Workshop Manual

Audi A4 2015 ➤ , Audi A4 Avant 2015 ➤ , Audi A5 2016 ➤ , Audi A6 2011 ➤ , Audi A6 China 2012 ➤ , Audi Q5 2017 ➤

Servicing 6-speed manual gearbox 0CS, 0DJ, 0CX

Edition 10.2017

Protected by copyright. Copying for private or commercial purposes, in part or in whole, is not permitted unless authorised by AUDI AG. AUDI AG does not guarantee or accept any liability with respect to the correctness of information in this document. Copyright by AUDI AG.

List of Workshop Manual Repair Groups

Repair Group

00 - Technical data

30 - Clutch

34 - Controls, housing

35 - Gears, shafts

39 - Final drive - differential

Protected by copyright. Copying for private or commercial purposes, in part or in whole, is not permitted unless authorised by AUDI AG. AUDI AG does not guarantee or accept any liability with respect to the correctness of information in this document. Copyright by AUDI AG.

Technical information should always be available to the foremen and mechanics, because their careful and constant adherence to the instructions is essential to ensure vehicle road-worthiness and safety. In addition, the normal basic safety precautions for working on motor vehicles must, as a matter of course, be observed.

All rights reserved.
No reproduction without prior agreement from publisher.

Copyright © 2017 Audi AG, Ingolstadt

Contents

00 - Technical data 1

1 Identification 1
1.1 Gearbox identification 1
1.2 Identification - four-wheel drive coupling 0CJ or 0CX 3

2 Repair instructions 5
2.1 General repair instructions 5

3 Technical data 13
3.1 Allocation of gearbox to engine 13
3.2 Capacities 13

4 Transmission layout 15
4.1 Transmission layout - front-wheel drive 15
4.2 Transmission layout - four-wheel drive 16

30 - Clutch 18

1 Clutch mechanism 18
1.1 Exploded view - clutch release mechanism 18
1.2 Removing and installing clutch slave cylinder together with release bearing 19

2 Clutch 21
2.1 General notes on clutch 21
2.2 Exploded view - clutch unit 24
2.3 Removing and installing clutch module 30
2.4 Removing and installing clutch 35
2.5 Resetting adjuster ring in SAC pressure plate 43
2.6 Renewing needle bearing for dual-mass flywheel 46

34 - Controls, housing 50

1 Transporting gearbox 50

2 Dismantling and assembling gearbox 51
2.1 Schematic overview - gearbox 51
2.2 Exploded view - gearbox 52
2.3 Exploded view - gear cluster, reverse gear wheel, selector mechanism 58
2.4 Exploded view - selector forks 60
2.5 Dismantling and assembling gearbox 61
2.6 Removing and installing selector shaft 89

3 Gearbox housing, clutch housing 92
3.1 Exploded view - gearbox housing 92
3.2 Exploded view - gearbox housing cover 94
3.3 Servicing gearbox housing 96
3.4 Servicing gearbox housing cover 103

4 Securing to engine and gearbox support 116

5 Gear oil circuit 118
5.1 Overview - gear oil circuit 118
5.2 Exploded view - gear oil pump 119
5.3 Removing and installing gear oil pump 120

35 - Gears, shafts 122

1 Dismantling and assembling gears and shafts 122
1.1 Exploded view - gear cluster 122
1.2 Dismantling and assembling gear cluster 124

2 Input shaft 133
2.1 Exploded view - input shaft 133

Protected by copyright. Copying for private or commercial purposes, in part or in whole, is not permitted unless authorised by AUDI AG. AUDI AG does not guarantee or accept any liability with respect to the correctness of information in this document. Copyright by AUDI AG.

2.2 Dismantling and assembling input shaft . . . 137
2.3 Allocation of 3rd - 6th gear synchro-rings to locking collars . . . 144
2.4 Checking 3rd - 6th gear synchro-rings for wear . . . 145
3 Output shaft . . . 147
3.1 Exploded view - output shaft . . . 147
3.2 Dismantling and assembling output shaft . . . 151

39 - Final drive - differential . . . 154

1 Oil seals . . . 154
1.1 Overview of fitting locations - oil seals . . . 154
1.2 Renewing oil seal (left-side) . . . 158
1.3 Renewing oil seal (right-side) . . . 162
1.4 Renewing input shaft oil seal . . . 163
1.5 Renewing sealing cap for output shaft in gearbox housing . . . 165
1.6 Renewing output shaft oil seal . . . 166
2 Final drive . . . 169
2.1 Exploded view - final drive . . . 169
2.2 Exploded view - pinion shaft . . . 171
2.3 Removing and installing pinion shaft . . . 172
2.4 Dismantling and assembling pinion shaft . . . 174
2.5 Table of adjustments - final drive . . . 178
2.6 Adjusting pinion shaft . . . 181
2.7 Adjusting final drive . . . 186
2.8 Renewing cover for final drive . . . 203
3 Differential . . . 210
3.1 Exploded view - differential . . . 210
3.2 Removing and installing differential . . . 211
3.3 Dismantling and assembling differential . . . 213
3.4 Removing and installing flange shaft (left-side) . . . 219
3.5 Removing and installing flange shaft (right-side) . . . 223
3.6 Renewing mounting bracket and ball bearing for flange shaft (left-side) . . . 225
4 Four-wheel drive coupling . . . 228
4.1 Exploded view - four-wheel drive coupling . . . 228
4.2 Removing and installing four-wheel drive coupling . . . 229

Protected by copyright. Copying for private or commercial purposes, in part or in whole, is not permitted unless authorised by AUDI AG. AUDI AG does not guarantee or accept any liability with respect to the correctness of information in this document. Copyright by AUDI AG.

00 – Technical data

1 Identification

(ARL005491; Edition 10.2017)

⇒ "1.1 Gearbox identification", page 1

⇒ "1.2 Identification - four-wheel drive coupling 0CJ or 0CX", page 3

1.1 Gearbox identification

⇒ "1.1.1 Gearbox identification - manual gearbox 0CS and 0DJ, front-wheel drive", page 1

⇒ "1.1.2 Gearbox identification - manual gearbox 0CX, four-wheel drive", page 2

1.1.1 Gearbox identification - manual gearbox 0CS and 0DJ, front-wheel drive

Protected by copyright. Copyright by AUDI AG. All rights reserved. Copyright by AUDI AG. Reproduction or distribution of this document or any part of it is not permitted unless authorised by AUDI AG. AUDI AG does not guarantee or accept any liability with respect to the correctness of this document. Copyright by AUDI AG.

Note

- *From approx. 09/2016 onwards, manual gearboxes 0CS and 0DJ, front-wheel drive are fitted with a forced lubrication system.*
- *The gear wheels and bearings on these gearboxes are lubricated via a mechanical oil pump fitted in the gearbox.*
- *Visible differences ⇒ page 1*
- *Allocate according to gearbox code ⇒ 6-speed manual gearbox 0CS, 0DJ, 0CX; Rep. gr. 00 ; Technical data; Allocation of gearbox to engine .*

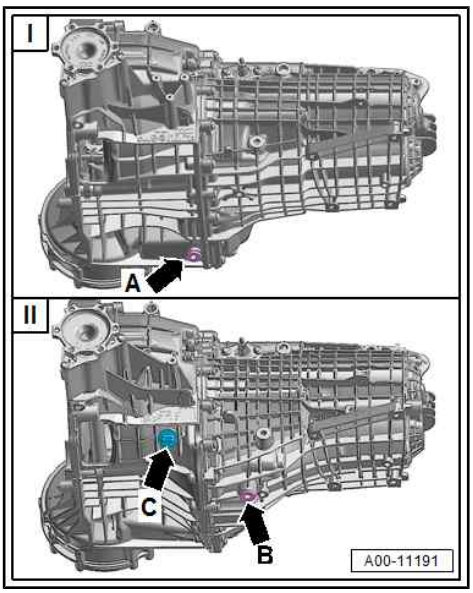

Differentiation of manual gearbox 0CS, 0DJ with and without forced lubrication

I - Manual gearbox without forced lubrication

- Oil drain plug -arrow A- is located in gearbox housing

II - Manual gearbox with forced lubrication

- Oil drain plug -arrow B- is located in gearbox cover
- Additional opening in gearbox housing with sealing plug -arrow C-

Location on gearbox

- -Arrow A- Manual gearbox 0CS or 0DJ ⇒ page 2
- -Arrow B- Code letters and production date ⇒ page 2

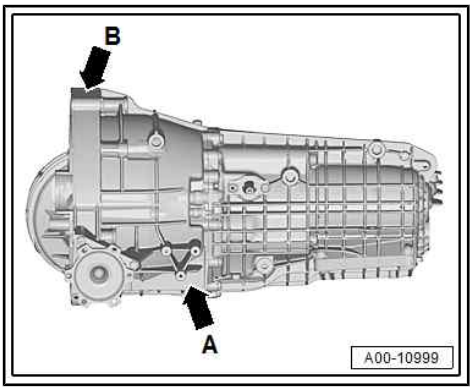

Manual gearbox 0CS or 0DJ -arrow-

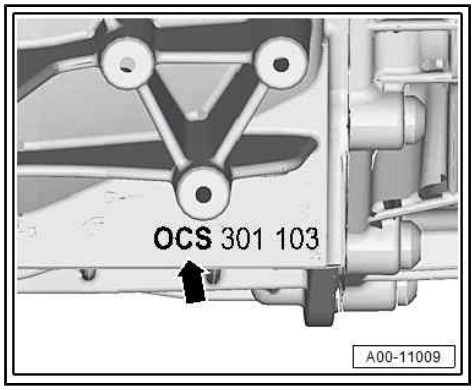

- The part number for the gearbox housing (0CS 301 103 in the example) may start with “0CS” or “0DJ”.
- The basic design of manual gearboxes 0CS and 0DJ is the same.

Difference:

- Gearbox 0CS does not have weight-optimising modifications.
- Gearbox 0DJ has weight-optimising modifications.
- They can only be distinguished by referring to the gearbox code letters ⇒ 6-speed manual gearbox 0CS, 0DJ, 0CX; Rep. gr. 00 ; Technical data; Allocation of gearbox to engine .

Code letters -arrow A- and production date of gearbox -arrow B-

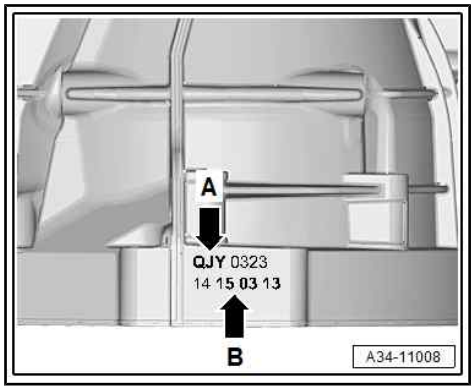

Example:	QJY	15 03 13
	Code letters	Production date: 15.03.2013

Note

- *Additional data depend on manufacture.*
- *The code letters for the gearbox are also given on the vehicle data stickers.*

Protected by copyright. Copying for private or commercial purposes, in part or in whole, is not permitted unless authorised by AUDI AG. AUDI AG does not guarantee or accept any liability with respect to the correctness and completeness of this document. Copyright by AUDI AG.

1.1.2 Gearbox identification - manual gearbox 0CX, four-wheel drive

Note

- *All manual gearboxes 0CX, four-wheel drive, are fitted with a forced lubrication system.*
- *The gear wheels and bearings on these gearboxes are lubricated via a mechanical oil pump fitted in the gearbox.*
- *For allocation of gearbox to engine and code, refer to ⇒ 6-speed manual gearbox 0CS, 0DJ, 0CX; Rep. gr. 00 ; Technical data .*

Location on gearbox

- -Arrow A- Code letters and production date ⇒ page 3
- -Arrow B- manual gearbox 0CX
- -Arrow C- four-wheel drive coupling 0CJ or 0CX ⇒ “1.2 Identification - four-wheel drive coupling 0CJ or 0CX”, page 3

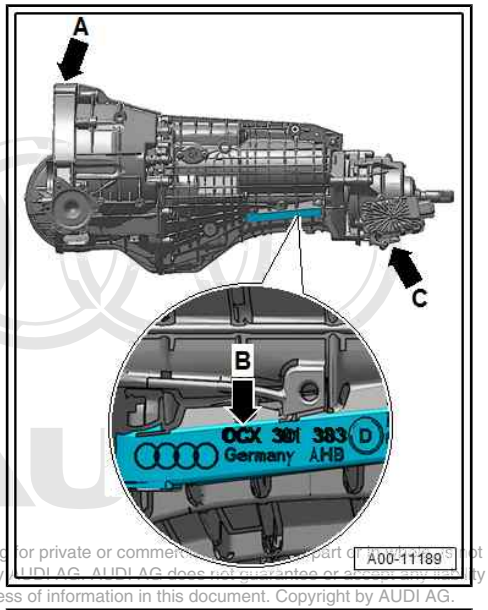

Protected by copyright. Copying for private or commercial purposes, part of these texts is not permitted unless authorised by AUDI AG. AUDI AG does not guarantee or accept any liability with respect to the correctness of information in this document. Copyright by AUDI AG.

Code letters -arrow A- and production date of gearbox -arrow B-

Example:	RJS	15 06 16
	Code letters	Production date: 15.06.2016

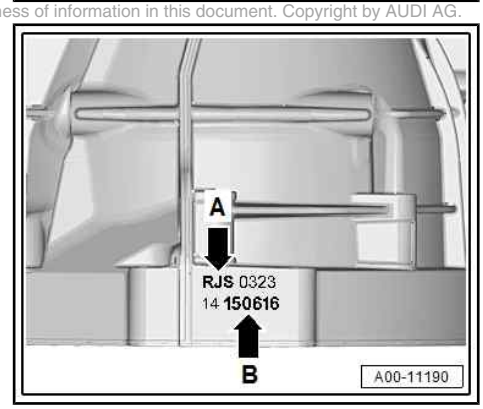

Note

- *Additional data depend on manufacture.*
- *The code letters for the gearbox are also given on the vehicle data stickers.*

1.2 Identification - four-wheel drive coupling 0CJ or 0CX

Note

- *There are two versions of the four-wheel drive coupling. As they look identical, they can only be distinguished from each other by the part number.*
- *Four-wheel drive coupling 0CJ can transfer up to 800 Nm.*
- *Four-wheel drive coupling 0CX can transfer up to 1200 Nm.*
- *For extensive information on how to perform the repair, refer to ⇒ Rear final drive; Rep. gr. 39 ; Four-wheel drive coupling .*

Location on four-wheel drive coupling 0CJ or 0CX

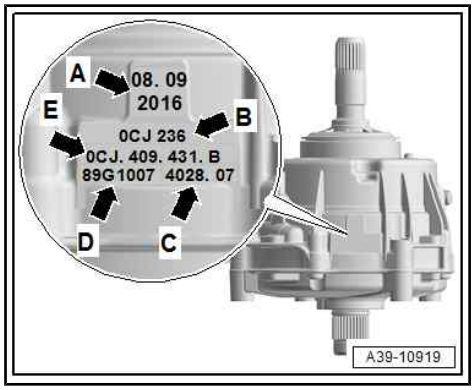

- -Arrow A- Production date

Example: 08.09.2016

- -Arrow B- Type of four-wheel drive coupling

Example: 0CJ 236

- -Arrow C- Coupling classification

Example: 4028.07

- -Arrow D- Serial number

Example: 89G1007

- -Arrow E- Part number

Example: 0CJ.409.431.B

Protected by copyright. Copying for private or commercial purposes, in part or in whole, is not permitted unless authorised by AUDI AG. AUDI AG does not guarantee or accept any liability with respect to the correctness of information in this document. Copyright by AUDI AG.

2 Repair instructions

⇒ “2.1 General repair instructions”, page 5

2.1 General repair instructions

Proper tools and the maximum possible care and cleanliness are essential for satisfactory repairs to the transmission units. The usual basic safety precautions also naturally apply when carrying out repair work.

To avoid repetition, a number of generally applicable instructions for the various repair procedures are summarised here. They apply to the work described in this Manual.

Special tools

- For a complete list of special tools used in this Workshop Manual ⇒ Workshop equipment and special tools catalogue .

Gearbox

- From approx. 09/2016 onwards, manual gearboxes 0CS and 0DJ, front-wheel drive are fitted with a forced lubrication system.
- Identification ⇒ page 1
- The gear wheels and bearings on these gearboxes are lubricated via a mechanical oil pump fitted in the gearbox.

Caution

After gearbox repairs have been performed, the gear wheels may be insufficiently lubricated as air bubbles may have formed in the oil circuit.

- *To ensure that all gear wheels are supplied with enough gear oil on gearboxes with forced lubrication, these vehicles must only be driven at very low throttle for the first 30 seconds.*

- Manual gearbox 0CX, four-wheel drive, is always fitted with a forced lubrication system.
- The replacement manual gearbox 0CX, four-wheel drive, is always offered without four-wheel drive coupling.
- When exchanging or repairing the manual gearbox, check the oil level and fill up with oil if necessary ⇒ 6-speed manual gearbox 0CS, 0DJ, 0CX; Rep. gr. 34 ; Gear oil; Checking gear oil level .
- Code letters and technical data ⇒ 6-speed manual gearbox 0CS, 0DJ, 0CX; Rep. gr. 00 ; Technical data
- Capacities and specifications ⇒ “3 Technical data”, page 13 .
- Allocate bolts and other components according to gearbox code letters, refer to ⇒ Electronic parts catalogue .
- Thoroughly clean all joints and connections and the surrounding areas before disconnecting.

Protected by copyright. Copying for private or commercial purposes, in part or in whole, is not permitted unless authorised by AUDI AG. AUDI AG does not guarantee or accept any liability with respect to the correctness of information in this document. Copyright by AUDI AG.

Four-wheel drive coupling “quattro ultra”

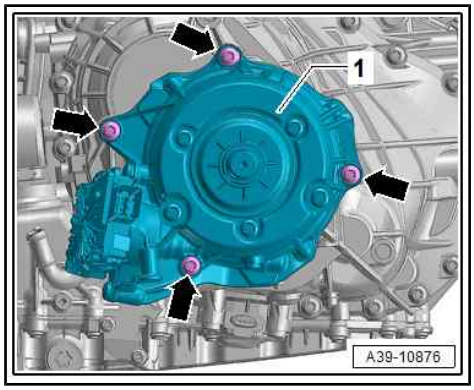

- For extensive information on how to repair the four-wheel drive coupling -1-, refer to ⇒ Rear final drive; Rep. gr. 39 ; Four-wheel drive coupling .
- The four-wheel drive coupling has its own oil supply.
- When exchanging or repairing the four-wheel drive coupling, check the ATF level and add ATF if necessary ⇒ Rear final drive; Rep. gr. 39 ; Four-wheel drive coupling; Checking fluid level .
- Removing and installing four-wheel drive coupling ⇒ Rear final drive; Rep. gr. 39 ; Four-wheel drive coupling; Removing and installing four-wheel drive coupling .
- Removing and installing all-wheel drive control unit - J492- ⇒ Rear final drive; Rep. gr. 39 ; Four-wheel drive coupling; Removing and installing control unit .

Protected by copyright. Copying for private or commercial purposes, in part or in whole, is not permitted unless authorised by AUDI AG. AUDI AG does not guarantee or accept any liability with respect to the correctness of information in this document. Copyright by AUDI AG.

Clutch, flywheel

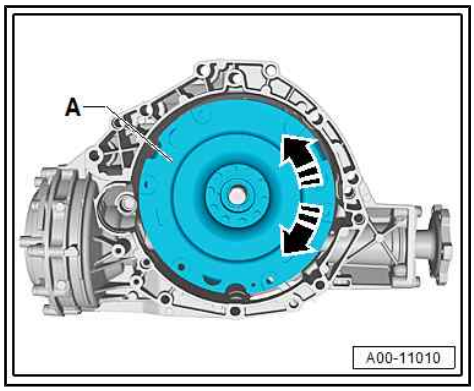

“Clacking” sound in LuK version dual-mass flywheel with centrifugal pendulum absorber

- Depending on version, clutch modules -A- with or without centrifugal pendulum absorbers may be fitted.
- When a clutch module with a centrifugal pendulum absorber is turned by hand, a clacking sound can be heard at intervals of approx. 90°.
- This is caused by a centrifugal pendulum absorber in the dual-mass flywheel and is not a fault.

Sealant

- Thoroughly clean housing contact surfaces before applying sealing paste .
- Apply sealing paste (⇒ Electronic parts catalogue) evenly and not too thickly.
- Breather holes must remain free of sealing paste .

O-rings, seals, oil seals and gaskets

- Always renew O-rings, seals, oil seals and gaskets after removal.
- The seals for the flange shafts, input shaft and selector shaft are normally referred to as oil seals.
- After removing gaskets and oil seals, always inspect the contact surface on the housing or shaft for burrs resulting from removal or for other signs of damage.
- Thoroughly clean housing joint surfaces before assembling.
- Before installing oil seals, lightly oil the outer circumference of the seal and fill the space between the sealing lips -arrow- about half full with grease ⇒ Electronic parts catalogue .
- The open side of the oil seal should face the side containing the fluid.
- When installing a new oil seal, position the seal such that the sealing lip does not contact the shaft in the same place as the old seal (make use of installation depth tolerances).
- Lightly lubricate O-rings before installation to prevent them from being trapped and damaged during assembly.
- After renewing oil seals and gaskets, check and, if necessary, top up oil level in gearbox ⇒ 6-speed manual gearbox 0CS, 0DJ, 0CX; Rep. gr. 34 ; Gear oil; Checking gear oil level .

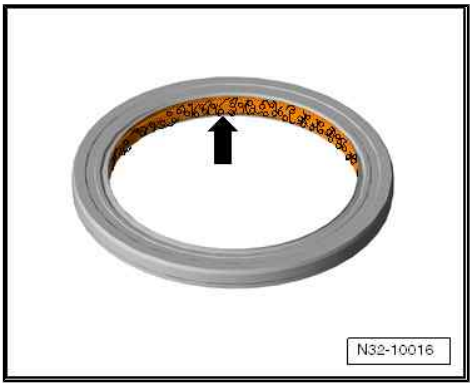

Locking elements

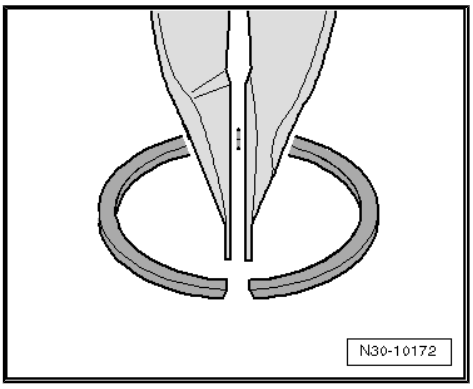

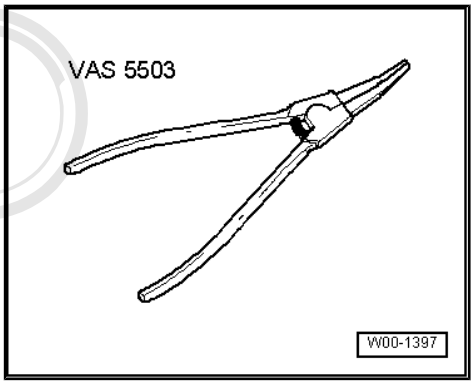

Protected by copyright. Copying for private or commercial purposes, in part or in whole, is not permitted unless authorised by AUDI AG. AUDI AG does not guarantee or accept any liability with respect to the correctness of information in this document. Copyright by AUDI AG.

- Do not over-stretch circlips.
- Always renew circlips which have been damaged or over-stretched.
- Installation position for some circlips: the circlip is fitted so that the narrow part of the gap is at the top. This also gives the pliers a better grip when removing and installing.
- To facilitate assembly, use circlip pliers - VAS 5503A- .
- Circlips must be properly seated in the base of the groove.
- Renew spring pins. Position: the slit -A- should be in line with the line of force -arrow-.

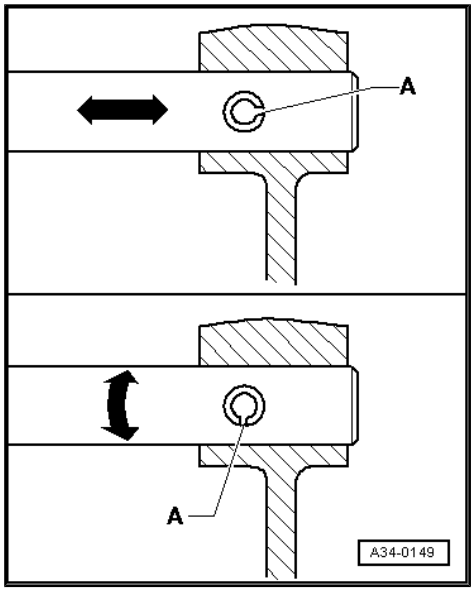

Bolts and nuts

- Loosen the nuts and bolts in reverse sequence to the specified tightening sequence.
- Nuts and bolts which secure covers and housings should be loosened and tightened in diagonal sequence and in stages if no tightening sequence is specified.
- Loosen and tighten particularly sensitive parts in diagonal sequence and in stages, taking care to keep them straight.
- The tightening torques stated apply to non-oiled nuts and bolts.
- Always renew self-locking bolts and nuts.
- Use a wire brush to clean the threads of bolts which are secured with locking fluid. Then install bolts with locking fluid ; for locking fluid refer to ⇒ Electronic parts catalogue .
- Threaded holes which take self-locking bolts or bolts coated with locking fluid must be cleaned (using a thread tap or similar). Otherwise there is a danger of the bolts shearing off the next time they are removed.

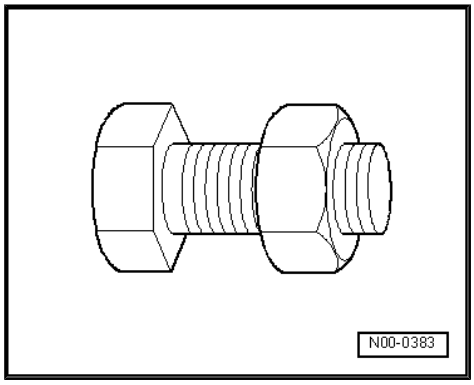

Protected by copyright. Copying for private or commercial purposes, in part or in whole, is not permitted unless authorised by AUDI AG. AUDI AG does not guarantee or accept any liability with respect to the correctness of information in this document. Copyright by AUDI AG.

Shims

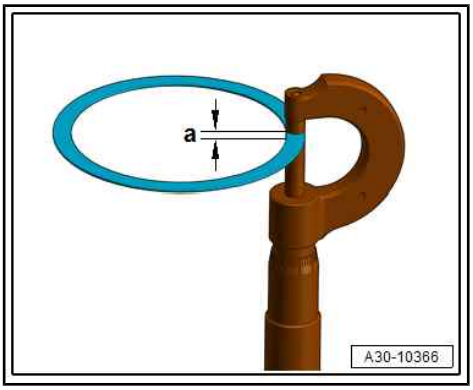

- Use a micrometer to measure the shims at several points.
- Check for burrs and damage.
- Do not install shims which are damaged or not in perfect condition.

Bearings

- Install needle bearings, ball sleeves and roller bearings so the lettering (side with thicker metal) faces towards the installing tool.
- Lubricate all bearings in gearbox with gear oil when installing.
- Use inductive heater - VAS 6414- to heat inner races of tapered roller bearings and angular contact ball bearings to approx. 100°C before installing. Press home onto stop when installing so there is no axial clearance.
- Heat inner races of needle bearings and roller bearings to max. 130 °C.
- Do not interchange the outer or inner races of bearings of the same size (the bearings are paired).
- If required, renew the tapered roller bearings on one shaft together and use new bearings from a single manufacturer.

Gear wheels, synchro-hubs, inner races for selector gears

- Before installing, heat inner races for selector gears to approx. 100° C using inductive heater - VAS 6414- .
- Use inductive heater - VAS 6414- to heat gear wheels and synchro-hubs to approx. 100 °C before installing. Press home onto stop when installing so there is no axial clearance.
- Note correct installation position.

Selector gears

- After installing, check that 1st to 6th speed selector gears have an axial clearance of 0.15 ... 0.50 mm and check that they rotate freely.

Input shaft

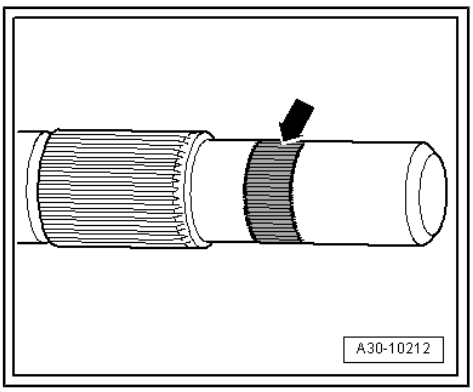

- If there is visible damage on the surface of the input shaft in the vicinity of the needle bearing for the dual-mass flywheel -arrow-, both the input shaft and the needle bearing in the dual-mass flywheel must be renewed.

- Renewing input shaft
⇒ “2.5 Dismantling and assembling gearbox”, page 61
- Renewing needle bearing in dual-mass flywheel
⇒ “2.6 Renewing needle bearing for dual-mass flywheel”, page 46

Protected by copyright. Copying for private or commercial purposes, in part or in whole, is not permitted unless authorised by AUDI AG. AUDI AG does not guarantee or accept any liability with respect to the correctness of information in this document. Copyright by AUDI AG.

- Check input shaft for scoring around bearing in drive plate -arrow-. Renew needle bearing in drive plate if necessary ⇒ Engine, mechanics; Rep. gr. 13 ; Cylinder block (gearbox end); Renewing needle bearing in drive plate .
- If the clutch is oily and oil is escaping at front end of drive shaft, a new sealing plug must be fitted in the hole in the drive shaft ⇒ page 133 .

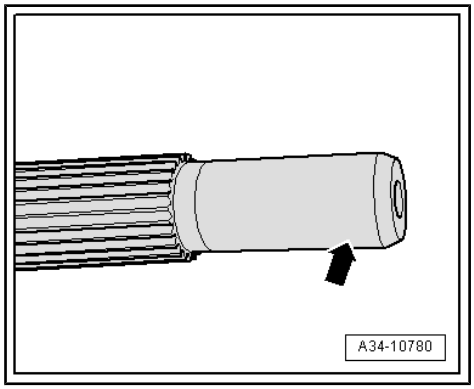

Synchro-rings

- Do not interchange. When reusing synchro-rings, always fit to the same selector gear.
- Check for wear; renew if necessary.
- Lubricate with gear oil before installing.

Checking molybdenum-coated synchro-rings -I- and carbon-coated synchro-rings -II-

- Clean synchro-ring; the friction surface must be free of oil.

I - Molybdenum-coated synchro-ring

- The friction surface of an intact molybdenum coated synchro-ring has a graphite-grey, slightly porous appearance.
- The synchro-ring must be renewed if very shiny areas -A- have formed on the friction surface or if the brass-coloured metal underneath is already visible.

II - Carbon-coated synchro-ring

- Check the friction surfaces -B- of carbon-coated synchro-rings for damage (flattened sections or particles of carbon coating broken away). Renew if necessary.

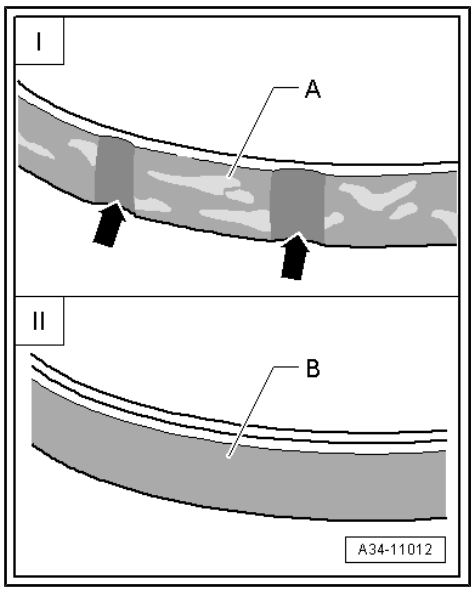

Distinguishing synchro-rings and inner rings for 1st and 2nd gear

Caution

The synchro-rings for 1st and 2nd gear must not be interchanged.

- *If synchro-rings are interchanged, the synchromesh will jam or malfunction prematurely.*
- *The locking collar must be installed in the correct direction ⇒ page 151 .*

A - The inner ring for 1st gear has a coated friction surface on the inside -arrow 1- and is conical.

B - The inner ring for 2nd gear has no friction surface on the inside -arrow 2- and is cylindrical.

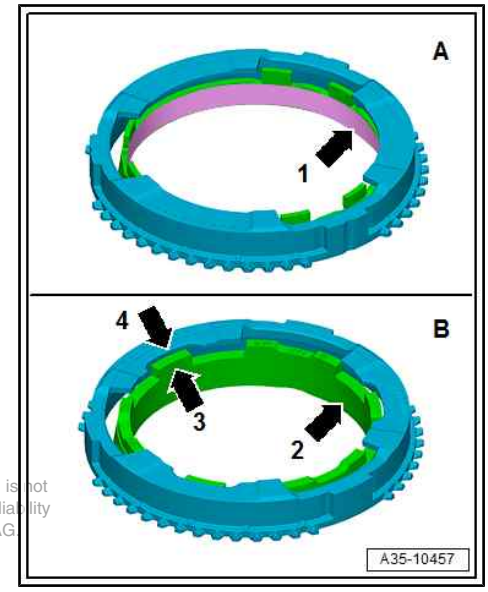

Distinguishing features:

- Additional lug -arrow 3- on inner ring
- Additional notch on synchro-ring -arrow 4-

Protected by copyright. Copying for private or commercial purposes, in part or in whole, is not permitted unless authorised by AUDI AG. AUDI AG does not guarantee or accept any liability with respect to the correctness of information in this document. Copyright by AUDI AG.

Checking synchro-rings for 1st gear

- Check inner friction surface -arrow 1- on synchro-ring -A- and outer friction surfaces -arrow 3- on inner ring -C- for grooves or scoring.
- Check coated friction surfaces -arrows 2- on intermediate ring -B- and inner friction surfaces -arrow 3- on inner ring -C-.
- The friction surface of an intact molybdenum coated synchro-ring has a graphite-grey, slightly porous appearance.
- The synchro-ring must be renewed if very shiny areas have formed on the friction surface or if the brass-coloured metal underneath is already visible.

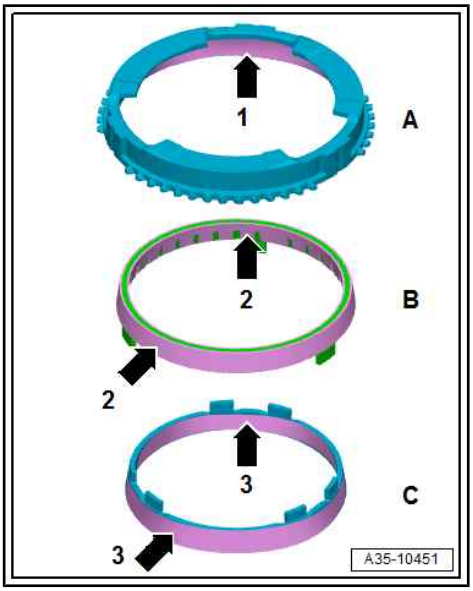

Checking synchro-rings for 2nd gear

- Check inner friction surface -arrow 1- on synchro-ring -A- and outer friction surface -arrow 3- on inner ring -C- for grooves or scoring.
- Check coated friction surfaces -arrows 2- of intermediate ring -B-.
- The friction surface of an intact molybdenum coated synchro-ring has a graphite-grey, slightly porous appearance.
- The synchro-ring must be renewed if very shiny areas have formed on the friction surface or if the brass-coloured metal underneath is already visible.

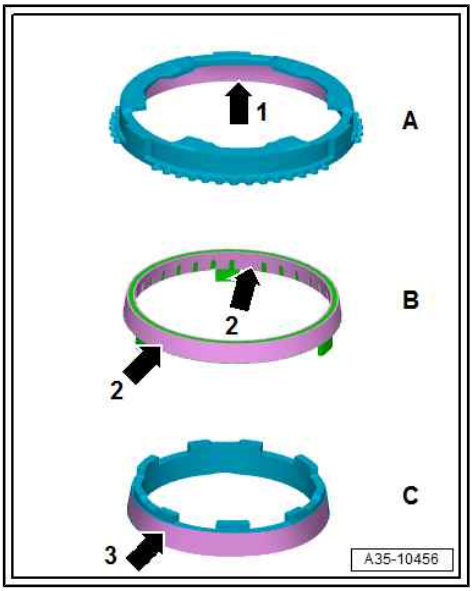

Abnormal wear on selector gears and locking collars

- Abnormal wear on synchro-ring or selector gear:

A - Worn chamfer on dog teeth of synchro-ring or selector gear

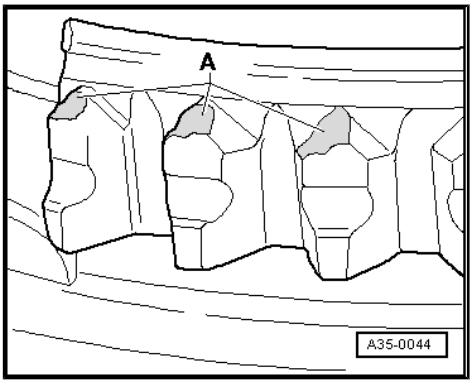

Protected by copyright. Copying for private or commercial purposes, in part or in whole, is not permitted unless authorised by AUDI AG. AUDI AG does not guarantee or accept any liability with respect to the correctness of information in this document. Copyright by AUDI AG.

♦ In comparison: intact synchro-ring or selector gear:

B - Undamaged chamfer on dog teeth of synchro-ring or selector gear

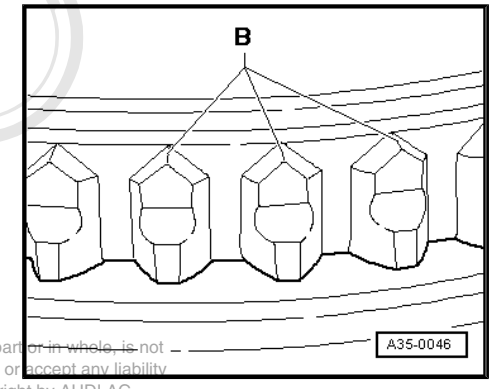

Protected by copyright. Copying for private or commercial purposes, in part or in whole, is not permitted unless authorised by AUDI AG. AUDI AG does not guarantee or accept any liability with respect to the correctness of information in this document. Copyright by AUDI AG.

♦ Abnormal wear on locking collar:

C - Worn chamfer on internal splines of locking collar

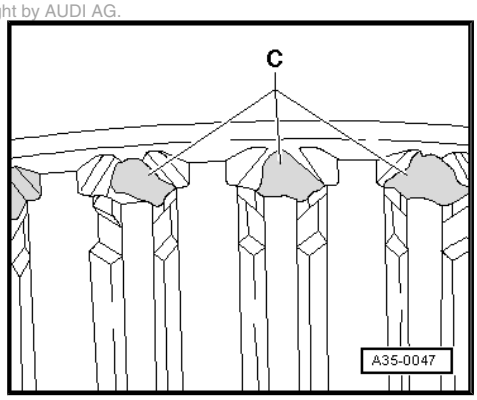

♦ In comparison: intact locking collar:

D - Intact chamfer on internal splines of locking collar

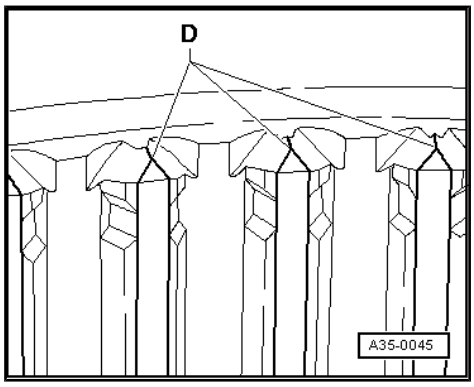

♦ Always renew synchro-rings with carbon coating together with locking collar. Renew selector gears also if there are traces of wear.

3 Technical data

⇒ "3.1 Allocation of gearbox to engine", page 13

⇒ "3.2 Capacities", page 13

3.1 Allocation of gearbox to engine

The allocation of the gearbox to the engine, the gearbox code and the axle ratios are described in ⇒ 6-speed manual gearbox 0CS, 0DJ, 0CX; Rep. gr. 00 ; Technical data .

Protected by copyright. Copying for private or commercial purposes, in part or in whole, is not permitted unless authorised by AUDI AG. AUDI AG does not guarantee or accept any liability with respect to the correctness of information in this document. Copyright by AUDI AG.

3.2 Capacities

⇒ "3.2.1 Capacities - 6-speed manual gearbox 0CS and 0DJ, front-wheel drive", page 13

⇒ "3.2.2 Capacities - 6-speed manual gearbox 0CX, four-wheel drive", page 14

⇒ "3.2.3 Capacity of four-wheel drive coupling 0CX, 0DJ", page 14

3.2.1 Capacities - 6-speed manual gearbox 0CS and 0DJ, front-wheel drive

Note

- *6-speed manual gearbox 0CS and 0DJ, front-wheel drive, are available with and without a forced lubrication system.*
- *The oil capacity is reduced on gearboxes with forced lubrication.*
- *Identification ⇒ page 1*

Manual gearbox	6-speed 0CS, 0DJ (front-wheel drive)	
Capacity on gearbox without forced lubrication	2.5 ltr.	
Capacity on gearbox with forced lubrication	Filling with new oil	Changing gear oil
	1.8 ltr.	1.1 ltr. (0.7 ltr. remain in gearbox)
♦ Gear oil specifications ⇒ Electronic parts catalogue		

3.2.2 Capacities - 6-speed manual gearbox 0CX, four-wheel drive

Manual gearbox	6-speed 0CX, four-wheel drive	
Capacity on gearbox with forced lubrication	Filling with new oil	Changing gear oil
	1.8 ltr.	1.1 ltr. (0.7 ltr. remain in gearbox)
♦ Gear oil specifications ⇒ Electronic parts catalogue		

Protected by copyright. Copying for private or commercial purposes, in part or in whole, is not permitted unless authorised by AUDI AG. AUDI AG does not guarantee or accept any liability with respect to the correctness of information in this document. Copyright by AUDI AG.

3.2.3 Capacity of four-wheel drive coupling 0CX, 0DJ

Four-wheel drive coupling	Four-wheel drive coupling 0CX, 0DJ
Capacity of four-wheel drive coupling	⇒ Rear final drive; Rep. gr. 00 ; Technical data; Capacities

4 Transmission layout

⇒ “4.1 Transmission layout - front-wheel drive”, page 15

⇒ “4.2 Transmission layout - four-wheel drive”, page 16

4.1 Transmission layout - front-wheel drive

Identification and ratio

Note

- *The layout of the components for front-wheel drive and four-wheel drive versions is identical.*
- *-Arrows- point in direction of travel.*

1 - Engine

2 - Drive plate

- ❑ With needle bearing for gearbox input shaft

3 - Clutch module

- ❑ Consists of pressure plate, clutch plate and dual-mass flywheel with flange for drive plate

4 - Front differential

5 - Output gear of intermediate drive

6 - Front pinion shaft

7 - Input gear of intermediate drive

8 - Manual gearbox

9 - Output shaft

10 - Input shaft (main shaft)

11 - Reverse gear wheel

I - 1st gear

II - 2nd gear

III - 3rd gear

IV - 4th gear

V - 5th gear

VI - 6th gear

R - Reverse gear

A - Front final drive

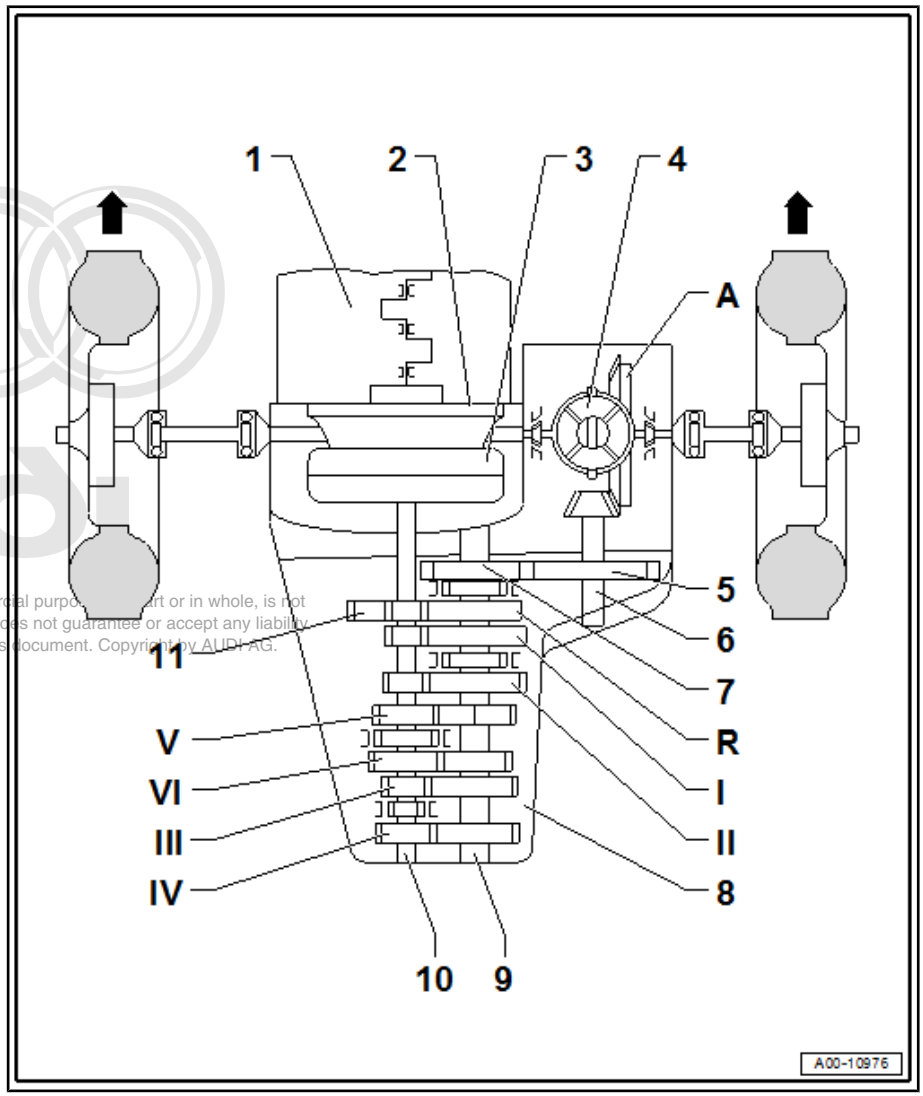

Protected by copyright. Copying for private or commercial purposes, in part or in whole, is not permitted unless authorised by AUDI AG. AUDI AG does not guarantee or accept any liability with respect to the correctness of information in this document. Copyright by AUDI AG.

4.2 Transmission layout - four-wheel drive

Identification and ratio

Note

-Arrows- point in direction of travel.

1 - Manual gearbox

- ❑ Layout of components for front-wheel drive and four-wheel drive versions is identical ⇒ page 15
- ❑ Removing and installing ⇒ 6-speed manual gearbox 0CS, 0DJ, 0CX; Rep. gr. 34 ; Removing and installing gearbox

2 - Four-wheel drive coupling

- ❑ Servicing ⇒ Rear final drive; Rep. gr. 39 ; Four-wheel drive coupling

3 - Four-wheel drive coupling input shaft

4 - Multi-plate clutch

5 - Four-wheel drive coupling output shaft

6 - All-wheel drive control unit - J492-

The following are integrated in the all-wheel drive control unit :

- ♦ Clutch actuator for all-wheel drive - V622-
- ♦ Clutch position sender for all-wheel drive - G969-
  - ❑ Removing and installing ⇒ Rear final drive; Rep. gr. 39 ; Four-wheel drive coupling; Removing and installing control

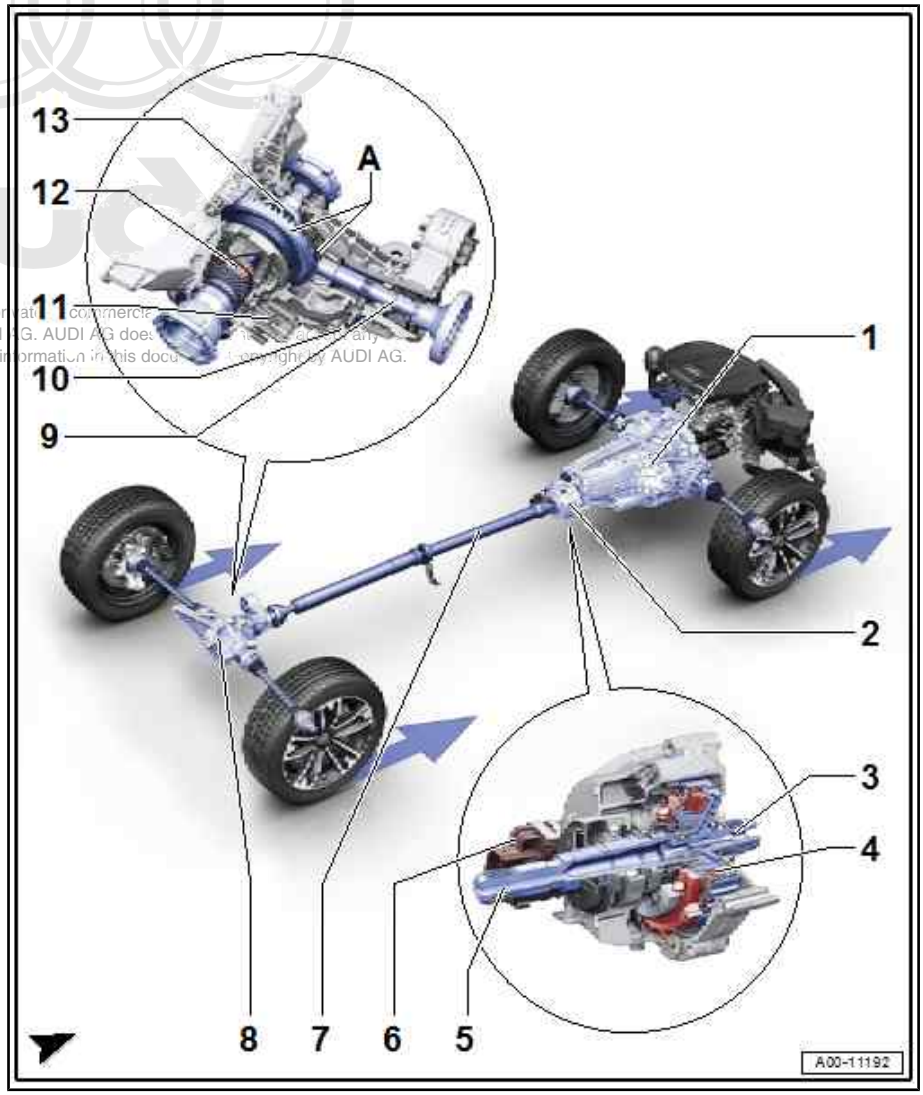

Protected by copyright. Copying for private or commercial purposes, in part or in whole, is not permitted unless authorised by AUDI AG. AUDI AG does not guarantee or accept any liability with respect to the correctness of information in this document. Copyright by AUDI AG.

unit

7 - Propshaft

- ❑ Overview ⇒ Rear final drive; Rep. gr. 39 ; Propshaft

8 - Rear final drive

- ❑ Overview ⇒ Rear final drive; Rep. gr. 39 ; Final drive

9 - Rear pinion shaft

10 - Propshaft speed sender - G970-

11 - Clutch actuator 2 for all-wheel drive - V623-

- ❑

12 - Dog clutch

13 - Rear differential

A - Rear final drive

Protected by copyright. Copying for private or commercial purposes, in part or in whole, is not permitted unless authorised by AUDI AG. AUDI AG does not guarantee or accept any liability with respect to the correctness of information in this document. Copyright by AUDI AG.

30 – Clutch

1 Clutch mechanism

⇒ “1.1 Exploded view - clutch release mechanism”, page 18

⇒ “1.2 Removing and installing clutch slave cylinder together with release bearing”, page 19

1.1 Exploded view - clutch release mechanism

1 - Bolt

- ❑ 3x
- ❑ 8 Nm

2 - Clutch slave cylinder with release bearing

- ❑ Clutch slave cylinder and release bearing are one unit and can only be renewed together
- ❑ Removing and installing ⇒ page 19

Note

New clutch slave cylinders supplied without input shaft oil seal and O-ring -5-

3 - Retaining clip

- ❑ Pull out as far as stop to separate clutch slave cylinder and breather or pipe -arrow-

4 - Input shaft oil seal

- ❑ Fitted in clutch slave cylinder
- ❑ Renewing ⇒ page 163

5 - O-ring

- ❑ Renew after removing

6 - O-ring

- ❑ Renew breather if damaged

7 - Breather

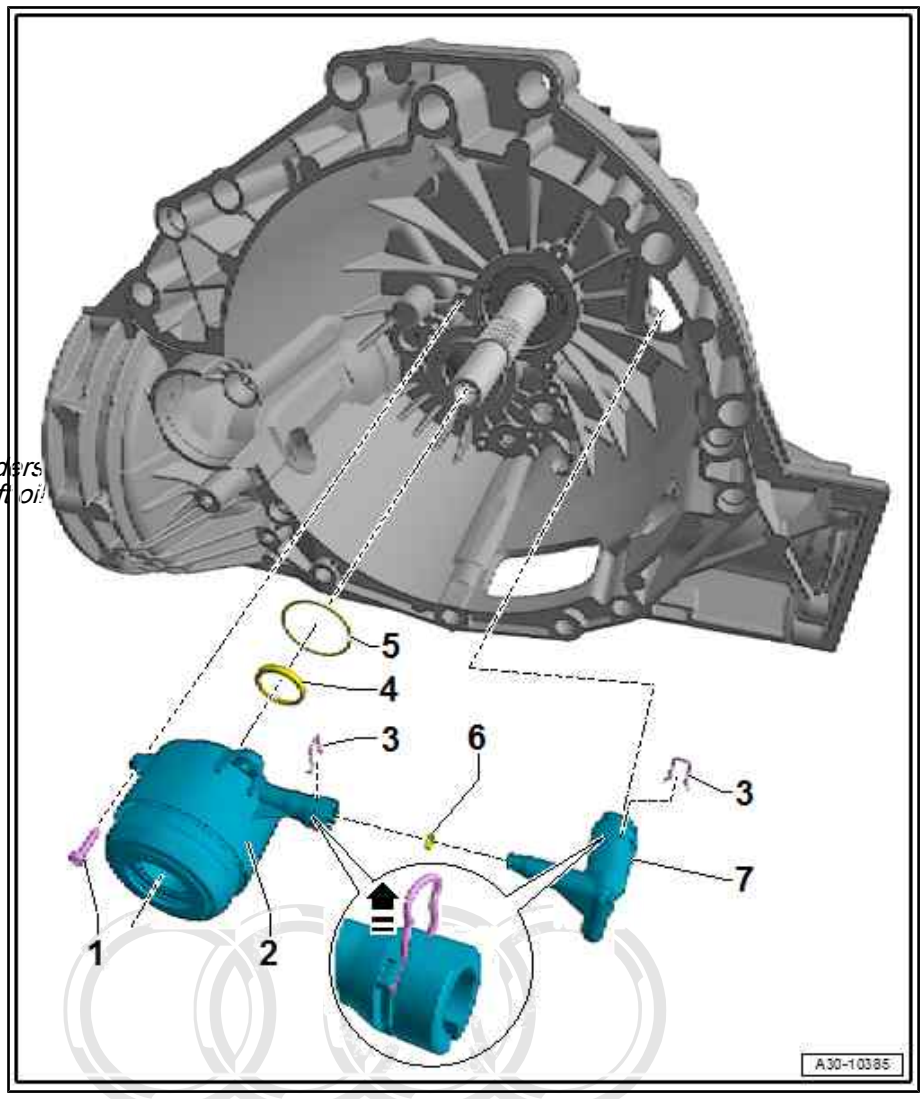

Protected by copyright. Copying for private or commercial purposes, in part or in whole, is not permitted unless authorised by AUDI AG. AUDI AG does not guarantee or accept any liability with respect to the correctness of information in this document. Copyright by AUDI AG.

1.2 Removing and installing clutch slave cylinder together with release bearing

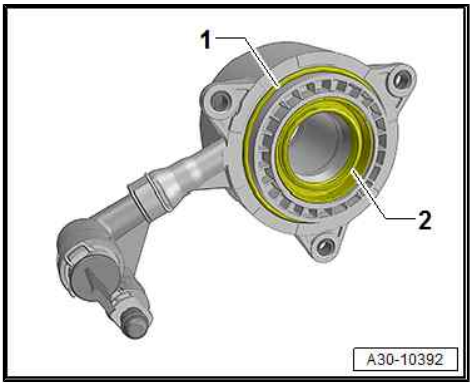

Note

- *Clutch slave cylinder and release bearing are one unit and can only be renewed together.*
- *New clutch slave cylinders are supplied without an O-ring -1- and input shaft oil seal -2-*
  ⇒ "1.4 Renewing input shaft oil seal", page 163 .
- *If you suspect a defective clutch slave cylinder, perform function test prior to renewing ⇒ 6-speed manual gearbox 0CS, 0DJ, 0CX; Rep. gr. 30 ; Clutch mechanism; Checking clutch master cylinder and clutch slave cylinder .*
- *Gearbox removed ⇒ 6-speed manual gearbox 0CS, 0DJ, 0CX; Rep. gr. 34 ; Removing and installing gearbox*

Special tools and workshop equipment required

- Torque wrench - V.A.G 1331-

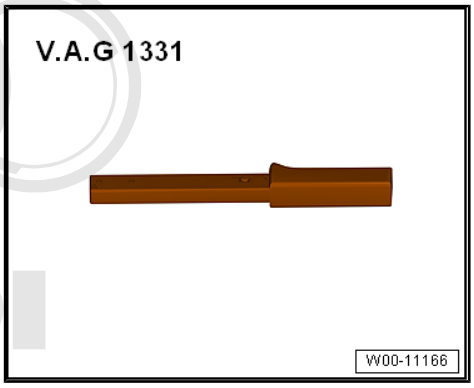

Protected by copyright. Copying for private or commercial purposes, in part or in whole, is not permitted unless authorised by AUDI AG. AUDI AG does not guarantee or accept any liability with respect to the correctness of information in this document. Copyright by AUDI AG.

- Sealing grease for oil seals ⇒ Electronic parts catalogue

Removing

- Gearbox removed ⇒ 6-speed manual gearbox 0CS, 0DJ, 0CX; Rep. gr. 34 ; Removing and installing gearbox; Removing gearbox .
- Clutch module removed ⇒ page 30 .

– Remove bolts -arrows-.

– Carefully take clutch slave cylinder off input shaft together with release bearing -A-.

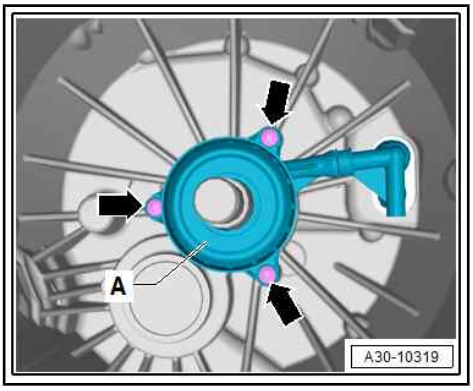

Installing

Installation is carried out in reverse order; note the following:

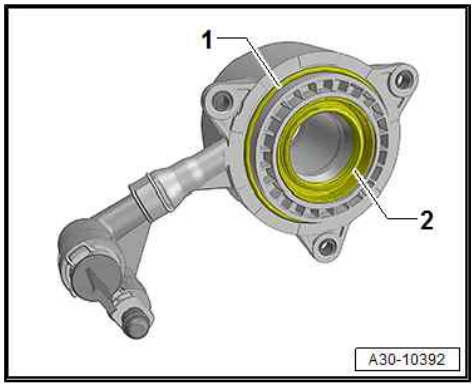

Note

- *Always renew O-ring -1-. Lightly lubricate O-ring with gear oil.*
- *Install input shaft oil seal -2- if it is not fitted, or renew oil seal if it is leaking ⇒ page 163 .*
- *Pack space between sealing lips -arrow- of input shaft oil seal half-full with sealing grease .*

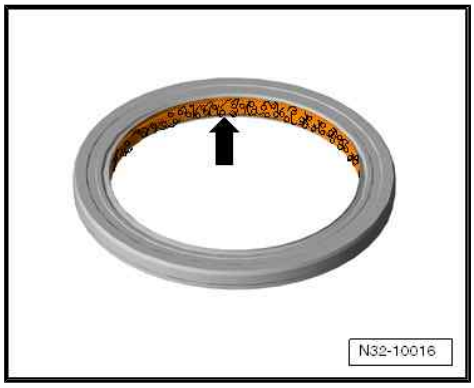

– Carefully slide clutch slave cylinder with release bearing -A- along input shaft towards gearbox housing.

Caution

Tighten securing bolts -arrows- for slave cylinder in small steps.

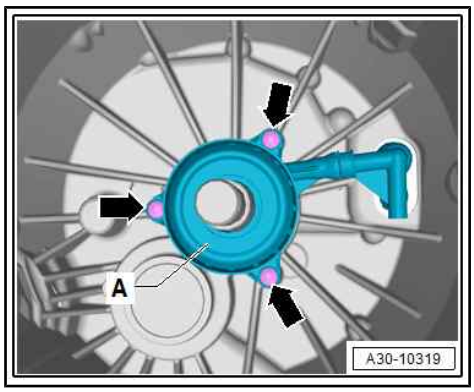

– Tighten securing bolts -arrows-.

– Bleed clutch mechanism after installing gearbox ⇒ 6-speed manual gearbox 0CS, 0DJ, 0CX; Rep. gr. 30 ; Clutch mechanism; Bleeding clutch mechanism .

Audi AG does not guarantee or accept any liability with respect to the correctness of information in this document. Copyright by AUDI AG.

Tightening torques

- ⇒ “1.1 Exploded view - clutch release mechanism”, page 18

2 Clutch

⇒ "2.1 General notes on clutch", page 21

⇒ "2.2 Exploded view - clutch unit", page 24

⇒ "2.3 Removing and installing clutch module", page 30

⇒ "2.4 Removing and installing clutch", page 35

⇒ "2.5 Resetting adjuster ring in SAC pressure plate", page 43

⇒ "2.6 Renewing needle bearing for dual-mass flywheel", page 46

2.1 General notes on clutch

Note

- *Refer to general repair instructions ⇒ page 5 .*
- *Servicing clutch mechanism and clutch hydraulics ⇒ 6-speed manual gearbox 0CS, 0DJ, 0CX; Rep. gr. 30 ; Clutch mechanism .*
- *The gearbox must be removed before working on the clutch ⇒ 6-speed manual gearbox 0CS, 0DJ, 0CX; Rep. gr. 34 ; Removing and installing gearbox; Removing gearbox .*
- *To avoid damaging clutch pressure plate when removing and installing, observe assembly instructions.*
- *Checking pressure plate for distortion ⇒ page 26 and ⇒ page 29*
- *Renew clutch plate and pressure plate if riveted fastening is damaged or loose.*
- *Select the correct clutch plate and pressure plate according to engine code ⇒ Electronic parts catalogue .*
- *If the clutch has burnt out, clean the gearbox housing thoroughly in the area of the clutch in order to prevent odour.*
- *Clutch pressure plates have an anti-corrosion coating and are greased. With the exception of the friction surface for the clutch plate, the clutch pressure plate must not be cleaned. Otherwise, the service life of the clutch will be considerably reduced.*
- *The friction surface of the clutch pressure plate and the dual-mass flywheel must be cleaned (degreased) thoroughly.*
- *Clean the input shaft splines and (in the case of used clutch plates) the hub splines. Remove corrosion and apply only a very thin coating of grease for clutch plate splines to the splines. Then move clutch plate backwards and forwards on input shaft until hub moves freely on shaft. It is important to remove excess grease.*
- *Remove grease from input shaft bearing journal as far as splines.*
- *If the clutch is oily and oil is escaping at front end of drive shaft, a new sealing plug must be fitted in the hole in the drive shaft ⇒ page 133 .*

Protected by copyright. Copying for private or commercial purposes, in part or in whole, is not permitted unless authorised by AUDI AG. AUDI AG does not guarantee or accept any liability with respect to the correctness of information in this document. Copyright by AUDI AG.

Notes on clutch module

“Clacking” sound (can be disregarded) in the clutch module -A- for the LuK version dual-mass flywheel with centrifugal pendulum absorber.

- Depending on version, clutch modules -A- with or without centrifugal pendulum absorbers may be fitted.
- When a clutch module with a centrifugal pendulum absorber is turned by hand, a clacking sound can be heard at intervals of approx. 90°.
- This is caused by a centrifugal pendulum absorber in the dual-mass flywheel and is not a fault.

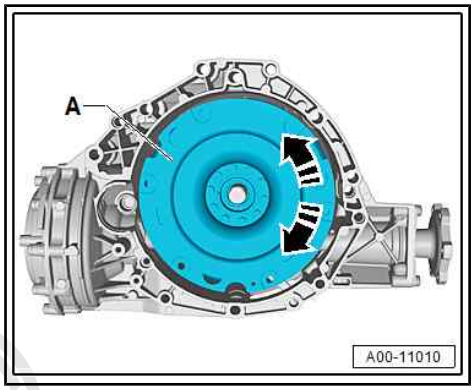

Place clutch module carefully on a work bench -2- (do not put it down with flange -1- facing downwards).

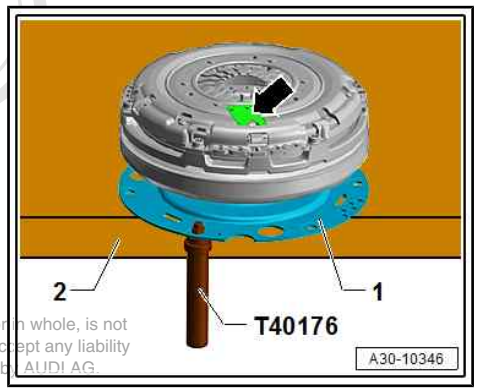

Note

- *Do not put down the module with the clutch pressure plate facing downwards; otherwise the adjustment mechanism -arrow- may be damaged.*
- *Do not place on extractor - T40176- .*

Protected by copyright. Copying for private or commercial purposes, in part or in whole, is not permitted unless authorised by AUDI AG. AUDI AG does not guarantee or accept any liability with respect to the correctness of information in this document. Copyright by AUDI AG.

Notes on “TAC” clutch, LuK version

Can be identified by pressure plate with adjustment mechanism -1-.

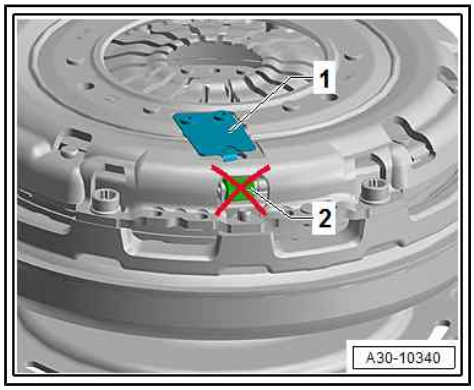

Caution

Risk of damage to clutch

- *Do not turn using opening -2- of adjustment mechanism.*

Notes on dual-mass flywheel

Caution

- *When the dual-mass flywheel is removed, the two weights may turn, shift and tilt slightly; this relative movement is part of the design and not a fault.*
- *The dual-mass flywheel does not settle until it is fitted in the gearbox and secured to the engine.*

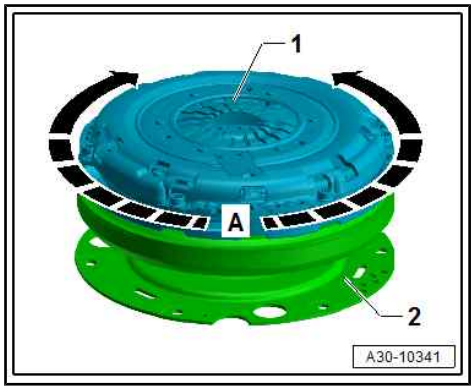

Protected by copyright. Copying for private or commercial purposes, in part or in whole, is not permitted unless authorised by AUDI AG. AUDI AG does not guarantee or accept any liability with respect to the correctness of information in this document. Copyright by AUDI AG.

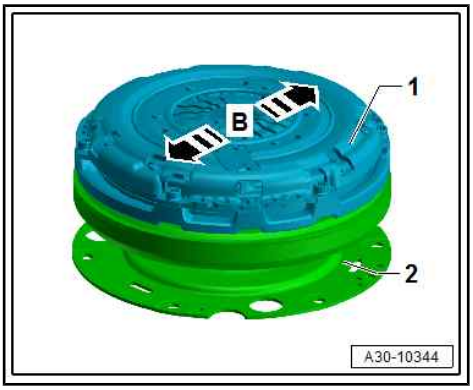

- When the secondary inertia weight -1- is rotated against the primary weight -2- as indicated by -arrows A-, it should turn smoothly as far as the stop in each direction with even resistance.
- Both stops are spring-loaded.
- The secondary inertia weight -1- can be moved horizontally in direction of -arrows B- relative to the primary weight -2-.
- The secondary weight -1- has a tilting clearance relative to the primary weight -2- (direction of -arrows C-).

Checking dual-mass flywheel for damage

– Check projections -arrow A- and friction surface -arrow B- for cracks.

- Ensure that dowel pins -arrows C- are seated securely in dual-mass flywheel.
- Surface -2- must not be warped -arrow D-.
- Drive plate -3- must not be bent.

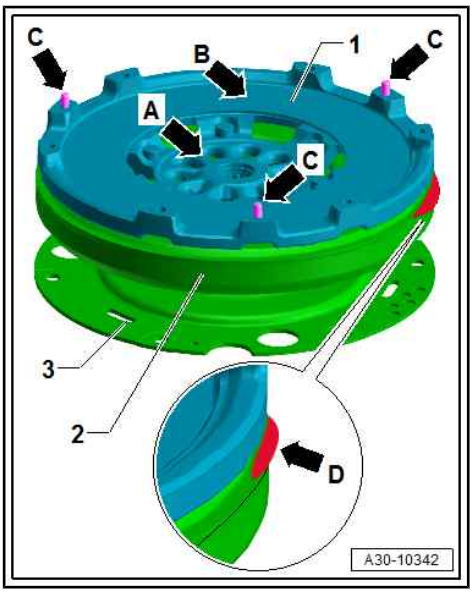

Damage to wall of dual-mass flywheel housing

- Damage to housing wall is caused by a defective bow spring -1- or bow spring mounting.

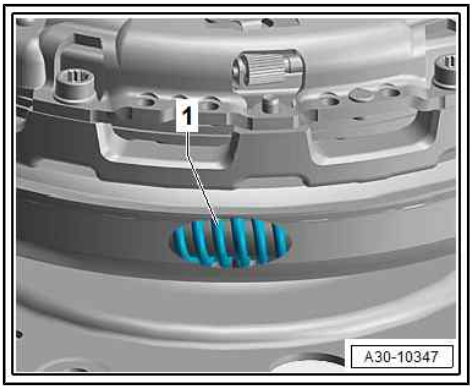

Notes on needle bearing in dual-mass flywheel and input shaft

Check needle bearing in dual-mass flywheel and renew if necessary ⇒ page 46 .

If there is visible damage on the surface of the input shaft in the vicinity of the needle bearing for the dual-mass flywheel -arrow-, both the input shaft and the needle bearing in the dual-mass flywheel must be renewed ⇒ page 46 .

Renewing input shaft ⇒ page 61

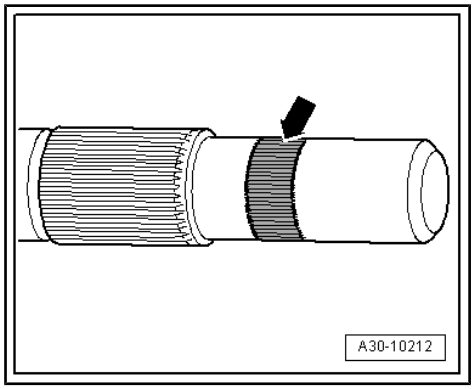

Check input shaft for scoring around bearing in drive plate -arrow-. Renew needle bearing in drive plate if necessary ⇒ Engine, mechanics; Rep. gr. 13 ; Cylinder block (gearbox end); Renewing needle bearing in drive plate .

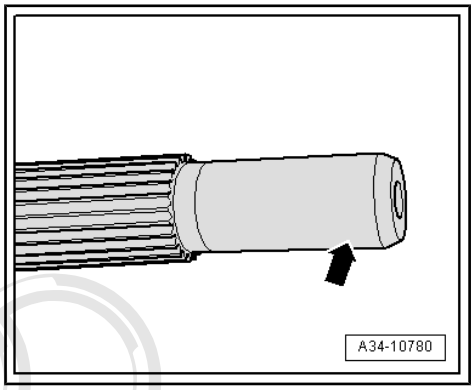

2.2 Exploded view - clutch unit

⇒ “2.2.1 Exploded view - clutch unit, SAC clutch (LuK version)”, page 24

⇒ “2.2.2 Exploded view - clutch unit, TAC clutch (LuK version)”, page 27

2.2.1 Exploded view - clutch unit, SAC clutch (LuK version)

- Observe notes on clutch ⇒ page 21 .
- “SAC” stands for “Self-Adjusting Clutch”.
- Clutch pressure plate and clutch plate can be renewed separately.
- When only the clutch plate is being renewed, the adjuster ring in the pressure plate has to be reset before assembly ⇒ page 43 .
- Identification ⇒ page 26

Protected by copyright. Copying for private or commercial purposes, in part or in whole, is not permitted unless authorised by AUDI AG. AUDI AG does not guarantee or accept any liability with respect to the correctness of information in this document. Copyright by AUDI AG.

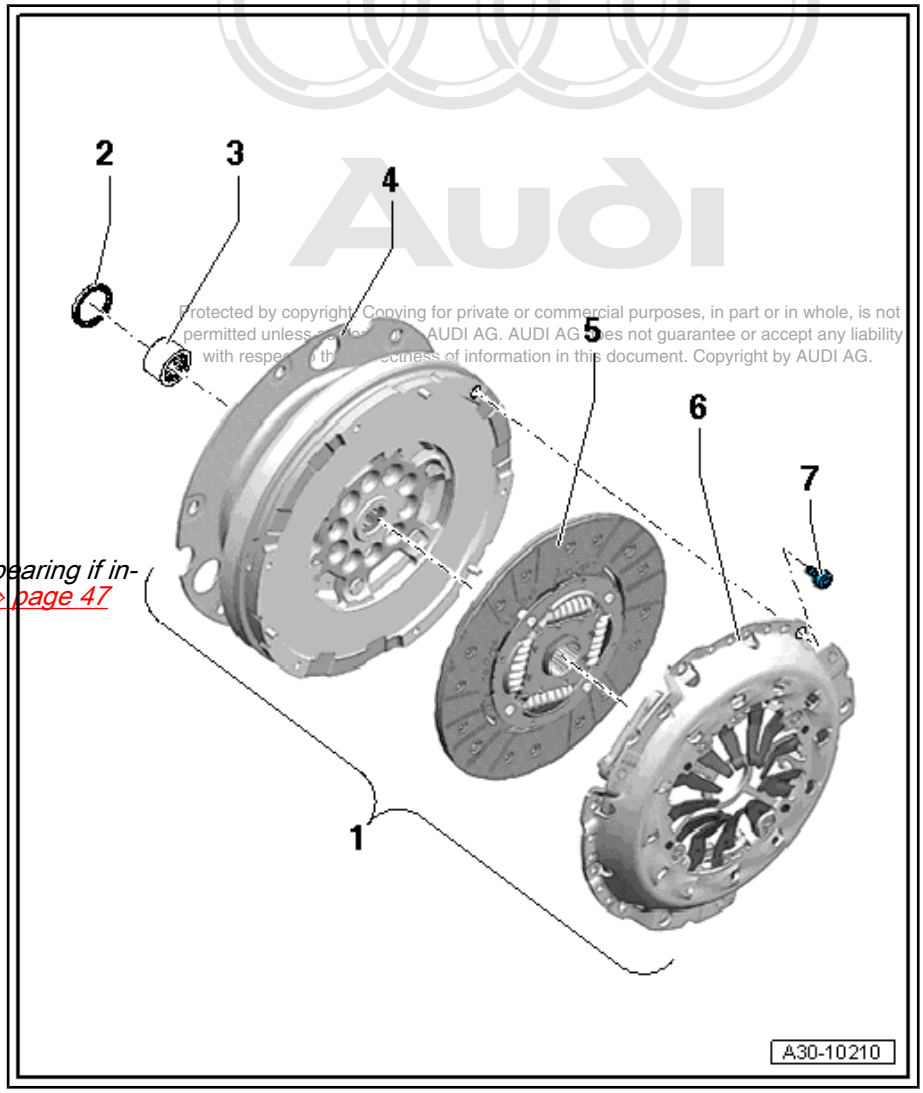

Protected by copyright. Copying for private or commercial purposes, in part or in whole, is not permitted unless ... AUDI AG. AUDI AG ... es not guarantee or accept any liability with respe... th... ...ctness of information in this document. Copyright by AUDI AG.

1 - Clutch module

- ❑ Removing and installing ⇒ page 30

2 - Seal

- ❑ For dual-mass flywheel
- ❑ Pulling out ⇒ page 47
- ❑ Driving in ⇒ page 49

3 - Needle bearing

- ❑ For dual-mass flywheel
- ❑ Pressing out ⇒ page 48
- ❑ Pressing in ⇒ page 48

Note

Always renew needle bearing if input shaft is damaged ⇒ page 47

4 - Dual-mass flywheel

- ❑ With flange for drive plate
- ❑ Ensure that dowel pins fit tightly
- ❑ Contact surface for clutch lining must be free of grooves, oil and grease
- ❑ Different versions with or without centrifugal pendulum absorber ⇒ page 26
- ❑ Removing and installing ⇒ page 35

5 - Clutch plate

- ❑ Removing and installing ⇒ page 35
- ❑ For correct version, refer to ⇒ Electronic parts catalogue
- ❑ If present, marking “Getriebeseite” (gearbox side) faces pressure plate
- ❑ If fitted, coil springs (damper assembly) face towards pressure plate

6 - SAC pressure plate

- ❑ Self-adjusting
- ❑ For correct version, refer to ⇒ Electronic parts catalogue
- ❑ Removing and installing ⇒ page 35
- ❑ Resetting adjuster ring ⇒ page 43
- ❑ Checking pressure plate for distortion ⇒ page 26
- ❑ Checking ends of diaphragm spring ⇒ page 26
- ❑ Checking springs and riveting ⇒ page 27
- ❑ Contact surface for clutch lining must be free of grooves, oil and grease

7 - Bolt

- ❑ Secures pressure plate to dual-mass flywheel
- ❑ Observe assembly instructions ⇒ page 35 for loosening or tightening
- ❑ Renew after removing
- ❑ 22 Nm +90°

Identification: SAC clutch

- Visible adjustment mechanism (adjuster ring with springs)

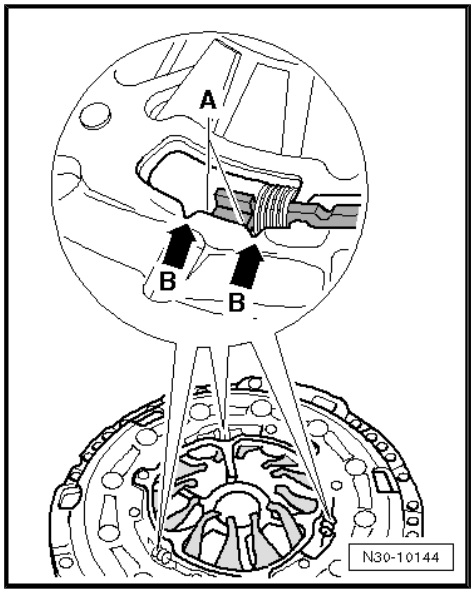

"Clacking" sound in LuK version dual-mass flywheel with centrifugal pendulum absorber

- Depending on version, clutch modules -A- with or without centrifugal pendulum absorbers may be fitted.
- When a clutch module with a centrifugal pendulum absorber is turned by hand, a clacking sound can be heard at intervals of approx. 90°.
- This is caused by a centrifugal pendulum absorber in the dual-mass flywheel and is not a fault.

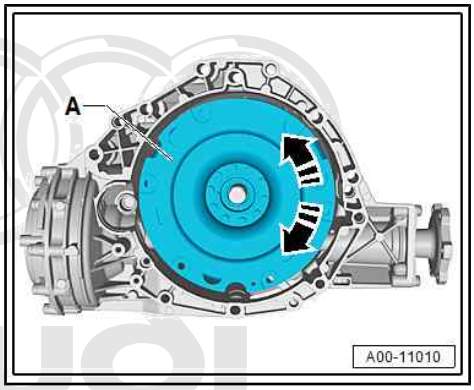

Checking pressure plate for distortion, cracks and burning

A - Straightedge

B - Feeler gauge

- Pressure plate distortion up to 0.8 mm is permissible.

Protected by copyright. Copying for private or commercial purposes, in part or in whole, is not permitted unless authorised by AUDI AG. AUDI AG does not guarantee or accept any liability with respect to the correctness of information in this document. Copyright by AUDI AG.

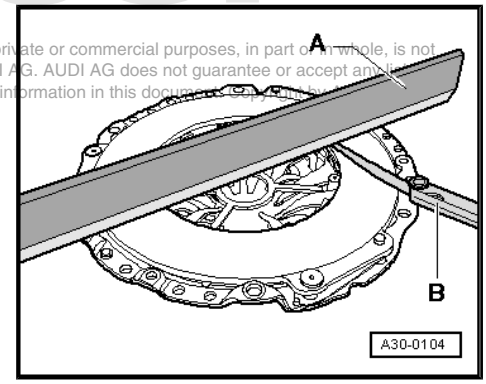

Checking ends of diaphragm spring

- Wear up to 0.3 mm (maximum) is permissible.

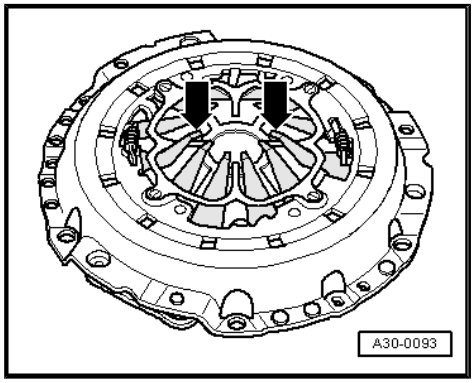

Checking springs and riveting

I - Springs OK

- Slight kinking on the outside -arrows A- is normal on production parts.

II - Springs damaged

- Renew pressure plate if springs are broken or badly bent -arrow B-.

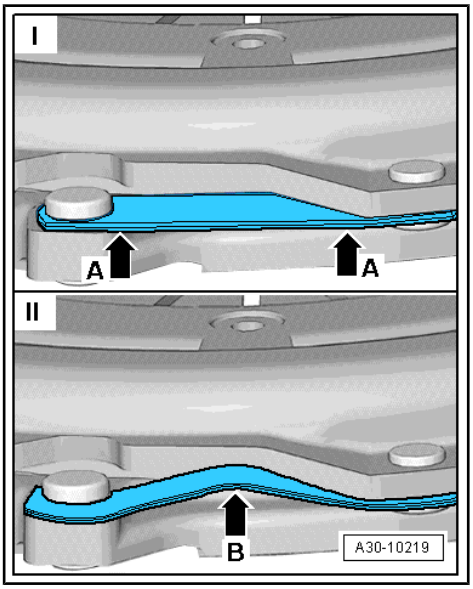

– Check that riveting -arrows B- is secure at all springs -arrows A-.

- Renew pressure plate if rivets -arrows B- are loose.

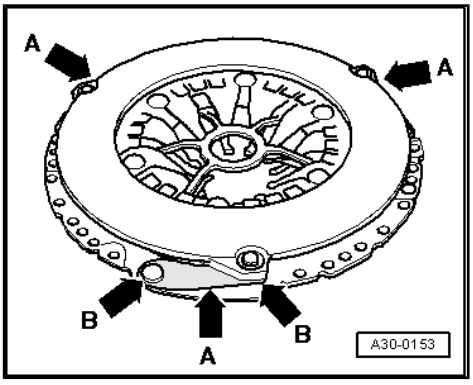

2.2.2 Exploded view - clutch unit, TAC clutch (LuK version)

- Observe notes on clutch ⇒ page 21 .
- Pressure plate and clutch plate can only be renewed together.
- “TAC” stands for “Travel Adjusted Clutch”.
- Identification ⇒ page 29

Protected by copyright. Copying for private or commercial purposes, in part or in whole, is not permitted unless authorised by AUDI AG. AUDI AG does not guarantee or accept any liability with respect to the correctness of information in this document. Copyright by AUDI AG.

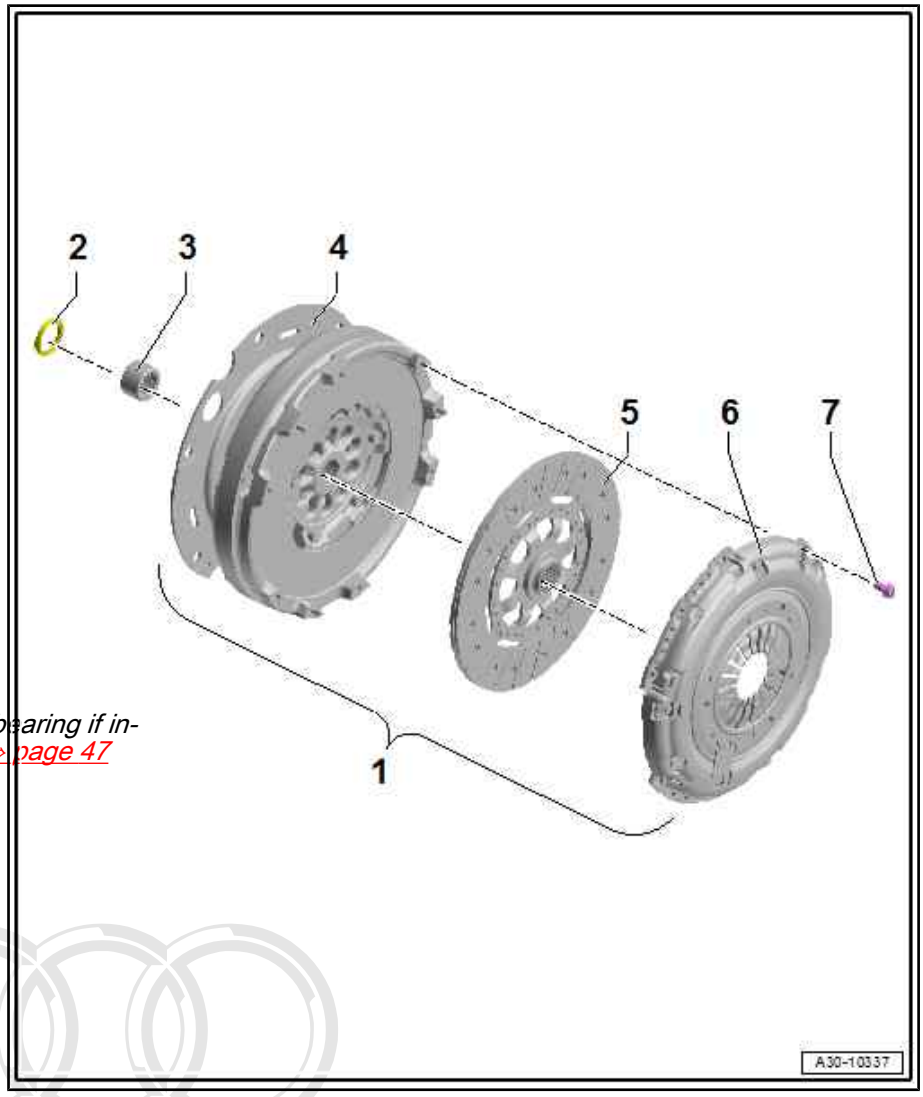

1 - Clutch module

- ❑ Removing and installing ⇒ page 30

2 - Seal

- ❑ For dual-mass flywheel
- ❑ Pulling out ⇒ page 47
- ❑ Driving in ⇒ page 49

3 - Needle bearing

- ❑ For dual-mass flywheel
- ❑ For correct version, refer to ⇒ Electronic parts catalogue
- ❑ Check and renew if necessary ⇒ page 46
- ❑ Pressing out ⇒ page 48
- ❑ Pressing in ⇒ page 48

Note

Always renew needle bearing if input shaft is damaged ⇒ page 47

4 - Dual-mass flywheel

- ❑ With flange for drive plate
- ❑ Ensure that dowel pins fit tightly
- ❑ Contact surface for clutch lining must be free of grooves, oil and grease
- ❑ Removing and installing ⇒ page 35
- ❑ Different versions with or without centrifugal pendulum absorber ⇒ page 29

5 - Clutch plate

- ❑ Removing and installing ⇒ page 35
- ❑ For correct version, refer to ⇒ Electronic parts catalogue
- ❑ Installation position: marking “Getriebeseite” (gearbox side) faces towards pressure plate

Protected by copyright. Copying for private or commercial purposes, in part or in whole, is not permitted unless authorised by AUDI AG. AUDI AG does not guarantee or accept any liability with respect to the correctness of information in this document. Copyright by AUDI AG.

6 - Pressure plate

- ❑ Self-adjusting
- ❑ Identification ⇒ page 29
- ❑ Pressure plate and clutch plate can only be renewed together
- ❑ For correct version, refer to ⇒ Electronic parts catalogue
- ❑ Removing and installing ⇒ page 35
- ❑ Checking pressure plate for distortion ⇒ page 29
- ❑ Checking ends of diaphragm spring ⇒ page 29
- ❑ Checking springs and riveting ⇒ page 30
- ❑ Checking metal ring ⇒ page 30
- ❑ Contact surface for clutch lining must be free of grooves, oil and grease

7 - Bolt

- ❑ Secures pressure plate to dual-mass flywheel
- ❑ Observe assembly instructions ⇒ page 35 for loosening or tightening

- ❑ Renew after removing
- ❑ 22 Nm +90°

"Clacking" sound in LuK version dual-mass flywheel with centrifugal pendulum absorber

- ♦ Depending on version, clutch modules -A- with or without centrifugal pendulum absorbers may be fitted.
- ♦ When a clutch module with a centrifugal pendulum absorber is turned by hand, a clacking sound can be heard at intervals of approx. 90°.
- ♦ This is caused by moving pendulum masses in the dual-mass flywheel and is not a fault.

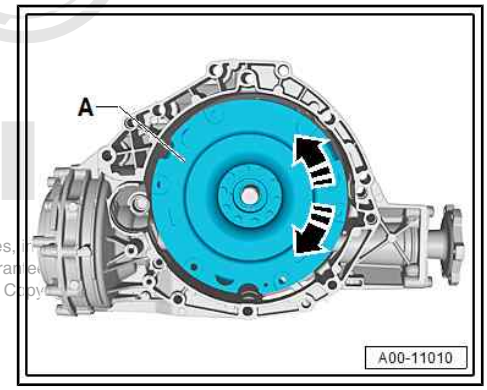

Protected by copyright. Copying for private or commercial purposes, ...
... respect to the correctness of information in this document. Copy...

Identification: "TAC" clutch, LuK version

Pressure plate with adjustment mechanism -1-.

Caution

Risk of damage to clutch

- *Do not turn using opening -2- of adjustment mechanism.*

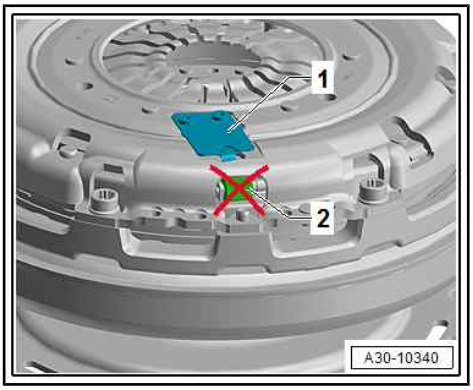

Checking pressure plate for distortion, cracks and burning

A - Straightedge

B - Feeler gauge

- Pressure plate distortion up to 0.8 mm is permissible.

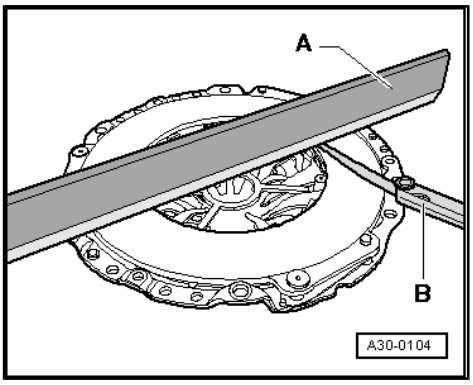

Checking ends of diaphragm spring

- Wear up to 0.3 mm (maximum) is permissible.

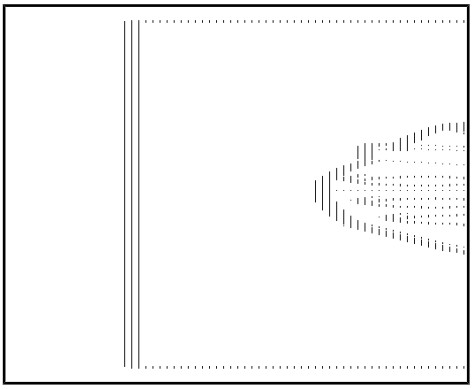

Checking springs and riveting

I - Springs OK

- Slight kinking on the outside -arrows A- is normal on production parts.

II - Springs damaged

- Renew pressure plate if springs are broken or badly bent -arrow B-.

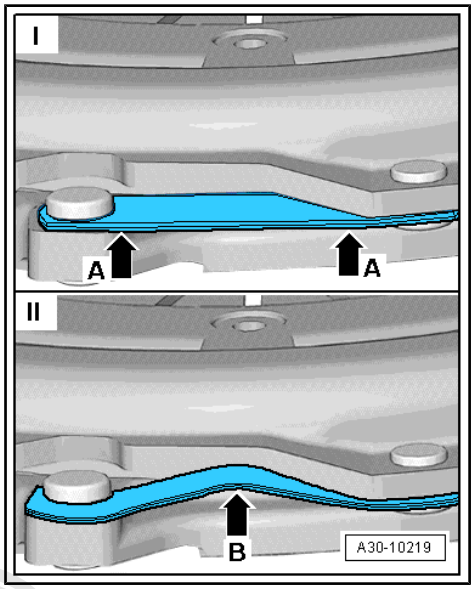

– Check that riveting -arrows B- is secure at all springs -arrows A-.

- Renew pressure plate if rivets -arrows B- are loose.

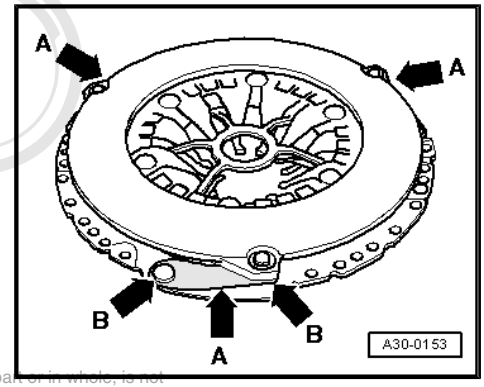

Protected by copyright. Copying for private or commercial purposes, in part or in whole, is not permitted unless authorised by AUDI AG. AUDI AG does not guarantee or accept any liability with respect to the correctness of information in this document. Copyright by AUDI AG.

Checking metal ring

– Check that metal ring in clutch pressure plate -arrow- is not damaged.

- Renew pressure plate if metal ring is broken.

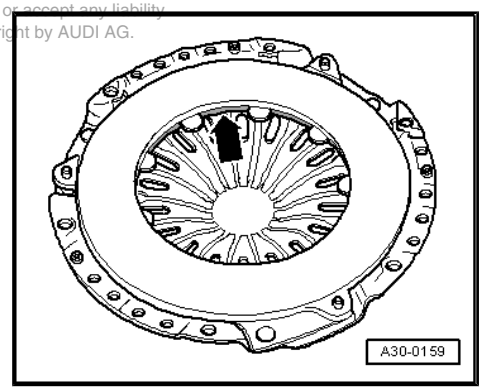

2.3 Removing and installing clutch module

Special tools and workshop equipment required

♦ Extractor - T40176-

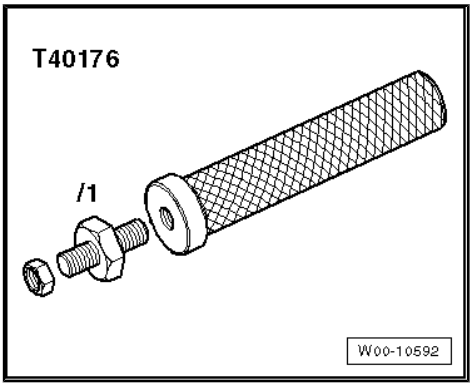

♦ Grease for clutch plate splines ⇒ Electronic parts catalogue

Removing

- Gearbox removed ⇒ 6-speed manual gearbox 0CS, 0DJ, 0CX; Rep. gr. 34 ; Removing and installing gearbox; Removing gearbox
- Gearbox is secured to gearbox support - T40173- with tensioning strap -1-.

– Tilt gearbox to rear with gearbox support - T40173- to prevent gear oil from escaping.

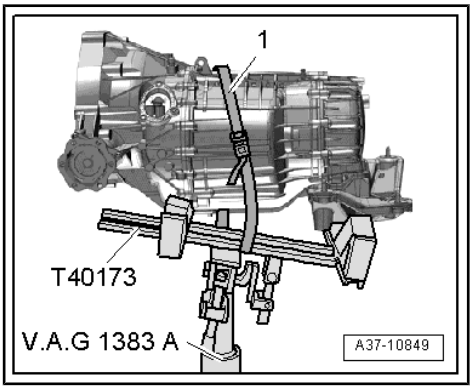

– Remove flange shaft (left-side) -2- ⇒ page 219 .

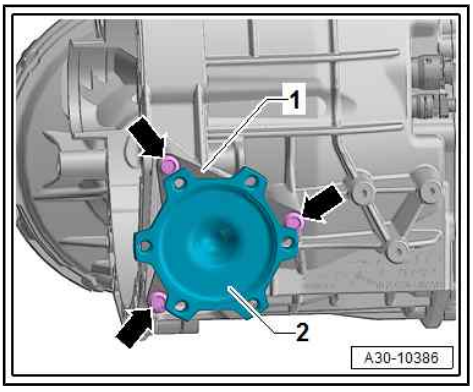

Note

♦ *Depending on version, clutch modules -A- with or without centrifugal pendulum absorbers may be fitted.*

♦ *When a clutch module with a centrifugal pendulum absorber is turned by hand, a clacking sound can be heard at intervals of approx. 90°.*

♦ *This is caused by a centrifugal pendulum absorber in the dual-mass flywheel and is not a fault.*

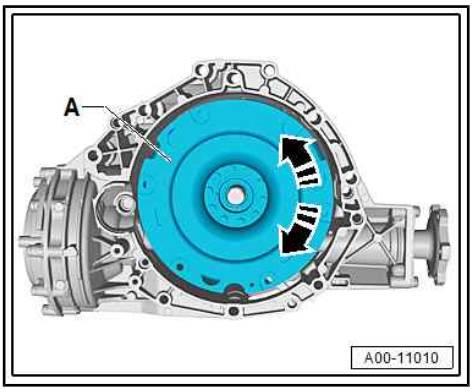

Protected by copyright. Copying for private or commercial purposes, in part or in whole, is not permitted unless authorised by AUDI AG. AUDI AG does not guarantee or accept any liability with respect to the correctness of information in this document. Copyright by AUDI AG.

– Attach extractor - T40176- to clutch module -A- using nut -B- -arrow-.

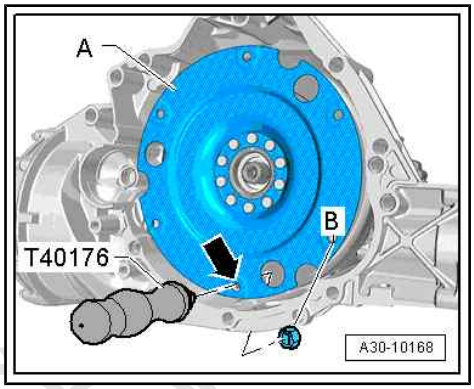

– Turn extractor - T40176- upwards.

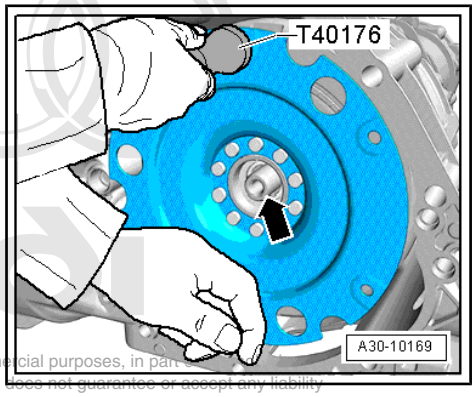

Caution

Risk of damage to oil seals and needle bearing in dual-mass flywheel.

- ***The clutch module weighs approx. 20 kg.***
- ***Keep firm hold of the bottom of the clutch module, as shown in the illustration, to prevent the clutch module from tilting over.***
- ***When removing and installing the clutch module, take care not to damage the oil seals and needle bearing in the dual-mass flywheel -arrow-.***
- ***Renew oil seals or needle bearing if damaged*** ***⇒ page 46*** ***.***

Protected by copyright. Copying for private or commercial purposes, in part, is not permitted unless authorised by AUDI AG. AUDI AG does not guarantee or accept any liability with respect to the correctness of information in this document. Copyright by AUDI AG.

– Pull clutch module off input shaft -arrow-, keeping clutch module straight.

– Place clutch module carefully on a work bench -2- (do not put it down with flange -1- facing downwards).

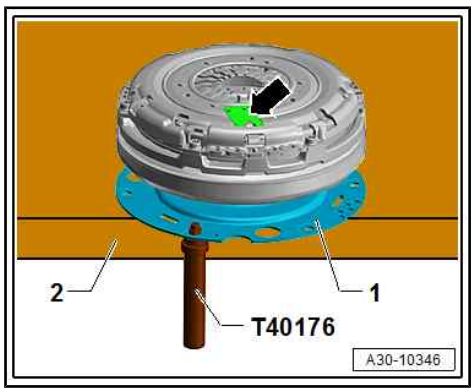

Caution

Risk of damage to adjustment mechanism -arrow- of TAC clutch pressure plate.

Take care not to damage flange -1- for drive plate on dual-mass flywheel.

- ***Do not put down the module with the clutch pressure plate facing downwards; otherwise the adjustment mechanism -arrow- may be damaged.***
- ***Do not put down clutch module with flange -1- for drive plate facing downwards.***
- ***Do not place on extractor - T40176- .***

Installing clutch module

Installation is carried out in reverse order; note the following:

– Thoroughly clean flange shaft (left-side), area of gearbox housing leading to differential -arrow A- and oil seal -arrow B-.

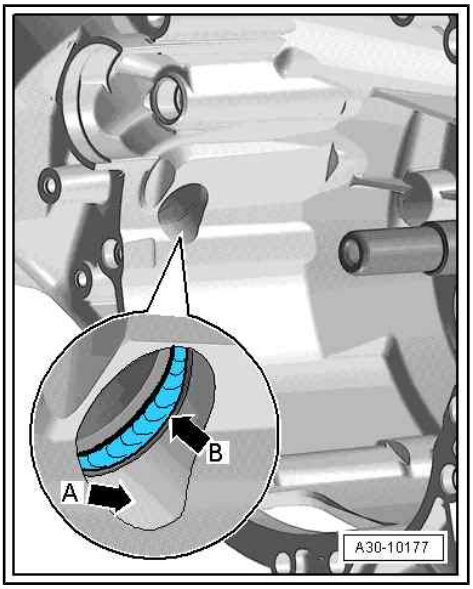

Note

If oil seal between differential and gearbox housing -arrow B- is damaged, it must be renewed ⇒ page 158 .

– Pack space between sealing lip and dust lip -arrow B- half full with sealing grease for oil seals ⇒ Electronic parts catalogue .

– Clean splines and bearing journal of input shaft -arrow-.

– Apply a thin coating of grease for clutch plate splines to splines on input shaft.

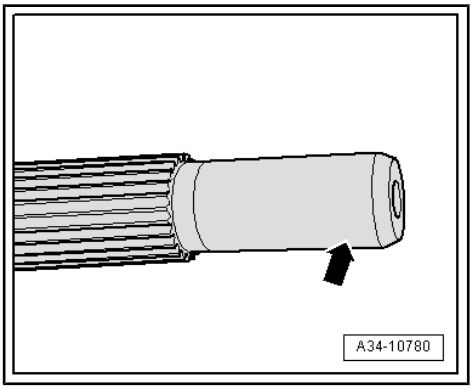

Caution

Before installing clutch module, remove grease from input shaft bearing journal -arrow- as far as splines.

– Carefully slide clutch module onto input shaft -arrow-, taking care to keep clutch module straight.

– Detach extractor - T40176- from clutch module.

– Install flange shaft (left-side) ⇒ page 222 .

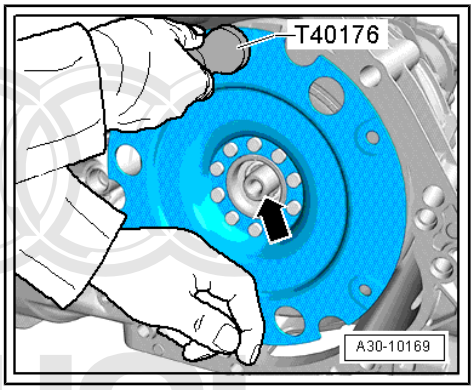

Protected by copyright. Copying for private or commercial purposes, in part or in whole, is not permitted unless authorised by AUDI AG. AUDI AG does not guarantee or accept any liability with respect to the correctness of information in this document. Copyright by AUDI AG.

The following preparations must be made before installing the gearbox:

– Insert assembly aid - T40169- into gearbox housing and clutch module from below, as shown in illustration.

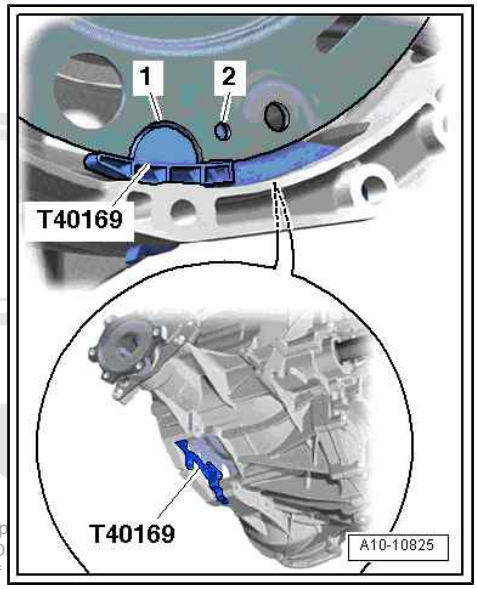

Protected by copyright. Copying for p
permitted unless authorised by AUD
with respect to the correctness of

• The assembly tool - T40169- must engage in the semi-circular recess and in the hole (-arrow A- and -arrow B-).

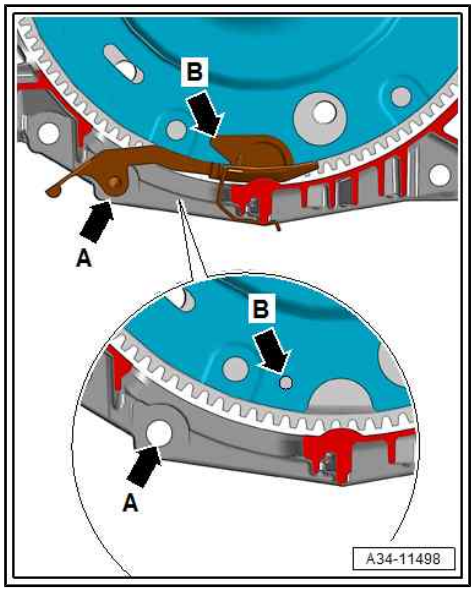

Note

There is only one inspection hole -arrow B- at the periphery; turn the clutch module accordingly.

– Insert transportation lock - T40170- into gearbox housing from below and clamp onto flange shaft -1-.

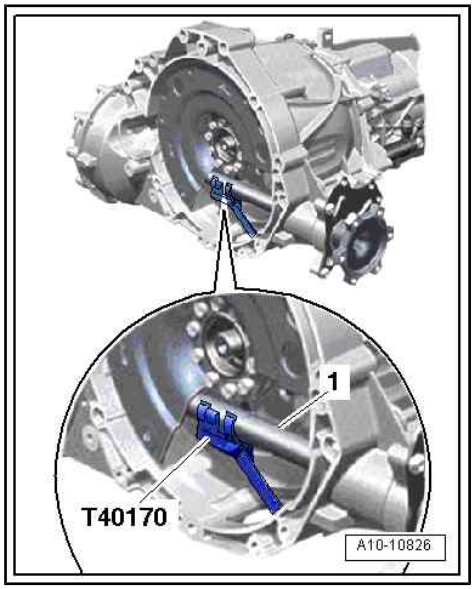

2.4 Removing and installing clutch

⇒ “2.4.1 Removing and installing SAC clutch, LuK version”, page 35

⇒ “2.4.2 Removing and installing clutch unit, LuK version with TAC pressure plate”, page 39

2.4.1 Removing and installing SAC clutch, “LuK” version

Identification: SAC clutch

- Visible adjustment mechanism (adjuster ring with springs)

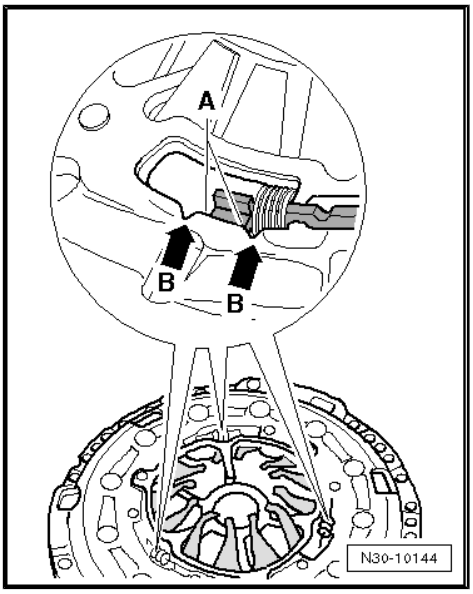

Protected by copyright. Copying for private or commercial purposes, in part or in whole, is not permitted unless authorised by AUDI AG. AUDI AG does not guarantee or accept any liability with respect to the correctness of information in this document. Copyright by AUDI AG.

Special tools and workshop equipment required

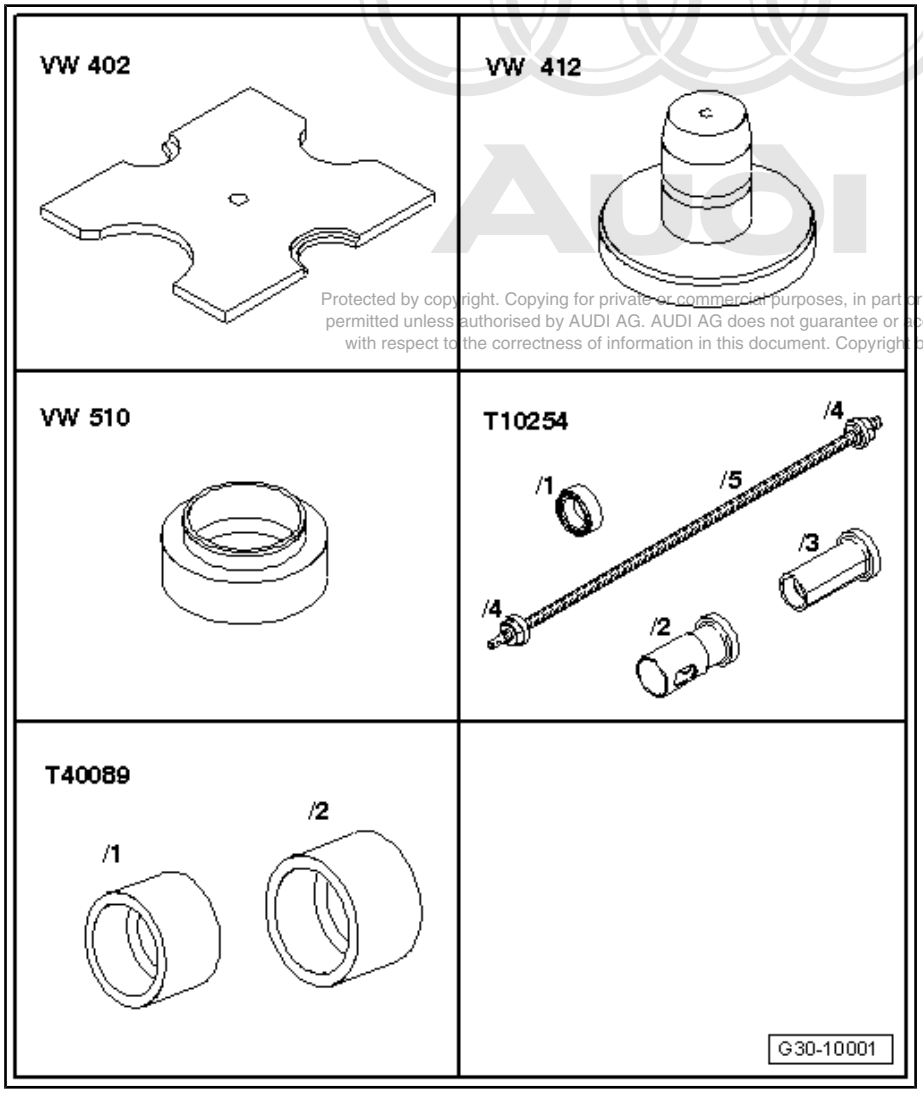

Protected by copyright. Copying for private or commercial purposes, in part or in whole, is not permitted unless authorised by AUDI AG. AUDI AG does not guarantee or accept any liability with respect to the correctness of information in this document. Copyright by AUDI AG.

- Thrust plate - VW 402-
- Press tool - VW 412-
- Thrust pad - VW 510-
- Assembly tool - T10254-
- Thrust piece - T40089-
- Centring mandrel - T40171-

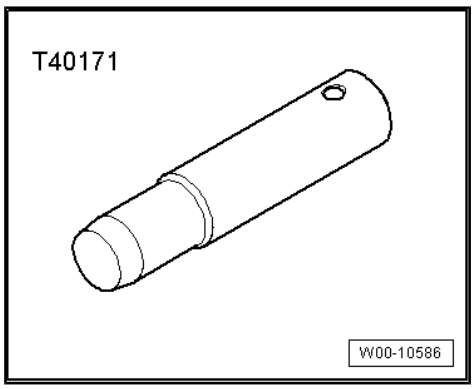

Removing

– Remove clutch module ⇒ page 30 .

3 - Pressure plate

Caution

Take care not to damage pressure plate and dual-mass flywheel.

Pressure plate -3- must be compressed before removing or installing.

If the pressure plate is not compressed, it will become distorted when the bolts -2- are slackened or tightened (causes clutch grab when driving off).

The dual-mass flywheel must rest only on the bearing washer -arrow A- when compressing the pressure plate -3- in the hydraulic press.

If the dual-mass flywheel is supported on the flange for drive plate -1-, the flange will become distorted and the flywheel will thus be damaged. In this case, the dual-mass flywheel will have to be renewed.

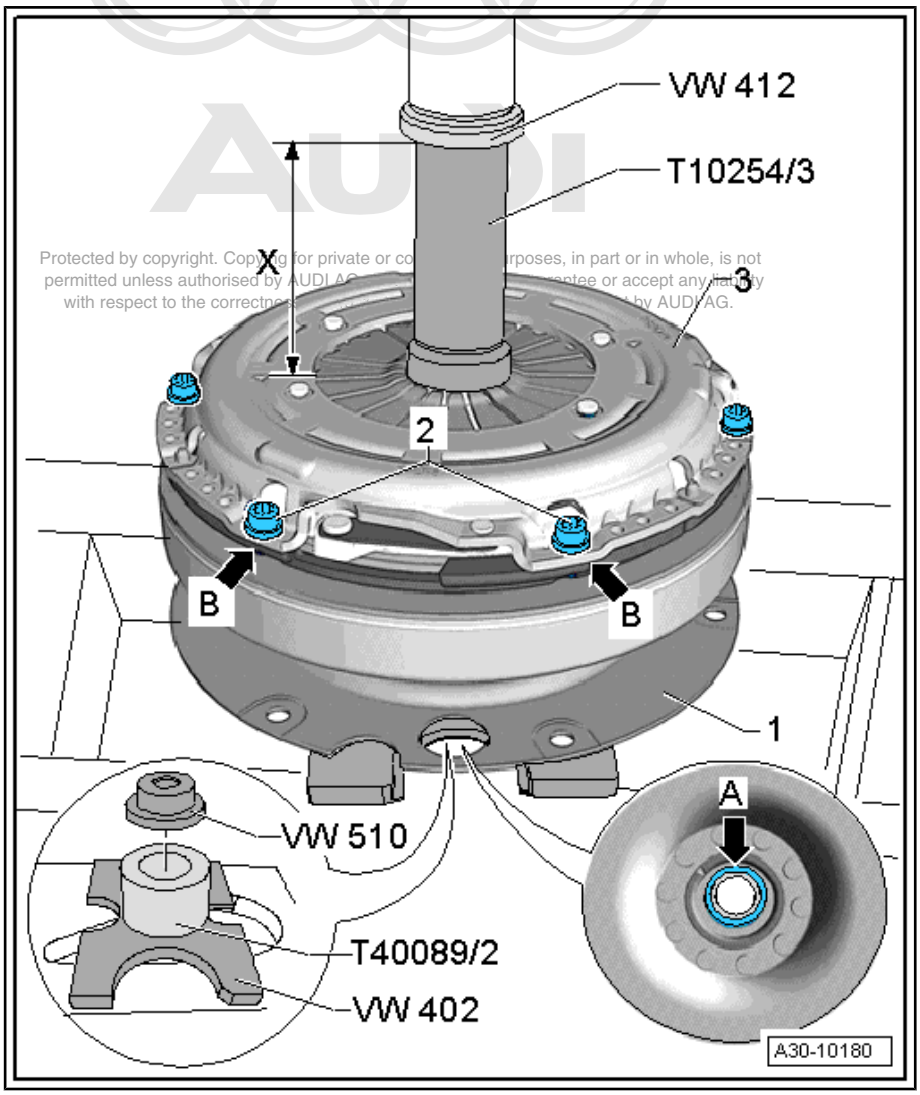

– Position the clutch module so that the thrust pad - VW 510- makes contact with the bearing washer -arrow A- in the dual-mass flywheel.

– Place the assembly tool - T10254/3- on the spring tongues in the diaphragm of the pressure plate -3- and apply the press.

- Distance of travel: dimension -x- = 8 to 9 mm

Note

A second mechanic is required for the next step.

– Remove all 6 bolts -2- and release press.

– Remove pressure plate -3- and clutch plate.

Installing

Installation is carried out in reverse order; note the following:

- Checking clutch pressure plate for distortion ⇒ page 26
- Observe notes on clutch ⇒ page 21 .

– Use centring mandrel - T40171- to centralise clutch plate.

- Installation position of clutch plate: damper assembly (coil springs) or marking “Getriebeseite” (gearbox side) point towards pressure plate.

– Position pressure plate on centring pins.

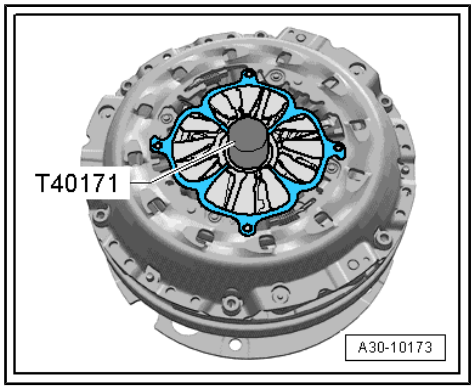

– Position the clutch module so that the thrust pad - VW 510- makes contact with the bearing washer -arrow A- in the dual-mass flywheel.

Protected by copyright. Copying for private or commercial purposes, in part or in whole, is not permitted unless authorised by AUDI AG. AUDI AG does not guarantee or accept any liability with respect to the correctness of information in this document. Copyright by AUDI AG.

1 - Pressure plate

Caution

Take care not to damage dual-mass flywheel.

The dual-mass flywheel -3- must rest only on the bearing washer -arrow A- when compressing the pressure plate -1- in the hydraulic press.

If the dual-mass flywheel is supported on the flange for drive plate -arrow B-, the flange will become distorted and the flywheel will thus be damaged. In this case, the dual-mass flywheel will have to be renewed.

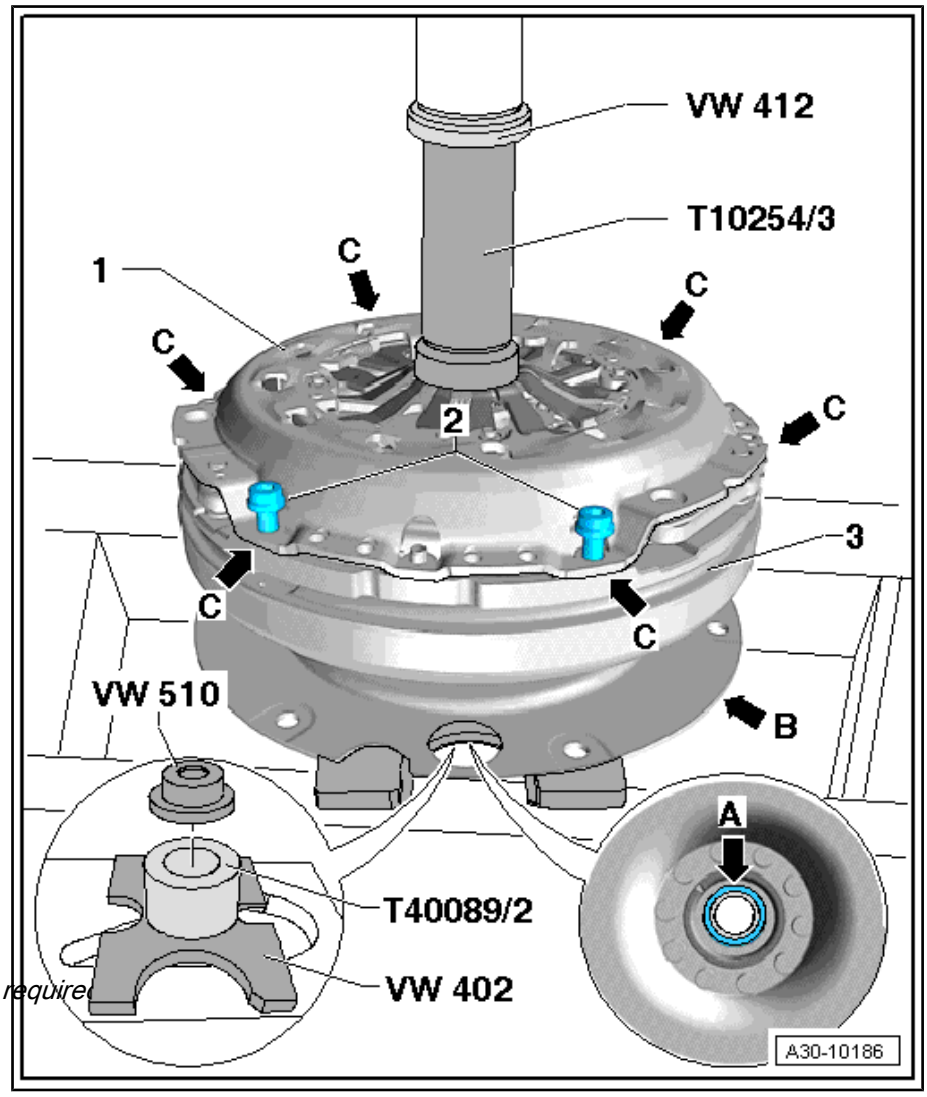

– Place assembly tool - T10254/3- over centring mandrel - T40171- .

– Apply press until pressure plate -1- just makes contact with dual-mass flywheel -3- -arrows C-.

Note

A second mechanic is required for the next step.

– Screw in each of the 6 bolts -2- in succession and tighten to final torque.

– Release press.

– Install clutch module ⇒ page 30 .

Tightening torques

- ⇒ "2.2.1 Exploded view - clutch unit, SAC clutch (LuK version)", page 24

2.4.2 Removing and installing clutch unit, LuK version with TAC pressure plate

Identification: TAC clutch, "LuK" version

Clutch pressure plate with adjustment mechanism -1- and -2-.

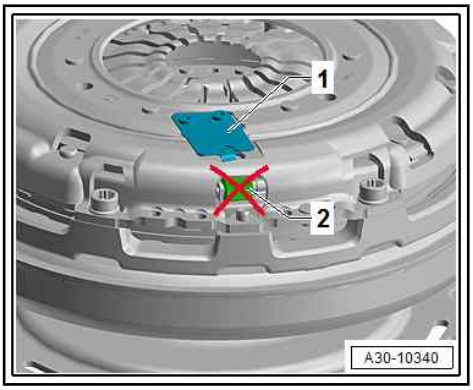

Caution

Risk of damage to clutch

- *Do not turn using opening -2- of adjustment mechanism.*

Special tools and workshop equipment required

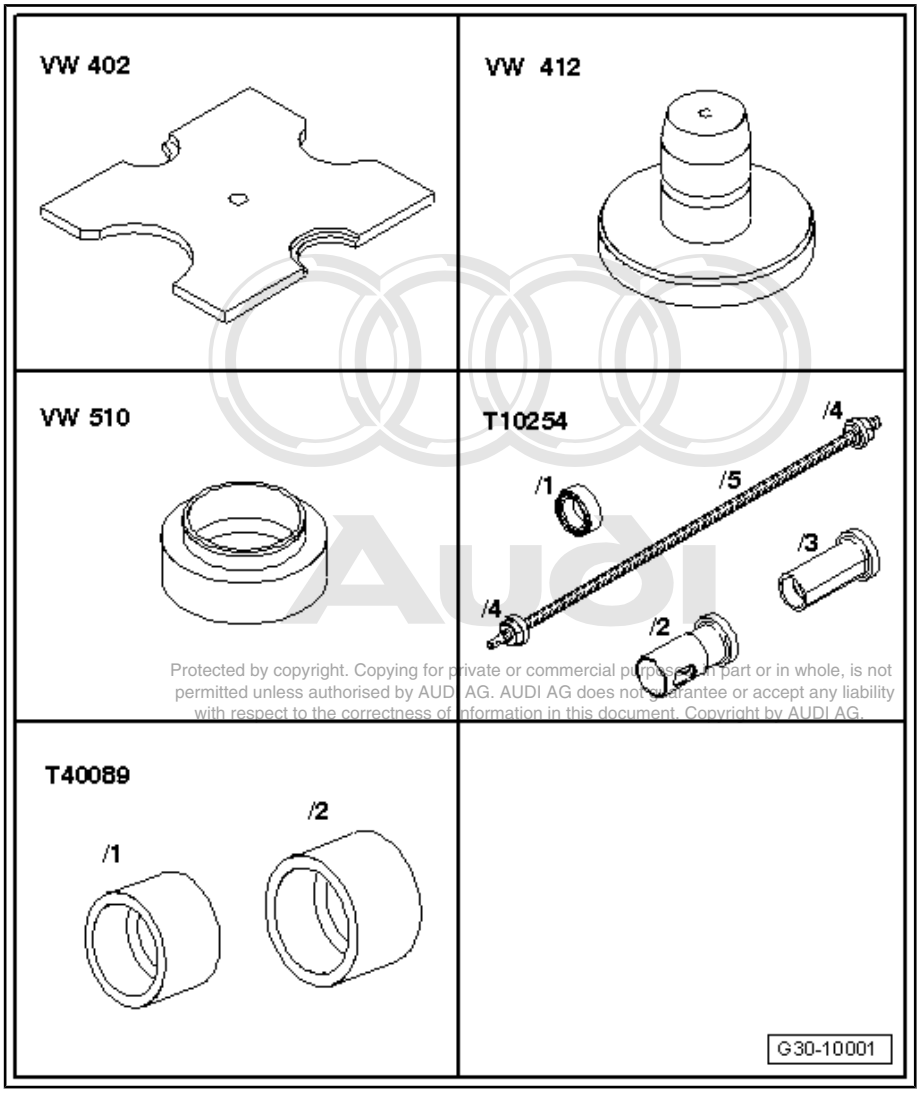

Protected by copyright. Copying for private or commercial purposes, in part or in whole, is not permitted unless authorised by AUDI AG. AUDI AG does not guarantee or accept any liability with respect to the correctness of information in this document. Copyright by AUDI AG.

- Thrust plate - VW 402-
- Press tool - VW 412-

- Thrust pad - VW 510-
- Assembly tool - T10254- is not required
- Thrust piece - T40089-
- Installing ring - 2003/3-

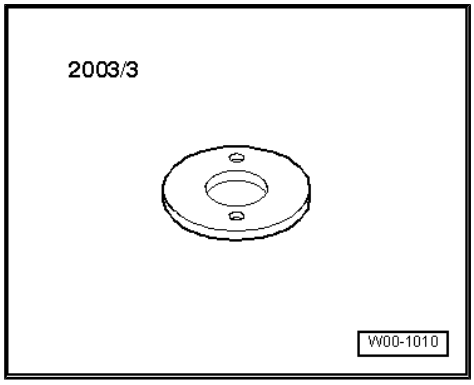

- Fitting sleeve - 3241/4-

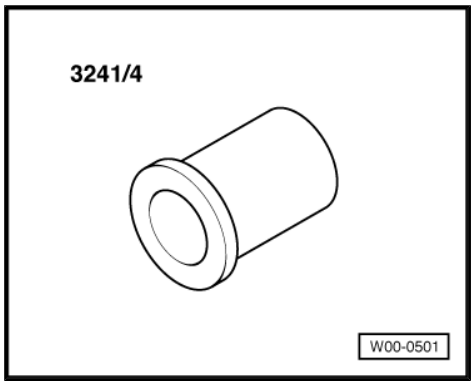

- Centring mandrel - T40171-

Protected by copyright. Copying for private or commercial purposes, in part or in whole, is not permitted unless authorised by AUDI AG. AUDI AG does not guarantee or accept any liability with respect to the correctness of information in this document. Copyright by AUDI AG.

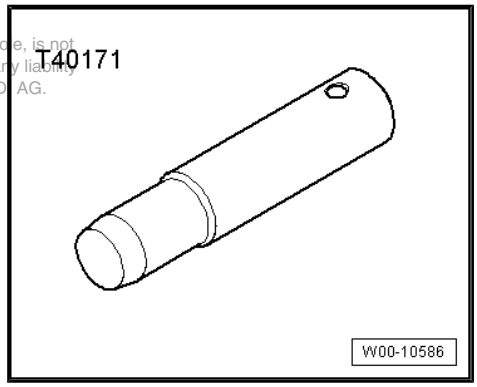

Removing

– Remove clutch module ⇒ page 30 .

3 - Pressure plate

Caution

Take care not to damage pressure plate and dual-mass flywheel.

Pressure plate -3- must be compressed before removing or installing.

If the pressure plate is not compressed, it will become distorted when the bolts -2- are slackened or tightened (causes clutch grab when driving off).

The dual-mass flywheel must rest only on the bearing washer -arrow A- when compressing the pressure plate -3- in the hydraulic press.

If the dual-mass flywheel is supported on the flange for drive plate -1-, the flange will become distorted and the flywheel will thus be damaged. In this case, the dual-mass flywheel will have to be renewed.

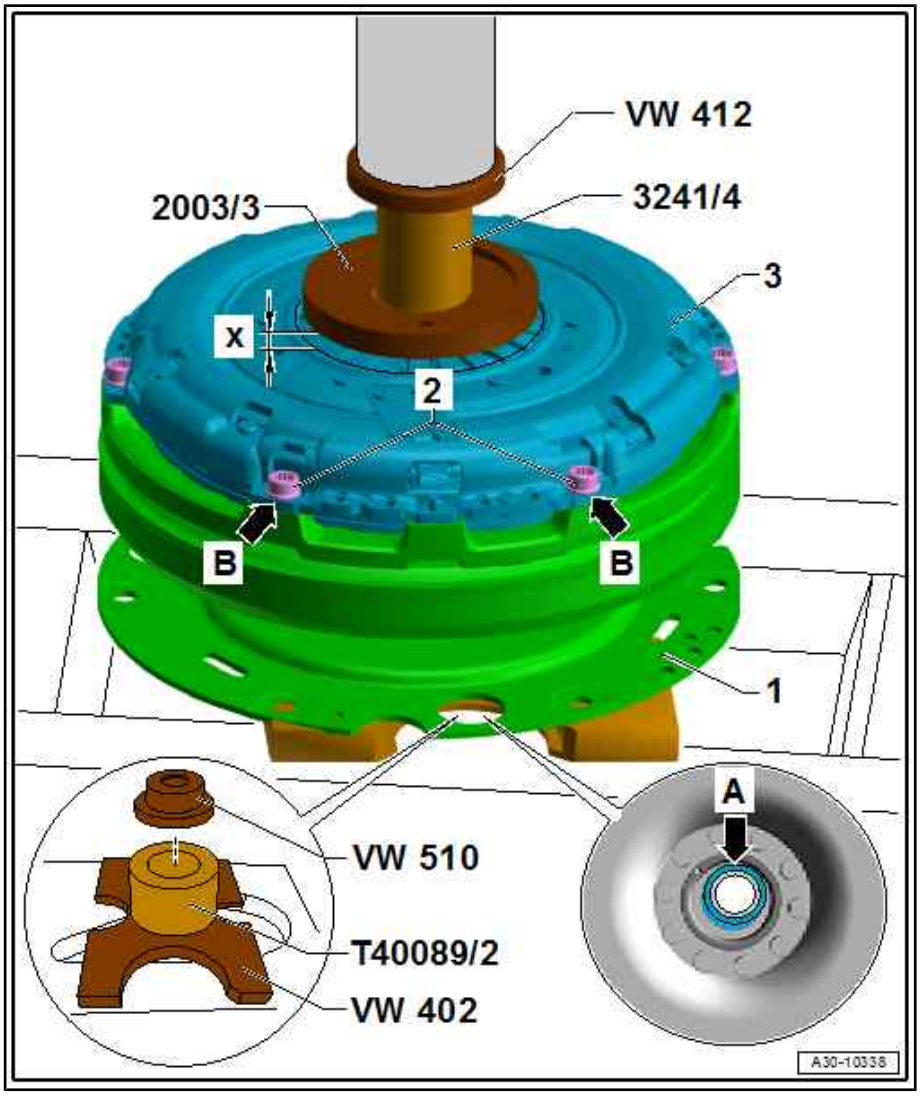

– Position the clutch module so that the thrust pad - VW 510- makes contact with the bearing washer -arrow A- in the dual-mass flywheel.

– Place fitting sleeve - 3241/4- with installing ring - 2003/3- attached on spring tongues in diaphragm of clutch pressure plate -3- and apply press.

- Distance of travel: dimension -x- = 8 to 9 mm

Note

A second mechanic is required for the next step.

– Remove all 6 bolts -2- and release press.

– Remove pressure plate -3- and clutch plate.

Protected by copyright. Copying for private or commercial purposes, in part or in whole, is not permitted unless authorised by AUDI AG. AUDI AG does not guarantee or accept any liability with respect to the correctness of information in this document. Copyright by AUDI AG.

Installing

Installation is carried out in reverse order; note the following:

- Checking clutch pressure plate for distortion ⇒ page 26
- Observe notes on clutch ⇒ page 21 .

– Use centring mandrel - T40171- to centralise clutch plate.

– Position pressure plate on centring pins.

- Installation position of clutch plate: Marking “Getriebeseite” (gearbox side) faces clutch pressure plate.

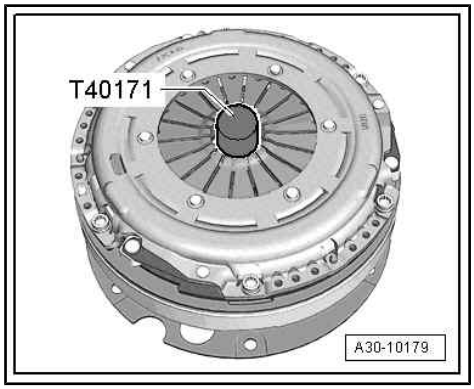

– Position the clutch module so that the thrust pad - VW 510- makes contact with the bearing washer -arrow A- in the dual-mass flywheel.

1 - Pressure plate

> **Caution**
>
> *Take care not to damage dual-mass flywheel. The dual-mass flywheel -3- must rest only on the bearing washer -arrow A- when compressing the pressure plate -1- in the hydraulic press.*
>
> *If the dual-mass flywheel is supported on the flange for drive plate -arrow B-, the flange will become distorted and the flywheel will thus be damaged. In this case, the dual-mass flywheel will have to be renewed.*

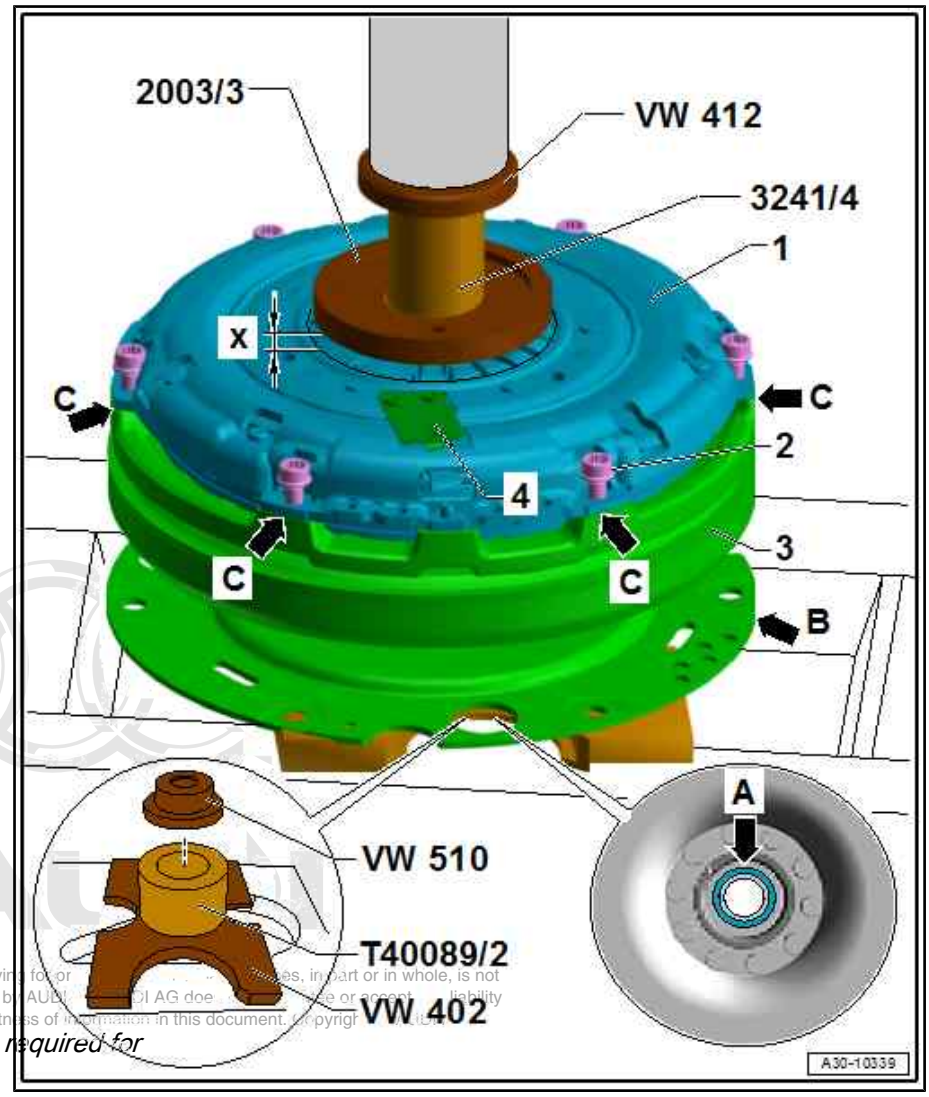

– Place fitting sleeve - 3241/4- with installing ring - 2003/3- attached over centring mandrel - T40171- .

– Apply press until pressure plate -1- just makes contact with dual-mass flywheel -3- -arrows C-.

> **Note**
>
> *A second mechanic is required for the next step.*

Protected by copyright. Copying for or [illegible] es, in part or in whole, is not permitted unless authorised by AUDI [illegible] DI AG doe[illegible] e or accept [illegible] liability with respect to the correctness of information in this document. Copyright [illegible]

– Screw in each of the 6 bolts -2- in succession and tighten to final torque.

– Release press.

– Then apply workshop press two more times.

- Distance of travel: dimension -x- = 8 to 9 mm

Note

Where necessary, this will lift adjustment mechanism -4- and adjust clutch.

– Install clutch module ⇒ page 30 .

Tightening torques

- ⇒ “2.2.2 Exploded view - clutch unit, TAC clutch (LuK version)”, page 27

Protected by copyright. Copying for private or commercial purposes, in part or in whole, is not permitted unless authorised by AUDI AG. AUDI AG does not guarantee or accept any liability with respect to the correctness of information in this document. Copyright by AUDI AG.

2.5 Resetting adjuster ring in SAC pressure plate

Note

- *When fitting a new clutch plate in conjunction with a used pressure plate, the adjuster ring in the pressure plate has to be reset by turning it back as far as it will go. If you do not reset the adjuster ring in the pressure plate, the pressure plate will operate with reduced clamping force, which will cause excessive wear, especially of the clutch plate (clutch will then slip).*
- *If the clutch plate is not renewed, it is not necessary to reset the adjuster ring.*
- *New pressure plates are pre-set accordingly, and do not have to be reset.*

Special tools and workshop equipment required

- Press tool - VW 412-

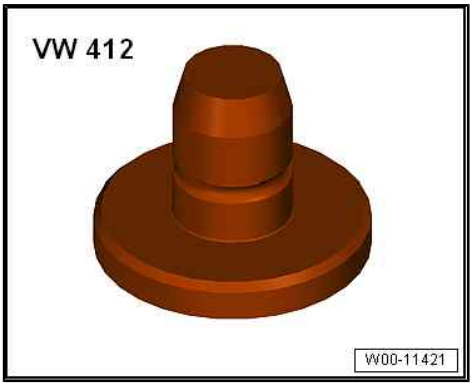

- Thrust pad - 3062-

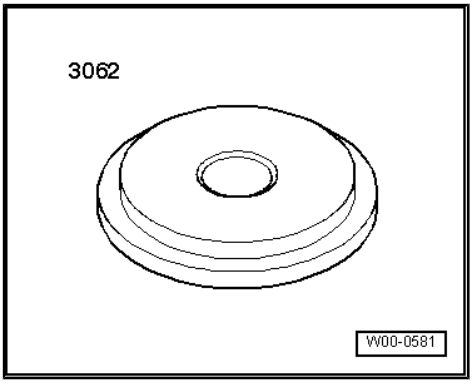

Procedure

– Insert 3 securing bolts for pressure plate -A- into mounting holes on pressure plate at 120° ($^1/_3$ turn) intervals, as shown in illustration.

– Screw 3 M8 nuts -B- onto bolts -A- and tighten nuts slightly.

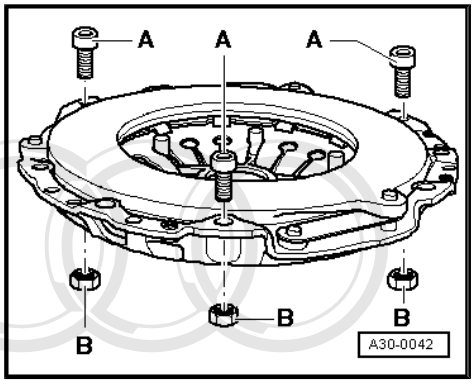

– Place pressure plate on press so that only the 3 bolt heads -arrows- make contact.

– Position thrust pad - 3062- in the centre of the pressure plate.

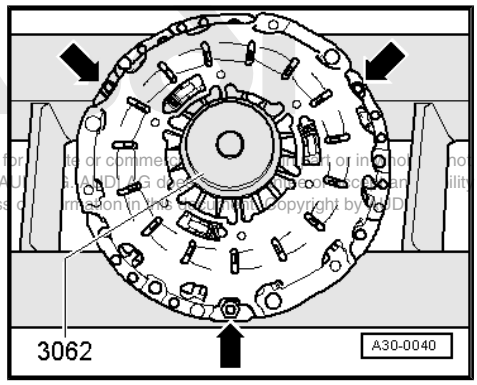

Protected by copyright. Copying for private or commercial purposes, in part or in whole, is not permitted unless authorised by AUDI AG. AUDI AG does not guarantee or accept any liability with respect to the correctness of information in this document. Copyright by AUDI AG.

Do not apply any force when performing the following work, as this could cause the forks on the adjuster ring to break off.

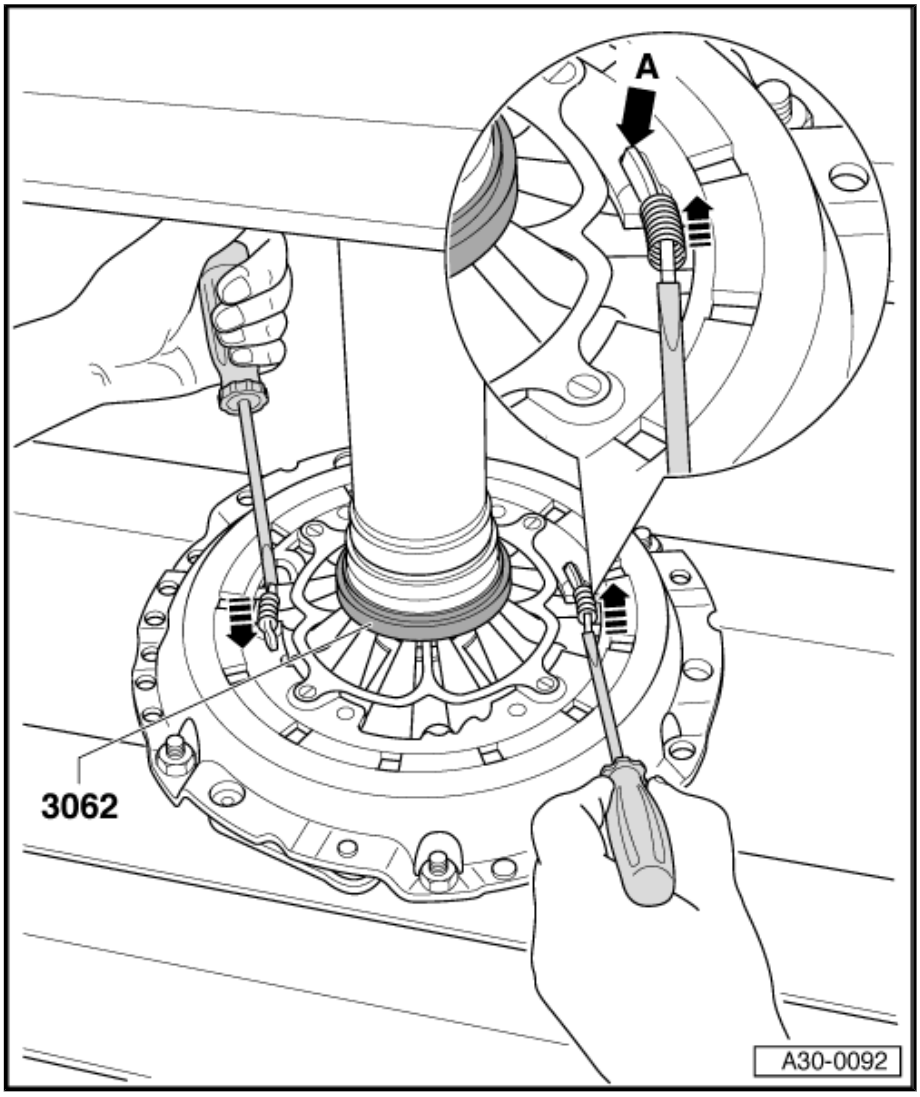

– Apply two screwdrivers to forks on adjuster ring. Use press to apply pressure to pressure plate until it is just possible to move adjuster ring.
– Using both screwdrivers, turn adjuster ring back evenly in direction of -arrows- as far as stop -arrow A-.
– Hold adjuster ring against stop and relieve pressure applied by press so that adjuster ring is held in this position.

Protected by copyright. Copying for private or commercial purposes, in part or in whole, is not permitted unless authorised by AUDI AG. AUDI AG does not guarantee or accept any liability with respect to the correctness of information in this document. Copyright by AUDI AG.

2.6 Renewing needle bearing for dual-mass flywheel

Special tools and workshop equipment required

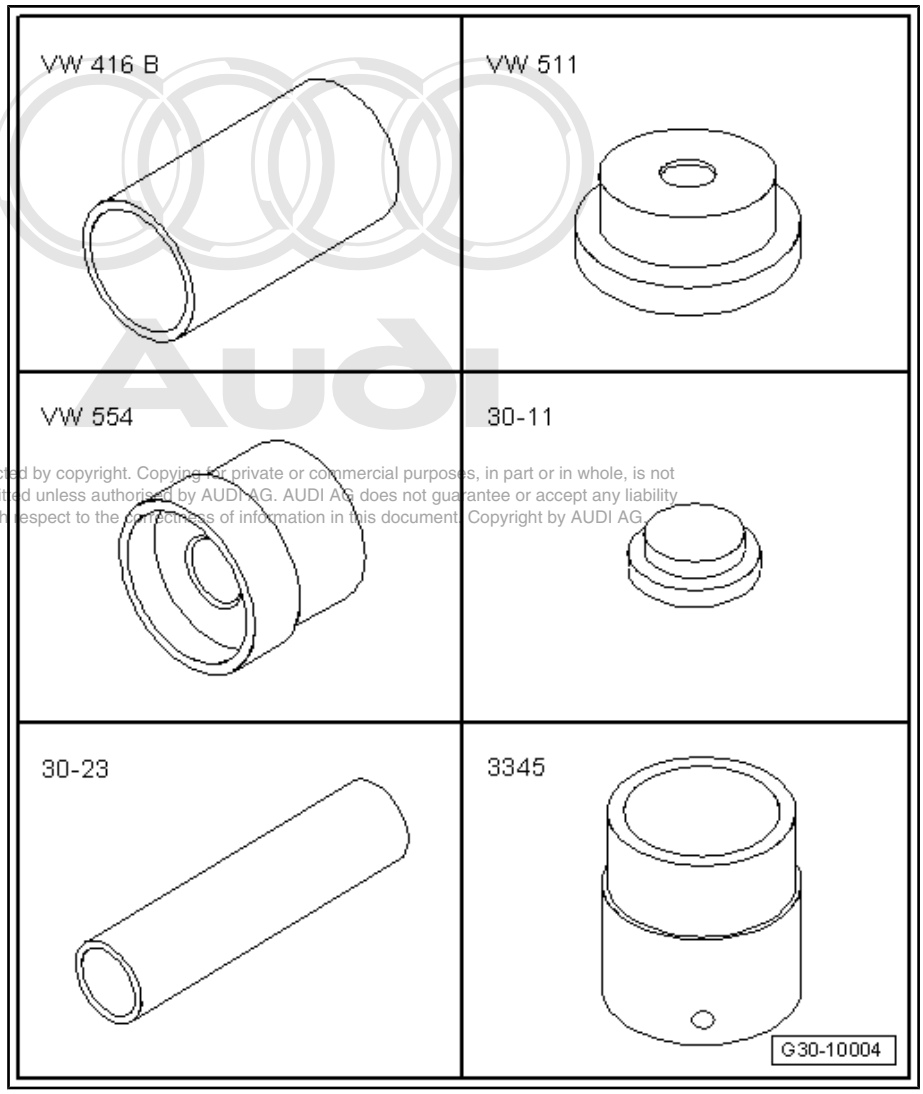

Protected by copyright. Copying for private or commercial purposes, in part or in whole, is not permitted unless authorised by AUDI AG. AUDI AG does not guarantee or accept any liability with respect to the correctness of information in this document. Copyright by AUDI AG.

- Tube - VW 416 B-
- Thrust pad - VW 511-
- Thrust piece - VW 554-
- Thrust plate - 30 - 11-
- Extension - 30 - 23-
- Wheel bearing tube - 3345-

♦ -1- Internal puller - VAS 251 609 (Kukko 21-4)-

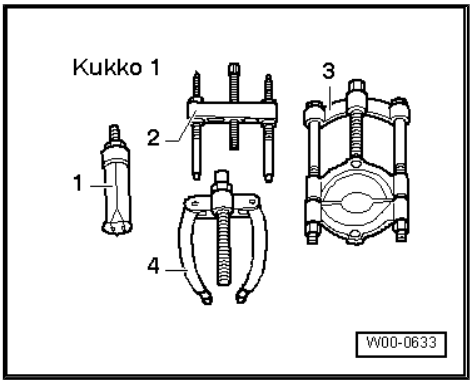

♦ -1- Internal puller - VAS 251 611 (Kukko 21-5)-

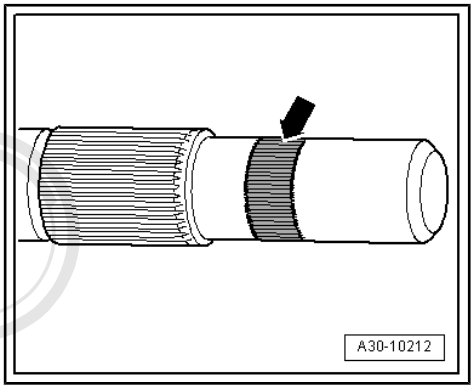

Note

♦ *If there is visible damage on the surface of the input shaft in the vicinity of the needle bearing for the dual-mass flywheel -arrow-, both the input shaft and the needle bearing in the dual-mass flywheel must be renewed.*

♦ *Depending on the version, needle bearings -A- or ball bearings -B- may be fitted in the dual-mass flywheel.*

♦ *For correct version, refer to ⇒ Electronic parts catalogue*

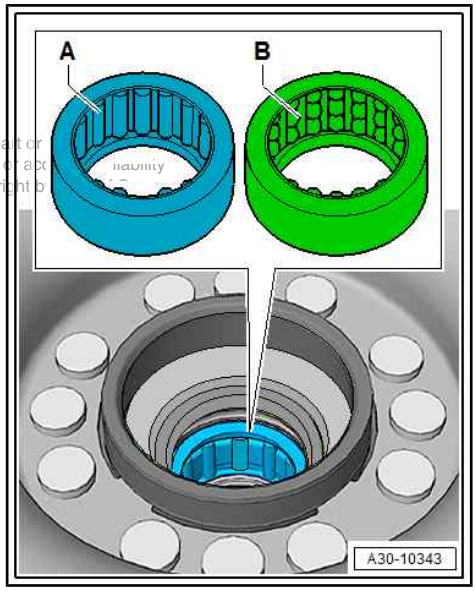

Removing

• Clutch pressure plate with clutch plate removed from dual-mass flywheel ⇒ page 35 .

Removing oil seal from dual-mass flywheel

– Clamp internal puller -A- behind sealing lip of oil seal -B- and pry out oil seal.

A - Internal puller 30 … 37 mm - VAS 251 611 (Kukko 21-5)-

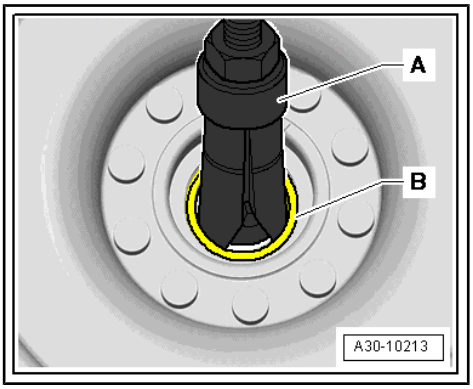

Pressing needle bearing out of dual-mass flywheel

Caution

Take care not to damage dual-mass flywheel.

- *If the dual-mass flywheel is supported on the flange for drive plate -B-, the flange will become distorted and the flywheel will thus be damaged. In this case, the dual-mass flywheel will have to be renewed.*

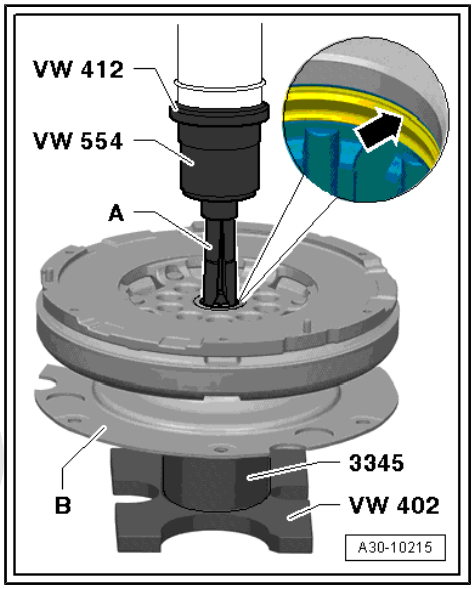

- Always renew the needle bearing when it has been removed from the dual-mass flywheel.

– Remove oil seal from dual-mass flywheel ⇒ page 47 .

– Apply internal puller -A- in area of seal -arrow- in needle bearing and tighten puller.

A - Internal puller 23.5 … 30 mm - VAS 251 609 (Kukko 21-4)-

– Then apply press tool - VW 554- to internal puller and press out needle bearing.

Pressing in needle bearing for dual-mass flywheel (press onto stop)

Protected by copyright. Copying for private or commercial purposes, in part or in whole, is not permitted unless authorised by AUDI AG. AUDI AG does not guarantee or accept any liability with respect to the correctness of information in this document. Copyright by AUDI AG.

Caution

Take care not to damage dual-mass flywheel.

- *The centring pins on the dual-mass flywheel can be damaged when pressing in the needle bearing.*
- *The dual-mass flywheel must always be supported centrally under the bearing mounting for the needle bearing -arrow-.*

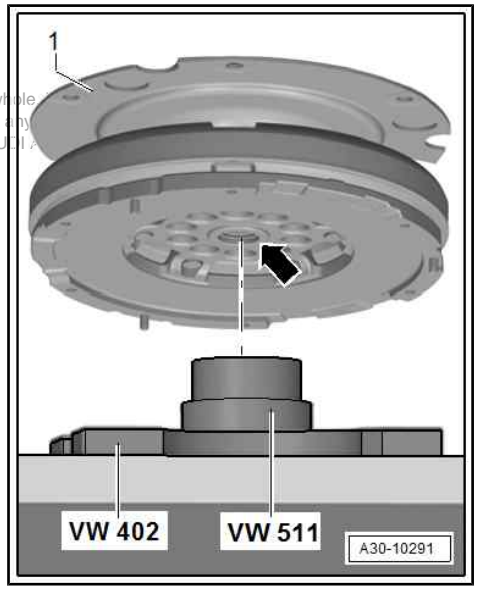

– Remove remaining grease in bore for needle bearing in dual-mass flywheel using a dry cleaning cloth.

Note

Do not use solvent for cleaning bore.

– Support dual-mass flywheel -1- with thrust pad - VW 511- directly below bearing mounting -arrow-.

– Insert smaller diameter of thrust plate - 30 - 11- in needle bearing -A-. Lettering on needle bearing (thicker metal) must face towards thrust plate .

– Carefully press in needle bearing as far as stop.

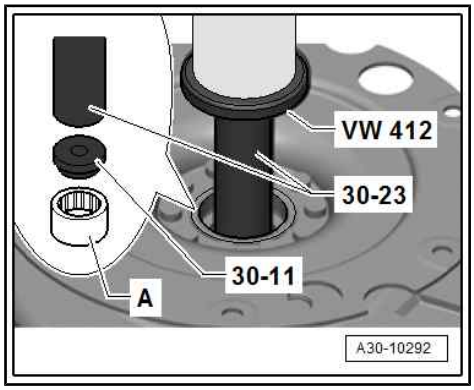

Driving oil seal into dual-mass flywheel (drive in onto stop)

- Needle bearing is installed in dual-mass flywheel.
- Open side of oil seal faces towards needle bearing.

– Carefully drive in seal onto stop.

– Attach clutch pressure plate with clutch plate to dual-mass flywheel ⇒ page 35 .

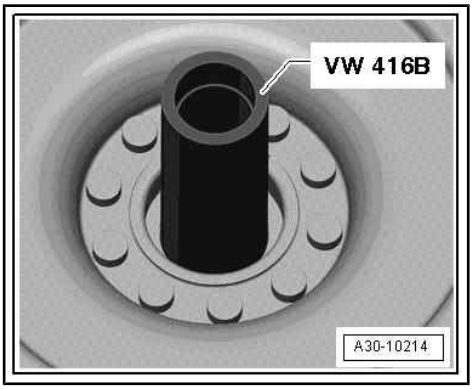

Protected by copyright. Copying for private or commercial purposes, in part or in whole, is not permitted unless authorised by AUDI AG. AUDI AG does not guarantee or accept any liability with respect to the correctness of information in this document. Copyright by AUDI AG.

34 – Controls, housing

1 Transporting gearbox

Special tools and workshop equipment required

- Hook and support tool - 3311-

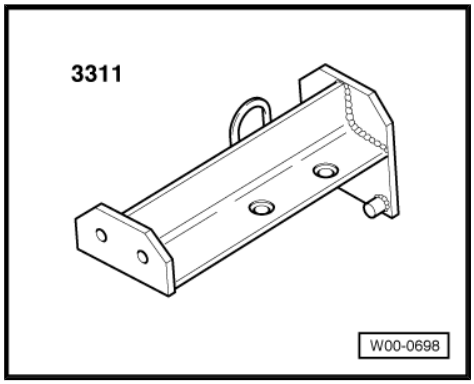

- Workshop hoist - VAS 6100-

Protected by copyright. Copying for private or commercial purposes, in part or in whole, is not permitted unless authorised by AUDI AG. AUDI AG does not guarantee or accept any liability with respect to the correctness of information in this document. Copyright by AUDI AG.

Procedure

– Attach gearbox to hook and support tool - 3311- and secure with bolt -arrow-.

– The workshop hoist - VAS 6100- can be used to lift and move the gearbox.

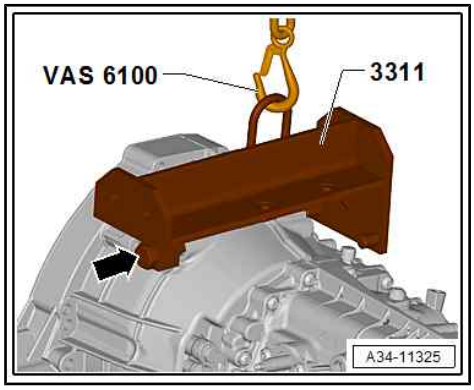

2 Dismantling and assembling gearbox

⇒ “2.1 Schematic overview - gearbox”, page 51

⇒ “2.2.2 Exploded view - gearbox with forced lubrication”, page 55

⇒ “2.3 Exploded view - gear cluster, reverse gear wheel, selector mechanism”, page 58

⇒ “2.4 Exploded view - selector forks”, page 60

⇒ “2.5 Dismantling and assembling gearbox”, page 61

⇒ “2.6 Removing and installing selector shaft”, page 89

2.1 Schematic overview - gearbox

Protected by copyright. Copying for private or commercial purposes, in part or in whole, is not permitted unless authorised by AUDI AG. AUDI AG does not guarantee or accept any liability with respect to the correctness of information in this document. Copyright by AUDI AG.

1 - Clutch module
- ❑ Consists of pressure plate, clutch plate and dual-mass flywheel with flange for drive plate

2 - Gearbox housing

3 - Cover for final drive

4 - Flange shaft (right-side)

5 - Differential
- ❑ With crown wheel

6 - Final drive gear set
- ❑ Pinion shaft with crown wheel/ differential

7 - Pinion shaft

8 - Spur gear drive output gear

9 - Reverse gear

10 - 1st gear

11 - 2nd gear

12 - Gearbox cover

13 - Output shaft

14 - Input shaft (main shaft)

15 - 4th gear

16 - 3rd gear

17 - 6th gear

18 - 5th gear

19 - Reverse gear wheel

20 - Spur gear drive input gear

21 - Flange shaft (left-side)

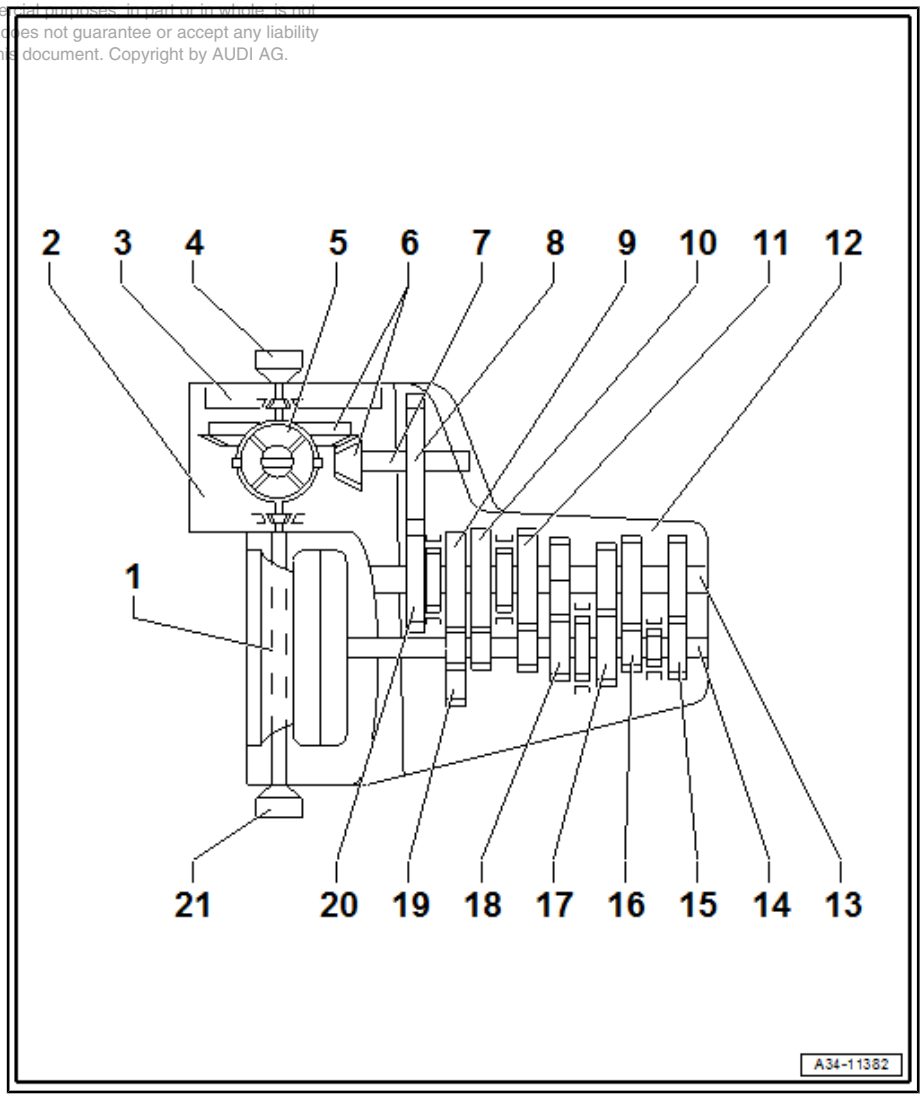

2.2 Exploded view - gearbox

⇒ “2.2.1 Exploded view - gearbox without forced lubrication”, page 52

⇒ “2.2.2 Exploded view - gearbox with forced lubrication”, page 55

2.2.1 Exploded view - gearbox without forced lubrication

Differentiation of manual gearbox with and without forced lubrication ⇒ page 1

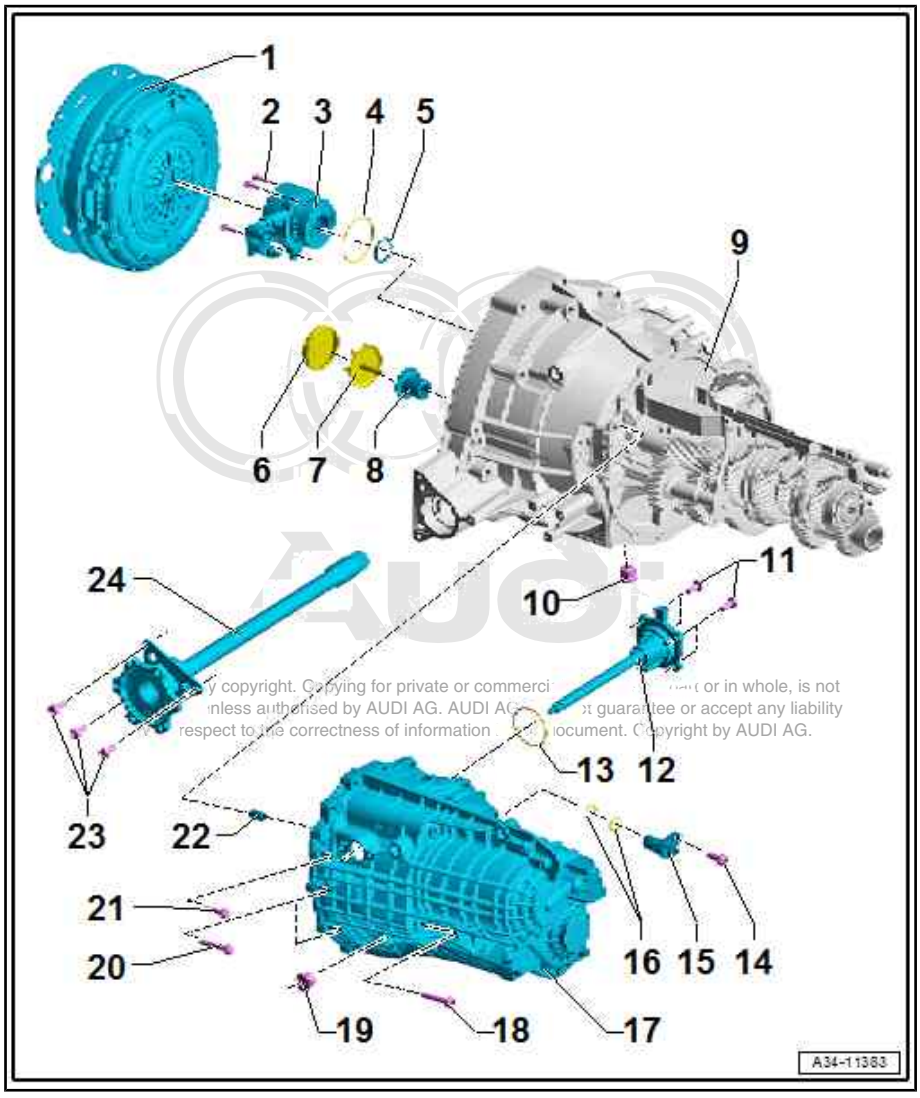

1 - Clutch module

- ❑ Removing and installing ⇒ page 30
- ❑ Servicing ⇒ page 24

2 - Bolt

- ❑ 3x
- ❑ Tightening torque ⇒ page 18

3 - Clutch slave cylinder with release bearing

- ❑ Removing and installing ⇒ page 19

4 - O-ring

- ❑ Renew after removing

5 - Circlip

- ❑ Determining thickness ⇒ page 73
- ❑ Insert in circumferential groove in input shaft

6 - Sealing cap

- ❑ For output shaft
- ❑ Clip onto oil guide
- ❑ Renew after removing
- ❑ Do not use additional lubricant on outer circumference for installation
- ❑ Renewing ⇒ “1.5 Renewing sealing cap for output shaft in gearbox housing”, page 165

7 - Oil guide

- ❑ Clip into sealing cap

8 - Bolt

- ❑ For output shaft
- ❑ Install with locking fluid ; for locking fluid refer to ⇒ Electronic parts catalogue
- ❑ 350 Nm

9 - Gearbox housing

- ❑ With gear cluster (input and output shafts) and selector fork cluster
- ❑ Removing and installing gear cluster (input and output shafts), reverse gear wheel and selector fork cluster ⇒ page 58
- ❑ Servicing gearbox housing ⇒ page 92

...y copyright. Copying for private or commerci... or in whole, is not ...nless authorised by AUDI AG. AUDI AG ...t guarantee or accept any liability ...respect to the correctness of information ...ocument. Copyright by AUDI AG.

- ❑ Removing and installing differential ⇒ page 169

10 - Oil drain plug

- ❑ Tightening torque ⇒ page 94

11 - Bolt

- ❑ Aluminium bolts (M8x22)
- ❑ 4x
- ❑ Renew after removing
- ❑ 8 Nm +60°

12 - Selector shaft with selector mechanism cover

- ❑ Removing and installing ⇒ page 89

13 - O-ring

- ❑ Renew after removing

14 - Bolt

- ❑ Renew after removing
- ❑ 8 Nm +60°

15 - Gear detection sensor - G604-

- ❑ Does not have to be removed when dismantling and assembling gearbox
- ❑ Installation position ⇒ page 54
- ❑ Please refer to installation instructions ⇒ page 54
- ❑ Can be removed and installed with gearbox installed in vehicle ⇒ 6-speed manual gearbox 0CS, 0DJ, 0CX; Rep. gr. 34 ; Selector mechanism

16 - O-rings

- ❑ Renew after removing

17 - Gearbox cover

- ❑ Servicing ⇒ page 94

18 - Bolt

- ❑ Steel bolts (M8x30)
- ❑ 3x
- ❑ Secures bearing mounting to gearbox cover
- ❑ Self-locking
- ❑ Renew after removing
- ❑ 20 Nm +30°

19 - Oil filler plug

- ❑ 45 Nm

Protected by copyright. Copying for private or commercial purposes, in part or in whole, is not permitted unless authorised by AUDI AG. AUDI AG does not guarantee or accept any liability with respect to the correctness of information in this document. Copyright by AUDI AG.

20 - Bolt

- ❑ Aluminium bolts (M8x55)
- ❑ 2x
- ❑ Renew after removing
- ❑ 8 Nm +120°

21 - Bolt

- ❑ Aluminium bolts (M8x40)
- ❑ 14x
- ❑ Renew after removing
- ❑ 8 Nm +120°

22 - Dowel sleeve

- ❑ 2x

23 - Bolt

- ❑ Steel bolts (M8x25)
- ❑ 3x
- ❑ Tightening torque ⇒ Item 1 (page 170)

24 - Flange shaft (left-side)

- ❑ With mounting bracket
- ❑ Removing and installing ⇒ page 219
- ❑ Renewing mounting bracket and ball bearing ⇒ page 225

Installation position of gear detection sensor - G604-

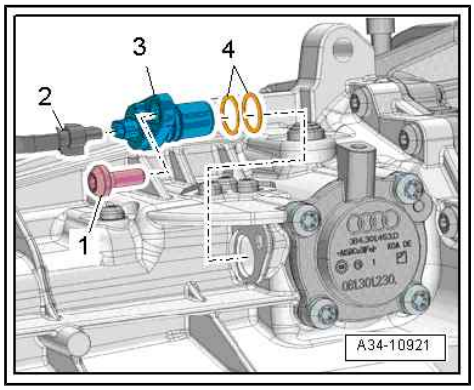

1 - Bolt

2 - Connector

3 - Gear detection sensor

4 - O-rings

Caution

Take care when installing gear detection sensor - G604- : risk of breakage or sensor malfunction

- *Gear detection sensor - G604- -3- must not be knocked into the gearbox or pulled in by tightening bolt -1-.*
- *O-rings -4- and bore in gearbox cover must be lubricated with gear oil.*
- *Gear detection sensor - G604- -3- can be pushed in carefully using a suitable tool, such as a hammer handle.*

Note

The gear detection sensor - G604- can also be removed and installed with the gearbox in the vehicle ⇒ 6-speed manual gearbox 0CS, 0DJ, 0CX; Rep. gr. 34 ; Selector mechanism .

Protected by copyright. Copying for private or commercial purposes, in part or in whole, is not permitted unless authorised by AUDI AG. AUDI AG does not guarantee or accept any liability with respect to the correctness of information in this document. Copyright by AUDI AG.

2.2.2 Exploded view - gearbox with forced lubrication

Differentiation of manual gearbox with and without forced lubrication ⇒ page 1

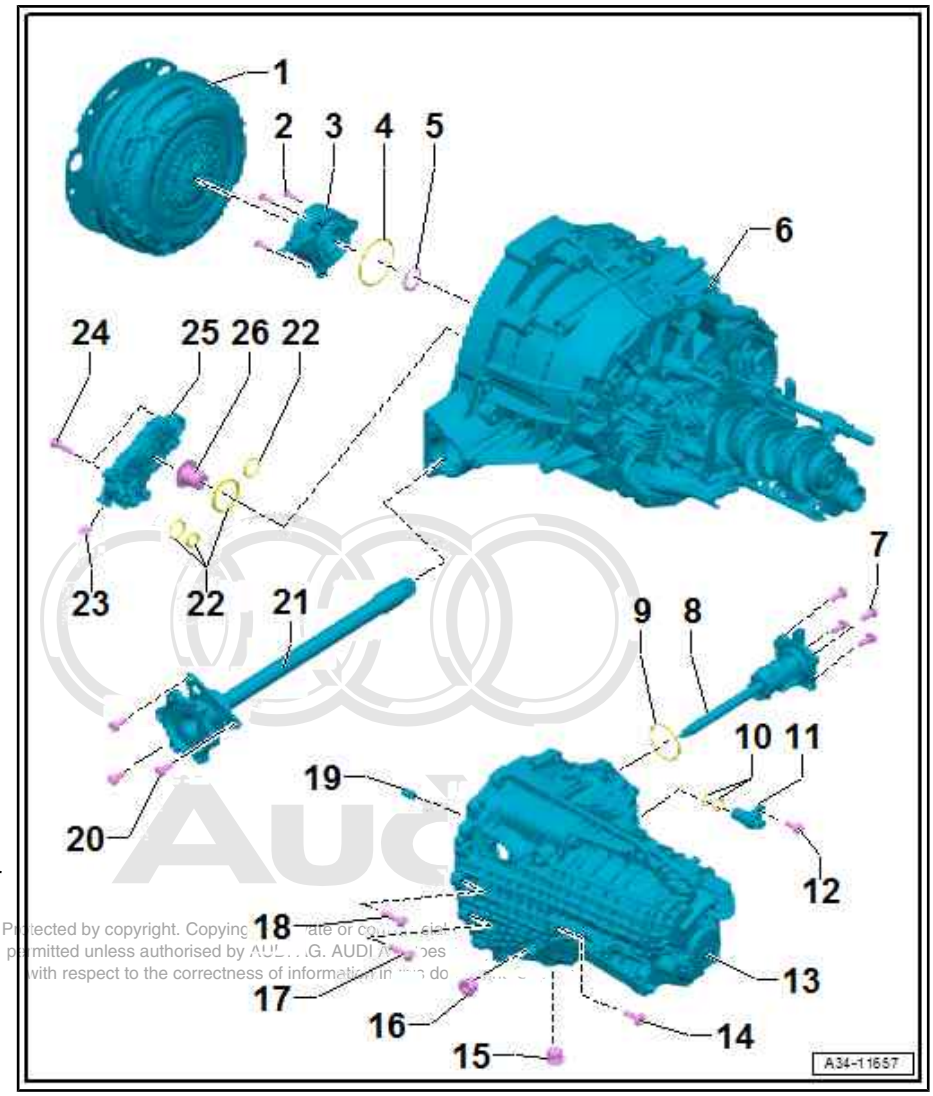

1 - Clutch module

- ❑ Removing and installing ⇒ page 30
- ❑ Servicing ⇒ page 24

2 - Bolts

- ❑ Tightening torque ⇒ page 18

3 - Clutch slave cylinder with release bearing

- ❑ Removing and installing ⇒ page 19

4 - O-ring

- ❑ Renew after removing

5 - Circlip

- ❑ Insert in circumferential groove in input shaft
- ❑ Determining thickness ⇒ page 85

6 - Gearbox housing

- ❑ With gear cluster (input and output shafts) and selector fork cluster
- ❑ Removing and installing gear cluster (input and output shafts), reverse gear wheel and selector fork cluster ⇒ page 59
- ❑ Servicing gearbox housing ⇒ page 92
- ❑ Removing and installing differential ⇒ page 211

7 - Bolts

- ❑ Aluminium bolts (M8x22)
- ❑ Renew after removing
- ❑ 8 Nm +60°

8 - Selector shaft with selector mechanism cover

- ❑ Removing and installing ⇒ page 89

9 - O-ring

- ❑ Renew after removing

10 - O-rings

- ❑ Renew after removing

11 - Gear detection sensor - G604-

- ❑ Does not have to be removed when dismantling and assembling gearbox
- ❑ Installation position ⇒ page 54
- ❑ Please refer to installation instructions ⇒ page 54
- ❑ Can be removed and installed with gearbox installed in vehicle ⇒ 6-speed manual gearbox 0CS, 0DJ, 0CX; Rep. gr. 34 ; Selector mechanism

Protected by copyright. Copying ... permitted unless authorised by AUDI ... AUDI ... with respect to the correctness of information in ...

12 - Bolt

- ❑ Renew after removing
- ❑ 8 Nm +60°

13 - Gearbox cover

- ❑ Servicing ⇒ page 103

14 - Bolt

- ❑ Steel bolts (M8x30)
- ❑ 3x
- ❑ Secures bearing mounting to gearbox cover
- ❑ Self-locking
- ❑ Renew after removing
- ❑ 20 Nm +30°

15 - Oil drain plug

- ❑ Tightening torque ⇒ page 94

16 - Oil filler plug

- ❑ 45 Nm

17 - Bolt

- ❑ Aluminium bolts (M8x55)
- ❑ 2x
- ❑ Renew after removing
- ❑ 8 Nm +120°

18 - Bolt

- ❑ Aluminium bolts (M8x40)
- ❑ 15x
- ❑ Renew after removing
- ❑ 8 Nm +120°

19 - Dowel sleeve

- ❑ 2x

20 - Bolt

- ❑ Steel bolts (M8x25)
- ❑ 3x
- ❑ Tightening torque ⇒ Item 1 (page 170)

Protected by copyright. Copying for private or commercial purposes, in part or in whole, is not permitted unless authorised by AUDI AG. AUDI AG does not guarantee or accept any liability with respect to the correctness of information in this document. Copyright by AUDI AG.

21 - Flange shaft (left-side)

- ❑ With mounting bracket
- ❑ Removing and installing ⇒ page 219
- ❑ Renewing mounting bracket and ball bearing ⇒ page 225

22 - O-rings

- ❑ For gear oil pump
- ❑ Renew after removing
- ❑ Allocation ⇒ page 119

23 - Bolt

- ❑ For pressure test connection for checking operation at manufacturer
- ❑ Gear oil runs into clutch housing when bolt is unscrewed
- ❑ Renew after removing
- ❑ Tightening torque ⇒ page 119

24 - Bolt

- ❑ Aluminium bolts (M8x40)

- ❑ 5x
- ❑ Renew after removing
- ❑ Tightening torque and sequence ⇒ page 119

25 - Gear oil pump

- ❑ Removing and installing ⇒ page 120

26 - Bolt

- ❑ For output shaft
- ❑ Drives gear oil pump
- ❑ Install with locking fluid ; for locking fluid refer to ⇒ Electronic parts catalogue
- ❑ 350 Nm

Protected by copyright. Copying for private or commercial purposes, in part or in whole, is not permitted unless authorised by AUDI AG. AUDI AG does not guarantee or accept any liability with respect to the correctness of information in this document. Copyright by AUDI AG.

2.3 Exploded view - gear cluster, reverse gear wheel, selector mechanism

⇒ “2.3.1 Exploded view - gear cluster, reverse gear wheel, selector mechanism, gearbox without forced lubrication”, page 58

⇒ “2.3.2 Exploded view - gear cluster, reverse gear wheel, selector mechanism, gearbox with forced lubrication”, page 59

2.3.1 Exploded view - gear cluster, reverse gear wheel, selector mechanism, gearbox without forced lubrication

1 - Gearbox housing

- ❑ With differential and pinion shaft

2 - Oil collector (top)

- ❑ Clipped into bearing mounting and opening in gearbox housing

3 - Magnet

- ❑ Clean

4 - Gear cluster

- ❑ Consists of input and output shafts with selector fork cluster
- ❑ Dismantling and assembling ⇒ page 122

5 - Reverse gear wheel

- ❑ With reverse shaft
- ❑ Exploded view - reverse gear wheel ⇒ page 59

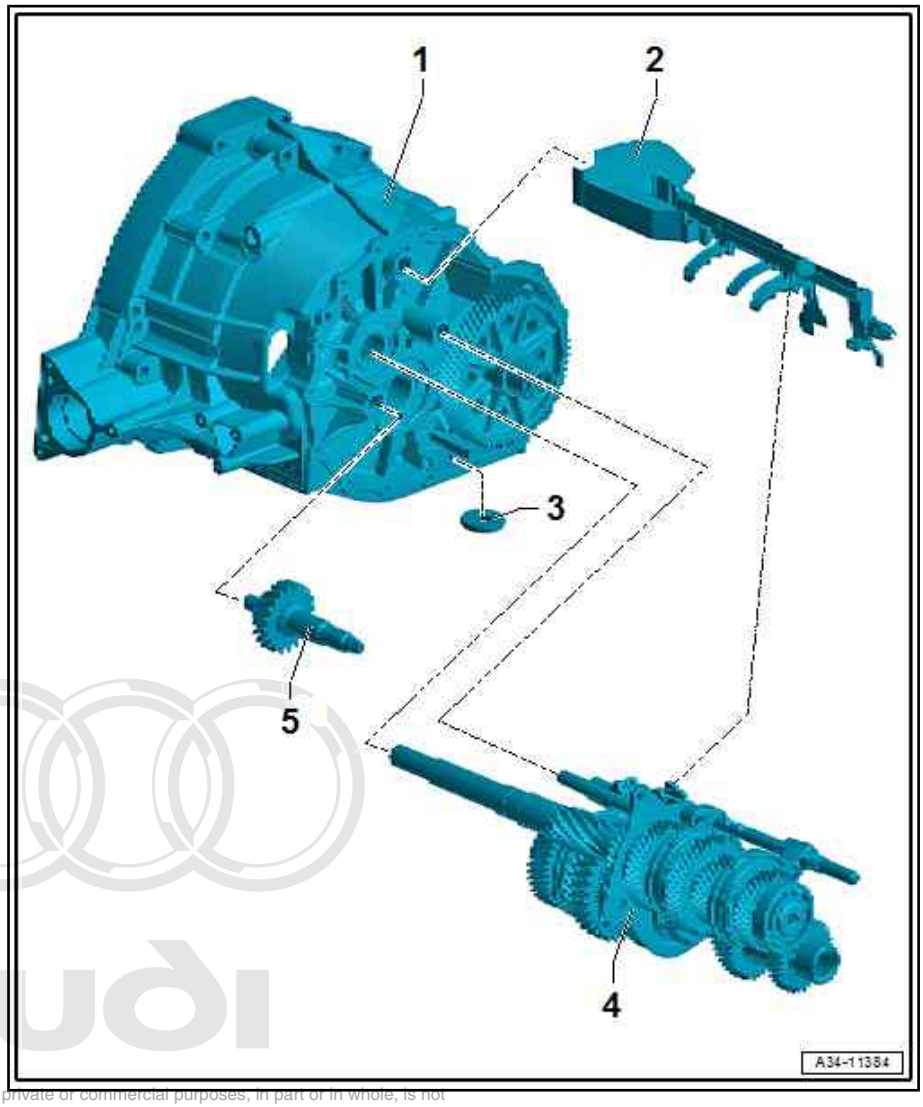

Protected by copyright. Copying for private or commercial purposes, in part or in whole, is not permitted unless authorised by AUDI AG. AUDI AG does not guarantee or accept any liability with respect to the correctness of information in this document. Copyright by AUDI AG.

Exploded view - reverse gear wheel

1 - Thrust washer

2 - Reverse gear wheel: Collar points towards gearbox housing.

3 - Needle bearing

4 - Reverse shaft

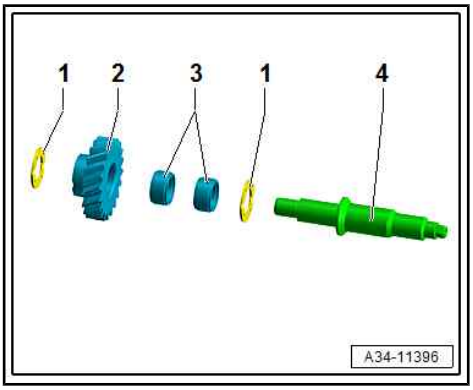

2.3.2 Exploded view - gear cluster, reverse gear wheel, selector mechanism, gearbox with forced lubrication

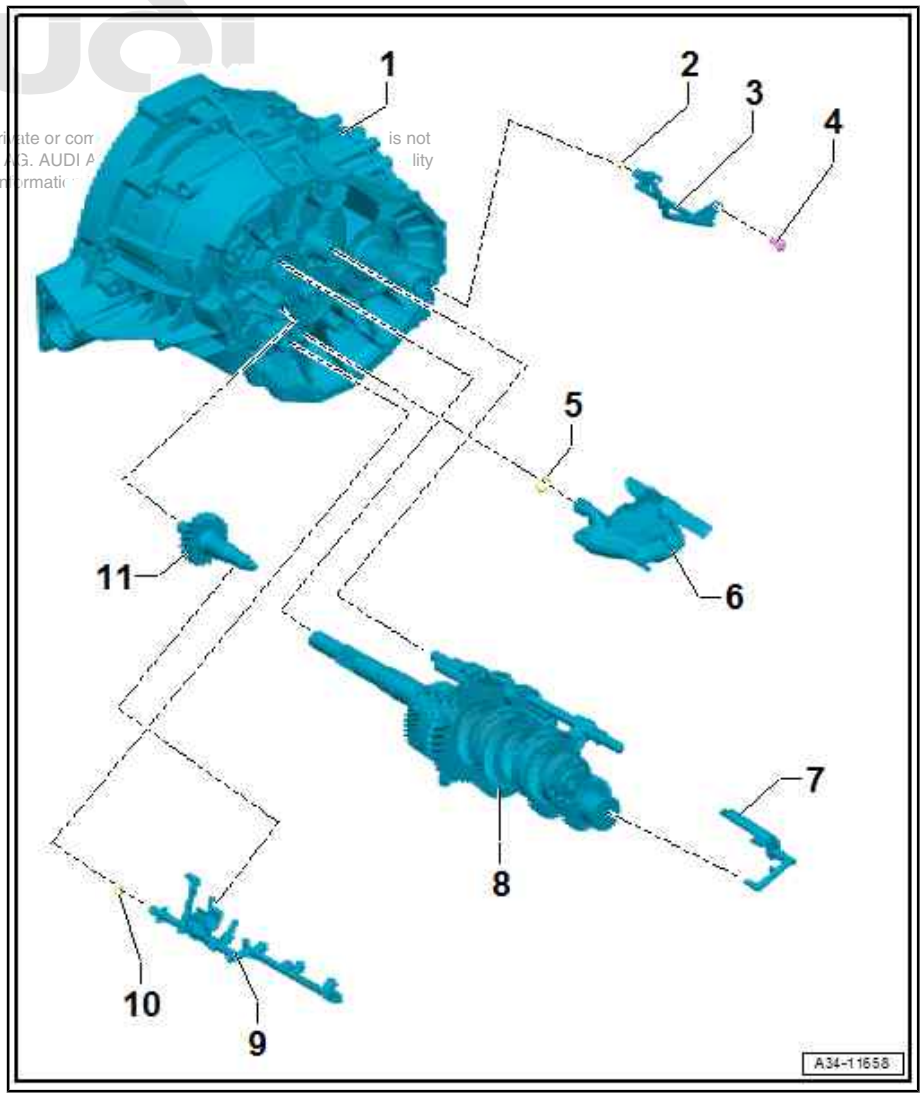

1 - Gearbox housing

- ❑ With differential and pinion shaft
- ❑ Servicing ⇒ page 96

Protected by copyright. Copying for private or com is not permitted unless authorised by AUDI AG. AUDI A lity with respect to the correctness of informati

2 - O-ring

- ❑ Renew after removing

3 - Injection tube for final drive gear set

- ❑ For oil supply to differential
- ❑ Removing and installing ⇒ page 100

4 - Bolt

- ❑ Renew after removing
- ❑ Tightening torque ⇒ Item 15 (page 93)

5 - O-ring

- ❑ Renew after removing

6 - Gear oil filter

- ❑ With magnet
- ❑ Renew when servicing gearbox

7 - Oil collector

- ❑ Remove together with sleeve for input shaft ball bearing ⇒ page 114
- ❑ Installing ⇒ page 115

8 - Gear cluster

- ❑ Consists of input and output shafts with selector fork cluster
- ❑ Dismantling and assembling ⇒ page 122

9 - Injection tube for gear cluster

- ❑ For oil supply to input and output shaft

10 - O-ring

- ❑ Renew after removing

11 - Reverse gear wheel

- ❑ With reverse shaft
- ❑ Exploded view - reverse gear wheel ⇒ page 59

2.4 Exploded view - selector forks

Note

- ♦ *Installation position of selector plates / selector forks in gearbox ⇒ page 61*
- ♦ *Detaching selector fork cluster from bearing mounting for input shaft and output shaft ⇒ page 122*

1 - Reverse gear selector fork

- ❑ Mounted on selector plate/selector fork for 1st and 2nd gear

2 - Selector plate / selector fork for 1st and 2nd gear

- ❑ Can be separated from mounting bracket ⇒ Item 4 (page 60)

3 - Selector plate / selector fork for 3rd and 4th gear

- ❑ With mounting bracket for selector plates/selector forks
- ❑ Cannot be separated from mounting bracket ⇒ Item 4 (page 60)

4 - Mounting bracket

- ❑ Removing and attaching at bearing mounting ⇒ page 122

5 - Selector plate / selector fork for 5th and 6th gear

- ❑ With mounting bracket for selector plates/selector forks
- ❑ Cannot be separated from mounting bracket ⇒ Item 4 (page 60)

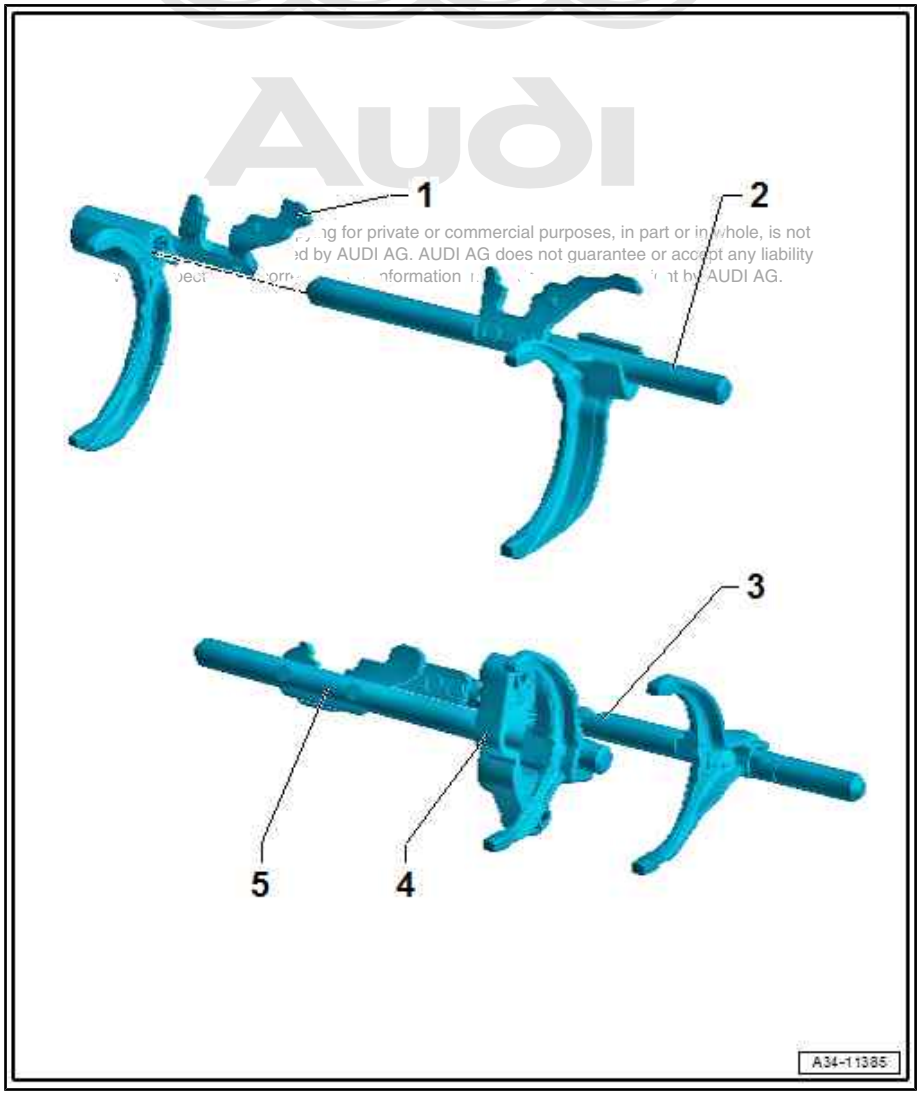

Audi
...g for private or commercial purposes, in part or in whole, is not ...d by AUDI AG. AUDI AG does not guarantee or accept any liability ...information ... by AUDI AG.

Installation position of selector plates / selector forks in gearbox

1 - Reverse gear selector fork

2 - Selector plate / selector fork for 1st and 2nd gear

3 - Selector plate / selector fork for 3rd and 4th gear

4 - Selector plate / selector fork for 5th and 6th gear

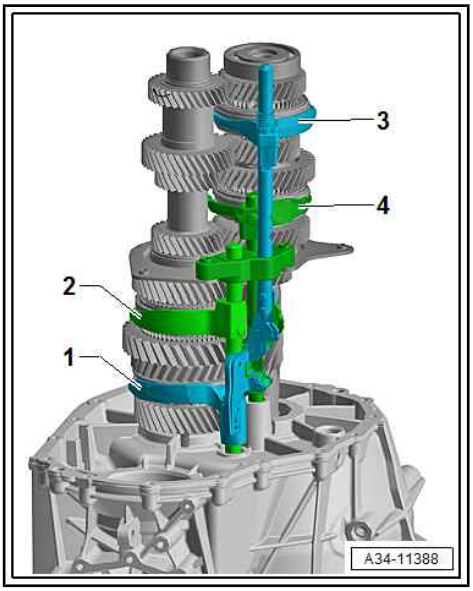

2.5 Dismantling and assembling gearbox

⇒ "2.5.1 Dismantling and assembling gearbox without forced lubrication", page 61

⇒ "2.5.2 Dismantling and assembling gearbox with forced lubrication", page 75

2.5.1 Dismantling and assembling gearbox without forced lubrication

Differentiation of manual gearbox with and without forced lubrication ⇒ page 1

Copyright by AUDI AG. This document is not permitted unless authorised by AUDI AG. AUDI AG does not guarantee or accept any liability with respect to the correctness of information in this document. Copyright by AUDI AG.

The selector shaft, gearbox cover, input shaft and output shaft are removed and installed together with the internal gearbox selector mechanism.

Note

- *The differential does not have to be removed in order to remove the above-mentioned components.*
- *Refer to general repair instructions ⇒ page 5 .*

Special tools and workshop equipment required

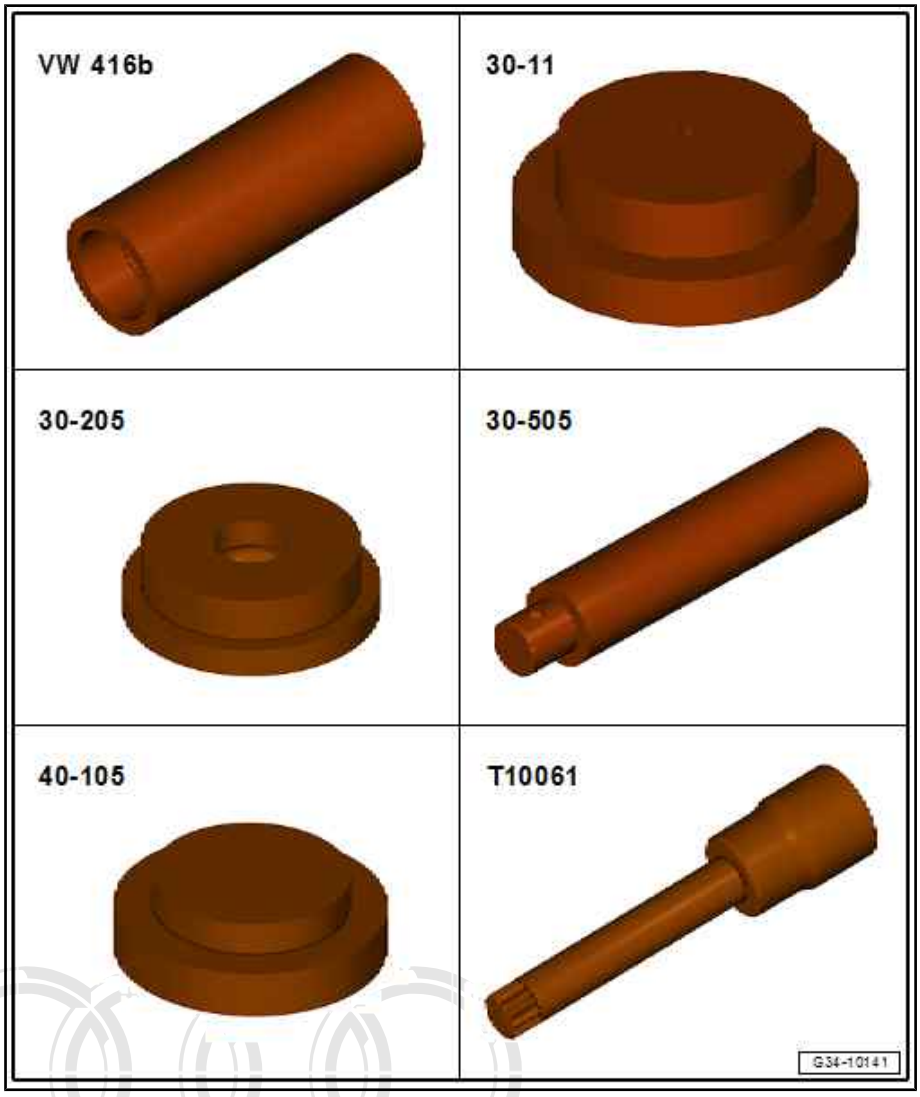

- Tube - VW 416 B-
- Thrust plate - 30 - 11-
- Thrust plate - 30 - 205-
- Mandrel - 30 - 505-
- Thrust plate - 40 - 105-
- Socket - T10061-

Protected by copyright. Copying for private or commercial purposes, in part or in whole, is not permitted unless authorised by AUDI AG. AUDI AG does not guarantee or accept any liability with respect to the correctness of information in this document. Copyright by AUDI AG.

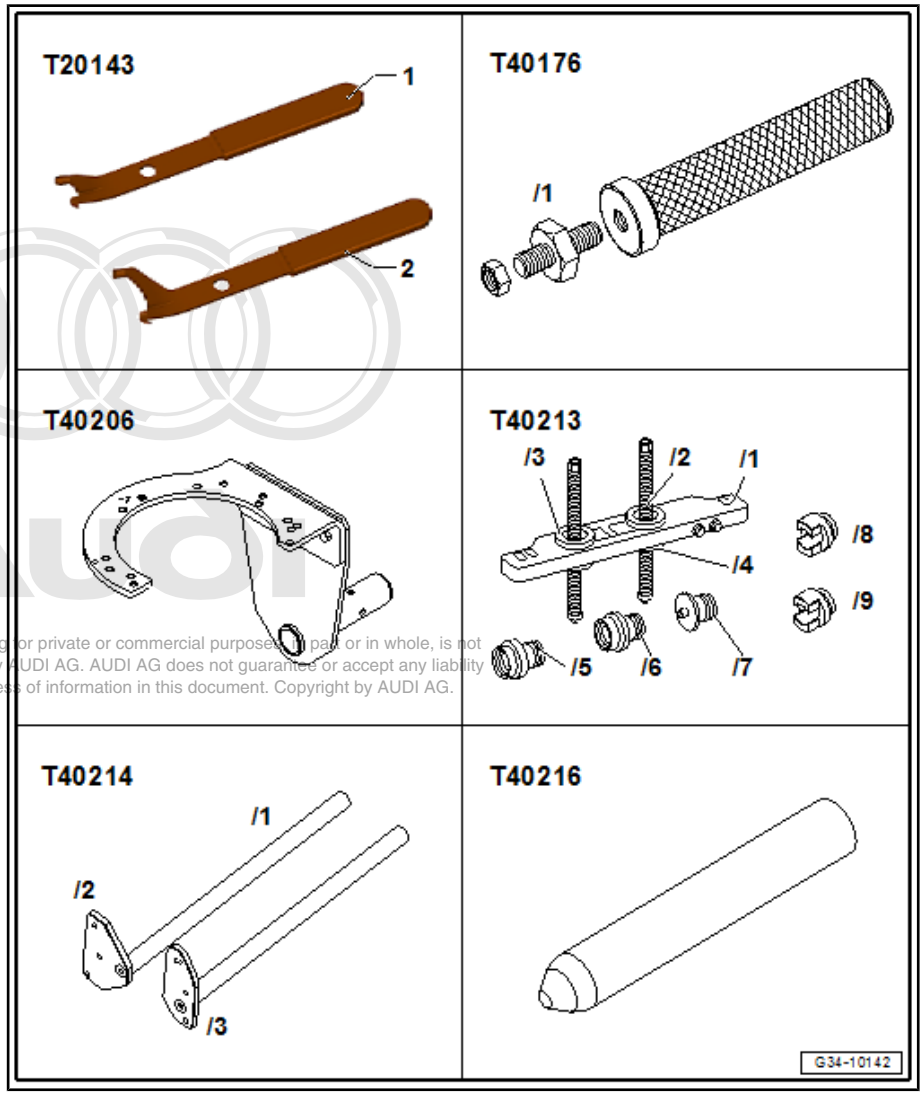

Protected by copyright. Copying for private or commercial purposes, in part or in whole, is not permitted unless authorised by AUDI AG. AUDI AG does not guarantee or accept any liability with respect to the correctness of information in this document. Copyright by AUDI AG.

- Extractor tool - T20143-
- Extractor - T40176-
- Gearbox support - T40206-
- Separating tool - T40213-
- Support - T40214-
- Guide pin - T40216-
- Bit XZN 16 - T10198-

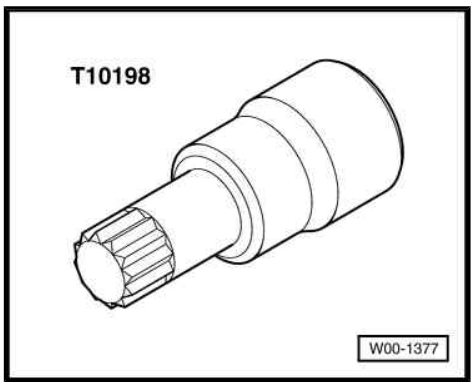

- Or T80 Torx key (depending on version)
- Hot air blower - V.A.G 1416-

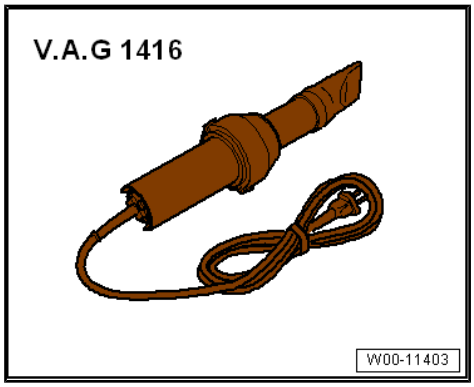

- Engine and gearbox support - VAS 6095-

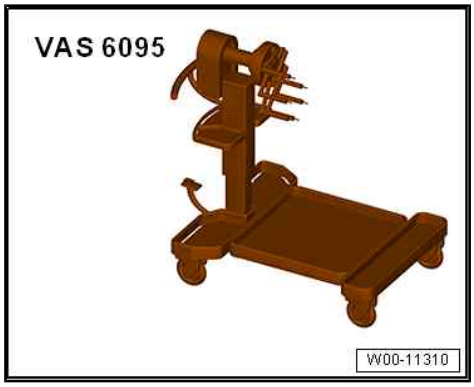

- Drip tray for workshop hoist - VAS 6208-

- Locking fluid ⇒ Electronic parts catalogue
- Sealing paste ⇒ Electronic parts catalogue
- Sealing grease for oil seals ⇒ Electronic parts catalogue

Protected by copyright. Copying for private or commercial purposes, in part or in whole, is not permitted unless authorised by AUDI AG. AUDI AG does not guarantee or accept any liability with respect to the correctness of information in this document. Copyright by AUDI AG.

Dismantling gearbox

– Lift gearbox with workshop hoist - VAS 6100- ⇒ page 50 .

– Place drip tray underneath.
– Unscrew plug -1- and drain off gear oil.

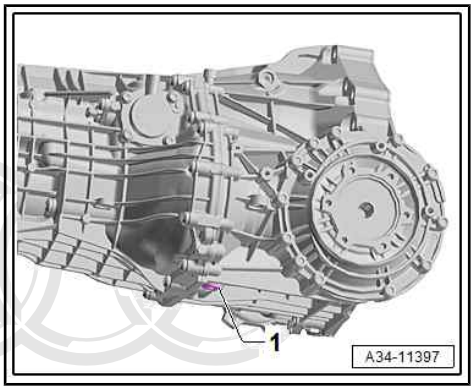

– Secure gearbox to engine and gearbox support ⇒ page 116 .

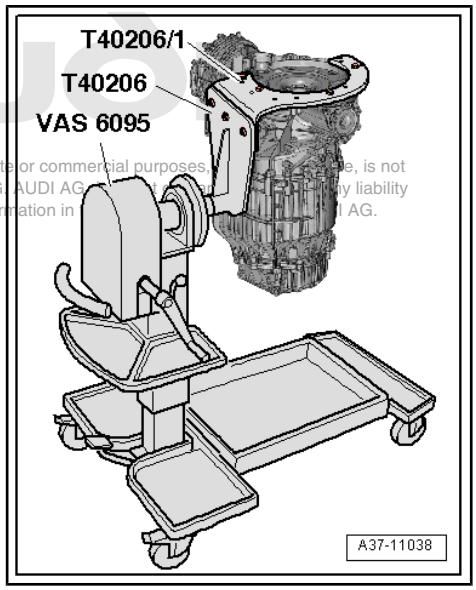

Protected by copyright. Copying for private or commercial purposes, ... e, is not permitted unless authorised by AUDI AG. AUDI AG ... y liability with respect to the correctness of information in ... AG.

– Remove clutch module ⇒ page 30 .

Caution

Take care not to damage flange for drive plate on dual-mass flywheel.

- *Place clutch module carefully on a work bench -2- with flange -1- facing downwards.*
- *Clutch modules with TAC pressure plate must not be placed with the clutch pressure plate facing downwards; otherwise the adjustment mechanism -arrow- may be damaged, which would cause problems with clutch operation.*

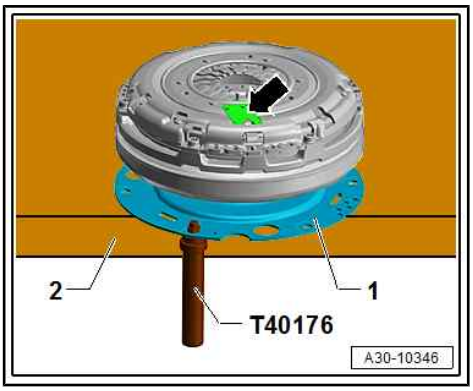

– Remove bolts -arrows-.
– Carefully take clutch slave cylinder off input shaft together with release bearing -A-.

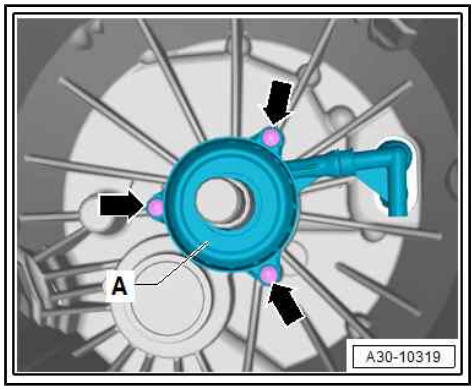

– Remove circlip -arrow- in front of ball bearing for input shaft.

Note

If this circlip cannot be removed, detach the gearbox cover first and knock the input shaft -1- forwards using a rubber-headed hammer.

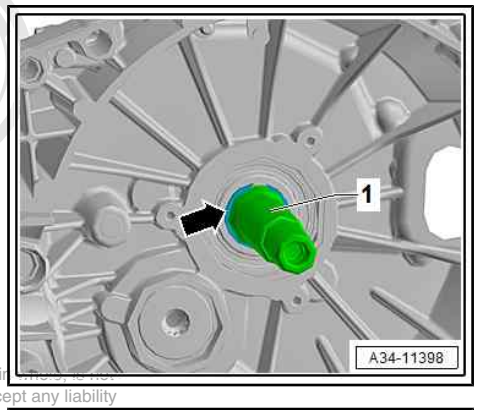

Protected by copyright. Copying for private or commercial purposes, in part or in whole, is not permitted unless authorised by AUDI AG. AUDI AG does not guarantee or accept any liability with respect to the correctness of information in this document. Copyright by AUDI AG.

– Pierce through centre of sealing cap -A- for output shaft and prise out in direction of -arrow-.

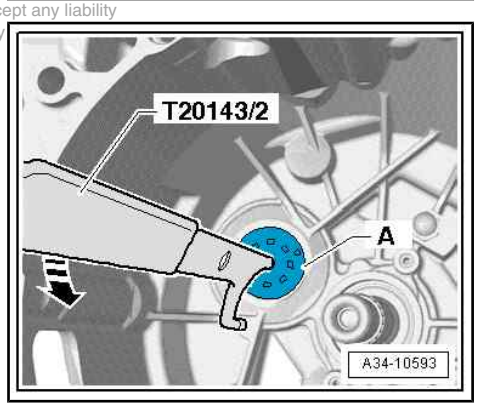

– Screw guide pin - T40216- onto selector shaft -1-.

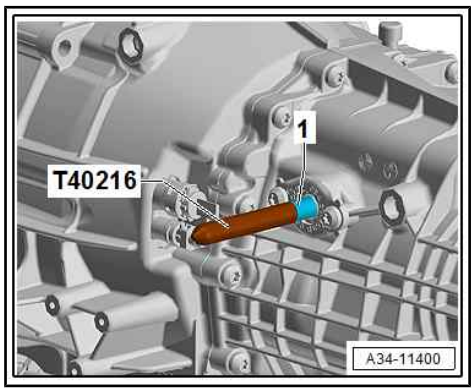

– Remove bolts -1- and carefully lever off selector shaft cover -2-.

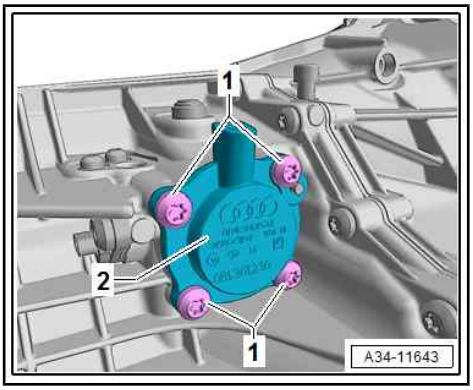

– Lift selector shaft slightly -arrow A- and pull it out -arrow B-.

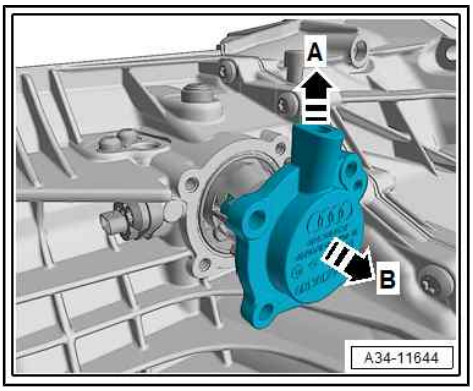

– Select 1st gear by moving selector plate/selector fork for 1st and 2nd gear -1- in direction of arrow -A-.

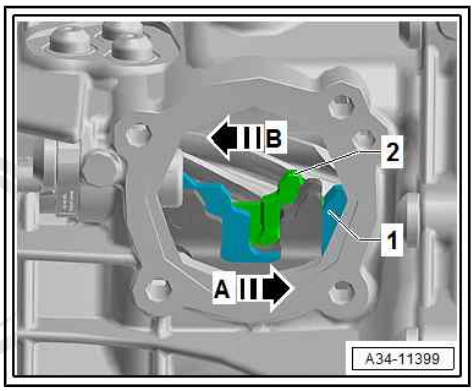

Note

- *The selector plate -1- is located behind the reverse gear selector fork.*
- *Rotate input shaft slightly to ensure that the gears shift correctly.*

– Next, move rear selector plate -2- in direction of arrow -B- to select 6th gear.

• The input and output shafts are both locked when these two gears are engaged.

– Loosen bolt -1- for output shaft using bit XZN 16 - T10198-2- or T80 Torx bit (depending on version) and a suitable ratchet -3- or similar.

Protected by copyright. Copying for private or commercial purposes, in part or in whole, is not permitted unless authorised by AUDI AG. AUDI AG does not guarantee or accept any liability with respect to the correctness of information in this document. Copyright by AUDI AG.

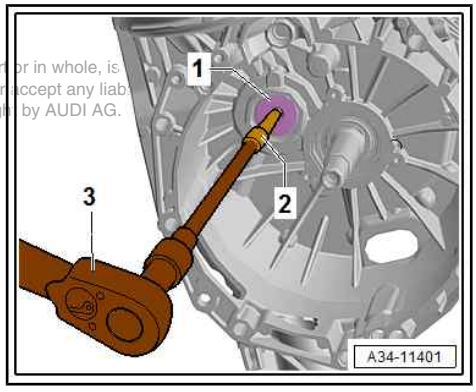

Note

- *Bolt -1- has a very high release torque (approx. 350 ... 500 Nm).*
- *1st gear and 6th gear must be engaged.*
- *Heat bolt to approx. 100 °C using hot air blower - V.A.G 1416- . This will reduce the torque required to release the bolt.*
- *After dismantling the gearbox, check the seal of the ball bearing in the gearbox housing for damage. Renew ball bearing if necessary.*

– Move selector plates to neutral position.
– Then turn gearbox in assembly stand or engine and gearbox support - VAS 6095- so that gearbox cover -3- faces upwards.
– Remove bolts -1- (3x) securing bearing mounting to gearbox cover, and bolts -2- securing gearbox cover -3- to gearbox housing -4-.

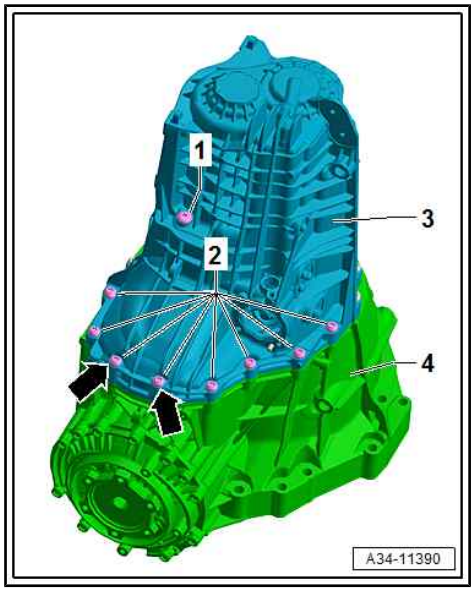

Note

When fitting gearbox cover, note that bolts marked with -arrows- are longer.

– Take off gearbox cover -3-.

– Remove magnet -1- from gearbox housing and clean magnet.

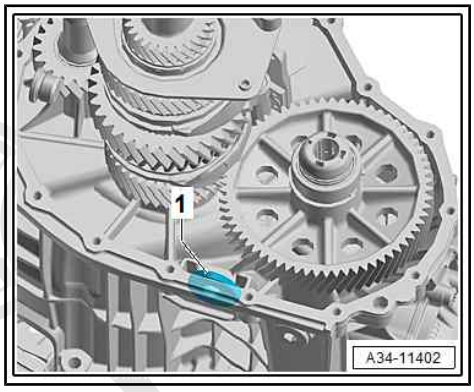

– Detach oil collector -1- from bearing mounting -2- and gearbox housing -arrows A ... C-.

Note

Clean magnet -3- in oil collector.

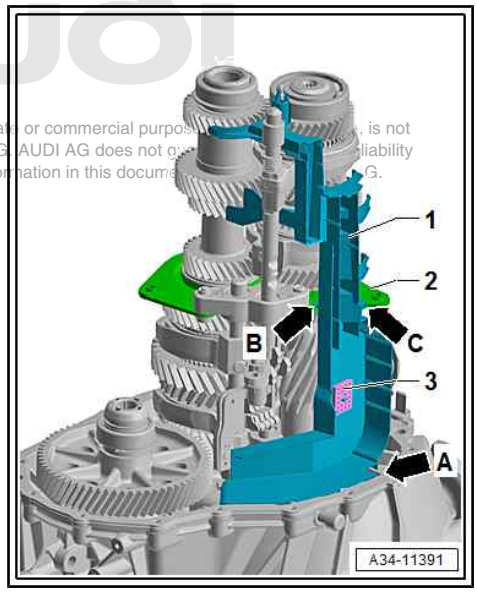

Protected by copyright. Copying for private or commercial purposes, is not permitted unless authorised by AUDI AG. AUDI AG does not guarantee liability with respect to the correctness of information in this document.

- If you have to dismantle the input shaft, now loosen the multi-point socket head bolt -1- in the input shaft by approx. $^1/_2$ turn.
- Engage 1st and 5th gears by moving locking collars -2- and -3- in direction of -arrows-.
- The shafts must be vertical, as shown in illustration.
- The multi-point socket head bolt -1- remains screwed in hand-tight in the input shaft.

– Then move locking collars back to neutral position.

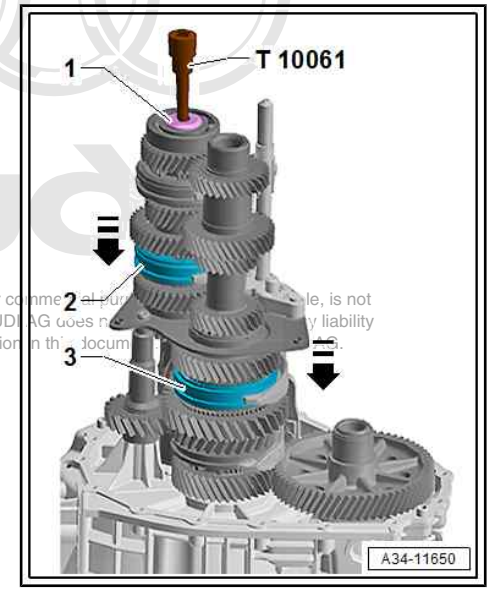

Protected by copyright. Copying for private or commercial purposes, in part or in whole, is not permitted unless authorised by AUDI AG. AUDI AG does not guarantee or accept any liability with respect to the correctness of information in this document.

– Turn gearbox into a horizontal position on assembly stand or engine and gearbox support - VAS 6095- . Reverse gear wheel -1- with reverse shaft -2- then faces upwards.

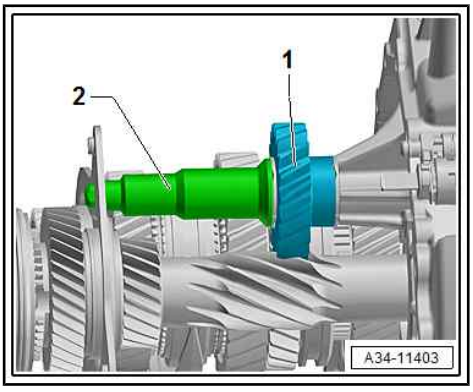

– Attach separating tool - T40213- to gearbox support - T40206- with bolts -arrow A- and -arrow B-.
- Screw bolt -arrow A- into threaded hole of gearbox support marked “5A”.
- Fit bolt -arrow B- in hole of gearbox support marked “14”.

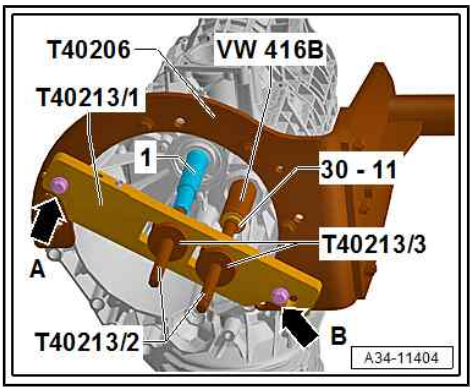

Caution

Risk of damage to gears, shafts and bearings.

- ***The input shaft and output shaft must be pressed out together.***
- ***It is permissible to turn the spindles alternately not more than one turn at a time when pressing out the shafts.***

– By turning spindles - T40213/2- of separating tool - T40213- alternately one turn at a time, press input shaft -1- and output shaft out of ball bearings in gearbox housing.

Note

- *Support for reverse shaft -1- is guided out of retainer in gearbox housing -arrow B- at the same time.*
- *It may now already be possible to remove the reverse shaft. To do so, push reverse gear selector fork -2- towards gearbox housing and detach reverse shaft from bearing mounting -3- -arrow A-.*

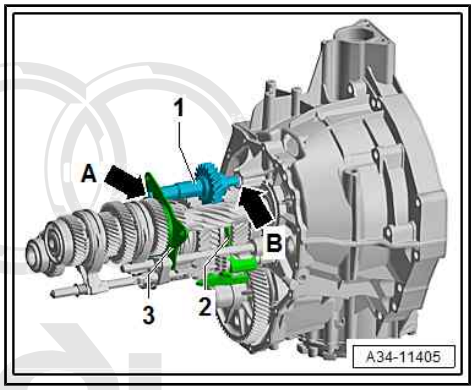

– Detach input shaft and output shaft from gearbox housing -1- together with selector fork cluster -2- and reverse shaft -4- (if not yet removed).

Protected by copyright. Copying for private or commercial purp ole, is not permitted unless authorised by AUDI AG. AUDI A does not o ny liability with respect to the correctness of information in his docu DI AG.

Note

- *If the input shaft is being serviced, loosen the multi-point socket head bolt -arrow A- ⇒ page 69 .*
- *When re-installing the gear cluster, ensure that the spur gear drive input gear engages with the spur gear drive output gear -3- -arrow B-.*

– Detach separating tool - T40213- from gearbox support - T40206- .

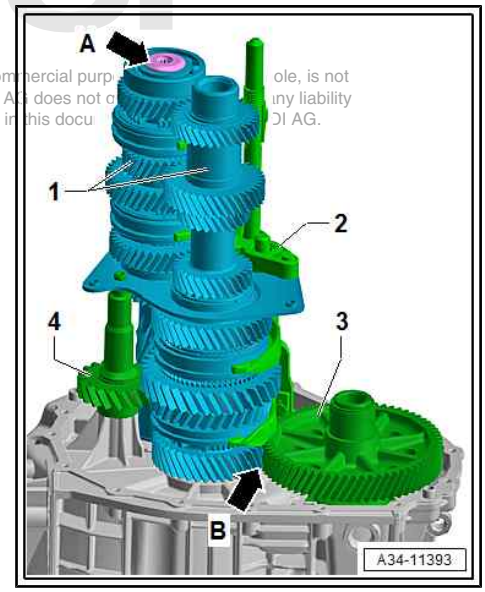

Assembling gearbox

– Install input shaft -1- and output shaft together with selector fork cluster -2- and reverse shaft -4- in gearbox housing.

- Ensure that the spur gear drive input gear engages with the spur gear drive output gear -3- -arrow B-.
- If previously removed, screw in multi-point socket head bolt -arrow A- hand-tight.

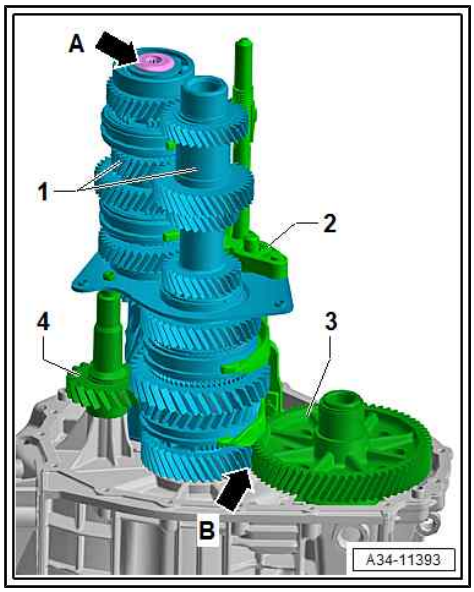

- Screw adapter - T40214/1- into support - T40214/3- , and adapter - T40214/2- into support - T40214/4- .

– Secure support - T40214/1- with adapter - T40214/3- and support - T40214/2- with adapter - T40214/4- to gearbox housing, as shown in illustration.

– Attach plate - T40213/1- to supports - T40214/1- and - T40214/2- .

– Insert thrust plate - 40 - 105- into output shaft opening.

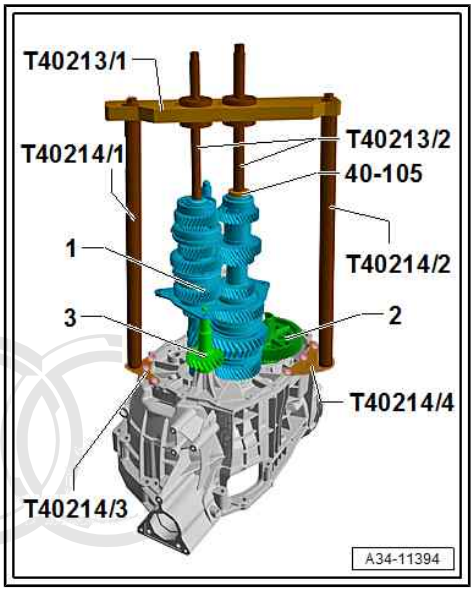

Caution

Risk of damage to gears, shafts and bearings.

- ***The input shaft and output shaft must be pressed in together.***
- ***It is permissible to turn the spindles alternately not more than one turn at a time when pressing in the shafts.***

– Then, by turning spindles - T40213/2- alternately one turn at a time, press in input shaft and output shaft until they are seated in ball bearings. When doing so, pay attention to reverse shaft -3- and ensure that teeth on output shaft engage in spur gear drive output gear -2-.

Protected by copyright. Copying for private or commercial purposes, in part or in whole, is not permitted unless authorised by AUDI AG. AUDI AG does not guarantee or accept any liability with respect to the correctness of information in this document. Copyright by AUDI AG.

- Reverse shaft -1- must be locked in place in bearing mounting -3- -arrow A- when pressing in gear cluster.
- Guide reverse shaft -1- into hole in gearbox housing -arrow A-.
- If necessary, push reverse gear selector fork -2- towards gearbox housing so that reverse gear wheel is seated correctly in teeth of input shaft.

– Detach separating tool - T40213- and supports - T40214- .

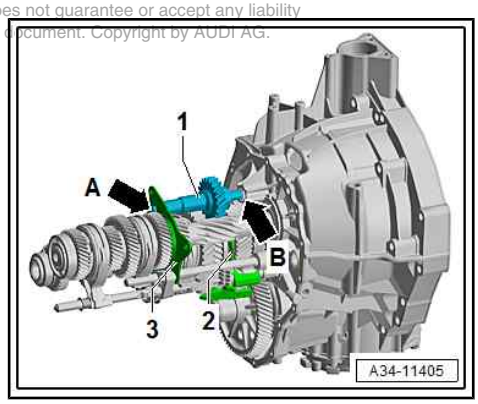

- If you have dismantled the input shaft, now apply locking fluid to the multi-point socket head bolt -1- in the input shaft; for locking fluid, refer to ⇒ Electronic parts catalogue . Then tighten the multi-point socket head bolt to specified torque.
- To do this, engage 2 gears by moving locking collars -2- and -3- in direction of -arrow-.

– Then move locking collars back to neutral position.

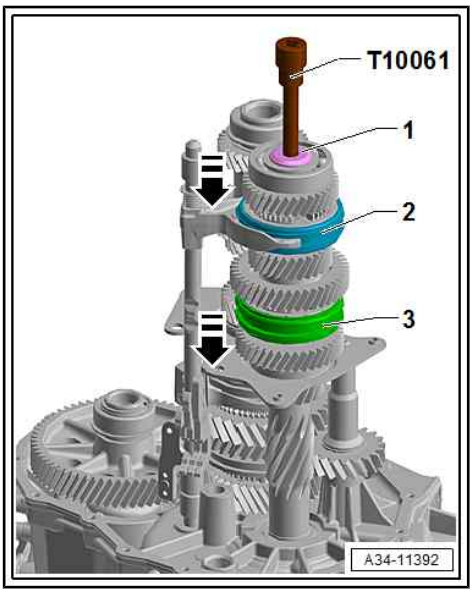

– Insert oil collector -1- into gearbox housing -arrow A- and clip onto bearing mounting -2- -arrows B, C-.

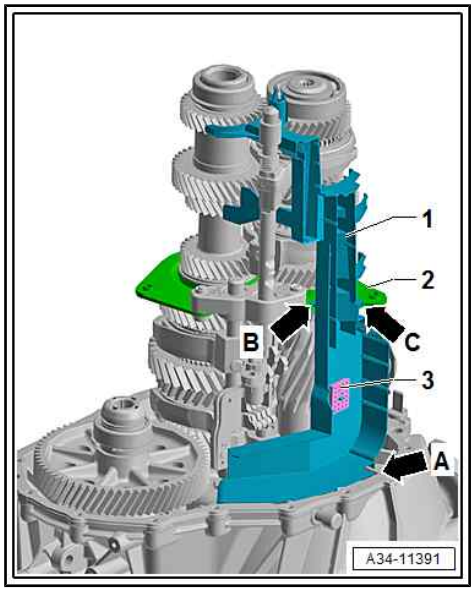

Note

The magnet -3- in the oil collector must be clean.

– Fit cleaned magnet -1- in gearbox housing.

– Check that the two dowel sleeves for centring gearbox cover and gearbox housing are fitted in gearbox housing.

– Apply sealing paste (refer to ⇒ Electronic parts catalogue) evenly and not too thickly onto surface between gearbox housing and gearbox cover.

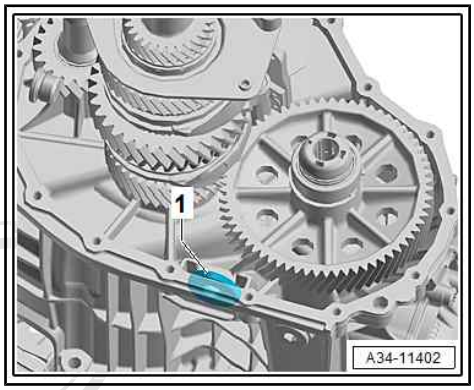

– Fit gearbox cover -3- onto gearbox housing -4-.

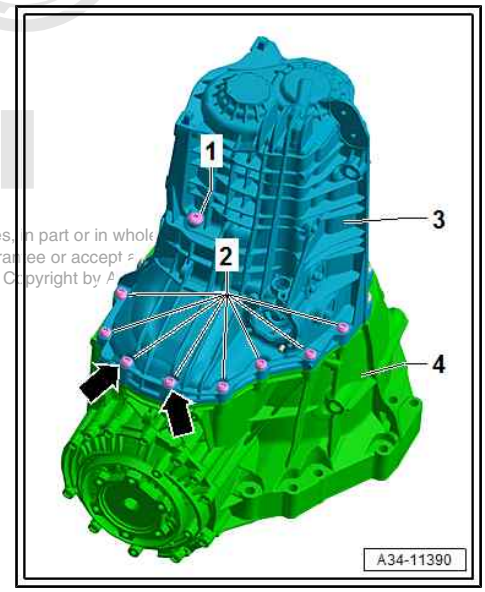

Note

- *To avoid damaging the roller bearing ⇒ Item 9 (page 95) for the output shaft in the gearbox cover, turn the gearbox cover back and forth somewhat when fitting it.*
- *Hold onto the gearbox cover until it is resting against the gearbox housing; do not use force.*

Protected by copyright. Copying for private or commercial purposes, in part or in whole, is not permitted unless authorised by AUDI AG. AUDI AG does not guarantee or accept any liability with respect to the correctness of information in this document. Copyright by AUDI AG.

– Fit new bolts -1- (3x) and screw them hand-tight into bearing mounting.

– Tighten new aluminium bolts -2- to specified torque; note that 2 bolts -arrows- are longer.

– Then tighten bolts -1- to specified torque.

Determine thickness of circlip -arrow- for input shaft -1- as follows:

– Determine the thickest circlip that will just fit and install it. For part number refer to ⇒ Electronic parts catalogue .

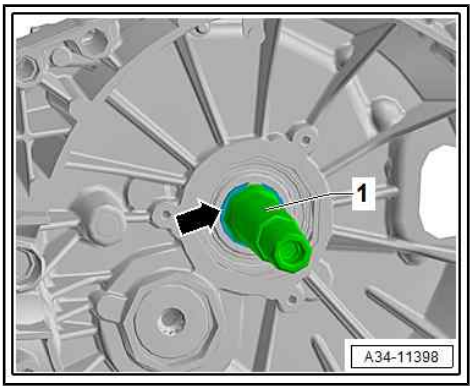

Note

Start with the thickest circlip.

The following circlips are available:

Circlip thickness (mm)		
3.44	3.47	3.50

– Select 1st gear by moving selector plate/selector fork for 1st and 2nd gear -1- in direction of arrow -A-.

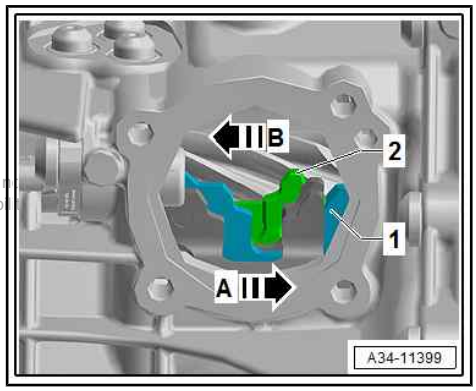

Note

Protected by copyright. Copying for private or commercial purposes, in part or in whole, is not permitted unless authorised by AUDI AG. AUDI AG does not guarantee or accept any liability with respect to the correctness of information in this document. Copyright by AUDI AG.

- *The selector plate -1- is located behind the reverse gear selector fork.*
- *Rotate input shaft slightly to ensure that the gears shift correctly.*

– Next, move rear selector plate -2- in direction of arrow -B- to select 6th gear.

- The input and output shafts are both locked when these two gears are engaged.

– Clean thread of bolt -1- for output shaft with a wire brush. Then install bolt with locking fluid (refer to ⇒ Electronic parts catalogue) and tighten to specified torque with bit XZN 16 - T10198- -2- or T80 Torx key (depending on version).

3 - Torque wrench

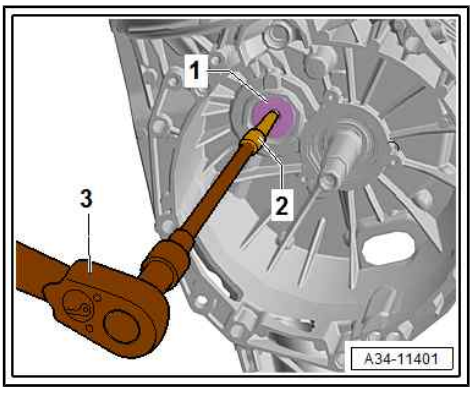

Caution

The sealing cap can only be fitted properly if the outer circumference has not been lubricated.

- ***Do not use additional lubricant on outer circumference of new sealing cap for installation.***

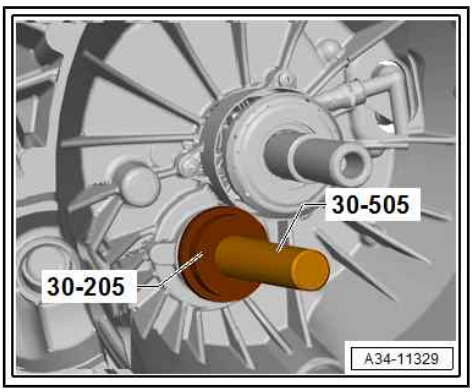

– Drive in new sealing cap for output shaft until flush.

– Clean locking fluid residue from threaded holes for securing selector shaft in gearbox cover (residue can be removed using a thread tap).
– Fit new O-ring on selector shaft cover -2-.
– Screw guide pin - T40216- onto selector shaft -1-.

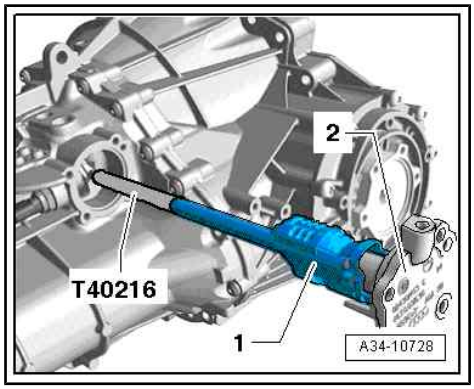

– Pack space between sealing lips -arrow- of selector shaft oil seal half-full with sealing grease for oil seals ; for sealing grease, refer to ⇒ Electronic parts catalogue .

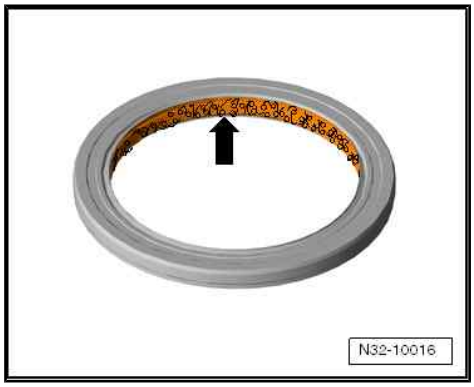

– Lift selector shaft slightly -arrow B- and install it in gearbox -arrow A-.

Protected by copyright. Copying for private or commercial purposes, in part or in whole, is not permitted unless authorised by AUDI AG. AUDI AG does not guarantee or accept any liability with respect to the correctness of information in this document. Copyright by AUDI AG.

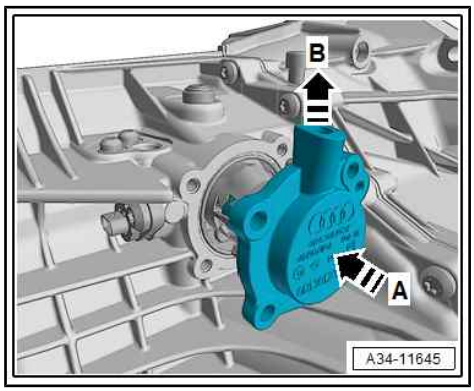

– Selector shaft cover -2- must make contact with gearbox housing.
– Tighten new bolts -1- to specified torque.

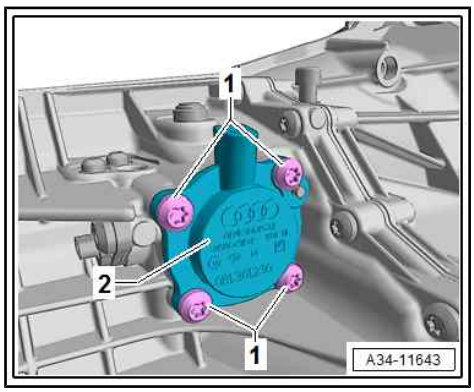

– Unscrew guide pin - T40216- from selector shaft -1-.

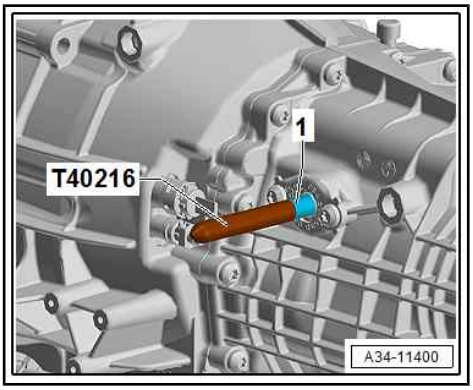

– Renew O-ring -1- for release bearing -2-.

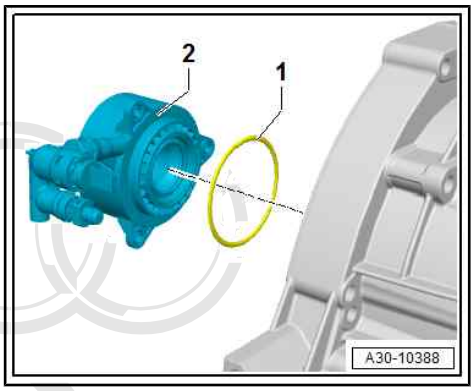

– Install clutch slave cylinder -A- with release bearing -arrows- ⇒ page 19 .

Protected by copyright. Copying for private or comm
permitted unless authorised by AUDI AG. AUDI AG
with respect to the correctness of information in

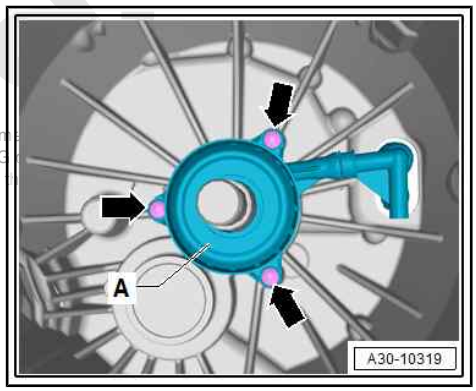

– Install clutch module and flange shaft (left-side) ⇒ page 33 .

– Fill up oil in gearbox; for capacities and specifications, refer to ⇒ 6-speed manual gearbox 0CS, 0DJ, 0CX; Rep. gr. 00 ; Technical data .

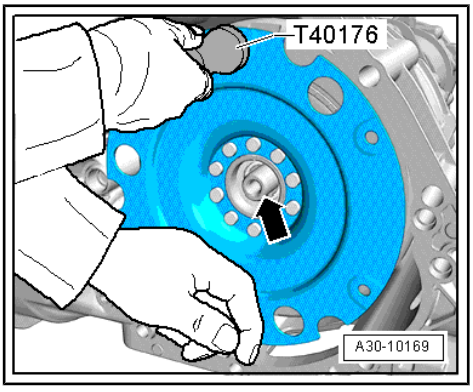

Tightening torques

- ⇒ “1.1 Exploded view - clutch release mechanism”, page 18
- ⇒ “2.1 Exploded view - input shaft”, page 133
- ⇒ “3.1 Exploded view - output shaft”, page 147
- ⇒ “2.2.1 Exploded view - gearbox without forced lubrication”, page 52

2.5.2 Dismantling and assembling gearbox with forced lubrication

Differentiation of manual gearbox with and without forced lubrication ⇒ page 1

The selector shaft, gearbox cover, input shaft and output shaft are removed and installed together with the internal gearbox selector mechanism.

Note

The differential does not have to be removed in order to remove the above-mentioned components.

Special tools and workshop equipment required

Protected by copyright. Copying in part or in whole is not permitted unless authorised by ... guarantee or accept any liability with respect to the correctness ... document. Copyright by AUDI AG.

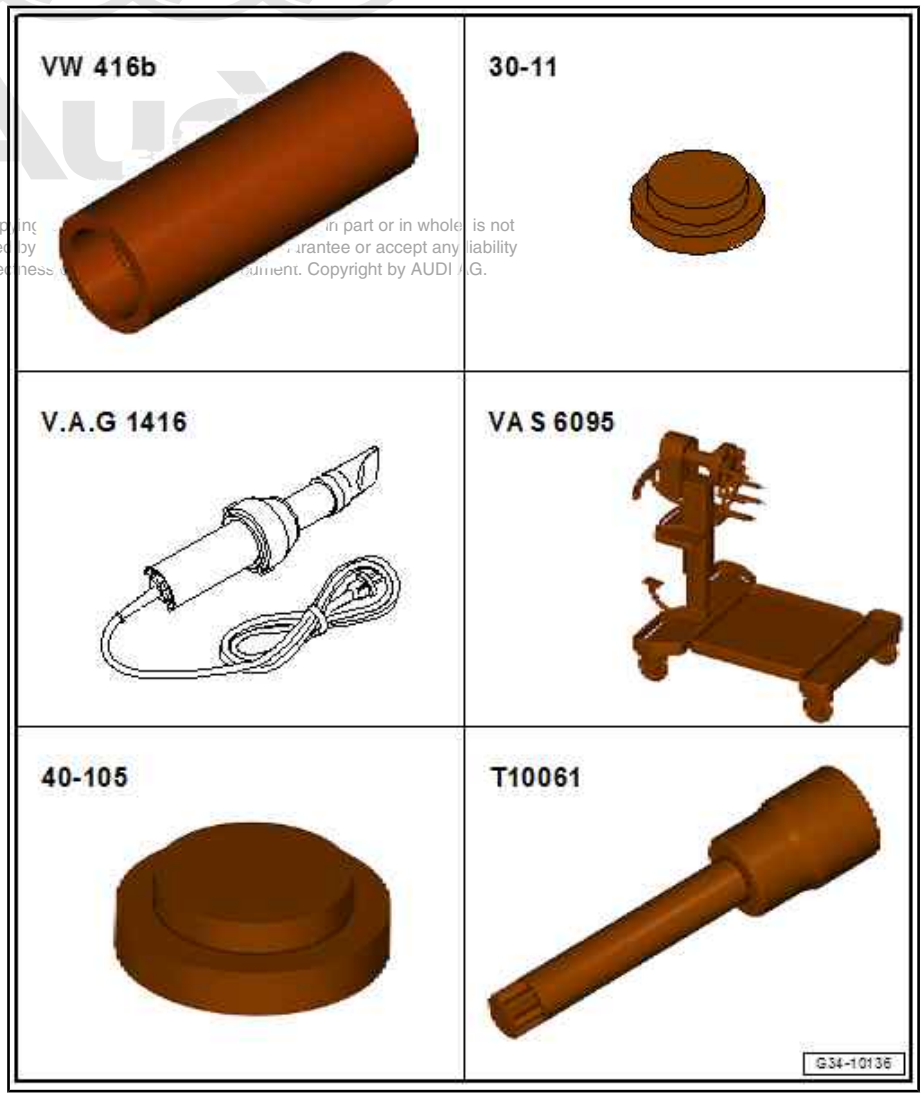

- Tube - VW 416 B-
- Thrust plate - 30 - 11-
- Hot air blower - V.A.G 1416-
- Engine and gearbox support - VAS 6095-
- Thrust plate - 40 - 105-
- Socket - T10061-

Protected by copyright. Copying for private or commercial purposes, in part or in whole, is not permitted unless authorised by AUDI AG. AUDI AG does not guarantee or accept any liability with respect to the correctness of information in this document. Copyright by AUDI AG.

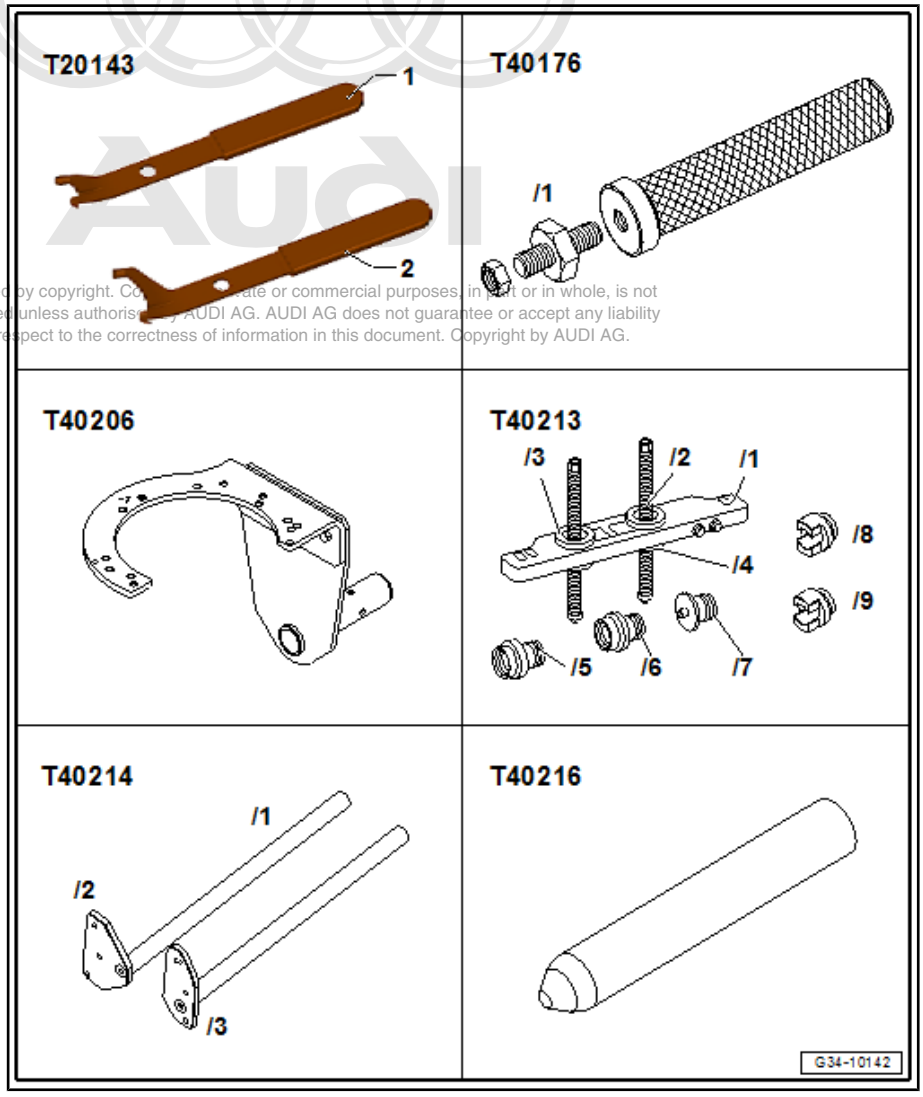

- Extractor tool - T20143-
- Extractor - T40176-
- Gearbox support - T40206-
- Separating tool - T40213-
- Support - T40214-
- Guide pin - T40216-
- Drip tray for workshop hoist - VAS 6208-

- T80 Torx bit
- Lever
- Locking fluid ⇒ Electronic parts catalogue
- Sealing paste ⇒ Electronic parts catalogue
- Sealing grease for oil seals ⇒ Electronic parts catalogue

Dismantling gearbox

– Lift gearbox with workshop hoist - VAS 6100- ⇒ page 50 .

– Place drip tray underneath.

– Unscrew oil drain plug -1- and drain off gear oil.

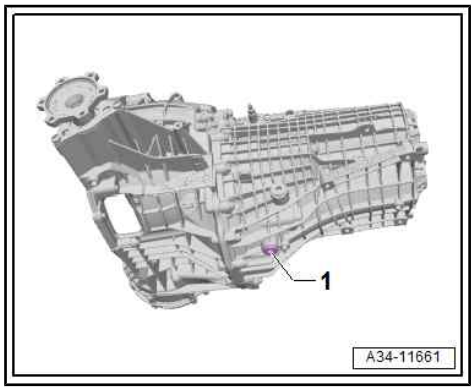

– Secure gearbox to engine and gearbox support ⇒ page 116 .

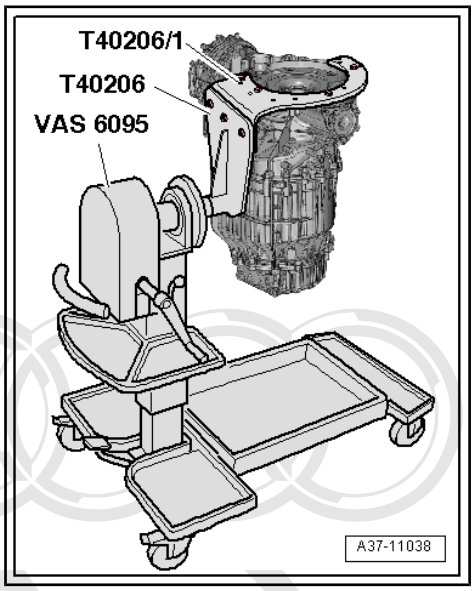

– Remove clutch module ⇒ page 30 .

Caution

Take care not to damage flange for drive plate on dual-mass flywheel.

- ***Place clutch module carefully on a work bench -2- with flange -1- facing downwards.***
- ***Clutch modules with TAC pressure plate must not be placed with the clutch pressure plate facing downwards; otherwise the adjustment mechanism -arrow- may be damaged, which would cause problems with clutch operation.***

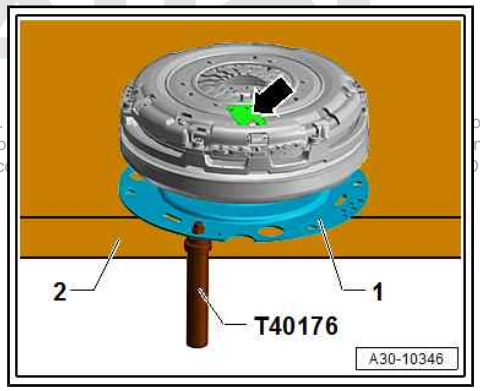

Protected by copyright. ... permitted unless autho ... with respect to the c ... ble, is not ... ny liability ... DI AG.

– Unscrew bolts -1- for gear oil pump.
– Detach gear oil pump -2-.

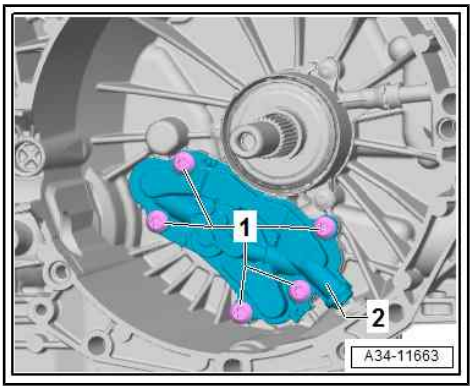

– Remove bolts -arrows-.
– Carefully take clutch slave cylinder off input shaft together with release bearing -A-.

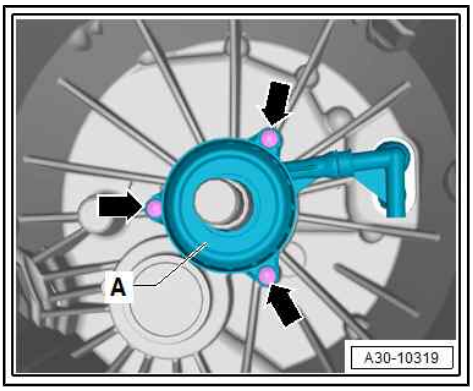

– Remove circlip -arrow- in front of ball bearing for input shaft.

Note

If this circlip cannot be removed, detach the gearbox cover first and knock the input shaft -1- forwards using a rubber-headed hammer.

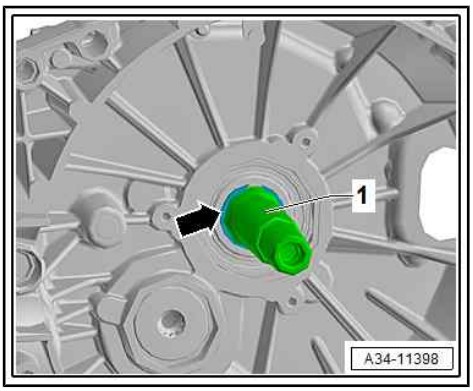

– Screw guide pin - T40216- onto selector shaft -1-.

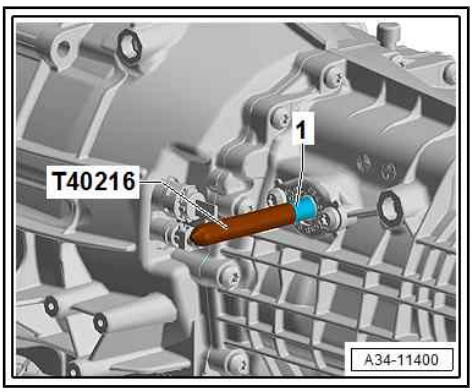

Protected by copyright. Copying for private or commercial purposes, in part or in whole, is not permitted unless authorised by AUDI AG. AUDI AG does not guarantee or accept any liability with respect to the correctness of information in this document. Copyright by AUDI AG.

– Remove bolts -1- and carefully lever off selector shaft cover -2-.

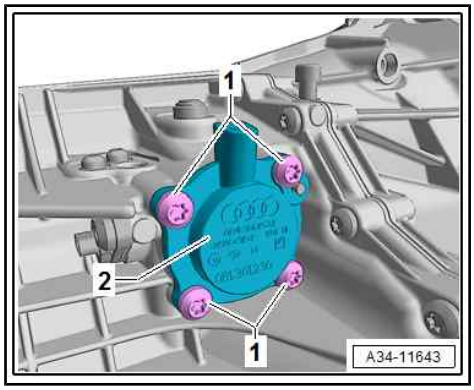

– Lift selector shaft slightly -arrow A- and pull it out -arrow B-.

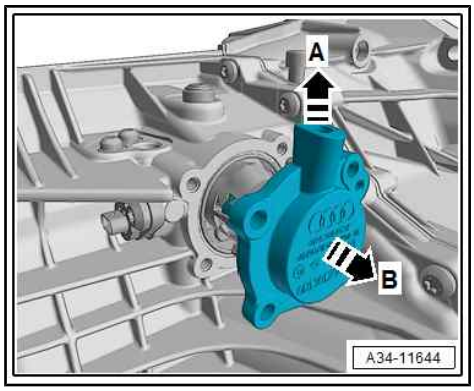

– Select 1st gear by moving selector plate/selector fork for 1st and 2nd gear -1- in direction of arrow -A-.

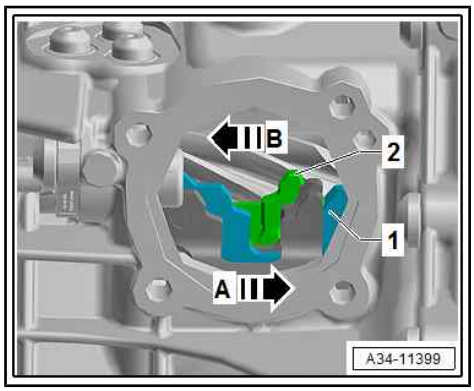

Note

- *The selector plate -1- is located behind the reverse gear selector fork.*
- *Rotate input shaft slightly to ensure that the gears shift correctly.*

– Next, move rear selector plate -2- in direction of arrow -B- to select 6th gear.

• The input and output shafts are both locked when these two gears are engaged.

– Loosen bolt -1- for input shaft using T80 Torx bit -2- and a suitable ratchet -3- or similar.

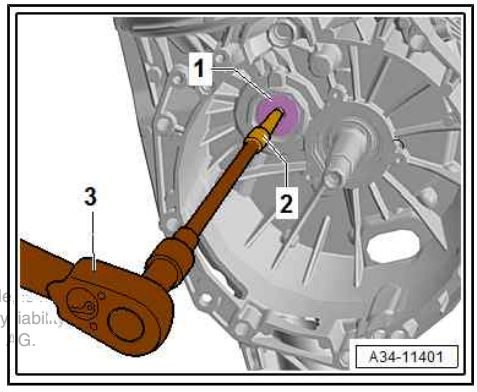

Note

- *Bolt -1- has a very high release torque (approx. 350 ... 500 Nm).*
- *1st gear and 6th gear must be engaged.*
- *Heat bolt to approx. 100 °C using hot air blower - V.A.G 1416- . This will reduce the torque required to release the bolt.*
- *After dismantling the gearbox, check the seal of the ball bearing in the gearbox housing for damage. Renew ball bearing if necessary.*

Protected by copyright. Copying for private or commercial purposes, in part or in whole, is not permitted unless authorised by AUDI AG. AUDI AG does not guarantee or accept any liability with respect to the correctness of information in this document. Copyright by AUDI AG.

– Move selector plates to neutral position.
– Then turn gearbox in assembly stand or engine and gearbox support - VAS 6095- so that gearbox cover -3- faces upwards.
– Unscrew bolts -1- securing bearing mounting to gearbox cover (3x) and bolts -2- securing gearbox cover -3- to gearbox housing -4-.

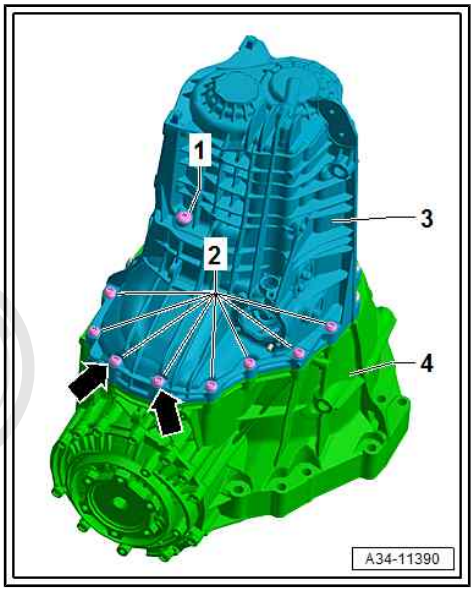

Note

When fitting gearbox cover, note that bolts marked with -arrows- are longer.

– Take off gearbox cover -3-.

– Lever out gear oil filter -1- using assembly lever -A-.

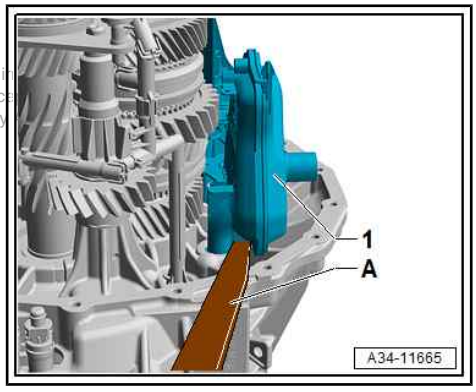

Note

Renew gear oil filter when servicing gearbox.

Protected by copyright. Copying for private or commercial purposes, in part or in
permitted unless authorised by AUDI AG. AUDI AG does not guarantee or acce
with respect to the correctness of information in this document. Copyright by

– Release retaining tabs -arrows A- and press injection tube for gear cluster -1- out of gearbox housing -2- in direction of -arrow B-.

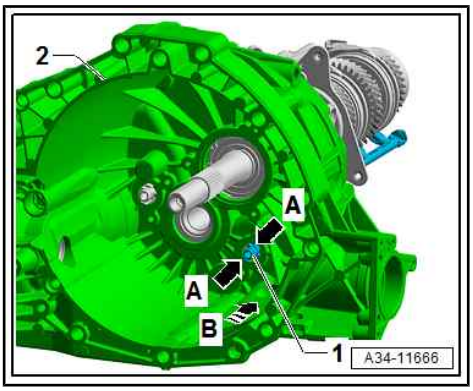

– Pull injection tube for gear cluster -1- out of guide -arrow A- on bearing mounting -2-.
– Then pull injection tube for gear cluster -1- off reverse shaft -3- -arrow B-.

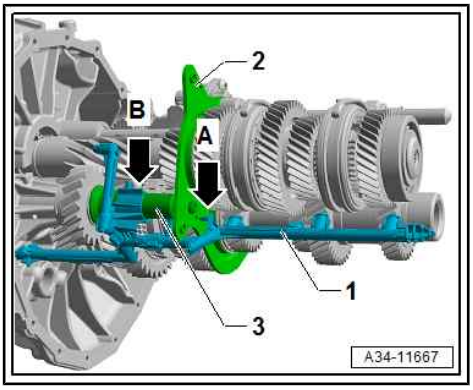

- If you have to dismantle the input shaft, now loosen the multi-point socket head bolt -1- in the input shaft by approx. $^1/_2$ turn.
- Engage 1st and 5th gears by moving locking collars -2- and -3- in direction of -arrows-.
- The shafts must be vertical, as shown in illustration.
- The multi-point socket head bolt -1- remains screwed in hand-tight in the input shaft.

– Then move locking collars back to neutral position.

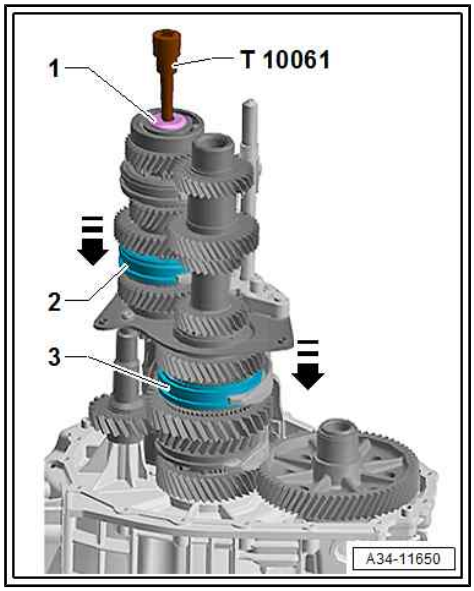

– Turn gearbox into a horizontal position on assembly stand or engine and gearbox support - VAS 6095- . Reverse gear wheel -1- with reverse shaft -2- then faces upwards.

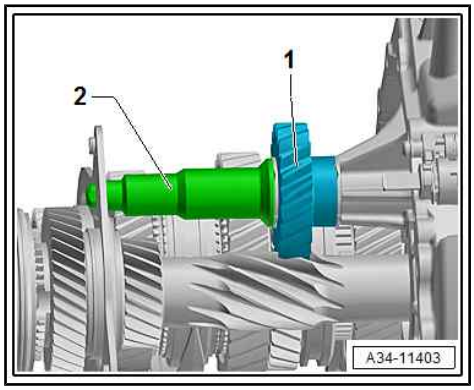

Protected by copyright. Copying for private or commercial purposes, in part or in whole, is not permitted unless authorised by AUDI AG. AUDI AG does not guarantee or accept any liability with respect to the correctness of information in this document. Copyright by AUDI AG.

– Attach separating tool - T40213- to gearbox support - T40206- with bolts -arrow A- and -arrow B-.
- Screw bolt -arrow A- into threaded hole of gearbox support marked “5A”.
- Fit bolt -arrow B- in hole of gearbox support marked “14”.

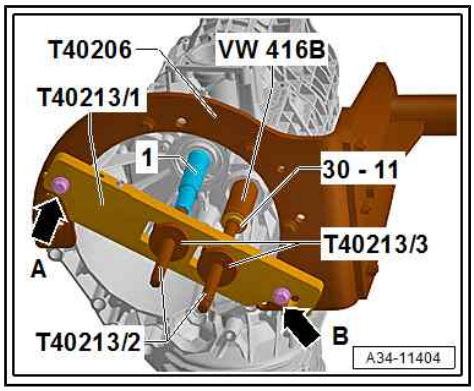

Caution

Risk of damage to gears, shafts and bearings.

- *The input shaft and output shaft must be pressed out together.*
- *It is permissible to turn the spindles alternately not more than one turn at a time when pressing out the shafts.*

– By turning spindles - T40213/2- of separating tool - T40213- alternately one turn at a time, press input shaft -1- and output shaft out of ball bearings in gearbox housing.

Note

- *Support for reverse shaft -1- is guided out of retainer in gearbox housing -arrow B- at the same time.*
- *It may now already be possible to remove the reverse shaft. To do so, push reverse gear selector fork -2- towards gearbox housing and detach reverse shaft from bearing mounting -3- -arrow A-.*

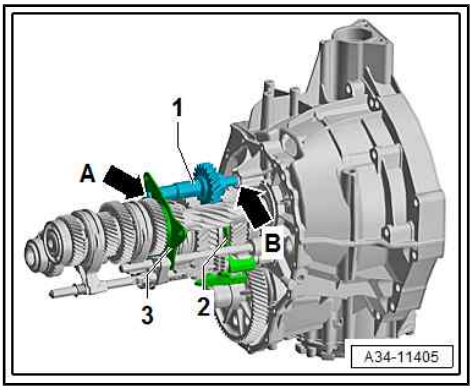

– Detach input shaft and output shaft from gearbox housing -1- together with selector fork cluster -2- and reverse shaft -4- (if not yet removed).

Note

- *If the input shaft is being serviced, loosen the multi-point socket head bolt -arrow A- ⇒ page 82 .*
- *When re-installing the gear cluster, ensure that the spur gear drive input gear engages with the spur gear drive output gear -3- -arrow B-.*

– Detach separating tool - T40213- from gearbox support - T40206- .

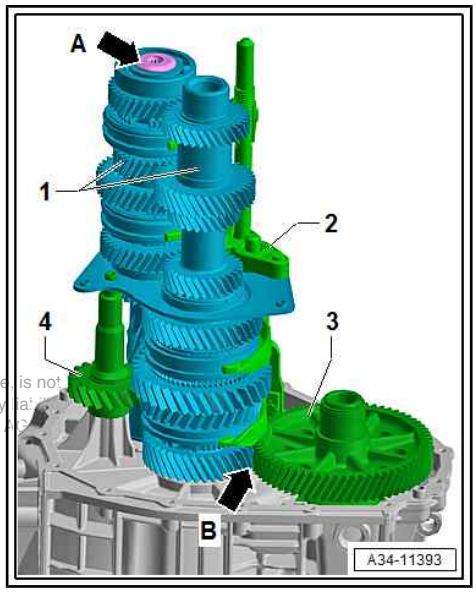

Protected by copyright. Copying for private or commercial purposes, in part or in whole, is not permitted unless authorised by AUDI AG. AUDI AG does not guarantee or accept any liability with respect to the correctness of information in this document. Copyright by AUDI AG.

Assembling gearbox

– Install input shaft -1- and output shaft together with selector fork cluster -2- and reverse shaft -4- in gearbox housing.

- Ensure that the spur gear drive input gear engages with the spur gear drive output gear -3- -arrow B-.
- If previously removed, screw in multi-point socket head bolt -arrow A- hand-tight.

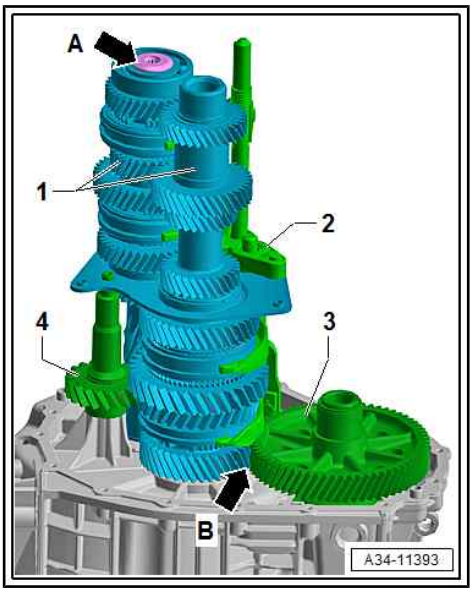

- Screw adapter - T40214/1- into support - T40214/3- , and adapter - T40214/2- into support - T40214/4- .

– Secure support - T40214/1- with adapter - T40214/3- and support - T40214/2- with adapter - T40214/4- to gearbox housing, as shown in illustration.

– Attach plate - T40213/1- to supports - T40214/1- and - T40214/2- .

– Insert thrust plate - 40 - 105- into output shaft opening.

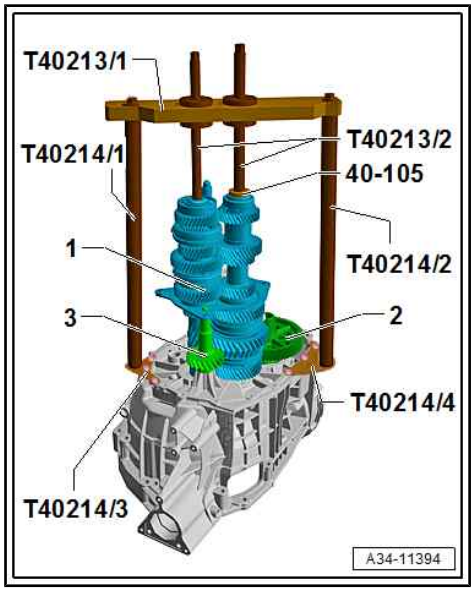

Caution

Risk of damage to gears, shafts and bearings.

- ***The input shaft and output shaft must be pressed in together.***
- ***It is permissible to turn the spindles alternately not more than one turn at a time when pressing in the shafts.***

– Then, by turning spindles - T40213/2- alternately one turn at a time, press in input shaft and output shaft until they are seated in ball bearings. When doing so, pay attention to reverse shaft -3- and ensure that teeth on output shaft engage in spur gear drive output gear -2-.

- Reverse shaft -1- must be locked in place in bearing mounting -3- -arrow A- when pressing in gear cluster.
- Guide reverse shaft -1- into hole in gearbox housing -arrow A-.
- If necessary, push reverse gear selector fork -2- towards gearbox housing so that reverse gear wheel is seated correctly in teeth of input shaft.

– Detach separating tool - T40213- and supports - T40214- .

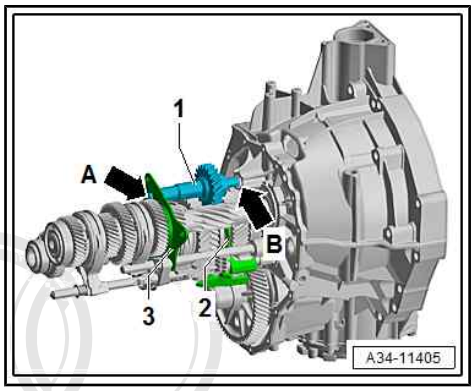

- If input shaft has been dismantled, clean thread of bolt -1- for input shaft with a wire brush.
- Engage two gears by moving locking collars -2- and -3- in direction of -arrow-.
- Coat multi-point socket head bolt with locking fluid (⇒ Electronic parts catalogue) and tighten to specified torque.

– Then move locking collars back to neutral position.

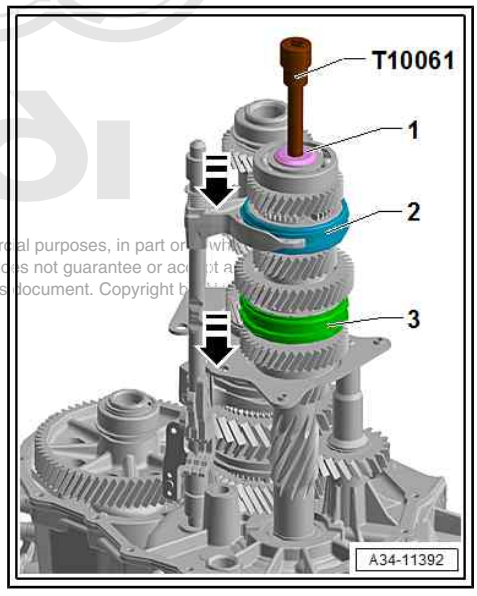

Protected by copyright. Copying for private or commercial purposes, in part or whole, is not permitted unless authorised by AUDI AG. AUDI AG does not guarantee or accept any liability with respect to the correctness of information in this document. Copyright by AUDI AG.

– Renew O-ring ⇒ Item 10 (page 59) for injection tube for gear cluster -1-.
– Press injection tube for gear cluster -1- onto reverse shaft -3- -arrow B-.
– Then slide guide -arrow A- into hole in bearing mounting -2-.
– Slide injection tube for gear cluster into gearbox housing until it engages audibly.

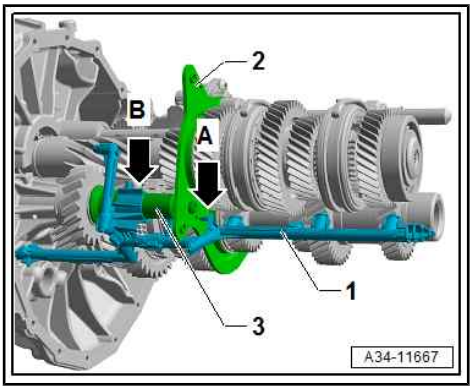

– Renew seal -3- for gear oil filter -1-.
– Insert gear oil filter -1- in gearbox housing -2-.
– Check that the two dowel sleeves for centring gearbox cover and gearbox housing are fitted in gearbox housing.
– Apply sealing paste (refer to ⇒ Electronic parts catalogue) evenly and not too thickly onto surface between gearbox housing and gearbox cover.

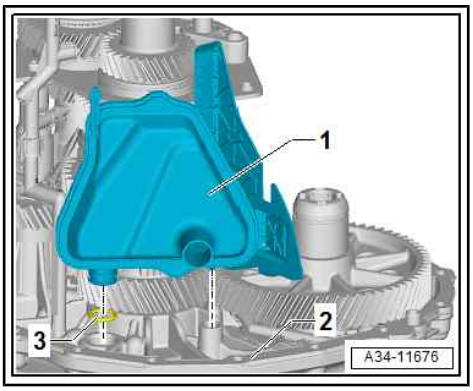

– Fit gearbox cover -3- onto gearbox housing -4-.

Note

- *To avoid damaging the roller bearing ⇒ Item 9 (page 95) for the output shaft in the gearbox cover, turn the gearbox cover back and forth somewhat when fitting it.*
- *Hold onto the gearbox cover until it is resting against the gearbox housing; do not use force.*

– Fit new bolts -1- (3x) and screw them hand-tight into bearing mounting.
– Tighten new bolts -2- to specified torque; note that two bolts -arrows- are longer.
– Tighten bolts -1- to specified torque.

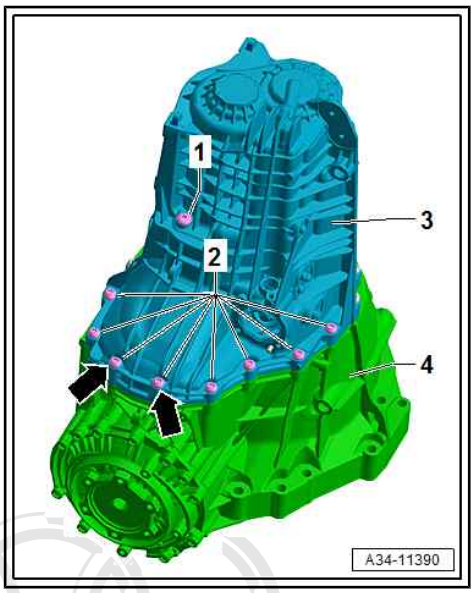

Determine thickness of circlip -arrow- for input shaft -1- as follows:

– Determine the thickest circlip that will just fit and install it. For part number refer to ⇒ Electronic parts catalogue .

Note

Start with the thickest circlip.

The following circlips are available:

Circlip thickness (mm)		
3.44	3.47	3.50

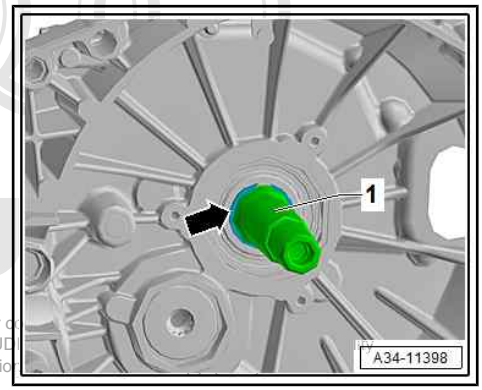

Protected by copyright. Copying for private or c
committed unless authorised by AUDI AG. AUD
with respect to the correctness of informatio

– Select 1st gear by moving selector plate/selector fork for 1st and 2nd gear -1- in direction of arrow -A-.

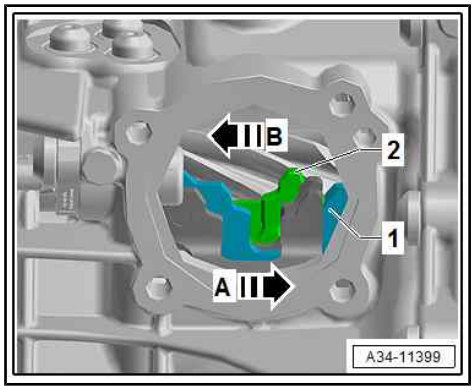

Note

- *The selector plate -1- is located behind the reverse gear selector fork.*
- *Rotate input shaft slightly to ensure that the gears shift correctly.*

– Next, move rear selector plate -2- in direction of arrow -B- to select 6th gear.

- The input and output shafts are both locked when these two gears are engaged.

– Clean thread of bolt -1- for output shaft with a wire brush.

– Fit bolt with locking fluid (⇒ Electronic parts catalogue) and tighten to specified torque using T80 Torx bit -2-.

3 - Torque wrench

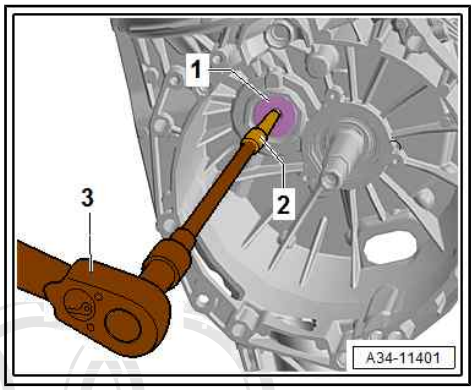

– Renew O-ring -1- for release bearing -2-.

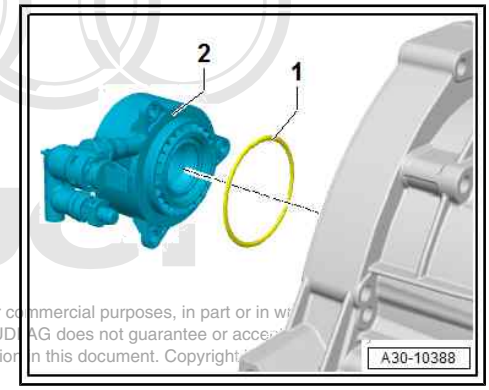

Protected by copyright. Copying for private or commercial purposes, in part or in wi
permitted unless authorised by AUDI AG. AUDI AG does not guarantee or acce
with respect to the correctness of information in this document. Copyright

– Install clutch slave cylinder with release bearing -A- -arrows- ⇒ page 19 .

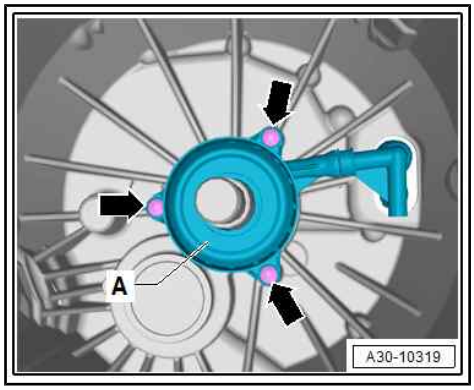

– Insert seals for gear oil pump -1-.

Allocation of seals for gear oil pump ⇒ page 119

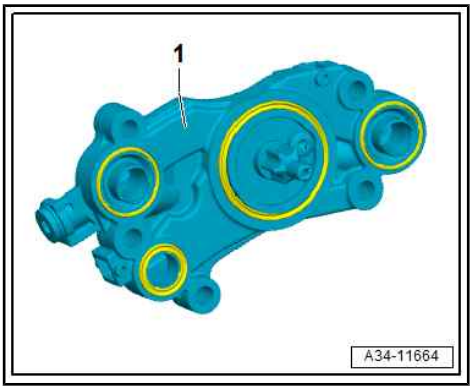

Note

The seals for the gear oil pump have to be renewed after removal.

– Fit gear oil pump -2- onto gearbox and tighten new bolts -1- in specified sequence ⇒ page 119 .

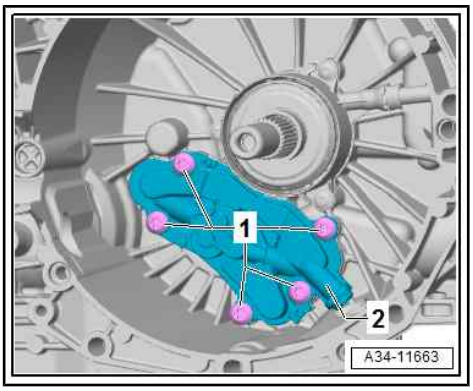

Protected by copyright. Copying for private or commercial purposes, in part or in whole, is not permitted unless authorised by AUDI AG. AUDI AG does not guarantee or accept any liability with respect to the correctness of information in this document. Copyright by AUDI AG.

– Remove locking fluid from threaded holes for securing selector shaft in gearbox cover. The threads can be cleaned with a thread tap.
– Fit new O-ring on selector shaft cover -2-.
– Screw guide pin - T40216- onto selector shaft -1-.

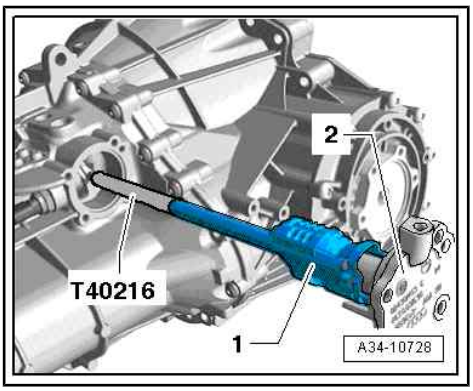

– Pack space between sealing lips -arrow- of selector shaft oil seal half-full with sealing grease for oil seals ; for sealing grease, refer to ⇒ Electronic parts catalogue .

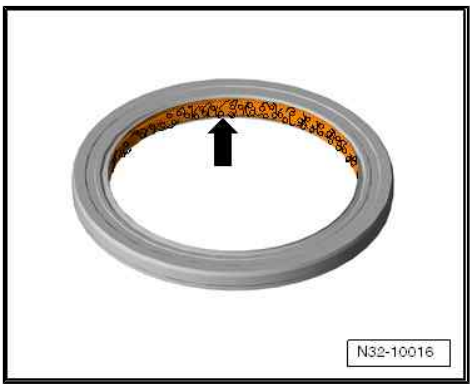

– Lift selector shaft slightly -arrow B- and install it in gearbox -arrow A-.

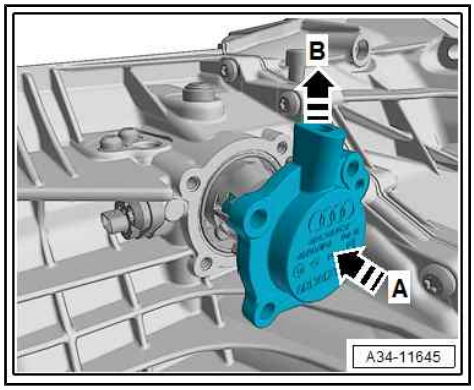

– Selector shaft cover -2- must make contact with gearbox housing.

– Tighten new bolts -1- to specified torque.

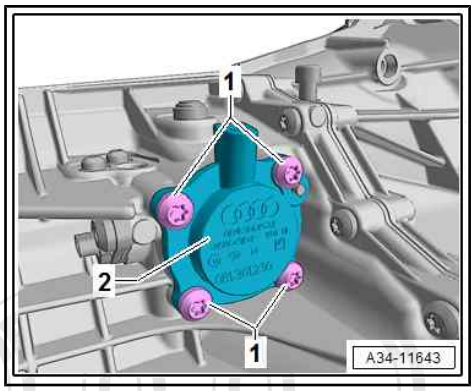

– Unscrew guide pin - T40216- from selector shaft -1-.

– Fill up gear oil ⇒ 6-speed manual gearbox 0CS, 0DJ, 0CX; Rep. gr. 34 ; Gear oil; Draining and filling gear oil .

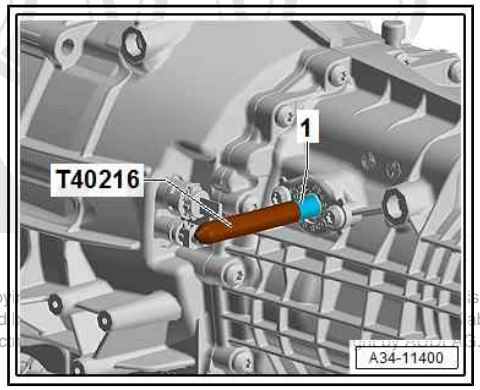

Note

Capacities and specifications ⇒ 6-speed manual gearbox 0CS, 0DJ, 0CX; Rep. gr. 00 ; Technical data

Protected by copyright. Copy... is not permitted unless authorised ... ability with respect to the correc... by AUDI AG.

After filling up gear oil, rotate gearbox 360° at engine and gearbox support - VAS 6095- .

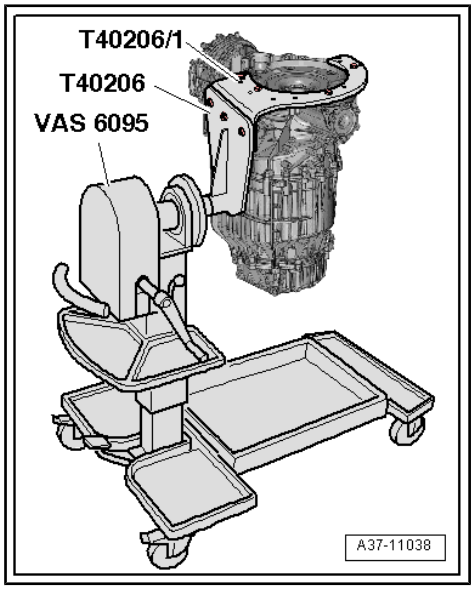

Caution

Risk of damage to gearbox!

- *Failing to rotate the gearbox can lead to damage to the gear cluster and bearings.*
- *The gear oil must be distributed evenly in the gearbox.*

– Install clutch module and flange shaft (left-side) ⇒ page 33 .

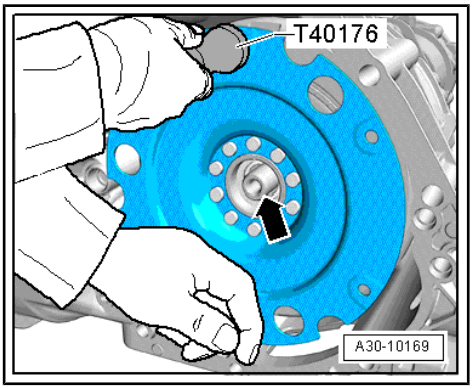

Tightening torques

- ⇒ “1.1 Exploded view - clutch release mechanism”, page 18
- ⇒ “2.1 Exploded view - input shaft”, page 133
- ⇒ “3.1 Exploded view - output shaft”, page 147
- ⇒ “2.2.2 Exploded view - gearbox with forced lubrication”, page 55
- ⇒ “5.2 Exploded view - gear oil pump”, page 119

2.6 Removing and installing selector shaft

Special tools and workshop equipment required

- Guide pin - T40216-

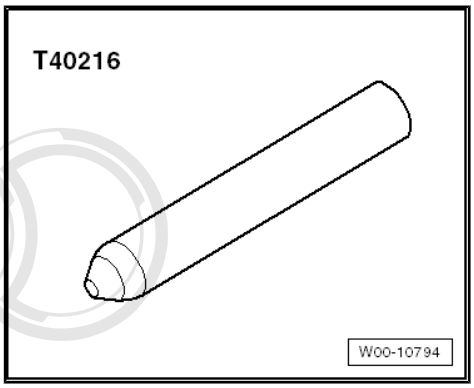

- Sealing grease for oil seals ⇒ Electronic parts catalogue

Removing

– Screw guide pin - T40216- onto selector shaft -1-.

Protected by copyright. Copying for private or commercial purp
permitted unless authorised by AUDI AG. AUDI AG does not
with respect to the correctness of information in this docum

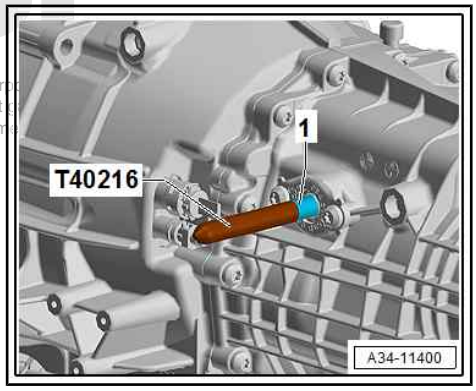

– Remove bolts -1- and carefully lever off selector shaft cover -2-.

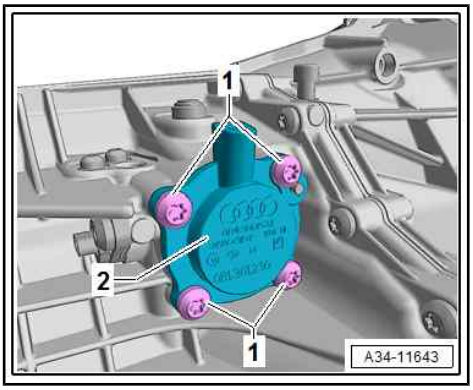

– Lift selector shaft slightly -arrow A- and pull it out -arrow B-.

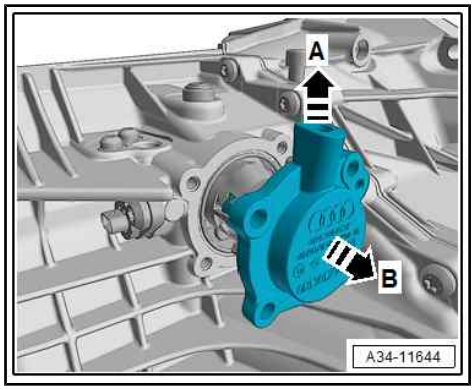

Installing

– Clean locking fluid residue from threaded holes for securing selector shaft in gearbox cover (residue can be removed using a thread tap).

– Fit new O-ring on selector shaft cover -2-.

– Screw guide pin T40216- onto selector shaft -1-.

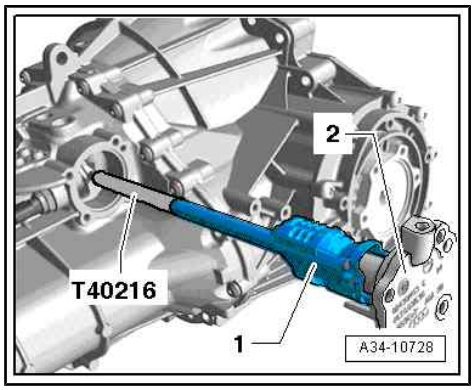

Copyright by AUDI AG. The reproduction, transmission or use of this document or its contents is not permitted unless authorised by AUDI AG. AUDI AG does not guarantee or accept any liability with respect to the correctness of information in this document. Copyright by AUDI AG.

– Pack space between sealing lips -arrow- of selector shaft oil seal half-full with sealing grease for oil seals ; for sealing grease, refer to ⇒ Electronic parts catalogue .

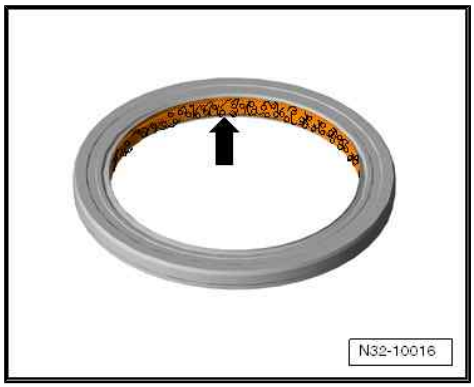

– Lift selector shaft slightly -arrow B- and install it in gearbox -arrow A-.

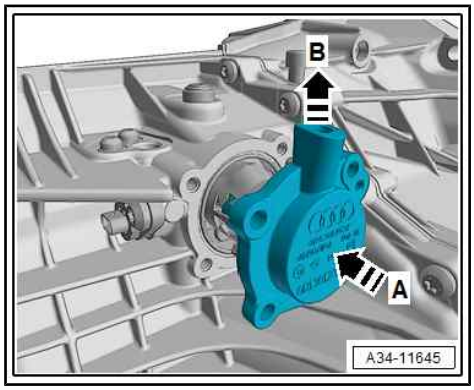

– Selector shaft cover -2- must make contact with gearbox housing.
– Fit and tighten new bolts -1-.

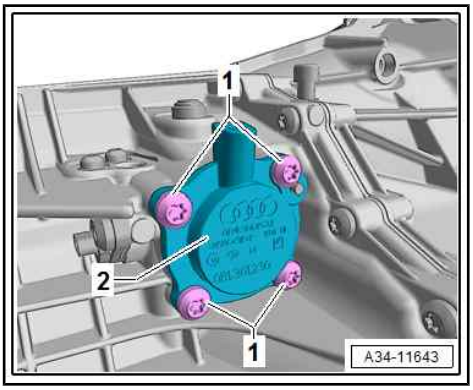

– Unscrew guide pin - T40216- from selector shaft -1-.

Tightening torques

◆ ⇒ “2.2.2 Exploded view - gearbox with forced lubrication”, page 55

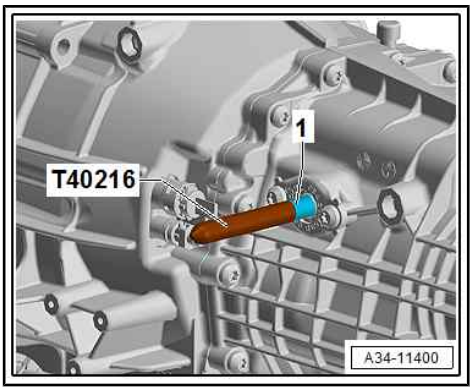

Protected by copyright. Copying for private or commercial purposes, in part or in whole, is not permitted unless authorised by AUDI AG. AUDI AG does not guarantee or accept any liability with respect to the correctness of information in this document. Copyright by AUDI AG.

3 Gearbox housing, clutch housing

⇒ "3.1 Exploded view - gearbox housing", page 92

⇒ "3.2 Exploded view - gearbox housing cover", page 94

⇒ "3.3 Servicing gearbox housing", page 96

⇒ "3.4 Servicing gearbox housing cover", page 103

3.1 Exploded view - gearbox housing

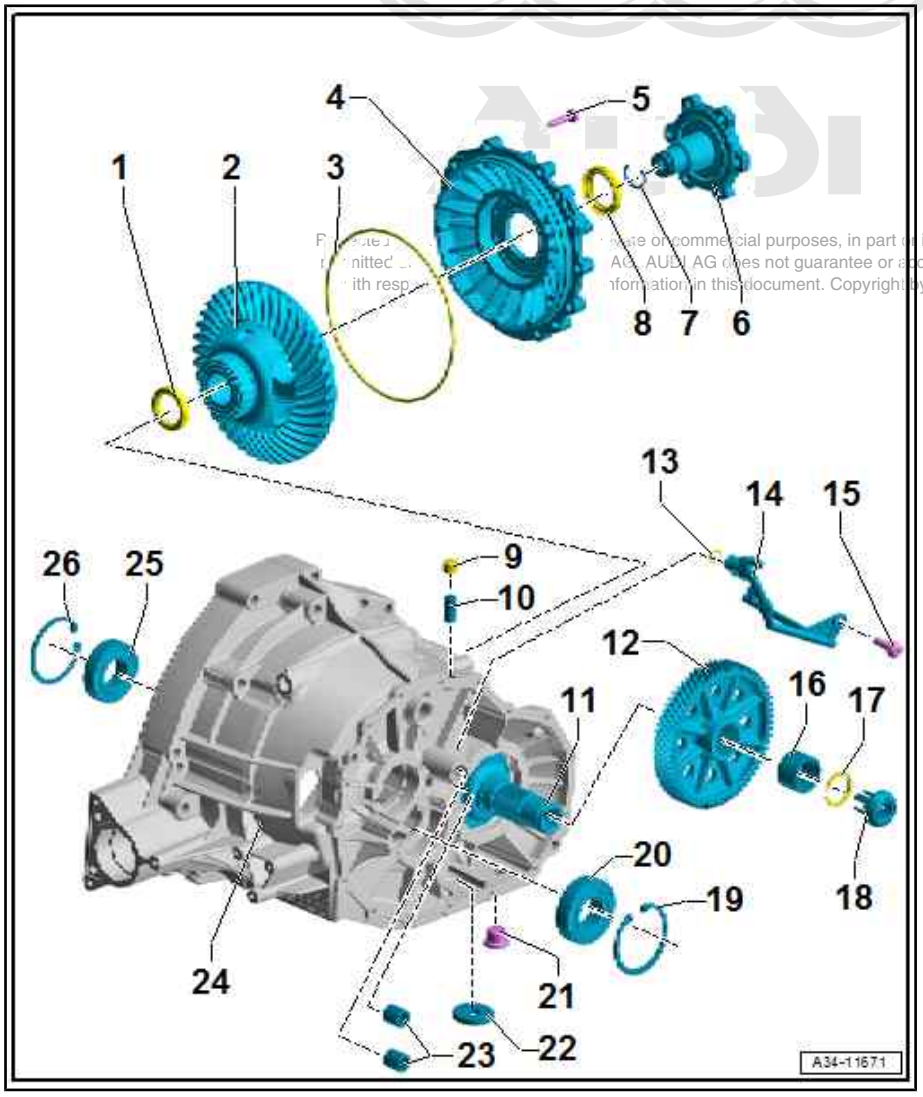

Protected ... or commercial purposes, in part or in whole, is not permitted ... AG. AUDI AG does not guarantee or accept any liability with respect ... information in this document. Copyright by AUDI AG.

1 - Oil seal
- ❑ For flange shaft (left-side)
- ❑ Removing and installing ⇒ page 158

2 - Differential
- ❑ Renewing bearing for differential ⇒ page 210

3 - O-ring
- ❑ Renew after removing
- ❑ Lubricate with gear oil

4 - Cover for final drive
- ❑ Renewing ⇒ page 203

5 - Bolt
- ❑ Steel bolts (M8x43)
- ❑ 12x
- ❑ Tightening torque ⇒ Item 8 (page 170)

6 - Flange shaft (right-side)
- ❑ Removing and installing ⇒ page 223

7 - Circlip
- ❑ For flange shaft (right-side)
- ❑ Renew after removing

8 - Oil seal
- ❑ For flange shaft (right-side)
- ❑ Removing and installing ⇒ page 162

9 - Cap
- ❑ For gearbox breather

10 - Breather pipe
- ❑ Clip in cap for gearbox breather
- ❑ Installation depth ⇒ page 99

11 - Pinion shaft
- ❑ Removing and installing ⇒ page 172

12 - Spur gear drive output gear
- ❑ Note correct position: Reinforcement ribs face towards gearbox cover
- ❑ Removing ⇒ page 100

- ❑ Installing ⇒ page 101

13 - O-ring

- ❑ Renew after removing

14 - Injection tube for final drive gear set

- ❑ For oil supply to differential
- ❑ Manual gearboxes with forced lubrication only
- ❑ Removing and installing ⇒ page 100

15 - Bolt

- ❑ Manual gearboxes with forced lubrication only
- ❑ Renew after removing
- ❑ 8 Nm +60°

16 - Inner race

- ❑ For roller bearing on pinion shaft
- ❑ Removing ⇒ page 100
- ❑ Installing ⇒ page 101

17 - Circlip

- ❑ Re-determining thickness ⇒ page 102

18 - Clip

- ❑ Prise off pinion shaft carefully e.g. with a screwdriver
- ❑ Fit into pinion shaft by hand
- ❑ Need not be refitted/renewed if damaged

19 - Circlip

- ❑ Installation position ⇒ page 103

20 - Ball bearing

- ❑ For output shaft
- ❑ Pressing out ⇒ page 102
- ❑ Pressing in ⇒ page 102

21 - Oil drain plug

- ❑ Tightening torque ⇒ page 94

22 - Magnet

- ❑ Manual gearboxes without forced lubrication only
- ❑ Clean

23 - Ball sleeve

- ❑ For selector plate / selector fork
- ❑ 2x
- ❑ Removing ⇒ page 99
- ❑ Installing ⇒ page 100

24 - Gearbox housing cover

25 - Ball bearing

- ❑ For input shaft
- ❑ Pressing out ⇒ page 103
- ❑ Pressing in ⇒ page 103

26 - Circlip

- ❑ Installation position ⇒ page 103

Protected by copyright. Copying for private or commercial purposes, in part or in whole, is not permitted unless authorised by AUDI AG. AUDI AG does not guarantee or accept any liability with respect to the correctness of information in this document. Copyright by AUDI AG.

Tightening torques for oil drain plugs

I - Manual gearbox without forced lubrication

- Oil drain plug -arrow A- is located in gearbox housing
- 45 Nm

II - Manual gearbox with forced lubrication

- Oil drain plug -arrow B- is located in gearbox cover
- Additional opening in gearbox housing with sealing plug -arrow C-
- 45 Nm

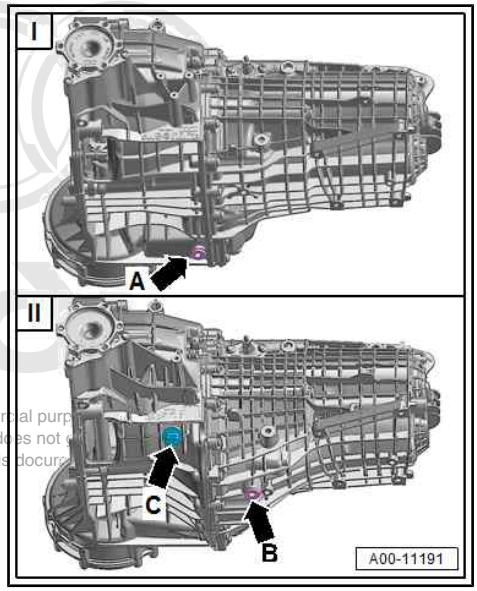

Protected by copyright. Copying for private or commercial purp
permitted unless authorised by AUDI AG. AUDI AG does not
with respect to the correctness of information in this docum

3.2 Exploded view - gearbox housing cover

1 - Large locking bush

- ❑ For selector shaft
- ❑ Removing and installing ⇒ page 109
- ❑ Installation depth ⇒ page 109

2 - Locking bushes

- ❑ For selector plate / selector fork
- ❑ Removing ⇒ page 110
- ❑ Driving in ⇒ page 110

3 - Gearbox housing cover

- ❑ Servicing ⇒ page 103

4 - Oil seal

- ❑ For output shaft
- ❑ Only for gearbox on vehicles with four-wheel drive
- ❑ Renewing ⇒ page 166

5 - Sealing cap

- ❑ Only for gearbox on vehicles with front-wheel drive
- ❑ Renew after removing
- ❑ Do not use additional lubricant on outer circumference for installation
- ❑ Renewing with gearbox installed ⇒ 6-speed manual gearbox 0CS, 0DJ, 0CX; Rep. gr. 39 ; Oil seals; Renewing oil seal (right-side)
- ❑ Removing ⇒ page 112

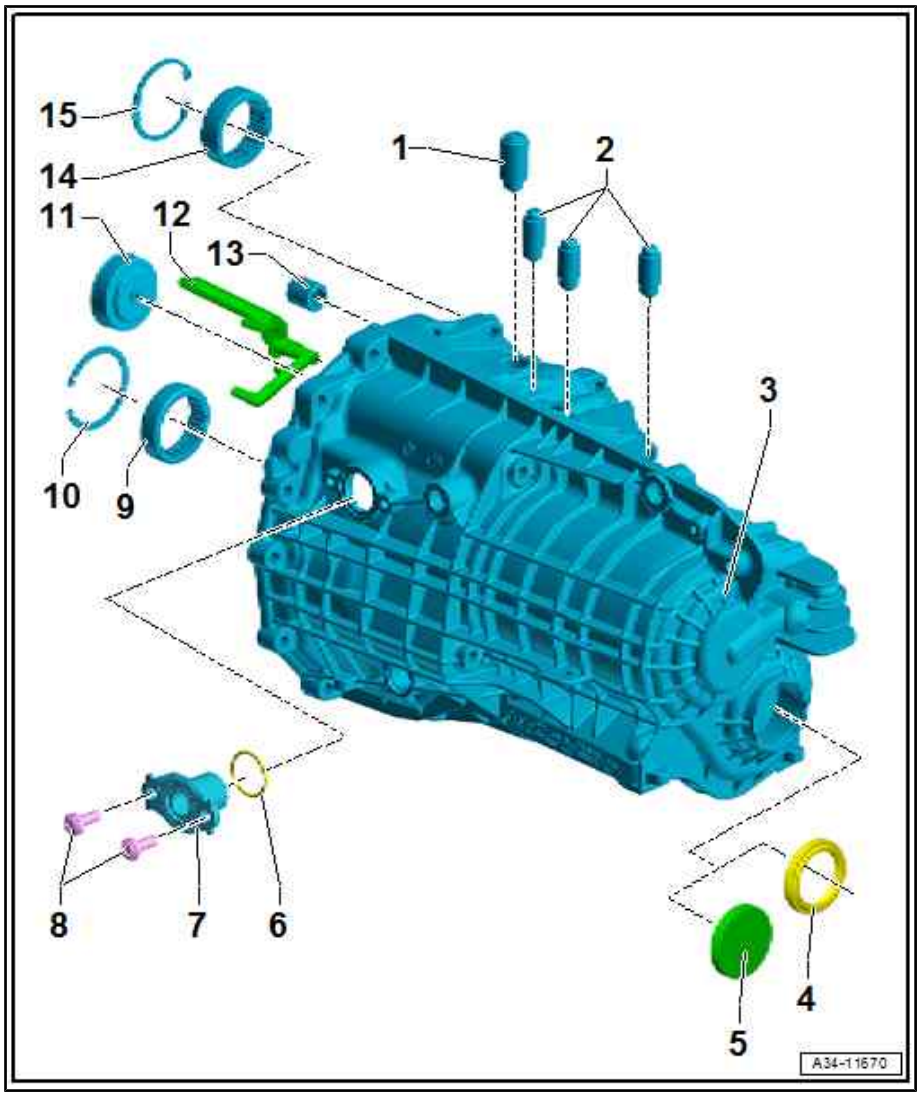

- ❑ Installing ⇒ page 112

6 - O-ring

- ❑ Renew after removing

7 - Bearing cover

- ❑ Exploded view ⇒ page 110
- ❑ Removing and installing oil seal for selector shaft ⇒ page 110
- ❑ Removing ball sleeve for selector shaft ⇒ page 111
- ❑ Installing ball sleeve for selector shaft ⇒ page 111

8 - Bolt

- ❑ Aluminium bolts (M8x22)
- ❑ Renew after removing
- ❑ 8 Nm +60°

Protected by copyright. Copying for private or commercial purposes, in part or in whole, is not permitted unless authorised by AUDI AG. AUDI AG does not guarantee or accept any liability with respect to the correctness of information in this document. Copyright by AUDI AG.

9 - Roller bearing

- ❑ Bearing for output shaft
- ❑ Pressing out on vehicles with front-wheel drive ⇒ page 112
- ❑ Pressing out on vehicles with four-wheel drive ⇒ page 113
- ❑ Pressing in ⇒ page 113

10 - Circlip

11 - Sleeve

- ❑ For input shaft ball bearing
- ❑ Renew after removing
- ❑ Removing ⇒ page 114
- ❑ Pressing in ⇒ page 114

12 - Oil collector

- ❑ Only for gearbox with forced lubrication
- ❑ Installing ⇒ page 115

13 - Ball sleeve

- ❑ For 3rd/4th gear selector plate / selector fork
- ❑ Removing ⇒ page 113
- ❑ Driving in ⇒ page 114

14 - Roller bearing

- ❑ For pinion shaft
- ❑ Pulling out ⇒ page 114
- ❑ Driving in ⇒ page 114

15 - Circlip

3.3 Servicing gearbox housing

Special tools and workshop equipment required

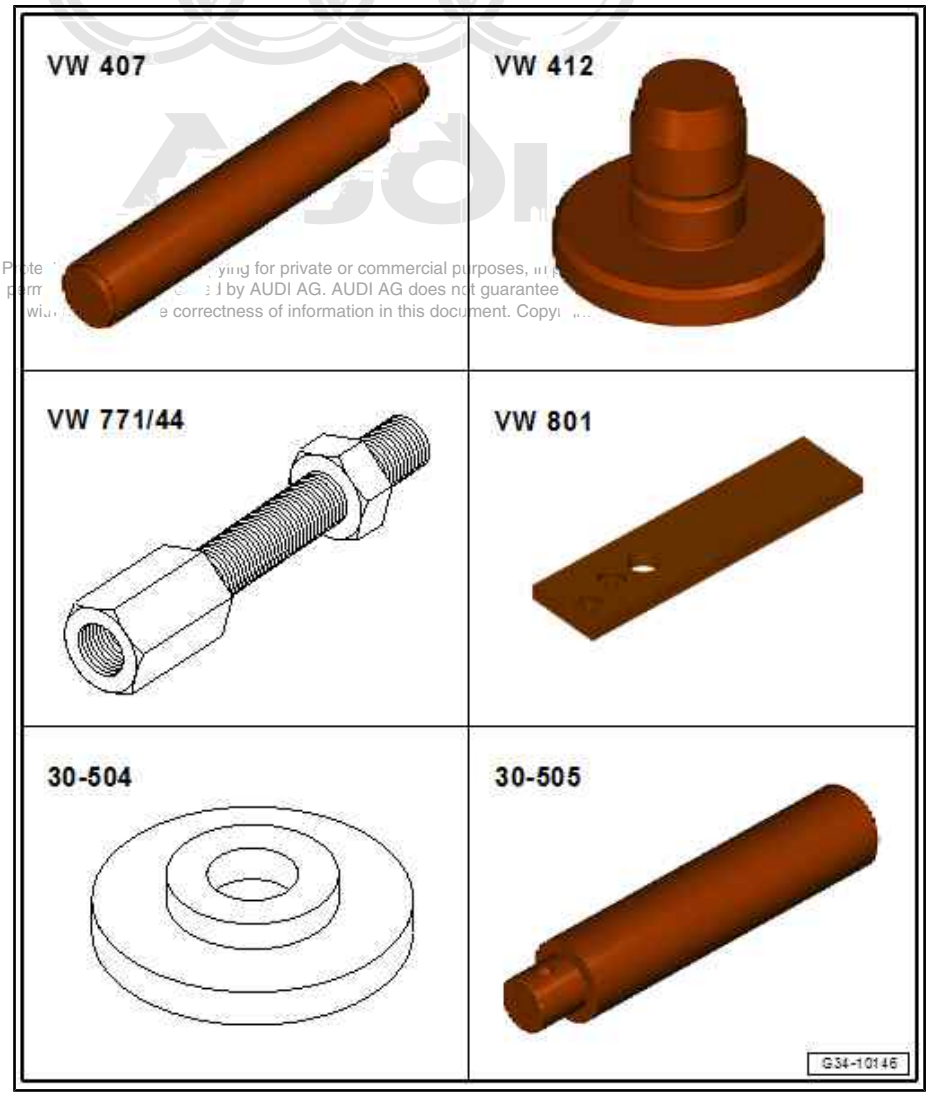

- Press tool - VW 407-
- Press tool - VW 412-
- Adapter - VW 771/44- from multi-purpose tool set - VW 771-
- Retaining plate - VW 801-
- Press tool - 30 - 504-
- Mandrel - 30 - 505-

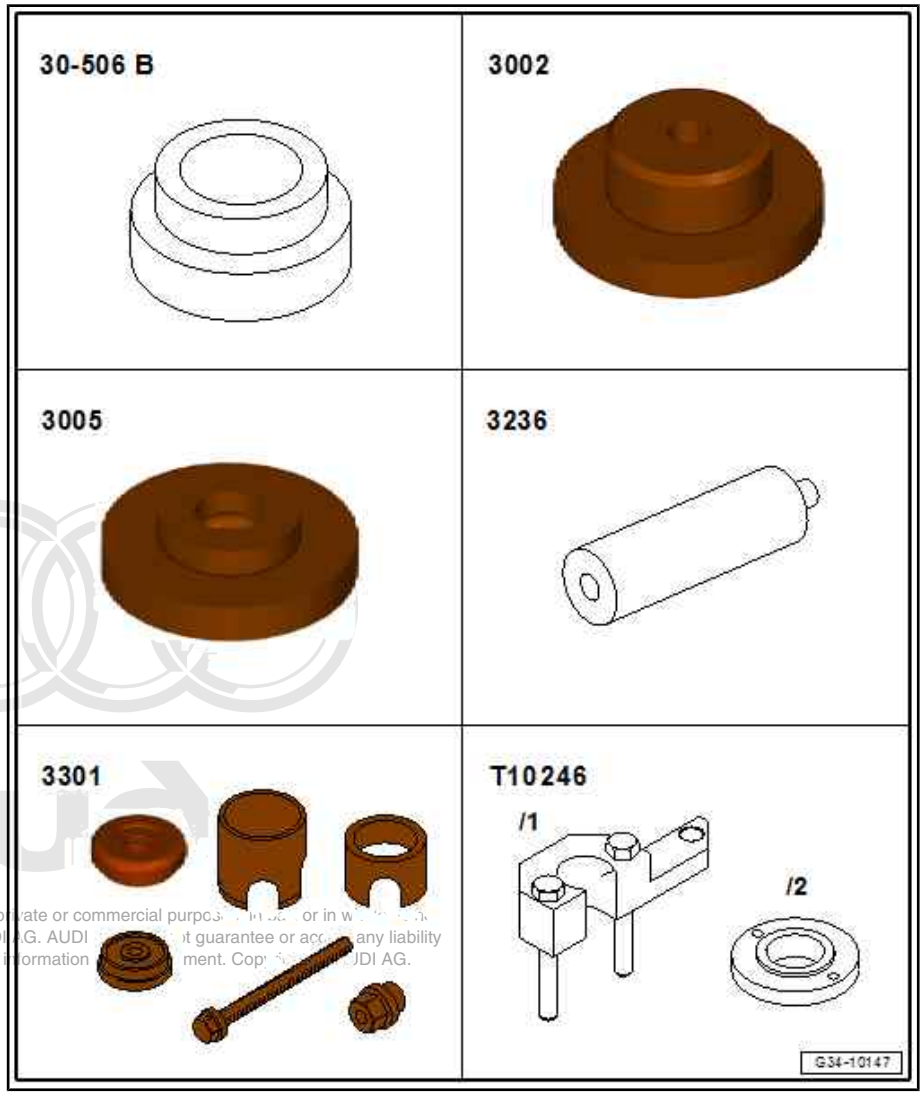

Protected by copyright. Copying for private or commercial purposes, in part, or in whole, is not permitted unless authorised by AUDI AG. AUDI AG does not guarantee or accept any liability with respect to the correctness of information in this document. Copyright by AUDI AG.

- Press tool - 30 - 506 B-
- Thrust piece - 3002-
- Thrust plate - 3005-
- Thrust piece - 3236-
- Assembly tool - 3301-
- Fitting tool - T10246-

- Pressure sleeve - T40103-

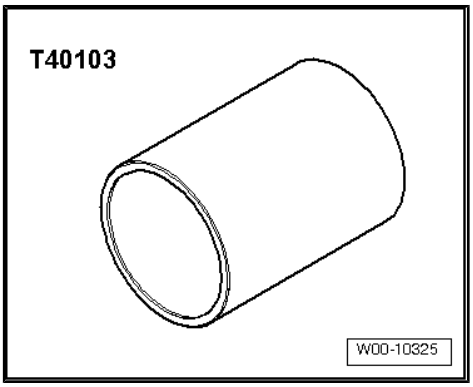

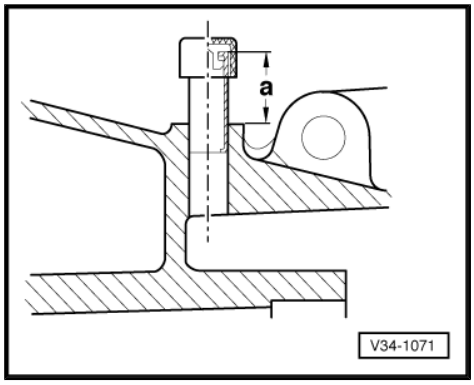

- Assembly tool - T40213-

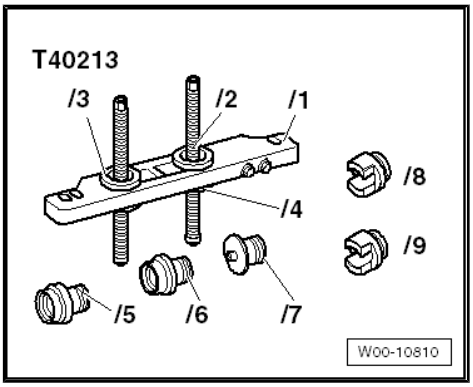

- Hot air blower - V.A.G 1416-

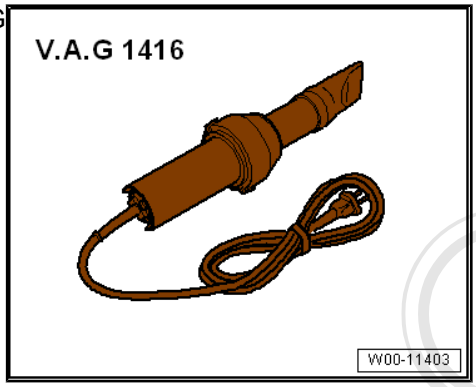

- Inductive heater - VAS 6414-

tected by copyright. Copying for private or commercial purposes, in part or in whole, is not rmitted unless authorised by AUDI AG. AUDI AG does not guarantee or accept any liability with respect to the correctness of information in this document. Copyright by AUDI AG.

- Press tool - VW412-

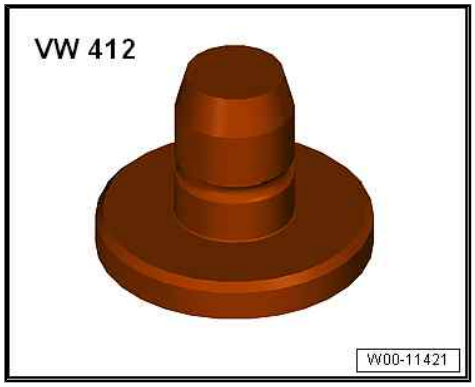

- -1- Internal puller - VAS 251 605 (Kukko 21-2)-

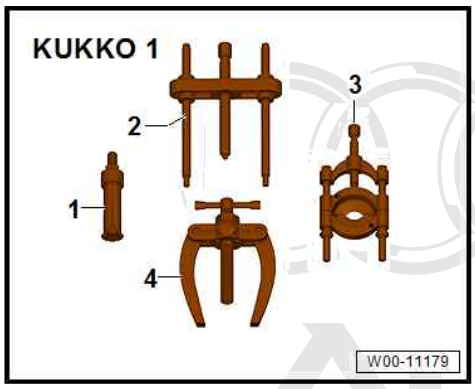

- -2- Puller - VAS 251 417 (Kukko 18-1)-
- -2- Puller - VAS 251 419 (Kukko 18-2)-
- -4- Counter-support - VAS 251 621 (Kukko 22-1)-
- 2 M14 x 1.5 nuts or M14 x 1.5 wheel nuts
- 1 M14 nut with washer

Protected by copyright. Copying for private or commercial purposes, in part or in whole, is not permitted unless authorised by AUDI AG. AUDI AG does not guarantee or accept any liability with respect to the correctness of information in this document. Copyright by AUDI AG.

Installation dimension of breather pipe

Dimension -a- = 21 mm

Pulling out ball sleeve -1- for selector plate/selector fork

2 - Internal puller - VAS 251 605 (Kukko 21-2)-

3 - Counter-support - VAS 251 621 (Kukko 22-1)-

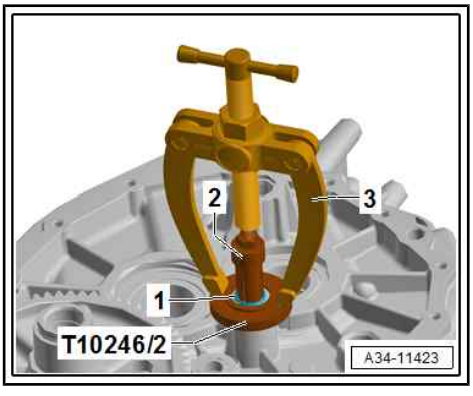

Note

To remove the ball sleeve for the 5th/6th gear selector plate/selector fork, also place the pad - T10246/2- from the fitting tool - T10246- on the gearbox housing, as shown in illustration.

Pressing in ball sleeve for selector plate/selector fork (press in until flush)

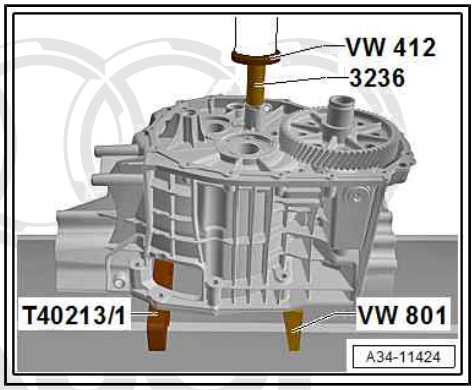

Note

- *To ensure that the gearbox lies parallel on the work table, position plate - T40213/1- and support plate - VW 801- on edge underneath.*
- *The ball sleeve can also be driven in flush with the gearbox housing attached to the gearbox support - T40206- .*

Pulling spur gear drive output gear -1- off pinion shaft together with sleeve -2-.

Protected by copyright. Copying for private or commercial purposes, in part or in whole, is not permitted unless authorised by AUDI AG. AUDI AG does not guarantee or accept any liability with respect to the correctness of information in this document.

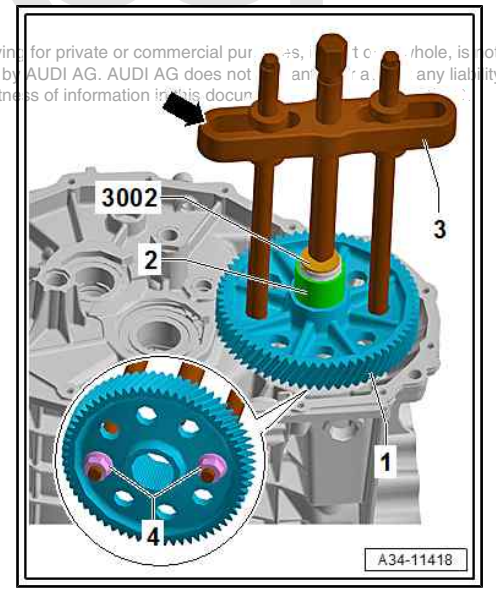

Before pulling out:

- Remove clip ⇒ Item 18 (page 93) and circlip ⇒ Item 17 (page 93) from pinion shaft.

3 - Puller - VAS 251 419 (Kukko 18-2)-

4 - M14 x 1.5 nut or M14 x 1.5 wheel nut

– Attach puller -3- to spur gear drive output gear -1- with nuts -4-.

– Heat spur gear drive output gear -1- to approx. 100 °C using hot air blower - V.A.G 1416- or similar.

– Counterhold at puller -arrow- when pulling off.

Caution

Risk of damage to gearbox housing and injection tube for final drive gear set.

- ***The nuts -4- on the puller must not make contact with the ribs of the housing or the injection tube for final drive gear set.***

Removing and installing injection tube for final drive gear set -1-

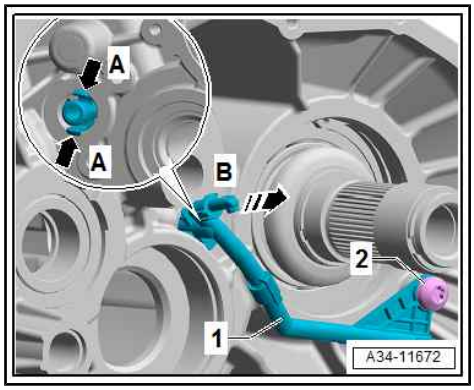

Before removing:

- Pull off spur gear drive output gear ⇒ page 100 .

– Remove bolt -2-.

– Release injection tube for final drive gear set -arrows A- and pull it out of gearbox housing in direction of -arrow B-.

– Guide injection tube for final drive gear set -1- out of hole in gearbox housing; pay attention to nozzle -arrow- while doing so.

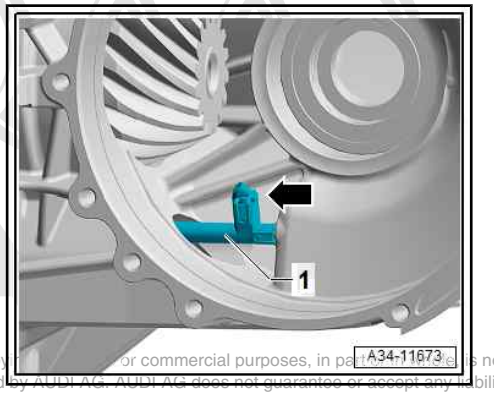

Note

Always renew O-ring ⇒ Item 13 (page 93) for injection tube for final drive gear set.

Installation is carried out in reverse sequence.

Protected by copyright. Copy or commercial purposes, in pa is not permitted unless authorised by AUDI AG. AUDI AG does not guarantee or accept any liability with respect to the correctness of information in this document. Copyright by AUDI AG

Pressing on spur gear drive output gear -3-

– Use inductive heater - VAS 6414- to heat spur gear drive output gear -3- to approx. 140 °C and fit it in installation position on pinion shaft.

• Installation position of spur gear drive output gear: Reinforcement ribs -arrow A- face upwards.

– Attach one spindle -1- of puller - VAS 251 417 (Kukko 18-1)- to adapter - VW 771/44- -5- and insert it into access hole in pinion shaft.

– Next, push nut -4- (M10) on until thread is flush with adapter - VW 771/44- .

– Then use nut -2- (M14) with washer to press spur gear drive output gear on as far as stop. When doing so, counterhold at hexagon flats of spindle -1- -arrow B-.

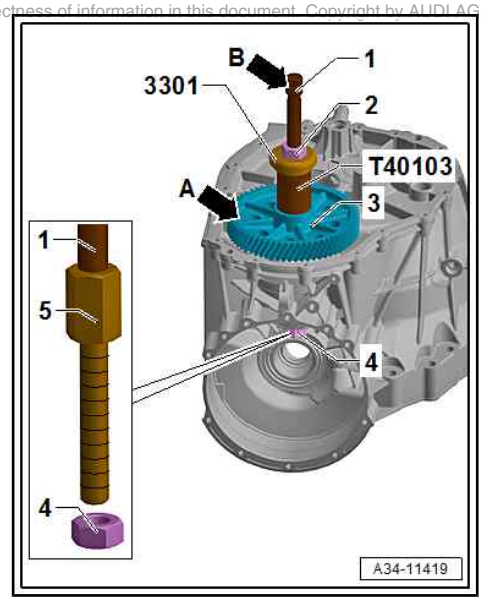

Pressing roller bearing inner race onto pinion shaft

• Spur gear drive output gear must be pressed on as far as stop.

– Use inductive heater - VAS 6414- to heat roller bearing inner race -3- to approx. 100 °C and fit it onto pinion shaft.

– Attach one spindle -1- of puller - VAS 251 417 (Kukko 18-1)- to adapter - VW 771/44- -5- and insert it into access hole in pinion shaft.

– Push nut -4- (M10) on until thread is flush with adapter - VW 771/44- .

– Then use nut -2- (M14) with washer to press inner race on as far as stop. When doing so, counterhold at hexagon flats of spindle -1-.

• After this, it is necessary to re-determine the required thickness of the shim ⇒ Item 17 (page 93) , ⇒ page 102 .

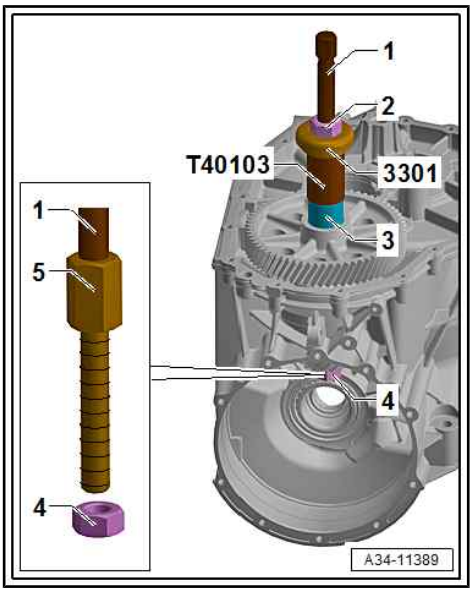

Selecting correct circlip for roller bearing inner race on pinion shaft

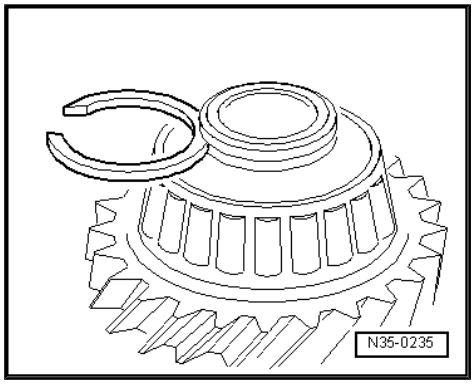

Note

- *Roller bearing inner race is pressed on to stop.*
- *The illustration shows a different component, but the procedure for selecting the circlip is the same.*

– Determine the thickest circlip that will just fit and install it. For part number refer to ⇒ Electronic parts catalogue .

The following circlips are available:

Circlip thickness (mm)		
2.39	2.43	2.46
2.49	2.52	2.55

Pressing output shaft ball bearing out of gearbox housing

Protected by copyright. Copying for private or commercial purposes, in part or in whole, is not permitted unless authorised by AUDI AG. AUDI AG does not guarantee or accept any liability with respect to the correctness of information in this document. Copyright by AUDI AG.

Before pressing out:

- Remove circlip for ball bearing ⇒ Item 19 (page 93) .

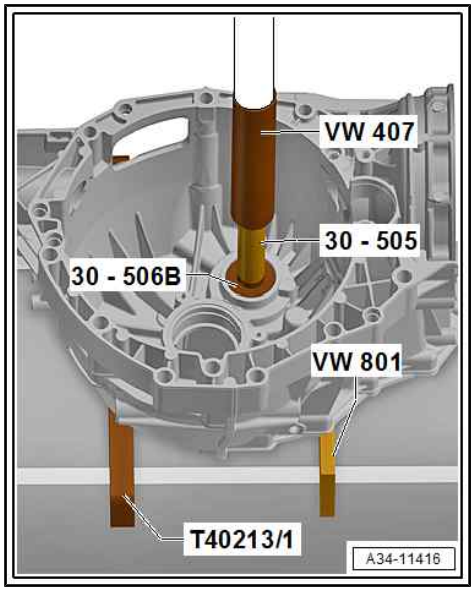

Note

- *To ensure that the gearbox lies parallel on the work table, position plate - T40213/1- and support plate - VW 801- on edge underneath.*
- *The ball bearing can also be driven out with the gearbox housing attached to the gearbox support - T40206- .*

Pressing output shaft ball bearing carefully into gearbox housing (press in onto stop)

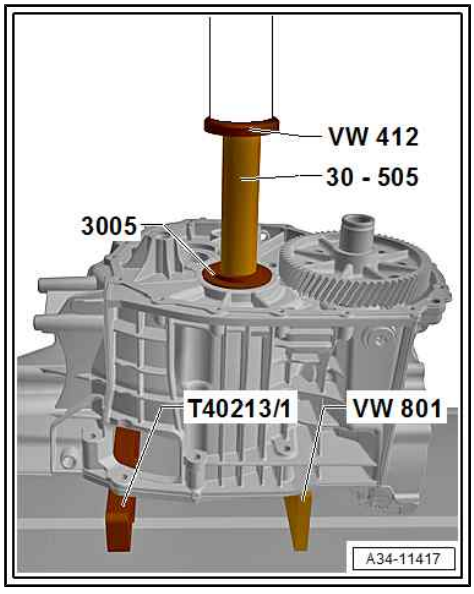

Note

- *To ensure that the gearbox lies parallel on the work table, position plate - T40213/1- and support plate - VW 801- on edge underneath.*
- *The ball bearing can also be driven in onto stop with the gearbox housing attached to the gearbox support - T40206- .*

– Then fit circlip for ball bearing ⇒ Item 19 (page 93) ; note correct installation position of circlip ⇒ page 103 .

Pressing input shaft ball bearing out of gearbox housing

Before pressing out:

- Remove circlip for ball bearing ⇒ Item 26 (page 93) .

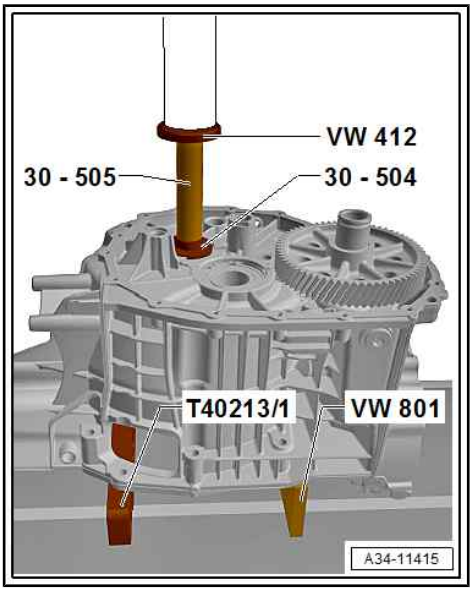

Note

- *To ensure that the gearbox lies parallel on the work table, position plate - T40213/1- and support plate - VW 801- on edge underneath.*
- *The ball bearing can also be driven out with the gearbox housing attached to the gearbox support - T40206- .*

Pressing input shaft ball bearing into gearbox housing (press in carefully onto stop)

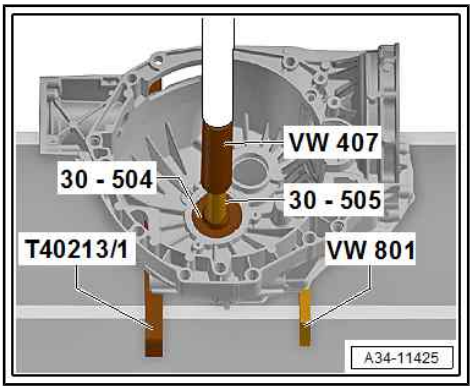

Note

- *To ensure that the gearbox lies parallel on the work table, position plate - T40213/1- and support plate - VW 801- on edge underneath.*
- *The ball bearing can also be driven in onto stop with the gearbox housing attached to the gearbox support - T40206- .*

– Then fit circlip for ball bearing ⇒ Item 26 (page 93) ; note correct installation position of circlip ⇒ page 103 .

Installation position of circlips -1- for ball bearings -2-

- The chamfer on the circlip faces away from the ball bearings. The smooth side faces the ball bearings.

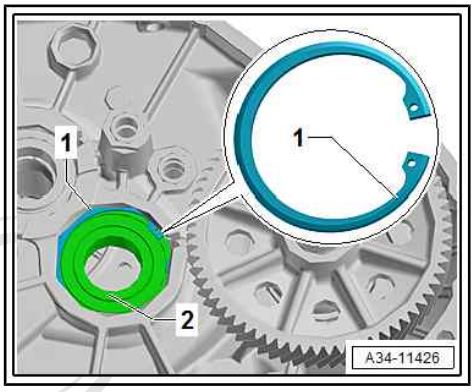

Note

- *Do not interchange the circlips for the ball bearings of the input shaft and output shaft.*
- *The circlip for the output shaft has a larger diameter.*
- *The illustration shows the circlip for the ball bearing of the output shaft.*

3.4 Servicing gearbox housing cover

Protected by copyright. Copying for private or commercial purposes, in part or in whole, is not permitted unless authorised by AUDI AG. AUDI AG does not guarantee or accept any liability with respect to the correctness of information in this document. Copyright by AUDI AG.

Special tools and workshop equipment required

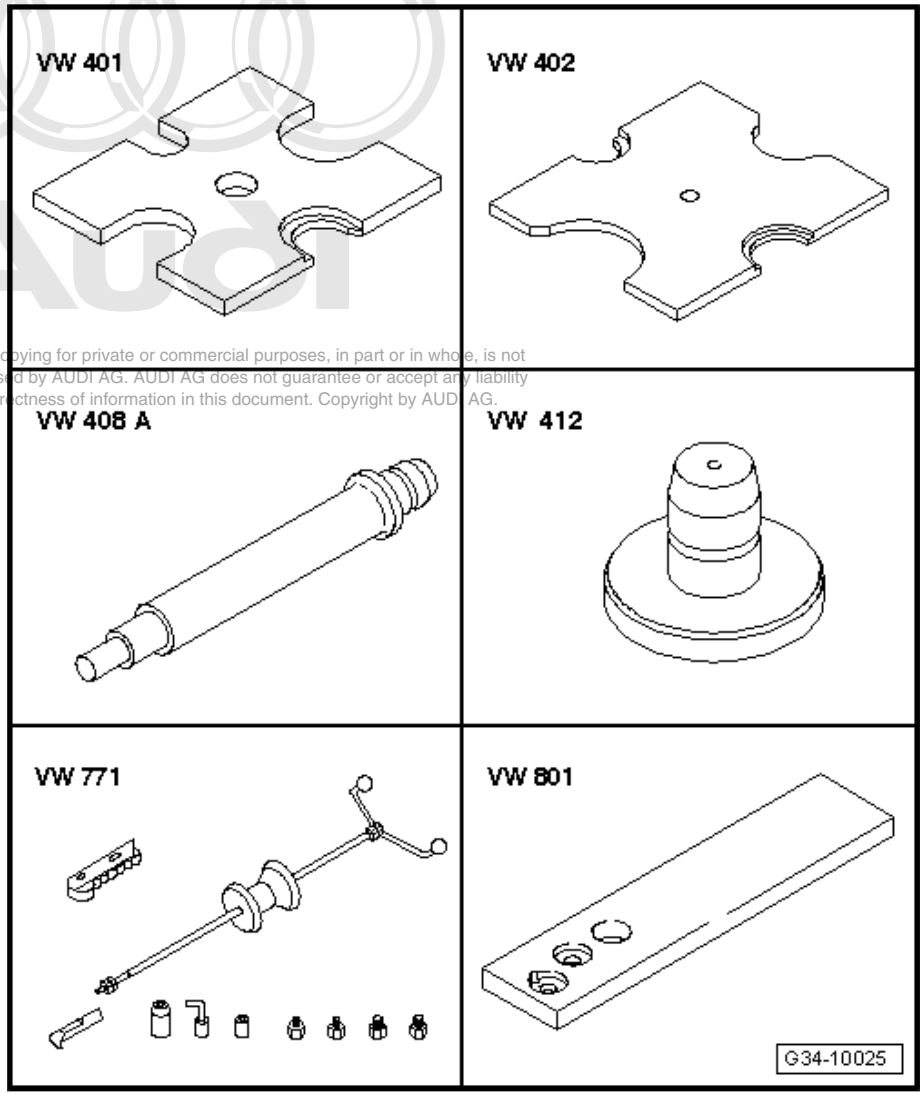

Protected by copyright. Copying for private or commercial purposes, in part or in whole, is not permitted unless authorised by AUDI AG. AUDI AG does not guarantee or accept any liability with respect to the correctness of information in this document. Copyright by AUDI AG.

- Thrust plate - VW 401-
- Thrust plate - VW 402-
- Press tool - VW 408 A-
- Press tool - VW 412-
- Multi-purpose tool - VW 771-
- Retaining plate - VW 801-

Protected by copyright. Copying for private or commercial purposes, in part or in whole, is not permitted unless authorised by AUDI AG. AUDI AG does not guarantee or accept any liability with respect to the correctness of information in this document. Copyright by AUDI AG.

- Tube - VW 418 A-
- Sleeve - VW 472/2-
- Thrust pad - VW 510-
- Thrust pad - VW 512-
- Engine and gearbox support supplement - VW 540/1 B-
- Guide pin - 10 - 15-

Protected by copyright. Copying for p , in part or in whole, is not permitted unless authorised by AUDI ntee or accept any liability with respect to the correctness of i Copyright by AUDI AG.

- Thrust plate - 30 - 205-
- Mandrel - 30 - 505-
- Thrust pad - 3074-
- Assembly tool - 3301-
- Shock absorber tool set - T10001-
- Punch - T10168-

Protected by copyright. Copying for private or commercial purposes, in part or in whole, is not permitted unless authorised by AUDI AG. AUDI AG does not guarantee or accept any liability with respect to the correctness of information in this document. Copyright by AUDI AG.

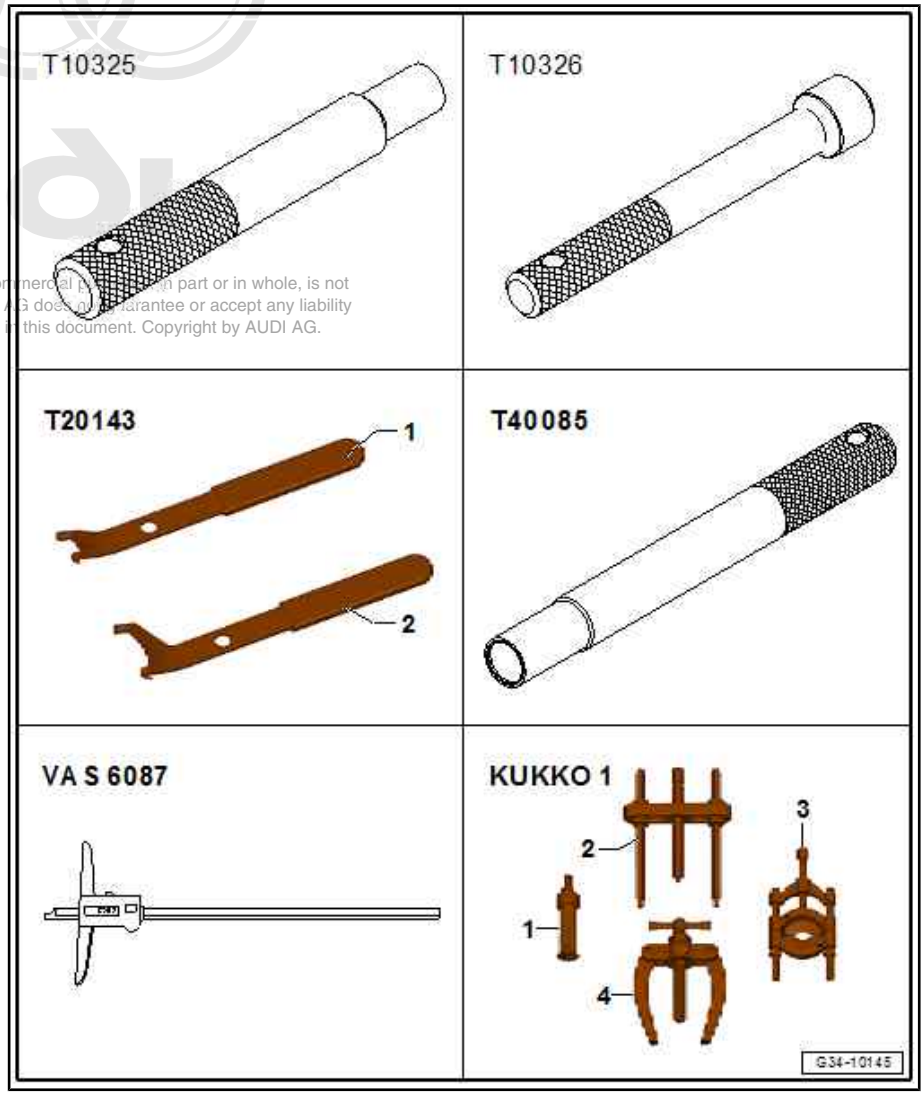

- Punch - T10325-
- Punch - T10326-
- Extractor tool - T20143-
- Punch - T40085-
- Digital depth gauge - VAS 6087-
- -1- Internal puller - VAS 251 605 (Kukko 21-2)-
- -1- Internal puller - VAS 251 613 (Kukko 21-6)-
- -4- Counter-support - VAS 251 623 (Kukko 22-2)-

- Press tool - VW 407-

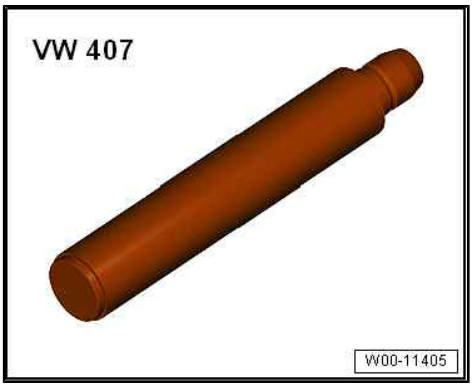

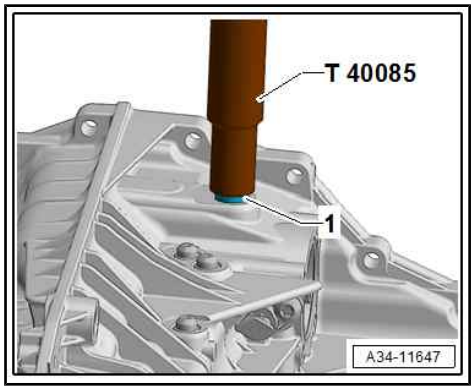

- Thrust plate - 3005-

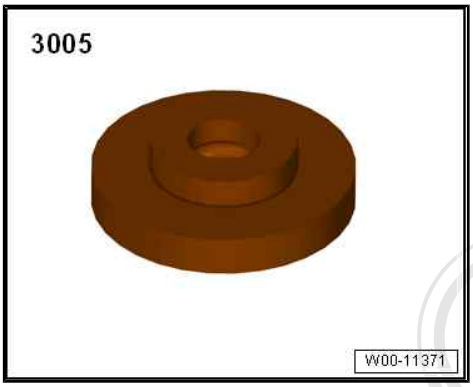

- Adapter - T40213/9-

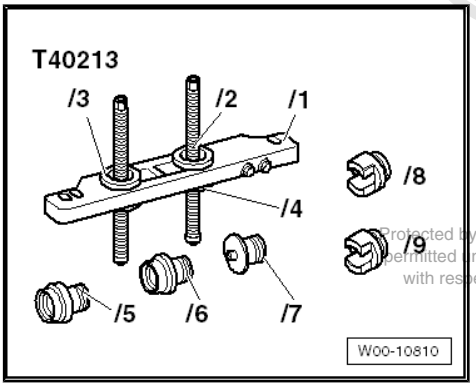

- Hot air blower - V.A.G 1416-

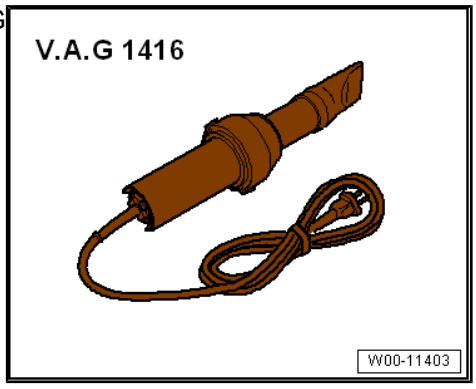

Protected by copyright. Copying for private or commercial purposes, in part or in whole, is not permitted unless authorised by AUDI AG. AUDI AG does not guarantee or accept any liability with respect to the correctness of information in this document. Copyright by AUDI AG.

♦ Punch - 30-212-

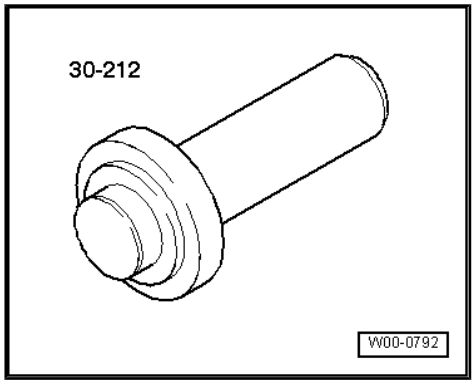

Removing and installing large locking bush -1- for selector shaft

Removing:

- The selector shaft must be removed.
- If the gearbox has not been dismantled, put a cloth in the aperture for the selector shaft to stop the locking bush from dropping into the gearbox.

– Drive out large locking bush inwards (i.e. into gearbox cover) using drift - T40085- .

Installing:

– Drive in locking bush to correct installation depth ⇒ page 109 using drift - T40085- .

Protected by copyright. Copying for private or commercial purposes, in part or in whole, is not permitted unless authorised by AUDI AG. AUDI AG does not guarantee or accept any liability with respect to the correctness of information in this document. Copyright by AUDI AG.

Installation depth of large locking bush -1- in gearbox cover

– Apply digital depth gauge - VAS 6087- to first shoulder -arrow- of locking bush and check installation depth -a-.

- Installation depth -a- = 6.5 ± 0.2 mm

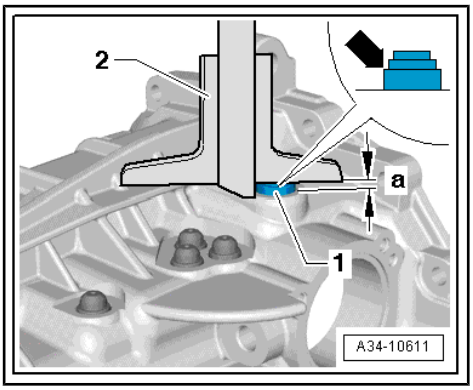

Removing locking bushes for selector plates/selector forks

- The gearbox cover must be removed.

– Drive out locking bushes for selector plates/selector forks -arrows- with drift - T10325- .

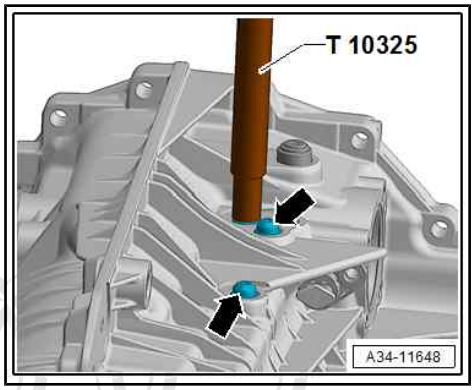

Driving in locking bushes for selector plates/selector forks

– Drive in locking bushes for selector plates/selector forks -arrows- with drift - T10326- (press in until drift contacts stop).

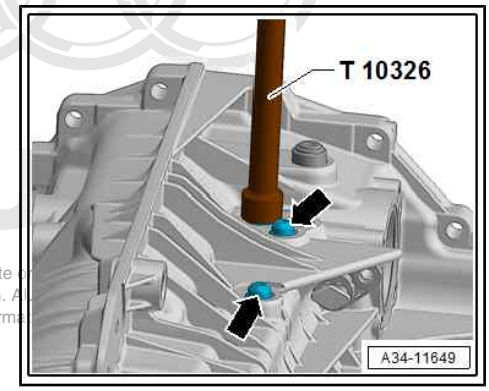

Protected by copyright. Copying for private or
permitted unless authorised by AUDI AG. A
with respect to the correctness of informa

Exploded view - sealing cap for selector shaft

1 - Oil seal for selector shaft; removing and installing ⇒ page 110

2 - Bearing cover

3 - Ball sleeve for selector shaft; removing ⇒ page 111 , installing ⇒ page 111

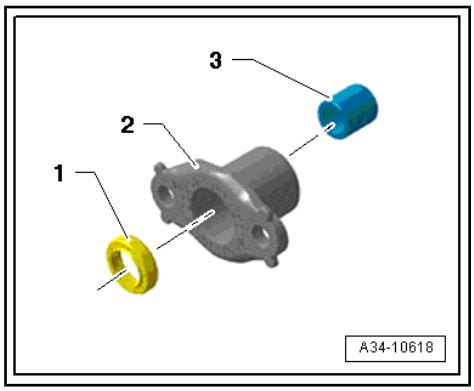

Removing and installing oil seal for selector shaft

– Lever out oil seal using extractor tool - T20143/1- .

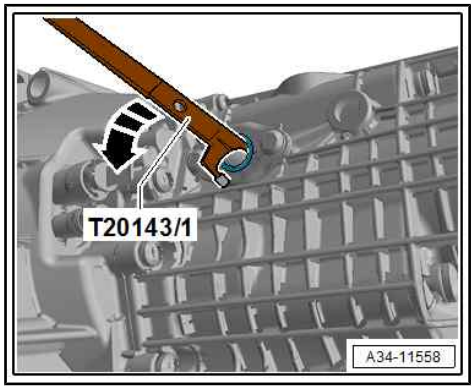

– Lightly oil outer circumference of oil seal.
– Pack space between sealing lip and dust lip half full with sealing grease for oil seals ⇒ Electronic parts catalogue .

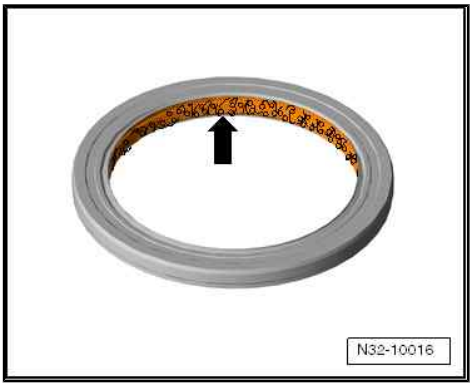

– Drive in oil seal using -T10001/1- or tube - VW 423- .
• Installation depth: 2 mm below top edge of sealing cap

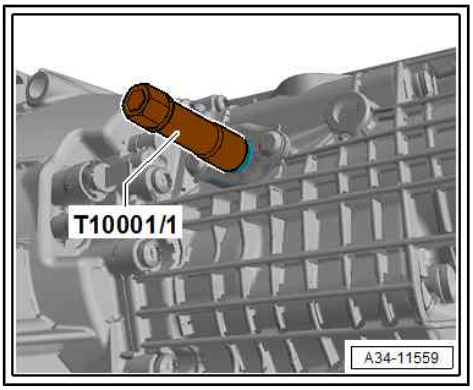

Pressing ball sleeve for selector shaft out of sealing cap

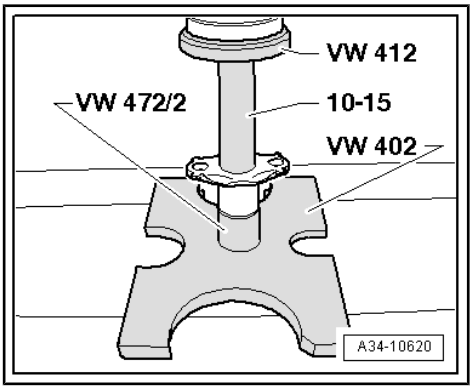

Pressing ball sleeve -A- for selector shaft into sealing cap -B- (press in until flush)

Fit ball sleeve so that side with lettering (thicker metal) faces guide pin - 10 - 15- .

Gearbox for front-wheel drive

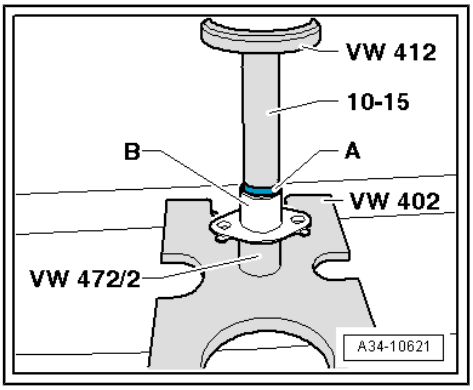

Protected by copyright. Copying for private or commercial purposes, in part or in whole, is not permitted unless authorised by AUDI AG. AUDI AG does not guarantee or accept any liability with respect to the correctness of information in this document. Copyright by AUDI AG.

Removing sealing cap for output shaft

– Pierce through centre of sealing cap -A- for output shaft and prise out in direction of -arrow-.

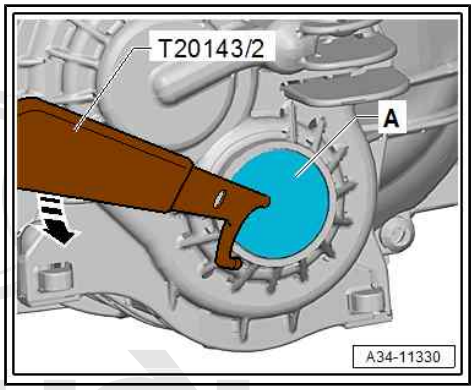

Driving in sealing cap for output shaft

Caution

The sealing cap can only be fitted properly if the outer circumference has not been lubricated.

- ***Do not use additional lubricant on outer circumference of new sealing cap for installation.***

Protected by copyright. Copying for private or commercial purposes, in part or in whole, is not permitted unless authorised by AUDI AG. AUDI AG does not guarantee or accept any liability with respect to the correctness of information in this document. Copyright by AUDI AG.

– Drive in new sealing cap for output shaft until flush.

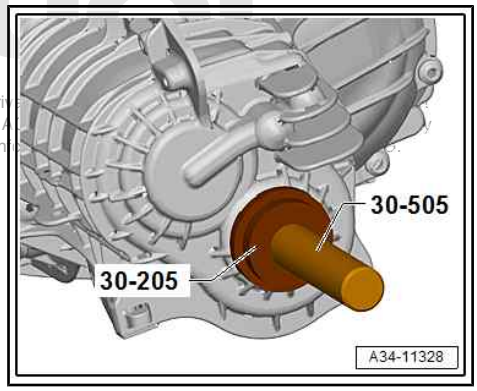

Pressing out roller bearing for output shaft - vehicles with front-wheel drive

Before pressing out:

- Remove sealing cap for output shaft ⇒ page 112 .
- Remove circlip for roller bearing ⇒ Item 10 (page 95) .

Gearbox for four-wheel drive

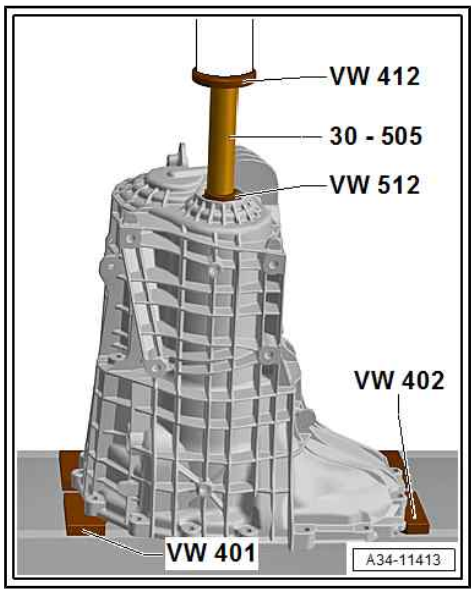

Pressing out roller bearing for output shaft - vehicles with four-wheel drive

Before pressing out:

- Remove output shaft oil seal ⇒ page 166 .
- Remove circlip for roller bearing ⇒ Item 10 (page 95) .

A - Press tool - VW412-

B - Punch - 30-212-

C - Thrust plate - VW401-

D - Thrust plate - VW402-

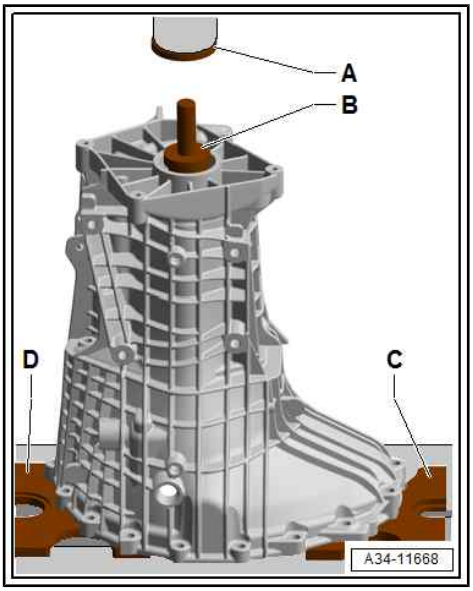

Pressing roller bearing for output shaft into gearbox cover (press onto stop)

Install roller bearing so the lettering (side with thicker metal) faces towards the thrust pad - 3074- .

– Vehicles with front-wheel drive: Support gearbox cover with thrust pad - VW 510- directly below bearing mounting.

- After pressing in, fit circlip for roller bearing ⇒ Item 10 (page 95) .
- Install output shaft oil seal ⇒ page 166 .

Protected by copyright. Copying for private or commercial purposes, in part or in whole, is not permitted unless authorised by AUDI AG. AUDI AG does not guarantee or accept any liability with respect to the correctness of information in this document. Copyright by AUDI AG.

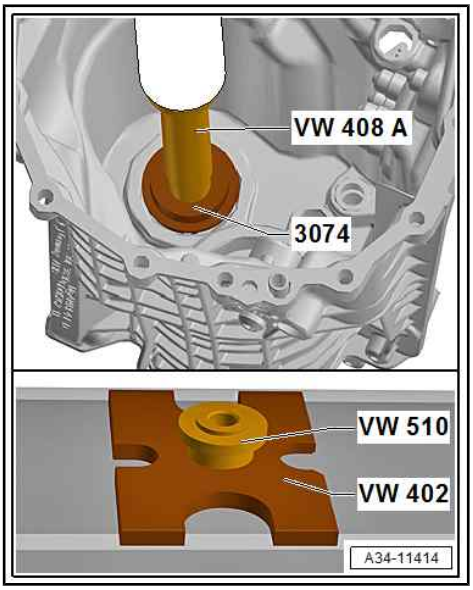

Removing ball sleeve for 3rd/4th gear selector plate/selector fork from gearbox cover

– Secure internal puller -2- in ball sleeve -1- and pull ball sleeve out of gearbox cover.

2 - Internal puller - VAS 251 605 (Kukko 21-2)-

3 - M12 nut with washer

Note

The gearbox cover can be secured to the gearbox support - VW 353- for this procedure.

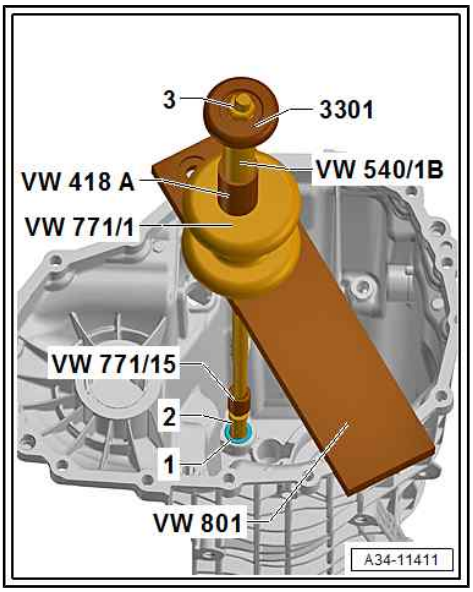

Pressing ball sleeve -1- for 3rd/4th gear selector plate/selector fork into gearbox cover (press in until flush)

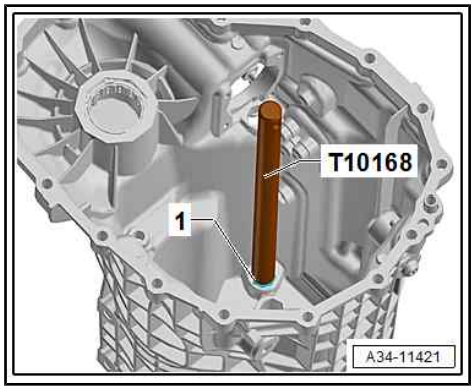

Note

The gearbox cover can be secured to the gearbox support - VW 353- for this procedure.

Pulling roller bearing for pinion shaft -1- out of gearbox cover

Before pulling out:

- Remove circlip for roller bearing ⇒ Item 15 (page 95) .

2 - Internal puller - VAS 251 613 (Kukko 21-6)-

3 - Counter-support - VAS 251 623 (Kukko 22-2)-

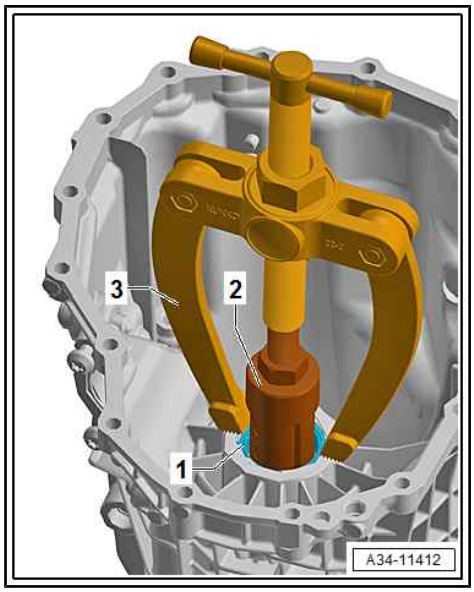

Note

The gearbox cover can be secured to the gearbox support - VW 353- for this procedure.

Driving roller bearing for pinion shaft into gearbox cover

Install roller bearing so the lettering (side with thicker metal) faces towards the thrust pad - 3074- .

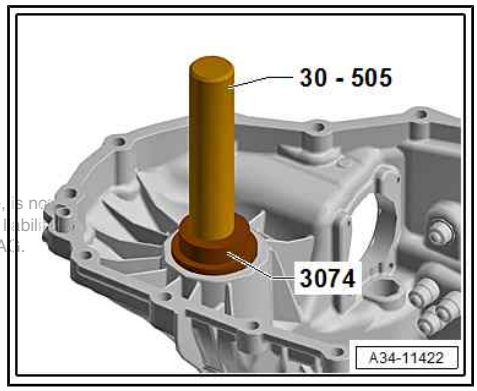

Note

Protected by copyright. Copying for private or commercial purposes, in part or in whole, is not permitted unless authorised by AUDI AG. AUDI AG does not guarantee or accept any liability with respect to the correctness of information in this document. Copyright by AUDI AG.

The gearbox cover can be secured to the gearbox support - VW 353- for this procedure.

- Then fit circlip for roller bearing ⇒ Item 15 (page 95) .

Removing sleeve for input shaft ball bearing -1-

– Heat gearbox cover -2- from outside in area of bearing seat -arrows- using hot air blower - V.A.G 1416- .

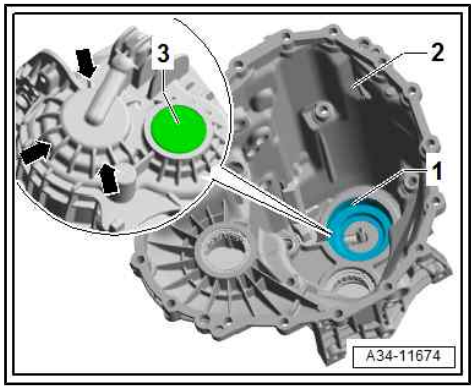

Note

Make sure sealing cap -3- is not damaged while you are heating gearbox cover.

– Lightly knock sleeve for ball bearing -1- out of bearing seat.

– Remove oil collector ⇒ Item 12 (page 95) .

Pressing in sleeve for input shaft ball bearing

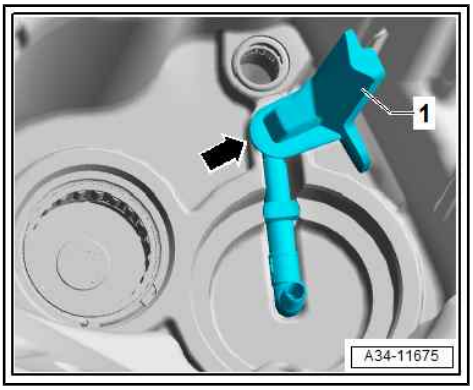

- Gearbox with forced lubrication: Insert oil collector -1- before pressing in.
- Oil collector -1- must make contact with gearbox housing -arrow-.
- Vehicles with front-wheel drive: To ensure that gearbox cover is not damaged in area around oil passage -arrow- when pressing in sleeve, place adapter - T40213/9- underneath bearing mounting for sleeve.

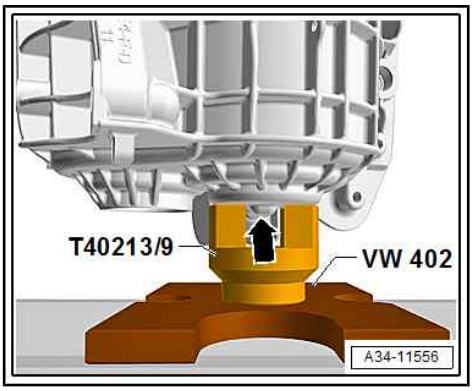

– Insert thrust plate - 3005- (with collar facing upwards towards press tool - VW 407-) in new sleeve -1-.

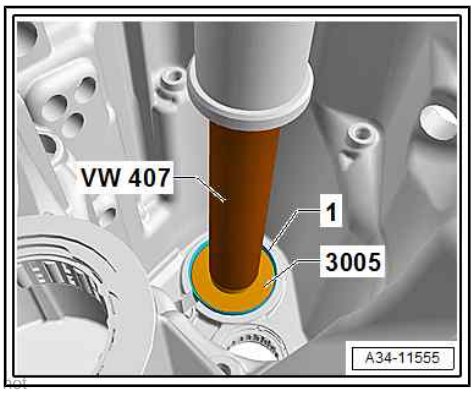

Protected by copyright. Copying for private or commercial purposes, in part or in whole, is not permitted unless authorised by AUDI AG. AUDI AG does not guarantee or accept any liability with respect to the correctness of information in this document. Copyright by AUDI AG.

4 Securing to engine and gearbox support

Special tools and workshop equipment required

- Engine and gearbox support - VAS 6095-

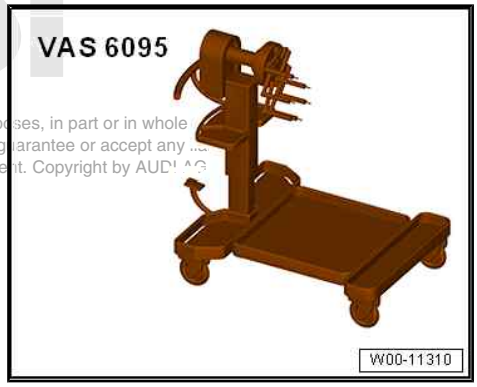

Protected by copyright. Copying for private or commercial purposes, in part or in whole is not permitted unless authorised by AUDI AG. AUDI AG does not guarantee or accept any liability with respect to the correctness of information in this document. Copyright by AUDI AG

- Gearbox support - T40206- with -T40206/1- or -T40206/1A-

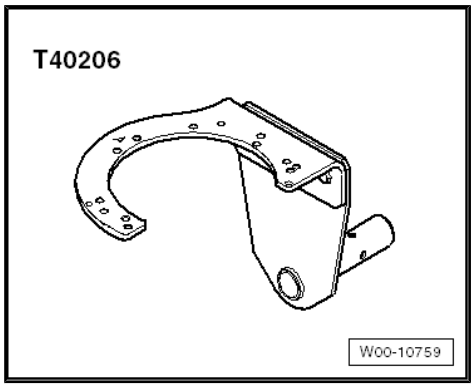

Procedure

Caution

Risk of breaking gearbox housing

- *The gearbox must be secured to the gearbox support with four bolts -arrows- as the gearbox housing could break when pressing out the gear cluster.*

– Secure gearbox support - T40206- to gearbox -arrows- with -T40206/1- or -T40206/1A- .

To do so, fit securing bolts into holes marked “3”, “6”, “8” and “11”.

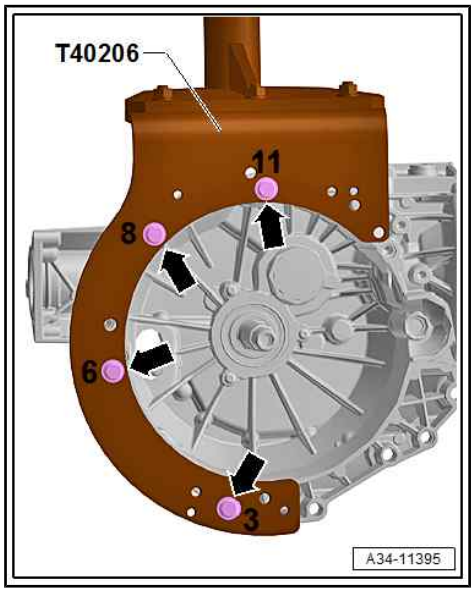

– Lift gearbox with workshop hoist - VAS 6100- ⇒ page 50 .
– Attach gearbox with gearbox support - T40206- to engine and gearbox support - VAS 6095- .

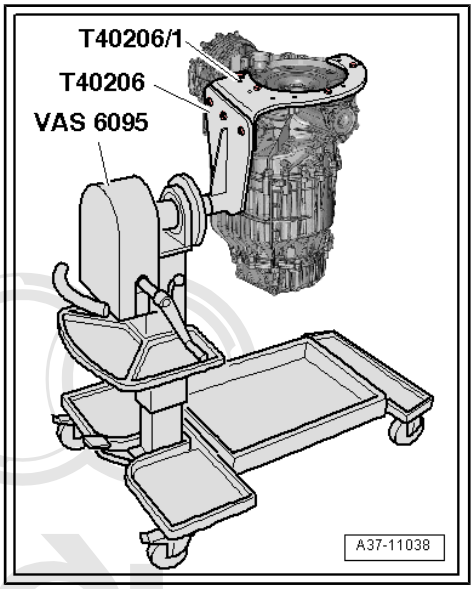

Protected by copyright. Copying for private or commercial purposes, in part or in whole, is not permitted unless authorised by AUDI AG. AUDI AG does not guarantee or accept any liability with respect to the correctness of information in this document. Copyright by AUDI AG.

5 Gear oil circuit

⇒ “5.1 Overview - gear oil circuit”, page 118

⇒ “5.2 Exploded view - gear oil pump”, page 119

⇒ “5.3 Removing and installing gear oil pump”, page 120

5.1 Overview - gear oil circuit

1 - Gear oil pump

- ❑ Driven via output shaft
- ❑ Removing and installing ⇒ page 120

2 - Gear oil filter

- ❑ With magnet
- ❑ Renew when servicing gearbox

3 - Injection tube for gear cluster

- ❑ For oil supply to input and output shaft

4 - Oil collector

- ❑ Remove together with sleeve for input shaft ball bearing ⇒ page 114
- ❑ Installing ⇒ page 115

5 - Injection tube for final drive gear set

- ❑ For oil supply to differential
- ❑ Removing and installing ⇒ page 100

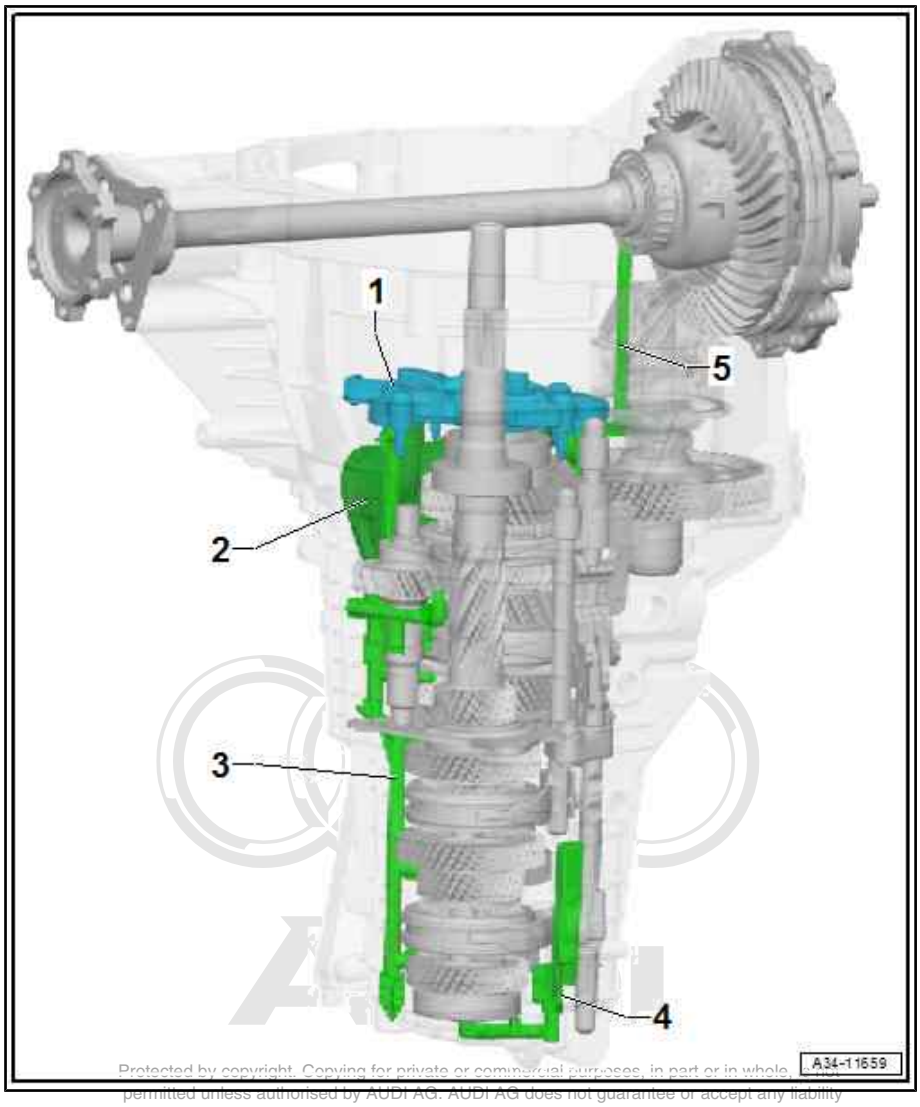

Protected by copyright. Copying for private or commercial purposes, in part or in whole, is not permitted unless authorised by AUDI AG. AUDI AG does not guarantee or accept any liability with respect to the correctness of information in this document. Copyright by AUDI AG.

5.2 Exploded view - gear oil pump

1 - Gear oil pump
- ❑ Driven via output shaft
- ❑ Removing and installing ⇒ page 120

2 - Seal for injection tube
- ❑ 31.5 x 2.6
- ❑ Renew after removing

3 - Output shaft oil seal
- ❑ 54 x 4.05
- ❑ Renew after removing

4 - Seal for suction line
- ❑ 24 x 2.85
- ❑ Renew after removing

5 - Bolt
- ❑ For pressure test connection for checking operation at manufacturer
- ❑ Gear oil runs into clutch housing when bolt is unscrewed
- ❑ Renew after removing
- ❑ 10 Nm +30°

6 - Bolts
- ❑ Aluminium bolts (M8x40)
- ❑ Renew after removing
- ❑ Tightening torque and sequence ⇒ page 119

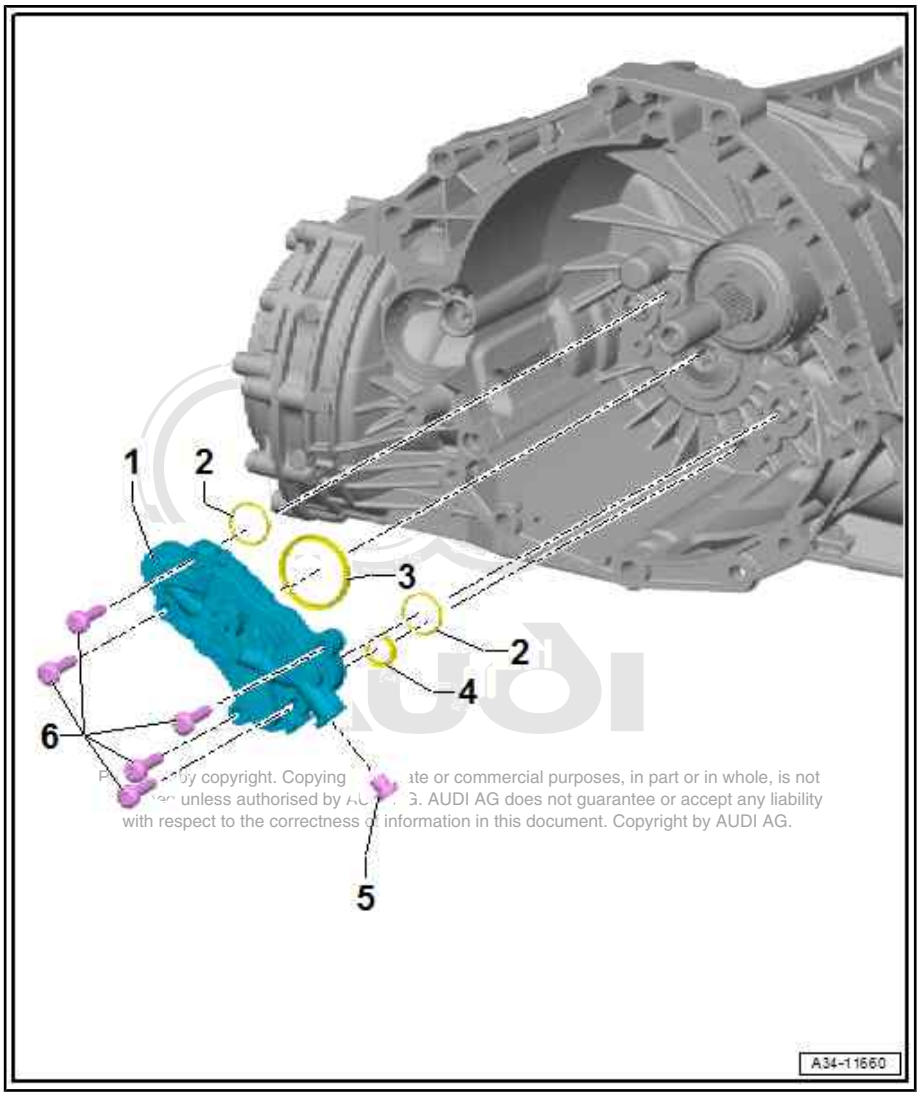

Protected by copyright. Copying for private or commercial purposes, in part or in whole, is not permitted unless authorised by AUDI AG. AUDI AG does not guarantee or accept any liability with respect to the correctness of information in this document. Copyright by AUDI AG.

Tightening torque and sequence for gear oil pump -A-

– Tighten new bolts in stages in sequence shown (-1- to -5-).

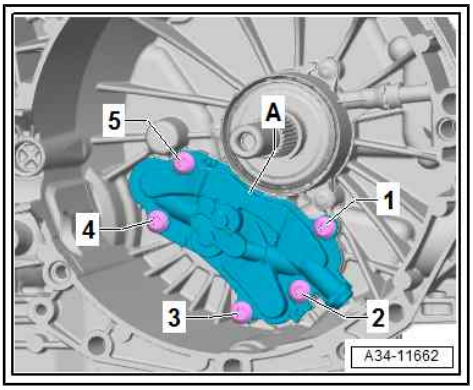

Stage	Bolts	Tightening torque
1	-1- to -5-	Tighten hand-tight
2	-1- to -5-	8 Nm +120°

5.3 Removing and installing gear oil pump

Special tools and workshop equipment required

- Torque wrench - V.A.G 1410-

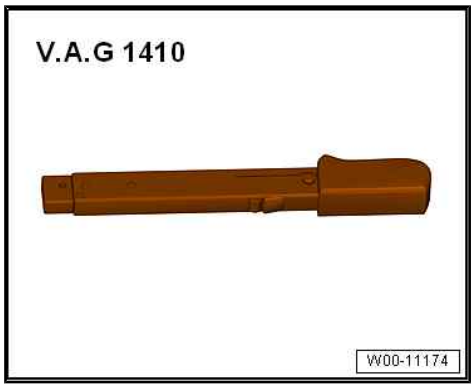

- Gearbox support - T40173-

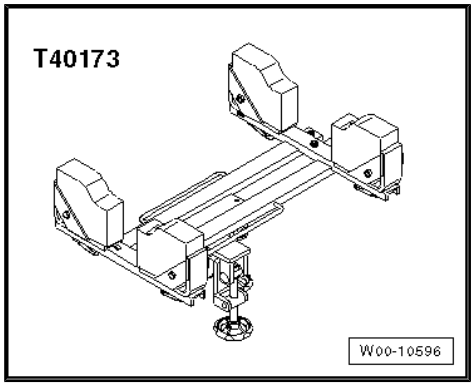

Removing

- Gearbox removed ⇒ 6-speed manual gearbox 0CS, 0DJ, 0CX; Rep. gr. 34 ; Removing and installing gearbox; Removing gearbox
- Gearbox is secured to gearbox support - T40173- with tensioning strap -1-.

– Tilt gearbox to rear with gearbox support - T40173- to prevent gear oil from escaping.

– Remove clutch module ⇒ page 30 .

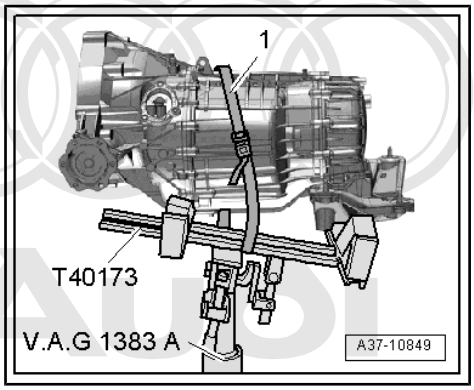

Protected by copyright. Copying for private or commercial purposes, in part or in whole, is not permitted unless auth... with the ... any liability ... UDI AG.

– Unscrew bolts -1- for gear oil pump.

– Detach gear oil pump -2-.

Installing

Installation is carried out in reverse order; note the following:

Note

The seals for the gear oil pump have to be renewed after removal.

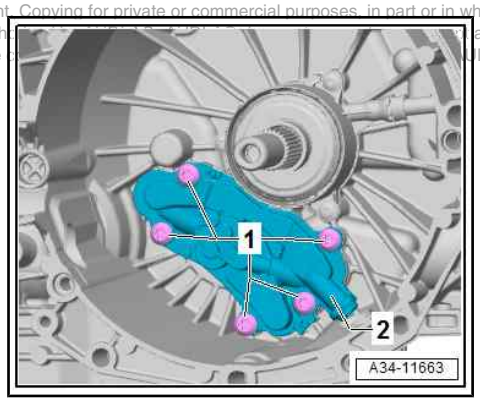

– Insert new seals for gear oil pump -1-.

Allocation of seals for gear oil pump ⇒ page 119

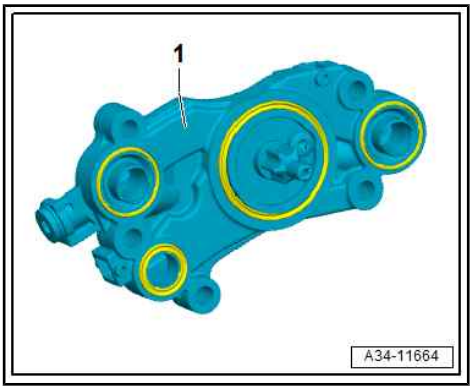

– Fit gear oil pump -2- onto gearbox and tighten new bolts -1- in specified sequence ⇒ page 119 .

Tightening torques

◆ ⇒ “5.2 Exploded view - gear oil pump”, page 119

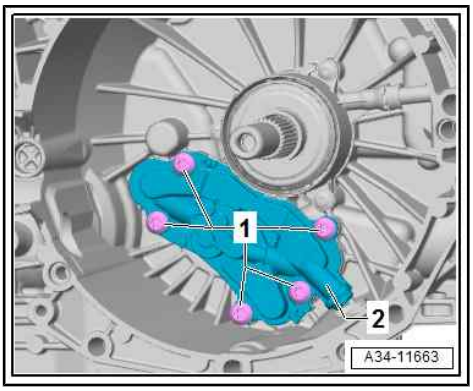

Protected by copyright. Copying for private or commercial purposes, in part or in whole, is not permitted unless authorised by AUDI AG. AUDI AG does not guarantee or accept any liability with respect to the correctness of information in this document. Copyright by AUDI AG.

35 – Gears, shafts

1 Dismantling and assembling gears and shafts

⇒ “1.1 Exploded view - gear cluster”, page 122

⇒ “1.2 Dismantling and assembling gear cluster”, page 124

1.1 Exploded view - gear cluster

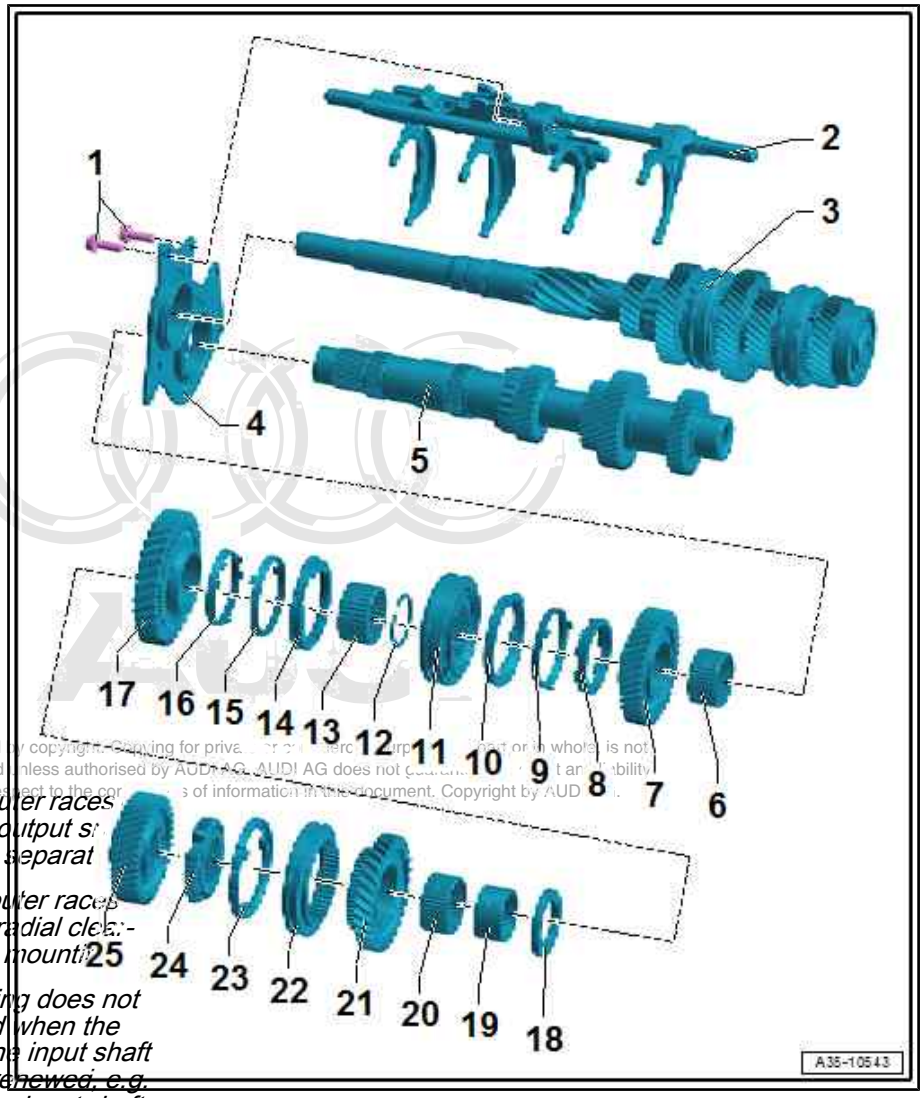

1 - Bolt

- ❑ Secures selector fork cluster ⇒ Item 2 (page 122) to bearing mounting ⇒ Item 4 (page 122)
- ❑ 2x
- ❑ 20 Nm +45°

2 - Selector fork cluster

- ❑ Dismantling and assembling ⇒ page 60

3 - Input shaft

- ❑ Dismantling and assembling ⇒ page 133

4 - Bearing mounting

- ❑ Carries bearings for input shaft and output shaft in gearbox cover
- ❑ Clean locking fluid out of threaded holes (using thread tap or similar)

Note

- *The roller bearing outer races the input shaft and output s cannot be renewed separat*
- *The roller bearing outer race must not have any radial clea ance in the bearing mounti*
- *The bearing mounting does not have to be renewed when the roller bearings on the input shaft or output shaft are renewed, e.g. when installing a new input shaft.*

Protected by copyright. Copying for priva... permitted unless authorised by AUDI AG. AUDI AG does not ... with respect to the cor... s of information in this document. Copyright by AUDI ...

5 - Output shaft

- ❑ With 3rd and 4th gear wheels
- ❑ Removing and installing 1st, 2nd and reverse gear ⇒ page 124
- ❑ Dismantling and assembling ⇒ page 151

6 - Needle bearing

- ❑ For 2nd gear

7 - 2nd speed selector gear

8 - Inner ring for 2nd gear

- ❑ Do not interchange with inner ring for 1st gear
- ❑ Installation position ⇒ page 129
- ❑ Distinguishing inner rings for 1st and 2nd gear ⇒ page 129

9 - Intermediate ring for 2nd gear

- ❑ Installation position ⇒ page 129
- ❑ Distinguishing inner rings for 1st and 2nd gear ⇒ page 129

10 - Synchro-ring for 2nd gear

- ❑ Do not interchange with synchro-ring for 1st gear
- ❑ Installation position ⇒ page 129
- ❑ Distinguishing inner rings for 1st and 2nd gear ⇒ page 129

11 - Locking collar/synchro-hub for 1st and 2nd gear

- ❑ Pulling off ⇒ page 128
- ❑ Installation position of synchro-hub: high inside collar faces 2nd speed selector gear ⇒ page 130
- ❑ Installation position of locking collar: outer chamfer faces 2nd speed selector gear ⇒ page 130
- ❑ Pressing on ⇒ page 130

12 - Circlip

- ❑ Determining thickness ⇒ page 130

13 - Needle bearing

- ❑ For 1st gear

14 - Synchro-ring for 1st gear

- ❑ Do not interchange with synchro-ring for 2nd gear
- ❑ Installation position ⇒ page 129
- ❑ Distinguishing inner rings for 1st and 2nd gear ⇒ page 129

15 - Intermediate ring for 1st gear

- ❑ Installation position ⇒ page 129
- ❑ Distinguishing inner rings for 1st and 2nd gear ⇒ page 129

16 - Inner ring for 1st gear

- ❑ Do not interchange with inner ring for 2nd gear
- ❑ Installation position ⇒ page 129
- ❑ Distinguishing inner rings for 1st and 2nd gear ⇒ page 129

17 - 1st speed selector gear

18 - Thrust washer

- ❑ For 1st speed and reverse selector gears

19 - Needle bearing inner race

- ❑ For reverse gear
- ❑ Pulling off ⇒ page 127
- ❑ Pressing on ⇒ page 131

20 - Needle bearing

- ❑ For reverse gear

21 - Reverse selector gear

22 - Reverse gear locking collar

- ❑ Installation position ⇒ page 149

23 - Synchro-ring for reverse gear

- ❑ Checking for wear ⇒ page 149

Copying for private or commercial purposes, in part or in whole, is not permitted unless authorised by AUDI AG. AUDI AG does not guarantee or accept any liability with respect to the correctness of information in this document. Copyright by AUDI AG.

24 - Reverse gear synchro-hub

- ❑ With synchro-spring
- ❑ Pulling off ⇒ page 127
- ❑ Pressing on ⇒ page 131

25 - Spur gear drive input gear

- ❑ Pulling off ⇒ page 127
- ❑ Pressing on ⇒ page 131

1.2 Dismantling and assembling gear cluster

Special tools and workshop equipment required

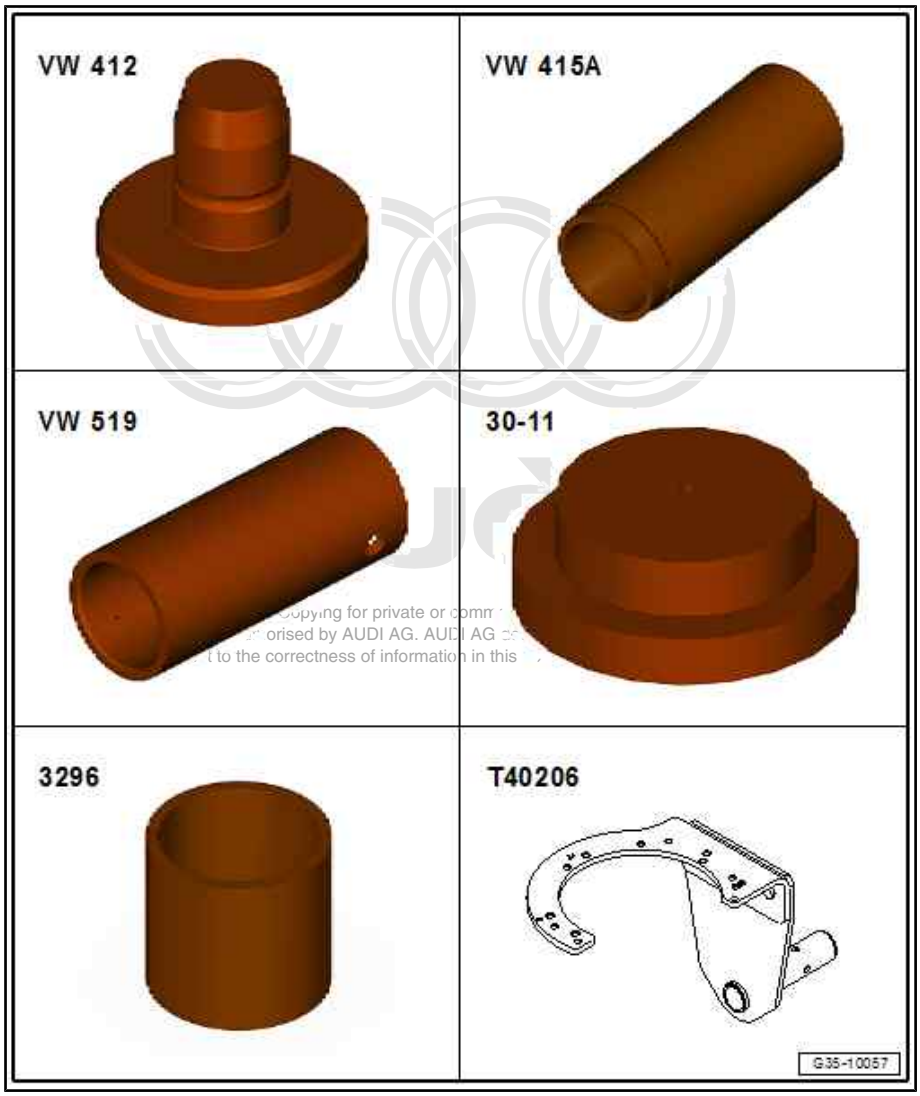

Copying for private or comm
orised by AUDI AG. AUDI AG
to the correctness of information in this

- ♦ Press tool - VW 412-
- ♦ Tube - VW 415 A-
- ♦ Tube - VW 519-
- ♦ Thrust plate - 30 - 11-
- ♦ Tube - 3296-
- ♦ Gearbox support - T40206-

- Separating tool - T40213-

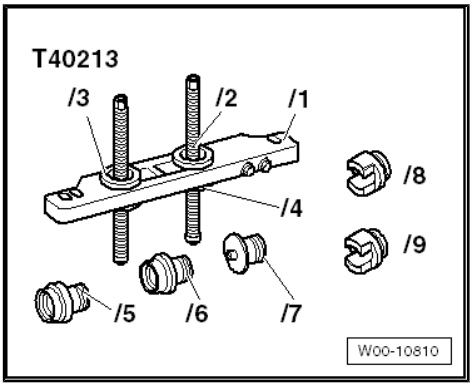

- Hot air blower - V.A.G 1416-

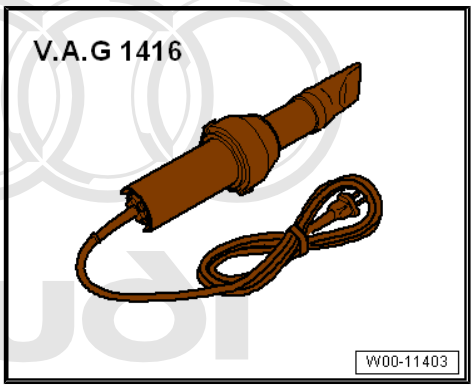

Protected by copyright. Copying for private or commercial purposes, in part or in whole, is not permitted unless authorised by AUDI AG. AUDI AG does not guarantee or accept any liability with respect to the correctness of information in this document. Copyright by AUDI AG.

- Circlip pliers - VAS 5503A-

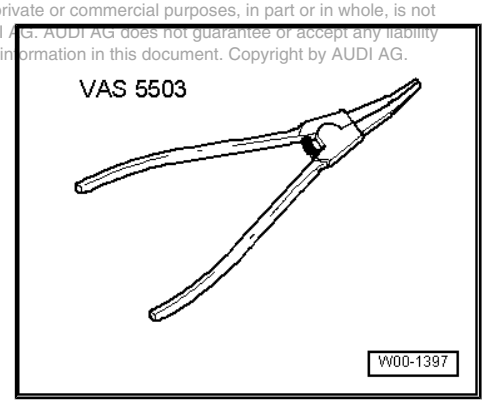

- Inductive heater - VAS 6414-

♦ -1- Two-arm puller - VAS 251 005 (Kukko 20-20)-

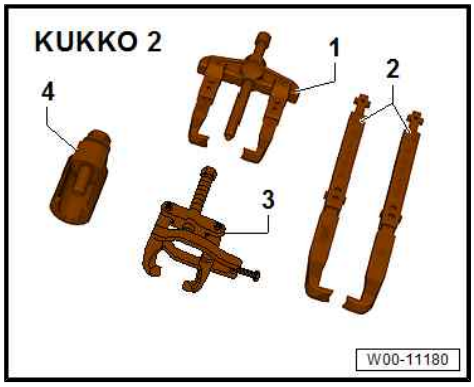

♦ -2- Puller hooks 300 mm

Dismantling gear cluster

– Attach plate - T40213/1- to gearbox support - T40206- with bolts -arrows-.

– Fit adapters - T40213/10- and -T40213/11- in plate - T40213/1- and secure with knurled nuts - T40213/3- .

Protected by copyright. Copying for private or commercial purposes, in part or in whole, is not permitted unless authorised by AUDI AG. AUDI AG does not guarantee or accept any liability with respect to the correctness of information in this document. Copyright by AUDI AG.

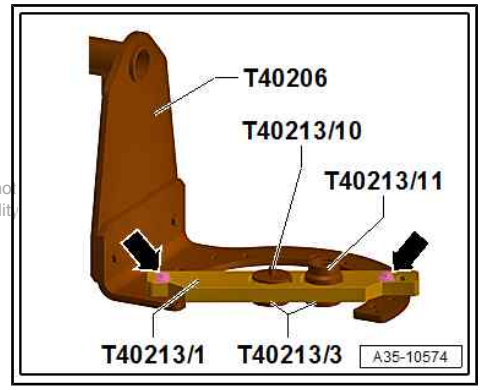

– Insert input shaft -1- together with output shaft -2- and selector fork cluster -3- in adapters - T40213/10- and -T40213/11- .

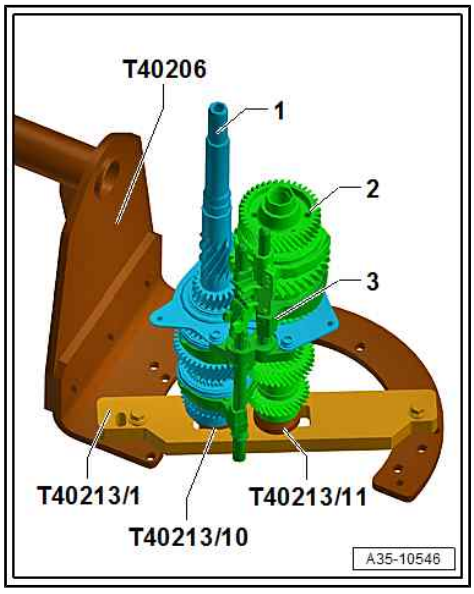

– Remove bolts -arrows- and detach selector fork cluster -2- from bearing mounting -1-.

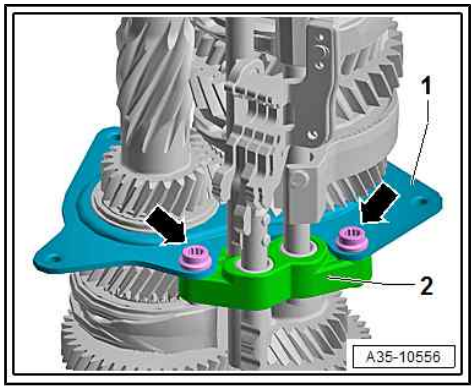

– Heat spur gear drive input gear -1- to approx. 100 °C using hot air blower - V.A.G 1416- and detach it from output shaft. When doing this, counterhold at hexagon flats -arrow- of two-arm puller .

2 - Two-arm puller - VAS 251 005 (Kukko 20-20)-

3 - Hook, 150 mm

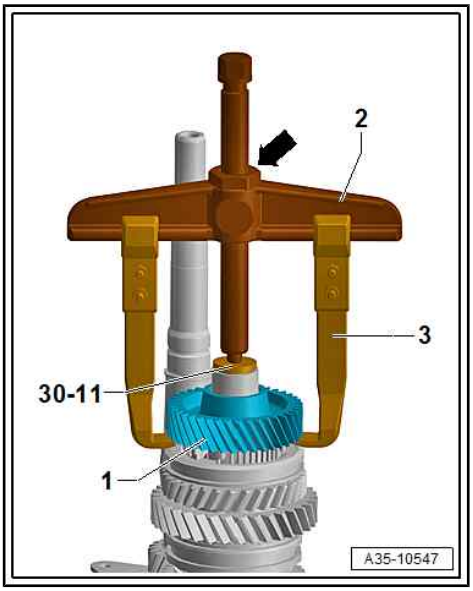

Protected by copyright. Copying for private or commercial purposes, in part or in whole, is not permitted unless authorised by AUDI AG. AUDI AG does not guarantee or accept any liability with respect to the correctness of information in this document. Copyright by AUDI AG.

– Pull off 1st speed selector gear -1- together with reverse gear synchro-hub and inner race for reverse selector gear.

– To do so, heat reverse gear synchro-hub to approx. 80 °C using hot air blower - V.A.G 1416- (or similar) and counterhold at hexagon flats -arrow- of two-arm puller .

2 - Two-arm puller - VAS 251 005 (Kukko 20-20)-

3 - Hook, 150 mm

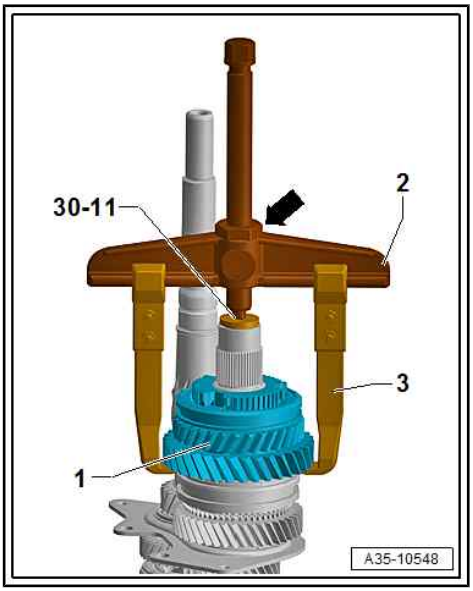

Caution

Risk of damage to dog teeth on 1st speed selector gear.

- *Hooks of two-arm puller must not come into contact with dog teeth of 1st speed selector gear during removal.*

– Remove needle bearing and synchro-rings for 1st speed selector gear.

Caution

The synchro-rings for 1st and 2nd gear must not be interchanged.

- *If synchro-rings are interchanged, the synchromesh will jam or malfunction prematurely.*

– Detach circlip for 1st/2nd gear synchro-hub.

– Pull off 2nd speed selector gear -1- together with synchro-hub and locking collar for 1st/2nd gear.

2 - Two-arm puller - VAS 251 005 (Kukko 20-20)-

3 - Hook, 300 mm

– Remove needle bearing for 2nd speed selector gear.

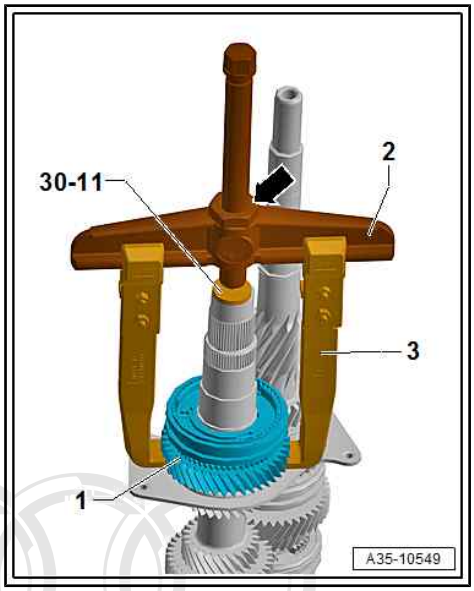

– Detach bearing mounting -1- from input shaft -2- and output shaft -3-.

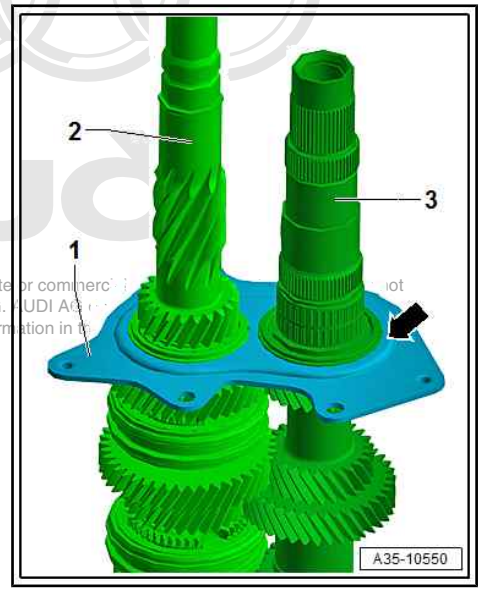

Note

- *Dismantling and assembling input shaft -2-* *⇒ page 137*
- *Dismantling and assembling output shaft -3-* *⇒ page 151*
- *Installation position of bearing mounting: raised portion -arrow- points upwards towards splines on input shaft.*

Copyright by AUDI AG. Copying for private or commerc... not permitted unless authorised by AUDI AG. AUDI AG ... with respect to the correctness of information in th...

Assembling gear cluster

– Place plate - T40213/1- with adapters - T40213/10- and - T40213/11- on work table of workshop press . Secure adapters with knurled nuts - T40213/3- .

– Insert output shaft -1- into adapter - T40213/11- and input shaft -2- into adapter - T40213/10- .

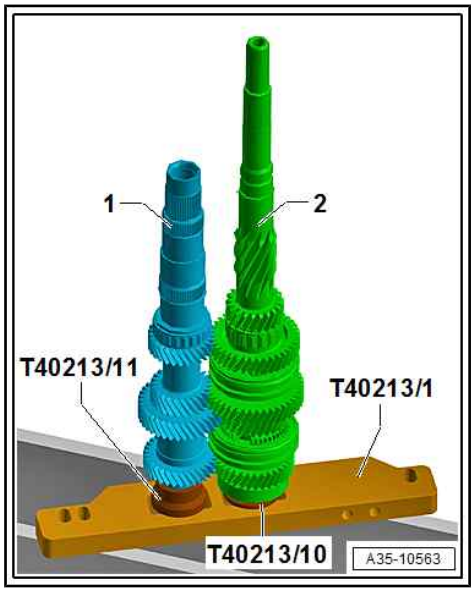

– Fit bearing mounting -1- in correct position over the two shafts -2, 3-, with projection -arrow- facing upwards.

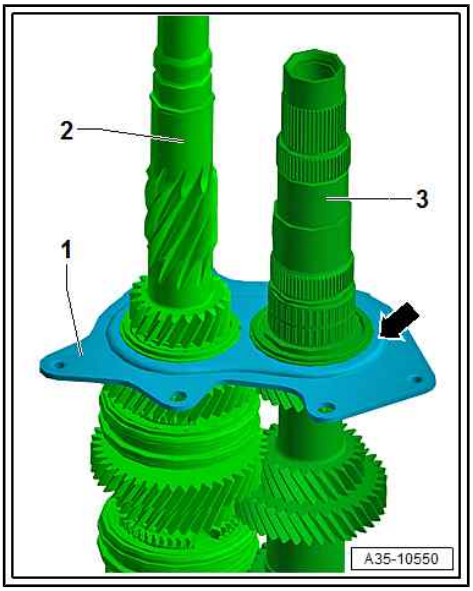

Distinguishing synchro-rings and inner rings for 1st and 2nd gear

Caution

The synchro-rings for 1st and 2nd gear must not be interchanged.

- *If synchro-rings are interchanged, the synchromesh will jam or malfunction prematurely.*
- *The locking collar must be installed in the correct direction* *⇒ page 130* *.*

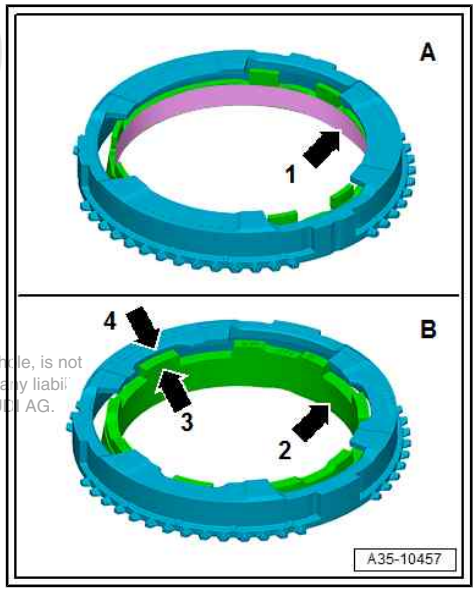

Protected by copyright. Copying for private or commercial purposes, in part or in whole, is not permitted unless authorised by AUDI AG. AUDI AG does not guarantee or accept any liabil

A - The inner ring for 1st gear has a coated friction surface on the inside -arrow 1- and is conical.

B - The inner ring for 2nd gear has no friction surface on the inside -arrow 2- and is cylindrical.

Distinguishing features:

- Additional lug -arrow 3- on inner ring
- Additional notch on synchro-ring -arrow 4-

Installation position of synchro-rings for 1st and 2nd gear

Note

- *Mixing up the inner ring -2- or synchro-ring -4- for 1st gear with the ones for 2nd gear will cause them to be damaged irreparably.*
- *If components are not being renewed, make sure that synchro-rings are re-installed on the same gear.*

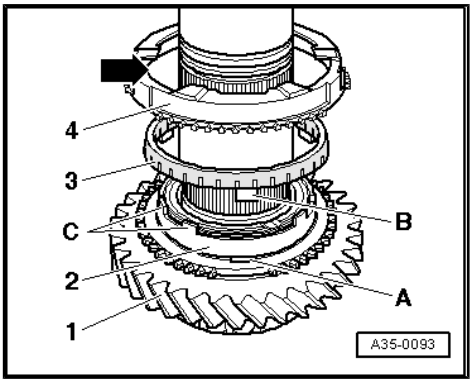

– Fit inner ring -2- onto selector gear -1-.

– Fit intermediate ring -3-. Lug -B- must be inserted into recess -A-.

– Fit synchro-ring -4-. Guide lugs -C- through recess -arrow-.

Assembly and installation position of 1st and 2nd gear locking collar and synchro-hub

– Fit locking collar -1- onto synchro-hub -2- as follows:

- The chamfer on the locking collar -arrow E- and the lower collar on the synchro-hub -arrow C- must face the 1st speed selector gear.
- The wide teeth of the locking collar -arrow A- and the synchro-hub -arrow B- must align.

– Then fit thrust blocks -3- in synchro-hub and press them into recesses -arrow D- in locking collar.

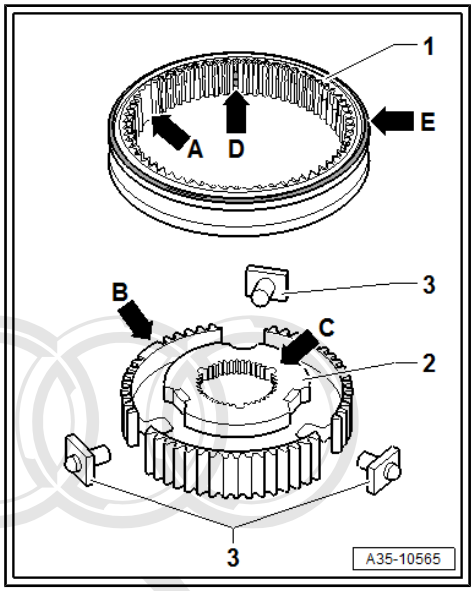

Pressing on 1st/2nd gear synchro-hub

- Heat synchro-hub to approx. 100 °C.
- Installation position of synchro-hub: lower inside collar faces 1st speed selector gear.
- Installation position of locking collar: outer chamfer -arrow- faces 2nd speed selector gear.

Protected by copyright. Copying for private or commercial purposes, in part or in whole, is not permitted unless authorised by AUDI AG. AUDI AG does not guarantee or accept any liability with respect to the correctness of information in this document. Copyright by AUDI AG.

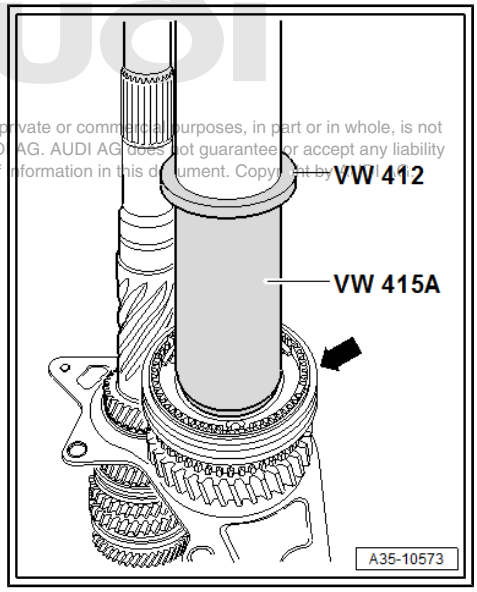

Note

When pressing on the synchro-hub, lift the 2nd speed selector gear slightly so that the stop lugs on the synchro-ring engage in the slots in the hub.

- When renewing synchro-hub or output shaft:

Determine thickness of new circlip -1- for 1st/2nd gear synchro-hub.

– Determine the thickest circlip that will just fit and install it. For part number refer to ⇒ Electronic parts catalogue .

The following circlips are available:

Circlip thickness (mm)		
2.44	2.47	2.50

– Install circlip for 1st/2nd gear synchro-hub -1-.

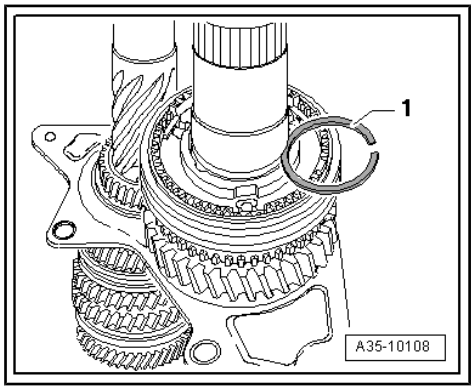

– Install 1st speed selector gear with synchro-rings and needle bearing on output shaft.
– Fit thrust washer -1- and pre-heated inner race -2- for reverse gear needle bearing.
– Fit reverse gear needle bearing together with selector gear and locking collar for reverse gear; note correct position ⇒ page 149 .
– Fit synchro-ring for reverse gear in locking collar.
– Heat synchro-hub for reverse gear to approx. 100 °C.

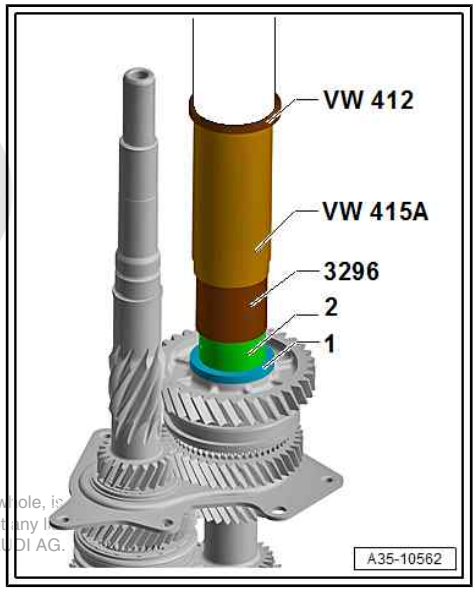

Protected by copyright. Copying for private or commercial purposes, in part or in whole, is not permitted unless authorised by AUDI AG. AUDI AG does not guarantee or accept any liability with respect to the correctness of information in this document. Copyright by AUDI AG.

– Press on synchro-hub for reverse gear -1- with installed synchro-spring ⇒ Item 4 (page 147) .

Note

When the synchro-hub for reverse gear is pressed on, the lugs -2- on the synchro-ring must engage in the slots in the hub -arrows-.

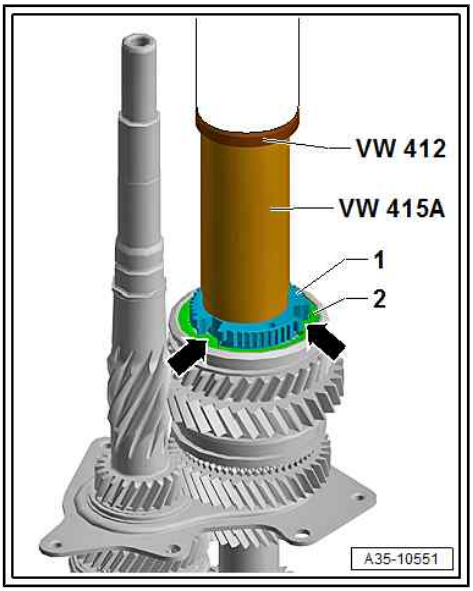

– Heat spur gear drive input gear -1- to max. 140 °C using inductive heater - VAS 6414- (or similar) and press it on.

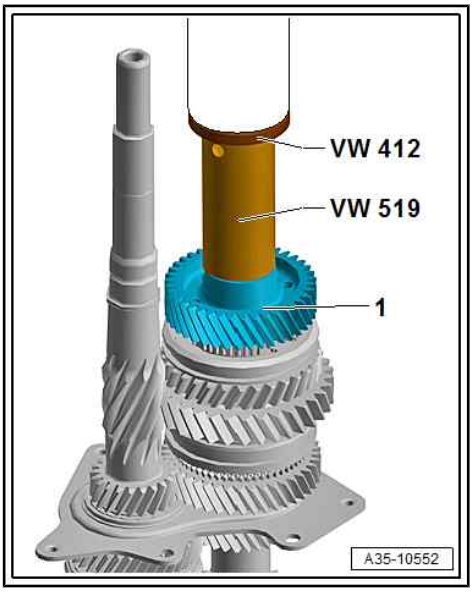

– To attach selector fork cluster -2- to gear cluster, secure plate - T40213/1- to gearbox support - T40206- ⇒ page 126 .
– Secure selector fork cluster -2- to bearing mounting -1- with bolts -arrows-.
– Remove input shaft together with output shaft and selector fork cluster from plate - T40213/1- .

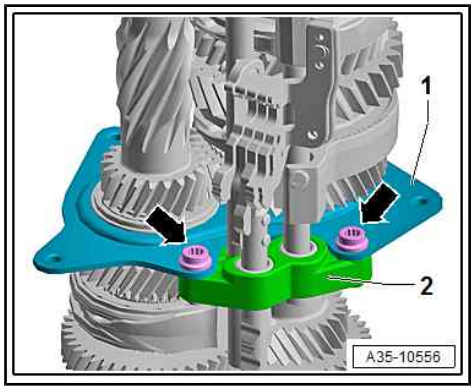

Tightening torques

◆ ⇒ “1.1 Exploded view - gear cluster”, page 122

Protected by copyright. Copying for private or commercial purposes, in part or in whole, is not permitted unless authorised by AUDI AG. AUDI AG does not guarantee or accept any liability with respect to the correctness of information in this document. Copyright by AUDI AG.

2 Input shaft

⇒ "2.1 Exploded view - input shaft", page 133

⇒ "2.2 Dismantling and assembling input shaft", page 137

⇒ "2.3 Allocation of 3rd - 6th gear synchro-rings to locking collars", page 144

⇒ "2.4 Checking 3rd - 6th gear synchro-rings for wear", page 145

2.1 Exploded view - input shaft

Detaching input shaft from output shaft and bearing mounting
⇒ page 122

Note

- *Lubricate all bearings and synchro-rings on input shaft with gear oil before installing.*
- *The circlip ⇒ Item 8 (page 135) should only be detached when renewing the roller bearing ⇒ Item 3 (page 134) .*
- *3rd to 6th speed selector gears should have an axial play of 0.15 ... 0.50 mm after installing.*
- *Note correct assignment of synchro-rings ⇒ page 144 .*
- *When fitting new gear wheels or input shaft refer to technical data ⇒ 6-speed manual gearbox 0CS, 0DJ, 0CX; Rep. gr. 00 ; Technical data and ⇒ Electronic parts catalogue .*

Protected by copyright. Copying for private or commercial purposes, in part or in whole, is not permitted unless authorised by AUDI AG. AUDI AG does not guarantee or accept any liability with respect to the correctness of information in this document. Copyright by AUDI AG.

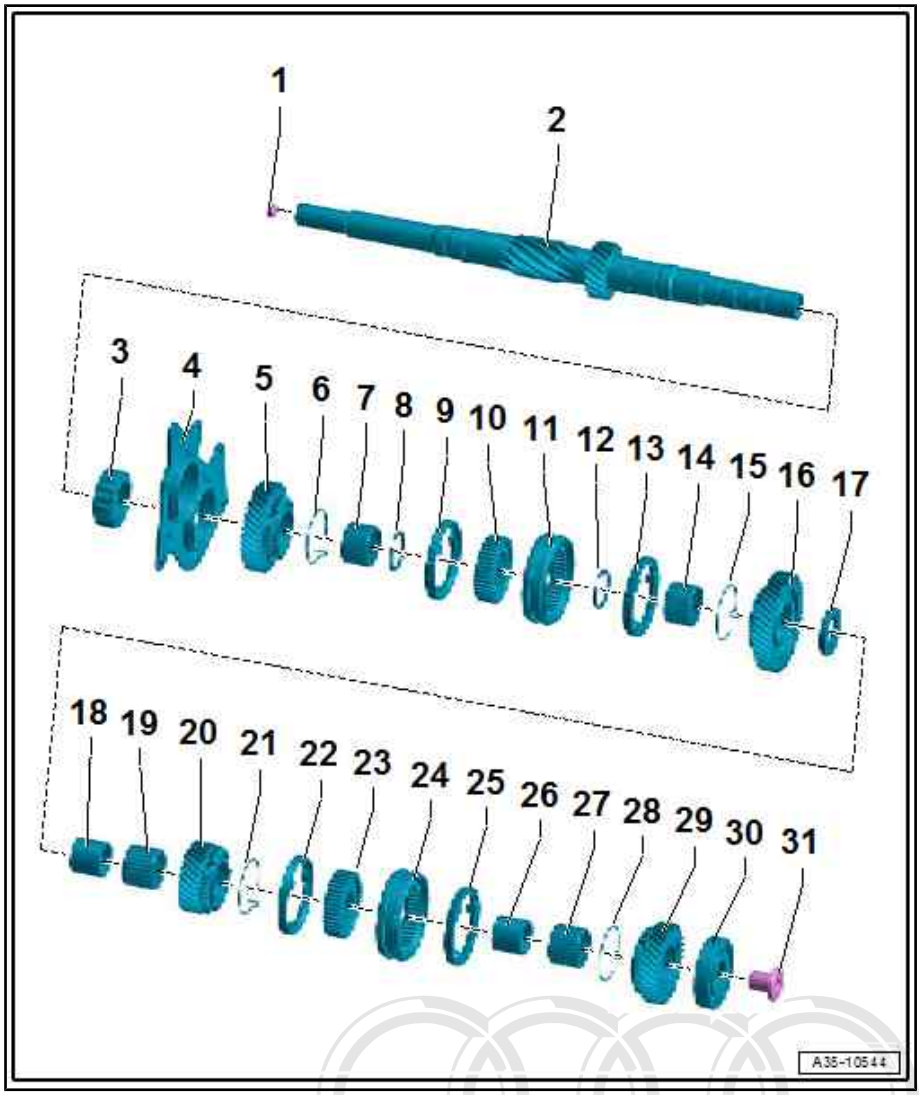

1 - Sealing plug

- ❑ For input shaft
- ❑ Installing ⇒ page 136

2 - Input shaft

- ❑ With splines for 1st, 2nd and reverse gear
- ❑ Sealing plug ⇒ Item 1 (page 134) is fitted in bore in vicinity of splines for clutch plate
- ❑ Fit sealing plug when renewing input shaft ⇒ page 136
- ❑ Checking input shaft for wear ⇒ page 136

3 - Roller bearing

- ❑ For input shaft
- ❑ Renew after removing
- ❑ Pressing off ⇒ page 140
- ❑ Pressing on ⇒ page 141

4 - Bearing mounting

- ❑ Carries bearings for input shaft and output shaft in gearbox cover
- ❑ Clean locking fluid out of threaded holes (using thread tap or similar)
- ❑ Different versions
- ❑ For correct version, refer to ⇒ Electronic parts catalogue

Note

- ♦ *The roller bearing outer races on the input shaft and output shaft cannot be renewed separately.*
- ♦ *The roller bearing outer races must not have any radial clearance in the bearing mounting.*
- ♦ *The bearing mounting does not have to be renewed when the roller bearings on the input shaft or output shaft are renewed, e.g. when installing a new input shaft.*

Protected by copyright. Copying for private or commercial purposes, in part or in whole, is not permitted unless authorised by AUDI AG. AUDI AG does not guarantee or accept any liability with respect to the correctness of information in this document. Copyright by AUDI AG.

5 - 5th speed selector gear

- When rotated, gear must not come into contact with circlip ⇒ Item 8 (page 135) ⇒ page 141

6 - Synchro-spring

- ❑ Fit in 5th speed selector gear ⇒ page 140

7 - Needle bearing

- ❑ For 5th gear
- ❑ Installation position ⇒ page 141

8 - Circlip

- ❑ Mark
- ❑ Renew after removing
- ❑ Do not interchange with other circlip ⇒ Item 12 (page 135)
- ❑ Installation position ⇒ page 141

- It should not be possible to turn circlip in annular groove on input shaft by hand
- In installation position, circlip must not come into contact with 5th speed selector gear when gear is rotated ⇒ page 141

9 - 5th gear synchro-ring

- ❑ Checking for wear ⇒ page 145
- ❑ Allocation ⇒ page 144

10 - Synchro-hub for 5th and 6th gear

- ❑ No specified installation position

11 - Locking collar for 5th and 6th gear

- ❑ No specified installation position
- ❑ Do not interchange with locking collar for 3rd/4th gear; mark locking collars
- ❑ ⇒ page 144

12 - Circlip

- ❑ Mark
- ❑ Do not interchange with other circlip ⇒ Item 8 (page 135)
- ❑ Determining thickness ⇒ page 142

13 - 6th gear synchro-ring

- ❑ Checking for wear ⇒ page 145
- ❑ Allocation ⇒ page 144

14 - Needle bearing

- ❑ For 6th gear

15 - Synchro-spring

- ❑ Fit in 6th speed selector gear ⇒ page 140

16 - 6th speed selector gear

17 - Thrust washer

- ❑ For 3rd speed and 6th speed selector gears

18 - Needle bearing inner race

- ❑ For 3rd gear

19 - Needle bearing

- ❑ For 3rd gear

20 - 3rd speed selector gear

21 - Synchro-spring

- ❑ Fit in 3rd speed selector gear ⇒ page 140

22 - 3rd gear synchro-ring

- ❑ Checking for wear ⇒ page 145
- ❑ Allocation ⇒ page 144

23 - Synchro-hub for 3rd and 4th gear

- ❑ Installation position: lower inside collar faces 4th gear ⇒ page 143

24 - Locking collar for 3rd and 4th gear

- ❑ Do not interchange with locking collar for 5th/6th gear; mark locking collars
- ❑ Installation position ⇒ page 143

tected by copyright. Copying for private or commercial purposes, in part or in whole, is not permitted unless authorised by AUDI AG. AUDI AG does not guarantee or accept any liability with respect to the correctness of information in this document. Copyright by AUDI AG.

- ❑ ⇒ page 144

25 - 4th gear synchro-ring

- ❑ Checking for wear ⇒ page 145
- ❑ ⇒ page 144

26 - Needle bearing inner race

- ❑ For 4th gear

27 - Needle bearing

- ❑ For 4th gear

28 - Synchro-spring

- ❑ Fit in 4th speed selector gear ⇒ page 140

29 - 4th speed selector gear

30 - Ball bearing

- ❑ Pressing off ⇒ page 139
- ❑ Note installation position ⇒ page 144
- ❑ Pressing on ⇒ page 144

31 - Multi-point socket head bolt

- ❑ Coat with locking fluid ; for locking fluid refer to ⇒ Electronic parts catalogue
- ❑ 250 Nm

Installing sealing plug -1- in input shaft

– Drive sealing plug -1- into input shaft -2- to dimension -a-.

- Dimension -a- = 14.5 mm
- Open end of sealing plug -arrow- faces towards assembly mandrel - 10-508- .

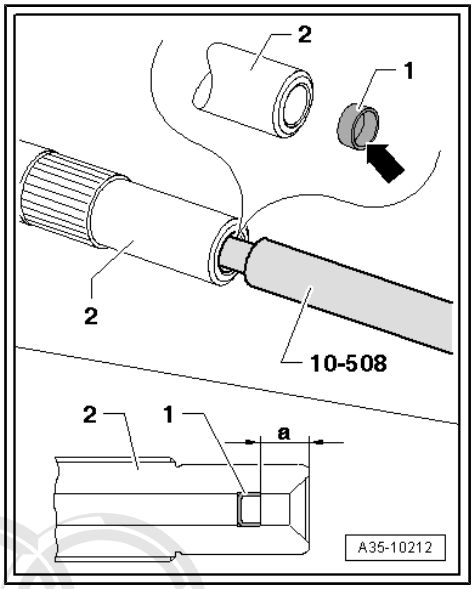

Checking input shaft for wear

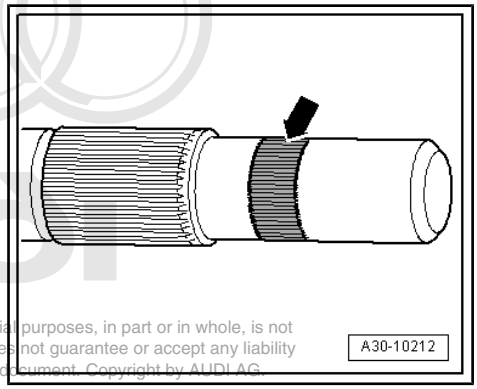

Protected by copyright. Copying for private or commercial purposes, in part or in whole, is not permitted unless authorised by AUDI AG. AUDI AG does not guarantee or accept any liability with respect to the correctness of information in this document. Copyright by AUDI AG.

- If damage can be felt on the surface of the input shaft in the vicinity of the needle bearing for the dual-mass flywheel -arrow-, both the input shaft and the needle bearing in the dual-mass flywheel must be renewed ⇒ page 46 .
- Check input shaft for scoring around bearing in drive plate -arrow-. Renew needle bearing in drive plate if necessary ⇒ Engine, mechanics; Rep. gr. 13 ; Cylinder block (gearbox end); Renewing needle bearing in drive plate .

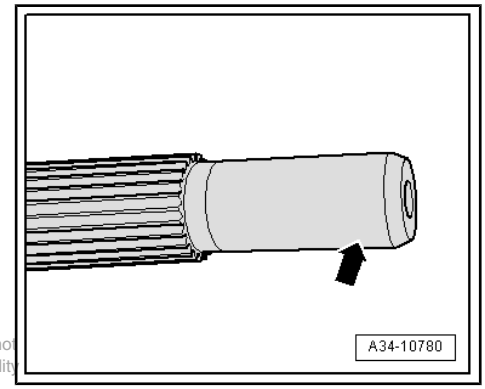

Protected by copyright. Copying for private or commercial purposes, in part or in whole, is not permitted unless authorised by AUDI AG. AUDI AG does not guarantee or accept any liability with respect to the correctness of information in this document. Copyright by AUDI AG.

2.2 Dismantling and assembling input shaft

Special tools and workshop equipment required

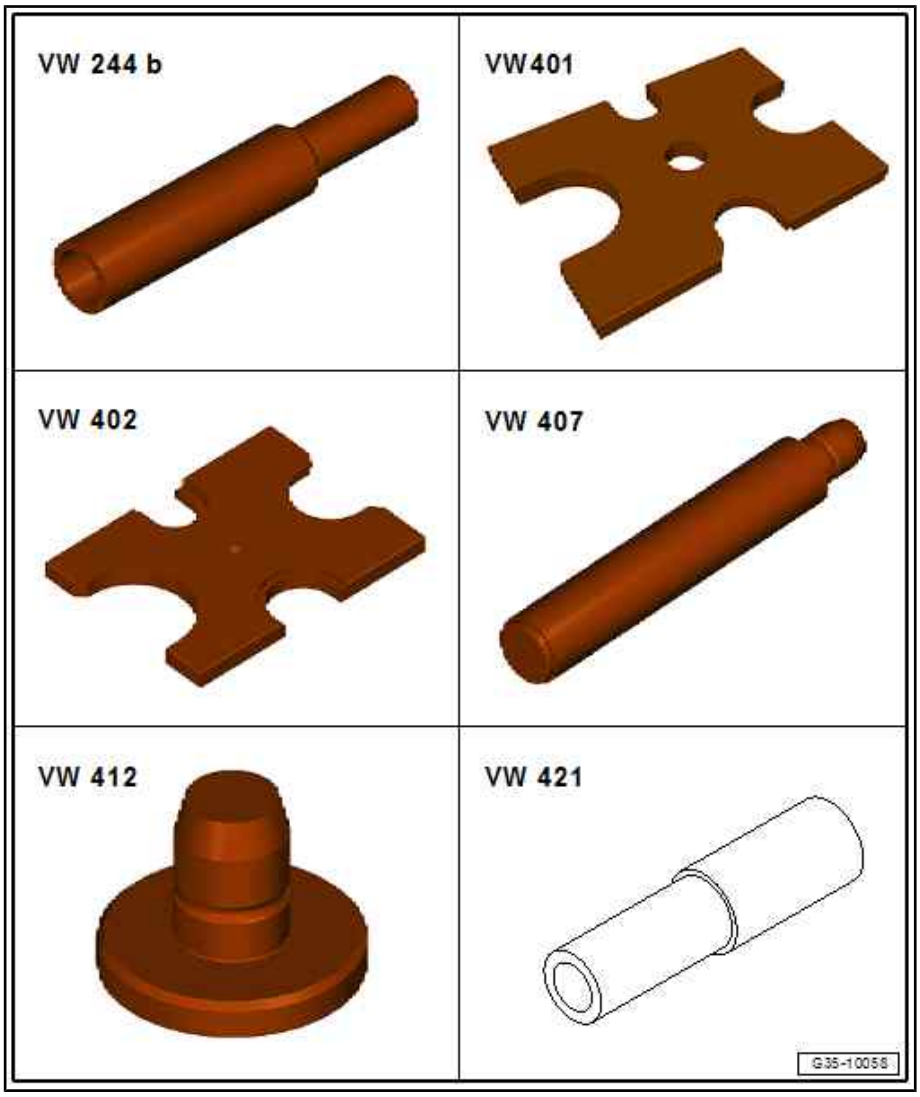

- ♦ Drift sleeve - VW 244 B-
- ♦ Thrust plate - VW 401-
- ♦ Thrust plate - VW 402-
- ♦ Press tool - VW 407-
- ♦ Press tool - VW 412-

- Tube - VW 421-

Protected by copyright. Copying for private or commercial purposes, in part or in whole, is not permitted unless authorised by AUDI AG. AUDI AG does not guarantee or accept any liability with respect to this document. Copyright by AUDI AG.

- Thrust piece - VW 454-
- Tube - VW 519-
- Drift sleeve - 40 - 21-
- Support bridge - 2011-
- Inductive heater - VAS 6414-
- -3- Splitter - VAS 251 411 (Kukko 17-2)-

Dismantling input shaft

- Input shaft has been detached from output shaft and bearing mounting ⇒ page 122 .
- Multi-point socket head bolt in input shaft has been loosened ⇒ page 69 .
- If synchro-rings are not being renewed, make sure that they are re-installed on the same gear.
- Do not confuse locking collar for 3rd/4th gear with locking collar for 5th/6th gear. Mark locking collars accordingly.

– First remove multi-point socket head bolt for input shaft.

– Clamp splitter -1- underneath driving teeth on 4th speed selector gear -3- and press off ball bearing -2-.

1 - Splitter - VAS 251 411 (Kukko 17-2)-

– Remove synchro-ring and needle bearing for 4th speed selector gear.

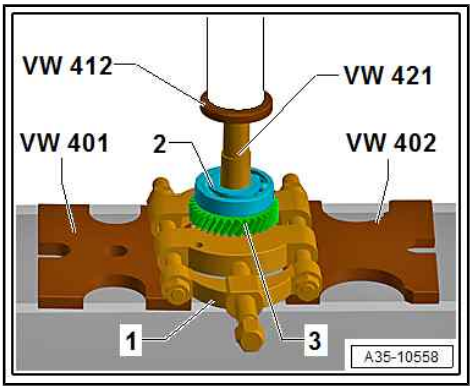

– Press off 3rd speed and 6th speed selector gears (items -4, 5-) together with synchro-hub for 3rd/4th gear -3- and needle bearing inner races -2-.

1 - Splitter - VAS 251 411 (Kukko 17-2)-

– Detach circlip for 5th /6th gear synchro-hub from input shaft.

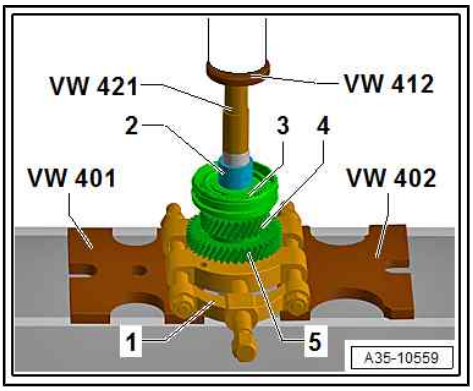

Note

Mark this circlip so that it is not interchanged with the circlip below the 5th /6th gear synchro-hub.

– Press off locking collar with 5th/6th gear synchro-hub -2- and 5th speed selector gear -3-.

1 - Splitter - VAS 251 411 (Kukko 17-2)-

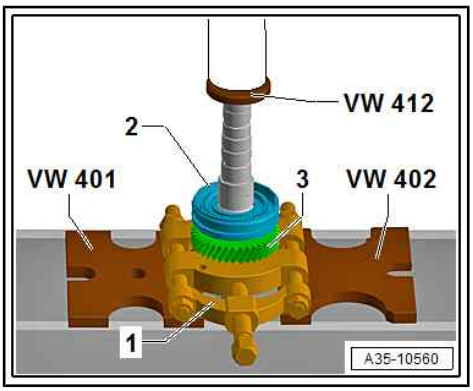

– Open out needle bearing -2- for 5th gear and guide it carefully over circlip -1- and teeth -3- for 5th/6th gear synchro-hub.

Note

- *The circlip -1- below teeth -3- for the 5th/6th gear synchro-hub should only be removed from the input shaft if the roller bearing is being renewed (next step).*
- *Always renew the circlip if it has been removed.*

– Remove circlip -1-.

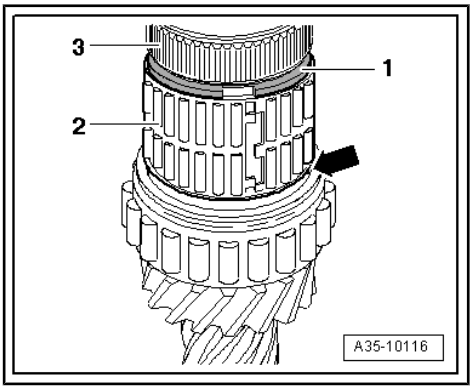

Protected by copyright. Copying for private or commercial purposes, in part or in whole, is not permitted unless authorised by AUDI AG. AUDI AG does not guarantee or accept any liability with respect to the correctness of information in this document. Copyright by AUDI AG.

– Press roller bearing off input shaft.

A - Splitter - VAS 251 411 (Kukko 17-2)-

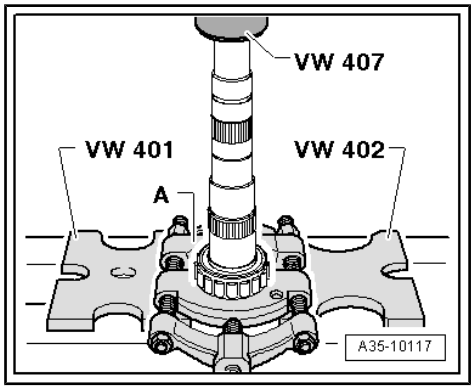

Note

- *The roller bearing will be damaged when it is pressed off and must therefore always be renewed.*
- *If the input shaft is being renewed, the roller bearing does not have to be pressed off the shaft.*
- *To press off the roller bearing, you can also break open the cage of the bearing using a screwdriver or similar and then apply the splitter -A- to the inner race.*

– Clean thread for multi-point socket head bolt in input shaft to remove any remaining locking fluid.

Assembling input shaft

Note

- *Lubricate all needle bearings and synchro-rings with gear oil before fitting.*
- *Checking synchro-rings for wear* ⇒ page 145 .
- *Note correct assignment of synchro-rings* ⇒ page 144 .
- *Using inductive heater - VAS 6414- or similar, heat needle bearing inner races to 130 °C (max.) before pressing on (wear protective gloves).*
- *Using inductive heater - VAS 6414- or similar, heat synchro-hub to 100 °C (max.) before pressing on (wear protective gloves).*
- *Always press on roller bearing, needle bearing inner races and synchro-hubs as far as stop to make sure the axial clearance of the selector gears meets the specification.*

Inserting synchro-spring in selector gear

The bent end of the synchro-spring -arrow- must be hooked into the hole in the selector gear.

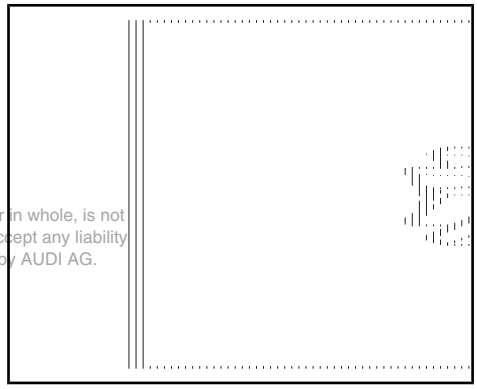

Protected by copyright. Copying for private or commercial purposes, in part or in whole, is not permitted unless authorised by AUDI AG. AUDI AG does not guarantee or accept any liability with respect to the correctness of information in this document. Copyright by AUDI AG.

– Press roller bearing onto input shaft as far as stop.

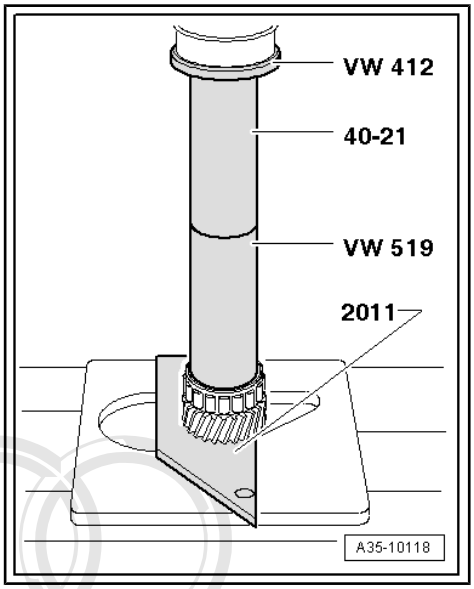

– Open out needle bearing -2- for 5th speed selector gear and guide it carefully over teeth for 5th/6th gear synchro-hub -3-. The needle bearing must be positioned against shoulder -arrow- on input shaft.

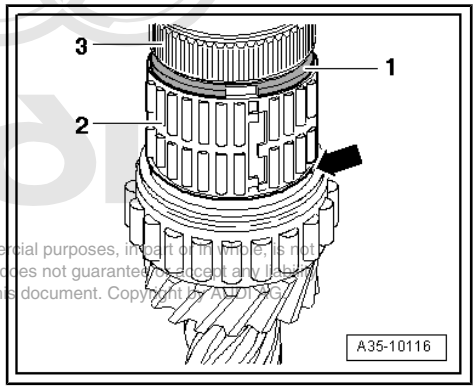

Note

If the circlip -1- has not been removed, the needle bearing -2- must also be guided carefully over this circlip.

Audi AG does not guarantee or accept any liability with respect to the correctness of information in this document. Copyright by AUDI AG.

– If previously removed, carefully open out new circlip -1- and guide it over splines for 5th/6th gear synchro-hub -3-.

- It should not be possible to turn the circlip in the annular groove on the input shaft by hand

– Install 5th speed selector gear -B-.

- When rotated, selector gear -B- must not come into contact with circlip -A-.
- There must be a uniform clearance -x- between selector gear and circlip all round.

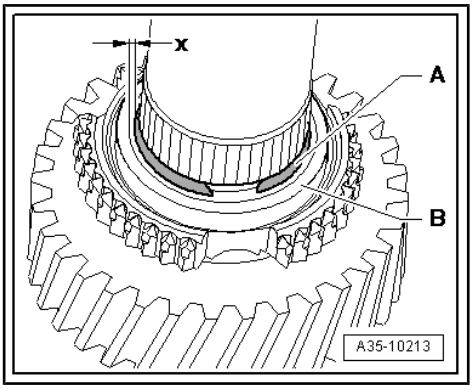

Press on synchro-hub for 5th and 6th gear as follows:

Note the following when performing the steps below:

- Fit input shaft in drilling of support bridge - 2011- .
- Position drift sleeves on centre of heated components (synchro-hub and needle bearing inner races).
- First press on components just briefly, then stop exerting pressure and check whether drift sleeves are still positioned properly and press on as far as stop.

– Fit 5th gear synchro-ring.

– Press on pre-heated synchro-hub as far as stop.

– Slide locking collar over synchro-hub.

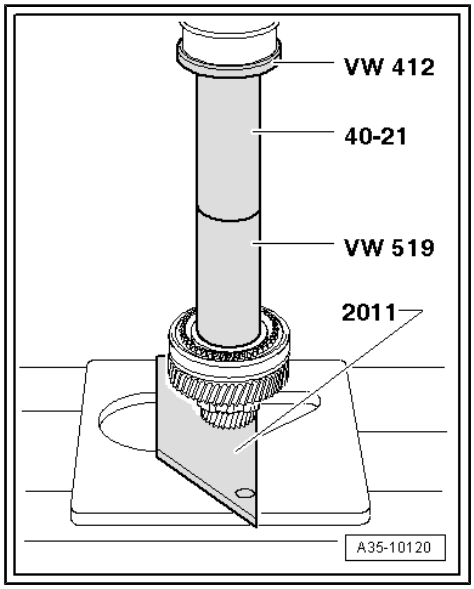

Determining thickness of circlip for synchro-hub for 5th and 6th gear

- Synchro-hub is pressed on as far as stop.

– Determine the thickest circlip that will just fit and install it. For part number refer to ⇒ Electronic parts catalogue .

The following circlips are available:

Circlip thickness (mm)		
2.41	2.44	2.47
2.50	2.55	

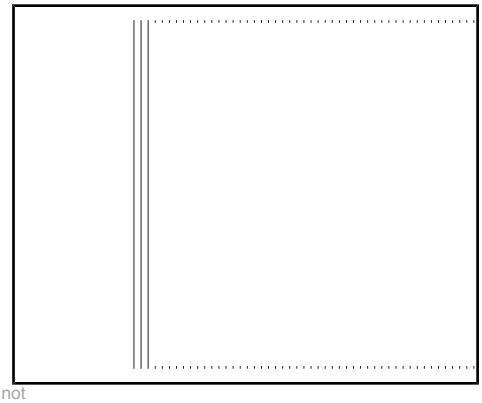

– Install 6th speed selector gear with needle bearing and synchro-ring.

Protected by copyright. Copying for private or commercial purposes, in part or in whole, is not permitted unless authorised by AUDI AG. AUDI AG does not guarantee or accept any liability with respect to the correctness of information in this document. Copyright by AUDI AG.

– Fit thrust washer -A-.

– Press on pre-heated needle bearing inner race -B- for 3rd speed selector gear.

– Install 3rd speed selector gear with needle bearing and synchro-ring.

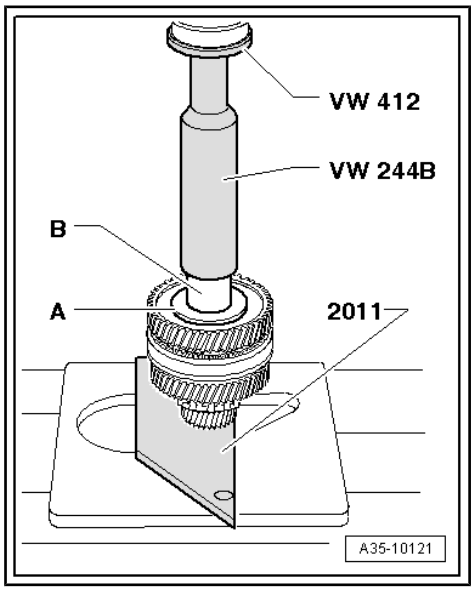

Installation position of 3rd/4th gear synchro-hub and locking collar

- The lower inside collar -arrow A- of the synchro-hub -1- faces 4th gear.

Note

- *Depending on version, locking collars -2- with or without groove -arrow B- may be fitted.*
- *If there is a groove -arrow B- on the locking collar -2-, this may face towards 3rd or 4th gear.*

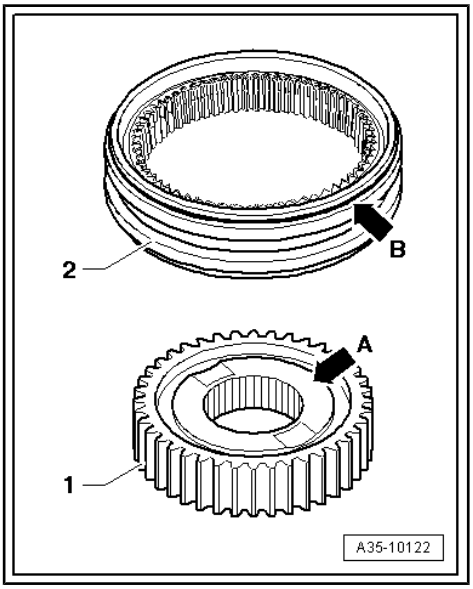

Pressing on pre-heated 3rd/4th gear synchro-hub

– Fit locking collar for 3rd/4th gear on synchro-hub.

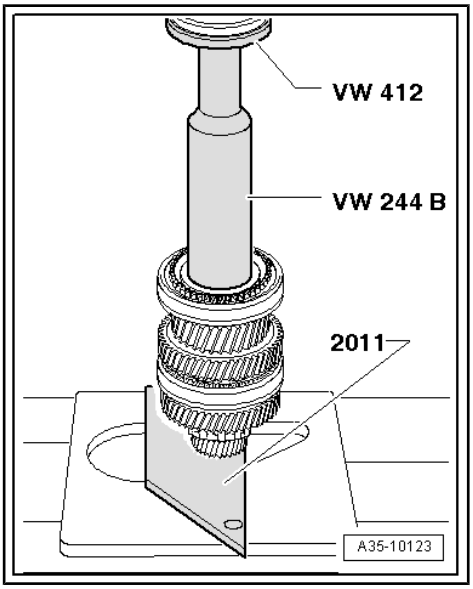

Pressing on pre-heated needle bearing inner race -A- for 4th speed selector gear

– Install 4th speed selector gear together with needle bearing and synchro-ring.

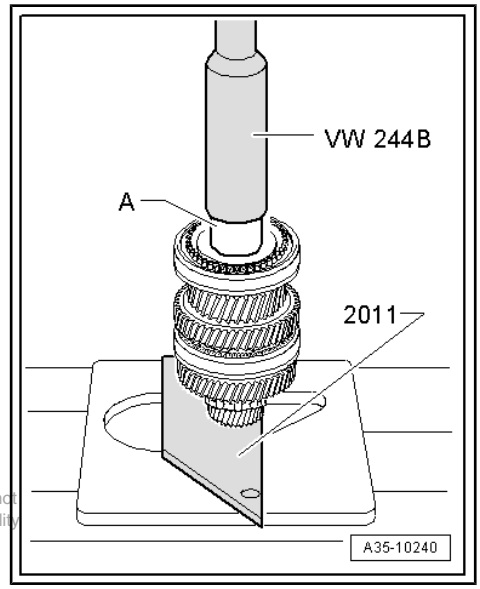

Protected by copyright. Copying for private or commercial purposes, in part or in whole, is not permitted unless authorised by AUDI AG. AUDI AG does not guarantee or accept any liability with respect to the correctness of information in this document. Copyright by AUDI AG.

– Installation position of ball bearing on input shaft

• High shoulder -arrow- faces 4th speed selector gear.

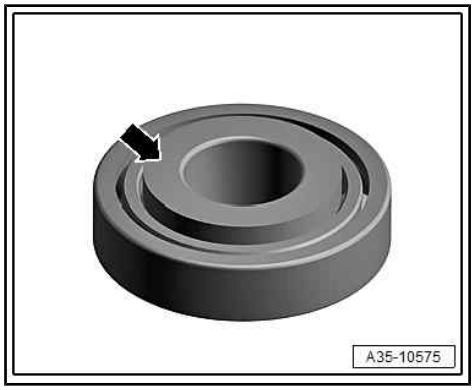

– Press ball bearing -1- onto input shaft.

– Then check all selector gears for freedom of movement and axial play.

• The axial play of the selector gears must be at least 0.15 mm.

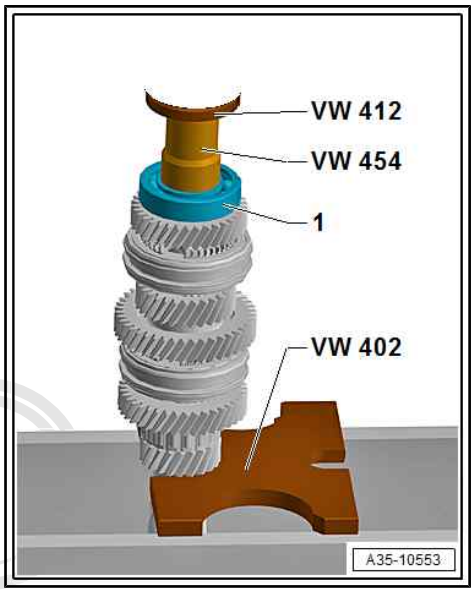

Note

For remaining assembly of gear cluster, tighten bolt for input shaft hand-tight.

2.3 Allocation of 3rd - 6th gear synchro-rings to locking collars

Note

Protected by copyright. Copying for private or commercial purposes, in part or in whole, is not permitted unless authorised by AUDI AG. AUDI AG does not guarantee or accept any liability with respect to the correctness of information in this document. Copyright by AUDI AG.

♦ *The synchro-rings for 3rd/4th gear always have a carbon coating.*

♦ *The synchro-rings for 5th/6th gear always have a molybdenum coating.*

♦ *Please note correct allocation of synchro-rings to locking collars.*

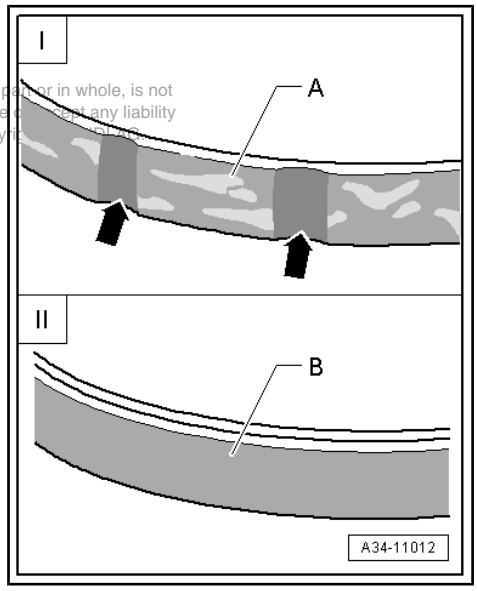

Different types of synchro-rings

I - Molybdenum-coated synchro-ring ⇒ page 145

• Distinguishing features: synchro-ring has oil recesses -arrows-, and friction surface -A- is graphite-grey with a slightly porous appearance.

• Fitted on 5th and 6th gears

II - Carbon-coated synchro-ring ⇒ page 145

• Distinguishing features: friction surface -B- is black with a porous appearance; upper part is not coated.

• Fitted on 3rd and 4th gears

Locking collars for molybdenum-coated synchro-rings

I - Locking collar with one groove -arrow 1- and no chamfers

- Locking collar -I- – old version, no longer installed
- Fitted on 5th and 6th gears

II - Locking collar with chamfers -arrows 2- on both sides of selector fork slot

- Locking collar -II- – new version, currently installed
- Fitted on 5th and 6th gears

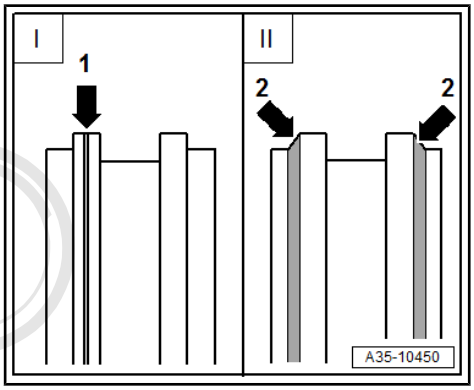

Locking collar for carbon-coated synchro-rings

Locking collar with chamfers on outer sides -arrows-

- Fitted on 3rd and 4th gears

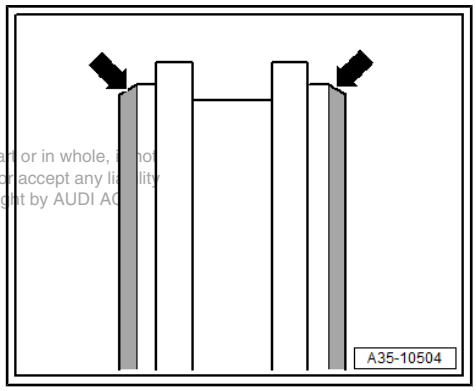

Protected by copyright. Copying for private or commercial purposes, in part or in whole, is not permitted unless authorised by AUDI AG. AUDI AG does not guarantee or accept any liability with respect to the correctness of information in this document. Copyright by AUDI AG

2.4 Checking 3rd - 6th gear synchro-rings for wear

Special tools and workshop equipment required

- Depth gauge

Note

- *If the synchromesh of one of the gears makes a grinding noise when engaging the gear, check the synchro-ring, the dog teeth of the locking collar/synchro-ring and the selector gear ⇒ page 11 and the synchro-spring -arrow- in the selector gear for damage. Renew damaged parts.*
- *The clutch and clutch actuator mechanism must be OK and the selector mechanism must be correctly adjusted.*

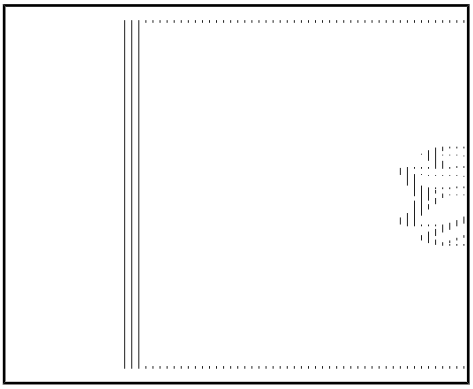

Checking synchro-ring for wear

– Press synchro-ring -E- into locking collar and measure gap -a- at positions -A-, -B- and -C- using depth gauge -D-.

– Add the measured values and divide by 3.

The determined value should not exceed 0.45 mm.

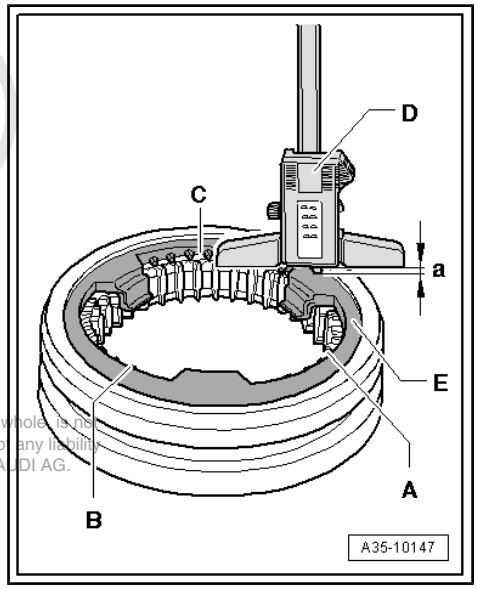

Protected by copyright. Copying for private or commercial purposes, in part or in whole, is not permitted unless authorised by AUDI AG. AUDI AG does not guarantee or accept any liability with respect to the correctness of information in this document. Copyright by AUDI AG.

Checking synchro-rings with molybdenum coating and carbon coating

Clean synchro-ring; the friction surface must be free of oil.

I - Molybdenum-coated synchro-ring

- The friction surface of an intact molybdenum coated synchro-ring has a graphite-grey, slightly porous appearance.
- The synchro-ring must be renewed if very shiny areas -A- have formed on the friction surface or if the brass-coloured metal underneath is already visible.

II - Carbon-coated synchro-ring

- Check the friction surfaces -B- of carbon-coated synchro-rings for damage (flattened sections or particles of carbon coating broken away). Renew if necessary.

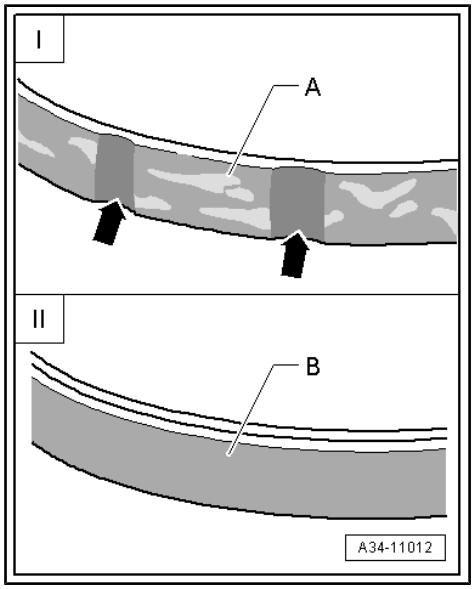

3 Output shaft

⇒ "3.1 Exploded view - output shaft", page 147

⇒ "3.2 Dismantling and assembling output shaft", page 151

3.1 Exploded view - output shaft

Detaching output shaft from input shaft and bearing mounting
⇒ page 122

Note

- *Lubricate all needle bearings and synchro-rings with gear oil before installing.*
- *When renewing synchro-rings, renew inner ring, intermediate ring and synchro-ring for the corresponding gear together.*
- *If synchro-rings are not being renewed, make sure that they are re-installed on the same gear.*
- *When fitting new gear wheels or output shaft refer to technical data ⇒ 6-speed manual gearbox 0CS, 0DJ, 0CX; Rep. gr. 00 ; Technical data and ⇒ Electronic parts catalogue .*

1 - Bolt
- ❑ Install with locking fluid ; for locking fluid refer to ⇒ Electronic parts catalogue
- ❑ 350 Nm

2 - Spur gear drive input gear
- ❑ Removing and installing ⇒ page 124

3 - Reverse gear synchro-hub
- ❑ Removing and installing ⇒ page 124

4 - Synchro-spring
- ❑ Insert in drilling in reverse gear synchro-hub ⇒ page 140

5 - Synchro-ring for reverse gear
- ❑ Checking for wear ⇒ page 149

6 - Reverse gear locking collar
- ❑ Installation position ⇒ page 149

7 - Reverse selector gear
- ❑ Installation position ⇒ page 149

8 - Needle bearing
- ❑ For reverse gear

9 - Needle bearing inner race
- ❑ For reverse gear
- ❑ Removing and installing ⇒ page 124

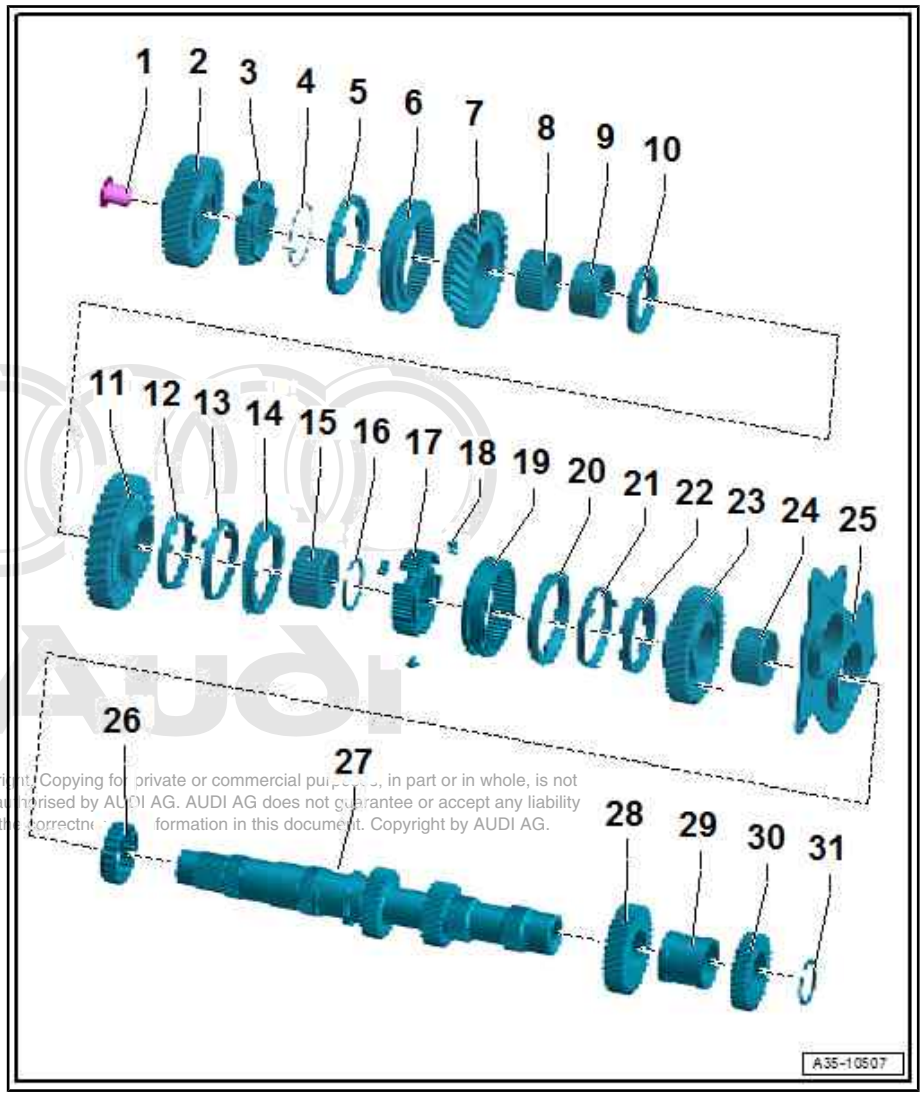

Protected by copyright. Copying for private or commercial purposes, in part or in whole, is not permitted unless authorised by AUDI AG. AUDI AG does not guarantee or accept any liability with respect to the correctness of information in this document. Copyright by AUDI AG.

10 - Thrust washer

- ❑ For 1st speed and reverse selector gears

11 - 1st speed selector gear

12 - Inner ring for 1st gear

- ❑ Renew if scored or if there are visible traces of wear
- ❑ Installation position ⇒ page 129
- ❑ Checking for wear ⇒ page 150
- ❑ Distinguishing inner rings and synchro-rings for 1st and 2nd gear ⇒ page 150

13 - Intermediate ring for 1st gear

- ❑ Installation position ⇒ page 129
- ❑ Checking for wear ⇒ page 150

14 - Synchro-ring for 1st gear

- ❑ Renew if scored or if there are visible traces of wear
- ❑ Installation position ⇒ page 129
- ❑ Checking for wear ⇒ page 150
- ❑ Distinguishing inner rings and synchro-rings for 1st and 2nd gear ⇒ page 150

15 - Needle bearing

- ❑ For 1st gear

Protected by copyright. Copying for private or commercial purposes, in part or in whole, is not permitted unless authorised by AUDI AG. AUDI AG does not guarantee or accept any liability with respect to the correctness of information in this document. Copyright by AUDI AG.

16 - Circlip

- ❑ Determining thickness ⇒ page 130

17 - Synchro-hub for 1st and 2nd gear

- ❑ Installation position ⇒ page 151

18 - Thrust piece

- ❑ 3x
- ❑ Installing ⇒ page 151

19 - Locking collar for 1st and 2nd gear

- ❑ Installation position ⇒ page 151

20 - Synchro-ring for 2nd gear

- ❑ Renew if scored or if there are visible traces of wear
- ❑ Installation position ⇒ page 129
- ❑ Checking for wear ⇒ page 150
- ❑ Distinguishing inner rings and synchro-rings for 1st and 2nd gear ⇒ page 150

21 - Intermediate ring for 2nd gear

- ❑ Installation position ⇒ page 129
- ❑ Checking for wear ⇒ page 150

22 - Inner ring for 2nd gear

- ❑ Renew if scored or if there are visible traces of wear
- ❑ Installation position ⇒ page 129
- ❑ Distinguishing inner rings and synchro-rings for 1st and 2nd gear ⇒ page 150

23 - 2nd speed selector gear

24 - Needle bearing

- ❑ For 2nd gear

25 - Bearing mounting

- ❑ Carries bearings for input shaft and output shaft in gearbox cover

26 - Roller bearing

- ❑ For output shaft

❑ Removing and installing ⇒ page 152

27 - Output shaft

❑ With splines for 5th and 6th gear

28 - 3rd gear wheel

❑ Installation position: high inside collar faces 4th gear
❑ Pressing off ⇒ page 152
❑ Pressing on ⇒ page 153

29 - Spacer sleeve

30 - 4th gear wheel

❑ Pressing off ⇒ page 152
❑ Installation position: high inside collar faces circlip ⇒ Item 31 (page 149)
❑ Pressing on ⇒ page 153

31 - Circlip

❑ Fit in annular groove on output shaft
❑ Determining thickness ⇒ page 153

Installation position of locking collar -2- and selector gear -1- for reverse gear

- The pointed teeth -arrow A- of the locking collar -2- point away from the driving teeth -arrow B- of the reverse selector gear -1-.

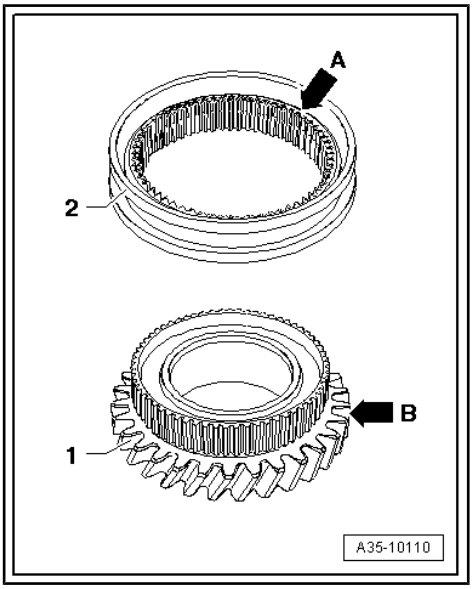

Checking synchro-ring for wear

– Press synchro-ring -E- into locking collar and measure gap -a- at positions -A-, -B- and -C- using depth gauge -D-.
– Add the measured values and divide by 3.

The determined value should not exceed 1.7 mm.

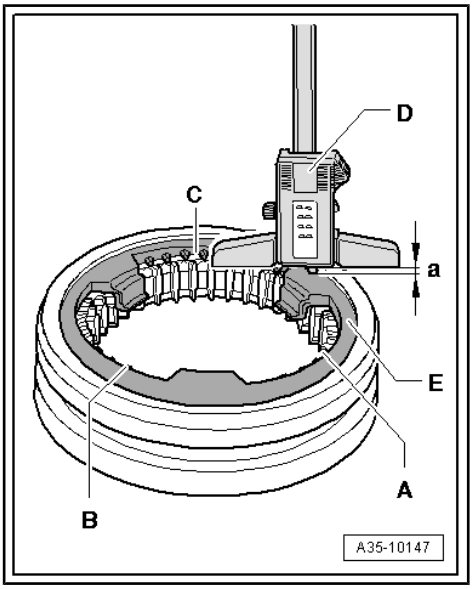

Protected by copyright. Copying for private or commercial purposes, in part or in whole, is not permitted unless authorised by AUDI AG. AUDI AG does not guarantee or accept any liability with respect to the correctness of information in this document. Copyright by AUDI AG.

Distinguishing synchro-rings and inner rings for 1st and 2nd gear

Caution

The synchro-rings for 1st and 2nd gear must not be interchanged.

- *If synchro-rings are interchanged, the synchromesh will jam or malfunction prematurely.*
- *The locking collar must be installed in the correct direction* *⇒ page 151* *.*

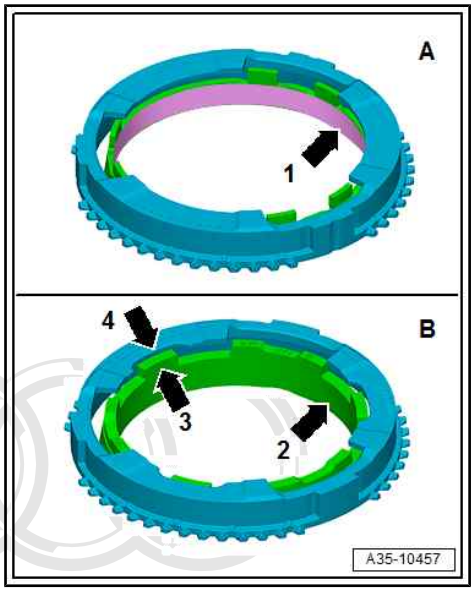

A - The inner ring for 1st gear has a coated friction surface on the inside -arrow 1- and is conical.

B - The inner ring for 2nd gear has no friction surface on the inside -arrow 2- and is cylindrical.

Distinguishing features:

- Additional lug -arrow 3- on inner ring
- Additional notch on synchro-ring -arrow 4-

Checking 1st gear inner ring for wear

– Check outer friction surface -arrow- for scoring or visible traces of wear and renew if necessary.

– Press inner ring onto chamfer on selector gear and measure gap -a- using a feeler gauge .

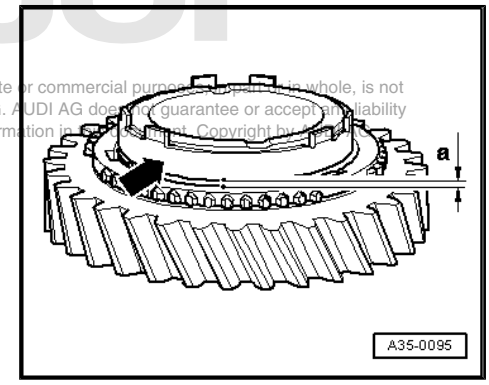

Gap -a-	Wear limit
Inner ring for 1st gear	0.6 mm

Protected by copyright. Copying for private or commercial purposes, in part or in whole, is not permitted unless authorised by AUDI AG. AUDI AG does not guarantee or accept any liability with respect to the correctness of information in this document. Copyright by AUDI AG.

Checking 1st and 2nd gear intermediate ring for wear

– Check inner friction surface of synchro-ring for grooves or scoring and renew if necessary.

– Fit inner ring, intermediate ring and synchro-ring on selector gear and rotate rings until they are »seated«.

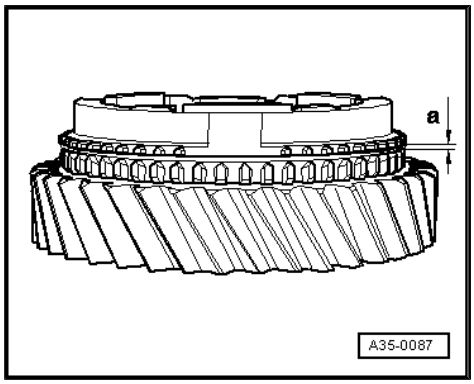

Note

To achieve proper seating, rotate synchro-rings approx. one turn while pressing down rings simultaneously.

– Then measure gap -a- using a feeler gauge .

Gap -a-	Wear limit
1st and 2nd gear	0.7 mm

Note

Renew inner ring, intermediate ring and synchro-ring for the corresponding gear together.

Assembly and installation position of 1st and 2nd gear locking collar and synchro-hub

– Fit locking collar -1- onto synchro-hub -2- as follows:

- The chamfer on the locking collar -arrow E- and the lower collar on the synchro-hub -arrow C- must face the 1st speed selector gear.
- The wide teeth of the locking collar -arrow A- and the synchro-hub -arrow B- must align.

– Then fit thrust blocks -3- in synchro-hub and press them into recesses -arrow D- in locking collar.

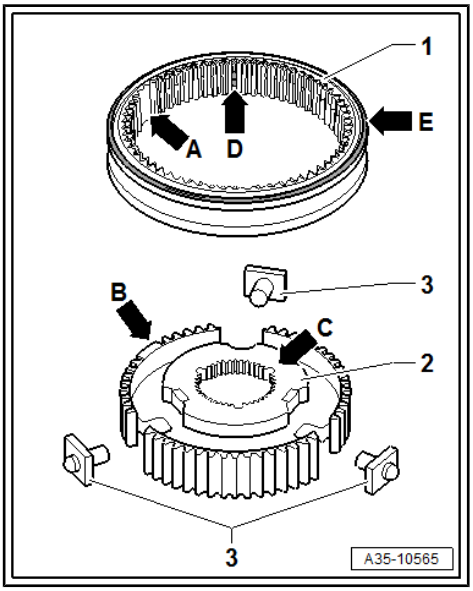

3.2 Dismantling and assembling output shaft

Special tools and workshop equipment required

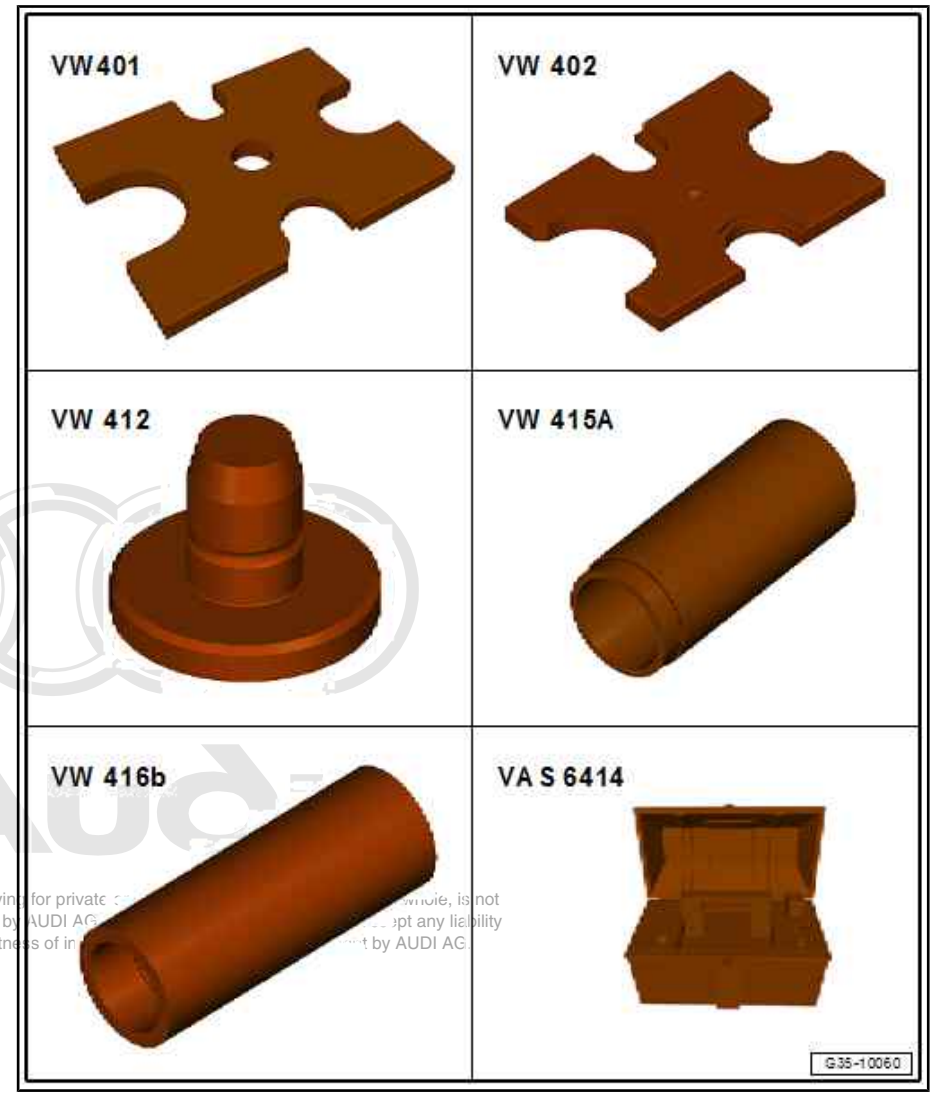

Protected by copyright. Copying for private ... whole, is not permitted unless authorised by AUDI AG ... pt any liability with respect to the correctness of in... t by AUDI AG.

♦ Thrust plate - VW 401-

- Thrust plate - VW 402-
- Press tool - VW 412-
- Tube - VW 415 A-
- Tube - VW 416 B-
- Inductive heater - VAS 6414-
- -3- Splitter - VAS 251 411 (Kukko 17-2)-

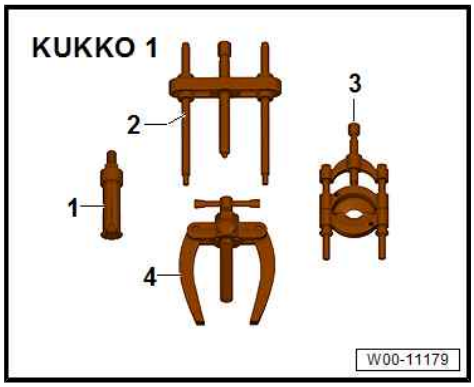

Note

Removing and installing 1st, 2nd and reverse gears is described under
⇒ "1.2 Dismantling and assembling gear cluster", page 124 .

Pressing off 4th gear wheel -2-

1 - Splitter - VAS 251 411 (Kukko 17-2)-

- First remove circlip ⇒ Item 31 (page 149) .

– Detach spacer sleeve ⇒ Item 29 (page 149) from output shaft.

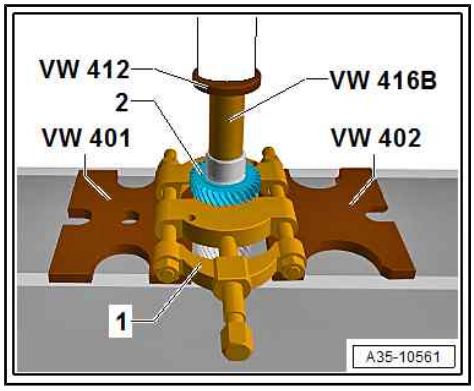

Pressing off 3rd gear wheel

A - Splitter - VAS 251 411 (Kukko 17-2)-

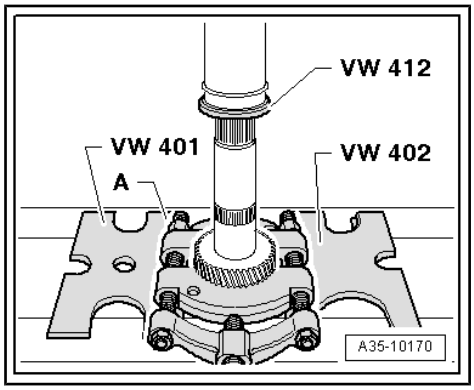

Protected by copyright. Copying for private or commercial purposes, in part or in whole, is not permitted unless authorised by AUDI AG. AUDI AG does not guarantee or accept any liability with respect to the correctness of information in this document. Copyright by AUDI AG.

Removing and attaching output shaft roller bearing -1-

– Carefully prise open roller bearing -arrow B- at separation -arrow A- until it can be guided over shoulder of output shaft.

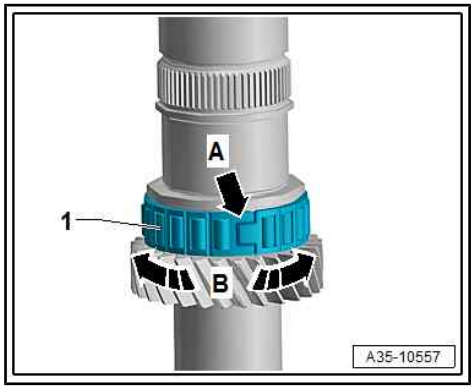

Note

If the seat for the roller bearing on the output shaft is damaged, the output shaft must be renewed.

Heating and pressing on 3rd gear wheel -1-

- Installation position:

Higher inside collar faces 4th gear.

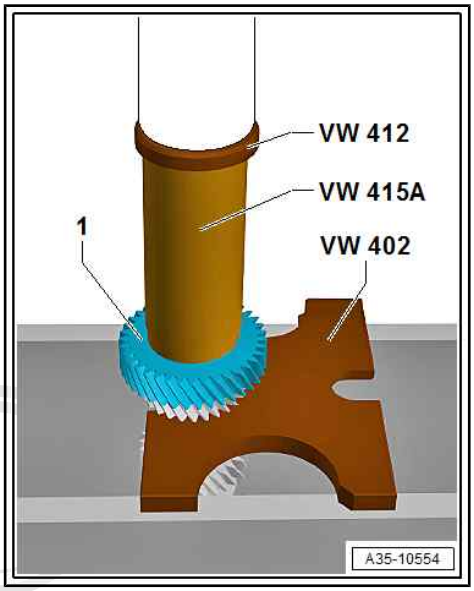

Fitting spacer sleeve -2- and pressing on 4th gear wheel -1-

- Installation position:

Higher inside collar faces upwards towards pressing tool.

Protected by copyright. Copying for private or commercial purposes, in part or in whole, is r
permitted unless authorised by AUDI AG. AUDI AG does not guarantee or accept any liabi
with respect to the correctness of information in this document. Copyright by AUDI AG.

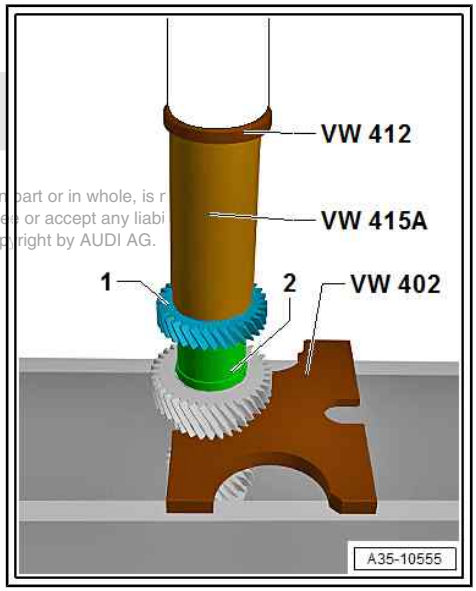

Selecting circlip -A- for 4th gear wheel on output shaft

Note

- *4th gear wheel pressed onto stop.*
- *The illustration shows a different component, but the procedure for selecting the circlip is the same.*

– Determine the thickest circlip that will just fit and install it. For part number refer to ⇒ Electronic parts catalogue .

The following circlips are available:

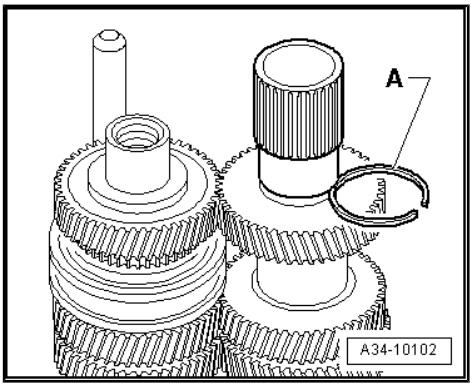

Circlip thickness (mm)			
2.44	2.47	2.50	2.53
2.56	2.59	2.62	

39 – Final drive - differential

1 Oil seals

⇒ “1.1 Overview of fitting locations - oil seals”, page 154

⇒ “1.3 Renewing oil seal (right-side)”, page 162

⇒ “1.2 Renewing oil seal (left-side)”, page 158

⇒ “1.4 Renewing input shaft oil seal”, page 163

⇒ “1.6 Renewing output shaft oil seal”, page 166

1.1 Overview of fitting locations - oil seals

⇒ “1.1.1 Overview of fitting locations - oil seals in manual gear-box”, page 154

⇒ “1.1.2 Overview of fitting locations - oil seals on four-wheel drive coupling quattro ultra ”, page 157

1.1.1 Overview of fitting locations - oil seals in manual gearbox

Note

- *The oil seals -2-, -9-, -10- and the sealing cap -8- can also be renewed with the gearbox installed ⇒ 6-speed manual gearbox 0CS, 0DJ, 0CX; Rep. gr. 39 ; Oil seals; Overview of fitting locations - oil seals .*
- *Oil seals -6- and -13- and sealing cap -18- can only be renewed with the gearbox removed from the vehicle.*

Protected by copyright. Copying for private or commercial purposes, in part or in whole, is not permitted unless authorised by AUDI AG. AUDI AG does not guarantee or accept any liability with respect to the correctness of information in this document. Copyright by AUDI AG.

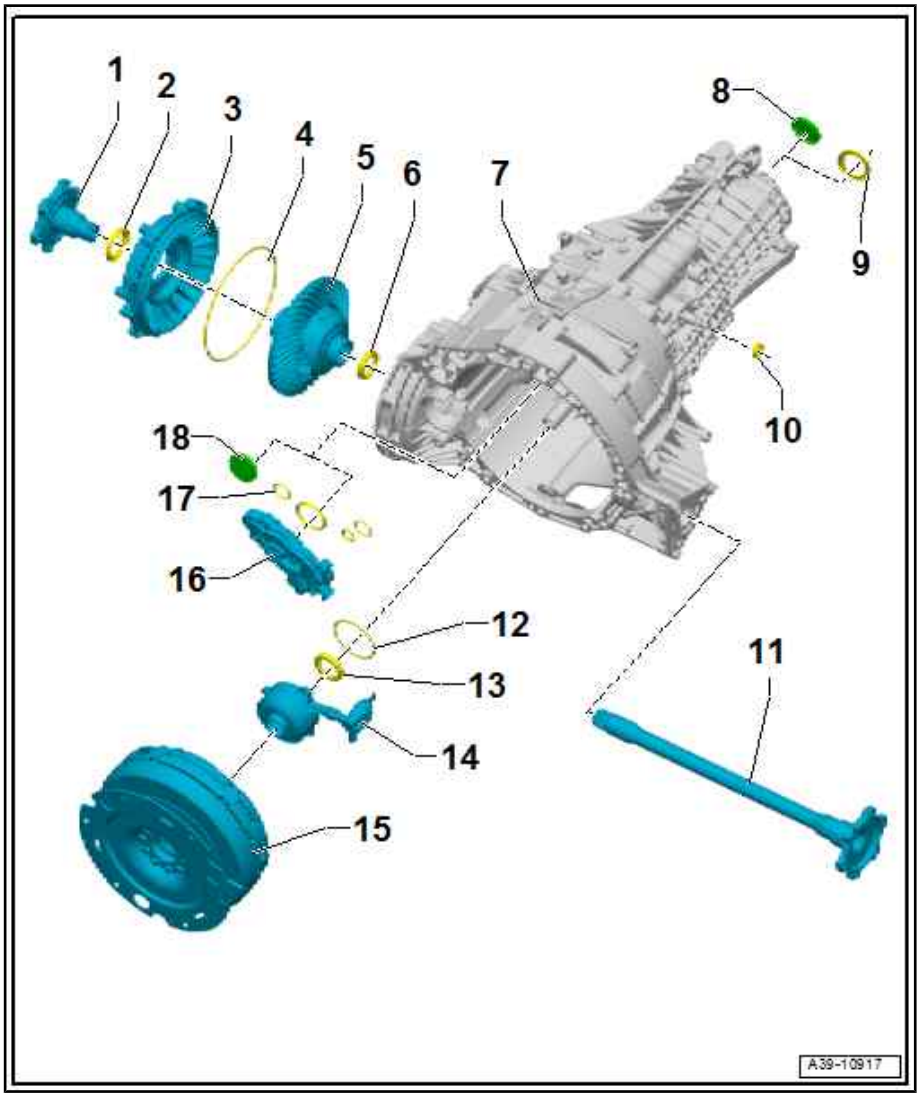

1 - Flange shaft (right-side)

- ❑ Removing and installing ⇒ page 223
- ❑ Renewing with gearbox installed ⇒ 6-speed manual gearbox 0CS, 0DJ, 0CX; Rep. gr. 39 ; Differential; Removing and installing flange shaft (right-side)

2 - Oil seal

- ❑ For flange shaft (right-side)
- ❑ Renewing ⇒ page 162
- ❑ Renewing with gearbox installed ⇒ 6-speed manual gearbox 0CS, 0DJ, 0CX; Rep. gr. 39 ; Oil seals; Renewing oil seal (right-side)

3 - Cover for final drive

- ❑ Renewing ⇒ page 203

4 - O-ring

- ❑ On cover for final drive
- ❑ Renew after removing
- ❑ Renewing ⇒ page 203

5 - Differential

- ❑ Exploded view ⇒ page 210
- ❑ Removing and installing ⇒ page 211

6 - Oil seal

- ❑ For flange shaft (left-side)
- ❑ Renewing ⇒ page 158

7 - Gearbox

- ❑ Dismantling and assembling ⇒ page 61
- ❑ Removing and installing ⇒ 6-speed manual gearbox 0CS, 0DJ, 0CX; Rep. gr. 34 ; Removing and installing gearbox

8 - Sealing cap

- ❑ For output shaft
- ❑ Only for gearbox on vehicles with front-wheel drive
- ❑ Without oil guide
- ❑ Renew after removing
- ❑ Do not use additional lubricant on outer circumference for installation
- ❑ Renewing with gearbox installed ⇒ 6-speed manual gearbox 0CS, 0DJ, 0CX; Rep. gr. 39 ; Oil seals; Renewing oil seal (right-side)
- ❑ Removing ⇒ page 112
- ❑ Installing ⇒ page 112

9 - Oil seal

- ❑ For output shaft
- ❑ Only for gearbox on vehicles with four-wheel drive
- ❑ Renewing ⇒ page 166

Copyright by AUDI AG.
permitted unless authorised by AUDI AG. AUDI AG does not guarantee or accept any liability
with regard to the correctness of information in this document. Copyright by AUDI AG.

10 - Oil seal

- ❑ For selector shaft
- ❑ Removing and installing ⇒ page 110
- ❑ Renewing with gearbox installed ⇒ 6-speed manual gearbox 0CS, 0DJ, 0CX; Rep. gr. 34 ; Selector mechanism; Renewing selector shaft oil seal

11 - Flange shaft (left-side)

- ❑ Removing and installing ⇒ page 219

12 - O-ring

- ❑ Renew after removing

13 - Seal

Protected by copyright. Copying for private or commercial purposes, in part or in whole, is not permitted unless authorised by AUDI AG. AUDI AG does not guarantee or accept any liability with respect to the correctness of information in this document. Copyright by AUDI AG.

- ❑ For input shaft
- ❑ Renewing ⇒ page 163

14 - Clutch slave cylinder with release bearing

- ❑ Removing and installing ⇒ page 19

15 - Clutch module

- ❑ Removing and installing ⇒ page 30

16 - Gear oil pump

- ❑ Only for gearbox with forced lubrication
- ❑ Driven via output shaft
- ❑ Removing and installing ⇒ page 120

17 - Oil seals

- ❑ Only for gearbox with forced lubrication
- ❑ For gear oil pump
- ❑ Renew after removing
- ❑ Allocation ⇒ page 119

18 - Sealing cap

- ❑ Only for gearbox without forced lubrication
- ❑ With oil guide
- ❑ For output shaft
- ❑ Renew after removing
- ❑ Do not use additional lubricant on outer circumference for installation
- ❑ Renewing ⇒ “1.5 Renewing sealing cap for output shaft in gearbox housing”, page 165

1.1.2 Overview of fitting locations - oil seals on four-wheel drive coupling “quattro ultra”

For extensive information on the four-wheel drive coupling -3-, refer to ⇒ Rear final drive; Rep. gr. 39 ; Four-wheel drive coupling .

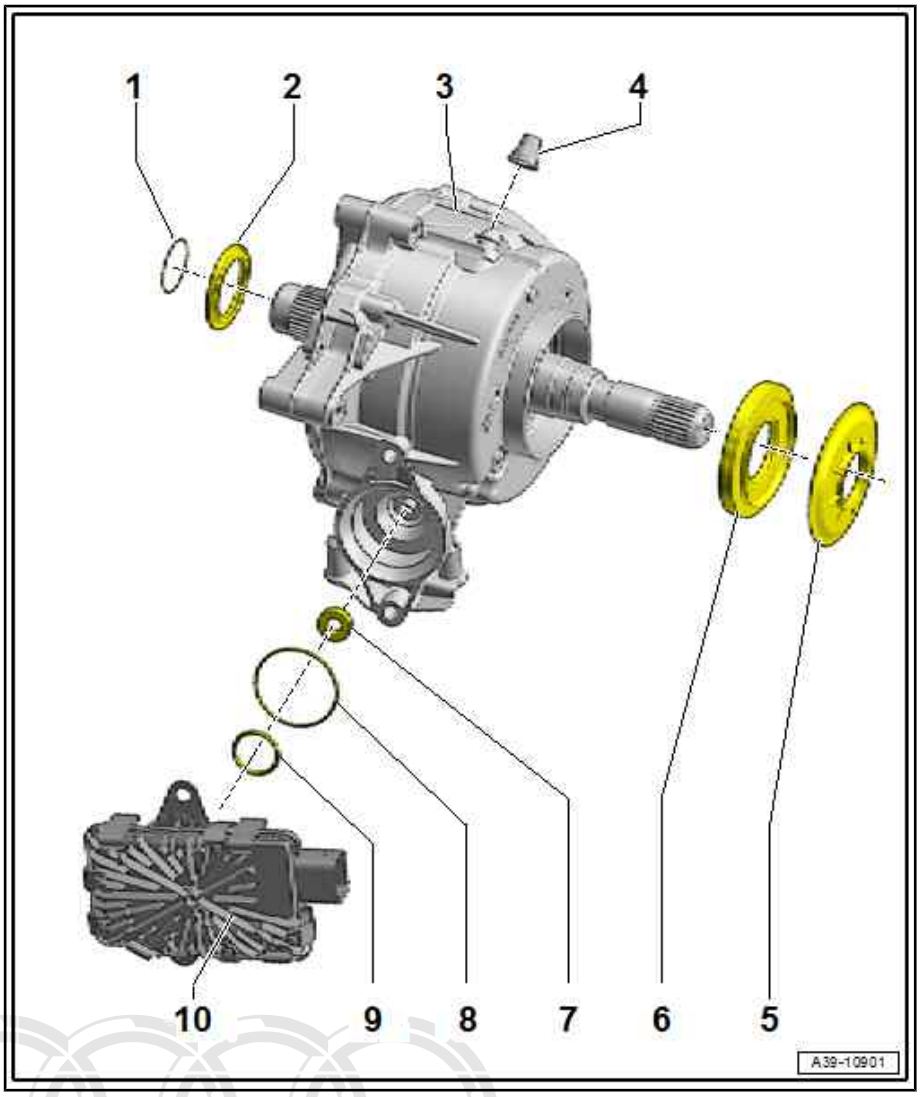

1 - O-ring

- ❑ For four-wheel drive coupling input shaft
- ❑ Renew if damaged

2 - Oil seal for four-wheel drive coupling input shaft

- ❑ Removing and installing ⇒ Rear final drive; Rep. gr. 39 ; Oil seals; Exploded view - oil seals

3 - Four-wheel drive coupling

- ❑ Removing and installing ⇒ page 229
- ❑ Additional work necessary when renewing four-wheel drive coupling ⇒ Rear final drive; Rep. gr. 39 ; Four-wheel drive coupling; Exploded view - four-wheel drive coupling
- ❑ Checking ATF level ⇒ Rear final drive; Rep. gr. 39 ; Four-wheel drive coupling; Checking fluid level

4 - Breather

5 - Dust ring

- ❑ For rear splined shaft
- ❑ Renew after removing
- ❑ Removing and installing ⇒ Rear final drive; Rep. gr. 39 ; Oil seals; Exploded view - oil seals

6 - Oil seal for rear splined shaft

- ❑ Removing and installing ⇒ Rear final drive; Rep. gr. 39 ; Oil seals; Exploded view - oil seals

7 - Oil seal for actuator shaft

8 - O-ring

- ❑ For all-wheel drive control unit
- ❑ Renew after removing

9 - O-ring

- ❑ For all-wheel drive control unit
- ❑ Renew after removing

Protected by copyright. Copying for private or commercial purposes, in part or in whole, is not permitted unless authorised by AUDI AG. AUDI AG does not guarantee or accept any liability with respect to the correctness of information in this document. Copyright by AUDI AG.

10 - All-wheel drive control unit - J492-

The following are integrated in the all-wheel drive control unit :

- ♦ Clutch actuator for all-wheel drive - V622-
- ♦ Clutch position sender for all-wheel drive - G969-

❑ Removing and installing ⇒ Rear final drive; Rep. gr. 39 ; Four-wheel drive coupling; Removing and installing control unit

1.2 Renewing oil seal (left-side)

Special tools and workshop equipment required

♦ Thrust piece - T40164-

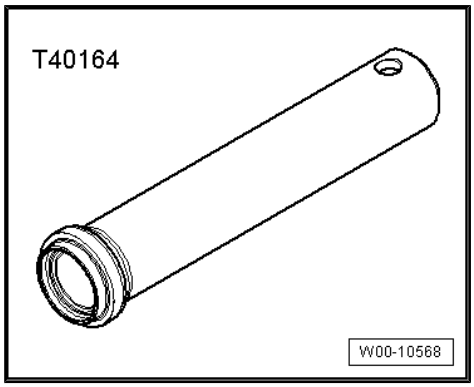

♦ Drip tray for workshop hoist - VAS 6208-

♦ Sealing grease for oil seals ⇒ Electronic parts catalogue

Removing

- Gearbox removed ⇒ 6-speed manual gearbox 0CS, 0DJ, 0CX; Rep. gr. 34 ; Removing and installing gearbox; Removing gearbox .
- Gearbox is secured to gearbox support - T40173- with tensioning strap -1-.

– Tilt gearbox towards rear and slightly to left with gearbox support - T40173- to prevent gear oil from escaping.

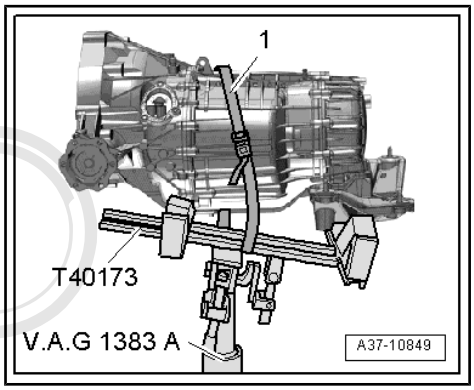

Protected by copyright. Copying for private or commercial purposes, in part or in whole, is not permitted unless authorised by AUDI AG. AUDI AG does not guarantee or accept any liability with respect to the correctness of information in this document. Copyright by AUDI AG.

– Remove flange shaft (right-side) ⇒ page 223 .
– Place drip tray - VAS 6208- under the gearbox.

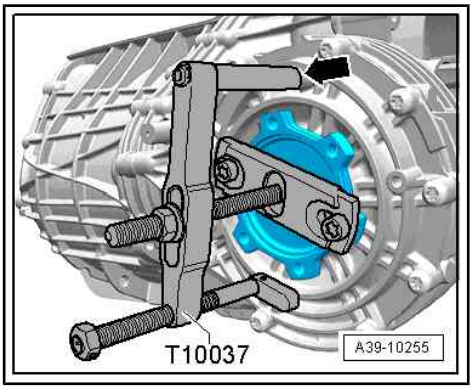

Unscrew bolts -arrows- and detach cover for final drive -1-.

Caution

Risk of damage to the differential.

- ***Detach cover for final drive from gearbox housing slowly and carefully. The differential may otherwise fall out of the gearbox.***
- ***A differential which has fallen to the ground can no longer be installed.***

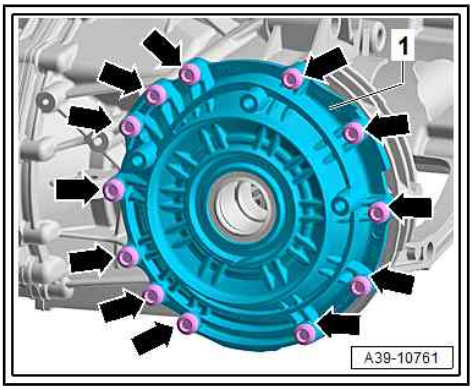

Protected by copyright. Copying for private or commercial purposes, in part or in whole, is not permitted unless authorised by AUDI AG. AUDI AG does not guarantee or accept any liability with respect to the correctness of information in this document. Copyright by AUDI AG.

– Carefully detach cover for final drive (some remaining gear oil may drain off).

– Carefully remove differential -1- and set it down on a soft surface.

Note

When doing so, do not lift the differential by holding onto the cage of the angular contact ball bearing -2-; instead, use the hole -arrow- for the flange shaft (right-side).

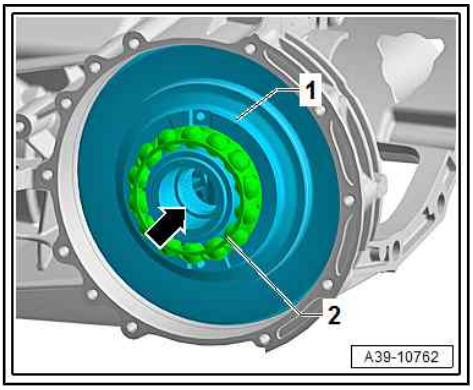

– Remove flange shaft (left-side) -1- ⇒ page 219 .

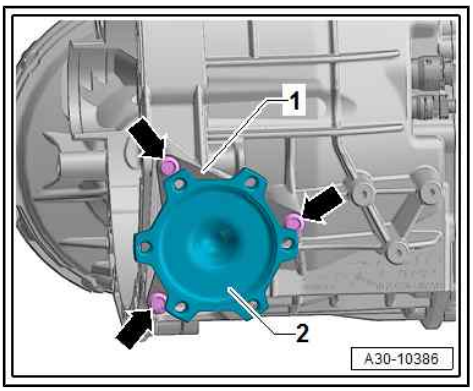

– Remove clutch module ⇒ page 30 .

Caution

Risk of damaging clutch module when removing and installing

- *Refer to Workshop Manual ⇒ "2.3 Removing and installing clutch module", page 30 .*

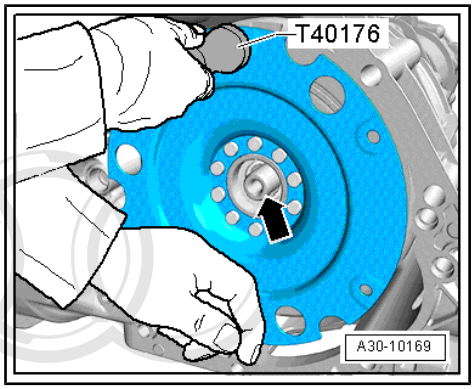

– Press out oil seal with a screwdriver.

Caution

Risk of damage to fitting surface in gearbox housing.

- *Apply screwdriver with care.*

Protected by copyright. Copying for private or c
permitted unless authorised by AUDI AG. AUD
with respect to the correctness of informatio

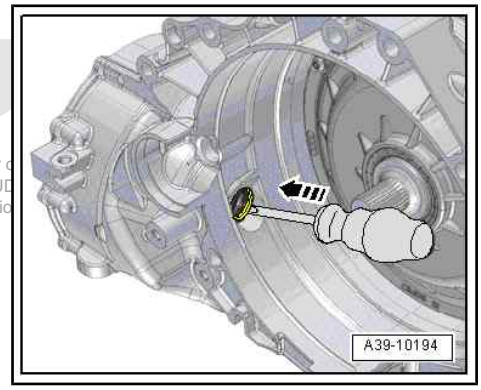

Installing

Installation is carried out in reverse order; note the following:

– Thoroughly clean area of gearbox housing leading to differential -arrow A-, and seat for oil seal -arrow B-.

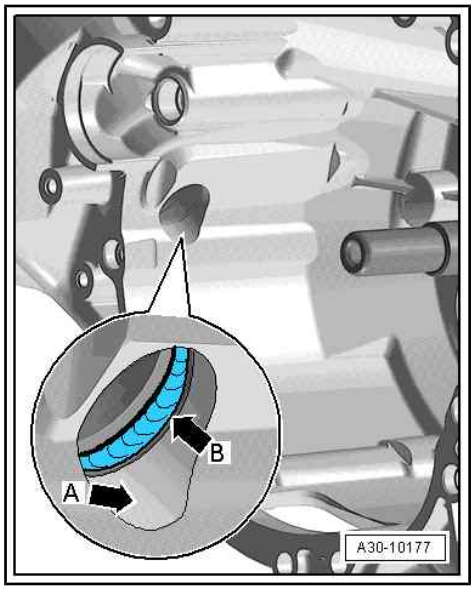

– Lightly oil outer circumference of new oil seal and slide onto thrust piece - T40164- .

• Open side of oil seal faces towards thrust piece - T40164- .

– Drive in oil seal onto stop (take care to keep seal straight).

– Pack space between sealing lip and dust lip half full with sealing grease for oil seals .

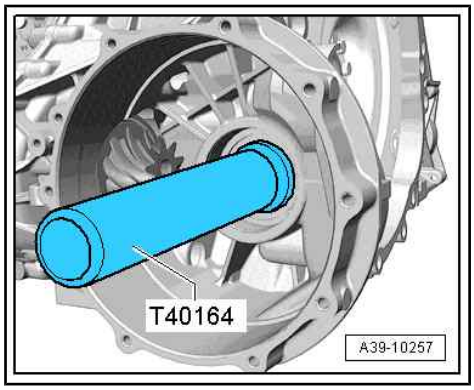

– Fit differential -1-.

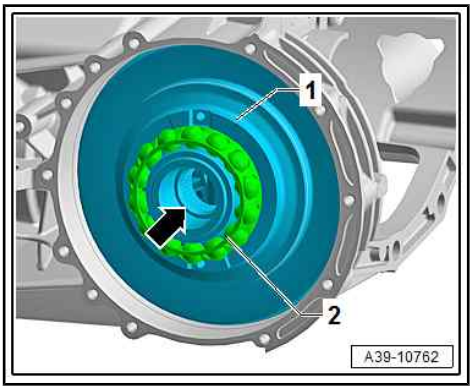

Note

When doing so, do not lift the differential by holding onto the cage of the angular contact ball bearing -2-; instead, use the hole -arrow- for the flange shaft (right-side).

– Renew O-ring -A- on cover for final drive and lubricate lightly with gear oil.

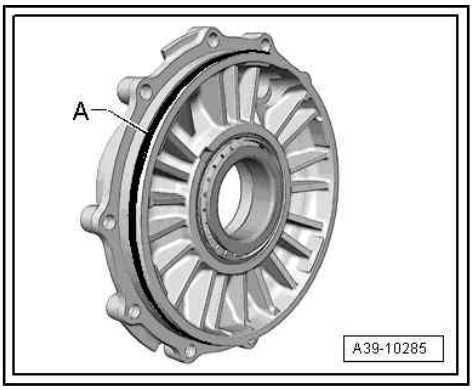

– Install cover for final drive -1- and tighten bolts -arrows-.

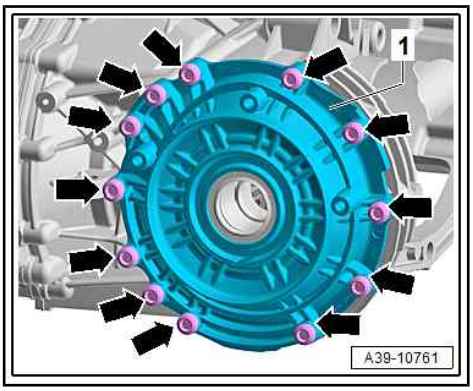

– Install flange shaft (right-side) ⇒ page 224 .

Protected by copyright. Copying for private or commercial purposes, in part or in whole, is not permitted unless authorised by AUDI AG. AUDI AG does not guarantee or accept any liability with respect to the correctness of information in this document. Copyright by AUDI AG.

– Install clutch module ⇒ page 30 .

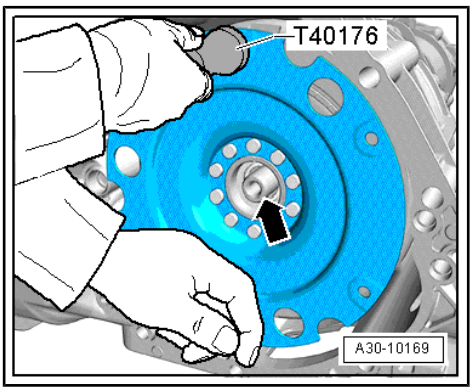

– Thoroughly clean flange shaft (left-side).
– Install flange shaft (left-side) ⇒ page 222 .
– After installing gearbox, fill up with gear oil and check gear oil level ⇒ 6-speed manual gearbox 0CS, 0DJ, 0CX; Rep. gr. 34 ; Gear oil .

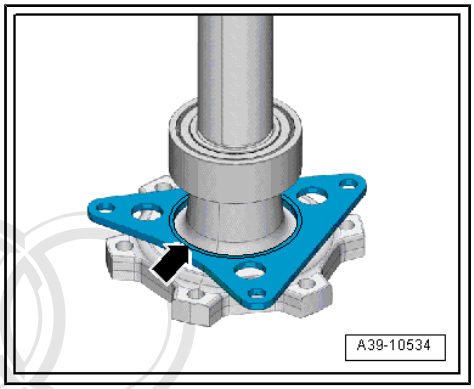

Tightening torques

◆ ⇒ “2.1 Exploded view - final drive”, page 169

1.3 Renewing oil seal (right-side)

Note

The flange shaft oil seal (right-side) can also be renewed with the gearbox installed in the vehicle ⇒ 6-speed manual gearbox 0CS, 0DJ, 0CX; Rep. gr. 39 ; Oil seals; Renewing oil seal (right-side)

Reproduction or distribution for commercial purposes, in part or in whole, is not permitted unless authorised by AUDI AG. AUDI AG does not guarantee or accept any liability with respect to the correctness of information in this document. Copyright by AUDI AG.

Special tools and workshop equipment required

◆ Thrust piece - 3306 A-

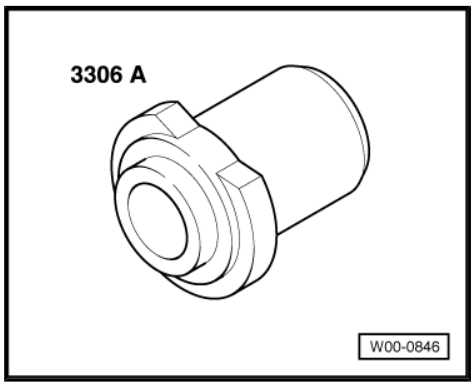

◆ Sealing grease for oil seals ⇒ Electronic parts catalogue

Removing

– Remove flange shaft (right-side) ⇒ page 223 .

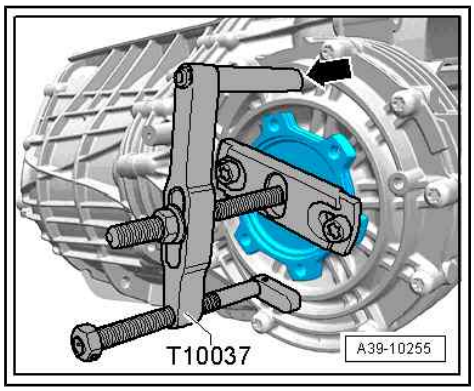

– Remove flange shaft oil seal -arrow- (right-side) using an assembly lever.

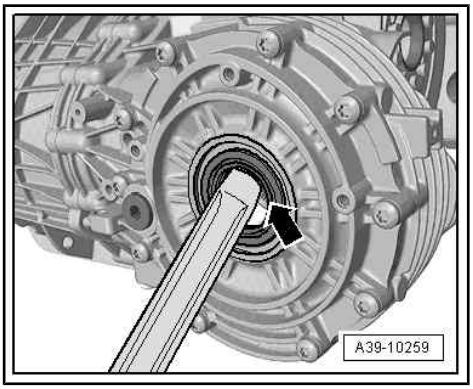

Installing

Installation is carried out in reverse order; note the following:

– Lightly oil outer circumference of new oil seal.

– Drive in new oil seal for flange shaft (right-side) as far as stop; keep seal straight when installing.

– Pack space between sealing lip and dust lip half full with sealing grease for oil seals .

– Install flange shaft (right-side) ⇒ page 224 .

– After installing gearbox, check gear oil level ⇒ 6-speed manual gearbox 0CS, 0DJ, 0CX; Rep. gr. 34 ; Gear oil; Checking gear oil level .

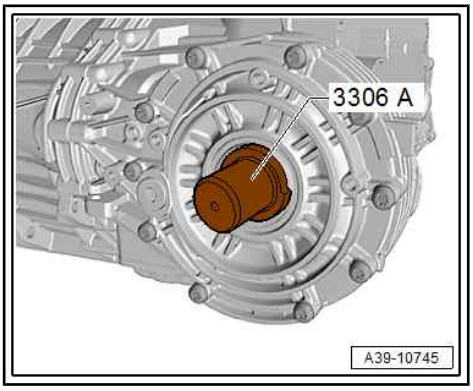

1.4 Renewing input shaft oil seal

Special tools and workshop equipment required

♦ Thrust plate - VW 402-

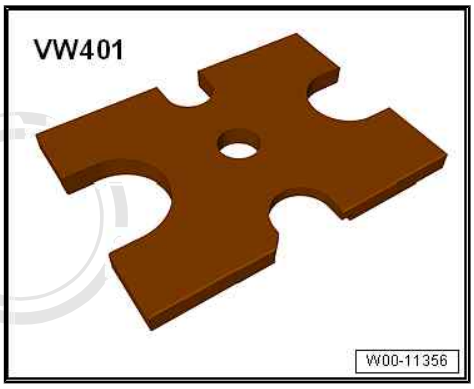

♦ Press tool - VW 412-

Protected by copyright. Copying for private or commercial purposes, in part or in whole, permitted unless authorised by AUDI AG. AUDI AG does not guarantee or accept any liability with respect to the correctness of information in this document. Copyright by AUDI AG.

♦ Thrust pad - VW 447 i-

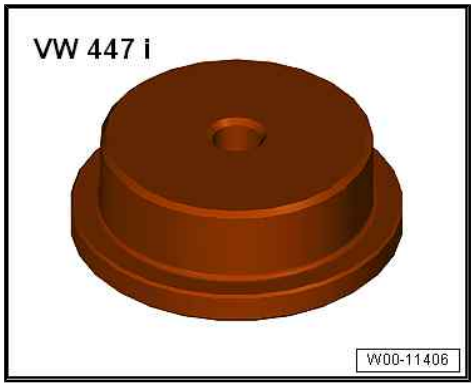

♦ Assembly tool - T10030-

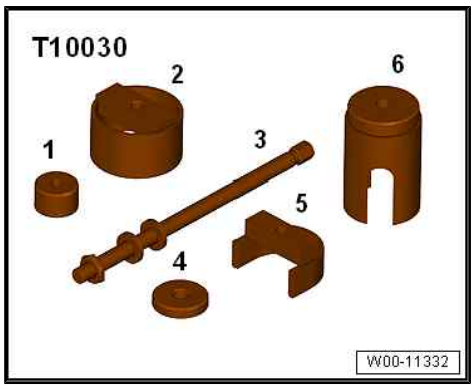

♦ Sealing grease for oil seals ⇒ Electronic parts catalogue

• Gearbox removed ⇒ 6-speed manual gearbox 0CS, 0DJ, 0CX; Rep. gr. 34 ; Removing and installing gearbox; Removing gearbox .

– Remove flange shaft (left-side) -2- ⇒ page 219 .

– Remove clutch module ⇒ page 30 .

– Remove clutch slave cylinder with release bearing ⇒ page 19 .

– Carefully lever off input shaft oil seal from clutch slave cylinder.

– Lightly oil outer circumference of new input shaft oil seal.

– Pack space between sealing lip and dust lip half full with sealing grease for oil seals .

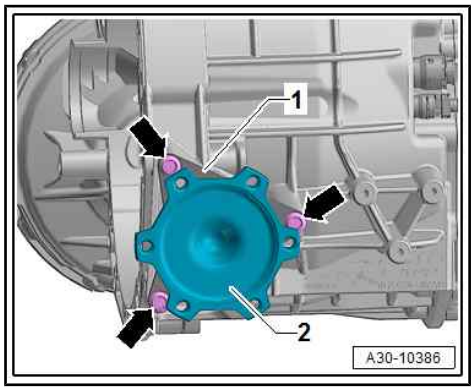

– Fit release bearing side of clutch slave cylinder into -T10030/2- .

– Using thrust plate - VW 447 i- , press new oil seal in carefully until it makes contact.

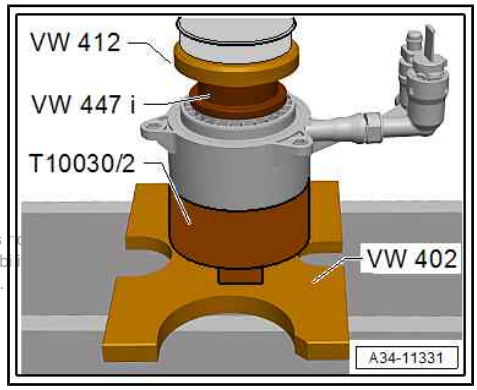

Protected by copyright. Copying for private or commercial purposes, in part or in whole, is not permitted unless authorised by AUDI AG. AUDI AG does not guarantee or accept any liability with respect to the correctness of information in this document. Copyright by AUDI AG.

– Then press oil seal -1- in further by dimension -a-.

• Dimension -a- = 0.5 mm

• To bring oil seal into correct installation position, use sleeve - VW 447 i- in place of thrust plate - T10030/1- .

– Install clutch slave cylinder with release bearing ⇒ page 19 .

– Install clutch module ⇒ page 33 .

– Install flange shaft (left-side) ⇒ page 222 .

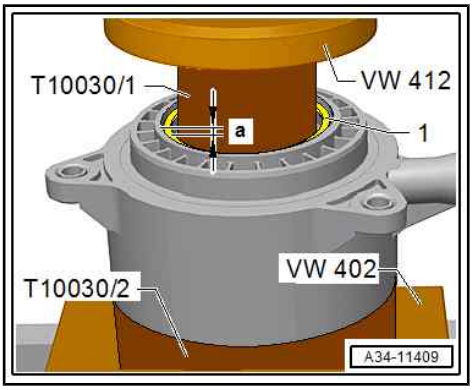

Tightening torques

♦ ⇒ “2.1 Exploded view - final drive”, page 169

1.5 Renewing sealing cap for output shaft in gearbox housing

Special tools and workshop equipment required

♦ Thrust plate - 30 - 205-

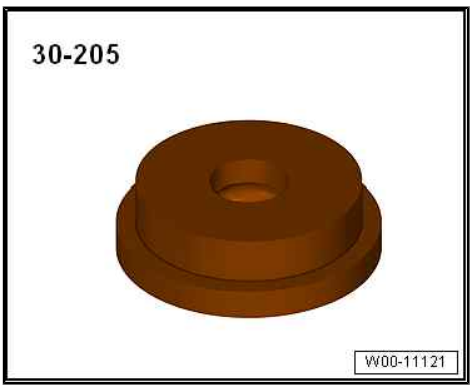

♦ Mandrel - 30 - 505-

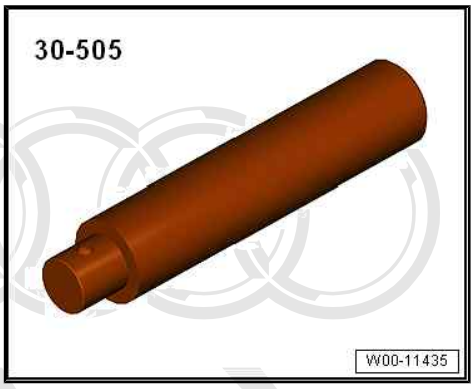

♦ Extractor tool - T20143/2-

Protected by copyright. Copying for private or commercial purposes, in part or in whole, is not permitted unless authorised by AUDI AG. AUDI AG does not guarantee or accept any liability with respect to the correctness of information in this document. Copyright by AUDI AG.

- Gearbox removed ⇒ 6-speed manual gearbox 0CS, 0DJ, 0CX; Rep. gr. 34 ; Removing and installing gearbox; Removing gearbox .

– Remove flange shaft (left-side) ⇒ page 219 .

– Remove clutch module ⇒ page 30 .

– Pierce through centre of sealing cap -A- for output shaft and prise out in direction of -arrow-.

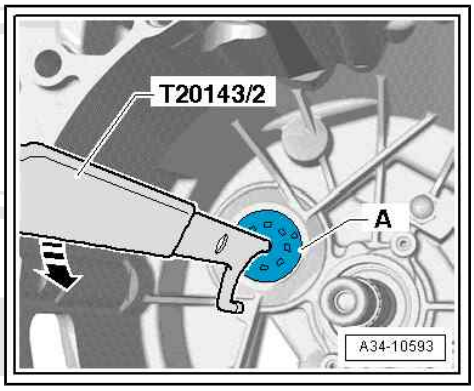

– Drive in new sealing cap for output shaft until flush.

Reproduced by Audi Publishing Services for commercial purposes, permitted unless authorised by AUDI AG. AUDI AG does not guarantee with respect to the correctness of information in this document. Copyright

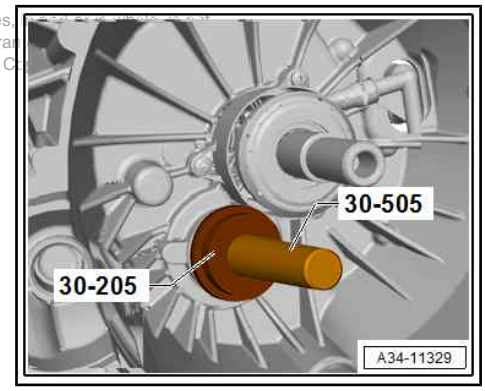

1.6 Renewing output shaft oil seal

Special tools and workshop equipment required

- ♦ Guide sleeve - T40367/1-
- ♦ Thrust piece - T40367/3-
- ♦ Extractor tool - T20143/2-

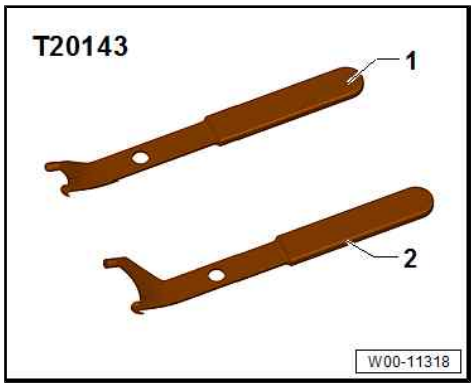

- ♦ Sealing grease ; select correct type from ⇒ Electronic parts catalogue

Removing

- Gearbox removed ⇒ 6-speed manual gearbox 0CS, 0DJ, 0CX; Rep. gr. 34 ; Removing and installing gearbox; Removing gearbox .
- Gearbox is secured to gearbox support - T40173- with tensioning strap -1-.

– Tilt gearbox forwards with gearbox support - T40173- to prevent gear oil from escaping.

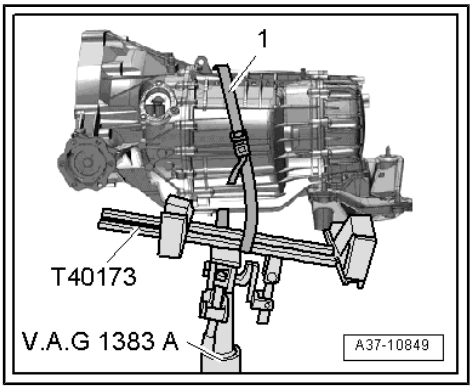

– Remove four-wheel drive coupling -1- ⇒ page 229 .

Protected by copyright. Copying for private or commercial purposes, in part or in whole, is not permitted unless authorised by AUDI AG. AUDI AG does not guarantee or accept any liability with respect to the correctness of information in this document. Copyright by AUDI AG.

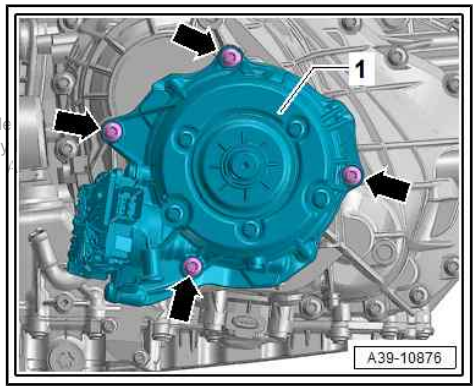

– Lever out output shaft oil seal using extractor tool - T20143/2- .

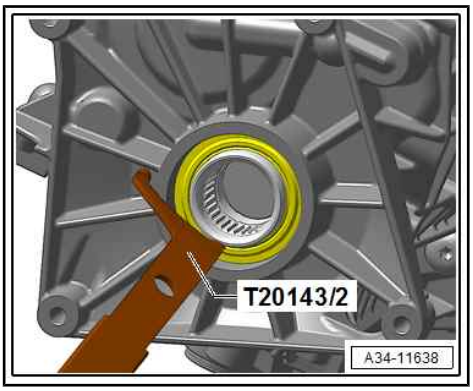

Installing

– Insert guide sleeve - T40367/1- -1- in rear splined shaft.

– Lightly oil outer circumference of oil seal.

– Pack space between sealing lip and dust lip half-full with sealing grease .

– Slide oil seal -2- over guide sleeve -1- and drive it in using thrust piece - T40367/3- -3- until it is flush.

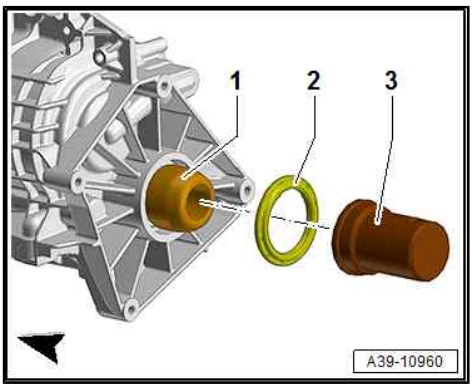

– Install four-wheel drive coupling -1- ⇒ page 229 .

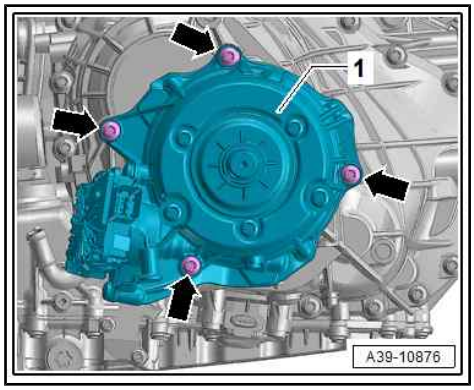

Protected by copyright. Copying for private or commercial purposes, in part or in whole, is not permitted unless authorised by AUDI AG. AUDI AG does not guarantee or accept any liability with respect to the correctness of information in this document. Copyright by AUDI AG.

2 Final drive

⇒ “2.1 Exploded view - final drive”, page 169
⇒ “2.2 Exploded view - pinion shaft”, page 171
⇒ “2.3 Removing and installing pinion shaft”, page 172
⇒ “2.4 Dismantling and assembling pinion shaft”, page 174
⇒ “2.5 Table of adjustments - final drive”, page 178
⇒ “2.6 Adjusting pinion shaft”, page 181
⇒ “2.7 Adjusting final drive”, page 186
⇒ “2.8 Renewing cover for final drive”, page 203

2.1 Exploded view - final drive

Note

Protected by copyright. Copying for private or commercial purposes, in part or in whole, is not permitted unless authorised by AUDI AG. AUDI AG does not guarantee or accept any liability with respect to the correctness of information in this document. Copyright by AUDI AG.

- *The differential can be removed and installed without removing the selector mechanism, input shaft, output shaft, pinion shaft and gearbox cover.*
- *If you are renewing the cover for the final drive -7-, you must adjust the preload of the bearings for the differential ⇒ page 203 .*
- *If you are renewing the bearings of the differential, you must adjust the final drive ⇒ page 194 .*
- *If you are renewing the differential, you must adjust the final drive ⇒ page 186 .*

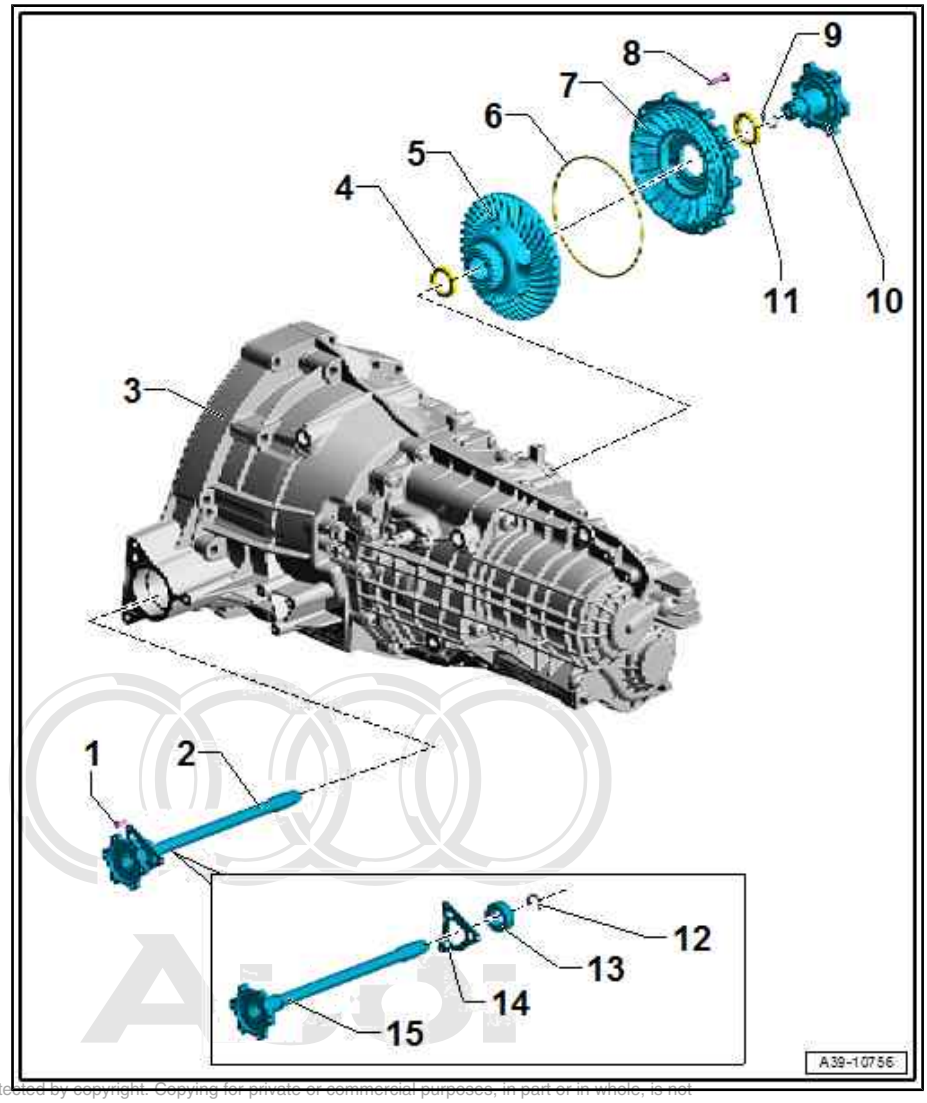

1 - Bolt

- ❑ Steel bolts (M8x25)
- ❑ 3x
- ❑ 15 Nm +45°

2 - Flange shaft (left-side)

- ❑ With mounting bracket and ball bearing
- ❑ Removing and installing ⇒ page 219
- ❑ Renewing ball bearing or mounting bracket ⇒ page 225

3 - Gearbox housing

4 - Oil seal

- ❑ For flange shaft (left-side)
- ❑ Renewing ⇒ page 158

5 - Differential with crown wheel

- ❑ Removing and installing ⇒ page 211
- ❑ Installation position ⇒ page 210

6 - O-ring

- ❑ Lubricate with gear oil
- ❑ Renew after removing

7 - Cover for final drive

- ❑ Renewing ⇒ page 203

8 - Bolt

- ❑ Steel bolts (M8x43)
- ❑ 12x
- ❑ 20 Nm +90°

Protected by copyright. Copying for private or commercial purposes, in part or in whole, is not permitted unless authorised by AUDI AG. AUDI AG does not guarantee or accept any liability with respect to the correctness of information in this document. Copyright by AUDI AG.

9 - Circlip

- ❑ Renew after removing
- ❑ Removing and installing ⇒ page 224

10 - Flange shaft (right-side)

- ❑ Removing and installing ⇒ page 223

11 - Oil seal

- ❑ For flange shaft (right-side)
- ❑ Renewing ⇒ page 162

12 - Circlip

- ❑ Renew after removing

13 - Ball bearing

- ❑ For flange shaft (left-side)
- ❑ Renewing ⇒ page 225

14 - Mounting bracket

- ❑ For flange shaft (left-side)
- ❑ Renewing ⇒ page 225

15 - Flange shaft (left-side)

- ❑ Removing and installing ⇒ page 219

2.2 Exploded view - pinion shaft

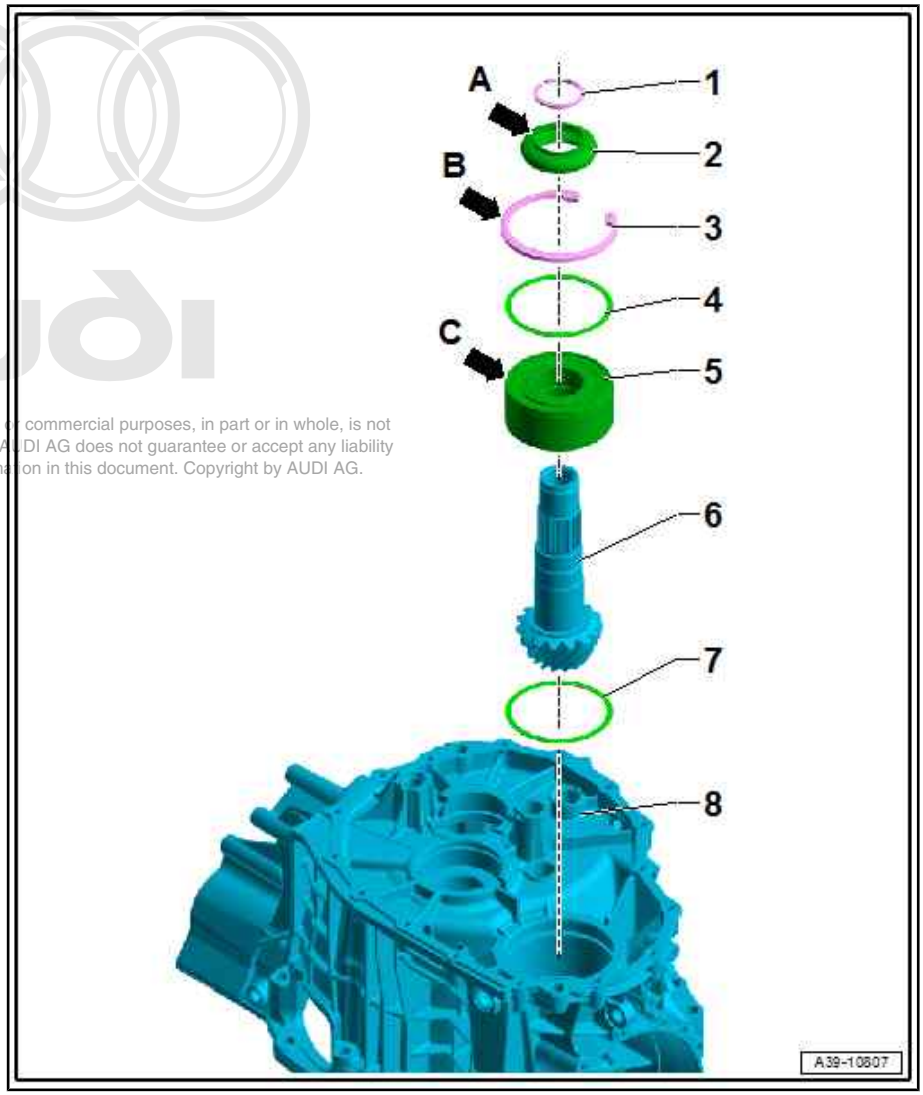

1 - Circlip

- ❑ For compressor sleeve of pinion shaft
- ❑ Renew after removing
- ❑ Removing and installing ⇒ page 174

2 - Compressor sleeve

- ❑ Renew after removing
- ❑ Installation position: high shoulder -arrow A- faces upwards towards circlip

Protected by copyright. Copying for private or commercial purposes, in part or in whole, is not permitted unless authorised by AUDI AG. AUDI AG does not guarantee or accept any liability with respect to the correctness of information in this document. Copyright by AUDI AG.

3 - Circlip

- ❑ Fit in annular groove on gearbox housing
- ❑ Installation position: chamfer -arrow B- faces upwards and flat surface faces double angular contact ball bearing

4 - Shim "S_4"

- ❑ Determining thickness ⇒ page 181

5 - Double angular contact ball bearing

- ❑ Renew after removing
- ❑ Installation position: annular groove -arrow C- faces upwards towards compressor sleeve
- ❑ Removing and installing ⇒ page 172

6 - Pinion shaft

- ❑ Can be renewed individually ⇒ Electronic parts catalogue
- ❑ Removing and installing ⇒ page 172
- ❑ Adjusting ⇒ page 181

7 - Shim "S_3"

- ❑ Determining thickness ⇒ page 181

8 - Gearbox housing

2.3 Removing and installing pinion shaft

Special tools and workshop equipment required

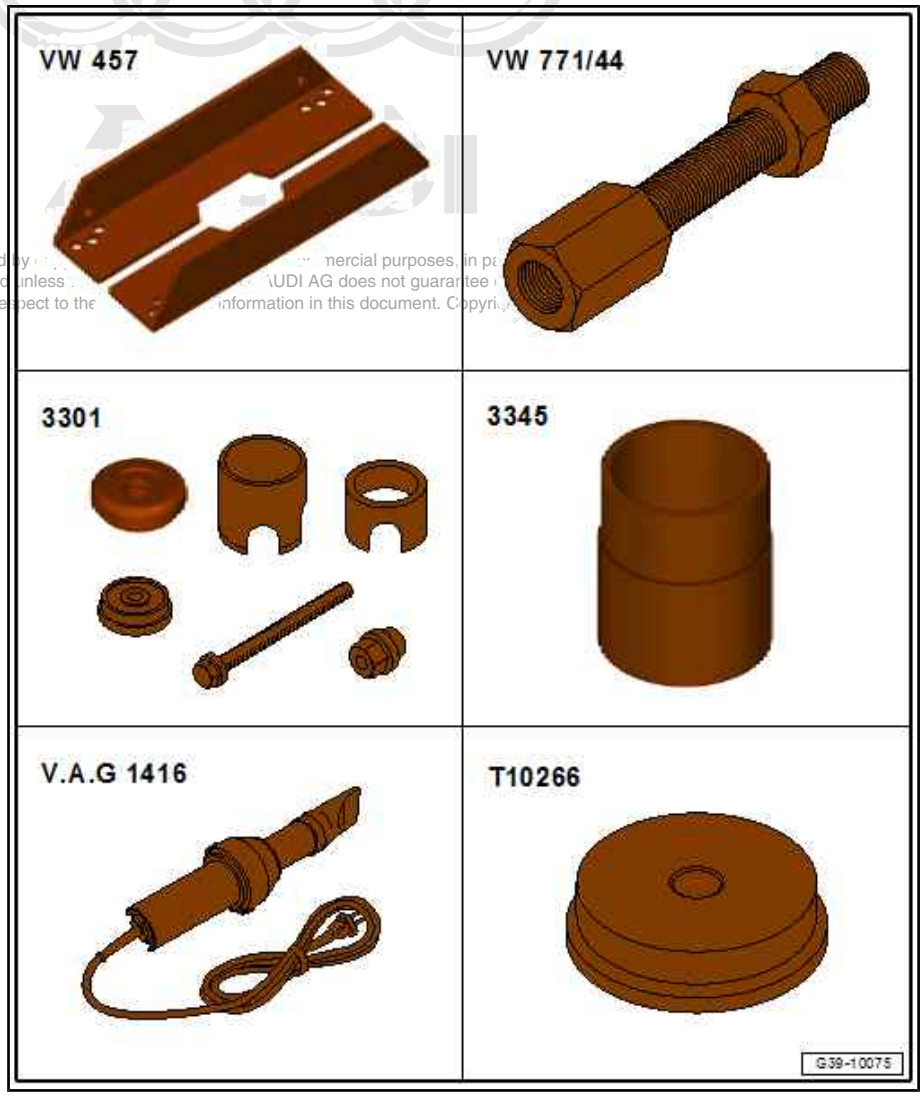

Protected by ... nercial purposes, in pa... permitted unless ... AUDI AG does not guarantee ... with respect to the ... information in this document. Copyri...

- Support rails - VW 457-
- Adapter - VW 771/44-
- Thrust pad from assembly tool - 3301-
- Wheel bearing tube - 3345-
- Hot air blower - V.A.G 1416-
- Thrust piece - T10266-

♦ -2- -Spindle- from puller - VAS 251 417 (Kukko 18-1)-

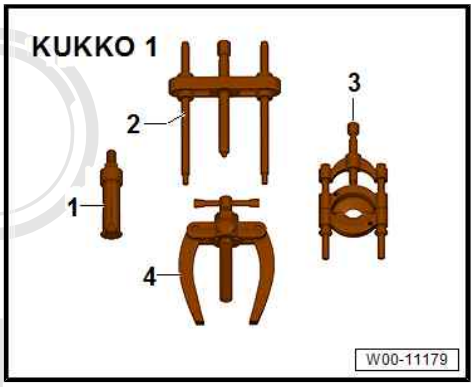

Removing

Protected by copyright. Copying for private or commercial purposes, in part or in whole, is not permitted unless authorised by AUDI AG. AUDI AG does not guarantee or accept any liability with respect to the correctness of information in this document. Copyright by AUDI AG.

- Spur gear drive output gear is removed ⇒ page 92 .

– Remove circlip -1-.

- Before pulling out pinion shaft -3-, remove shim -2- to prevent it from becoming wedged in annular groove of gearbox housing.

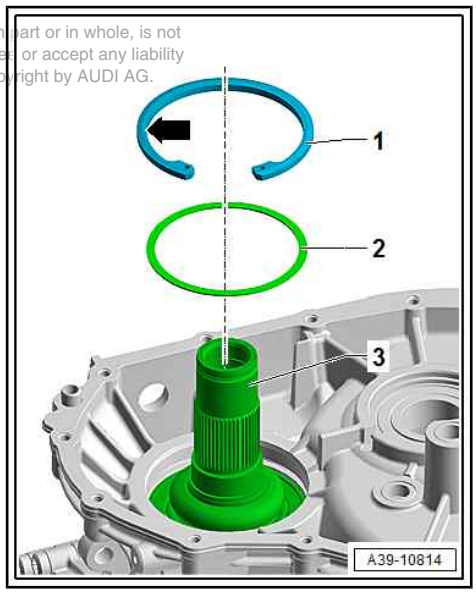

Remove pinion shaft -3- as follows:

– Attach one spindle -1- of puller - VAS 251 417 (Kukko 18–1)- to adapter - VW 771/44- -5- and insert it into access hole in pinion shaft.

– Next, push nut -4- (M10) on until thread is flush with adapter - VW 771/44- .

– Then use nut -2- (M14) with washer to pull out pinion shaft -3-. When doing so, counterhold at hexagon flats of spindle -1- -arrow-.

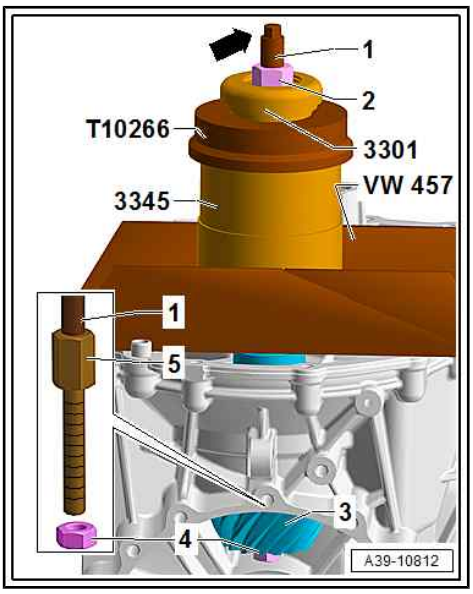

Installing

- Heat gearbox housing in area of bearing seat -arrow- to approx. 100 °C with hot air blower - V.A.G 1416- .

– Insert shim “S 3” -1- into gearbox housing.

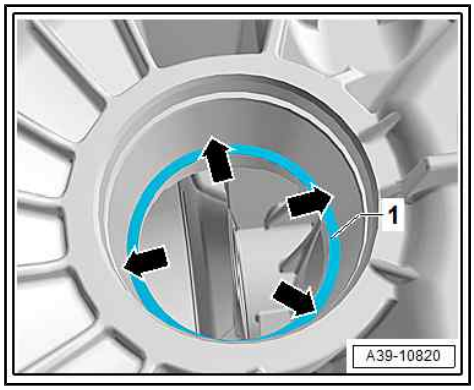

– Then insert pinion shaft -3- swiftly into gearbox housing as far as stop, taking care to keep it straight.

– Determine required shim “S 4” ⇒ page 181 and fit it on double angular contact ball bearing.

- Installation position of circlip -1-: chamfer -arrow- faces upwards and flat surface faces double angular contact ball bearing

– Fit circlip -1- in annular groove on gearbox housing.

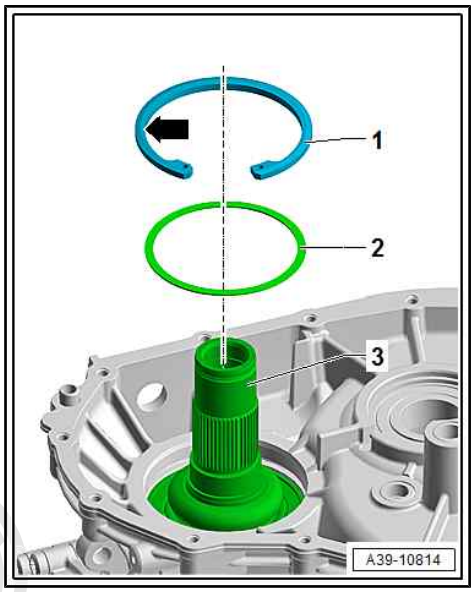

2.4 Dismantling and assembling pinion shaft

Protected by copyright. Copying for private or commercial purposes, in part or in whole, is not permitted unless authorised by AUDI AG. AUDI AG does not guarantee or accept any liability with respect to the correctness of information in this document. Copyright by AUDI AG.

Special tools and workshop equipment required

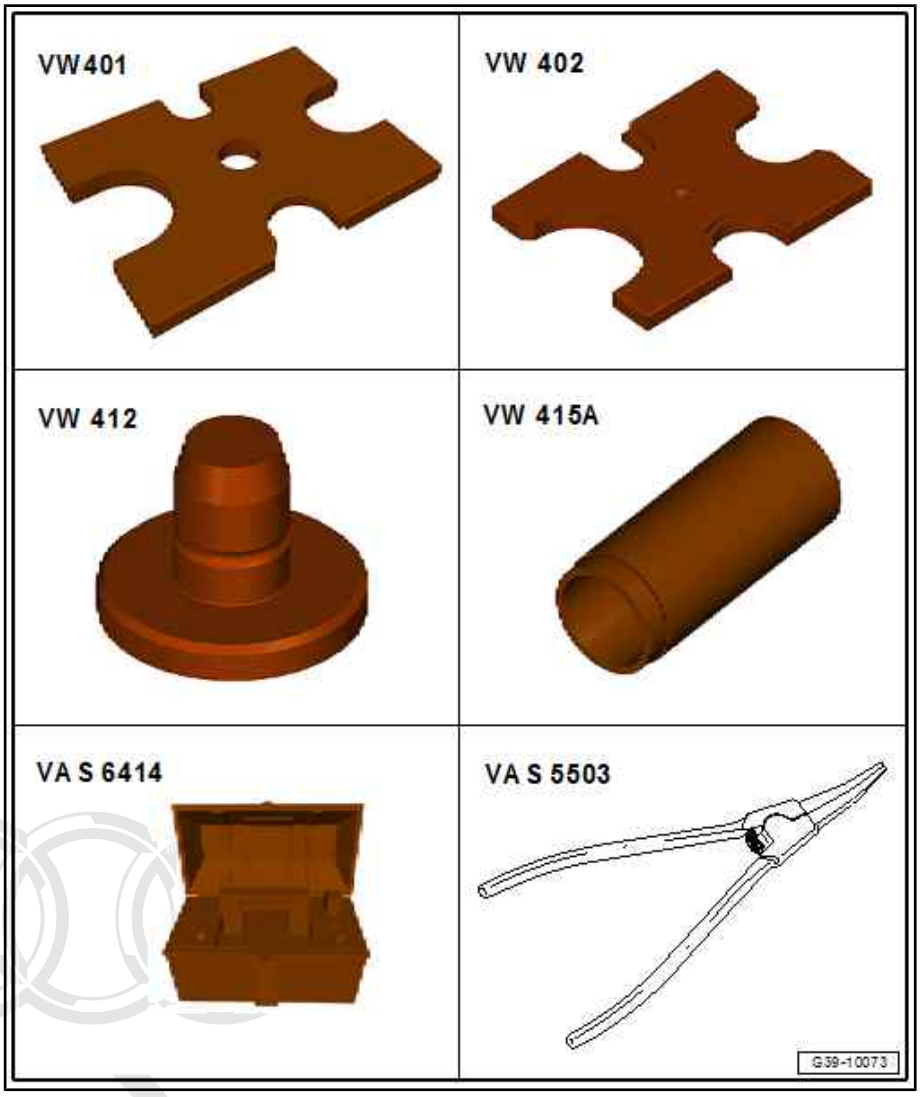

- Thrust plate - VW 401-
- Thrust plate - VW 402-
- Press tool - VW 412-
- Tube - VW 415A-
- Inductive heater - VAS 6414-
- Circlip pliers (drive shafts) - VAS 5503A-

Protected by copyright. Copying for private or commercial purposes, in part or in whole, is not permitted unless authorised by AUDI AG. AUDI AG does not guarantee or accept any liability with respect to the correctness of information in this document. Copyright by AUDI AG.

- Splitter - VAS 251 411 (Kukko 17–2)-

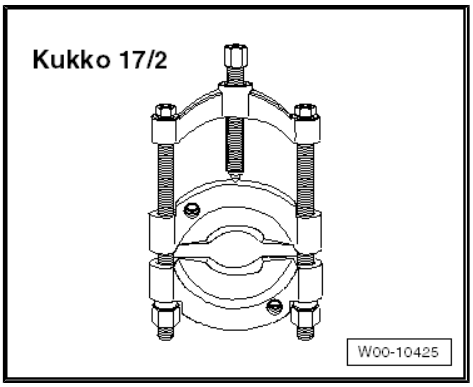

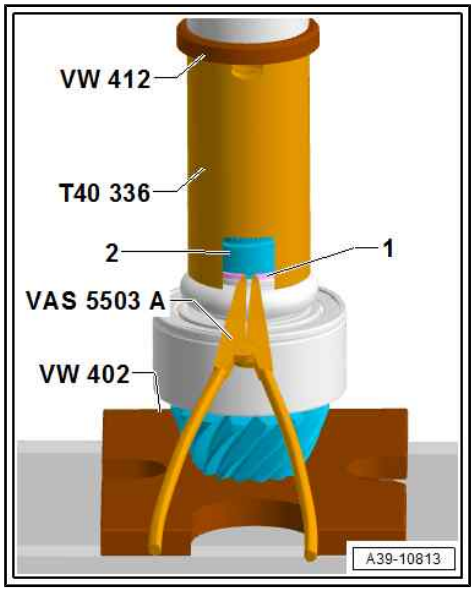

- Thrust piece - T40336-

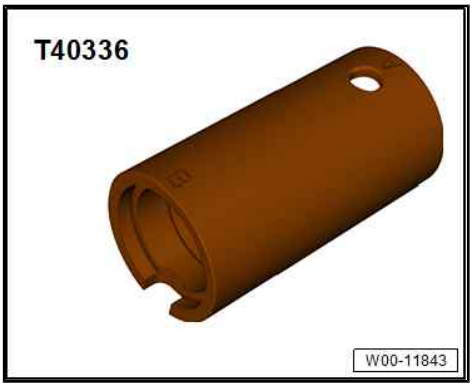

Detaching circlip for compressor sleeve -1- from pinion shaft

- Fit thrust piece - T40336- onto pinion shaft -2- so that groove on circlip -1- is centred in large opening on thrust piece .

– Squeeze compressor sleeve until circlip -1- can be removed from groove on pinion shaft -2-.

Pressing off double angular contact ball bearing -2-

– Secure pinion shaft -3- to prevent it from falling.

1 - Splitter - VAS 251 411 (Kukko 17–2)-

Note

If bottom inner ring of double angular contact ball bearing remains on pinion shaft, it must be pressed off separately using splitter - VAS 251 411 (Kukko 17–2)- -1-.

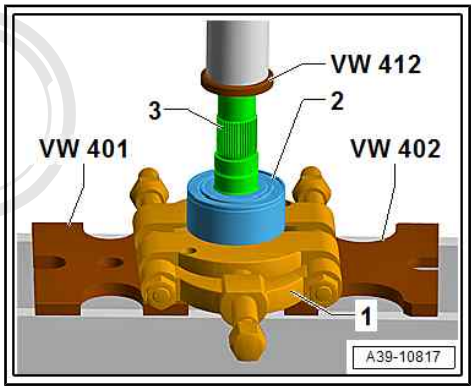

Protected by copyright. Copying for private or commercial purposes, in part or in whole, is not permitted unless authorised by AUDI AG. AUDI AG does not guarantee or accept any liability with respect to the correctness of information in this document. Copyright by AUDI AG.

Pressing off inner ring of double angular contact ball bearing -2-

– Secure pinion shaft to prevent it from falling.

– Secure splitter -1- in groove on inner ring -arrow-.

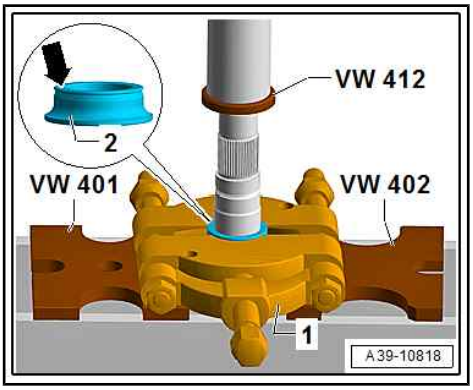

Pressing double angular contact ball bearing -1- onto pinion shaft

- Installation position of double angular contact ball bearing -1-: Annular groove -arrow- faces upwards towards press tool.

– Heat double angular contact ball bearing to approx. 100 °C using inductive heater - VAS 6414- and press on as far as stop.

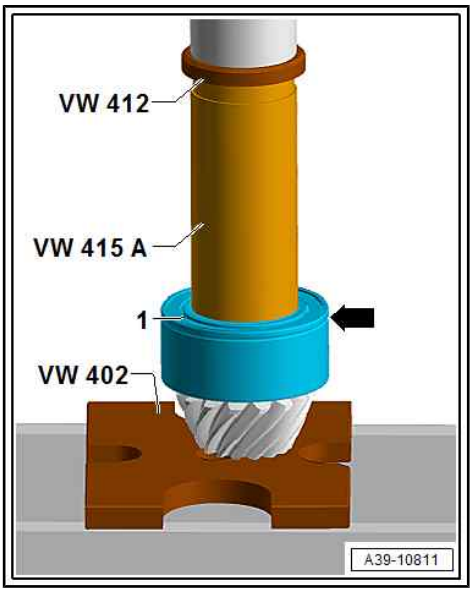

Install circlip -1- on pinion shaft as follows:

– First fit a new compressor sleeve -2- in installation position.

- Installation position of compressor sleeve: High shoulder -arrow- faces circlip -1-.
- Slide on new circlip -1- until it makes contact with compressor sleeve.

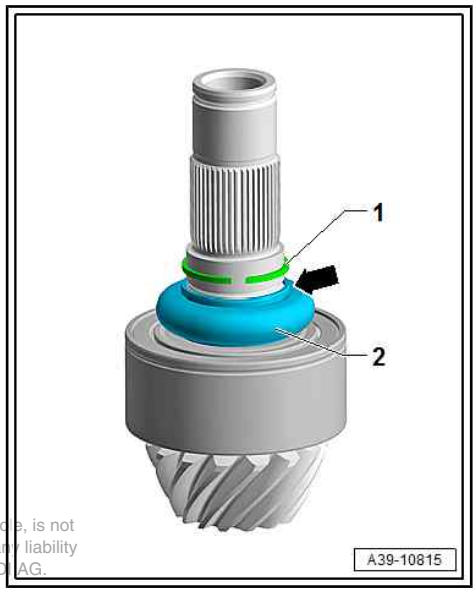

Protected by copyright. Copying for private or commercial purposes, in part or in whole, is not permitted unless authorised by AUDI AG. AUDI AG does not guarantee or accept any liability with respect to the correctness of information in this document. Copyright by AUDI AG.

Bringing circlip for compressor sleeve -2- into installation position

- Fit thrust piece - T40336- onto pinion shaft so that groove on circlip -2- is centred in small opening on thrust piece .

– Carefully squeeze compressor sleeve -1- using workshop press.

– Circlip must engage audibly in annular groove on pinion shaft.

– After pressing on, check that circlip is positioned in groove around entire circumference.

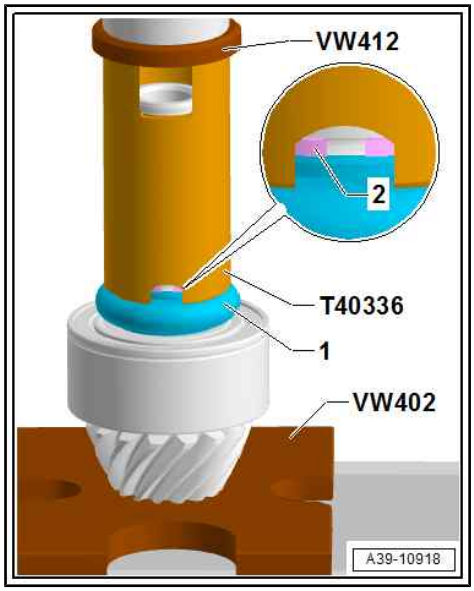

2.5 Table of adjustments - final drive

Adjusting pinion shaft and crown wheel

Note

- *Careful adjustment of the crown wheel and pinion shaft is essential to ensure that the final drive gives long service and runs silently. The position of quietest running is found by moving the pinion shaft in an axial direction and at the same time lifting the crown wheel out of the zero-play mesh position by the amount necessary to maintain the backlash within the specified tolerance.*
- *The goal of this adjustment is to find the setting for quietest possible running.*
- *The pinion shaft and crown wheel with differential can be renewed independently of one another. If the pinion shaft or crown wheel is damaged after a period of operation of more than 100,000 km, it is advisable to renew both components.*
- *Observe the general repair instructions for bearings and shims.*
- *Always renew the double angular contact ball bearing on the pinion shaft if the gear oil is contaminated with metal particles or when renewing the pinion shaft.*

Adjustment of final drive gear set

Protected by copyright. Copying for private or commercial purposes, in part or in whole, is not permitted unless authorised by AUDI AG. AUDI AG does not guarantee or accept any liability with respect to the correctness of information in this document. Copyright by AUDI AG.

1 - Crown wheel with differential

2 - Pinion shaft with attached double angular contact ball bearing, compressor sleeve and circlip

3 - Double angular contact ball bearing

M - Distance from centre of differential to outer ring of double angular contact ball bearing

R - Actual distance between centre axis of crown wheel and face of pinion shaft in position of quietest running

- ❑ Distance “R” = 60.00 mm for all final drive gear sets. There are no individual dimensions for allowance.
- ❑ Set distance “R” on master gauge - VW 385/30- .

Vo - Hypoid offset

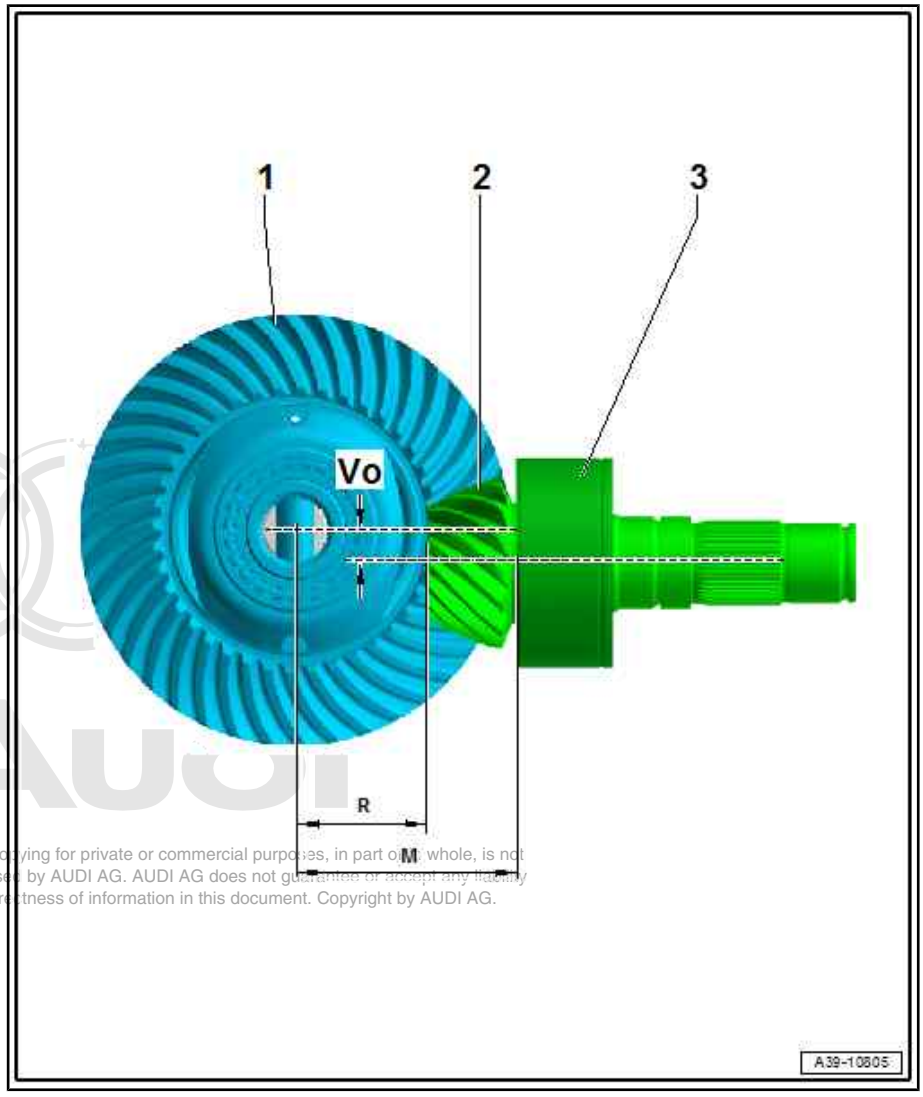

Protected by copyright. Copying for private or commercial purposes, in part or in whole, is not permitted unless authorised by AUDI AG. AUDI AG does not guarantee or accept any liability with respect to the correctness of information in this document. Copyright by AUDI AG.

Position of shims

Note

Table of adjustments when renewing individual components of gearbox ⇒ *page 180* .

S1 - Shim for crown wheel in cover for final drive

S2 - Shim for crown wheel in gearbox housing

S3 - Shim for correct positioning of pinion shaft in gearbox housing

S4 - Shim for correct positioning of double angular contact ball bearing/pinion shaft in gearbox housing

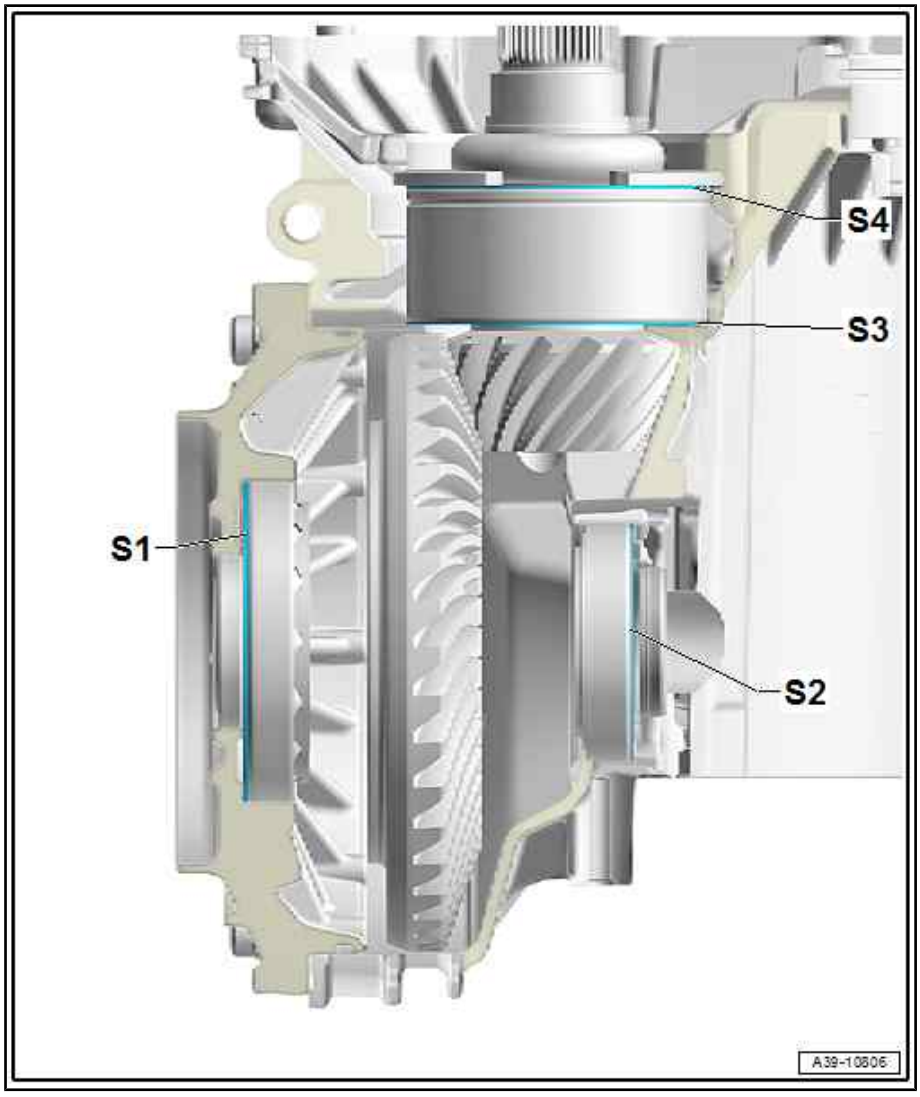

Table of adjustments

Note

- *If repairs have been carried out on the gearbox, it is only necessary to re-adjust the pinion shaft or crown wheel (differential) if components were renewed which directly affect the setting of the final drive.*
- *No adjustments are required when renewing the double angular contact ball bearing on the pinion shaft.*
- *Refer to the following table to avoid unnecessary adjustment work:*

Protected by copyright. Copying for private or commercial purposes, in part or in whole, is not permitted unless authorised by AUDI AG. AUDI AG does not guarantee or accept any liability with respect to the correctness of information in this document. Copyright by AUDI AG.

Components requiring adjustment: Component renewed	Pinion shaft ("S 3" + "S 4") ⇒ page 181	Crown wheel ("S 1" + "S 2") ⇒ page 186	Backlash 0.17 … 0.25 mm ⇒ page 191 or ⇒ page 199
Gearbox housing	X	X	X
Differential [1)]		X	X
Bearing for differential		X	X

Pinion shaft [1]	X	X	X
Cover for final drive		X	X

[1] It is not necessary to renew pinion shaft and differential (crown wheel) together.

Recommended sequence for adjusting gear set

The following work sequence is recommended to save time when the crown wheel (differential) and pinion shaft have to be adjusted:

- Determine total shim thickness "S_{total}" (S_1 plus S_2) to obtain specified preload on differential tapered roller bearings.
- Determine shim thickness "S_3" so that the dimension from the centre of the crown wheel to the face of the pinion shaft corresponds to the dimension determined during production.
- Shim "S_4" for correct positioning of double angular contact ball bearing/pinion shaft in gearbox housing
- Distribute total shim thickness "S_{total}" (S_1 plus S_2) so that the specified backlash between crown wheel and pinion shaft is obtained.

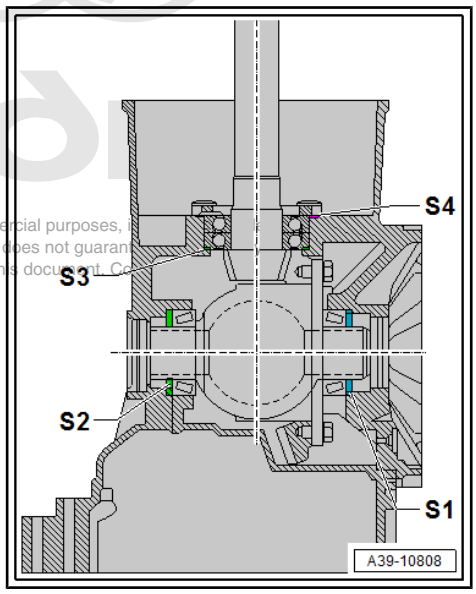

2.6 Adjusting pinion shaft

Special tools and workshop equipment required

- Universal measuring tool - VW 385-

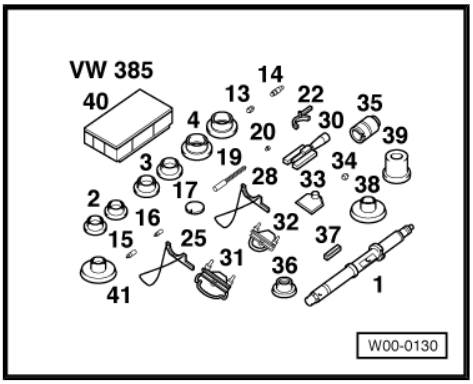

- Gearbox support - T40206-

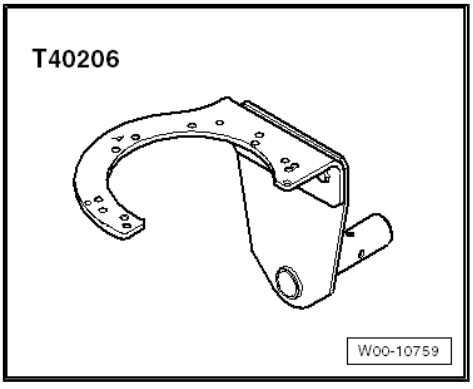

- Hot air blower - V.A.G 1416-

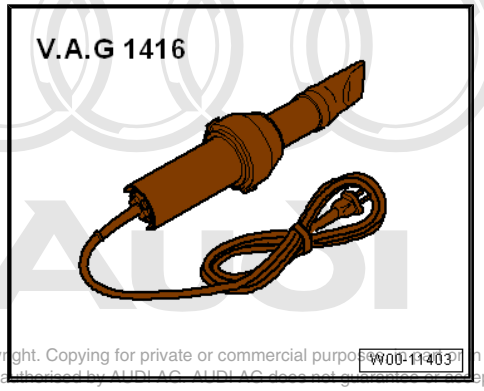

Protected by copyright. Copying for private or commercial purposes, in part or in whole, is not permitted unless authorised by AUDI AG. AUDI AG does not guarantee or accept any liability with respect to the correctness of information in this document. Copyright by AUDI AG.

- Dial gauge , e.g. -VAS 6080-

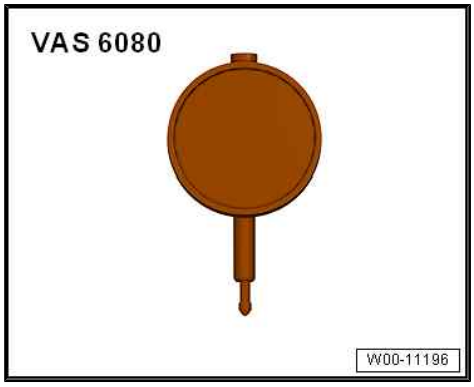

- Measuring pin - T40337-

Determining thickness of provisional shims “S_3” and “S_4”

– Secure gearbox housing onto gearbox support - T40206- (gearbox housing must be in vertical position).

- Differential removed
- Double angular contact ball bearing pressed onto pinion shaft and compressor sleeve (with circlip) fitted ⇒ page 174
- Heat gearbox housing in area of bearing seat -arrow- to approx. 100 °C using hot air blower - V.A.G 1416- or similar.

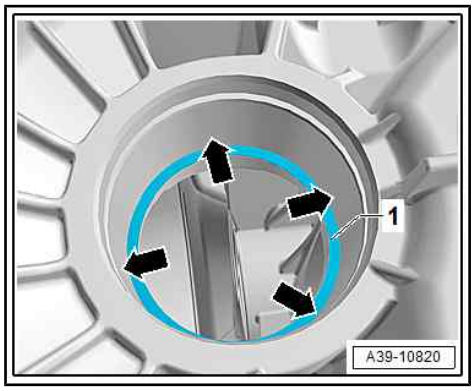

Note

For measurement purposes the old (removed) shim -1- “S_3” (1.05 mm in this example) is inserted provisionally. This is referred to in the following as “S_3”. “S_3*” is exchanged with the final shim “S_3” after determining distance “R”.*

– Insert old shim “S $_3$*” -1- (1.05 mm in example) into gearbox housing.

– Then insert pinion shaft -3- swiftly by hand into gearbox housing as far as stop, taking care to keep it straight.

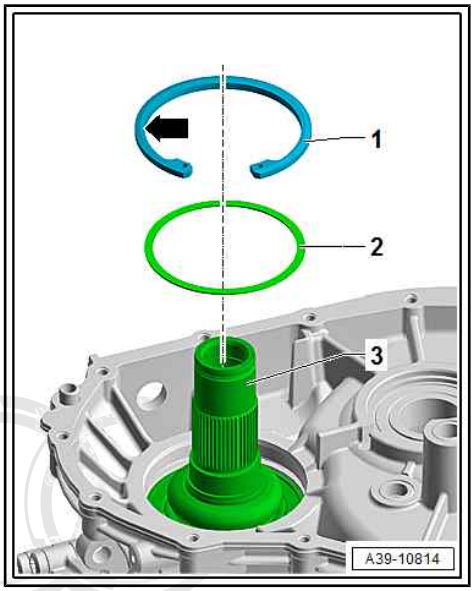

Determine the provisional shim “S_4” -2- as follows:

Formula: “S_4” = 2.76 mm - “S_3*”

Example:

	Constant value	2.76 mm
-	Thickness of old shim “S_3*”	1.05 mm
=	Thickness of provisional shim “S_4”	1.71 mm

Note

For measurement purposes a shim “S_4” with a thickness of 1.71 mm is inserted provisionally. This is referred to in the following as “S_4”. “S_4*” is exchanged with the final shim “S_4” after determining distance “R”.*

– Place provisional shim “S_4*” -2- onto double angular contact ball bearing.

• Installation position of circlip -1-: chamfer -arrow- faces upwards and flat surface faces double angular contact ball bearing

– Fit circlip -1- in annular groove on gearbox housing.

Protected by copyright. Copying for private or commercial purposes, in part or in whole, is not permitted unless authorised by AUDI AG. AUDI AG does not guarantee or accept any liability with respect to the correctness of information in this document. Copyright by AUDI AG.

Setting dimension “R”

Note

Dimension “R” must be set on the master gauge - VW 385/30- to determine the final shim thickness of “S_3” and “S_4” for this particular final drive gear set.

– Set adjustment rings of universal measuring tool - VW 385/1- to the following values:

♦ Dimension -a- = 38 mm

♦ Dimension -b- = 58 mm

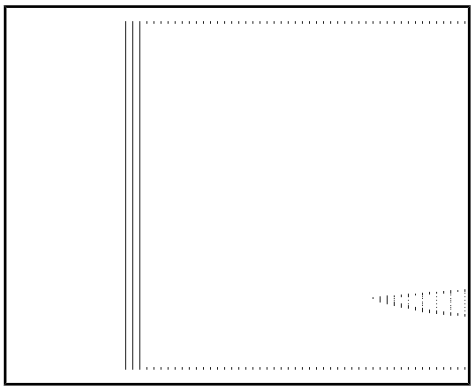

– Assemble universal measuring tool - VW 385/1- as illustrated:

♦ Dial gauge extension -VW 385/15- , 9.3 mm long

– Set master gauge - VW 385/30- to dimension “R” = 60.00 mm and place onto universal measuring tool - VW 385/1- .

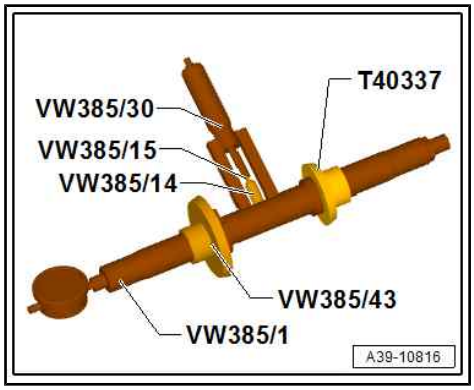

Note

Distance “R” = 60.00 mm for all final drive gear sets. There are no individual dimensions for allowance.

– Set dial gauge (3 mm measuring range) to “0” with 2 mm pre-load.

– Place end measuring plate - VW 385/33- on face of pinion gear.

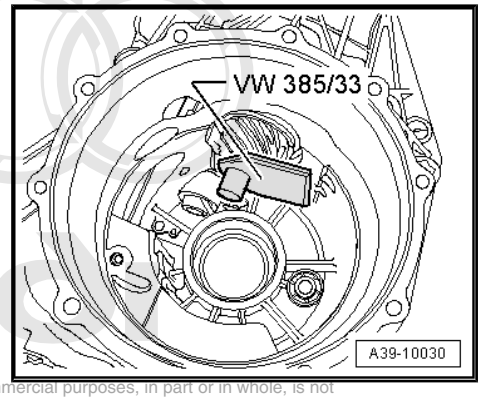

Note

Ensure contact surface of end measuring plate - VW 385/33- fits exactly and is free of oil.

– Detach master gauge - VW 385/30- and insert universal measuring tool - VW 385/1- in gearbox housing.

Protected by copyright. Copying for private or commercial purposes, in part or in whole, is not permitted unless authorised by AUDI AG. AUDI AG does not guarantee or accept any liability with respect to the correctness of information in this document. Copyrig ... AG.

When turning universal measuring tool, it is important to ensure that dial gauge extension -VW 385/15- does not make contact with magnet -arrow- of end measuring plate .

- The dial gauge faces towards the final drive cover.
- Flange shaft oil seal (right-side) is removed from final drive cover.
- The O-ring is fitted into cover for final drive.

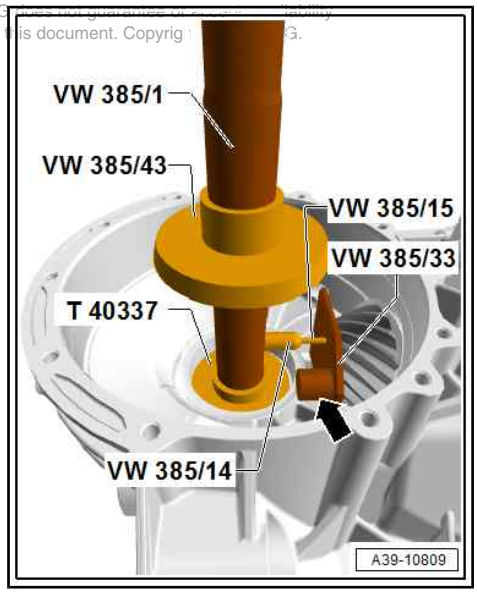

– Fit final drive cover -1- and tighten the 4 bolts -2- to specified torque ⇒ Item 8 (page 170) .

– Using the adjustable ring, pull 2nd centring disc - VW 385/43- out as far as possible so that the universal measuring tool can still just be turned by hand.

– Turn universal measuring tool until tip of dial gauge touches end measuring plate on face of pinion gear, and measure maximum deflection (return point).

♦ Measurement in following example = 0.09 mm (in red scale)

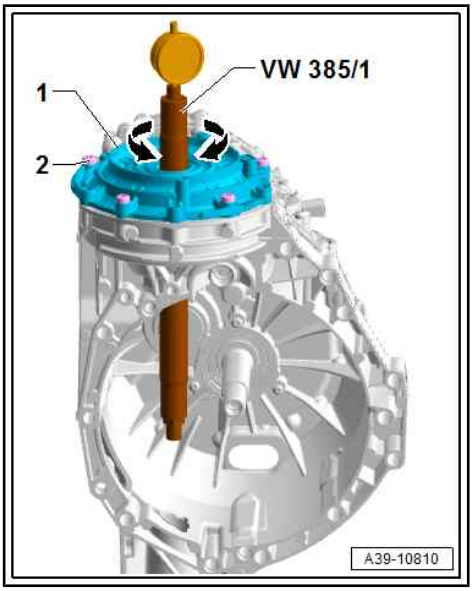

Note

After removing universal measuring tool , check once again that the dial gauge indicates "0" with 2 mm preload when master gauge - VW 385/30- is in place.

Determining thickness of shim "S_3"

♦ Subtract value if measurement is obtained on red scale.

♦ Add value if measurement is obtained on black scale.

Formula:

"S_3" = "S_3*" + "measured value" ("measured value" on black scale)

"S_3" = "S_3*" - "measured value" ("measured value" on red scale)

Example:

Inserted shim "S_3*"	1.05 mm
- Measured value (in red scale)	0.09 mm
= Thickness of shim "S_3"	0.96 mm

– Select shim from table; refer to ⇒ Electronic parts catalogue for part number.

Available shims for "S_3" and "S_4"

Shim thickness (mm)				
0.45	0.81	1.17	1.53	1.89
0.49	0.85	1.21	1.57	1.93
0.53	0.89	1.25	1.61	1.97
0.57	0.93	1.29	1.65	2.01
0.61	0.97	1.33	1.69	2.05
0.65	1.01	1.37	1.73	2.09
0.69	1.05	1.41	1.77	2.13
0.73	1.09	1.45	1.81	
0.77	1.13	1.49	1.85	

Protected by copyright. Copying for private or commercial purposes, in part or in whole, is not permitted unless authorised by AUDI AG. AUDI AG does not guarantee or accept any liability with respect to the correctness of information in this document. Copyright by AUDI AG.

Tolerance variations make it possible to obtain the exact shim thickness required.

– Remove pinion shaft with old shims "S_3*" and "S_4*" ⇒ page 172 .

- Heat gearbox housing in area of bearing seat -arrows- to approx. 100 °C with hot air blower - V.A.G 1416- .
- If necessary, cool down double angular contact ball bearing on pinion shaft, e.g. using commercially available chilling spray.

– Insert selected shim “S_3” -1- (0.97 mm in example) into gearbox housing.

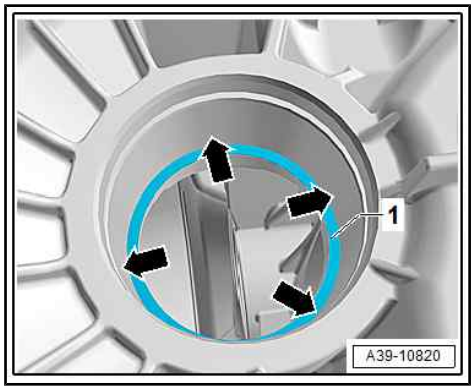

– Then insert pinion shaft -3- swiftly into gearbox housing as far as stop, taking care to keep it straight.

Protected by copyright. Copying for private or commercial purposes, in part or in whole, is not permitted unless authorised by AUDI AG. AUDI AG does not guarantee or accept any liability with respect to the correctness of information in this document. Copyright by AUDI AG.

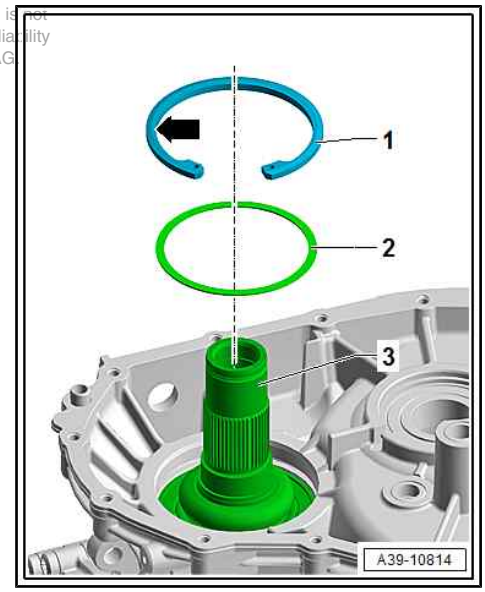

Determining thickness of shim “S_4”

Formula: “S_4” = 2.76 mm - “S_3”

Example:

	Constant value	2.76 mm
-	Thickness of shim “S_3”	0.97 mm
=	Thickness of shim “S_4”	1.79 mm

Determine the shim “S_4” from table ⇒ page 185 .

– Fit determined shim “S_4” -2- (1.81 mm in example) onto double angular contact ball bearing.

- Installation position of circlip -1-: chamfer -arrow- faces upwards and flat surface faces double angular contact ball bearing

– Fit circlip -1- in annular groove on gearbox housing.

Checking dimension “R”

– Install pinion shaft with appropriate measured shims “S_3” and “S_4”.

– Insert universal measuring tool and check adjustment.

– Read off measurement.

◆ If the shims have been correctly selected, the dimension “R” should be indicated within a tolerance of ± 0.04 mm.

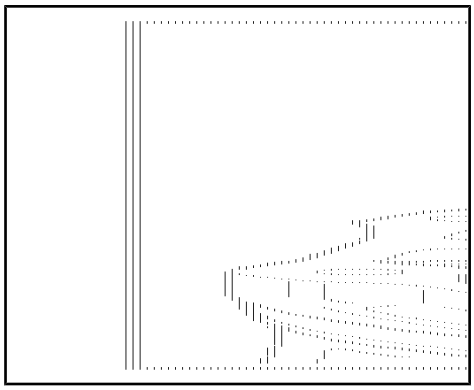

Note

After removing universal measuring tool , check once again that the dial gauge indicates “0” with 2 mm preload when master gauge - VW 385/30- is in place.

2.7 Adjusting final drive

⇒ “2.7.1 Adjusting final drive when renewing gearbox housing or pinion shaft”, page 186

⇒ “2.7.2 Adjusting final drive (if renewing differential or bearings for differential)”, page 194

2.7.1 Adjusting final drive when renewing gearbox housing or pinion shaft

Special tools and workshop equipment required

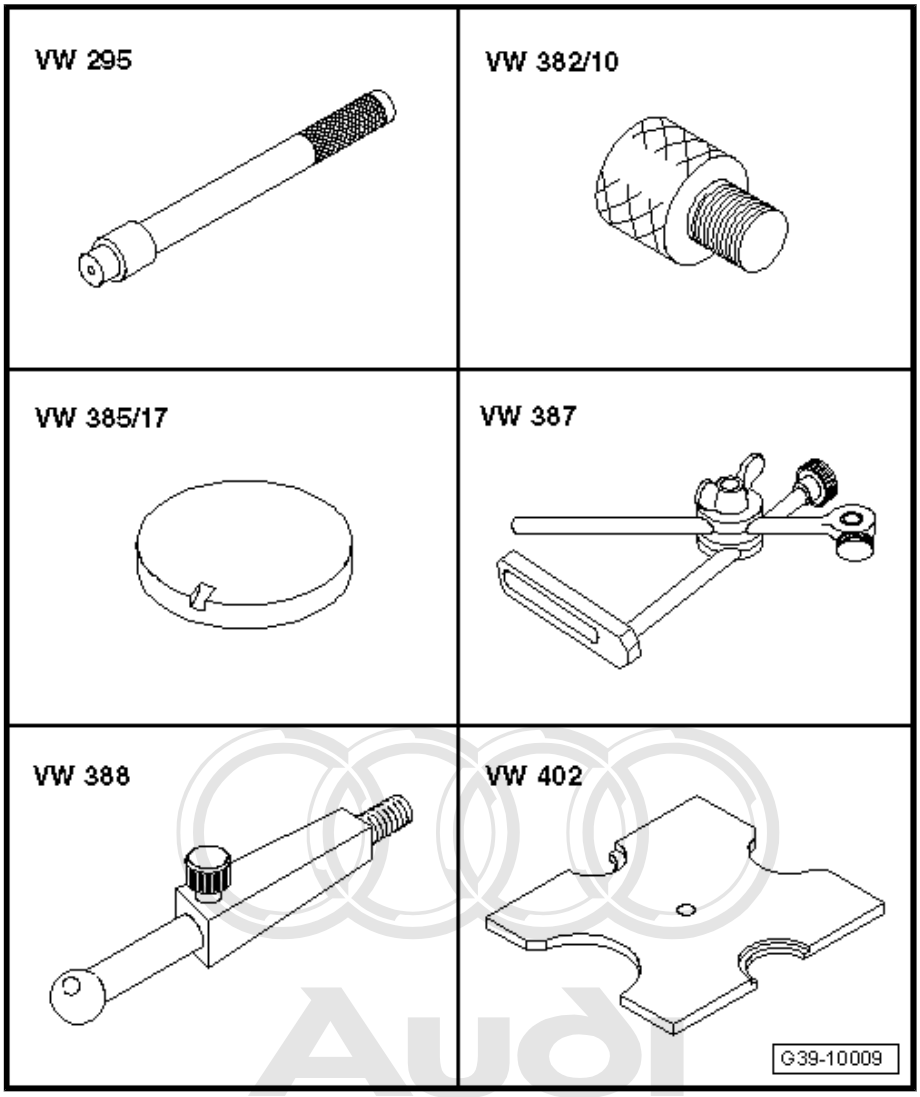

Protected by copyright. Copying for private or commercial purposes, in part or in whole, is not permitted unless authorised by AUDI AG. AUDI AG does not guarantee or accept any liability with respect to the correctness of information in this document. Copyright by AUDI AG.

- Drift - VW 295-
- Dial gauge extension - VW 382/10-
- Measuring plate - VW 385/17-
- Universal dial gauge bracket - VW 387-
- Adjustable measuring lever - VW 388-
- Thrust plate - VW 402-

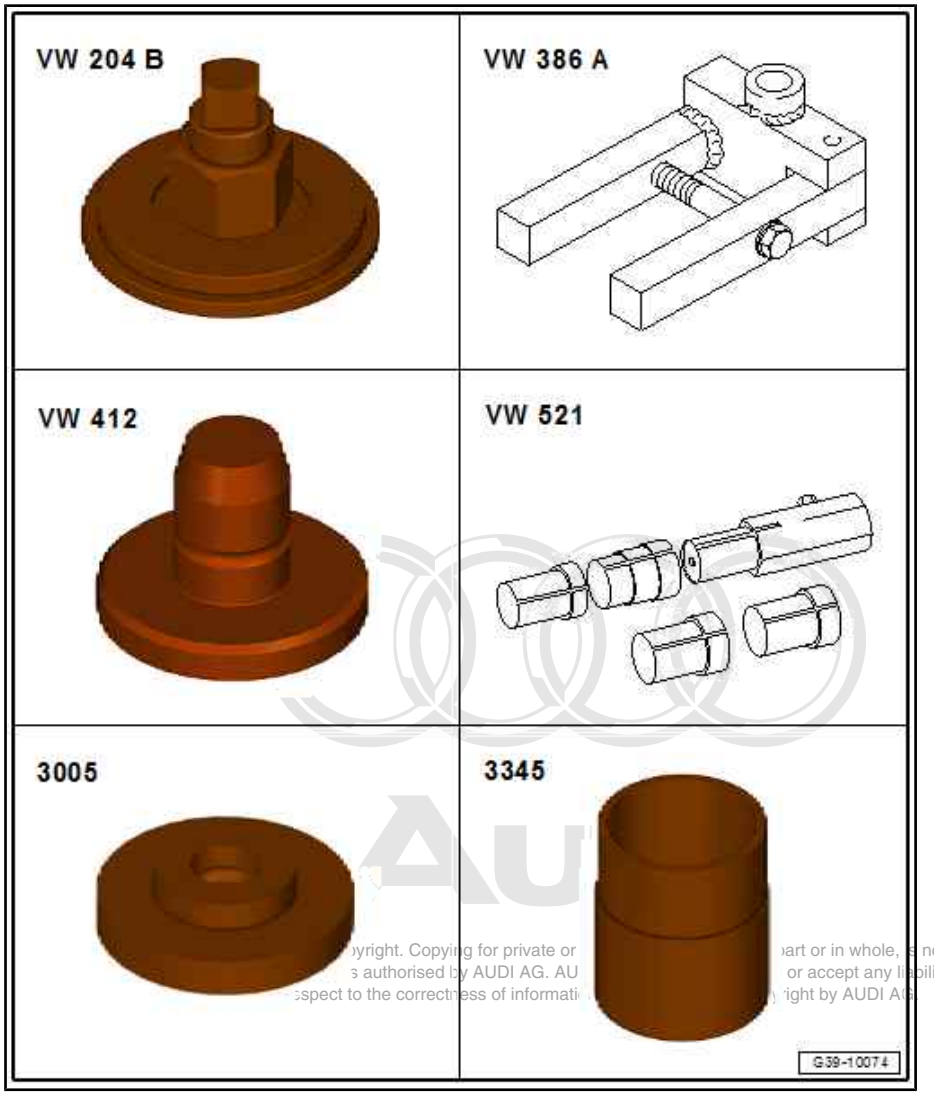

...yright. Copying for private or ...art or in whole, is not
...s authorised by AUDI AG. AU... or accept any liability
...espect to the correctness of informati... ...ight by AUDI AG

- Crankshaft seal fitting tool - VW 204 B-
- Drive pinion clamp - VW 386A-
- Press tool - VW 412-
- Crown wheel adjusting tool - VW 521-
- Thrust plate - 3005-
- Wheel bearing tube - 3345-
- Plate - 2036/1- from valve assembly device - 2036-

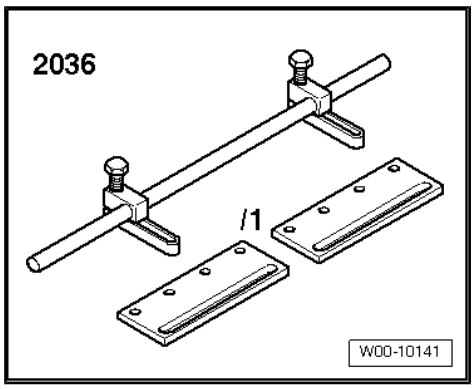

- Dial gauge , e.g. -VAS 6080-

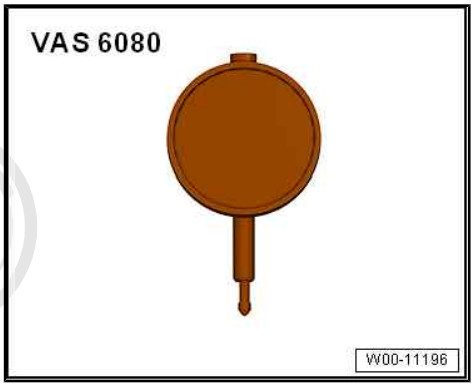

Note

- *Careful adjustment of the final drive is essential to ensure that it gives long service and runs silently.*
- *When renewing only the differential or the differential bearings, it is not necessary to remove the pinion shaft. In this case, follow the procedure on ⇒ page 194 .*
- *Table of adjustments ⇒ page 180*

This is to be copyright. Copying or reproduction of this document, in part or in whole, is not permitted without the express consent of AUDI AG. AUDI AG does not guarantee or accept any liability with respect to the correctness of information in this document. Copyright by AUDI AG.

- The final drive must be readjusted if the gearbox housing or the pinion shaft have been renewed.
- Pinion shaft removed ⇒ page 172 .
- The gearbox must be secured to the assembly stand, and the clutch module with the flange shaft (right-side) must be removed.

Determining total shim thickness "S_{total}" for shims "S_1" + "S_2"

(Setting preload of differential bearings)

– Remove flange shaft oil seals

– Remove outer bearing races for differential from gearbox housing and final drive cover, and take out shims ⇒ page 210 .

– Drive outer race of tapered roller bearing (left-side) with shim "S_2" into gearbox housing. For measurement purposes use a 0.65 mm thick "S_2*" shim.

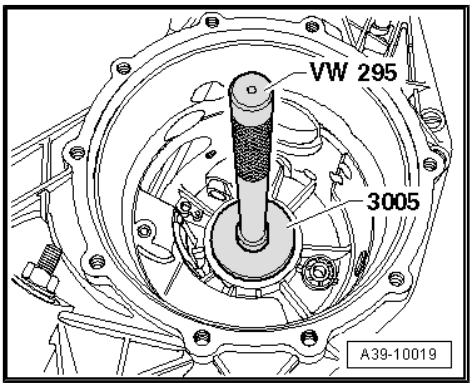

Note

- *For measurement purposes a shim "S_2" with a thickness of 0.65 mm (in this example) is inserted provisionally. This is referred to in the following as "S_2*". "S_2*" is exchanged with the final shim "S_2" after determining backlash.*
- *Available shims ⇒ page 193 ; select shims from ⇒ Electronic parts catalogue .*

– Press outer race for angular contact ball bearing (right-side) with provisional shim “S_1” into cover for final drive. For measurement purposes use a 1.05 mm thick “S_1*” shim.

Larger diameter of -VW 204 B- faces outer ring for angular contact ball bearing.

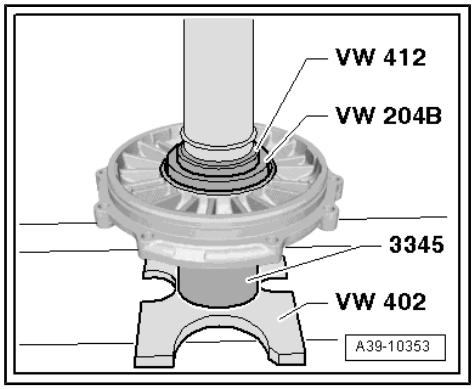

Note

- *For measurement purposes a 1.05 mm thick shim “S_1” is inserted provisionally. This is referred to in the following as “S_1*”. “S_1*” is exchanged with the final shim “S_1” after determining backlash.*
- *Available shims ⇒ page 194 ; select shims from ⇒ Electronic parts catalogue .*

– Install differential in gearbox housing. The crown wheel is positioned on the right-hand side (same side as cover for final drive).

• The O-ring is fitted into cover for final drive.

– Carefully secure cover for final drive with 4 bolts (tighten to 20 Nm in diagonal sequence).

– Turn gearbox so that cover for final drive points upwards.

– Turn differential 5 turns in both directions to settle bearings.

– Place measuring plate - VW 385/17- on differential.

– Attach measuring equipment to gearbox housing.

– Set dial gauge (3 mm measuring range) -A- to “0” with 2 mm preload.

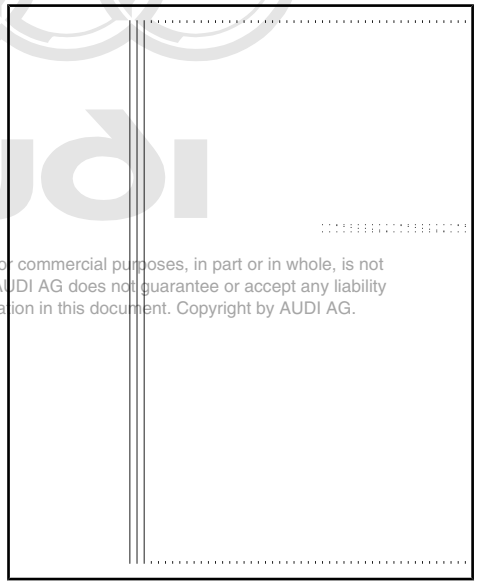

Note

The tip of the dial gauge must be applied to the centre of the differential.

Protected by copyright. Copying for private or commercial purposes, in part or in whole, is not permitted unless authorised by AUDI AG. AUDI AG does not guarantee or accept any liability with respect to the correctness of information in this document. Copyright by AUDI AG.

– Raise differential without turning, read clearance off dial gauge and note down.

• Measurement in following example: 0.25 mm

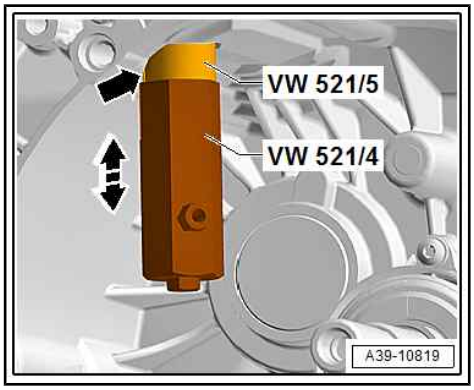

Note

- *Secure special tools -VW 521/4- and -VW 521/5- on left side of differential (housing side) to lift differential.*
- *Ensure that crown wheel adjusting tool - VW 521- does not make contact with gearbox housing -arrow-.*
- *If the measurement has to be repeated, the differential must again first be turned 5 turns in each direction to settle the bearings.*

Formula: "S_{total}" = "S_1*" + "S_2*" + measured value + bearing preload

Example:

Inserted shims "S_1*" + "S_2*"	1.70 mm
+ Measured value	0.22 mm
+ Bearing preload (constant value)	0.30 mm
= Total shim thickness"S_{total}" for "S_1" + "S_2"	2.22 mm

- Provisional shim "S_1*" with thickness 1.05 mm remains installed in final drive cover.

Determining thickness of provisional shim "S_2*"

Note

- *Provisional shim "S_2*" is replaced with final shim "S_2" after determining backlash.*
- *Total shim thickness "S_{total}" remains unchanged.*

Formula: "S_2*" = "S_{total}" – "S_1*"

Example:

Total shim thickness"S_{total}" for "S_1" + "S_2"	2.22 mm
- Inserted shim "S_1*"	1.05 mm
= Thickness of shim "S_2*"	1.17 mm

Protected by copyright. Copying for private or commercial purposes, in part or in whole, is not permitted unless authorised by AUDI AG. AUDI AG does not guarantee or accept any liability with respect to the correctness of information in this document. Copyright by AUDI AG.

Available shims ⇒ page 193 ; select shims from ⇒ Electronic parts catalogue .

Measuring backlash

- Pinion shaft fitted with shims "S_3" and "S_4" ⇒ page 172 .
- The O-ring is fitted into cover for final drive.

– Install differential with shims: "S_1*" is fitted on cover side, "S_2*" in gearbox housing.

Caution

Risk of damage to the gear set

- ***Check backlash when tightening cover for final drive. There must always be a certain amount of play.***
- ***Check play by turning pinion shaft back and forth.***

– Fit cover for final drive and tighten bolts to 20 Nm.

– Assemble crown wheel adjusting tool - VW 521- ⇒ page 198 and insert in differential.
– Turn differential 5 turns in both directions to settle bearings.

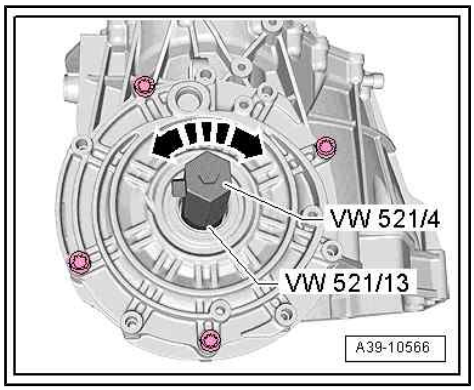

– Secure universal dial gauge bracket - VW 387- to cover for final drive -arrow-.
– Insert dial gauge , e.g. -VAS 6080- with dial gauge extension - VW 382/10- (6 mm, flat).
– Adjust measuring lever - VW 388- to distance “a” = 79 mm (for ∅ 196 mm crown wheel).

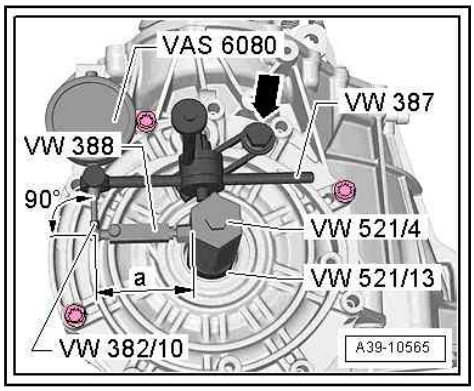

Protected by copyright. Copying for private or commercial purposes, in part or in whole, is not permitted unless authorised by AUDI AG. AUDI AG does not guarantee or accept any liability with respect to the correctness of information in this document. Copyright by AUDI AG.

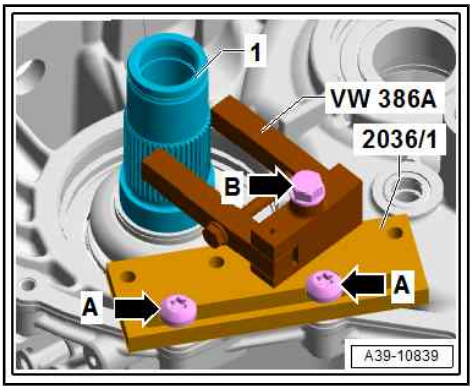

– Pinion shaft must be locked in place to ensure that backlash can be measured exactly.
– To do so, secure bracket - 2036/1- to gearbox housing with bolts -arrows A-.
– Secure clamping piece for pinion shaft - VW 386A- with bolt -arrow B-.

Measure play between teeth faces (backlash) as follows:

– Turn crown wheel until it makes contact with the face of one tooth (end of backlash travel).
– Preload dial gauge to 2 mm and set to “0”.
– Turn back crown wheel until it makes contact with opposite tooth face (backlash).
– Take backlash reading and note down measured value.
– Turn crown wheel through 90° another three times, repeating measurement each time; unfasten clamping piece for pinion shaft - VW 386A- to do so.

Determining average backlash

– Add the four measured values together and divide by four.

Example:

1st measured value	0.54 mm
+ 2nd measured value	0.53 mm
+ 3rd measured value	0.55 mm
+ 4th measured value	0.54 mm
= Sum of measured values	2.16 mm

• Result: the average backlash is 2.16 mm : 4 = 0.54 mm

Determining thickness of shim “S_2”

Formula: “S_2” = “S_2*” - measured backlash + specified backlash

Example:

Previous shim “S_2*”	1.17 mm
- Measured average backlash	0.54 mm
+ Specified backlash (desired average value for backlash)	0.21 mm
= Thickness of shim “S_2”	0.84 mm

Select shim from table; refer to ⇒ Electronic parts catalogue for part number.

Available shims for “S_2”

Shim thickness (mm)				
0.37	0.65	0.93	1.21	1.49
0.41	0.69	0.97	1.25	1.53
0.45	0.73	1.01	1.29	1.57
0.49	0.77	1.05	1.33	1.61
0.53	0.81	1.09	1.37	1.65
0.57	0.85	1.13	1.41	
0.61	0.89	1.17	1.45	

Tolerance variations make it possible to obtain the exact shim thickness required.

Protected by copyright. Copying for private or commercial purposes, in part or in whole, is not permitted unless authorised by AUDI AG. AUDI AG does not guarantee or accept any liability with respect to the correctness of information in this document. Copyright by AUDI AG.

Determining thickness of shim "S_1"

Formula: "S_1" = "S_{total}" – "S_2"

Example:

	Total shim thickness"S_{total}" for "S_1" + "S_2"	2.22 mm
-	Thickness of shim "S_2"	0.84 mm
=	Thickness of shim "S_1"	1.38 mm

– Select shim from table; refer to ⇒ Electronic parts catalogue for part number.

Available shims for "S_1"

Shim thickness (mm)				
0.65	0.89	1.13	1.37	1.61
0.69	0.93	1.17	1.41	1.65
0.73	0.97	1.21	1.45	1.69
0.77	1.01	1.25	1.49	1.73
0.81	1.05	1.29	1.53	1.77
0.85	1.09	1.33	1.57	

Tolerance variations make it possible to obtain the exact shim thickness required.

– Remove old shims "S_1*" and "S_2*" and fit selected new shims ⇒ page 210 .

Checking adjustment

– After installing shims "S_1" and "S_2", turn differential 5 turns in both directions so that the tapered roller bearings settle.

– Measure backlash four times on circumference.

◆ Specification: 0.17 ... 0.25 mm

Protected by copyright. Copying for private or commercial purposes, permitted unless authorised by AUDI AG. AUDI AG does not guarantee with respect to the correctness of information in this do

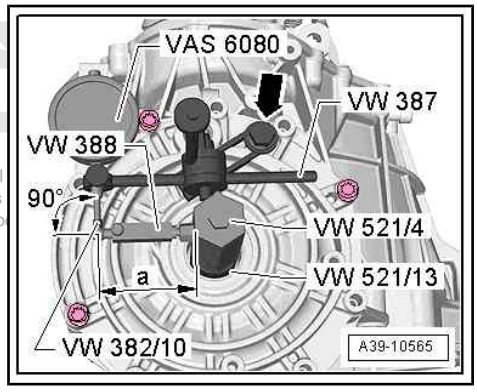

Note

Adjustment must be repeated if backlash is outside tolerance. The total shim thickness "S_{total}" must remain unchanged.

2.7.2 Adjusting final drive (if renewing differential or bearings for differential)

Special tools and workshop equipment required

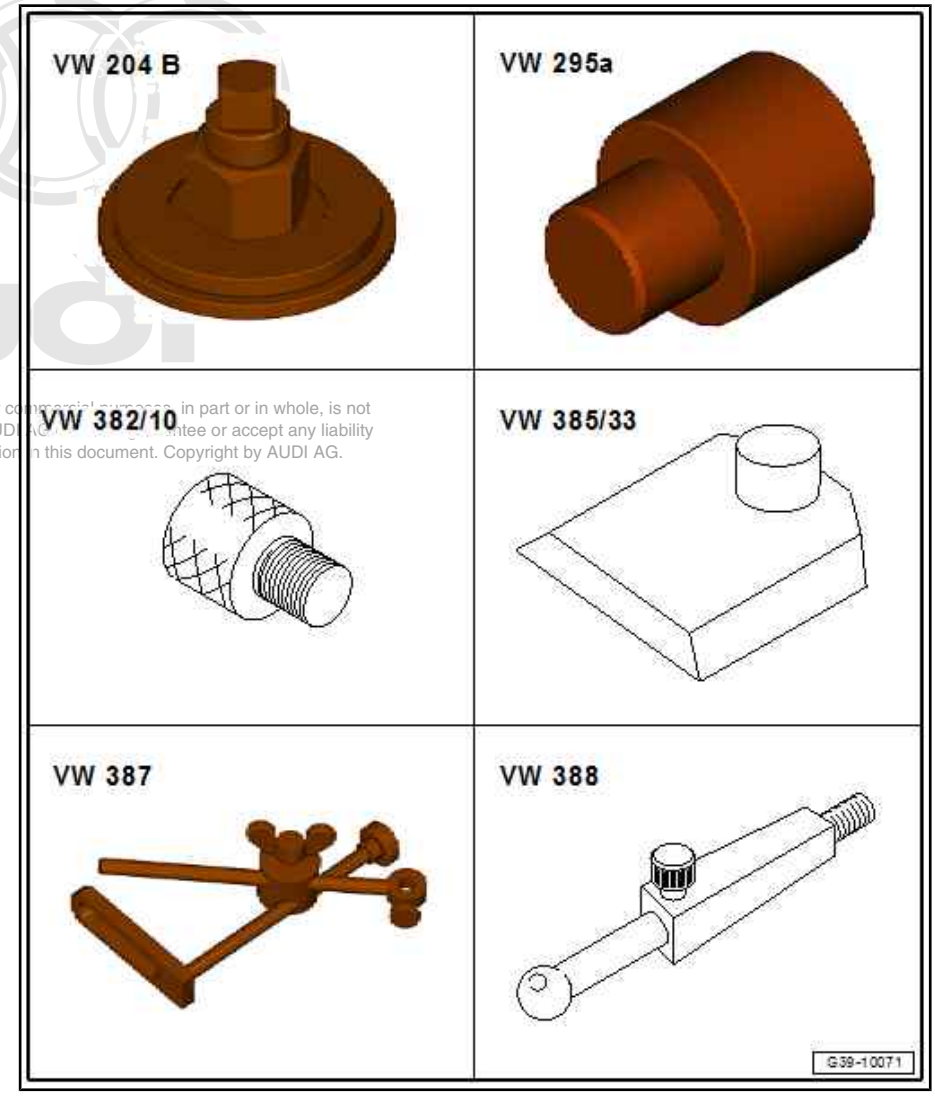

Protected by copyright. Copying for private or commercial purposes, in part or in whole, is not permitted unless authorised by AUDI AG. AUDI AG does not guarantee or accept any liability with respect to the correctness of information in this document. Copyright by AUDI AG.

- Crankshaft seal fitting tool - VW 204 B-
- Punch - VW 295 A-
- Dial gauge extension - VW 382/10-
- Measuring plate - VW 385/33-
- Universal dial gauge bracket - VW 387-
- Adjustable measuring lever - VW 388-

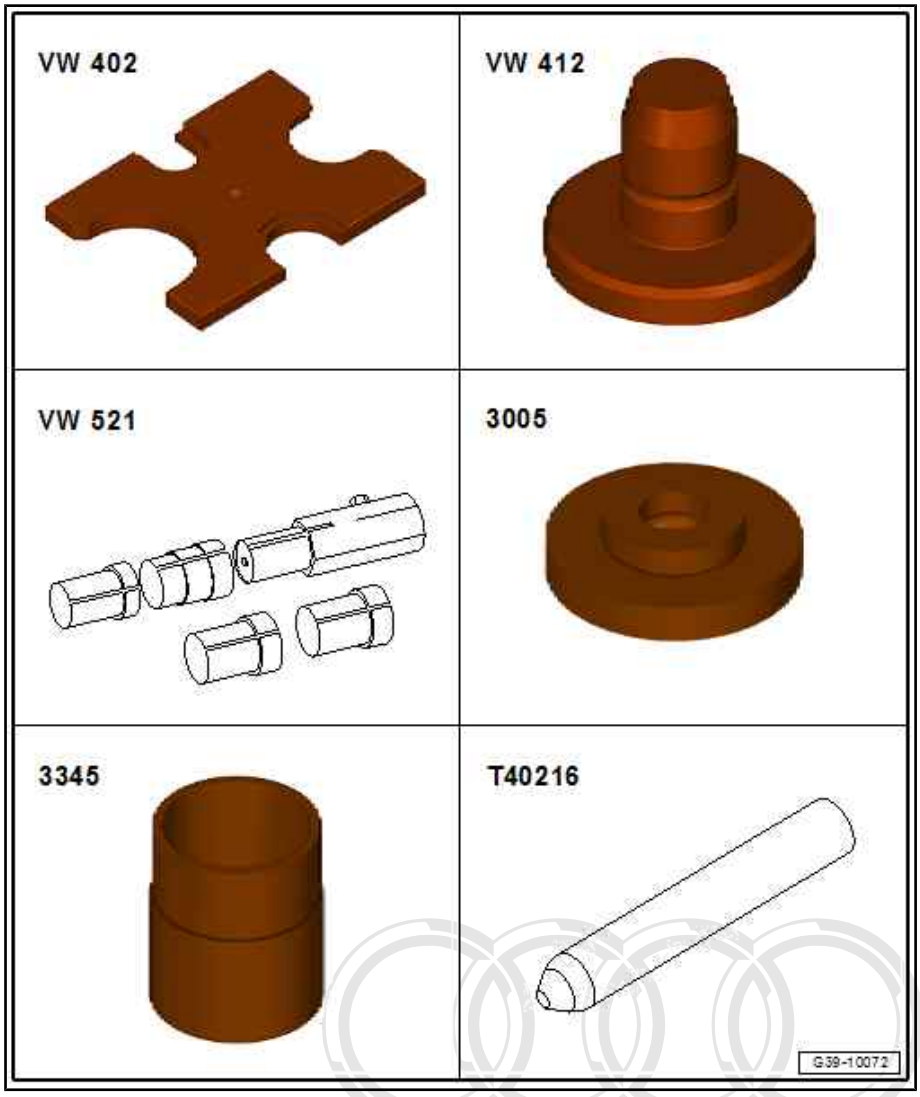

- Thrust plate - VW 402-
- Press tool - VW 412-
- Crown wheel adjusting tool - VW 521-
- Thrust plate - 3005-
- Wheel bearing tube - 3345-
- Guide pin - T40216-
- Wedge - T10161-

Protected by copyright. Copying for private or commercial purposes, in part or in whole, is not permitted unless authorised by AUDI AG. AUDI AG does not guarantee or accept any liability with respect to the correctness of information in this document. Copyright by AUDI AG.

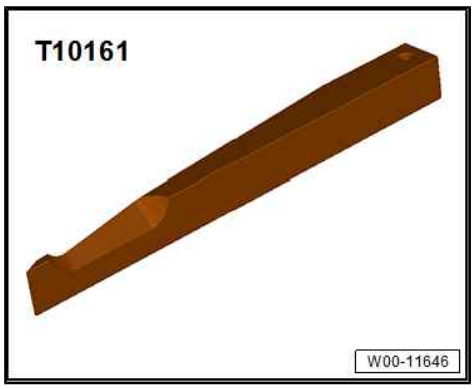

♦ Dial gauge , e.g. -VAS 6080-

Protected by copyright. Copying for private or commercial purposes, in part or in whole, is not permitted unless authorised by AUDI AG. AUDI AG does not guarantee or accept any liability with respect to the correctness of information in this document. Copyright by AUDI AG.

Note

Careful adjustment of the differential is essential to ensure that the final drive gives long service and runs silently.

- The final drive (differential) must be adjusted when the differential and the bearings of the differential have been renewed.
- The pinion shaft remains installed; for which reason backlash must always be present during the adjustment process. Otherwise the gear set will be damaged.
- The gearbox must be secured to the assembly stand, and the clutch module with the flange shaft (right-side) must be removed.

Determining total shim thickness "S_{total}" for shims "S_1" + "S_2"

– Pull tapered roller bearing outer race (left-side) out of gearbox housing ⇒ page 217 .

– Drive new tapered roller bearing outer race (left-side) with old shim "S_2" (1.25 mm in example given) into gearbox housing.

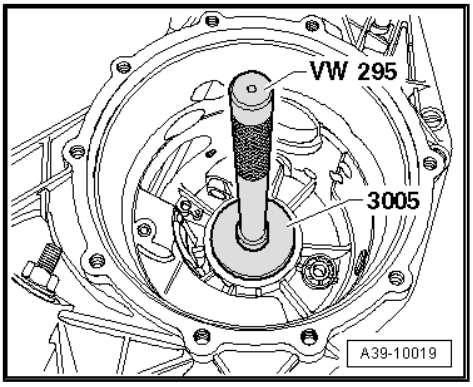

Note

The old shim "S_2" (1.25 mm thick in the example given) is inserted for measurement purposes This is referred to in the following as "S_2". "S_2*" is exchanged with the final shim "S_2" after determining backlash.*

– Press new outer race for angular contact ball bearing (right-side) with old shim "S_1" into cover for final drive. When doing so, larger diameter of -VW 204 B- faces outer race.

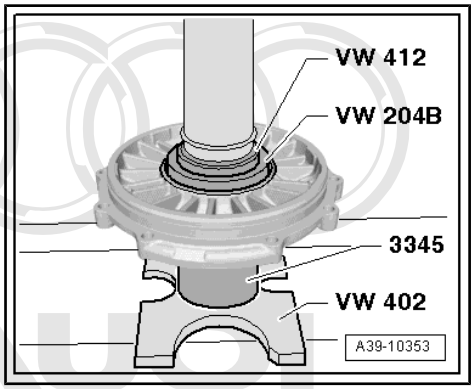

– Install differential in gearbox housing.

Caution

Risk of damage to the gear set

- *Check backlash when tightening cover for final drive. There must always be a certain amount of play.*
- *If gearbox is dismantled, check play at pinion shaft by turning it back and forth.*
- *If gearbox is not dismantled, insert crown wheel adjusting tool - VW 521- and check play.*

Protected by copyright. Copying for private or commercial purposes, in part or in whole, is not permitted unless authorised by AUDI AG. AUDI AG does not guarantee or accept any liability with respect to the correctness of information in this document. Copyright by AUDI AG.

– Carefully secure cover for final drive with 4 bolts (tighten to 20 Nm in diagonal sequence).

Assemble crown wheel adjusting tool - VW 521- as follows:

- Fit sleeve - VW 521/13- with smaller outer diameter -arrow- onto mandrel - VW 521/4- .

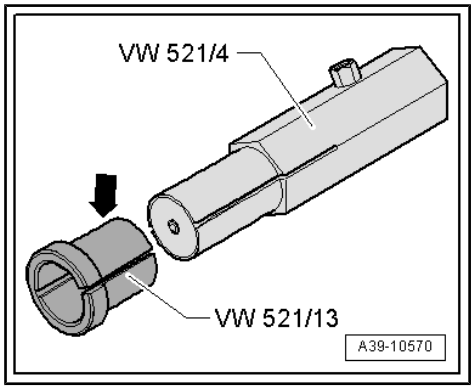

– Insert crown wheel adjusting tool - VW 521- and turn differential 5 turns in both directions to settle bearings.

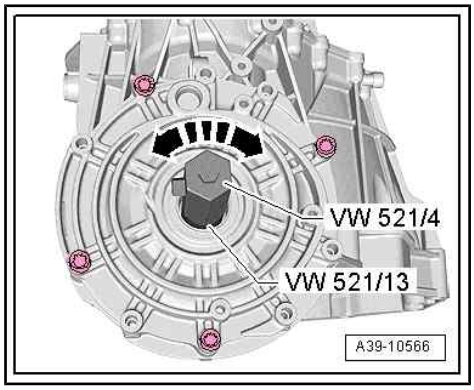

– Remove crown wheel adjusting tool - VW 521- and attach measuring tools to gearbox housing as follows:
– Secure universal dial gauge bracket - VW 387- to threaded hole in gearbox housing with bolt -A-.
– Apply dial gauge extension to centre of measuring plate - VW 385/33- .
– Set dial gauge , e.g. -VAS 6080- to »0« with 1 mm preload.
– Slacken 4 bolts -arrows- by one turn in diagonal sequence.
– Check reading on dial gauge.
• Specification: 0.25 ... 0.30 mm

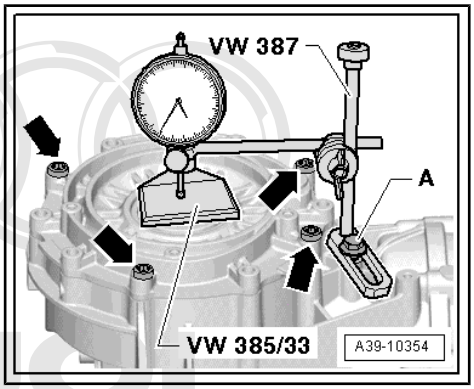

Note

Protected by copyright. Copying for private or commercial purposes, in part or in whole, is not permitted unless authorised by AUDI AG. AUDI AG does not guarantee or accept any liability with respect to the correctness of information in this document. Copyright by AUDI AG.

♦ *If specified measured value is not achieved, or if no backlash is discernible, correct thickness of shims "S_1" and "S_2".*

♦ *Select correct shims from ⇒ Electronic parts catalogue .*

Measuring backlash

• Differential fitted with shims "S_1" and "S_2".
– Install differential with crown wheel: S_1 is fitted on cover side, S_2 in gearbox housing.
– Fit cover for final drive and tighten bolts to 20 Nm.

– Assemble crown wheel adjusting tool - VW 521- ⇒ page 198 and insert in differential.
– Turn differential 5 turns in both directions to settle bearings.

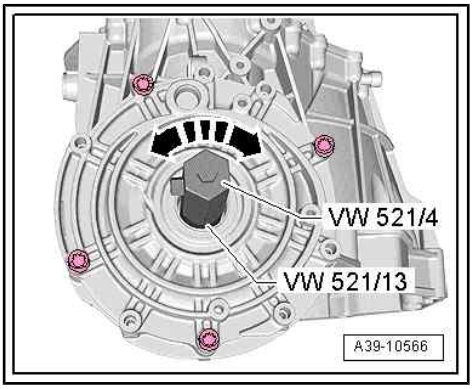

– Screw guide pin - T40216- onto selector shaft -1-.

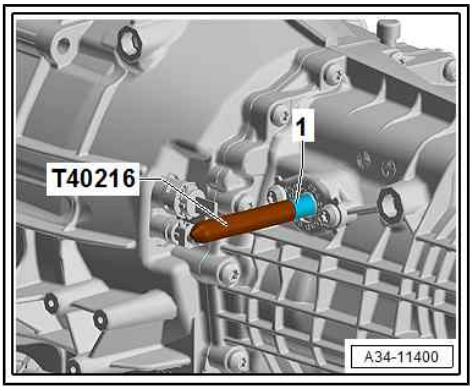

– Remove bolts -1- and carefully lever off selector shaft cover -2-.

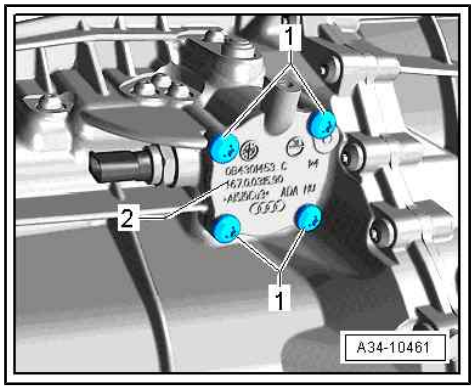

– Lift selector shaft slightly -arrow A- and pull it out -arrow B-.

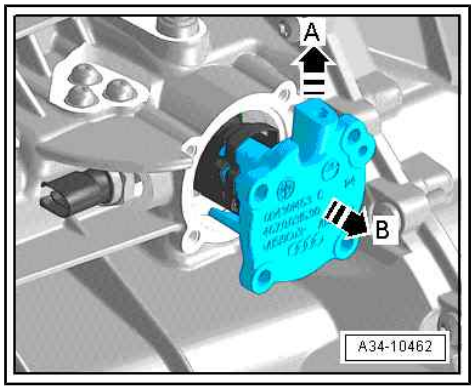

Protected by copyright. Copying for private or commercial purposes, in part or in whole, is not permitted unless authorised by AUDI AG. AUDI AG does not guarantee or accept any liability with respect to the correctness of information in this document. Copyright by AUDI AG.

– Then turn gearbox in assembly stand or engine and gearbox support - VAS 6095- so that gearbox cover -3- faces upwards.

– Remove bolts -1- securing bearing mounting to gearbox cover, and bolts -2- securing gearbox cover -3- to gearbox housing -4-.

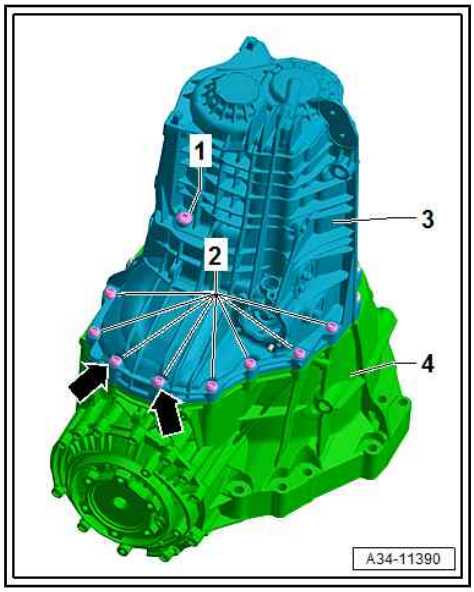

Note

When fitting gearbox cover, note that bolts marked with -arrows- are longer.

– Take off gearbox cover -3-.

– Insert wedge - T10161- between spur gear drive output gear -1- and gearbox housing.

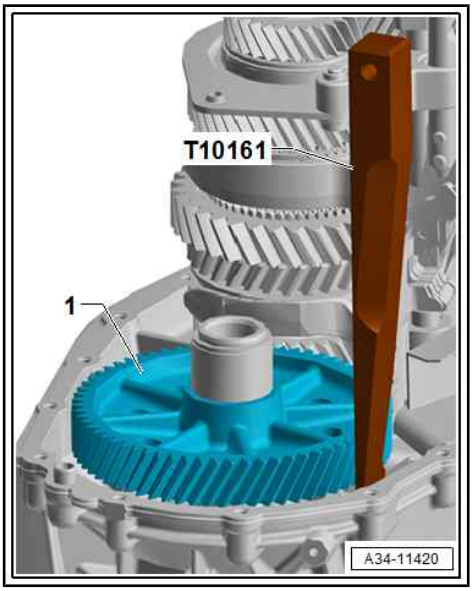

Protected by copyright. Copying for private or commercial purposes, in part or in whole, is not permitted unless authorised by AUDI AG. AUDI AG does not guarantee or accept any liability with respect to the correctness of information in this document. Copyright by AUDI AG.

– Secure universal dial gauge bracket - VW 387- to cover for final drive -arrow-.

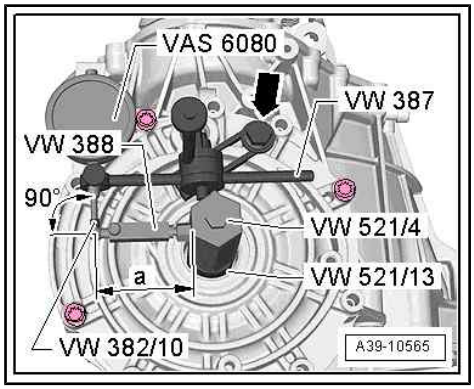

Note

The attachment point for the universal dial gauge bracket -arrow- may differ slightly from the illustration.

– Insert dial gauge , e.g. -VAS 6080- with dial gauge extension - VW 382/10- (6 mm, flat).

– Set measuring lever - VW 388- to dimension “a” = 79.0 mm.

Measure play between teeth faces (backlash) as follows:

– Turn crown wheel until it makes contact with the face of one tooth (end of backlash travel).

– Preload dial gauge to 2 mm and set to “0”.

– Turn back crown wheel until it makes contact with opposite tooth face (backlash).

– Take backlash reading and note down measured value.

– Turn crown wheel through 90° and repeat measurement another 3 times. To turn further, remove wedge - T10161- between spur gear drive output gear and gearbox housing ⇒ page 201 .

Determining average backlash

– Add the four measured values together and divide by four.

Example:	
1st measured value	0.23 mm
+ 2nd measured value	0.25 mm
+ 3rd measured value	0.25 mm
+ 4th measured value	0.23 mm
= Sum of measured values	0.96 mm

Protected by copyright. Copying for private or commercial purposes, in part or in whole, is not permitted unless authorised by AUDI AG. AUDI AG does not guarantee or accept any liability with respect to the correctness of information in this document. Copyright by AUDI AG.

• Result: the average backlash is 0.96 mm : 4 = 0.24 mm

Determining thickness of shim “S_2”

Formula: “S_2” = “S_2*” - measured backlash + specified backlash

Example:	
Previous shim “S_2*”	1.25 mm
- Measured average backlash	0.24 mm
+ Specified backlash (desired average value for backlash)	0.21 mm
= Thickness of shim “S_2”	1.22 mm

Available shims for “S_2” ⇒ page 193 : for part number refer to ⇒ Electronic parts catalogue .

Determining thickness of shim “S_1”

Formula: “S_1” = “S_{total}” – “S_2”

Example:	
Total shim thickness“S_{total}” for “S_1” + “S_2”	2.17 mm
- Thickness of shim “S_2”	1.22 mm
= Thickness of shim “S_1”	0.95 mm

Available shims for "S_1" ⇒ page 194 : for part number refer to ⇒ Electronic parts catalogue .

– Remove old shims "S_1*" and "S_2*" and fit selected new shims ⇒ page 210 .

Checking adjustment

– After installing shims "S_1" and "S_2", turn differential 5 turns in both directions so that the tapered roller bearings settle.

– Measure backlash four times on circumference.

♦ Specification: 0.17 ... 0.25 mm

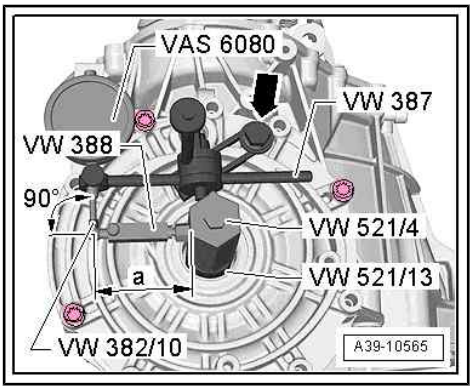

Note

Adjustment must be repeated if backlash is outside tolerance. The total shim thickness "S_{total}" must remain unchanged.

2.8 Renewing cover for final drive

Note

♦ *When renewing cover for final drive, determine thickness of new shim to adjust preload of bearings for differential.*

♦ *This shim is located behind the outer race of the angular contact ball bearing in the cover for the final drive.*

Protected by copyright. Copying for private or commercial purposes, in part or in whole, is not permitted unless authorised by AUDI AG. AUDI AG does not guarantee or accept any liability with respect to the correctness of information in this document. Copyright by AUDI AG.

Special tools and workshop equipment required

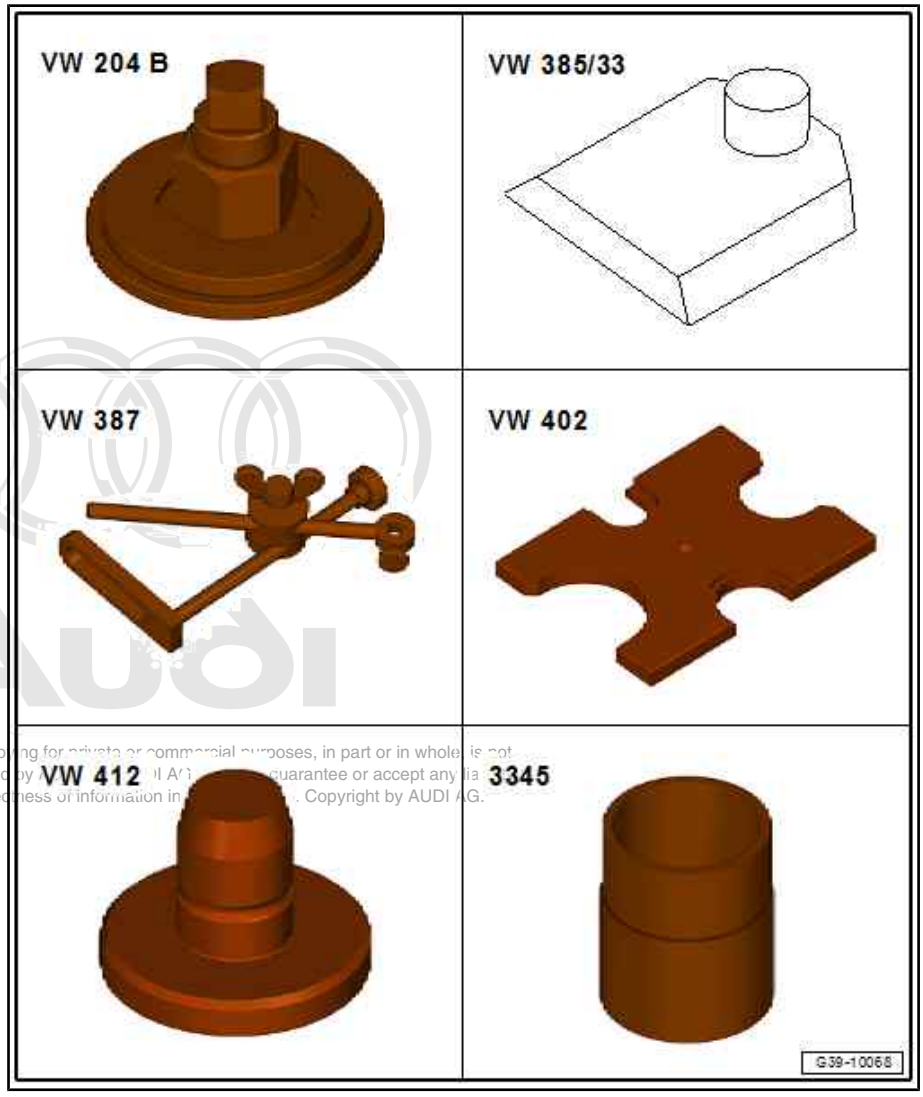

Protected by copyright. Copying for private or commercial purposes, in part or in whole, is not permitted unless authorised by AUDI AG. AUDI AG does not guarantee or accept any liability with respect to the correctness of information in this document. Copyright by AUDI AG.

- Crankshaft seal fitting tool - VW 204 B-
- Measuring plate - VW 385/33-
- Universal dial gauge bracket - VW 387-
- Thrust plate - VW 402-
- Press tool - VW 412-
- Wheel bearing tube - 3345-
- Hub grease cap puller - VW 637/2-

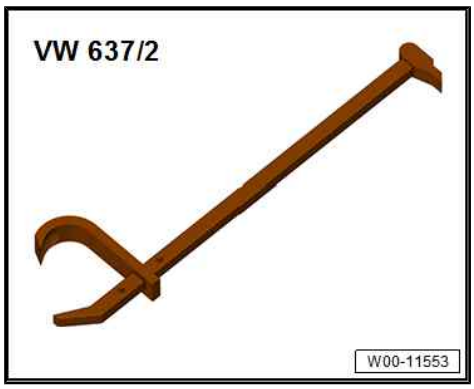

- Ruler - T40100-

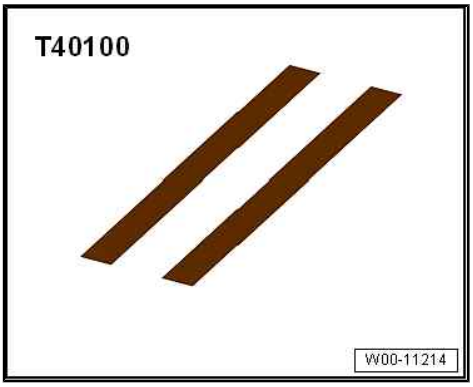

- Gauge block - T40101-

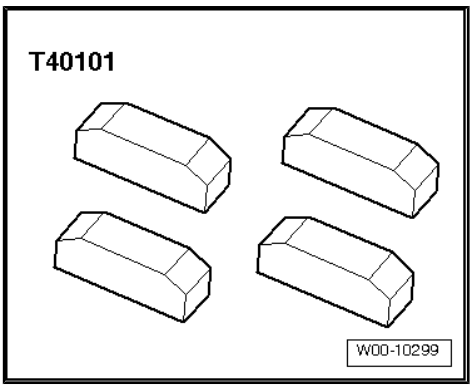

- Dial gauge - VAS 6080A-

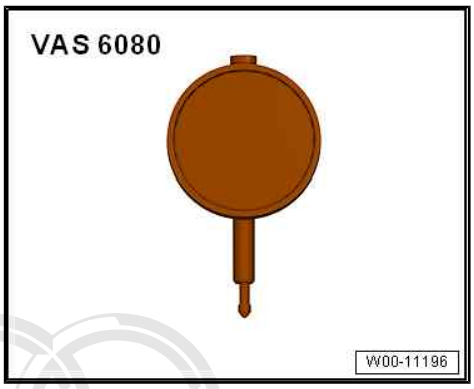

- Digital depth gauge , e.g. -VAS 6087-

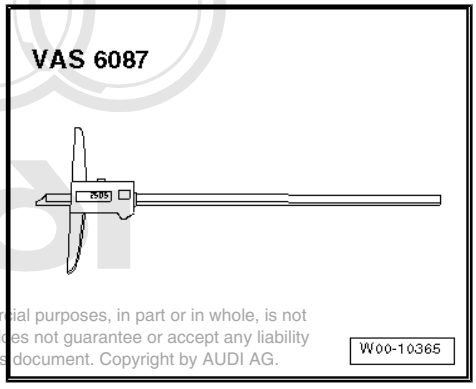

Protected by copyright. Copying for private or commercial purposes, in part or in whole, is not permitted unless authorised by AUDI AG. AUDI AG does not guarantee or accept any liability with respect to the correctness of information in this document. Copyright by AUDI AG.

♦ -1- Internal puller - VAS 251 619 (Kukko 21/89)-

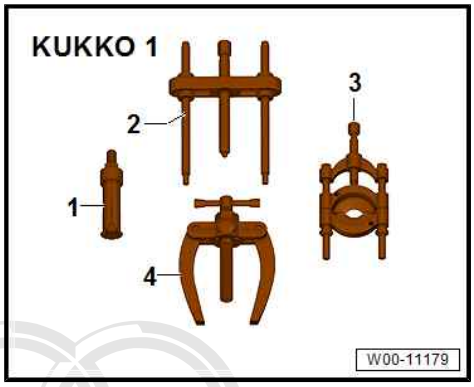

♦ -4- Counter-support - VAS 251 625 (Kukko 22/4)-

- Gearbox removed ⇒ 6-speed manual gearbox 0CS, 0DJ, 0CX; Rep. gr. 34 ; Removing and installing gearbox; Removing gearbox

– Secure gearbox to gearbox support ⇒ page 116 .

– Turn gearbox so that cover for final drive points upwards.

– Remove flange shaft (right-side) ⇒ page 223 .

– Remove flange shaft oil seal -arrow- (right-side) using an assembly lever.

Protected by copyright. Copying for private or comm
permitted unless authorised by AUDI AG. AUDI AG
with respect to the correctness of information in

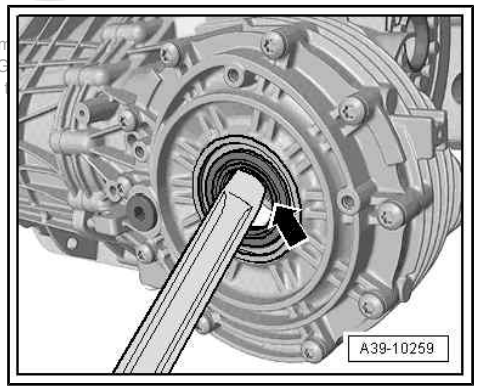

– Unscrew bolts -arrows- and detach cover for final drive -1-.

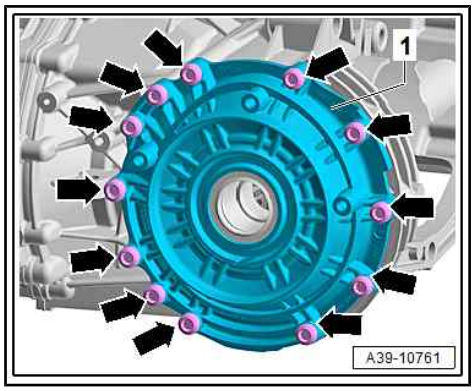

Note

To facilitate removal of the outer race for the angular contact ball bearing, heat up the cover for final drive to approx. 100 °C using the hot air blower - V.A.G 1416- .

– Then press outer race for angular contact ball bearing slightly off bearing seat by applying hub grease cap puller - VW 637/2- continuously in small stages and pressing in direction of -arrow-.

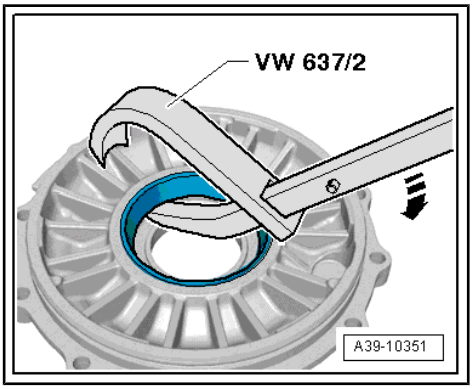

– Then pull out outer race for angular contact ball bearing -3- using internal puller -2- and counter-support -1-.

1 - Counter-support - VAS 251 625 (Kukko 22/4)-

2 - Internal puller 56 … 110 mm - VAS 251 619 (Kukko 21/89)-

– Remove existing shim.

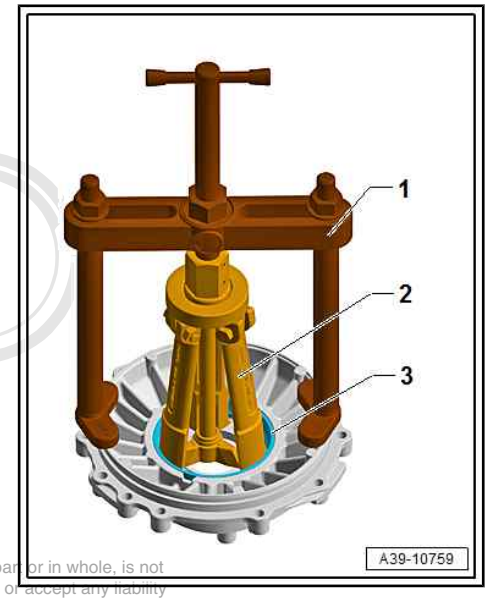

Protected by copyright. Copying for private or commercial purposes, in part or in whole, is not permitted unless authorised by AUDI AG. AUDI AG does not guarantee or accept any liability with respect to the correctness of information in this document. Copyright by AUDI AG.

Determining thickness of shim

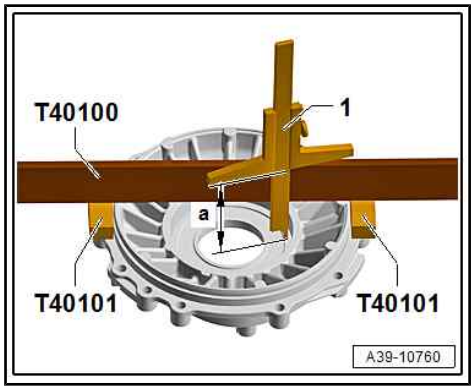

Measure dimension -a- on old cover and new cover as follows:

– Position gauge blocks - T40101- opposite one another on joint surface of final drive cover.

– Place ruler - T40100- on edge on top of these gauge blocks .

– Using a digital depth gauge (e.g. digital depth gauge - VAS 6087-), measure down into seat for outer race of angular contact ball bearing.

Example:

Dimension -a- on old cover for final drive	82.05 mm
Dimension -a- on new cover for final drive	82.20 mm
Difference	= 0.15 mm

– Install thicker shim if dimension -a- is smaller on new cover.

– Install thinner shim if dimension -a- is greater on new cover.

Example:

Existing shim	1.30 mm
Difference	- 0.15 mm
New shim	= 1.15 mm

Note

Select correct shim from ⇒ Electronic parts catalogue .

– The shim thickness in this example is 1.15 mm.

– Install new shim of required thickness in new cover for final drive.

– Press in outer race for angular contact ball bearing onto stop; larger diameter of -VW 204 B- faces towards outer race.

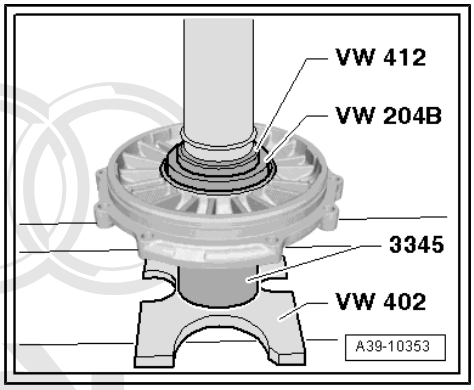

Note

Support cover for final drive with -3345- directly below bearing seat.

Protected by copyright. Copying for private or commercial purposes, in part or in whole, is not permitted unless authorised by AUDI AG. AUDI AG does not guarantee or accept any liability with respect to the correctness of information in this document. Copyright by AUDI AG.

Check adjustment of preload of bearings for differential as follows:

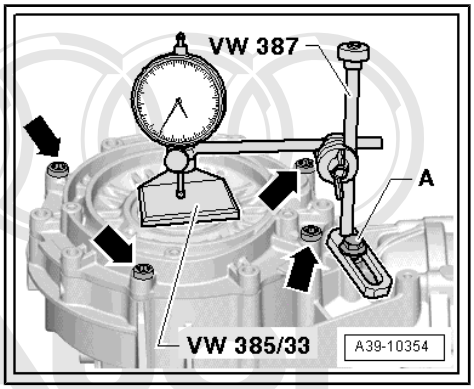

- Fit cover for final drive without O-ring and tighten 4 bolts -arrows-.
- Attach measuring equipment to gearbox housing.
- Secure universal dial gauge bracket - VW 387- to threaded hole in gearbox housing with bolt -A-.
- Apply dial gauge extension to centre of measuring plate - VW 385/33- .
- Set dial gauge , e.g. -VAS 6080- to »0« with 1 mm preload.
- Slacken 4 bolts -arrows- by one turn in diagonal sequence.
- Check reading on dial gauge.
- It should be 0.25 ... 0.30 mm for bearings with low mileage.

Protected by copyright. Copying for private or commercial purposes, in part or in whole, is not permitted unless authorised by AUDI AG. AUDI AG does not guarantee or accept any liability with respect to the correctness of information in this document. Copyright by AUDI AG.

Note

For bearings with high mileage, measured value must be at least 0.05 mm.

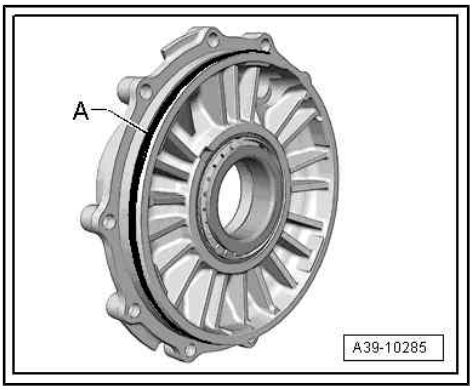

- Renew O-ring -A-.
- Lightly lubricate new O-ring with gear oil.

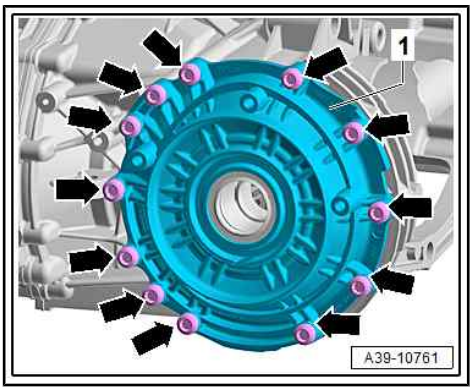

- Install cover for final drive -1- and tighten bolts -arrows- to specified torque.
- Install new flange shaft oil seal (right-side) ⇒ page 163 .
- Install flange shaft (right-side) ⇒ page 224 .
- If gear oil has been drained off, fill up gearbox with gear oil and check oil level ⇒ 6-speed manual gearbox 0CS, 0DJ, 0CX; Rep. gr. 34 ; Gear oil .

Tightening torques

- ⇒ “2.1 Exploded view - final drive”, page 169

3 Differential

⇒ “3.1 Exploded view - differential”, page 210

⇒ “3.2 Removing and installing differential”, page 211

⇒ “3.3 Dismantling and assembling differential”, page 213

⇒ “3.4 Removing and installing flange shaft (left-side)”, page 219

⇒ “3.5 Removing and installing flange shaft (right-side)”, page 223

⇒ “3.6 Renewing mounting bracket and ball bearing for flange shaft (left-side)”, page 225

3.1 Exploded view - differential

Note

- *Observe the general repair instructions for bearings and shims ⇒ page 5 .*
- *Always renew both bearings for differential together.*
- *Adjustment work is required when renewing the parts marked with 1) ⇒ page 180 .*

1 - Gearbox housing 1)

2 - Shim “S_2”

- ❑ Note thickness
- ❑ If bearings for differential are renewed, thickness of required shim must be determined ⇒ page 194

3 - Tapered roller bearing outer race 1)

- ❑ Pulling out ⇒ page 217
- ❑ Driving in ⇒ page 217

4 - Tapered roller bearing inner race 1)

- ❑ Pulling off ⇒ page 217
- ❑ Pressing on ⇒ page 218

5 - Differential with crown wheel 1)

- ❑ Crown wheel cannot be removed from differential
- ❑ Differential bevel gears cannot be renewed

6 - Inner race for angular contact ball bearing 1)

- ❑ Pulling off ⇒ page 218
- ❑ Pressing on ⇒ page 218

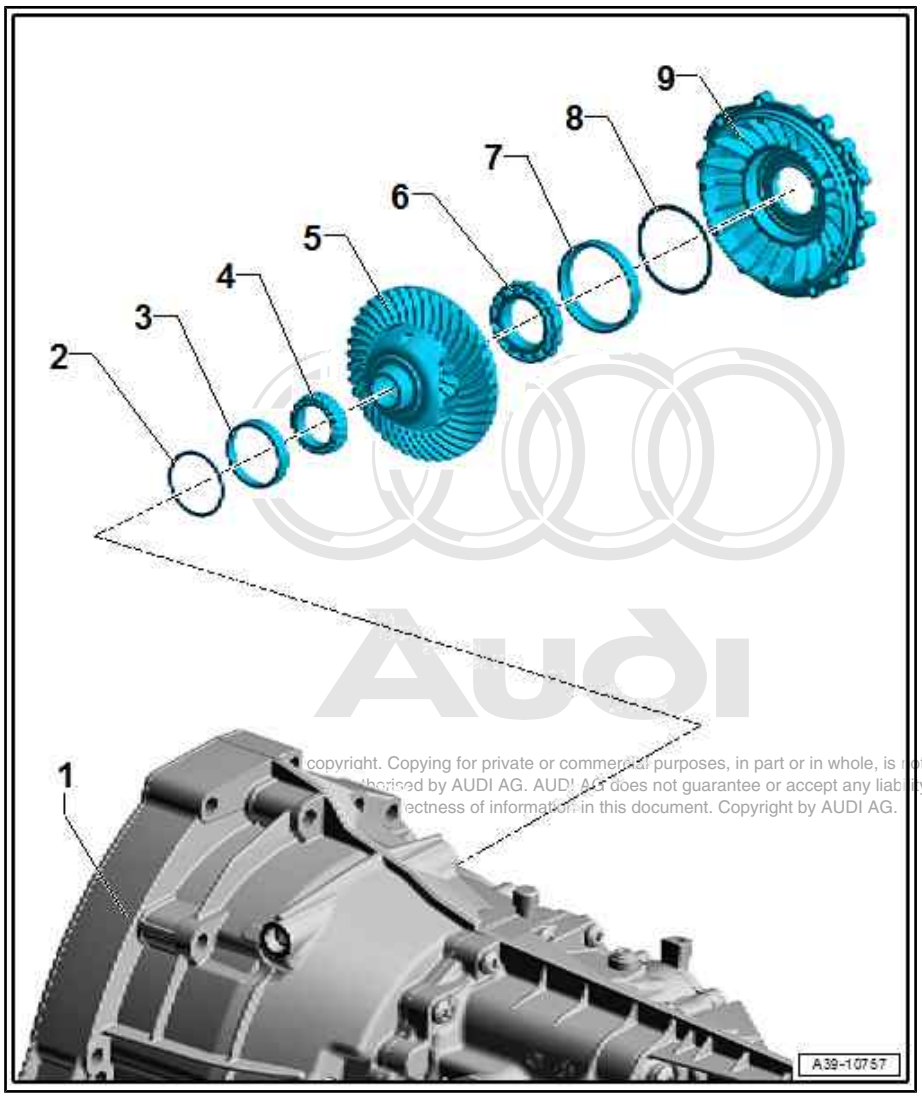

copyright. Copying for private or commercial purposes, in part or in whole, is not authorised by AUDI AG. AUDI AG does not guarantee or accept any liability ectness of information in this document. Copyright by AUDI AG.

7 - Outer race for angular contact ball bearing [1)]

- ❑ Removing ⇒ page 219 and ⇒ page 219
- ❑ Pressing in ⇒ page 219

8 - Shim "S_1"

- ❑ Note thickness
- ❑ If bearings for differential or cover for final drive are renewed ⇒ Item 9 (page 211) , thickness of required shim must be determined ⇒ page 194

9 - Cover for final drive [1)]

- ❑ If renewed, re-determine thickness of shim "S_1" ⇒ page 203

3.2 Removing and installing differential

Note

Before carrying out assembly work on differential, drain off gear oil, secure gearbox to assembly stand and remove clutch module with flange shaft (right-side) ⇒ page 61 .

Special tools and workshop equipment required

- ♦ Drip tray for workshop hoist - VAS 6208-

Removing

- Gearbox removed ⇒ 6-speed manual gearbox 0CS, 0DJ, 0CX; Rep. gr. 34 ; Removing and installing gearbox; Removing gearbox .
- Gearbox is secured to gearbox support - T40173- with tensioning strap -1-.

– Tilt gearbox towards rear and slightly to left with gearbox support - T40173- to prevent gear oil from escaping.

– Place drip tray - VAS 6208- under the gearbox.

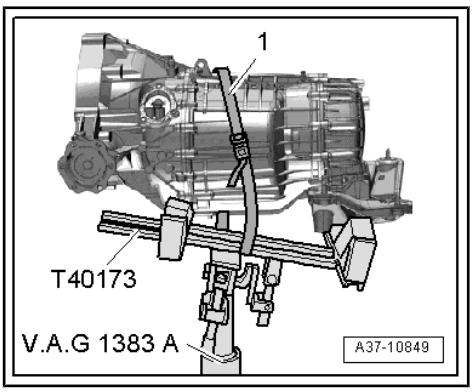

Protected by copyright. Copying for private or commercial purposes, in part or in whole, is not permitted unless authorised by AUDI AG. AUDI AG does not guarantee or accept any liability with respect to the correctness of information in this document. Copyright by AUDI AG.

– Remove flange shaft (right-side) ⇒ page 223 .

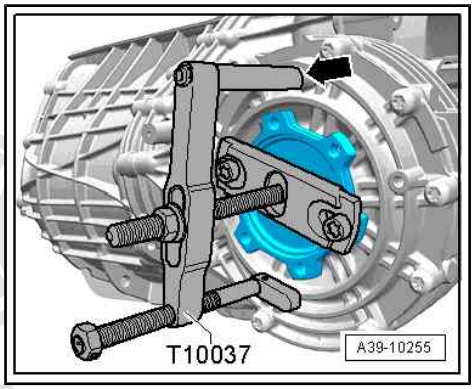

Unscrew bolts -arrows- and detach cover for final drive -1-.

Caution

Risk of damage to the differential.

- ***Detach cover for final drive from gearbox housing slowly and carefully. The differential may otherwise fall out of the gearbox.***
- ***A differential which has fallen to the ground can no longer be installed.***

Protected by copyright. Copying for private or commercial p
permitted unless authorised by AUDI AG. AUDI AG does n
with respect to the correctness of information in this doc

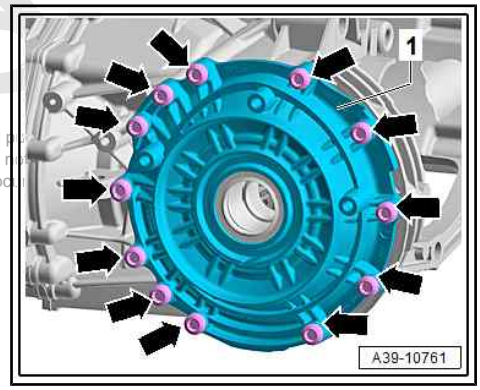

– Carefully detach cover for final drive (some remaining gear oil may drain off).

– Carefully remove differential -1- and set it down on a soft surface.

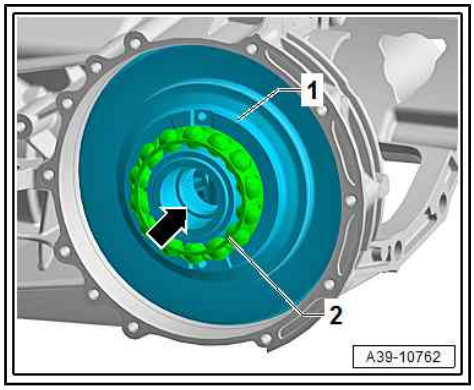

Note

- *When doing so, do not lift the differential by holding onto the cage of the angular contact ball bearing -2-; instead, use the hole -arrow- for the flange shaft (right-side).*
- *If tapered roller bearing outer race (left-side) of differential requires renewal, first remove flange shaft (left-side)* *⇒ page 219* .

Installing

Installation is carried out in reverse order; note the following:

– Fit differential -1-.

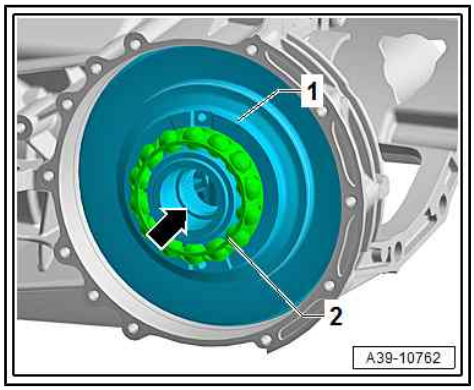

Note

When doing so, do not lift the differential by holding onto the cage of the angular contact ball bearing -2-; instead, use the hole -arrow- for the flange shaft (right-side).

– Renew O-ring -A- on cover for final drive and lubricate lightly with gear oil.

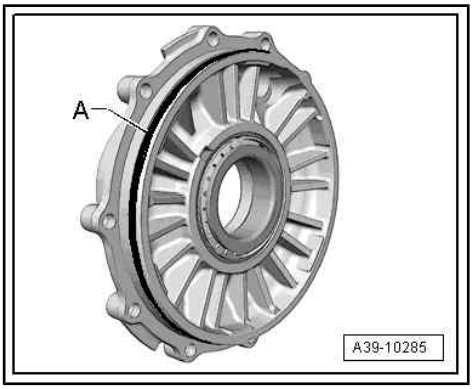

– Install cover for final drive -1- and tighten bolts -arrows-.

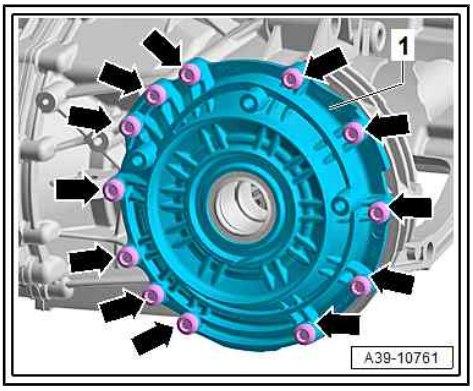

– Install flange shaft (right-side) ⇒ page 224 .

Note

If previously removed, install flange shaft (left-side) ⇒ page 222 .

– After installing gearbox, fill up with gear oil and check gear oil level ⇒ 6-speed manual gearbox 0CS, 0DJ, 0CX; Rep. gr. 34 ; Gear oil; Checking gear oil level .

Tightening torques

- ⇒ “2.1 Exploded view - final drive”, page 169

3.3 Dismantling and assembling differential

Note

- *Observe the general repair instructions for bearings and shims ⇒ page 5 .*
- *Before carrying out assembly work on differential, drain off gear oil, secure gearbox to assembly stand and remove clutch module with flange shaft (right-side) ⇒ page 61 .*

Protected by copyright. Copying for private or commercial purposes, in part or in whole, is not permitted unless authorised by AUDI AG. AUDI AG does not guarantee or accept any liability with respect to the correctness of information in this document. Copyright by AUDI AG.

Special tools and workshop equipment required

- Crankshaft seal fitting tool - VW 204 B-
- Punch - VW 295-
- Thrust plate - VW 401-
- Thrust plate - VW 402-
- Press tool - VW 412-
- Thrust pad - VW 447 H-

Protected by copyright. Copying for private or commercial purposes, in part or in whole, is not permitted unless authorised by AUDI AG. AUDI AG does not guarantee or accept any liability with respect to the correctness of information in this document. Copyright by AUDI AG.

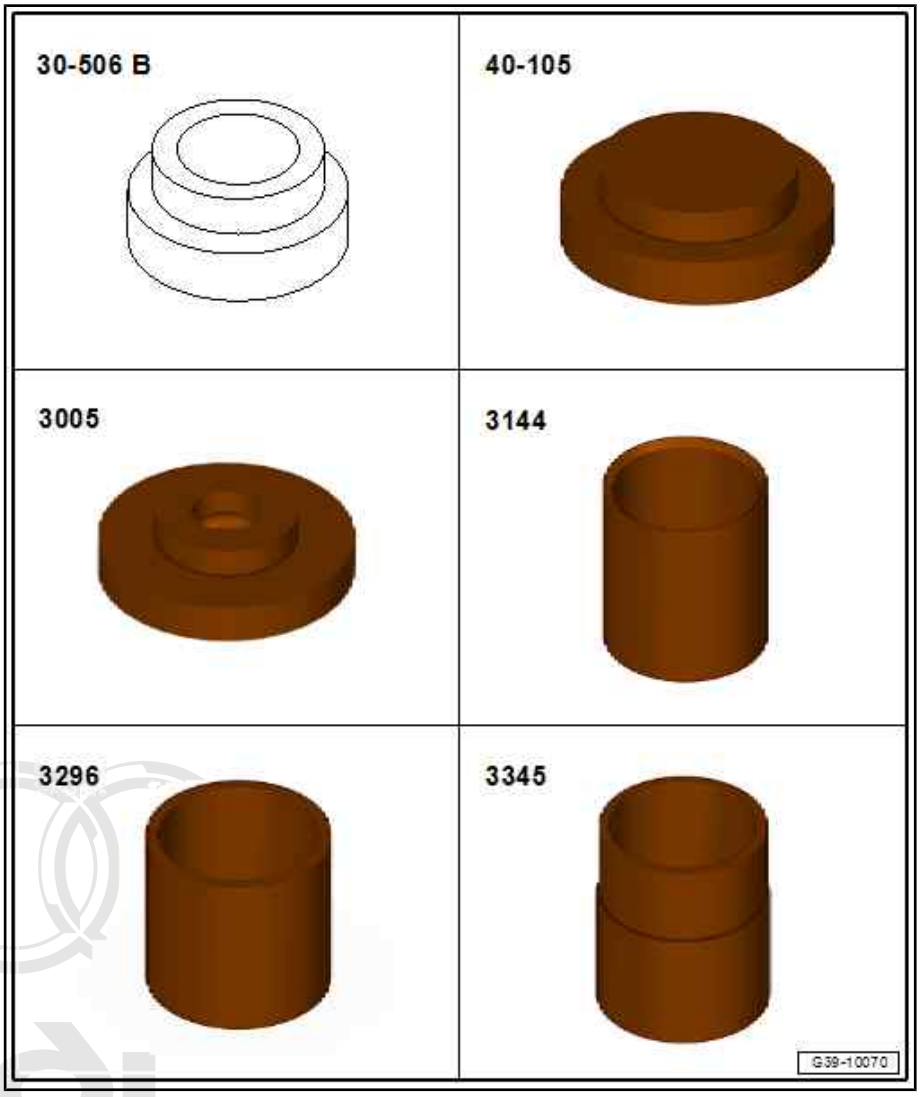

Protected by copyright. Copying for private or commercial purposes, in part or in whole, is not permitted unless authorised by AUDI AG. AUDI AG does not guarantee or accept any liability with respect to the correctness of information in this document. Copyright by AUDI AG.

- Press tool - 30 - 506 B-
- Thrust plate - 40 - 105-
- Thrust plate - 3005-
- Sleeve - 3144-
- Tube - 3296-
- Wheel bearing tube - 3345-
- Hub grease cap puller - VW 637/2-

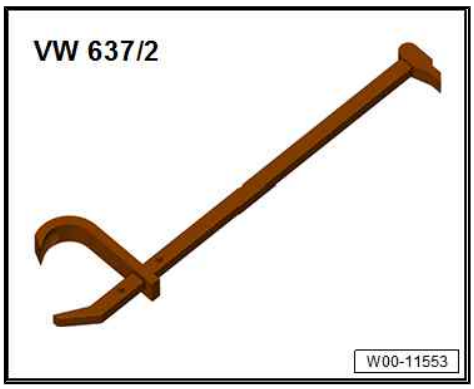

- Pressure sleeve - T10299-

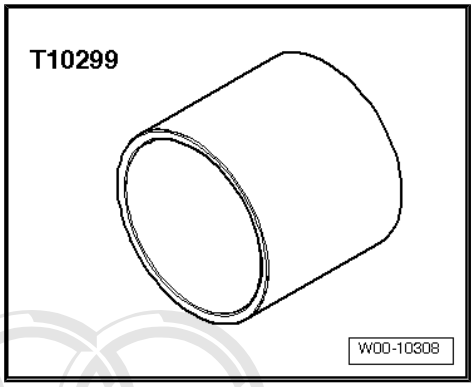

- Tapered roller bearing puller - V.A.G 1582-

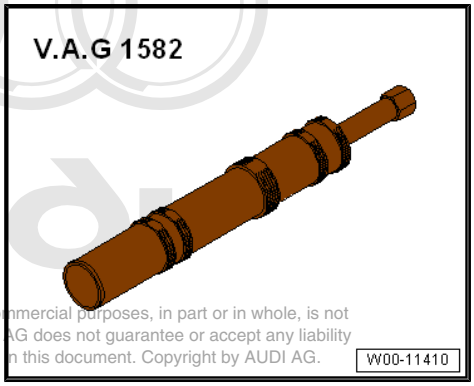

Protected by copyright. Copying for private or commercial purposes, in part or in whole, is not permitted unless authorised by AUDI AG. AUDI AG does not guarantee or accept any liability with respect to the correctness of information in this document. Copyright by AUDI AG.

- Adapter - V.A.G 1582/16A-
- Adapter - V.A.G 1582/17-
- Inductive heater - VAS 6414-

- -1- Internal puller - VAS 251 619 (Kukko 21/89)-

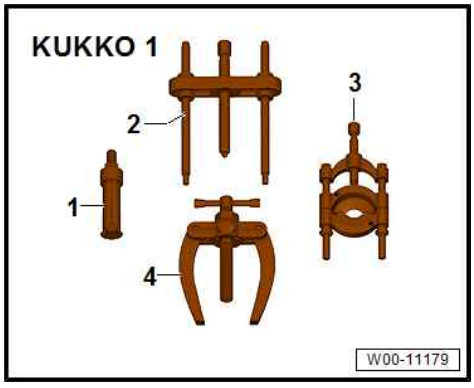

- -1- Internal puller - VAS 6775-
- -4- Counter-support - VAS 251 623 (Kukko 22/2)-
- -4- Counter-support - VAS 251 625 (Kukko 22/4)-

– Secure gearbox to gearbox support ⇒ page 116 .

– Remove differential ⇒ page 211 .

Pulling tapered roller bearing outer race (left-side) out of gearbox housing

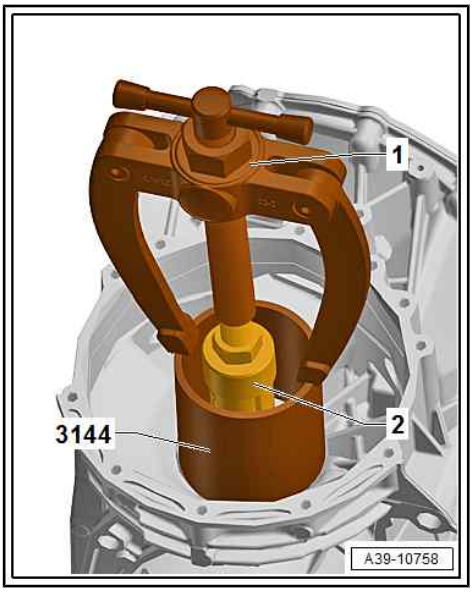

1 - Counter-support - VAS 251 623 (Kukko 22/2)-

2 - Internal puller 56 … 70 mm - VAS 6775-

Use internal puller - VAS 6775- so that it can be applied below outer race.

– After removing, check shim for damage.

Driving tapered roller bearing outer race (left-side) into gearbox housing

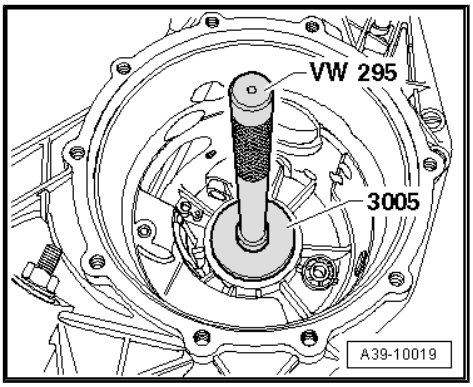

Note

First insert shim in gearbox housing.

Pulling off tapered roller bearing inner race (left-side)

– Before setting up the puller, place thrust plate - 40 - 105- on differential cage.

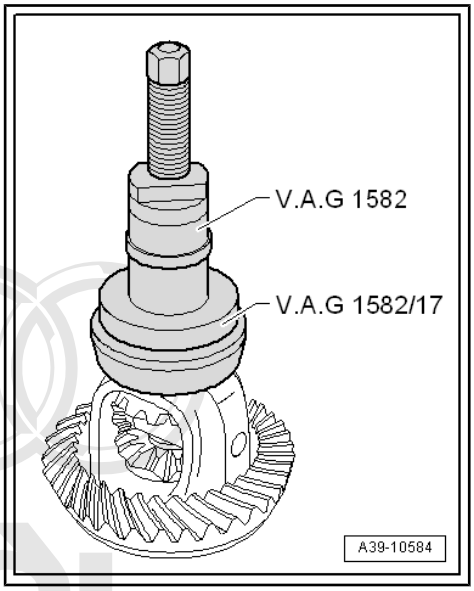

Protected by copyright. Copying for private or commercial purposes, in part or in whole, is not permitted unless authorised by AUDI AG. AUDI AG does not guarantee or accept any liability with respect to the correctness of information in this document. Copyright by AUDI AG.

Pressing on tapered roller bearing inner race (left-side)

WARNING

Wear protective gloves.

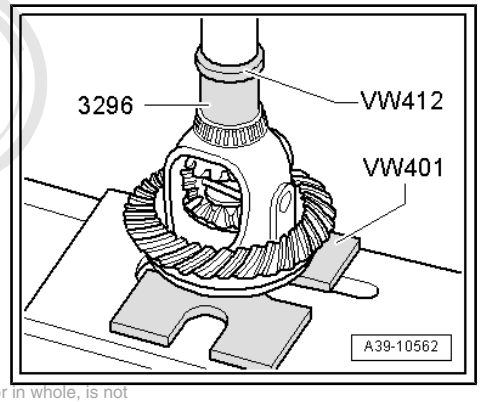

Note

Support bottom of differential with press tool - 30 - 506 B- (do not apply to inner race).

Protected by copyright. Copying for private or commercial purposes, in part or in whole, is not permitted unless authorised by AUDI AG. AUDI AG does not guarantee or accept any liability with respect to the correctness of information in this document. Copyright by AUDI AG.

– Heat inner race to approx. 100 °C, fit in position and press home.

Pulling off inner race of angular contact ball bearing (right-side)

– Carefully secure differential in a vice with soft jaws -A-.

– Detach bearing cage and balls from inner race.

– Before setting up puller, place thrust pad - VW 447 H- on differential cage.

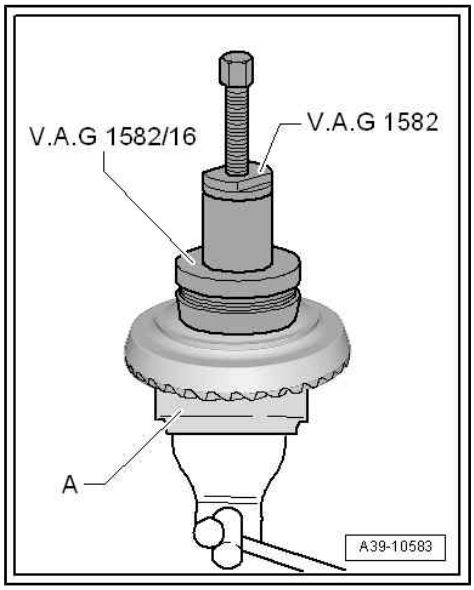

Pressing on inner race of angular contact ball bearing (right-side)

WARNING

Wear protective gloves.

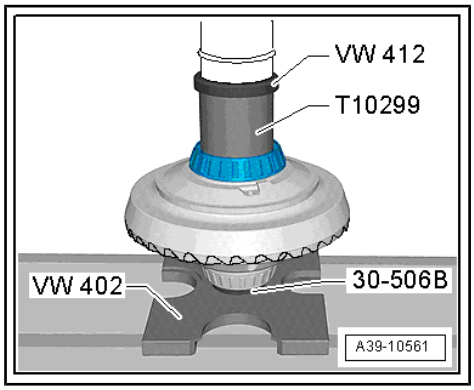

Note

- *Support bottom of differential with press tool - 30 - 506 B- (do not apply to inner race).*
- *The illustration shows an inner race for a tapered roller bearing; the procedure is identical for pressing on the inner race for an angular contact ball bearing.*

– Heat inner race to approx. 100 °C, fit in position and press home.

Pressing outer race for angular contact ball bearing slightly off bearing seat

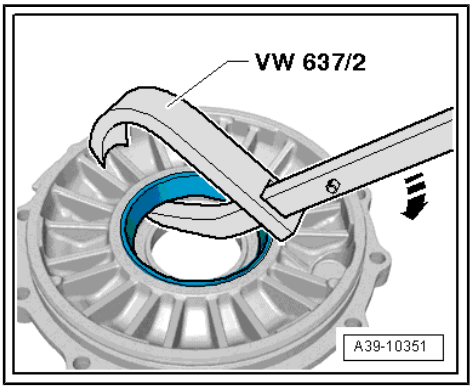

Note

To facilitate removal of the outer race for the angular contact ball bearing, heat up the cover for final drive to approx. 100 °C using the hot air blower - V.A.G 1416- .

– Then press outer race for angular contact ball bearing slightly off bearing seat by applying hub grease cap puller - VW 637/2- continuously in small stages and pressing in direction of -arrow-.
– Then pull outer race for angular contact ball bearing out of final drive cover ⇒ page 219 .

Pulling outer race -3- for angular contact ball bearing out of final drive cover

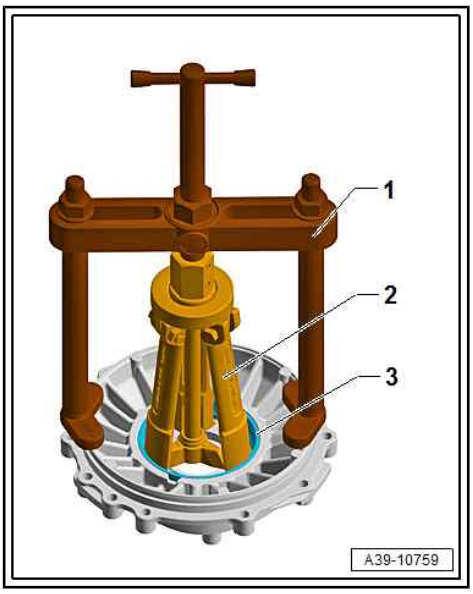

1 - Counter-support - VAS 251 625 (Kukko 22/4)-
2 - Internal puller 56 … 110 mm - VAS 251 619 (Kukko 21/89)-

Protected by copyright. Copying for private or commercial purposes, in part or in whole, is not permitted unless authorised by AUDI AG. AUDI AG does not guarantee or accept any liability with respect to the correctness of information in this document. Copyright by AUDI AG.

Pressing outer race for angular contact ball bearing into final drive cover

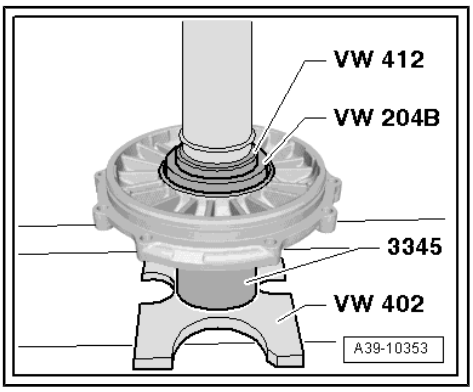

– First install shim in cover for final drive.
– Press in outer race for angular contact ball bearing onto stop; larger diameter of -VW 204 B- faces towards outer race.

Note

Support cover for final drive with -3345- directly below bearing seat.

3.4 Removing and installing flange shaft (left-side)

Special tools and workshop equipment required

♦ Drip tray for workshop hoist - VAS 6208-

♦ Puller - T10037-

♦ Multi-purpose tool - VW 771/1-

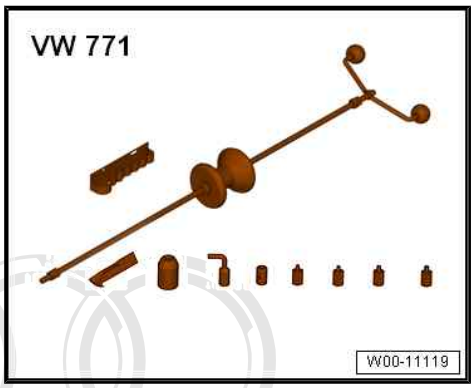

♦ Sealing grease for oil seals ⇒ Electronic parts catalogue

Removing

- Gearbox removed ⇒ 6-speed manual gearbox 0CS, 0DJ, 0CX; Rep. gr. 34 ; Removing and installing gearbox; Removing gearbox
- Gearbox is secured to gearbox support - T40173- with tensioning strap -1-.

– Tilt gearbox to rear with gearbox support - T40173- to prevent gear oil from escaping.

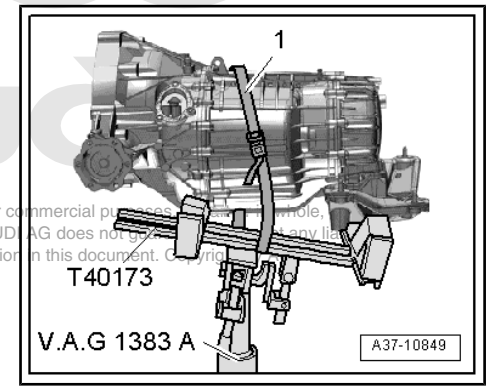

Protected by copyright. Copying for private or commercial purposes, in part or in whole, is not permitted unless authorised by AUDI AG. AUDI AG does not guarantee or accept any liability with respect to the correctness of information in this document. Copyright by AUDI AG.

– Unscrew bolts -arrows- on mounting bracket -1- for flange shaft (left-side).

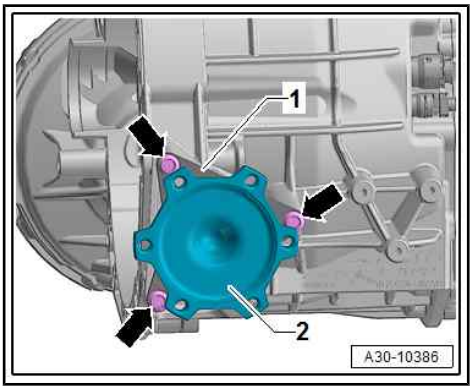

Caution

Risk of damage to oil seal.

- *If you do not keep the shaft centred when pulling it out further, the splines of the shaft -2- will fall against the inner oil seal -arrow 3- between the differential and the gearbox housing.*
- *If oil seal is damaged, it must be renewed ⇒ page 158 .*

– Remove flange shaft (left-side) from gearbox in direction of -arrow A-.

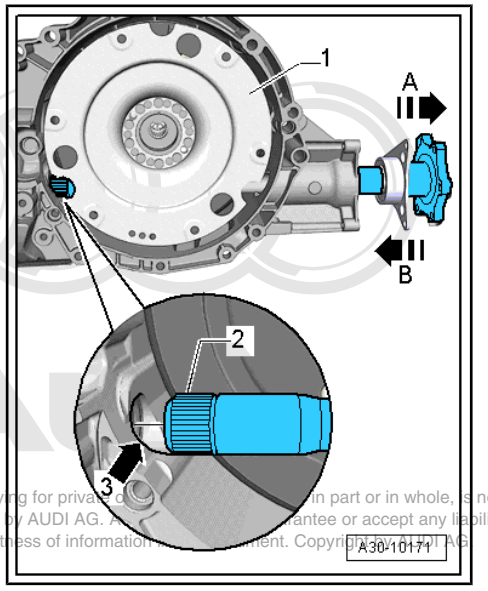

Protected by copyright. Copying for private or commercial purposes, in part or in whole, is not permitted unless authorised by AUDI AG. AUDI AG does not guarantee or accept any liability with respect to the correctness of information in this document. Copyright by AUDI AG

Note

- *If the flange shaft (left-side) cannot be removed by hand, pull it out carefully using multi-purpose tool - VW 771- .*
- *To do this, secure plate of puller - T10037- to flange shaft -arrows- and attach plate to spindle of multi-purpose tool - VW 771- (nuts -A-).*

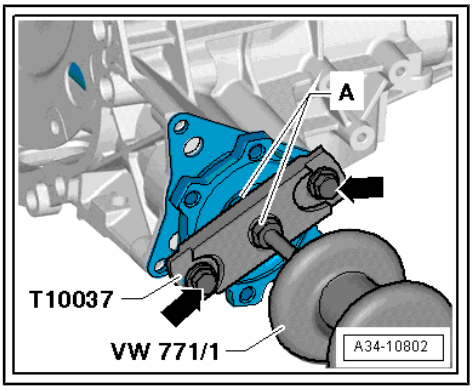

– Remove clutch module ⇒ page 30 .

Caution

Risk of damaging clutch module when removing and installing

- *Refer to Workshop Manual ⇒ "2.3 Removing and installing clutch module", page 30 .*

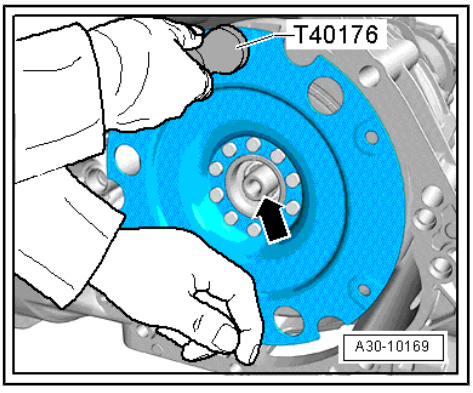

Installing flange shaft (left-side)

Installation is carried out in reverse order; note the following:

– Thoroughly clean area of gearbox housing leading to differential -arrow A-, and oil seal -arrow B-.

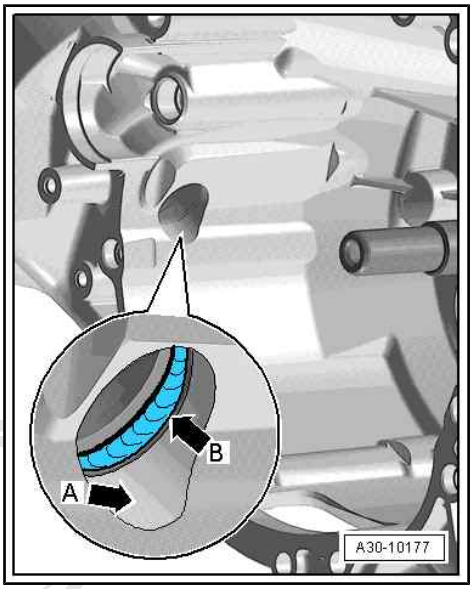

Note

If oil seal for flange shaft (left-side) between differential and gearbox housing -arrow B- is damaged, it must be renewed ⇒ page 158 .

– Pack space between sealing lip and dust lip half full with sealing grease for oil seals .

– Thoroughly clean flange shaft (left-side).

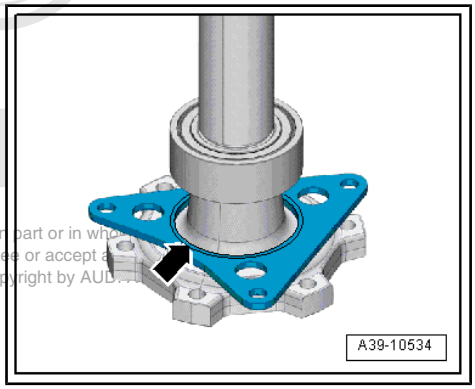

Protected by copyright. Copying for private or commercial purposes, in part or in whole, is not permitted unless authorised by AUDI AG. AUDI AG does not guarantee or accept any liability with respect to the correctness of information in this document. Copyright by AUDI AG.

– Install clutch module -1- ⇒ page 30 .

– Turn clutch module -1- so that you can see opening to differential -arrow 3-.

– Slide flange-shaft (left-side) -2- into gearbox in direction of -arrow B- (keep end of shaft centred while guiding it into oil seal on front final drive -arrow 3-).

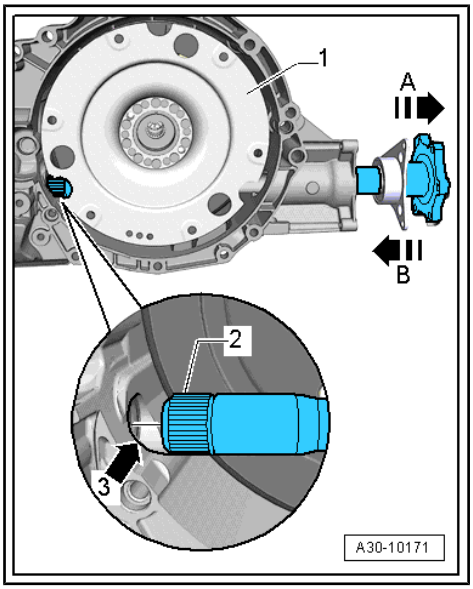

Caution

Risk of damage to oil seal.

- ***If you do not keep the shaft centred, the splines of the shaft -2- will damage the oil seal -arrow 3- between the differential and the gearbox housing.***
- ***If oil seal is damaged, it must be renewed ⇒ page 158 .***

– Tighten mounting bracket -1- for flange shaft (left-side) -arrows-.

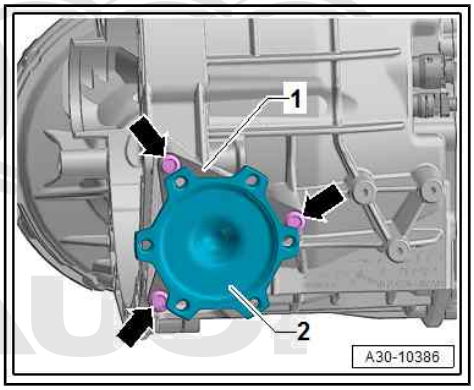

Tightening torques

♦ ⇒ “2.1 Exploded view - final drive”, page 169

Protected by copyright. Copying for private or commercial purposes, in part or in whole, is not permitted unless authorised by AUDI AG. AUDI AG does not guarantee or accept any liability with respect to the correctness of information in this document. Copyright by AUDI AG.

3.5 Removing and installing flange shaft (right-side)

Note

The flange shaft (right-side) can also be removed and installed with the gearbox installed ⇒ 6-speed manual gearbox 0CS, 0DJ, 0CX; Rep. gr. 39 ; Differential; Removing and installing flange shaft (right-side) .

Special tools and workshop equipment required

♦ Drift - VW 295-

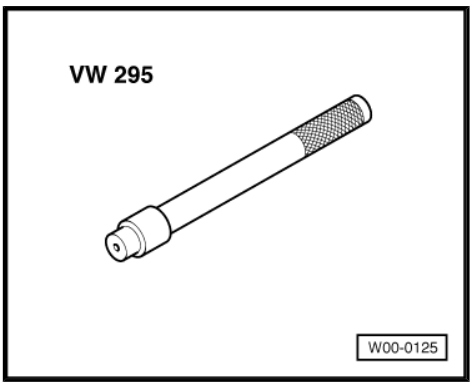

♦ Puller - T10037-

♦ Sealing grease for oil seals ⇒ Electronic parts catalogue

Removing

- Gearbox removed ⇒ 6-speed manual gearbox 0CS, 0DJ, 0CX; Rep. gr. 34 ; Removing and installing gearbox; Removing gearbox
- Gearbox is secured to gearbox support - T40173- with tensioning strap -1-.

– Tilt gearbox to rear with gearbox support - T40173- to prevent gear oil from escaping.

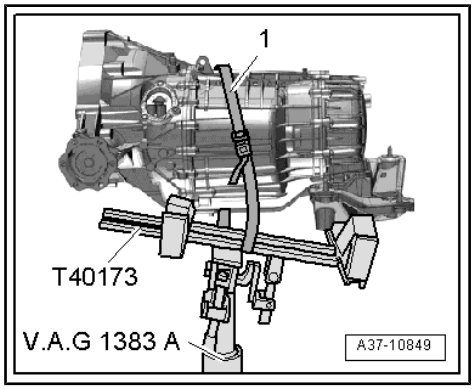

– Remove flange shaft (right-side); to do so, secure puller - T10037- to gearbox housing -arrow-.

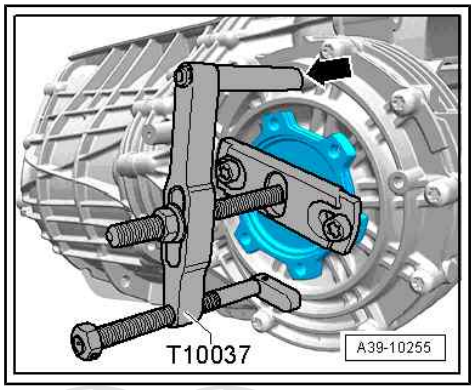

Installing flange shaft (right-side).

Installation is carried out in reverse order; note the following:

– Always renew circlip for flange shaft -A-.

– Clamp flange shaft in vice, using jaw protectors. Use new circlip -A- to press old circlip out of groove in flange shaft.

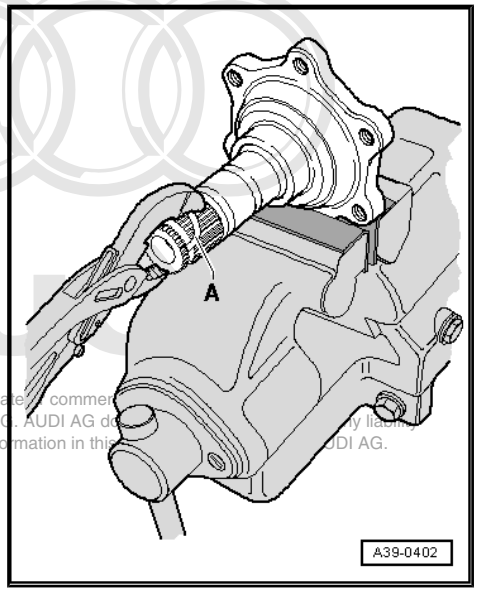

Protected by copyright. Copying for private or commercial purposes, in part or in whole, is not permitted unless authorised by AUDI AG. AUDI AG does not guarantee or accept any liability with respect to the correctness of information in this document. Copyright by AUDI AG.

– Check flange shaft oil seal (right-side) -arrow- for damage and renew if necessary ⇒ page 162 .

– Pack space between sealing lip and dust lip half full with sealing grease for oil seals .

– Knock flange shaft in with drift - VW 295- .

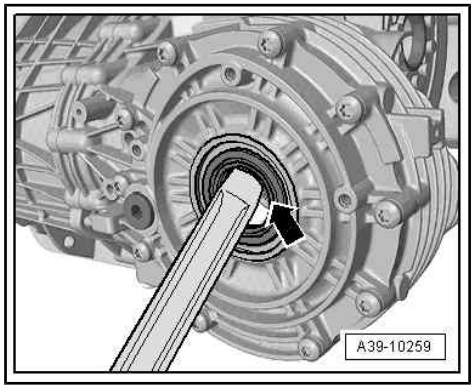

3.6 Renewing mounting bracket and ball bearing for flange shaft (left-side)

Special tools and workshop equipment required

- Thrust plate - VW 401-

- Thrust plate - VW 402-

Protected by copyright. Copying for private or commercial purposes, in part or in whole, is not permitted unless authorised by AUDI AG. AUDI AG does not guarantee or accept any liability with respect to the correctness of information in this document. Copyright by AUDI AG.

- Press tool - VW 412-

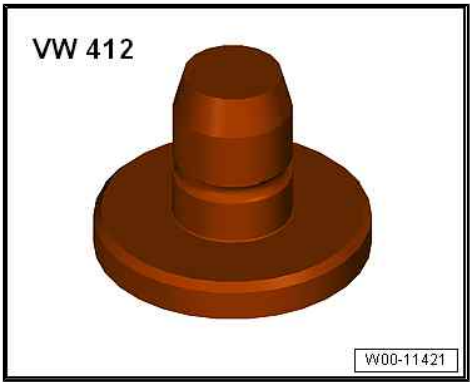

- Tube - VW 516-

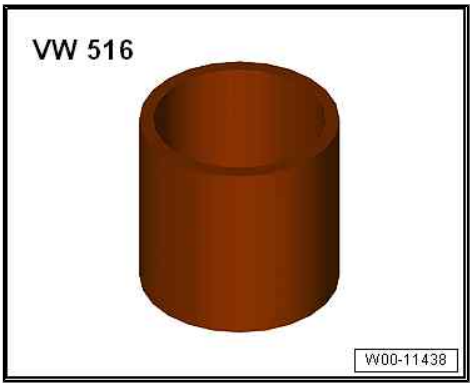

– Remove flange shaft (left-side) ⇒ page 219 .
– Remove circlip -1- from flange shaft.

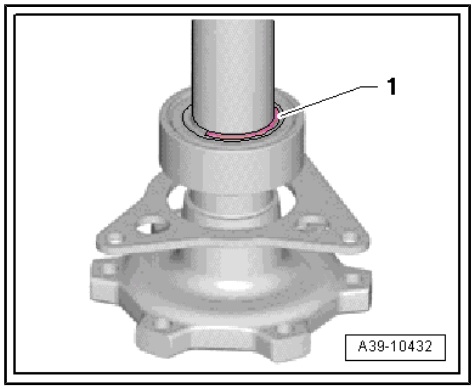

– Press ball bearing -A- off flange shaft.

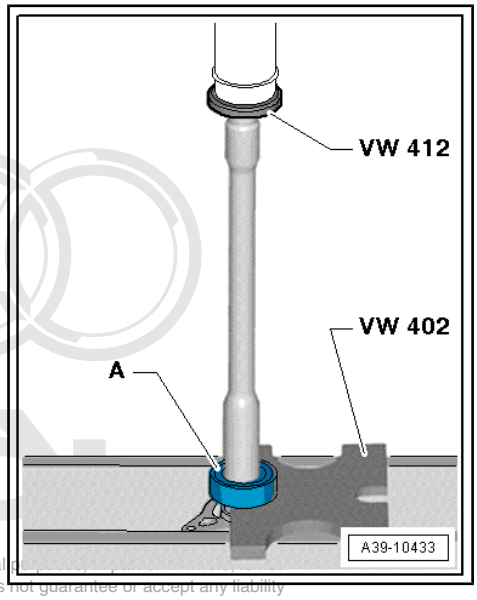

Protected by copyright. Copying for private or commercial purposes, [illegible]
permitted unless authorised by AUDI AG. AUDI AG does not guarantee or accept any liability
with respect to the correctness of information in this document. Copyright by AUDI AG.

– Fit new mounting bracket -1-.
• Installation position: side with lettering faces towards flange for drive shaft.
– Fit new ball bearing -2-.

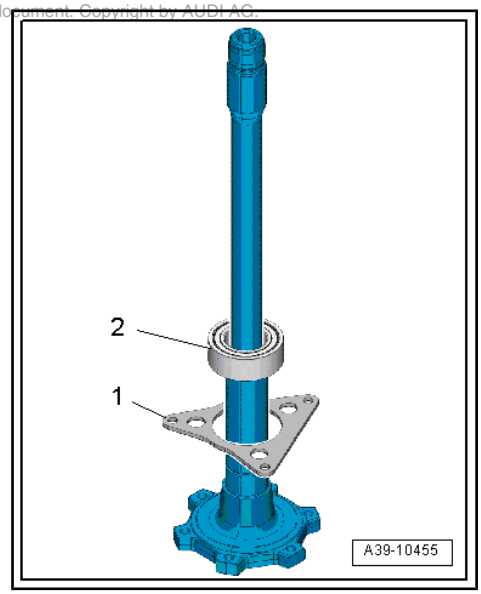

– With mounting bracket -B- installed, press on ball bearing -A- as far as stop.

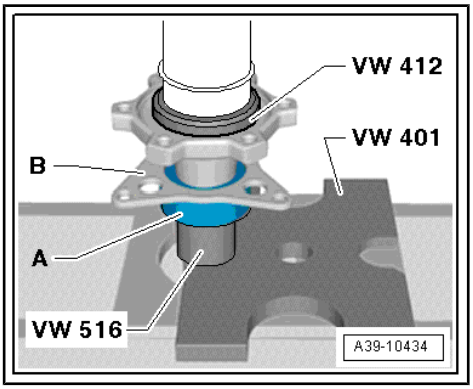

– Fit circlip -1- in annular groove on flange shaft.

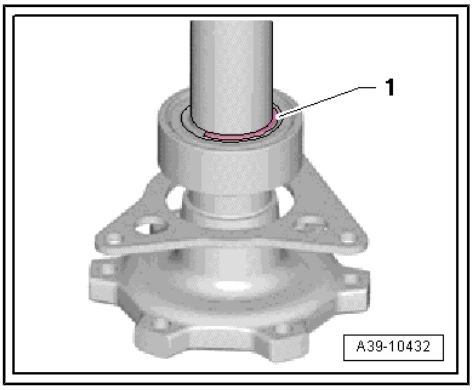

Protected by copyright. Copying for private or commercial purposes, in part or in whole, is not permitted unless authorised by AUDI AG. AUDI AG does not guarantee or accept any liability with respect to the correctness of information in this document. Copyright by AUDI AG.

4 Four-wheel drive coupling

⇒ “4.1 Exploded view - four-wheel drive coupling”, page 228

⇒ “4.2 Removing and installing four-wheel drive coupling”, page 229

4.1 Exploded view - four-wheel drive coupling

For extensive information on the four-wheel drive coupling -1-, refer to ⇒ Rear final drive; Rep. gr. 39 ; Four-wheel drive coupling .

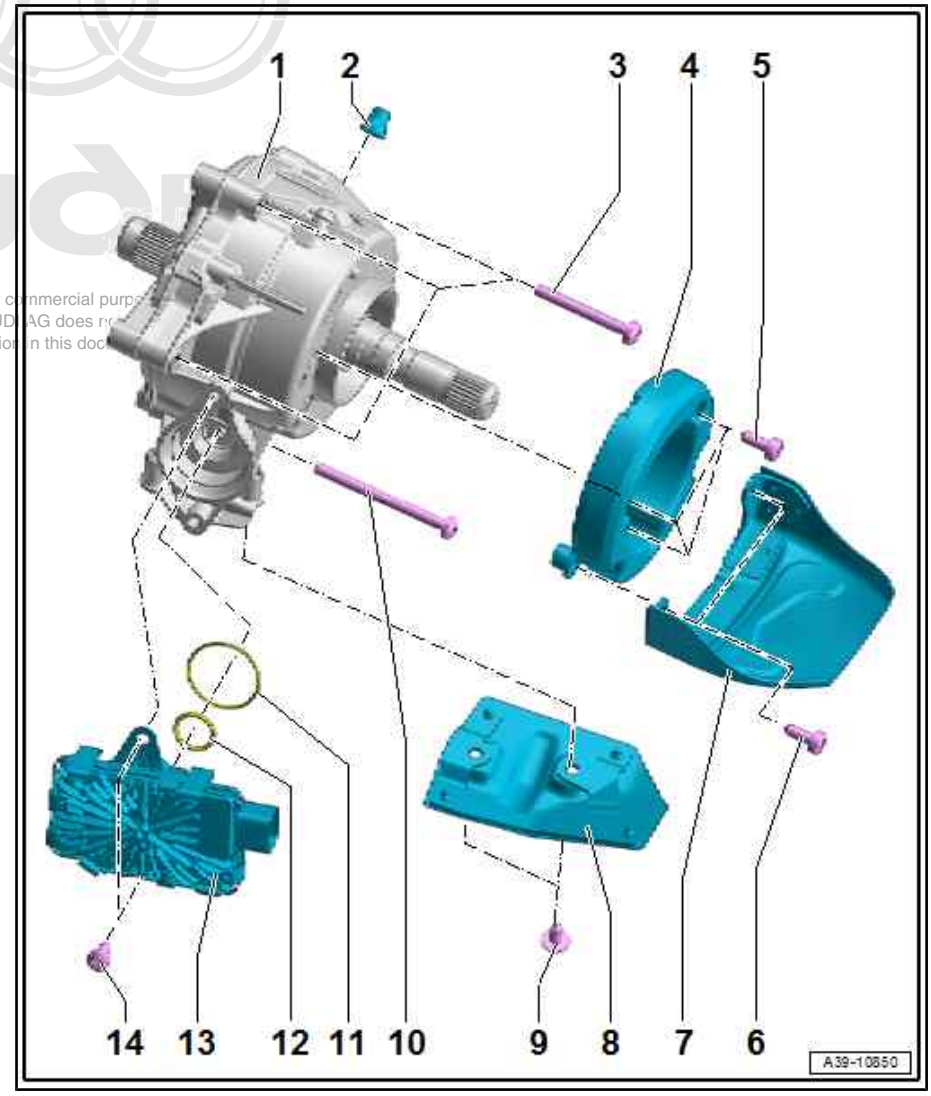

1 - Four-wheel drive coupling

- ❑ Removing and installing ⇒ page 229
- ❑ Servicing ⇒ Rear final drive; Rep. gr. 39 ; Four-wheel drive coupling
- ❑ Checking ATF level ⇒ Rear final drive; Rep. gr. 39 ; Four-wheel drive coupling; Checking fluid level

Protected by copyright. Copying for private or commercial purposes, in part or in whole, is not permitted unless authorised by AUDI AG. AUDI AG does not guarantee or accept any liability with respect to the correctness of information in this document.

2 - Breather

3 - Bolt

- ❑ M8X70
- ❑ 3x
- ❑ Renew after removing
- ❑ 8 Nm + 180°

4 - Damper weight

- ❑ Depending on version

5 - Bolt

- ❑ Depending on version
- ❑ 28 Nm
- ❑ Self-locking
- ❑ Renew
- ❑ Clean thread in four-wheel drive coupling using thread tap

6 - Bolt

- ❑ Depending on version
- ❑ 28 Nm
- ❑ Self-locking
- ❑ Renew
- ❑ Clean thread in four-wheel drive coupling using thread tap

7 - Heat shield

- ❑ For propshaft
- ❑ Depending on version

8 - Heat shield

- ❑ For all-wheel drive control unit
- ❑ Depending on version

9 - Bolt

- ❑ Depending on version
- ❑ 8 Nm

10 - Bolt

- ❑ M8X100
- ❑ Renew after removing
- ❑ 8 Nm +180°

11 - O-ring

- ❑ For all-wheel drive control unit
- ❑ Renew after removing

12 - O-ring

- ❑ For all-wheel drive control unit
- ❑ Renew after removing

13 - All-wheel drive control unit - J492-

The following are integrated in the all-wheel drive control unit :

- ♦ Clutch actuator for all-wheel drive - V622-
- ♦ Clutch position sender for all-wheel drive - G969-
  - ❑ Removing and installing ⇒ Rear final drive; Rep. gr. 39 ; Four-wheel drive coupling; Removing and installing control unit

14 - Bolt

- ❑ 21 Nm

4.2 Removing and installing four-wheel drive coupling

Removing

- Gearbox removed
- Refer to general repair instructions ⇒ page 5 .

– Unscrew bolts -arrows- and detach four-wheel drive coupling from gearbox.

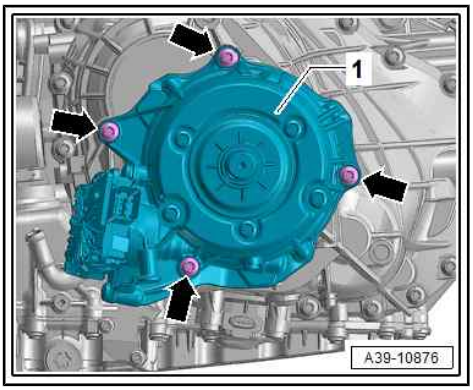

Installing

Installation is carried out in reverse order; note the following:

- Tightening torques
  ⇒ “4.1 Exploded view - four-wheel drive coupling”, page 228

Protected by copyright. Copying for private or commercial purposes, in part or in whole, is not permitted unless authorised by AUDI AG. AUDI AG does not guarantee or accept any liability with respect to the correctness of information in this document. Copyright by AUDI AG.

– Check O-ring -1- on four-wheel drive coupling input shaft -2- for damage and renew if necessary.
– Apply a very thin coating of sealing grease - G 052 128 A1- to splines of four-wheel drive coupling input shaft.

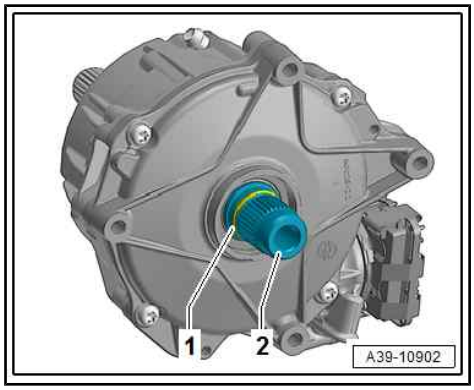

– Fit four-wheel drive coupling -1- on gearbox and tighten bolts -arrows- hand-tight.
– Tighten bolts -arrows- alternately and diagonally to specified torque.

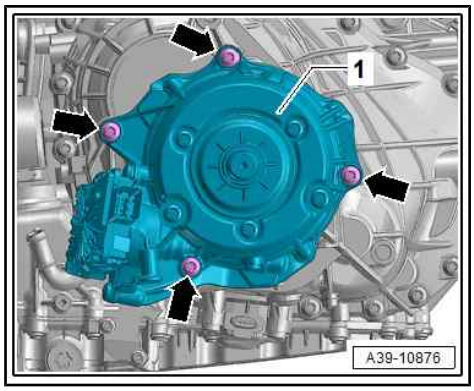

Protected by copyright. Copying for private or commercial purposes, in part or in whole, is not permitted unless authorised by AUDI AG. AUDI AG does not guarantee or accept any liability with respect to the correctness of information in this document. Copyright by AUDI AG.