Fastener Tightening Specifications

Application	Specification	
	Metric	English
Catalytic Converter to Exhaust Manifold Nut (LZ4/LY7)	45 N·m	33 lb ft
Exhaust Manifold Bolt (LZ4/LY7)	20 N·m	15 lb ft
Exhaust Manifold Heat Shield Bolt (LZ4/LY7)	10 N·m	89 lb in
Exhaust Manifold Lower Heat Shield Bolt	10 N·m	89 lb in
Exhaust Manifold Lower Heat Shield Bolt	50 N·m	37 lb ft
Exhaust Pipe to Muffler Nut (LZ4/LY7)	25 N·m	18 lb ft
Exhaust Pipe to Right Catalytic Converter Nut (LZ4/LY7)	25 N·m	18 lb ft
Heater Oxygen Sensor (HO2S)	42 N·m	31 lb ft
Heat Shield Nut	10 N·m	89 lb in
Intermediate Pipe to Muffler Nut (LAT)	30 N·m	22 lb ft
Left Catalytic Converter-to-Right Catalytic Converter Nut (LZ4/LY7)	25 N·m	18 lb ft

cardiagn.com

Exhaust Manifold Replacement (LAT or LE5)

Removal Procedure

1. Raise and support the vehicle. Refer to Lifting and Jacking the Vehicle.

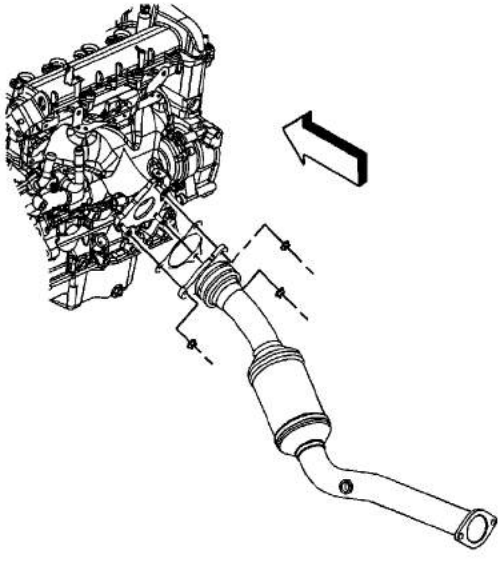

Caution: Do not bend the exhaust flex decoupler more than 3 degrees in any direction. Movement of more than 3 degrees will damage the exhaust flex decoupler.

2. Remove the catalytic converter to exhaust manifold nuts.
3. Pull down and back on the exhaust pipe in order to separate the catalytic converter from the exhaust manifold.
4. Remove and discard the catalytic converter gasket.

cardiagn.com

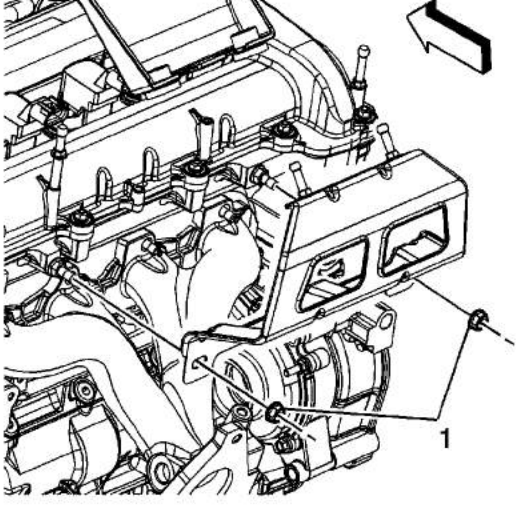

5. Remove the air cleaner outlet duct. Refer to Air Cleaner Outlet Duct Replacement.
6. Remove the outlet duct retaining bracket.
7. Remove the exhaust manifold heat shield. Refer to Exhaust Manifold Heat Shield Replacement.
8. Remove the HO2S. Refer to Heated Oxygen Sensor 1 Replacement.

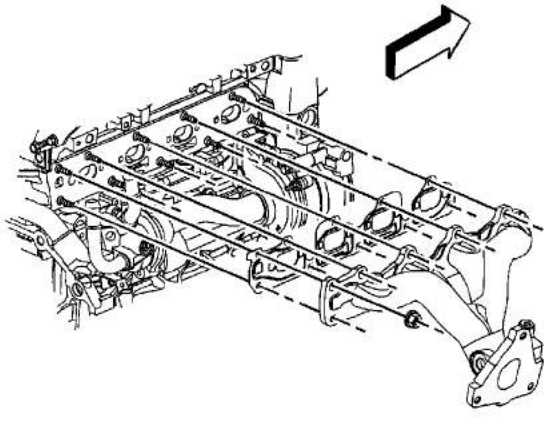

9. Remove the exhaust manifold nuts.
10. Remove the exhaust manifold.
11. Remove and discard the exhaust manifold gasket.
12. Clean and inspect all gasket mating surfaces.

Installation Procedure

cardiagn.com

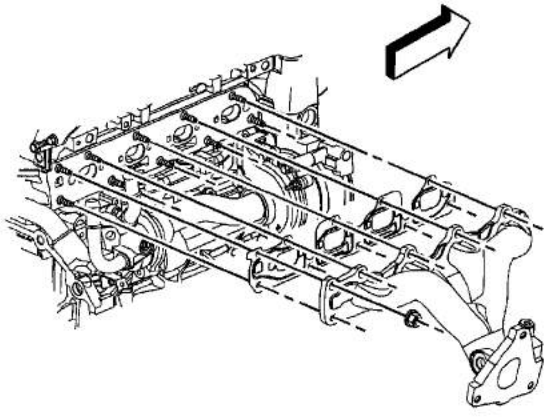

1. Install a NEW exhaust manifold gasket onto the studs.
2. Install the exhaust manifold to the cylinder head.

Caution: Refer to Fastener Caution in the Preface section.

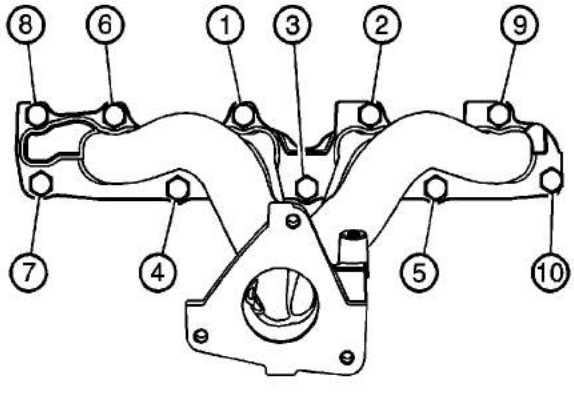

3. Install NEW exhaust manifold nuts and tighten to **14 N·m (10 lb ft)**.

cardiagn.com

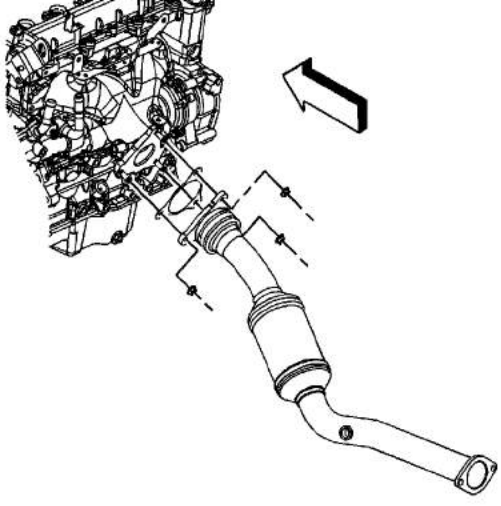

4. Install a NEW catalytic converter gasket.
5. Install the catalytic converter to the exhaust manifold studs.
6. Install the catalytic converter to exhaust manifold nuts and tighten to **50 N·m (37 lb ft)**.
7. Lower the vehicle.
8. Install the exhaust manifold heat shield. Refer to Exhaust Manifold Heat Shield Replacement.
9. Install the air cleaner outlet duct. Refer to Air Cleaner Outlet Duct Replacement.

cardiagn.com

Exhaust Manifold Replacement - Left Side (LZ4)

Removal Procedure

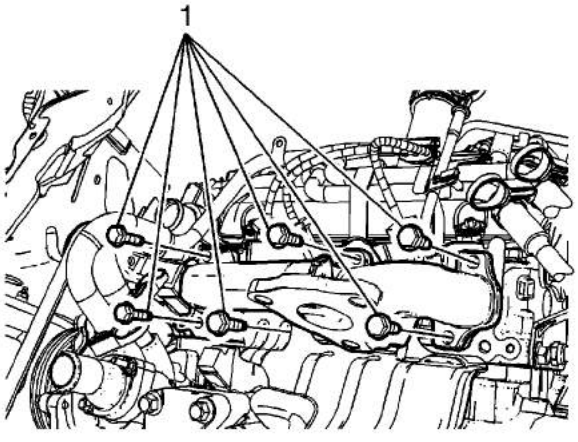

1. Remove the left side catalytic converter. Refer to Catalytic Converter Replacement - Left Side.
2. Remove the heated oxygen sensors (HO2S). Refer to Heated Oxygen Sensor Replacement - Bank 2 Sensor 1.
3. Remove the left side exhaust manifold bolts (1).
4. Remove the left side exhaust manifold and gasket.

Installation Procedure

cardiagn.com

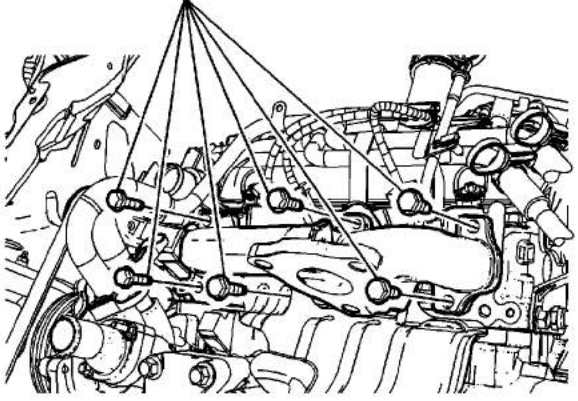

1. Install the left side exhaust manifold and a NEW exhaust manifold gasket onto the cylinder.

   Caution: Refer to Fastener Caution in the Preface section.

2. Install the exhaust manifold bolts and tighten to **20 N·m (15 lb ft)**.
3. Install the HO2S. Refer to Heated Oxygen Sensor Replacement - Bank 2 Sensor 1.
4. Install the left side catalytic converter. Refer to Catalytic Converter Replacement - Left Side.

cardiagn.com

Exhaust Manifold Replacement - Left Side (LY7 or LCS)

Removal Procedure

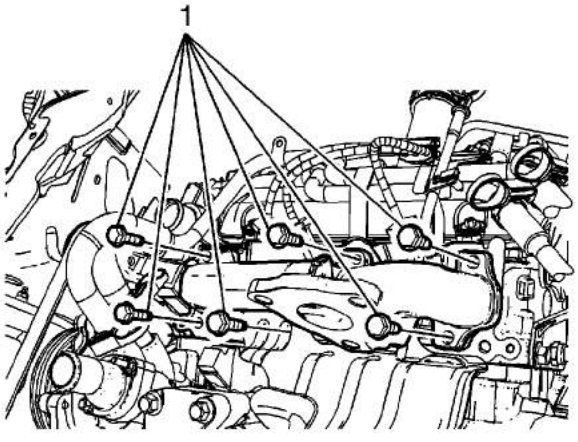

1. Remove the left side catalytic converter. Refer to Catalytic Converter Replacement - Left Side.
2. Remove the heated oxygen sensors (HO2S). Refer to Heated Oxygen Sensor Replacement - Bank 2 Sensor 1.
3. Remove the oil level indicator and tube. Refer to Oil Level Indicator and Tube Replacement.
4. Lower vehicle.
5. Remove the exhaust manifold heat shield. Refer to Exhaust Manifold Heat Shield Replacement - Left Side.
6. Remove the left side exhaust manifold bolts (1).
7. Raise the vehicle. Refer to Lifting and Jacking the Vehicle.
8. Remove the left side exhaust manifold and gasket.

Installation Procedure

cardiagn.com

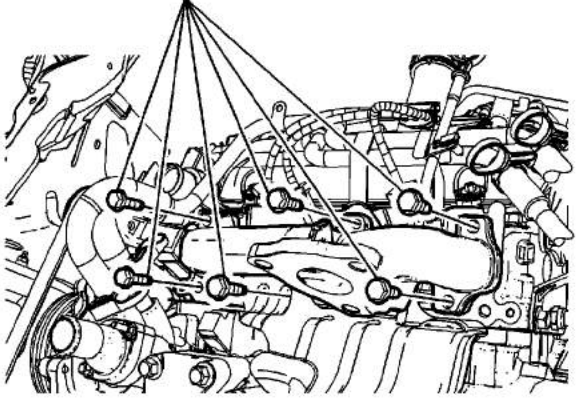

1. Install the left side exhaust manifold and a NEW exhaust manifold gasket onto the cylinder.
2. Lower the vehicle.

Caution: Refer to Fastener Caution in the Preface section.

3. Install the exhaust manifold bolts and tighten to **20 N·m (15 lb ft)**.
4. Install the HO2S. Refer to Heated Oxygen Sensor Replacement - Bank 1 Sensor 1.
5. Remove the exhaust manifold heat shield. Refer to Exhaust Manifold Heat Shield Replacement - Left Side.
6. Install the left side catalytic converter. Refer to Catalytic Converter Replacement - Left Side.
7. Install the oil level indicator and tube. Refer to Oil Level Indicator and Tube Replacement.

cardiagn.com

Exhaust Manifold Replacement - Right Side (LZ4)

Removal Procedure

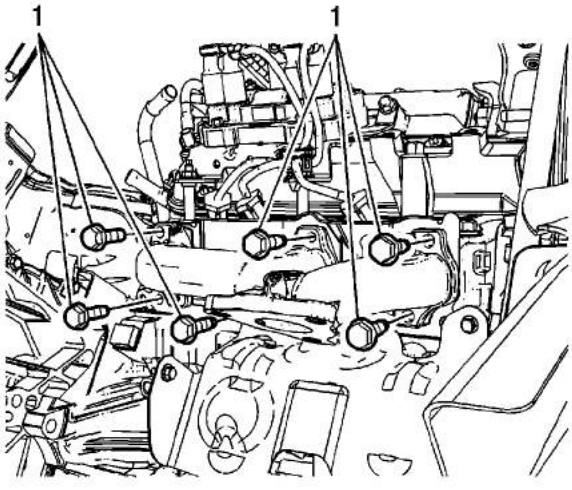

1. Remove the right side catalytic converter. Refer to Catalytic Converter Replacement - Right Side.
2. Remove the heated oxygen sensor (HO2S). Refer to Heated Oxygen Sensor Replacement - Bank 1 Sensor 1.
3. Remove the right side exhaust manifold bolts (1).
4. Remove the right side exhaust manifold and gasket.

Installation Procedure

cardiagn.com

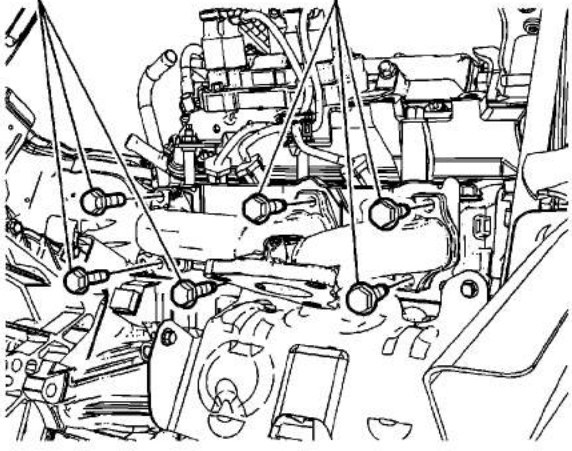

1. Install the right side exhaust manifold and a NEW exhaust manifold gasket onto the cylinder.

   Caution: Refer to Fastener Caution in the Preface section.

2. Install the exhaust manifold bolts and tighten to **20 N·m (15 lb ft)**.
3. Install the heated oxygen sensor (HO2S). Refer to Heated Oxygen Sensor Replacement - Bank 1 Sensor 1.
4. Install the right side catalytic converter. Refer to Catalytic Converter Replacement - Right Side.

cardiagn.com

Exhaust Manifold Replacement - Right Side (LY7 or LCS)

Removal Procedure

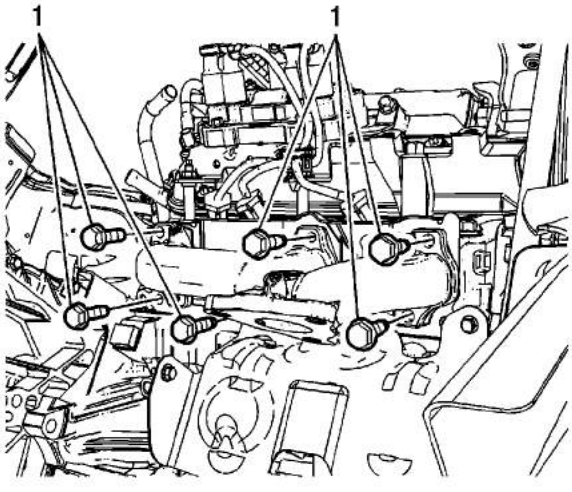

1. Remove the right side catalytic converter. Refer to Catalytic Converter Replacement - Right Side.
2. Remove the exhaust manifold heat shield. Refer to Exhaust Manifold Heat Shield Replacement - Right Side.
3. Remove the heated oxygen sensor (HO2S). Refer to Heated Oxygen Sensor Replacement - Bank 1 Sensor 1.
4. Remove the right side exhaust manifold bolts (1).
5. Remove the right side exhaust manifold and gasket.

Installation Procedure

cardiagn.com

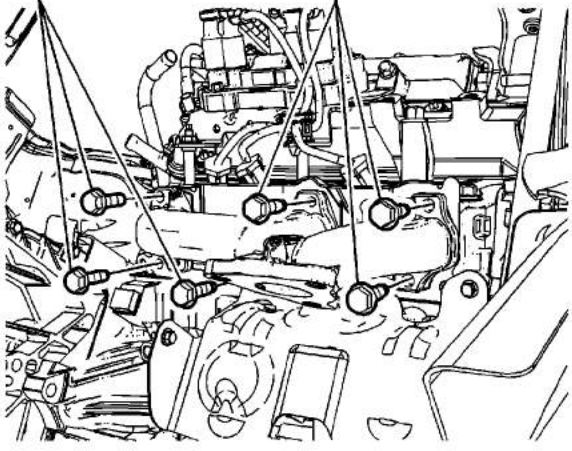

1. Install the right side exhaust manifold and a NEW exhaust manifold gasket onto the cylinder.

   Caution: Refer to Fastener Caution in the Preface section.

2. Install the exhaust manifold bolts and tighten to **20 N·m (15 lb ft)**.

   Tighten
   Tighten the bolts to.

3. Install the exhaust manifold heat shield. Refer to Exhaust Manifold Heat Shield Replacement - Right Side.
4. Install the heated oxygen sensor (HO2S). Refer to Heated Oxygen Sensor Replacement - Bank 1 Sensor 1.
5. Install the right side catalytic converter. Refer to Catalytic Converter Replacement - Right Side.

cardiagn.com

Catalytic Converter Replacement

Removal Procedure

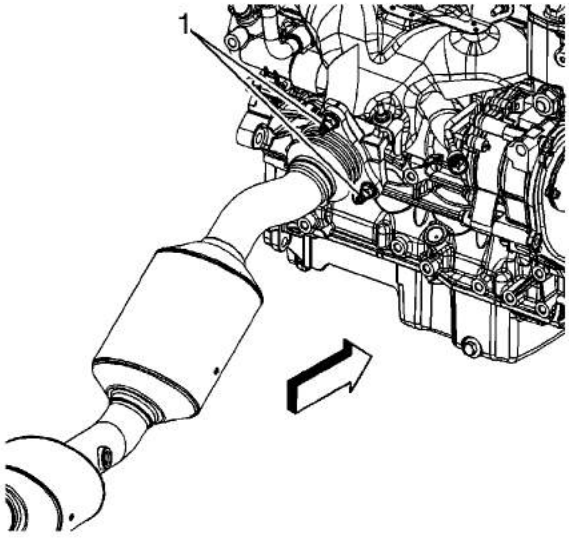

1. Remove the heated oxygen sensor. Refer to Heated Oxygen Sensor 2 Replacement.
2. Remove the catalytic converter to exhaust manifold nuts (1).

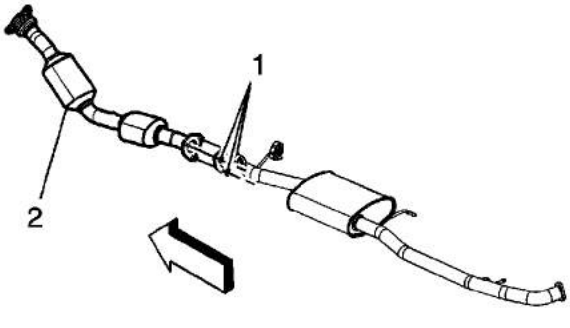

3. Remove the catalytic converter to muffler nuts (1).
4. Separate the exhaust pipe from the catalytic converter studs.
5. Position and support the exhaust pipe out of the way.

© 2010 General Motors Corporation. All rights reserved.

cardiagn.com

Installation Procedure

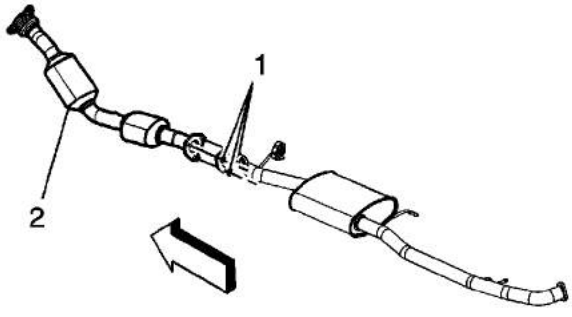

1. Install the catalytic converter (2) along with a NEW gasket to the exhaust manifold.
2. Position and join the exhaust pipe to the catalytic converter studs.

   Caution: Refer to Fastener Caution in the Preface section.

3. Install the catalytic converter to muffler nuts and tighten to **17 N·m (13 lb ft)**.

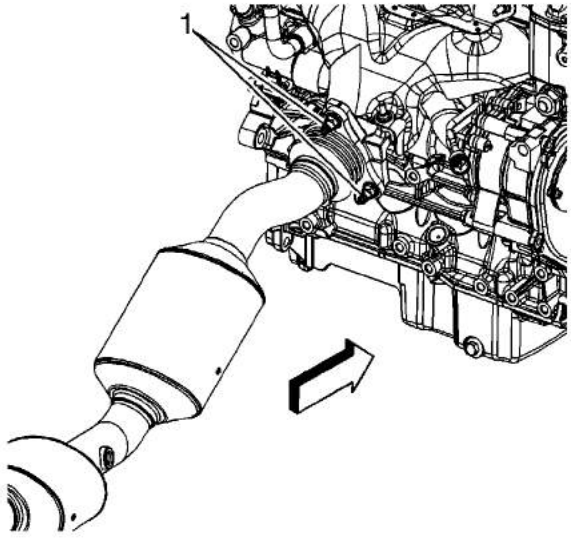

4. Install the catalytic converter to exhaust manifold nuts (1) and tighten to **50 N·m (37 lb ft)**.

cardiagn.com

cardiagn.com

Catalytic Converter Replacement - Left Side (LZ4)

Removal Procedure

Note: The catalytic converter is serviced by replacing the entire assembly. Always replace the gaskets at the front and rear flanges when servicing the catalytic converter. Never install the original gasket.

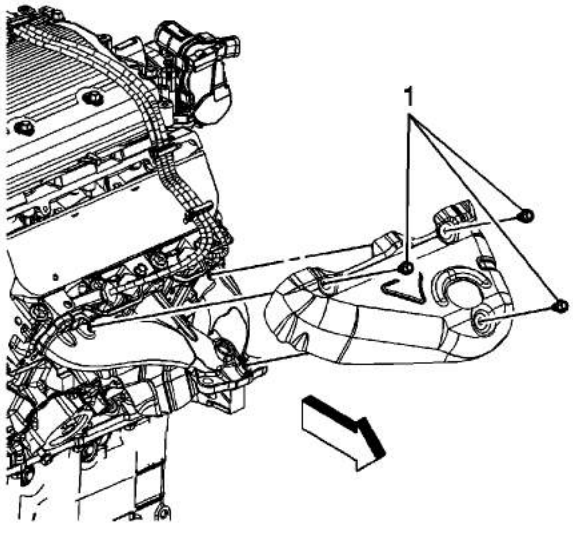

1. Remove the heated oxygen sensors (HO2S). Refer to Heated Oxygen Sensor Replacement - Bank 2 Sensor 2.
2. Lower the vehicle.
3. Remove the left side exhaust manifold heat shield bolts (1).
4. Remove the left side exhaust manifold heat shield.

cardiagn.com

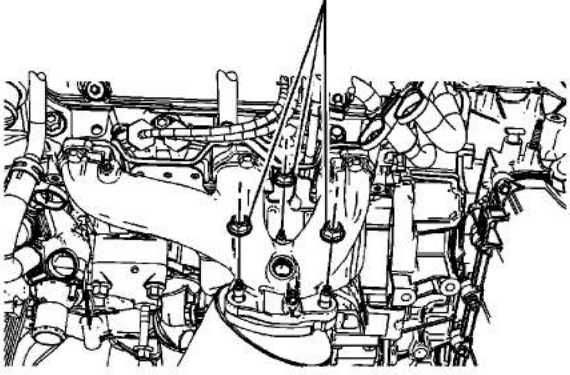

5. Remove the left side catalytic converter to exhaust manifold nuts (1).
6. Raise and support the vehicle. Refer to Lifting and Jacking the Vehicle.
7. Support the exhaust system.

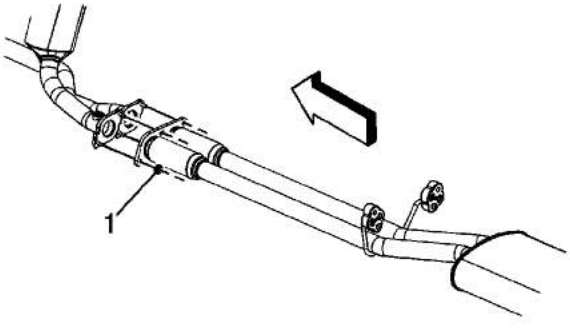

8. Remove the catalytic converter to muffler nuts (1).
9. Reposition the muffler assembly rearward until the catalytic converter can be removed.
10. Remove the catalytic converter.
11. Remove the catalytic converter gaskets.
12. Clean and inspect the exhaust manifold and the exhaust pipe gasket mating surfaces.

Installation Procedure

cardiagn.com

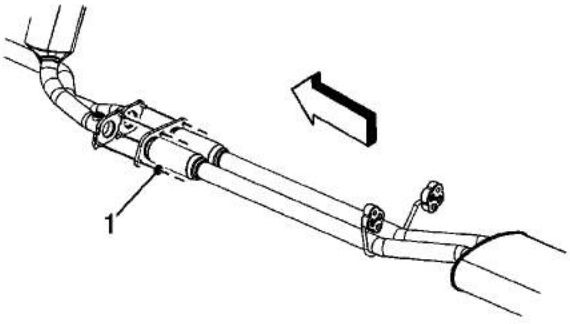

1. Install the catalytic converter gasket onto the catalytic converter.
2. Reposition the muffler assembly rearward until the catalytic converter can be installed.
3. Install the catalytic converter.

   Caution: Refer to Fastener Caution in the Preface section.

4. Install the catalytic converter nuts (1) and tighten to **60 N·m (44 lb ft)**.
5. Remove the support from the exhaust system.

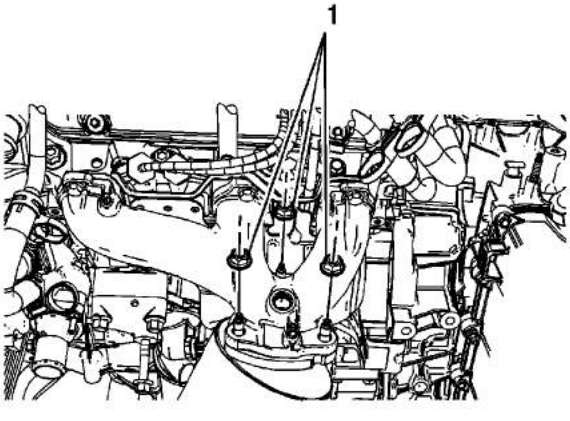

6. Lower the vehicle.
7. Install the left side catalytic converter to exhaust manifold nuts (1) and tighten to **35 N·m (26 lb ft)**.

cardiagn.com

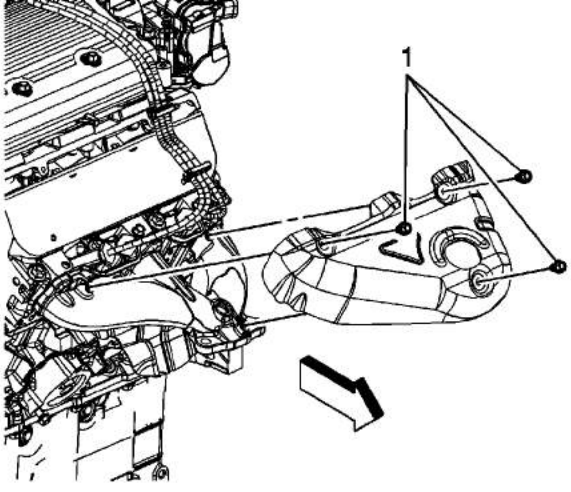

8. Install the exhaust manifold heat shield.
9. Install the left side exhaust manifold heat shield bolts (1) and tighten to **10 N·m (89 lb in)**.
10. Install the HO2S sensor. Refer to Heated Oxygen Sensor Replacement - Bank 2 Sensor 2.

cardiagn.com

Catalytic Converter Replacement - Left Side (LY7 or LCS)

Removal Procedure

Note: The catalytic converter is serviced by replacing the entire assembly. Always replace the gaskets at the front and rear flanges when servicing the catalytic converter. Never install the original gasket.

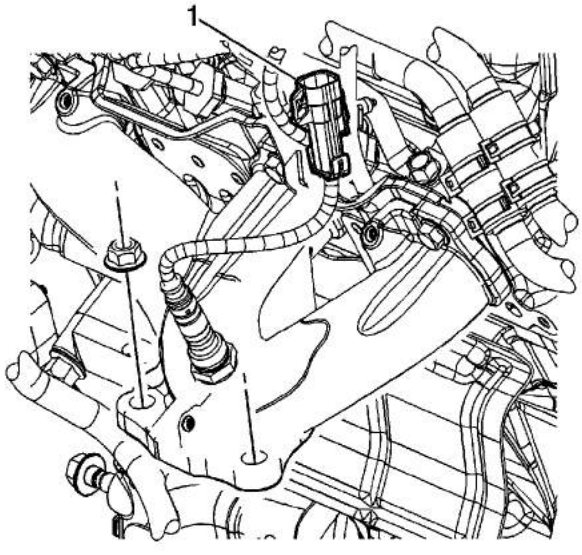

1. Remove the heated oxygen sensor (HO2S). Refer to Heated Oxygen Sensor Replacement - Bank 2 Sensor 2.
2. Lower the vehicle.
3. Disconnect the oxygen sensor electrical connector (1).

cardiagn.com

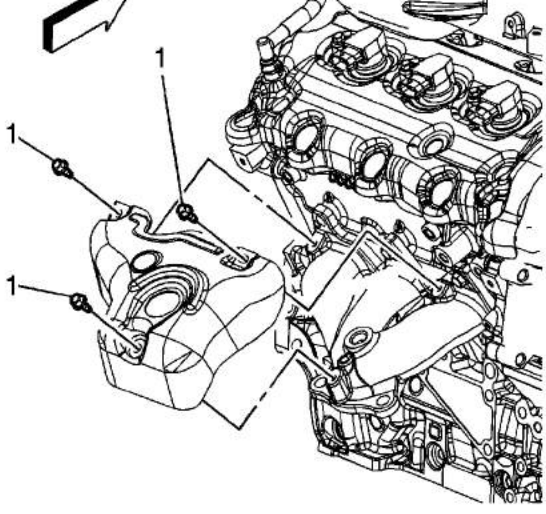

4. Remove the left side exhaust manifold heat shield bolts (1).
5. Remove the left side exhaust manifold heat shield.

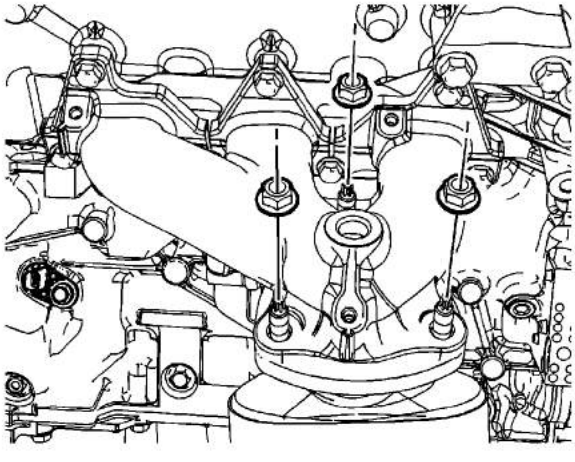

6. Remove the left side catalytic converter to exhaust manifold nuts (1).
7. Raise and support the vehicle. Refer to Lifting and Jacking the Vehicle.
8. Support the exhaust system.

cardiagn.com

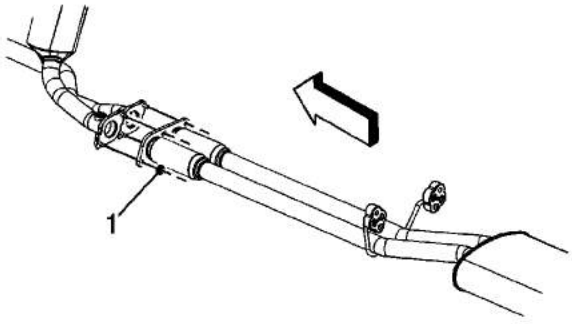

9. Remove the catalytic converter to muffler nuts (1).
10. Reposition the muffler assembly rearward until the catalytic converter can be removed.
11. Remove the catalytic converter.
12. Remove the catalytic converter gaskets.
13. Clean and inspect the exhaust manifold and the exhaust pipe gasket mating surfaces.

Installation Procedure

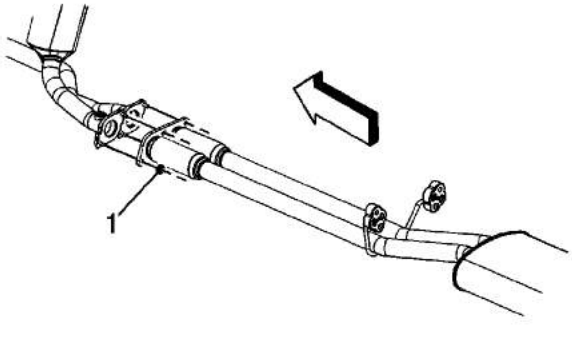

1. Install the catalytic converter gasket onto the catalytic converter.
2. Reposition the muffler assembly rearward until the catalytic converter can be installed.
3. Install the catalytic converter.

cardiagn.com

4. Install the catalytic converter nuts (1) and tighten to **60 N·m (44 lb ft)**.
5. Remove the support from the exhaust system.

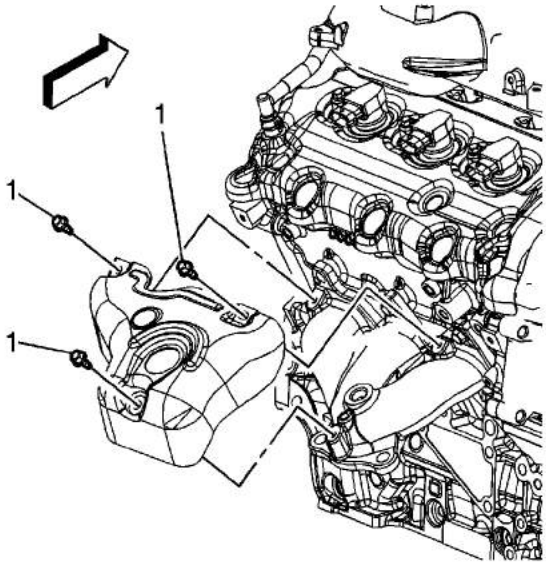

6. Lower the vehicle.
7. Install the left side catalytic converter to exhaust manifold nuts (1) and tighten to **35 N·m (26 lb ft)**.

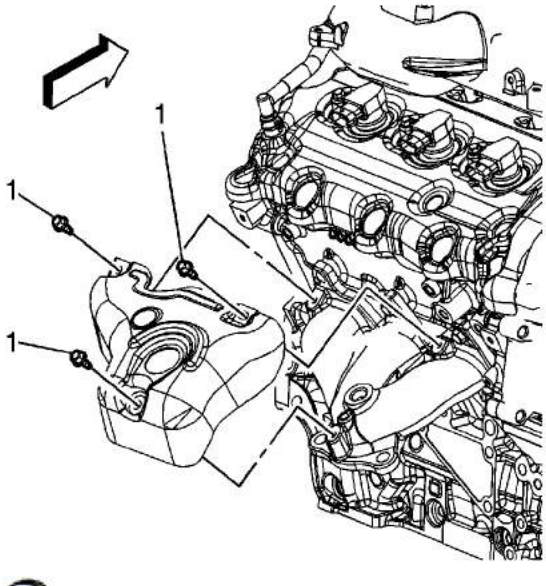

8. Install the exhaust manifold heat shield.
9. Install the left side exhaust manifold heat shield bolts (1) and tighten to **10 N·m (89 lb in)**.

cardiagn.com

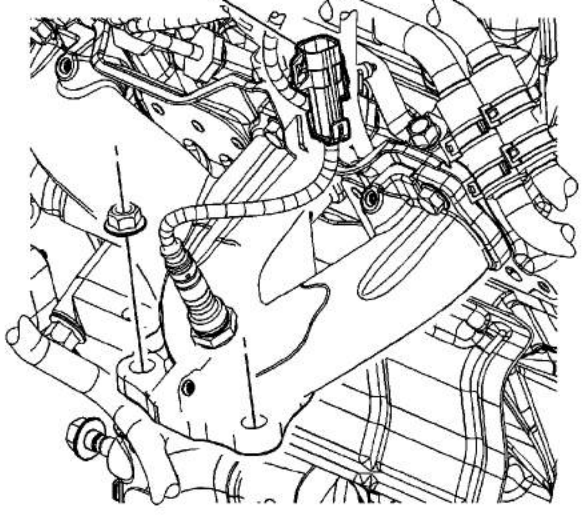

10. Disconnect the oxygen sensor electrical connector (1) and tighten to .
11. Install the HO2S sensor. Refer to Heated Oxygen Sensor Replacement - Bank 2 Sensor 2.

cardiagn.com

Catalytic Converter Replacement - Right Side (LZ4)

Removal Procedure

Note: The catalytic converter is serviced by replacing the entire assembly. Always replace the gaskets at the front and rear flanges when servicing the catalytic converter. Never install the original gasket.

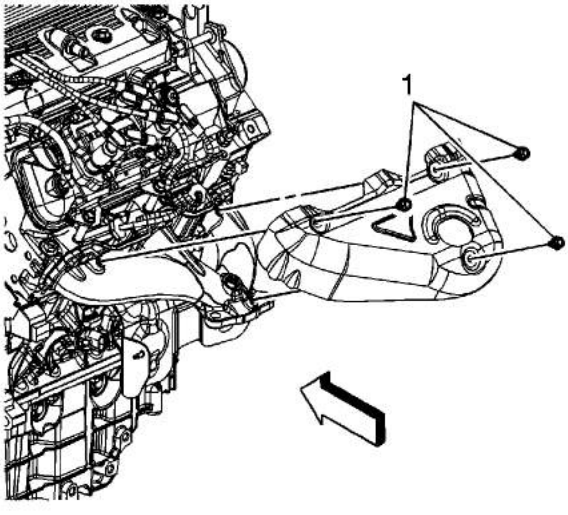

1. Remove the heated oxygen sensor (HO2S). Refer to Heated Oxygen Sensor Replacement - Bank 1 Sensor 2.
2. Lower the vehicle.
3. Remove the right side exhaust manifold heat shield bolts (1).
4. Remove the right side exhaust manifold heat shield.

cardiagn.com

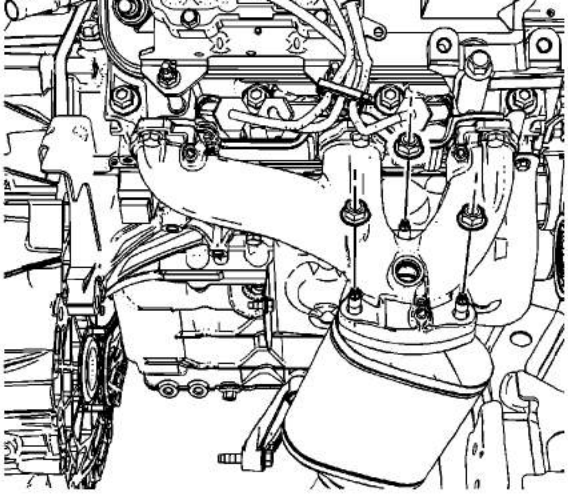

5. Remove the right side catalytic converter to exhaust manifold nuts (1).
6. Raise and support the vehicle. Refer to Lifting and Jacking the Vehicle.
7. Support the exhaust system.

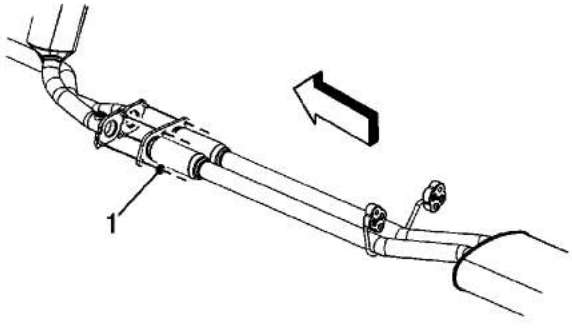

8. Remove the catalytic converter to muffler nuts (1).
9. Reposition the muffler assembly rearward until the catalytic converter can be removed.
10. Remove the catalytic converter.
11. Remove the catalytic converter gaskets.
12. Clean and inspect the exhaust manifold and the exhaust pipe gasket mating surfaces.

Installation Procedure

Caution: Refer to Fastener Caution in the Preface section.

cardiagn.com

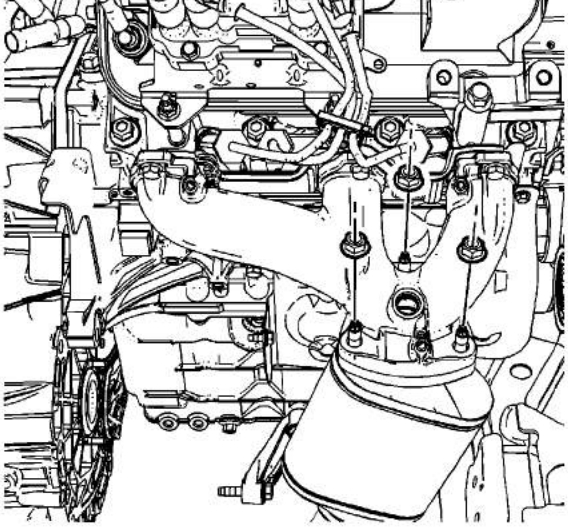

1. Install the right side catalytic converter to exhaust manifold nuts (1) and tighten to **35 N·m (26 lb ft)**.

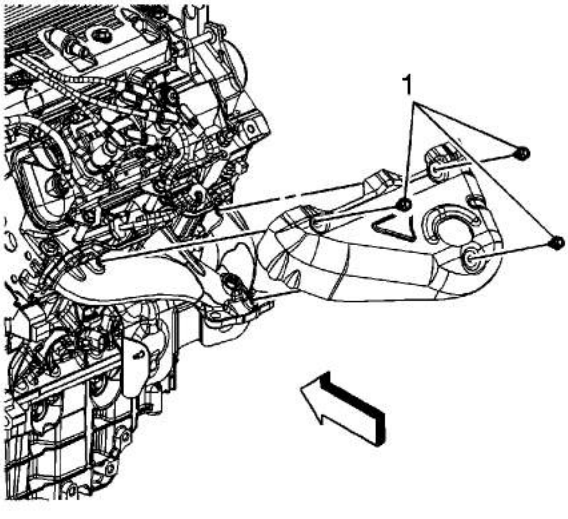

2. Install the right side exhaust manifold heat shield.
3. Install the right side exhaust manifold heat shield bolts (1) and tighten to **10 N·m (89 lb in)**.

cardiagn.com

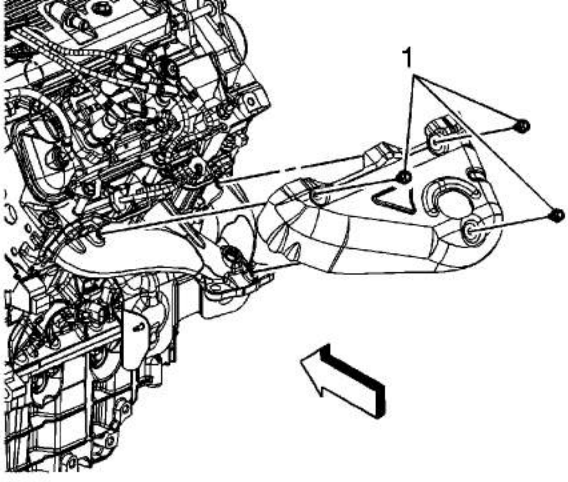

4. Install the exhaust manifold heat shield.
5. Install the right side exhaust manifold heat shield bolts (1) and tighten to **10 N·m (89 lb in)**.
6. Install the HO2S sensor. Refer to Heated Oxygen Sensor Replacement - Bank 1 Sensor 2.

cardiagn.com

Catalytic Converter Replacement - Right Side (LY7)

Removal Procedure

Note: The catalytic converter is serviced by replacing the entire assembly. Always replace the gaskets at the front and rear flanges when servicing the catalytic converter. Never install the original gasket.

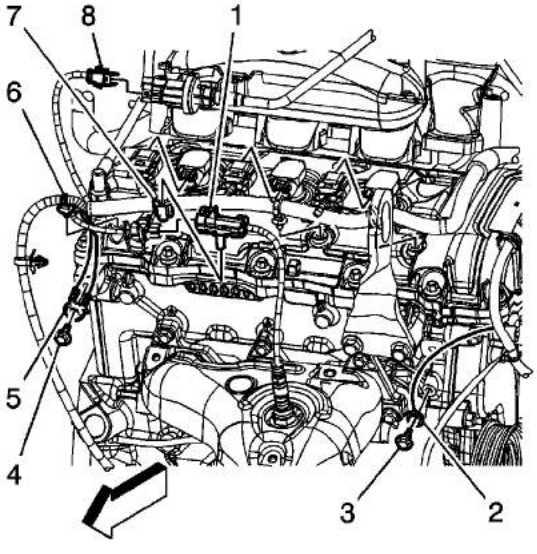

1. Remove the heated oxygen sensor (HO2S). Refer to Heated Oxygen Sensor Replacement - Bank 1 Sensor 2.
2. Lower the vehicle.
3. Disconnect the engine wiring harness electrical connector from the HO2S electrical connector (1)

cardiagn.com

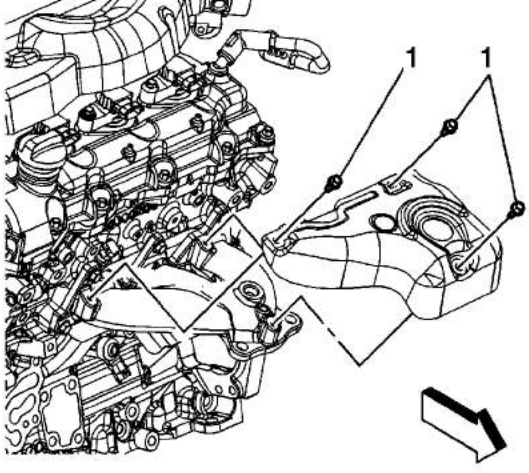

4. Remove the right side exhaust manifold heat shield bolts (1).
5. Remove the right side exhaust manifold heat shield.

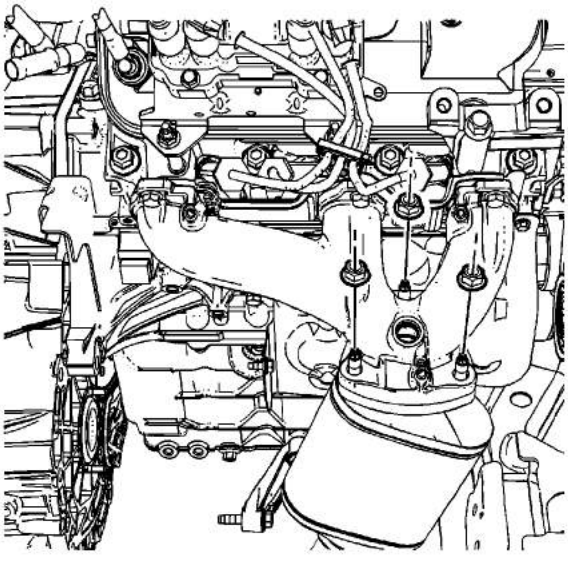

6. Remove the right side catalytic converter to exhaust manifold nuts (1).
7. Raise and support the vehicle. Refer to Lifting and Jacking the Vehicle.
8. Support the exhaust system.

cardiagn.com

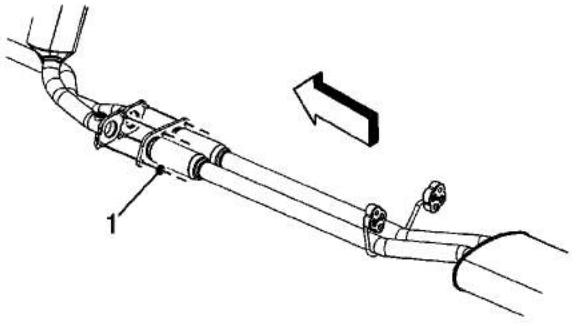

9. Remove the catalytic converter to intermediate muffler nuts (1).
10. Reposition the muffler assembly rearward until the catalytic converter can be removed.
11. Remove the catalytic converter.
12. Remove the catalytic converter gaskets.
13. Clean and inspect the exhaust manifold and the exhaust pipe gasket mating surfaces.

Installation Procedure

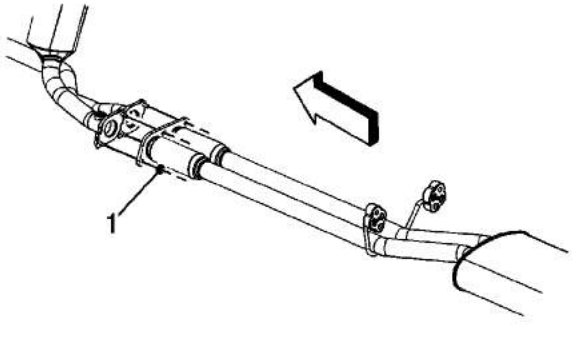

1. Install the catalytic converter gasket onto the catalytic converter.
2. Reposition the muffler assembly rearward until the catalytic converter can be installed.
3. Install the catalytic converter.

cardiagn.com

4. Install the catalytic converter to intermediate muffler nuts (1) and tighten to **60 N·m (44 lb ft)**.
5. Remove the support from the exhaust system.

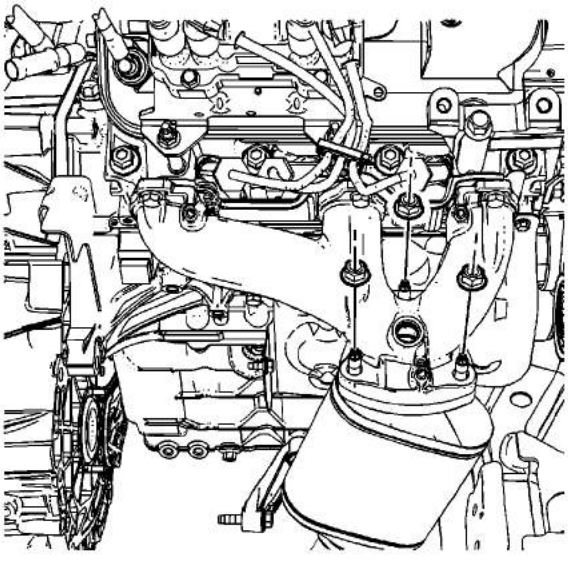

6. Install the right side catalytic converter to exhaust manifold nuts (1) and tighten to **35 N·m (26 lb ft)**.

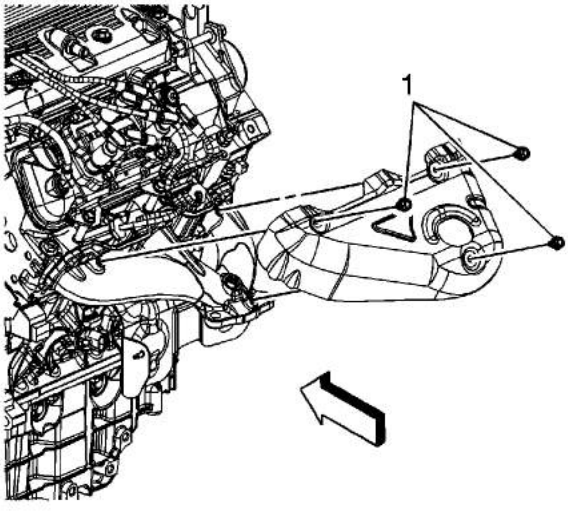

7. Install the right side exhaust manifold heat shield.
8. Install the right side exhaust manifold heat shield bolts (1) and tighten to **10 N·m (89 lb in)**.

cardiagn.com

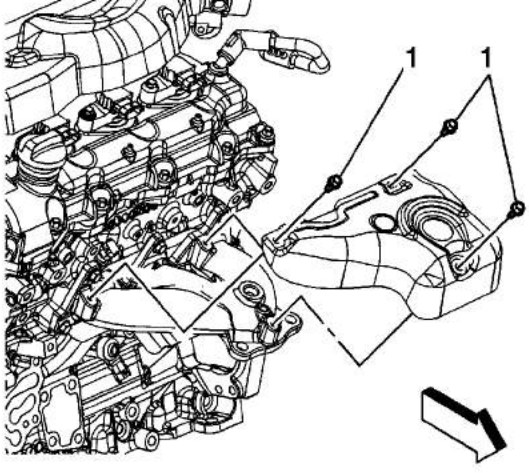

9. Install the exhaust manifold heat shield.
10. Install the right side exhaust manifold heat shield bolts (1) and tighten to **10 N·m (89 lb in)**.

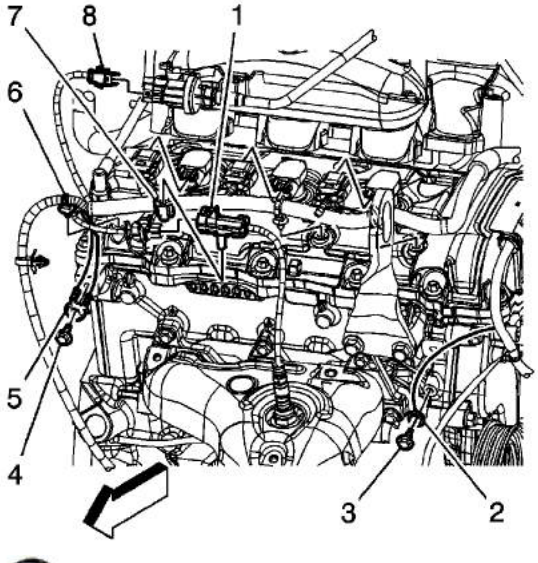

11. Connect the engine wiring harness electrical connector to the HO2S electrical connector (1)
12. Install the HO2S sensor. Refer to Heated Oxygen Sensor Replacement - Bank 1 Sensor 2.

cardiagn.com

Catalytic Converter Replacement - Right Side (LCS)

Removal Procedure

Note: The catalytic converter is serviced by replacing the entire assembly. Always replace the gaskets at the front and rear flanges when servicing the catalytic converter. Never install the original gasket.

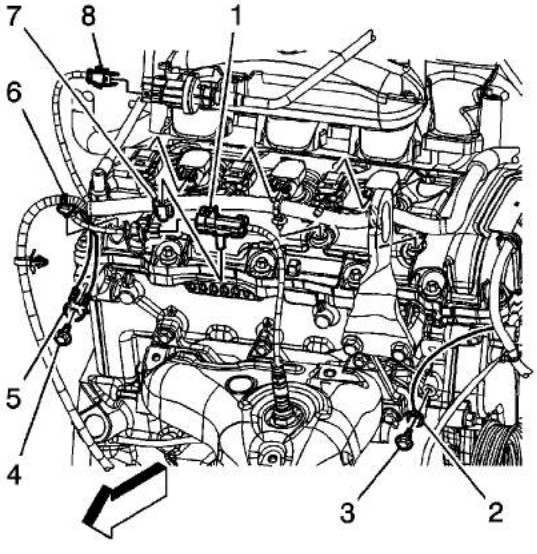

1. Remove the heated oxygen sensor (HO2S). Refer to Heated Oxygen Sensor Replacement - Bank 1 Sensor 2.
2. Lower the vehicle.
3. Disconnect the engine wiring harness electrical connector from the HO2S electrical connector (1)

cardiagn.com

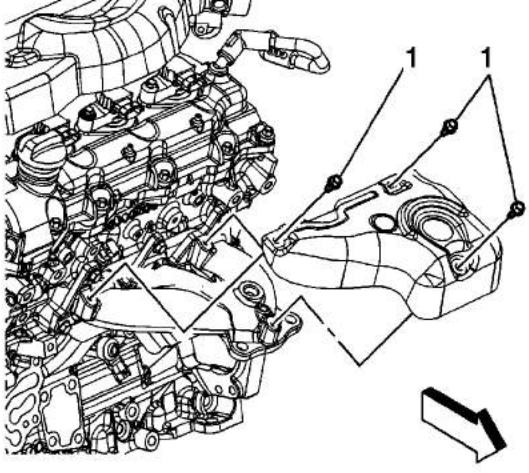

4. Remove the right side exhaust manifold heat shield bolts (1).
5. Remove the right side exhaust manifold heat shield.

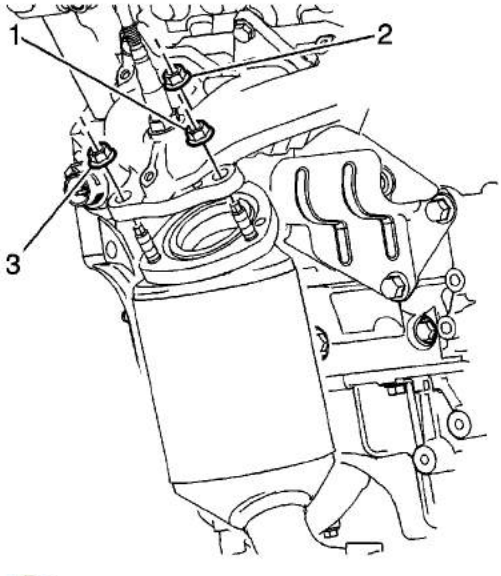

6. Remove the right side catalytic converter to exhaust manifold nuts (1, 2 and 3).
7. Raise and support the vehicle. Refer to Lifting and Jacking the Vehicle.
8. Support the exhaust system.

cardiagn.com

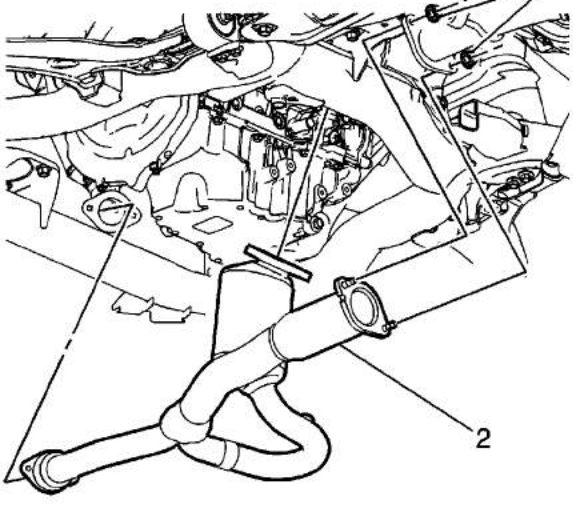

9. Remove the catalytic converter to intermediate muffler nuts (1).
10. Reposition the muffler assembly rearward until the catalytic converter (2) can be removed.
11. Remove the catalytic converter.
12. Remove the catalytic converter gaskets.
13. Clean and inspect the exhaust manifold and the exhaust pipe gasket mating surfaces.

Installation Procedure

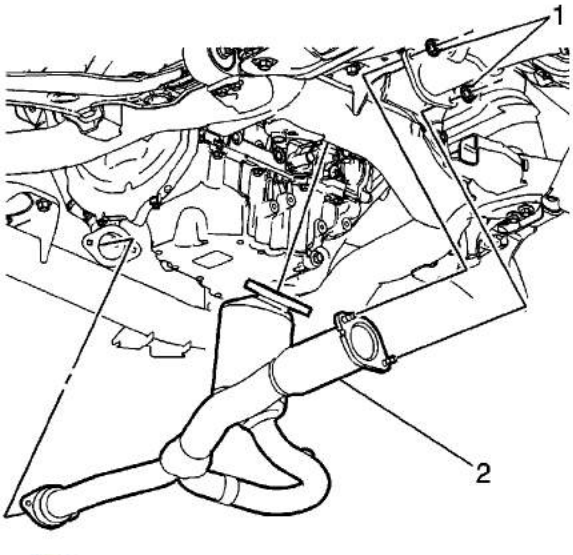

1. Install the catalytic converter gasket onto the catalytic converter.
2. Reposition the muffler assembly rearward until the catalytic converter (2) can be installed.
3. Install the catalytic converter.

cardiagn.com

4. Install the catalytic converter to intermediate muffler nuts (1) and tighten to **60 N·m (44 lb ft)**.
5. Remove the support from the exhaust system.

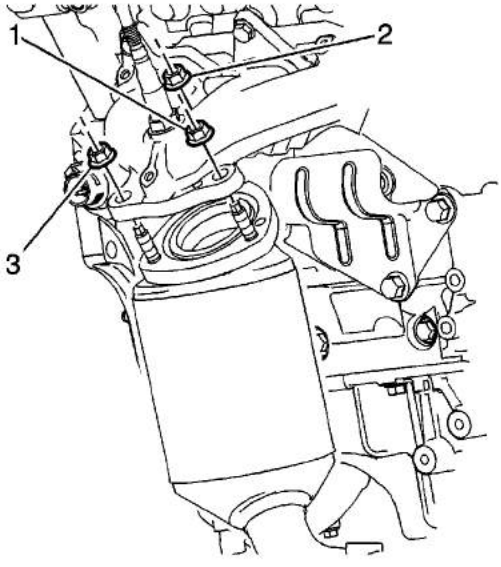

6. Tighten the right side catalytic converter to exhaust manifold nuts in the following sequence.
   6.1. Tighten the nut (1) to **35 N·m (26 lb ft)**
   6.2. Tighten the nut (2) to **35 N·m (26 lb ft)**
   6.3. Tighten the nut (3) to **35 N·m (26 lb ft)**

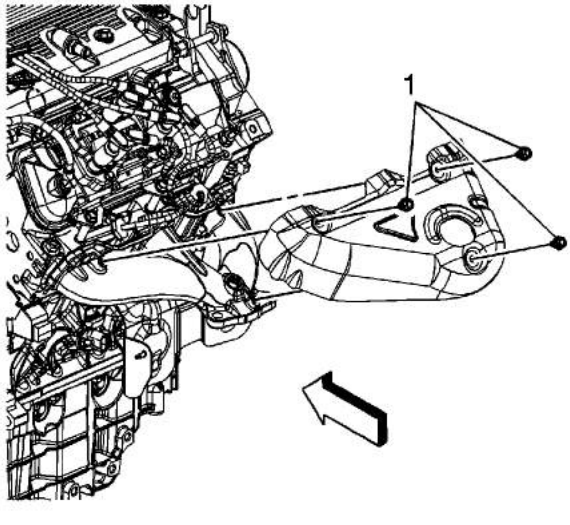

7. Install the right side exhaust manifold heat shield.
8. Install the right side exhaust manifold heat shield bolts (1) and tighten to **10 N·m**

cardiagn.com

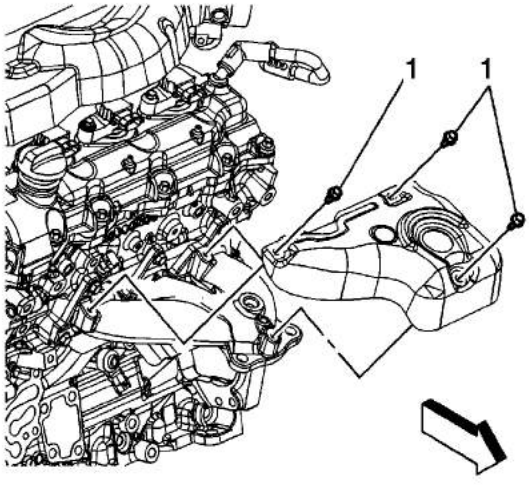

9. Install the exhaust manifold heat shield.
10. Install the right side exhaust manifold heat shield bolts (1) and tighten to **10 N·m (89 lb in)**.

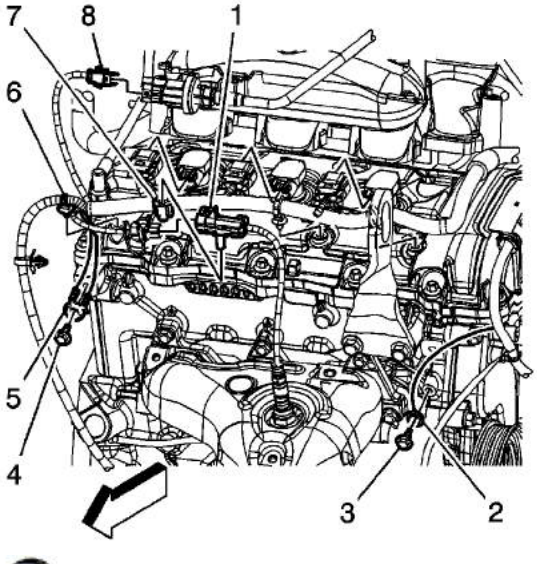

11. Connect the engine wiring harness electrical connector to the HO2S electrical connector (1)
12. Install the HO2S sensor. Refer to Heated Oxygen Sensor Replacement - Bank 1 Sensor 2.

cardiagn.com

Exhaust Muffler Replacement (LAT or LE5)

Removal Procedure

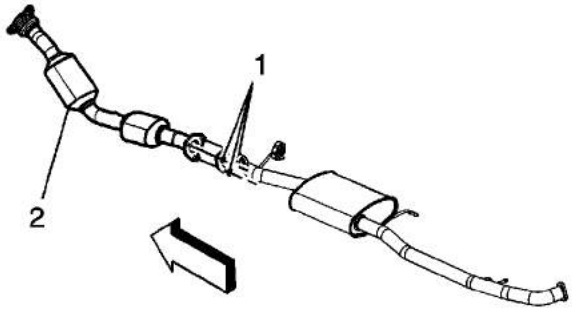

1. Raise and suitably support the vehicle. Refer to Lifting and Jacking the Vehicle.
2. Remove the catalytic converter to muffler nuts (1).

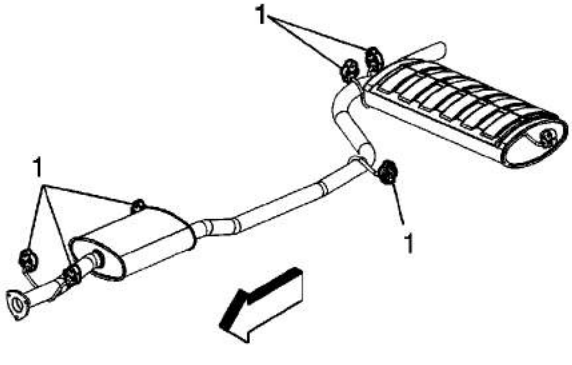

3. With the aid of an assistant, remove the muffler insulators (1) from the hangers.
4. Remove the muffler assembly.

[redacted]

cardiagn.com

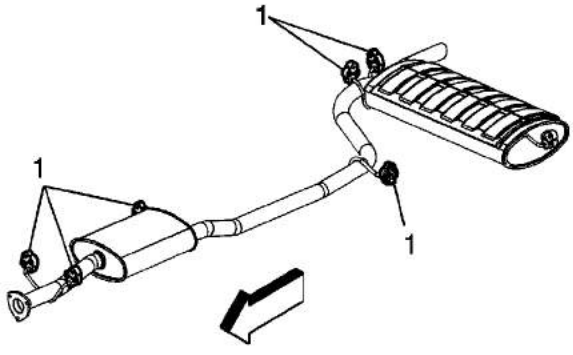

Note: Replace the muffler hangers any time the exhaust system is removed from the vehicle. Do not use any mineral oil based lubricants or sharp tools when installing new exhaust system hangers.

1. With the aid of an assistant , position the muffler assembly.
2. Install the muffler insulators (1) to the hangers.

Caution: Refer to Fastener Caution in the Preface section.

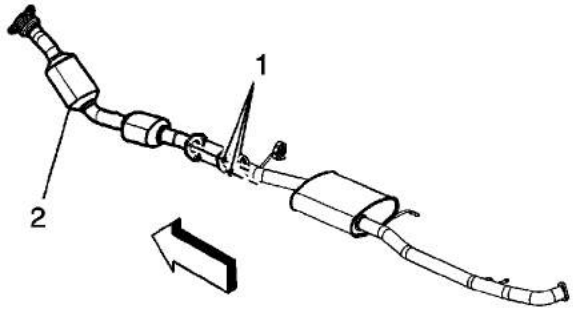

cardiagn.com

3. Install the catalytic converter to muffler nuts and tighten to **25 N·m**.

cardiagn.com

Exhaust Muffler Replacement (LZ4)

Removal Procedure

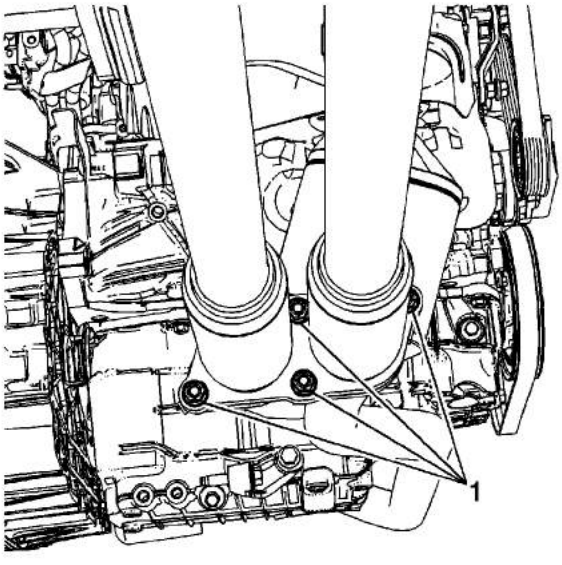

1. Raise and suitably support the vehicle. Refer to Lifting and Jacking the Vehicle.
2. Remove the catalytic converter to muffler nuts (1).

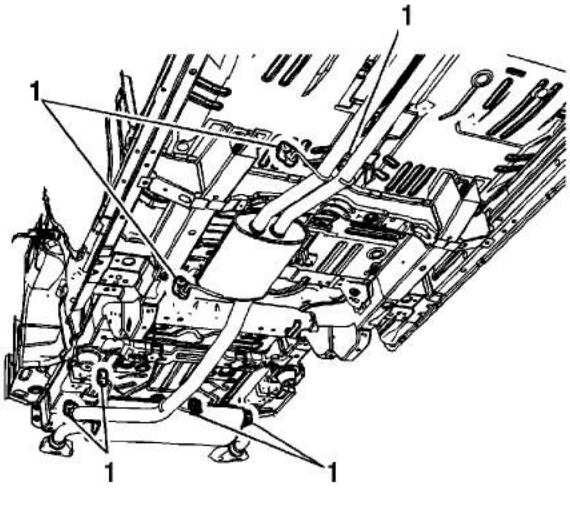

3. With the aid of an assistant, remove the muffler insulators (1) from the hangers.
4. Remove the muffler assembly.

© 2010 General Motors Corporation. All rights reserved.

cardiagn.com

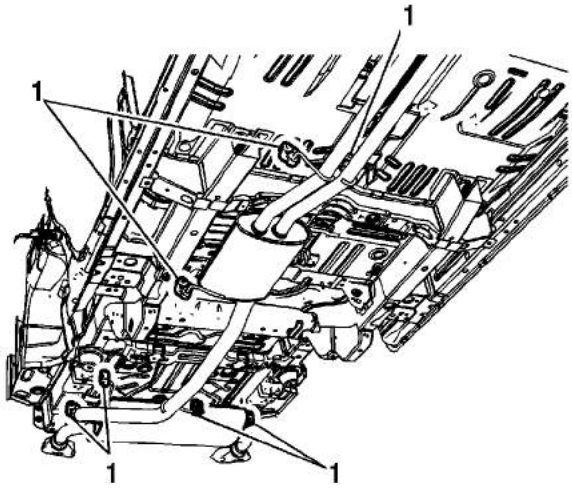

Note: Replace the muffler hangers any time the exhaust system is removed from the vehicle. Do not use any mineral oil based lubricants or sharp tools when installing new exhaust system hangers.

1. With the aid of an assistant , position the muffler assembly.
2. Install the muffler insulators (1) to the hangers.

Caution: Refer to Fastener Caution in the Preface section.

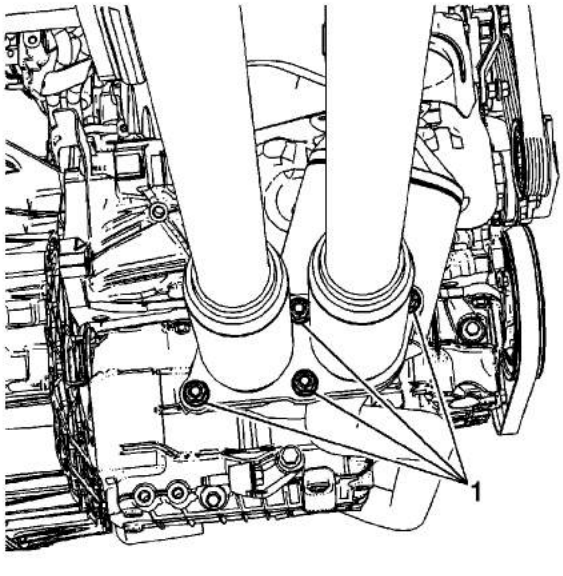

cardiagn.com

3. Install the catalytic converter to muffler nuts and tighten to **25 N·m (18 lb ft)**.

cardiagn.com

Exhaust Muffler Replacement (LY7)

Removal Procedure

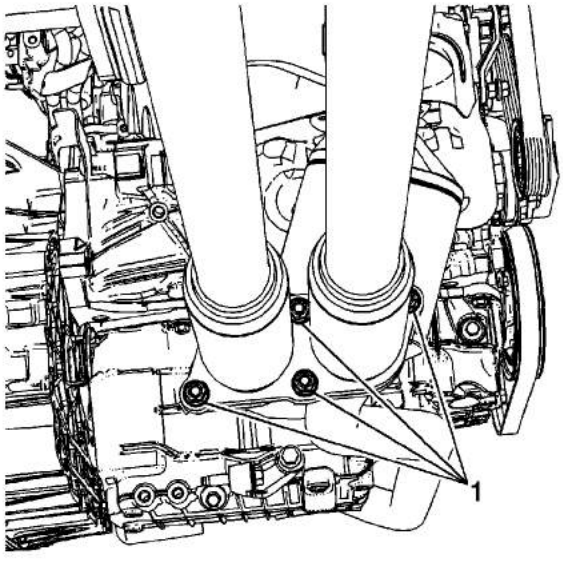

1. Raise and suitably support the vehicle. Refer to Lifting and Jacking the Vehicle.
2. Remove the catalytic converter to muffler nuts (1).

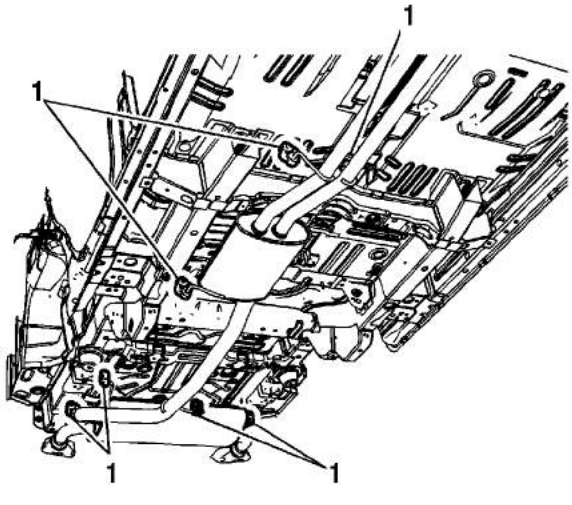

3. With the aid of an assistant, remove the muffler insulators (1) from the hangers.
4. Remove the muffler assembly.

[redacted]

cardiagn.com

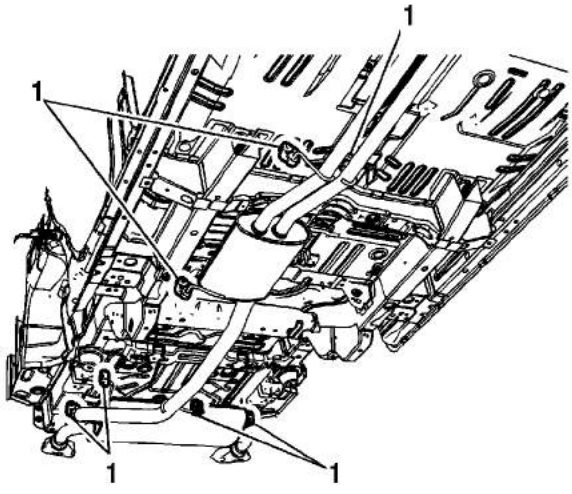

Note: Replace the muffler hangers any time the exhaust system is removed from the vehicle. Do not use any mineral oil based lubricants or sharp tools when installing new exhaust system hangers.

1. With the aid of an assistant , position the muffler assembly.
2. Install the muffler insulators (1) to the hangers.

Caution: Refer to Fastener Caution in the Preface section.

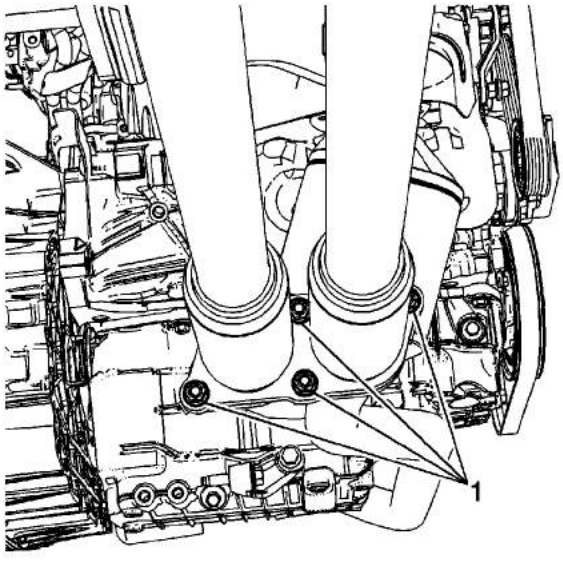

cardiagn.com

3. Install the catalytic converter to muffler nuts and tighten to **25 N·m (18 lb ft)**.

cardiagn.com

Exhaust Muffler Replacement (LCS)

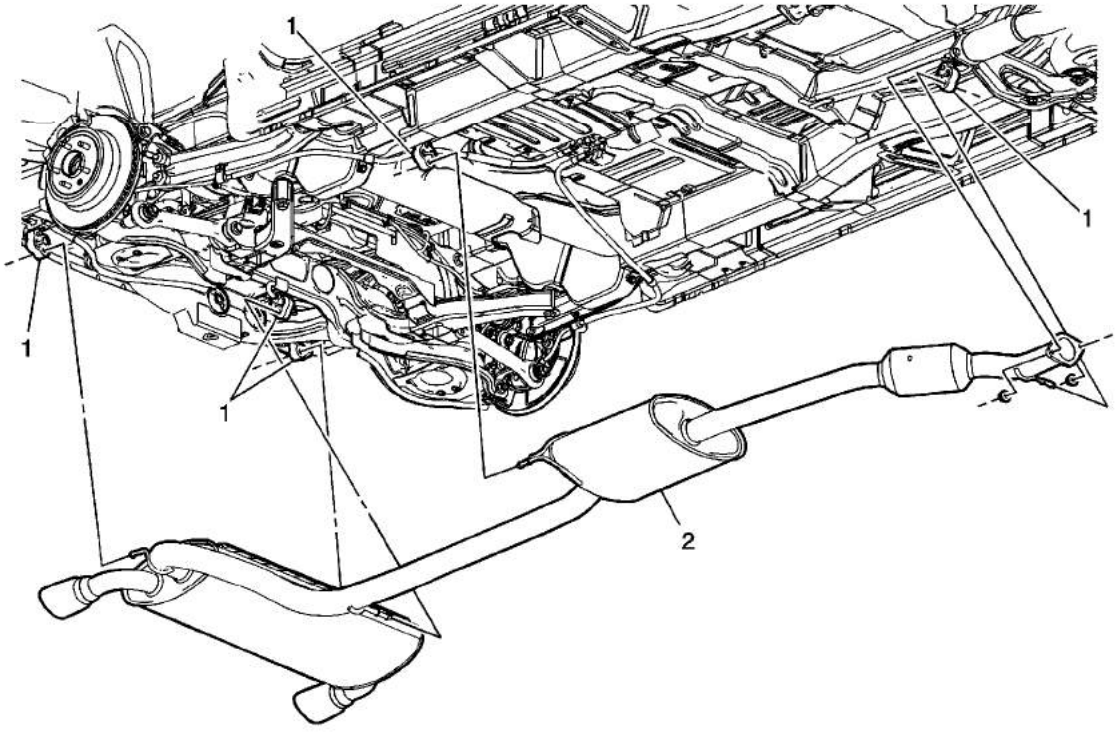

Callout	Component Name
Preliminary Procedures Raise and support the vehicle. Refer to Lifting and Jacking the Vehicle	
1	Nut (Qty: 2) **Caution:** Refer to Fastener Caution in the Preface section. **Tighten** 60 N·m (44 lb ft)
2	Hanger (Qty:5)
3	Muffler Assembly **Procedure** With the aid of an assistant remove the muffler assembly

cardiagn.com

Exhaust Manifold Heat Shield Replacement (LAT or LE5)

Removal Procedure

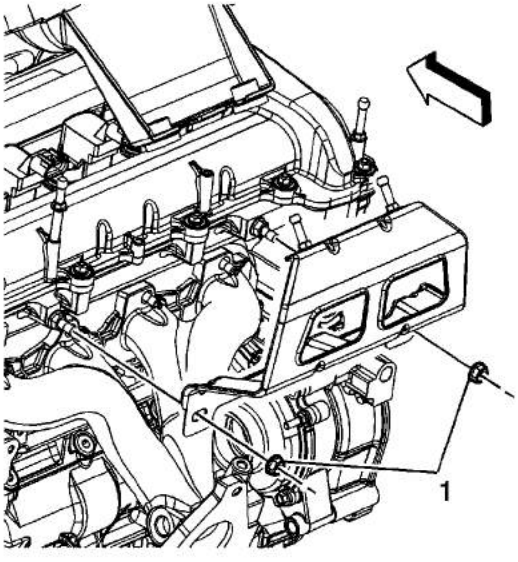

1. Remove the air cleaner outlet duct. Refer to Air Cleaner Outlet Duct Replacement.
2. On the LAT engine, remove the air cleaner bracket nuts (1).
3. Remove the air cleaner bracket.

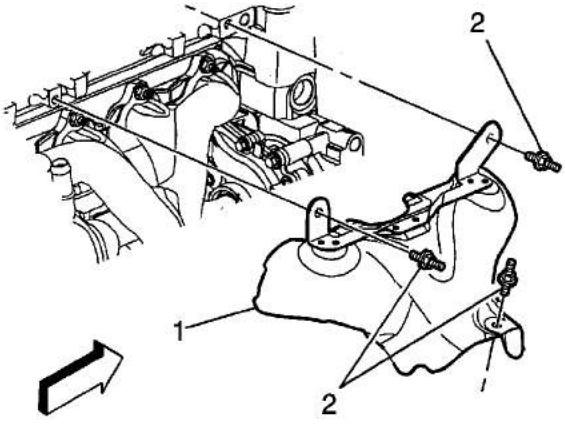

4. Remove the exhaust manifold heat shield studs (2).
5. Remove the exhaust manifold heat shield (1).

© 2010 General Motors Corporation. All rights reserved.

cardiagn.com

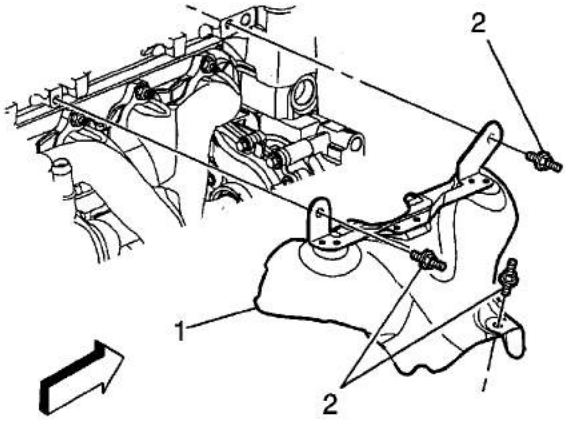

1. Install the exhaust manifold heat shield (1).

   Caution: Refer to Fastener Caution in the Preface section.

2. Install the exhaust manifold heat shield studs (2) and tighten to **22 N·m (16 lb ft)**.

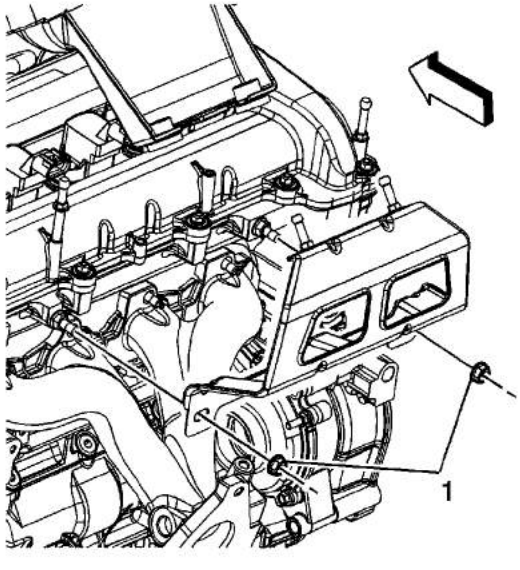

3. On the LAT engine, install the air cleaner bracket.
4. Install the air cleaner bracket nuts (1) and tighten to **20 N·m (15 lb ft**.
5. Install the air cleaner outlet duct. Refer to Air Cleaner Outlet Duct Replacement.

cardiagn.com

Exhaust Manifold Heat Shield Replacement - Right Side (LY7 or LCS)

Removal Procedure

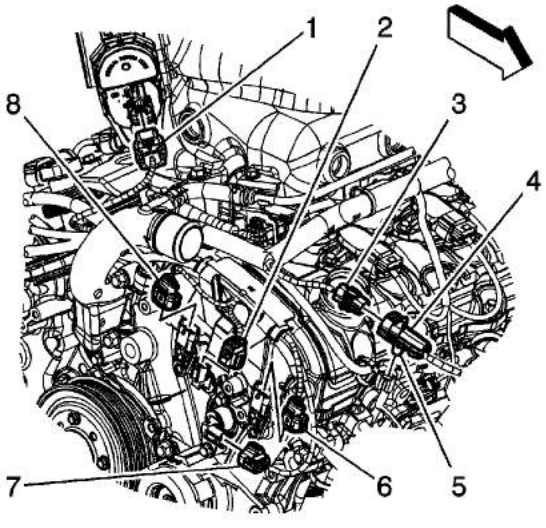

1. Remove the fuel injector sight shield. Refer to Fuel Injector Sight Shield Replacement.
2. Disconnect the engine wiring harness electrical connector (3) from the heated oxygen sensor (HO2S) electrical connector (4).
3. Remove the HO2S electrical connector retainer (5) from the retainer clip.

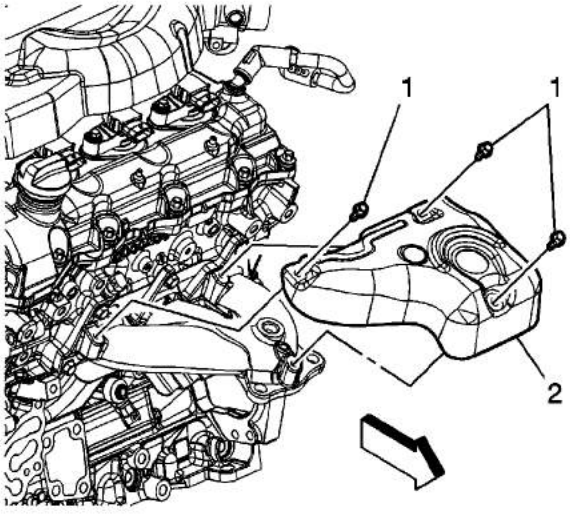

[redacted]

cardiagn.com

4. Remove the exhaust manifold heat shield bolts (1).
5. Remove the exhaust manifold heat shield (2).

Installation Procedure

Caution: Refer to Fastener Caution in the Preface section.

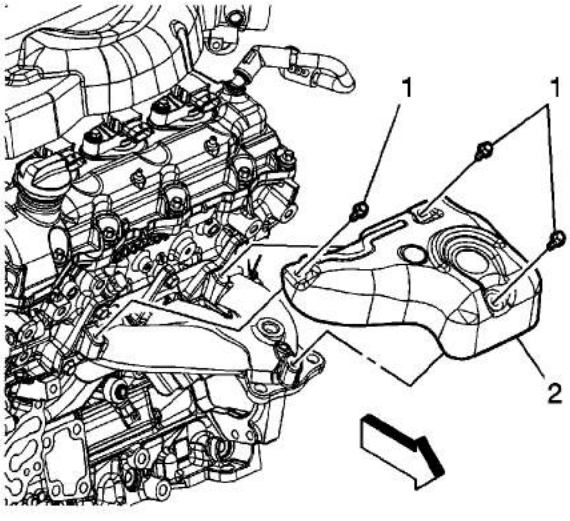

1. Install the exhaust manifold heat shield (2).
2. Install the exhaust manifold heat shield bolts (1) and tighten to **22 N·m (16 lb ft)**.

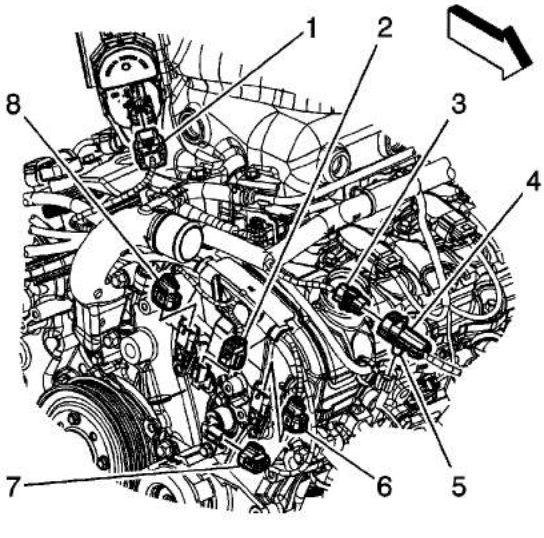

cardiagn.com

5. Install the fuel injector sight shield. Refer to Fuel Injector Sight Shield Replacement.

cardiagn.com

Exhaust Manifold Heat Shield Replacement - Right Side (LZ4)

Removal Procedure

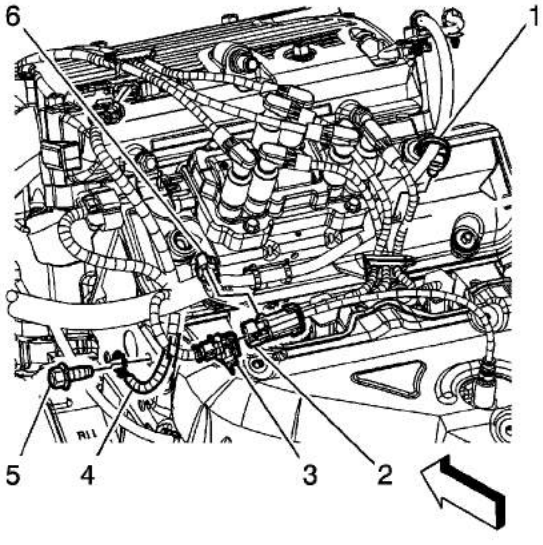

1. Remove the intake manifold cover. Refer to Intake Manifold Cover Replacement.
2. Remove the connector position assurance (CPA) retainer.
3. Disconnect the engine wiring harness electrical connector (3) from the heated oxygen sensor (HO2S) electrical connector (2).
4. Remove the HO2S electrical connector rosebud clip from the engine wiring harness retainer strap (6).

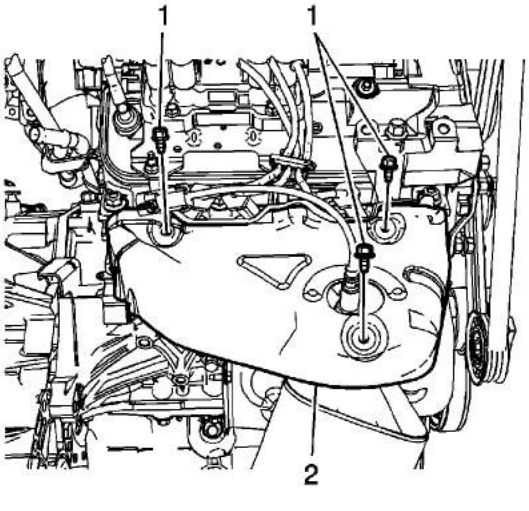

[redacted]

cardiagn.com

5. Remove the exhaust manifold heat shield bolts (1).
6. Remove the exhaust manifold heat shield (2).

Installation Procedure

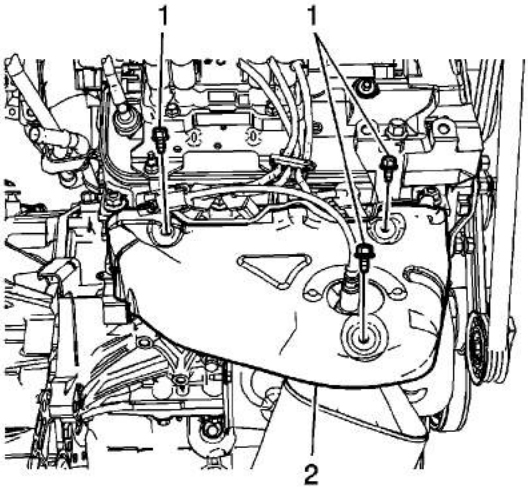

1. Install the exhaust manifold heat shield (2).

   Caution: Refer to Fastener Caution in the Preface section.

2. Install the exhaust manifold heat shield bolts (1) and tighten to **22 N·m (16 lb ft)**.

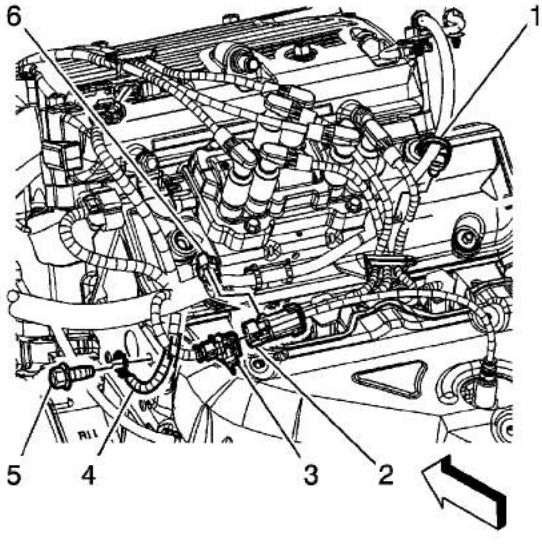

cardiagn.com

3. Connect the engine harness electrical connector (3) to the HO2S electrical connector (2).
4. Install the CPA retainer.
5. Install the HO2S electrical connector rosebud clip to the engine wiring harness retaining strap (6).
6. Install the intake manifold cover. Refer to Intake Manifold Cover Replacement.

cardiagn.com

Exhaust Manifold Heat Shield Replacement - Left Side (LY7 or LCS)

Removal Procedure

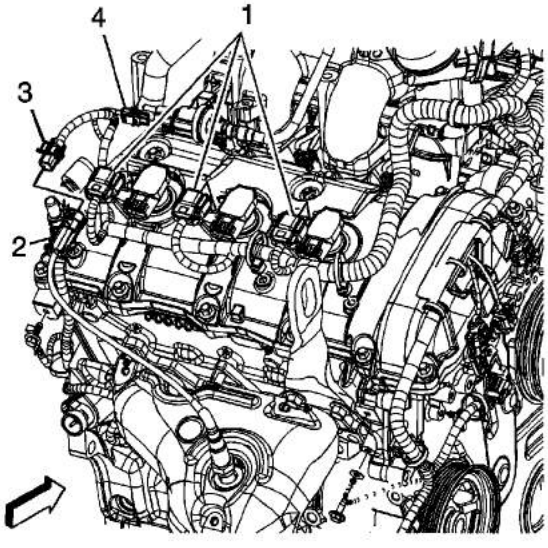

1. Remove the fuel injector sight shield. Refer to Fuel Injector Sight Shield Replacement.
2. Disconnect the engine wiring harness electrical connector (3) from the heated oxygen sensors (HO2S) electrical connector (2).

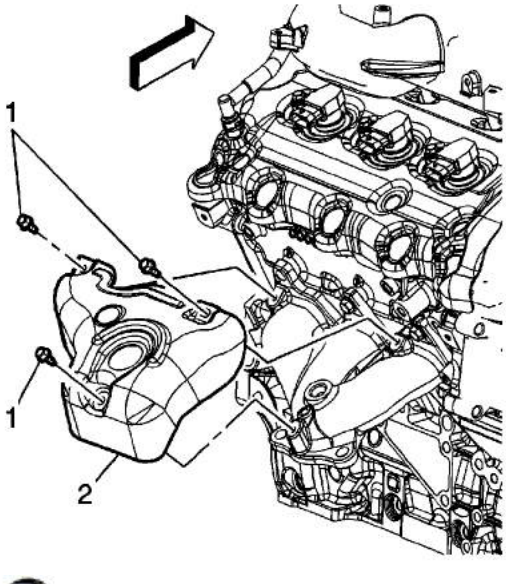

[redacted]

cardiagn.com

Installation Procedure

Caution: Refer to Fastener Caution in the Preface section.

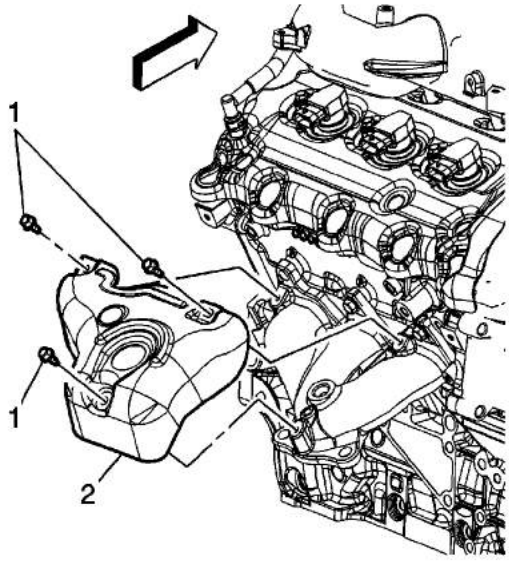

1. Install the exhaust manifold heat shield (2).
2. Install the exhaust manifold heat shield bolts (1) and tighten to **22 N·m (16 lb ft)**.

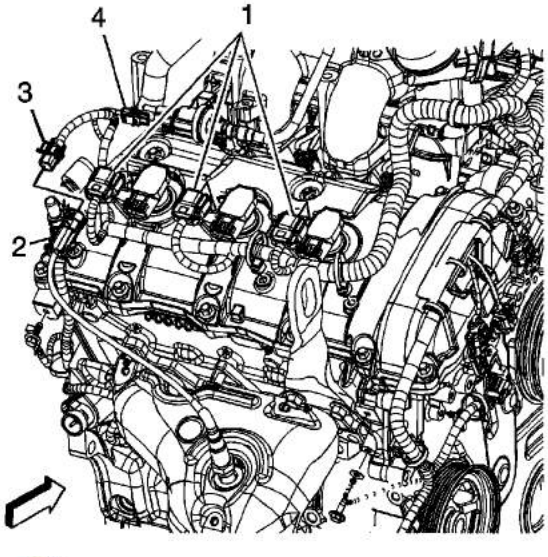

3. Connect the engine harness electrical connector (1) to the HO2S (2).
4. Install the fuel injector sight shield. Refer to Fuel Injector Sight Shield Replacement.

cardiagn.com

Exhaust Manifold Heat Shield Replacement - Left Side (LZ4)

Removal Procedure

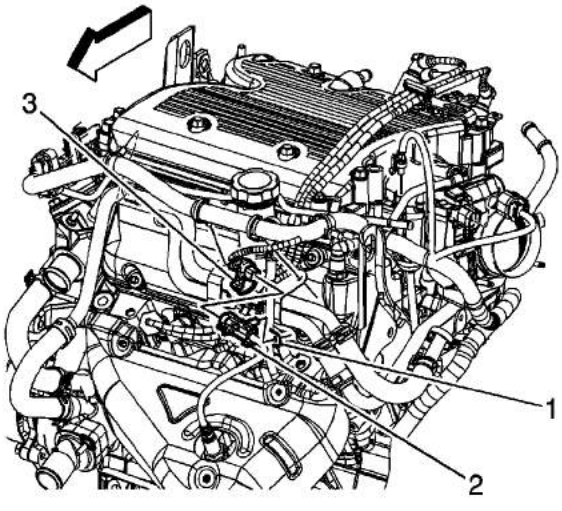

1. Remove the intake manifold cover. Refer to Intake Manifold Cover Replacement.
2. Remove the connector position assurance (CPA) retainer.
3. Disconnect the engine wiring harness electrical connector (3) from the heated oxygen sensors (HO2S) electrical connector (2).

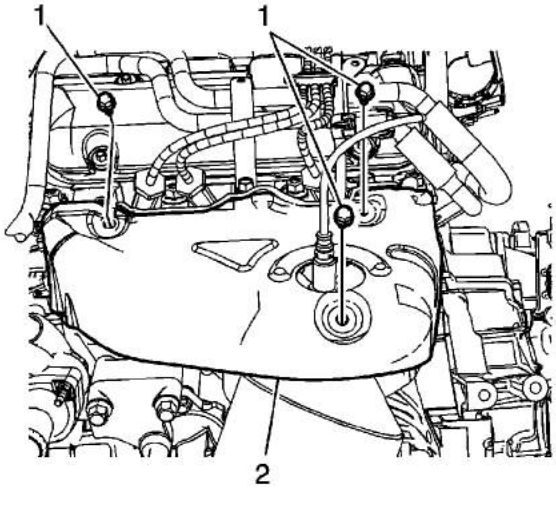

[redacted]

cardiagn.com

4. Remove the exhaust manifold heat shield bolts (1).
5. Remove the exhaust manifold heat shield (2).

Installation Procedure

Caution: Refer to Fastener Caution in the Preface section.

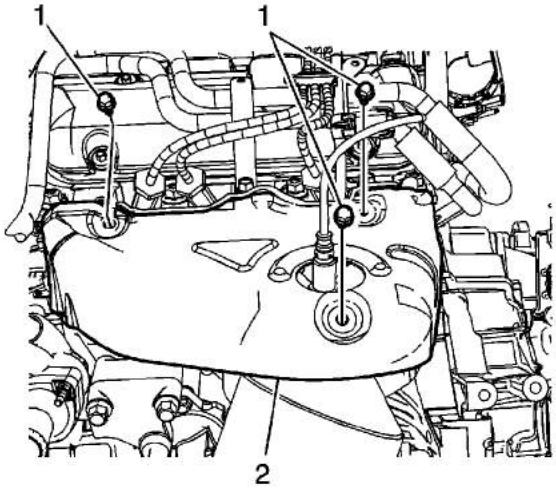

1. Install the exhaust manifold heat shield (2).
2. Install the exhaust manifold heat shield bolts (1) and tighten to **22 N·m (16 lb ft)**.

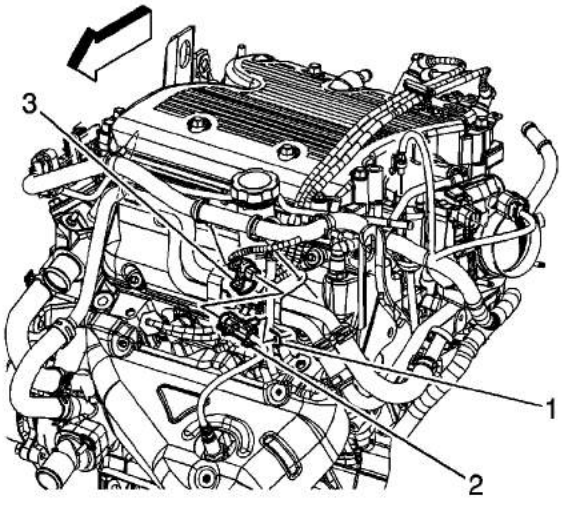

cardiagn.com

5. Install the intake manifold cover. Refer to Intake Manifold Cover Replacement.

cardiagn.com