254

Service.

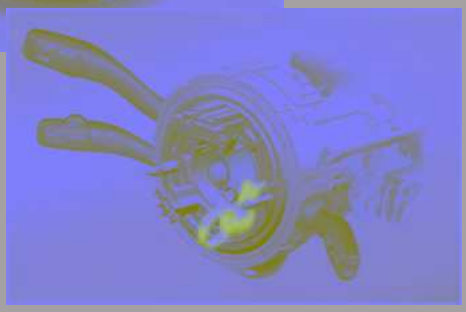

AUDI A4´01 - Technical Features

Design and Function

Self-study programme 254

For internal use only.

Advance by technology

The new Audi A4,

a vehicle which combines driving pleasure and good sense
with the highest level of quality and sports styling.

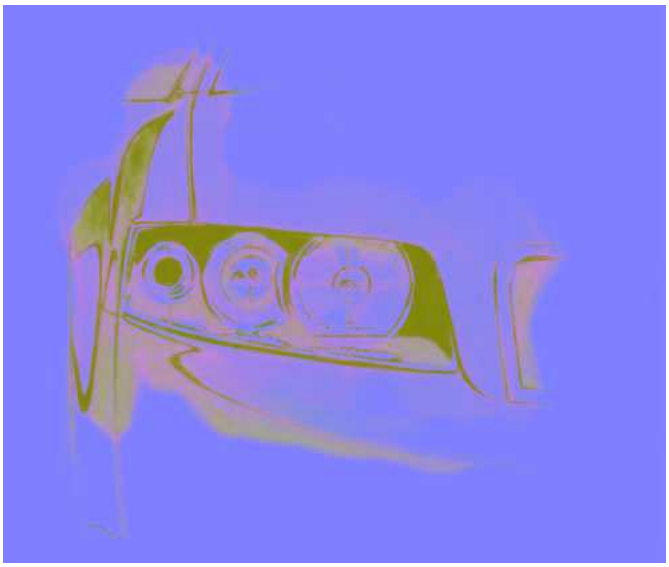

Control unit for vehicle electrical system...48

New engine programme ...18

Electronic stability programme with brake assistance ...32

Steering column switch module ...44

Crash sensors for front airbag ...14

Multi-communication bar ...72

Trapezium link rear axle...27

Aero-floor ...7

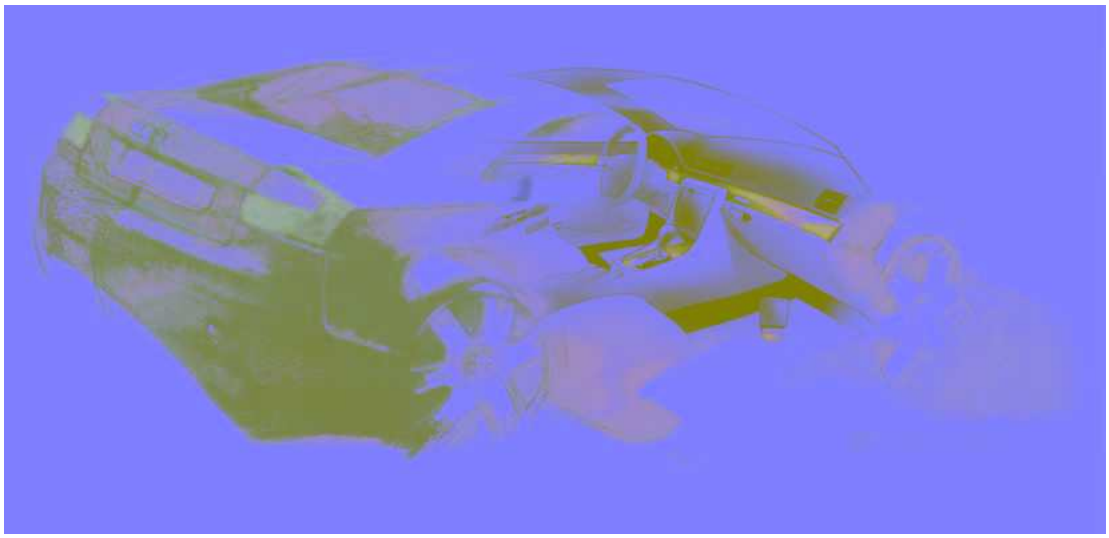

Contents

Page

Introduction 4

Body 8

Occupant protection 12

Engine and gearbox

2.0 l R4 and 3.0 l V6 engines (see SSP 255) 18
Innovations - 2.5 l V6 TDI engine. 19
Innovations - automatic gearbox 23

Running gear

Axles 26
Mechanical unit mountings 28
Brake system 29
Brake assistance 32

Electrical system

Vehicle electrical system 36
CAN BUS system 38
Dash panel insert 40
Steering column switch module 44
Function circuit diagram 46
Control unit for vehicle electrical system 48
Function circuit diagram for "lowline" version. 50
Function circuit diagram for "highline" version 52
Convenience system 58
Anti-theft alarm system 63
Radio - chorus II, concert II and symphony II 65
Navigation IV and Navigation Plus-D 69
Multi-communication bar 72
Electric logbook "Audi Logbook" 74

Heater/AC

Design and function 76
7-piston compressor 77
Air conditioner 78
Glove compartment cooling 79
Solar roof. 80
Fresh air blower 81
Actuators/sensors 82
Functional diagram for fully automatic air conditioner 84
Additional heater 86

The self-study programme will provide you with information on design and functions.

It is not intended as a workshop manual.

For maintenance and repair operations it is essential that you refer to the current technical literature.

New

Important: Note

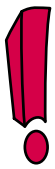

Introduction

The architecture of motion

Performance and smooth running

The engine programme of the new Audi A4 includes two petrol engines of a completely new design, with aluminium housings.
The 2.0 litre 4-cylinder in-line engine with 96 kW (130 PS) and the 3.0 litre V6 with 162 kW (220 PS) fulfil the EU 4 emissions standard.
A high degree of running smoothness is achieved via balancer shafts.

Infinitely variable perfection

For the first time in this vehicle class, Audi offers the infinitely variable "multitronic" automatic gearbox for all front-wheel drive versions.

The new light alloy running gear

With the four-link front axle, each wheel is controlled by four aluminium transverse links. The pivot bearings are also made from the same light alloy.

The trapezium link rear axle for the quattro drive system is also used in the front-wheel drive models of the Audi A4.

Finely-tuned aerodynamics

Despite the greater frontal area and the cooling air current for the air conditioner (standard), it was possible to improve the C_D value by 5 %, in comparison to its predecessor, to 0.28.

A special feature is the so-called aero-floor, which provides for optimal airflow on the underside of the vehicle.

SSP254_048

Electronic stability programme (ESP) including brake assistant

For the latest ESP generation, the hydraulic brake assistant is an integral part of the standard equipment.
It is intended to assist the driver by automatically increasing the brake pressure during emergency braking.

High safety standards

With a thoroughly optimised body design and comprehensive safety equipment, the new Audi A4 is able to comply with all current valid safety standards, throughout the world.
Crash sensors for the front airbags integrated directly into the bumper bar, improve occupant protection.

Communication centre on wheels

With regard to infotainment, the new Audi A4 leaves nothing to be desired.
4 different audio systems, 2 differently configured Navigation systems and a car phone with voice operation are on offer.

Vehicle dimensions of Audi A4´01

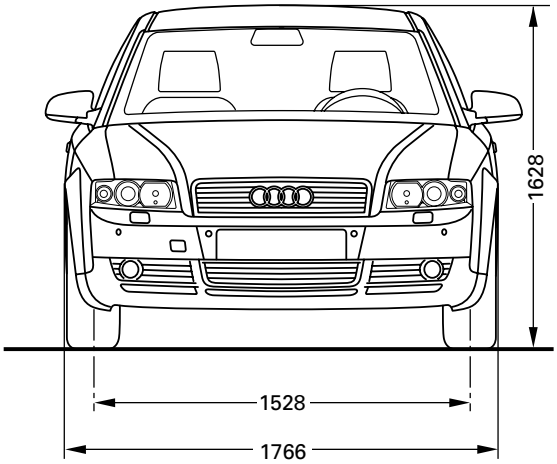

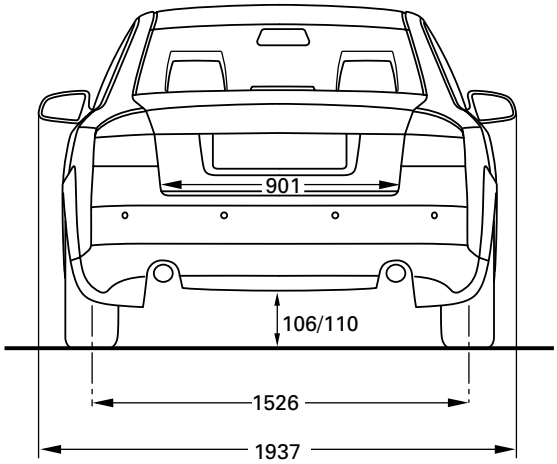

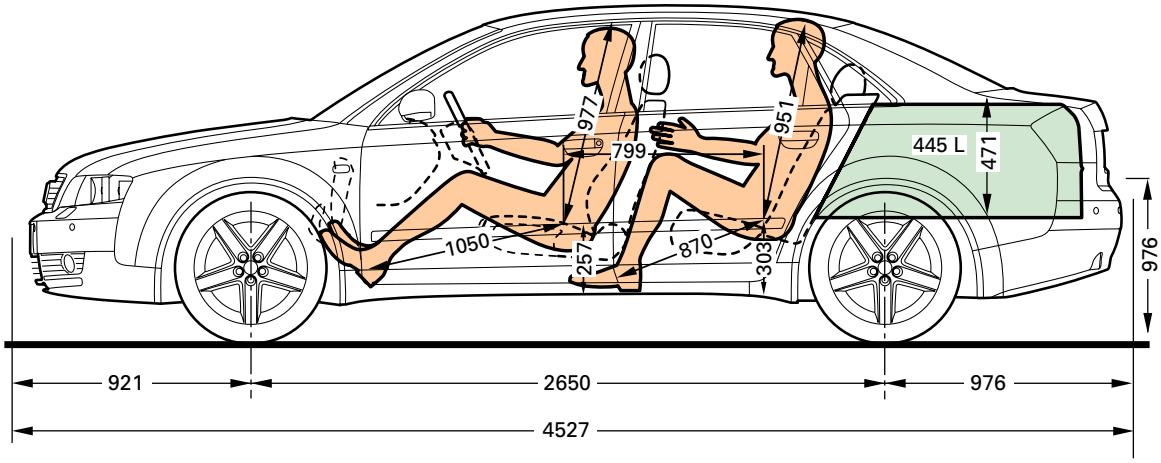

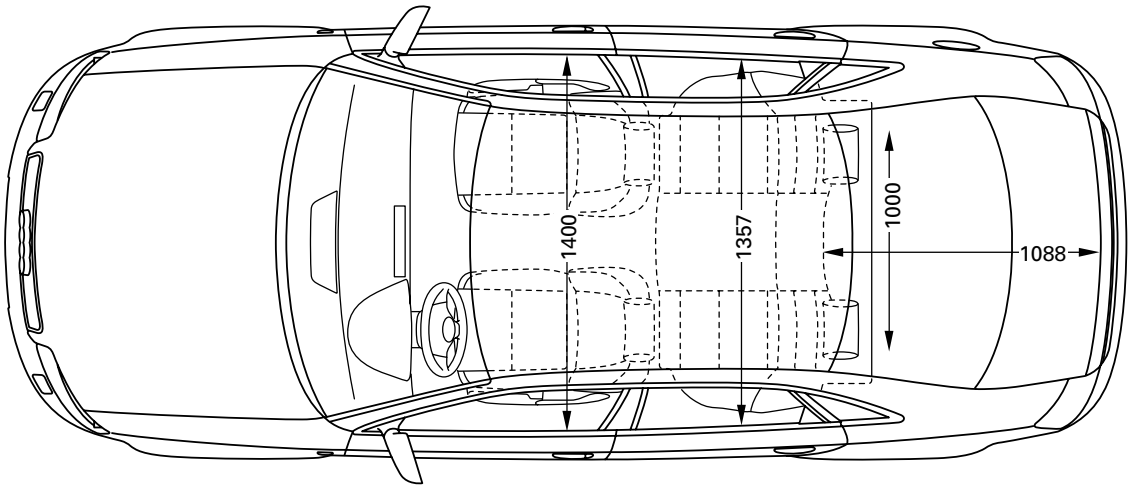

SSP254_051

The aero-floor

not only contributes to improved aerodynamics.
It was also possible to reduce the noise level by approx. 3 dB (A).

The aero-floor was designed so as to guarantee ground clearance and resistance to stone impact and to prevent accumulation of dirt, stones and snow.

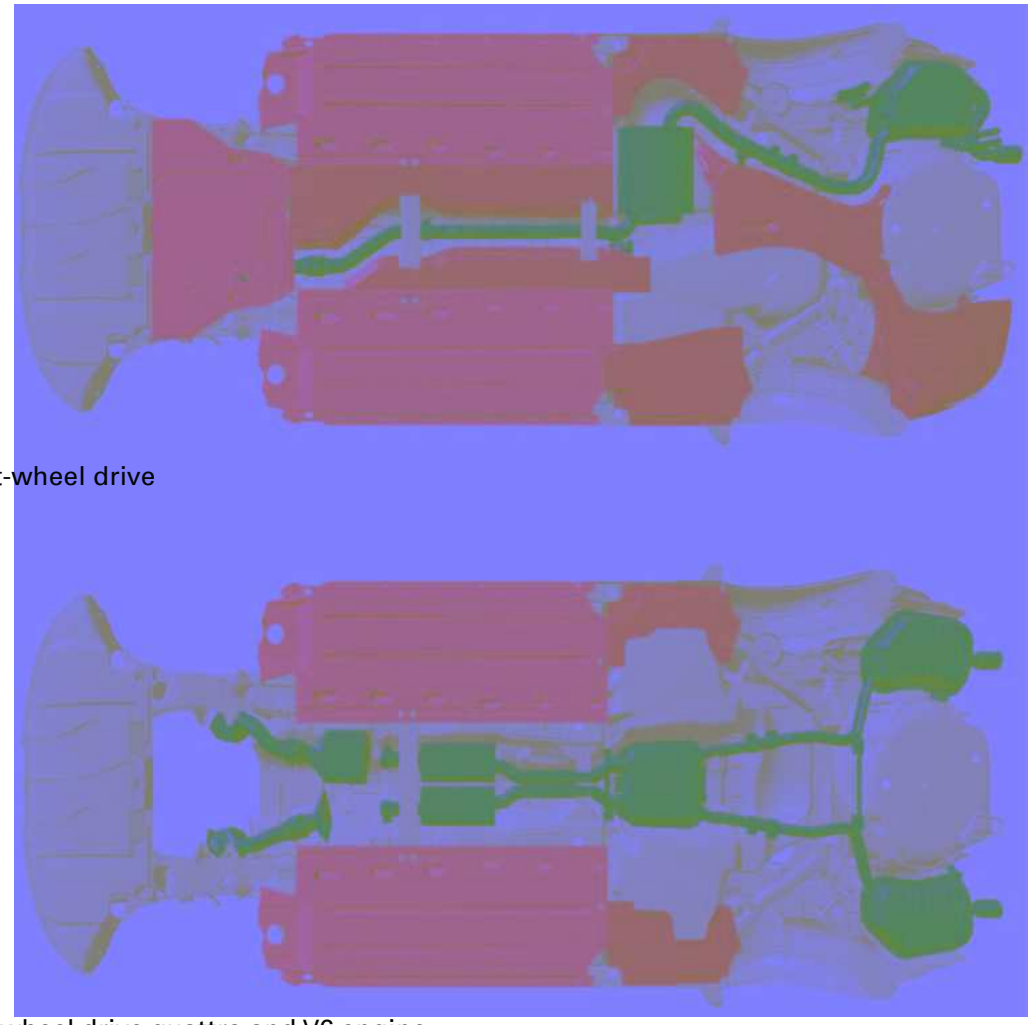

Front-wheel drive

Four-wheel drive quattro and V6 engine

SSP254_053

Part of the additional costs generated by the aero-floor could be compensated by dispensing with certain panelling components as well as by dispensing with PVC protection of the underside of the vehicle. The latter is of advantage during recycling.

! The engine compartment noise insulation does not form part of the aero-floor.

Body

The new Audi A4 is designed for optimal conformance with current crash requirements and safety standards.
This could only be achieved by increasing the body weight.

In order to reduce this additional weight to a minimum, the proportion of light-weight materials has been increased in comparison to its predecessor.
The proportion of high-strength sheet metal parts as well as the use of a total of 10 large component "tailored blanks", contribute significantly to weight reduction.
Body rigidity has been increased by 45 % by increasing the number of connection points by 25 %.

Front impact design features

- the straightened longitudinal member with crash-optimised octagonal cross-piece
- the rigid and significantly wider bumper cross-piece
- the integration of the member structures into the passenger cell
- strength, rigidity and weight-optimised suspension strut cross-piece

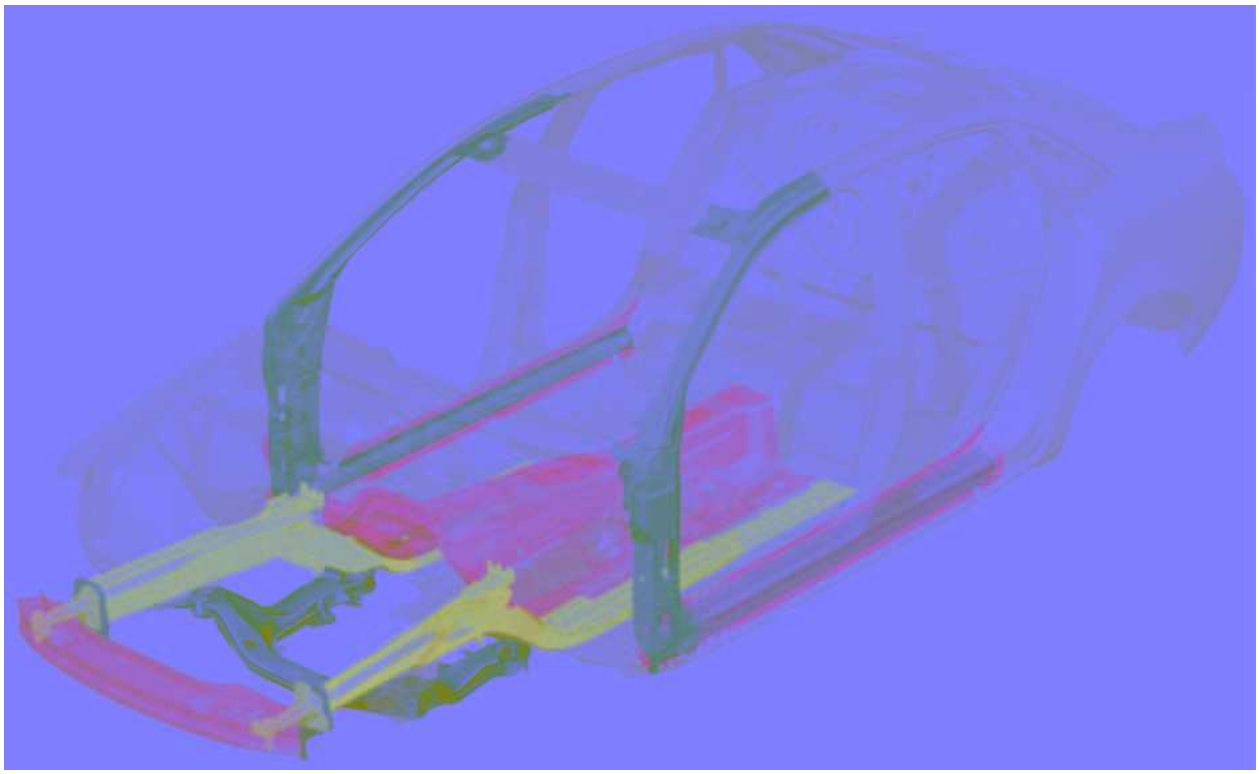

SSP254_054

Depending upon vehicle weight, performance and fuel consumption are the characteristics which our customers can experience at first hand.

Side impact design features

In the floor area, the cell consists of three large tailored blanks, which ensure a stable connection between the front and rear of the vehicle.

Weight-saving optimisation of deformation characteristics in the event of a side impact was achieved by the use of an aluminium extruded profile in the sill.

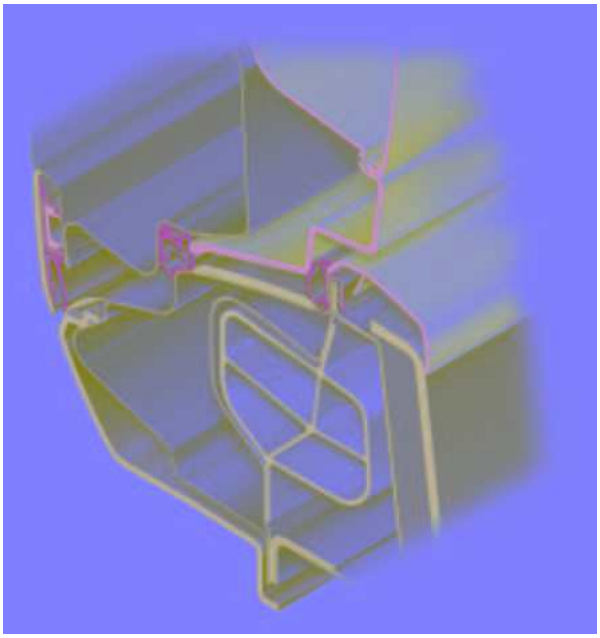

SSP254_055

! “tailored blanks” are made-to-measure sheet metal parts with varying material thickness.

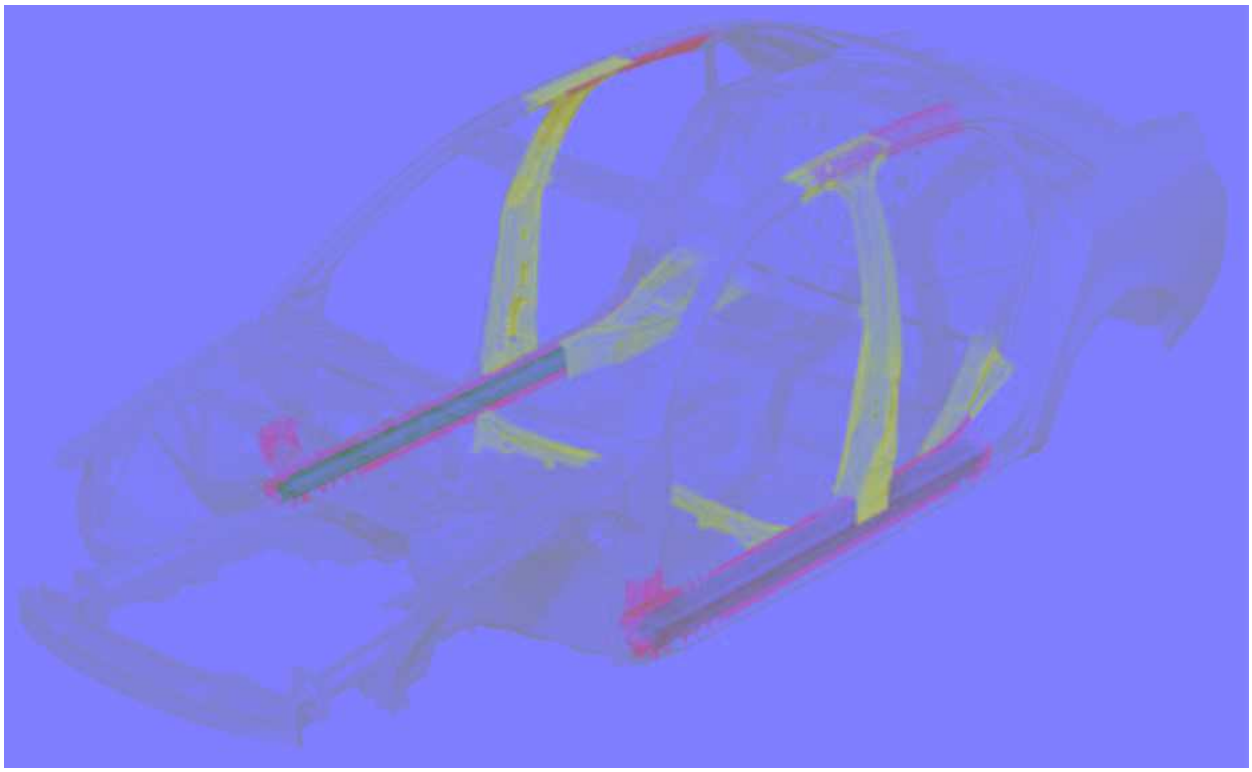

SSP254_056

Doors

The doors of the Audi A4 demonstrate a significantly increased rigidity due to the one-piece door shell construction.

For the first time, a so-called spray-on noise insulation is used, which is sprayed on as required and allows weight reduction for the same effectiveness.

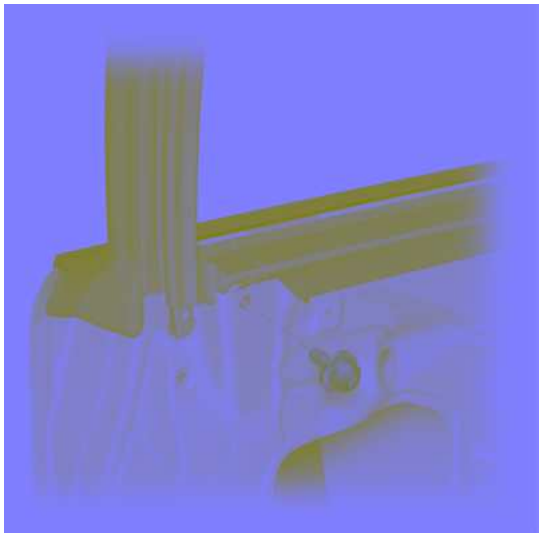

SSP254_066

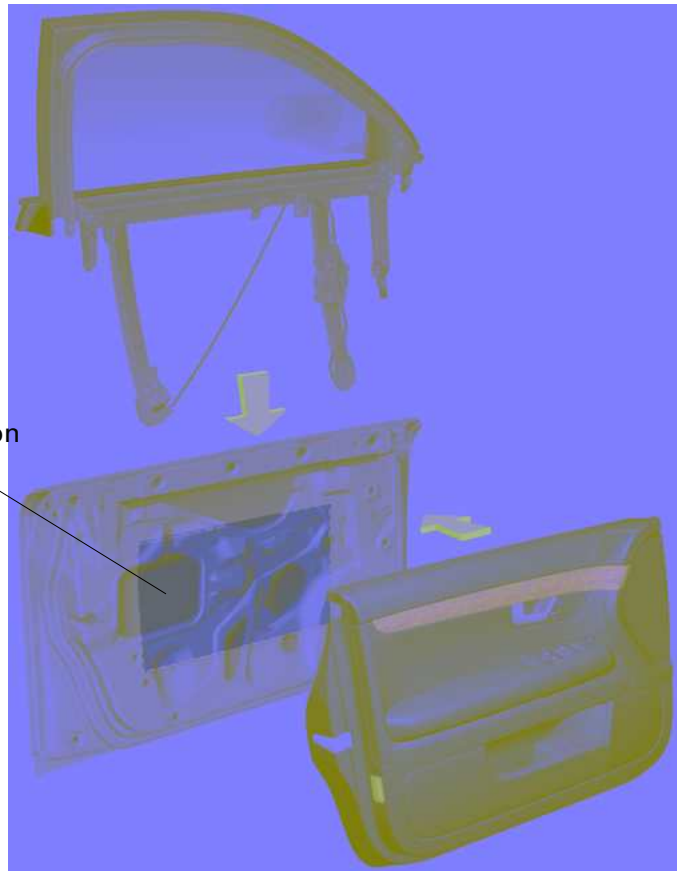

SSP254_067

The newly developed sub-frame is bolted to the door shell via fitted bolts.

In addition, the doors have been fitted with a second weatherseal. One weatherseal is fitted to the door and the other is fitted to the body.

The new door concept permits a reduction in the overall noise level of a further 3 dB (A) and thus contributes to improving the aero-acoustics.

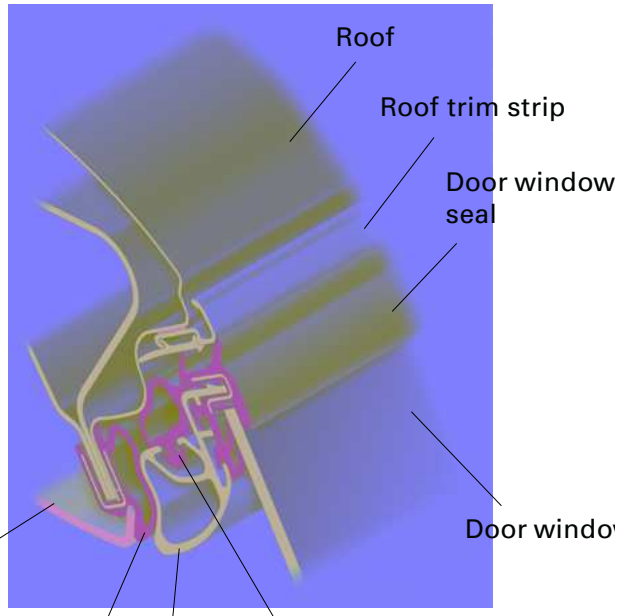

SSP254_075

Emergency door locking

In the event of failure of the central locking, e.g. due to power supply faults, each door can be individually locked without using the lock cylinder.

Firstly, with the door open, the cap must be removed. Emergency locking is effected by inserting the ignition key.

After the door has been closed, it is not possible to open it from the outside.
The door can be opened from the inside by actuating the door release handle twice.

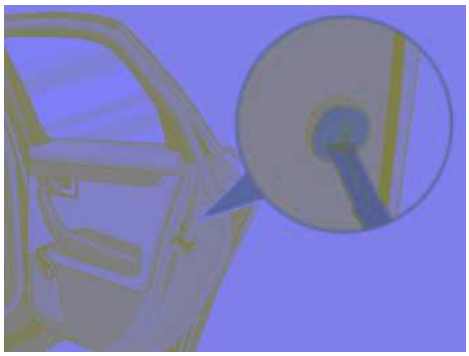

SSP254_069

Luggage compartment lid

The luggage compartment lid should always be operated via the radio remote control.

The lock cylinder for the luggage compartment lid is integrated into the handle.

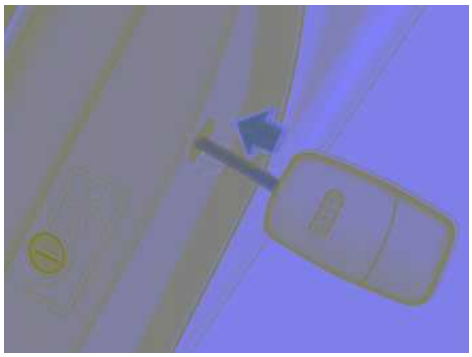

SSP254_070

Continuous locking of luggage compartment

If the lock cylinder is in the horizontal position with the key removed, the luggage compartment lid is no longer included in the central locking system. Opening is then only possible via the centre unlocking button of the radio remote control.

When the lock cylinder is in the vertical position, the lid is an integral part of the central locking system.

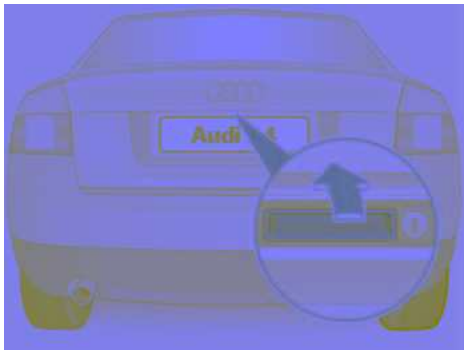

SSP254_071

Manual unlocking and opening

is effected by turning the key to the left.
In this position, it is not possible to remove the key, which must subsequently be returned to the vertical position.
Thus, it is ensured that the luggage compartment lid is an integral part of the central locking system.

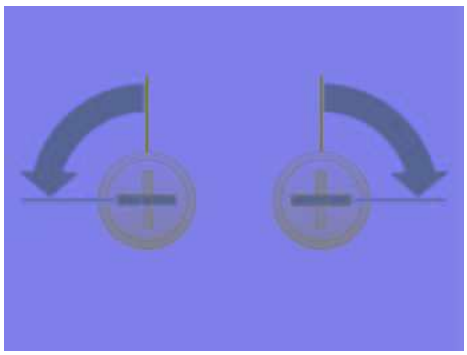

SSP254_072

Overview of system

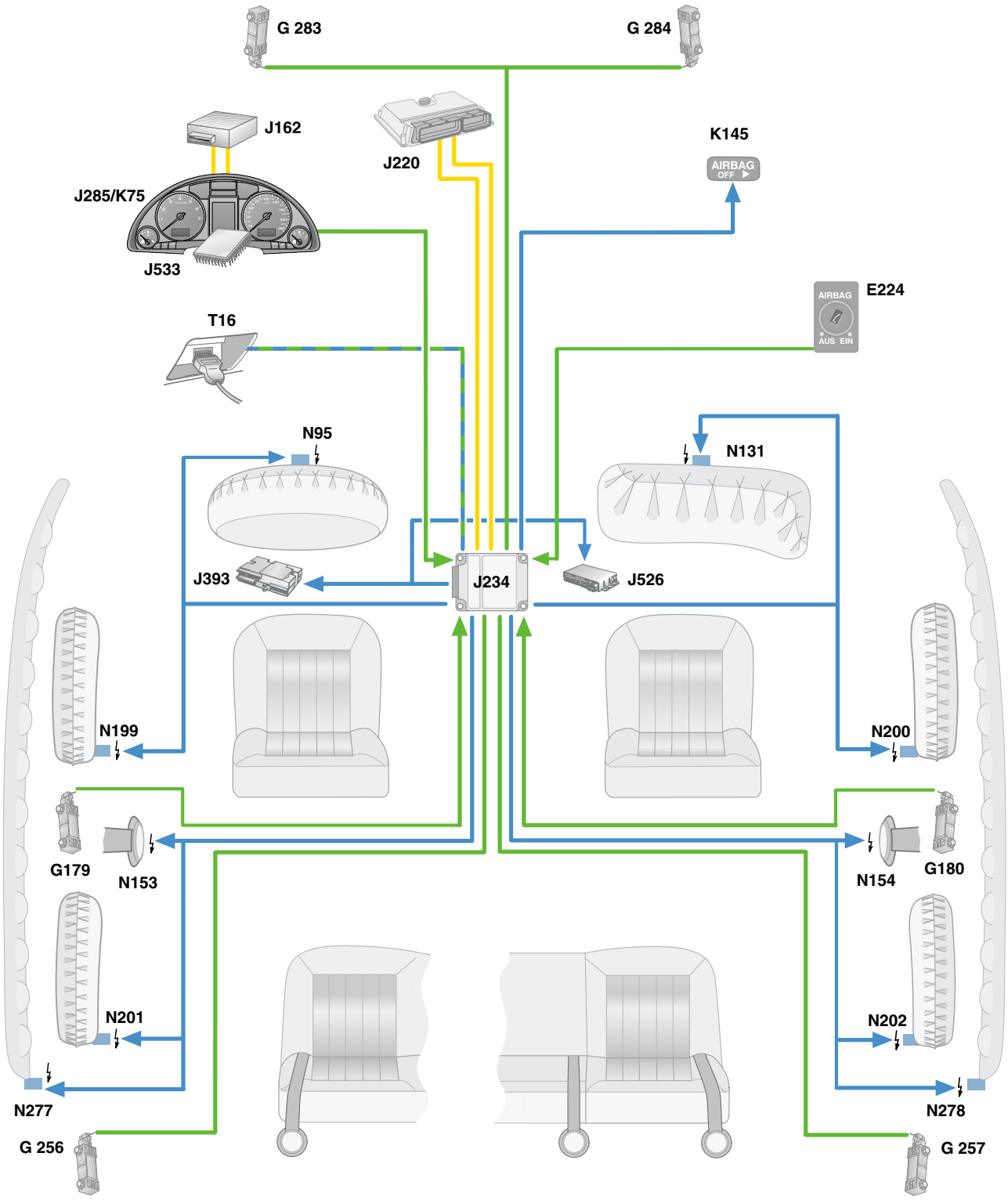

SSP254_029

To complement the comprehensive body modifications, occupant protection has been improved through the further development of the familiar 8.4 airbag system.

The new generation bears the designation 8.4 E, where the E stands for "extended".

The system comprises driver/passenger airbags, front side airbags, optional rear side airbags, SIDEGUARDS®, three point front seat belts with ball tensioners and belt force limiters, three point rear outer seat belts, centre lap belt (for fixed rear seat bench), Isofix preparation in rear of vehicle, and a total of 6 non-central accelerometers:

- 2 front impact crash sensors
- 2 driver/passenger side airbag crash sensors, (in the B-pillar for side impact)
- 2 driver/passenger rear side airbag crash sensors, (on the C-pillar for side impact)

The position of the sensors is selected so that they are installed as near as possible to the outer structure of the vehicle.
This enables quicker deceleration detection in the event of an impact.

The external sensors deliver digitised acceleration data to the airbag control unit, which is then evaluated in the control unit and which triggers the relevant restraint system components.

Key

E224	Key switch for switching off passenger's side airbag
G179	Side airbag crash sensor, driver's side (B-pillar)
G180	Side airbag crash sensor, passenger's side (B-pillar)
G256	Crash sensor for rear side airbag, driver's side
G257	Crash sensor for rear side airbag, passenger's side
G283	Front airbag crash sensor, driver's side
G284	Front airbag crash sensor, passenger's side
J162	Heater control unit
J220	Control unit for motronic
J234	Airbag control unit
J285	Control unit with display unit in dash panel insert
J393	Central control unit for convenience system
J526	Control unit for telephone / telematics
J533	Diagnosis interface for data bus (Gateway)
K75	Airbag warning lamp
K145	"Airbag off" warning lamp, passenger's side
N95	Airbag igniter, driver's side
N131	Airbag igniter 1, passenger's side
N153	Igniter for belt tensioner, driver's side
N154	Igniter for belt tensioner, passenger's side
N199	Igniter for side airbag, driver's side
N200	Igniter for side airbag, passenger's side
N201	Igniter for rear side airbag, driver's side
N202	Igniter for rear side airbag, passenger's side
N277	Igniter for airbag in B-pillar (SIDEGUARD®), driver's side
N278	Igniter for airbag in B-pillar (SIDEGUARD®), passenger's side
T16	Connector, 16-pin, diagnosis connection

Crash sensors for front airbag G283, 284

Both sensors for front impact detection function in conjunction with the crash sensor and the safe sensor which are integrated into the airbag control unit J234.

If a certain signal threshold is exceeded in the front airbag crash sensor, a threshold reduction is activated in the airbag control unit, which results in a shorter triggering time.

SSP254_058

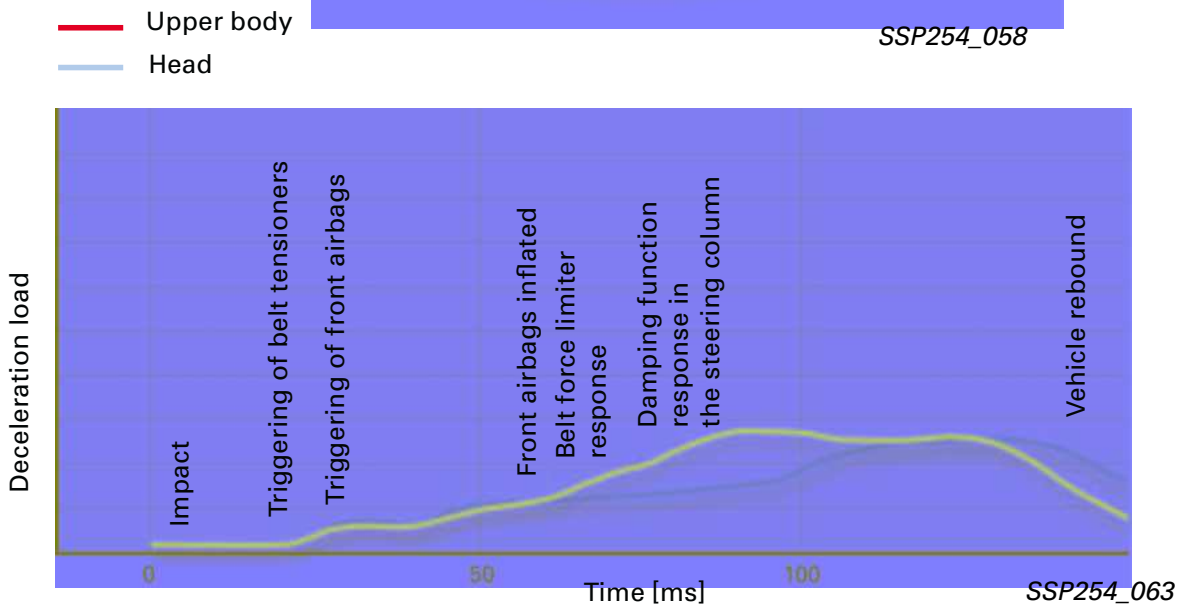

SSP254_063

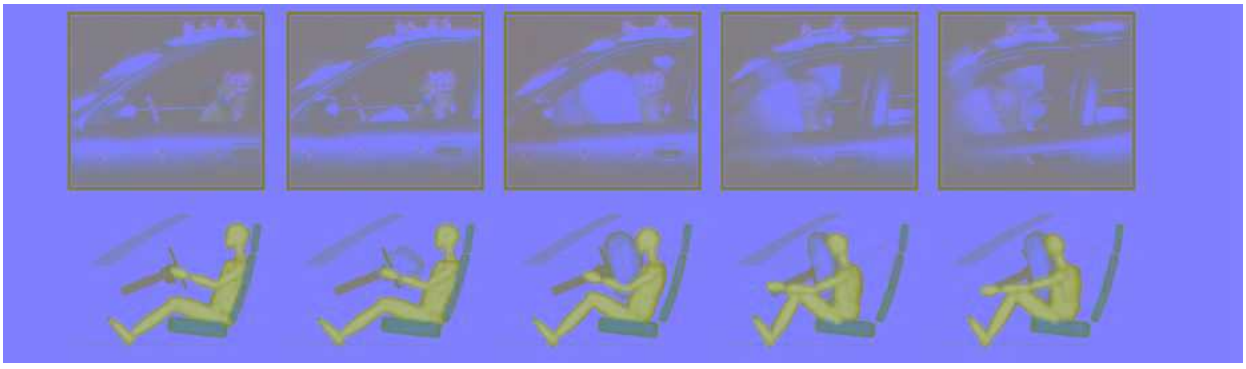

SSP254_064

Crash sensors for side airbags G179, 180, 256, 257

In order to trigger the components of the restraint system, two simultaneous impact detection signals are required for the plausibility check:

- from both opposing crash sensors (B-pillar left with right and/or (C-pillar left with right) and
- from the control unit internal crash sensors.

The crash sensors are designed in such a way that incorrect installation is excluded.

SSP254_059

Airbag control unit J234

The warning lamp for airbag K75 is activated continuously following a detected impact. "CRASH DATA STORED" and the triggered components are displayed with fault code during fault memory readout.

Re-encoding of the airbag control unit is no longer possible after the first crash data message is stored.

Triggering is performed in two thresholds depending upon the deceleration value:

- Threshold 1 = belt tensioners only
- Threshold 2 = belt tensioners and airbag(s)

! Sensors and components to be replaced following an accident, are listed in the current workshop manual.

Deactivation of passenger airbag

Deactivation of the passenger airbag is only possible via the key switch. In the Audi A4, the passenger's side airbag is also deactivated. Deactivation via the diagnostic tester is not possible.

If a customer requires the deactivation function where a key switch is not fitted, this can only be achieved by retrofitting the key switch and airbag OFF lamp and by re-encoding of the airbag control unit.

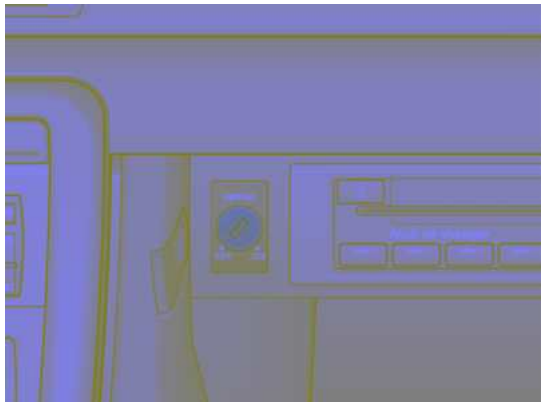

SSP254_101

Front belt attachment

Belt lock and strap fastenings are permanently connected to the seat frame. Thus, in conjunction with the seat belt height adjuster, an optimal belt fitting can be achieved for each seat position.

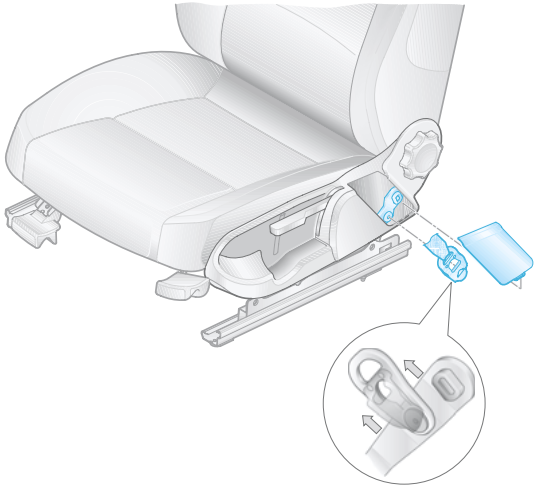

SSP254_011

Front head restraints

In order to offer a high degree of occupant protection in conjunction with the seat belt and airbag, the front head restraints have been supplemented by an integral locking mechanism.

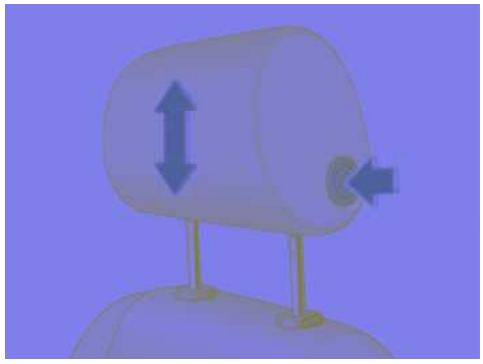

SSP254_102

Crash signal processing

There are two separate crash signal outputs:

One crash signal is output via the conventional wiring and triggers the following functions:

- Transmitting an emergency call via the control unit for telephone/telematics J526 (optional)
- unlocking the vehicle,
- Switch on interior light (switch must be set to door contact),
- switching on hazard warning lights via the central convenience electronics J393. The auxiliary heater J162 (optional) is switched off by the central convenience electronics J393 via a CAN convenience message.

The second crash signal output functions via the convenience CAN bus, which switches off the engine fuel supply via the engine control unit J220.

Engine and gearbox

Engine

The 4-cylinder, 2.0 l engine

provides high propulsive force due to the maximum torque of 195 Nm at 3300 rpm.

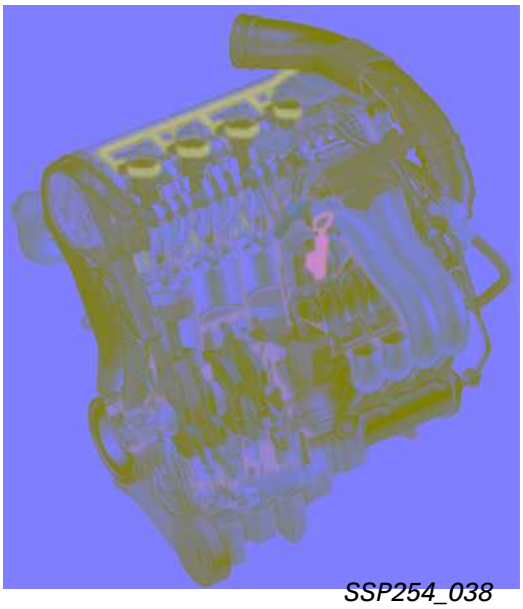

SSP254_038

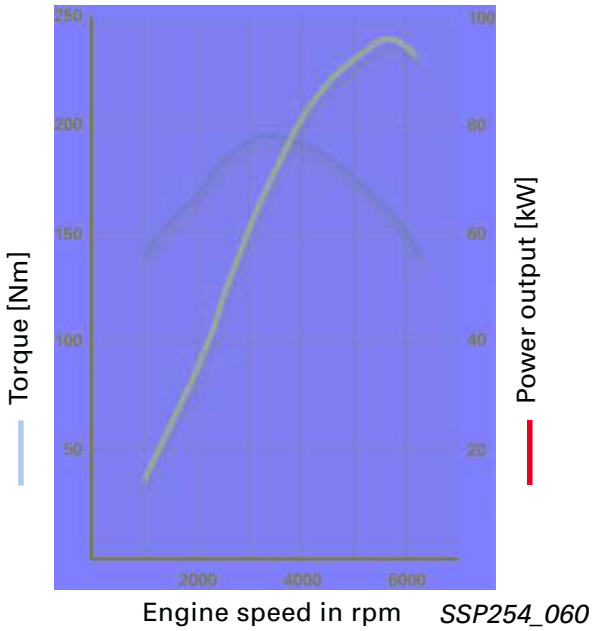

SSP254_060

The 3,0 l V6 engine

with five-valve cylinder head, produces162 kW (220 PS) at 6300 rpm from 2976 cm^3.
The maximum torque of 300 Nm is developed at 3200 rpm.

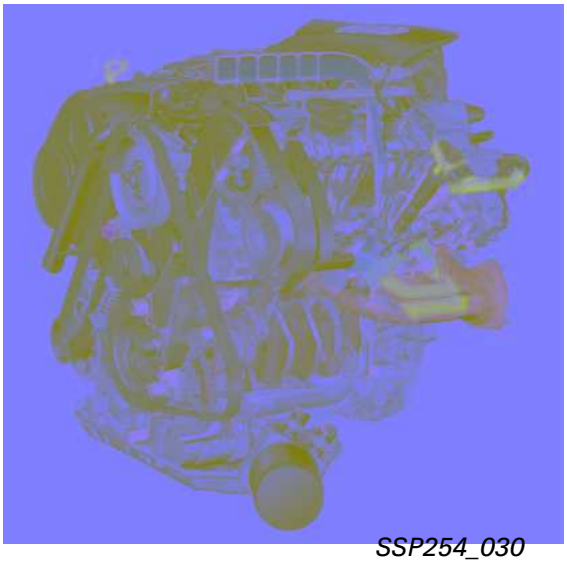

SSP254_030

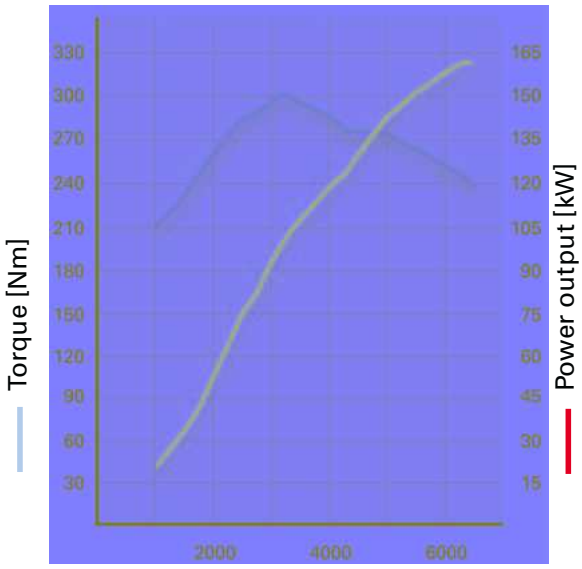

SSP254_061

Detailed information on these engines can be found in SSP 255.

Innovations 2.5 l V6 TDI engine

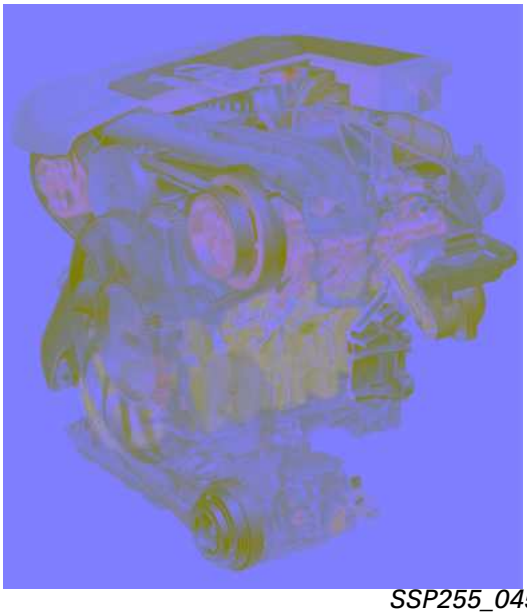

SSP255_045

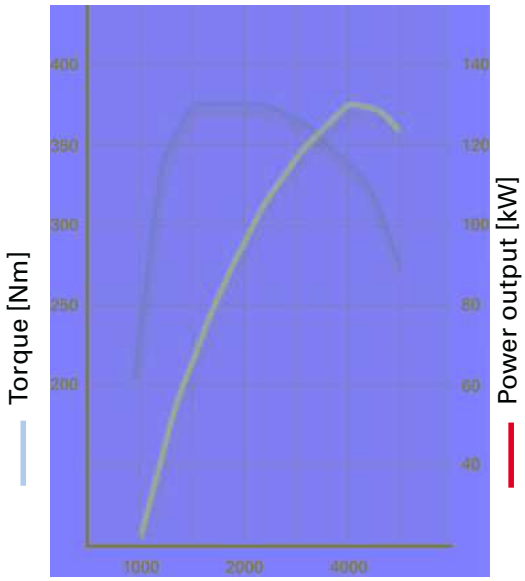

SSP255_039

Technical data

Capacity:	2496 cm^3	Injection system:	Bosch VE VP 44 S3.5
Bore:	78.3 mm	Turbocharger:	VNT 20
Stroke:	86.4 mm	Exhaust emissions class:	EU 3
Compression:	18.5 : 1	Consumption: (6-gear, quattro)	urban 11.0 l/100 km country 6.1 l/100 km average 7.8 l/100 km
Power output:	132 kW (180 PS)		
Torque:	370 Nm at 1500 rpm		

The main features of the basic engine are the same as those of the familiar V6 TDI engine with 132 kW (180 PS).

Power output and torque curve values could be maintained under conditions which were well within EU 3 limit values.

The injection system was modified in order to reduce exhaust gas and particle emissions.

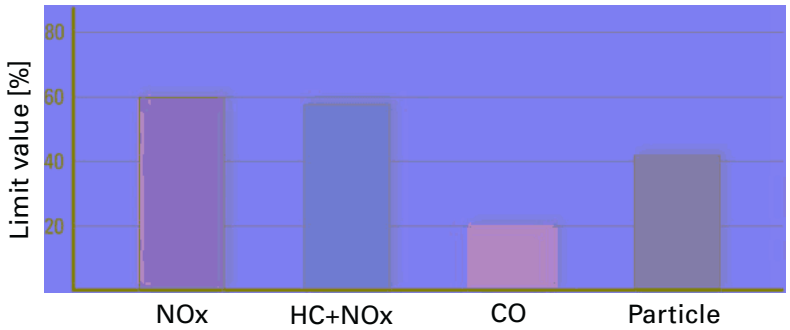

SSP255_038

EU 3 limit values 100 %

Particle	= 0.05 g/km
CO	= 0.64 g/km
HC+NOx	= 0.56 g/km
NOx	= 0.50 g/km

Injection pump VP 44 S3.5

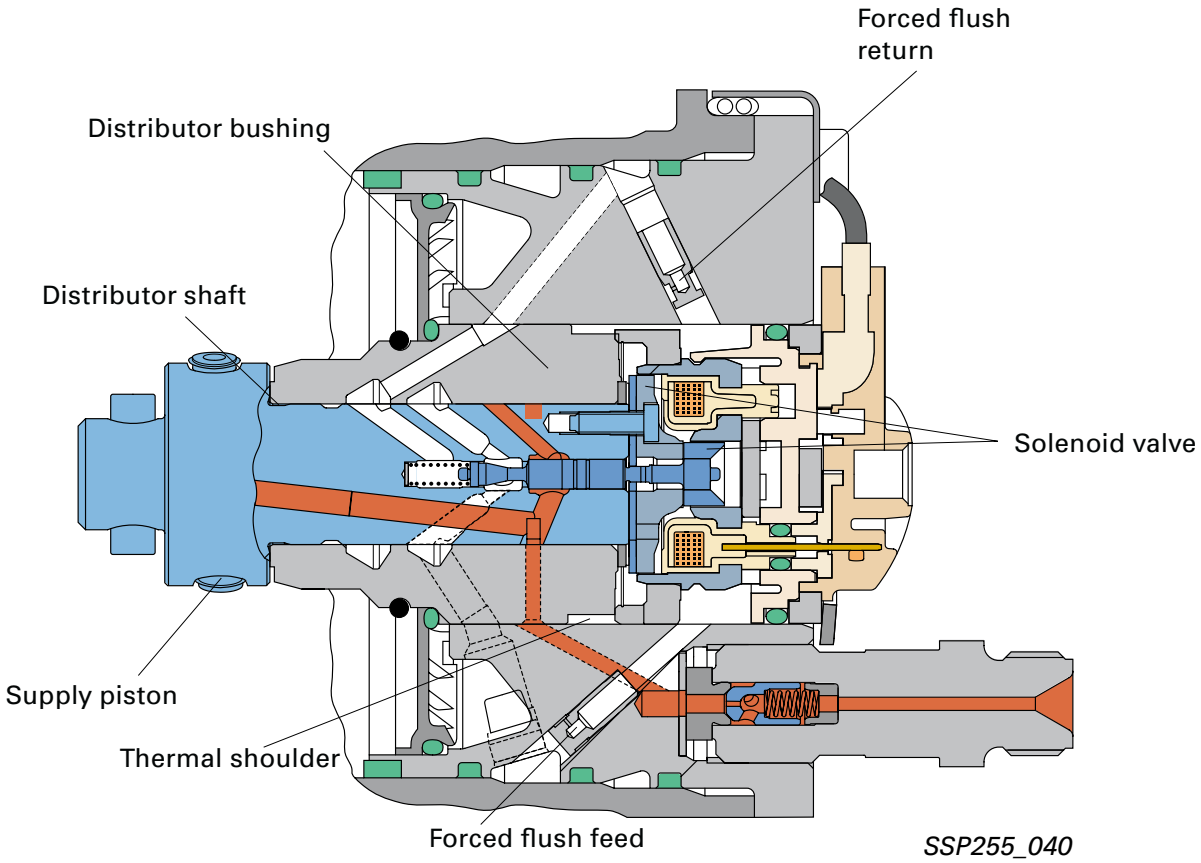

The high pressure section of the injection pump has been redesigned with regard to pressure levels and quicker solenoid valve actuation.

The injection pressure at part throttle has been increased by the following measures:

- increased cam stroke from 3.5 to 4.0 mm
- more stable support structure for high pressure section on pump body
- conversion from 3 pistons with a diameter of 6.0 mm, to 2 pistons with a diameter of 7.0 mm.

By reducing the number of high-pressure pistons from 3 to 2, it was possible to reduce high-pressure leakage via the sealing surfaces.

In order to initiate pre-injection for cold and warm engines, the solenoid valve dynamics have been significantly increased.
The associated increased heat generation in the solenoid valve, is compensated by improved fuel flow and optimal filling of the high pressure section is achieved.

Noise levels have been significantly improved by the pre-injection for cold and warm operation and the use of dual-spring nozzle holders.

Previously, pre-injection via the solenoid valve was only realised during the engine warm-up phase.

Injector

For the first time, an ICU injector (**I**nverse **C**avity **U**ndercut) is used, which has a dual needle guide.

The advantage of this ICU geometry is a significantly improved spray formation, especially in the part throttle range for small injection quantities and short needle lift.

Due to the improved spray formation through the use of the ICU injector, it was possible to reduce the exhaust emissions and the particle values by up to 20 %.

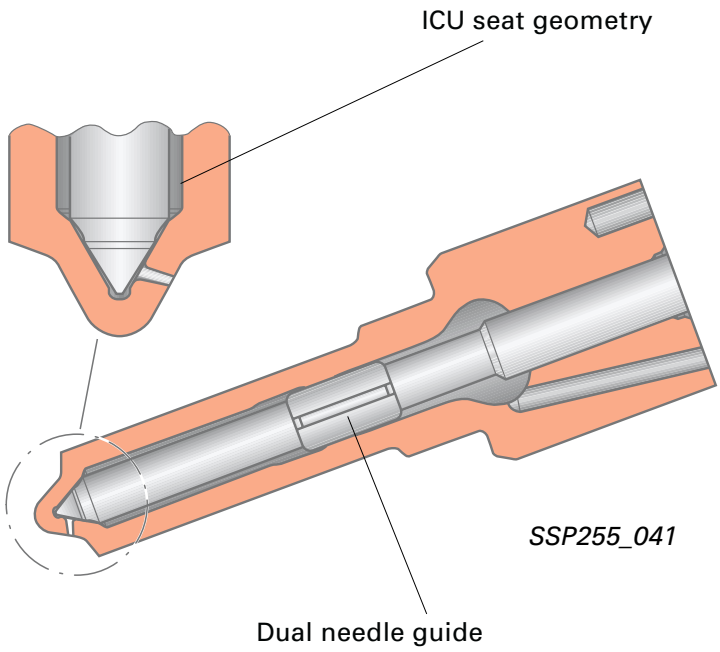

SSP255_041

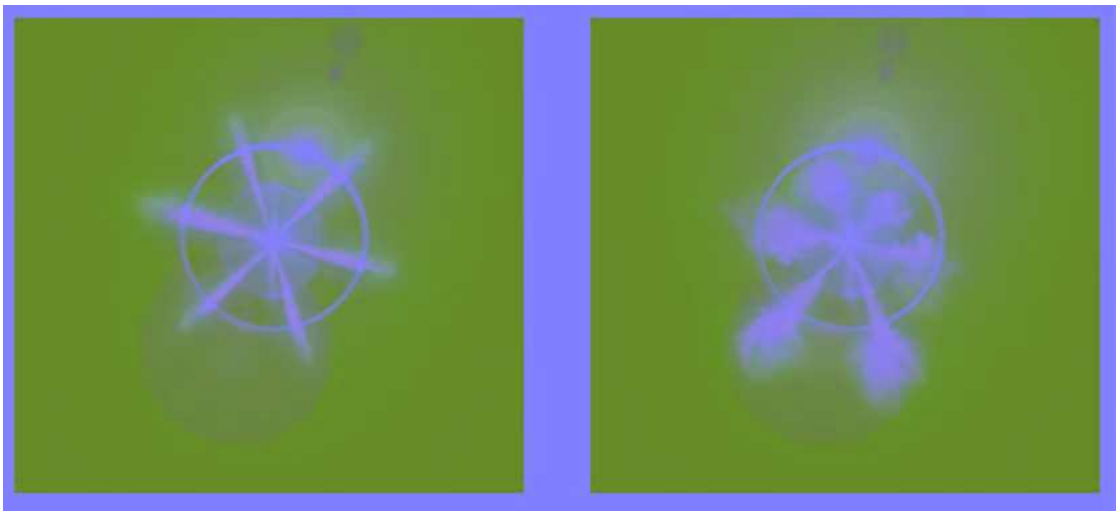

ICU seat geometry

Standard seat geometry

SSP255_042

Charge air cooler

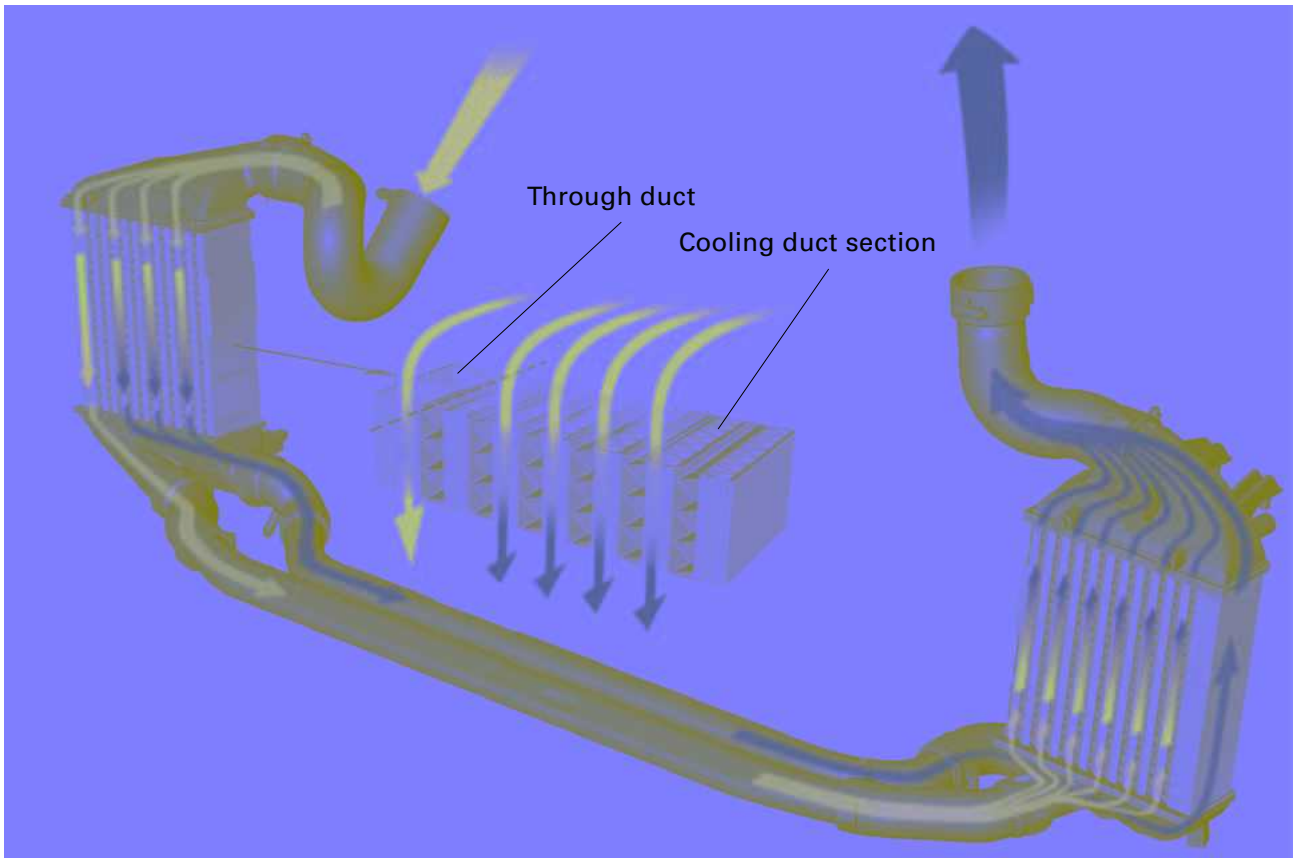

SSP255_043

The existing series connection of the two charge air coolers for the 110 kW engine is inadequate for the 132 kW engine with its high air throughput.

A new charge air cooler design was developed, in order to ensure optimal charge air flow.

The charge air cooler design comprises two sections, in which part of the charge air is fed via a through duct, connected to a space-saving pipe, to the section of the other charge air cooler which is fitted with cooling fins.
The rest of the charge air is fed directly through the cooling fins, via a separate pipe, to the second charge air cooler and into the through duct.

Innovations - automatic gearbox

5-speed 01V automatic gearbox

The Audi A4 quattro MJ01 with 5-speed automatic gearbox features a new shift lever gate, together with a new shifting concept.

The existing selector lever positions, 4,3,2 are discontinued and are replaced by the "S" position.

Gearshift positions 4,3,2 have been discontinued as they are hardly ever used in practice. The DSP (dynamic shift programme) and "tiptronic" function have basically rendered them superfluous.

With the selector lever is in the "S" position, a sports shift programme provides the relevant driving dynamics. In position "S", the DSP also provides for adaptation of the driving set values to the driving conditions.

The introduction of the "S" programme enables a significant extension of the useful shift range between economy and sports.

The "S" programme comprises the following special features:

- If, during driving with constant accelerator pedal position, the selector lever is set to the "S" position, the system always shifts down, within defined limits.
- In order to achieve a direct driving reaction in response to accelerator pedal actuation, the converter clutch is closed during driving operation, where possible.
- If, in conjunction with the overall gearbox ratio, 5th gear is designed as overdrive gear (overdrive, 4+E), only 1st -4th gears are shifted.

We recommend the multi-function steering wheel (available as optional extra) with steering wheel "tiptronic" ("thumb shifting").

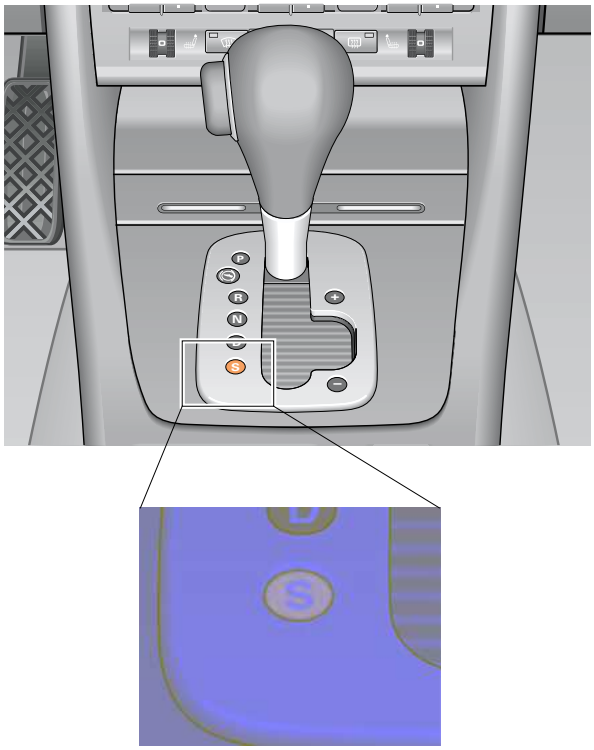

SSP254_117

Example: Dynamics code 40
Shift map 1

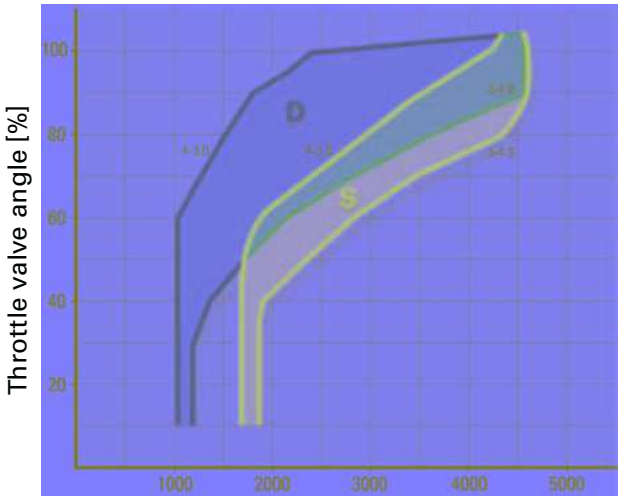

D - normal driving programme
S - sports driving programme

SSP254_103

"multitronic" and 5-speed automatic gearbox

SSP254_088

An innovation for all automatic gearboxes is the "Tip in D " function. This means that the steering wheel "tiptronic" function is now also available in selector lever position "D".

The transition to the "tiptronic" function is effected by actuating one of the two tip switches on the multi-function steering wheel (selector lever in position "D"). The system then switches to the "tiptronic" function for approx. 10 seconds. All gears can be shifted within the range of permissible engine speeds.
The system returns to normal automatic operation approx. 10 seconds after the last tip request.

Special feature:

The countdown from approx. 10 seconds to return to normal automatic operation is interrupted, in the event that cornering is detected or the vehicle is in overrun operation.

When normal driving conditions are detected again, the countdown recommences from approx. 10 seconds.

Notes

Axles

Four-link front axle

The thorough further development of the light-weight construction resulted in a weight reduction of approx. 8.5 kg at the front axle. In addition to all transverse links, the pivot bearing is now also made of aluminium. The wheel bearing is attached to the pivot bearing via four bolts. The wheel hub can be pressed in and out.

SSP254_087

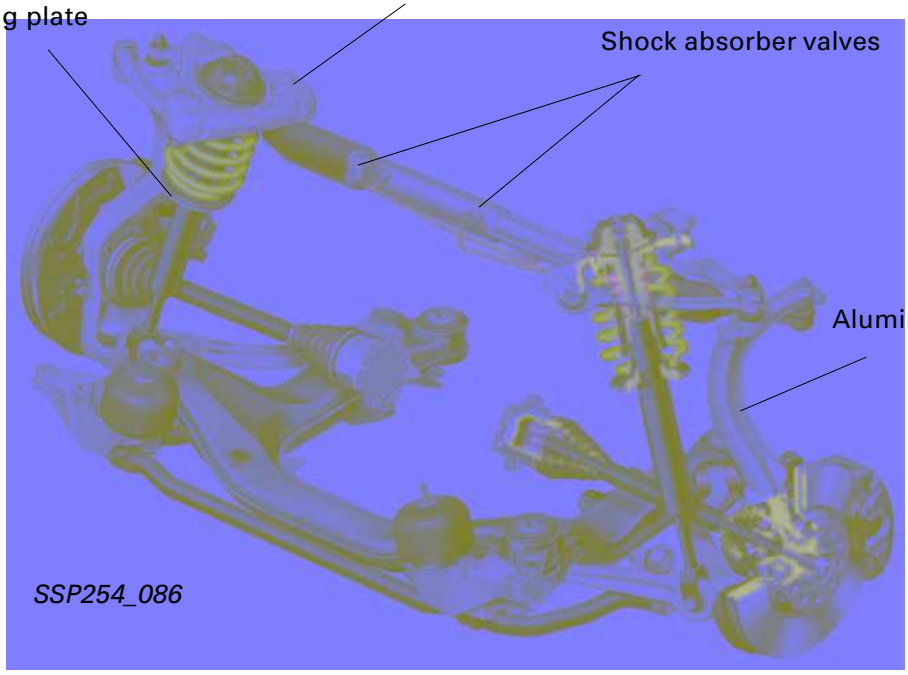

SSP254_086

The suspension strut mounting is of the bulky rubber bearing construction.
It consists of two functional components:

- The inner part forms the connection to the piston rod.
- The larger outer part provides for acoustic insulation of the shock absorber.

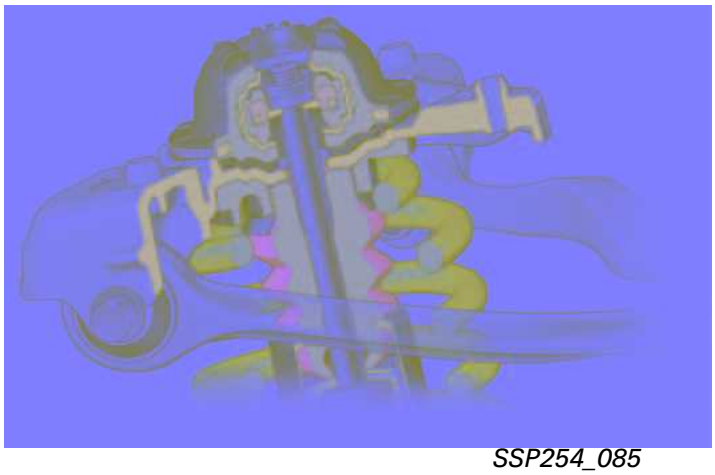

SSP254_085

Trapezium link rear axle

The rear axle design with largely identical components is used in both the front-wheel drive as well as in the quattro versions.

Apart from the axle mounting, the two axle versions differ only in the wheel carrier and the wheel bearings.

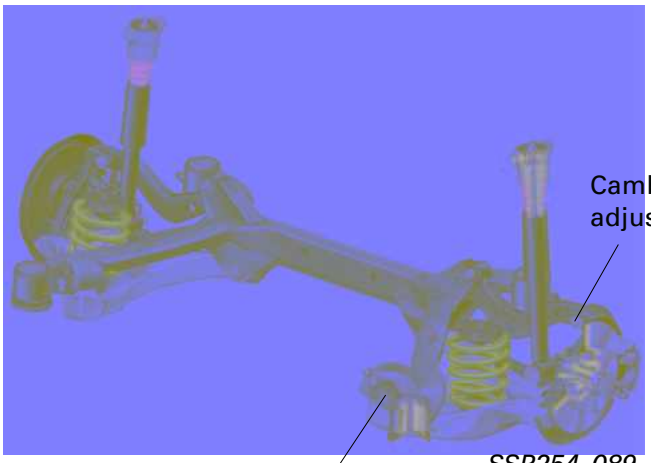

SSP254_089

The front-wheel drive version is fitted with a wheel bearing unit with integral wheel hub, which is mounted on a stub axle forged together with the wheel carrier.

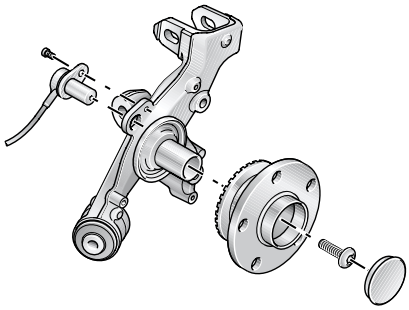

SSP254_083

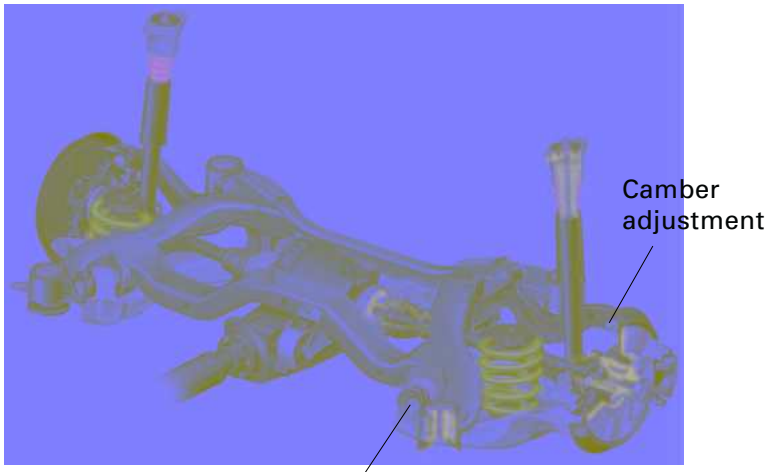

SSP254_091

The wheel bearings of the quattro version consist of pressed-in, double-row angular ball bearings with conventional wheel hubs.

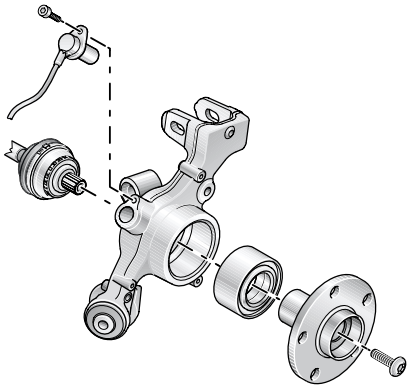

SSP254_082

Mechanical unit mountings

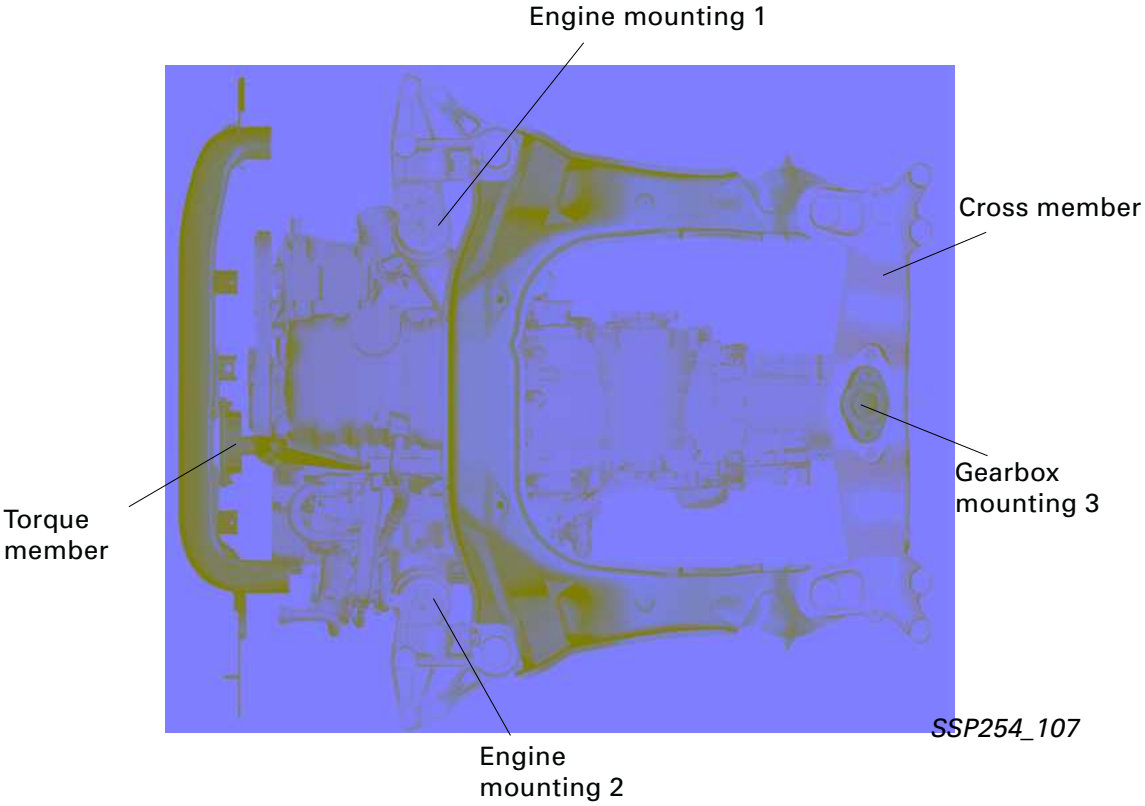

A newly designed three-point mechanical unit mounting is used in the new Audi A4.

The hydraulically damped engine mountings (electrically-controlled version for diesel engines) are fastened directly to the longitudinal members via die-cast aluminium brackets.

The gearbox mounting is effected by means of a conventional rubber bearing on a body-mounted aluminium carrier, which is produced according to the hollow sand casting technique.

The additional cross member enables support over a longer lever arm, which positively influences vibration and load cycle characteristics.

The aluminium cross member is bolted to the body as well as to the rear subframe mountings and, in addition to its supporting function for the gearbox mounting, serves as a body-stiffening tunnel bridge.

! The three-point mechanical unit mounting is used for all engine/gearbox combinations except those including the 01V 5-speed automatic gearbox.

Brake system

The new Bosch ESP 5.7 is introduced in the Audi A4. The ESP 5.7 is distinguished by the following special features:

- The hydraulic unit and control unit form a single unit.
- The charging pump (actuation of ESP hydraulic pump V156) is discontinued.
- A brake assistant is included.

Hydraulic modulator

Due to the increased brake fluid viscosity at extremely low ambient temperatures, the required delivery rate for the return pump for ABS V39 could not be achieved without a charging pump (resulting from the increased suction resistance in the system).

The purpose of the development of the ESP 5.7 was to improve the suction of the ABS return pump so that the charging pump was no longer necessary.

The charging pump could be discontinued through the use of a two-stage ABS return pump, enlarging the cross-section of the brake lines and the use of a larger-dimensioned central valve in the brake master cylinder.

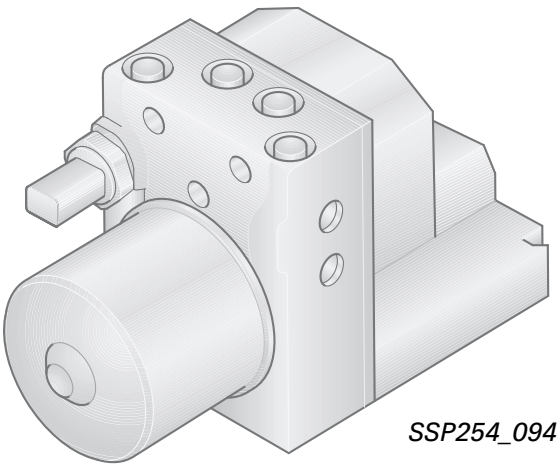

SSP254_094

Single-stage ABS return pump

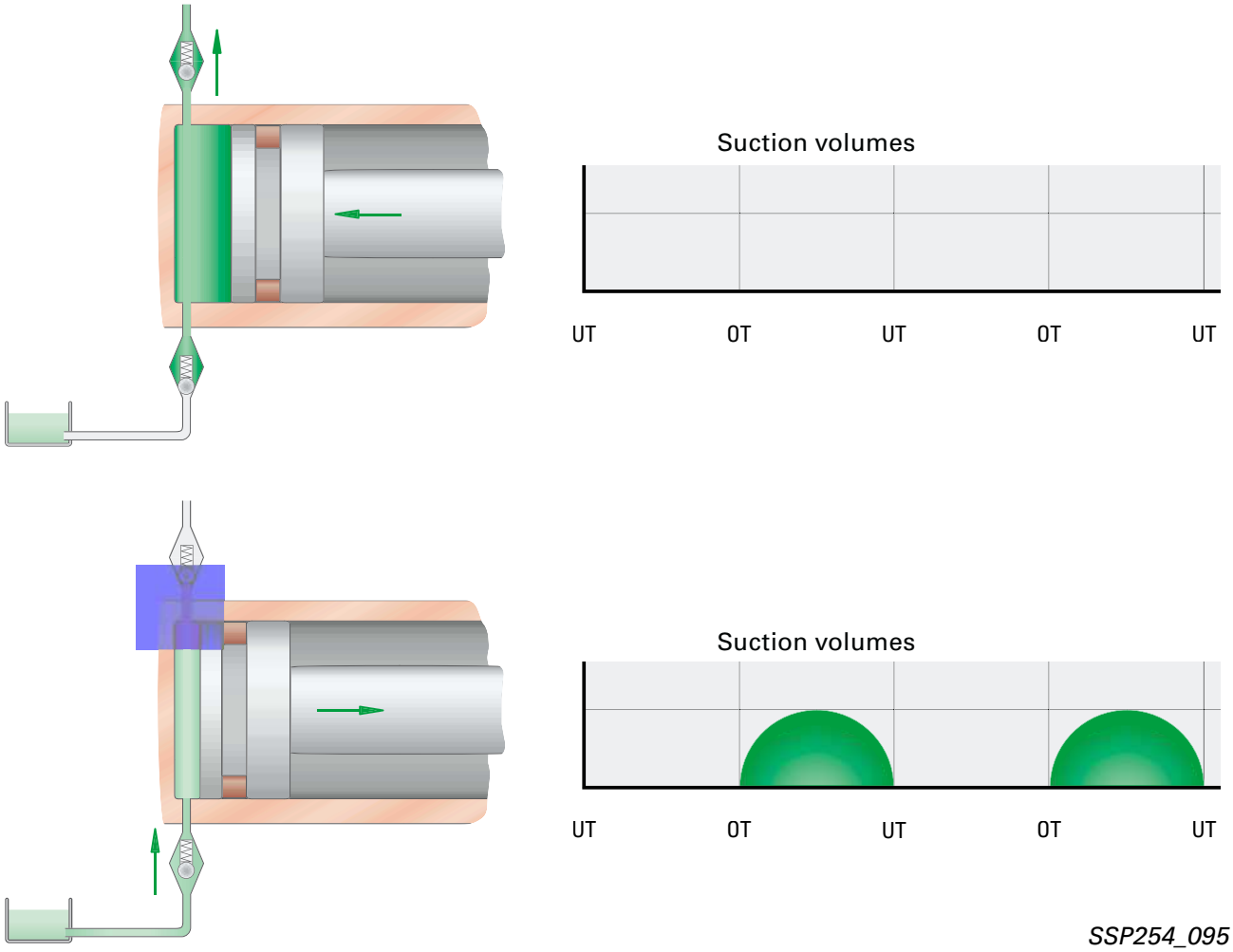

SSP254_095

The graphic shows a comparison of the suction volumes of both pump versions.

In the single-stage ABS return pump, the entire suction volume must be drawn in and flow through the suction line during one piston stroke (piston stroke from TDC to BDC).

The suction pressure is correspondingly high and increases with increasing viscosity. Cavitation and the associated drop in performance on the pressure side, are the results.

Two-stage ABS return pump

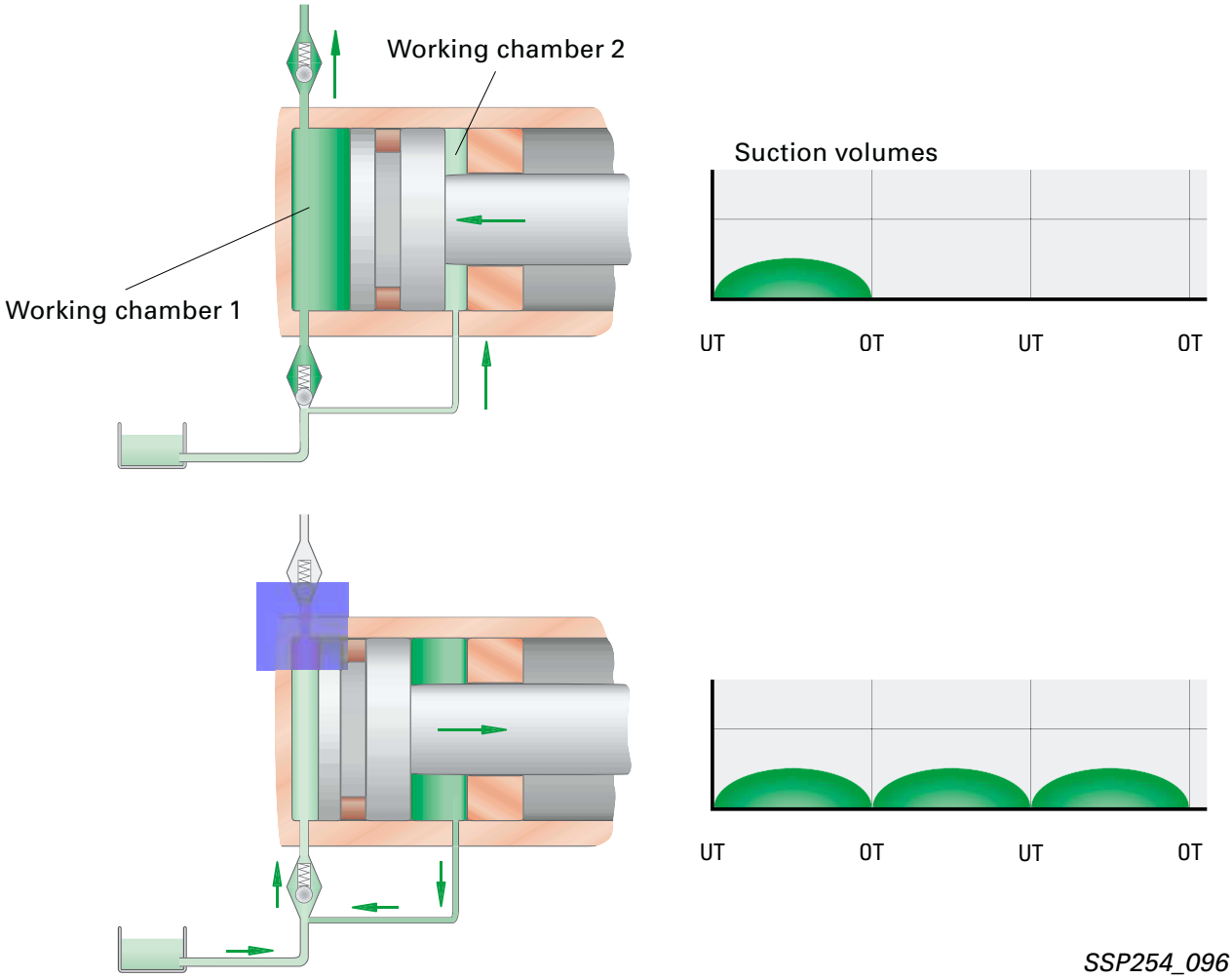

SSP254_096

The piston of the two-stage ABS return pump is stepped and has a double-acting function within two working chambers.

Suction is effected in two stages; brake fluid being drawn through the suction line during each piston stroke.

As the entire suction volume is supplied almost continuously, the maximum suction flow rate is significantly lower, which diminishes the suction pressure and prevents cavitation.
Thus, a quick pressure build-up is ensured, even at extremely low temperatures.

Function:

If the piston moves from BDC to TDC, the brake fluid in working chamber 1 is compressed whereas working chamber 2 is simultaneously under suction.

If the piston then moves from
TDC to BDC, the brake fluid which has been drawn into working chamber 2 is forced back into the suction line against the inlet valve.

In working chamber 1, brake fluid is now drawn via the open inlet valve, out of the suction line and out of the connection line to working chamber 2.

The suction flow rate in the suction line is diminished by that amount which flows back out of the connection line from working chamber 2
(drawn in during previous working operation).

Brake assistant

Investigations in accident research have shown, that the majority of drivers fail to adequately actuate the brakes in an emergency situation.
This results in insufficient brake pressure being generated to achieve maximum vehicle deceleration.
This lengthens the braking distance.

During emergency braking, the brake assistant aids the driver by increasing the brake pressure automatically, to a level exceeding the locking limit.
The ABS (**A**nti-lock**b**raking**s**ystem) is thus quickly brought into the operating range, which enables a maximum vehicle deceleration to be achieved.

Brake servo pressure sensor G294 is used for detection of emergency braking.

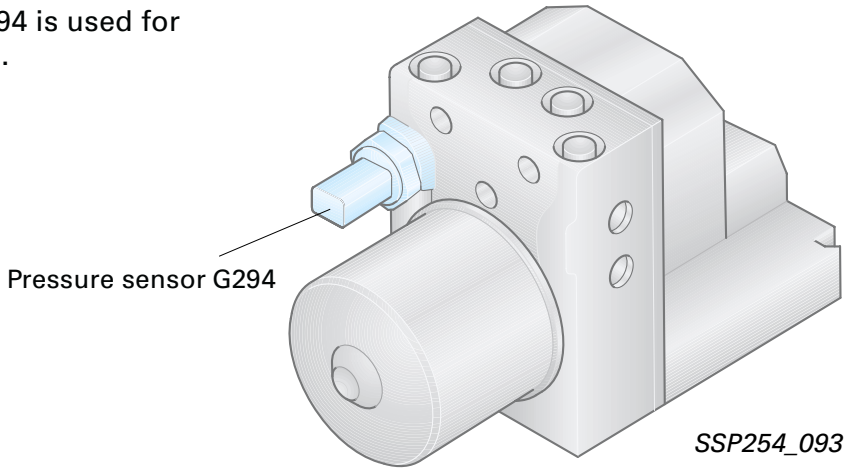

For this purpose, the pressure increase gradient (pressure build-up with respect to time) is evaluated and, if necessary, the brake assistant is activated.

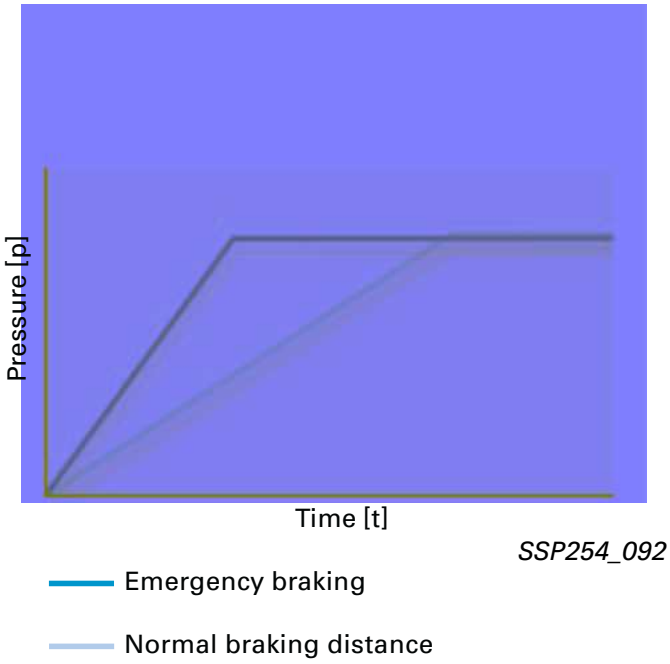

The function of the brake assistant is sub-divided into 2 phases:

► Phase 1

If the pressure increase gradient exceeds a specified value (emergency braking), the ABS return pump and the relevant solenoid valve are activated by the ESP control unit and the brake pressure is thus increased into the ABS control range, in a similar manner to that of the control system for an electronic differential lock.

► Phase 2

If the pressure determined by the driver falls below a certain value after triggering of the brake assistant, the system pressure is restored to the pedal pressure determined by the driver.

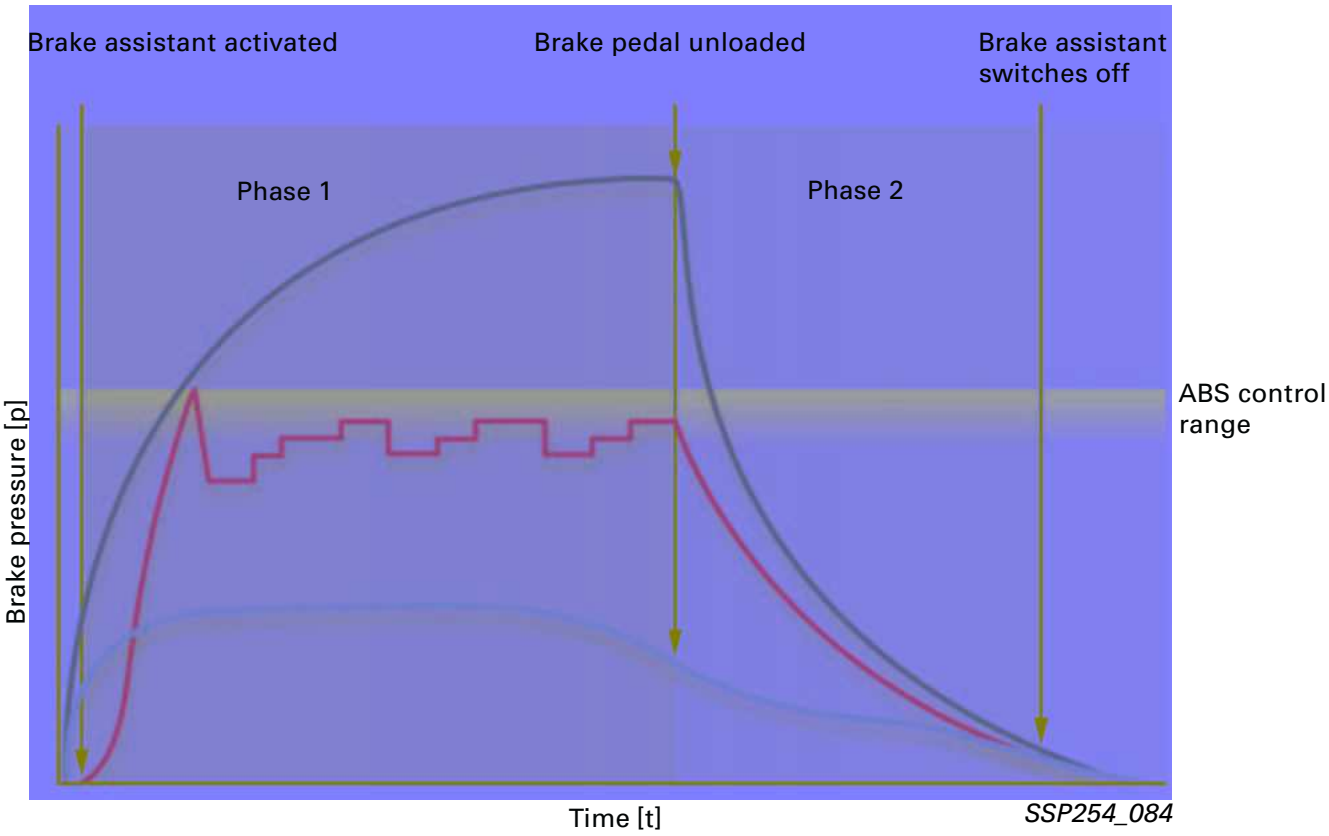

Brake pressure determined by an experienced driver

Regulated brake pressure (brake assistant)

Determined brake pressure insufficient inexperienced driver

The integral inlet and outlet valves in the hydraulic modulator are no longer simply switched on/off, but are regulated via supplied voltage.
This enables more precise control on extremely slippery surfaces, e.g. ice.

Brake fluid reservoir

The brake fluid reservoir is secured with an additional screw.

The new maintenance opening in the brake fluid reservoir enables the extraction of brake fluid from both brake fluid chambers.

The new brake filler and bleeder unit VAS 5234 must be used for this purpose.

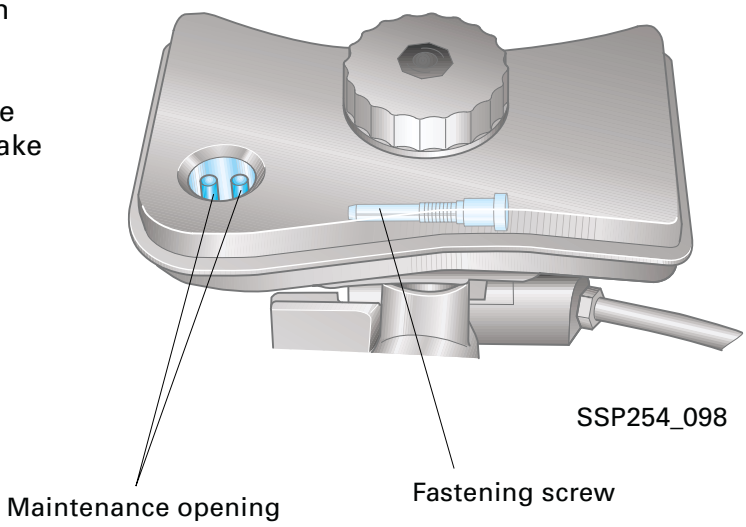

SSP254_098

Brake light switch

The fastening and adjustment of the brake light switch are new.

The brake light switch is secured to the pedal bracket via a bayonet fitting.

The position of the push rod is adjusted for the basic setting.

For this purpose, the brake light switch must be released by turning it anti-clockwise. The push rod catch is released simultaneously via the locking lug.

The push rod is now free and can be adjusted without risk of damage.

The push rod is pulled out to the stop for the basic setting.
The brake light switch can now be inserted into the pedal bracket and secured by turning clockwise. At the same time, the push rod catch is locked automatically by means of the locking lug.

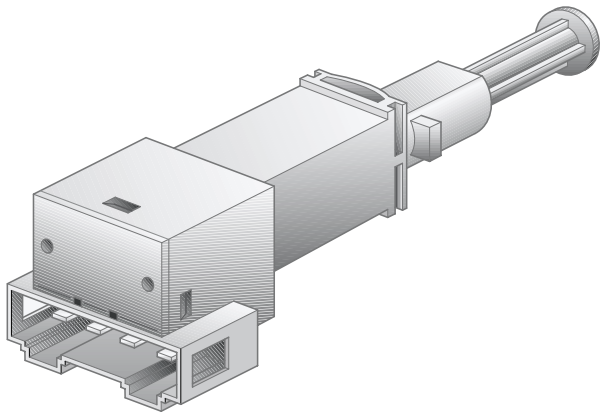

SSP254_099

Notes

Electrical system

Vehicle electrical system

Control unit for headlamp range control J431

Chip card reader R99

Control unit for telematics J499

Control unit for mobile phone control electronics J412

Battery

Control unit with display in dash panel insert J285

Front airbag crash sensor, passenger's side G284

Control unit for coolant fan, Stage 1+2 J293

Control unit for ESP J104

Front airbag crash sensor, driver's side G283

Control unit for Motronic J220
Control unit for automatic gearbox J217

Steering column switch module J527

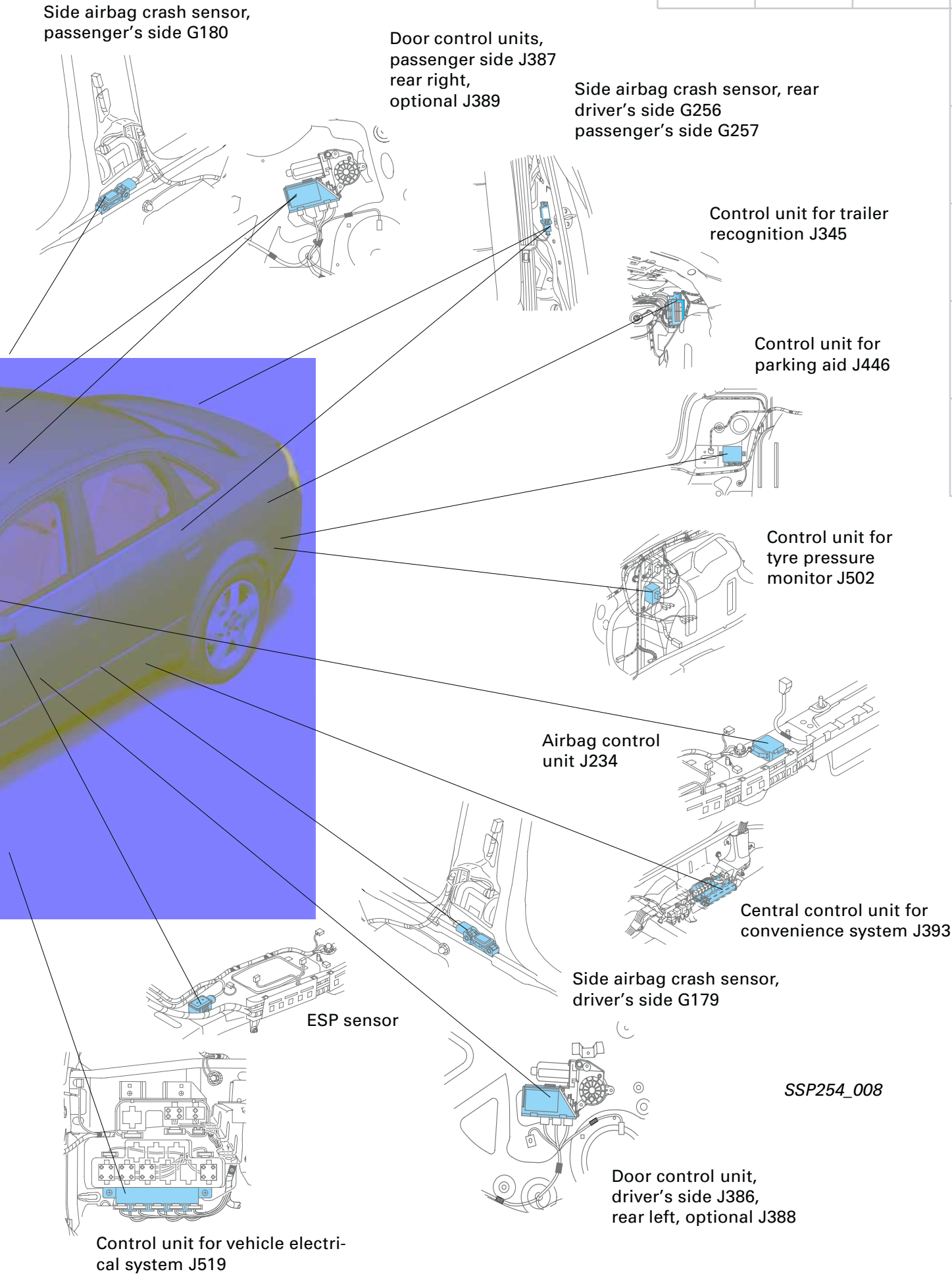
Side airbag crash sensor, passenger's side G180
Door control units, passenger side J387 rear right, optional J389
Side airbag crash sensor, rear driver's side G256 passenger's side G257
Control unit for trailer recognition J345
Control unit for parking aid J446
Control unit for tyre pressure monitor J502
Airbag control unit J234
Central control unit for convenience system J393
Side airbag crash sensor, driver's side G179
ESP sensor
Door control unit, driver's side J386, rear left, optional J388
Control unit for vehicle electrical system J519

SSP254_008

Electrical system

CAN BUS networking

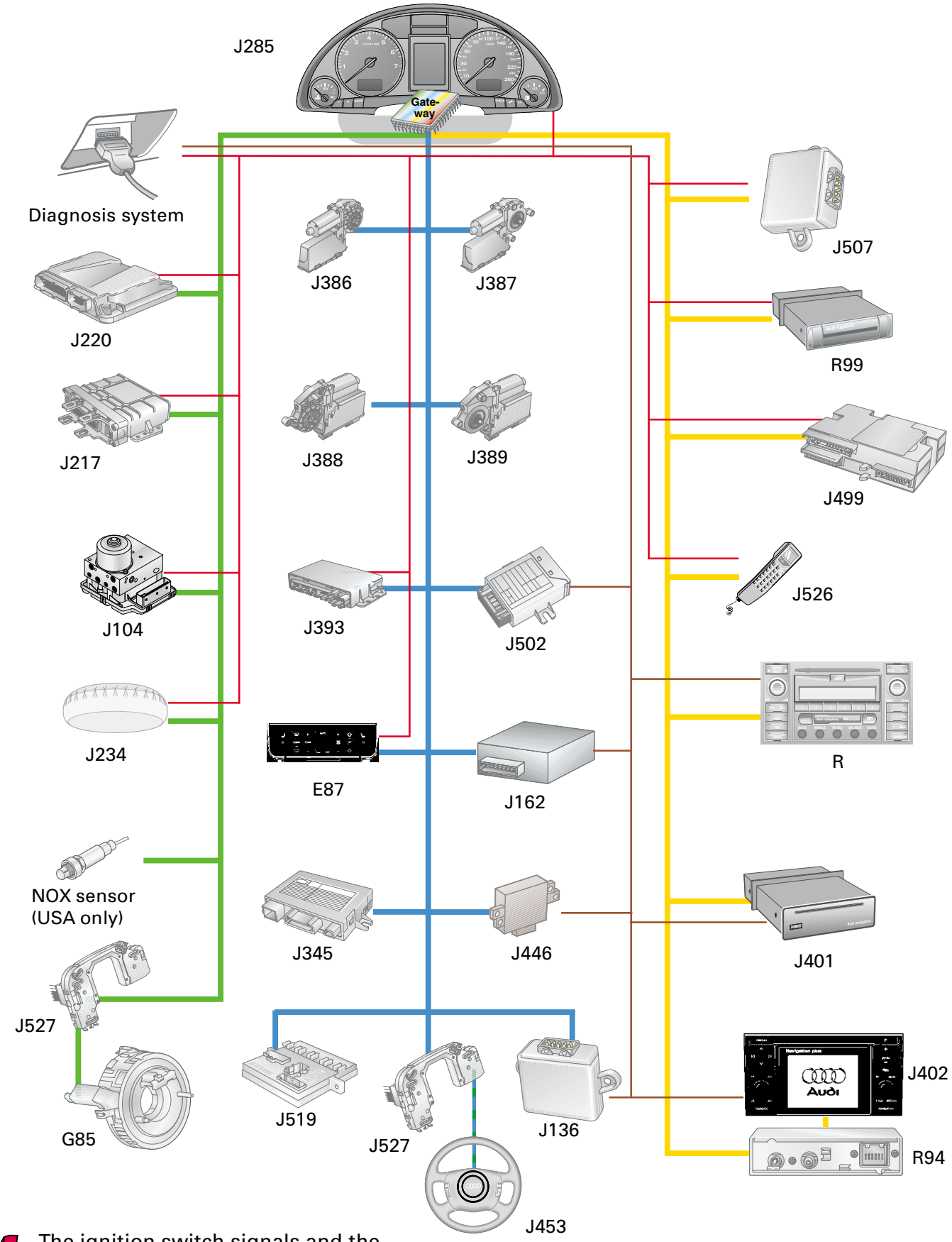

The ignition switch signals and the control buttons for multifunction and "tiptronic" steering wheel are registered via the steering column electronics.

CAN data bus

The Audi A4 is equipped with a widely extended CAN data bus system.

Due to the ever increasing number of control units installed in the vehicle and the associated requirement for data exchange, the importance of the CAN data bus system increases significantly.

For communication between the installed control units and the diagnostic tester, two diagnosis wires (K and L) are available.

G85	Steering angle sender
E87	Operating and display unit for air conditioner
J104	Control unit for ESP
J136	Control unit for seat adjustment with memory, optional
J162	Auxiliary heater, optional
J217	Control unit for automatic gearbox
J220	Control unit for motronic
J234	Airbag control unit
J285	Control unit with display unit in dash panel insert
J345	Control unit for trailer recognition
J386	Door control unit, driver's side
J387	Door control unit, passenger side
J388	Rear left door control unit, optional
J389	Rear right door control unit, optional
J393	Central control unit for convenience system
J401	Navigation system control unit
J402	Control unit for operating electronics, navigation, TV tuner
J446	Control unit for parking aid
J453	Control unit for multi-function steering wheel
J499	Control unit for telematics
J502	Control unit for tyre pressure monitor
J507	Control unit for speech entry
J519	Control unit for vehicle electrical system
J526	Control unit for telephone - permanent installation
J527	Control unit for steering column electronics
R	Radio
R94	Interface for navigation
R99	Chip card reader

Drive BUS	500 kBaud
Convenience BUS	100 kBaud
Display BUS	100 kBaud
Diagnosis connection K wire	
Diagnosis connection L wire (2nd K wire)	

The newly developed adapter VAS 6017 enables communication with all control units.

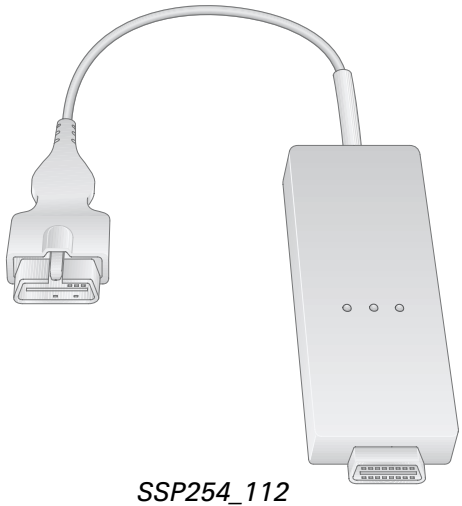

SSP254_112

Dash panel insert

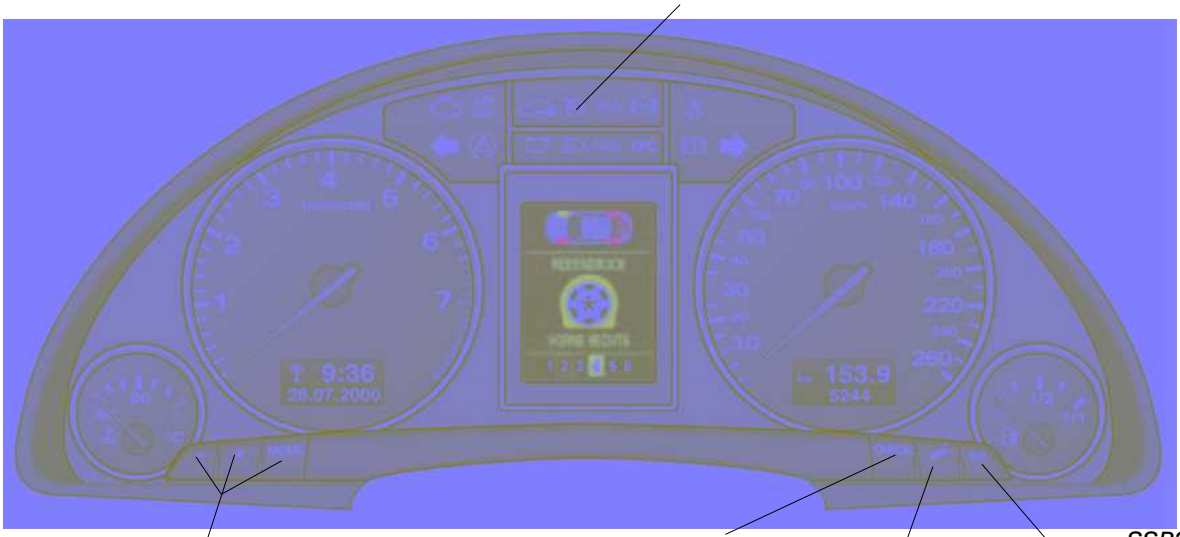

SSP254_012

There are two dash panel insert versions:

- "lowline"
- "highline"

The "highline" version is equipped with a high-quality colour display for the driver information system and is installed in vehicles with navigation systems as well as telematics.

The dash panel insert of the new Audi A4 is equipped with

- the gateway for linking the three data bus systems: drive, convenience, information
- and the immobiliser III.

User prompt in the centre display via the control switch in the centre console, is only available in vehicles with

- navigation system ("highline" version only) and/or
- telematics and/or
- auxiliary heater and/or
- tyre pressure monitoring.

SSP254_104

The optional driver information system includes the following functions:

- radio clock
- auto-check system
- on-board computer.

The km range is indicated in the basic version.

In order to ensure good signal reception for the radio clock, the receiver is installed in the rear bumper bar.

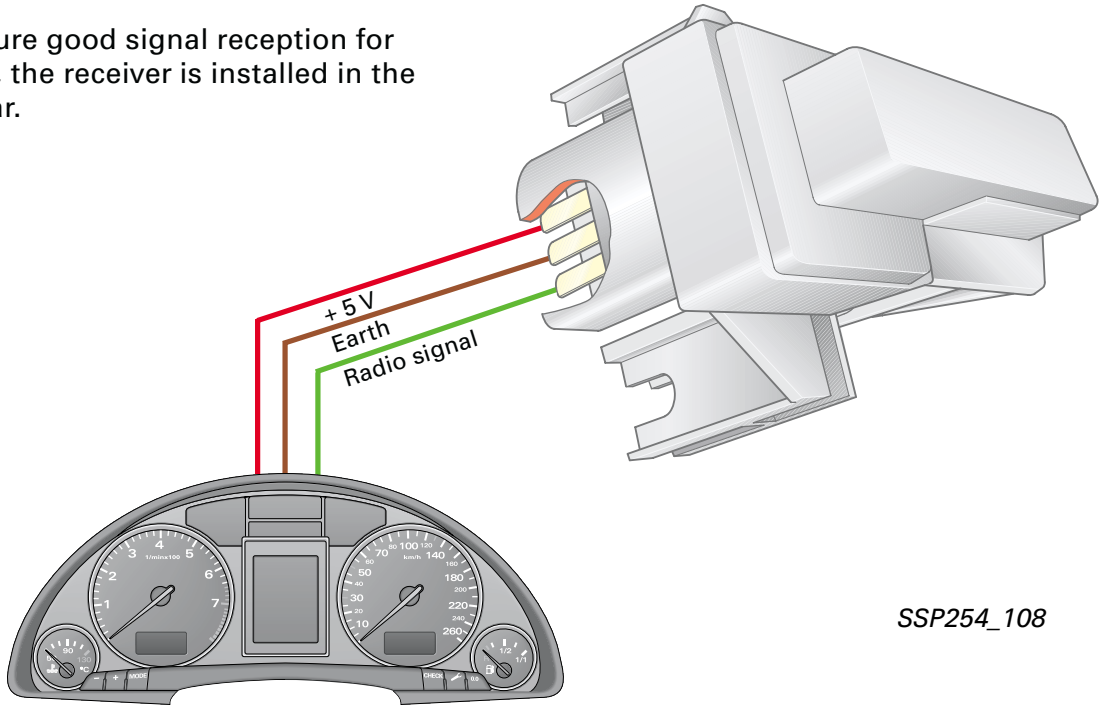

SSP254_108

Electrical system

A new feature of the Auto-Check system is the position-dependent bulb monitor display.

The fault message is transmitted from the vehicle electrical system control unit J519, via the convenience data bus, to the dash panel insert J285 and appears on the centre display.

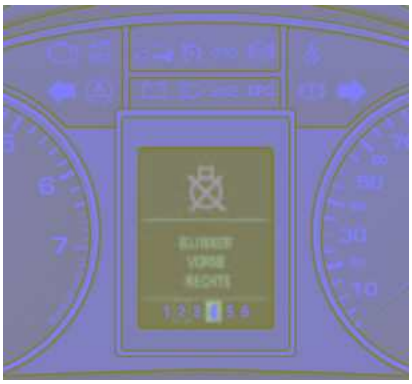

SSP254_118

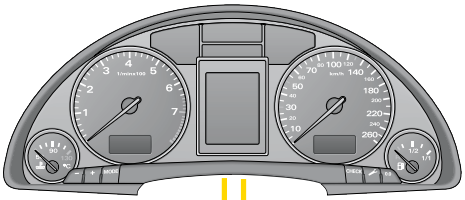

Control unit with display unit in dash panel processor J285

Convenience data bus

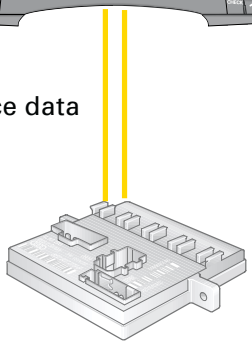

Control unit for vehicle electrical system J519

SSP254_125

The Audi A4 quattro is equipped with two fuel gauge senders G and G169.

Sender G registers the lower, and sender G169 the upper partial volume in the fuel tank.

The signals from senders G and G169 are evaluated separately. The calculated litre values are then added and displayed.

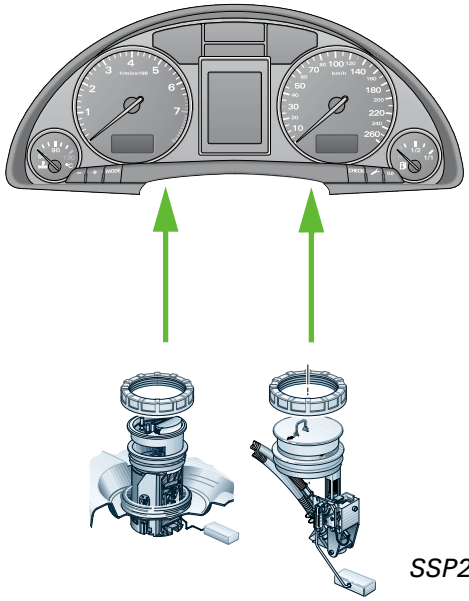

SSP254_123

Fuel gauge sender G

Fuel gauge sender 2, G169

Diagnostics

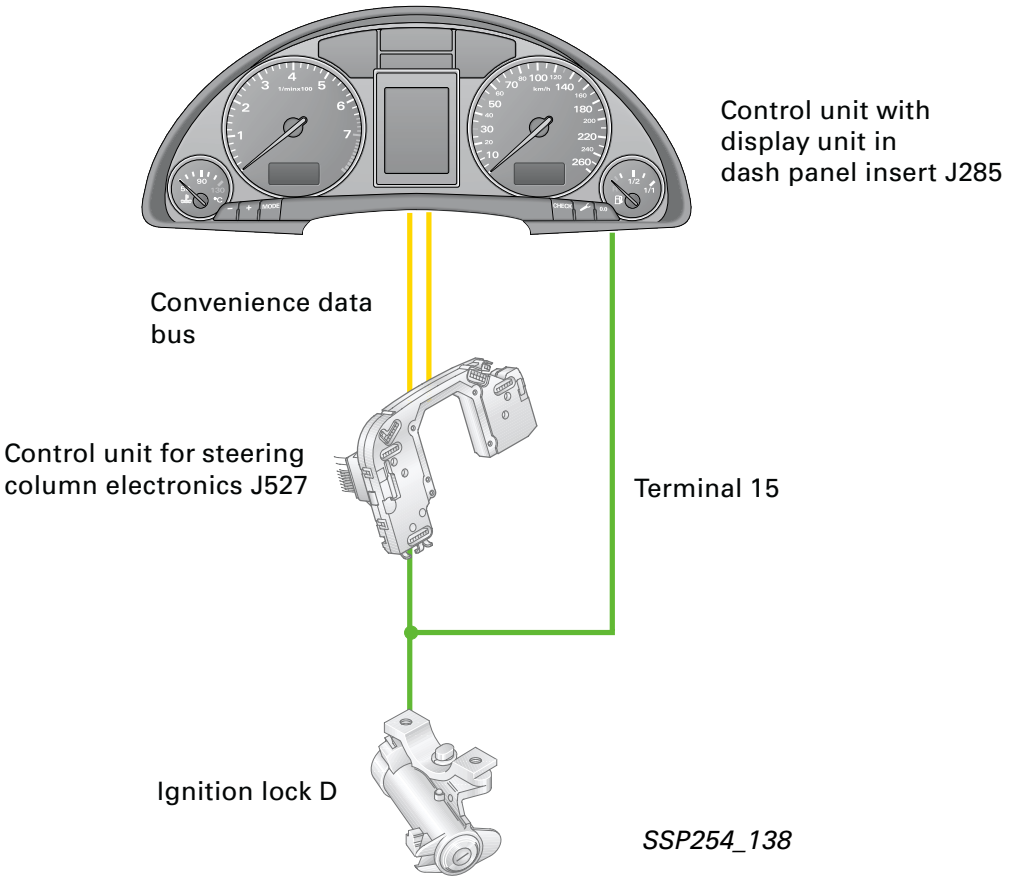

The dash panel insert checks the plausibility

- of both fuel gauge senders in quattro vehicles
- as well as the terminal 15 input signal.

Due to the gateway function of the dash panel insert, the communication with the individual control units connected to the CAN data bus is checked during diagnosis.

Communication faults are entered into the fault memory. The current status can be read in the measured value blocks.

A further innovation is the display of the maximum and minimum engine oil levels in the measured value block after the most recent service operation.

The adaptation of the mileage/kilometre reading after replacement of the dash panel insert, is possible (several attempts) up to a recorded distance of 5 km after installation.

Steering column switch module

Due to the compact design of the newly developed steering column switch module, it was possible to minimise the amount of wiring necessary and the space requirements.

A self-diagnosis facility for the steering column switch is now available with new switch module.

The steering column switch module consists of the following components:

- Turn signal switch
- Wiper switch with interval potentiometer
- Separate steering column switch cruise control system operation
- Coil spring for diver's airbag
- Steering angle sensor for ESP
- Steering column electronics for signal conversion and processing of drive and convenience CAN BUS J527

In addition, the steering column electronics register the ignition switch signals. Furthermore, the control buttons for multifunction and "tiptronic" steering wheel are registered via the steering wheel electronics module.

Steering column switch

Detection of the respective switch positions is effected via voltage coding, using various resistance values in the relevant position. The steering column electronics evaluates this switch information and transmits it, via the convenience CAN BUS, to the vehicle electrical system control unit J519.

Cruise control system (CCS)

For ergonomic reasons, the control switch for the cruise control system is located on the left side of the steering column, below the turn signal lever.

Warning lamp K31 in the dash panel insert illuminates when the CCS is in control mode.

The modified operation of the CCS Steering column switch function is described in the Owner's Manual.

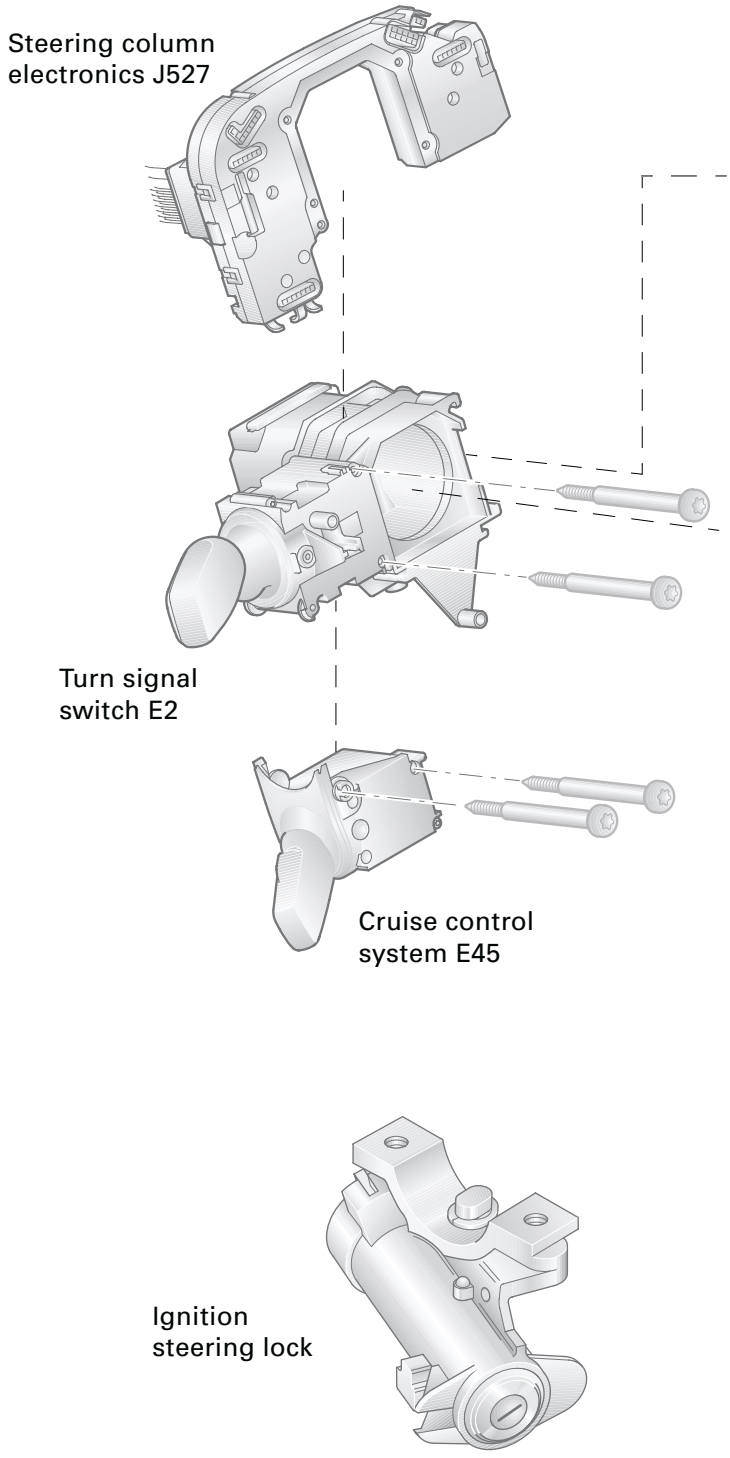

SSP254_105

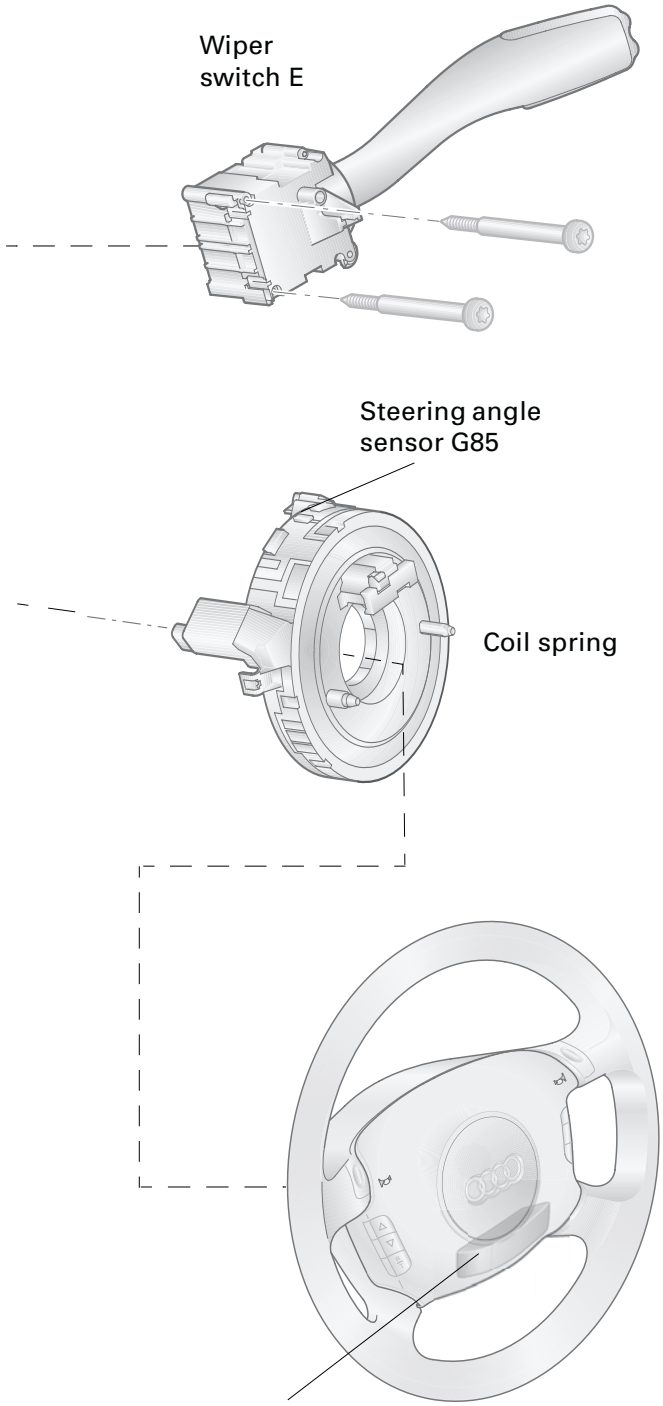

SSP254_014

The steering column switch module must always be coded.

Ignition lock registration

The signals from the terminals:

- P parking light
- 86s ignition key contact
- 75 Load-reduction relay
- 15 ignition ON
- 50 starter

are transmitted to the steering column electronics J527 via conventional wiring. The switch positions of the ignition lock are prepared by the electronics, supplied to the convenience CAN bus and then transmitted via the gateway to the drive and infotainment CAN bus systems.

Steering angle sender G85

The determination of steering angle is performed via optical elements in the steering column electronics J527 and is supplied to the drive CAN BUS.
The current steering angle position is thus made available to the ESP control unit.

For further information on the optical steering angle sensor, please refer to SSP 204.

Self-diagnosis

Communication between the diagnostic tester and the steering column electronics J527 is effected by means of the convenience data bus via the central convenience electronics J393, as no separate K wire is connected to the steering column electronics.. (see graphic 254 018 on Page 57)

The steering column electronics module with operating unit for "tiptronic", multi-functions, horn etc., is incorporated in the self-diagnosis.

Address word 16

After the addressing, the tester answers with the text "steering column electronics".

Functional diagram Steering column switch module (maximum equipment)

Components

E	Windscreen wiper switch
E2	Turn signal switch
E45	CCS switch
E221	Operating unit in steering wheel
G85	Steering angle sender
H	Horn actuation
J234	Airbag control unit
J453	Control unit for multi-function steering wheel
J527	Control unit for steering column electronics
S	Fuse
Z36	Heated steering wheel

Colour coding

- = Input signal
- = Output signal
- = Positive power supply
- = Earth
- = CAN-BUS

Auxiliary signals

1	CAN screen drive
2	Emergency vehicle distress radio
3	Emergency vehicle radio
4	Cruise control system on/off
5	CAN low convenience
6	CAN high convenience
7	CAN low drive
8	CAN high drive
9	Ignition lock terminal 75
10	Ignition lock S contact
11	Ignition lock terminal 15
12	Ignition lock terminal 50
13	Ignition lock terminal P
X, Y, Z	Connection within the functional diagram

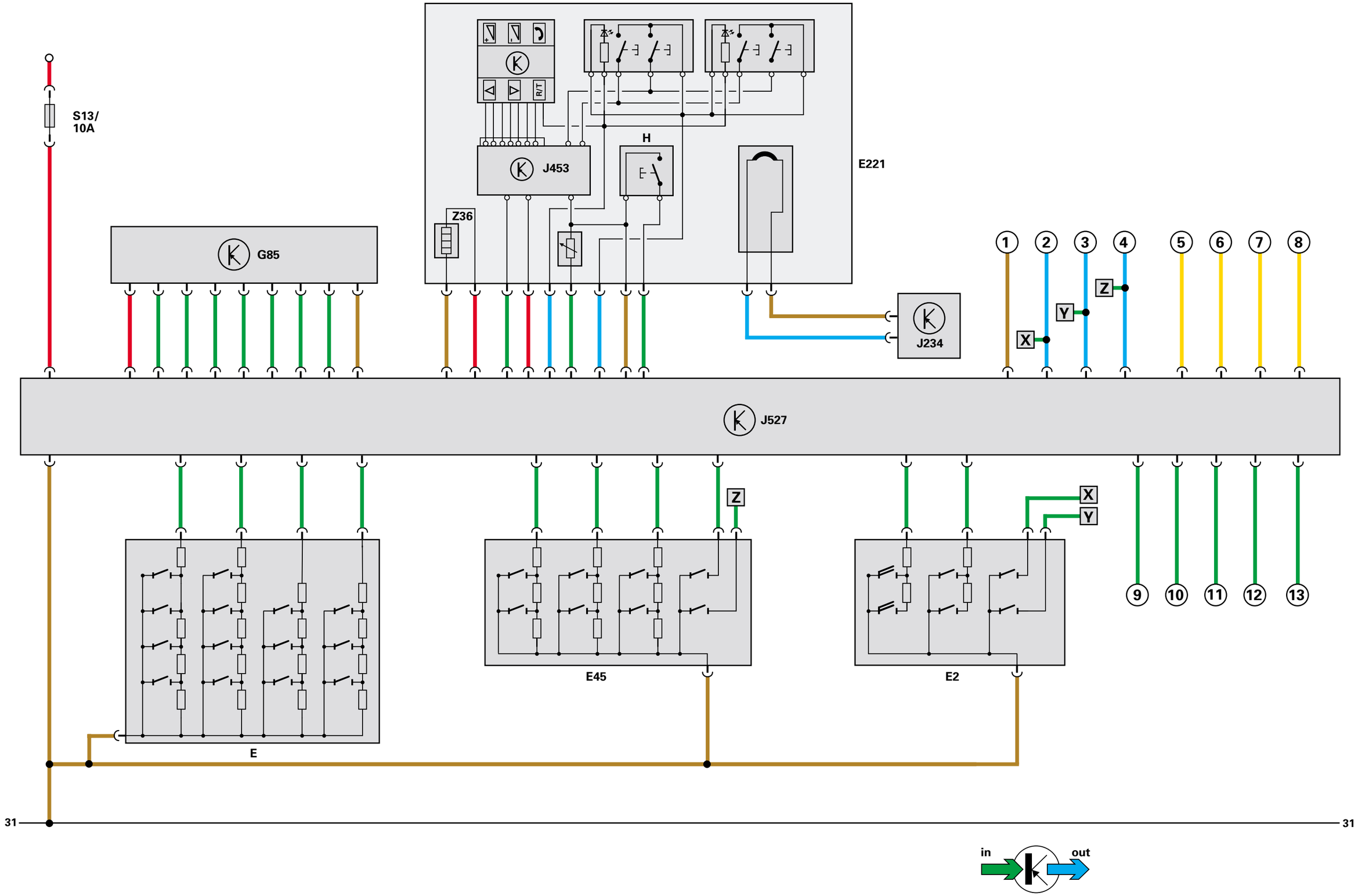
S13/
10A
G85
J453
H
E221
Z36
J234
J527
1
2
3
4
5
6
7
8
X
Y
Z
9
10
11
12
13
E
E45
E2
31
31
in
out

Control unit for vehicle electrical system J519

The control unit for vehicle electrical system J519 is the newly developed electronic central electrics and comprises a comprehensive self-diagnosis, which can be selected directly with address word 09.

The control unit for vehicle electrical system receives the input signals from the convenience CAN BUS via the steering column switch module or the rotary light control.

The power connections for the individual consumers are driven via semi-conductor elements, e.g. transistors.
A separate supply is not required, as this is provided by the internal electronics in the event of a fault.

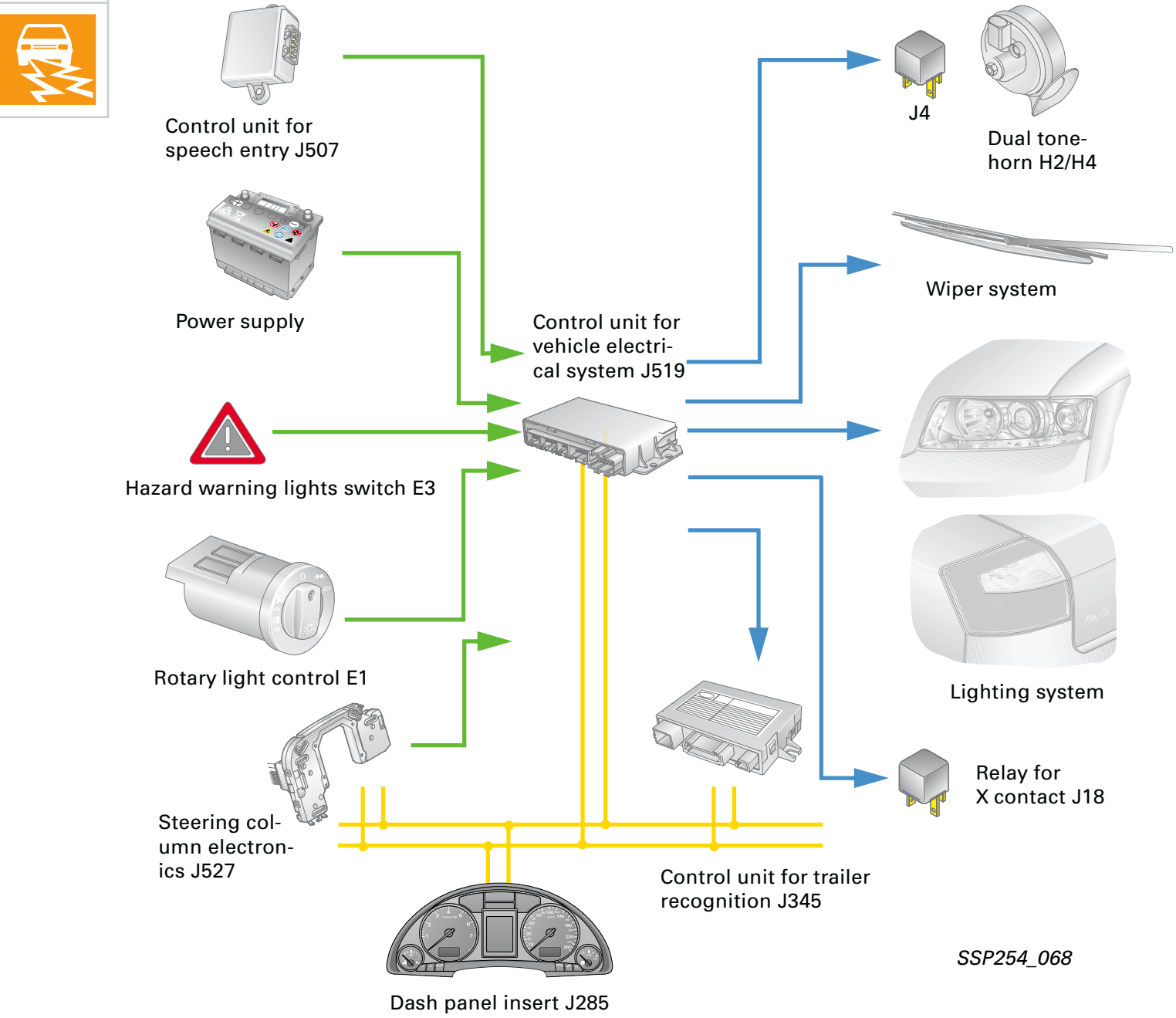

There are three control unit versions:

- "lowline" for the standard version
- "lowline" for vehicles with headlight washer system
- "highline" for vehicles with driver information system

The following functions are available with the "lowline" version:

- Wash/wipe control and interval
- Hazard warning and turn signal control
- Actuation of horn and load-reduction relay
- Parking light left/right
- Side light left/right
- Main beam left/right and headlight flasher
- Number plate light

The "highline" version implements the driver information system function and also performs the following control functions:

- Driving light and dipped beam left/right,
- Fog lights and rear lights,
- Reversing lights,
- Brake lights

with separate outputs to each of the individual consumers.

Light control

In the highline version, light control is transmitted from the steering column switch module or directly from the rotary light control, via the convenience data bus, to the vehicle electrical system control unit.

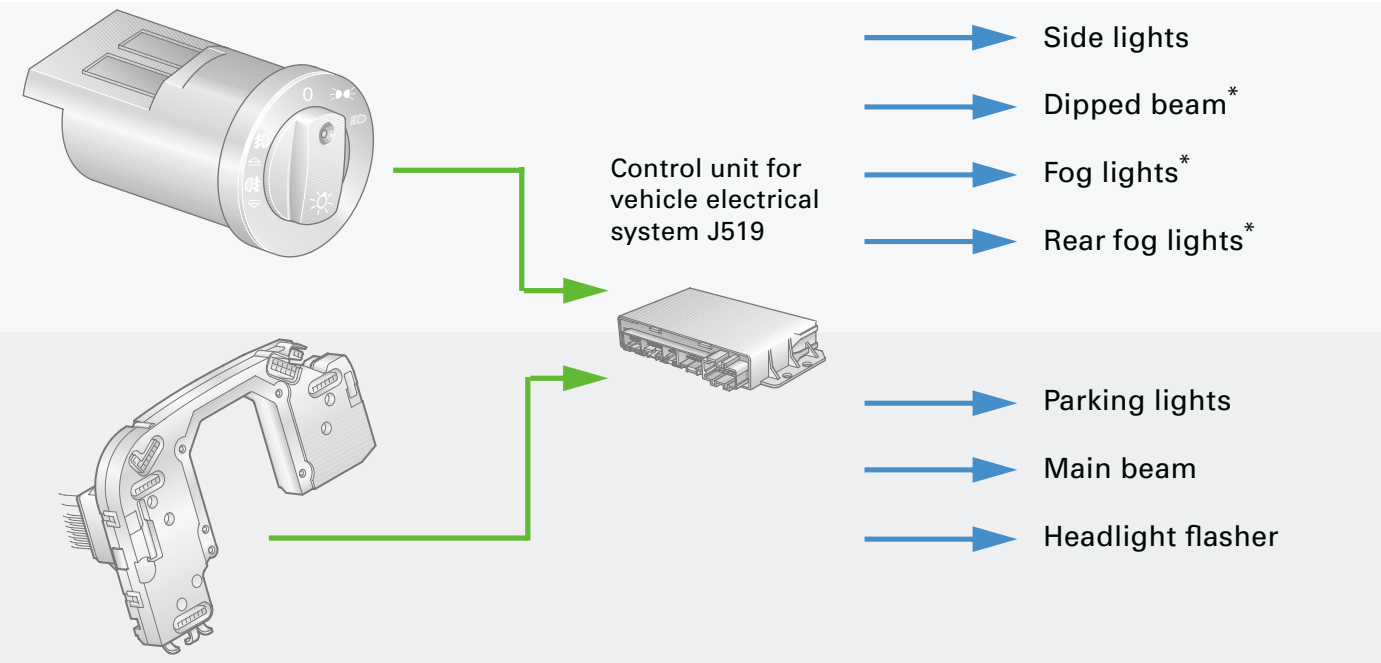

*In the "lowline" version, the components marked with an asterisk are connected via conventional wiring and fuses, directly to the lighting units.

Functional diagram Control unit for vehicle electrical system J519

"lowline" version

Components

E1	Light switch
E3	Hazard warning light switch
F	Brake light switch
F4	Reversing light switch
F216	Contact switch for switchable rear fog lights
H2	Treble horn
H7	Bass horn
J4	Relay for dual tone horn
J59	Load-reduction relay for x contact
J345	Control unit for trailer recognition
J446	Control unit for parking aid
J519	Control unit for vehicle electrical system
L22	Bulb for fog light, left
L23	Bulb for fog light, right
L46	Bulb for rear fog light, left
L47	Bulb for rear fog light, right
M1	Bulb for side light, left
M2	Bulb for rear light, right
M3	Bulb for side light, right
M4	Bulb for rear light, left
M5	Bulb for turn signal light, front left
M6	Bulb for turn signal light, rear left
M7	Bulb for turn signal light, front right
M8	Bulb for turn signal light, rear right
M9	Bulb for brake light, left
M10	Bulb for brake light, right
M16	Bulb for reversing light, left
M17	Bulb for reversing light, right
M18	Bulb for side turn signal light, left
M19	Bulb for side turn signal light, right
M25	Bulb for high-level brake light
M29	Bulb for dipped beam headlight, left
M30	Bulb for main beam headlight, left
M31	Bulb for dipped beam headlight, right
M32	Bulb for main beam headlight, right
S	Fuses
U10	Socket for trailer operation
V	Windscreen wiper motor
V5	Windscreen washer pump
V11	Pump for headlight washer conditioning system
V48	Servo motor for headlight range control, left
V49	Servo motor for headlight range control, right
X	Number plate lights

Colour coding

= Input signal

= Output signal

= Positive power supply

= Earth

= CAN-BUS

Auxiliary signals

1	CAN high convenience
2	CAN low convenience
3	Terminal 75
4	not fitted with trailer coupling
5	only with trailer coupling
6	Automatic gearbox "multitronic"
7	Manual gearbox
A	
U, X, Y	Connection within the functional diagram
Z	

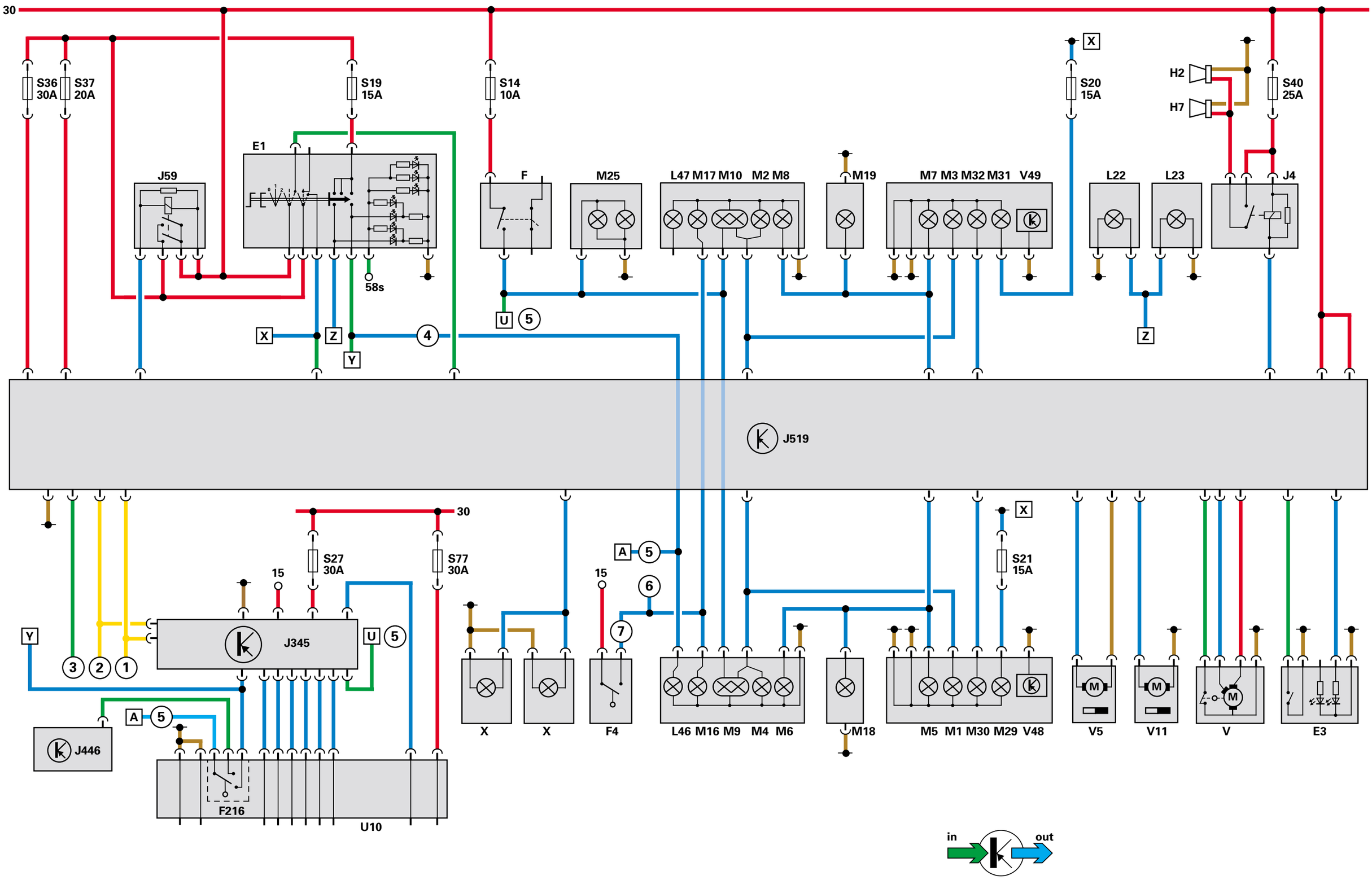
30
S36
30A
S37
20A
S19
15A
S14
10A
S20
15A
S40
25A
H2
H7
E1
J59
F
M25
L47 M17 M10 M2 M8
M19
M7 M3 M32 M31 V49
L22
L23
J4
58s
X
Z
Y
4
U
5
J519
S27
30A
S77
30A
15
J345
3
2
1
A
J446
F216
U10
6
7
X
F4
L46 M16 M9 M4 M6
M18
M5 M1 M30 M29 V48
S21
15A
V5
V11
V
E3
in
out

Functional diagram Control unit for vehicle electrical system J519

"highline" version

Components

E1	Light switch
E3	Hazard warning light switch
F	Brake light switch
F216	Contact switch for switchable rear fog lights
H2	Treble horn
H7	Bass horn
J4	Relay for dual tone horn
J59	Load-reduction relay for x contact
J345	Control unit for trailer recognition
J446	Control unit for parking aid
J519	Control unit for vehicle electrical system
L22	Bulb for fog light, left
L23	Bulb for fog light, right
L46	Bulb for rear fog light, left
L47	Bulb for rear fog light, right
M1	Bulb for side light, left
M2	Bulb for rear light, right
M3	Bulb for side light, right
M4	Bulb for rear light, left
M5	Bulb for turn signal light, front left
M6	Bulb for turn signal light, rear left
M7	Bulb for turn signal light, front right
M8	Bulb for turn signal light, rear right
M9	Bulb for brake light, left
M10	Bulb for brake light, right
M16	Bulb for reversing light, left
M17	Bulb for reversing light, right
M18	Bulb for side turn signal light, left
M19	Bulb for side turn signal light, right
M25	Bulb for high-level brake light
M29	Bulb for dipped beam headlight, left
M30	Bulb for main beam headlight, left
M31	Bulb for dipped beam headlight, right
M32	Bulb for main beam headlight, right
S	Fuses
U10	Socket for trailer operation
V	Windscreen wiper motor
V5	Windscreen washer pump
V11	Pump for headlight washer conditioning system
V48	Servo motor for headlight range control, left
V49	Servo motor for headlight range control, right
X	Number plate light

Colour coding

= Input signal

= Output signal

= Positive power supply

= Earth

= CAN-BUS

Auxiliary signals

1	CAN high convenience
2	CAN low convenience
3	Terminal 75
4	Terminal 31
U	Connection within the functional diagram

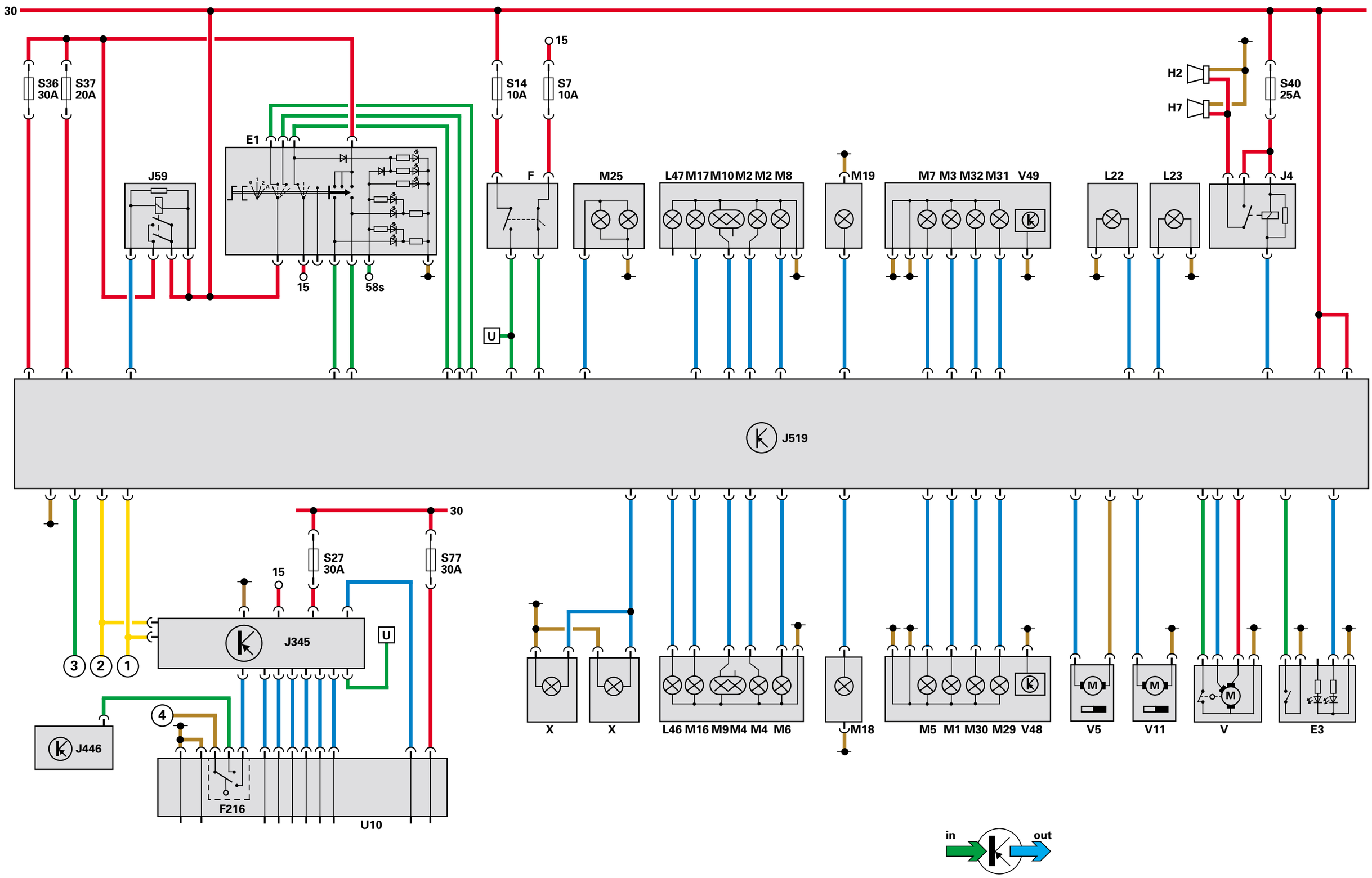
30
S36
30A
S37
20A
J59
E1
15
58s
S14
10A
15
S7
10A
F
U
M25
L47 M17 M10 M2 M2 M8
M19
M7 M3 M32 M31 V49
L22
L23
H2
H7
S40
25A
J4
J519
30
S27
30A
S77
30A
15
J345
U
3
2
1
4
J446
F216
U10
X
X
L46 M16 M9 M4 M4 M6
M18
M5 M1 M30 M29 V48
V5
V11
V
E3
in
out

In the "highline" version of the vehicle electrical system control unit, only the 21 watt filament of the two-phase bulb for the brake and rear light is used.

With lights switched on and non-actuated brakes, the power rating is reduced to 5 watts by a pulse-width modulated signal via the vehicle electrical system control unit J519.

Thus a self-diagnosis/driver information system (FIS) is possible for the second rear light.
A defective brake light would be indicated in FIS.

Rear lights on:

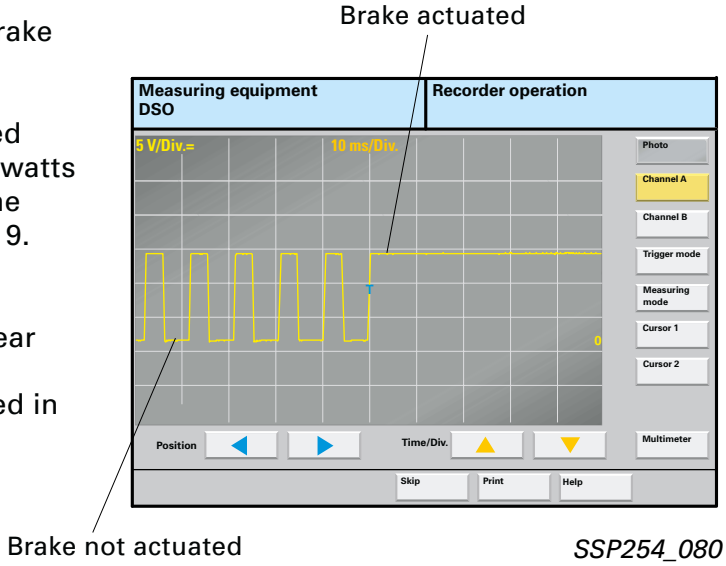

SSP254_080

In vehicles with the "highline" version, national lighting regulations can be adapted via coding.

For non-plausible condition of the rotary light control, the side lights and low beam are switched on automatically by the vehicle electrical system control unit in the "highline" version.

Electrical fault finding

In certain lighting circuits, an open-circuit voltage measurement using the Multimeter is not possible, as the semi-conductor elements are clocked until the circuit is again closed.

For defective bulbs which are operated via the vehicle electrical system control unit J519, no permanent fault storage is effected, but only for the period of the fault.
This means that the fault memory must not be erased after changing a defective bulb.

Reversing lamp on:

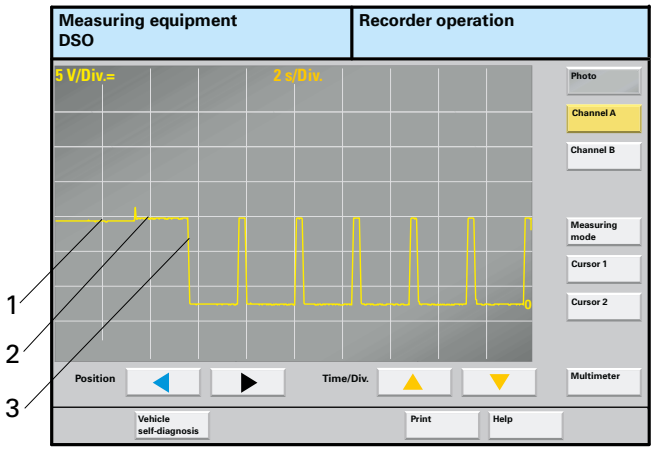

SSP254_052

1 - bulb illuminates
2 - bulb failure
3 - clock frequency of power output

Turn signal/hazard warning light control

The functions:

- Anti-theft alarm flasher
- Central locking system flasher when opening/closing
- Key-learn flasher for key adaption
- Crash flasher
- Panic flasher (USA only)

are specified by the central convenience electronics and transmitted via the convenience data bus to the vehicle electrical system control unit, which then executes the "commands".

The hazard warning flasher signal is controlled separately by the vehicle electrical system control unit, via the hazard warning flasher button.
If, during hazard warning flashing, the turn signal flasher is actuated, e.g. during towing, the hazard warning lights lose their priority for this period.

The turn signal clicking is generated by an integral acoustic relay in the dash panel insert.

For active hazard warning flasher with ignition OFF, the flasher bulbs are actuated for a shorter period in order to minimise current consumption.

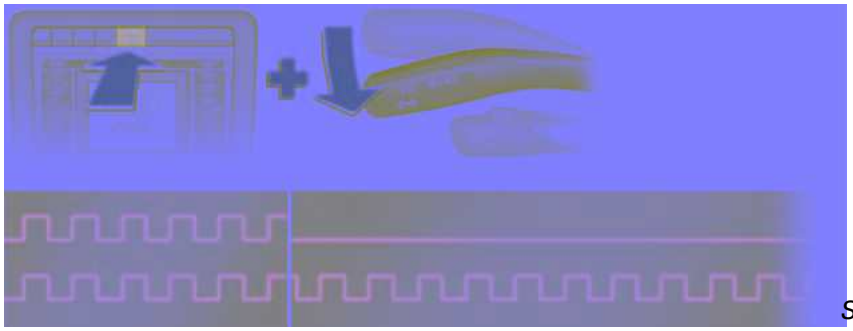

Turn signal light, right

Turn signal light, left

SSP254_077

The signal for turn signal flashing or motorway flashing is output via the steering column switch module and executed by the vehicle electrical system control unit.

Motorway flashing is detected by the vehicle electrical system control unit when the turn signal lever is pressed and this triggers a triple turn signal flash.

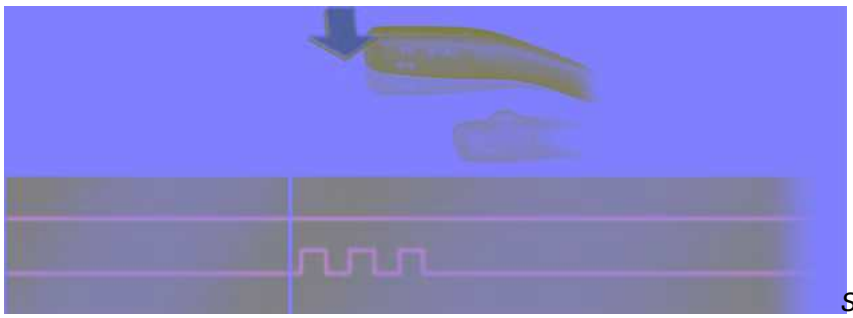

Turn signal light, right

Turn signal light, left

SSP254_078

Wash/wipe system

The wash/wipe system is equipped with the speed-dependent 4-stage interval system.

A new feature is the re-wipe function for the windscreen washer system.
Re-wiping occurs automatically 5 seconds after the wash procedure is completed.

The windscreen wash/wipe relays are integrated into the vehicle electrical system control unit J519.

The washer fluid reservoir is a two-part design for easier removal and installation.
An additional sensor is fitted for vehicles with headlight washer system (HWS). In the "highline" version, this is also used for the Check system.
The purpose of the sensor, is to switch off the HWS pump via the vehicle electrical system control unit.
This prevents the pump running dry.

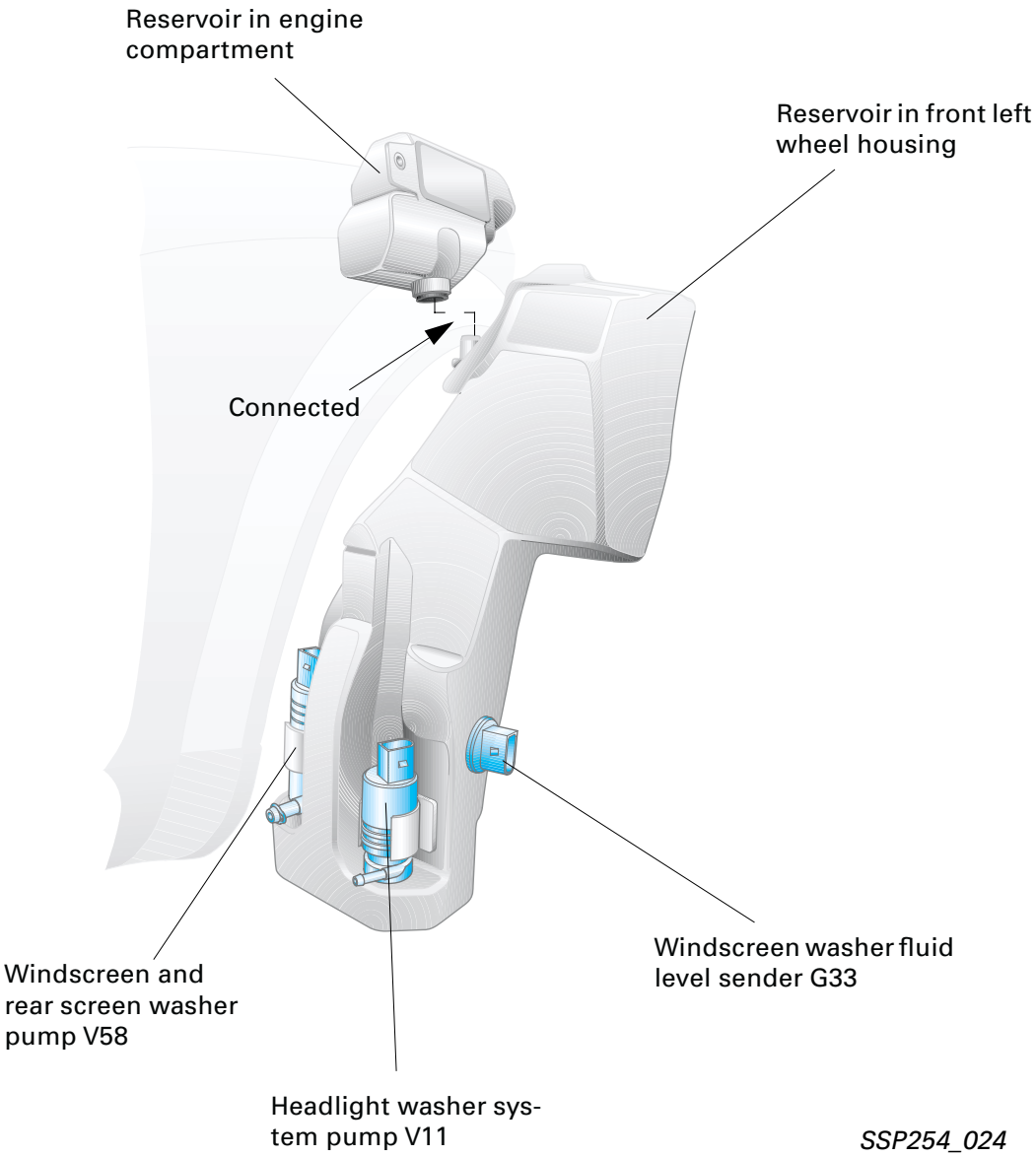

Control unit for trailer recognition J345

A separate control unit is required for trailer operation. This transmits the vehicle lighting system convenience CAN messages from the vehicle electrical system control unit to the trailer lights. A parallel link from the trailer socket to the vehicle wiring would result in fault detection via the microprocessor in the vehicle electrical system control unit.

The diagnostic function of the control unit for trailer recognition is performed via the vehicle electrical system control unit J519, address word 09.

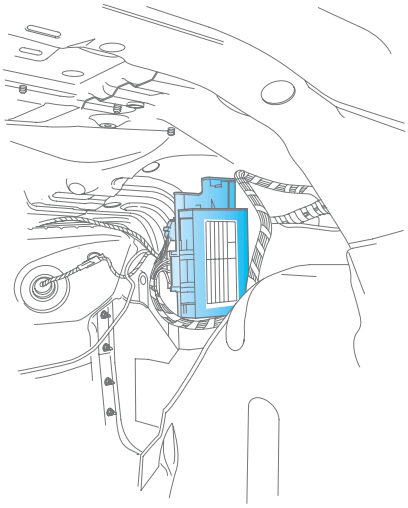

SSP254_016

Address word 09 - vehicle electrical system/ Central convenience electronics

Communication takes place by means of the convenience data bus via the central convenience electronics, as no separate K-wire leads to the vehicle electrical system control unit. For this reason, intact central convenience electronics are essential for performing self-diagnosis.

In the case of faulty communication between the control unit for trailer recognition and the vehicle electrical system control unit, the rear lights are actuated as a warning signal.

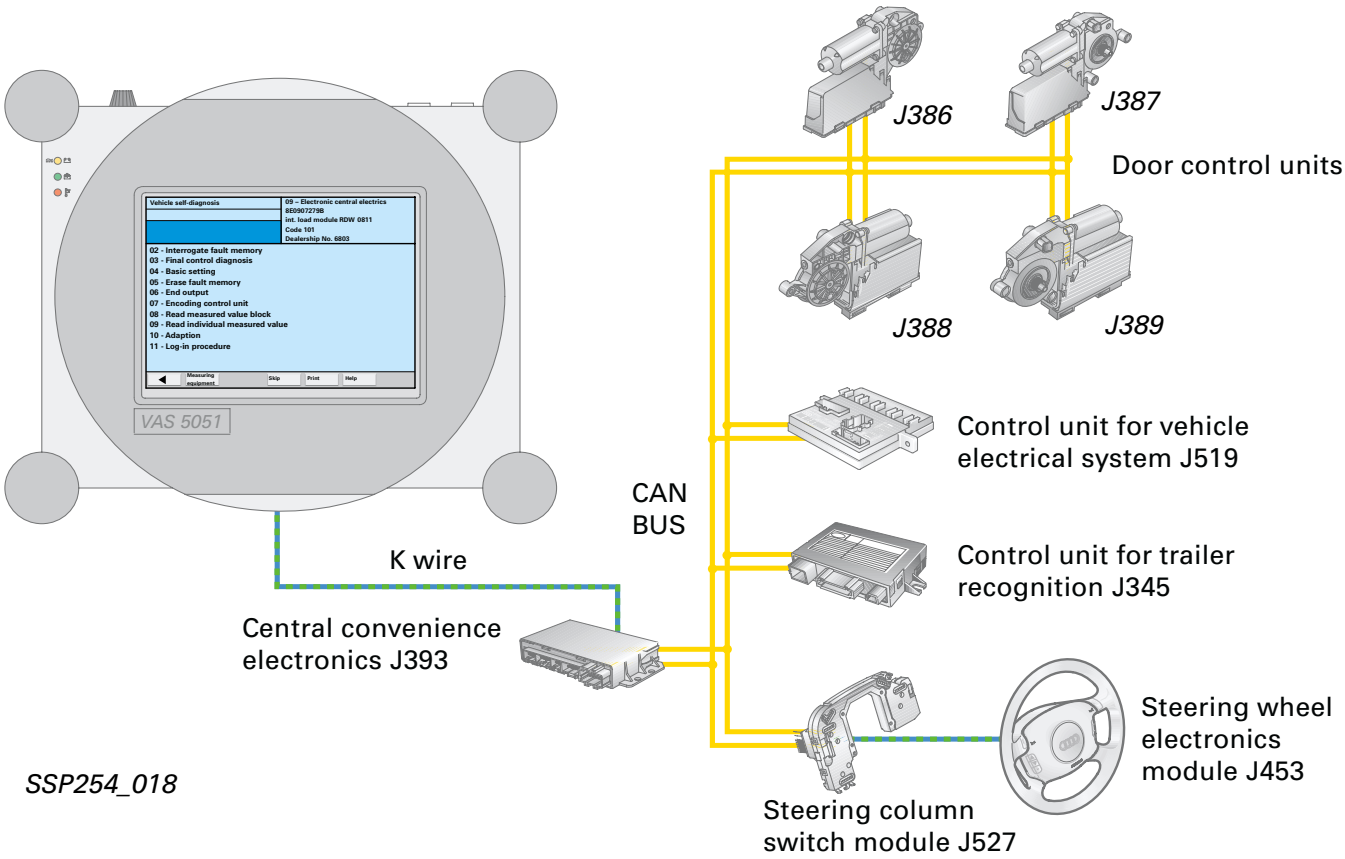

SSP254_018

Convenience system

The convenience system previously used in the Audi A2 is also used in the Audi A4.

In the series version, the following additional functions

- Door warning lights
- Radio remote control

and in the optional version, the following functions

- Anti-theft alarm with interior monitor and towing protection (new)
- Electric sliding/tilting/glass sun roof
- Footwell lights
- Exit lights
- Mirror fold-in function
- Mirror memory function

are included in the Audi A4.

In the basic version without rear electric window lifters, central locking control of the rear doors is assumed by the central convenience electronics.

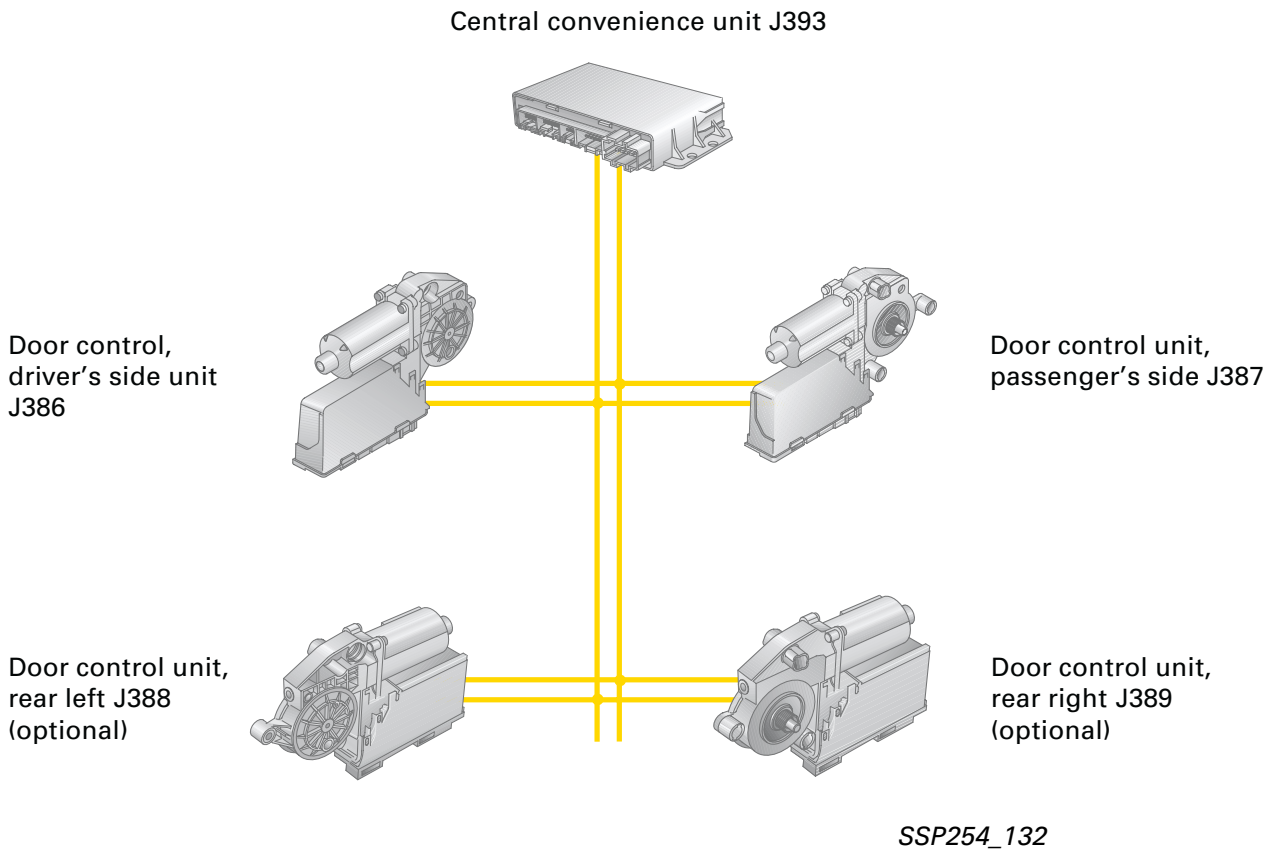

SSP254_132

Central convenience electronics (CCE)

The following information and functions are processed in the central convenience electronics:

Sensors

Crash signal
(from airbag control unit J234)

Handbrake switch F9

Tailgate release
- Button for release, tailgate lock cylinder F248
- 3. Remote control button
- Switch for tailgate to F206
- Switch for central locking, tailgate F218

Anti-theft alarm (optional)
- Contact switch for bonnet F266
- Ultrasonic sensor for anti-theft alarm G209

Aerial for remote control, Central locking and anti-theft alarm in multi-communication bar

Reversing lamp M17

When mechanical window lifters fitted in rear
- Door contact signal
- Locking signal
- Safe signal

for rear doors

Actuators

Fuel filler flap
- Motor for tank cap locking V155

Tailgate
- Motor for tailgate release V139

Anti-theft alarm (optional)
- Horn for anti-theft alarm H8 (sounder)
- Turn signal lights via data bus to vehicle electrical system control unit J519

Interior light control
- Dimming of interior lighting
- Footwell light switching (optional)
- Luggage compartment lamp switching

Automatic closing/opening
- Window lifters via door control units
- Sun roof

When mechanical window lifters fitted in rear
- Lock rear door lock motors
- Safe rear door lock motors
- Activation of rear entry lights (optional)
- Activation of rear door warning lights

Enabling of door control units and sunroof

Gateway function for diagnosis
- Control unit for vehicle electrical system J519
- Steering column switch module J527

Door control units

The door control units integrated in the window lifter motors process the following signals:

Sensors

Window lifter switches

Enabling via the CCE

Door lock feedback signal

- Door contact signal
- Locked signal
- Safe signal

for driver's door also

- Lock cylinder switch unlocking/ locking F241
- Interior central locking switch F59
- Switch for childproof lock E254 (optional)
- Central window lifter operation
- Mirror adjustment switching E48
- Switch for mirror adjustment E43
- Switch for mirror fold-in function (optional) E263
- Switch for unlocking luggage compartment (USA) E164
- Switch for seat memory, driver's side (optional) E263
- Switch for interior monitor E183 (optional)
- Inclination sensor switch (optional)

for front doors also

- Mirror release switch (optional)
- Sender for mirror position for mirror memory (optional)

Actuators

Door locking and unlocking

Safe activation and deactivation of the doors

Activation of illumination in the doors

- Entry lights (optional)
- Door opener illumination (optional)
- Door warning lights
- Switch illumination

for front doors also

- Electric mirror adjustment
- Mirror heating
- Mirror fold-in function
- Mirror memory

for driver's door also

- Control of indicator LED
- Inclination sensor LED switched off (optional)
- LED, interior monitoring
- LED, childproof lock

additionally for passenger's door

- Mirror for reversing (optional)

Mirror functions

The mirror heating is switched on together with the

- rear window heating
- at an outside temperature of below 20 °C

switches on automatically.

When the mirror heating is switched on, the heating capacity is 100%. Then the heating is activated intermittently in accordance with the ambient temperature and vehicle speed. The mirror glass is kept at a temperature of around 20 °C.

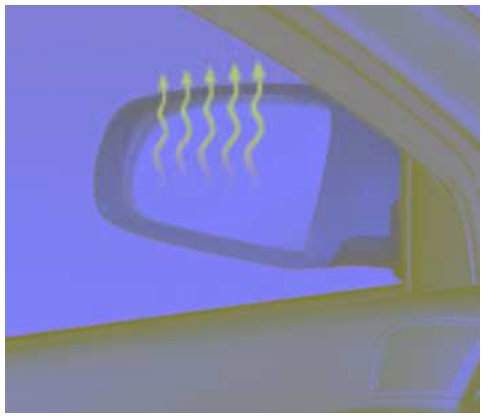

SSP254_126

The mirror fold-in function (optional) returns the mirrors to the normal position at a vehicle speed of 15 km/h. The function is disabled at the same time.

SSP254_127

Passenger's side mirror

Lowering of the mirror (optional) takes place when the reverse gear is engaged.

The mirror is returned to its original position by

- operating the mirror selector switch, or
- when the speed of 15 km/h is exceeded.

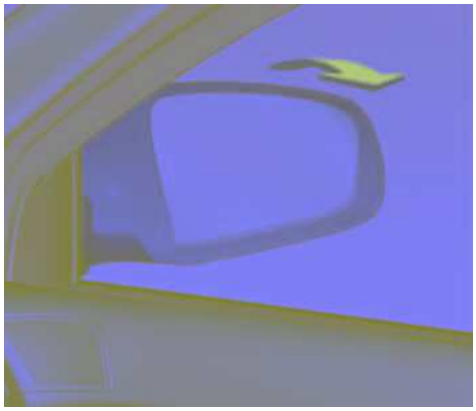

SSP254_128

Diagnostics

The adjustment of various settings can be performed via the control unit coding and adaption functions of the convenience system diagnosis.

Customer requirements relating to the convenience opening and closing functions can be taken into account via adaption channel 62.

In order to account for the resistance of normal or insulating windows with regard to the excess force limitation function of the electric window lifters, the relevant type of glazing is set in adaption channel 63.

Anti-theft alarm with interior monitor

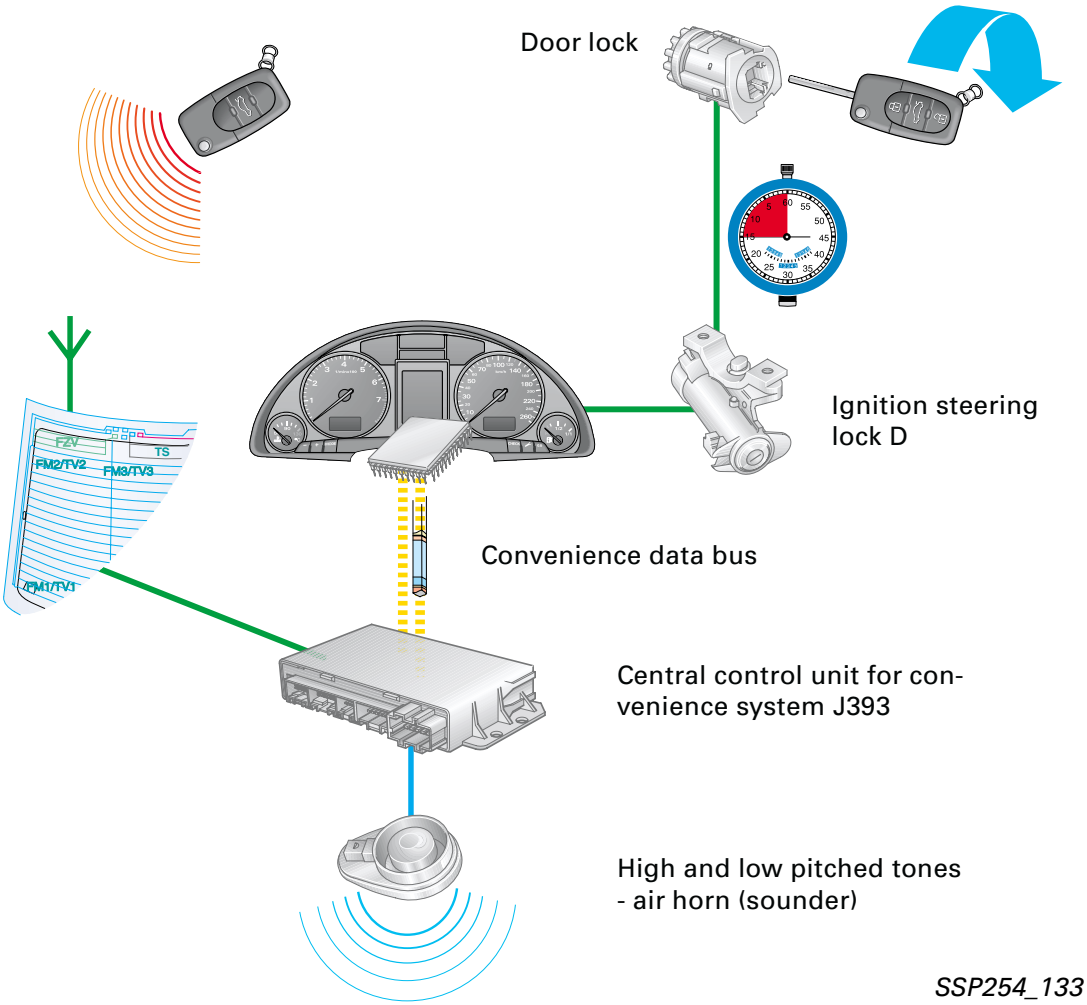

SSP254_133

The Audi A4 convenience system is available with

- Anti-theft alarm
- Ultrasonic interior monitor
- Shattered glass sensor (Avant)
- Towing protection

as optional extras.

The anti-theft alarm is only activated when the vehicle is locked via the radio remote control and by closing the driver's door.

Deactivation is performed by

- opening the vehicle via the radio remote control or
- opening the vehicle via the driver's door lock cylinder and switching on the ignition within 15 seconds. If this time period is not observed or if the key used is not stored in the immobiliser, the alarm is triggered.

Data exchange between the immobiliser in the dash panel insert and the central convenience electronics takes place via the convenience data bus.

An innovation in the anti-theft alarm is that a sounder with an integrated battery is fitted in place of the horn.

This enables the alarm to sound even when the power supply has been interrupted.

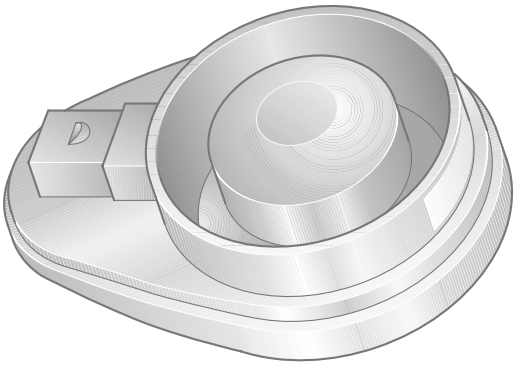

SSP254_134

The ultrasonic interior monitor and the towing protection can be switched off from inside the passenger compartment by means of a switch.

SSP254_135

Diagnostics

The angles of the both the longitudinal and transversal inclination of the inclination sensor are displayed in the measured value block.

Functional mechanism of inclination sender

Towing protection is achieved by means of the inclination sender installed in the central convenience electronics.

The functional mechanism of the inclination sender is based on the determination of resistance changes relating to the volumetric fluctuation of a viscous electrically conductive fluid.

Variously arranged electrodes project into this fluid.
Alternating fields are applied to the electrodes of the sender, which is divided into sub-compartments.
When a change in position occurs, the distribution of the fluid in the chambers also changes.
As the level of the liquid in the sub-compartments changes, the resistance determined for the sub-compartments via the electrodes also changes.

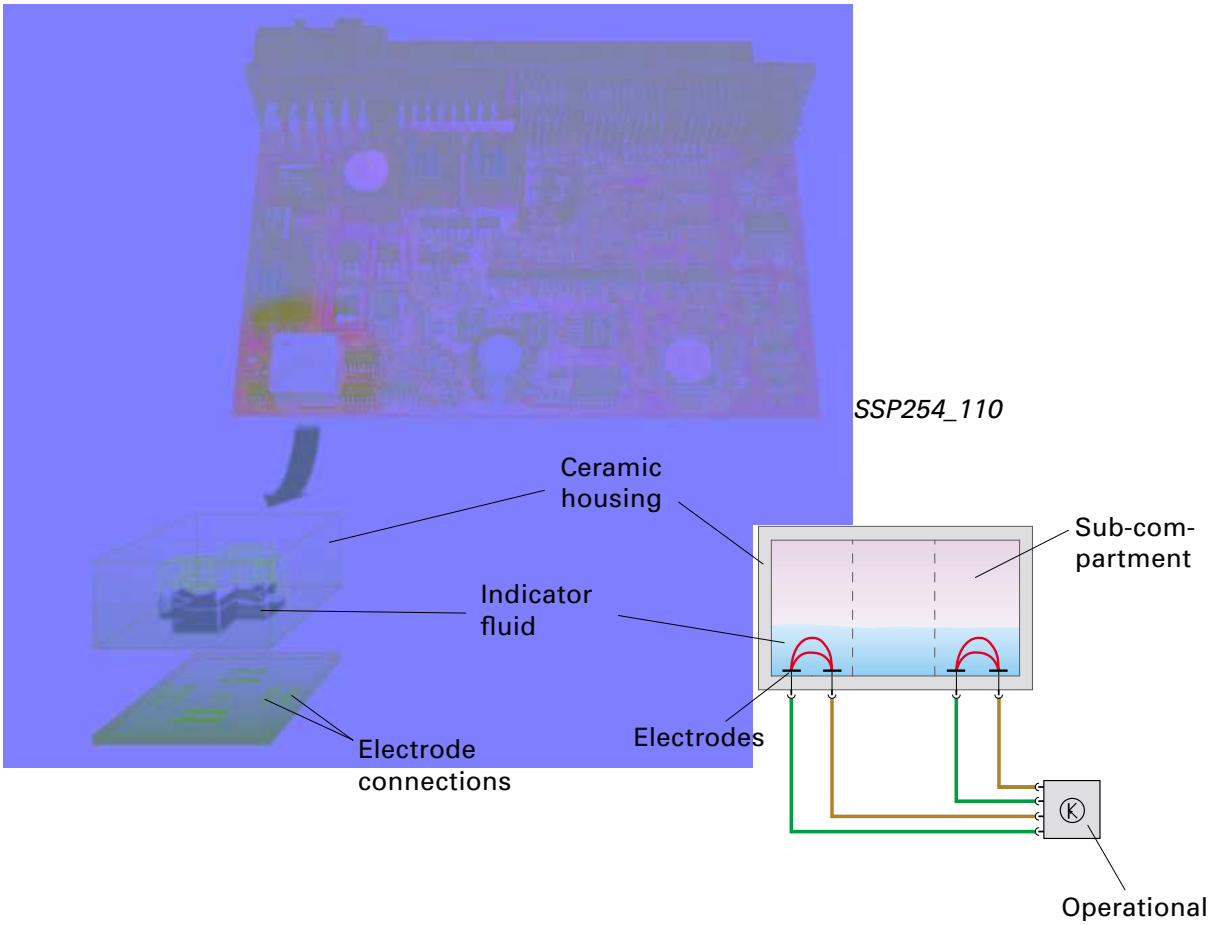

SSP254_110

The resistance is stored at the moment of activation of the anti-theft alarm.
Changes in the position of the inclination sensor caused by one-sided lifting of the vehicle alter the resistance. The alarm is triggered.
The angle of inclination can be displayed in the measured value blocks.

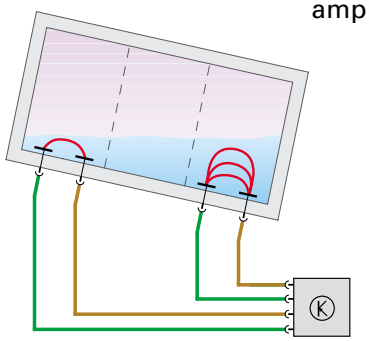

SSP254_111

Radio chorus II, concert II and symphony II

In the new Audi A4, the new generation of radios, chorus II, concert II and symphony II are available as options.

The following functions have been optimised:

- AM has been extended to include long wave.
- There are now 12 programmable stations for AM and FM.

All three radio versions are compatible with the external CD changer (optional).

The optional CD changer is now built into the glove compartment.

SSP254_106

The BOSE sound system can be ordered as an optional extra for all radio systems of the new generation.

The connection of the new generation of radios to the data bus information system enables the exchange of large volumes of data with other systems.

This makes new functions such as e.g. convenience radio coding possible.

Thanks to the convenience radio coding, manual deactivation of the radio anti-theft lock following a loss of the power supply is no longer necessary.
A prerequisite is that the radio is built into the same vehicle.

Sound quality is enhanced by the installation of a central loudspeaker in the centre of the dash panel as well as a sub-bass speaker under the rear shelf.

Radio chorus II

New functions with respect to the predecessor model include:

- Skip title function
- Scan function
- Dolby noise suppression

in the cassette player as well as

- a sorting function within a radio station family

in the convenience radio tuner search function.

SSP254_009

Radio concert II

A single speed CD player is integrated in the concert II radio.

The cassette player has been discontinued.

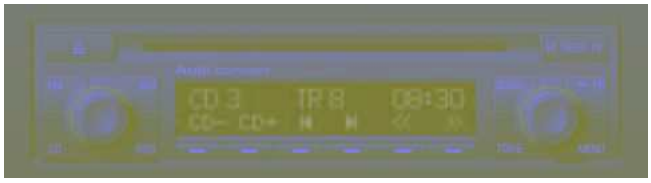

SSP254_007

Radio concert II and symphony II

The improved radio traffic news memory in the Radio concert II and symphony II allows the driver to program the time for starting the two-hour recording of traffic news announcements. Two timers are available, which can be programmed individually.

Example:

The driver can set the starting time for the recording of radio traffic news announcements for the drive to work in the morning and for the drive back in the evening separately.

Radio reception is improved in the concert II and symphony II radios by the use of the **M**ulti **C**ommunication **B**ar (MCB) with integrated aerial diversity.

For further information on the aerial module, please refer to 72.

In order to improve sound quality, acoustic curves related to vehicle type are stored in the concert II and symphony II radios.

The acoustic curves are set in the control unit coding function of the radio systems.

In addition, the sound settings for the FM, AM and CD modes are stored separately in the concert II and symphony II radios. Consequently, the various level controls do not require resetting each time the driver changes modes.

Radio symphony II

A 6x CD changer as well as a cassette player are integrated in the symphony II radio.

Searching for alternative frequencies is speeded up by the use of a second tuner. The second tuner also allows for Traffic Message Channel (TMC) evaluation in the background.

For further information, please refer to the relevant operating instructions.

SSP254_006

CAN networking in the new generation of radios

All three radio versions are connected to the data bus information system.

Important signals via the data bus information system:

Inputs/source

- Ignition on/steering column-electronics
- Ignition key inserted/steering column electronics
- Switch illumination/dash panel insert
- Display illumination/dash panel insert
- Speed/dash panel insert
- Convenience coding/dash panel insert
- Vehicle identification/dash panel insert
- Prompt signal/data bus information
- Data bus system information/ dash panel insert
- Time/dash panel insert
- Control signals from multi-function steering wheel/steering column electronics

Outputs/receiver

- Display functions/dash panel insert
- Sleep signal/data bus information
- TMC data for symphony II/ navigation system
- Convenience coding request/ dash panel insert

Example:

If the radio is switched on with the ignition key (S-contact) this requires the exchange of data between three control units:

- Steering column electronics,
- dash panel insert (gateway) and
- radio.

If the radio does not switch on,

- the signal input in the steering column electronics (terminal 86S),
- communication between the steering column electronics and the dash panel (convenience data bus) and
- communication between the dash panel and the radio (data bus information system)

must be checked.

Diagnostics

For diagnosis of radio systems concert II and symphony II, current consumption of aerial diversity is monitored via the intermittent frequency (IF) wiring.

For further information on IF wiring, please refer to SSP 213, Page 54.

Test mode

The new radio versions are equipped with a test mode.

Activating field intensity measurement:

- Radio switched off
- Hold down key 1
- Switch on radio

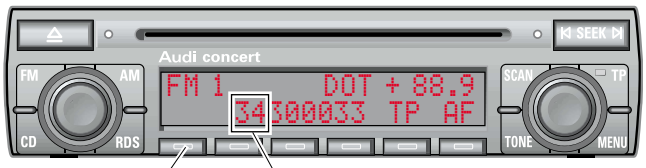

Button 1

Field intensity - mean value

SSP254_119

Activating GALA display volume increase:

- Radio switched off
- Hold down key 2
- Switch on radio

Button 2

Increase in dB

SSP254_120

Navigation IV and Navigation Plus-D

The new Navigation System IV and Navigation System Plus-D are equipped with the dynamic routing system.

SSP254_129

The following traffic hold-ups are taken into account during route planning:

- closed roads
- tailbacks and
- slow-moving traffic.

The system's sources of information are the traffic information from the radio stations via the Travel Message Channel and from the telematics® (optional) via the telephone connection.

Once it is switched on, the navigation system takes account of the traffic messages within a radius of approx. 50 km around the vehicle.

If the route planning is activated, any hold-ups are taken into consideration.

New hold-ups which arise are immediately accounted for in the routing and the driver is re-routed.

Data transfer of the traffic data is by

- Travel Message Channel data from the radio
- Telephone data from the telematics control unit J526

to the navigation system via the data bus information system.

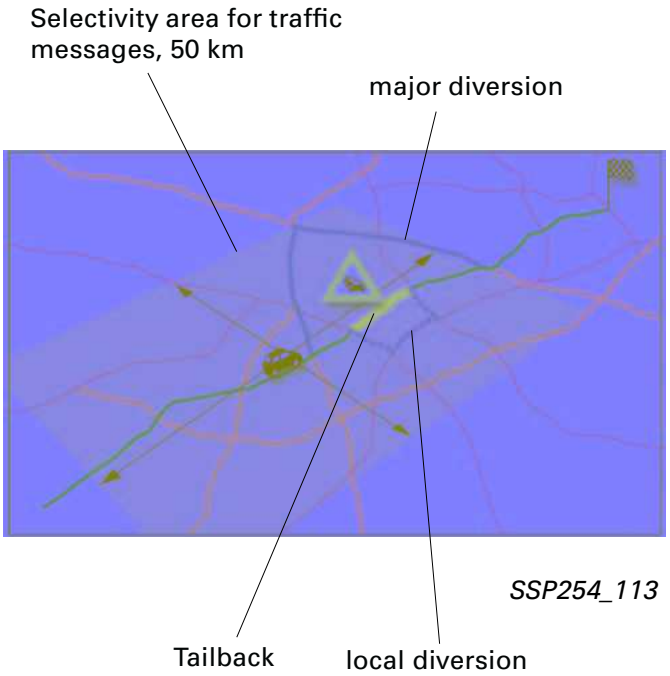

SSP254_113

Within the menu structure of the navigation system, the driver is able to

- switch the dynamic routing on and off,
- select the source of traffic information,
- manually exclude route sections from the route planning.

For further information, please refer to the operating instructions.

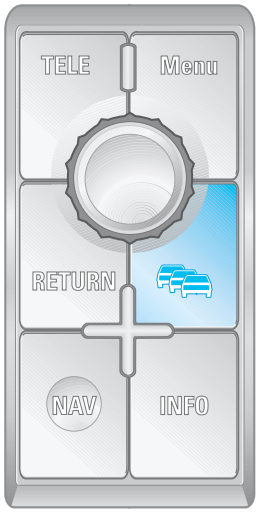

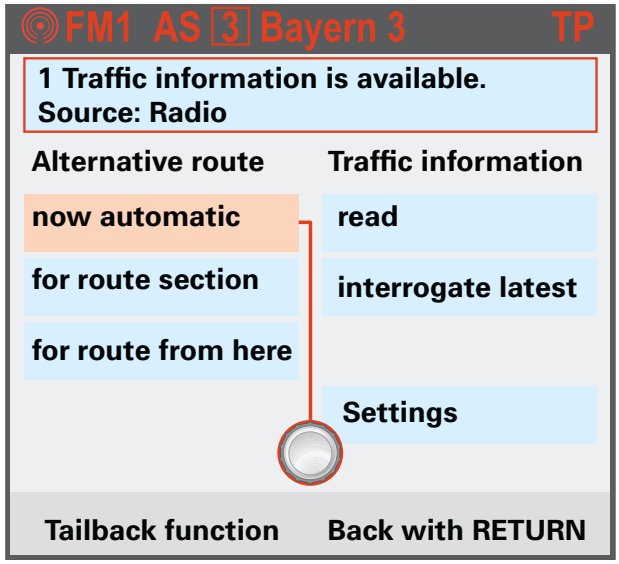

SSP254_130

Travel Message Channel (TMC)

The TMC is a component of the Radio Data System (RDS), which is transmitted by the radio stations.

The information in the TMC includes the location, type and duration of traffic hold-ups reported by the police, automobile associations and government authorities in a coded form standard throughout Europe.

The TMC data is not currently transmitted by all radio stations.
This requires the use of a second tuner in the radio or in the interface of the Navigation System Plus.

As only the symphony II radio is equipped with a second tuner, the use of TMC data for dynamic routing is only possible with this version.

Dynamic routing in conjunction with the chorus II and concert II radios is only possible by means of the traffic messages via telephone with telematics®.

Diagnostics

The navigation system diagnostics is interrogated via the L-wire.

Interface for Navigation Plus (R94)

The interface of the Navigation System Plus performs the following tasks:

- Exchange of data bus information - Navigation System Plus internal data bus
- Transfer of TMC data to the Navigation System Plus for dynamic route planning

In order to receive the TMC data, an interface connects the aerial and radio.

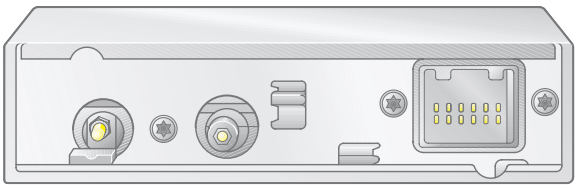

SSP254_122

The following data is exchanged via the interface:

Input from data bus information/sender	Output to data bus information/receiver
Display request/instrument cluster	**Display/instrument cluster**
Traffic news/Telematics	**Control signals data bus/data bus information system**
Fault messages/card reader	**Vehicle data/card reader**
Control signals/multi-function steering wheel	
Terminal 15/steering column electronics	

Multi-communication bar (MCB)

The Audi A4 Saloon features the multi-communication bar in the top part of the rear window for the first time.

The

- aerial module,
- aerial for navigation system (GPS),+
- and aerial for telephone (GSM)

are fitted in the MCB.

The

- aerial diversity,
- aerial amplifier for the four radio aerials (FM1-4, AM),
- 4 aerial amplifiers for the TV aerials 1-4,
- aerial for radio remote control, central locking (RCL),
- and the aerial for the telestart function (TS) of the auxiliary heating

are integrated in the aerial module.

The aerial conductor is located in the rear window. The electrical connection between the aerial amplifier and the conductor on the rear window is made by means of spring contacts.

Both the GPS and the GSM aerials are also fitted in the top edge of the rear window, but these are not connected by means of conductors in the rear window.

Thanks to this compact arrangement, no aerials are visible from outside.

The emergency aerial for the telematics is located at the rear bumper.

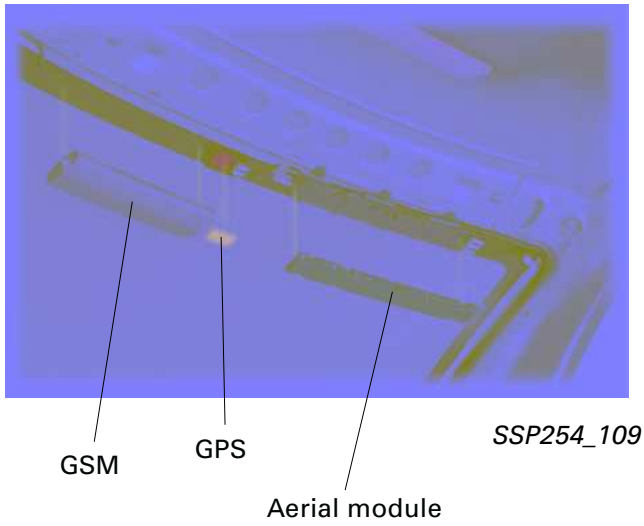

SSP254_109

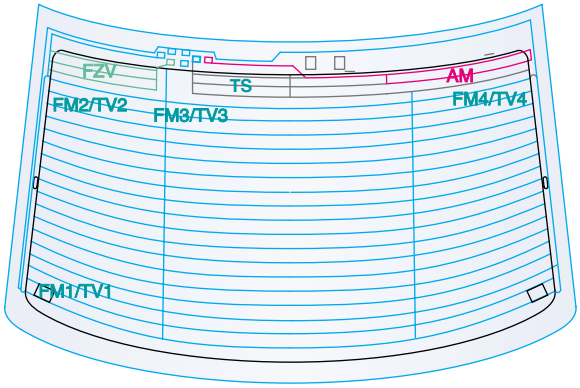

Normal glazing

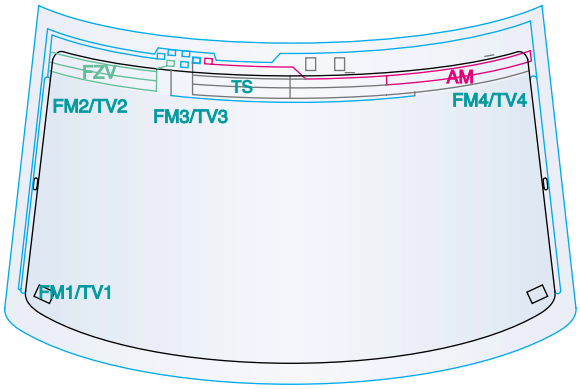

Insulating glazing

SSP254_013

Television (TV) tuner

The image and sound quality of each individual tuner is monitored in the TV tuner. The tuner with the best reception is switched through to the operating unit.

Thanks to the high speed, switching can be performed within a single scanning line.

The control signals of the Navigation Plus - operating unit are transmitted via the data bus system of the navigation system.

Transfer of the image and sound data takes place via the conventional wiring.

The TV tuner is not connected to the data bus information system.

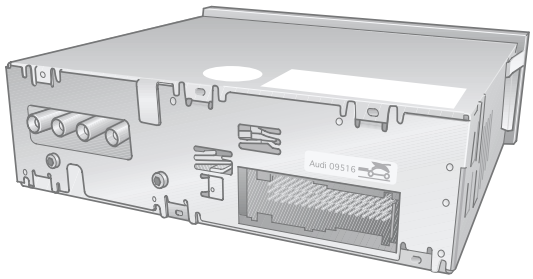

SSP254_137

Self-diagnosis

Address word 57

The video standard for the relevant country can be set via the coding function.

The TV aerials can be activated for reception consecutively in the final control diagnosis, enabling the detection of a faulty aerial.

The condition of the connections to the aerials, navigation system and external video inputs can be displayed via the measured value blocks.

The electronic logbook, Audi Logbook

The Audi Logbook is a fully automatic logbook which allows the customer to calculate business and private journeys in order to determine costs, e.g. for tax purposes.

The Audi Logbook is only available in conjunction with Navigation Plus or Navigation IV.

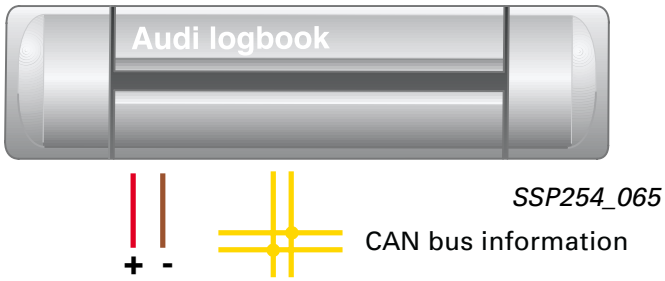

SSP254_065

The Audi Logbook System includes:

- Chip card reader R99,
- PC card reader,
- Software CD for installing the Audi Logbook program on the PC,
- Chip card.

For initial operation of the Audi Logbook, the chip card must be activated using a PC and PC card reader (see Owner's manual).

SSP254_040

In the "business journey" mode, data relating to

- date
- time at start of journey
- position at start of journey
- position at end of journey
- time at end of journey
- kilometres driven

are stored in the Chip card reader R99.

The date and route driven are stored In the "private journey" mode.

The "continue journey" mode is used to prevent short breaks from being stored (e.g. refuelling stops).

Operation and setting of the Audi Logbook is via the navigation system menu.

The following options can be selected:

- Business journey
- Private journey
- Continue journey

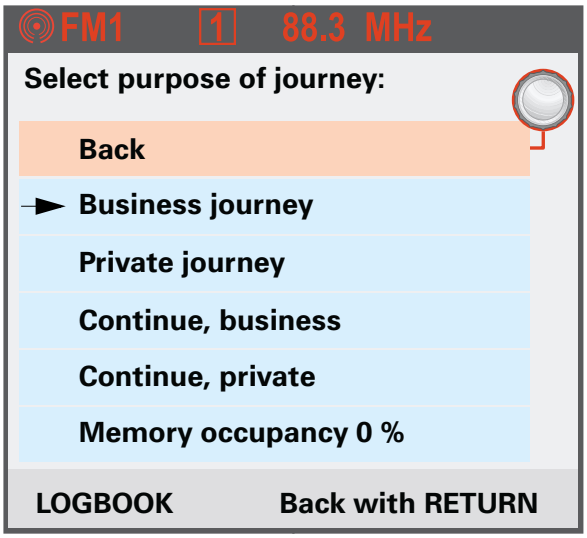

SSP254_131

Around 250 individual journeys can be stored on the chip card.
Once 200 individual journeys have been stored in the card reader, the driver is requested by a message on the navigation system display to store the data on the chip card.

The card reader has the capability to store around 2700 individual journeys.

The Audi Logbook has no diagnostic capability.

Fault messages are indicated via the navigation system display.
The messages displayed are generated in the chip card reader and communicated to the navigation system as information via the data bus.

In order to activate the Audi Logbook, adaption of the navigation unit must be performed. (see workshop manual).

Design and function

The air conditioner represents a further development of the two-zone air conditioning concept previously used in the A6.

The redesigned system is based on the performance data for top of the medium range vehicles, taking account of low system weight and energy consumption as well as, to an increasing extent, recycling capability.

Operating and display unit E87.

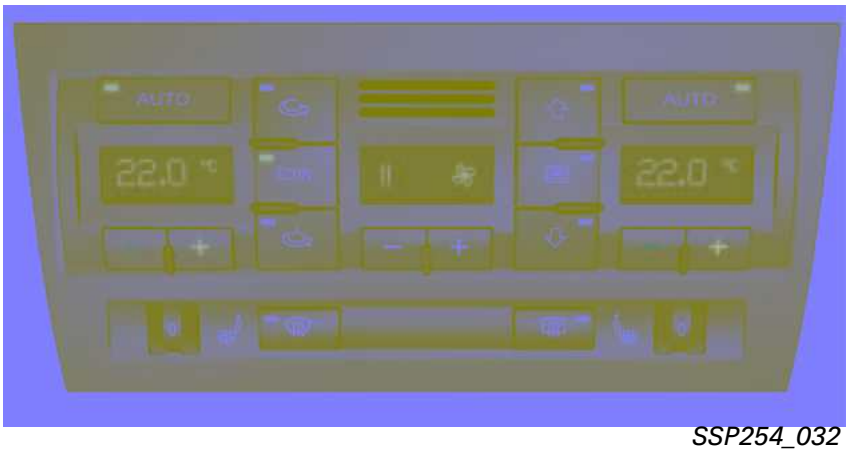

SSP254_032

Innovations include:

- Individual temperature control for both driver and front passenger
- Option of synchronising the temperature zones for driver and front passenger by pressing the "Auto" button for approx. three seconds.

  Example:
  If the same temperature is desired for the passenger's side as for the driver's side, the "Auto" button should be pressed for at least three seconds.
  The same applies the other way round, for making the driver's side temperature the same as that of the passenger's side.

- The fault diagnosis and measured value blocks for the seat heating system are read out via address word 08 for the air conditioner.
- The system is encoded automatically via the dash panel insert.
- Integrated rotary control knob with potentiometer for seat heating.
  (this means the potentiometers cannot be replaced individually)
- Intake blower V42 for passenger compartment temperature sensor G56 is integrated and cannot be replaced individually.

A distinction is made between eight different versions, identified by means of the part number index:

- with or without seat heating
- with or without navigation system,
- at a later date, with or without air quality sensor.

! The operating and display unit E87 is connected to the convenience CAN bus. Diagnosis takes place via the K-wire.

7-piston compressor

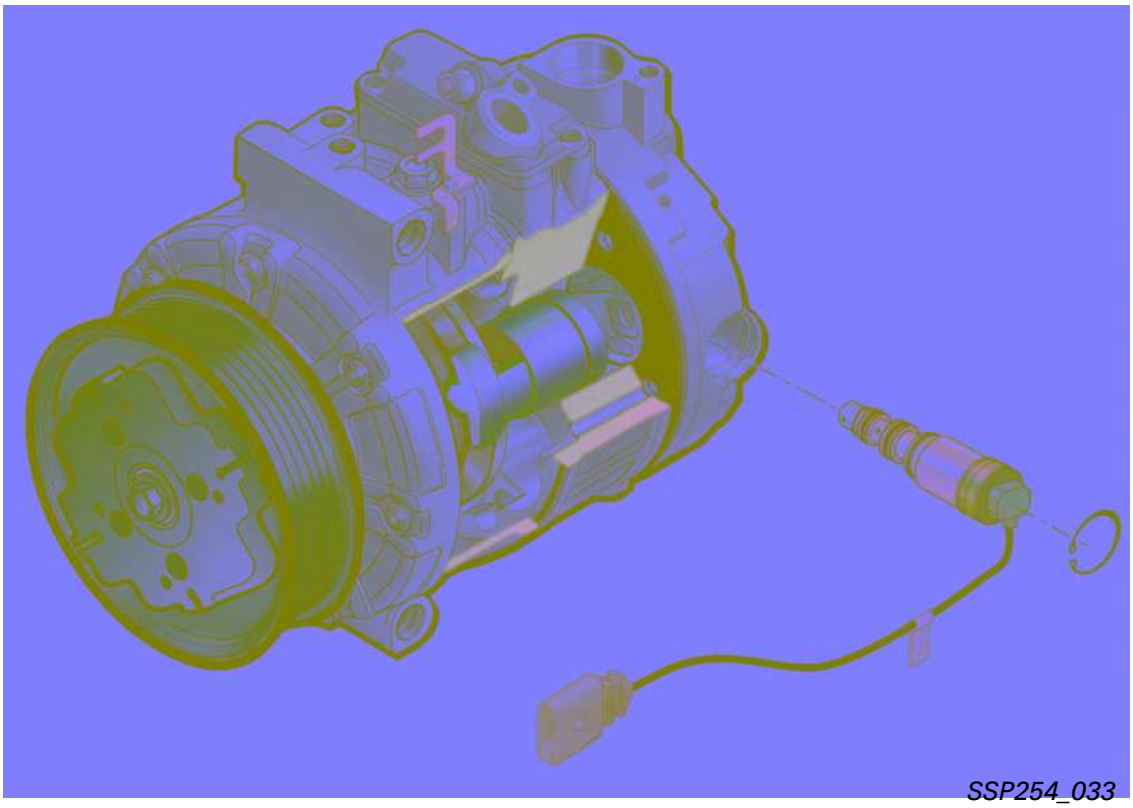

Two versions of externally controlled compressors are used in the Audi A4:

- the 6-piston compressor, which you have already studied in detail in SSP 240,
- the 7-piston compressor, which differs in the number of pistons and the resulting increased displacement.

Depending on the country-specific vehicle version, the 7-piston compressor with its higher total output is used (e.g. in hot countries).

Based on the engine version installed, a distinction is made between the following compressor
types:

- 6 and 7 pistons for compressor fitted on right side of engine,
- 6 and 7 pistons for compressor fitted on left side of engine,
- 6 pistons for 6-cylinder TDI Diesel mechanical units.

Distinguishing features to identify the compressor fitted are:

- Lettering on the compressor identification plate is 6SEU for the 6-cylinder or 7SEU for the 7-cylinder compressor.
- the greater outer diameter of the 7-cylinder compressor (approx. 122 mm) compared to the smaller outer diameter of the 6-cylinder compressor (approx. 113 mm)

! Vehicles equipped with a 7-piston compressor, are fitted with a radiator fan which has a higher output.

Air conditioner

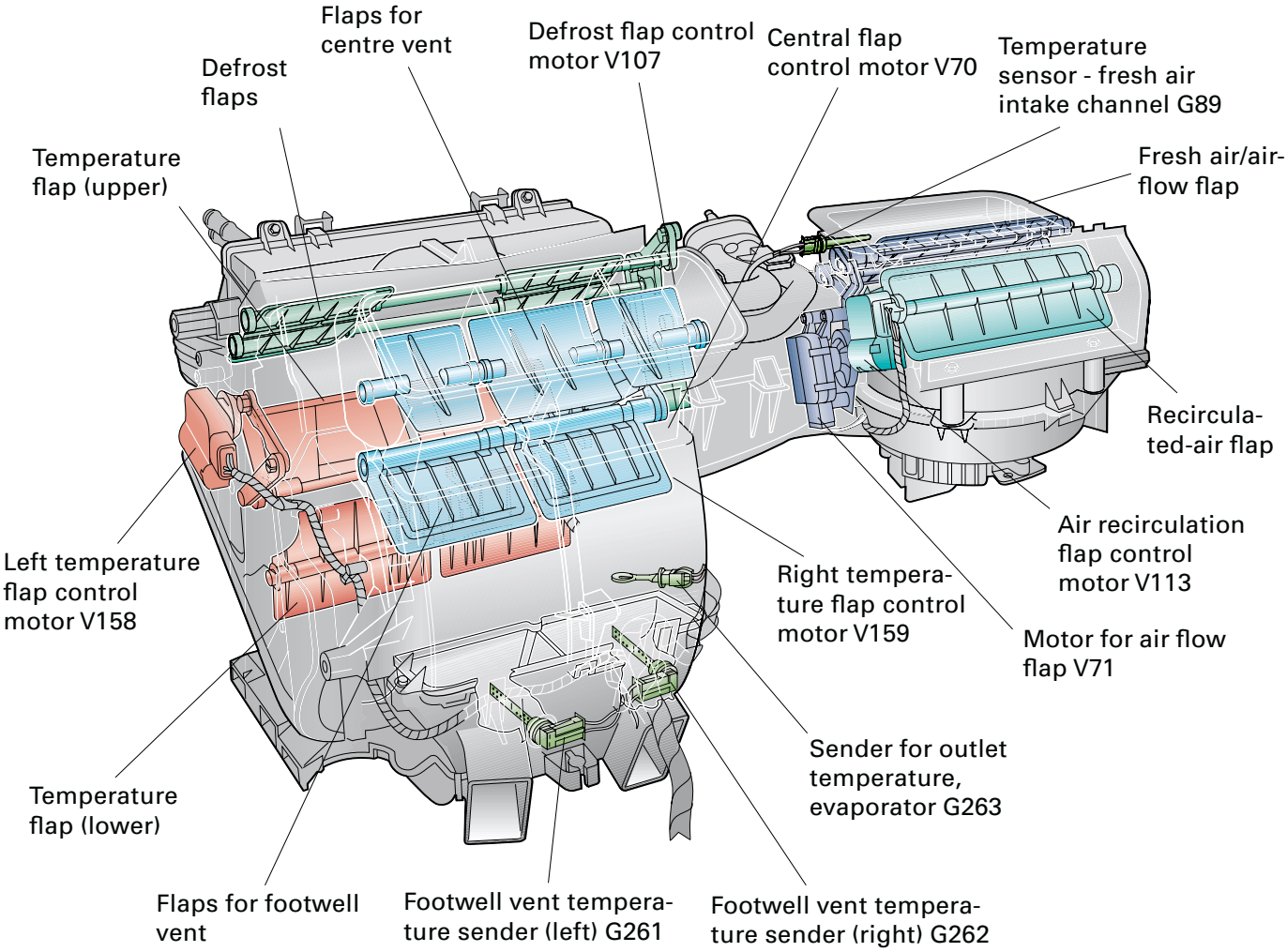

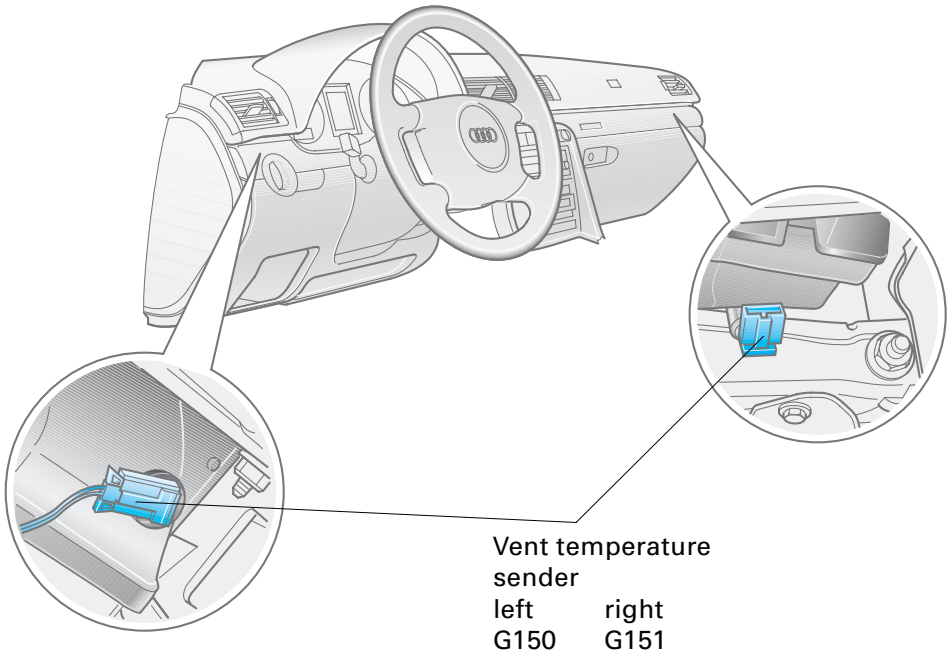

SSP254_019

The basic functions of the air conditioner in the Audi A4 are based on the Audi A6 system and includes the following features:

- Air-side separation for driver's and passenger's side.
- The heat exchanger can be replaced without removing the air conditioner.
- The PTC additional heater element for diesel mechanical units can also be replaced without removing the unit.
- All control motors and potentiometers are easily accessible and replaceable.
- Connecting hose from air conditioner to glove compartment for supplying the glove compartment cooler (optional).
  (in vehicles without glove compartment cooling, the connection is sealed with a rubber plug).
- Modified fresh air blower for passenger compartment (description, see section: Fresh air blower/electronically controlled fresh air blower, on page 81).

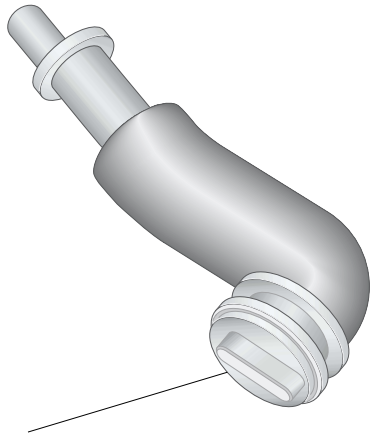

SSP254_015

Connecting hose to glove compartment cooler

Glove compartment cooling

The cooler fills the entire space of the glove compartment. It can, for instance, hold two bottles with a volume of 0.25 and 0.7 litres. The cold air supply is achieved via a connecting hose from the air conditioner unit.
The hose is fitted with a rotary slide for cold air regulation.

Two examples give an impression of its performance:

- Cooling of the cooler contents from approx. +30 °C to approx. +16 °C within one hour and
- after switching off the cold air supply, warming up by approx. +4 °C per hour at an ambient temperature of approx. +30 seconds and exposure to the sun.

SSP254_034

Solar roof

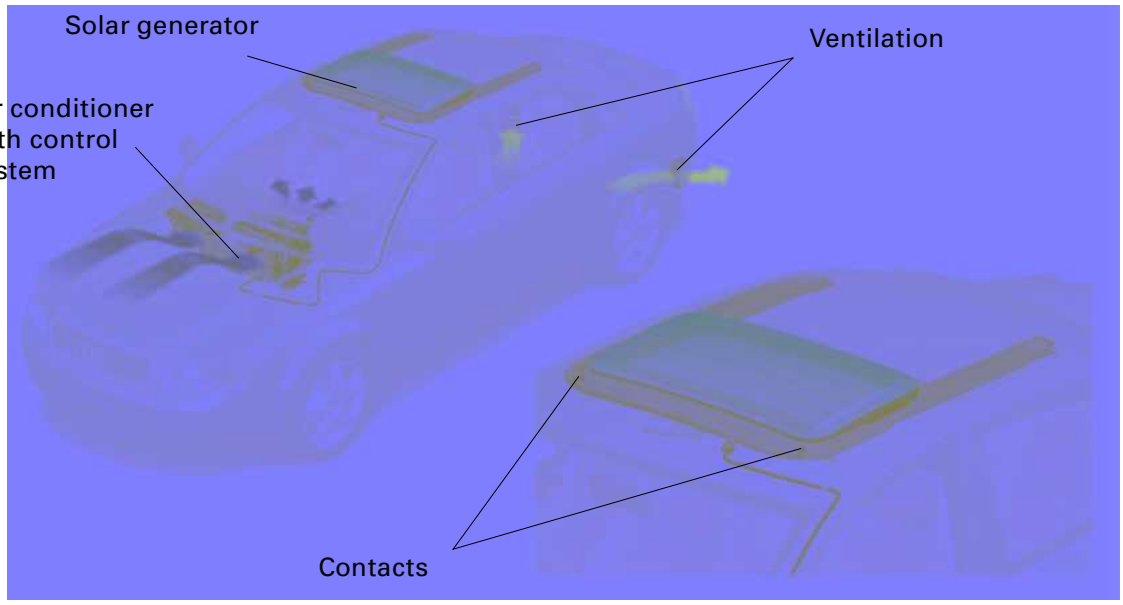

SSP254_035

For the first time, the A4 can optionally be equipped with the solar roof previously used in the A8 and A6.
The fresh air blower is continually driven by electricity obtained from solar radiation.
The output is proportional to the intensity of the sunlight.

Modifications to the familiar models:

- Re-engineered fresh air blower
- The DC/DC transformer has been discontinued, its function is now performed by the fresh air blower control unit J126.

Significant advantages in comparison with vehicles without solar roof are:

- lowered temperature level in vehicles parked in the sun (see chart),
- increased efficiency of the air conditioner as the interior temperature set is achieved more quickly,
- despite the reduced output of the system during the winter, an air-drying effect occurs which effectively dehumidifies the vehicle, reducing fogging of the windows.

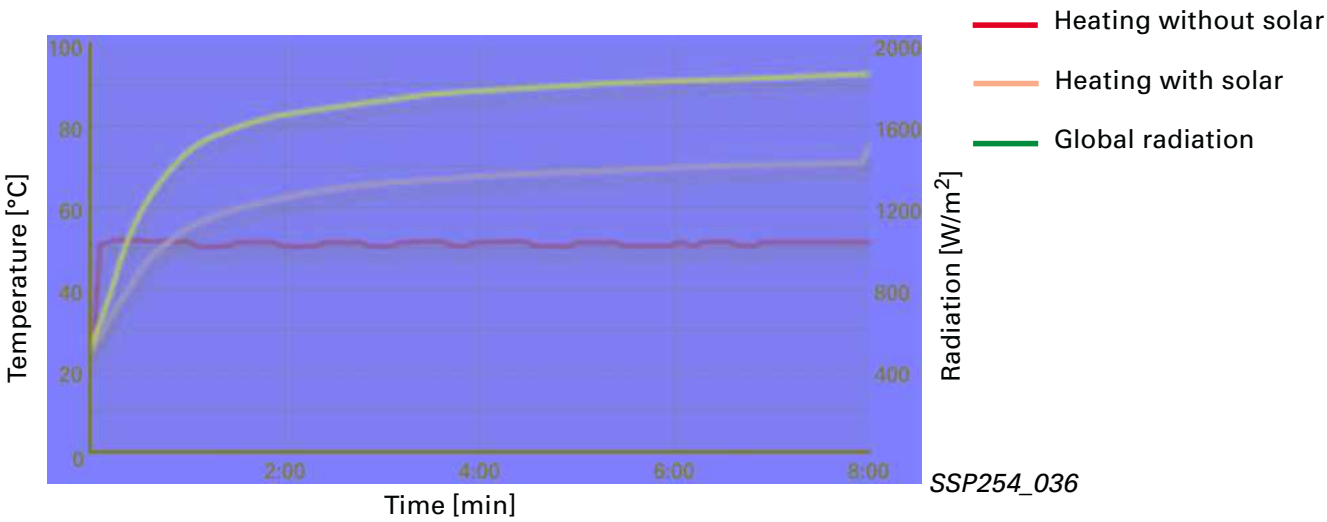

SSP254_036

Fresh air blower

Control technology has been integrated in the new fresh air blower.

It includes the following features:

- Integrated control unit with diagnostic capability via the operating and display unit E87 (fault memory and measured value block diagnosis-capable control unit),
- optimised bearings for smoother running,
- separate solar input.

The required blower speed is calculated in the operating and display unit E87, and requested by the control unit for fresh air blower J126 via a PWM signal.

In the case of malfunctions, such as e.g. a stiff or blocked blower, this is signalled to the operating and display unit E87 by duty cycle changes based on the altered frequency. The relevant fault is set.

The blower bearings have been re-engineered in order to optimise the effectiveness of the system.
This particularly benefits solar operation.

The energy supplied by the solar roof is utilised to drive the fresh air blower by means of special electronics via the separate solar input in the blower.

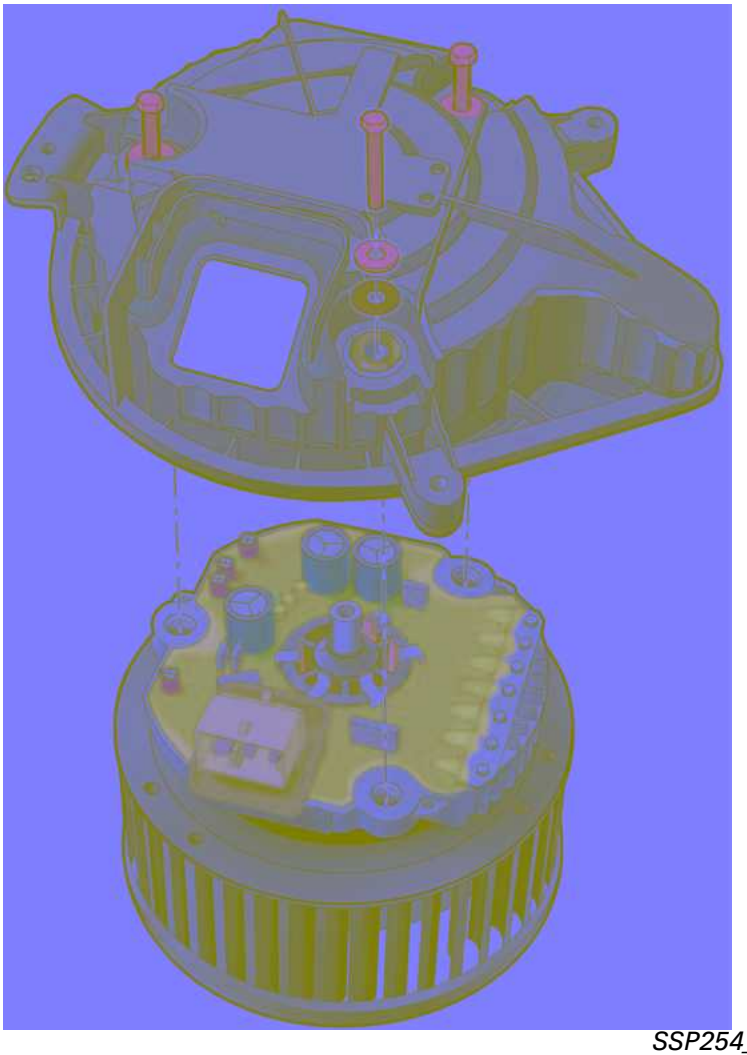

SSP254_037

Actuators/sensors

Ambient temperature sensor
G17

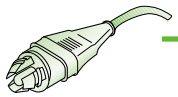

Dash panel temperature
sensor G56
and
Temperature selection in the air conditioner operating and display unit E87

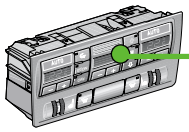

Sender for footwell vent temperature,
right, G262

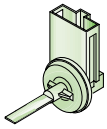

Sender for footwell vent temperature, left, G261

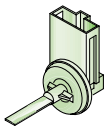

Vent temperature sender, right, G151

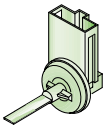

Vent temperature sender, left, G150

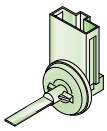

Fresh air intake temperature
sensor G89

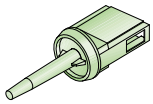

Evaporator outlet temperature
sender G263

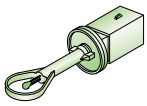

High-pressure sender G65

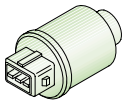

Sunlight penetration photo-
sensor G107

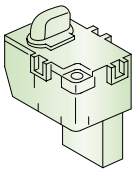

Signals:
Terminal 31b from automatic wash/wipe interval system
Regulating valve for air conditioner compressor N280
Air quality sensor G238

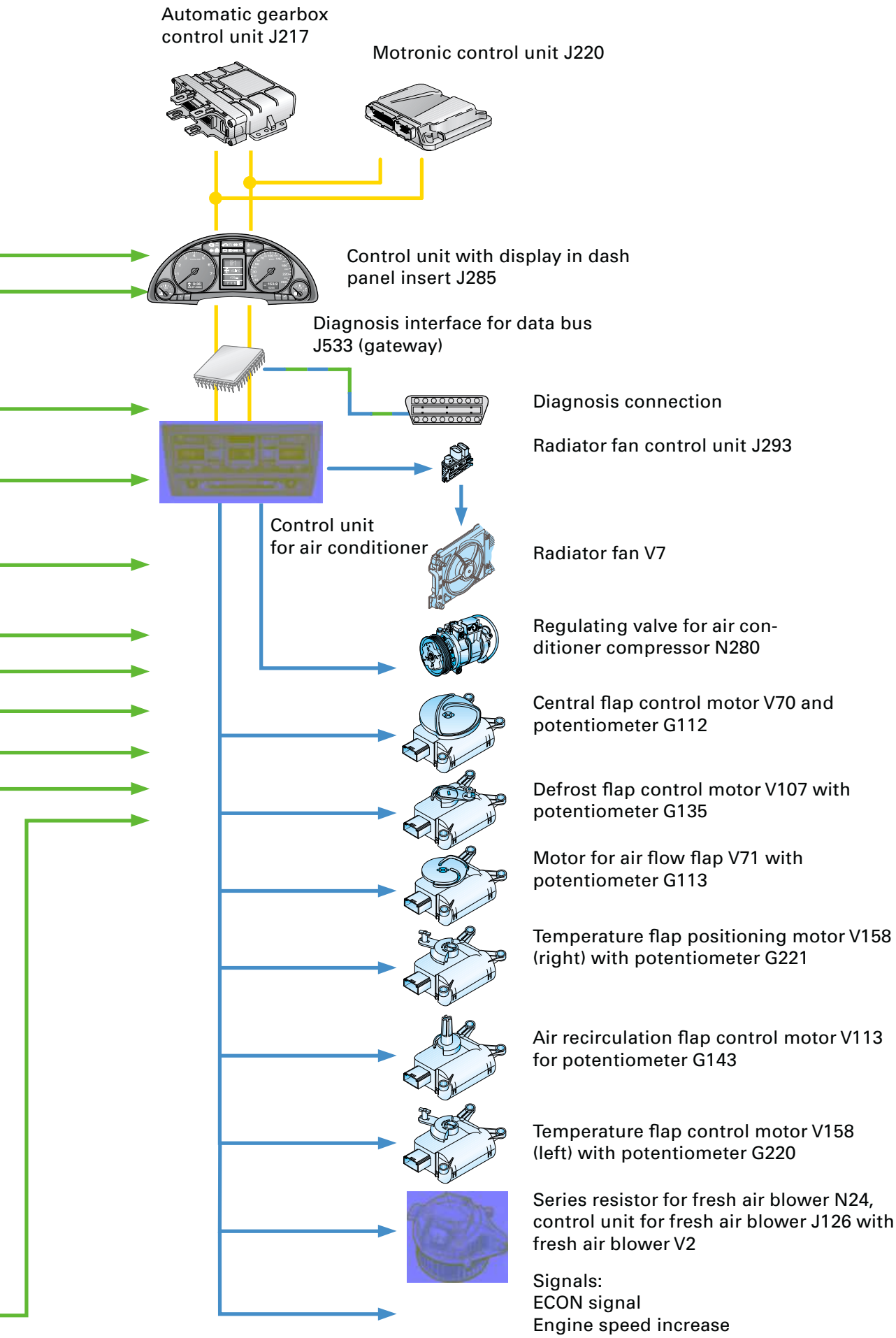
Automatic gearbox control unit J217
Motronic control unit J220
Control unit with display in dash panel insert J285
Diagnosis interface for data bus J533 (gateway)
Diagnosis connection
Radiator fan control unit J293
Control unit for air conditioner
Radiator fan V7
Regulating valve for air con-ditioner compressor N280
Central flap control motor V70 and potentiometer G112
Defrost flap control motor V107 with potentiometer G135
Motor for air flow flap V71 with potentiometer G113
Temperature flap positioning motor V158 (right) with potentiometer G221
Air recirculation flap control motor V113 for potentiometer G143
Temperature flap control motor V158 (left) with potentiometer G220
Series resistor for fresh air blower N24, control unit for fresh air blower J126 with fresh air blower V2
Signals:
ECON signal
Engine speed increase
Air conditioner compressor
SSP254_041

Functional diagram for fully automatic air conditioner

Components

C20	Solar cells
E87	Operating and display unit for air conditioner
G59	Driver's seat temperature sensor
G60	Front passenger's seat temperature sensor
G65	High-pressure sender
G89	Temperature sensor - fresh air intake-channel
G107	Sunlight penetration photosensor
G112	Potentiometer in positioning motor for central flap
G113	Potentiometer in positioning motor for air flow flap
G135	Potentiometer in central flap control motor defrost flap
G143	Potentiometer in central flap control motor recirculated-air flap
G150	Vent temperature sender, left
G151	Vent temperature sender, right
G220	Potentiometer, positioning motor for temperature flap, left
G221	Potentiometer, positioning motor for temperature flap, right
G238	Air quality sensor
G262	Vent temperature sender, footwell, left
G262	Vent temperature sender, footwell, right
G263	Vent temperature sender, evaporator
J9	Relay for heated windscreen and rear window
J126	Blower control unit
N280	Regulating valve for compressor, air conditioner
S	Fuses
V2	Fresh air blower
V70	Central flap control motor
V71	Air flow flap control motor
V107	Defrost flap control motor
V113	Air recirculation flap control motor
V158	Temperature flap positioning motor, left
V159	Temperature flap positioning motor, right
Z1	Heated rear window
Z6	Heated driver's seat
Z8	Heated front passenger's seat

Colour coding

= Input signal

= Output signal

= Positive power supply

= Earth

= CAN-BUS

Auxiliary signals

1 CAN-high convenience

2 CAN-low convenience

3 Terminal 75

4 Windscreen heating Z2

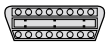

K-diagnostic connection

CAN-H CONVENIENCE
CAN-L CONVENIENCE
} Connection to convenience data bus

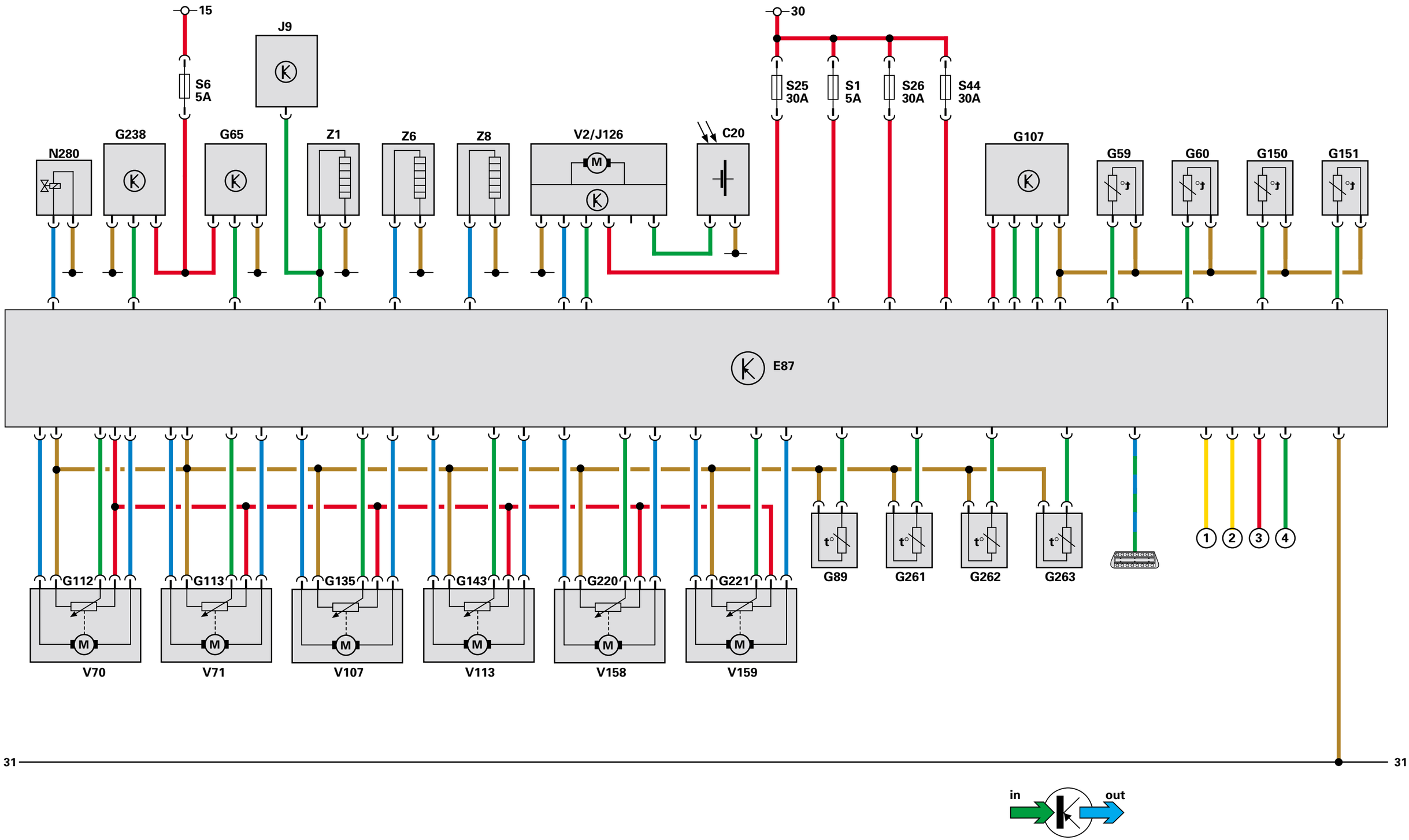
15
30
S6
5A
J9
S25
30A
S1
5A
S26
30A
S44
30A
N280
G238
G65
Z1
Z6
Z8
V2/J126
C20
G107
G59
G60
G150
G151
E87
G112
G113
G135
G143
G220
G221
G89
G261
G262
G263
1
2
3
4
V70
V71
V107
V113
V158
V159
31
31
in
out

Additional heater

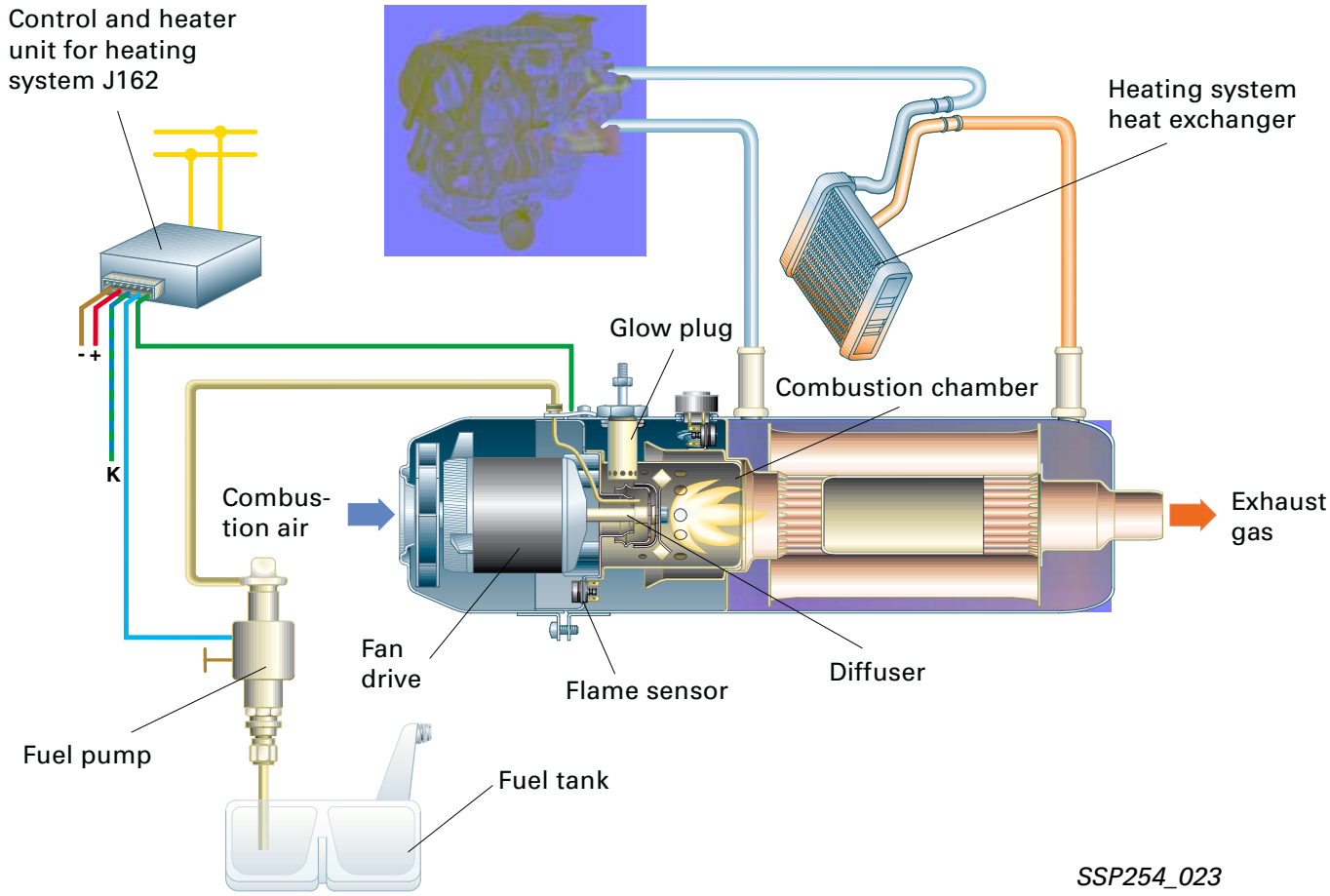

SSP254_023

The Audi A4 can optionally be equipped with an additional heater for coolant.
Its mode of operation corresponds to the systems in use previously.
The additional heater warms the heating-system heat exchanger in the air conditioner unit via the cooling-water circuit.

The cut-in time is "programmed" via the dash panel insert.

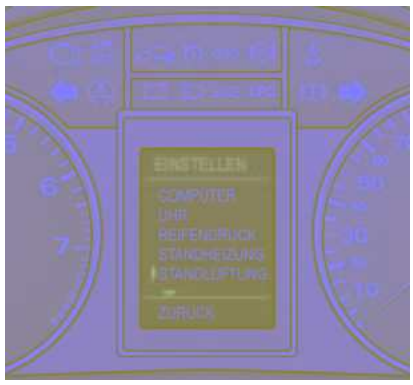

SSP254_097

All rights reserved, including the
right to make technical changes.
AUDI AG
Dept. I/VK-5
D-85045 Ingolstadt
Fax 0841/89-36367
040.2810.73.00
Technical status 10/00
Printed in Germany