Protected by copyright. Copying for private or commercial purposes, in part or in whole, is not permitted unless authorised by AUDI AG. AUDI AG does not guarantee or accept any liability with respect to the correctness of information in this document. Copyright by AUDI AG.

# Workshop Manual

## Audi A4 2008 ➤ , Audi A4 2015 ➤ , Audi A5 2016 ➤ , Audi A5 Cabriolet 2009 ➤ , Audi A5 Coupé 2008 ➤ , Audi A6 2011 ➤ , Audi A6 2019 ➤ , Audi A6 China 2012 ➤ , Audi A7 Sportback 2011 ➤ , Audi A7 Sportback 2018 ➤ , Audi A8 2010 ➤ , Audi A8 2018 ➤ , Audi A8 China 2018 ➤ , Audi Q5 2008 ➤ , Audi Q5 2017 ➤ , Audi Q5 China 2010 ➤ , Audi Q7 2016 ➤

## Servicing 8-speed automatic gearbox

Edition 04.2019

# List of Workshop Manual Repair Groups

## Repair Group

00 - Technical data
32 - Torque converter
37 - Controls, housing
38 - Gears, control
39 - Final drive - front differential

Technical information should always be available to the foremen and mechanics, because their careful and constant adherence to the instructions is essential to ensure vehicle road-worthiness and safety. In addition, the normal basic safety precautions for working on motor vehicles must, as a matter of course, be observed.

Protected by copyright. Copying for private or commercial purposes, in part or in whole, is not permitted unless authorised by AUDI AG. AUDI AG does not guarantee or accept any liability with respect to the correctness of information in this document. Copyright by AUDI AG.

All rights reserved.
No reproduction without prior agreement from publisher.
Copyright © 2019 Audi AG, Ingolstadt

D4B8072D26D

# Contents

**00 - Technical data** . . . . . 1
- **1 Identification** . . . . . 1
- 1.1 Gearbox identification . . . . . 1
- **2 Safety precautions** . . . . . 2
- 2.1 General safety precautions . . . . . 2
- 2.2 Safety precautions when working on vehicles with start/stop system . . . . . 2
- 2.3 Safety precautions when using testers and measuring instruments during a road test . . . . . 2
- 2.4 Safety precautions when tow-starting and towing . . . . . 3
- **3 Repair notes** . . . . . 4
- 3.1 Impact wrenches . . . . . 4
- 3.2 Rules for cleanliness . . . . . 4
- 3.3 General notes . . . . . 5
- 3.4 General repair instructions . . . . . 6
- 3.5 Contact corrosion . . . . . 7
- **4 Technical data** . . . . . 9
- 4.1 Oil distribution . . . . . 9
- **5 Transmission layout** . . . . . 10

**32 - Torque converter** . . . . . 11
- **1 Torque converter** . . . . . 11
- 1.1 Exploded view - torque converter . . . . . 11
- 1.2 Removing and installing torque converter . . . . . 12
- 1.3 Draining torque converter . . . . . 17
- 1.4 Checking torque converter . . . . . 18
- 1.5 Removing and installing oil seal for torque converter . . . . . 18

**37 - Controls, housing** . . . . . 21

**38 - Gears, control** . . . . . 22
- **1 ATF system** . . . . . 22
- 1.1 Removing and installing ATF strainer . . . . . 22
- **2 Mechatronic unit** . . . . . 24
- 2.1 Exploded view - mechatronic unit . . . . . 24
- 2.2 Removing and installing mechatronic unit . . . . . 32
- 2.3 Removing and installing auxiliary hydraulic pump for gearbox oil . . . . . 41
- 2.4 Removing and installing hydraulic pulse accumulator with accumulator solenoid N485 . . . . . 43
- 2.5 Removing and installing electrical wiring harness for auxiliary hydraulic pump for gearbox oil . . . . . 44

**39 - Final drive - front differential** . . . . . 47
- **1 Centre differential** . . . . . 47
- 1.1 Exploded view - centre differential . . . . . 47
- 1.2 Removing and installing centre differential . . . . . 48
- 1.3 Removing and installing rear splined shaft . . . . . 49
- 1.4 Renewing oil seal for rear splined shaft . . . . . 52
- 1.5 Renewing ball bearing for rear splined shaft . . . . . 57
- 1.6 Renewing ball bearing for centre differential . . . . . 60
- **2 Transfer box** . . . . . 63
- 2.1 Exploded view - transfer box . . . . . 63
- 2.2 Dismantling and assembling transfer box . . . . . 64

Protected by copyright. Copying for private or commercial purposes, in part or in whole, is not permitted unless authorised by AUDI AG. AUDI AG does not guarantee or accept any liability with respect to the correctness of information in this document. Copyright by AUDI AG.

Protected by copyright. Copying for private or commercial purposes, in part or in whole, is not permitted unless authorised by AUDI AG. AUDI AG does not guarantee or accept any liability with respect to the correctness of information in this document. Copyright by AUDI AG.

# 00 – Technical data

## 1 Identification

(ARL006342; Edition 04.2019)

⇒ “1.1 Gearbox identification”, page 1

### 1.1 Gearbox identification

**Location of code letters on gearbox**

- The gearbox code letters are located on the identification plate on the underside of the gearbox. Fitting location of identification plate -arrow-.

Protected by copyright. Copying for private or commerci
permitted unless authorised by AUDI AG. AUDI AG does
with respect to the correctness of information in this do

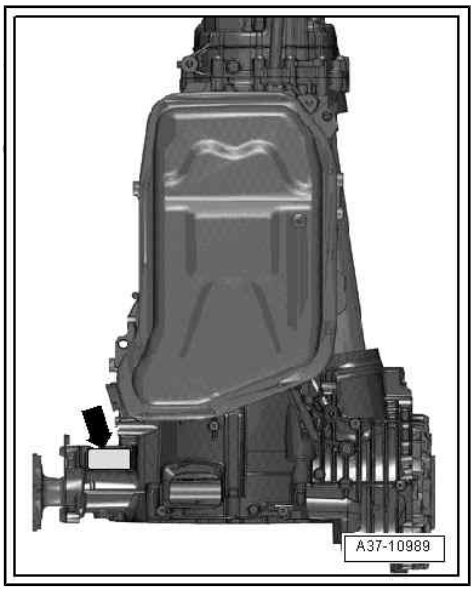


**Code letters and gearbox serial number**

Example:

1 - Serial number of gearbox

2 - Model number

3 - Manufacturer's gearbox designation: 8HP-55

4 - Gearbox code, in this example: MXV

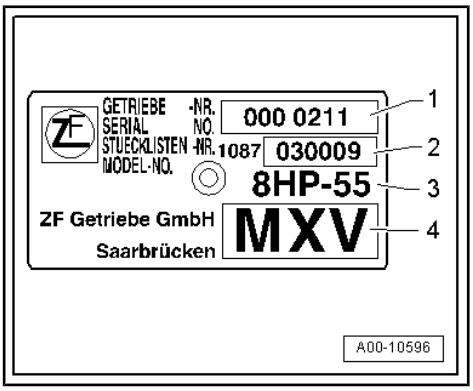

# 2 Safety precautions

⇒ “2.1 General safety precautions”, page 2

⇒ “2.2 Safety precautions when working on vehicles with start/stop system”, page 2

⇒ “2.3 Safety precautions when using testers and measuring instruments during a road test”, page 2

⇒ “2.4 Safety precautions when tow-starting and towing”, page 3

Protected by copyright. Copying for private or commercial purposes, in part or in whole, is not permitted unless authorised by AUDI AG. AUDI AG does not guarantee or accept any liability with respect to the correctness of information in this document. Copyright by AUDI AG.

## 2.1 General safety precautions

**Accident risk; vehicle may start to move**

If you select a gear while the engine is running, the vehicle may start to move.

– Move selector lever to position “P”.

– Apply parking brake.

**Risk of irreparable damage to electronic components**

When disconnecting the battery there is a risk of irreparable damage to electronic components.

– Always switch off the ignition before disconnecting the battery.

♦ Switch off ignition before disconnecting and connecting test equipment.

– Disconnect battery ⇒ Electrical system; Rep. gr. 27 ; Battery; Disconnecting and connecting battery .

## 2.2 Safety precautions when working on vehicles with start/stop system

**Risk of injury - engine may start unexpectedly**

The engine can start unexpectedly if the vehicle's start/stop system is activated. A message in the instrument cluster indicates whether the start/stop system is activated.

– To deactivate the start/stop system, switch off the ignition.

## 2.3 Safety precautions when using testers and measuring instruments during a road test

**Risk of injury if test equipment is not secured**

If an accident occurs and the front passenger's airbag is triggered, test equipment which is not secured adequately may be catapulted through the vehicle with potentially serious consequences.

– Secure test equipment on the rear seat with a strap.

Or:

– Have a second mechanic operate test equipment on the rear seat.

## 2.4 Safety precautions when tow-starting and towing

**Risk of damage to gearbox**

Incorrect towing of the vehicle may result in damage to the gearbox.

– Move selector lever into position “N” before towing the vehicle.
– Do not exceed a speed of 50 km/h or a distance of 50 km when towing the vehicle.

Protected by copyright. Copying for private or commercial purposes, in part or in whole, is not permitted unless authorised by AUDI AG. AUDI AG does not guarantee or accept any liability with respect to the correctness of information in this document. Copyright by AUDI AG.

# 3 Repair notes

⇒ “3.1 Impact wrenches”, page 4

⇒ “3.2 Rules for cleanliness”, page 4

⇒ “3.3 General notes”, page 5

⇒ “3.4 General repair instructions”, page 6

⇒ “3.5 Contact corrosion”, page 7

Protected by copyright. Copying for private or commercial purposes, in part or in whole, is not permitted unless authorised by AUDI AG. AUDI AG does not guarantee or accept any liability with respect to the correctness of information in this document. Copyright by AUDI AG.

## 3.1 Impact wrenches

**In general, it is permitted to use an impact wrench to unscrew bolts and nuts. An exception to this is when work is performed inside an open high-voltage battery. For this work, it is not permitted to use an impact wrench.**

An impact wrench may be used to screw in bolts and nuts when performing repair work if the following requirements are observed. In general, electric and compressed-air impact wrenches should be used.

**Requirements:**

- Only screw in bolts with locking fluid or self-locking nuts at low speed.
- Use a suitable impact wrench with variable speed and adjustable torque range.
- Use suitable bits when working in the vicinity of sensitive surfaces, e.g. plastic-coated bits for aluminium rims.
- When working in the vicinity of natural gas systems, observe the information in the Workshop Manual “Natural gas engines - General information”.

**Use:**

- Fit bolts/nuts by hand.
- Only use an impact wrench to screw in bolts/nuts until the head of the bolt/nut makes contact and then continue tightening with a torque wrench.
- Clean threaded pins before unscrewing the bolt/nut.

## 3.2 Rules for cleanliness

- ♦ Thoroughly clean all joints and connections and the surrounding areas before disconnecting.
- ♦ Use cleaning fluid - D 009 401 04- to clean the gearbox and its components.
- ♦ Use commercially available lint-free cloths for cleaning, such as the “WYPALL X70 / WORKHORSE” cloth from Kimberly-Clark Professional.
- ♦ Seal off open lines and connections immediately with clean plugs or protective caps from engine bung set - VAS 6122- .
- ♦ After removal, place parts on a clean surface and cover them. Use sheeting or lint-free cloths.
- ♦ Carefully cover or seal open components if repairs cannot be carried out immediately.

- Only install clean components; replacement parts should only be unpacked immediately prior to installation.
- Protect unplugged electrical connectors against dirt and moisture and make sure connections are dry when attaching.

## 3.3 General notes

### Gearbox

- The 8-speed automatic gearbox 0BK, four-wheel drive, has eight hydraulically actuated forward gears. When the torque converter lock-up clutch closes, these forward gears act as mechanically driven gears since the slippage in the torque converter is prevented.
- A special feature of the 0BK gearbox is the location of the front final drive (front differential with flange shafts) in front of the torque converter. This allows for a more even weight distribution between the front and rear axles on the vehicle.
- For detailed information on the function of the gearbox refer to ⇒ Self-study programme No. 457 ; Audi A8 '10, Power transmission .

### Torque converter

The torque converter is equipped with a lock-up clutch allowing controlled slip. Due to the new construction in this gearbox the torque converter is located behind the front final drive.

### Mechatronic unit

The mechatronic unit incorporates the following components as a complete synchronised unit:

- Hydraulic control system, automatic gearbox control unit - J217-
- Sensors and actuators

The mechatronic unit is installed inside the gearbox in the ATF oil pan.

### Automatic gearbox control unit - J217-

The control unit is part of the mechatronic unit in the gearbox.

The gear change points are calculated automatically (depending on the driving situation and the resistance to motion).

Advantages:

- Gear change points controlled for enhanced fuel economy
- Maximum engine output is always available
- Gear-change points are adapted individually in all driving situations
- Gear-change points are infinitely variable

Protected by copyright. Copying for private or commercial purposes, in part or in whole, is not permitted unless authorised by AUDI AG. AUDI AG does not guarantee or assume any liability with respect to the correctness of information in this document. Copyright by AUDI AG.

### Oil system for transfer box and final drive

Depending on engine version, gearboxes may have separate or common oil systems ⇒ “4.1 Oil distribution”, page 9 .

On vehicles with a common oil system, the appropriate testing regulations MUST be adhered to as the oil level of the transfer box is dependent on the oil level of the front axle differential.

### Variation of gear-change points for gradients

An additional gear change map automatically selects gear changes for gradients. The gear changes are selected according to accelerator pedal position and road speed.

- Gear change map for extreme uphill gradients is matched to engine output.
- Gear change map for extreme downhill gradients is matched to the braking effect of the engine.
- The driver can achieve an increased engine braking effect by directly selecting a specific gear via the tiptronic function, e.g. when towing a trailer on downhill gradients.

## 3.4 General repair instructions

Proper tools and the maximum possible care and cleanliness are essential for satisfactory repairs to the transmission units. The usual basic safety precautions also naturally apply when carrying out repair work.

To avoid repetition, a number of generally applicable instructions for the various repair procedures are summarised here. They apply to the work described in this Manual.

### Guided Fault Finding, Vehicle self-diagnosis and Test Instruments

- Before servicing the gearbox, the exact cause of the failure must be determined using the functions `Guided Fault Finding`, `Vehicle Self-diagnosis` and `Test Instruments` ⇒ Vehicle diagnostic tester.

### Environmental and waste disposal regulations for oil

- ATF, gear oil and any other type of oil must be handled with care.
- Dispose of drained oil properly.
- Always adhere to statutory environmental and waste disposal regulations.
- Observe the information shown on the packaging of the oil.

Protected by copyright. Copying for private or commercial purposes, in part or in whole, is not permitted unless authorised by AUDI AG. AUDI AG does not guarantee or accept any liability with respect to the correctness of information in this document. Copyright by AUDI AG.

### Special tools

For a complete list of special tools used in this Workshop Manual
⇒ Workshop equipment and special tools

### Gearbox

- Observe rules for cleanliness when working on gearbox ⇒ page 4 .

### O-rings, oil seals and gaskets

- Always renew O-rings, oil seals and gaskets.
- After removing gaskets and seals, always inspect the contact surface on the housing or shaft for burrs resulting from removal or for other signs of damage.
- Thoroughly clean housing joint surfaces before assembling.
- Lightly lubricate the outer circumference and sealing lip of oil seals with ATF before installing.
- Lightly lubricate O-rings with ATF before installation to prevent them from being crushed during assembly.
- Use only ATF for parts running in ATF. Other lubricants will cause malfunction of the gearbox hydraulics.
- The open side of the oil seal should face the side containing the fluid.
- When installing a new oil seal, position the seal such that the sealing lip does not contact the shaft in the same place as the old seal (make use of installation depth tolerances).

- After installation, fill up fluid.

**Nuts, bolts**

- Loosen bolts in reverse sequence to the specified tightening sequence.
- Bolts and nuts used to secure covers and housings must be tightened in steps according to the specified tightening sequence and method.
- Bolts and nuts which secure covers and housings should be loosened and tightened in diagonal sequence and in stages if no tightening sequence is specified.
- Tightening torques apply to non-lubricated bolts and nuts (unless specified otherwise).
- Renew self-locking nuts and bolts.
- Use a wire brush to clean the threads of bolts which are secured with locking fluid. Then apply locking fluid - AMV 185 101 A1- to bolt threads before installing.
- Threaded holes which take self-locking bolts or bolts coated with locking fluid must be cleaned (using a tap or similar). Otherwise there is a danger of the bolts shearing off the next time they are removed.

Automatically copyright protected. Copying for private or commercial purposes, in part or in whole, is not permitted unless authorised by AUDI AG. AUDI AG does not guarantee or accept any liability with respect to the correctness of information in this document. Copyright by AUDI AG.

**Locking elements**

- Do not over-stretch circlips.
- Renew circlips which have been damaged or over-tensioned.
- Circlips must be properly seated in the base of the groove.

**Mounting**

- Install needle bearings so the lettering (side with thicker metal) faces towards the installing tool.
- Lubricate bearings with gear oil or ATF, depending on fitting location.
- Do not interchange inner or outer races of bearings of the same size.
- Always renew the tapered roller bearings on one shaft together and use new bearings from a single manufacturer.

**Shims**

- Use a micrometer to measure the shims at several points. Different shim thicknesses make it possible to obtain the exact shim thickness required; if necessary, fit 2 shims.
- Check for burrs and damage. Install only shims which are in perfect condition.

## 3.5 Contact corrosion

Contact corrosion can occur if unsuitable fasteners are used (e.g. bolts, nuts, washers, etc.).

For this reason, only fasteners with a special surface coating are fitted.

Rubber or plastic parts and adhesives also consist of non-conductive materials.

Always install new parts if you are not sure whether used parts can be re-fitted ⇒ Electronic parts catalogue .

**Please note:**

- We recommend using only genuine replacement parts; these have been tested and are compatible with aluminium.
- We recommend using Audi Genuine Accessories.
- Damage caused by contact corrosion is not covered by warranty.

Protected by copyright. Copying for private or commercial purposes, in part or in whole, is not permitted unless authorised by AUDI AG. AUDI AG does not guarantee or accept any liability with respect to the correctness of information in this document. Copyright by AUDI AG.

# 4 Technical data

⇒ “4.1 Oil distribution”, page 9

## 4.1 Oil distribution

**Gearbox with common oil system**

- The oil chambers in the front final drive -3- and the transfer box -1- are interconnected by means of the protective tube -2-.
- The side shaft runs in gear oil in the protective tube.
- There is no oil escape hole.

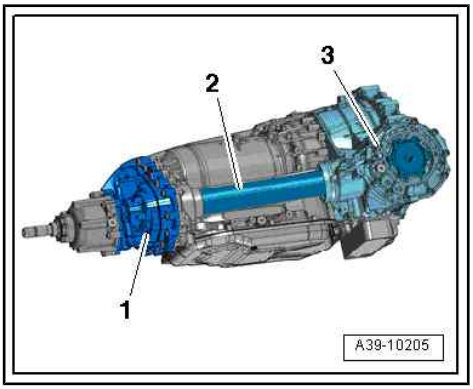


**Gearbox with separate oil systems**

- There is no oil in the protective tube -2-; the transfer box -1- and the front final drive -3- are each separated from the side shaft by an oil seal.
- Gearboxes with separate oil systems can be identified by the presence of an oil escape hole -arrow-.

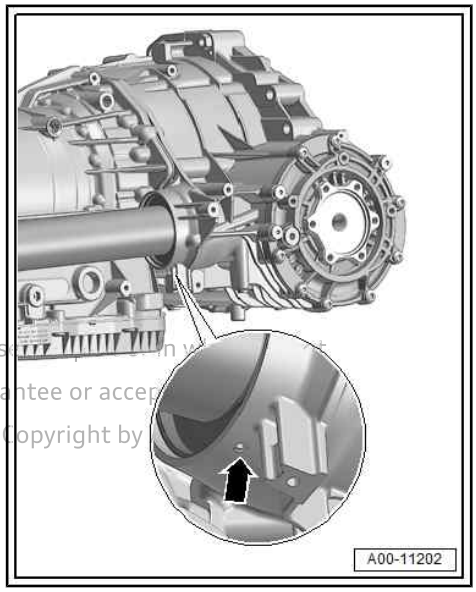


Protected by copyright. Copying for private or commercial purpos
permitted unless authorised by AUDI AG. AUDI AG does not guara
with respect to the correctness of information in this document. Copyright by

# 5 Transmission layout

**1 - Rear final drive**

- ❑ Removing and installing ⇒ Rear final drive; Rep. gr. 39 ; Final drive; Removing and installing final drive

**2 - Propshaft**

- ❑ Removing and installing ⇒ Rear final drive; Rep. gr. 39 ; Propshaft; Removing and installing propshaft

**3 - 8-speed automatic gearbox**

- ❑ Removing and installing ⇒ 8-speed automatic gearbox; Rep. gr. 37 ; Removing and installing gearbox

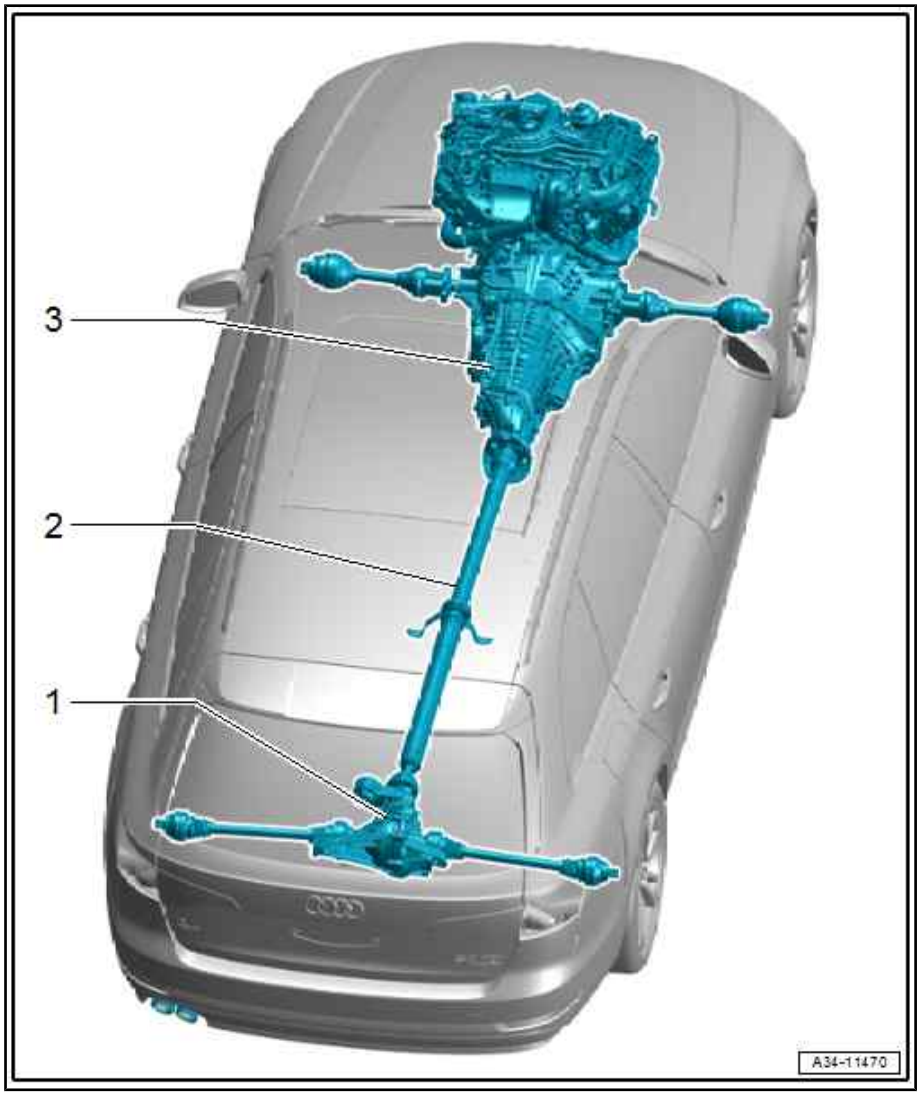


Protected by copyright. Copying for private or commercial purposes, in part or in whole, is not permitted unless authorised by AUDI AG. AUDI AG does not guarantee or accept any liability with respect to the correctness of information in this document. Copyright by AUDI AG.

# 32 – Torque converter

Protected by copyright. Copying for private or commercial purposes, in part or in whole, is not permitted unless authorized by AUDI AG. AUDI AG does not guarantee or accept any liability with respect to the correctness of information in this document. Copyright by AUDI AG.

## 1 Torque converter

⇒ "1.1 Exploded view - torque converter", page 11

⇒ "1.2 Removing and installing torque converter", page 12

⇒ "1.3 Draining torque converter", page 17

⇒ "1.4 Checking torque converter", page 18

⇒ "1.5 Removing and installing oil seal for torque converter", page 18

### 1.1 Exploded view - torque converter

⇒ "1.1.1 Exploded view - torque converter", page 11

⇒ "1.1.2 Exploded view - torque converter, e-tron", page 12

### 1.1.1 Exploded view - torque converter

**1 - Torque converter**

- ❑ Allocation to gearbox ⇒ Electronic parts catalogue
- ❑ Removing and installing ⇒ page 12

**2 - Gearbox housing**

**3 - Oil seal**

- ❑ For torque converter
- ❑ Renewing ⇒ page 18

**4 - O-ring**

- ❑ Renew after removing

**5 - Bolt**

- ❑ 6x
- ❑ Renew after removing
- ❑ Tightening procedure ⇒ 8-speed automatic gearbox; Rep. gr. 37 ; Removing and installing gearbox; Installing gearbox
- ❑ 60 Nm

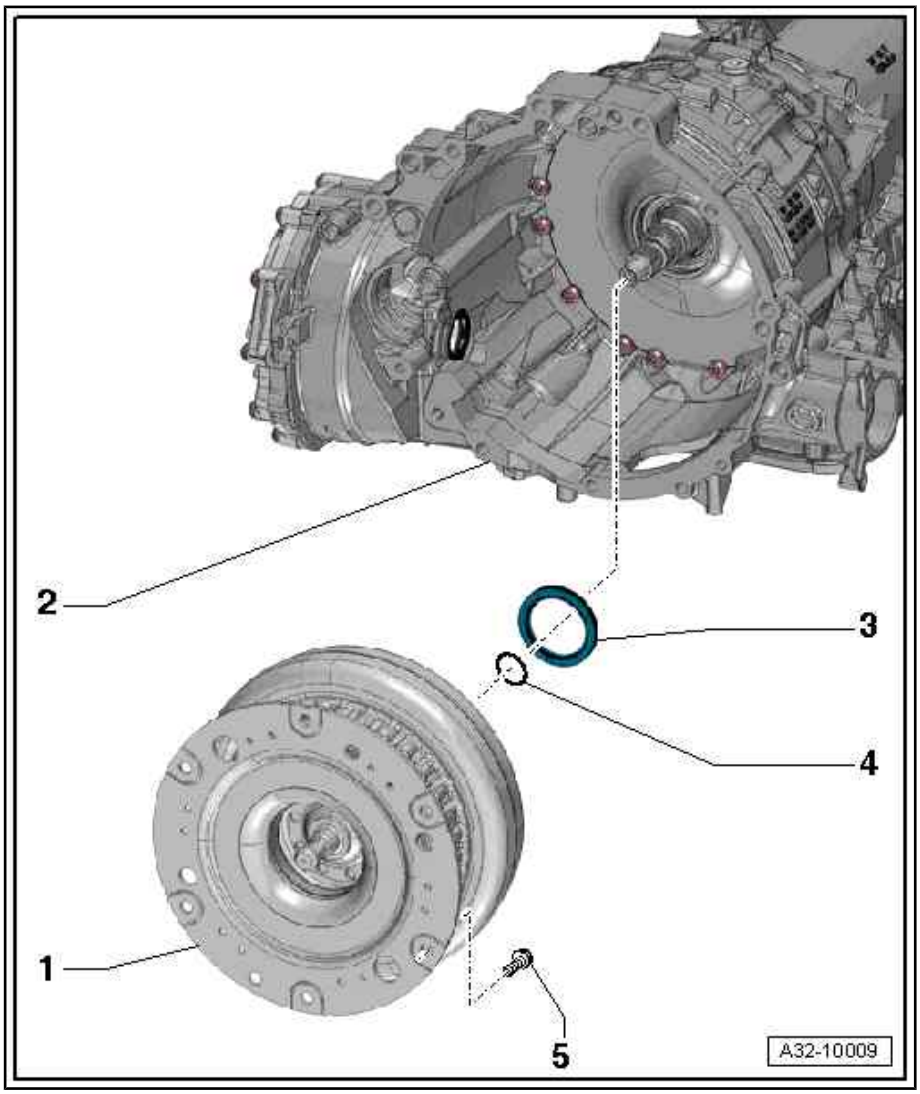

### 1.1.2 Exploded view - torque converter, e-tron

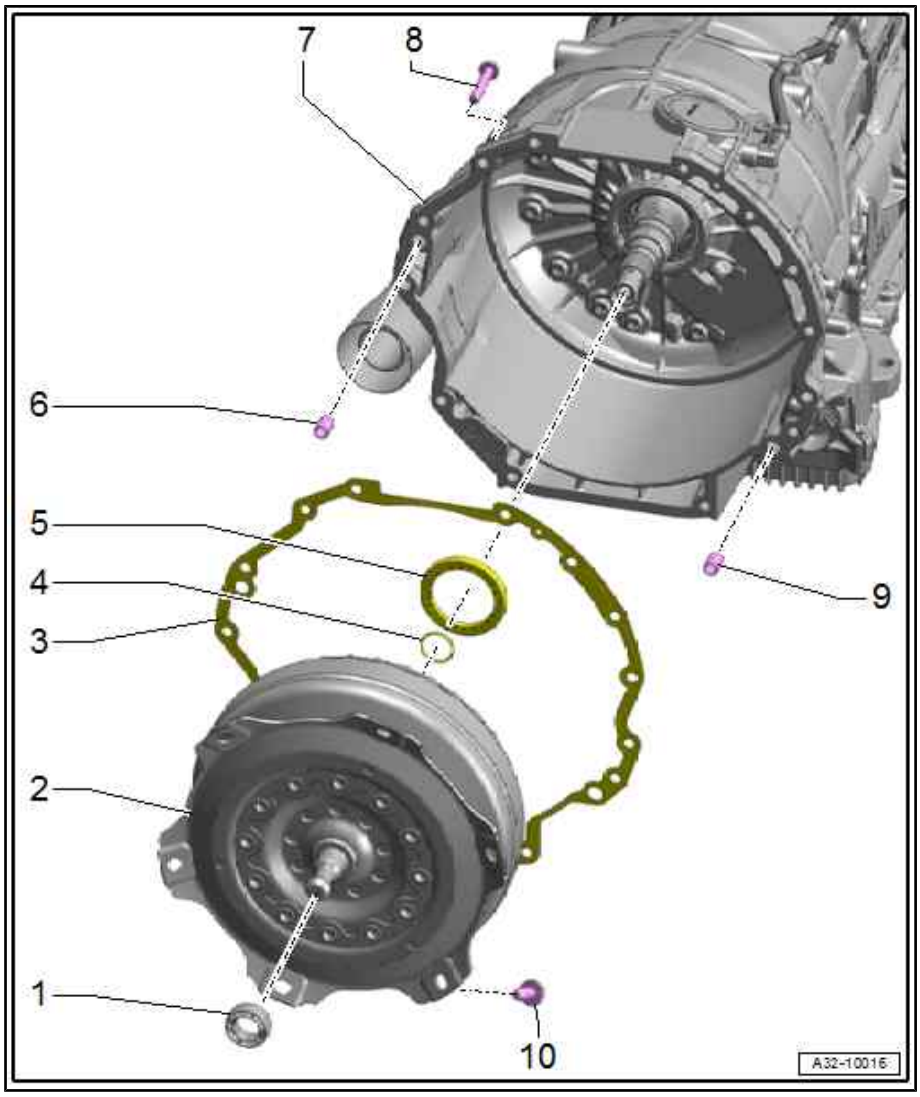


**1 - Centring sleeve**

- ❑ Removing and installing ⇒ Engine; Rep. gr. 93 ; Electric drive motor ; Removing and installing centring sleeve

**2 - Torque converter**

- ❑ Allocation to gearbox ⇒ Electronic parts catalogue
- ❑ Removing and installing ⇒ page 12

**3 - Gasket**

- ❑ Renew after removing

**4 - O-ring**

- ❑ Renew after removing

**5 - Oil seal**

- ❑ For torque converter
- ❑ Renewing ⇒ page 18

**6 - Dowel sleeve**

**7 - Gearbox housing**

**8 - Bolt**

- ❑ Tightening torque and sequence ⇒ 8-speed automatic gearbox; Rep. gr. 37 ; Removing and installing gearbox; Tightening torques for gearbox

**9 - Dowel sleeve**

**10 - Bolt**

- ❑ 6x
- ❑ Renew after removing
- ❑ Tightening procedure ⇒ 8-speed automatic gearbox; Rep. gr. 37 ; Removing and installing gearbox; Installing gearbox
- ❑ 62 Nm

## 1.2 Removing and installing torque converter

⇒ "1.2.1 Removing and installing torque converter", page 12

⇒ "1.2.2 Removing and installing torque converter - e-tron", page 16

### 1.2.1 Removing and installing torque converter

**Special tools and workshop equipment required**

Protected by copyright. Copying for private or commercial purposes, in part or in whole, is not permitted unless authorised by AUDI AG. AUDI AG does not guarantee or accept any liability with respect to the correctness of information in this document. Copyright by AUDI AG.

- Extractor - T40176-

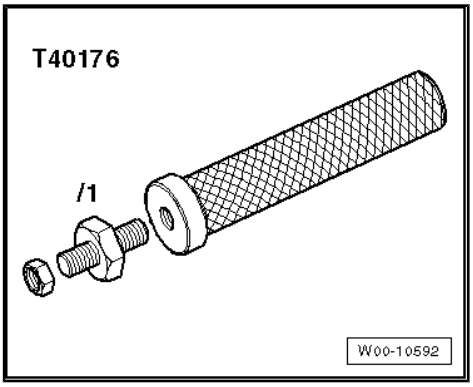


- Depth gauge - VAS 6082-

Protected by copyright. Copying for private or commercial purposes, in part or in whole, is not permitted unless authorised by AUDI AG. AUDI AG does not guarantee or accept any liability with respect to the correctness of information in this document. Copyright by AUDI AG

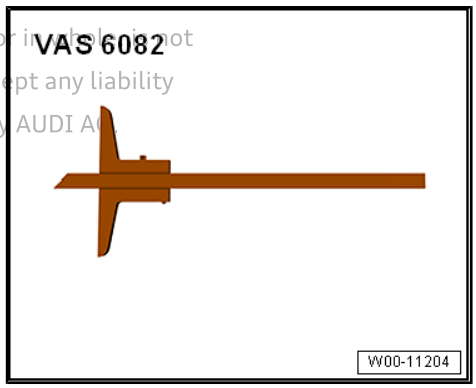


- Grease for clutch plate splines - G 000 100-
- Sealing grease - G 052 128 A1-

**Removing**

- Gearbox removed ⇒ 8-speed automatic gearbox; Rep. gr. 37 ; Removing and installing gearbox; Removing gearbox .

– Remove flange shaft (left-side) ⇒ 8-speed automatic gearbox; Rep. gr. 39 ; Differential; Removing and installing flange shaft (left-side) .

– Attach extractor - T40176- to torque converter -A- using nut -B-.

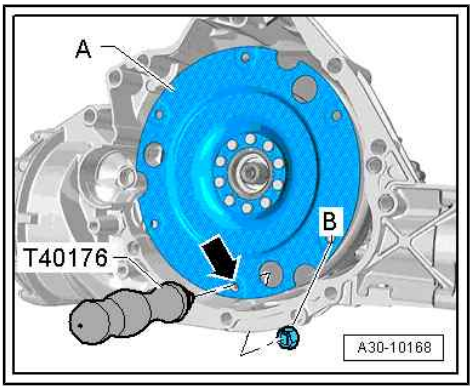

– Turn extractor - T40176- upwards.
– Keep hold of the bottom of the torque converter to prevent it from tilting over.
– Pull torque converter off input shaft -arrow-, keeping torque converter straight and paying attention to vent line.
– Put torque converter down carefully, e.g. on work bench.

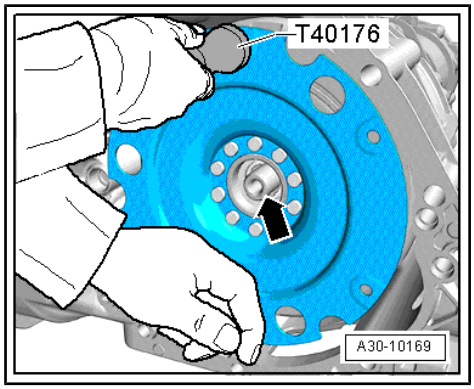


## Installing

Installation is carried out in reverse order; note the following:

– Thoroughly clean area of torque converter bellhousing leading to differential -arrow A-, and oil seal -arrow B-.
• Renew oil seal between differential and gearbox housing -arrow B- if it is damaged ⇒ 8-speed automatic gearbox; Rep. gr. 39 ; Oil seals; Overview of fitting locations - oil seals .

Protected by copyright. Copying for private or commercial pu
permitted unless authorised by AUDI AG. AUDI AG does not g
with respect to the correctness of information in this docume

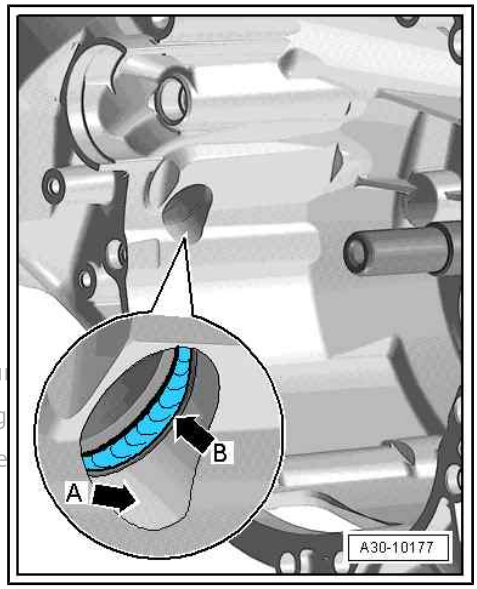


– Pack space between sealing lip and dust lip -arrow- half full with sealing grease - G 052 128 A1- .

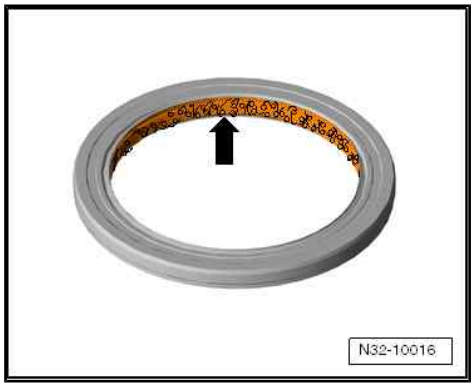

– Renew O-ring -arrow- on input shaft.

Protected by copyright. Copying for private or commercial purposes, permitted unless authorised by AUDI AG. AUDI AG does not guarant with respect to the correctness of information in this document. Co

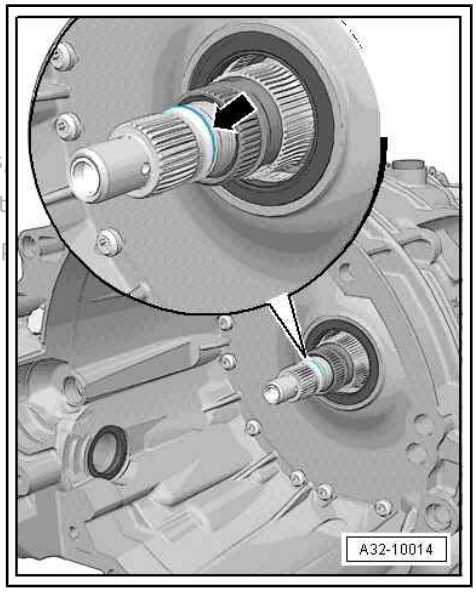


– Check torque converter ⇒ page 18 .
– Check torque converter oil seal for damage and renew if necessary ⇒ page 18 .
– Attach extractor - T40176- to torque converter with nut.
– Use extractor - T40176- to carefully slide torque converter onto input shaft -2- as far as first stop, taking care to keep torque converter straight.
– Turn the torque converter and at the same time press it inwards lightly until the torque converter splines engage in the drive hub for the ATF pump and the torque converter slides in a noticeable distance.

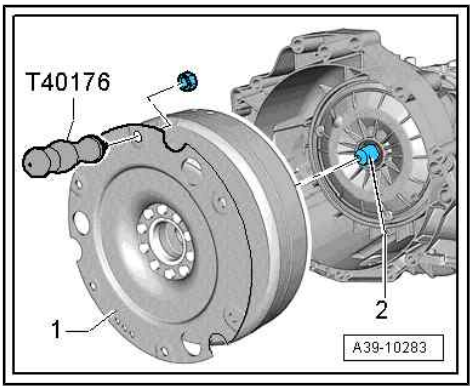


### Checking installation depth of torque converter

If the torque converter has been correctly installed, the distance -a- between the surface of the mounting holes and the contact surface of the torque converter bellhousing should be:

- Dimension -a- = min. 16 mm.

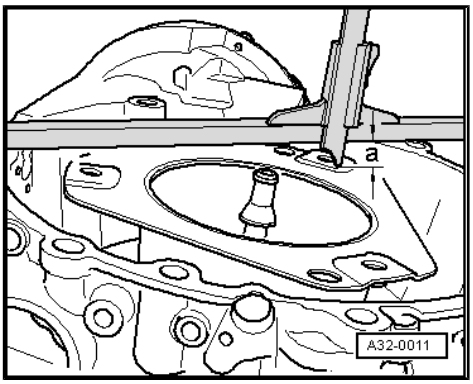


– Detach extractor - T40176- from torque converter -A-.
– Remove nut -B-.
– Install flange shaft (left-side) ⇒ 8-speed automatic gearbox; Rep. gr. 39 ; Differential; Removing and installing flange shaft (left-side) .

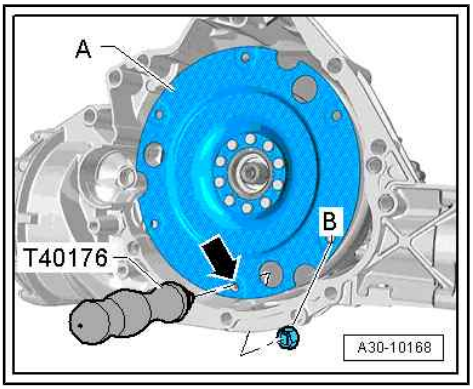

## 1.2.2 Removing and installing torque converter - e-tron

**Special tools and workshop equipment required**

- Extractor - T40176-

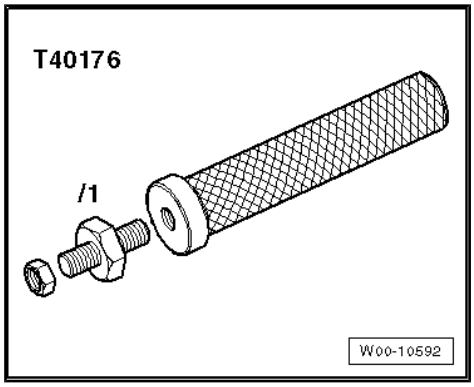


- Depth gauge - VAS 6082-

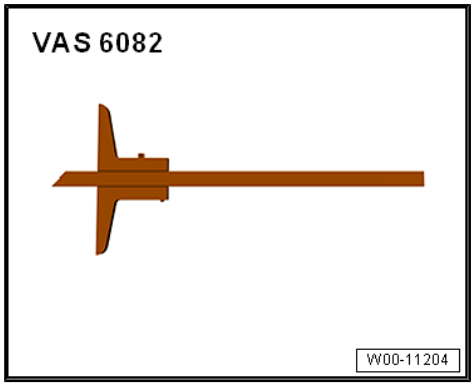


- Grease for clutch plate splines - G 000 100-
- Sealing grease - G 052 128 A1-

**Removing**

- Check that required replacement parts are available before beginning work ⇒ Electronic parts catalogue .⇒
- Gearbox removed ⇒ 8-speed automatic gearbox; Rep. gr. 37 ; Removing and installing gearbox; Removing gearbox .

– Attach extractor - T40176- to torque converter -2- using nut -1-.

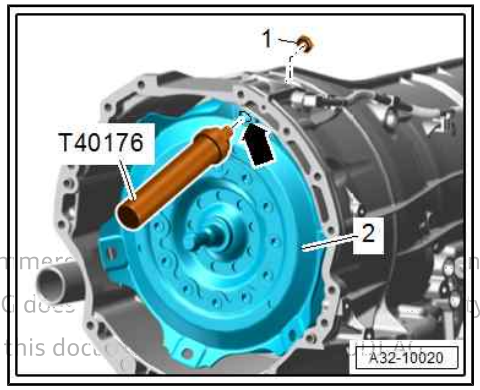


Protected by copyright. Copying for private or commercial purposes, in part or in whole, is not permitted unless authorised by AUDI AG. AUDI AG does not guarantee or assume any liability with respect to the correctness of information in this document. © Copyright by AUDI AG.

**Note:**

Keep hold of the bottom of the torque converter, as shown in the illustration, to prevent it from tilting over.

– Turn extractor - T40176- upwards.

– Pull torque converter off input shaft, keeping torque converter straight and paying attention to vent line.

– Put torque converter down carefully, e.g. on work bench.

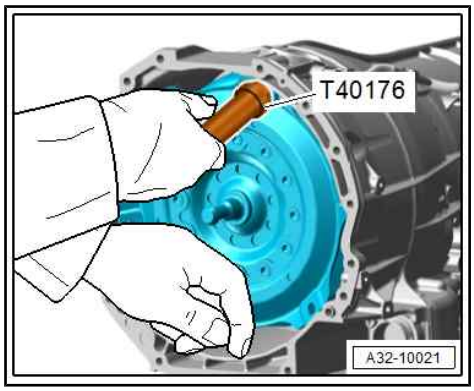

**Installing**

- Renew O-ring -arrow- on input shaft.

– Check torque converter ⇒ page 18 .

– Check torque converter oil seal for damage or leaks. Renew if necessary ⇒ page 18 .

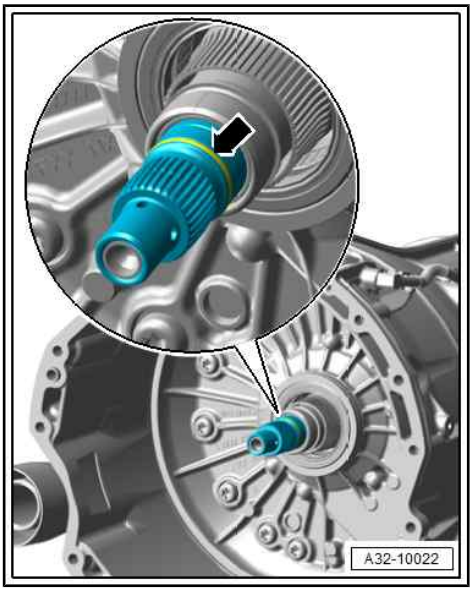


– Apply a thin coating of grease for clutch plate splines - G 000 100- to input shaft -3-.

– Attach extractor - T40176- to torque converter -1- using nut -2-.

– Use extractor - T40176- to carefully slide torque converter onto input shaft as far as first stop, taking care to keep torque converter straight.

– Turn the torque converter and at the same time press it inwards lightly until the torque converter splines engage in the drive hub for the ATF pump and the torque converter slides in a noticeable distance.

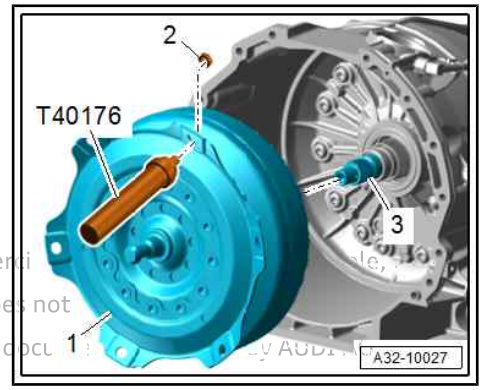


Protected by copyright. Copying for private or commercial use, in whole or in part, is not permitted unless authorised by AUDI AG. AUDI AG does not warrant or accept any liability with respect to the correctness of information in this document. Copyright by AUDI AG

**Checking position of torque converter.**

If the torque converter has been correctly installed, the distance -a- between the surface of the mounting holes and the contact surface of the torque converter bellhousing should be:

- Dimension -a- = min. 30 mm.

If the torque converter has not been fully inserted, the distance will be only approx. 18 mm.

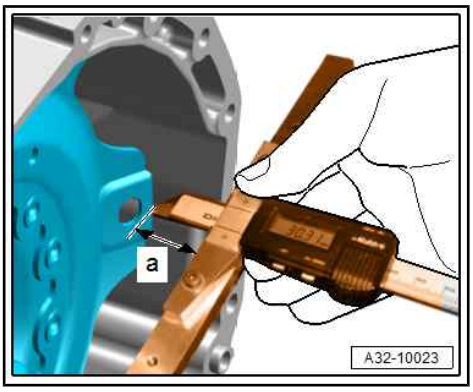


**When you then install the gearbox, note the following in particular.**

- Before and while you are tightening the bolts on the three-phase current drive - VX54- /gearbox flange keep checking that the torque converter can still be rotated behind the drive motor.
- If the torque converter cannot be rotated, you must assume that it is not installed correctly; this means that the drive lugs on the converter or the ATF pump will be damaged irreparably when the bolts are tightened to their final torque.

– Remove extractor - T40176- from torque converter.

## 1.3 Draining torque converter

**Special tools and workshop equipment required**

- Used oil collection and extraction unit - VAS 6622A- with oil extractor probe, flexible - VAS 6622/2-

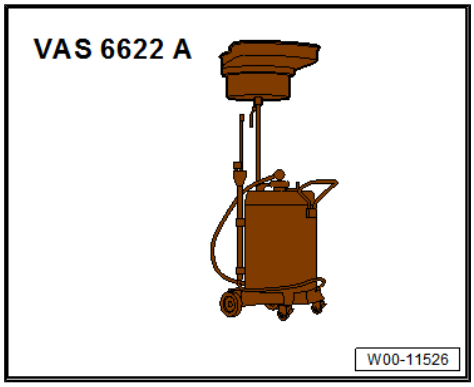


**Procedure**

Drain the torque converter as follows if the ATF is very dirty due to component wear, or when performing a major gearbox overhaul:

– Place torque converter on two blocks of wood as shown.

– Extract ATF from torque converter using used oil collection and extraction unit - VAS 6622A- .

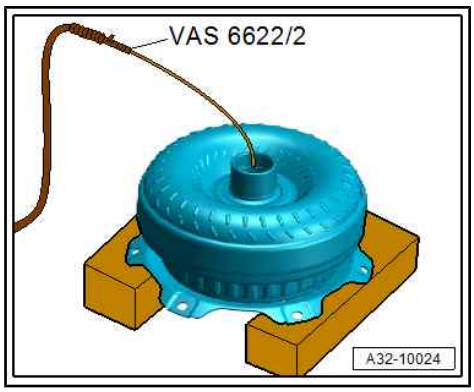


## 1.4 Checking torque converter

– Check torque converter hub -arrow- for scoring.

• The torque converter must be renewed as a complete unit if it is damaged or defective.

Protected by copyright. Copying for private or co not
permitted unless authorised by AUDI AG. AUDI A ty
with respect to the correctness of information in

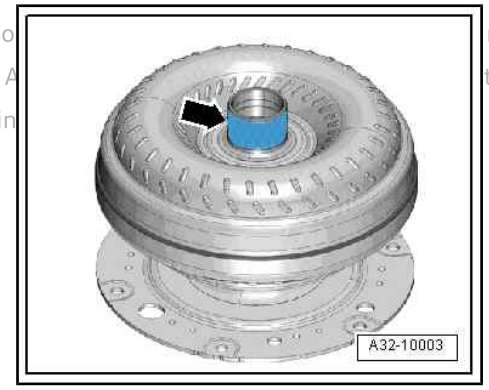


## 1.5 Removing and installing oil seal for torque converter

⇒ “1.5.1 Removing and installing oil seal for torque converter”, page 18

⇒ “1.5.2 Removing and installing oil seal for torque converter - e-tron”, page 19

### 1.5.1 Removing and installing oil seal for torque converter

**Special tools and workshop equipment required**

♦ Extractor hook -T20143/2-

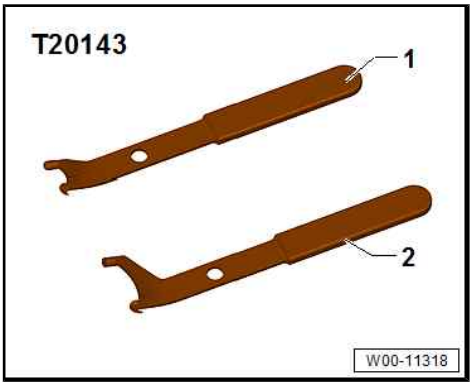


♦ Thrust piece - T40240-

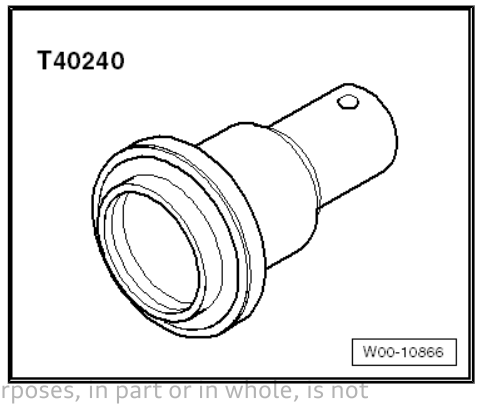


Protected by copyright. Copying for private or commercial purposes, in part or in whole, is not permitted unless authorised by AUDI AG. AUDI AG does not g
with respect to the correctness of information in this docume

**Procedure**

– Remove torque converter ⇒ page 12 .

– Prise out torque converter oil seal with extractor tool - T20143/2- .

– Lightly lubricate outer circumference and sealing lips of oil seal with ATF.

• Installation position: open side of oil seal points towards gearbox

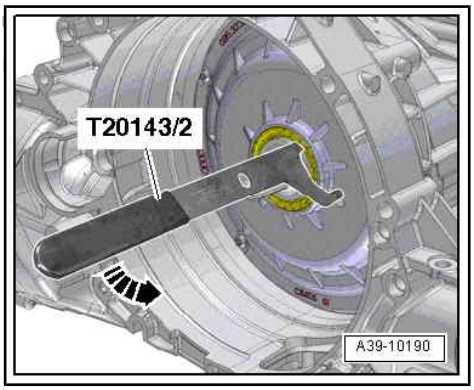


– Drive in torque converter oil seal using thrust piece - T40240- -1- until thrust piece reaches stop.

– Install torque converter ⇒ page 12 .

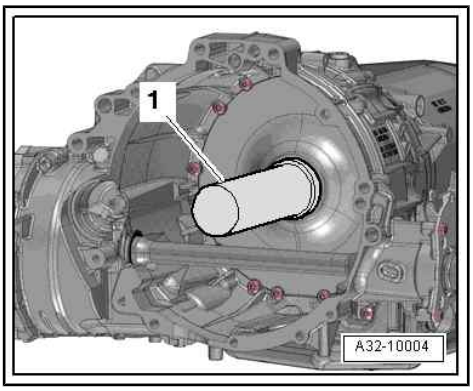


## 1.5.2 Removing and installing oil seal for torque converter - e-tron

**Special tools and workshop equipment required**

♦ Extractor hook -T20143/2-

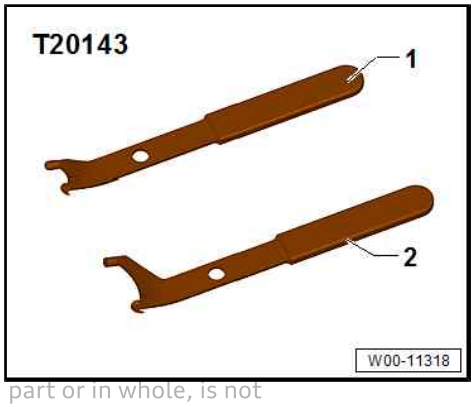


Protected by copyright. Copying for private or commercial purposes, in part or in whole, is not permitted unless authorised by AUDI AG. AUDI AG does not guarantee or accept any liability with respect to the correctness of information in this document. Copyright by AUDI AG.

♦ Thrust piece - T40240-

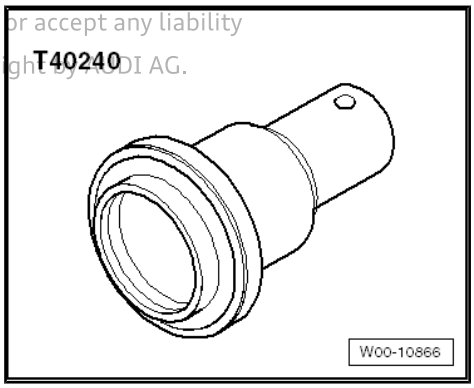


**Procedure**

– Remove torque converter ⇒ page 12 .

– Prise out torque converter oil seal with extractor tool - T20143/2- .

– Lightly lubricate outer circumference and sealing lips of oil seal with ATF.

• Installation position: open side of oil seal points towards gearbox

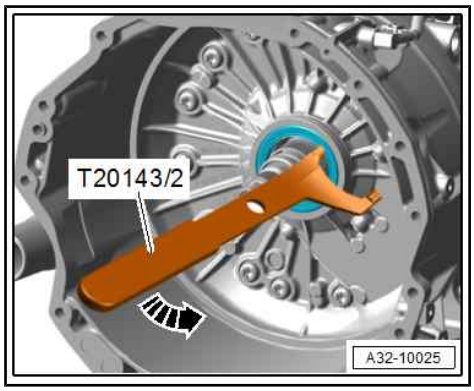


– Drive in torque converter oil seal with thrust piece - T40240- until thrust piece reaches stop.

– Install torque converter ⇒ page 12 .

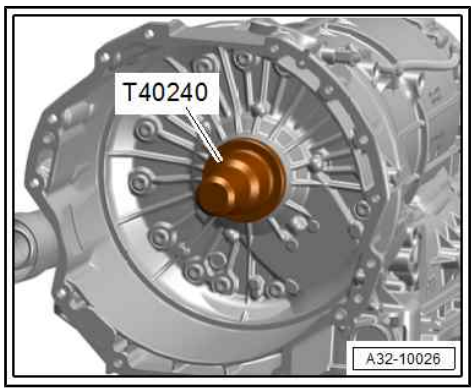

# 37 – Controls, housing

Protected by copyright. Copying for private or commercial purposes, in part or in whole, is not permitted unless authorised by AUDI AG. AUDI AG does not guarantee or accept any liability with respect to the correctness of information in this document. Copyright by AUDI AG.

# 38 – Gears, control

## 1 ATF system

⇒ “1.1 Removing and installing ATF strainer”, page 22

### 1.1 Removing and installing ATF strainer

**Special tools and workshop equipment required**

- Used oil collection and extraction unit - V.A.G 1782-

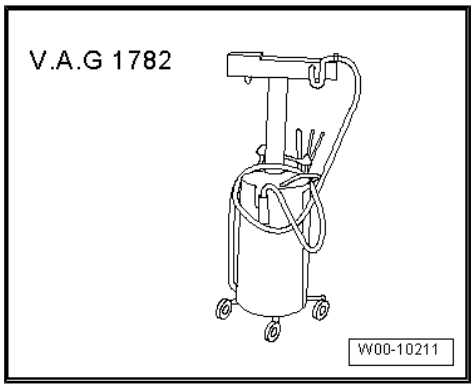


**Removing**

- Note general repair instructions ⇒ 8-speed automatic gearbox; Rep. gr. 00 ; Repair instructions; General repair instructions .
- Note rules for cleanliness ⇒ 8-speed automatic gearbox; Rep. gr. 00 ; Repair instructions; Rules for cleanliness .

– Remove oil pan ⇒ 8-speed automatic gearbox; Rep. gr. 38 ; ATF system; Removing and installing oil pan .

– Place used oil collection and extraction unit - V.A.G 1782- below gearbox.

– Carefully pull ATF filter downwards off mechatronic unit.

**Installing**

Installation is carried out in reverse order; note the following:

– Fit O-ring -2- on ATF filter -1-.

Protected by copyright. Copying for private or commercial purpo
permitted unless authorised by AUDI AG. AUDI AG does not guar
with respect to the correctness of information in this document.

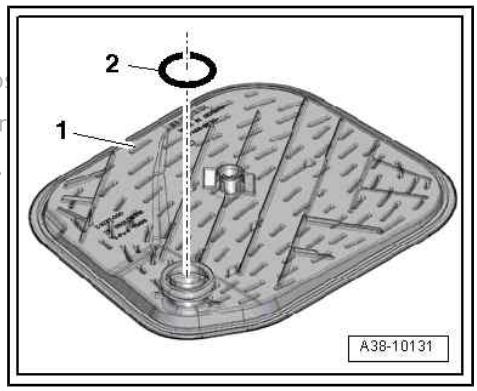

– Clean both magnets -arrows-. Ensure that magnets make full contact with recesses in ATF filter.

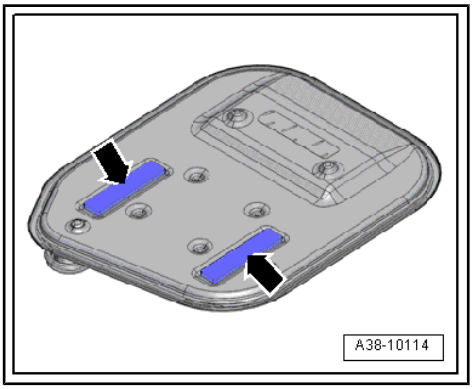


– Fit ATF filter on mechatronic unit.

♦ The intake neck -1- of the ATF filter must be inserted as far as the stop in aperture -2- of the mechatronic unit.

♦ The retainer -4- on the reverse side must engage on the bolt -3- located opposite on the mechatronic unit.

– Install ATF oil pan ⇒ 8-speed automatic gearbox; Rep. gr. 38 ; ATF system; Removing and installing oil pan .

– Fill up ATF ⇒ 8-speed automatic gearbox; Rep. gr. 37 ; ATF; Draining and filling ATF .

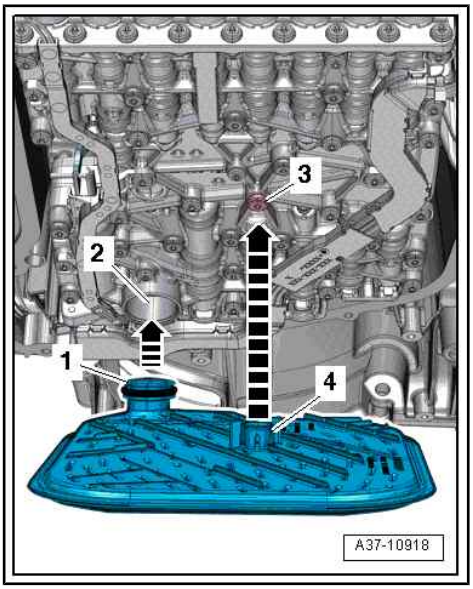


Protected by copyright. Copying for private or commercial purposes, in part or in whole, is not permitted unless authorised by AUDI AG. AUDI AG does not guarantee or accept any liability with respect to the correctness of information in this document. Copyright by AUDI AG.

# 2 Mechatronic unit

⇒ “2.1 Exploded view - mechatronic unit”, page 24

⇒ “2.2 Removing and installing mechatronic unit”, page 32

⇒ “2.3 Removing and installing auxiliary hydraulic pump for gearbox oil”, page 41

⇒ “2.4 Removing and installing hydraulic pulse accumulator with accumulator solenoid N485 ”, page 43

⇒ “2.5 Removing and installing electrical wiring harness for auxiliary hydraulic pump for gearbox oil”, page 44

## 2.1 Exploded view - mechatronic unit

⇒ “2.1.1 Exploded view - mechatronic unit, 0BK, 0BL, 0BW”, page 24

⇒ “2.1.2 Exploded view - mechatronic unit, 0D5, 0D6”, page 26

⇒ “2.1.3 Exploded view - mechatronic unit, 0D7, 0DY”, page 29

⇒ “2.1.4 Tightening torques - mechatronic unit”, page 30

### 2.1.1 Exploded view - mechatronic unit, 0BK, 0BL, 0BW

Coat O-rings and seals with ATF. Other types of lubricant will cause the gearbox hydraulics to malfunction.

Protected by copyright. Copying for private or commercial purposes, in part or in whole, is not permitted unless authorised by AUDI AG. AUDI AG does not guarantee or accept any liability with respect to the correctness of information in this document. Copyright by AUDI AG.

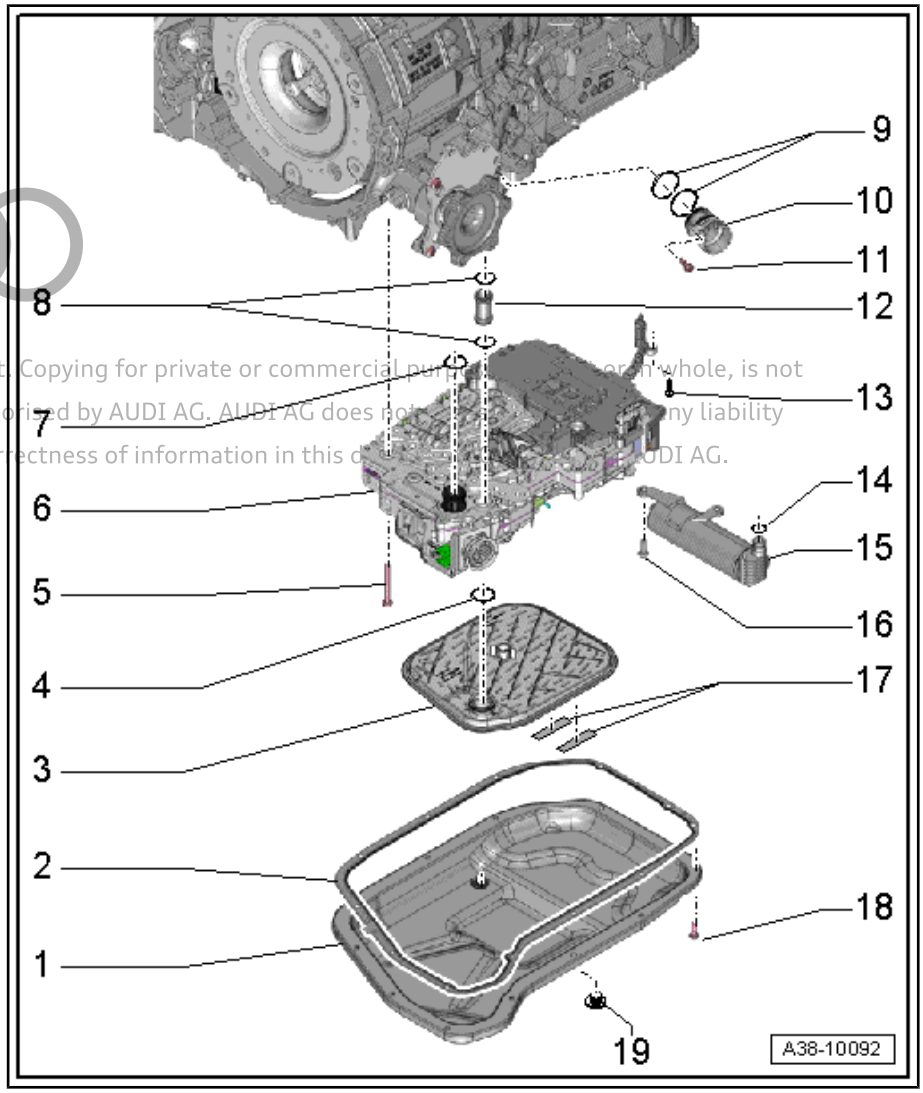


**1 - ATF oil pan**

- ❑ Removing and installing ⇒ 8-speed automatic gearbox; Rep. gr. 38 ; ATF system; Removing and installing oil pan

**2 - Gasket**

- ❑ Renew

**3 - ATF filter**

- ❑ Removing and installing ⇒ page 22

Protected by copyright. Copying for private or commercial purposes, in whole or in part, is not permitted unless authorized by AUDI AG. AUDI AG does not guarantee or assume any liability with respect to the correctness of information in this document. Copyright by AUDI AG.

**4 - O-ring**

- ❑ Renew

**5 - Bolt**

- ❑ Tightening torque and sequence for mechatronic unit ⇒ “2.1.4 Tightening torques - mechatronic unit”, page 30

**6 - Mechatronic unit**

- ❑ Removing and installing ⇒ page 32

**7 - O-ring**

- ❑ Renew

**8 - O-rings**

- ❑ Renew together with ATF pipe ⇒ Item 12 (page 25)

**9 - Seals**

- ❑ Renew together with connector housing ⇒ Item 10 (page 25)

**10 - Connector housing**

- ❑ Renew

**11 - Bolt**

- ❑ 5.5 Nm

**12 - ATF pipe**

- ❑ Renew

**13 - Bolt**

- ❑ 5 Nm

**14 - O-ring**

- ❑ Renew
- ❑ Not fitted on all versions
- ❑ For connection on hydraulic pulse accumulator

**15 - Hydraulic pulse accumulator/gearbox auxiliary hydraulic pump**

- ❑ Different versions
- ❑ Removing and installing hydraulic pulse accumulator ⇒ page 43
- ❑ Removing and installing auxiliary hydraulic pump ⇒ page 41

**16 - Bolt**

- ❑ 8 Nm

**17 - Magnets**

- ❑ Ensure full contact with ATF filter
- ❑ Clean before installing

**18 - Bolt**

- ❑ Renew
- ❑ Tightening torque and sequence ⇒ page 26

**19 - Drain plug**

- ❑ For ATF in gearbox
- ❑ Tightening torque ⇒ 8-speed automatic gearbox; Rep. gr. 39 ; Gear oil; Overview of fitting locations - drain and inspection plugs

**ATF oil pan - tightening torque and sequence**

– Tighten bolts in 3 stages in the sequence shown:

| Stage | Bolts | Tightening torque/angle specification |
|---|---|---|
| 1. | -1 … 12- | Screw in new bolts by hand until bolt heads make contact |
| 2. | -1 … 12- | 4 Nm |
| 3. | -1 … 12- | Turn 45° further |

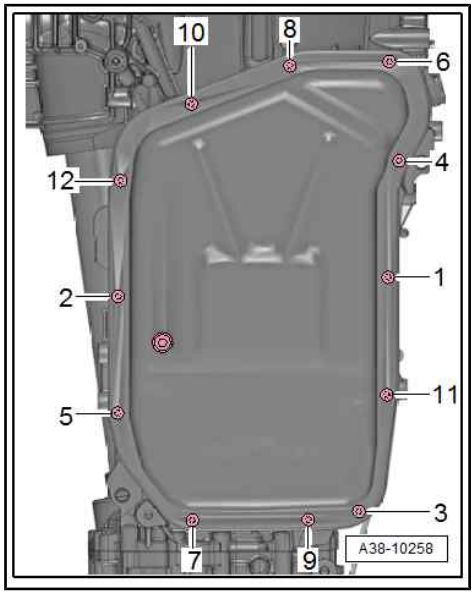


## 2.1.2 Exploded view - mechatronic unit, 0D5, 0D6

Coat O-rings and seals with ATF. Other types of lubricant will cause the gearbox hydraulics to malfunction.

Protected by copyright. Copying for private or commercial purposes, in part or in whole, is not permitted unless authorised by AUDI AG. AUDI AG does not guarantee or accept any liability with respect to the correctness of information in this document. Copyright by AUDI AG.

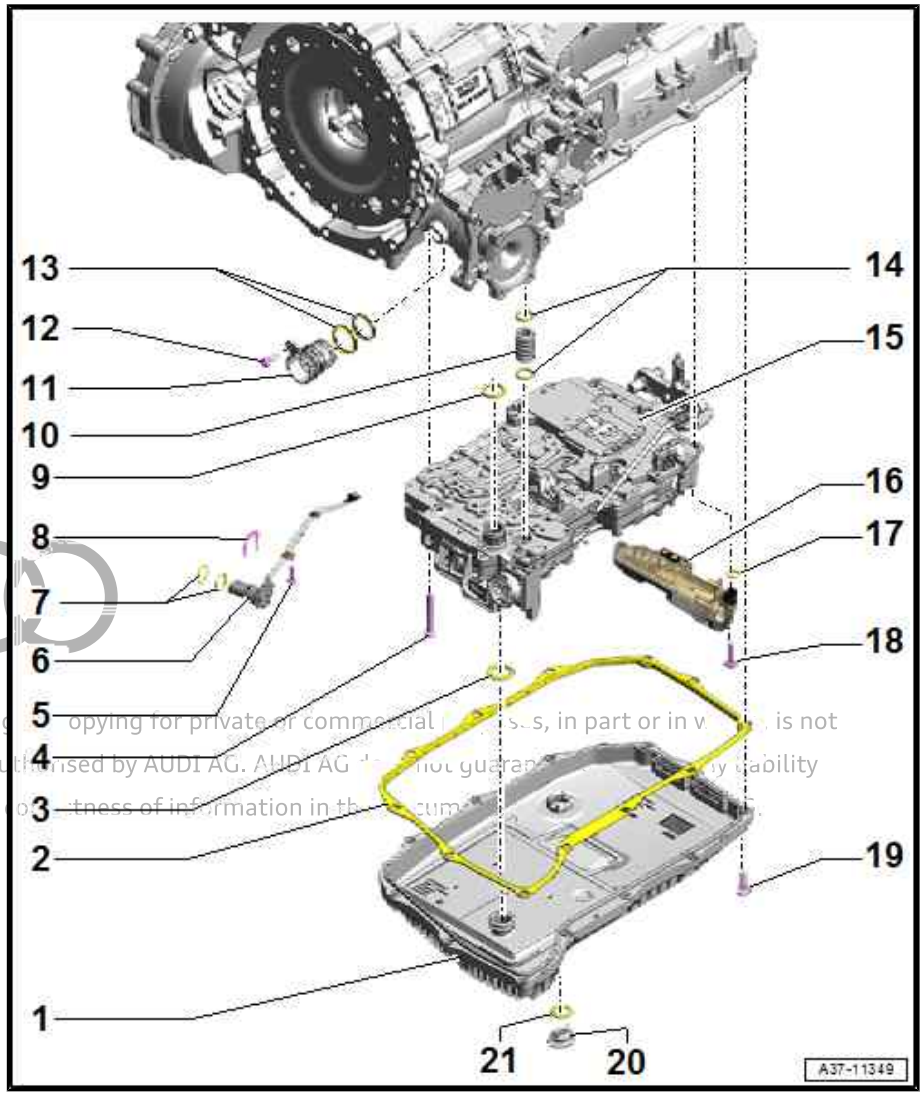


**1 - ATF oil pan**

- ❑ With integrated ATF filter
- ❑ Removing and installing ⇒ 8-speed automatic gearbox; Rep. gr. 38 ; ATF system; Removing and installing oil pan

**2 - Gasket**

- ❑ Renew after removing

**3 - O-ring**

- ❑ Renew after removing

**4 - Bolt**

- ❑ Renew after removing
- ❑ Tightening torque and sequence ⇒ "2.1.4 Tightening torques - mechatronic unit", page 30

**5 - Bolt**

- ❑ 10 Nm

Protected by copyright. Copying for private or commercial purposes, in part or in whole, is not permitted unless authorised by AUDI AG. AUDI AG does not guarantee or assume any liability with respect to the correctness of information in this document.

**6 - Electrical wiring harness**

- ❑ Depending on version
- ❑ For auxiliary hydraulic pump 1 for gearbox oil - V475-
- ❑ Removing and installing ⇒ page 44

**7 - O-rings**

- ❑ Renew after removing

**8 - Securing clip**

**9 - O-ring**

- ❑ Renew after removing

**10 - ATF pipe**

- ❑ Renew after removing

**11 - Connector housing**

- ❑ Renew after removing

**12 - Bolt**

- ❑ 5.5 Nm

**13 - Seals**

- ❑ Renew together with connector housing

**14 - O-rings**

- ❑ Renew together with ATF pipe

**15 - Mechatronic unit**

- ❑ Removing and installing ⇒ page 37

**16 - Hydraulic pulse accumulator or auxiliary hydraulic pump**

- ❑ Different versions
- ❑ Removing and installing hydraulic pulse accumulator ⇒ page 43
- ❑ Removing and installing auxiliary hydraulic pump ⇒ page 41

**17 - O-ring**

- ❑ For connection for auxiliary hydraulic pump 1 for gearbox oil - V475-
- ❑ Renew after removing

**18 - Bolt**

- ❑ 3x
- ❑ Renew after removing
- ❑ Hydraulic pulse accumulator 8 Nm
- ❑ Auxiliary hydraulic pump 4 Nm +45°

**19 - Bolt**

- ❑ Renew after removing
- ❑ Tightening torque and sequence ⇒ page 28

**20 - ATF drain plug**

- ❑ Tighten as far as stop

**21 - O-ring**

- ❑ Renew after removing

Protected by copyright. Copying for private or commercial purposes, in part or in whole, is not permitted unless authorised by AUDI AG. AUDI AG does not guarantee or accept any liability with respect to the correctness of information in this document.

**ATF oil pan - tightening torque and sequence (12 bolts)**

– Tighten bolts in stages in the sequence shown:

| Stage | Bolts | Tightening torque/angle specification |
|---|---|---|
| 1. | -1 … 12- | Screw in new bolts by hand until bolt heads make contact |
| 2. | -1 … 12- | 4 Nm |
| 3. | -1 … 12- | Turn 45° further |

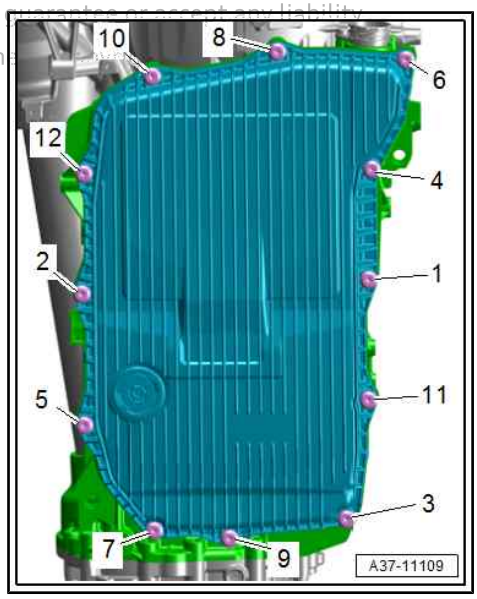


**ATF oil pan - tightening torque and sequence (13 bolts)**

– Tighten bolts in 2 stages in the sequence shown:

| Stage | Bolts | Tightening torque/angle specification |
|---|---|---|
| 1. | -1 … 13- | Screw in new bolts by hand until bolt heads make contact |
| 2. | -1 … 13- | 10 Nm |

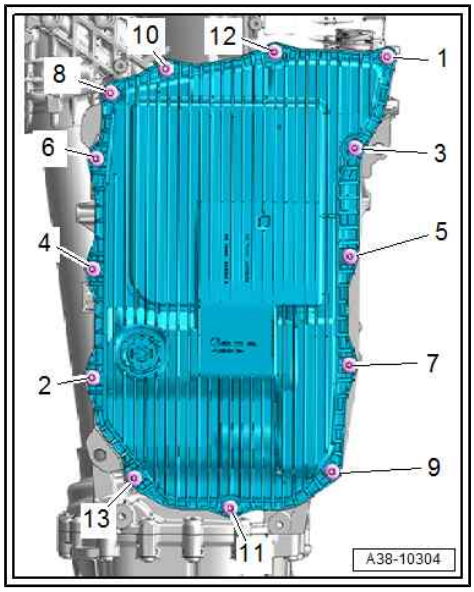

## 2.1.3 Exploded view - mechatronic unit, 0D7, 0DY

Coat O-rings and seals with ATF. Other types of lubricant will cause the gearbox hydraulics to malfunction.

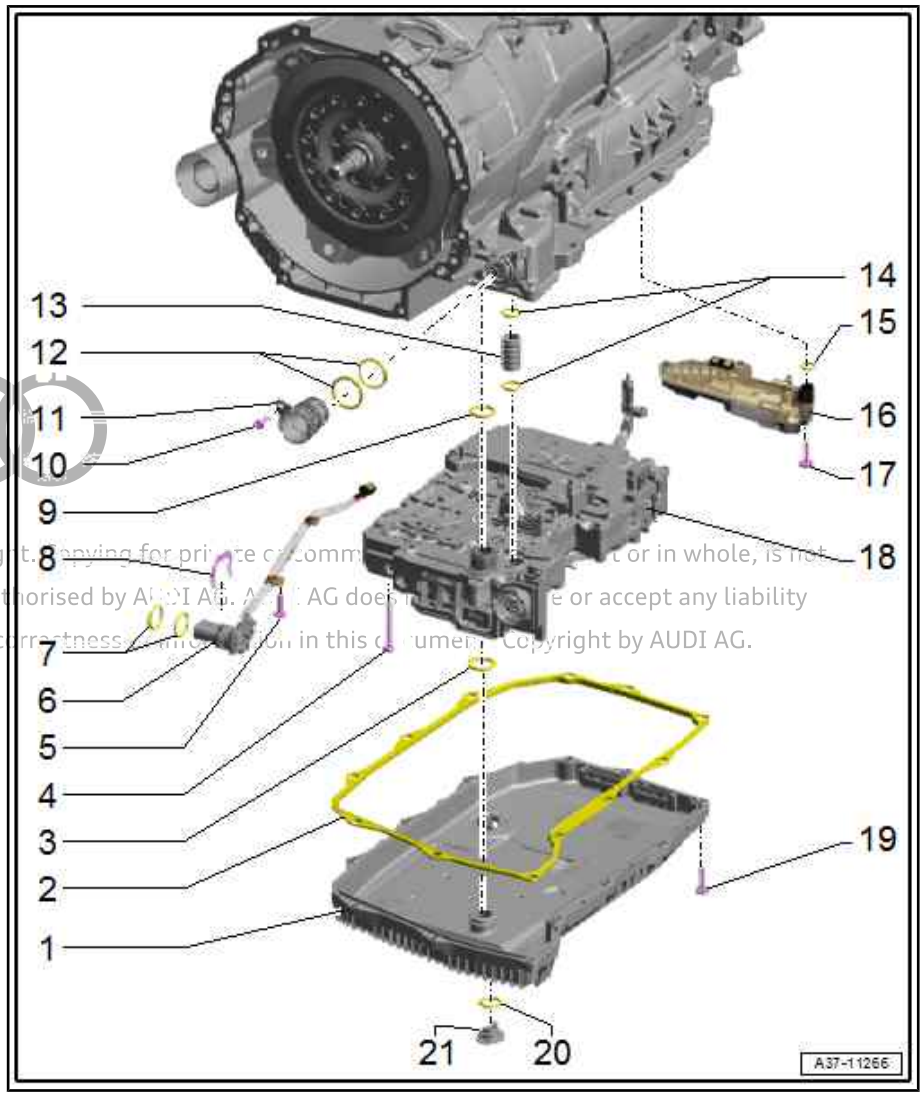


**1 - Oil pan**

- ❑ With integrated ATF filter
- ❑ Removing and installing ⇒ 8-speed automatic gearbox; Rep. gr. 38 ; ATF system; Removing and installing oil pan

**2 - Gasket**

- ❑ Renew after removing

**3 - O-ring**

- ❑ Renew after removing

**4 - Bolt**

- ❑ Renew after removing
- ❑ Tightening torque and sequence ⇒ "2.1.4 Tightening torques - mechatronic unit", page 30

Protected by copyright. Copying for private or commercial purposes, in part or in whole, is not permitted unless authorised by AUDI AG. AUDI AG does not make any representation or accept any liability with respect to the correctness of information in this document. Copyright by AUDI AG.

**5 - Bolt**

- ❑ 10 Nm

**6 - Electrical wiring harness**

- ❑ For auxiliary hydraulic pump 1 for gearbox oil - V475-
- ❑ Removing and installing ⇒ page 44

**7 - O-rings**

- ❑ Renew after removing

**8 - Securing clip**

**9 - O-ring**

- ❑ Renew after removing

**10 - Bolt**

- ❑ 5.5 Nm

**11 - Connector housing**

- ❑ Renew after removing

**12 - O-rings**

- ❑ Renew after removing

**13 - ATF pipe**

- ❑ Renew after removing

**14 - Seals**

- ❑ Renew together with ATF pipe ⇒ Item 13 (page 29)

**15 - O-ring**

- ❑ Renew after removing

**16 - Auxiliary hydraulic pump 1 for gearbox oil - V475-**

- ❑ Removing and installing ⇒ page 41

**17 - Bolt**

- ❑ 3x, M6x28
- ❑ Renew after removing
- ❑ 8 Nm

**18 - Mechatronic unit**

- ❑ Removing and installing ⇒ page 32

**19 - Bolt**

- ❑ Tightening torque and sequence ⇒ page 30

Protected by copyright. Copying for private or commercial purposes, in part or in whole, is not permitted without the prior written consent of AUDI AG. AUDI AG does not guarantee or accept any liability with respect to the correctness of information in this document. Copyright by AUDI AG.

**20 - O-ring**

- ❑ Renew after removing

**21 - ATF drain plug**

- ❑ Tighten as far as stop

**Oil pan - tightening torque and sequence**

– Tighten bolts in stages in the sequence shown:

| Stage | Bolts | Tightening torque/angle specification |
|---|---|---|
| 1. | -1 … 12- | Screw in bolts by hand until bolt heads make contact |
| 2. | -1 … 12- | 4 Nm |
| 3. | -1 … 12- | 10 Nm |

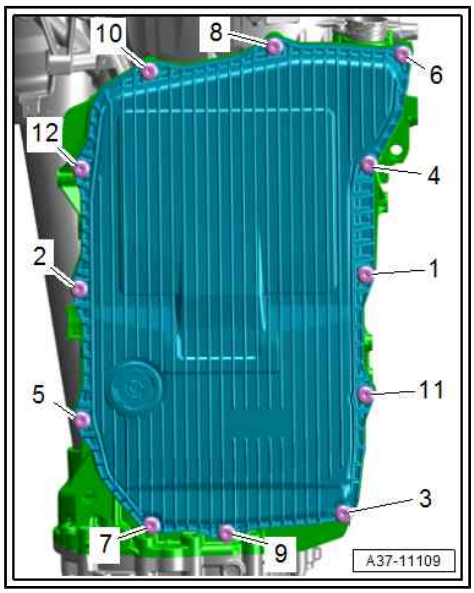


## 2.1.4 Tightening torques - mechatronic unit

⇒ Fig. ""Mechatronic unit with hydraulic pulse accumulator"" , page 31

⇒ Fig. ""Mechatronic unit without hydraulic pulse accumulator/ without auxiliary hydraulic pump"" , page 31

⇒ Fig. ""Mechatronic unit with auxiliary hydraulic pump"" , page 32

**Mechatronic unit with hydraulic pulse accumulator**

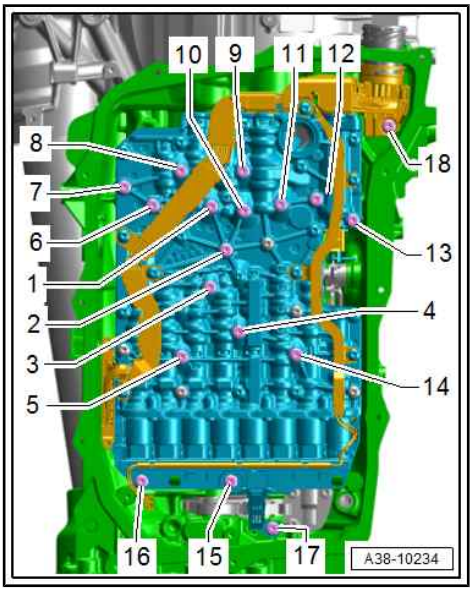


| Tightening sequence | Tightening torque | Bolt |
|---|---|---|
| -1-14- | 8 Nm | M6x59 |
| -15-16- | 8 Nm | M6x20 |
| -17- | 5 Nm | M6x20 |
| -18- | 8 Nm | M6x20 |

**Mechatronic unit without hydraulic pulse accumulator/without auxiliary hydraulic pump**

| Tightening sequence | Tightening torque | Bolt |
|---|---|---|
| -1-14- | 8 Nm | M6x59 |
| -15-17- | 8 Nm | M6x20 |
| -18- | 5 Nm | M6x20 |
| -19- | 8 Nm | M6x20 |

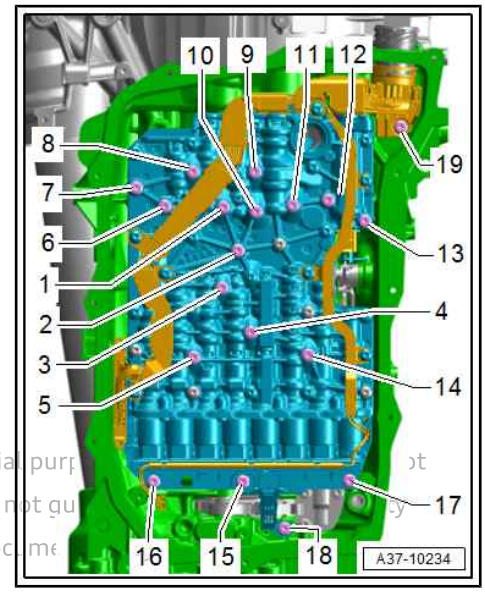


Protected by copyright. Copying for private or commercial purp ot
permitted unless authorised by AUDI AG. AUDI AG does not gu y
with respect to the correctness of information in this docume

**Mechatronic unit with auxiliary hydraulic pump**

| Tightening sequence | Tightening torque | Bolt |
|---|---|---|
| -1-14- | 8 Nm | M6x59 |
| -15-17- | 8 Nm | M6x20 |
| -18- | 5 Nm | M6x20 |
| -19- | 8 Nm | M6x20 |

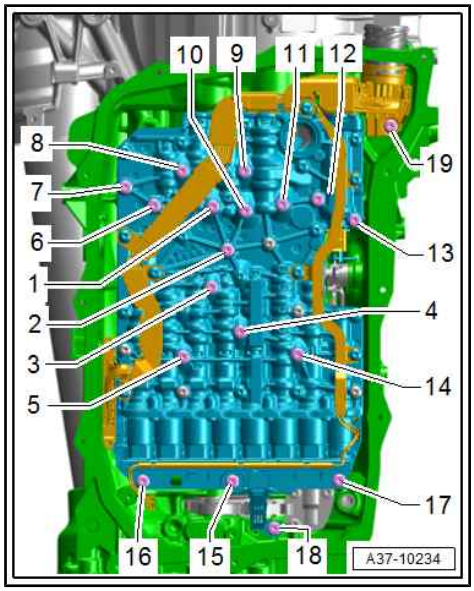


## 2.2 Removing and installing mechatronic unit

⇒ "2.2.1 Removing and installing mechatronic unit - gearbox generation 1", page 32

⇒ "2.2.2 Removing and installing mechatronic unit - gearbox generation 2", page 37

### 2.2.1 Removing and installing mechatronic unit - gearbox generation 1

- Note general repair instructions ⇒ 8-speed automatic gearbox; Rep. gr. 00 ; Repair instructions; General repair instructions .
- Note rules for cleanliness ⇒ 8-speed automatic gearbox; Rep. gr. 00 ; Repair instructions; Rules for cleanliness .

**Special tools and workshop equipment required**

- Extractor tool - T10271-

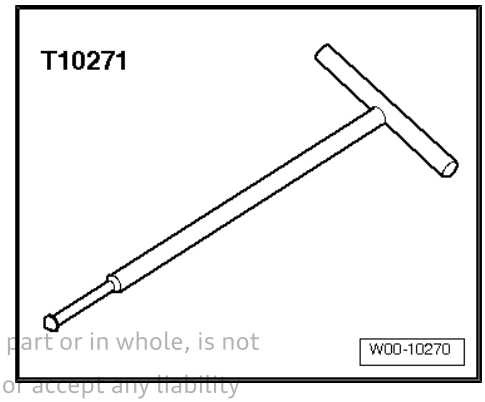


Protected by copyright. Copying for private or commercial purposes, in part or in whole, is not permitted unless authorised by AUDI AG. AUDI AG does not guarantee or accept any liability with respect to the correctness of information in this document. Copyright by AUDI AG.

♦ Guide pin - T40199-

Protected by copyright. Copying for private or commercial purposes, in part or in whole, is not permitted unless authorised by AUDI AG. AUDI AG does not guarantee or accept any liability with respect to the correctness of information in this document. Copyright by AUDI AG.

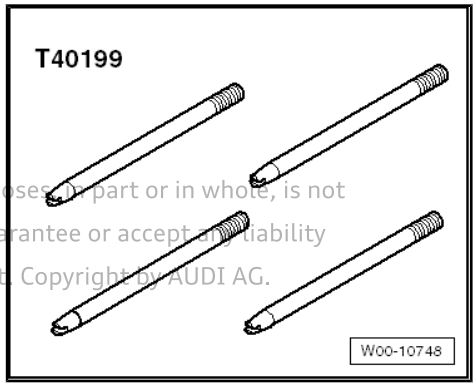


**Removing**

- Gearbox in vehicle

– Shift gearbox into “P”.

– Switch off ignition.

– Remove oil pan ⇒ 8-speed automatic gearbox; Rep. gr. 38 ; ATF system; Removing and installing oil pan .

– Remove ATF filter ⇒ page 22 .

**NOTICE**

**Risk of irreparable damage due to electrostatic discharge.**

**– Do not touch connector contacts with your hands.**

**– Touch the lifting platform or other earthed object to discharge static electricity.**

– Turn fastener anti-clockwise -arrow- and unplug electrical connector at gearbox.

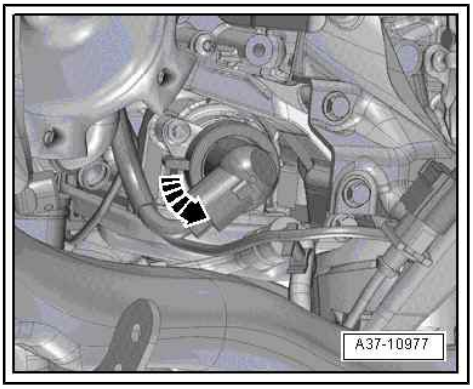


– Remove bolt -1-.

– Turn connector housing -2- anti-clockwise -arrow- and detach.

– If fitted, remove auxiliary hydraulic pump ⇒ page 41 .

– If fitted, remove hydraulic pulse accumulator ⇒ page 43 .

**Audi A8 (shift-by-wire)**

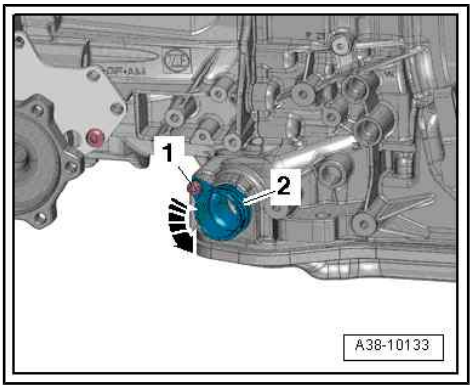

– Move gearbox selector lever -3- for parking lock manual release mechanism to vertical position and secure it with a cable tie -arrow-.

• The selector slide -1- can then be engaged more easily in the jaw -2- of the manual release mechanism.

**All vehicles (continued)**

Protected by copyright. Copying for private or commerci
permitted unless authorised by AUDI AG. AUDI AG does
with respect to the correctness of information in this do

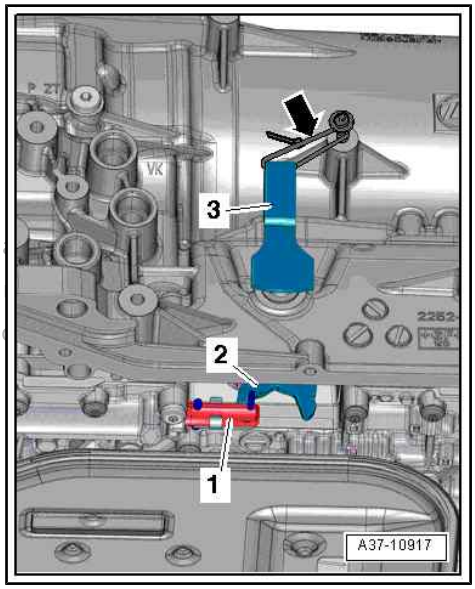


**NOTICE**

**Risk of damage to mechatronic unit.**

– **Only loosen the bolts which have a Torx T40 head.**

– **If other bolts are loosened, this may affect the operation of the mechatronic unit or the mechatronic unit could come apart.**

– Remove bolts in the sequence -19 ... 2-.

– Screw four guide pins - T40199- hand-tight into bolt holes -5, 7, 12, 14-.

– Remove bolt -1-.

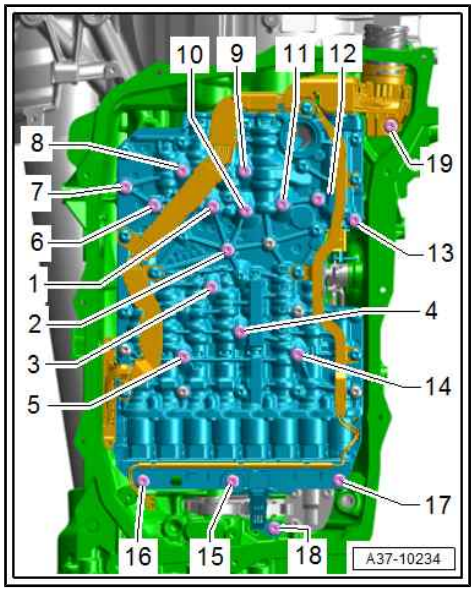


– Before detaching mechatronic unit, pull gearbox output speed sender - G195- -4- out of gearbox housing.

– Detach mechatronic unit.

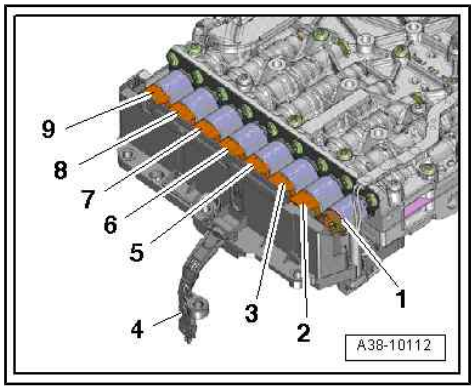

– When setting down the mechatronic unit, the side with the bolt heads must be facing downwards.

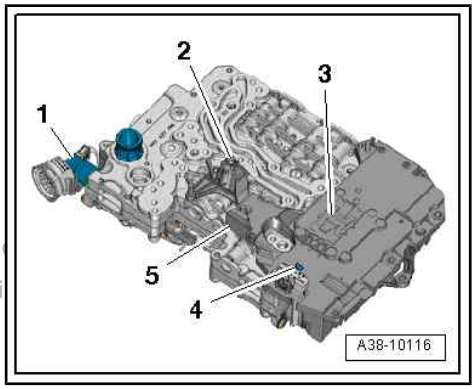


**Installing**

- Always renew mechatronic unit if contaminated or defective.
- When installing, use all components provided in repair set.

Protected by copyright. Copying for private or commercial purposes, in
permitted unless authorised by AUDI AG. AUDI AG does not guarantee
with respect to the correctness of information in this document. Copyri

– Fit new O-rings -1- and -3- in grooves on ATF pipes.

– Fit ATF pipe -2- in mechatronic unit.

– Check ATF pipes for damage and make sure they are firmly seated in mechatronic unit.

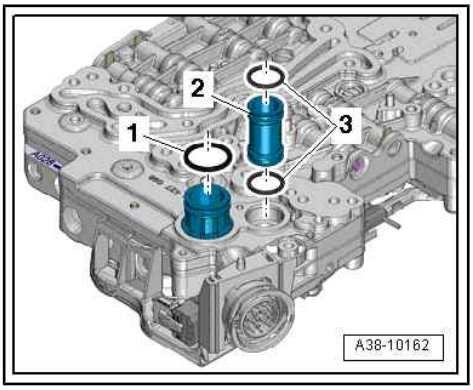


– Pull out sealing sleeve using puller - T10271- and fit new sealing sleeve.

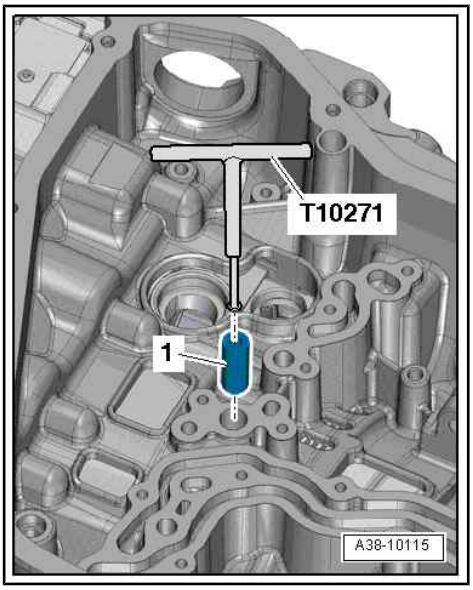


– If not already in place, screw in 4 guide pins - T40199- hand-tight, as shown in illustration.

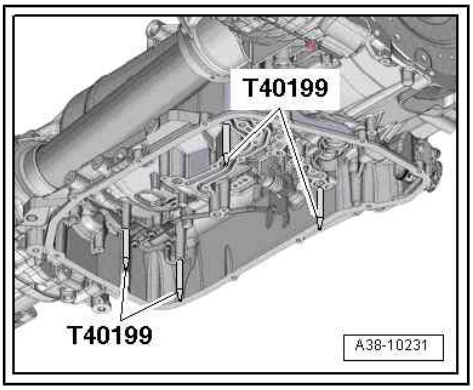


**Note**

- Because of the spring clip on its reverse side, the mechatronic unit cannot initially be brought into full contact with the gearbox housing.
- For this reason, it is advisable to have the assistance of a second mechanic when installing the mechatronic unit with the gearbox in the vehicle.

**Audi A8 (shift-by-wire)**

– Fit mechatronic unit onto gearbox housing.

• The jaw -2- of the manual release mechanism must engage behind the pin in the selector slide -1- -arrow-.

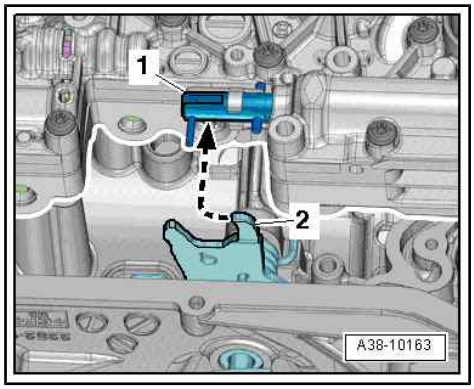


**Audi models without shift-by-wire**

– Fit mechatronic unit carefully onto gearbox housing.

• Gearbox selector lever -A- must engage in actuator -C- for multifunction switch - F125- -arrow 1-; if necessary move actuator -C- accordingly.

• Gearbox selector lever -A- must engage in selector slide -B- -arrow 2-; if necessary move selector slide -B- accordingly.

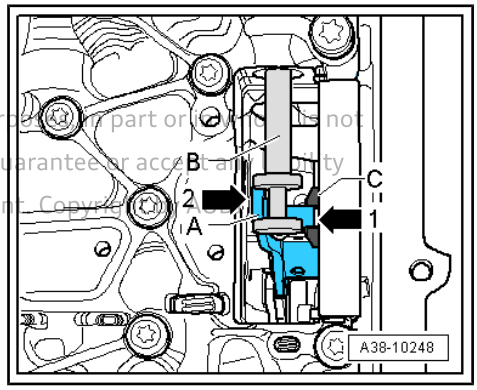


**All vehicles (continued)**

– Screw in bolts -1 ... 4- by hand until bolt heads make contact.

– Remove the 4 guide pins - T40199- .

– Tighten bolts for mechatronic unit in specified sequence ⇒ page 24 .

– If previously fitted, install auxiliary hydraulic pump ⇒ page 41 .

– If previously fitted, install hydraulic pulse accumulator ⇒ page 43 .

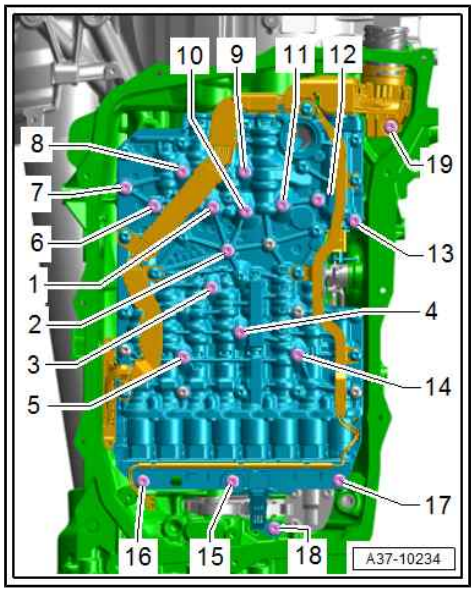


Copyright. Copying for private or commercial purposes, in part or in whole, is not permitted unless authorised by AUDI AG. AUDI AG does not guarantee or accept any liability with respect to the correctness of information in this document. Copyright

Installation is carried out in the reverse order; note the following:

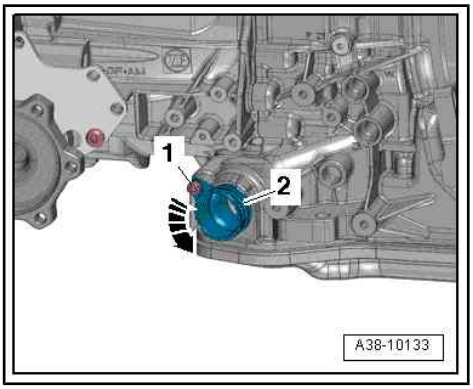


**NOTICE**

**Risk of irreparable damage due to electrostatic discharge.**

- **Do not touch connector contacts with your hands.**
- **Touch the lifting platform or other earthed object to discharge static electricity.**

- Fit new connector housing -2- with lug pointing downwards and insert by turning clockwise (in opposite direction to arrow).
- Make sure that electrical connector is properly engaged and secured.
- Tighten bolt -1-.

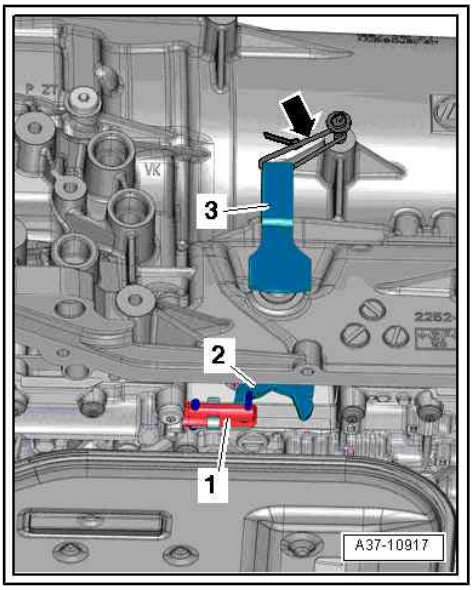


- Remove cable tie -arrow-.
- Install ATF filter ⇒ page 22 .
- Install oil pan ⇒ 8-speed automatic gearbox; Rep. gr. 38 ; ATF system; Removing and installing oil pan .
- Fill up ATF ⇒ 8-speed automatic gearbox; Rep. gr. 37 ; ATF; Draining and filling ATF .

**Tightening torques**

♦ ⇒ page 24

## 2.2.2 Removing and installing mechatronic unit - gearbox generation 2

- Note general repair instructions ⇒ 8-speed automatic gearbox; Rep. gr. 00 ; Repair instructions; General repair instructions .
- Note rules for cleanliness ⇒ 8-speed automatic gearbox; Rep. gr. 00 ; Repair instructions; Rules for cleanliness .

**Special tools and workshop equipment required**

♦ Guide pin - T40199-

Protected by copyright. Copying for private or commercial purposes, in part or in whole, is not permitted unless authorised by AUDI AG. AUDI AG does not guarantee or accept any liability with respect to the correctness of information in this document. Copyright by AUDI AG.

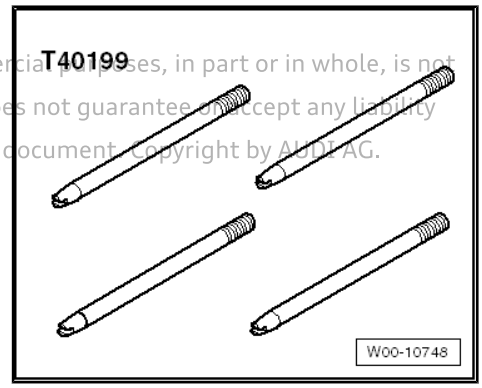

## Removing

- Gearbox in vehicle

– Shift gearbox into “P”.

– Switch off ignition.

– Remove ATF oil pan ⇒ 8-speed automatic gearbox; Rep. gr. 38 ; ATF system; Removing and installing oil pan .

– If fitted, remove auxiliary hydraulic pump ⇒ page 41 .

– If fitted, remove hydraulic pulse accumulator ⇒ page 43 .

**NOTICE**

**Risk of irreparable damage due to electrostatic discharge.**

**– Do not touch connector contacts with your hands.**

**– Touch the lifting platform or other earthed object to discharge static electricity.**

– Turn fastener anti-clockwise -arrow- and unplug electrical connector at gearbox.

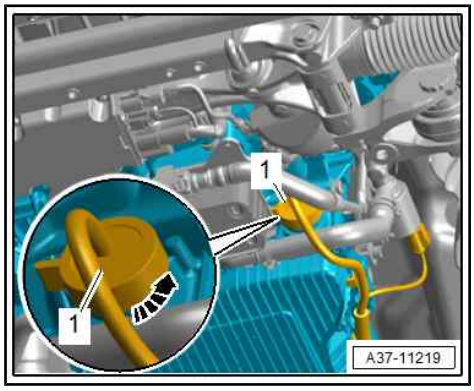


– Remove bolt -1-.

– Turn connector housing -2- anti-clockwise -arrow- and detach.

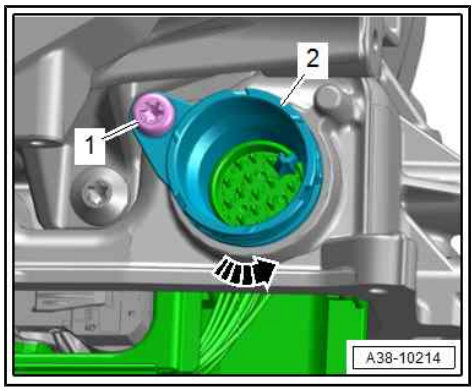


– For better access, move the parking lock lever -3- to a vertical position and secure it with a cable tie in this position -arrow-. The spool valve -1- can then be engaged more easily in the jaw -2- of the manual release mechanism.

Protected by copyright. Copying for private or commercial purposes, i
permitted unless authorised by AUDI AG. AUDI AG does not guarante
with respect to the correctness of information in this document. Copy

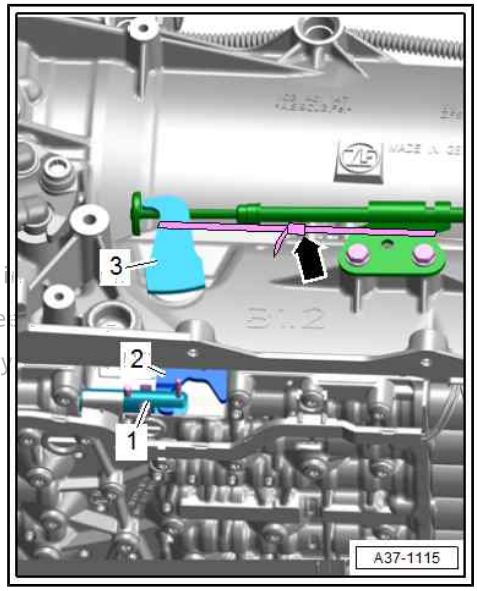

**NOTICE**

**Risk of damage to mechatronic unit.**

- **Only loosen the bolts which have a Torx T40 head.**
- **If other bolts are loosened, this may affect the operation of the mechatronic unit or the mechatronic unit could come apart.**

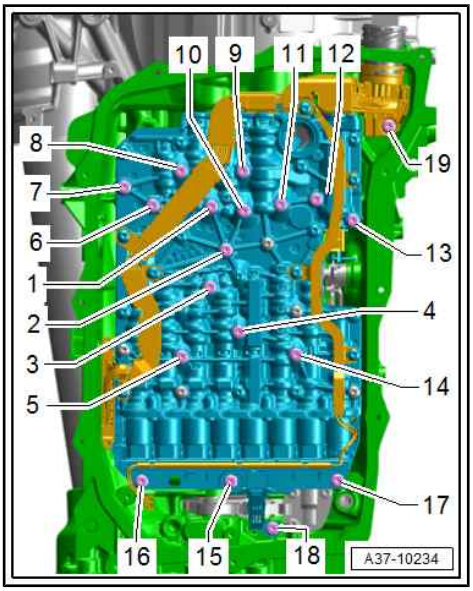


- Remove bolts in the sequence -19 ... 2-.
- Do not remove bolt -1- at this stage.
- Screw four guide pins - T40199- hand-tight into bolt holes -5, 7, 12, 14-.
- Remove bolt -1-.
- Detach mechatronic unit.

- When setting down the mechatronic unit, the side with the bolt heads must be facing downwards.

Protected by copyright. Copying for private or commercial purposes
permitted unless authorised by AUDI AG. AUDI AG does not guarant
with respect to the correctness of information in this document. Co

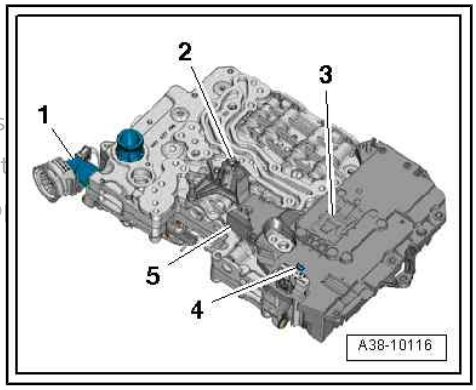


## Installing

- Always renew mechatronic unit if contaminated or defective.
- When installing, use all components provided in repair set.
- Fit new O-rings -1- and -3- in grooves on ATF pipes.
- Fit ATF pipe -2- in mechatronic unit.
- Check ATF pipes for damage and make sure they are firmly seated in mechatronic unit.

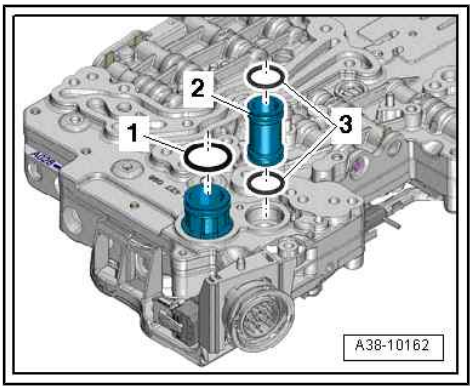


- If not already in place, screw in 4 guide pins - T40199- hand-tight, as shown in illustration.

◆ The guide pins - T40199- ensure that the mechatronic unit is kept straight while it is being installed. This prevents damage to the ATF pipes on the reverse side of the mechatronic unit.

◆ Because of the spring clip on its reverse side, the mechatronic unit cannot initially be brought into full contact with the gearbox housing.

◆ For this reason, it is advisable to have the assistance of a second mechanic when installing the mechatronic unit with the gearbox in the vehicle.

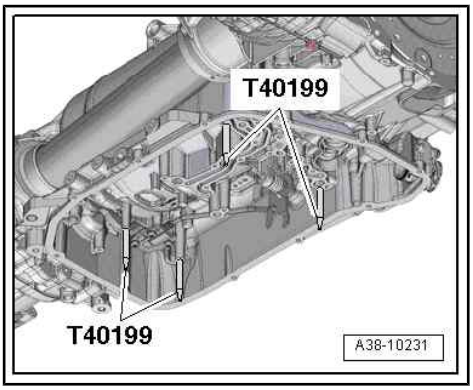

- Parking lock lever -3- fixed in vertical position with a cable tie -arrow-.

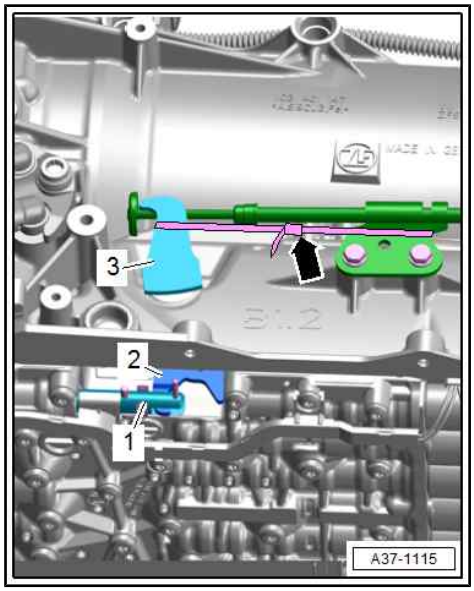


– Fit mechatronic unit onto gearbox housing.

- The jaw -2- of the manual release mechanism must engage behind the pin in the selector slide -1- -arrow-.

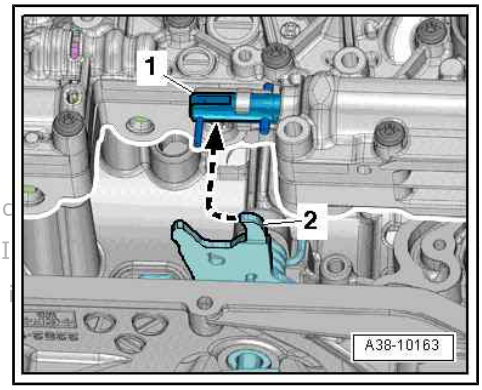


Protected by copyright. Copying for private or c s not
permitted unless authorised by AUDI AG. AUDI lity
with respect to the correctness of information

– Screw in bolts -1 ... 4- by hand until bolt heads make contact.

– Remove the 4 guide pins - T40199- .

– Tighten bolts for mechatronic unit in specified sequence ⇒ page 24 .

– If previously fitted, install auxiliary hydraulic pump ⇒ page 41 .

– If previously fitted, install hydraulic pulse accumulator ⇒ page 43 .

Further assembly is carried out in reverse sequence; note the following:

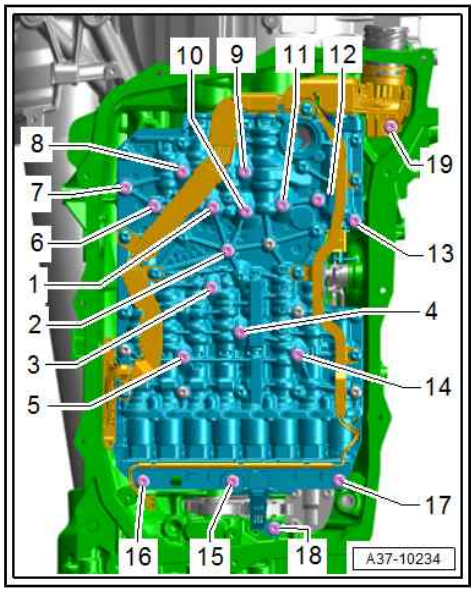


**NOTICE**

**Risk of irreparable damage due to electrostatic discharge.**

– **Do not touch connector contacts with your hands.**

– **Touch the lifting platform or other earthed object to discharge static electricity.**

– Fit new connector housing -2- with lug pointing downwards and insert by turning clockwise (in opposite direction to arrow).
– Make sure that electrical connector is properly engaged and secured.
– Tighten bolt -1-.

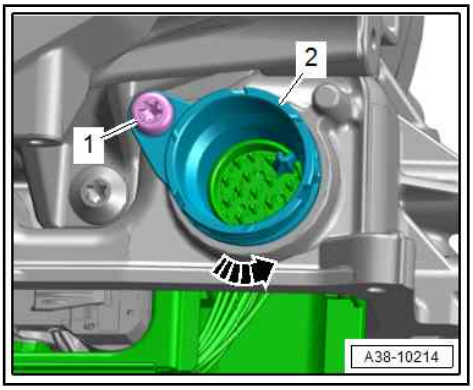


– Remove cable tie -arrow-.
– Install ATF oil pan ⇒ 8-speed automatic gearbox; Rep. gr. 38 ; ATF system; Removing and installing oil pan .
– Fill up ATF ⇒ 8-speed automatic gearbox; Rep. gr. 37 ; ATF; Draining and filling ATF .
– Electrical connections and routing ⇒ Current flow diagrams, Electrical fault finding and Fitting locations.

**Tightening torques**

♦ ⇒ page 24

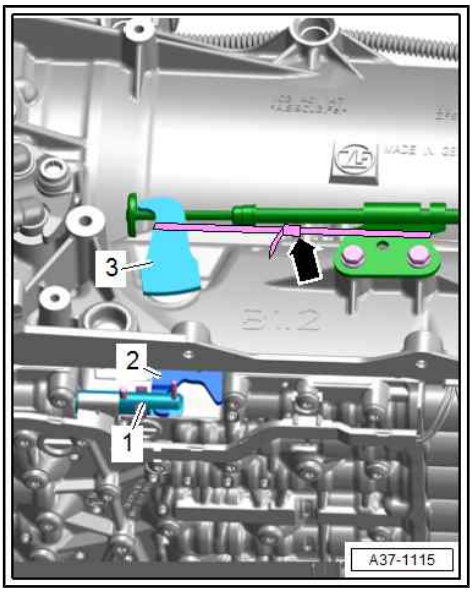


## 2.3 Removing and installing auxiliary hydraulic pump for gearbox oil

**Removing**

• Gearbox in vehicle

♦ Note general repair instructions ⇒ 8-speed automatic gearbox; Rep. gr. 00 ; Repair instructions; General repair instructions .

♦ Note rules for cleanliness ⇒ 8-speed automatic gearbox; Rep. gr. 00 ; Repair instructions; Rules for cleanliness .

– Shift gearbox into position “P”.
– Switch off ignition.
– Remove oil pan ⇒ 8-speed automatic gearbox; Rep. gr. 38 ; ATF system; Removing and installing oil pan .
– Remove ATF filter ⇒ page 22 .

**NOTICE**

**Risk of irreparable damage due to electrostatic discharge.**

– **Do not touch connector contacts with your hands.**
– **Touch the lifting platform or other earthed object to discharge static electricity.**

purposes, in part or in whole, is not permitted unless authorised by AUDI AG. AUDI AG does not guarantee or accept any liability with respect to the correctness of information in this document. Copyright by AUDI AG.

– Carefully unplug electrical connector -B- for auxiliary hydraulic pump 1 for gearbox oil - V475- -A-.
– Remove securing bolts in the sequence -3 ... 1-.
– Detach auxiliary hydraulic pump 1 for gearbox oil - V475- -A- from gearbox housing.
• Due to O-ring -D-, the auxiliary hydraulic pump 1 for gearbox oil - V475- fits tightly in the gearbox housing.

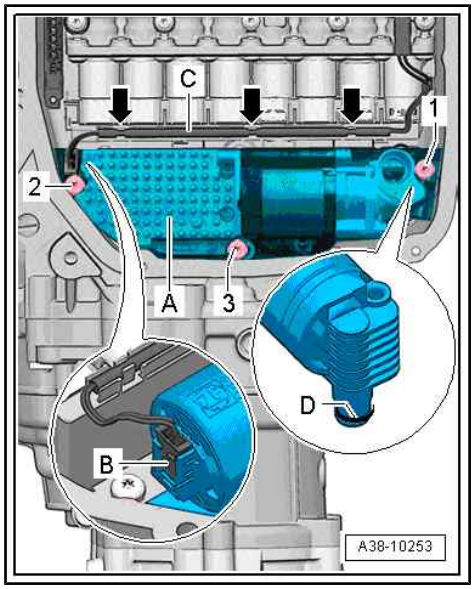


**Installing**

• The connector contacts -2- and -3- of electrical wire -1- must be pressed properly into the gearbox housing.
• The connector contacts must not be interchanged.

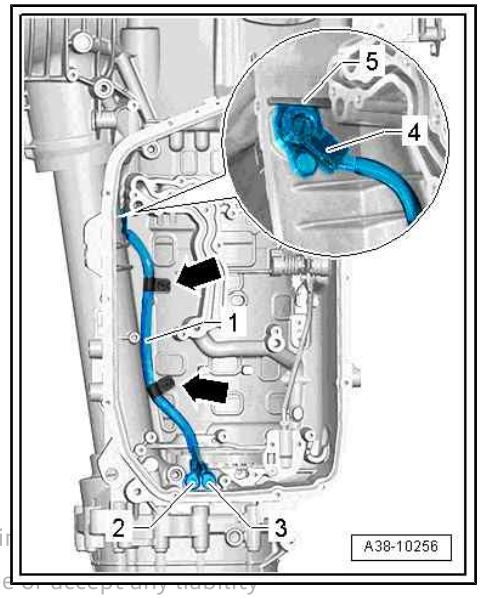


Protected by copyright. Copying for private or commercial purposes, in
permitted unless authorised by AUDI AG. AUDI AG does not guarantee
with respect to the correctness of information in this document. Copyright by AUDI AG.

– Carefully renew O-ring -D- on auxiliary hydraulic pump 1 for gearbox oil - V475- by hand, without using tools.

• If the seat of the O-ring is damaged or scratched, the auxiliary hydraulic pump 1 for gearbox oil - V475- must be renewed.

– Fit auxiliary hydraulic pump 1 for gearbox oil - V475- with new O-ring -D-.

– Tighten securing bolts in the sequence -1 ... 3-.

♦ -1, 2, 3-: M6x28

– Plug in and engage electrical connector -B- for auxiliary hydraulic pump 1 for gearbox oil - V475- -A-.

– Route electrical wiring -C- as shown in illustration and secure -arrows-.

– Install ATF filter ⇒ page 22 .

– Install oil pan ⇒ 8-speed automatic gearbox; Rep. gr. 38 ; ATF system; Removing and installing oil pan .

– Fill up ATF ⇒ 8-speed automatic gearbox; Rep. gr. 37 ; ATF; Draining and filling ATF .

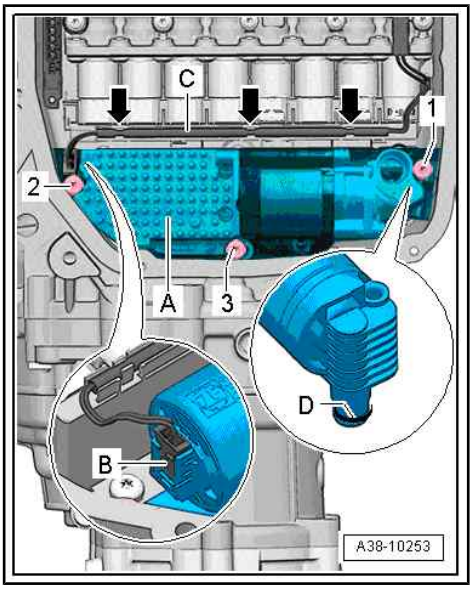


**Tightening torques**

♦ ⇒ page 24

## 2.4 Removing and installing hydraulic pulse accumulator with accumulator solenoid - N485-

The hydraulic pulse accumulator is not fitted in all gearbox versions.

♦ Note general repair instructions ⇒ 8-speed automatic gearbox; Rep. gr. 00 ; Repair instructions; General repair instructions .

♦ Note rules for cleanliness ⇒ 8-speed automatic gearbox; Rep. gr. 00 ; Repair instructions; Rules for cleanliness .

**Removing**

• Gearbox in vehicle

– Shift gearbox into "P".

– Switch off ignition.

– Remove oil pan ⇒ 8-speed automatic gearbox; Rep. gr. 38 ; ATF system; Removing and installing oil pan .

– Remove ATF filter ⇒ page 22 .

Protected by copyright. Copying for private or commercial purposes, in part or in whole, is not permitted unless authorised by AUDI AG. AUDI AG does not guarantee or accept any liability with respect to the correctness of information in this document. Copyright by AUDI AG.

**NOTICE**

**Risk of irreparable damage due to electrostatic discharge.**

- **Do not touch connector contacts with your hands.**
- **Touch the lifting platform or other earthed object to discharge static electricity.**

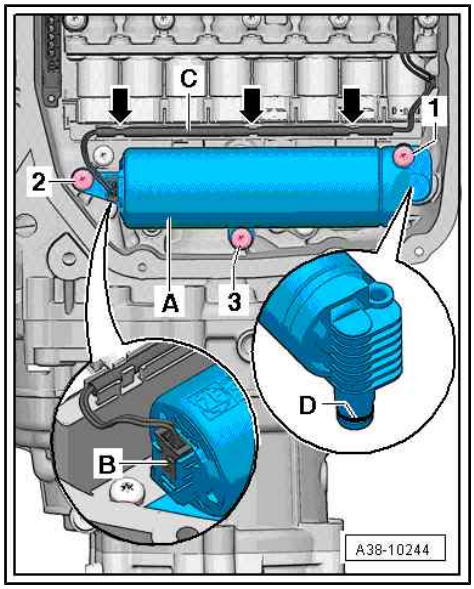


- Carefully unplug electrical connector -B- for hydraulic pulse accumulator -A-.
- Remove bolts in the sequence -3 ... 1-.
- Detach hydraulic pulse accumulator -A-.

### Installing

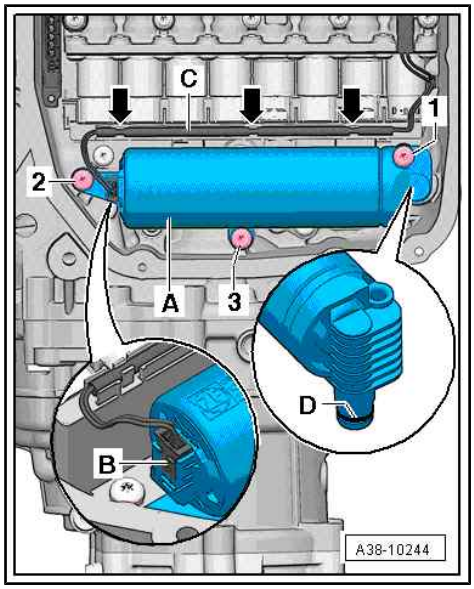


- Renew O-ring and bolts for hydraulic pulse accumulator.
- Fit hydraulic pulse accumulator -A- with new O-ring -D-.
- Tighten bolts in the sequence -1 ... 3-.
- ♦ -1-: M6x59
- ♦ -2, 3-: M6x20
- Plug in and engage connector -B-.
- Route electrical wiring -C- as shown in illustration and secure -arrows-.
- Install ATF filter ⇒ page 22 .
- Install oil pan ⇒ 8-speed automatic gearbox; Rep. gr. 38 ; ATF system; Removing and installing oil pan .
- Fill up ATF ⇒ 8-speed automatic gearbox; Rep. gr. 37 ; ATF; Draining and filling ATF .

### Tightening torques

- ♦ ⇒ page 24

## 2.5 Removing and installing electrical wiring harness for auxiliary hydraulic pump for gearbox oil

### Removing

Protected by copyright. Copying for private or commercial purposes, in part or in whole, is not permitted unless authorised by AUDI AG. AUDI AG does not guarantee or accept any liability with respect to the correctness of information in this document. Copyright by AUDI AG.

- Remove mechatronic unit ⇒ page 32 .

– Remove bolts -arrows- and remove gearbox support (right-side) -1- with gearbox mounting.

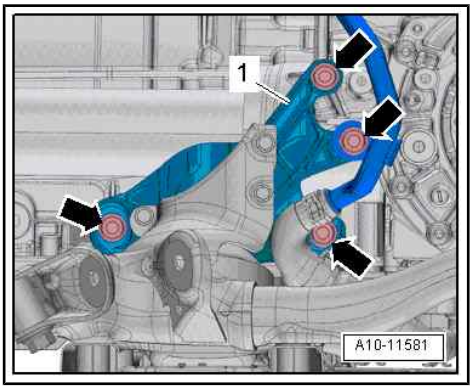


– Unplug electrical connector -arrow- for auxiliary hydraulic pump 1 for gearbox oil - V475- at right of gearbox.
– Move electrical wiring clear.

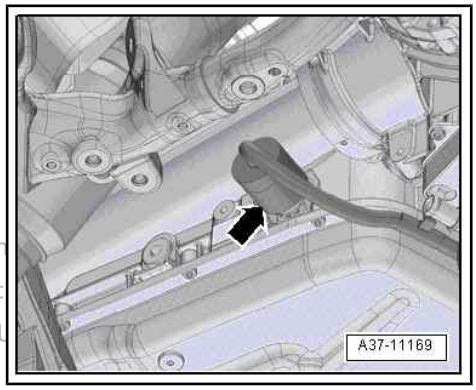


Protected by copyright. Copying for private or commercial purposes, in part or in
permitted unless authorised by AUDI AG. AUDI AG does not guarantee or accept
with respect to the correctness of information in this document. Copyright by AU

– Detach securing clip -A- from connector -B- for wiring harness for auxiliary hydraulic pump 1 for gearbox oil - V475- in direction of -arrow-.

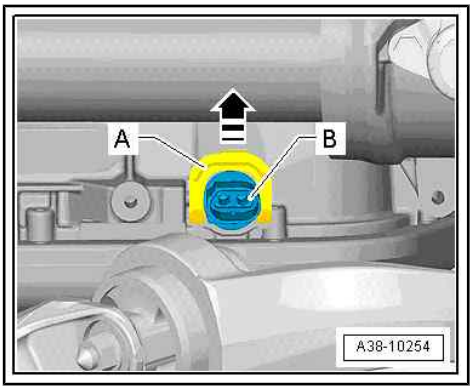


– Before removal, mark connector contacts -2- and -3- in relation to holes in gearbox housing.
– Transfer these markings to the new wiring harness -1- when installing.
– Disconnect connector contacts -2- and -3- from gearbox housing.
– Detach wiring harness -1- from retainers -arrows-.
– Then unplug connector -4- from gearbox housing -5-.

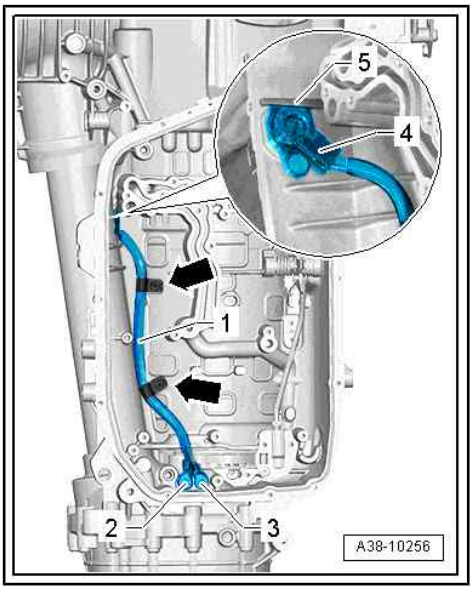

### Installing

Installation is carried out in reverse order; note the following:

- If the existing wiring harness -1- is being re-installed, renew O-rings on connector -4-.
- Installation position of connector -4-: flat surface fits against rib -5- on housing, as shown in illustration.

Protected by copyright. Copying for private or co not permitted unless authorised by AUDI AG. AUDI A ty with respect to the correctness of information in

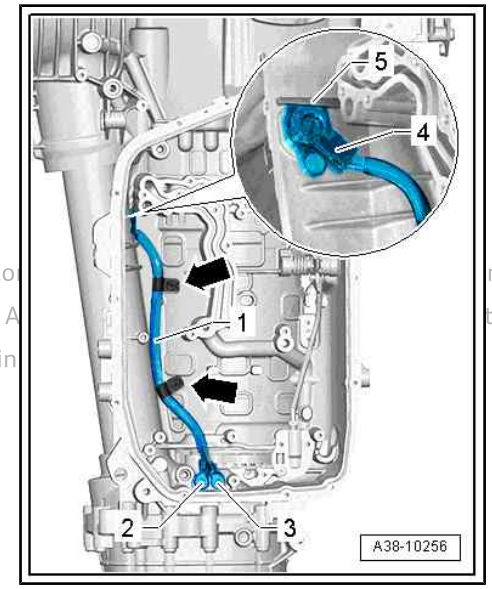


– Press securing clip -A- onto connector -B- for wiring harness for auxiliary hydraulic pump 1 for gearbox oil - V475- in opposite direction of -arrow- and secure connector.

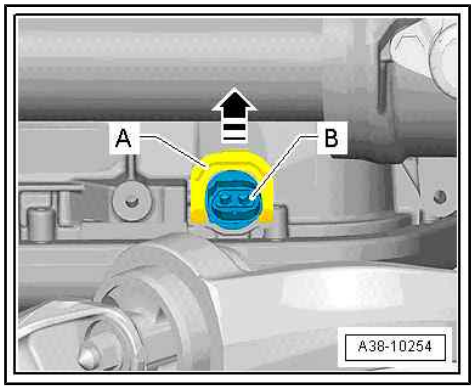


– Press connector contacts -2- and -3- into holes in gearbox housing according to marks made upon removal.
– Install mechatronic unit ⇒ page 32 .
– Install auxiliary hydraulic pump 1 for gearbox oil - V475- ⇒ page 41 .
– Install ATF filter ⇒ page 22 .
– Install oil pan ⇒ 8-speed automatic gearbox; Rep. gr. 38 ; ATF system; Removing and installing oil pan .
– Fill up ATF ⇒ 8-speed automatic gearbox; Rep. gr. 37 ; ATF; Draining and filling ATF .

### Tightening torques

♦ ⇒ page 24

# 39 – Final drive - front differential

## 1 Centre differential

⇒ "1.1 Exploded view - centre differential", page 47
⇒ "1.2 Removing and installing centre differential", page 48
⇒ "1.3 Removing and installing rear splined shaft", page 49
⇒ "1.4 Renewing oil seal for rear splined shaft", page 52
⇒ "1.5 Renewing ball bearing for rear splined shaft", page 57
⇒ "1.6 Renewing ball bearing for centre differential", page 60

### 1.1 Exploded view - centre differential

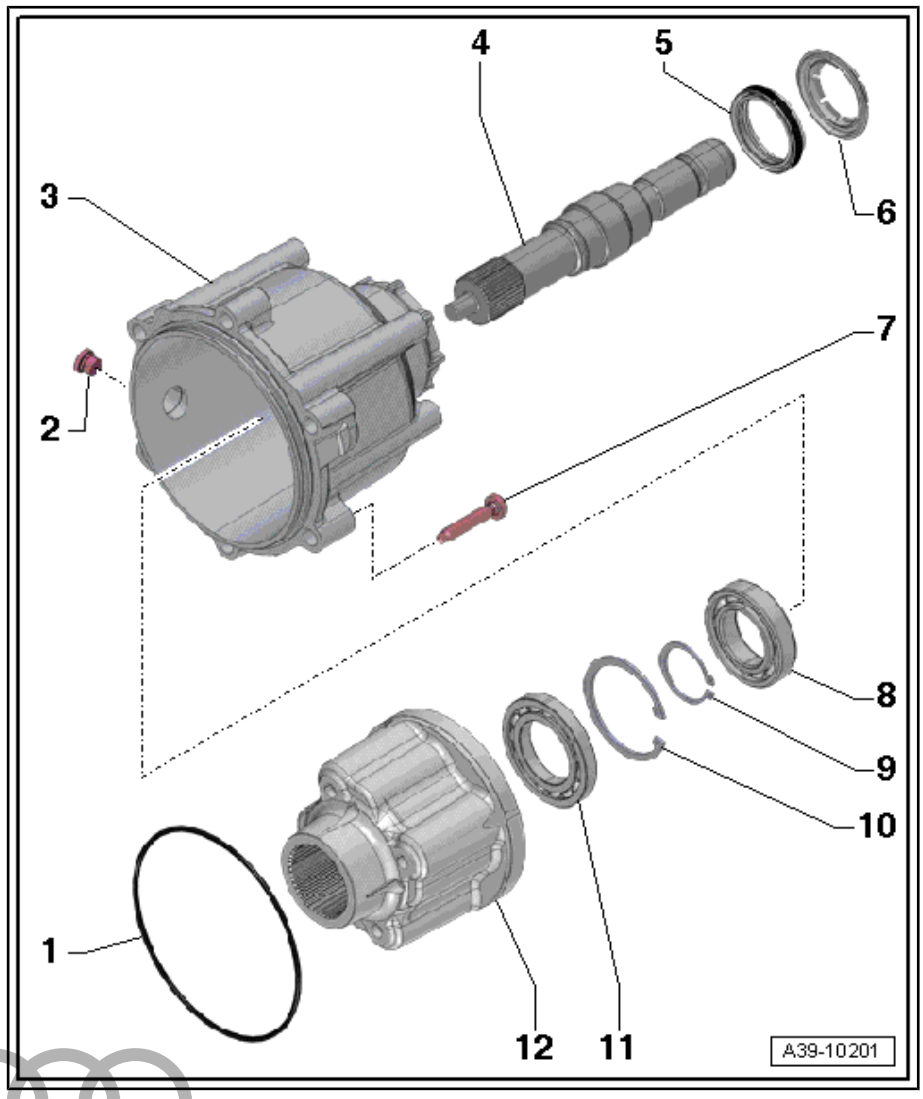


**1 - O-ring**
- ❑ Renew
- ❑ Lubricate with gear oil

**2 - Plug**
- ❑ For inspection and filler hole
- ❑ For gear oil in transfer box
- ❑ Tightening torque ⇒ 8-speed automatic gearbox; Rep. gr. 39 ; Gear oil; Overview of fitting locations - drain and inspection plugs

**3 - Centre differential housing**
- ❑ Removing and installing ⇒ page 48

**4 - Rear splined shaft**
- ❑ Removing and installing ⇒ "1.4 Renewing oil seal for rear splined shaft", page 52
- ❑ Renew oil seal when renewing rear splined shaft

**5 - Oil seal**
- ❑ For rear splined shaft
- ❑ Renewing ⇒ page 52

**6 - Dust ring**
- ❑ Cannot be removed without being damaged

**7 - Bolt**
- ❑ Renew
- ❑ Tightening torque and sequence ⇒ page 48

**8 - Ball bearing**
- ❑ For rear splined shaft
- ❑ Renewing ⇒ page 57

Protected by copyright. Copying for private or commercial purposes, in part or in whole, is not permitted unless authorised by AUDI AG. AUDI AG does not guarantee or accept any liability with respect to the correctness of information in this document. Copyright by AUDI AG.

**9 - Circlip**

- ❑ For rear splined shaft

**10 - Circlip**

- ❑ For ball bearing for rear splined shaft

**11 - Ball bearing**

- ❑ For centre differential
- ❑ Renewing ⇒ page 60

**12 - Centre differential**

**Centre differential housing - tightening torque and sequence**

– Tighten bolts in 3 stages in the sequence shown:

| Stage | Bolts | Tightening torque/angle specification |
|---|---|---|
| 1. | -1- and -6- | 3 Nm |
| 2. | -1 … 6- | 10 Nm |
| 3. | -1 … 6- | Turn 90° further |

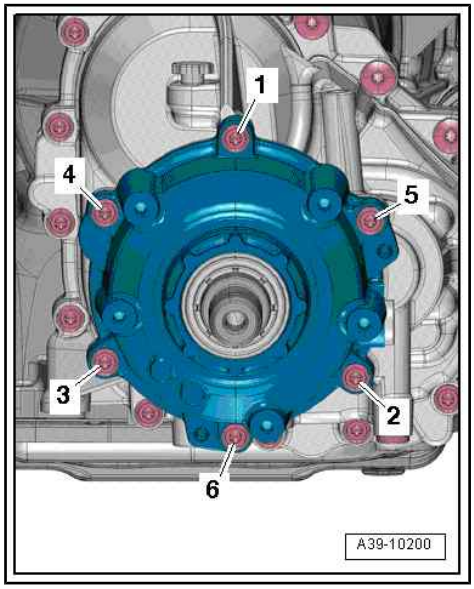


## 1.2 Removing and installing centre differential

- Note general repair instructions ⇒ 8-speed automatic gearbox; Rep. gr. 00 ; Repair instructions; General repair instructions .
- Note rules for cleanliness ⇒ 8-speed automatic gearbox; Rep. gr. 00 ; Repair instructions; Rules for cleanliness .

**Removing**

- Gearbox installed

– Remove propshaft ⇒ Rear final drive; Rep. gr. 39 ; Propshaft; Removing and installing propshaft .

– Drain gear oil in transfer box ⇒ 8-speed automatic gearbox; Rep. gr. 39 ; Gear oil; Draining and filling gear oil .

Protected by copyright. Copying for private or commercial purposes, in part or in whole, is not permitted unless authorised by AUDI AG. AUDI AG does not guarantee or accept any liability with respect to the correctness of information in this document. Copyright by AUDI AG.

– Slacken bolts securing centre differential housing in the sequence -6 ... 1- and remove bolts.

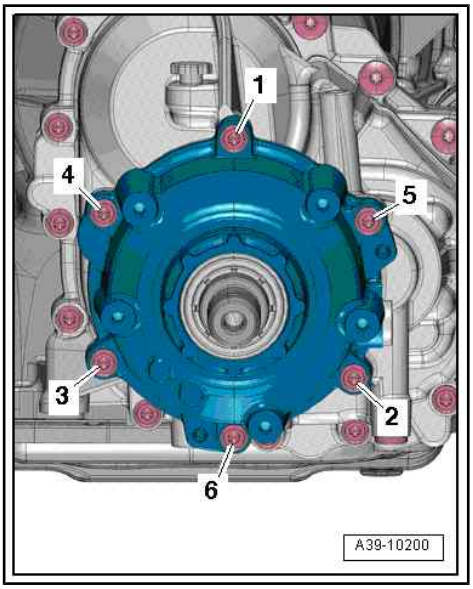


NOTICE

**Gearbox components must be handled with care, otherwise they will be damaged.**

– **Detach centre differential housing from gearbox carefully towards the rear. Take care that centre differential does not drop out of gearbox.**

– Secure centre differential -1- to prevent it from falling out, or pull it off output shaft towards rear.

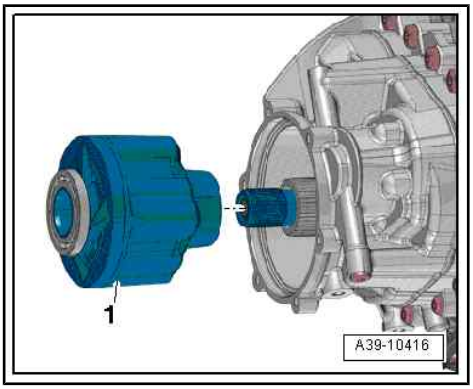


### Installing

Installation is carried out in reverse order; note the following:

- Renew O-ring for centre differential housing.

If centre differential has been removed -1-:

– Fit centre differential onto splines of output shaft. At the same time turn centre differential slightly.

– Check whether centre differential can be turned by hand after being fitted.

– Fit housing with new O-ring and rear splined shaft installed onto centre differential. Turn housing slightly if necessary.

– Install propshaft ⇒ Rear final drive; Rep. gr. 39 ; Propshaft; Removing and installing propshaft .

– Fill up gear oil in transfer box ⇒ 8-speed automatic gearbox; Rep. gr. 39 ; Gear oil; Draining and filling gear oil .

### Tightening torques

◆ ⇒ Fig. ""Centre differential housing - tightening torque and sequence"" , page 48

## 1.3 Removing and installing rear splined shaft

### Special tools and workshop equipment required

Protected by copyright. Copying for private or commercial purposes, in part or in whole, is not permitted unless authorised by AUDI AG. AUDI AG does not guarantee or accept any liability with respect to the correctness of information in this document. Copyright by AUDI AG.

- Thrust plate - VW 402-

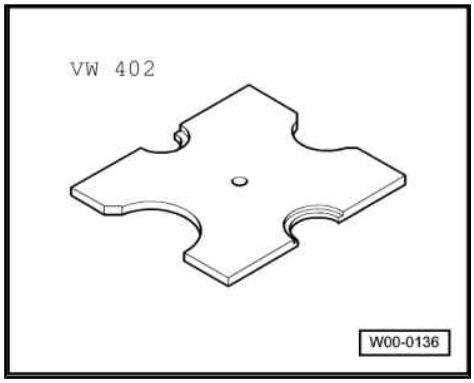


- Press tool - VW 412-

Protected by copyright. Copying for private or commercial purposes, in part or in whole, is not permitted unless authorised by AUDI AG. AUDI AG does not guarantee or accept any liability with respect to the correctness of information in this document. Copyright by AUDI AG

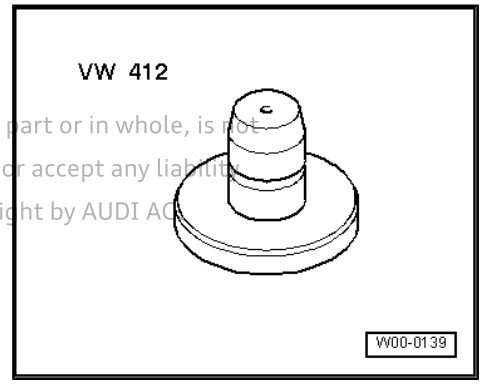


- Drift sleeve - 30 - 100-

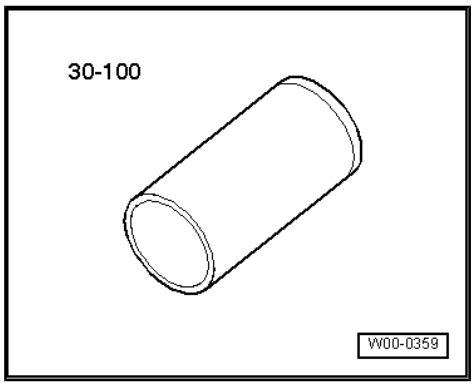


- Extractor tool - T20143-

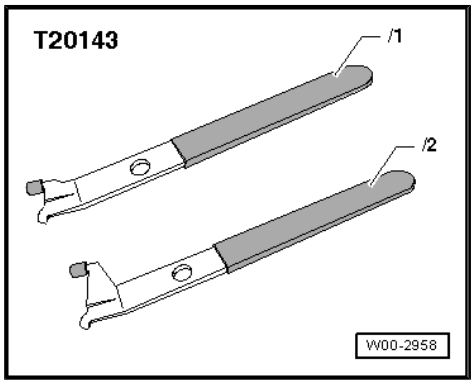

♦ Assembly tool - T40239-

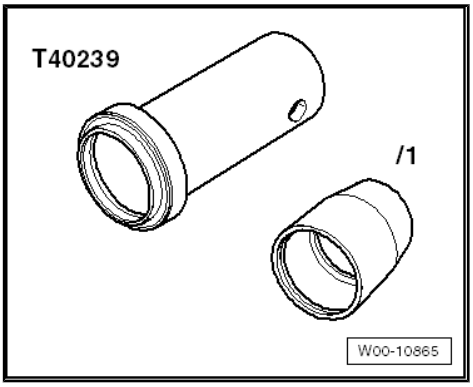


♦ Sealing grease - G 052 128 A1-

**Procedure**

– Remove centre differential housing
⇒ “1.2 Removing and installing centre differential”, page 48 .

– Remove circlip -arrow- on inside of housing.

– Carefully knock rear splined shaft out of centre differential housing using copper drift.

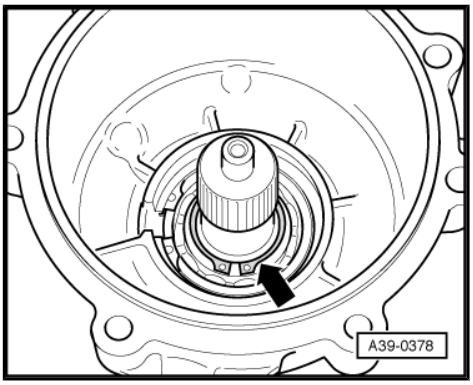


Protected by copyright. Copying for private or commercial purposes, in part o
permitted unless authorised by AUDI AG. AUDI AG does not guarantee or acc
with respect to the correctness of information in this document. Copyright b

– Lever out oil seal -1-.

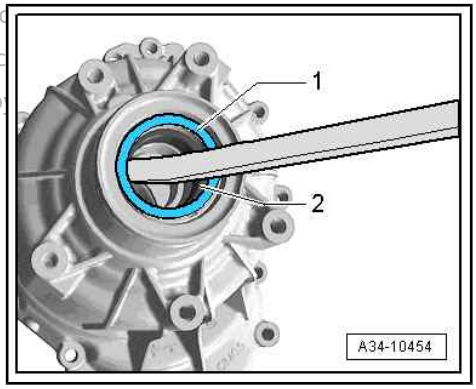


**Installing**

– Lightly lubricate outer circumference of oil seal with gear oil.

• Installation position: the open side of the oil seal faces the housing.

– Drive in oil seal as far as stop using thrust piece - T40239- , -item 1-. Make sure oil seal remains straight.

– Pack space between sealing lip and dust lip half-full with sealing grease - G 052 128 A1- .

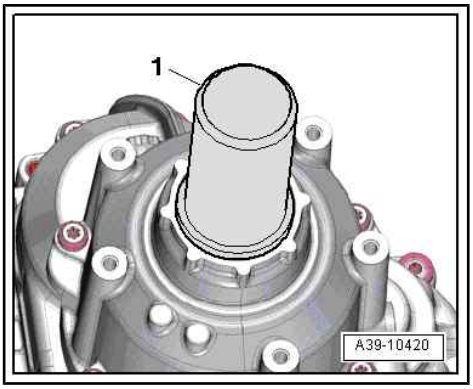

– Press rear splined shaft into centre differential housing as follows:
– Insert rear splined shaft into centre differential housing from below.
– Place housing with rear splined shaft on thrust plate - VW 402- under workshop press.
– Position drift sleeve - 30 - 100- on inner race of ball bearing.
– Press in rear splined shaft.

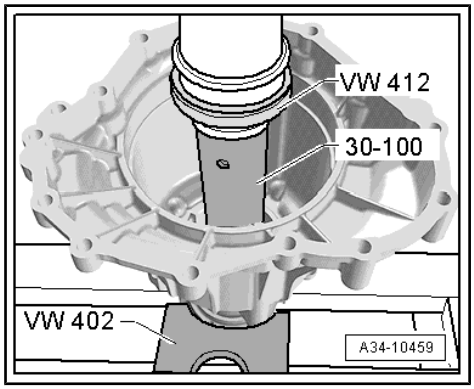


– Fit circlip -arrow- into groove on rear splined shaft.
– Install centre differential housing ⇒ page 48 .
– Fill up gear oil in transfer box ⇒ 8-speed automatic gearbox; Rep. gr. 39 ; Gear oil; Draining and filling gear oil .

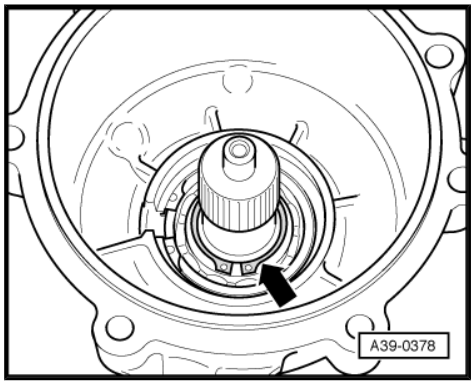


## 1.4 Renewing oil seal for rear splined shaft

⇒ "1.4.1 Renewing oil seal for rear splined shaft - vehicles without vibration damper", page 52

⇒ "1.4.2 Renewing oil seal for rear splined shaft - vehicles with vibration damper", page 54

Protected by copyright. Copying for private or commercial purposes, in part or in whole, is not permitted unless authorised by AUDI AG. AUDI AG does not guarantee or accept any liability with respect to the correctness of information in this document. Copyright by AUDI AG.

### 1.4.1 Renewing oil seal for rear splined shaft - vehicles without vibration damper

**Special tools and workshop equipment required**

♦ Extractor tool - T20143/1-

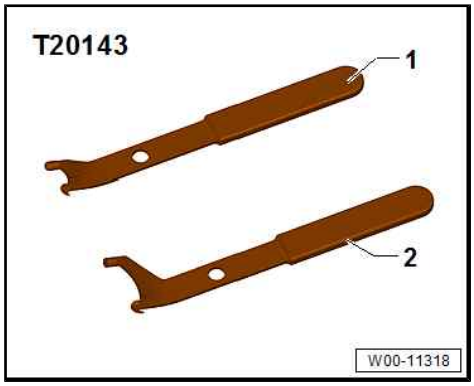

♦ Assembly tool - T40239-

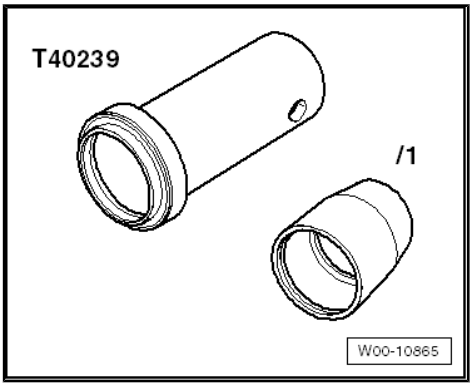


♦ Sealing grease - G 052 128 A1-

- Note general repair instructions ⇒ 8-speed automatic gearbox; Rep. gr. 00 ; Repair instructions; General repair instructions .
- Note rules for cleanliness ⇒ 8-speed automatic gearbox; Rep. gr. 00 ; Repair instructions; Rules for cleanliness .

Protected by copyright. Copying for private or commercial purposes, in part or in whole, is not permitted unless authorised by AUDI AG. AUDI AG does not guarantee or accept any liability with respect to the correctness of information in this document. Copyright by AUDI AG.

**Procedure**

– Remove propshaft ⇒ Rear final drive; Rep. gr. 39 ; Propshaft; Removing and installing propshaft .

– Pry off dust ring -1-.

- The dust ring cannot be removed without being damaged.

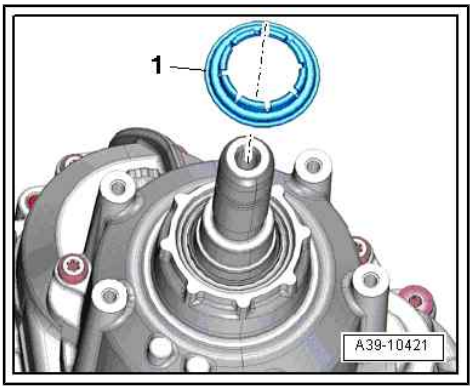


– Pull out oil seal for rear splined shaft.

– Clean contact surface and sealing surface.

– Lubricate outer circumference of seal with gear oil.

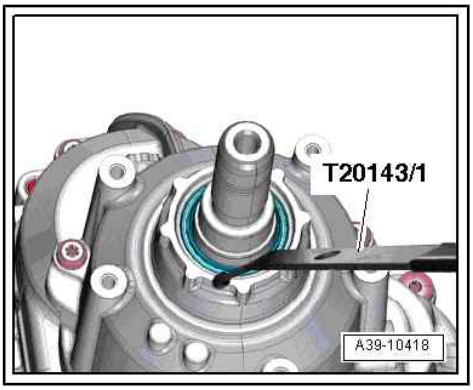

– Fit guide sleeve - T40239/1- -item 1- onto rear splined shaft.

– Pack space between sealing lip and dust lip half-full with sealing grease - G 052 128 A1- .

– Push oil seal -2- over guide sleeve -item 1- and onto rear splined shaft.

Protected by copyright. Copying for private or commer
permitted unless authorised by AUDI AG. AUDI AG doe
with respect to the correctness of information in this d

• Installation position: open side of oil seal should face gearbox housing.

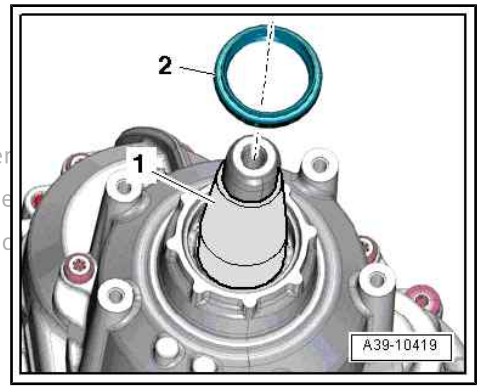


– Drive in oil seal as far as stop using thrust piece - T40239- , -item 1-. Make sure oil seal remains straight.

**Note**

• Pull guide sleeve - T40239/1- carefully out of oil seal so that sealing lip is not rolled back.

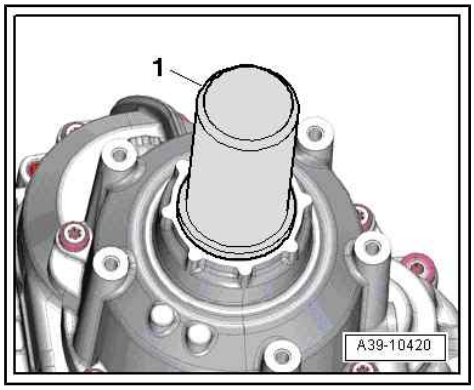


– Clip on new dust ring -1-.

– Install propshaft ⇒ Rear final drive; Rep. gr. 39 ; Propshaft; Removing and installing propshaft .

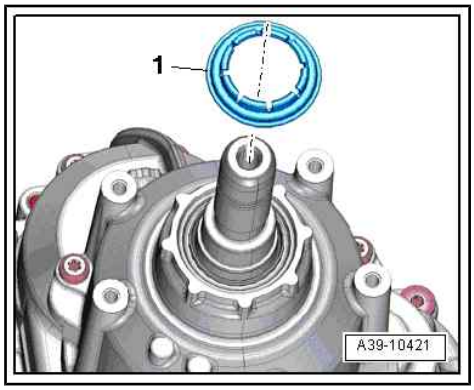


## 1.4.2 Renewing oil seal for rear splined shaft - vehicles with vibration damper

**Special tools and workshop equipment required**

♦ Thrust plate - VW 402-

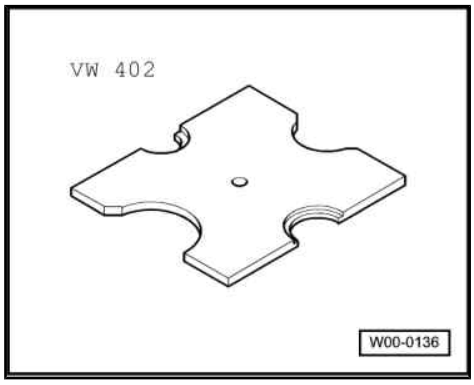

- Press tool - VW 412-

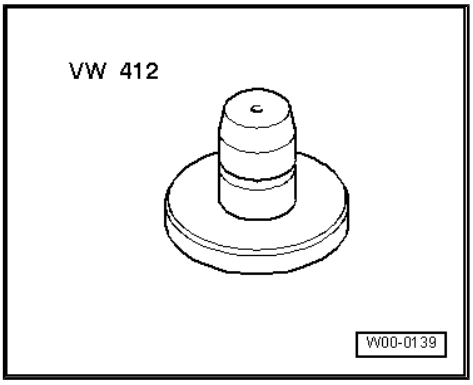


- Drift sleeve - 30 - 100-

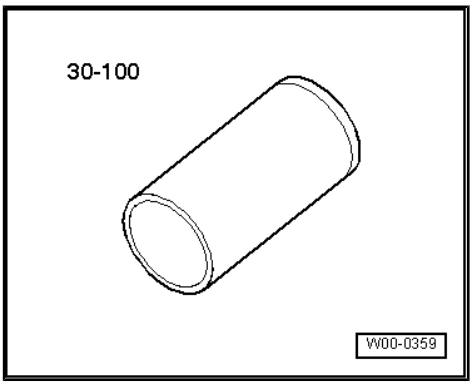


- Extractor tool - T20143-

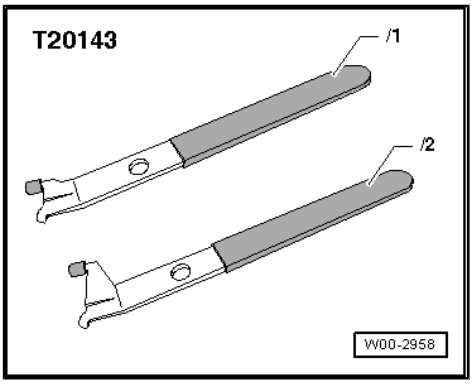


- Assembly tool - T40239-

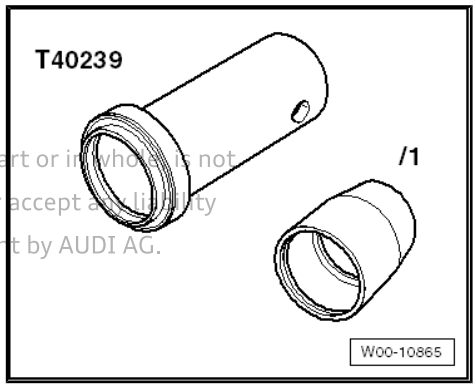


Protected by copyright. Copying for private or commercial purposes, in part or in whole, is not permitted unless authorised by AUDI AG. AUDI AG does not guarantee or accept any liability with respect to the correctness of information in this document. Copyright by AUDI AG.

- Sealing grease - G 052 128 A1-

### Procedure

– Remove centre differential housing
⇒ “1.2 Removing and installing centre differential”, page 48 .

– Remove circlip -arrow- on inside of housing.

– Carefully knock rear splined shaft out of centre differential housing using copper drift.

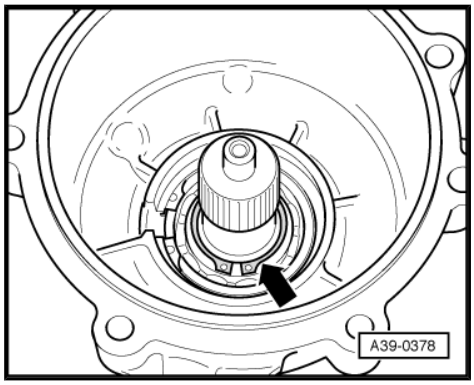


– Lever out oil seal -1-.

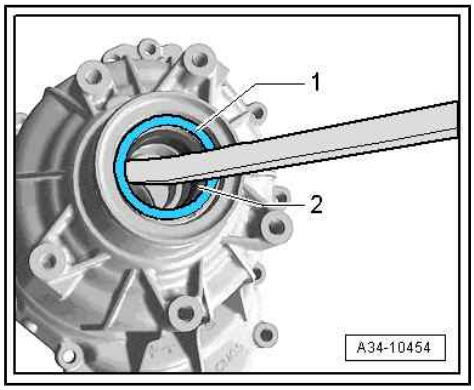


### Installing

– Lightly lubricate outer circumference of oil seal with gear oil.

• Installation position: the open side of the oil seal faces the housing.

– Drive in oil seal as far as stop using thrust piece - T40239- , -item 1-. Make sure oil seal remains straight.

– Pack space between sealing lip and dust lip half-full with sealing grease - G 052 128 A1- .

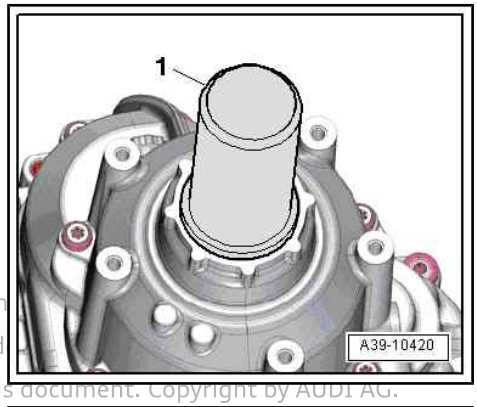


Protected by copyright. Copying for private or comm
permitted unless authorised by AUDI AG. AUDI AG d
with respect to the correctness of information in this document. Copyright by AUDI AG.

– Press rear splined shaft into centre differential housing as follows:

– Insert rear splined shaft into centre differential housing from below.

– Place housing with rear splined shaft on thrust plate - VW 402- under workshop press.

– Position drift sleeve - 30 - 100- on inner race of ball bearing.

– Press in rear splined shaft.

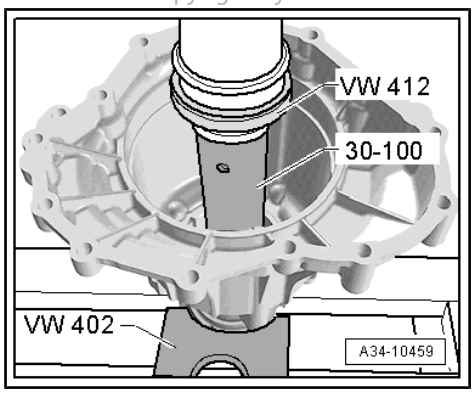

– Fit circlip -arrow- into groove on rear splined shaft.
– Install centre differential housing ⇒ page 48 .
– Fill up gear oil in transfer box ⇒ 8-speed automatic gearbox; Rep. gr. 39 ; Gear oil; Draining and filling gear oil .

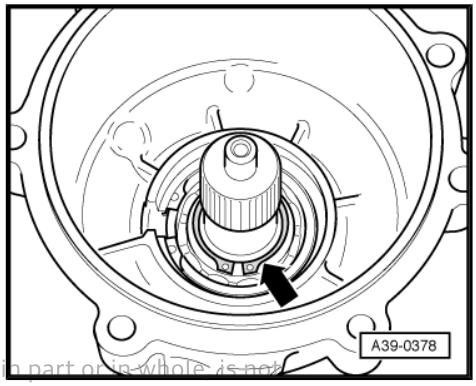


Protected by copyright. Copying for private or commercial purposes, in part or in whole, is not permitted unless authorised by AUDI AG. AUDI AG does not guarantee or accept any liability with respect to the correctness of information in this document. Copyright by AUDI AG.

## 1.5 Renewing ball bearing for rear splined shaft

**Special tools and workshop equipment required**

♦ Thrust plate - VW 401-

♦ Thrust plate - VW 402-

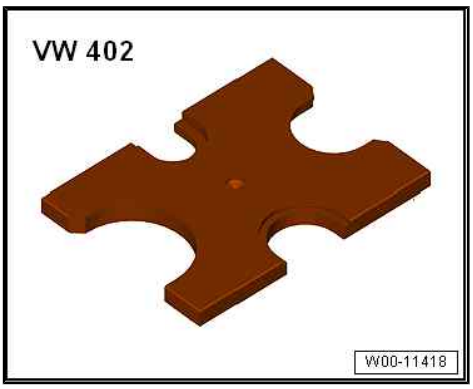


♦ Press tool - VW 409-

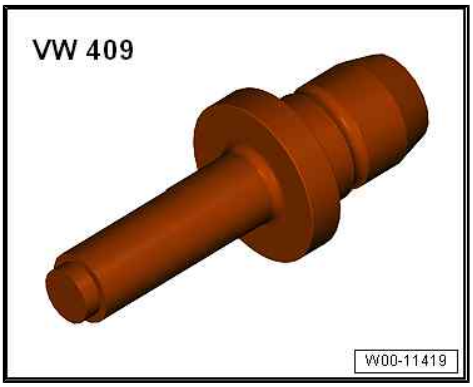

- Press tool - VW 412-

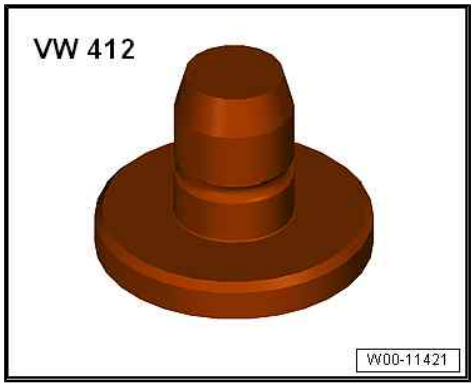


- Tube - VW 415A-

Protected by copyright. Copying for private or commercial purposes, in part or in whole, is
permitted unless authorised by AUDI AG. AUDI AG does not guarantee or accept any li
with respect to the correctness of information in this document. Copyright by AU

- Tube - 2040-

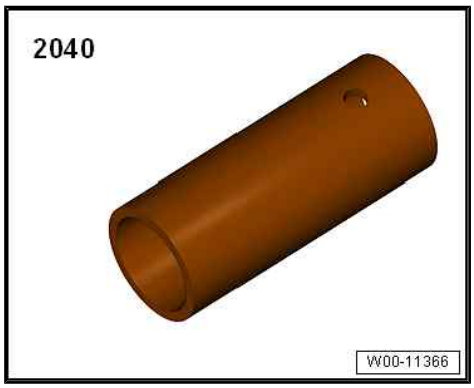


**Procedure**

– Remove centre differential housing ⇒ page 48 .

– Remove circlip -A- for rear splined shaft and circlip -B- for ball bearing.

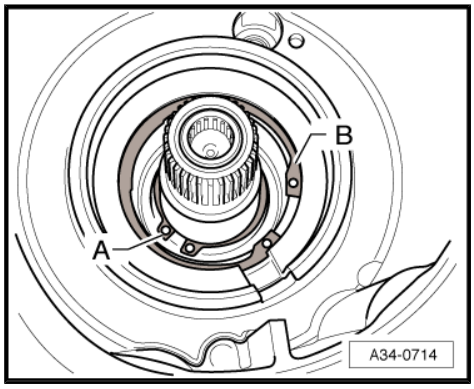

– Press rear splined shaft out of centre differential housing using press tool - VW 409- .

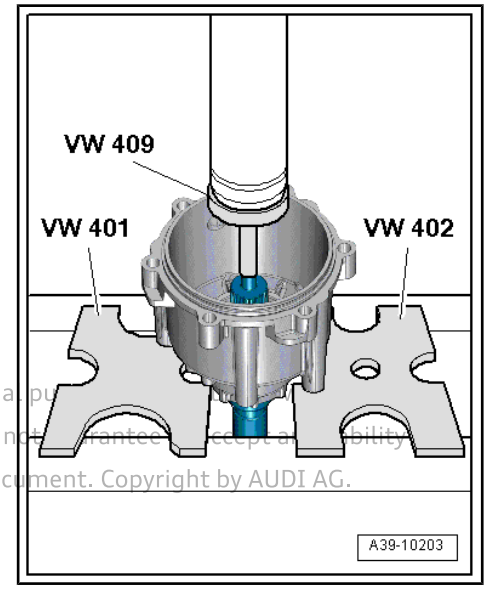


Protected by copyright. Copying for private or commercial purposes, in part or in whole, is not permitted unless authorised by AUDI AG. AUDI AG does not guarantee or accept any liability with respect to the correctness of information in this document. Copyright by AUDI AG.

– Prise out oil seal.

– To prevent damage to the housing, place something underneath (e.g. metal bar -A-) .

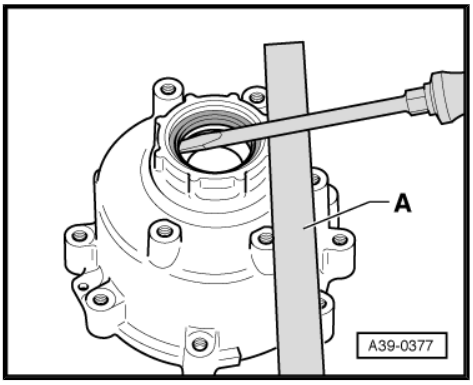


– Press out ball bearing for rear splined shaft.

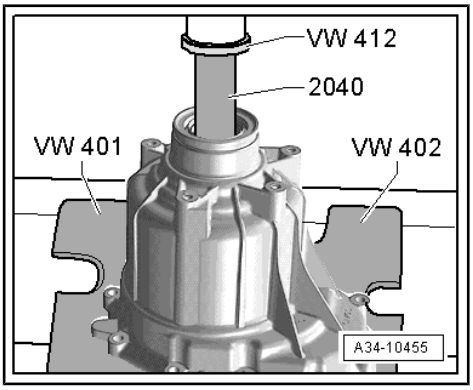


– Press in ball bearing for rear splined shaft.

• Collar of tube - VW 415 A- -arrow- faces press tool - VW 412- .

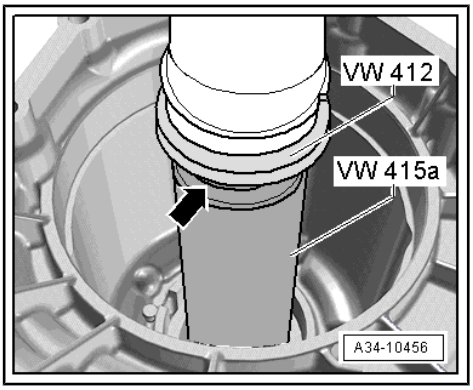

– Fit circlip -B- for ball bearing.

• Item -A- can be disregarded.

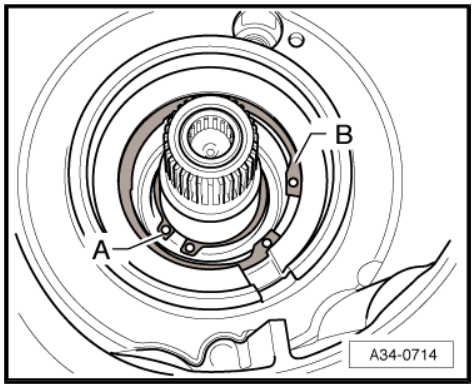


– Press rear splined shaft into centre differential housing using press tool - VW 412- .

Protected by copyright. Copying for private or commercial purposes, in part or in whole, is not permitted unless authorised by AUDI AG. AUDI AG does not guarantee or accept any liability with respect to the correctness of information in this document. Copyright by AUDI AG.

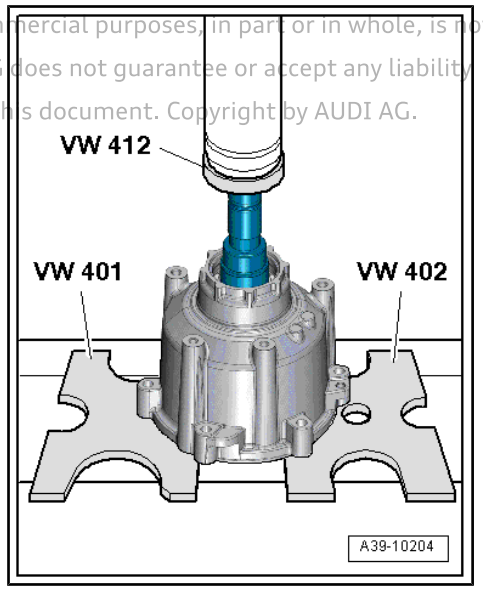


– Fit circlip -arrow- into groove on rear splined shaft.

– Install centre differential housing ⇒ page 48 .

– Install oil seal for rear splined shaft ⇒ page 52 .

– Fill up gear oil in transfer box ⇒ 8-speed automatic gearbox; Rep. gr. 39 ; Gear oil; Draining and filling gear oil .

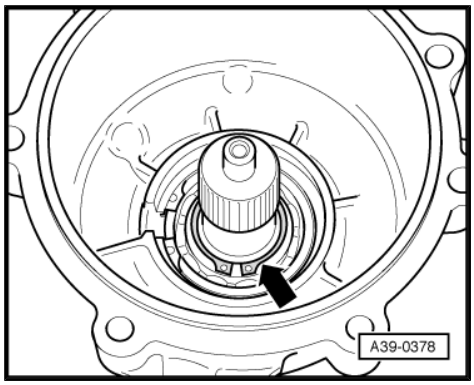


## 1.6 Renewing ball bearing for centre differential

**Special tools and workshop equipment required**

- Thrust plate - VW 401-

- Thrust plate - VW 402-

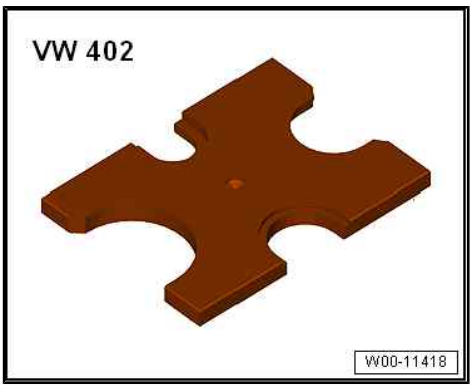


- Press tool - VW 412-

Protected by copyright. Copying for private or commercial purposes, in par e, is not permitted unless authorised by AUDI AG. AUDI AG does not guarantee y with respect to the correctness of information in this document. Co

- Thrust piece - VW 432-

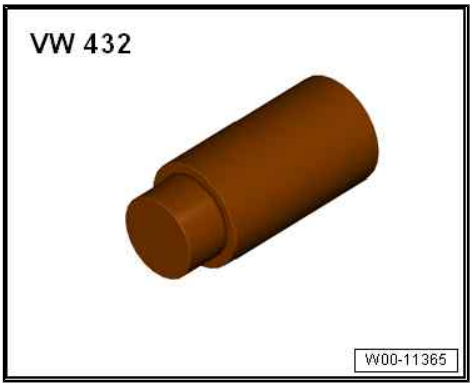

Protected by copyright. Copying for private or commercial purposes, in part or in whole, is not permitted unless authorised by AUDI AG. AUDI AG does not guarantee or accept any liability with respect to the correctness of information in this document. Copyright by AUDI AG.

♦ Assembly tool - 3350-

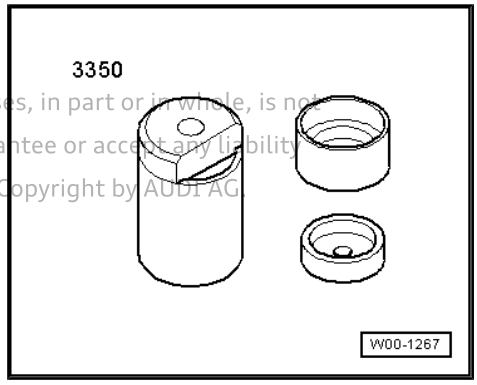


♦ Splitter - VAS 251 411-

**Procedure**

– Remove centre differential housing ⇒ page 48 .

– Pull centre differential -1- off output shaft towards the rear.

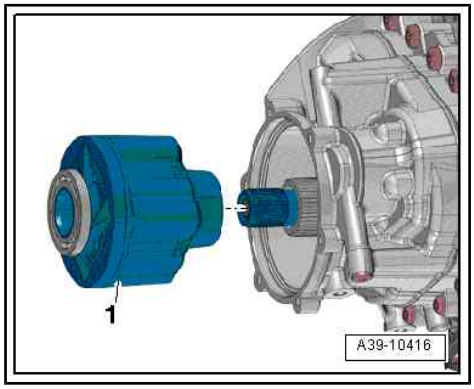


– Press ball bearing off centre differential.

A - Splitter - VAS 251 411-

• The collar of press tool - VW 432- points towards ball bearing.

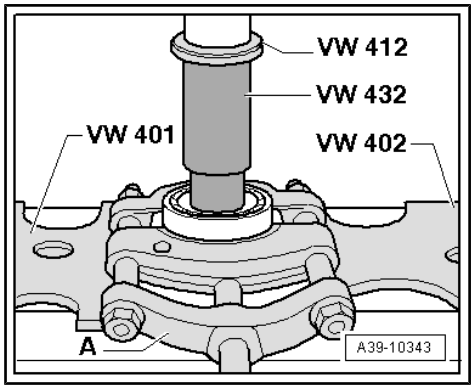


– Press ball bearing onto centre differential.

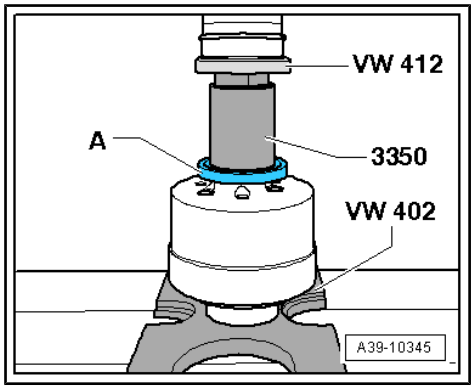

# 2 Transfer box

⇒ “2.1 Exploded view - transfer box”, page 63

⇒ “2.2 Dismantling and assembling transfer box”, page 64

## 2.1 Exploded view - transfer box

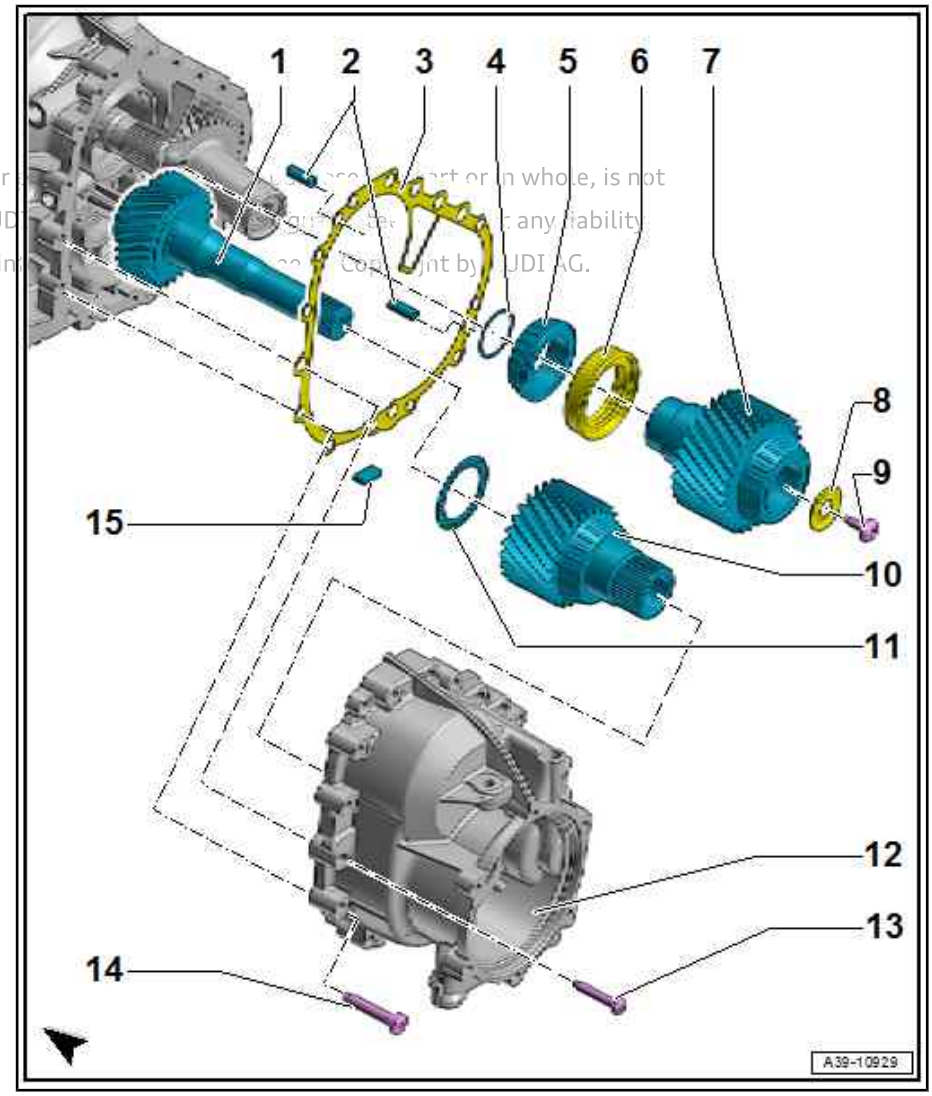


1 - Rear splined shaft

2 - Dowel sleeve

3 - Housing gasket

4 - Spacer

Protected by copyright. Copying for [illegible] or in whole, is not permitted unless authorised by AUD[illegible] any liability with respect to the correctness of in[illegible] Copyright by AUDI AG.

5 - Tapered roller bearing

6 - Twin-lip oil seal
- ❑ Renewing ⇒ “2.2 Dismantling and assembling transfer box”, page 64

7 - Pinion shaft

8 - Sealing washer
- ❑ Renew

9 - Bolt
- ❑ M8×18
- ❑ 20 Nm
- ❑ Renew

10 - Pinion shaft

11 - Needle bearing

12 - Transfer box housing

13 - Bolt
- ❑ M8×44
- ❑ Renew
- ❑ Tightening sequence ⇒ page 64

14 - Bolt
- ❑ M10×52
- ❑ Renew
- ❑ Tightening sequence ⇒ page 64

15 - Magnet

Tightening sequence for end cover 0BK/0BW/0D5

– Tighten bolts in 3 stages in the sequence shown:

| Stage | Bolts | Tightening torque/angle specification |
|---|---|---|
| 1. | -2, 9, 6- | 6 Nm |
| 2. | -1 … 9- | 9 Nm + 90° |
| 3. | -10 … 15- | 50 Nm |

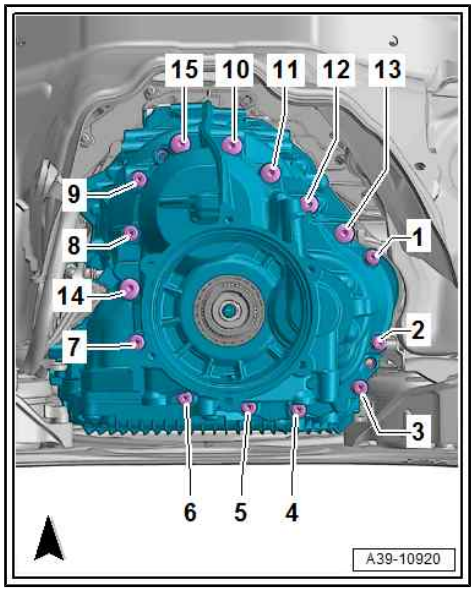


Tightening sequence for end cover 0BL/0D6/0D7

| Stage | Bolts | Tightening torque/angle specification |
|---|---|---|
| 1. | -4, 11, 8- | 6 Nm |
| 2. | -1 … 11- | 9 Nm + 90° |
| 3. | -12 … 17- | 50 Nm |

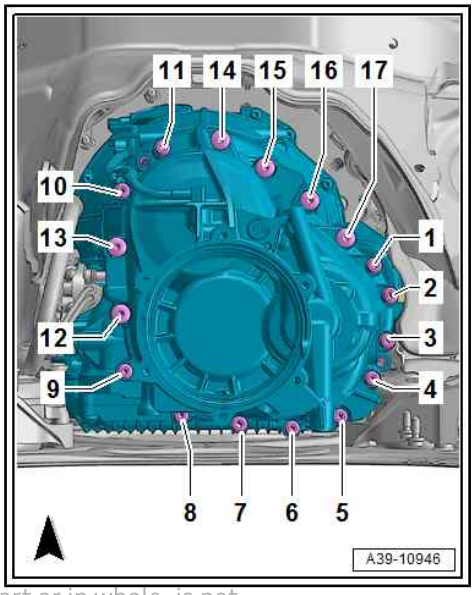


Protected by copyright. Copying for private or commercial purposes, in part or in whole, is not permitted unless authorised by AUDI AG. AUDI AG does not guarantee or assume any liability with respect to the correctness of information in this document. Copyright by AUDI AG.

## 2.2 Dismantling and assembling transfer box

Twin-lip oil seal leaking

- If oil emerges from oil escape hole -arrow-, twin-lip oil seal between ATF and MTF areas is damaged.
- For this repair, the transfer box will need to be dismantled and reassembled.

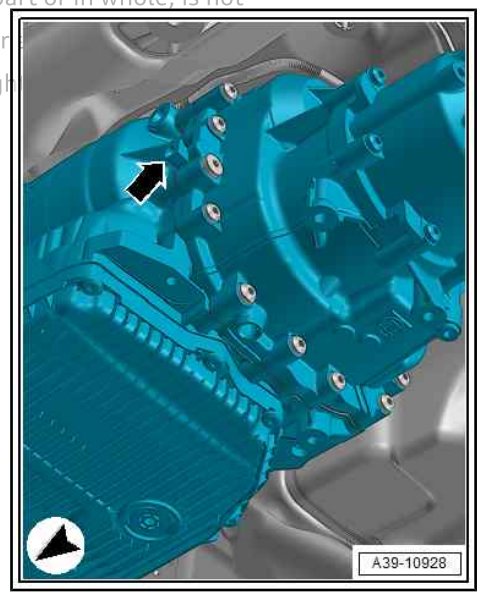


Special tools and workshop equipment required

- Assembly tool -T40381 -

Protected by copyright. Copying for private or commercial purposes, in part or in whole, is not permitted unless authorised by AUDI AG. AUDI AG does not guarantee or accept any liability with respect to the correctness of information in this document. Copyright by AUDI AG.

- Hub grease cap puller - VW637/2-

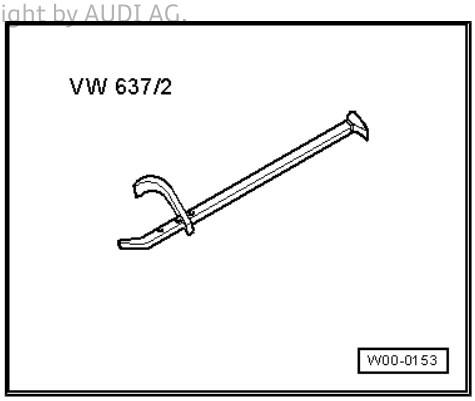


- Thrust piece - 3118-

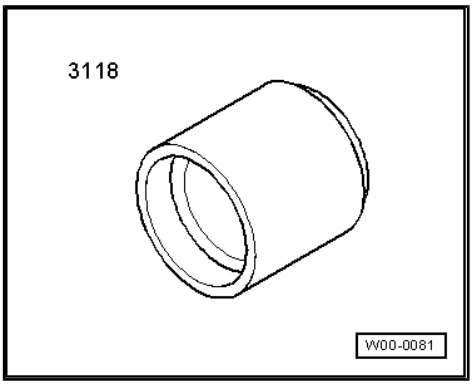


- Tube - VW416B-

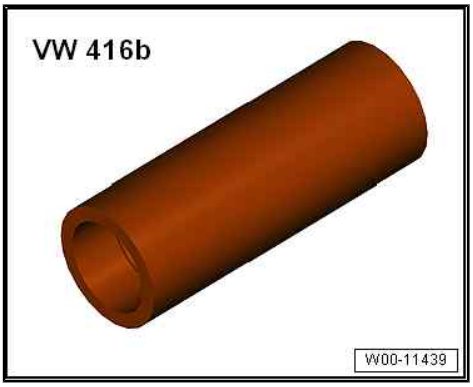

- Thrust pad - VW447H-

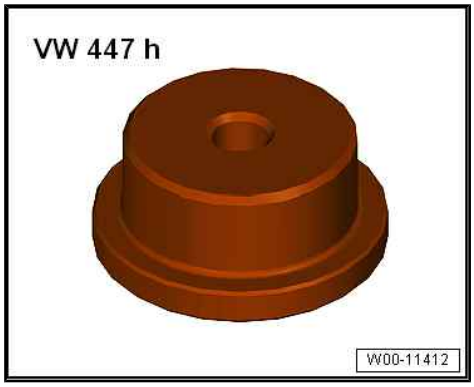


- Thrust pad - VW447i-

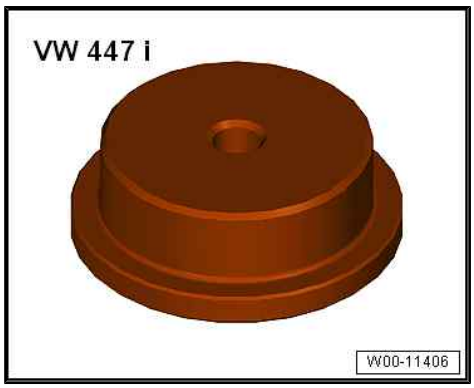


- Thrust pad - VW511-

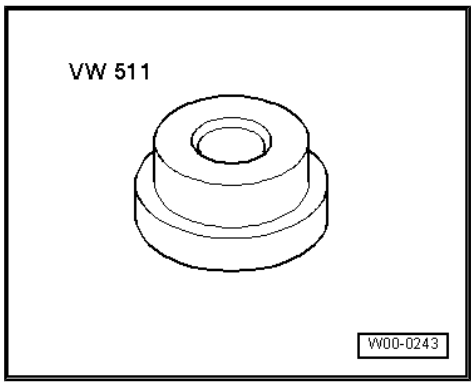


- Splitter, e.g. KUKKO 17-2 - VAS 251 411-

Protected by copyright. Copying for private or commercial purposes, in part or in whole, is not permitted unless authorised by AUDI AG. AUDI AG does not guarantee or accept any liability with respect to the correctness of information in this document. Copyright by AUDI AG.

♦ Used oil collection and extraction unit - VAS 6622A-

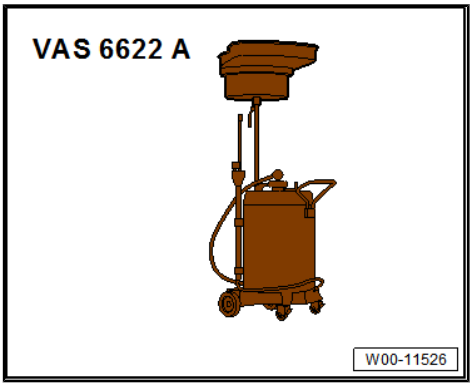


**Removing**

– Remove propshaft ⇒ Rear final drive; Rep. gr. 39 ; Propshaft; Removing and installing propshaft .

– Remove centre differential
⇒ “1.2 Removing and installing centre differential”, page 48 .

**NOTICE**

**Risk of damage to gearbox components due to falling parts.**

- **Gearbox components may fall out when intermediate housing is being removed.**
- **Damaged or dropped bearings and shafts cannot be renewed as this process requires complex measurement procedures which cannot be carried out with workshop tools.**
- **Perform the following steps with extreme care.**

– Place used oil collection and extraction unit - VAS 6622A- under transfer box to catch any gearbox components that fall out.

– Remove all bolts and carefully take off intermediate housing.

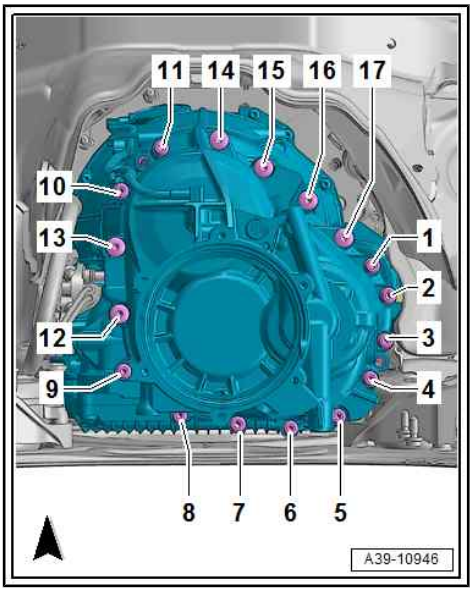


– Pull out shaft -1-.

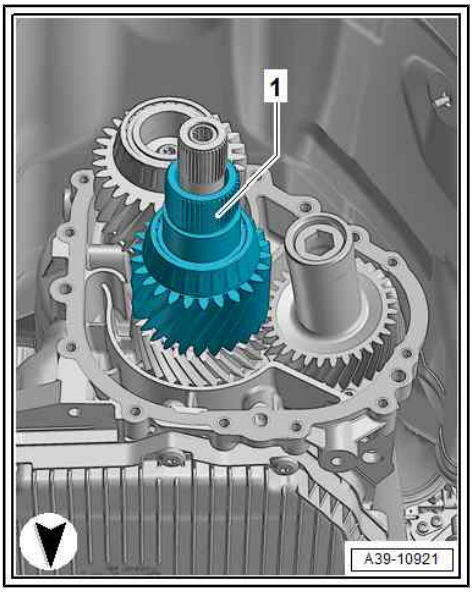


Protected by copyright. Copying for private or commercial purposes, in part or in whole, is not permitted unless authorised by AUDI AG. AUDI AG does not guarantee or accept any liability with respect to the correctness of information in this document. Copyright by AUDI AG.

– Take out shaft -2- with bearing -1-.

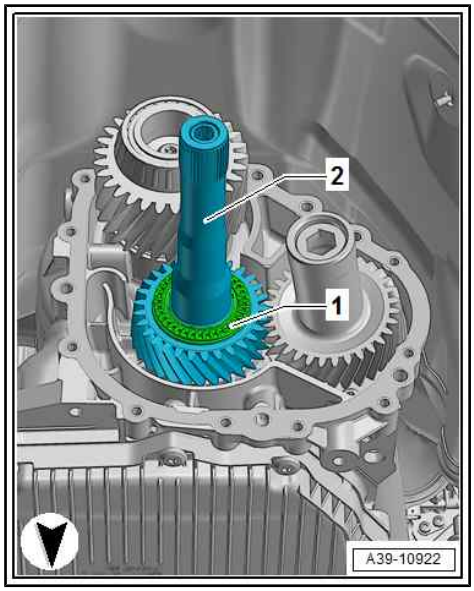


– Remove bolt -1- and detach sealing washer -2-.

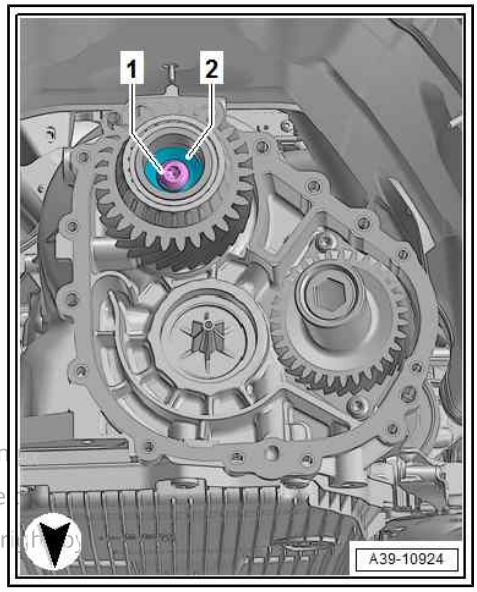


Protected by copyright. Copying for private or commercial purposes, in
permitted unless authorised by AUDI AG. AUDI AG does not guarantee
with respect to the correctness of information in this document. Copyr

– Fit old gasket -1- to protect sealing surface of housing and pry out pinion shaft -2- using hub grease cap puller - VW637/2- .

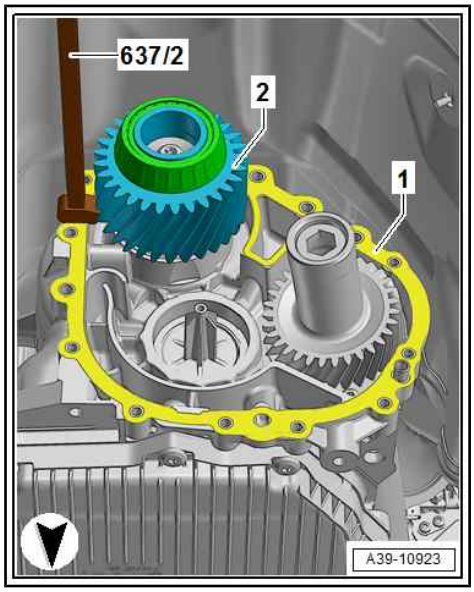

– Take care not to lose shim -1-.

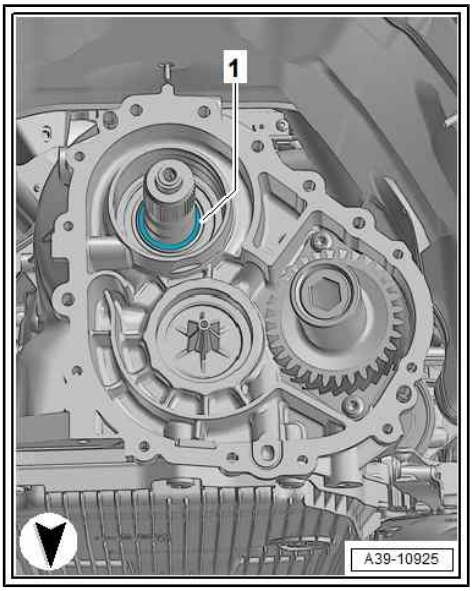


Protected by copyright. Copying for private or commercial purposes, in part or in whole, is not permitted unless authorised by AUDI AG. AUDI AG does not guarantee or accept any liability with respect to the correctness of information in this document. Copyright by AUDI AG.

**Renewing oil seal**

– Fit splitter, e.g. KUKKO 17-2 - VAS 251 411- , tube - VW416B- and thrust pad - VW447H- as shown and press tapered roller bearing out carefully using workshop press - VAS 6654- .

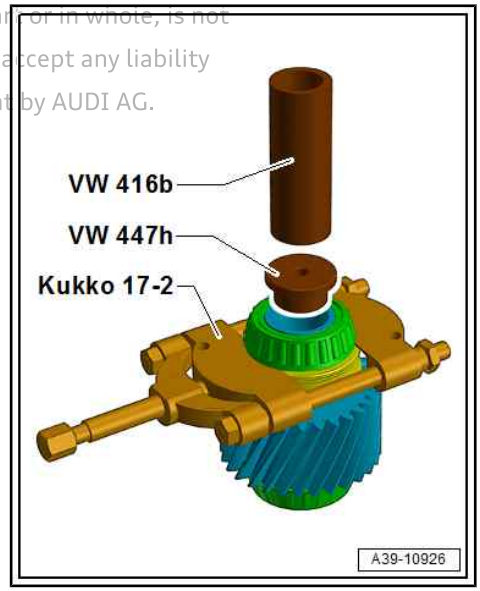


– With open side facing downwards, slide new oil seal on using assembly sleeve - T40381/1- .

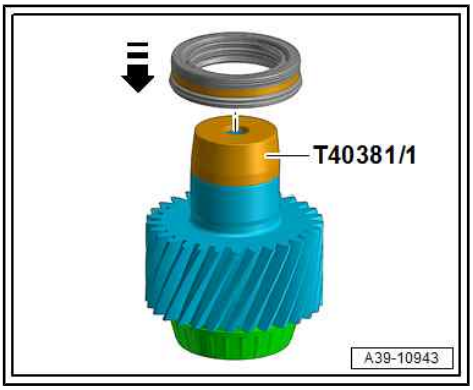

– Support input pinion on thrust pad - VW511- and carefully press tapered roller bearing -arrow- on using thrust piece - 3118- and thrust pad - VW447i- .

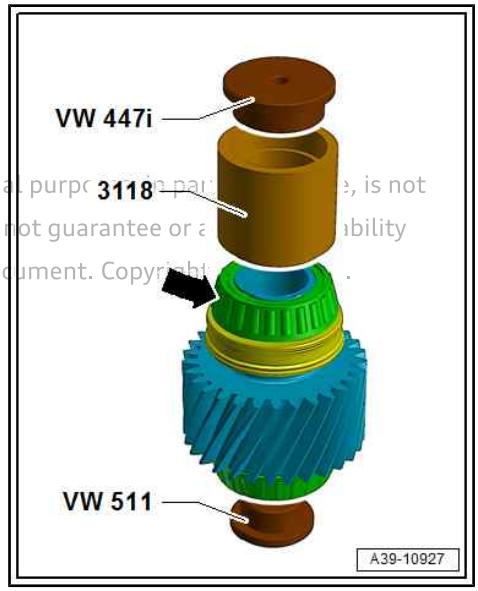


Protected by copyright. Copying for private or commercial purpo... e, is not permitted unless authorised by AUDI AG. AUDI AG does not guarantee or a... ability with respect to the correctness of information in this document. Copyright ... .

– Check that shim -1- is fitted.

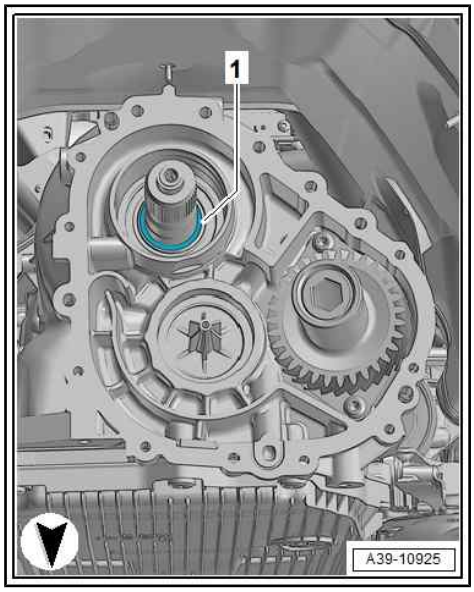


– Press input pinion into gearbox housing as far as stop using assembly aid - T40381/2-

**The remaining installation steps are carried out in the reverse sequence; note the following points:**

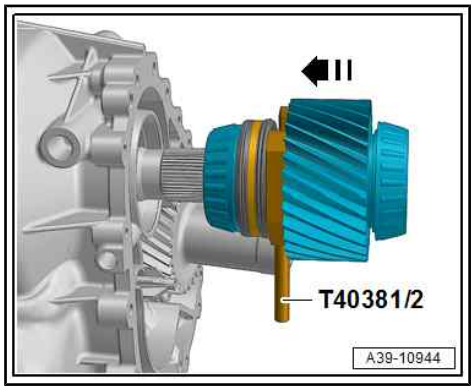

– Fit new bolt -1- with new sealing washer -2- and tighten
⇒ “2.1 Exploded view - transfer box”, page 63 .

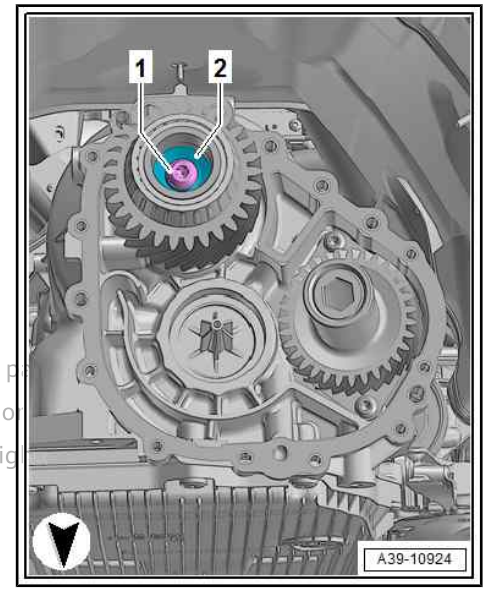


Protected by copyright. Copying for private or commercial purposes, in p
permitted unless authorised by AUDI AG. AUDI AG does not guarantee o
with respect to the correctness of information in this document. Copyrig

### Gearbox with oil pump

Depending on the version, an additional oil pump may be fitted in the transfer box housing.

– When fitting transfer box housing, ensure that oil pump drive aligns with gearbox output shaft.

– To do this, it may be necessary to rotate the gearbox output shaft by turning the front wheels.

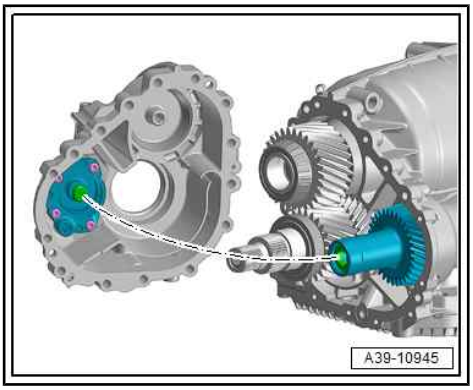


– To do so, release parking lock and secure parking lock lever with cable tie.

### Continued for all gearboxes

– Install transfer box housing and tighten to specified torque
⇒ Fig. ““Tightening sequence for end cover 0BK/0BW/0D5““ , page 64 .

– Install centre differential
⇒ “1.2 Removing and installing centre differential”, page 48 .
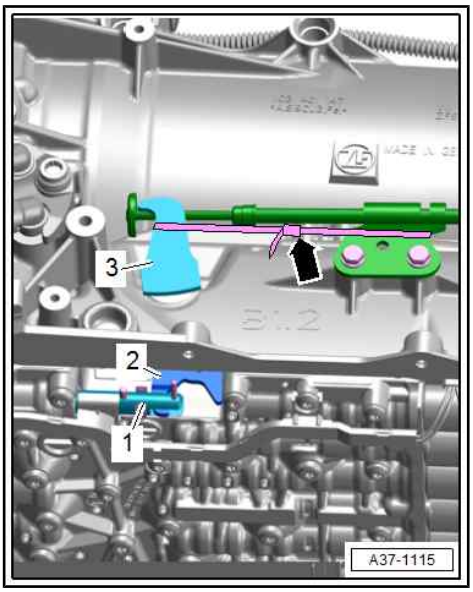
– Install propshaft ⇒ Rear final drive; Rep. gr. 39 ; Propshaft; Removing and installing propshaft .