MODEL IDENTIFICATION

MODEL IDENTIFICATION - CARS

Body Code (1)	Model
"C"	Park Avenue
"E"	Eldorado
"F"	Camaro & Firebird
"H"	Bonneville, Eighty Eight, LeSabre, LSS & Regency
"K"	(2) DeVille & Seville
"Y"	Corvette

(1) Vehicle body code is fourth character of VIN.

(2) Includes Concours and D'Elegance.

DESCRIPTION & OPERATION

Steering columns are designated as fixed or tilt column, and as column shift or floor shift. Column shift and floor shift columns are basically the same, except for the shift tube on column shift steering columns.

Steering column components are designed to collapse if impacted during a collision. Steering shaft, column jacket and shift tube (column shift) are 2-piece units injected with plastic to hold the 2 pieces together as one unit. If column and/or steering wheel are impacted, the injected plastic will shear, allowing the column assembly to collapse.

BRAKE/TRANSMISSION SHIFT INTERLOCK (BTSI) SYSTEM

This system does not allow shift lever to be moved out of Park unless brake pedal is pressed. With brake pedal released and ignition on, current flows through BTSI solenoid to ground, energizing solenoid. With solenoid energized, a lock pawl protrudes from solenoid, preventing shift lever from being moved.

With brake pedal pressed, current flows through stoplight switch to ground side of solenoid. Under this condition, battery voltage is available on positive and negative sides of solenoid. This causes solenoid to de-energize, releasing lock pawl.

COLUMN COLLAPSE FEATURE

Steering column is designed to collapse if impacted during a collision. Steering shaft and column jacket are both 2-piece units which are internally injected with plastic. Plastic protrudes from holes in each unit keeping 2 separate pieces held together as one unit. See **Fig. 17** . If the column or steering wheel is forcefully impacted, plastic pieces break off, allowing column and shaft to collapse.

PARK LOCK CABLE SYSTEM (A/T)

A park lock cable system prevents shift lever from being moved out of Park position unless ignition lock cylinder is out of LOCK position. It also prevents the lock cylinder from being turned to LOCK position unless shift lever is in Park position. This is accomplished by a park lock cable connected between lock cylinder and shift lever.

STEERING WHEEL ROTATION SENSOR

The steering wheel rotation sensor, on vehicles equipped with variable effort steering, senses rotation speed of the steering wheel assembly. This information provides more assist during sudden directional changes at highway speeds.

SERVICE PRECAUTIONS

WARNING: **All vehicles are equipped with air bag. See SERVICE PRECAUTIONS and DISABLING & ACTIVATING AIR BAG SYSTEM before attempting any repairs to steering column or components.**

Observe the following precautions when servicing air bag system:

- Disable air bag system before attempting any repairs to steering column or components. See **DISABLING & ACTIVATING AIR BAG SYSTEM** .
- After disabling air bag system, Diagnostic Energy Reserve Module (DERM) retains back-up voltage for about 10 minutes. To avoid accidental air bag deployment, wait at least 10 minutes after disabling air bag system before working on vehicle components.
- Always wear safety glasses when working around air bag system.
- Always carry a live (undeployed) air bag with trim cover facing away from your body. This minimizes the chance of injury if air bag accidentally deploys.
- Place a live (undeployed) air bag on a bench or other surface with trim cover facing up, away from surface. This will reduce motion of air bag if it accidentally deploys.
- Never probe air bag inflator module connectors. Air bag may accidentally deploy.
- Never attempt repair of any air bag system components. Replace any faulty components as required.

DISABLING & ACTIVATING AIR BAG SYSTEM

WARNING: **Supplemental Inflatable Restraint (SIR) Diagnostic Energy Reserve Module (DERM) retains back-up voltage for about 10 minutes after disabling SIR system. Wait a minimum of 10 minutes after disabling SIR before servicing steering column components. Servicing steering column components before 10-minute period may cause accidental deployment of air bag and possible personal injury.**

1. Before proceeding, follow air bag service precautions. See **SERVICE PRECAUTIONS** . To disable air

bag, with wheels in straight-ahead position, turn ignition switch to OFF-LOCK position and remove key. Remove SIR fuse (air bag fuse) from fuse block.

2. Remove left sound insulator. Remove Connector Position Assurance (CPA) clip from Yellow SIR harness connector at base of steering column. All SIR system connectors use CPA clips to ensure connector retention. Disconnect Yellow SIR connector. Wait at least 10 minutes before working on vehicle.
3. With SIR fuse removed and ignition on, AIR BAG indicator light will be on. This is normal operation for SIR system and does not indicate a fault code or system problem.
4. To activate air bag system, ensure ignition is off. Connect Yellow SIR connector and CPA clip at base of steering column. Install SIR fuse. Turn ignition switch to RUN position. Observe AIR BAG indicator light. Light should flash 7-9 times and then go out. If AIR BAG indicator light does not function as described, a malfunction in air bag system exists.

ADJUSTMENTS

CAUTION: When battery is disconnected, vehicle computer and memory systems may lose memory data. Driveability problems may exist until computer systems have completed a relearn cycle. See COMPUTER RELEARN PROCEDURES article in GENERAL INFORMATION before disconnecting battery.

NOTE: For aid in adjustments, see exploded views of column assemblies. See Fig. 19 - Fig. 25 .

BTSI & PARK LOCK SYSTEM

System Check

1. Place shift lever in Park. Turn lock cylinder to OFF-LOCK position. Remove key. If lock cylinder cannot be turned to OFF-LOCK position or key cannot be removed, perform appropriate adjustment procedure.
2. With lock cylinder in OFF-LOCK position, try to move shift lever out of Park. If shift lever can be moved out of Park, perform appropriate adjustment procedure.
3. Turn lock cylinder to RUN position. Try to move shift lever out of Park. If shift lever can be moved out of Park, perform appropriate adjustment procedure. Depress brake pedal, move shift lever out of Park. If shift lever cannot be moved out of Park, perform appropriate adjustment procedure.
4. Try to turn lock cylinder to OFF-LOCK position. Ignition switch should stop turning before reaching the OFF-LOCK position, and the key should not be able to be removed. If system does not operate as specified, perform appropriate adjustment procedure.
5. With key in same position as in previous step (just before OFF-LOCK position), place shift lever in Park. Turn lock cylinder toward RUN position, and then to OFF-LOCK position. Remove key. If system does not operate as specified, perform appropriate adjustment procedure.

Adjustment (Column Shift "C" & "H" Bodies)

1. Turn lock cylinder to OFF position (not LOCK position). Place shift lever in Neutral. Unlock shift cable adjuster at transaxle end of shift cable (pull button up) to release cable tension.
2. Lock shift cable adjuster (push button down). Place shift lever in Park. Ensure shift indicator is adjusted. Recheck BTSI system. If system still does not operate as specified, go to next step.
3. Remove interlock solenoid by prying actuator end fitting from shift lever stud and prying adjuster block from bracket. Remove retaining clip. Compress adjuster block to release, slide away from solenoid as far as possible. See **Fig. 1** . With shift lever in Neutral, reinstall solenoid. Move shift lever to Park, BTSI solenoid actuator is now properly adjusted. Reinstall adjustment retaining clip.
4. Recheck BTSI system. If system does not operate as specified, repeat previous step.

Adjustment (Column Shift "E" & "K" Bodies)

NOTE: Lock cylinder must be in RUN position when park lock cable is removed from or inserted into ignition switch inhibitor.

Turn lock cylinder to RUN position, depress brake pedal. Move shift lever out of Park position. Disengage locking button, pull cable away from solenoid until fitting starts to extend, compressing spring inside ball joint. Allow cable to move back .04-.08" (1-2 mm), engage locking button. See **Fig. 2** . Recheck BTSI system. If system does not operate as specified, repeat procedure.

Adjustment (Floor Shift)

1. Remove center console trim for access to base of shift lever. Place shift lever in Park. Turn lock cylinder to RUN position to energize BTSI solenoid. Unlock cable adjuster at base of shift lever by pressing locking button upward. Turn lock cylinder to LOCK position.
2. On "C", "F", "H" and "Y" bodies, push cable connector nose forward to remove slack. On "E" and "K" bodies, push cable housing toward shifter to remove slack. On all models, with no load applied to cable, lock cable adjuster button by pressing locking button down. Install center console trim. Connect negative battery cable.
3. Recheck BTSI system. If system does not operate as specified, repeat previous step.

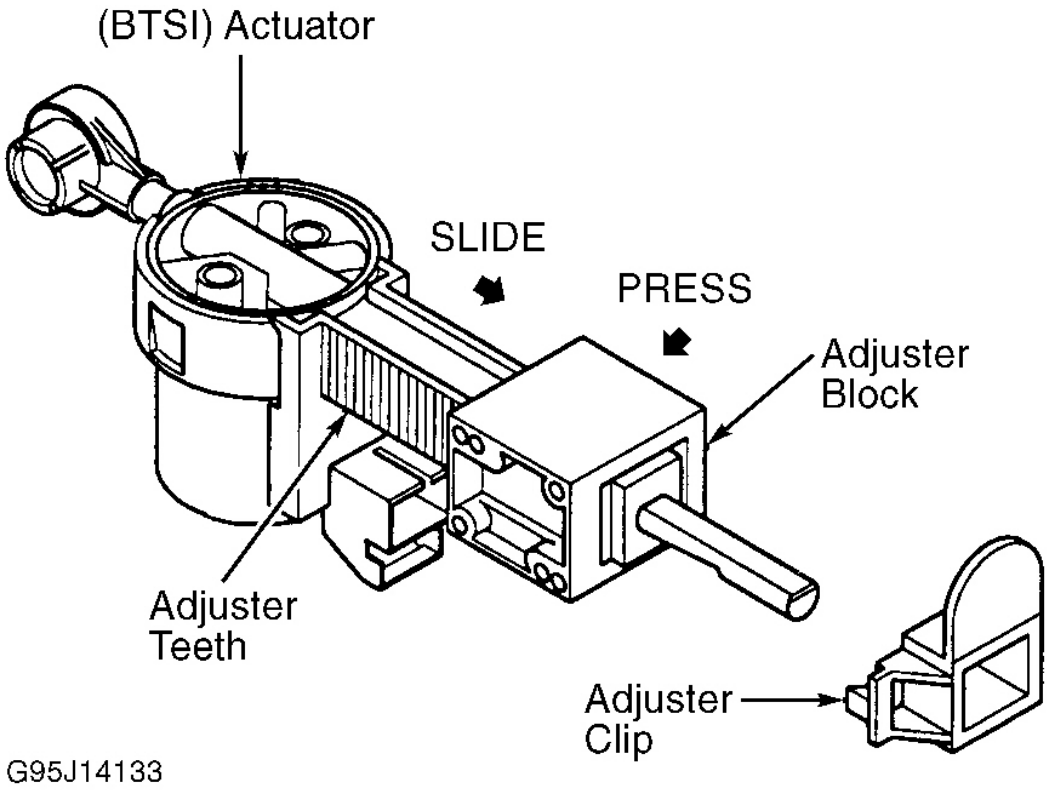

Fig. 1: Adjusting BTSI Actuator ("C" & "H" Bodies)
Courtesy of GENERAL MOTORS CORP.

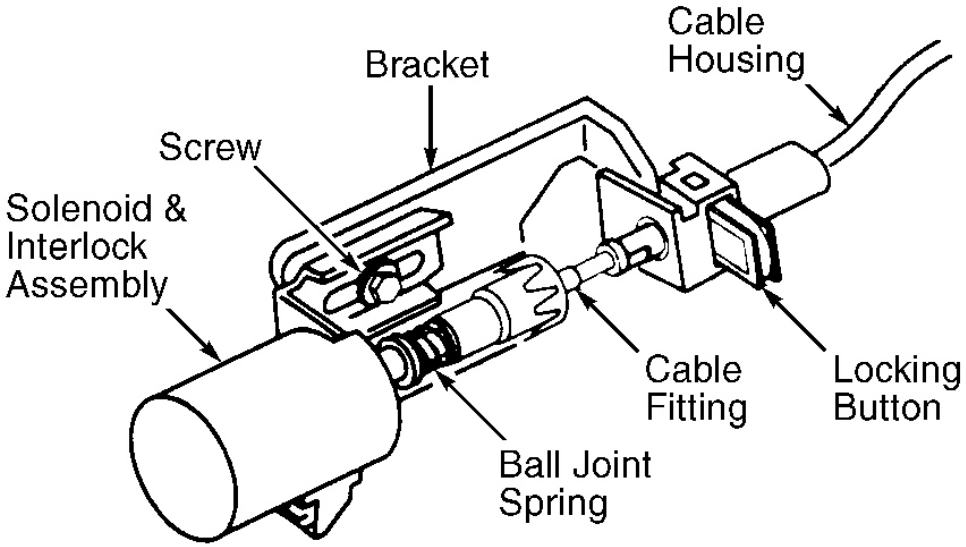

NOTE: DO NOT extend cable fitting while adjusting solenoid.

G94C32922

Fig. 2: Adjusting Park Lock Cable ("E" & "K" Bodies)
Courtesy of GENERAL MOTORS CORP.

DIMMER SWITCH

1. With switch removed from column bracket, insert a 3/32" drill bit into adjusting pin hole to limit switch travel. See **Fig. 3** . Insert actuator rod into switch. Install switch to column bracket, finger-tighten screws.
2. Lightly push switch upward against actuator rod until no lash (free-play) exists between rod and switch. Tighten mounting screws to 35 INCH lbs. (4 N.m). Remove drill bit. Ensure proper switch operation using dimmer/headlight switch handle.

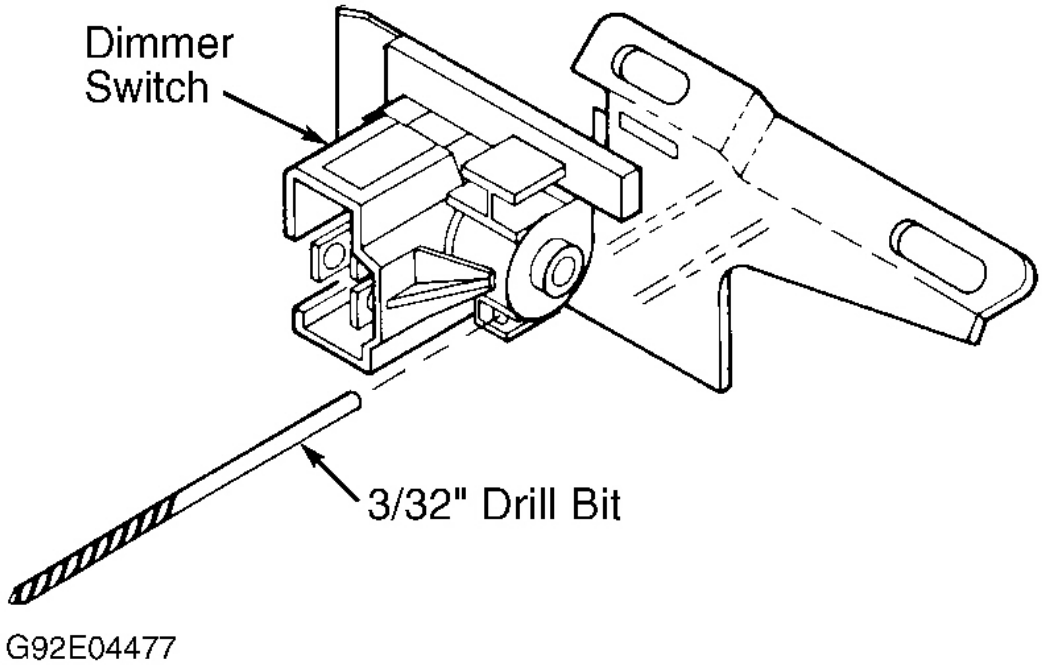

Fig. 3: Adjusting Dimmer Switch
Courtesy of GENERAL MOTORS CORP.

IGNITION SWITCH

CAUTION: New ignition switch is pinned in OFF-LOCK position. Plastic pin must be removed before operating switch.

1. Set key lock cylinder in OFF-LOCK position. On fixed column, set ignition switch slider (where actuator rod connects to switch) to OFF-LOCK position by moving slider as far left as possible, and then one detent to right. See **Fig. 4** .
2. On tilt column, set ignition switch slider (where actuator rod connects to switch) to OFF-LOCK position by moving slider to right as far as possible, and then one detent to left. See **Fig. 4** .
3. Install switch. Tighten switch screws to 35 INCH lbs. (4 N.m). Ensure ignition switch functions properly with lock cylinder in all positions.

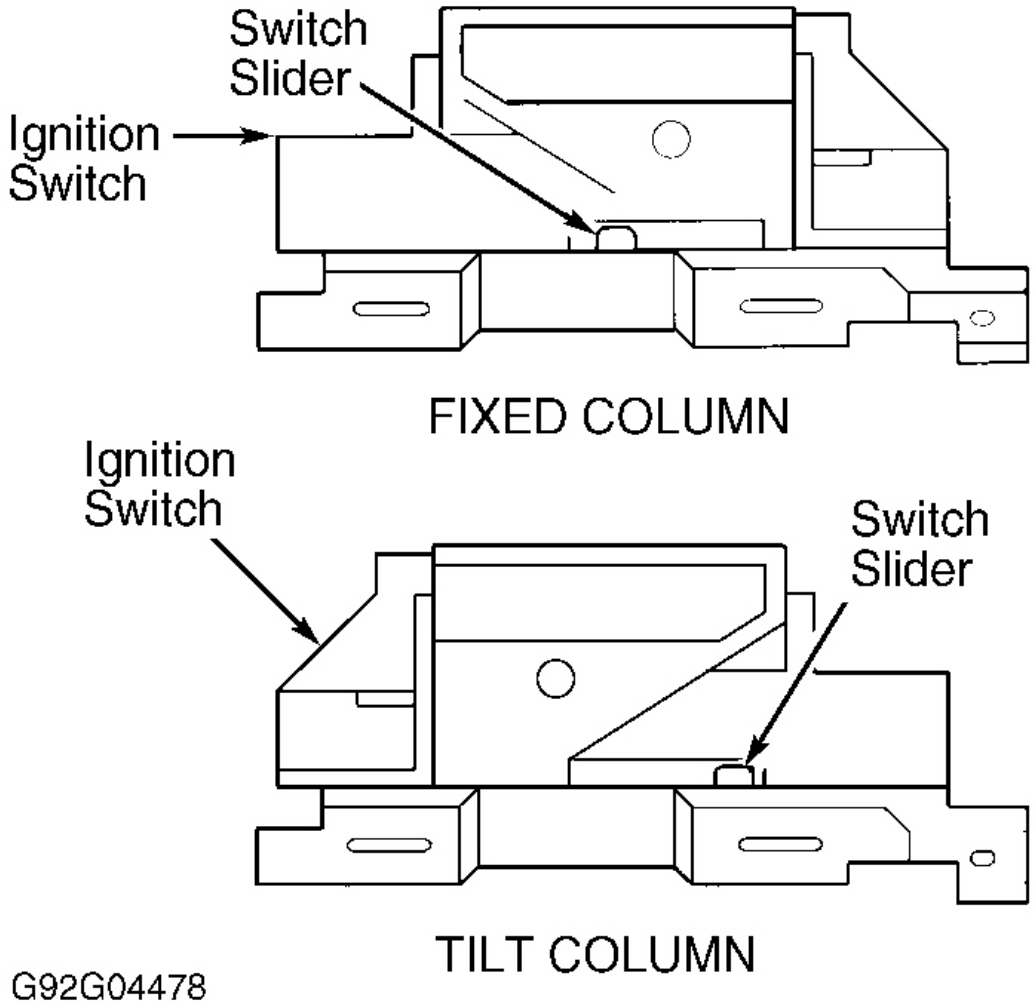

Fig. 4: Adjusting Ignition Switch
Courtesy of GENERAL MOTORS CORP.

COLUMN SHIFT INDICATOR

"E" & "K" Bodies

1. Position shift lever in Neutral. Loosen shift indicator adjustment nut on steering column. Slide adjuster until shift indicator is centered in Neutral.
2. Move shift lever through all positions, and back to Neutral to check adjustment. Verify pointer indicates proper gear position, and does not show 2 gear positions at same time. See **Fig. 5** .

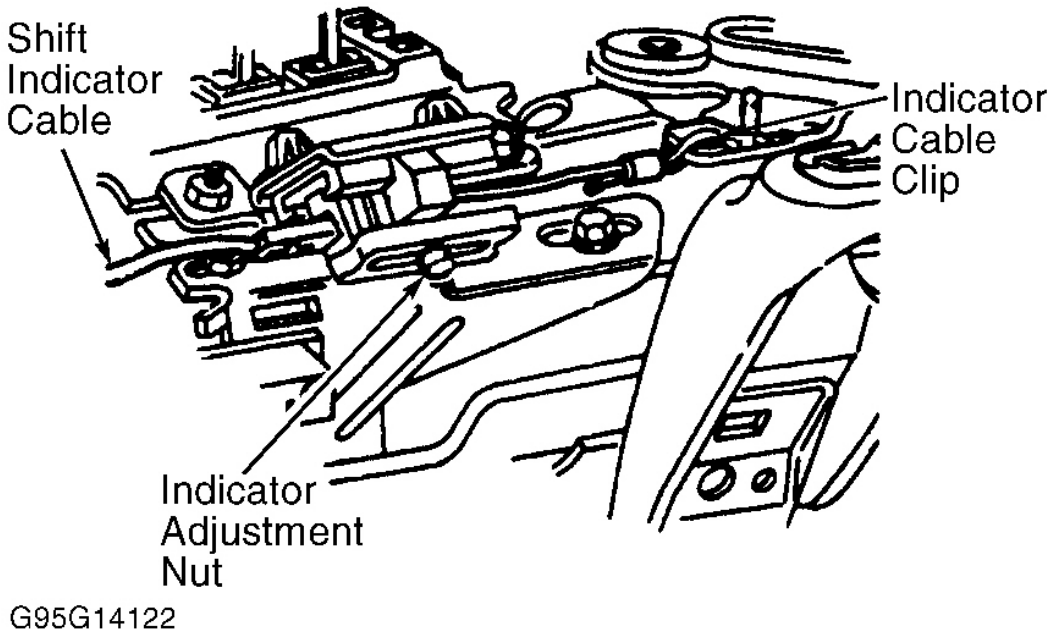

Fig. 5: Adjusting Column Shift Indicator ("E" & "K" Bodies)
Courtesy of GENERAL MOTORS CORP.

All Except "E" & "K" Bodies

1. Position shift lever in Neutral. Position guide clip on edge of shift bowl to center position pointer in Neutral. Push clip onto bowl. Ensure that cable rests on bowl and not on column jacket.
2. With gear selector in Neutral, holes must be visible on both sides of pointer. Pointer must cover portions of "1" or be to right of "1" when transaxle is in LOW position. See **Fig. 6** .

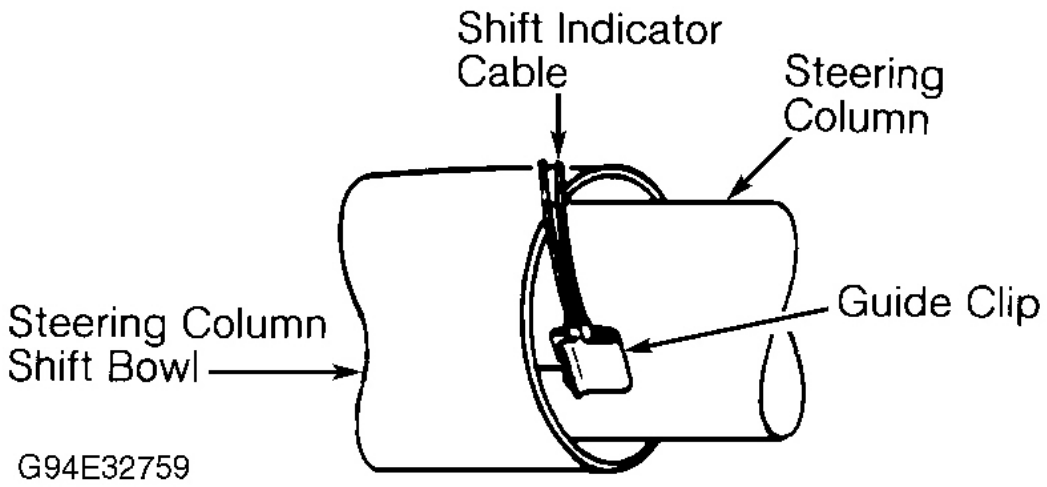

Fig. 6: Adjusting Column Shift Indicator (All Except "E" & "K" Bodies)
Courtesy of GENERAL MOTORS CORP.

SIR COIL ASSEMBLY

NOTE: **If coil assembly hub or steering shaft were rotated after assembly was removed, use the following procedure to center coil ribbon before installing assembly. A new coil ribbon does not require centering, as it is already centered and held in position with a plastic tab. Remove tab after coil assembly is installed.**

1. Hold coil assembly with clear bottom upward to see coil ribbon. While holding coil assembly housing and pressing spring lock, rotate hub in direction of arrow (on bottom of assembly) until it stops. Coil assembly should now be wound up snug against center hub.
2. Rotate coil assembly hub in opposite direction about 2 1/2 turns. Release spring lock between locking tabs in front of arrow. Coil assembly can now be installed if wheels are in straight-ahead position.

REMOVAL & INSTALLATION

CAUTION: **When battery is disconnected, vehicle computer and memory systems may lose memory data. Driveability problems may exist until computer systems have completed a relearn cycle. See COMPUTER RELEARN PROCEDURES article in GENERAL INFORMATION before disconnecting battery.**

NOTE: **All components listed under REMOVAL & INSTALLATION can be removed without removing steering column. To remove all other components, remove steering column, and then perform appropriate procedure under OVERHAUL.**

See Fig. 19 -Fig. 25 .

AIR BAG (INFLATOR) MODULE

Removal

1. See **SERVICE PRECAUTIONS** . Disable SIR system. See **DISABLING & ACTIVATING AIR BAG SYSTEM** .
2. Loosen screws behind steering wheel using No. 30 Torx bit, until air bag module is released from steering wheel. Pull up air bag module, and then disconnect electrical connectors from rear of module. Remove module and position aside with pad facing upward.

Installation

Connect electrical connectors to rear of module. Install module in steering wheel and install retaining screws. Tighten screws to specification. See **TORQUE SPECIFICATIONS** table. Activate SIR system. See **DISABLING & ACTIVATING AIR BAG SYSTEM** .

STEERING WHEEL

Removal & Installation

1. Set front wheels in straight-ahead position. Turn ignition switch to LOCK position. Remove air bag module. See **AIR BAG (INFLATOR) MODULE** .
2. Mark steering wheel hub in relation to steering shaft for installation reference. Remove steering wheel nut. Using steering wheel puller, remove steering wheel. DO NOT install puller bolts too deeply into hub, as SIR coil assembly will be damaged.
3. To install, reverse removal procedure. Align marks on steering wheel hub and steering shaft before installing steering wheel. Tighten steering wheel nut to 30 ft. lbs. (41 N.m). Install air bag. Activate SIR system. See **DISABLING & ACTIVATING AIR BAG SYSTEM** .

SIR COIL ASSEMBLY

CAUTION: Set front wheels in straight-ahead position before removing or installing coil assembly. This centers the coil assembly. If an off-centered coil assembly is installed, ribbon in coil assembly will break when steering wheel is turned. Always keep ignition switch in LOCK position to prevent wheel from turning and allowing SIR coil to become off-centered. To center the coil assembly, see SIR COIL ASSEMBLY under ADJUSTMENTS.

Removal

1. Set front wheels in straight-ahead position and turn ignition switch to LOCK position. Disable SIR system. See **DISABLING & ACTIVATING AIR BAG SYSTEM** . Remove air bag module. See **AIR BAG (INFLATOR) MODULE** . Remove steering wheel. See **STEERING WHEEL** .

2. Remove coil assembly retaining ring. Note orientation of coil assembly to steering column housing. Remove coil assembly, allowing assembly to hang by wiring. Remove wave washer. Remove and discard lock plate retaining ring using Lock Plate Compressor (J-23653-SIR). See **Fig. 7** . Remove lock plate, turn signal cancel cam and upper bearing spring. Remove upper bearing inner race seat and inner race.
3. On all except "E" and "K" bodies, remove multifunction switch lever by grasping and pulling lever straight out. On "E" and "K" bodies, remove multifunction switch lever by pushing lever in, rotating 1/4 turn clockwise to release, and pulling it straight out. Remove screw retaining hazard flasher knob. On all models, move turn signal switch up to right turn position, remove screws and allow switch to hang by wiring.
4. To aid in installing SIR coil wiring and connector down through column assembly, attach long piece of mechanics wire to coil assembly lower wiring connector at base of steering column. Carefully pull coil assembly, wiring and connector up and out of column. Disconnect mechanics wire from connector and allow wire to hang.

Installation

NOTE: Use care not to pinch wires when installing components. After wiring is fed through column, attach CAUTION tag to wiring near connector at base of steering column. Tag is included in SIR coil assembly repair kit.

To install, reverse removal procedure. Ensure coil assembly hub and steering shaft are centered before installing coil assembly. After coil assembly is installed, remove slack from coil assembly wiring in steering column to prevent wire damage. Activate SIR system. See **DISABLING & ACTIVATING AIR BAG SYSTEM** .

TURN SIGNAL SWITCH

Removal & Installation

1. Remove steering wheel and SIR coil assembly. See **STEERING WHEEL** and **SIR COIL ASSEMBLY** . Remove lock plate retaining ring using Lock Plate Compressor (J-23653-SIR) and small tip screwdriver or scribe. See **Fig. 7** . Remove lock plate.
2. Remove turn signal cancel cam, upper bearing spring, upper bearing inner race seat and inner race. Remove screw retaining hazard flasher knob assembly. Remove lower instrument panel and steering column covers. Disconnect turn signal switch harness connector from vehicle harness.
3. Tie mechanics wire to turn signal switch harness connector to ease installation of turn signal switch harness connector down through column. Remove turn signal switch from steering shaft while pulling harness up through column. To install, reverse removal procedure.

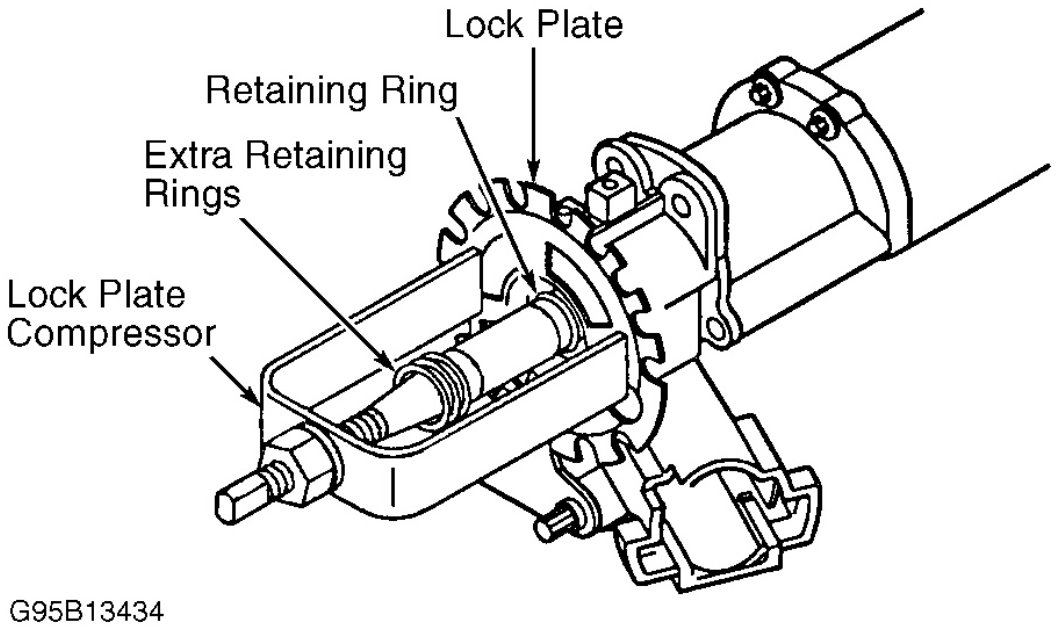

Fig. 7: Removing Shaft Lock Retaining Ring
Courtesy of GENERAL MOTORS CORP.

LOCK CYLINDER

Removal & Installation

Remove turn signal switch. See **TURN SIGNAL SWITCH** . With ignition key removed, remove buzzer switch. Insert key into lock cylinder. On all except "C" body, turn lock cylinder to LOCK position. Remove lock cylinder retaining screw.

On "H" body, remove pivot and pulse switch connector from bulkhead connector and remove 13-way secondary lock. Remove pass key wire terminals No. 12 and 13.

On "C" body, remove lower and upper column shroud. Turn key to START position. Push lock cylinder lock pin using 1/16" Allen wrench. Release key to RUN position.

On all bodies, remove lock cylinder. To install, reverse removal procedure. Tighten fasteners to specification. See **TORQUE SPECIFICATIONS** .

DIMMER SWITCH

Removal

Disable SIR system. See **DISABLING & ACTIVATING AIR BAG SYSTEM** . Remove lower instrument

panel trim panel(s) from base of column to access dimmer switch. Disconnect electrical connector from dimmer switch mounted on column. Remove 2 screws retaining dimmer switch and remove switch from actuator rod.

Installation

Install and adjust dimmer switch using adjustment procedure. See **DIMMER SWITCH** under ADJUSTMENTS. To install remaining components, reverse removal procedure.

IGNITION SWITCH

Removal

Disable SIR system. See **DISABLING & ACTIVATING AIR BAG SYSTEM** . Disconnect negative battery cable. Remove lower instrument panel trim panel(s) from base of steering column to access ignition switch mounted on column. Remove dimmer switch. See **DIMMER SWITCH** . Lift and remove ignition switch from actuator rod. Disconnect electrical connectors from ignition switch.

Installation

Connect electrical connectors to ignition switch. Install and adjust ignition switch using appropriate adjustment procedure as per type of column. See **IGNITION SWITCH** under ADJUSTMENTS. Install and adjust dimmer switch using adjustment procedure. See **DIMMER SWITCH** under ADJUSTMENTS. To install remaining components, reverse removal procedure.

LOCK HOUSING COVER

Removal & Installation

1. Remove steering wheel, SIR coil assembly, turn signal switch and lock cylinder. Remove dimmer and ignition switches. Remove column end cover from lock housing (if equipped). Disconnect cruise control switch connector (if equipped) near multifunction switch.
2. Disconnect multifunction switch connector. Set multifunction switch lever in OFF position (centered). On all except "E" and "K" bodies, remove multifunction switch lever by grasping and pulling lever straight out. On "E" and "K" bodies, remove multifunction switch lever by pushing lever in, rotating 1/4 turn clockwise to release, and pulling it straight out.
3. Unscrew and remove tilt lever (if equipped). Remove lock housing screws. Remove lock housing from column. To install, reverse removal procedure.

MULTIFUNCTION SWITCH LEVER

NOTE: **Multifunction switch lever incorporates wiper/washer switch and acts as mechanical link to turn signal switch and headlight dimmer switch. Also, cruise control switch (if equipped) is on end of multifunction switch lever.**

Removal & Installation

Ensure lever is in center OFF position. Firmly grasp tilt lever and rotate counterclockwise to remove. Remove housing end cap. Disconnect electrical connector. On all except "E" and "K" bodies, remove multifunction switch lever by pulling it straight out of turn signal switch. On "E" and "K" bodies, remove multifunction switch lever by pushing lever in, rotating 1/4 turn clockwise to release, and pulling it straight out. To install, reverse removal procedure.

STEERING WHEEL ROTATION SENSOR

Removal & Installation

1. Set front wheels in straight-ahead position and turn ignition switch to LOCK position. Disconnect negative battery cable. Disable SIR system. See **DISABLING & ACTIVATING AIR BAG SYSTEM** . Remove bolt and nut from coupling attaching upper intermediate steering shaft assembly to lower steering shaft assembly. See **Fig. 8** .
2. Remove upper intermediate steering shaft assembly from lower steering shaft assembly. Disconnect electrical connector. Remove lower bearing adapter clip. Remove steering wheel rotation sensor. To install, reverse removal procedure. Tighten intermediate shaft nut to 40 ft. lbs. (54 N.m).

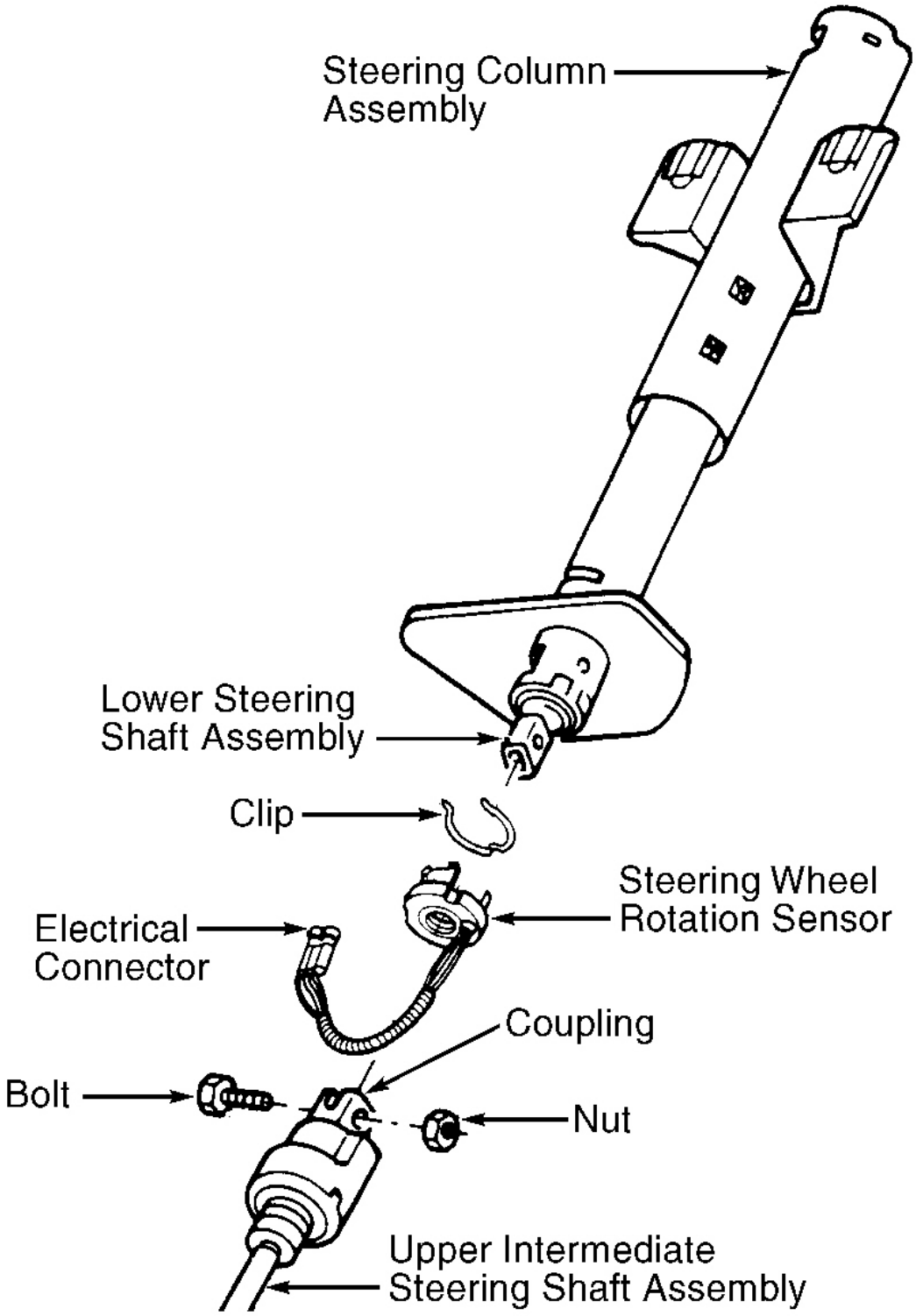
Steering Column Assembly
Lower Steering Shaft Assembly
Clip
Steering Wheel Rotation Sensor
Electrical Connector
Coupling
Bolt
Nut
Upper Intermediate Steering Shaft Assembly
G94I32928

Fig. 8: Removing Steering Wheel Rotation Sensor (Typical)
Courtesy of GENERAL MOTORS CORP.

STEERING COLUMN

CAUTION: Column must be handled with care when removed from vehicle. Use only fasteners of the same or equivalent part number if replacement is necessary. Improper fasteners or tightening could result in column failure. Applying excessive pressure, or causing impact to mainshaft during service, may cause column to collapse. If weight of column is supported by lower attachment, lower retainer or bushing will be damaged. On vehicles with SIR, do not rotate steering shaft after column is removed. SIR coil assembly will be damaged.

Removal

1. Disable SIR system (if equipped). See **DISABLING & ACTIVATING AIR BAG SYSTEM** . Disconnect negative battery cable. Set front wheels in straight-ahead position and turn ignition switch to LOCK position. Remove trim panels from around steering column as necessary.
2. Remove steering wheel. See **STEERING WHEEL** . Remove stoplight switch. On most models, remove lower column joint coupling bolt attaching steering rack intermediate shaft to steering column shaft. If required, remove lower column toe plate-to-firewall attaching bolts.
3. On column shift models, disconnect transmission linkage rod or cable from lever on shift tube and disconnect gear indicator cable from column. On floor shift models, disconnect park lock cable from ignition lock inhibitor. Disconnect electrical connectors as necessary. Remove steering column bracket(s) mounting nuts, and remove steering column.

Installation

To install, reverse removal procedure. Tighten column bracket mounting nuts to 20 ft. lbs. (27 N.m). Tighten shaft joint coupling nut to 35 ft. lbs. (47 N.m). Tighten column harness connector bolt to 42 INCH lbs. (4.8 N.m). After installation is complete, activate SIR system. See **DISABLING & ACTIVATING AIR BAG SYSTEM** .

LOWER BEARING & RELATED COMPONENTS

Removal & Installation

Remove steering column and lower shaft joint coupling. Remove column snap ring or retaining clip to remove lower bearing and related components. To install, reverse removal procedure.

OVERHAUL

NOTE: For aid in overhaul, see exploded views of column assemblies. See Fig. 19 -Fig. 25 .

REPAIR PROCEDURES

Preparation

CAUTION: DO NOT strike steering shaft with hammer to remove steering wheel. Hammering will loosen plastic injections which maintain column rigidity. DO NOT thread steering wheel puller bolts completely through steering wheel hub, as this will damage to SIR coil assembly.

Remove steering wheel and steering column, and then remove all other components listed under REMOVAL & INSTALLATION. Overhaul procedures are similar and typical of all column variations.

Disassembly (Fixed Column)

Remove lower bearing and related components. See **LOWER BEARING & RELATED COMPONENTS** . Remove retaining ring from top of steering column shaft. Remove steering column shaft. Remove shift lever bowl (column shift) or bowl (floor shift). Remove bowl shroud and shift tube from column jacket.

Disassembly (Tilt Column)

1. Using Tilt Spring Compressor (J-39346), compress spring retainer at least 1/4". Rotate lower hex of tilt spring compressor counterclockwise 1/4 turn to release retainer. Remove tilt spring compressor, retainer, spring and guide. See **Fig. 9** .

NOTE: Mark upper shaft in relation to lower shaft for reassembly reference. Failure to assemble properly will cause steering wheel to be turned 180 degrees from its correct position.

2. Using Pivot Pin Remover (J-21854-01), remove pivot pins from column housing. See **Fig. 10** . Install tilt lever. Pull back tilt lever, and then pull column housing down and away from column. Components can now be removed from column housing. Remove lower bearing and related components. Remove steering column shaft.
3. Remove upper and lower shaft assembly. Note orientation of pinch bolt notch to upper shaft block tooth. Tilt shafts at 90-degree angle to each other to disengage. Rotate centering spheres 90 degrees, and then remove spheres. Remove joint preload spring from centering sphere.
4. Remove column housing support, shift lever gate and shift tube retaining ring. Remove thrust washer, shaft lock, wave washer and shift tube. Remove shift lever bowl (column shift) or bowl (floor shift). Remove bowl shroud. Remove shift lever spring from gearshift lever bowl. Remove gearshift bowl shroud from gearshift lever bowl (column shift).

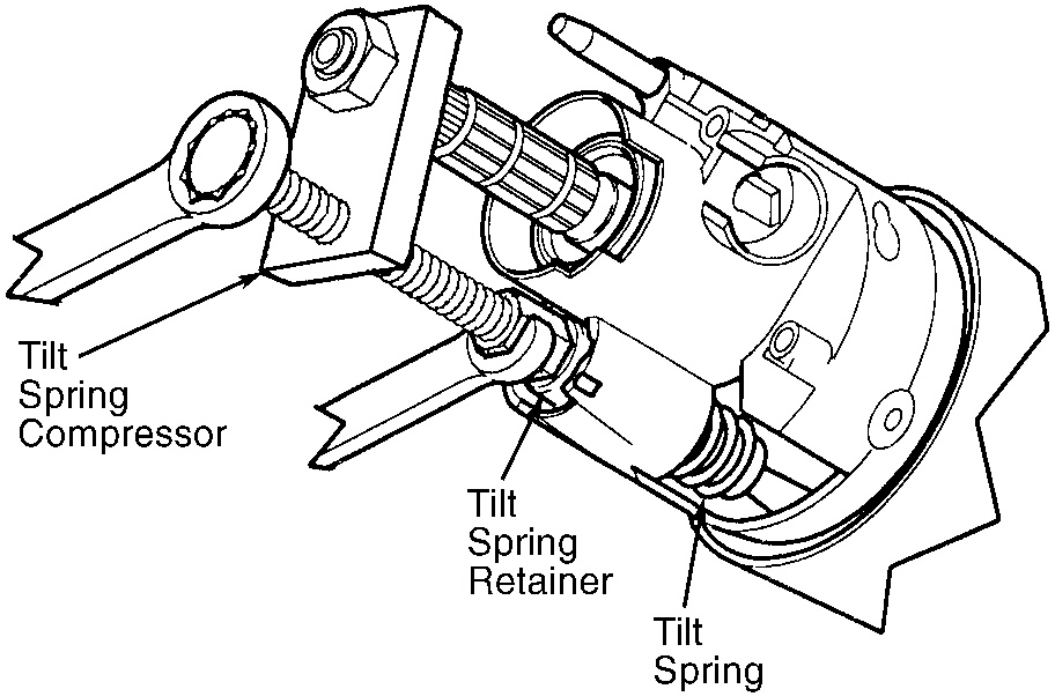

NOTE: Seat counterbore of tool over Steering Shaft & secure with standard hexagon nut.
Turn counterclockwise to remove Spring Retainer.

G95H14123

Fig. 9: Removing Tilt Spring
Courtesy of GENERAL MOTORS CORP.

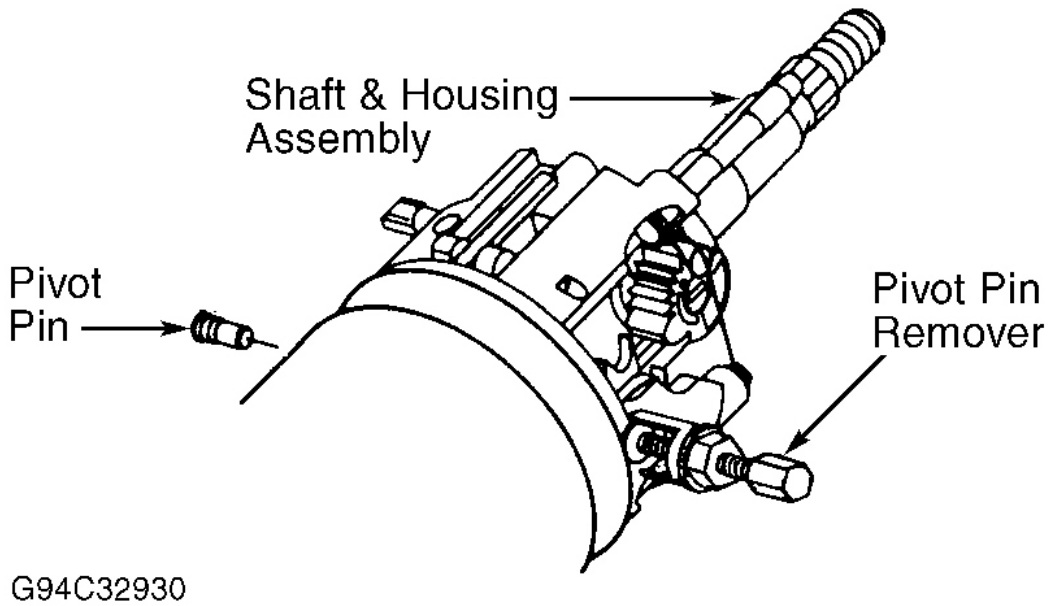

Fig. 10: Removing Pivot Pin
Courtesy of GENERAL MOTORS CORP.

NOTE: **Vehicles involved in an accident with frame damage, major body damage, impact to steering column or air bag deployment may have a damaged or misaligned steering column. Use following procedures to inspect steering column for damage.**

Inspection (Column Jacket)

Remove lower bearing from bottom of column. Using **COLUMN JACKET COLLAPSE MEASUREMENTS** table as a guide, measure distance between points on column jacket as specified in illustration. See **Fig. 11** -**Fig. 15** . If distance measured is not as specified, replace column jacket.

COLUMN JACKET COLLAPSE MEASUREMENTS (1)

Application	In. (mm)
"C" Body	5.11-5.19 (129.92-131.92)
"E" & "K" Bodies	
Column Shift	4.99-5.02 (126.63-127.63)
Floor Shift	5.26-5.29 (133.48-134.48)
"F" Body	12.73-12.77 (323.44-324.44)
"H" Body	5.11-5.19 (129.92-131.92)
"N" Body	4.05-4.09 (102.88-103.88)

"Y" Body	9.63-9.67 (244.70-245.70)
(1) See appropriate illustration.	

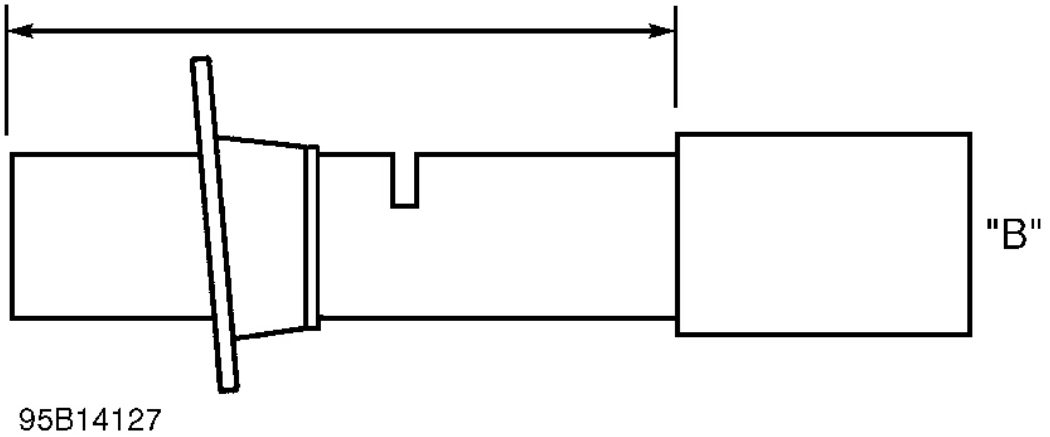

Fig. 11: Measuring Column Jacket ("F" & "Y" Bodies)
Courtesy of GENERAL MOTORS CORP.

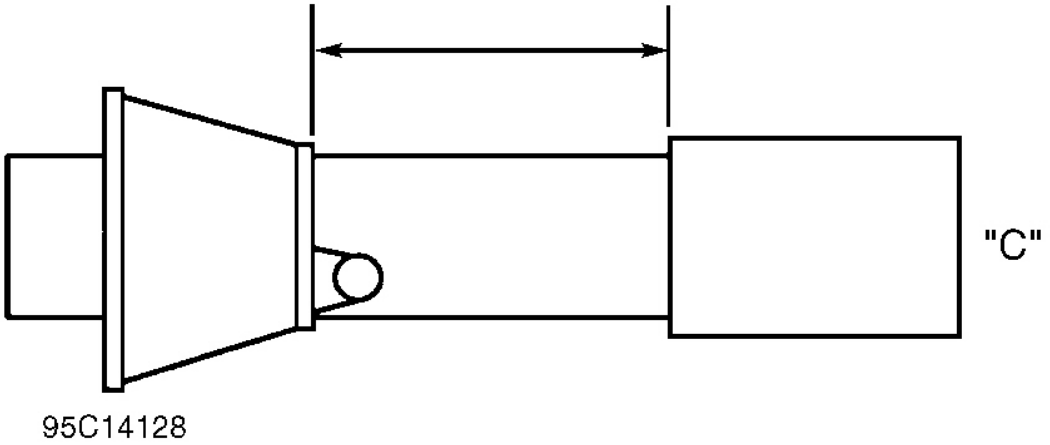

Fig. 12: Measuring Column Jacket ("C" & "H" Bodies)
Courtesy of GENERAL MOTORS CORP.

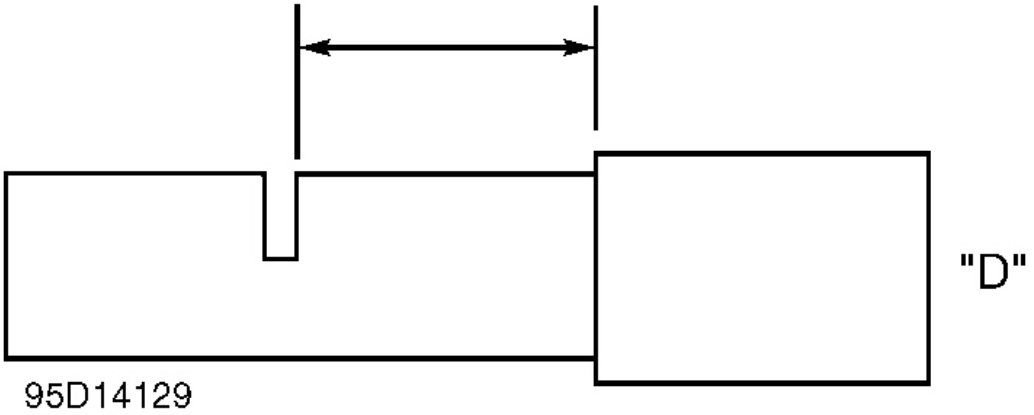

Fig. 13: Measuring Column Jacket ("E" & "K" Bodies - Column Shift)
Courtesy of GENERAL MOTORS CORP.

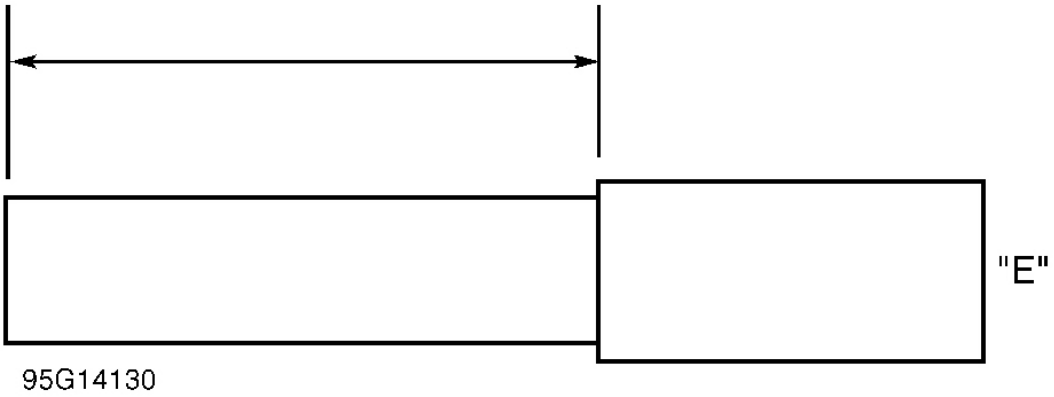

Fig. 14: Measuring Column Jacket ("E" & "K" Bodies - Floor Shift)
Courtesy of GENERAL MOTORS CORP.

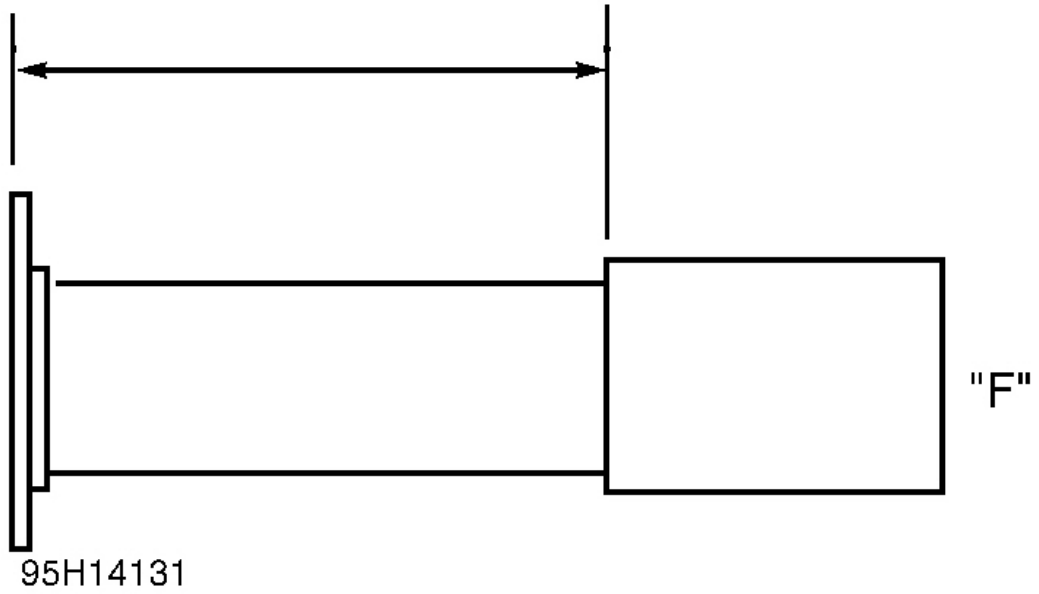

Fig. 15: Measuring Column Jacket ("N" Body)
Courtesy of GENERAL MOTORS CORP.

Inspection (Shift Tube)

Inspect shift tube for sheared injection plastic See **Fig. 16** . If injection plastic is sheared, replace shift tube. Check shift lever operation. If lever can be moved to Park position without raising the lever, upper shift tube plastic bearing is broken. Replace shift tube.

Inspection (Steering Shaft)

Inspect steering shaft for sheared injection plastic. See **Fig. 17** . If injection plastic is sheared, replace steering shaft. Check steering shaft runout by installing a dial indicator at lower end of steering shaft, and then rotating steering wheel. If runout exceeds .062" (1.59 mm), replace steering shaft.

Reassembly (All Columns)

To reassemble, reverse disassembly procedure. Apply a thin coat of lithium-based grease to all friction points when reassembling.

Spring Height Measurement

Measure distance from adapter face and bearing assembly to lower spring retainer. Spring height must equal 1.0" (25.4 mm). See **Fig. 18** .

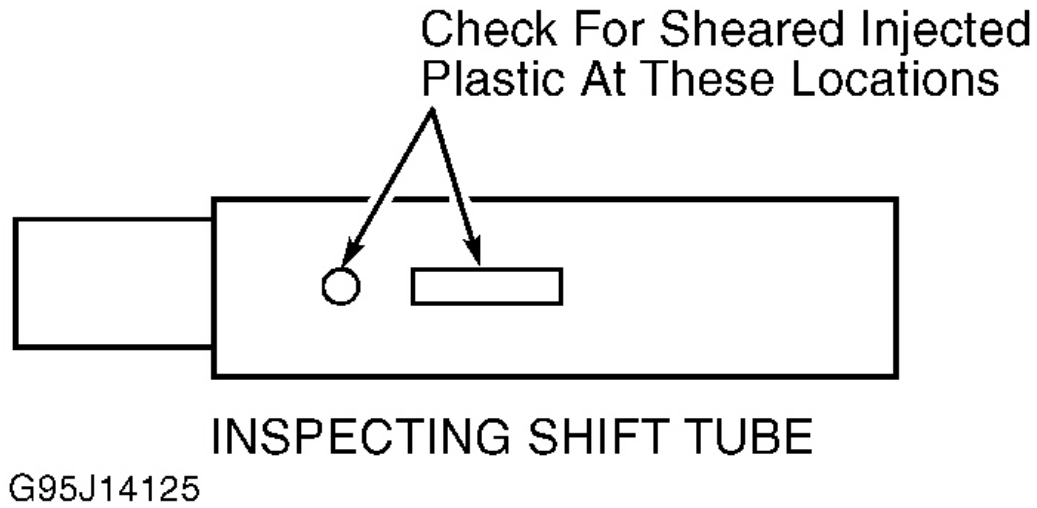

Fig. 16: Inspecting Shift Tube
Courtesy of GENERAL MOTORS CORP.

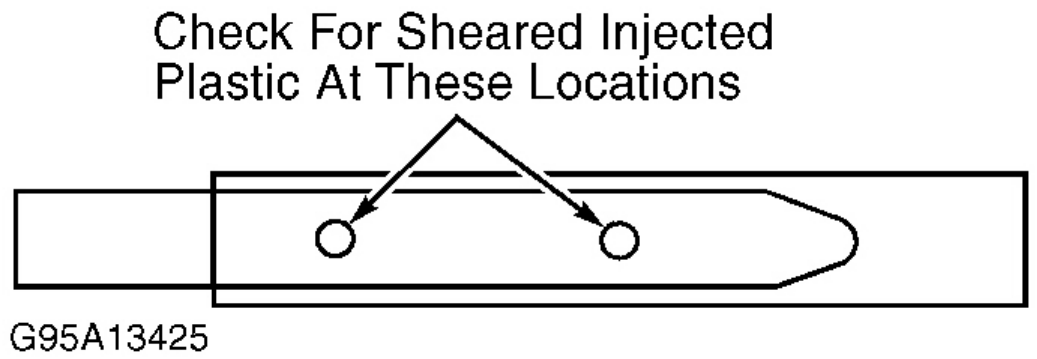

Fig. 17: Inspecting Steering Shaft
Courtesy of GENERAL MOTORS CORP.

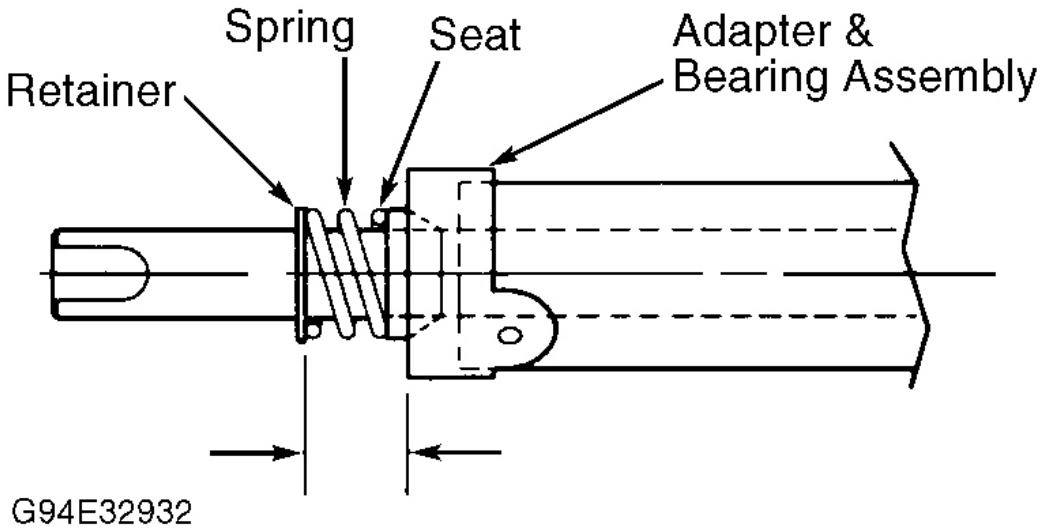

Fig. 18: Measuring Spring Height
Courtesy of GENERAL MOTORS CORP.

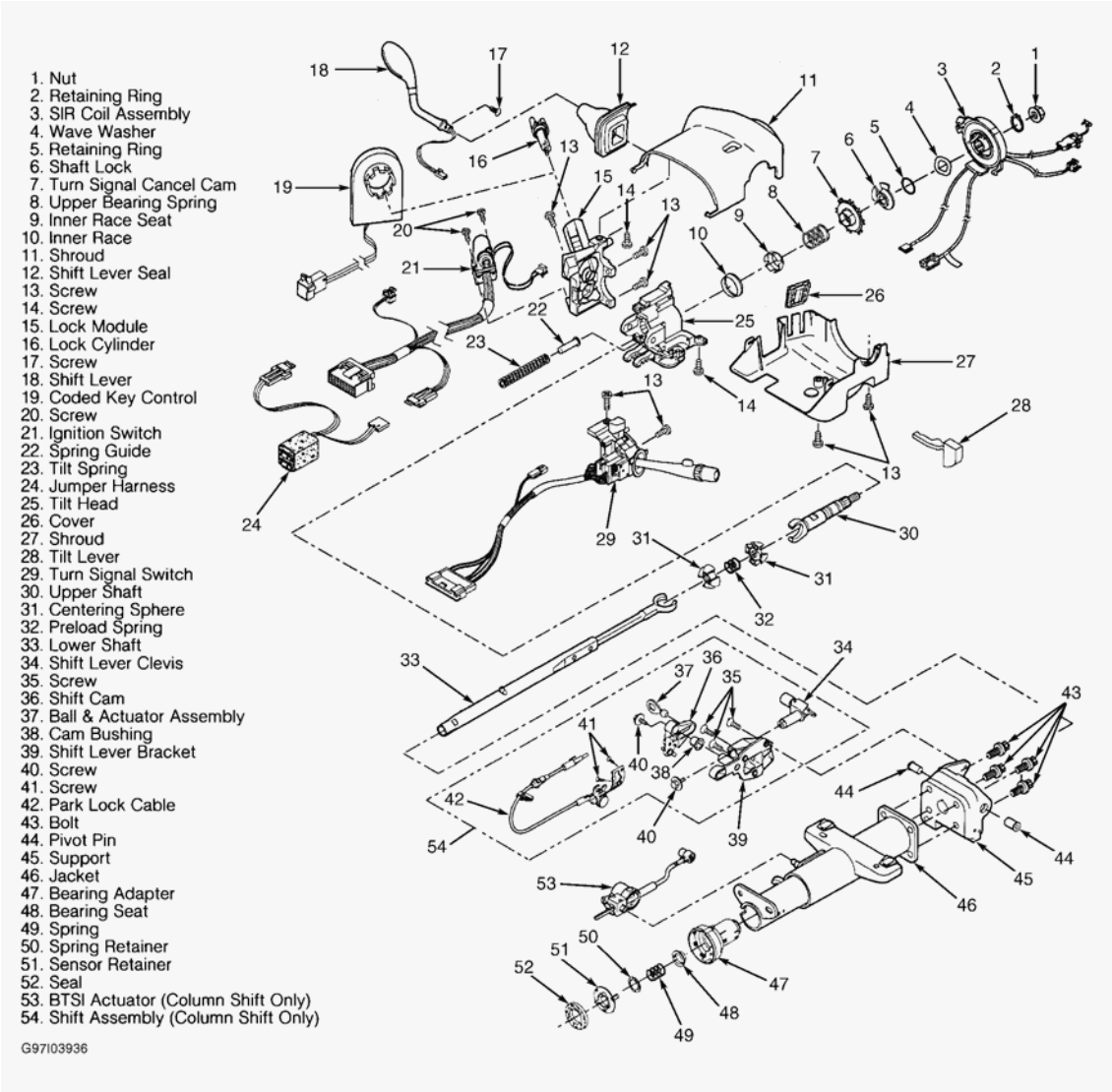

Fig. 19: Exploded View Of Steering Column Assembly ("C" Body - Column Shift)
Courtesy of GENERAL MOTORS CORP.

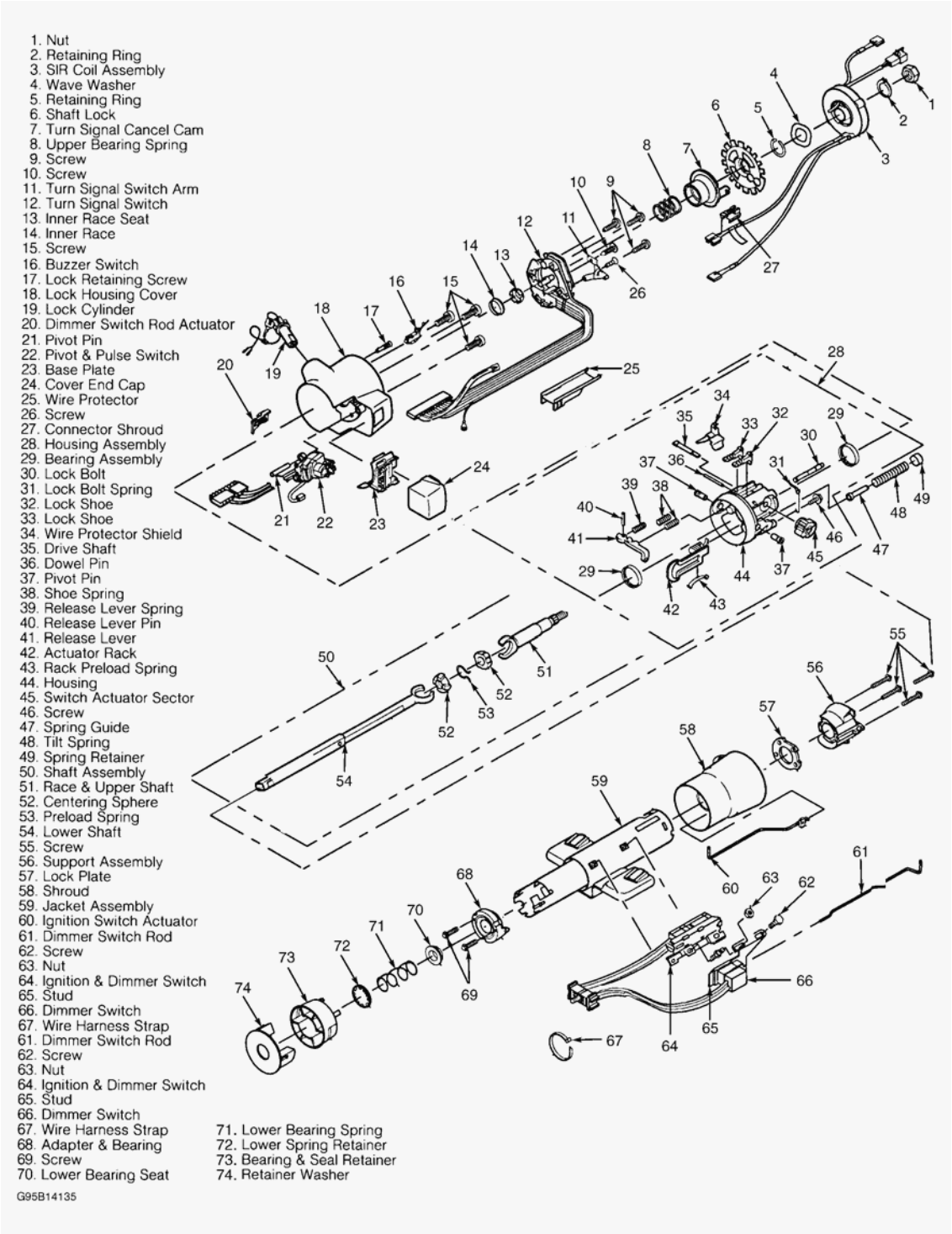

Fig. 20: Exploded View Of Steering Column Assembly ("C" & "H" Bodies - Floor Shift)
Courtesy of GENERAL MOTORS CORP.

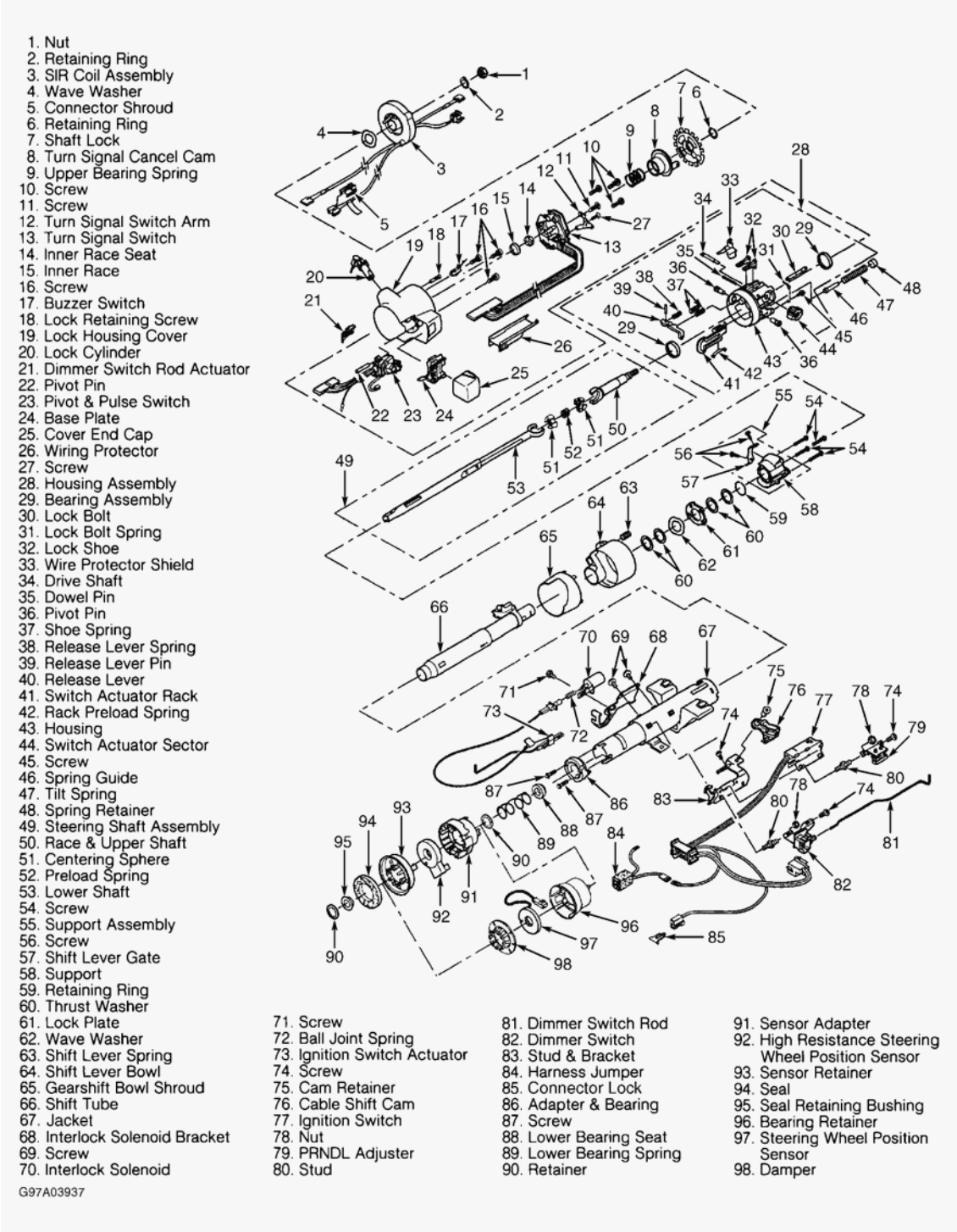

Fig. 21: Exploded View Of Steering Column Assembly ("E" & "K" Bodies - Column Shift)
Courtesy of GENERAL MOTORS CORP.

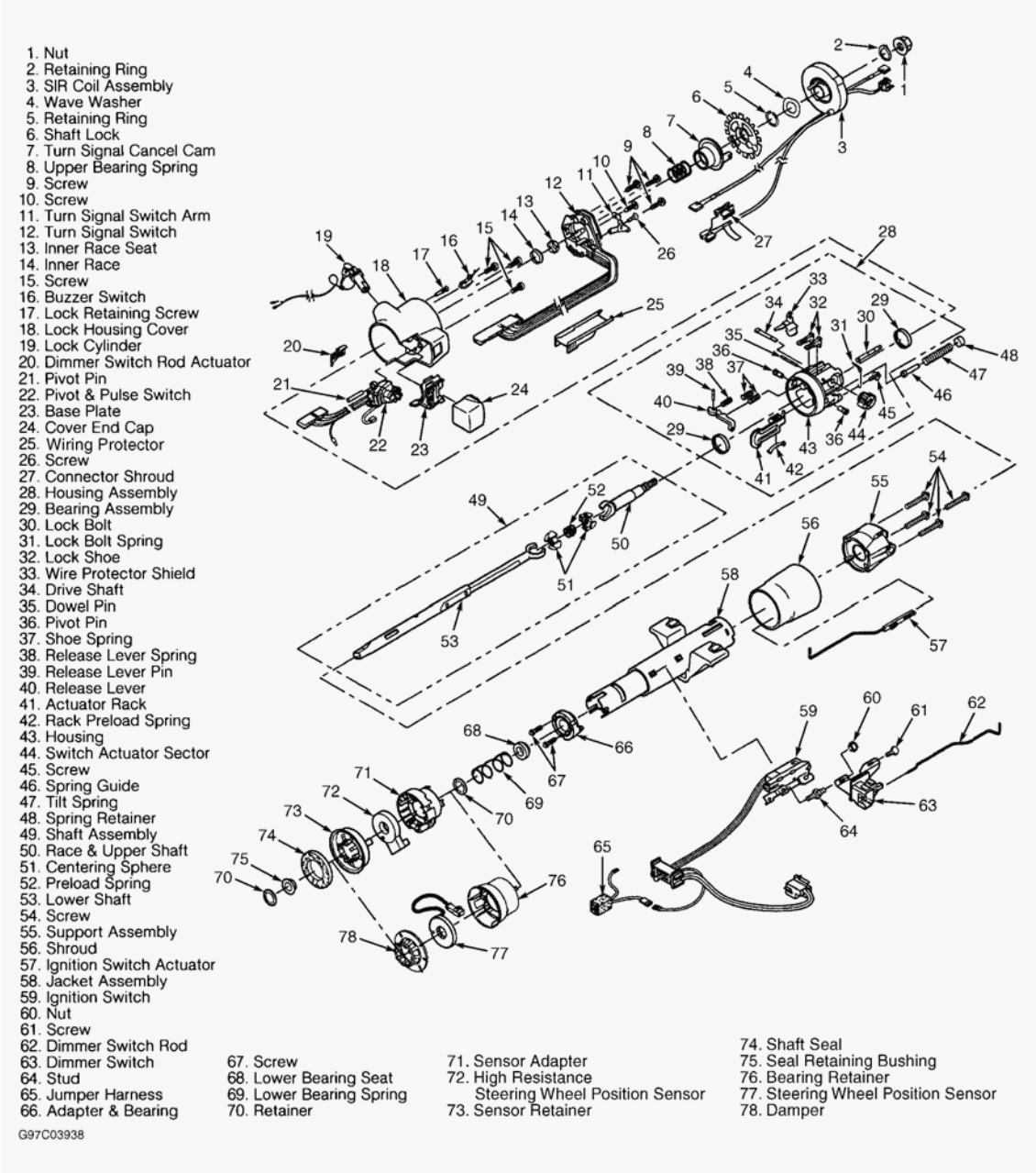

Fig. 22: Exploded View Of Steering Column Assembly ("E" & "K" Bodies - Floor Shift)
Courtesy of GENERAL MOTORS CORP.

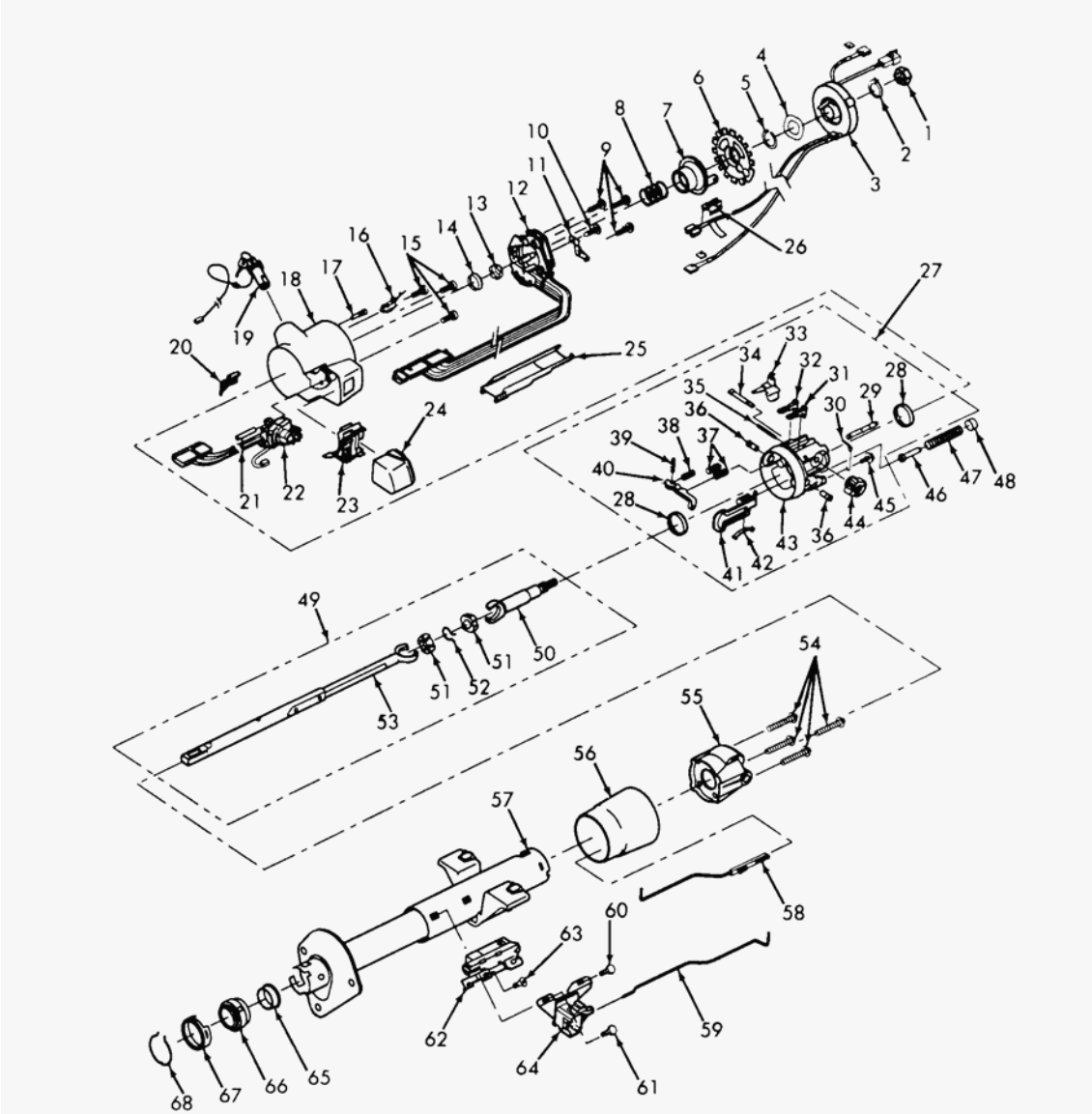

1. Nut
2. Retaining Ring
3. SIR Coil Assembly
4. Wave Washer
5. Retaining Ring
6. Shaft Lock
7. Turn Signal Cancel Cam
8. Spring
9. Screw
10. Screw
11. Turn Signal Switch Arm
12. Turn Signal Switch
13. Seat
14. Inner Race
15. Screw
16. Buzzer Switch
17. Screw
18. Housing Cover
19. Lock Cylinder
20. Dimmer Switch Rod Actuator
21. Pivot Pin
22. Pivot & Pulse Switch
23. Base Plate
24. Cover End Cap
25. Wiring Protector
26. Shroud
27. Housing
28. Bearing
29. Lock Bolt
30. Spring
31. Lock Shoe
32. Lock Shoe
33. Shield
34. Drive Shaft
35. Dowel Pin
36. Pivot Pin
37. Shoe Spring
38. Lever Spring
39. Lever Pin
40. Release Lever
41. Actuator Rack
42. Preload Spring
43. Housing
44. Actuator Sector
45. Screw
46. Spring Guide
47. Tilt Spring
48. Retainer
49. Shaft Assembly
50. Race & Upper Shaft
51. Centering Sphere
52. Preload Spring
53. Lower Steering Shaft
54. Screw
55. Support
56. Shroud
57. Jacket Assembly
58. Ignition Switch Actuator
59. Dimmer Switch Rod
60. Screw
61. Screw
62. Ignition Switch
63. Screw
64. Dimmer Switch
65. Lower Bearing Adapter
66. Bearing Assembly
67. Retainer
68. Clip

G94C33078

Fig. 23: Exploded View Of Steering Column Assembly ("F" Body)
Courtesy of GENERAL MOTORS CORP.

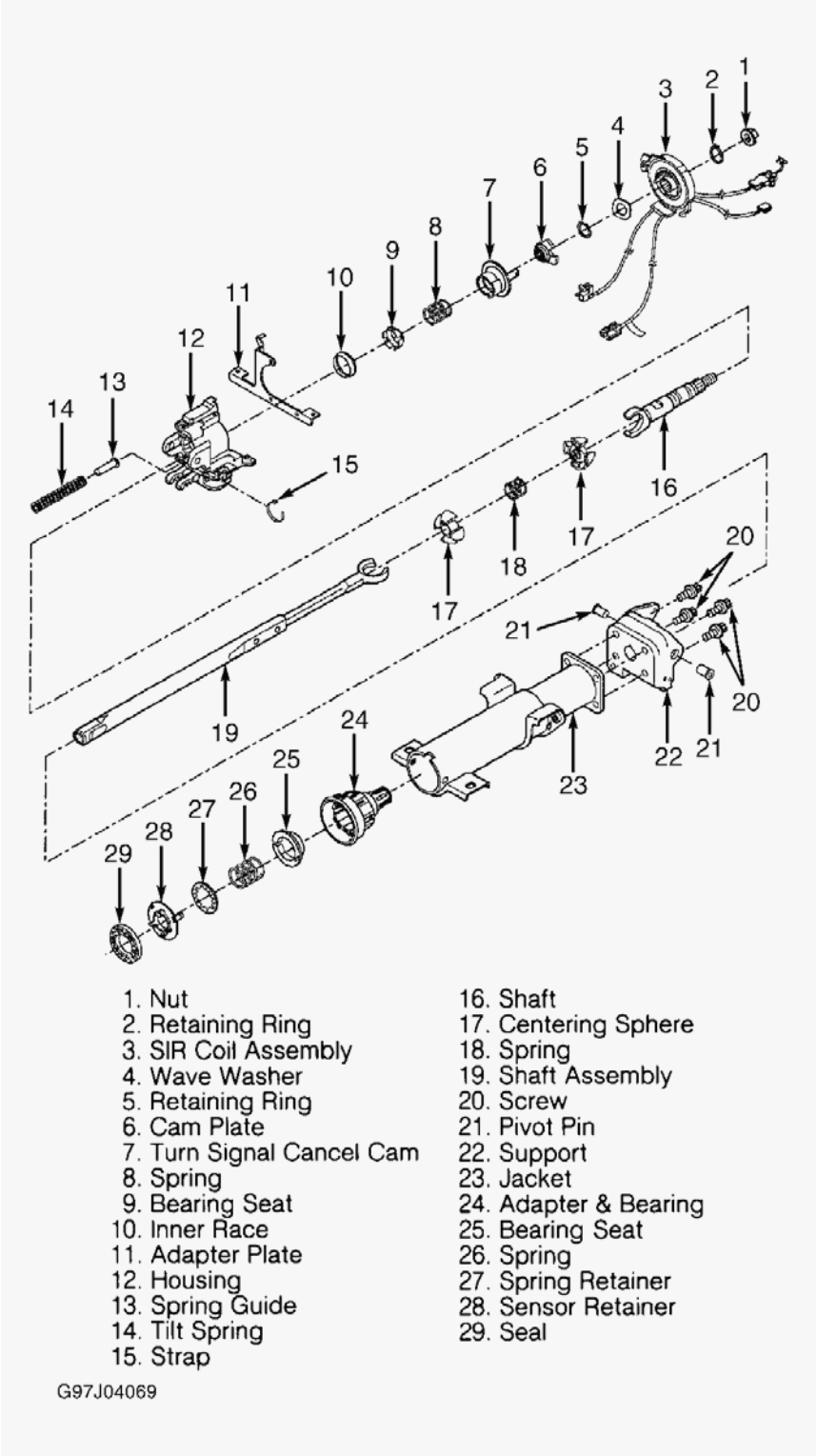

Fig. 24: Exploded View Of Steering Column Assembly ("N" Body - Tilt)
Courtesy of GENERAL MOTORS CORP.

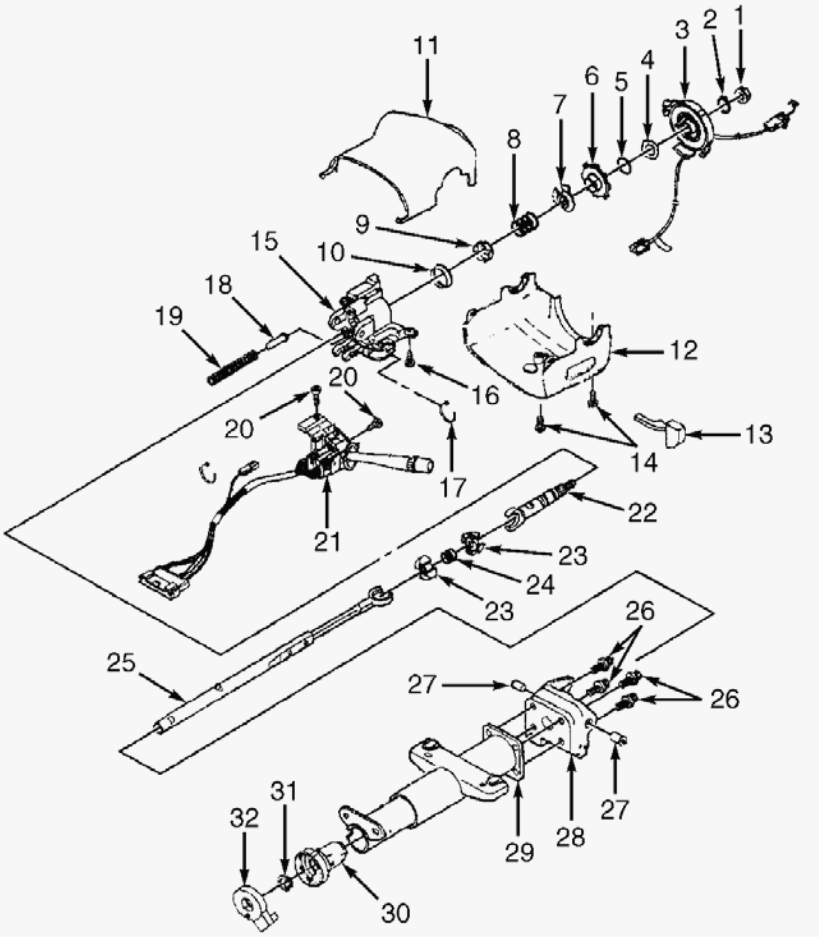

1. Nut
2. Retaining Ring
3. SIR Coil Assembly
4. Wave Washer
5. Retaining Ring
6. Cam Plate
7. Turn Signal Cancel Cam
8. Spring
9. Bearing Seat
10. Inner Race
11. Upper Cover
12. Lower Cover
13. Tilt Handle
14. Screw
15. Housing
16. Screw
17. Strap
18. Spring Guide
19. Tilt Spring
20. Screw
21. Multifunction Switch
22. Shaft
23. Centering Sphere
24. Spring
25. Shaft Assembly
26. Screw
27. Pivot Pin
28. Support
29. Jacket
30. Adapter & Bearing
31. Bearing
32. Sensor

G97G03940

Fig. 25: Exploded View Of Steering Column Assembly ("Y" Body)
Courtesy of GENERAL MOTORS CORP.

TORQUE SPECIFICATIONS

TORQUE SPECIFICATIONS

Application	Ft. Lbs. (N.m)
Column Bracket-To-Instrument Panel Stud Nuts	20 (27)
Column Bracket-To-Upper Support Bolts	20 (27)
Flexible Coupling Nuts	20 (27)
Intermediate Shaft-To-Steering Shaft Bolt	35 (47)
Lower Intermediate Shaft-To-Steering Gear Box Bolt	35 (47)
Steering Wheel Nut	30 (41)
Steering Wheel Rotation Sensor	40 (54)
Upper Intermediate Shaft-To-Steering Column Bolt	40 (54)
	INCH Lbs. (N.m)
Air Bag Module Screws	
"C", "E", "H" & "K" Bodies	27 (3.0)
"F" Body	25 (2.8)
"Y" Body	86 (9.7)
Dimmer Switch Nut & Stud	35 (4)
Ignition Switch Screw & Stud	35 (4)
Lock Cylinder Screws	22 (2.5)
Lock Housing Cover Screws	80 (9)
Support-To-Jacket Screws	(1) 77 (8.8)
Turn Signal Switch Screws	30 (3.4)

(1) Steering column upper support assembly-to-column jacket assembly mounting screws.