REPAIR INSTRUCTIONS

THROTTLE BODY REMOVAL

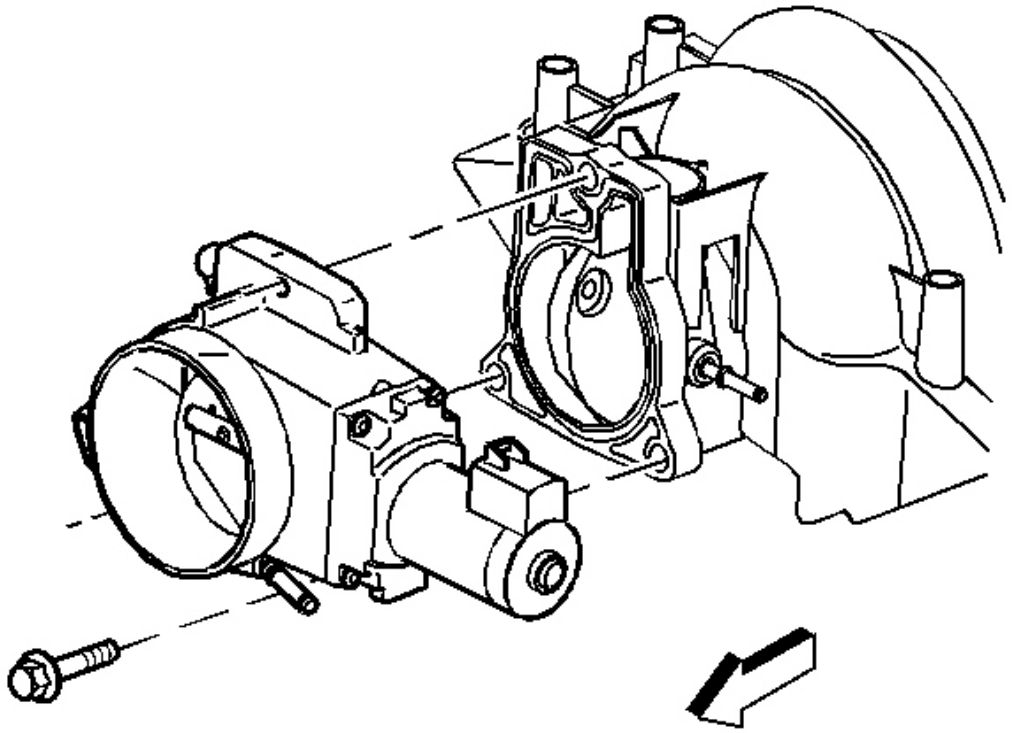

Fig. 1: Throttle Body & Bolts
Courtesy of GENERAL MOTORS CORP.

IMPORTANT: The intake manifold, throttle body, fuel injection rail and fuel injectors may be removed as an assembly. If not servicing the individual components, remove the manifold as a complete assembly.

1. Remove the electrical wire harness connectors from the throttle body.
2. Remove the engine coolant air bleed hose and clamp.

cardiagn.com

NOTE: **Handle the electronic throttle control components carefully. Use cleanliness in order to prevent damage. Do not drop the electronic throttle control components. Do not roughly handle the electronic throttle control components. Do not immerse the electronic throttle control components in cleaning solvents of any type.**

3. Remove the throttle body bolts.
4. Remove the throttle body.

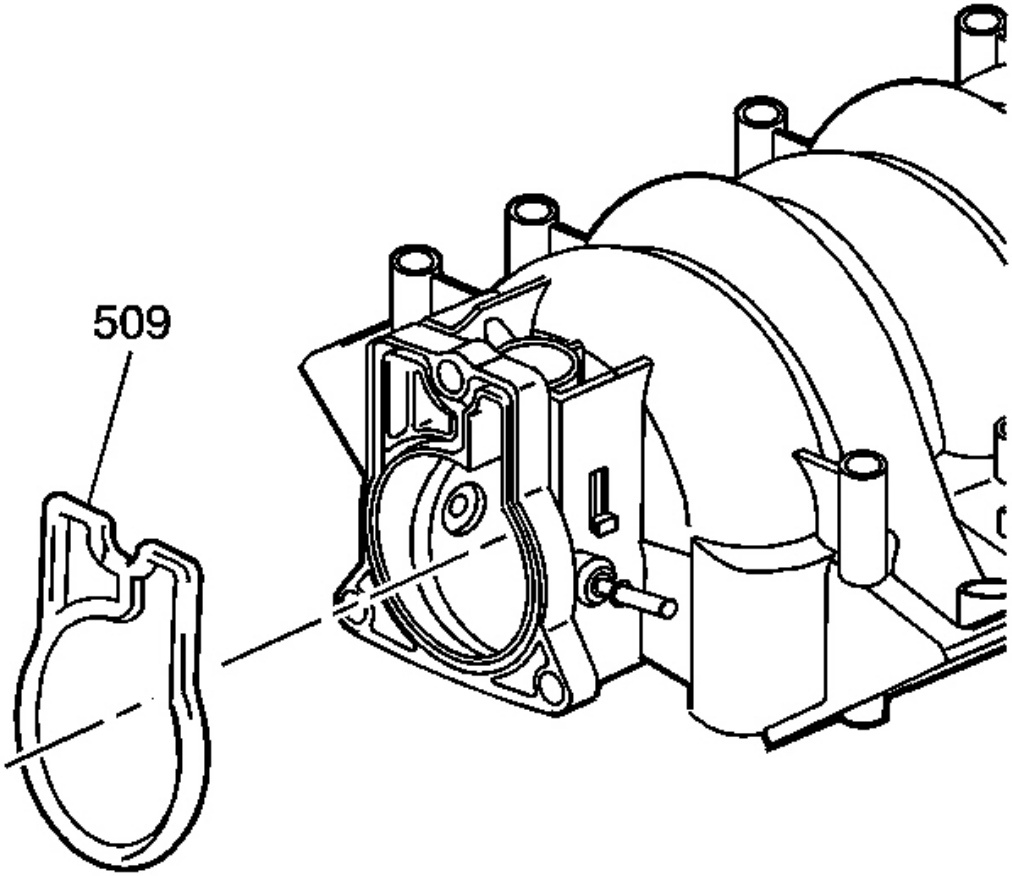

Fig. 2: Throttle Body Gasket
Courtesy of GENERAL MOTORS CORP.

5. Remove the throttle body gasket (509).

IMPORTANT: DO NOT use the throttle body gasket again. Install a NEW gasket during

cardiagn.com

assembly.

6. Discard the gasket.

FUEL RAIL AND INJECTORS REMOVAL

cardiagn.com

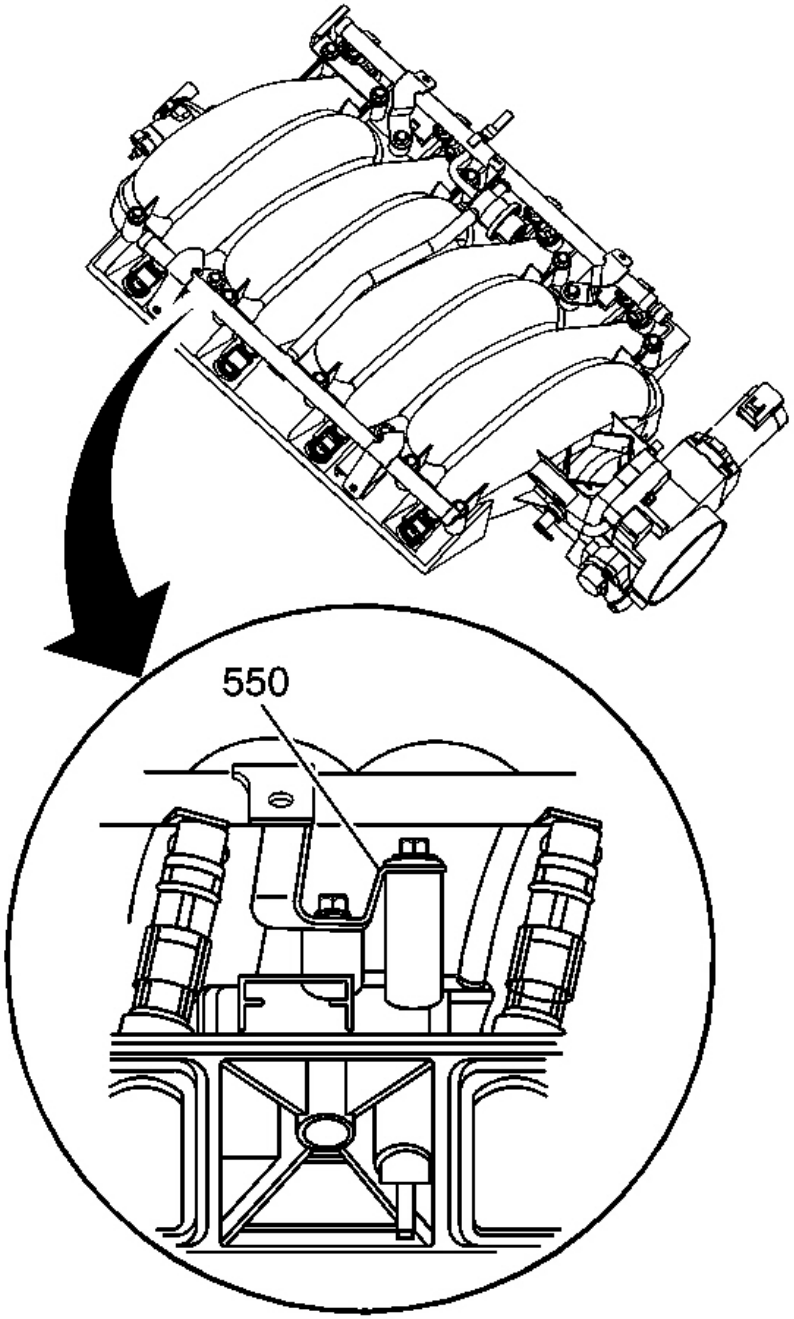

Fig. 3: Fuel Rail Ground Strap
Courtesy of GENERAL MOTORS CORP.

IMPORTANT: The intake manifold, throttle body, fuel injection rail and fuel injectors

cardiagn.com

may be removed as an assembly. If not servicing the individual components, remove the intake manifold as a complete assembly.

1. Note the location of the fuel rail ground strap (550) on the intake manifold.

   The fuel rail ground strap must be installed during assembly.

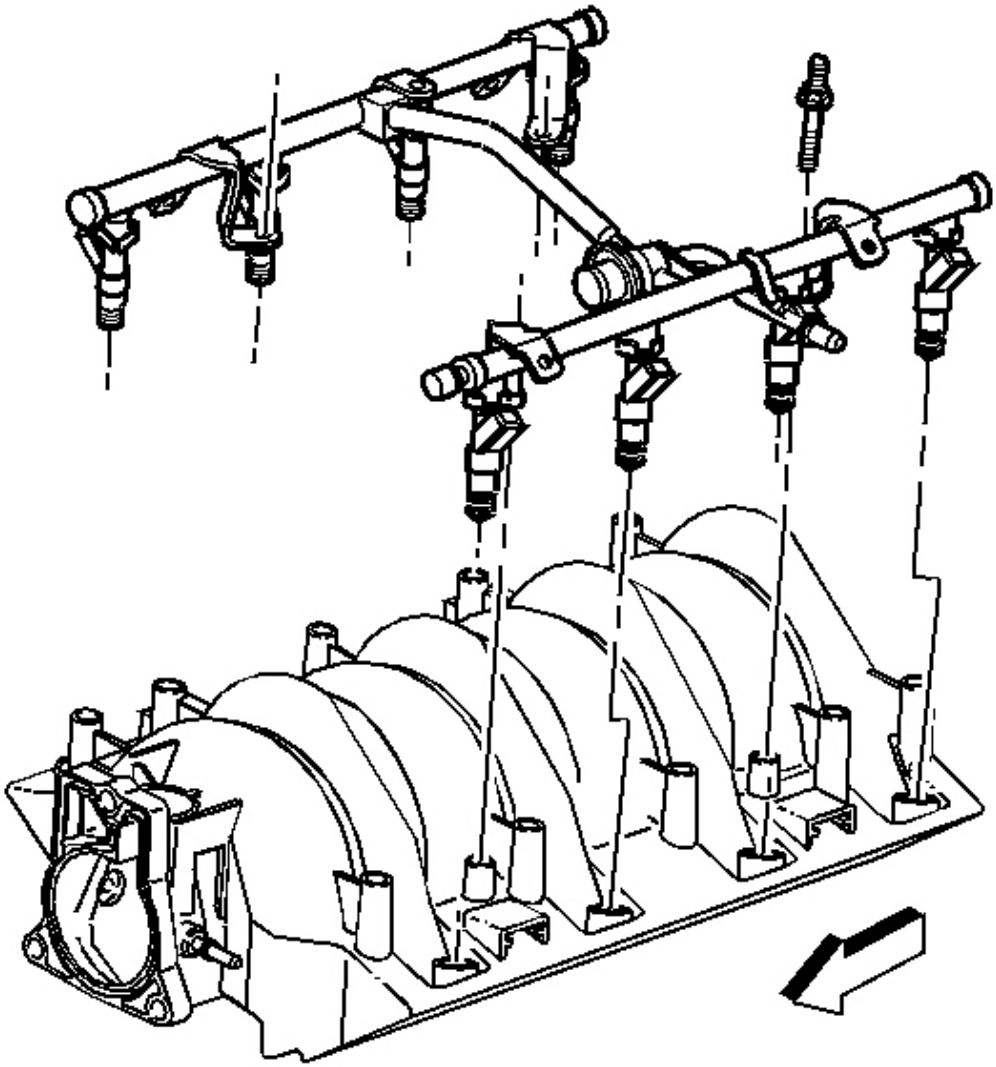

Fig. 4: Fuel Rail & Bolts
Courtesy of GENERAL MOTORS CORP.

cardiagn.com

CAUTION: Refer to Fuel Rail Stop Bracket Installation Caution in Cautions and Notices.

2. Remove the fuel rail bolts.

IMPORTANT:

- **Do not separate the fuel injectors from the fuel rail unless component service is required.**
- **Use cleanliness and care when handling the fuel system components.**
- **Do not allow dirt or debris to enter the fuel injectors or fuel rail components, cap ends as necessary.**

3. Remove the fuel rail, with injectors, lifting evenly from both sides of the fuel rail until all the injectors have left their bores.

INTAKE MANIFOLD REMOVAL

cardiagn.com

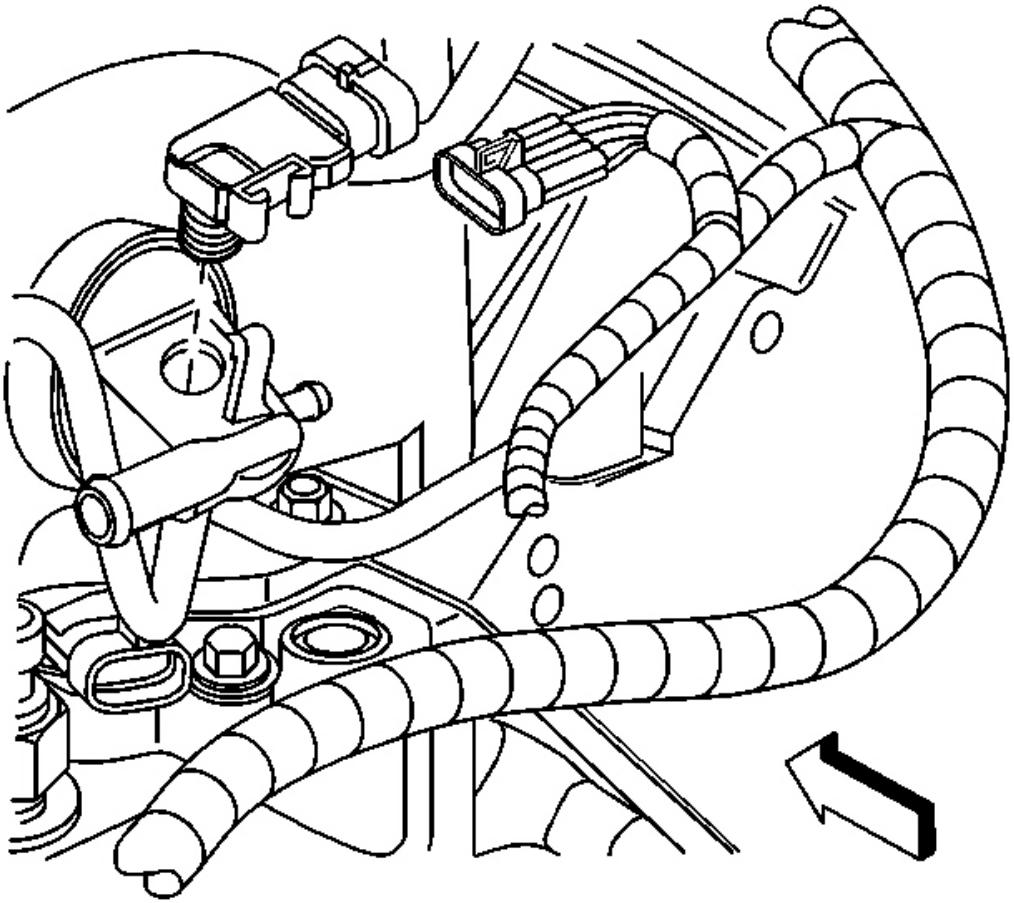

Fig. 5: MAP Sensor
Courtesy of GENERAL MOTORS CORP.

IMPORTANT:

- **The intake manifold, throttle body, fuel injection rail, and fuel injectors may be removed as an assembly. If not servicing the individual components, remove the manifold as a complete assembly.**
- **DO NOT use the intake manifold-to-cylinder head gaskets again.**

1. Remove the manifold absolute pressure (MAP) sensor, if required.

cardiagn.com

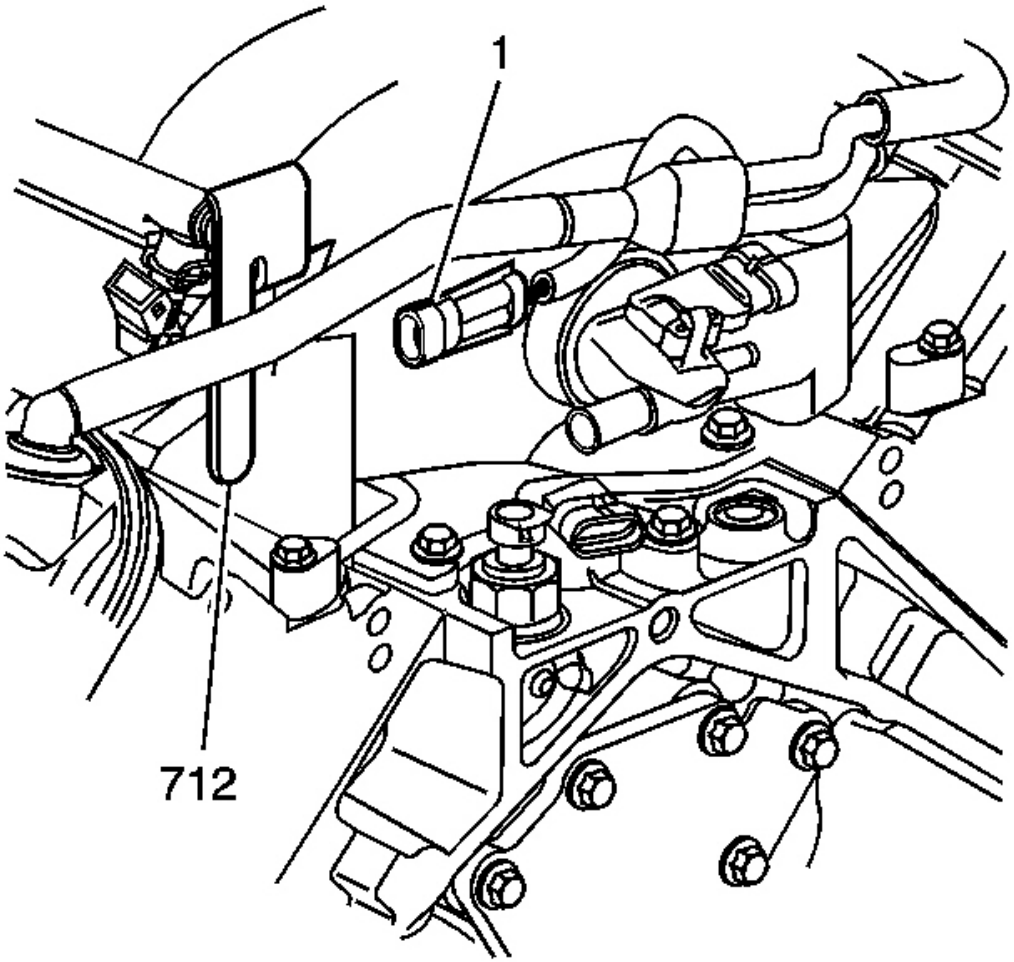

Fig. 6: Knock Sensor Wire Harness Connector & Fuel Rail Stop Bracket
Courtesy of GENERAL MOTORS CORP.

2. Disconnect the knock sensor wire harness connector (1) from the fuel rail stop bracket (712).

cardiagn.com

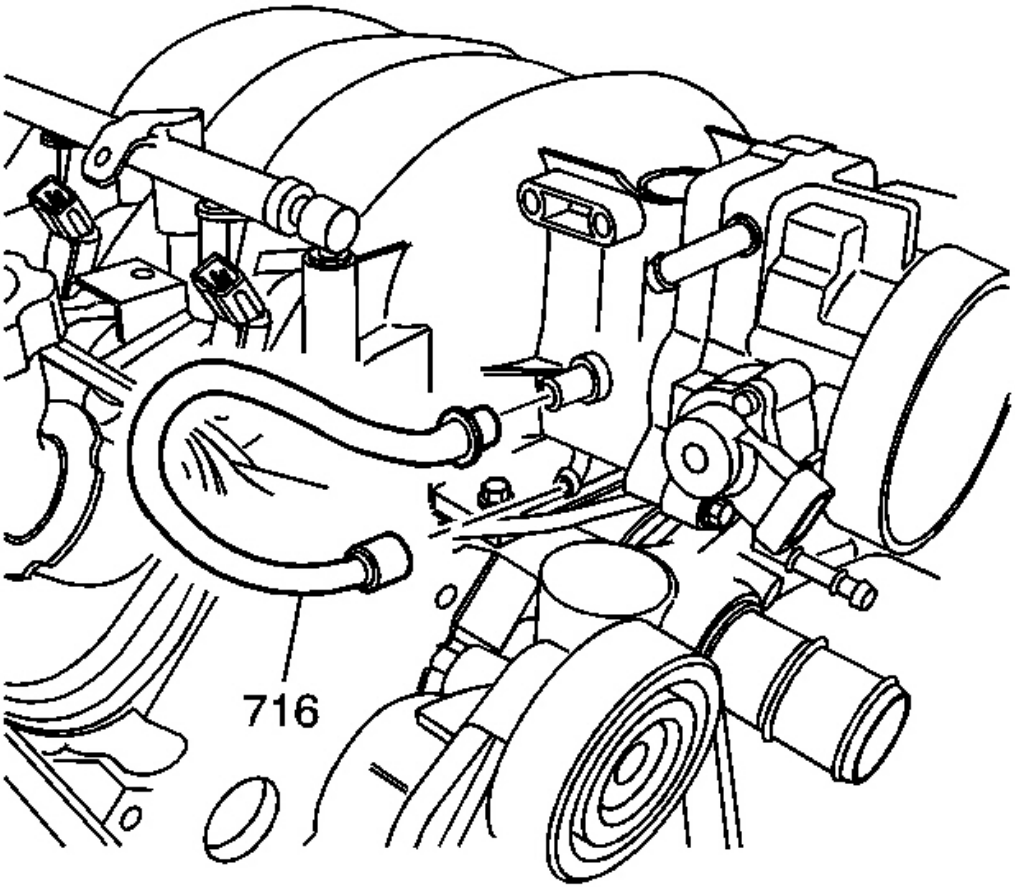

Fig. 7: PCV Dirty Air Pipe, Valley Cover & Intake Manifold
Courtesy of GENERAL MOTORS CORP.

3. Remove the positive crankcase ventilation (PCV) pipe - dirty air (716) from the valley cover and intake manifold.

cardiagn.com

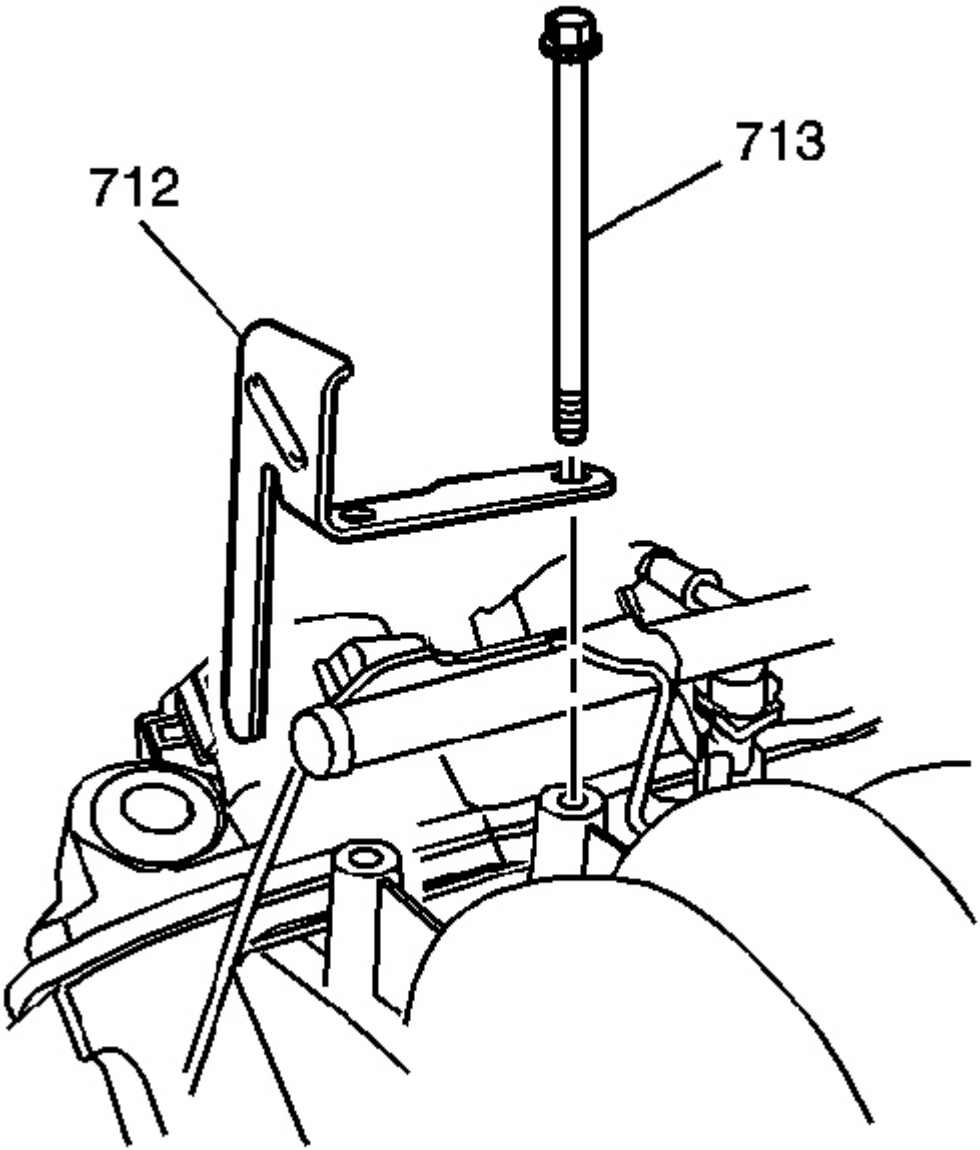

Fig. 8: Intake Manifold Bolts & Fuel Rail Stop Bracket
Courtesy of GENERAL MOTORS CORP.

CAUTION: Refer to Fuel Rail Stop Bracket Installation Caution in Cautions and Notices.

cardiagn.com

4. Remove the intake manifold bolts (713) and fuel rail stop bracket (712).

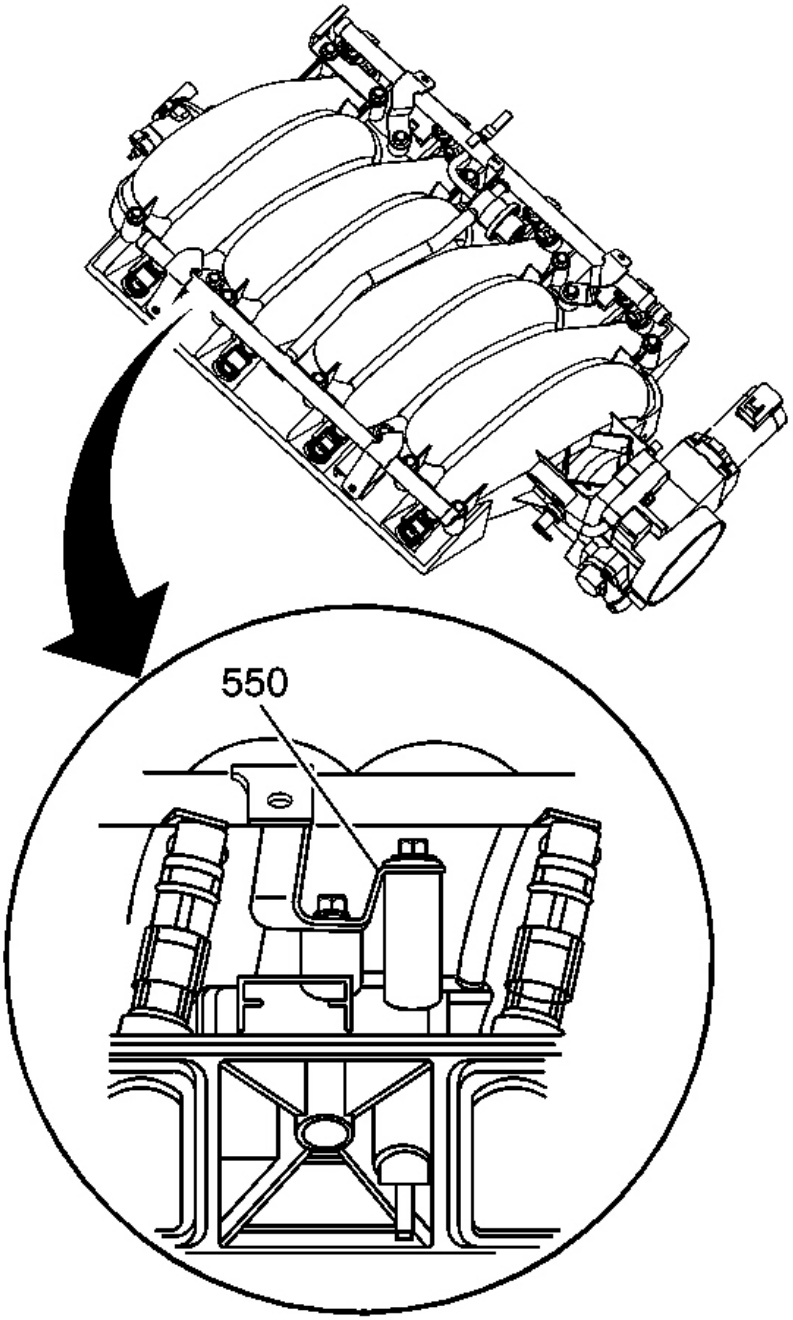

Fig. 9: Fuel Rail Ground Strap
Courtesy of GENERAL MOTORS CORP.

cardiagn.com

5. Note the location of the fuel rail ground strap (550) on the intake manifold.

   The fuel rail ground strap must be installed during assembly.

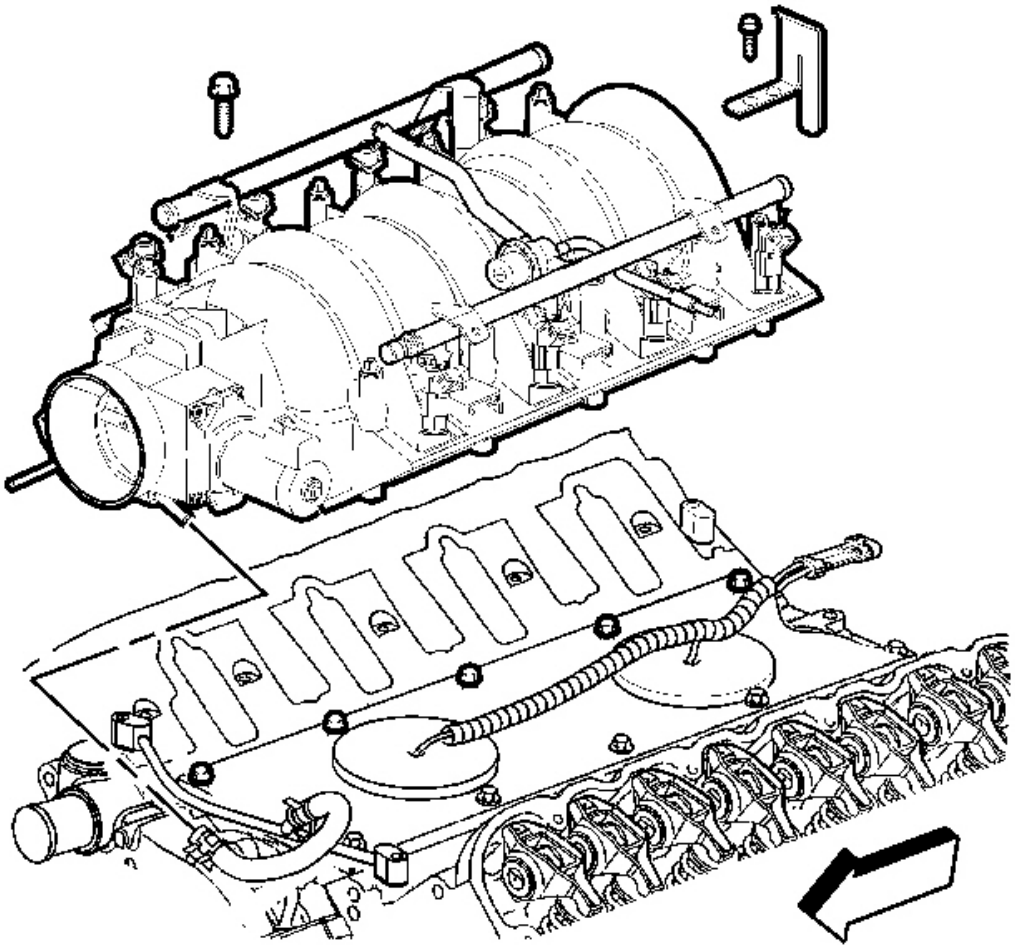

Fig. 10: Engine Coolant Air Bleed Pipe Hose & Throttle Body
Courtesy of GENERAL MOTORS CORP.

6. Remove the engine coolant air bleed pipe hose from the throttle body.
7. Remove the intake manifold.

cardiagn.com

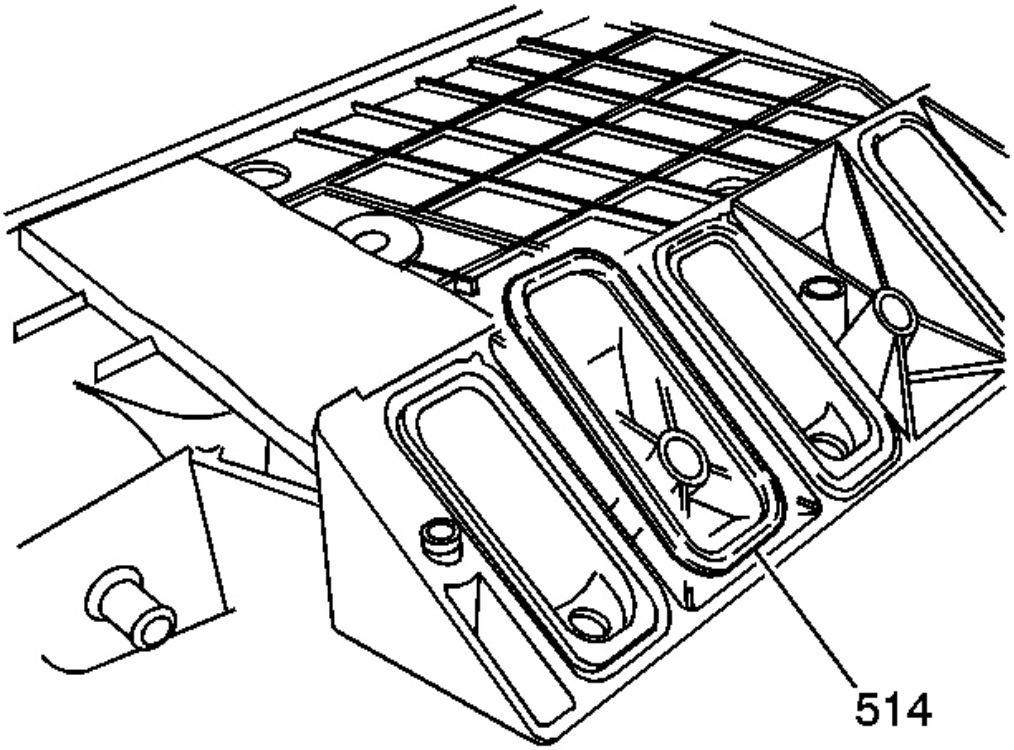

Fig. 11: Manifold-To-Cylinder Head Gaskets
Courtesy of GENERAL MOTORS CORP.

8. Remove the manifold-to-cylinder head gaskets (514) from the intake manifold.
9. Discard the intake manifold gaskets.

COOLANT AIR BLEED PIPE REMOVAL

cardiagn.com

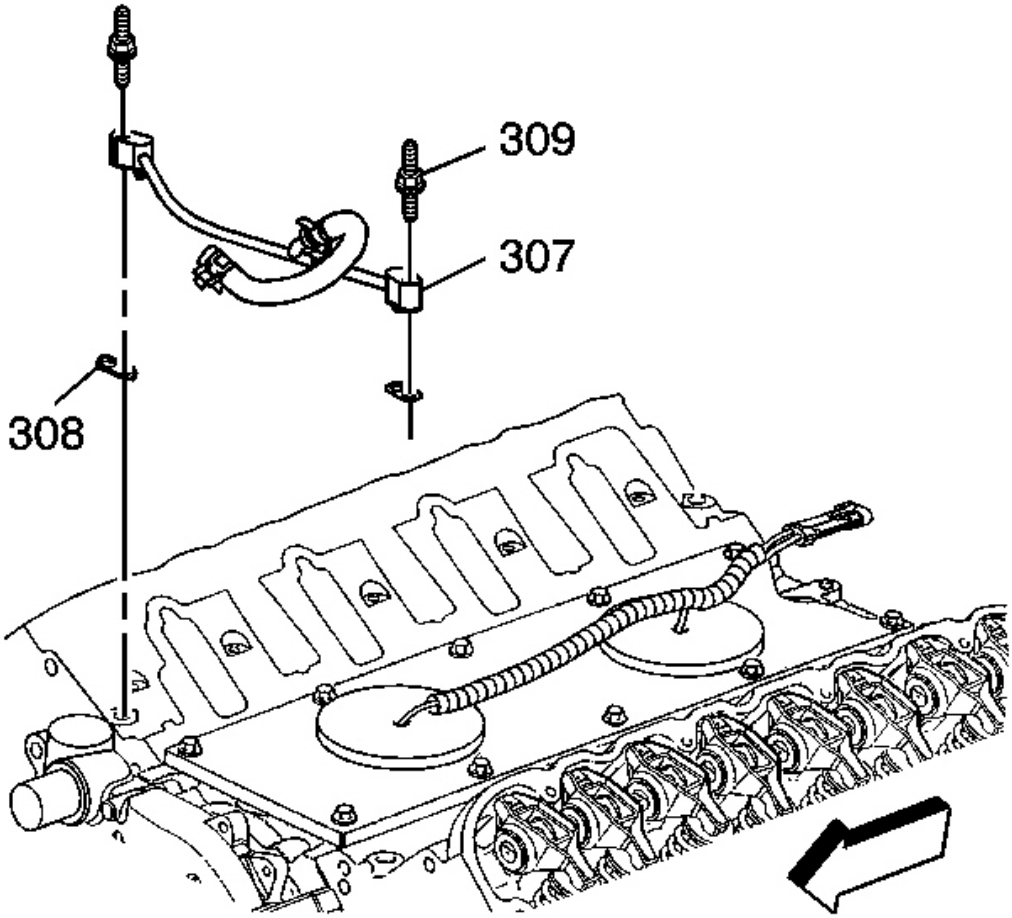

Fig. 12: Engine Coolant Air Bleed Pipe Studs, Pipe & Gaskets
Courtesy of GENERAL MOTORS CORP.

1. Remove the engine coolant air bleed pipe studs (309).
2. Remove the pipe (307) and gaskets (308).

cardiagn.com

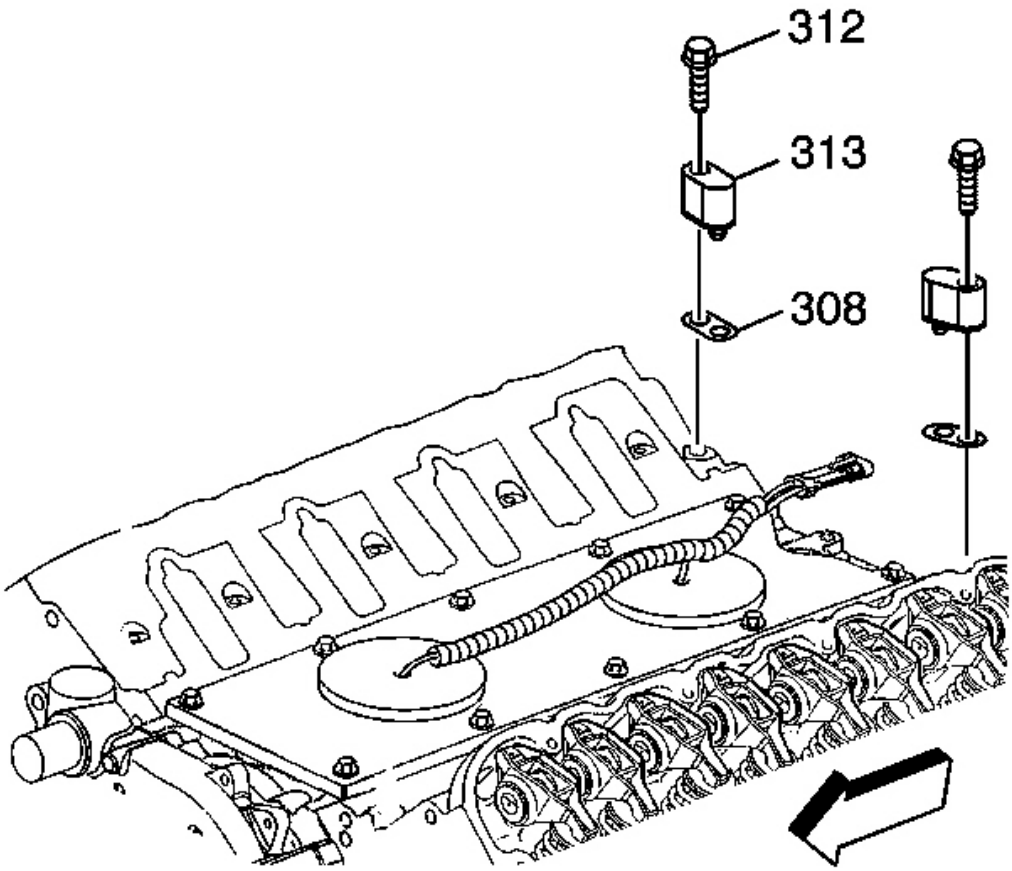

Fig. 13: View Of Engine Coolant Air Bleed Cover & Bolts
Courtesy of GENERAL MOTORS CORP.

3. Remove the engine coolant air bleed cover bolts (312) and covers (313).

cardiagn.com

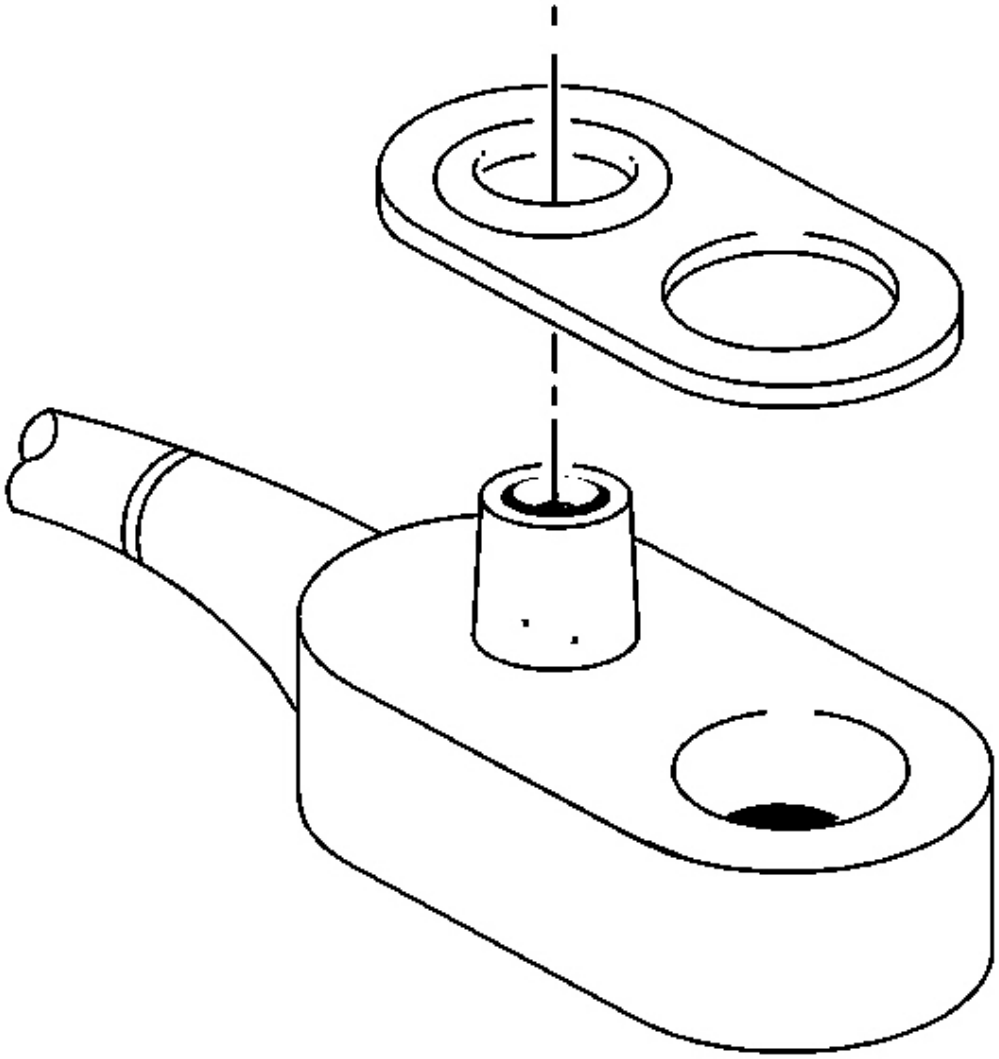

Fig. 14: View Of Pipe, Cover & Gasket
Courtesy of GENERAL MOTORS CORP.

4. Remove the gaskets from the pipe and covers.
5. Discard the gaskets.

cardiagn.com

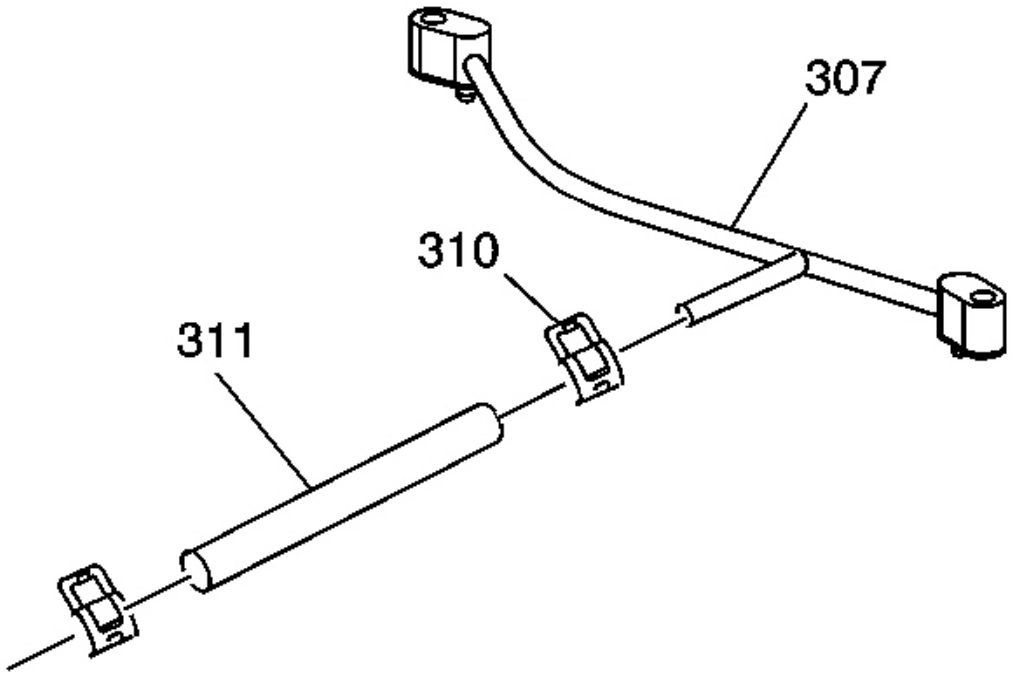

Fig. 15: Hose, Clamps & Pipe
Courtesy of GENERAL MOTORS CORP.

6. Remove the hose (311) and clamps (310) from the pipe (307).

ENGINE VALLEY COVER REMOVAL

cardiagn.com

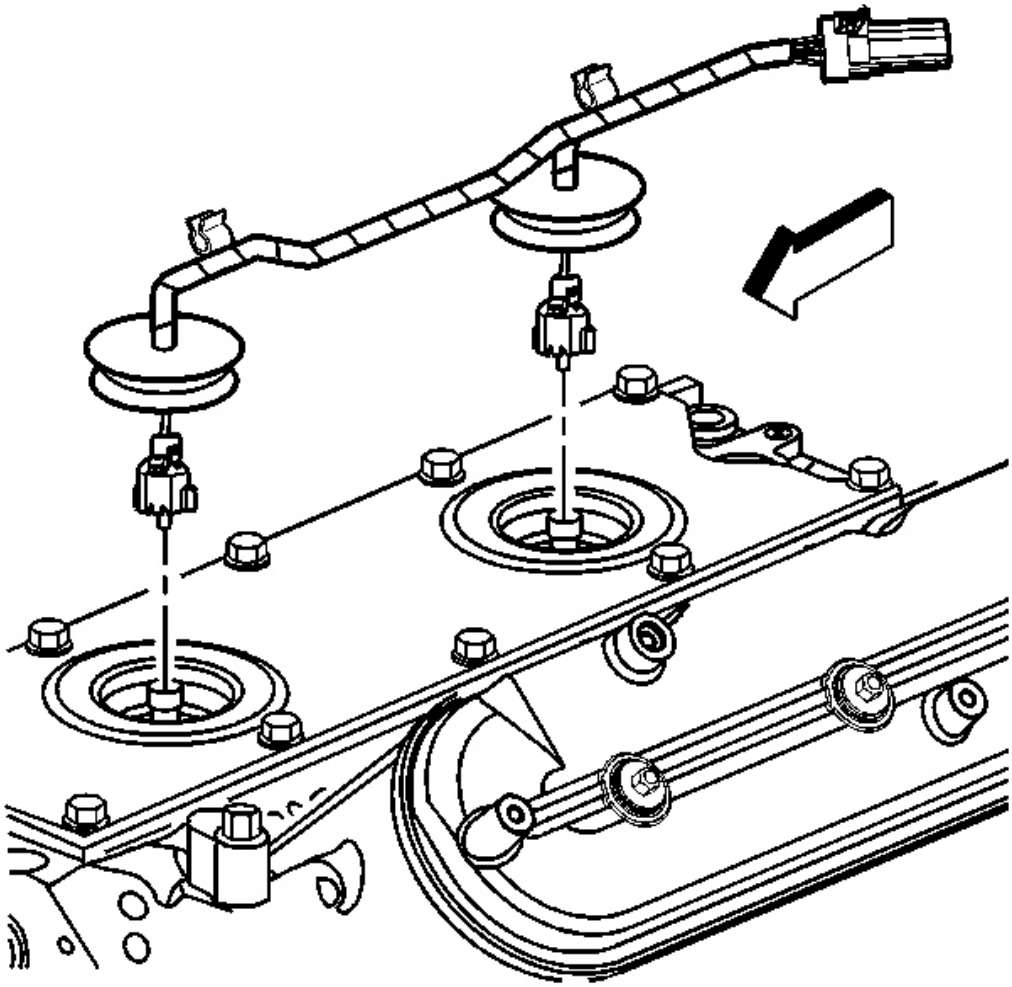

Fig. 16: View Of Knock Sensor Wire Harness
Courtesy of GENERAL MOTORS CORP.

1. Remove the knock sensor wire harness.

cardiagn.com

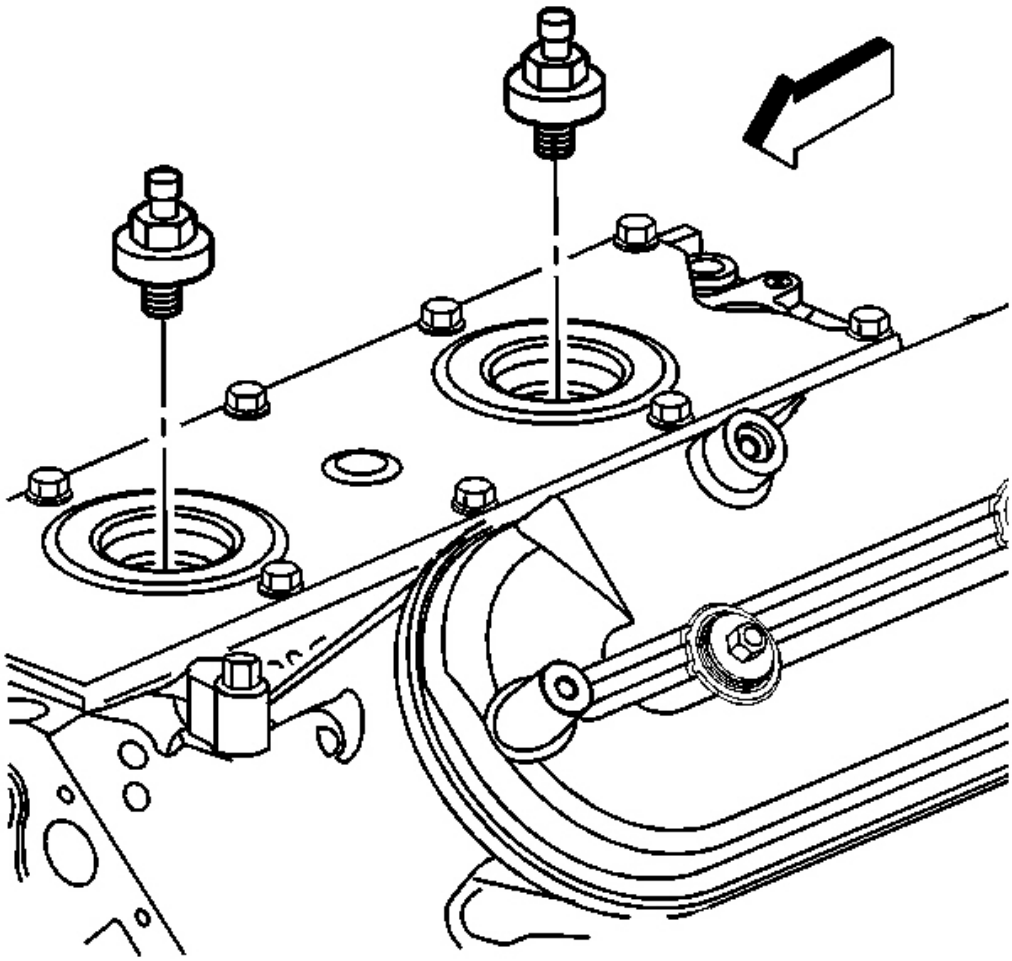

Fig. 17: View Of Knock Sensors
Courtesy of GENERAL MOTORS CORP.

2. Remove the knock sensors.

cardiagn.com

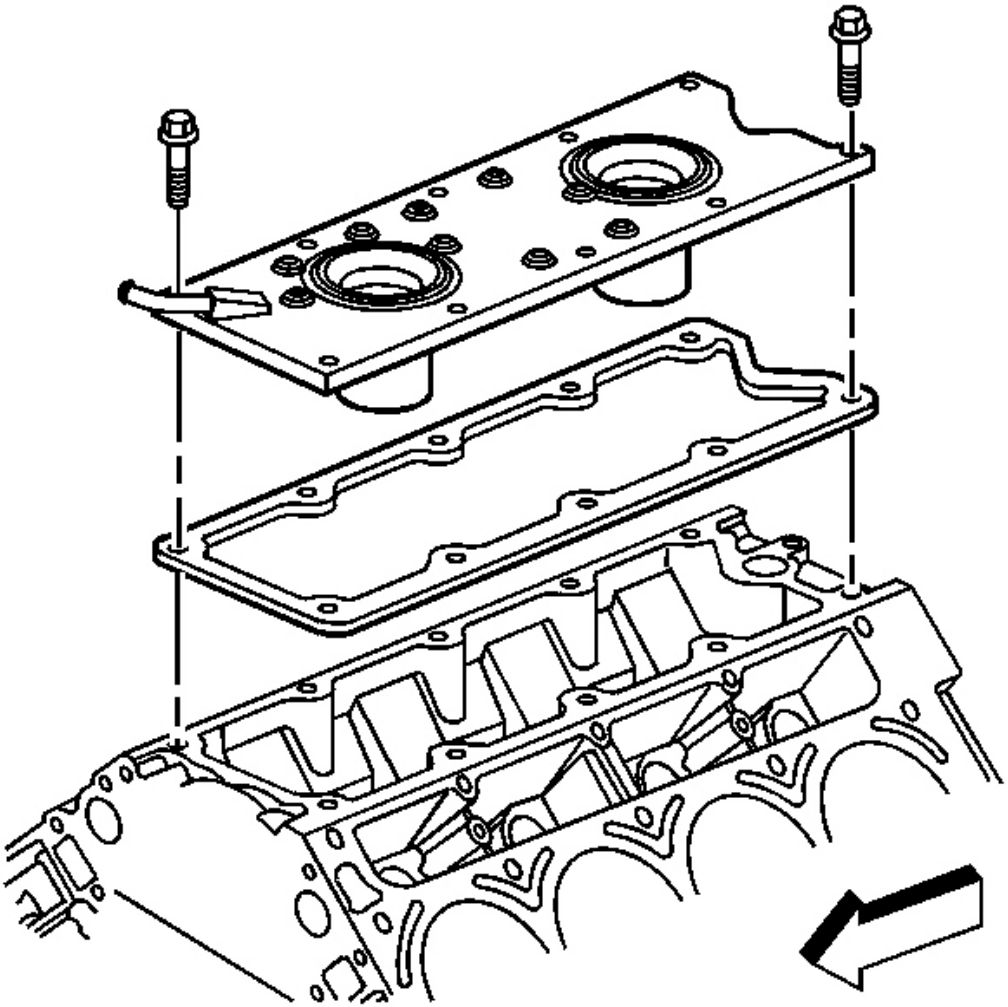

Fig. 18: Valley Cover Gasket & Bolts
Courtesy of GENERAL MOTORS CORP.

3. Remove the valley cover bolts.
4. Remove the valley cover and gasket.
5. Discard the valley cover gasket.

cardiagn.com

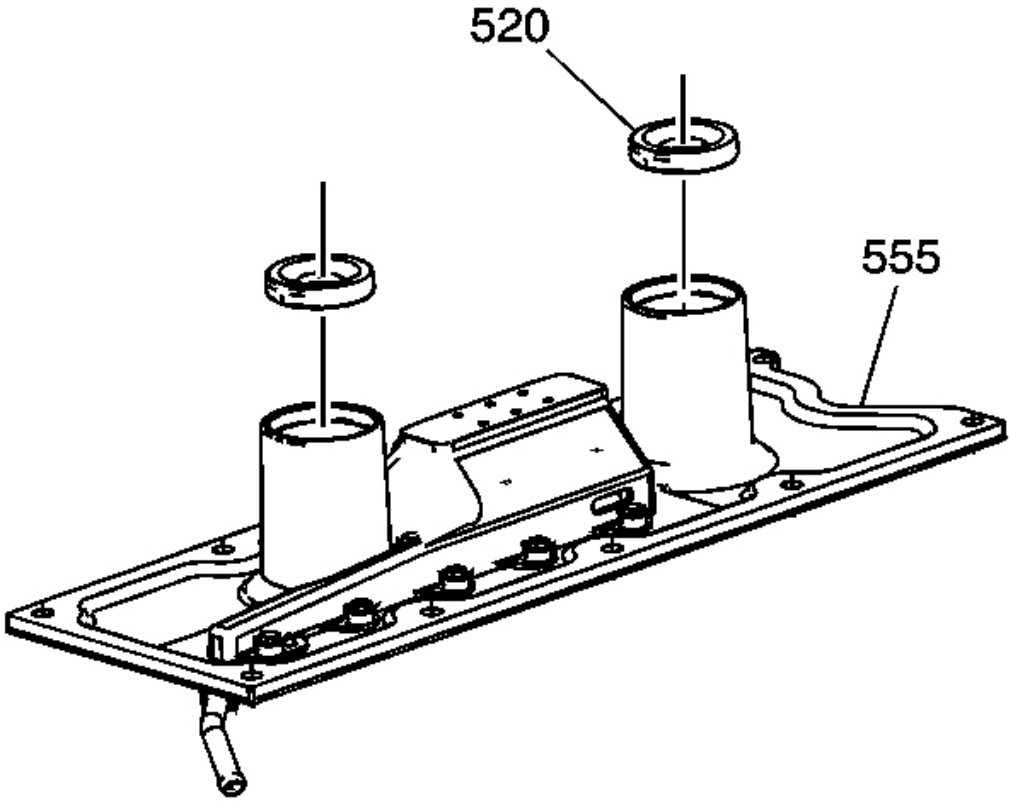

Fig. 19: Knock Sensor Oil Seals & Cover
Courtesy of GENERAL MOTORS CORP.

6. Remove the knock sensor oil seals (520) from the cover (555).

VALVE ROCKER ARM COVER REMOVAL - LEFT

cardiagn.com

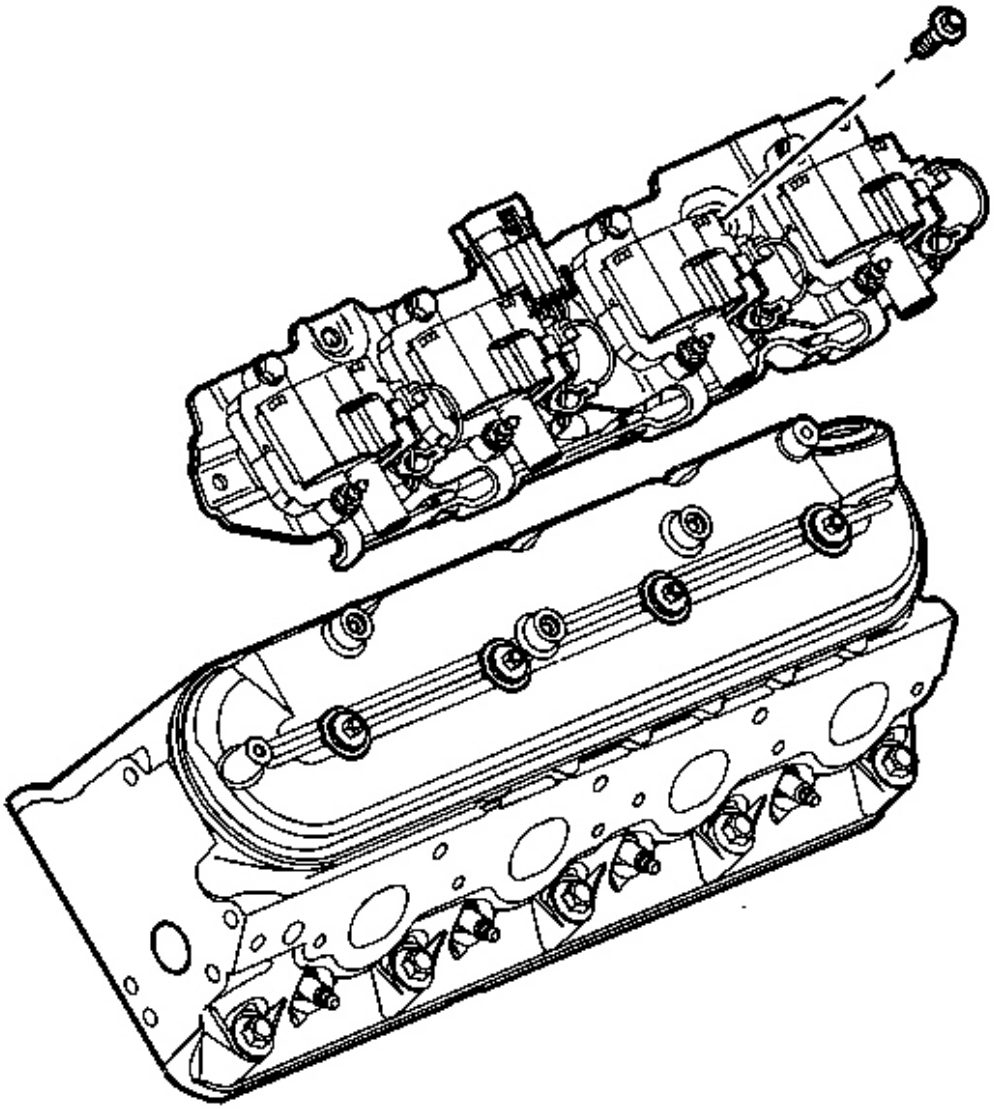

Fig. 20: Ignition Coil, Bracket Assembly & Bolts
Courtesy of GENERAL MOTORS CORP.

IMPORTANT:

- **Do not remove the positive crankcase ventilation (PCV) valve grommet from the cover unless service is required.**
- **If the grommet has been removed from the cover, a NEW grommet must be installed.**

cardiagn.com

1. Remove the ignition coil and bracket assembly and bolts.

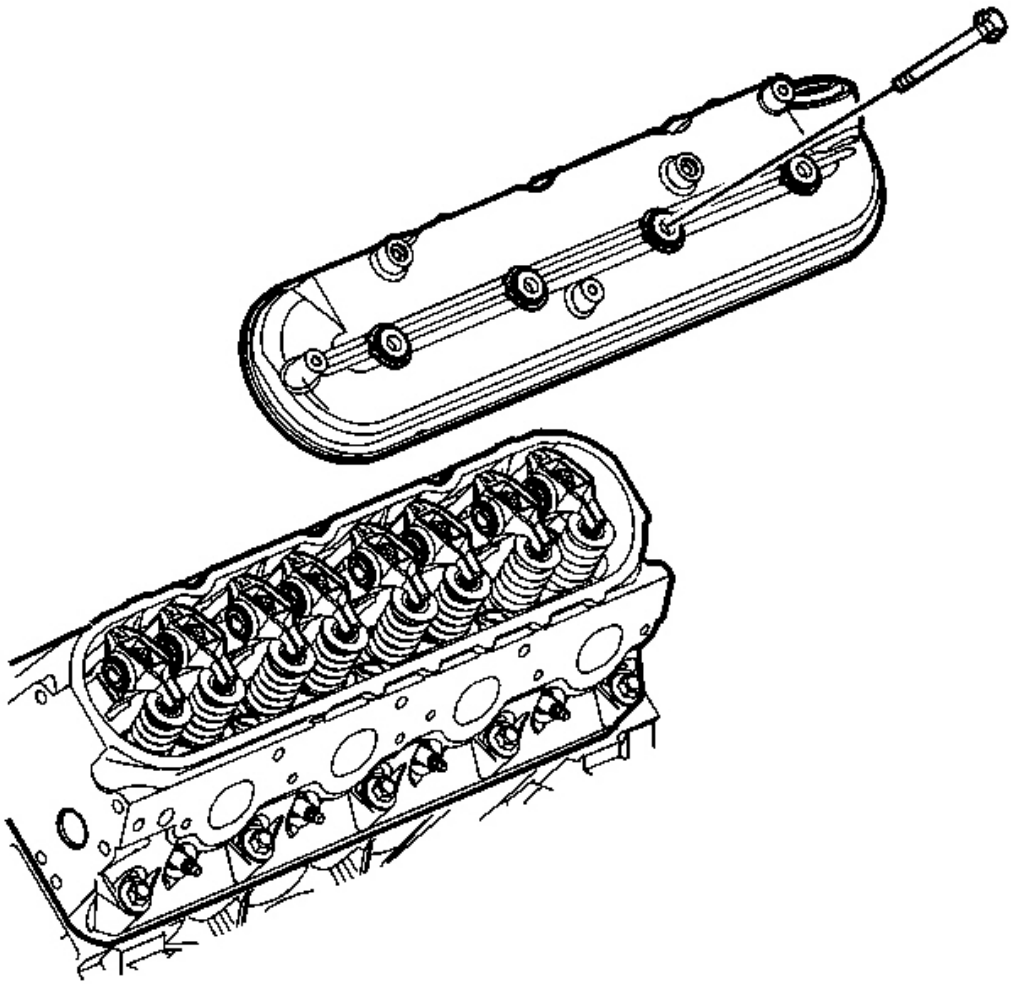

Fig. 21: Valve Cover To Cylinder Head View
Courtesy of GENERAL MOTORS CORP.

2. Remove the valve rocker arm cover bolts.
3. Remove the valve rocker arm cover.

cardiagn.com

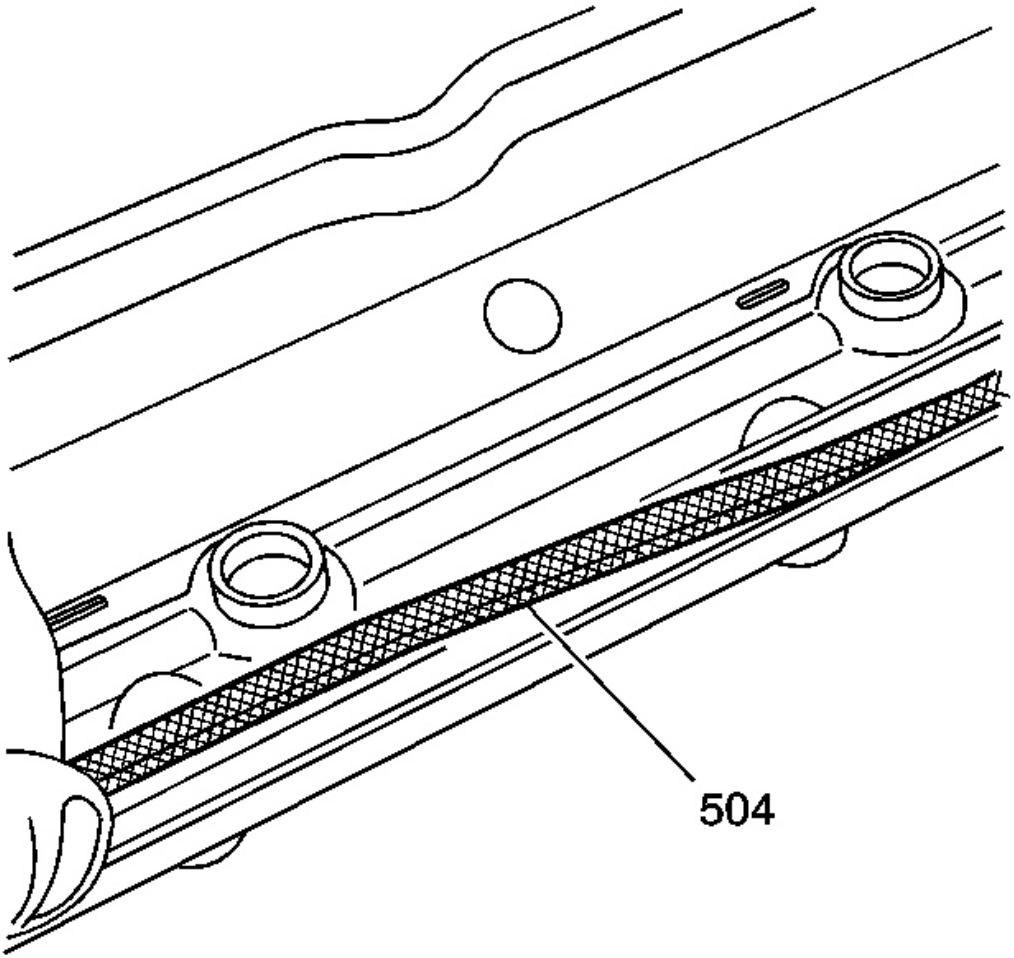

Fig. 22: View Of Valve Rocker Arm Cover Gasket
Courtesy of GENERAL MOTORS CORP.

4. Remove the gasket (504) from the cover.
5. Discard the gasket.

The bolt grommets may be used again, if not damaged.

cardiagn.com

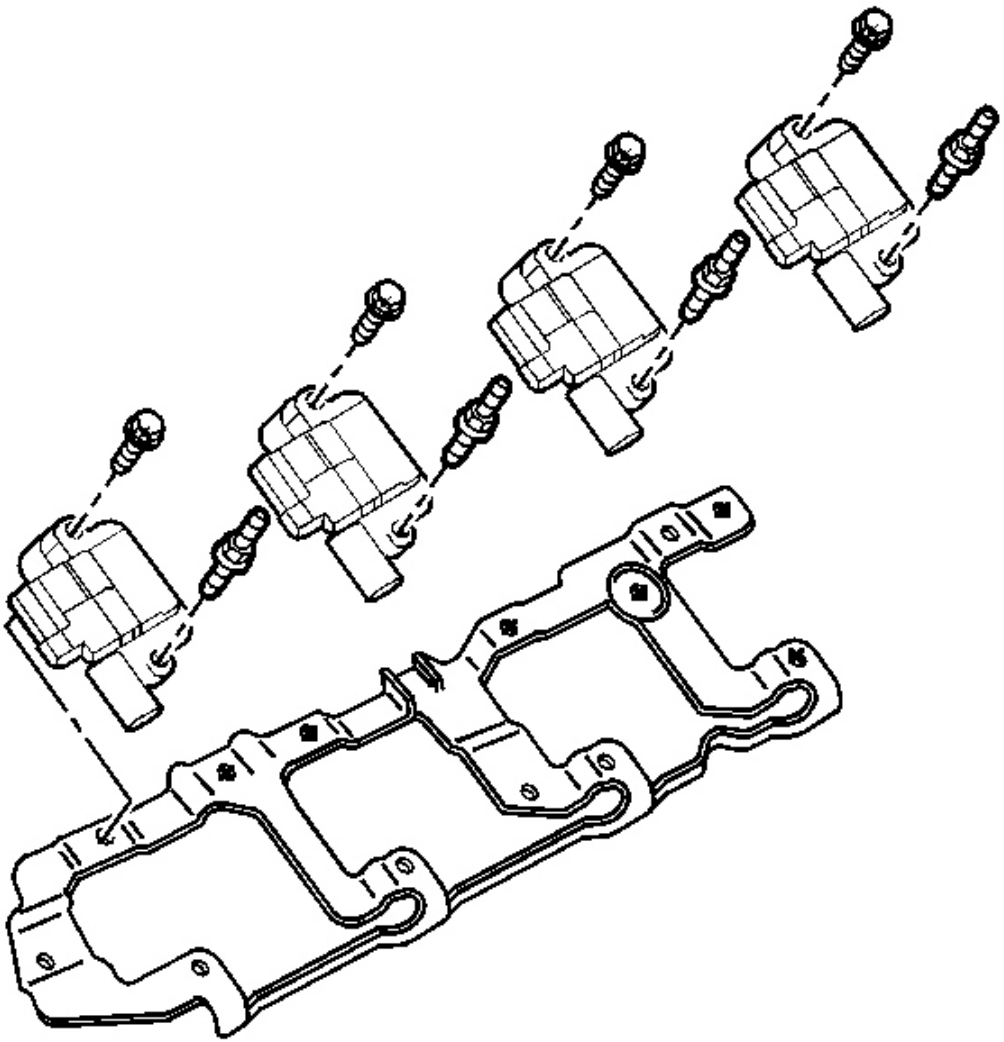

Fig. 23: View Of Left Ignition Coils & Bolts
Courtesy of GENERAL MOTORS CORP.

6. Remove the ignition coils, wire harness, and bolts from the bracket, if required.

VALVE ROCKER ARM COVER REMOVAL - RIGHT

cardiagn.com

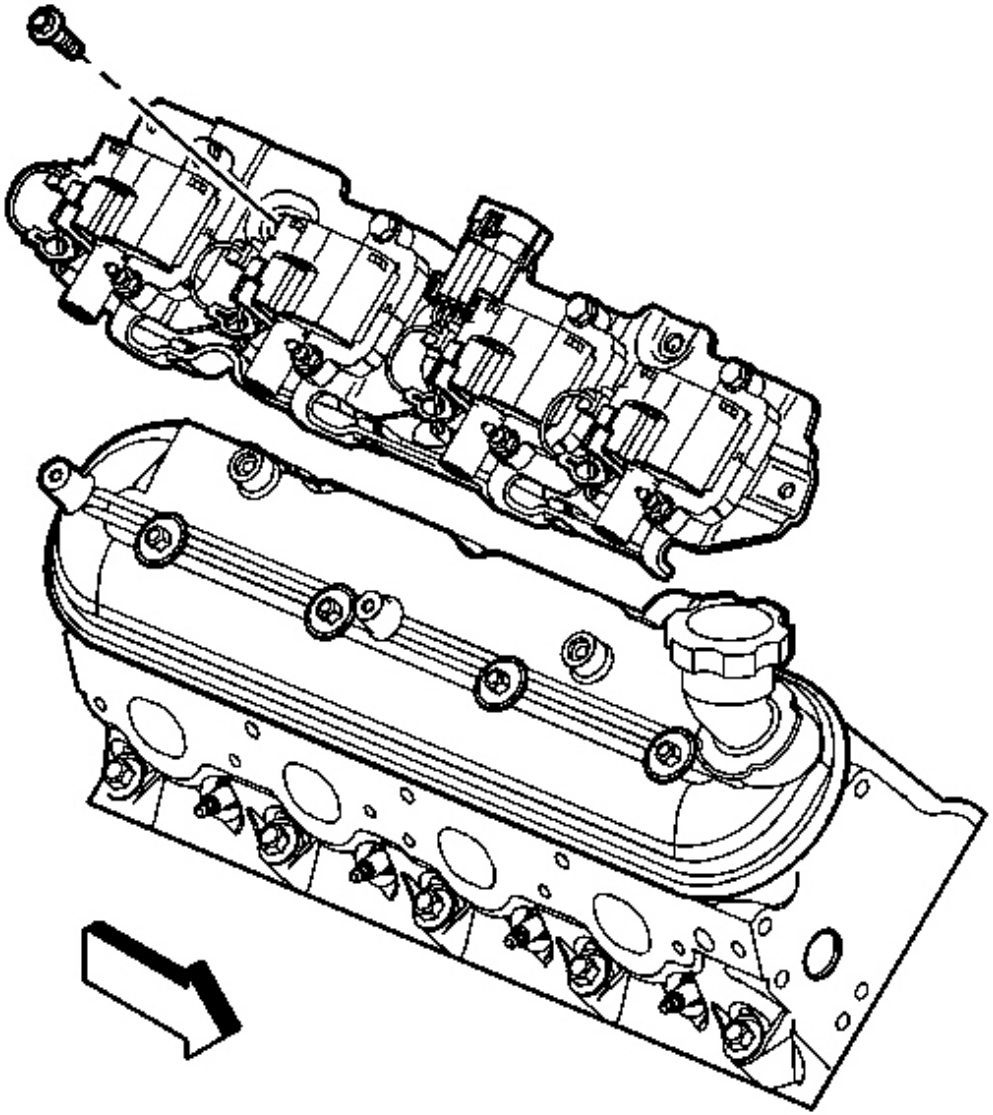

Fig. 24: View Of Right Ignition Coils & Bolts
Courtesy of GENERAL MOTORS CORP.

IMPORTANT:

- **Do not remove the oil fill tube from the cover unless service is required.**
- **If the oil fill tube has been removed from the cover, install a NEW tube during assembly.**

cardiagn.com

1. Remove the ignition coil and bracket assembly and bolts.

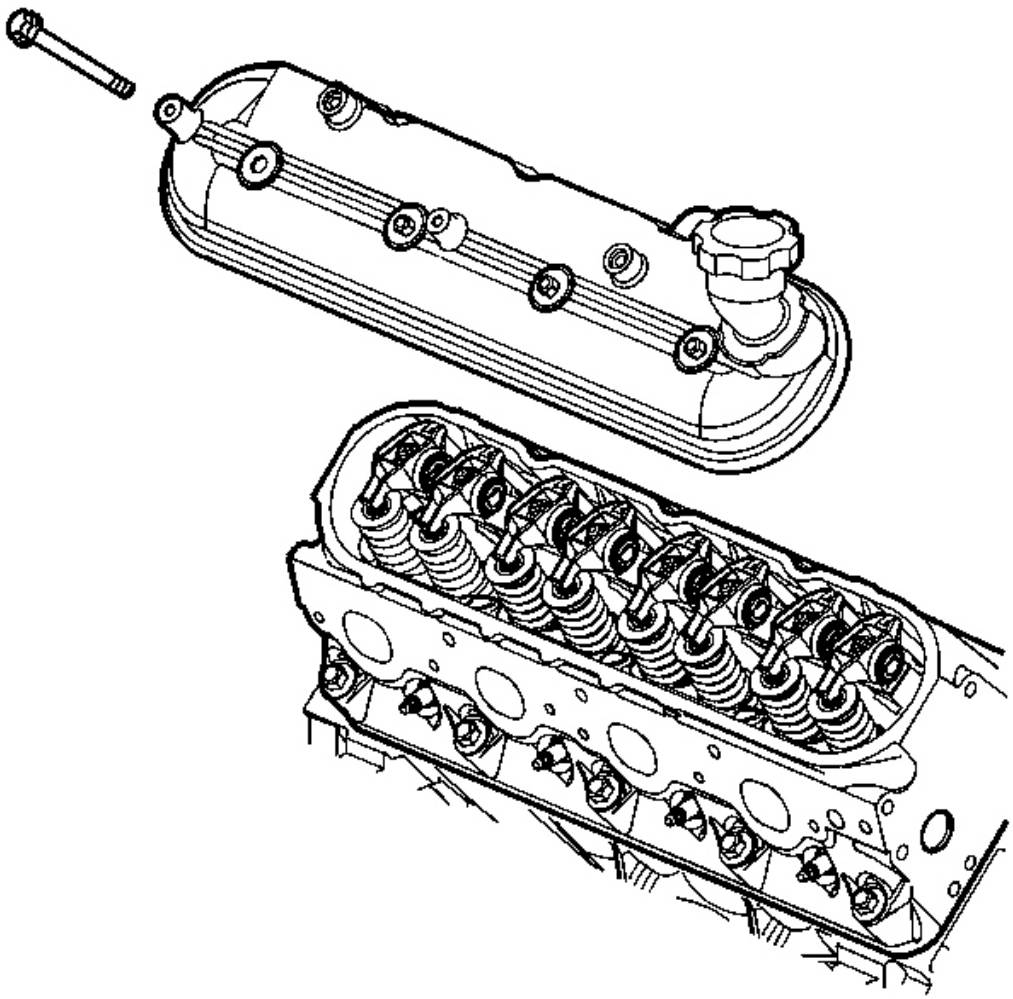

Fig. 25: View Of Valve Rocker Arm Cover & Bolts (Right)
Courtesy of GENERAL MOTORS CORP.

2. Remove the valve rocker arm cover bolts.
3. Remove the valve rocker arm cover.

cardiagn.com

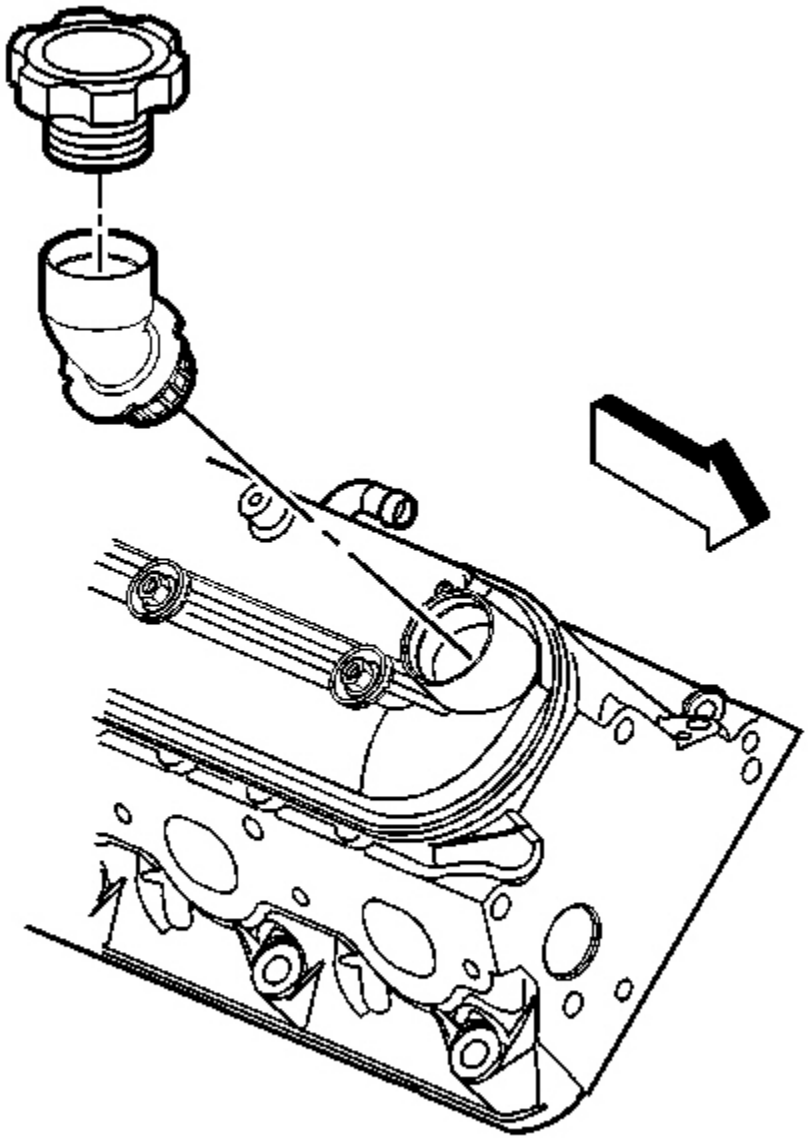

Fig. 26: View Of Oil Fill Tube
Courtesy of GENERAL MOTORS CORP.

4. Remove the oil fill cap from the oil fill tube.
5. Remove the oil fill tube, if required.
6. Discard the oil fill tube.

cardiagn.com

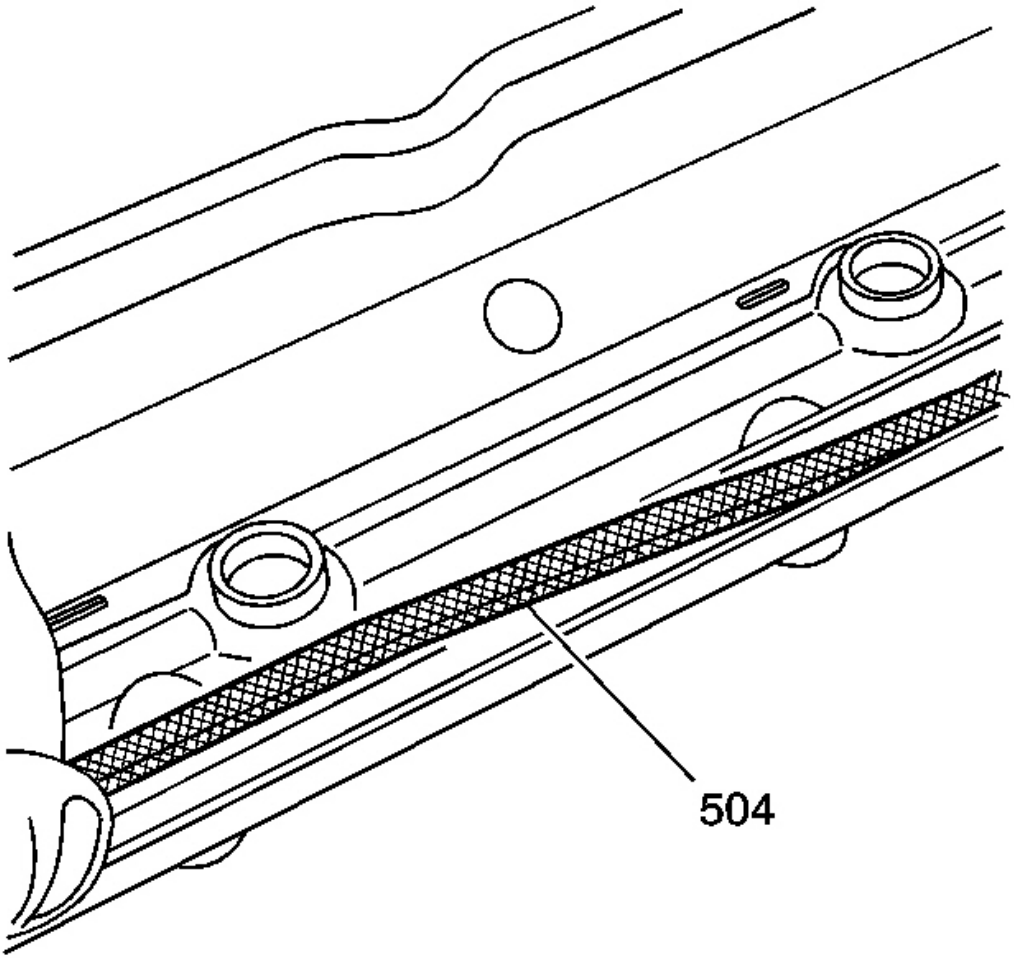

Fig. 27: View Of Valve Rocker Arm Cover Gasket
Courtesy of GENERAL MOTORS CORP.

7. Remove the gasket (504) from the cover.
8. Discard the gasket.

The bolt grommets may be used again, if not damaged.

cardiagn.com

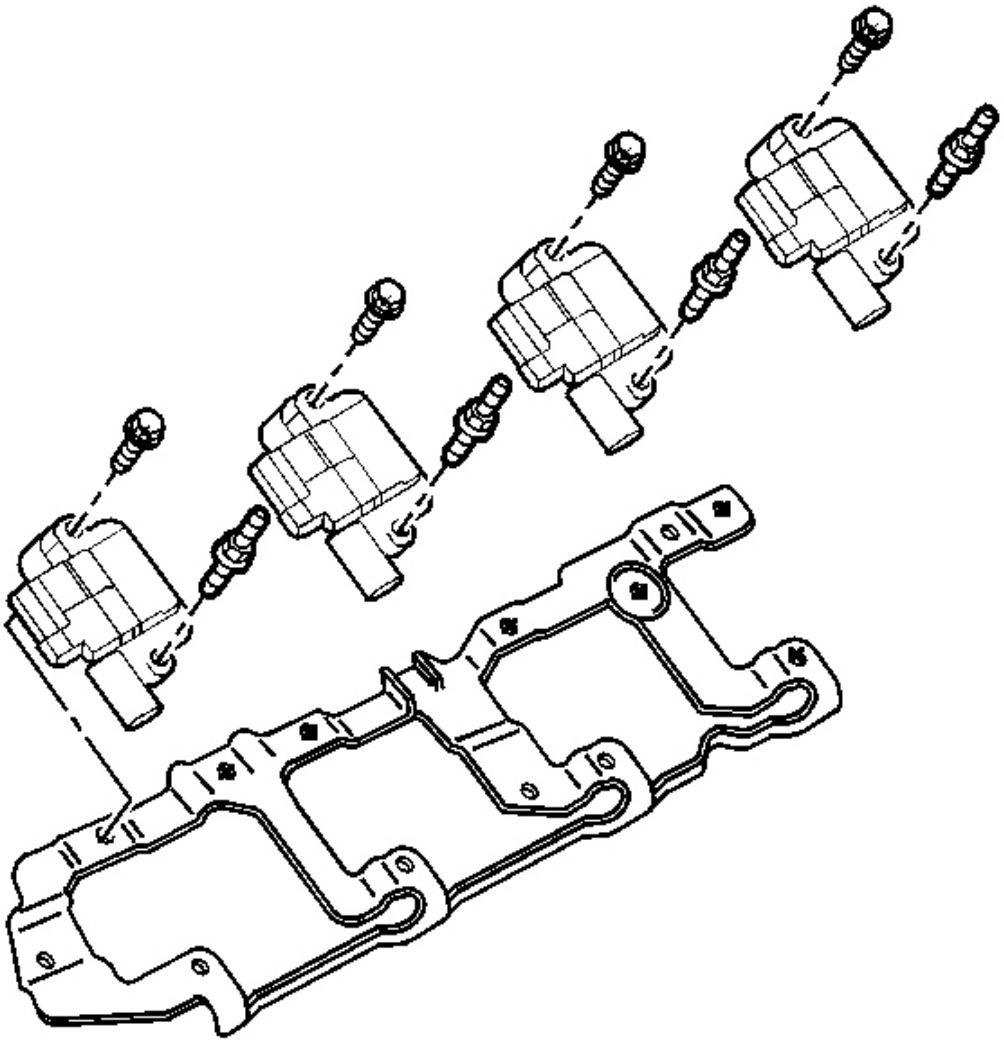

Fig. 28: View Of Left Ignition Coils & Bolts
Courtesy of GENERAL MOTORS CORP.

9. Remove the ignition coils, wire harness, and bolts from the bracket, if required.

VALVE ROCKER ARM AND PUSH ROD REMOVAL

IMPORTANT: Place valve rocker arms, valve pushrods, and pivot support, in a rack so that they can be installed in the same location from which they were removed.

cardiagn.com

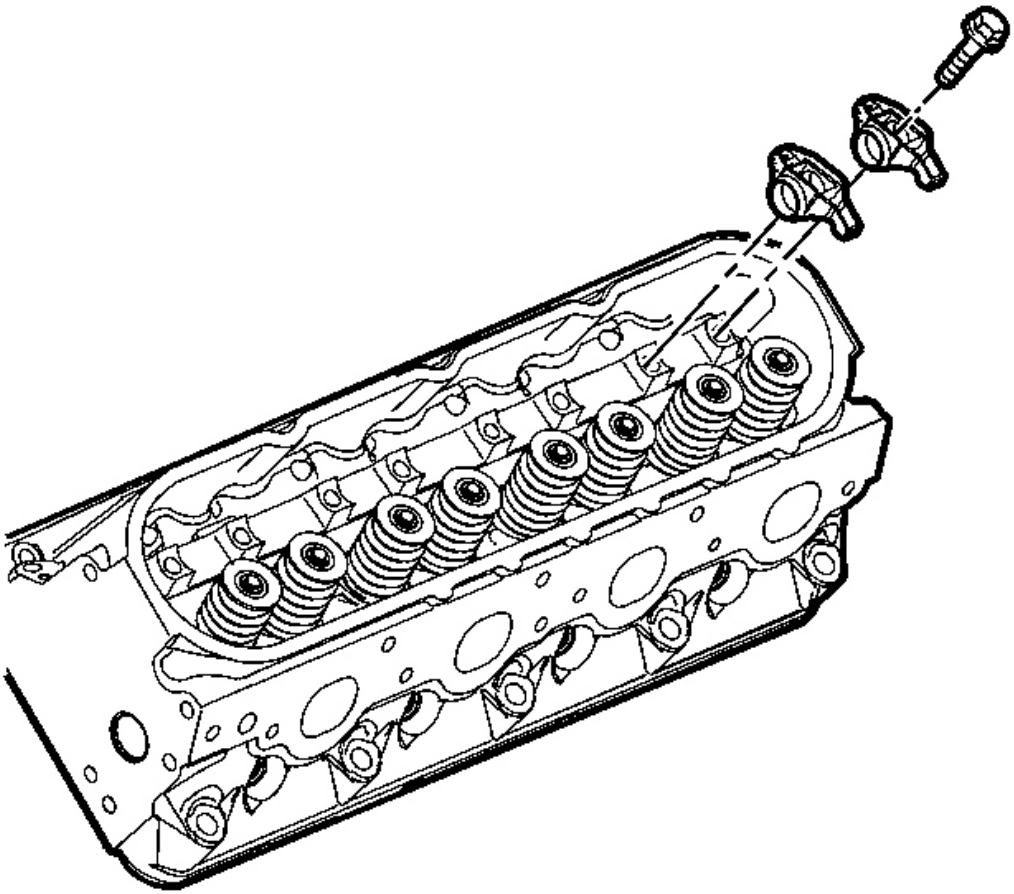

Fig. 29: View Of Valve Rocker Arms
Courtesy of GENERAL MOTORS CORP.

1. Remove the valve rocker arm bolts.
2. Remove the valve rocker arms.

cardiagn.com

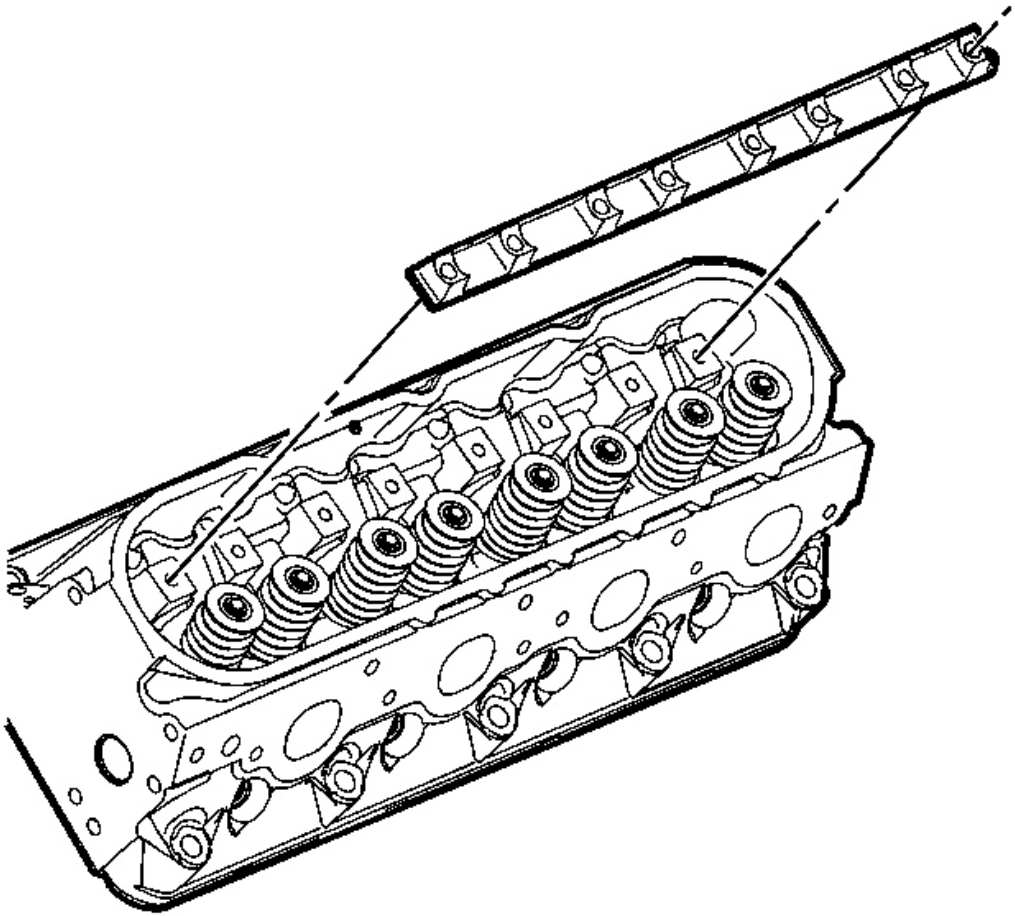

Fig. 30: View Of Valve Rocker Arm Pivot Support
Courtesy of GENERAL MOTORS CORP.

3. Remove the valve rocker arm pivot support.

cardiagn.com

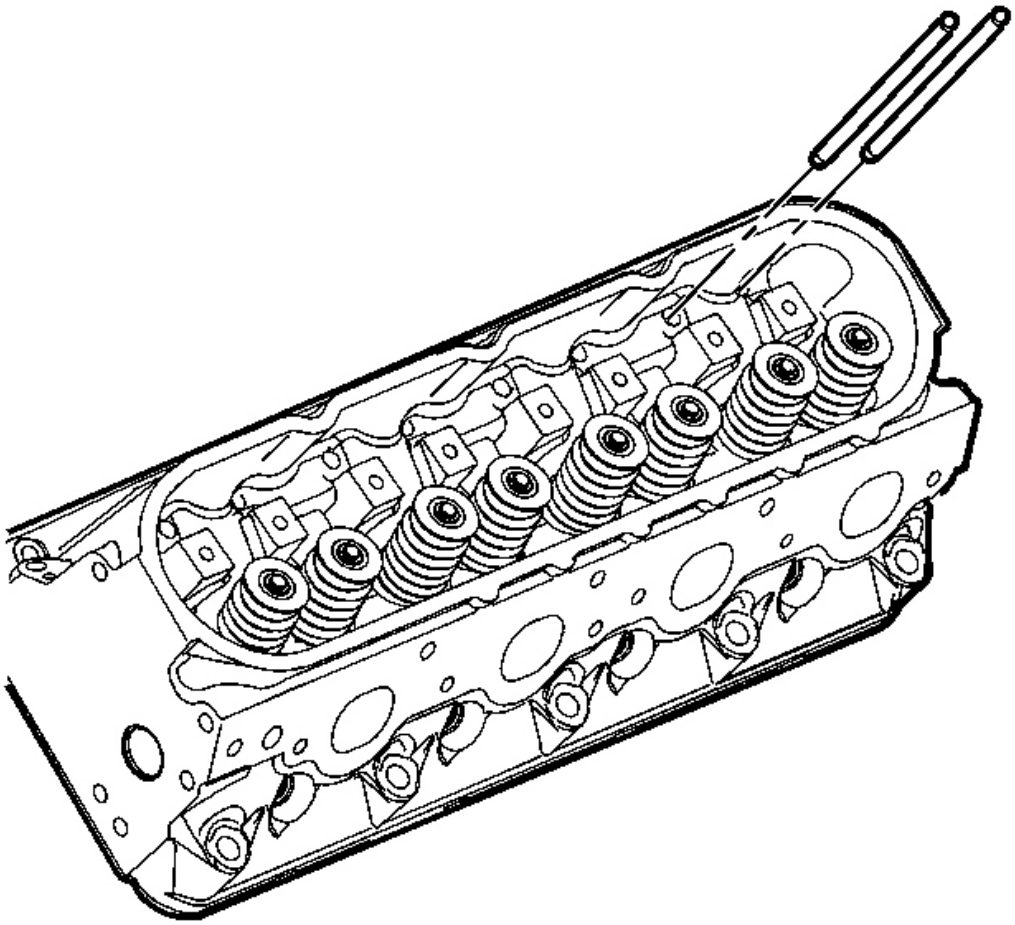

Fig. 31: View Of Pushrods
Courtesy of GENERAL MOTORS CORP.

4. Remove the pushrods.

CYLINDER HEAD REMOVAL - LEFT

cardiagn.com

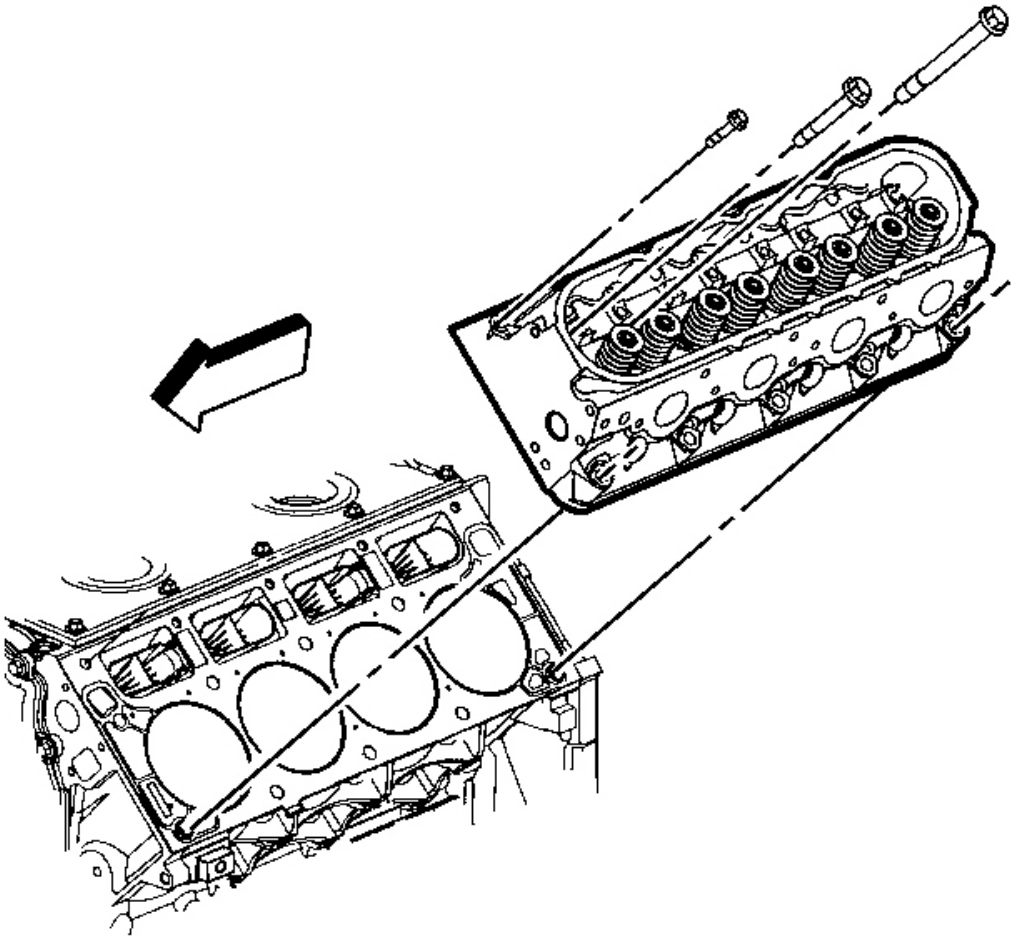

Fig. 32: View Of Cylinder Head & Bolts (Left)
Courtesy of GENERAL MOTORS CORP.

1. Remove the spark plugs from the cylinder head.

IMPORTANT: The cylinder head bolts can NOT be used again. Install NEW cylinder head bolts during assembly.

2. Remove the cylinder head bolts.

NOTE: After removal, place the cylinder head on two wood blocks to prevent damage to the sealing surfaces.

cardiagn.com

3. Remove the cylinder head.

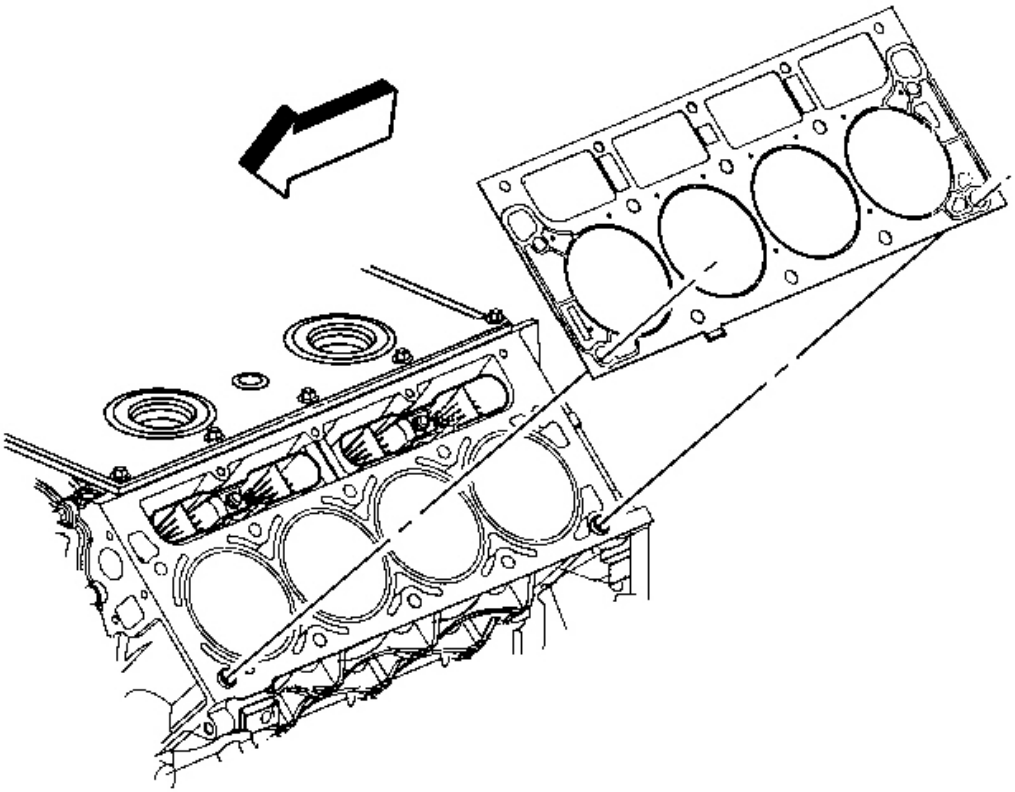

Fig. 33: View Of Cylinder Head Gasket (Left)
Courtesy of GENERAL MOTORS CORP.

4. Remove the gasket.
5. Discard the gasket.
6. Discard the cylinder head bolts.

CYLINDER HEAD REMOVAL - RIGHT

cardiagn.com

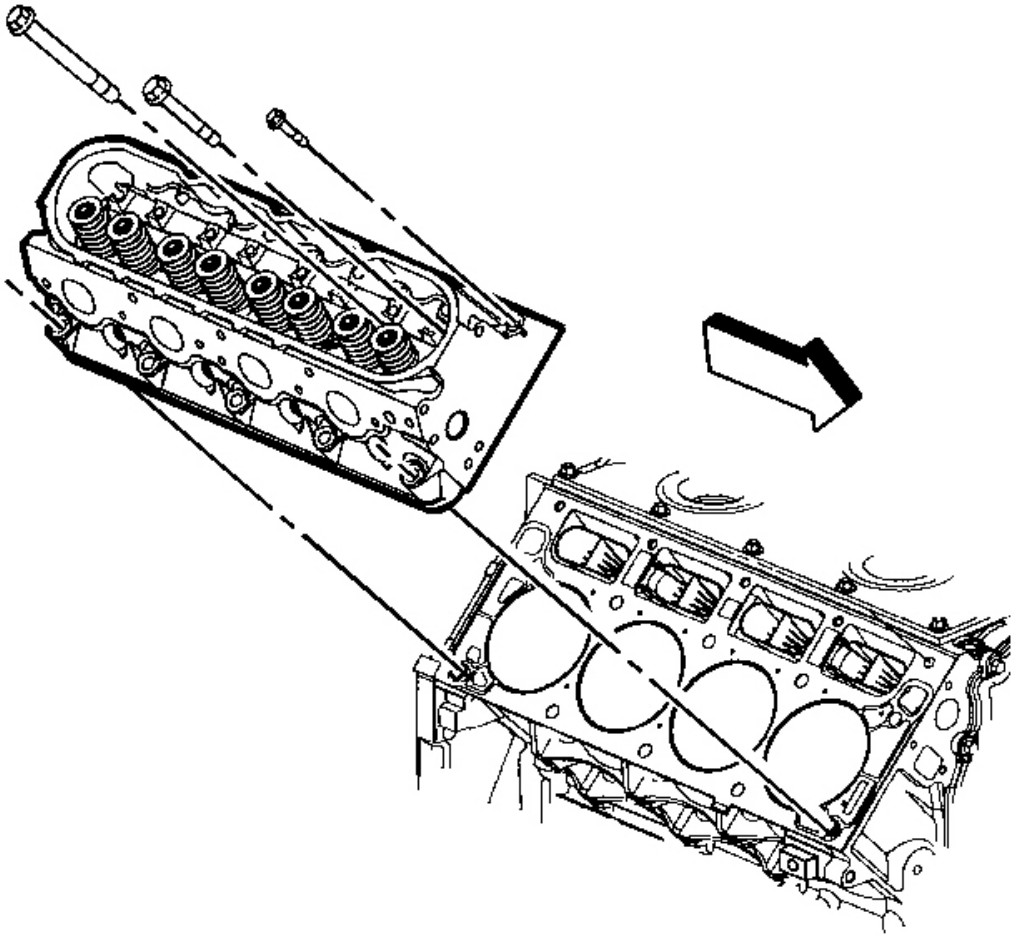

Fig. 34: View Of Cylinder Head & Bolts
Courtesy of GENERAL MOTORS CORP.

1. Remove the spark plugs from the cylinder head.

IMPORTANT: The cylinder head bolts can NOT be used again. Install NEW cylinder head bolts during assembly.

2. Remove the cylinder head bolts.

NOTE: After removal, place the cylinder head on two wood blocks to prevent damage to the sealing surfaces.

cardiagn.com

3. Remove the cylinder head.

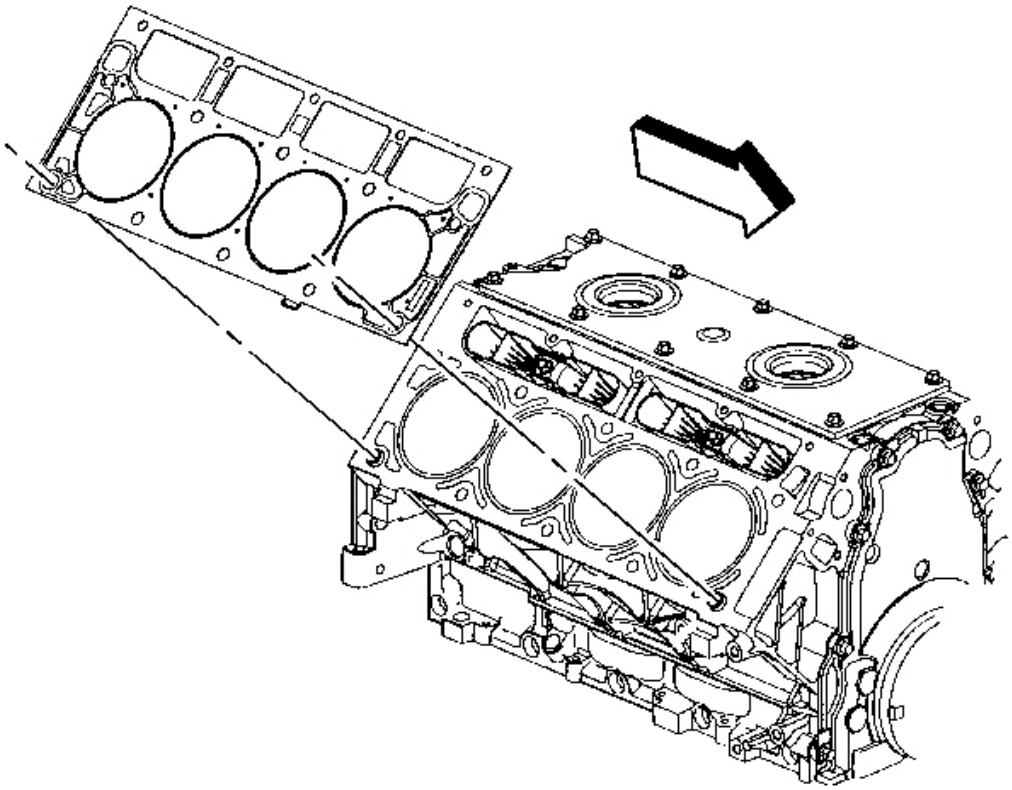

Fig. 35: View Of Cylinder Head Gasket (Right)
Courtesy of GENERAL MOTORS CORP.

4. Remove the gasket.
5. Discard the gasket.
6. Discard the cylinder head bolts.

VALVE LIFTER REMOVAL

Tools Required

J 3049-A Valve Lifter Remover

cardiagn.com

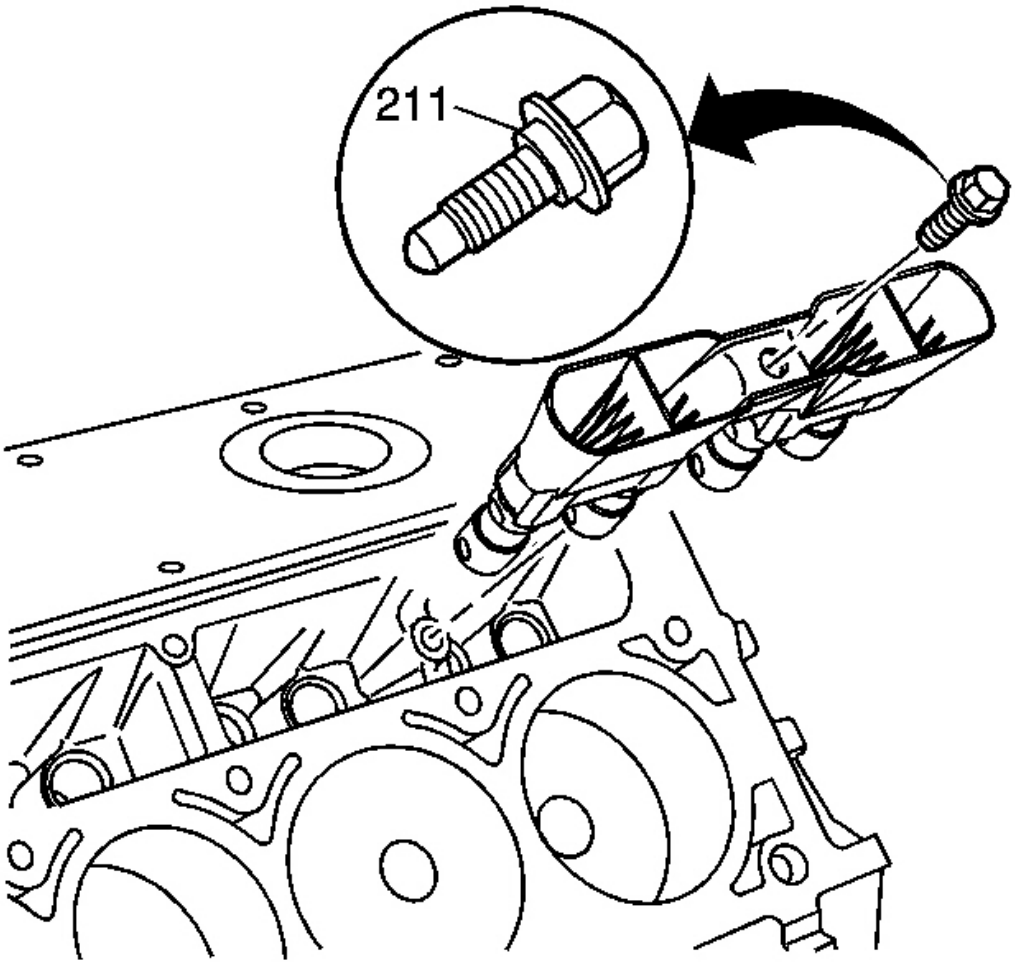

Fig. 36: View Of Valve Lifter & Guide Bolts
Courtesy of GENERAL MOTORS CORP.

1. Remove the valve lifter guide bolts (211).
2. Remove the valve lifters and guide.

cardiagn.com

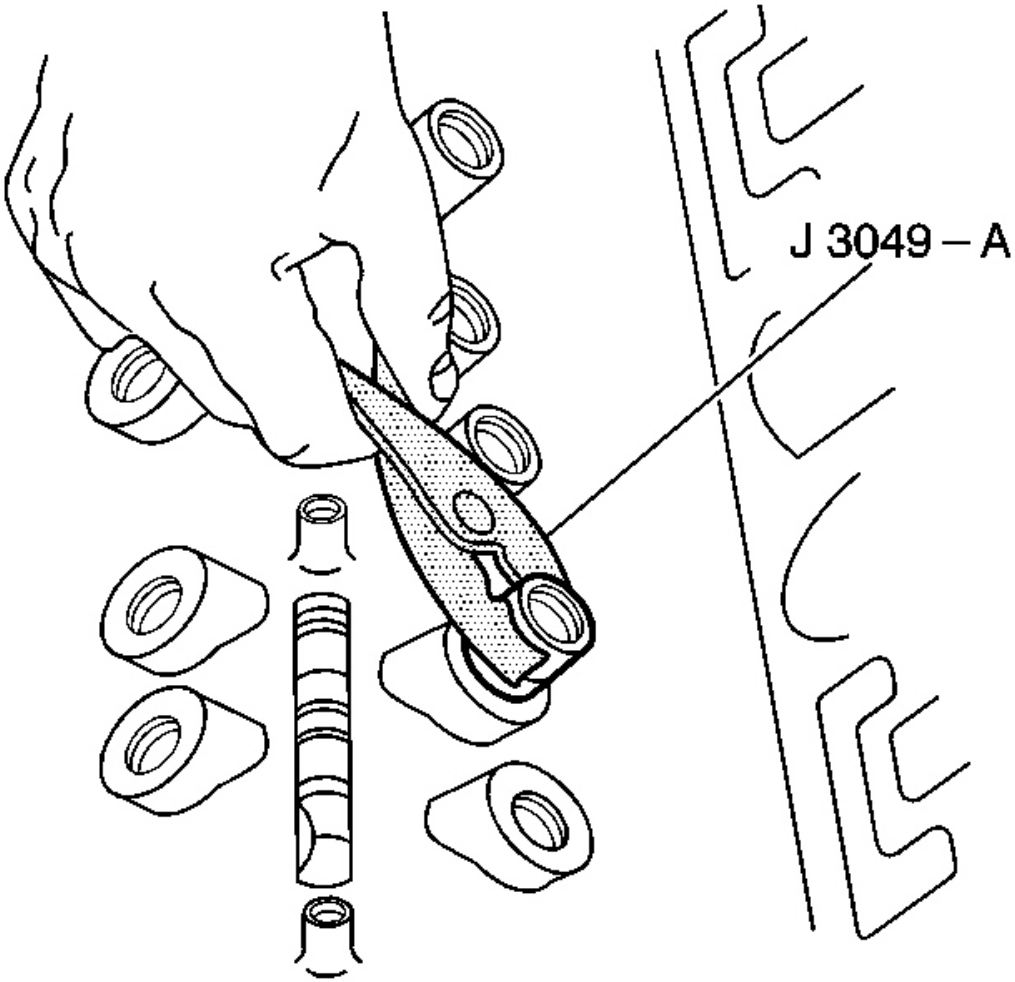

Fig. 37: Using J 3049-A To Remove The Stuck Valve Lifters
Courtesy of GENERAL MOTORS CORP.

IMPORTANT: Some valve lifters may be stuck in their bores because of gum or varnish deposits.

3. Use the **J 3049-A** or equivalent in order to remove the valve lifters, if required.

cardiagn.com

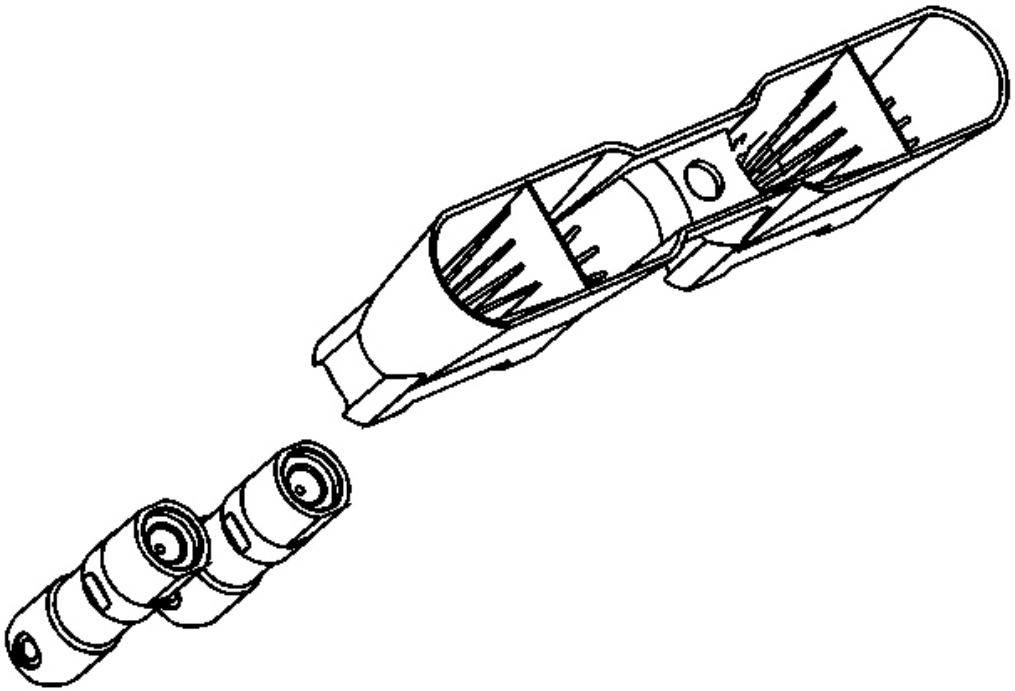

Fig. 38: View Of Valve Lifters Removed From Guide
Courtesy of GENERAL MOTORS CORP.

4. Remove the valve lifters from the guide.
5. Organize or mark the components so that they can be installed in the same location from which they were removed. Refer to **Separating Parts** .

OIL FILTER, ADAPTER AND PAN COVER REMOVAL

cardiagn.com

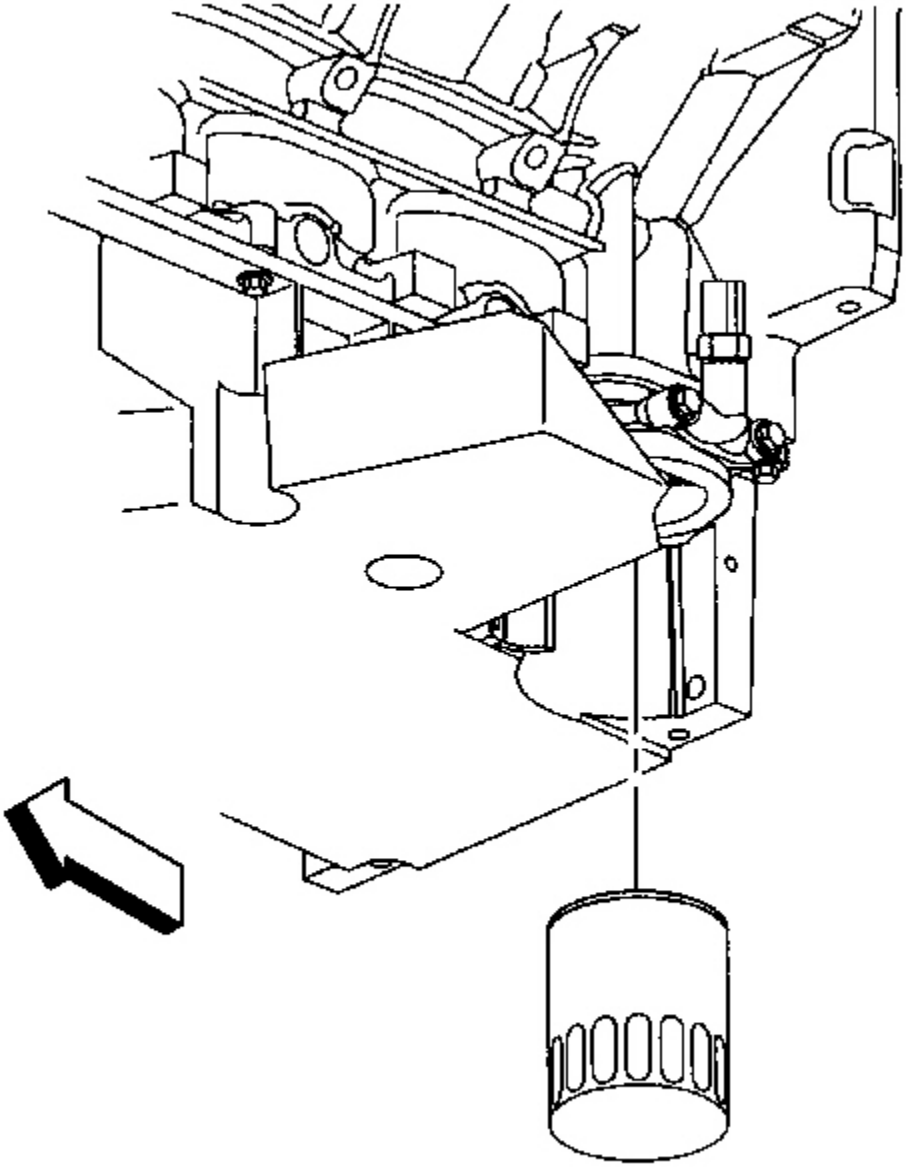

Fig. 39: Oil Filter
Courtesy of GENERAL MOTORS CORP.

1. Remove the oil filter.

cardiagn.com

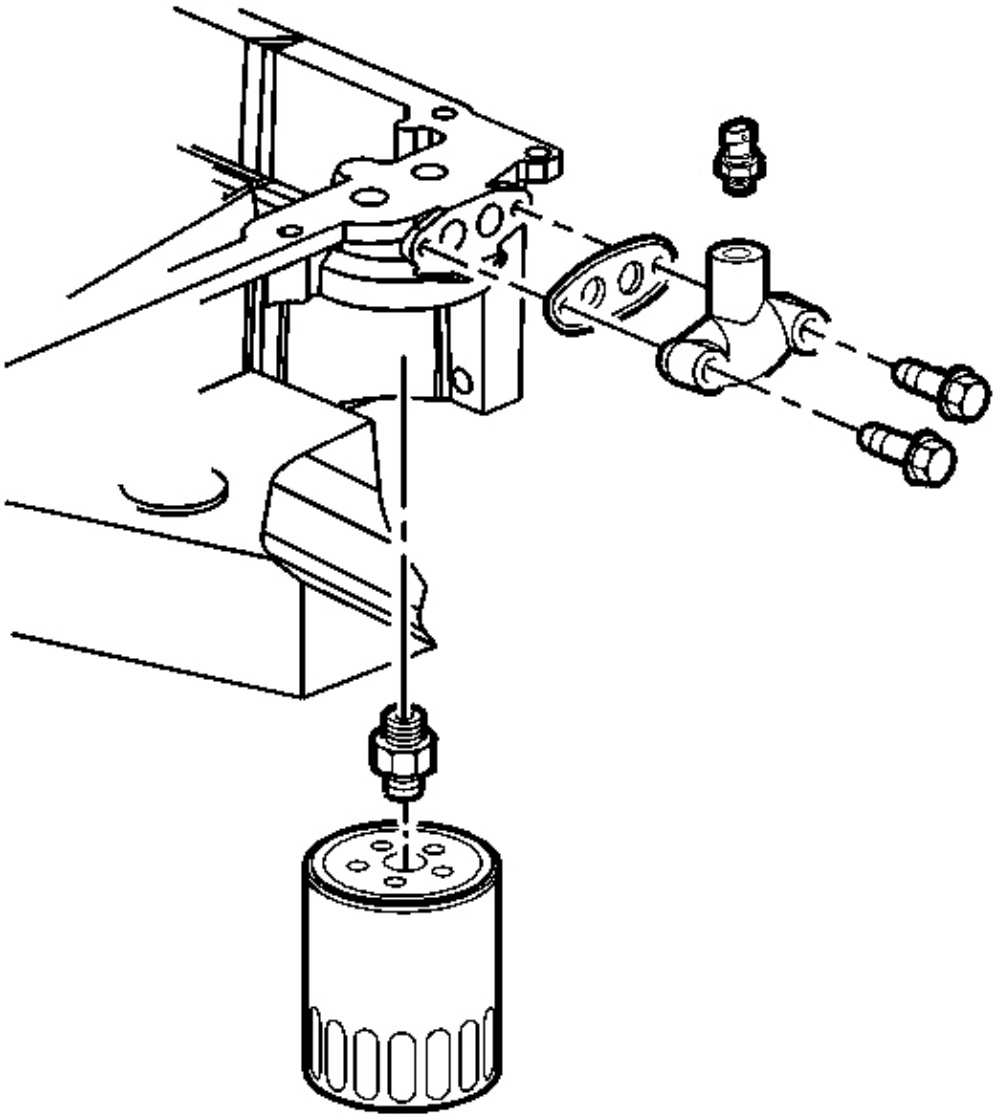

Fig. 40: Oil Temperature Sensor, Oil Pan Cover, Bolts, And Gasket
Courtesy of GENERAL MOTORS CORP.

2. Remove the oil temperature sensor from the oil pan cover.
3. Remove the oil pan cover, bolts, and gasket.
4. Discard the gasket.

cardiagn.com

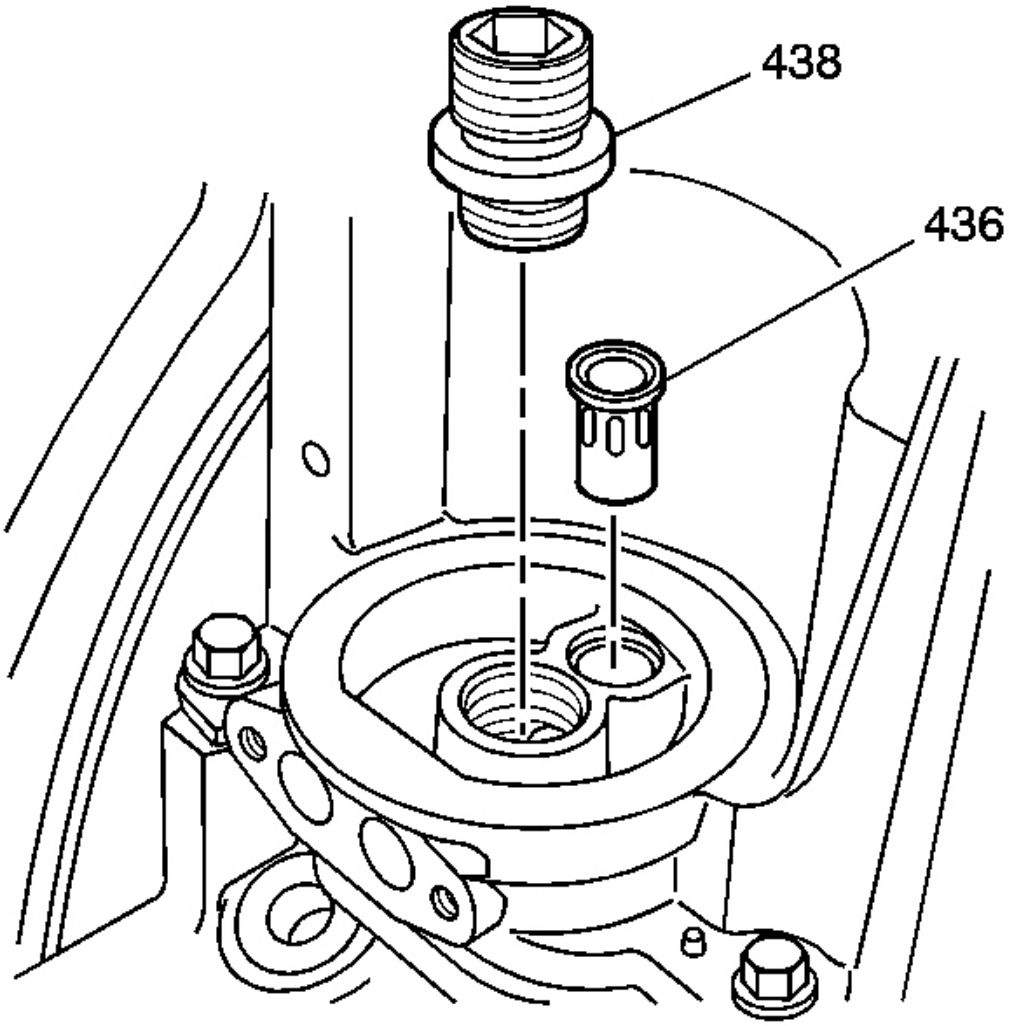

Fig. 41: View Of Oil Filter Fitting & Valve
Courtesy of GENERAL MOTORS CORP.

5. Remove the oil filter fitting (438) and valve (436), if required.

OIL PAN REMOVAL

cardiagn.com

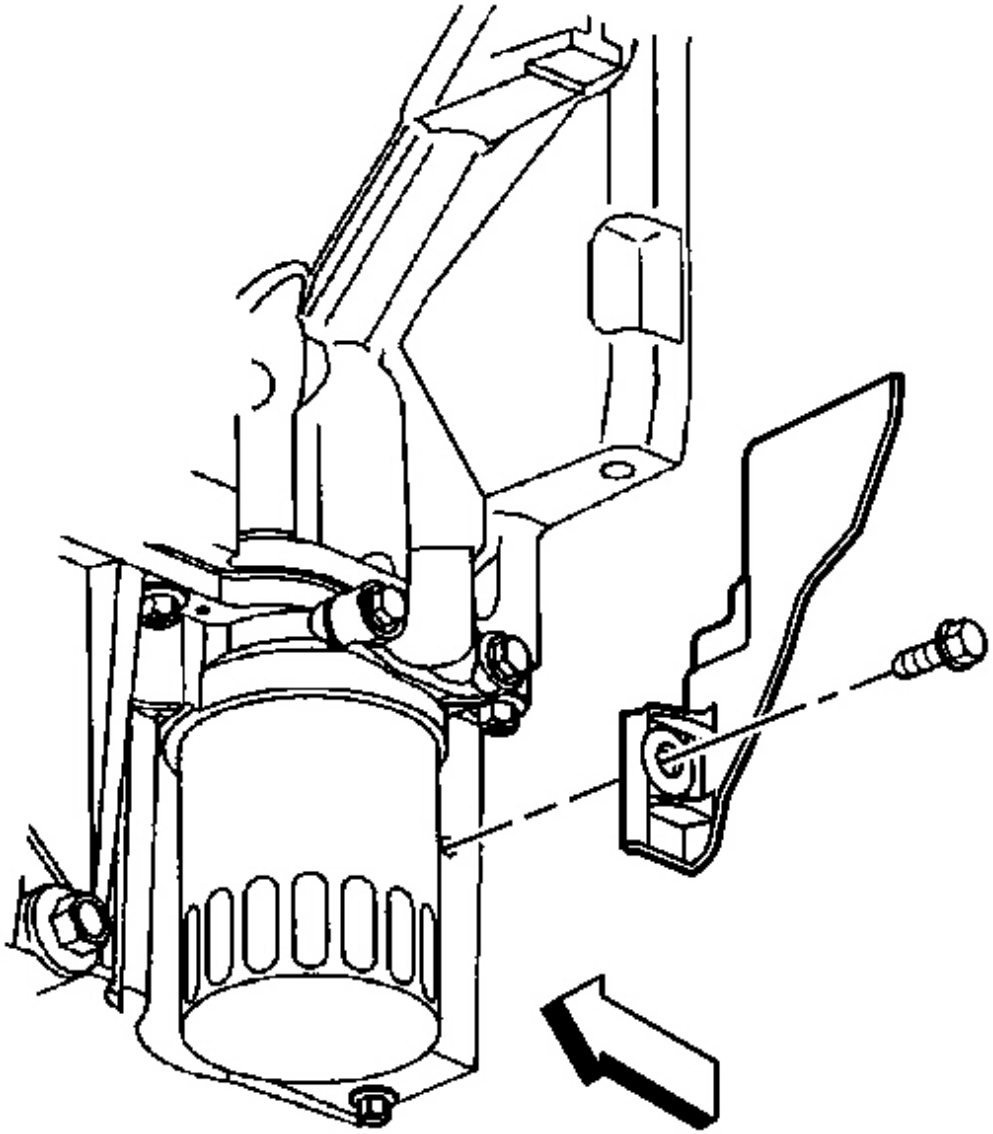

Fig. 42: View Of Left Closeout Cover & Bolt
Courtesy of GENERAL MOTORS CORP.

IMPORTANT:

- **It is not necessary to remove the oil pan - lower - in order to remove the oil pan assembly.**
- **The original oil pan gasket is retained and aligned to the oil pan by**

cardiagn.com

rivets. When installing a new gasket, it is not necessary to install new oil pan gasket rivets.

- **DO NOT use the oil pan gaskets again. When installing the oil pan, install NEW oil pan gaskets.**

1. Remove the left closeout cover and bolt.

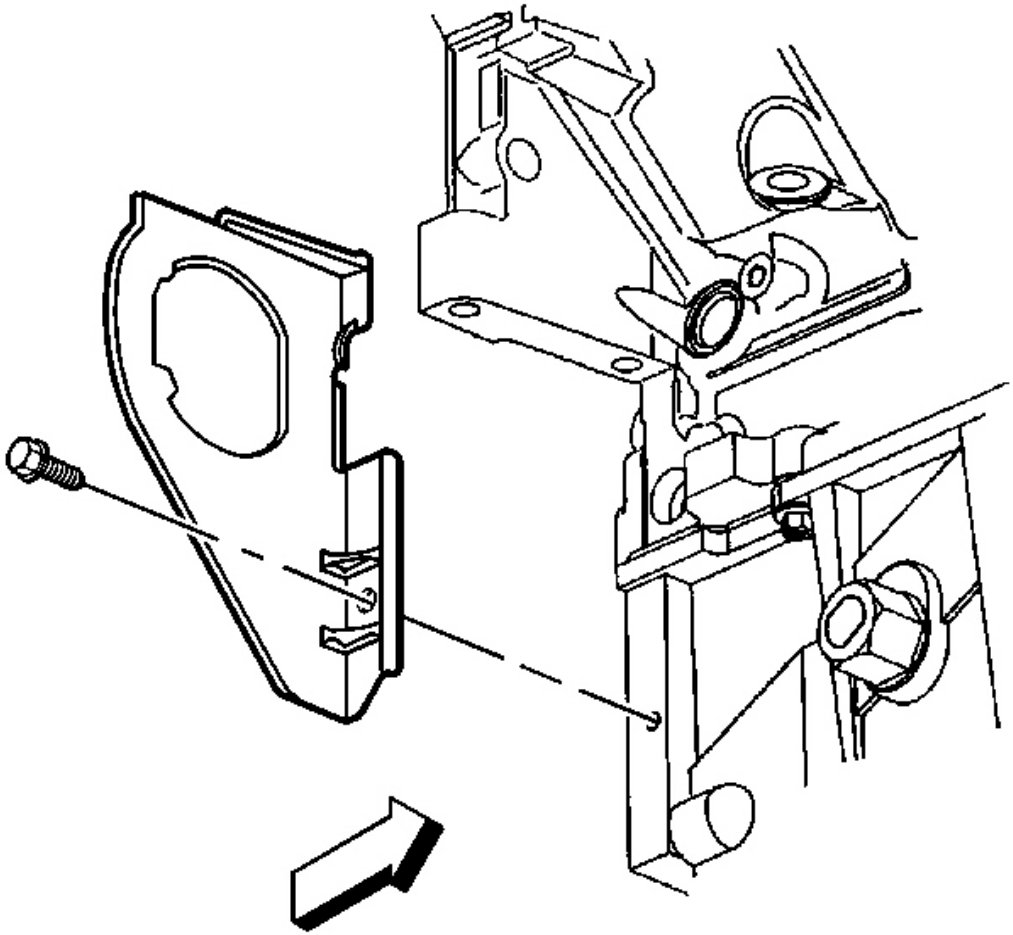

Fig. 43: View Of Right Closeout Cover & Bolt
Courtesy of GENERAL MOTORS CORP.

2. Remove the right closeout cover and bolt.

cardiagn.com

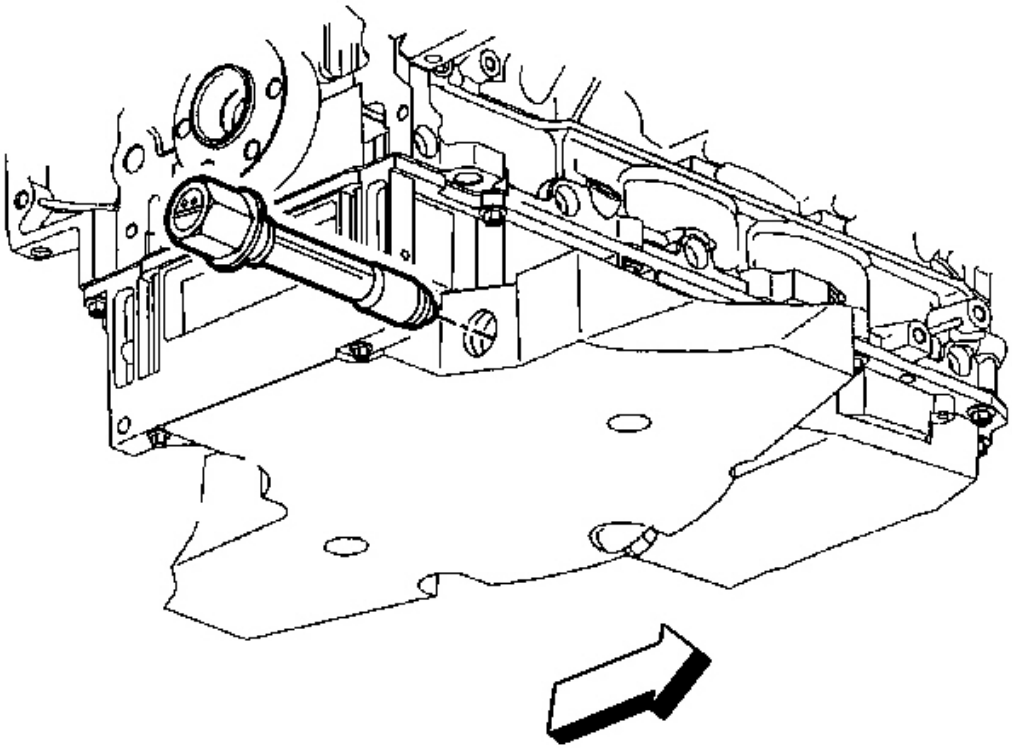

Fig. 44: Oil Level Sensor & Oil Pan
Courtesy of GENERAL MOTORS CORP.

IMPORTANT: It is not necessary to remove the oil level sensor prior to oil pan removal. Remove the oil level sensor if service is required.

3. Remove the oil level sensor from the oil pan, if required.

cardiagn.com

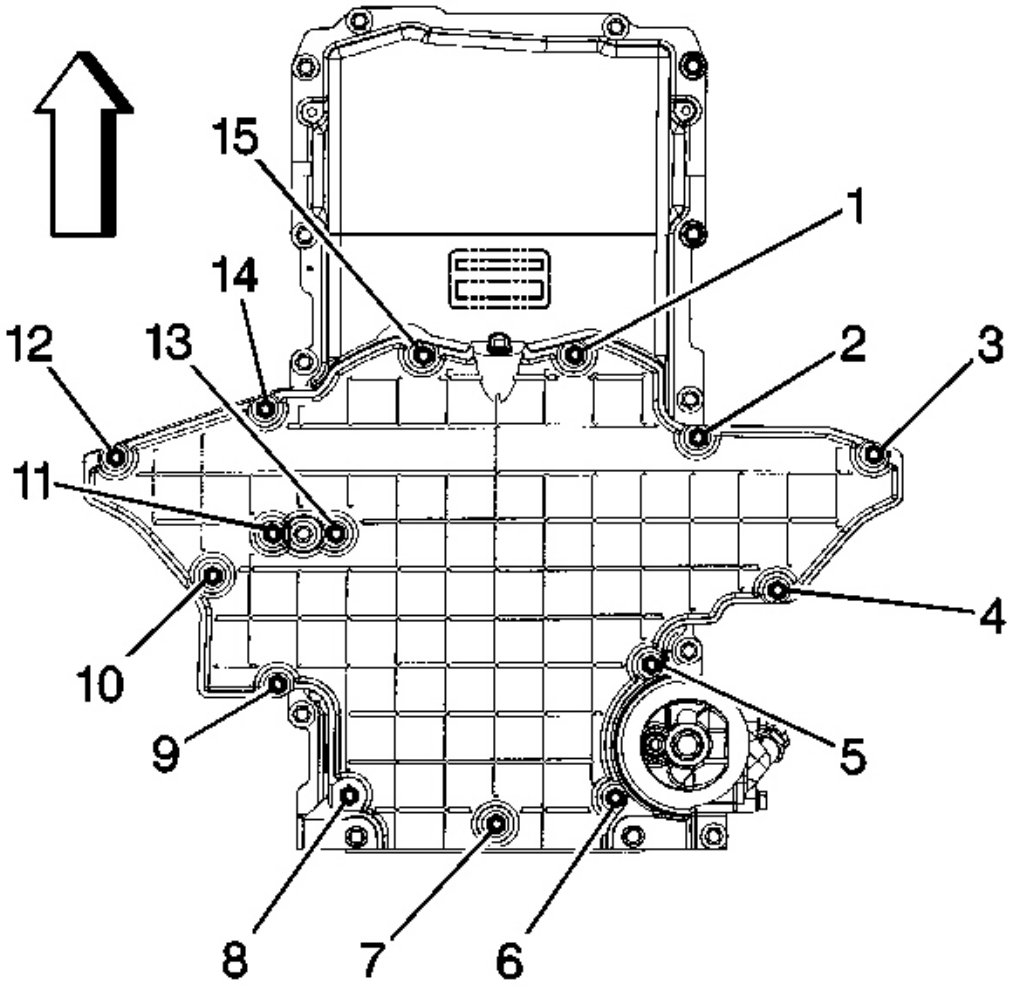

Fig. 45: Oil Pan - Lower - Bolts
Courtesy of GENERAL MOTORS CORP.

IMPORTANT: It is not necessary to remove the oil pan - lower - to remove the oil pan assembly.

4. Remove the oil pan - lower - bolts (1-15), if required.

cardiagn.com

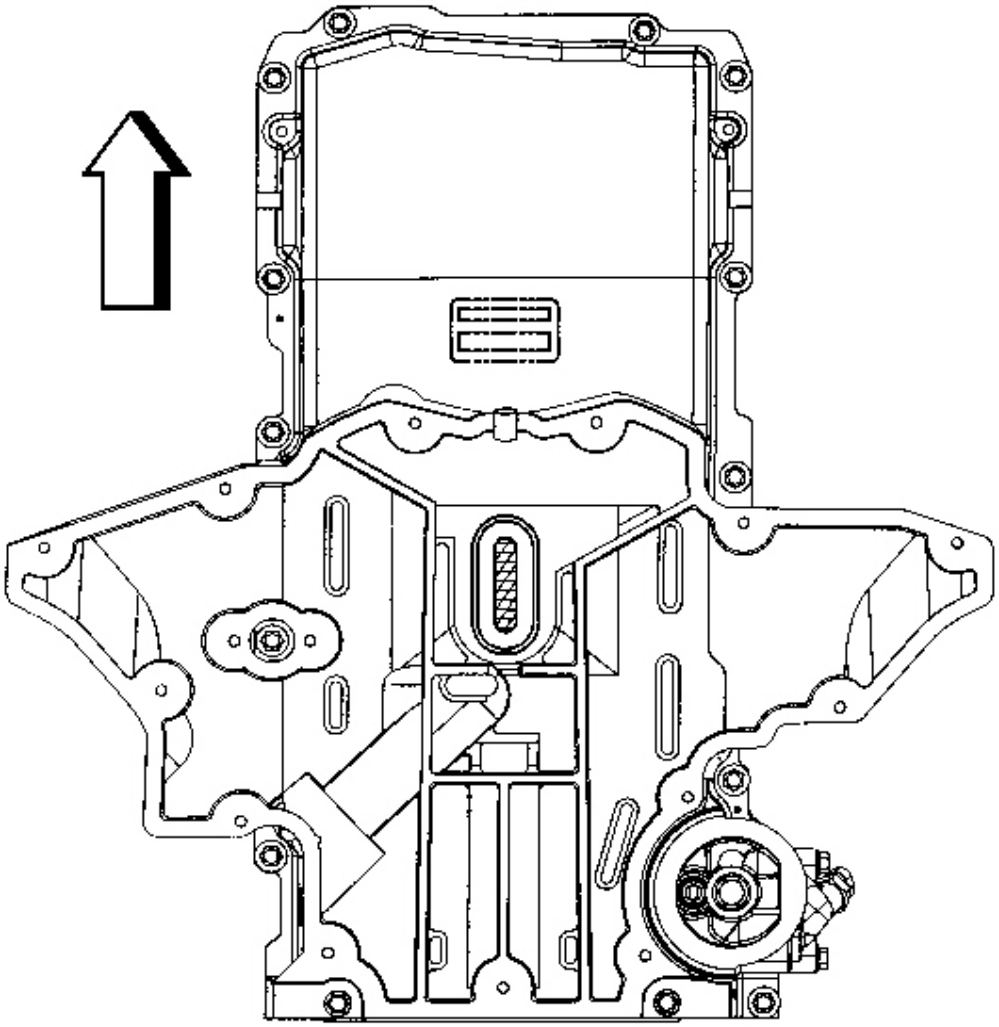

Fig. 46: Lower Oil Pan
Courtesy of GENERAL MOTORS CORP.

5. Removal of the oil pan - lower - will not provide access to the crankshaft oil deflector, crankshaft, or other internal engine components.

cardiagn.com

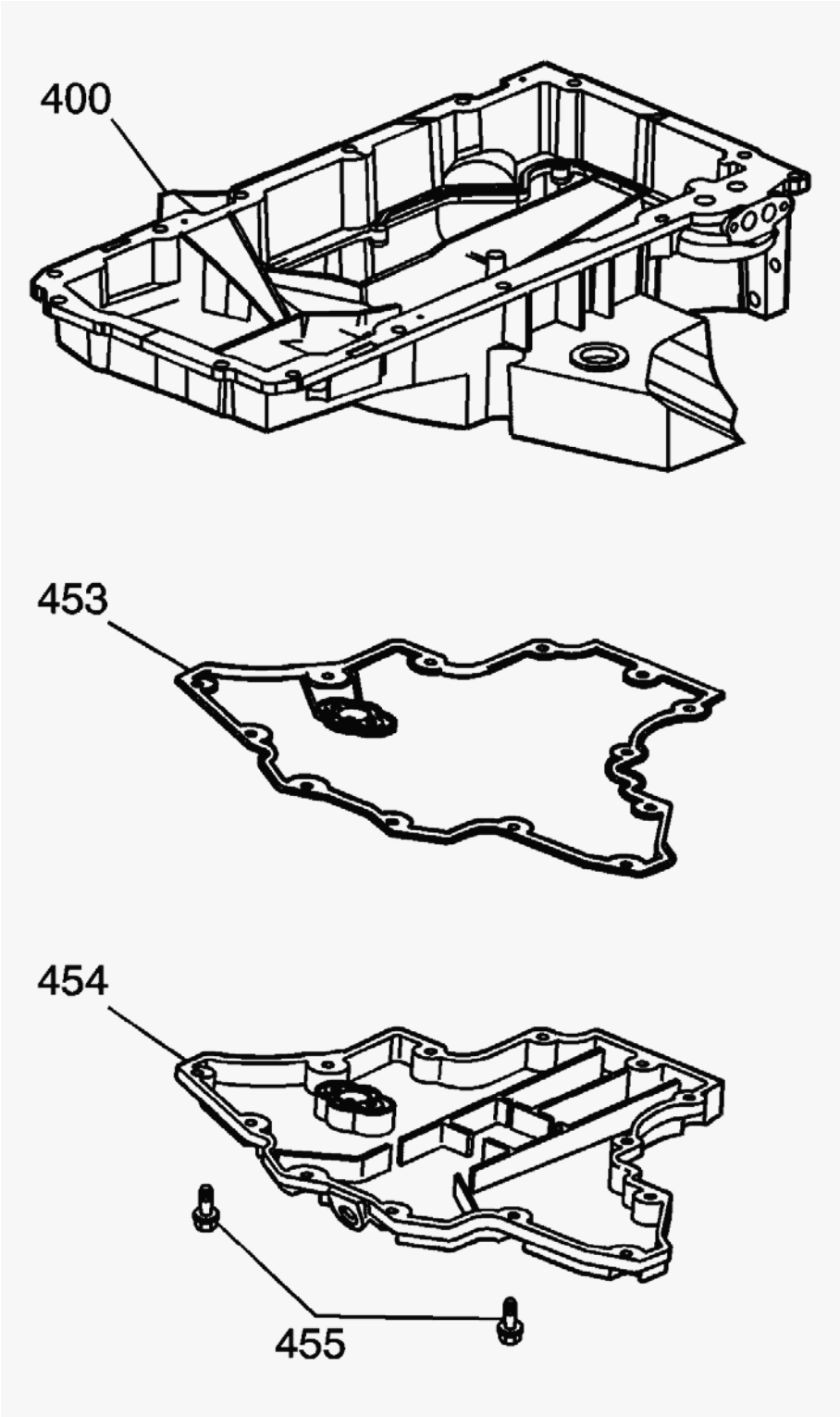

Fig. 47: Oil Pan - Upper, Gasket, Oil Pan - Lower & Bolts
Courtesy of GENERAL MOTORS CORP.

6. Separate the oil pan (400) - upper, gasket (453), oil pan (454) - lower, and bolts (455), if required.

cardiagn.com

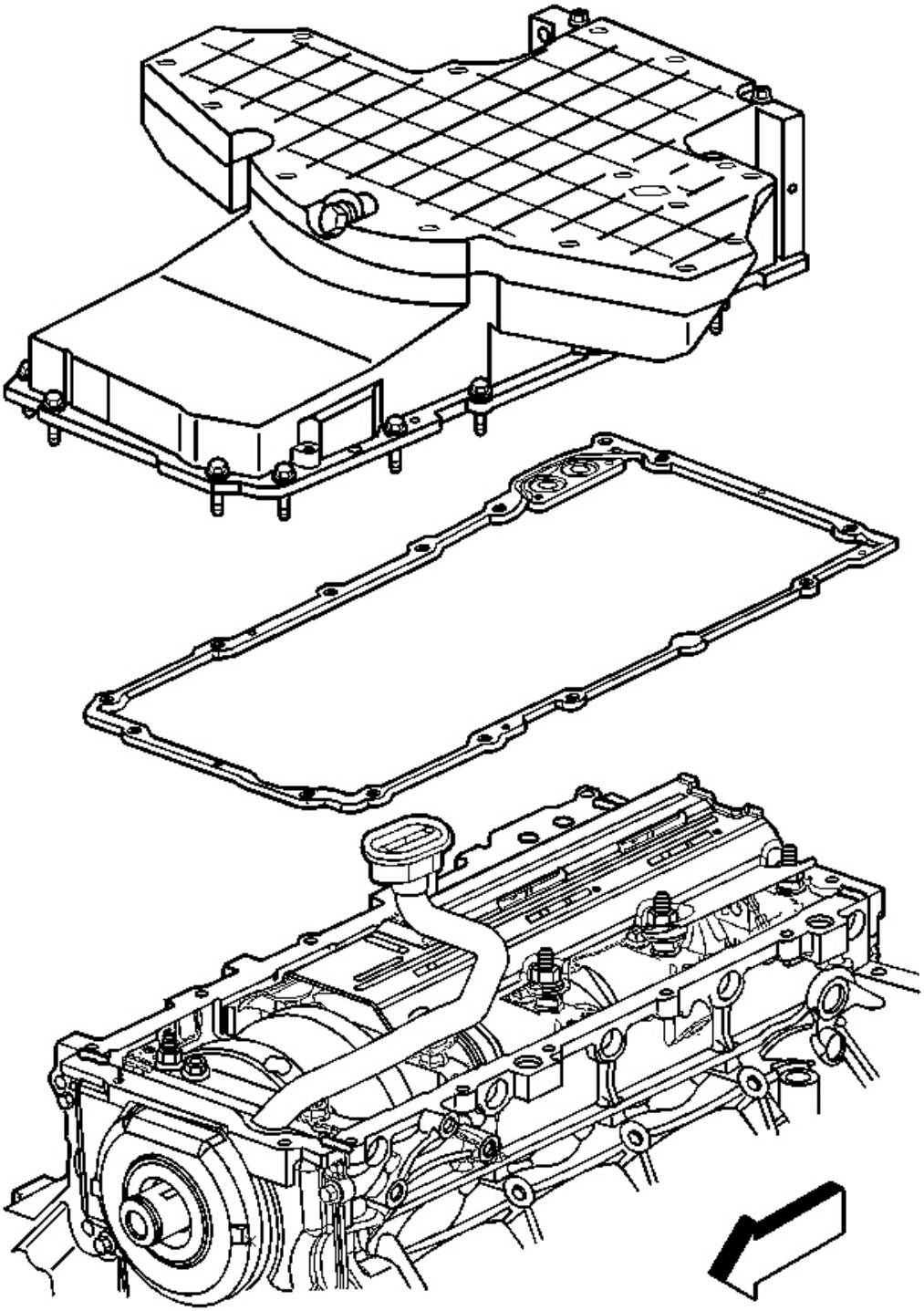

cardiagn.com

Fig. 48: Oil Pan & Gasket
Courtesy of GENERAL MOTORS CORP.

7. Remove the oil pan bolts.
8. Remove the oil pan.

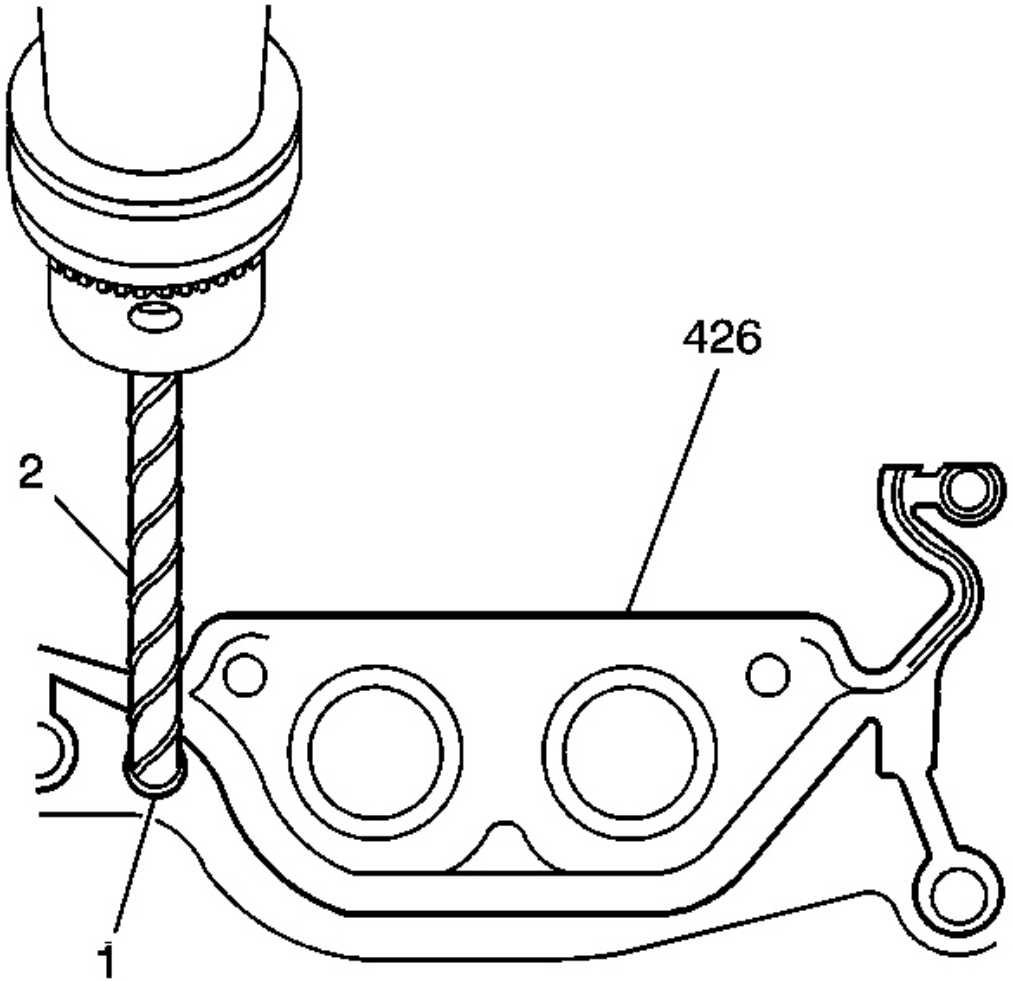

Fig. 49: Drill, Gasket & Oil Pan Gasket Retaining Rivets
Courtesy of GENERAL MOTORS CORP.

IMPORTANT:

- **DO NOT allow foreign material to enter the oil passages of the oil pan. Cap or cover the openings as required.**

cardiagn.com

- **Use care not to gouge, score, or damage the oil pan sealing surface.**

9. Drill (2) out the oil pan gasket retaining rivets (1), if required.
10. Remove the gasket (426) from the pan - upper.
11. Discard the gasket and rivets.

ENGINE FRONT COVER REMOVAL

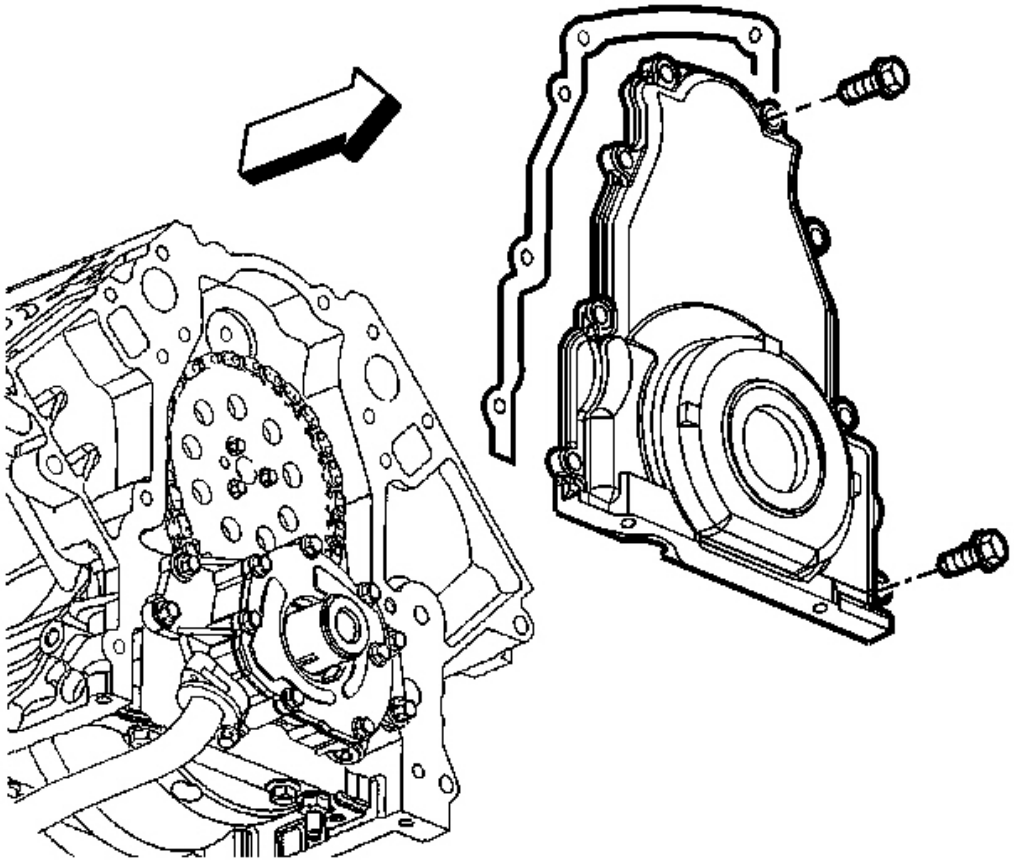

Fig. 50: View Of Front Cover & Gasket
Courtesy of GENERAL MOTORS CORP.

1. Remove the front cover bolts.
2. Remove the front cover and gasket.
3. Discard the front cover gasket.

cardiagn.com

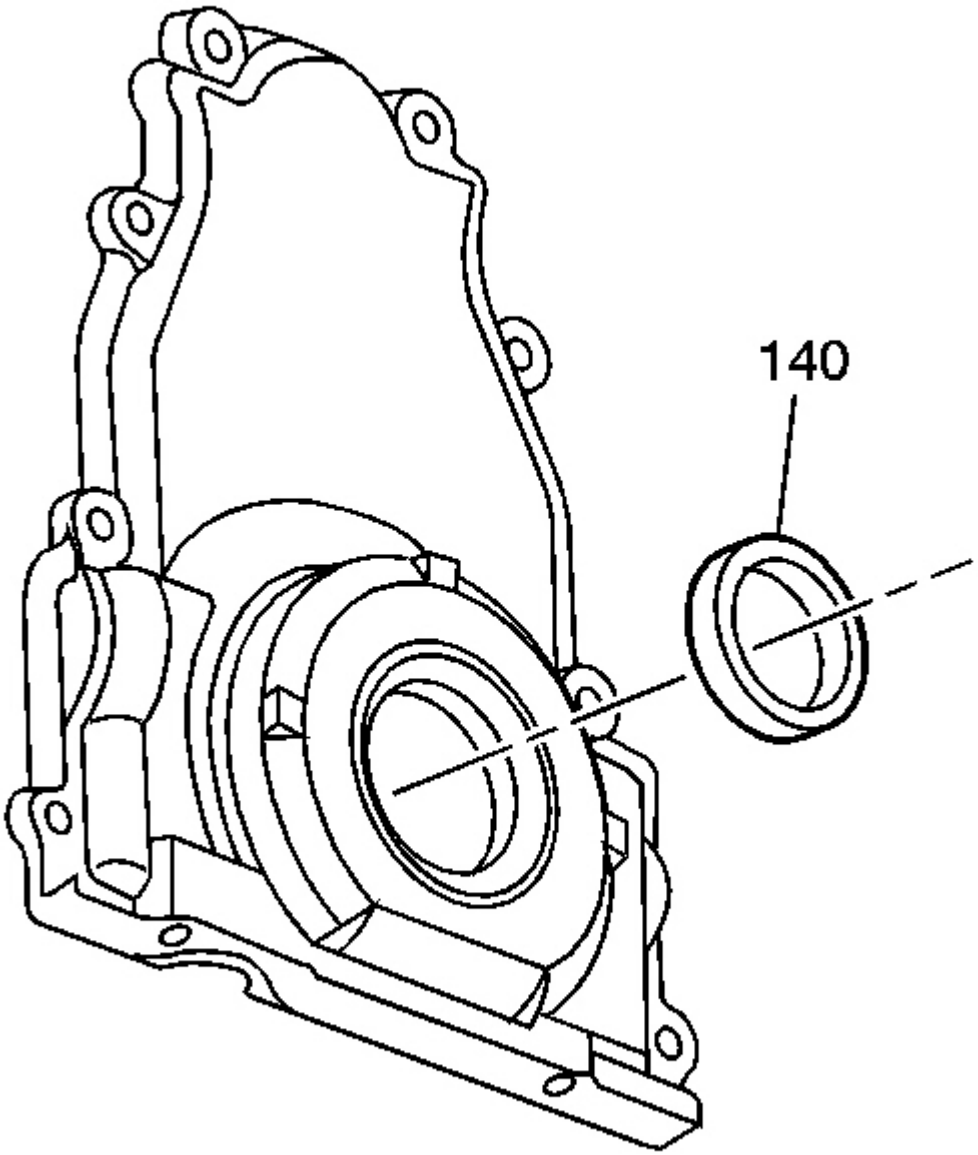

Fig. 51: View Of Crankshaft Front Oil Seal
Courtesy of GENERAL MOTORS CORP.

4. Remove the crankshaft front oil seal (140) from the cover.

ENGINE REAR COVER REMOVAL

cardiagn.com

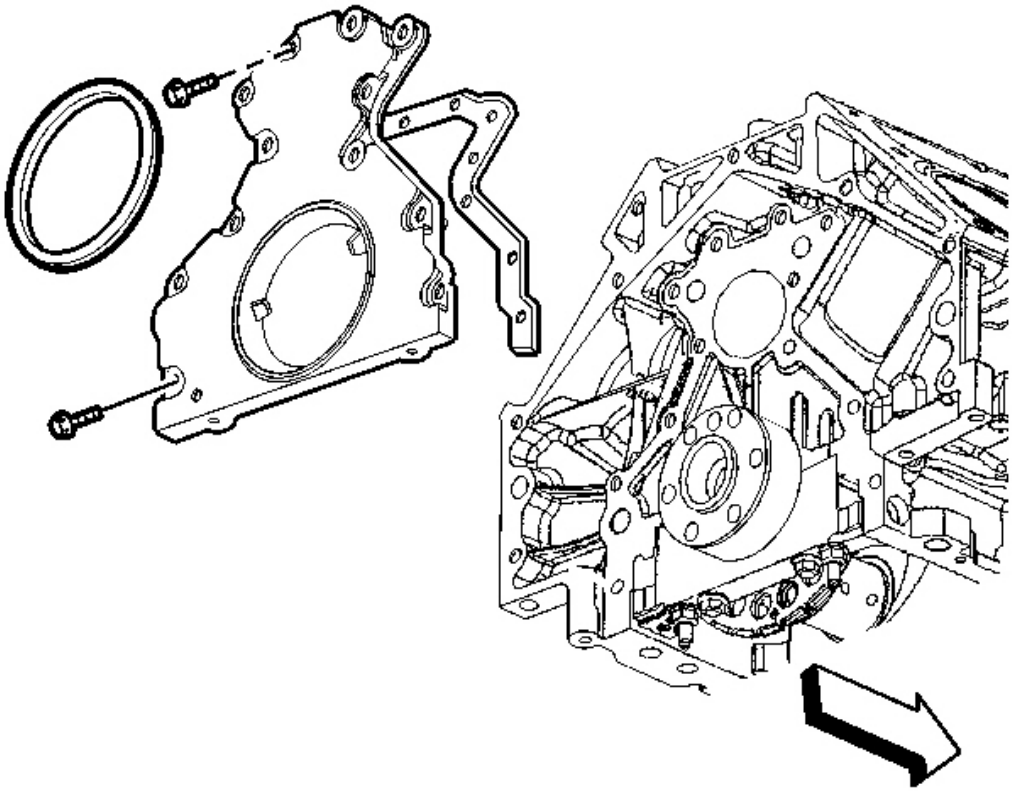

Fig. 52: View Of Rear Cover, Bolts & Gasket
Courtesy of GENERAL MOTORS CORP.

1. Remove the rear cover bolts.
2. Remove the rear cover and gasket.
3. Discard the rear cover gasket.

cardiagn.com

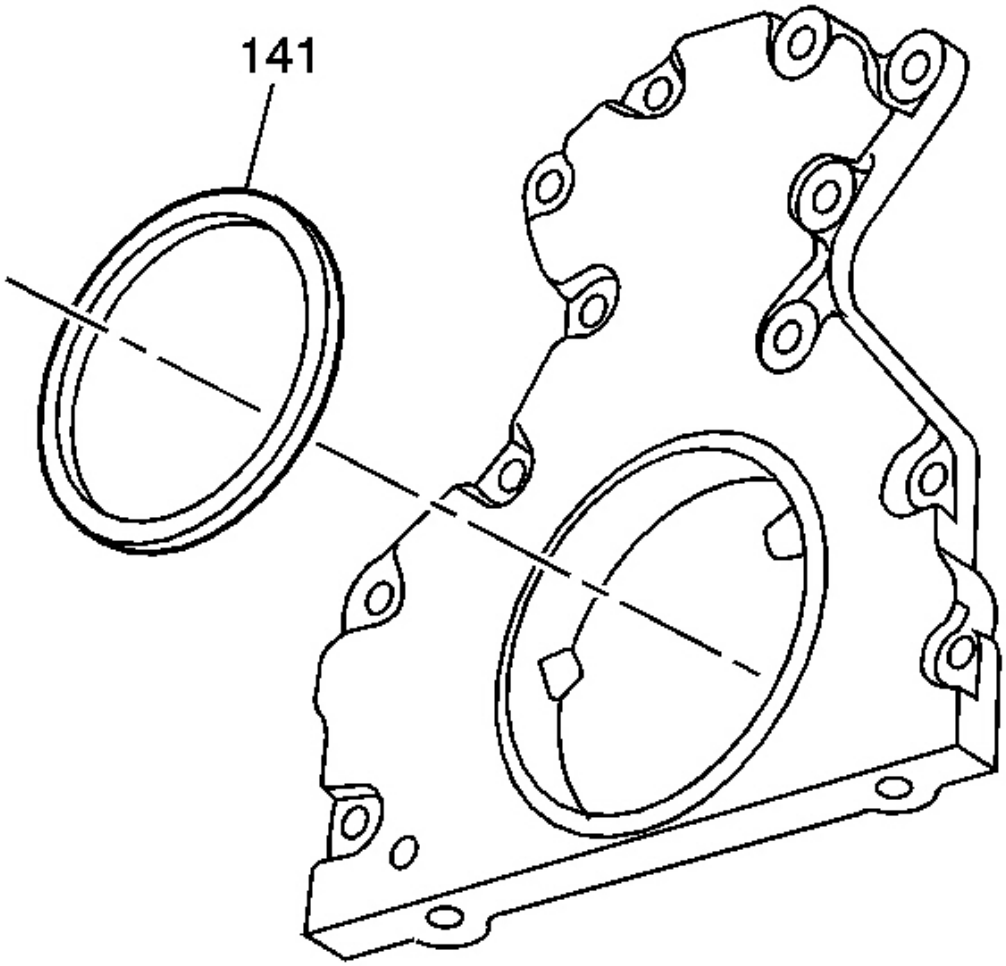

Fig. 53: View Of Crankshaft Rear Oil Seal
Courtesy of GENERAL MOTORS CORP.

4. Remove the crankshaft rear oil seal (141) from the cover.

OIL PUMP, PUMP SCREEN AND DEFLECTOR REMOVAL

cardiagn.com

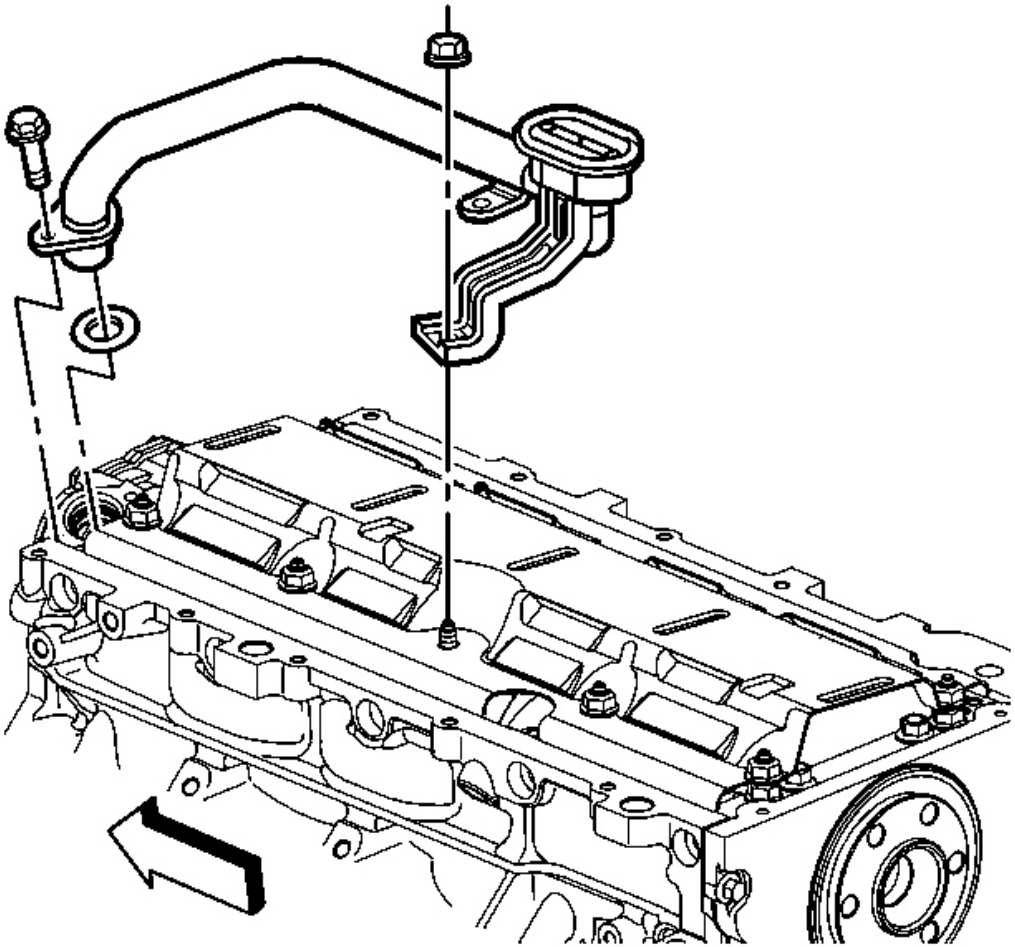

Fig. 54: View Of Oil Pump Screen, Nuts & Bolts
Courtesy of GENERAL MOTORS CORP.

1. Remove the oil pump screen bolt and nuts.
2. Remove the oil pump screen with O-ring seal.
3. Remove the O-ring seal from the pump screen.
4. Discard the O-ring seal.

cardiagn.com

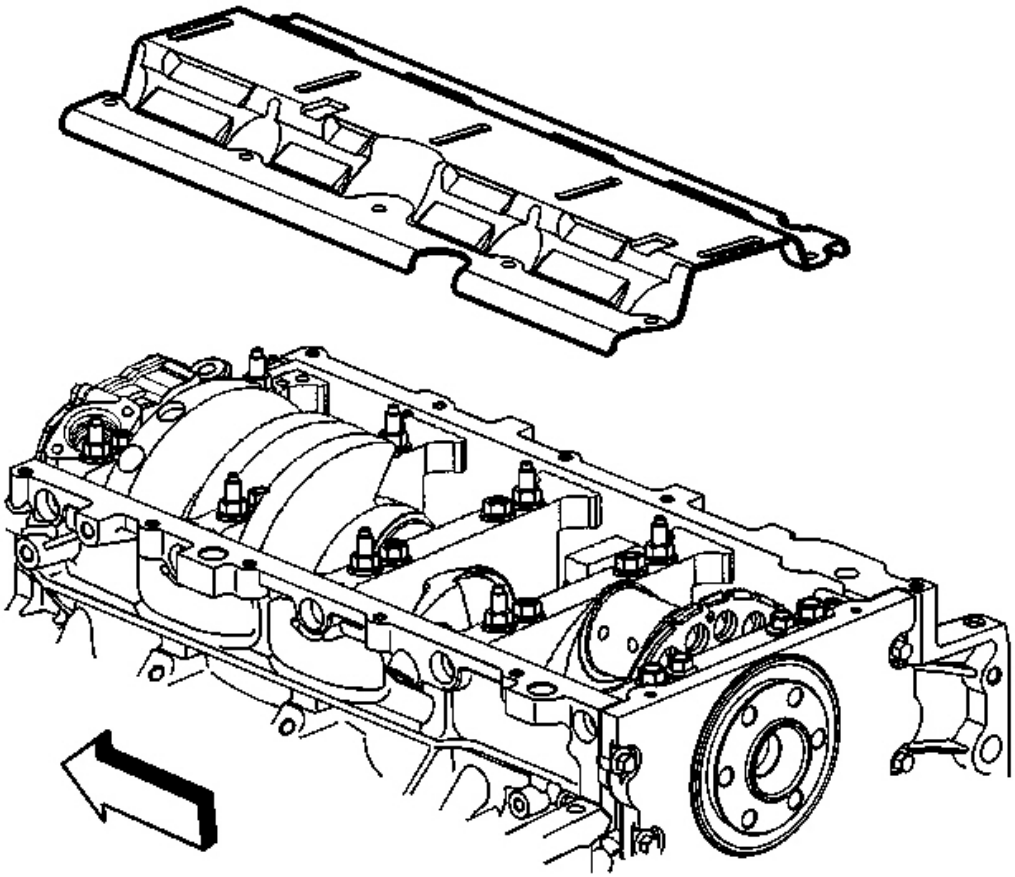

Fig. 55: Crankshaft Oil Deflector
Courtesy of GENERAL MOTORS CORP.

5. Remove the remaining crankshaft oil deflector nuts.
6. Remove the crankshaft oil deflector.

cardiagn.com

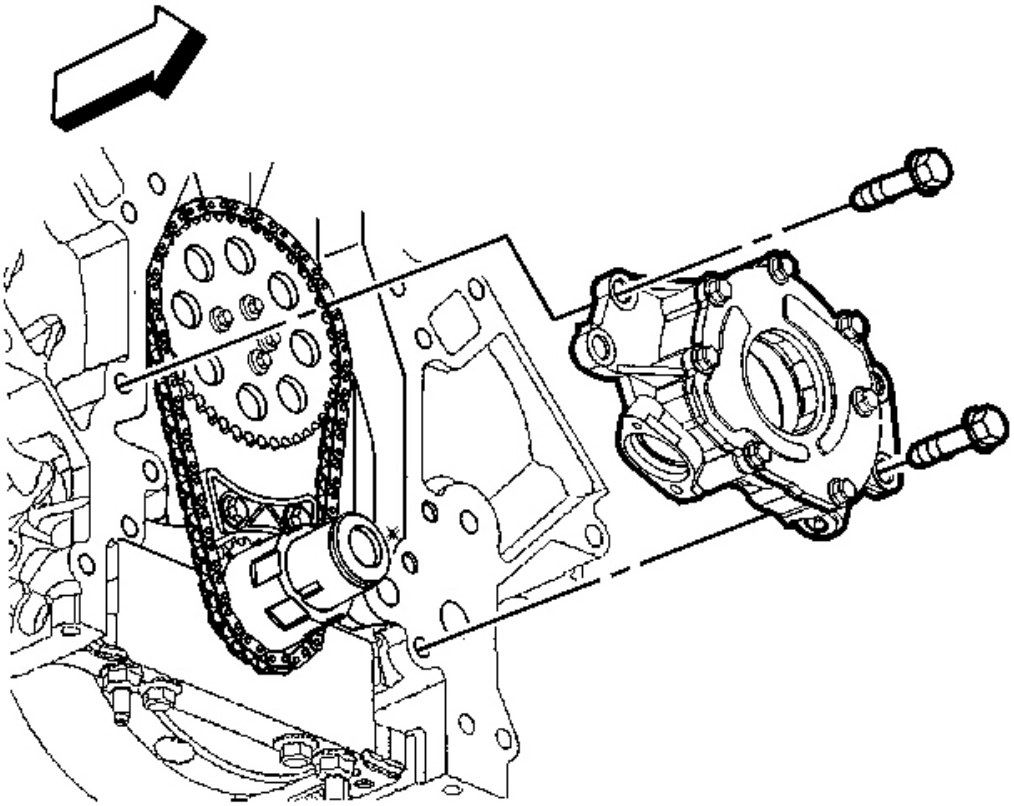

Fig. 56: Oil Pump & Bolts
Courtesy of GENERAL MOTORS CORP.

7. Remove the oil pump bolts.

IMPORTANT: Do not allow dirt or debris to enter the oil pump assembly. Cap ends as necessary.

8. Remove the oil pump.

TIMING CHAIN AND SPROCKETS REMOVAL

Tools Required

- **J 8433-1** Puller Bar
- **J 41558** Crankshaft Sprocket Remover
- J 41816-2 Crankshaft End Protector

cardiagn.com

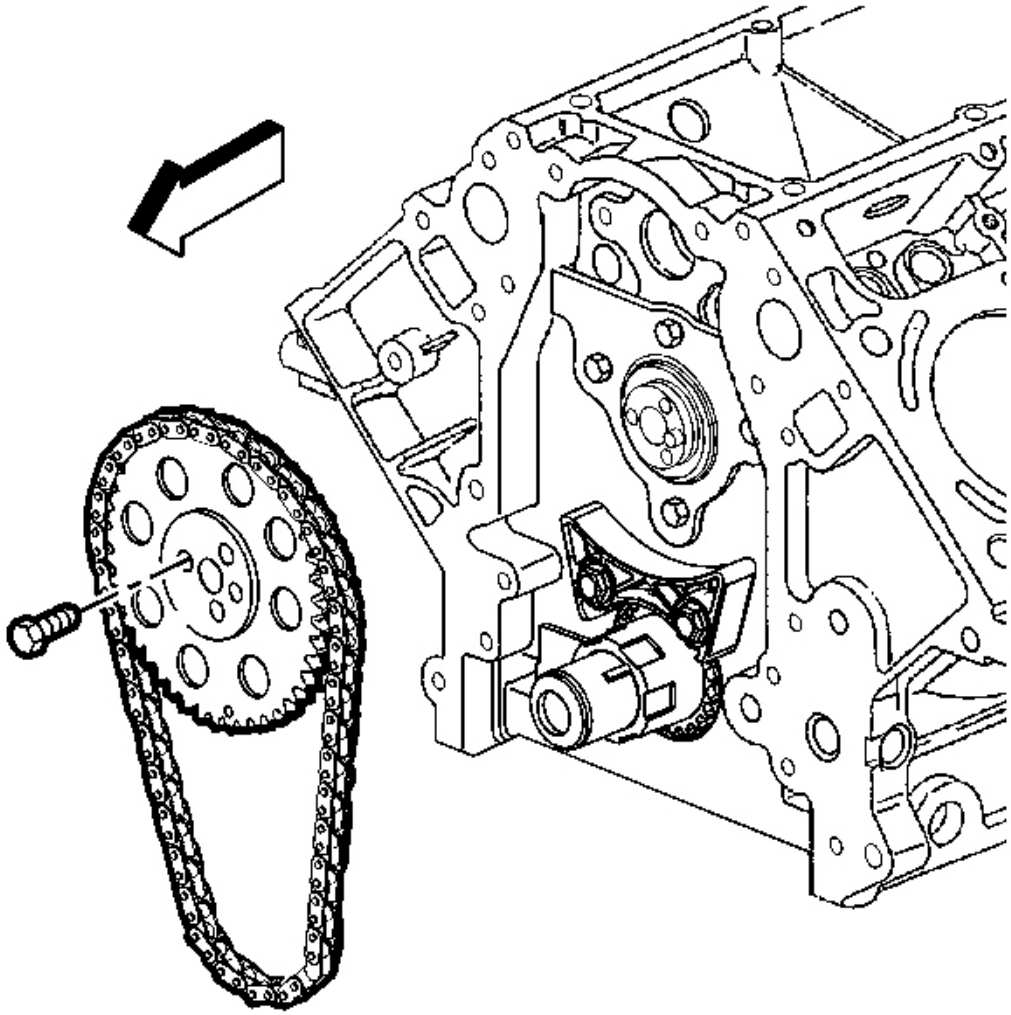

Fig. 57: Camshaft Sprocket, Timing Chain & Bolts
Courtesy of GENERAL MOTORS CORP.

NOTE: **Do not turn the crankshaft assembly after the timing chain has been removed in order to prevent damage to the piston assemblies or the valves.**

1. Remove the camshaft sprocket bolts.
2. Remove the camshaft sprocket and timing chain.

cardiagn.com

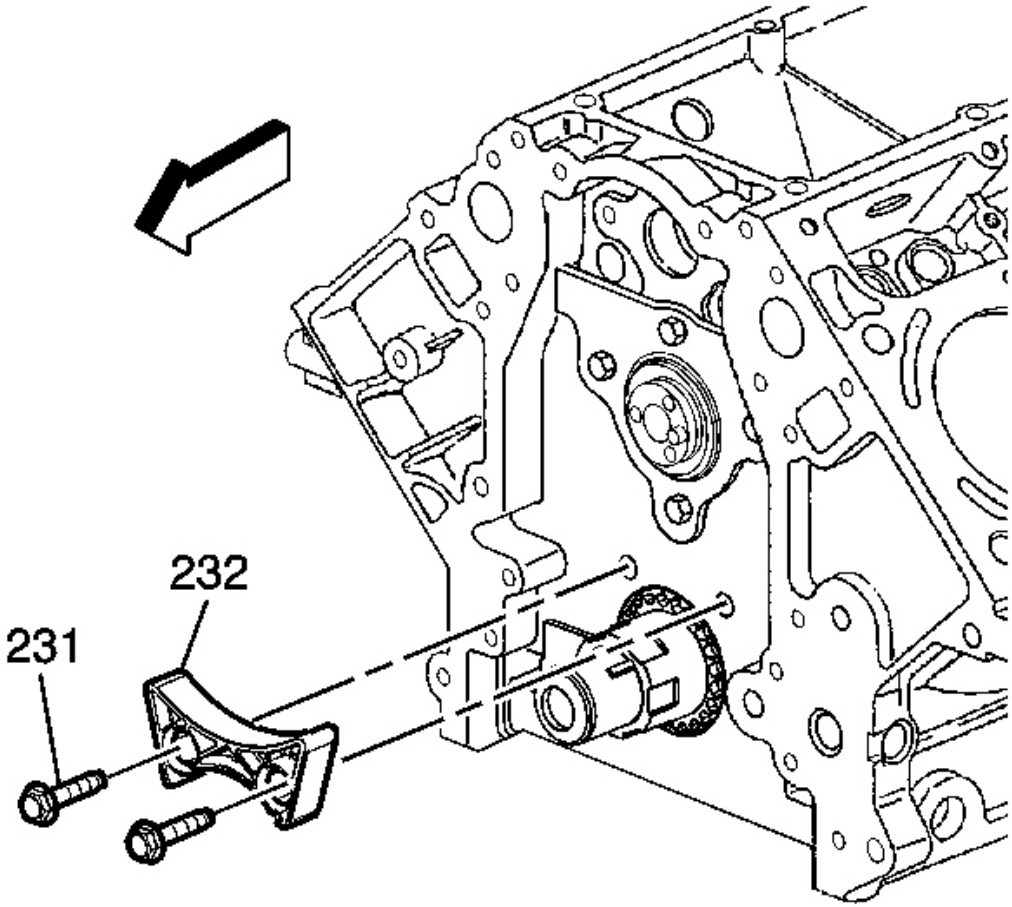

Fig. 58: Chain Dampener & Bolts
Courtesy of GENERAL MOTORS CORP.

3. Remove the chain dampener (232) and bolts (231).

cardiagn.com

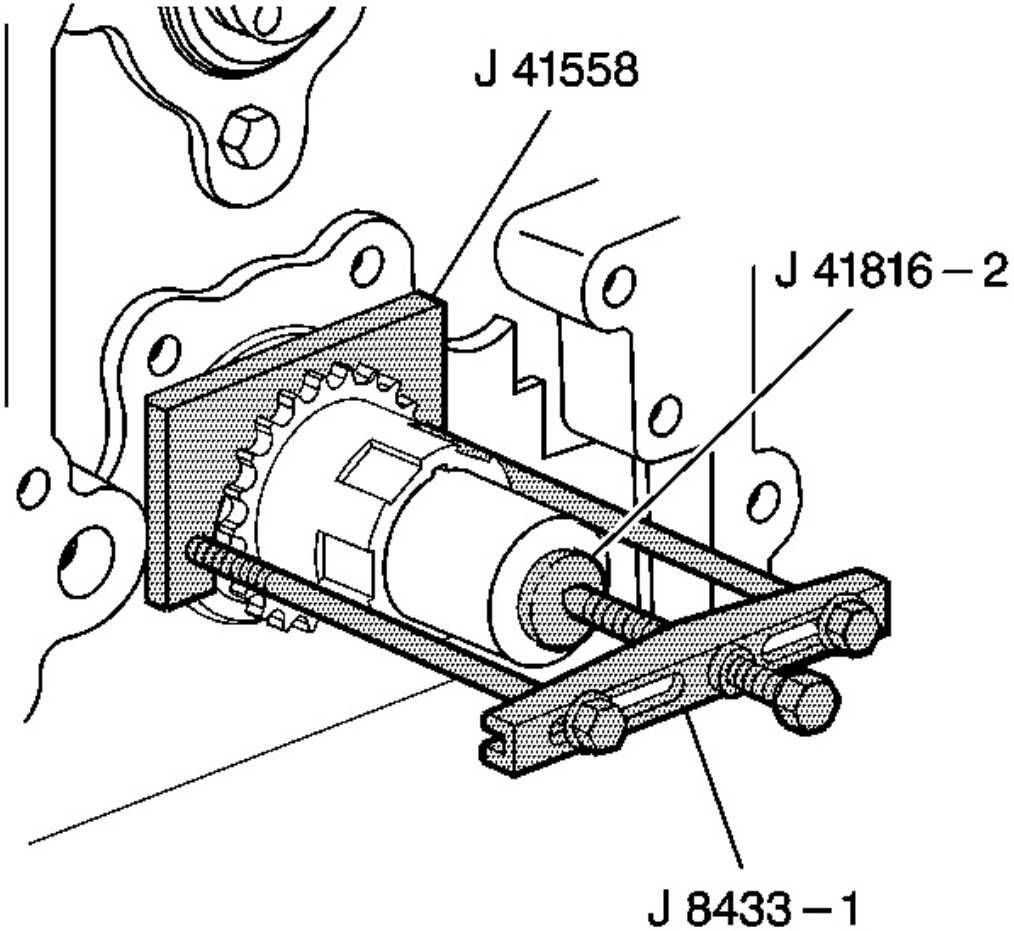

Fig. 59: View Of J 8433-1, J 41816-2 & J 41558
Courtesy of GENERAL MOTORS CORP.

4. Use the **J 8433-1** , the J 41816-2 , and the **J 41558** in order to remove the crankshaft sprocket.

cardiagn.com

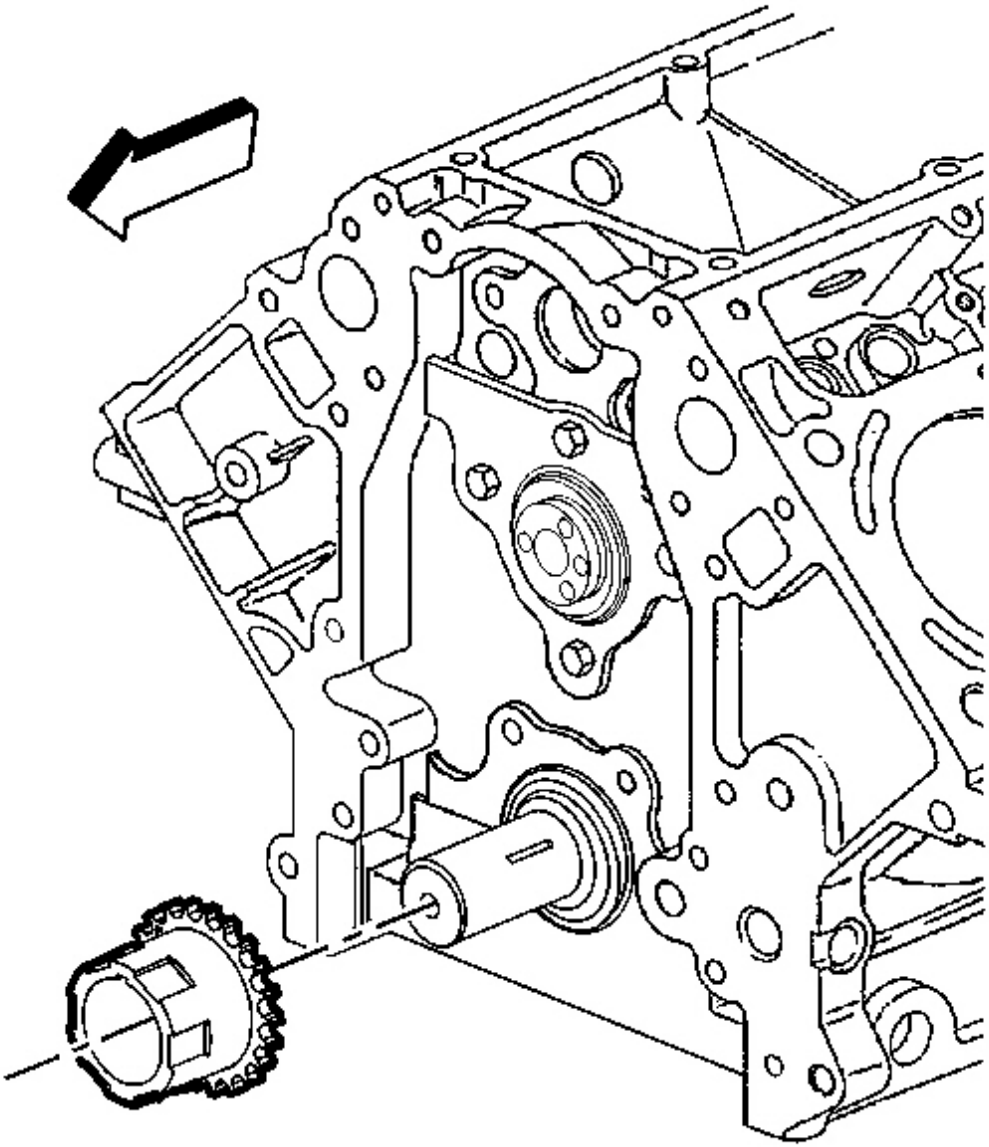

Fig. 60: View Of Crankshaft Sprocket
Courtesy of GENERAL MOTORS CORP.

5. Remove the crankshaft sprocket.

cardiagn.com

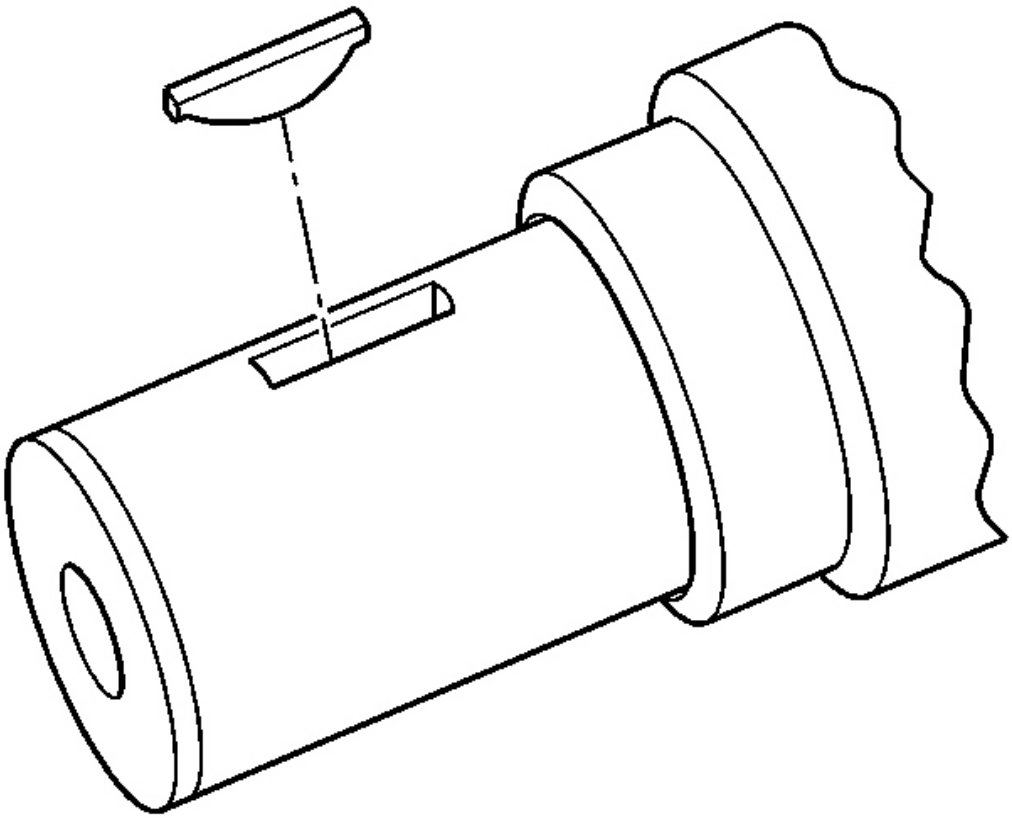

Fig. 61: View Of Crankshaft Sprocket Key
Courtesy of GENERAL MOTORS CORP.

6. Remove the crankshaft sprocket key, if required.

CAMSHAFT REMOVAL

cardiagn.com

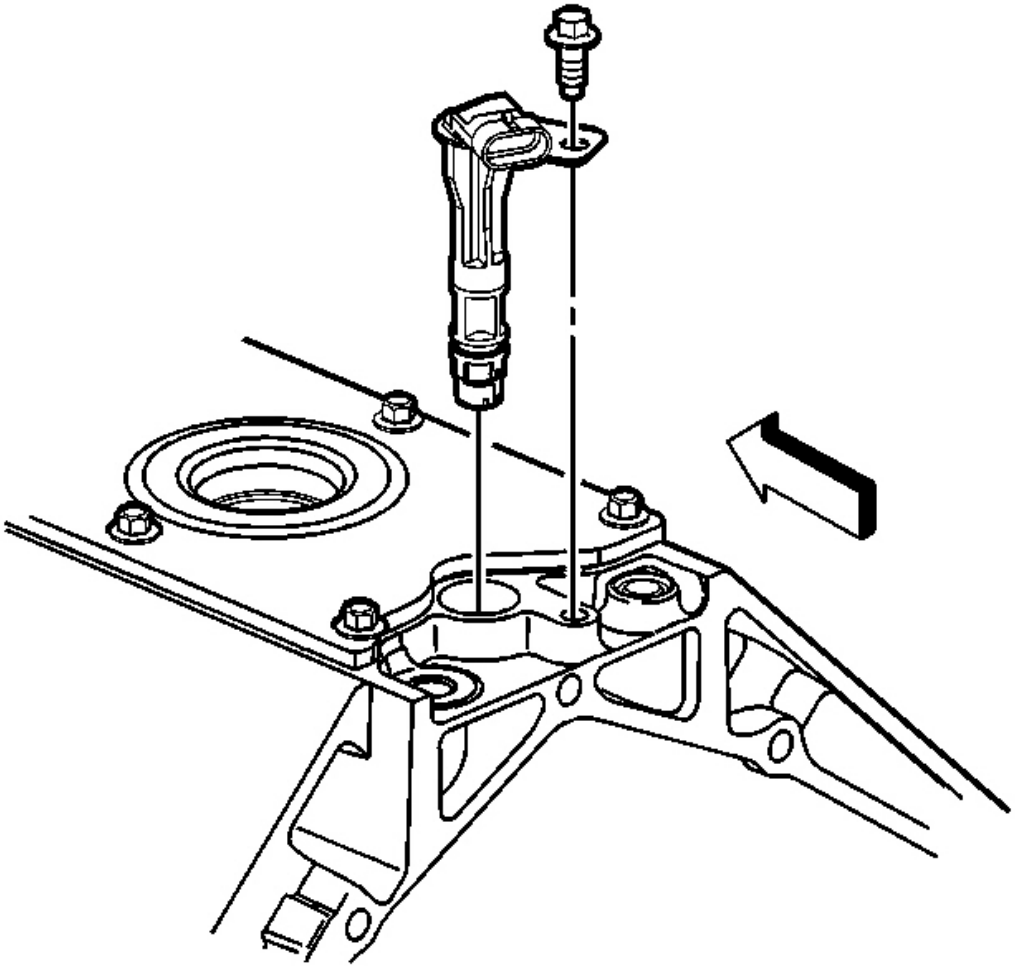

Fig. 62: View Of Camshaft Sensor & Bolt
Courtesy of GENERAL MOTORS CORP.

1. Remove the camshaft position (CMP) sensor bolt and the sensor.

cardiagn.com

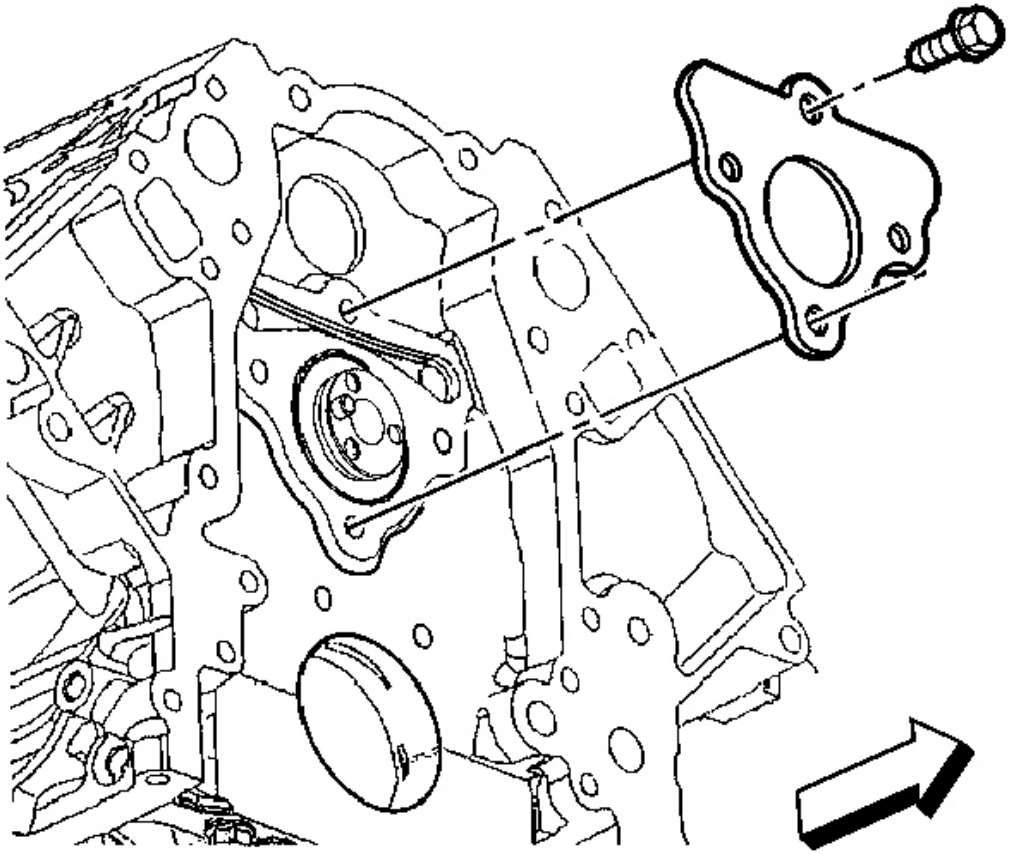

Fig. 63: View Of Camshaft Retainer & Bolts
Courtesy of GENERAL MOTORS CORP.

2. Remove the camshaft retainer bolts and the retainer.

cardiagn.com

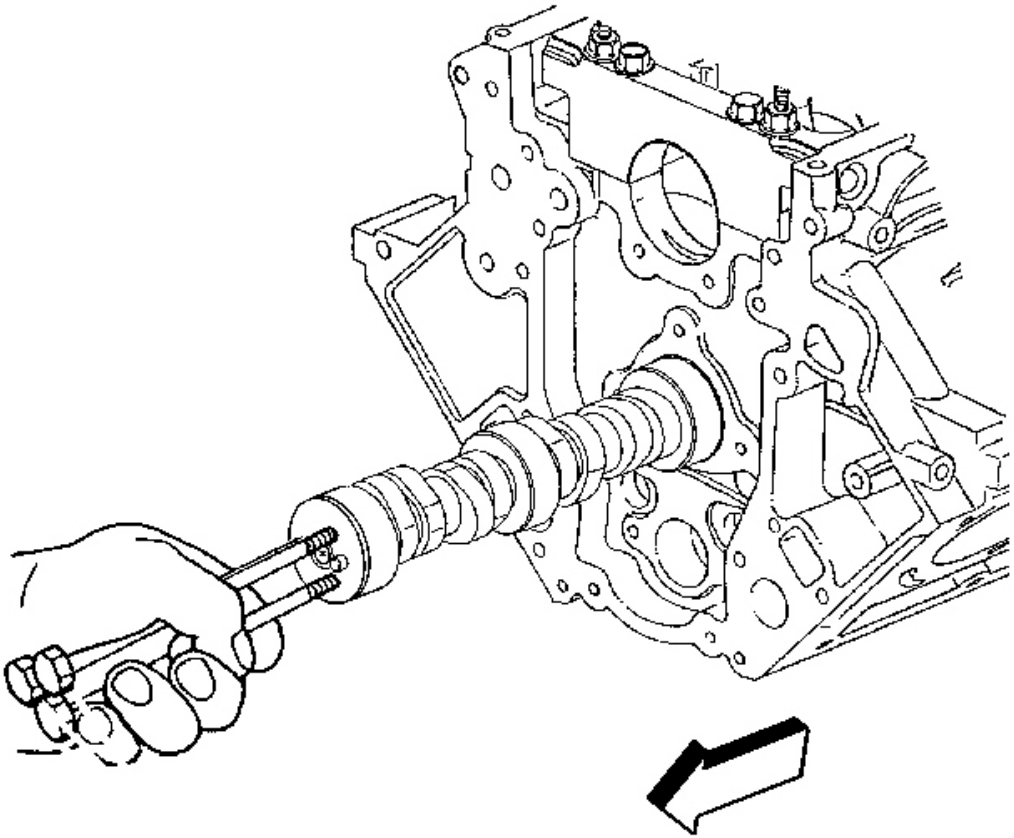

Fig. 64: 3 M8 - 1.25 X 100 mm Bolts & Camshaft Front Bolt Holes
Courtesy of GENERAL MOTORS CORP.

NOTE: **All camshaft journals are the same diameter, so care must be used in removing or installing the camshaft to avoid damage to the camshaft bearings.**

3. Remove the camshaft.
    1. Install the 3 M8 - 1.25 x 100 mm bolts in the camshaft front bolt holes.
    2. Using the bolts as a handle, carefully rotate and pull the camshaft out of the engine block.
    3. Remove the bolts from the front of the camshaft.

PISTON, CONNECTING ROD, AND BEARING REMOVAL

Tools Required

cardiagn.com

- **J 24270** Cylinder Bore Ridge Reamer
- **J 41556** Connecting Rod Guide

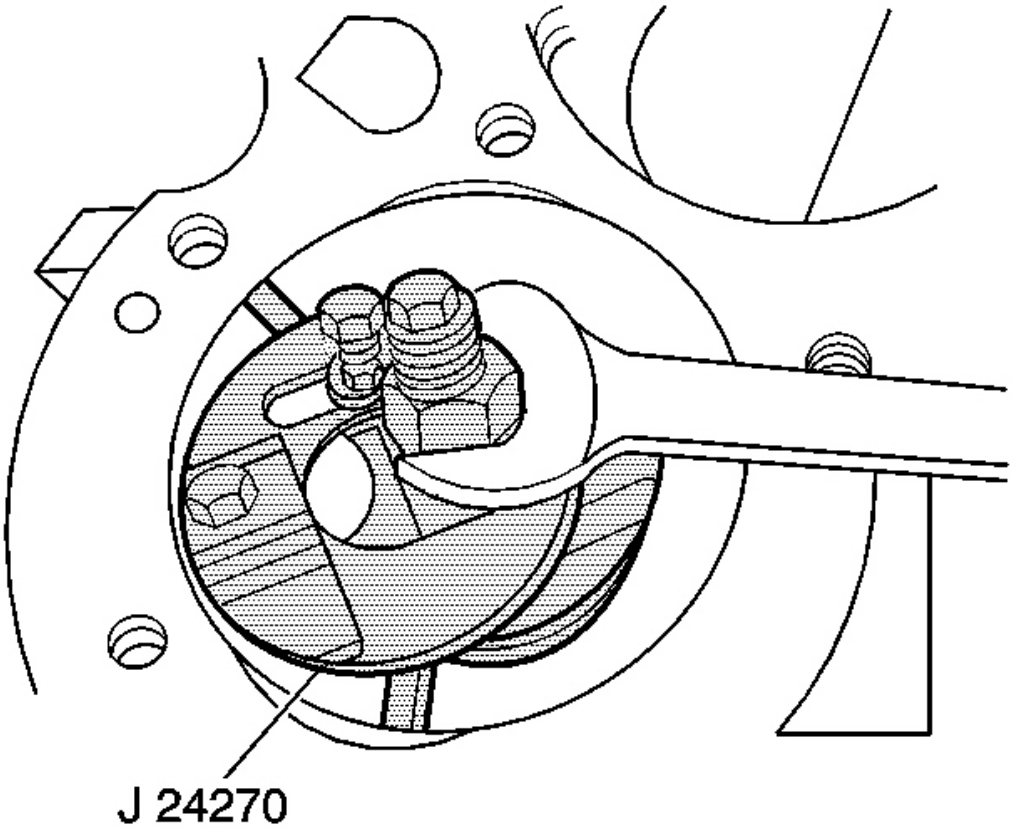

Fig. 65: Cylinder Ridge & J 24270
Courtesy of GENERAL MOTORS CORP.

IMPORTANT: The connecting rods and the bearing caps are NOT interchangeable.

1. Use the **J 24270** in order to remove the cylinder bore ring ridge, if required.
    1. Turn the crankshaft until the piston is at the bottom of the stroke.
    2. Place a cloth on top of the piston.
    3. Use the **J 24270** or equivalent in order to remove cylinder ring ridge.
    4. Turn the crankshaft so the piston is at the top of the stroke.
    5. Remove the cloth.
    6. Remove the cutting debris from the cylinder and piston.

cardiagn.com

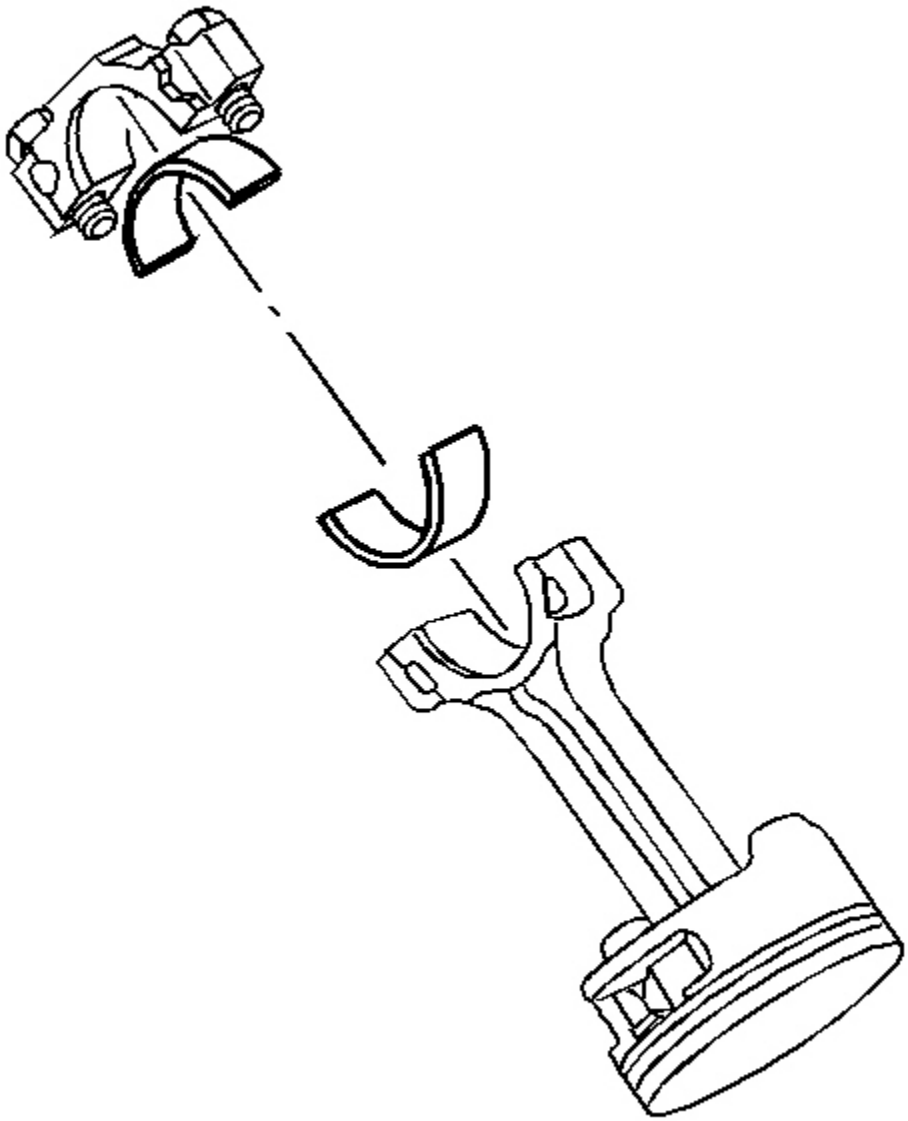

Fig. 66: View Of Connecting Rod Cap & Bolts
Courtesy of GENERAL MOTORS CORP.

IMPORTANT:

- **Using a paint stick or etching tool, place matchmarks or numbers on the connecting rods and the connecting rod caps. The connecting rods and caps MUST be assembled to their original position and direction.**

cardiagn.com

- **A stamping mark on the side of the connecting rod, at the crank journal, may effect component geometry.**
- **Mark the top of the piston to the specific cylinder bore.**

2. Remove the connecting rod bolts.

IMPORTANT: Mark, sort, or organize the connecting rod bearings so they may be installed to their original position and location.

3. Remove the connecting rod cap. Refer to **Separating Parts** .

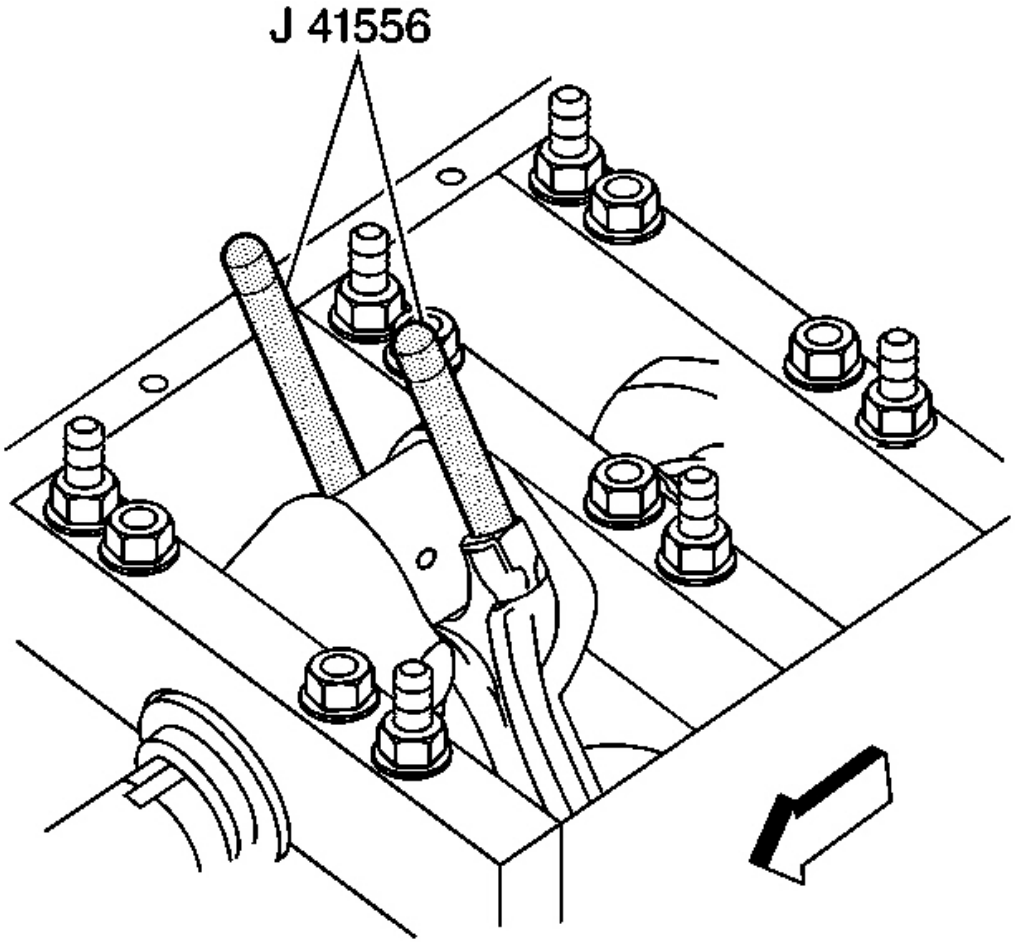

Fig. 67: View Of J 41556 & Connecting Rod
Courtesy of GENERAL MOTORS CORP.

cardiagn.com

4. Install the **J 41556** to the connecting rod.

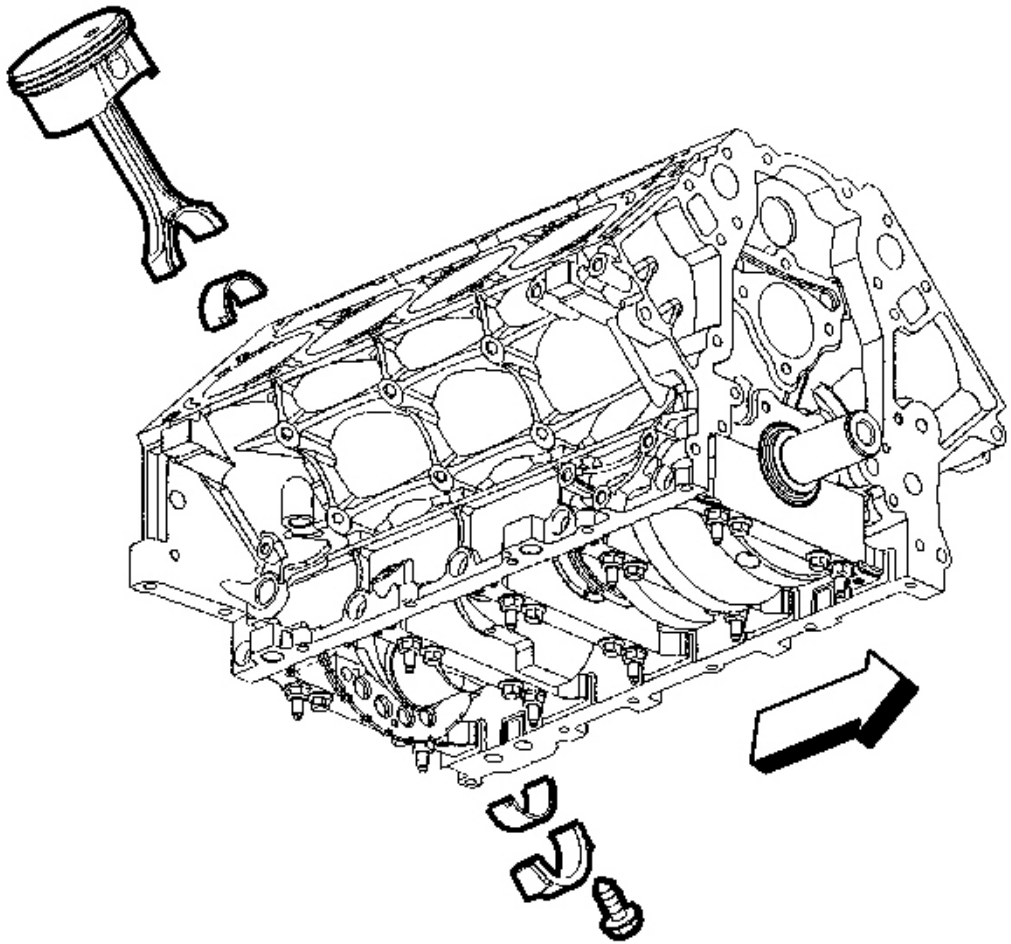

Fig. 68: View Of Piston, Cylinder Bore & Connecting Rod Assembly
Courtesy of GENERAL MOTORS CORP.

5. Use a hammer and tap lightly on the end of the **J 41556** in order to remove the piston and connecting rod assembly from the cylinder bore.

cardiagn.com

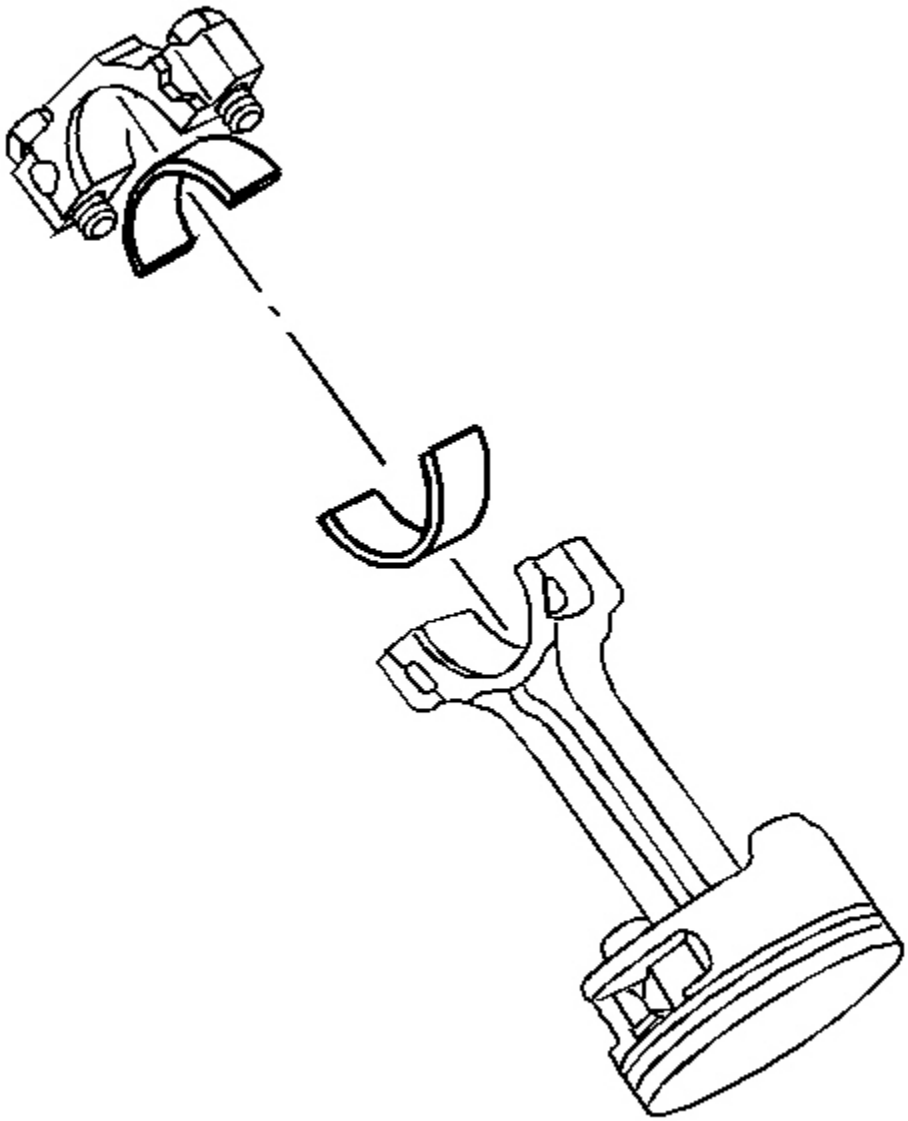

Fig. 69: View Of Connecting Rod Cap & Bolts
Courtesy of GENERAL MOTORS CORP.

6. Upon removal of the piston and connecting rod assembly, assemble the connecting rod cap and bolts onto the matching connecting rod.

CRANKSHAFT AND BEARINGS REMOVAL

cardiagn.com

Tools Required

- **J 6125-1B** Slide Hammer
- J 41818 Crankshaft Bearing Cap Remover

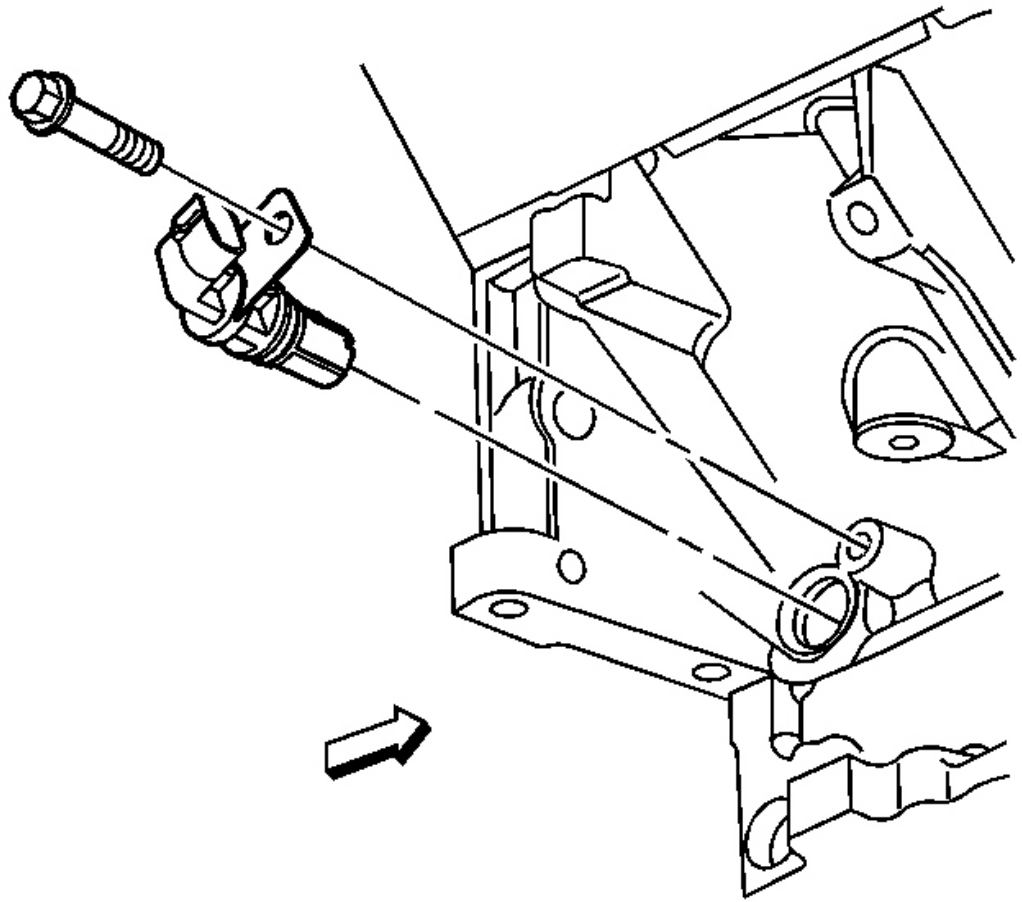

Fig. 70: View Of CKP Sensor & Bolt
Courtesy of GENERAL MOTORS CORP.

IMPORTANT:

- **The crankshaft bearing caps are machined with the engine block, for the proper clearances. Mark or identify each crankshaft bearing cap location and direction before removal. The crankshaft bearing caps MUST be installed to their original position and direction.**
- **Do not use the bearing cap M8 bolts again.**
- **Remove the bearing cap M8 bolts prior to cap removal.**

cardiagn.com

1. Remove the crankshaft position (CKP) sensor bolt.
2. Remove the CKP sensor.

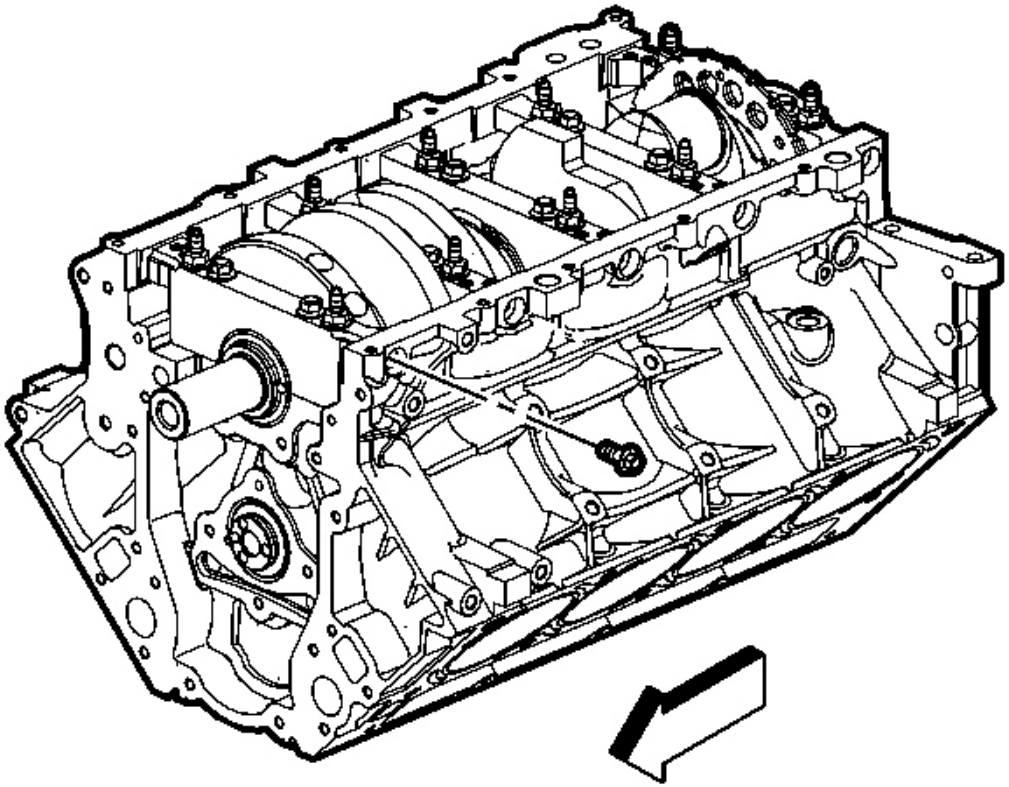

Fig. 71: View Of Bearing Cap Bolts & Studs
Courtesy of GENERAL MOTORS CORP.

3. Remove the crankshaft bearing cap M8 bolts.
4. Remove the bearing cap M10 bolts and studs.

cardiagn.com

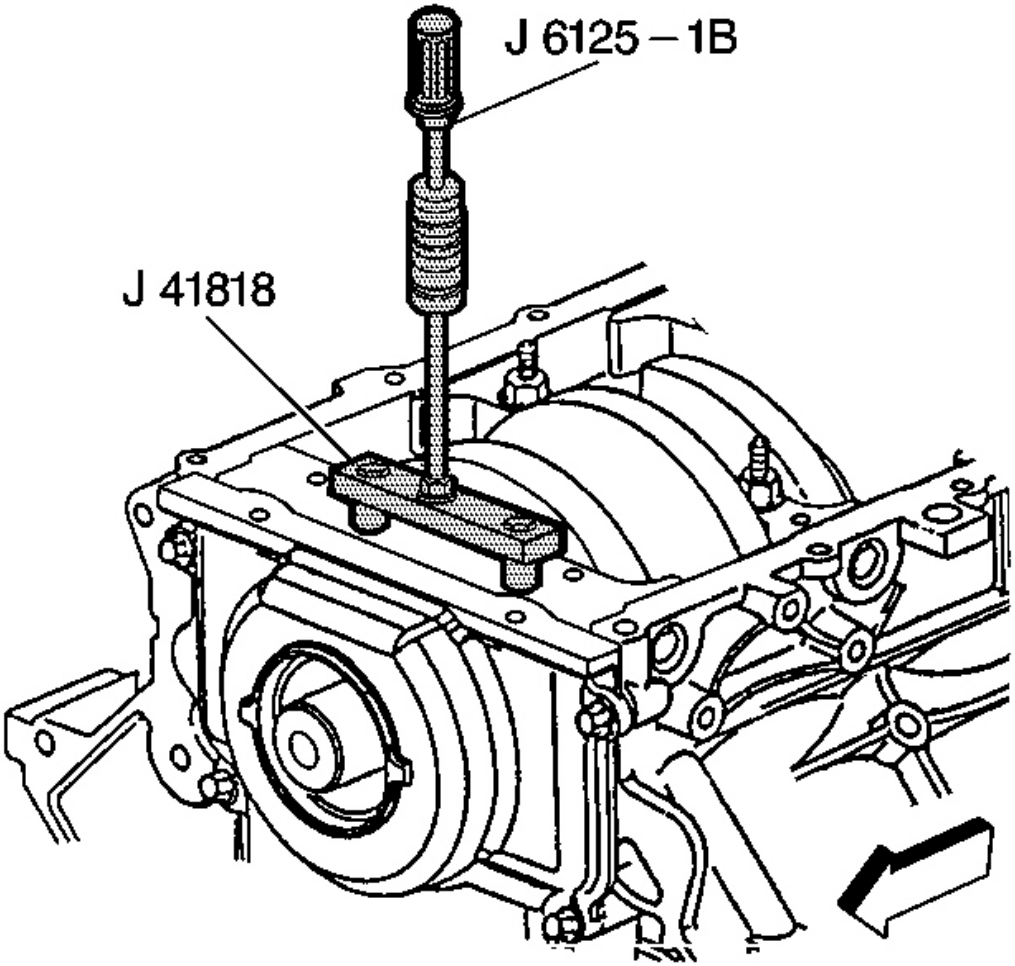

Fig. 72: View Of J 6125-1B & J 41818
Courtesy of GENERAL MOTORS CORP.

NOTE: **Refer to Fastener Notice in Cautions and Notices.**

5. Install the J 41818 .

   Tighten: Tighten the J 41818 bolts to 11 N.m (100 lb in).

6. Install the **J 6125-1B** to the J 41818 in order to remove the crankshaft bearing caps.

cardiagn.com

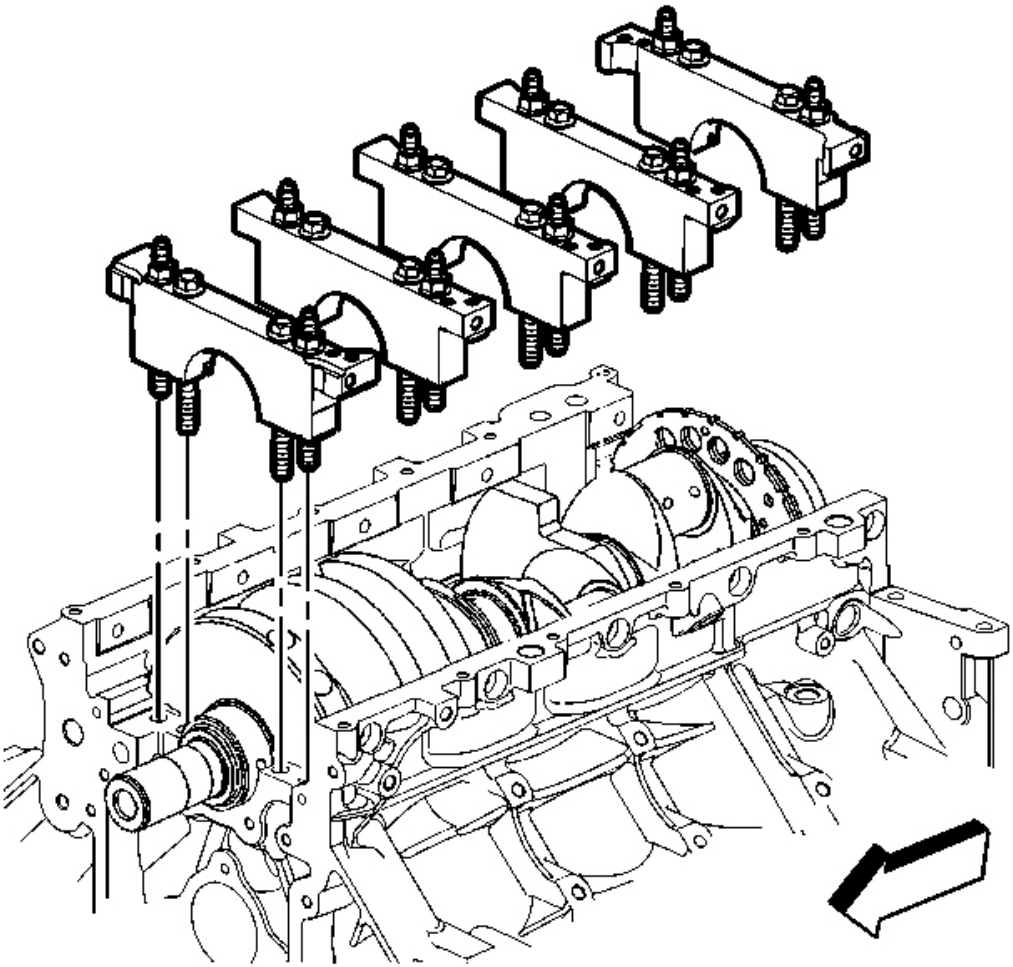

Fig. 73: View Of Bearing Caps
Courtesy of GENERAL MOTORS CORP.

7. Remove the bearing caps.

cardiagn.com

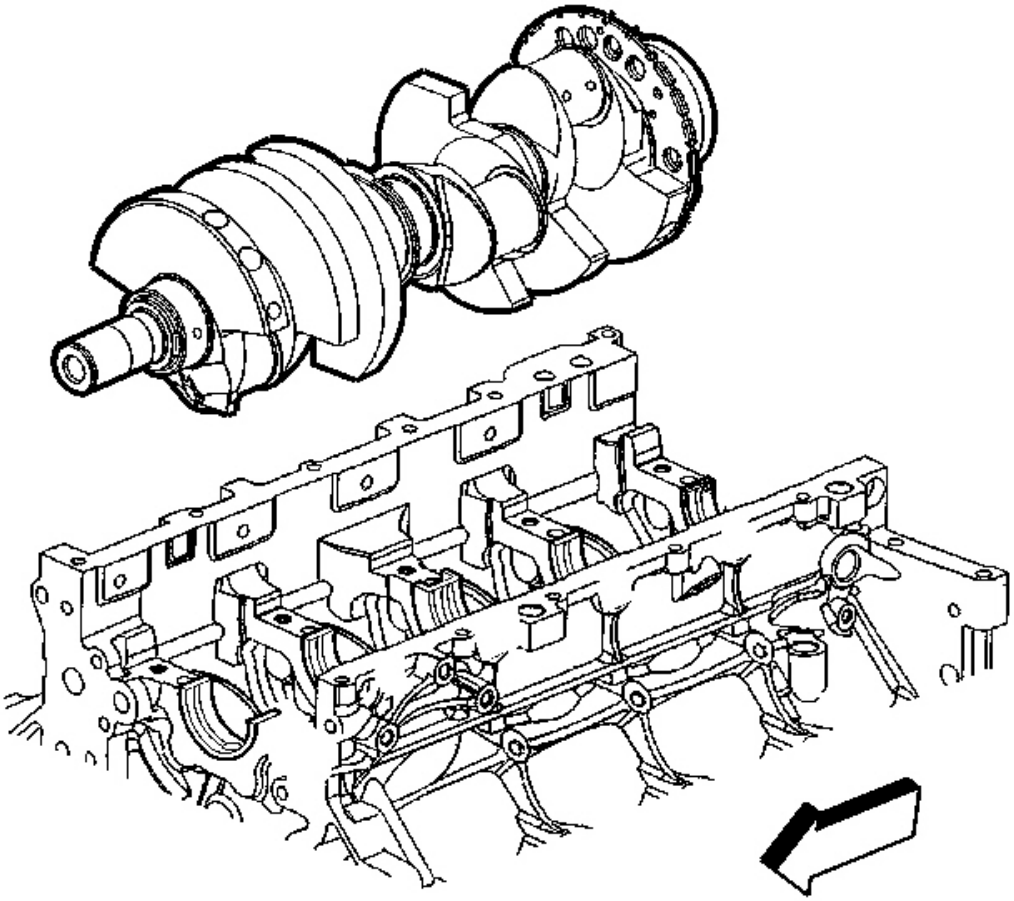

Fig. 74: View Of Crankshaft
Courtesy of GENERAL MOTORS CORP.

8. Remove the crankshaft.

cardiagn.com

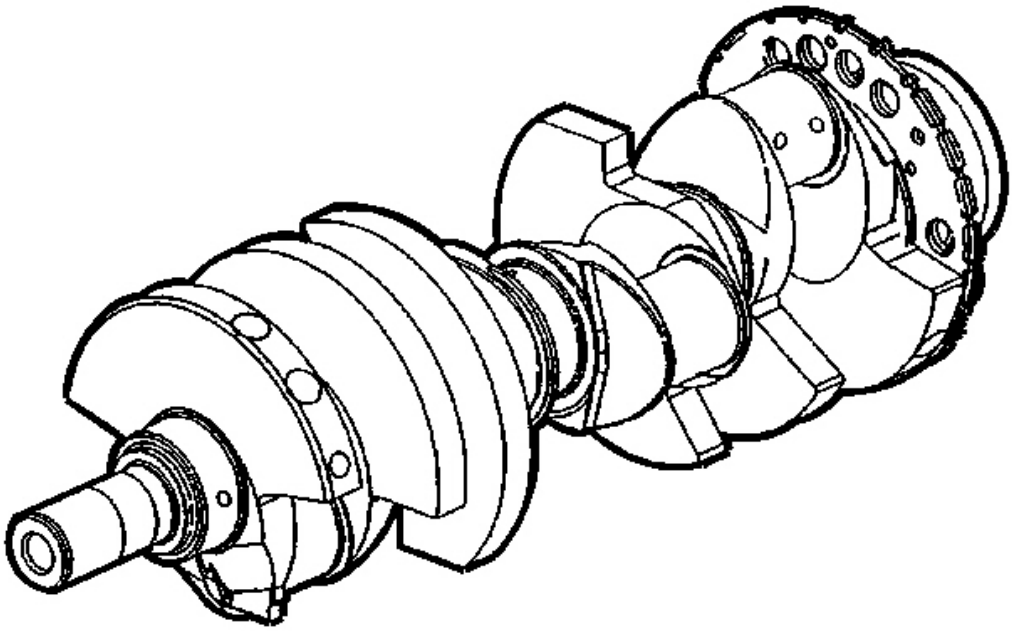

Fig. 75: CKP Reluctor Ring Lobes
Courtesy of GENERAL MOTORS CORP.

IMPORTANT: Use care when handling the crankshaft. Avoid damage to the crankshaft position sensor reluctor ring teeth. Nicks, burrs or other damage to the teeth may effect On-Board Diagnostics (OBD) II system performance.

9. Lay the crankshaft onto 2 wooden V-blocks or other protective surface.

cardiagn.com

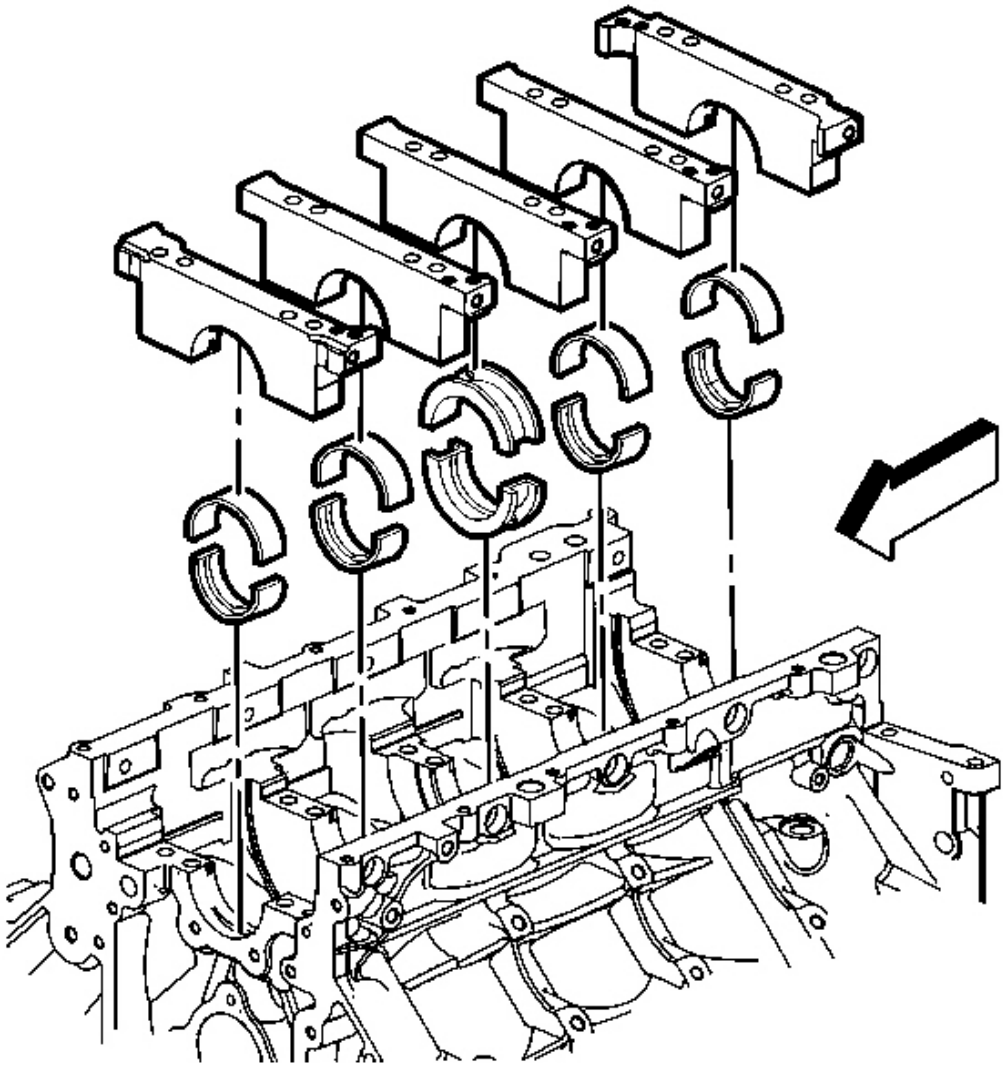

Fig. 76: View Of Crankshaft Bearings & Bearing Caps
Courtesy of GENERAL MOTORS CORP.

10. Remove the crankshaft bearings from the bearing caps and the engine block.
11. Mark, sort, or organize the crankshaft bearings so they may be installed to their original position and location. Refer to **Separating Parts** .

ENGINE BLOCK PLUG REMOVAL

cardiagn.com

Tools Required

J 41712 Oil Pressure Switch Socket

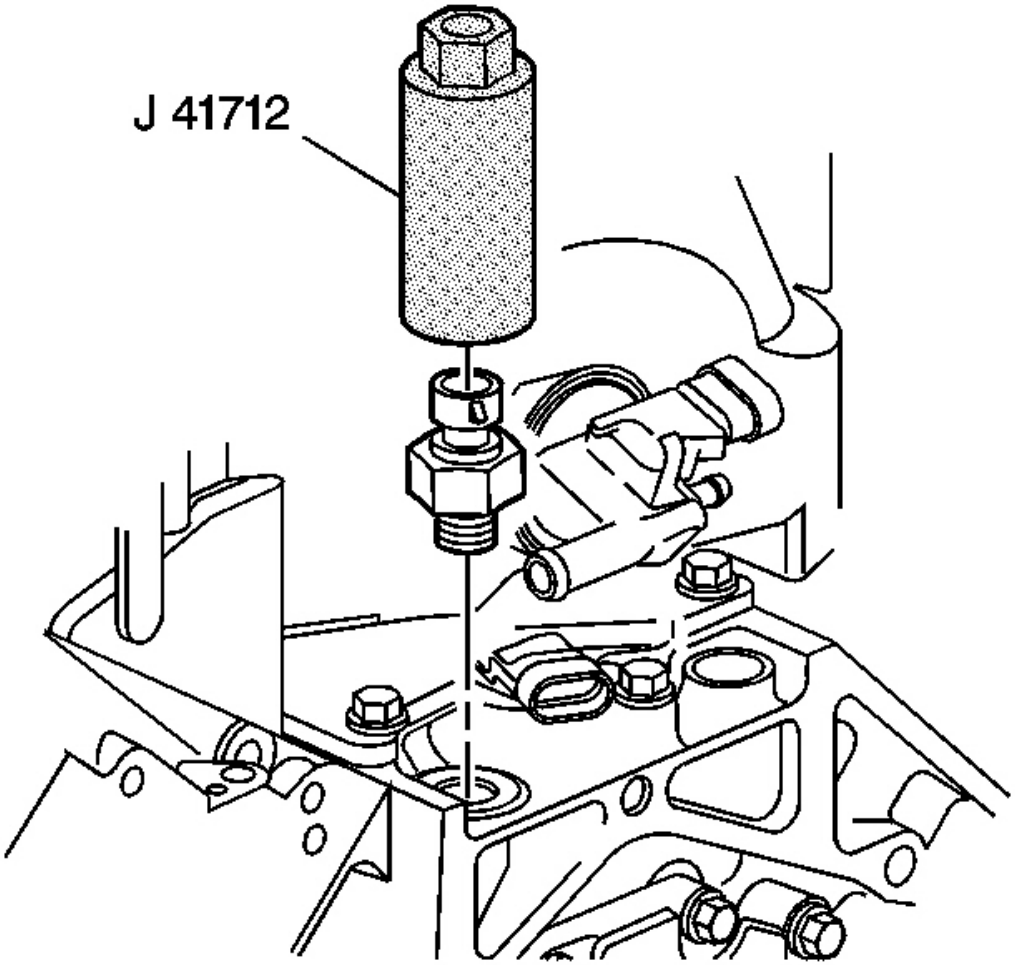

Fig. 77: Remove J 41712 Oil Pressure Sensor
Courtesy of GENERAL MOTORS CORP.

IMPORTANT:

- **Do not remove the engine block front oil gallery plug unless service is required.**
- **If the front oil gallery plug is removed for service, a NEW oil gallery plug must be installed.**

cardiagn.com

1. Use the J 41712 or equivalent in order to remove the oil pressure sensor, if not previously removed.

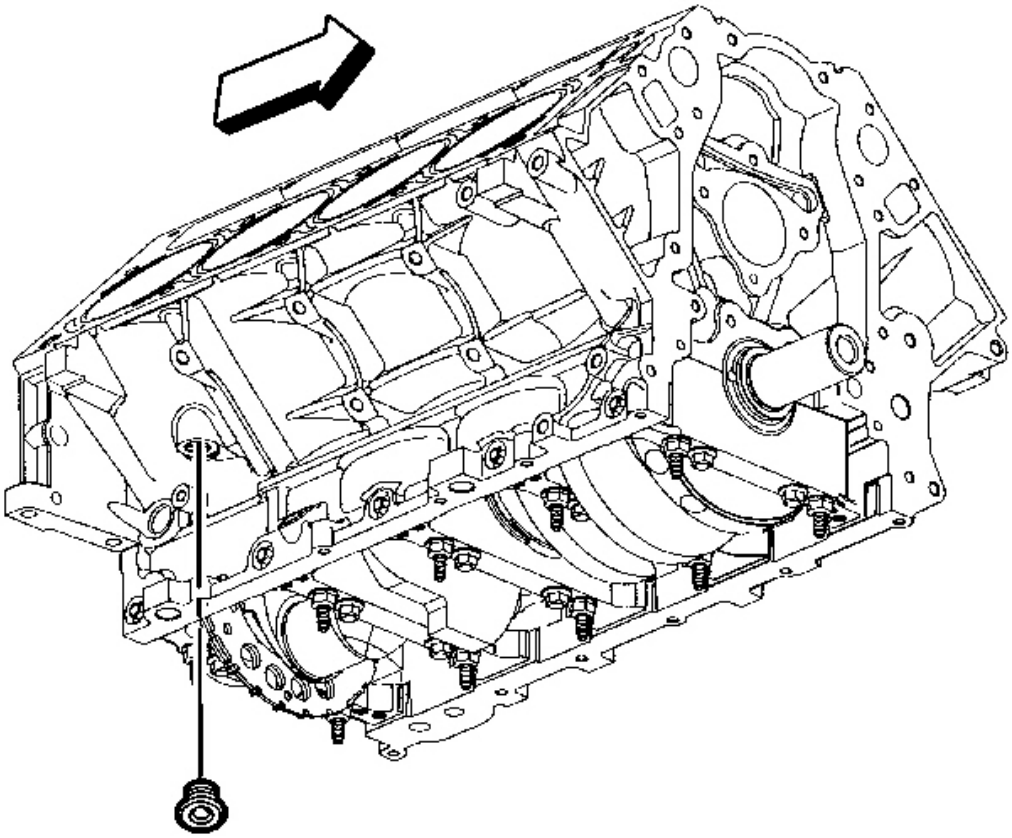

Fig. 78: Identifying Plug Location On Underside Of Block
Courtesy of GENERAL MOTORS CORP.

2. Remove the engine block right side coolant drain hole plug.

cardiagn.com

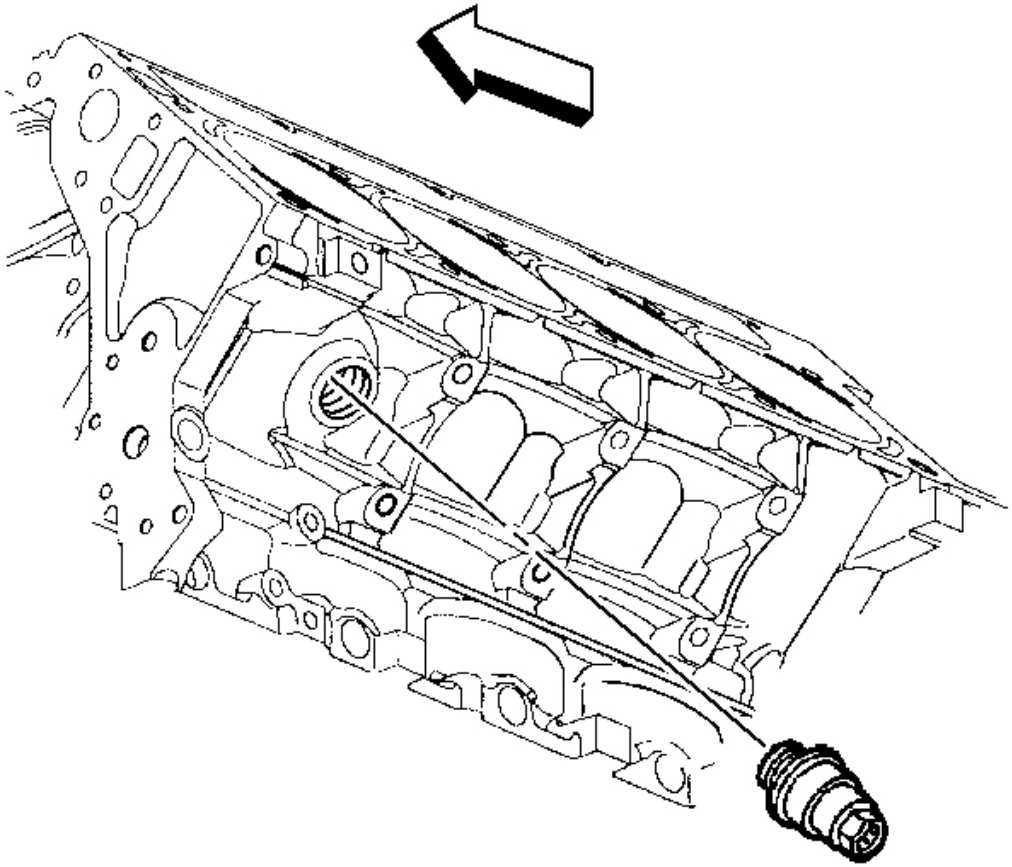

Fig. 79: View Of Engine Block Coolant Heater
Courtesy of GENERAL MOTORS CORP.

3. Remove the engine block coolant heater, if applicable.

cardiagn.com

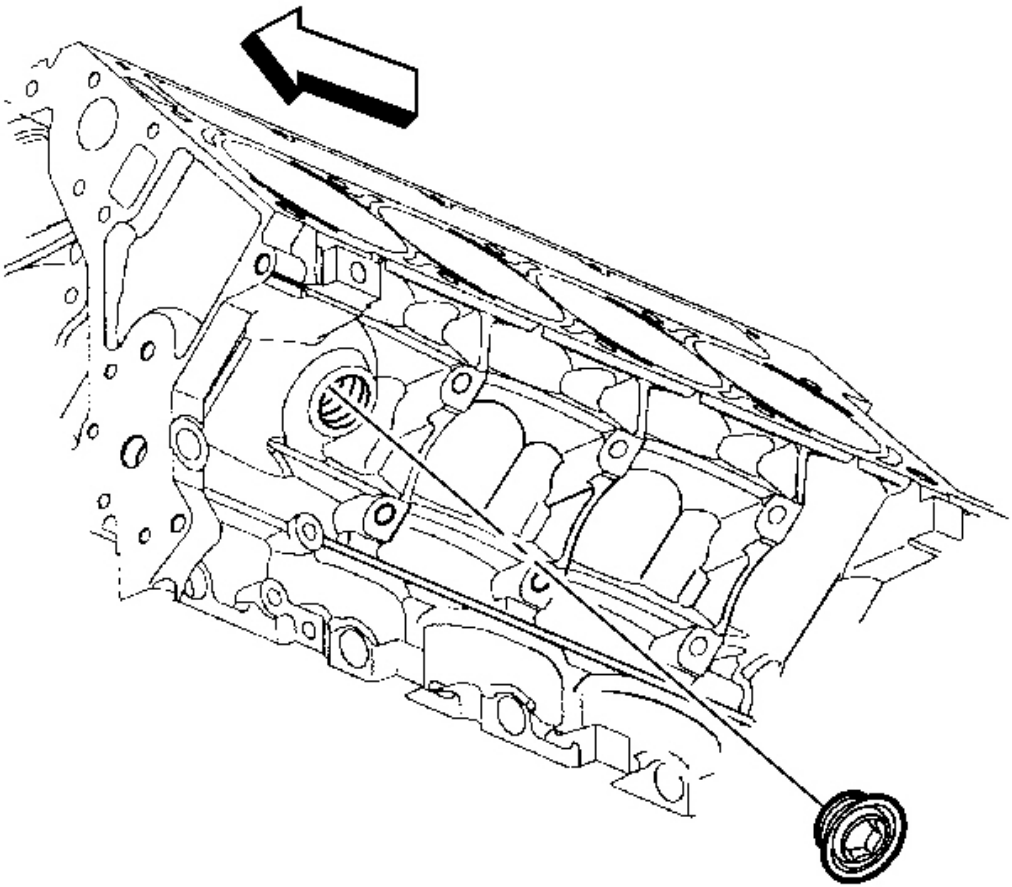

Fig. 80: View Of Engine Block Left Rear Coolant Drain Hole Plug
Courtesy of GENERAL MOTORS CORP.

4. Remove the engine block left side coolant drain hole plug, if applicable.

cardiagn.com

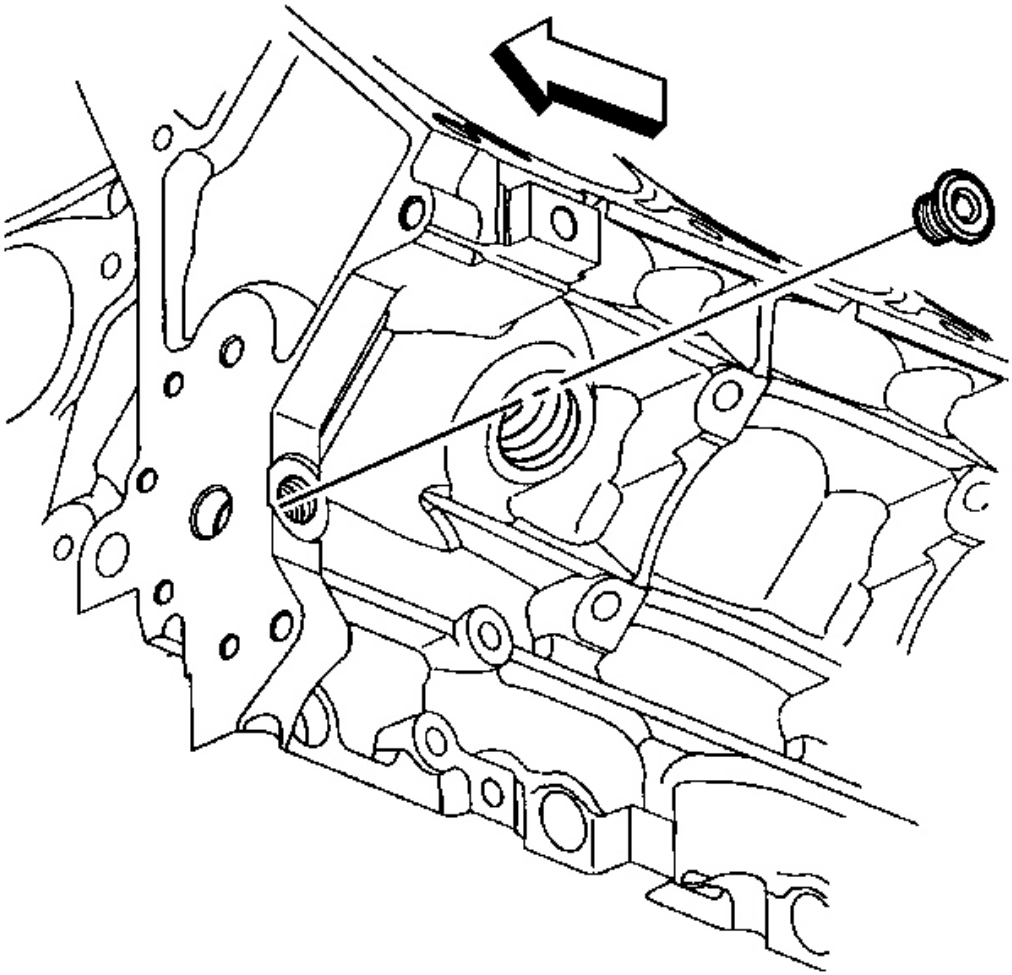

Fig. 81: Engine Block Left Front Oil Gallery Plug
Courtesy of GENERAL MOTORS CORP.

5. Remove the engine block left front oil gallery plug.

cardiagn.com

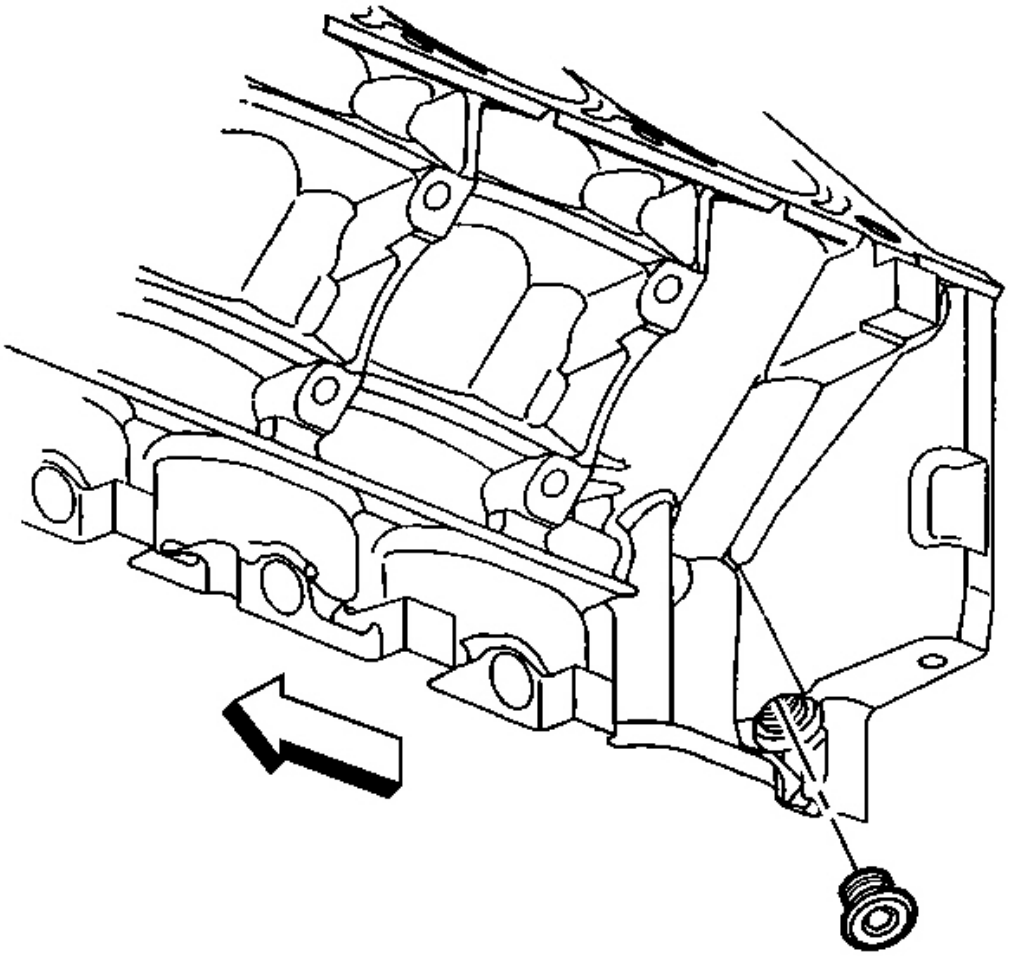

Fig. 82: Engine Block Left Rear Oil Gallery Plug
Courtesy of GENERAL MOTORS CORP.

6. Remove the engine block left rear oil gallery plug.
7. Inspect the block plug sealing washers.

   If the block plug and coolant heater sealing washers are not damaged, they may be used during assembly.

cardiagn.com

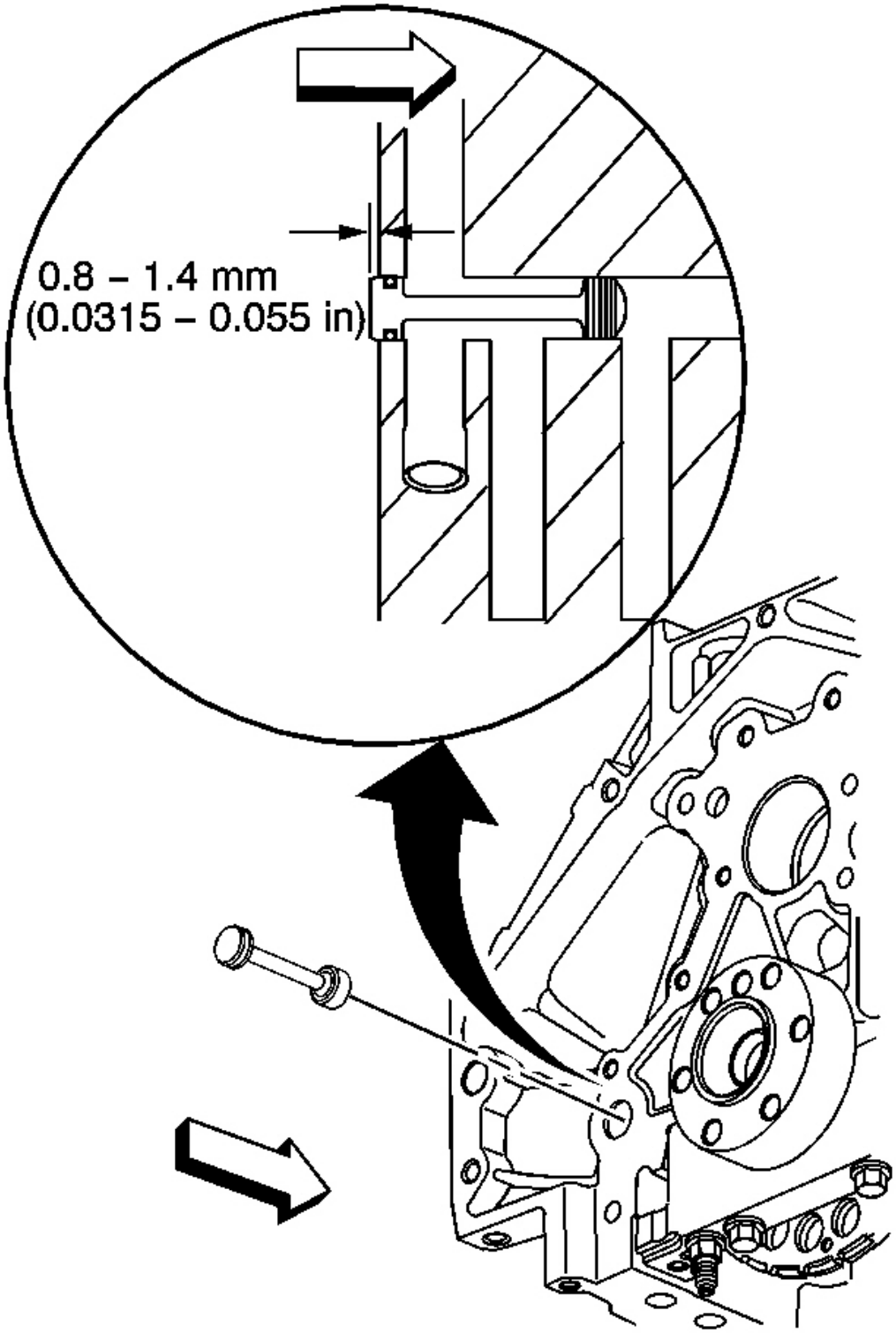

cardiagn.com

Fig. 83: Engine Block Rear Oil Gallery Plug
Courtesy of GENERAL MOTORS CORP.

8. Remove the engine block rear oil gallery plug.
9. Inspect the O-ring seal of the rear oil gallery plug.

   If the O-ring seal is not cut or damaged, the plug and O-ring seal may be used during assembly.

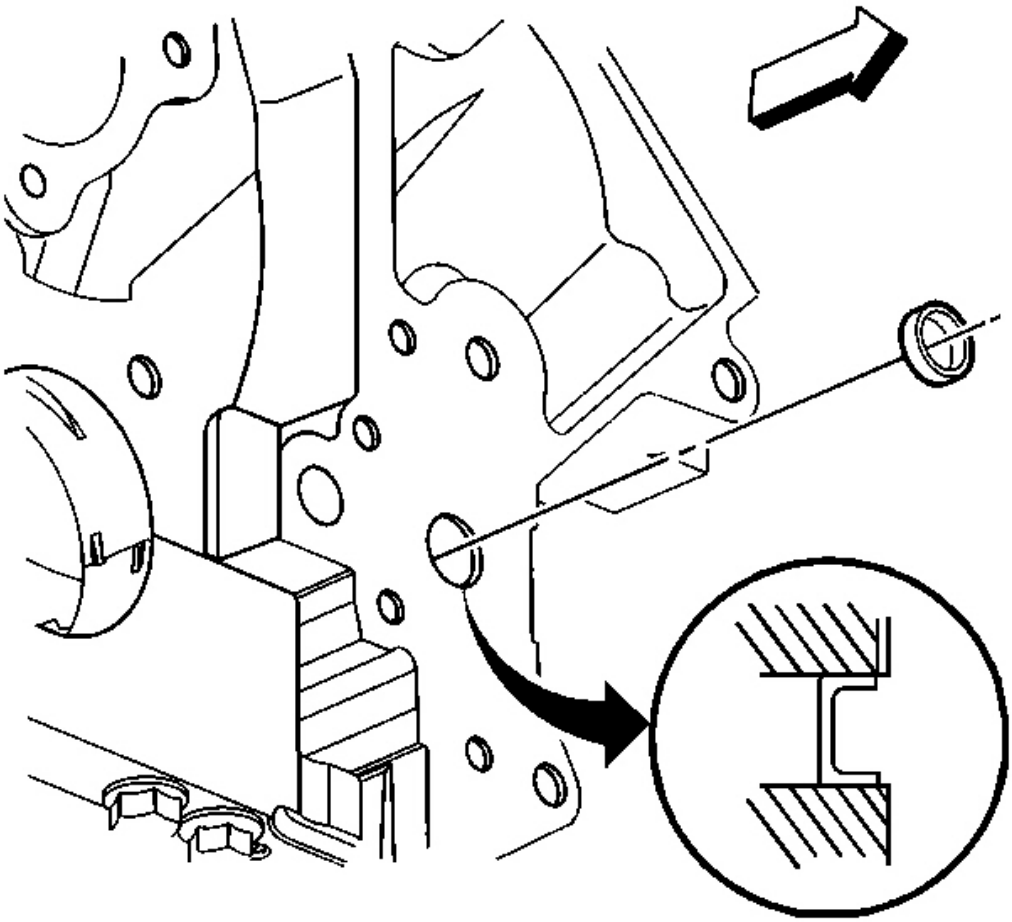

Fig. 84: Engine Block Front Oil Gallery Plug
Courtesy of GENERAL MOTORS CORP.

IMPORTANT:

- **Remove the front oil gallery plug only if service is required.**
- **If the front oil gallery plug is removed, a NEW oil gallery plug must**

cardiagn.com

be installed.

10. Remove the engine block front oil gallery plug.

ENGINE BLOCK CLEANING AND INSPECTION

Tools Required

- **J 8087** Cylinder Bore Gage
- **J 42385-100** Head/Main Bolt Thread Repair Kit

1. Clean the following areas:

NOTE: Do not use a caustic solution to clean the aluminum engine block.

IMPORTANT: When cleaning an engine block in a thermal type oven, do not exceed 232°C (450°F).

- The engine block in the solvent

  Remove all sludge, dirt, or debris. Refer to **Cleanliness and Care** .

CAUTION: Refer to Safety Glasses Caution in Cautions and Notices.

- Dry the block with compressed air.
- The gasket surfaces

  Refer to **Replacing Engine Gaskets** .

- The coolant passages
- The oil galleries
- The main bearing caps
- The engine block head bolt holes for threadlocking material

  Thread repair tool J 42385-107 may be used to clean the threads of old threadlocking material.

2. Inspect the following areas:
   - The cylinder walls for excessive scratches, gouging, or ring ridge
   - The coolant jacket for cracks
   - The valve lifter bores for excessive scoring or wear
   - The crankshaft bearing webs for cracks

cardiagn.com

- The gasket sealing surfaces for excessive scratches or gouging

  Refer to **Replacing Engine Gaskets** .

- The oil galleries for restrictions
- All threaded bolt holes for damage

3. Measure the cylinder bores for oversize.

Measuring the Cylinder for Oversize

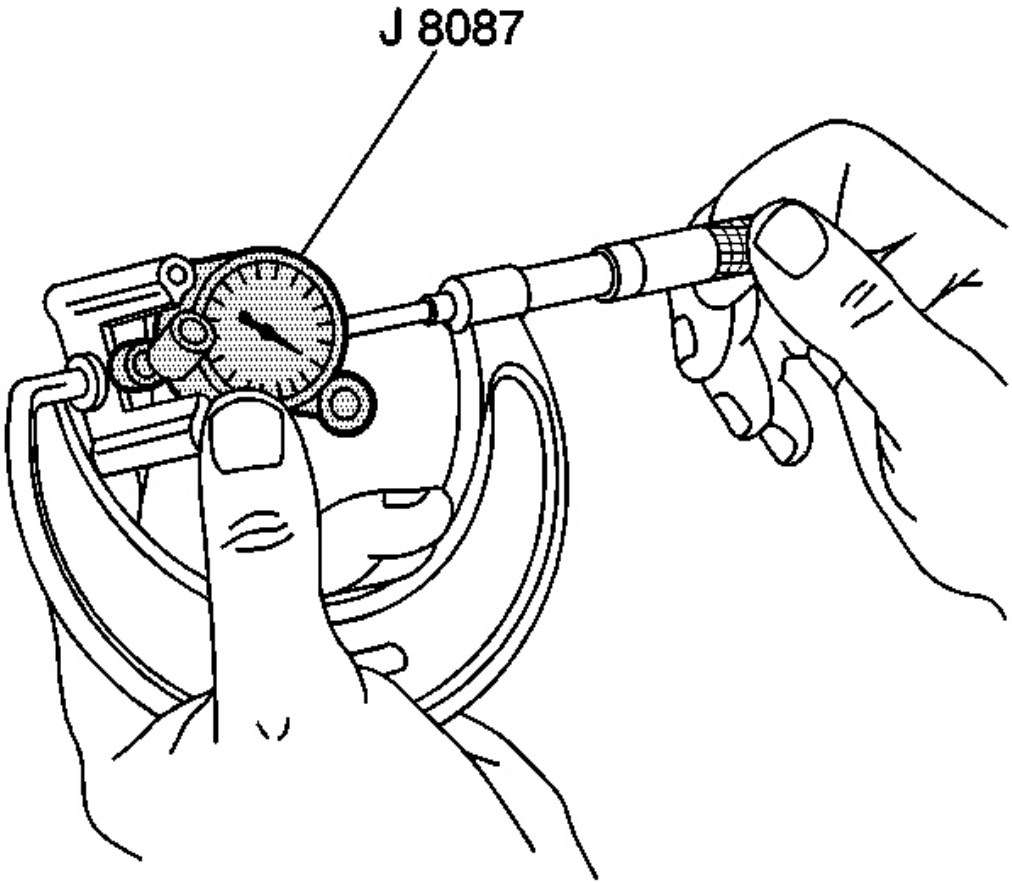

Fig. 85: Measuring The Micrometer & Bore Gauge Dial Using J 8087
Courtesy of GENERAL MOTORS CORP.

1. Adjust the micrometer to 99.0 mm (3.897 in).

cardiagn.com

2. Insert the **J 8087** into the micrometer and zero the bore gauge dial.

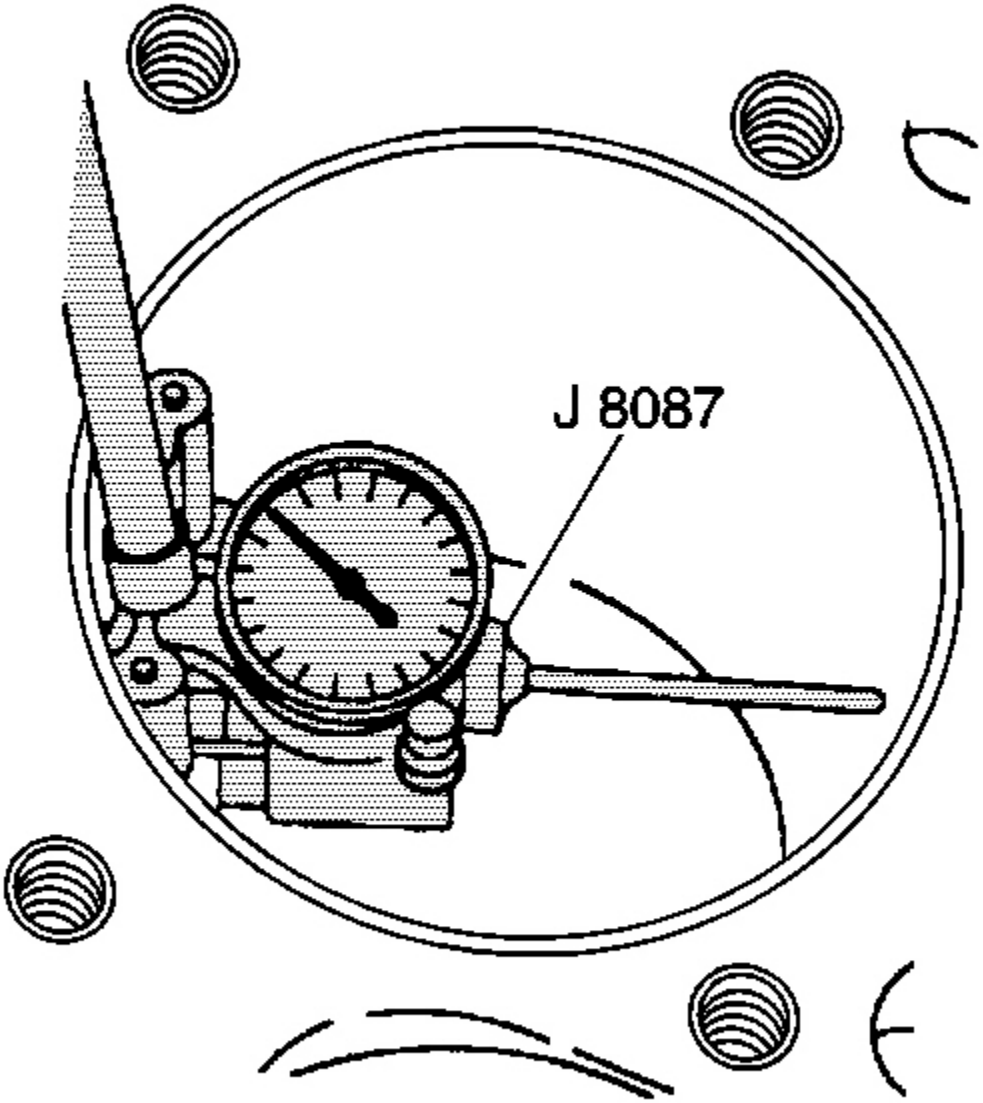

Fig. 86: Determining The Cylinder Bore Out-Of-Round Using J 8087
Courtesy of GENERAL MOTORS CORP.

3. Use a bore gage and measure the cylinder bore for oversize.

   Slide the bore gage up and down throughout the length of the cylinder bore. Check the bore both parallel

cardiagn.com

and perpendicular to the centerline of the crankshaft.

A cylinder that measures 99.0-99.018 mm (3.897-3.898 in) may be honed and serviced with a standard size piston.

A cylinder bore that exceeds the maximum diameter must be serviced with an oversized piston.

CYLINDER BORING AND HONING

Boring Procedure

1. A 0.25 mm (0.01 in) oversize service piston and piston ring set are available for the LS1/LS6 engine.

   IMPORTANT: Do not bore the cylinder liners on the LS1/LS6 engine.

2. It is recommended to hone the cylinder to achieve proper fit for the oversize piston.

   Refer to the Cylinder Honing information for the proper honing procedure.

Honing Procedure

cardiagn.com

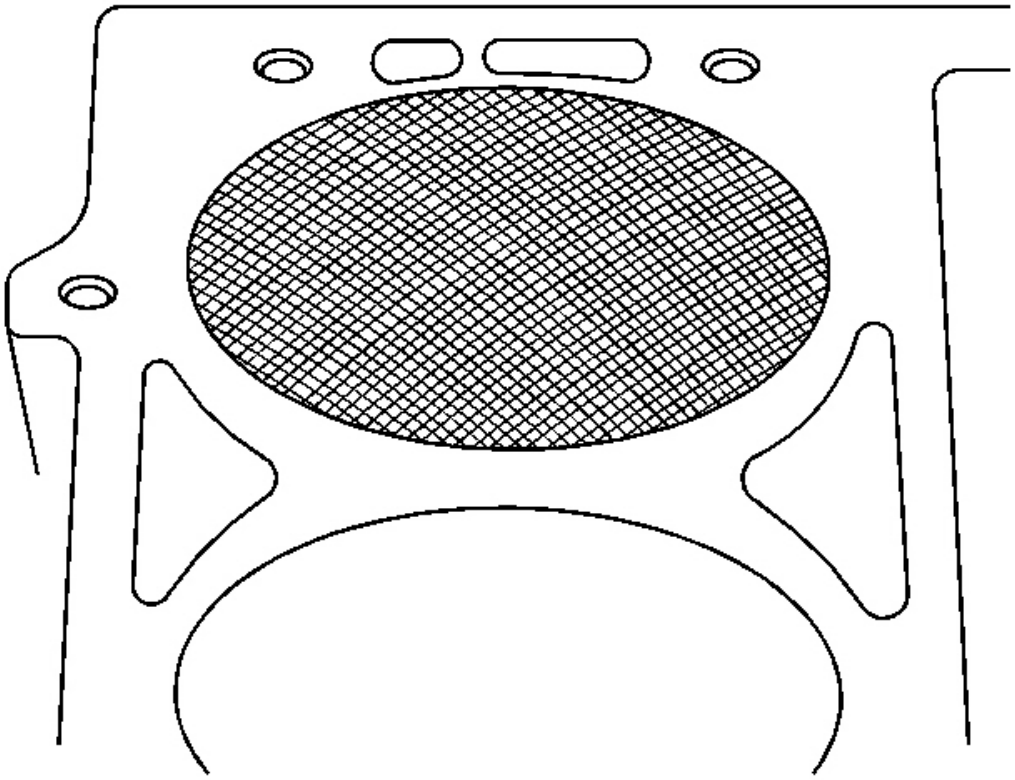

Fig. 87: Cylinder Bore Cross Hatch Pattern
Courtesy of GENERAL MOTORS CORP.

1. When honing the cylinders, follow the manufacturer's recommendations for equipment use, cleaning, and lubrication. Use only clean, sharp stones of the proper grade for the amount of material you remove. Dull, dirty stones cut unevenly and generate excessive heat. Do not hone to final clearance with a coarse or medium-grade stone. Leave sufficient metal so that all stone marks may be removed with fine-grade stones. Perform final honing with a fine-grade stone, honing the cylinder to the proper clearance.
2. During the honing operation, thoroughly clean the cylinder bore. Repeatedly check the cylinder bore for fit with the selected piston.

   All measurements of the piston or the cylinder bore should be made with the components at normal room temperature.

3. When honing a cylinder for fit to an oversize piston, first perform the preliminary honing with a 100 grit stone.
4. Perform final cylinder honing with a 240 grit stone and obtain a 45 degree cross hatch pattern.

cardiagn.com

A 240 grit stone is preferred for final honing. If a 240 grit stone is not available, a 220 grit stone may be used as a substitute.

5. When honing to eliminate taper in the cylinder, make full strokes the complete length of the bore.

   Repeatedly check the measurement at the top, the middle, and the bottom of the bore.

6. The finish marks should be clean but not sharp. The finish marks should also be free from imbedded particles and torn or folded metal.
7. By measuring the selected piston at the sizing point and by adding the average of the clearance specification, you can determine the final cylinder honing dimension required.
8. When finished, the reconditioned cylinder bores should have less than or meet the specified out-of-round and taper requirements.
9. After final honing and before the piston is checked for fit, clean the cylinder bores with hot water and detergent. Scrub the bores with a stiff bristle brush and rinse the bores thoroughly with hot water. Do not allow any abrasive material to remain in the cylinder bores. This abrasive material may cause premature wear of the new piston rings and the cylinder bores. Abrasive material will also contaminate the engine oil and may cause premature wear of the bearings. After washing the cylinder bore, dry the bore with a clean rag.
10. Perform final measurements of the piston and the cylinder bore.
11. Permanently mark the top of the piston for the specific cylinder to which it has been fitted.
12. Apply clean engine oil to each cylinder bore in order to prevent rusting.

Deglazing Procedure

cardiagn.com

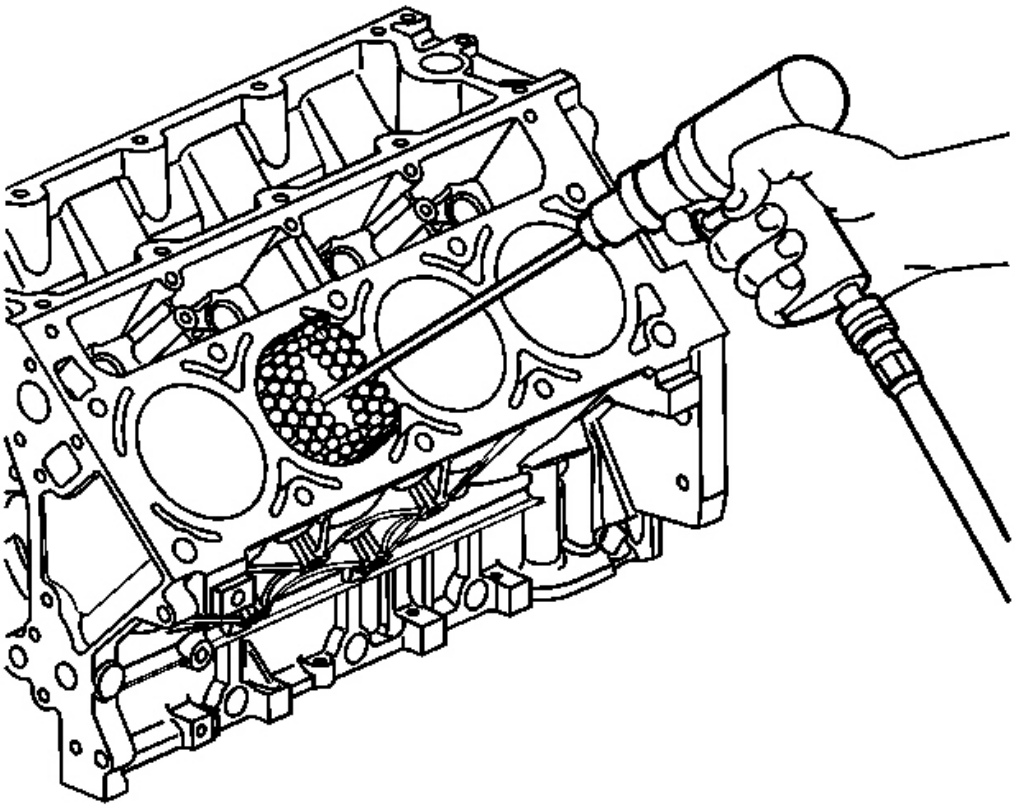

Fig. 88: Deglazing The Cylinder Bore
Courtesy of GENERAL MOTORS CORP.

Using a ball type or self centering honing tool, deglaze the cylinder bore lightly. Deglazing should be done only to remove any deposits that may have formed. Use a 240 grit stone of silicone carbide or equivalent material when preforming the deglazing procedure.

A 240 grit stone is preferred for final honing. If a 240 grit stone is not available, a 220 grit stone may be used as a substitute.

CRANKSHAFT AND BEARINGS CLEANING AND INSPECTION

Tools Required

- **J 6125-1B** Slide Hammer
- **J 7872** Magnetic Base Dial Indicator Set
- J 41818 Crankshaft Bearing Cap Remover

cardiagn.com

- **J 45059** Angle Meter

Cleaning Procedure

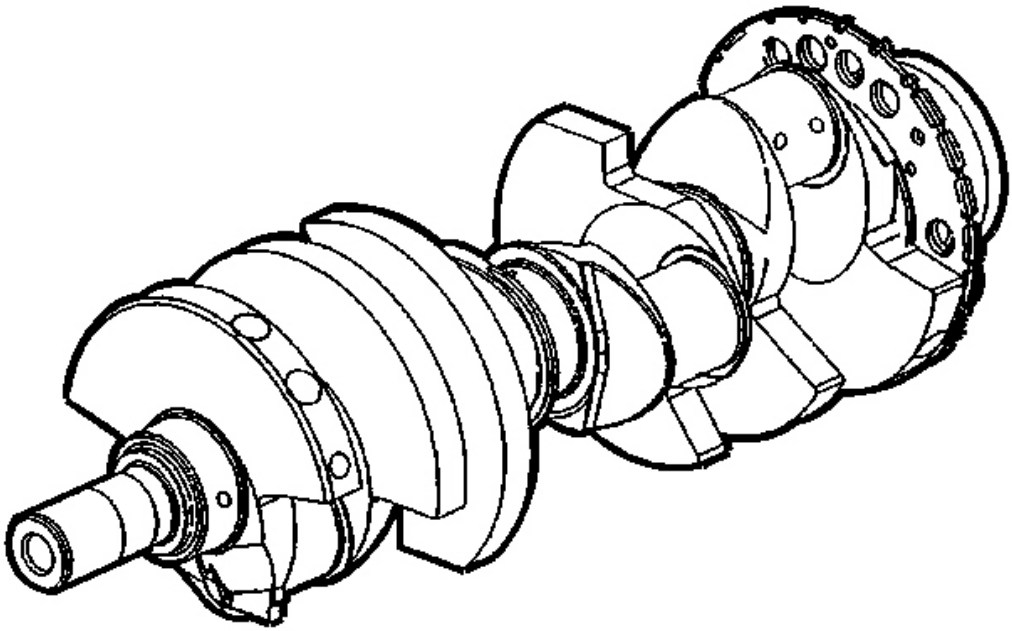

Fig. 89: CKP Reluctor Ring Lobes
Courtesy of GENERAL MOTORS CORP.

IMPORTANT: Use care when handling the crankshaft. Avoid damage to the bearing surfaces or the lobes of the crankshaft position reluctor ring. Damage to the teeth of the crankshaft position reluctor ring may effect On-Board Diagnostics (OBD) II system performance.

1. Clean the crankshaft with solvent.
2. Thoroughly clean all oil passages and inspect for restrictions or burrs.

CAUTION: Refer to Safety Glasses Caution in Cautions and Notices.

3. Dry the crankshaft with compressed air.

Inspection Procedure

cardiagn.com

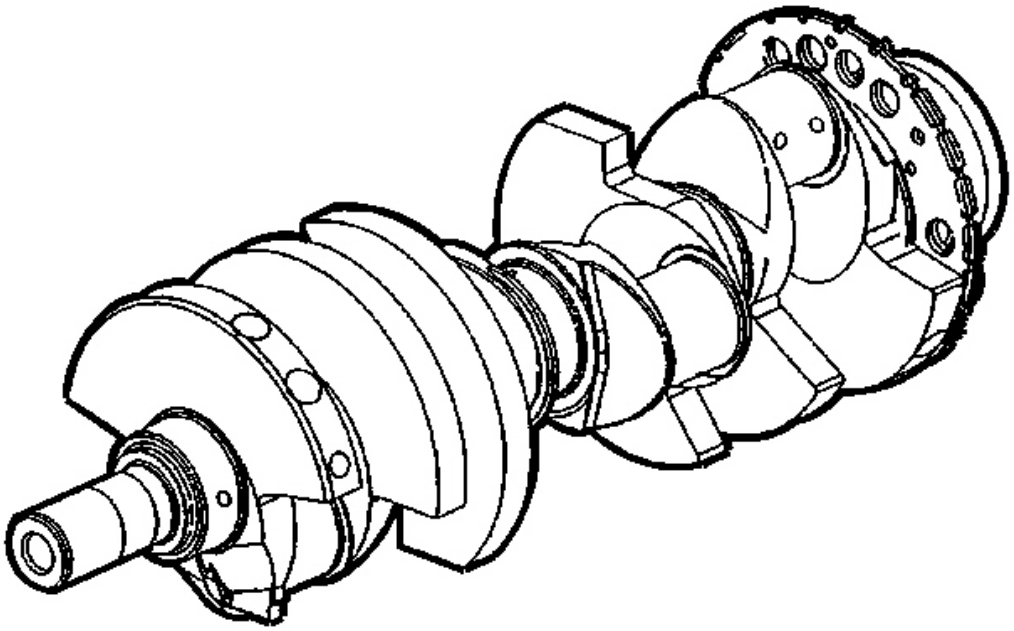

Fig. 90: CKP Reluctor Ring Lobes
Courtesy of GENERAL MOTORS CORP.

IMPORTANT:

- **The reluctor ring teeth should not have imperfections on the rising or falling edges.**
- **Imperfections of the reluctor ring teeth may effect OBD II system performance.**

1. Perform a visual inspection of the crankshaft for damage.
2. Inspect the crankshaft position (CKP) reluctor ring lobes for damage.

cardiagn.com

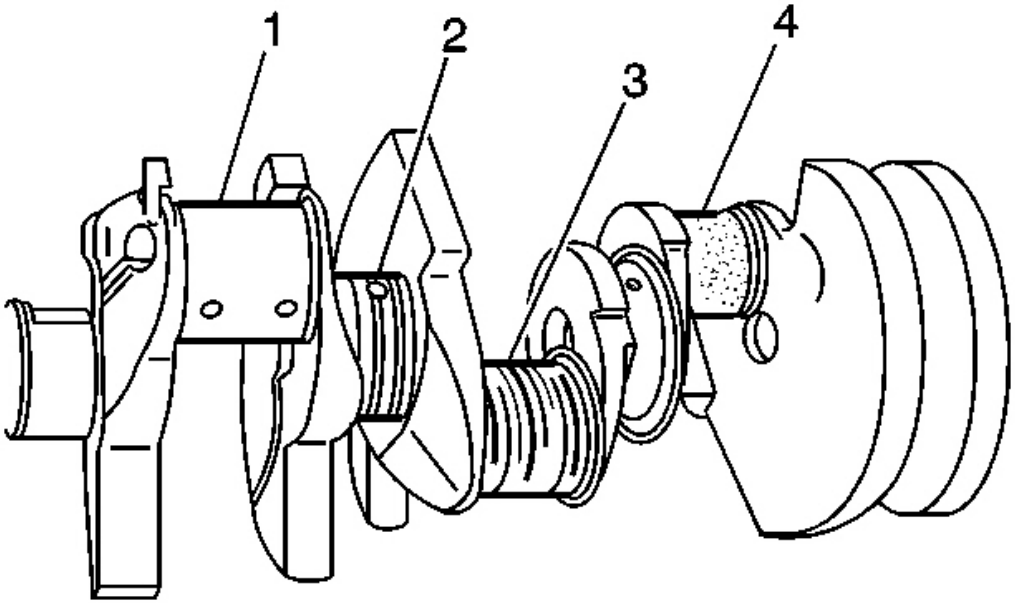

Fig. 91: Crankshaft Inspection Areas (1-4)
Courtesy of GENERAL MOTORS CORP.

3. Inspect the crankshaft journals for wear (1).

   Journals should be smooth with no signs of scoring, wear, or damage.

4. Inspect the crankshaft journals for grooves or scoring (2).
5. Inspect the crankshaft journals for scratches or wear (3).
6. Inspect the crankshaft journals for pitting or imbedded bearing material (4).

cardiagn.com

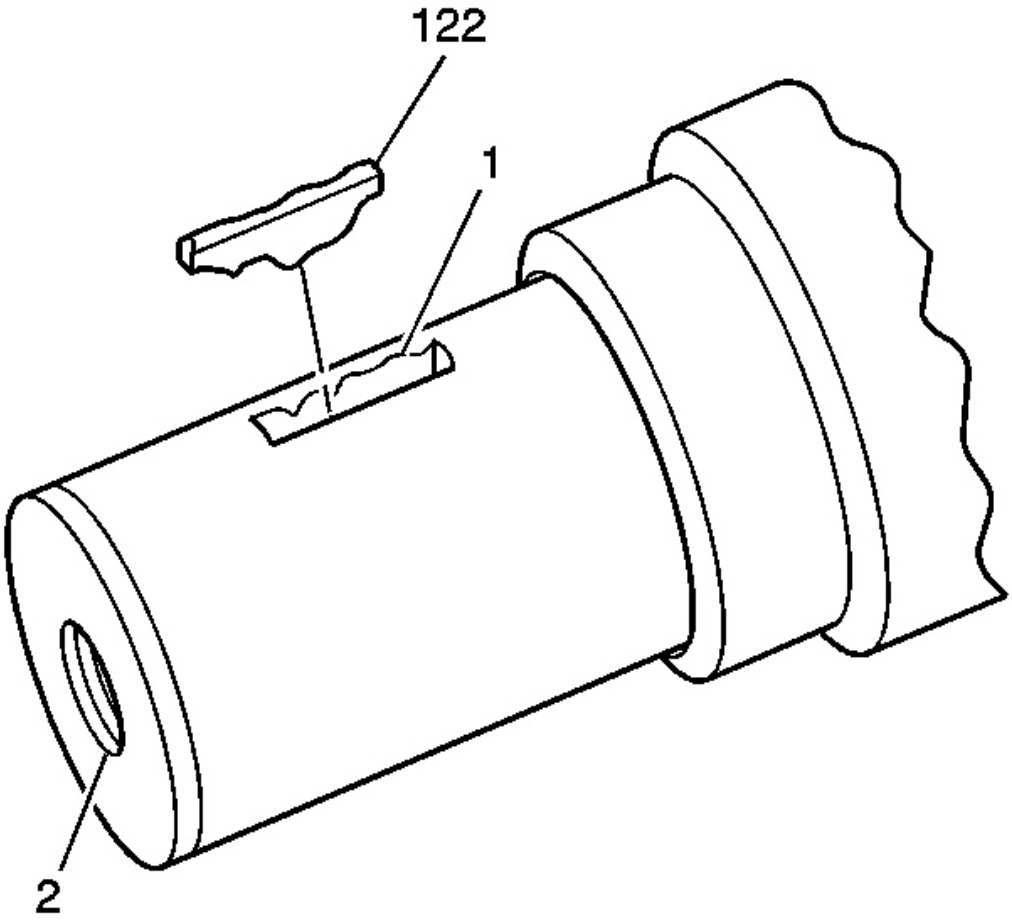

Fig. 92: View Of Crankshaft Key, Keyway & Threaded Hole
Courtesy of GENERAL MOTORS CORP.

7. Inspect the crankshaft key (122), keyway (1), and threaded hole (2) for damage.

cardiagn.com

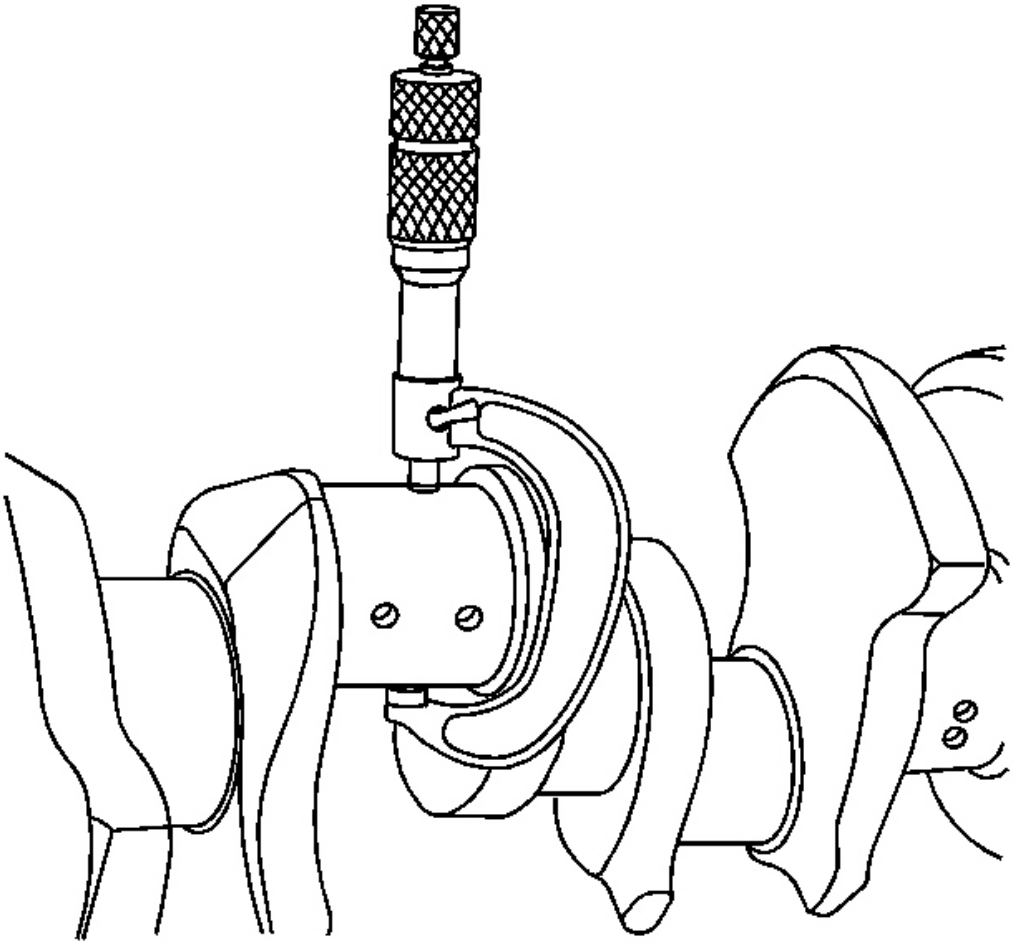

Fig. 93: Measuring The Crankpins For Out-Of-Round & Taper
Courtesy of GENERAL MOTORS CORP.

8. Measure the crankpins for the out-of-round.
9. Measure the crankpins for taper.

cardiagn.com

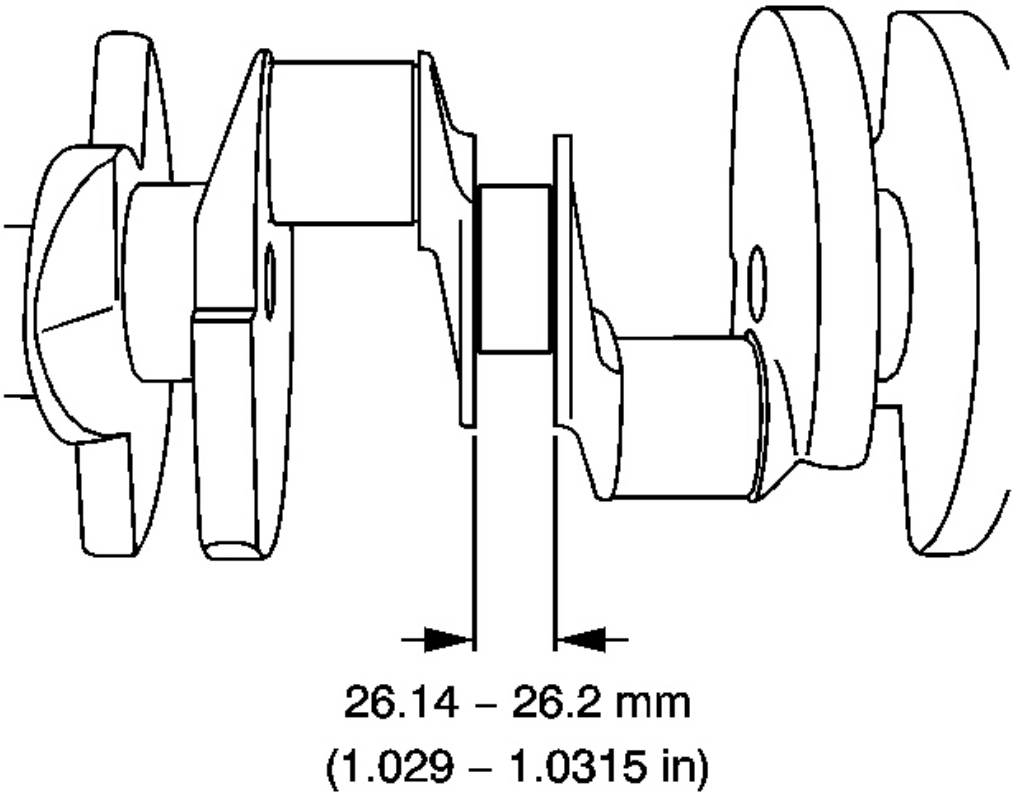

Fig. 94: Measuring The Crankshaft Thrust Wall Width
Courtesy of GENERAL MOTORS CORP.

10. Measure the crankshaft thrust wall width.

    A crankshaft with a thrust wall width in excess of 26.2 mm (1.0315 in) must be replaced.

cardiagn.com

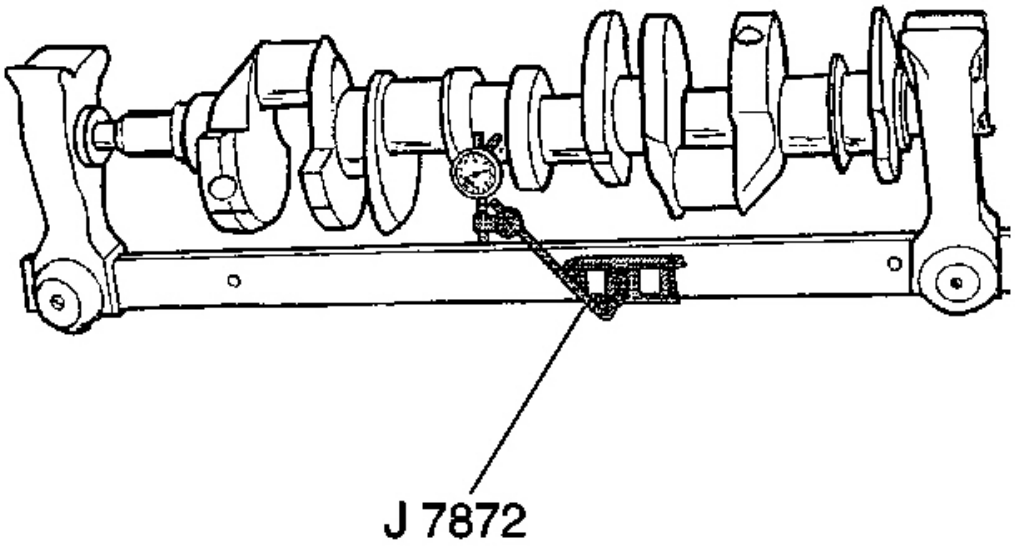

Fig. 95: Measuring The Crankshaft Runout Using J 7872
Courtesy of GENERAL MOTORS CORP.

11. Measure the crankshaft runout.

    Use wooden V blocks or a fixture to support the crankshaft on the front and rear journals.

12. Use the **J 7872** in order to measure the crankshaft runout at the front and rear intermediate journals.
13. Use the **J 7872** in order to measure the runout of the crankshaft rear flange.
14. Use the **J 7872** in order to measure the runout of the crankshaft position reluctor ring. Reluctor ring runout should be measured 1.0 mm (0.04 in) below the ring teeth.

    If the reluctor ring has runout in excess of 0.7 mm (0.028 in), replace the crankshaft.

cardiagn.com

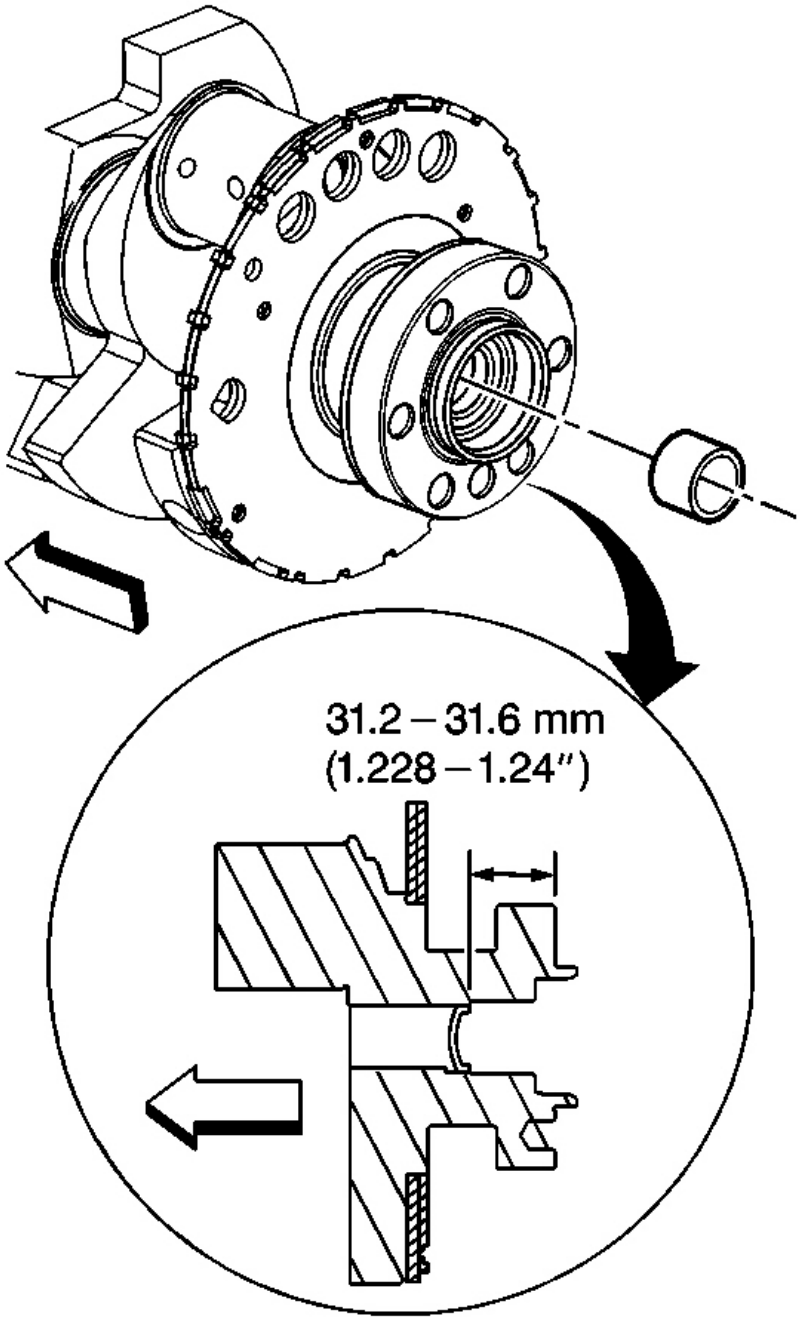

Fig. 96: Crankshaft Rear Oil Gallery Plug
Courtesy of GENERAL MOTORS CORP.

IMPORTANT: A loose or damaged crankshaft oil gallery plug must be replaced.

cardiagn.com

15. Inspect the crankshaft rear oil gallery plug for a loose fit or leaking.

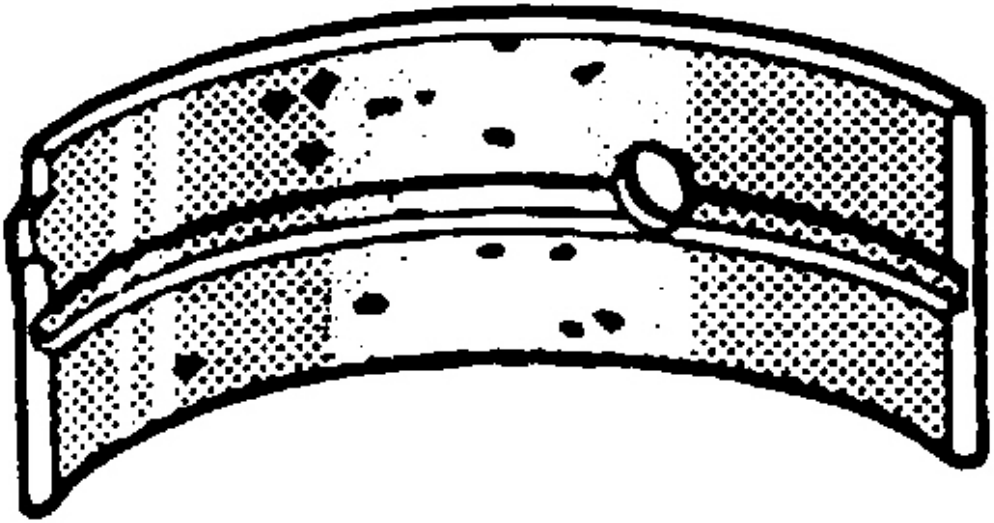

Fig. 97: Inspecting Bearings For Craters Or Pockets
Courtesy of GENERAL MOTORS CORP.

16. Inspect crankshaft bearings for craters or pockets. Flattened sections on the bearing halves also indicate fatigue.

cardiagn.com

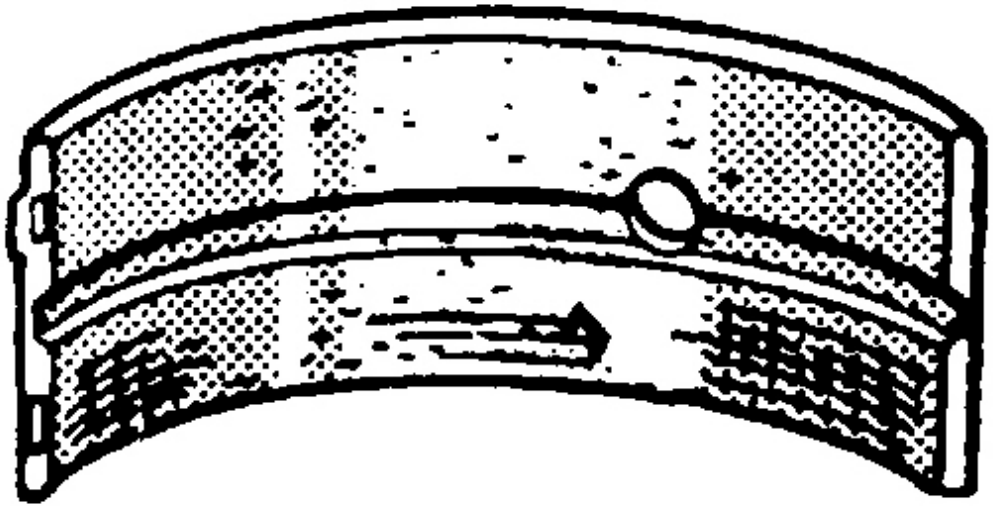

Fig. 98: Inspecting The Crankshaft Rod Bearings For Excess Scoring Or Discoloration
Courtesy of GENERAL MOTORS CORP.

17. Inspect the crankshaft bearings for excessive scoring or discoloration.
18. Inspect the crankshaft bearings for dirt or debris imbedded into the bearing material.

cardiagn.com

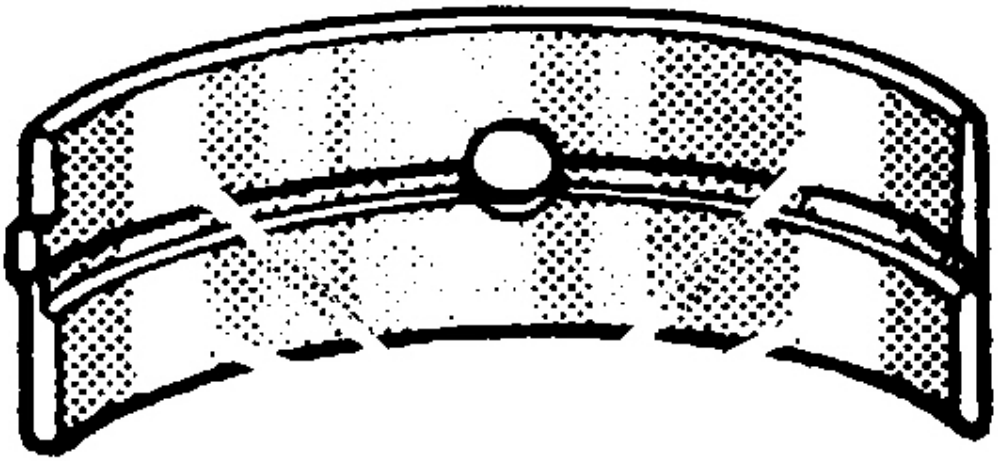

Fig. 99: Inspect The Crankshaft Bearings For Improper Seating
Courtesy of GENERAL MOTORS CORP.

19. Inspect the crankshaft bearings for improper seating indicated by bright, polished sections of the bearing.

    If the lower half of the bearing is worn or damaged, both upper and lower halves should be replaced.

    Generally, if the lower half is suitable for use, the upper half should also be suitable for use.

Measuring Main Bearing Clearance - Gaging Plastic Method

cardiagn.com

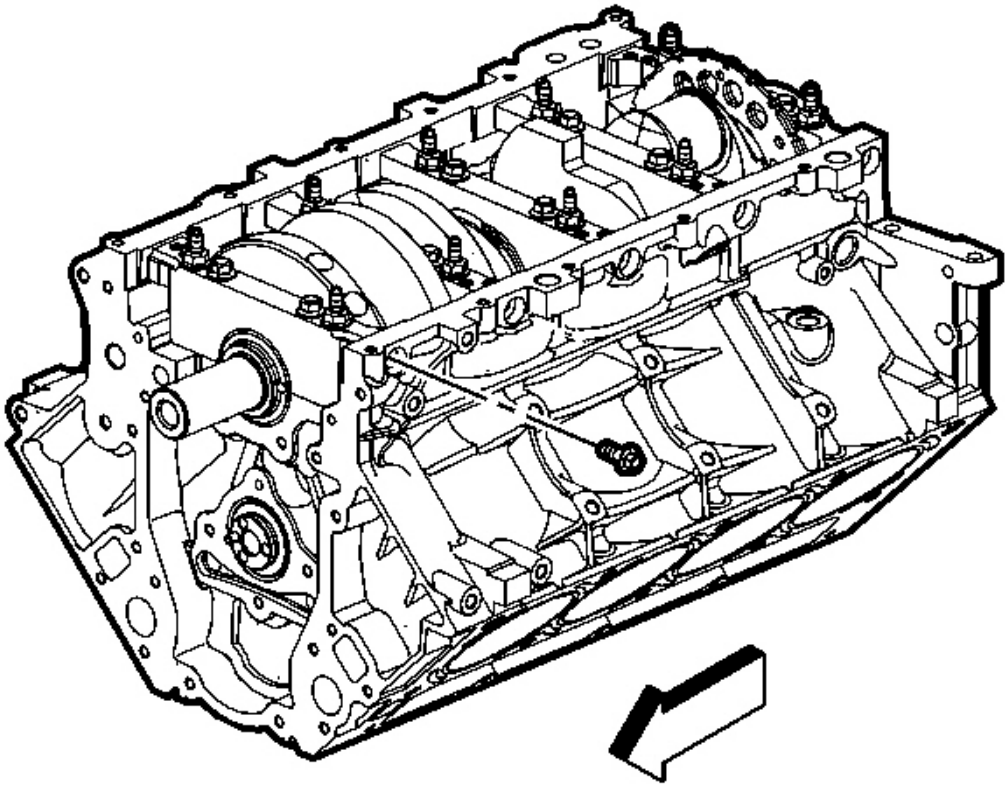

Fig. 100: View Of Bearing Cap Bolts & Studs
Courtesy of GENERAL MOTORS CORP.

IMPORTANT:

- **The crankshaft main bearings are a precision insert type. Main bearing caps are machined with the engine block, for proper clearance, and cannot be shimmed or filed for bearing fit. If the clearances are found to be excessive, new bearings and/or engine block and cap repair or replacement may be required.**
- **Do not rotate the crankshaft while gaging plastic is between the crankshaft journal and the bearing surface.**
- **The crankshaft bearing clearances are critical. Excessive bearing clearance may effect crankshaft position sensor signals and may effect On-Board Diagnostics (OBD) II system operation.**
- **Remove the bearing cap side bolts prior to cap removal.**

1. Remove the bearing cap M8 bolts.

cardiagn.com

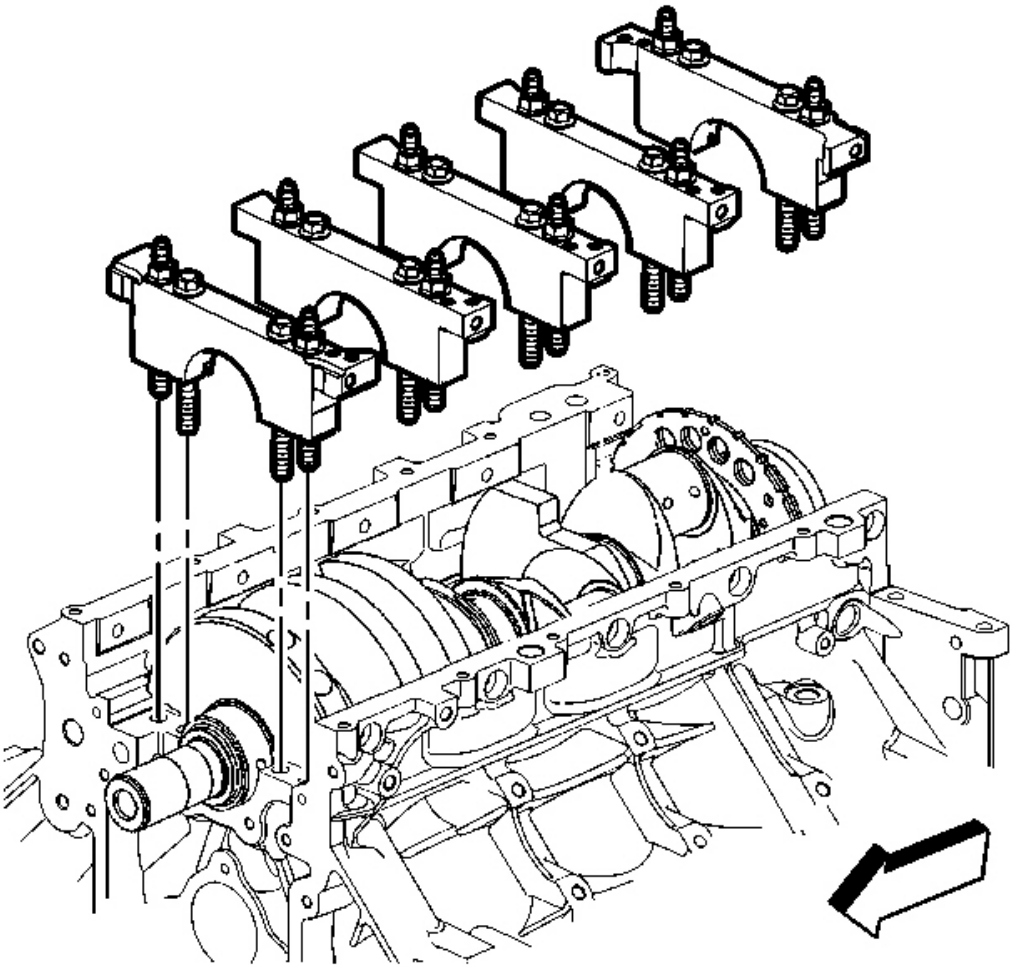

Fig. 101: View Of Bearing Caps
Courtesy of GENERAL MOTORS CORP.

2. Remove the bearing cap M10 bolts and studs.

cardiagn.com

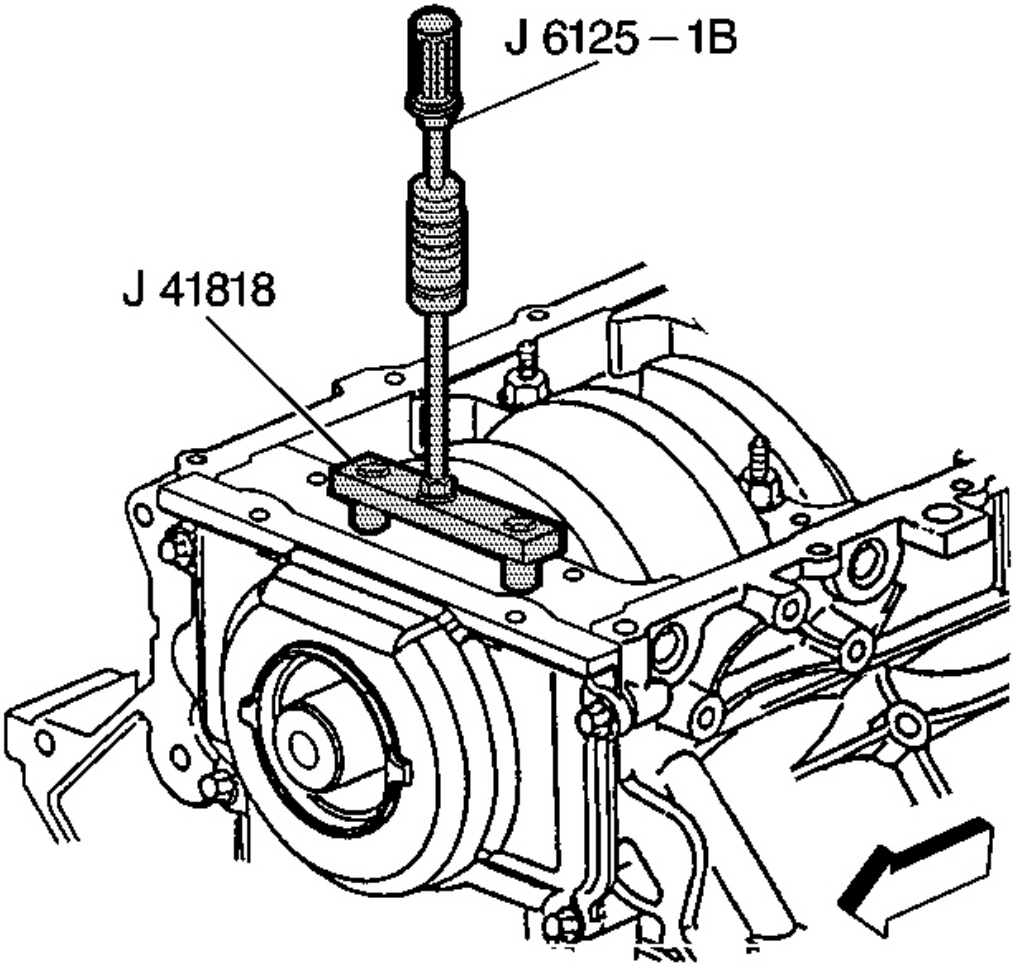

Fig. 102: View Of J 6125-1B & J 41818
Courtesy of GENERAL MOTORS CORP.

NOTE: **Refer to Fastener Notice in Cautions and Notices.**

3. Install the J 41818 to the bearing cap.

   Tighten: Tighten the J 41818 bolts to 11 N.m (100 lb in).

4. Install the **J 6125-1B** to the J 41818 in order to remove the bearing cap.

cardiagn.com

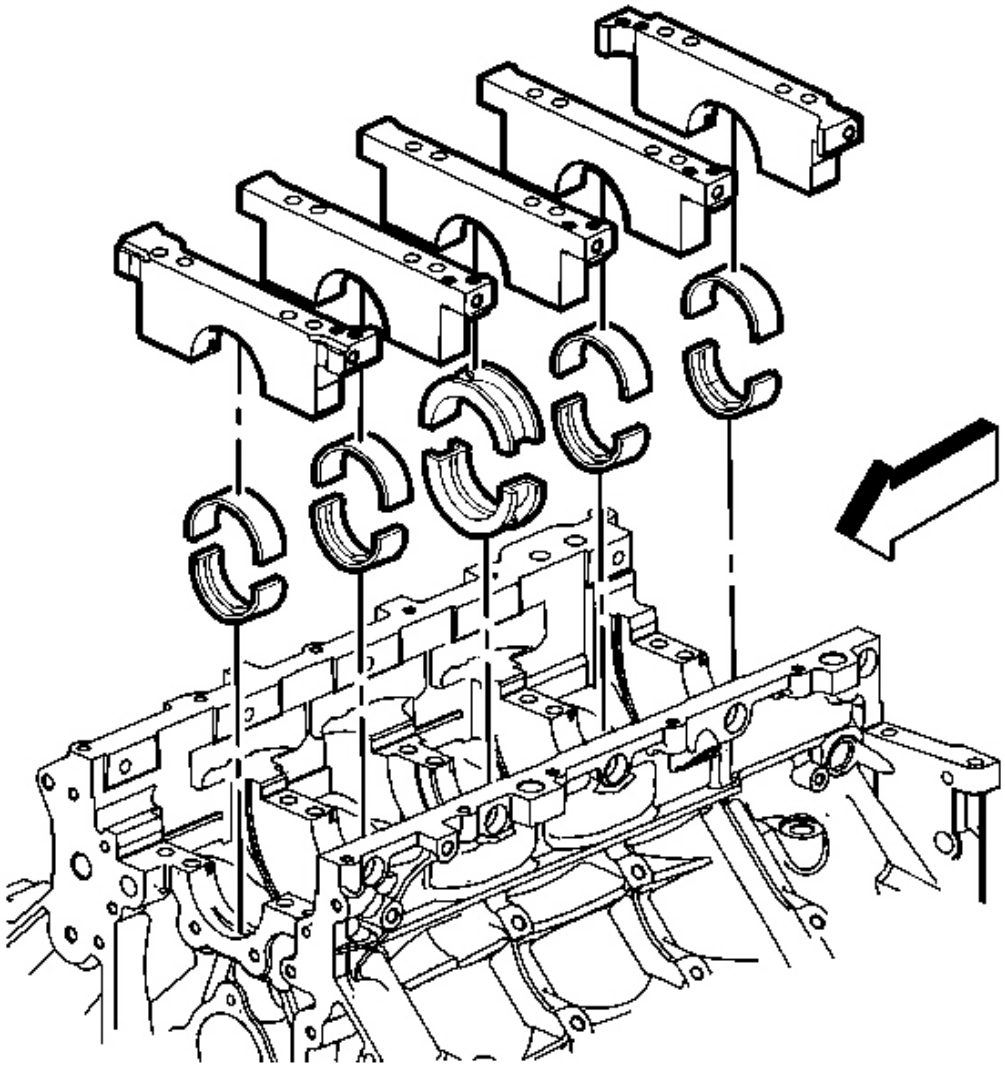

Fig. 103: View Of Crankshaft Bearings & Bearing Caps
Courtesy of GENERAL MOTORS CORP.

5. Remove the bearing cap and lower bearing.

cardiagn.com

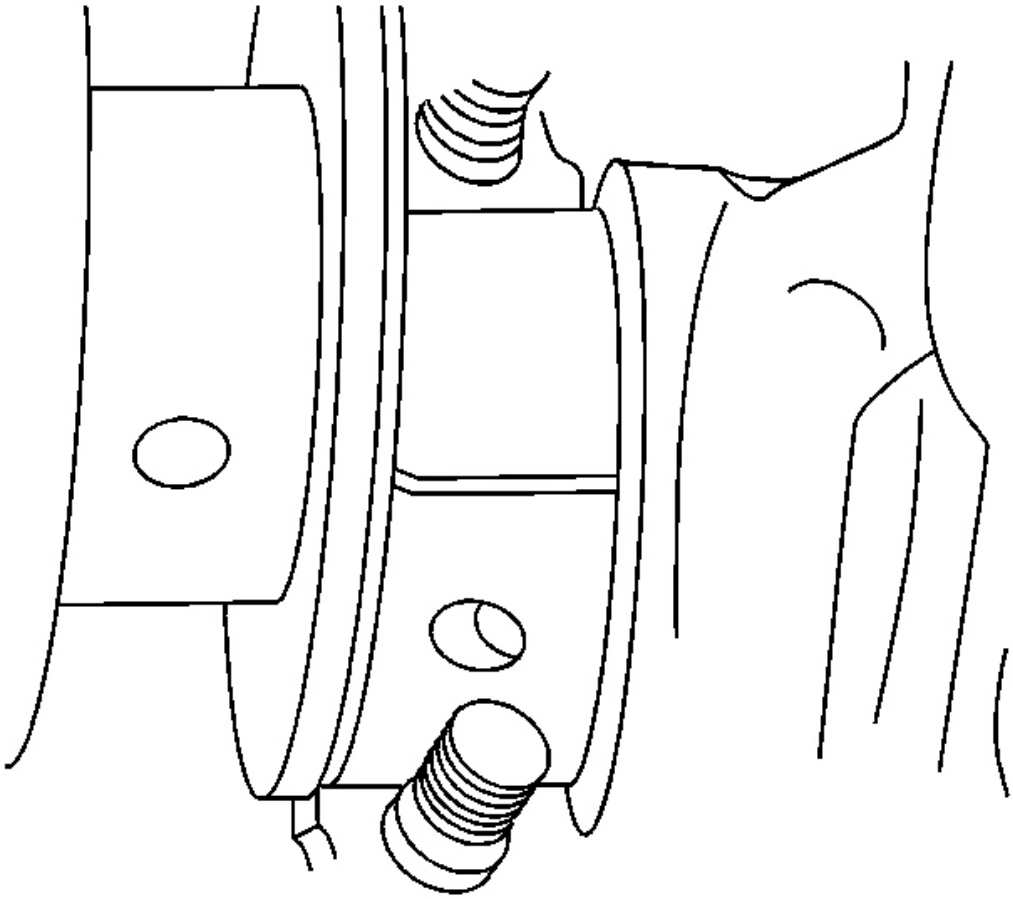

Fig. 104: View Of Gaging Plastic & Crankshaft Journal
Courtesy of GENERAL MOTORS CORP.

6. Install gaging plastic onto the crankshaft journal. Install the gaging plastic the full width of crankshaft bearing journal.

cardiagn.com

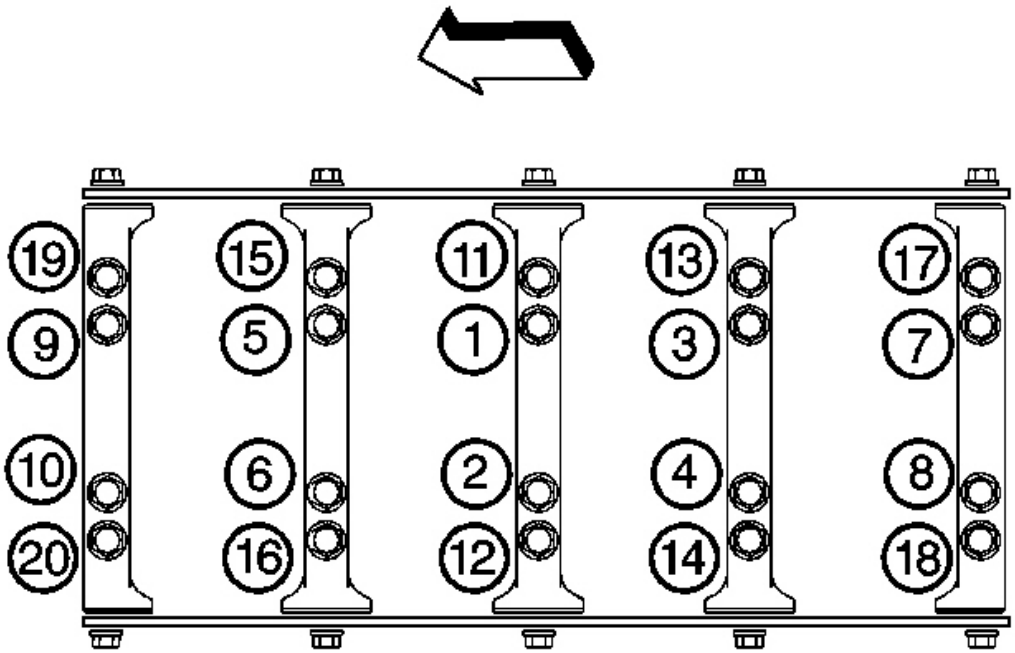

Fig. 105: Main Cap Bolt Hole Tightening Sequence
Courtesy of GENERAL MOTORS CORP.

7. Install the bearing, bearing cap, bolts and studs.

   Tighten:

   1. Tighten the M10 bolts (1-10) a first pass in sequence to 20 N.m (15 lb ft).
   2. Tighten the M10 bolts (1-10) a final pass in sequence to 80 degrees using the **J 45059** .
   3. Tighten the M10 studs (11-20) a first pass in sequence to 20 N.m (15 lb ft).
   4. Tighten the M10 studs (11-20) a final pass in sequence to 53 degrees using the **J 45059** .
   5. Tighten the M8 bolts to 25 N.m (18 lb ft).

      Tighten the bolt on one side of the bearing cap and then tighten the bolt on the opposite side of the same bearing cap.

cardiagn.com

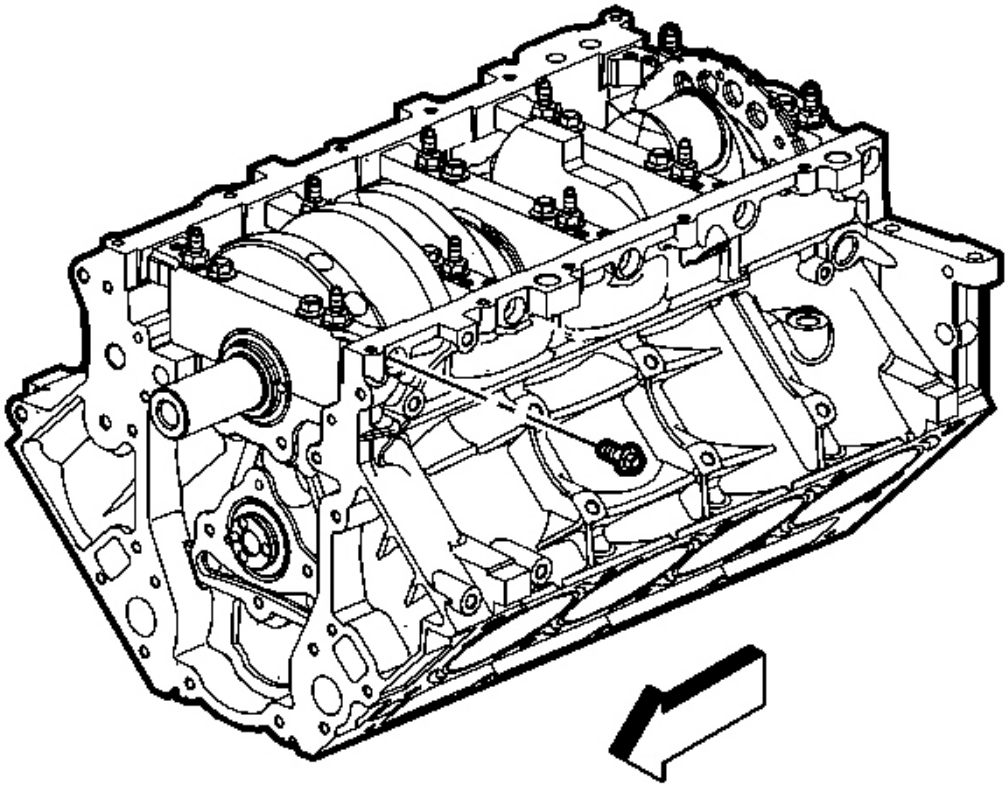

Fig. 106: View Of Bearing Cap Bolts & Studs
Courtesy of GENERAL MOTORS CORP.

IMPORTANT: Remove the bearing cap side bolts prior to cap removal.

8. Remove the bearing cap M8 bolts.

cardiagn.com

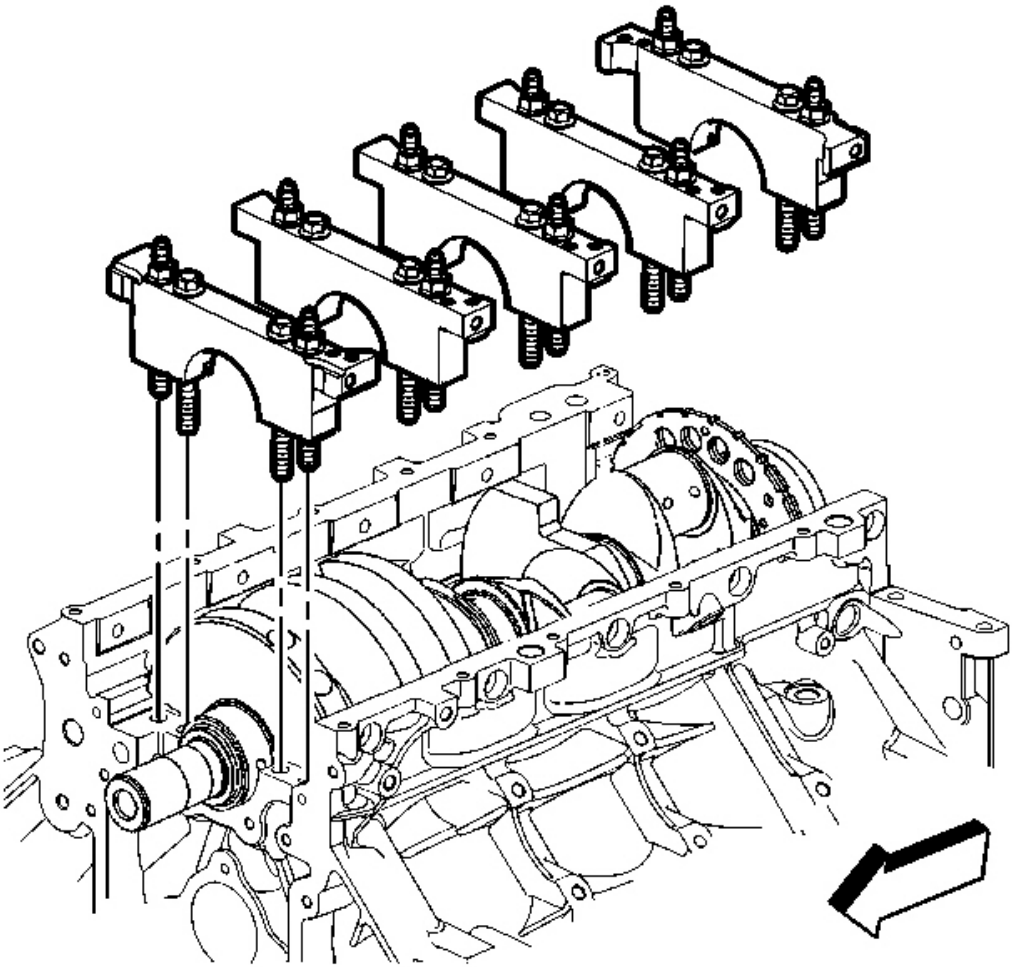

Fig. 107: View Of Bearing Caps
Courtesy of GENERAL MOTORS CORP.

9. Remove the bearing cap M10 bolts and studs.

cardiagn.com

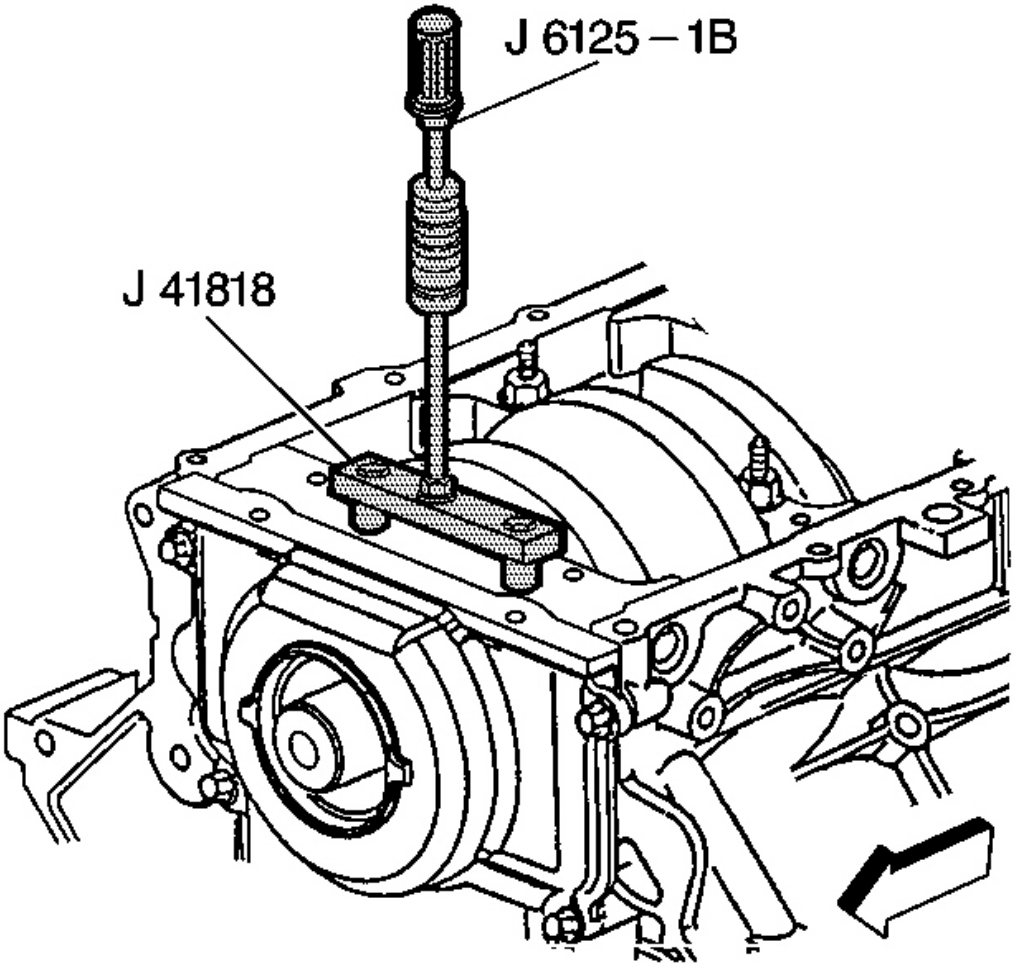

Fig. 108: View Of J 6125-1B & J 41818
Courtesy of GENERAL MOTORS CORP.

10. Use the J 41818 and the **J 6125-1B** in order to remove the bearing cap.

cardiagn.com

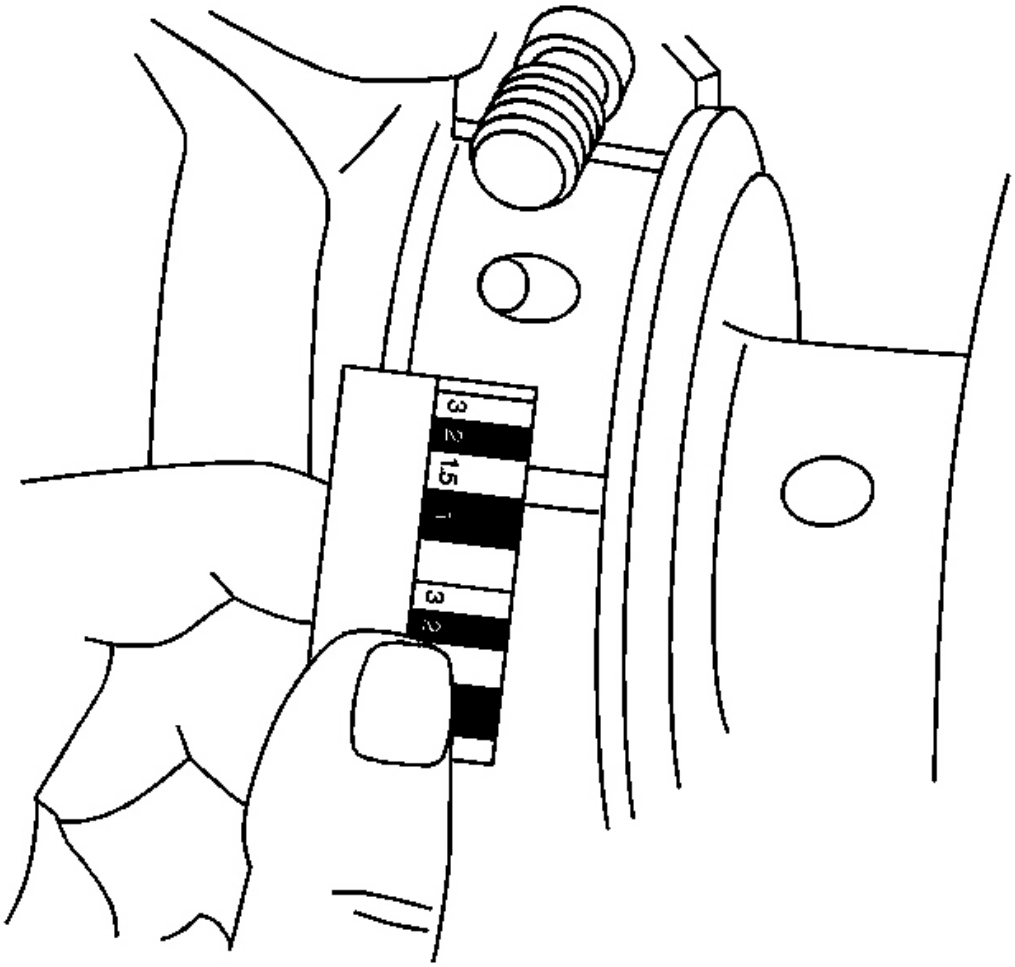

Fig. 109: Measuring The Gaging Plastic On Crankshaft
Courtesy of GENERAL MOTORS CORP.

11. Measure the gaging plastic at its widest area using the scale supplied with the plastic gaging kit.
    - If the gaging plastic shows irregularity in the journal exceeding 0.025 mm (0.001 in), remove the crankshaft and measure the journal with a micrometer.
    - If the bearing clearance is greater than 0.065 mm (0.0025 in), select and install an undersized bearing set, and measure the clearance with gaging plastic.
    - If clearance cannot be brought to specifications, replace the crankshaft or grind the crankshaft for use with the next undersized bearing.

cardiagn.com

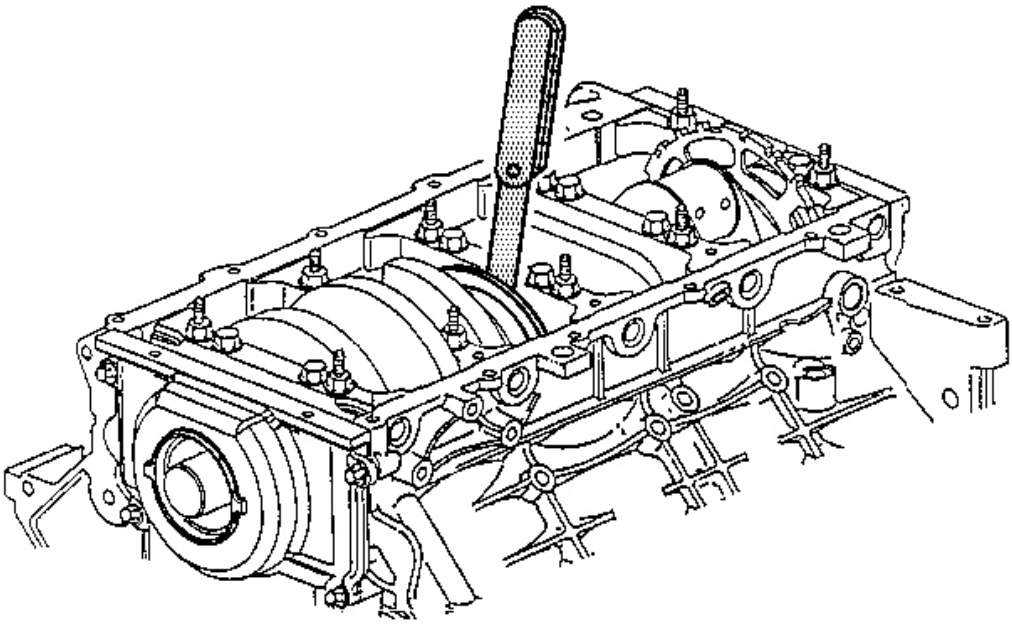

Fig. 110: Measuring Crankshaft End Play
Courtesy of GENERAL MOTORS CORP.

12. Measure the crankshaft end play.
    1. Thrust the crankshaft forward or rearward.
    2. Insert a feeler gage between the center crankshaft bearing and the bearing surface of the crankshaft and measure the bearing clearance. Refer to **Engine Mechanical Specifications (LS1)** or **Engine Mechanical Specifications (LS6)** .
    3. If the bearing clearance is not within specifications:
        - Inspect the thrust surfaces for nicks, gouges or raised metal. Minor imperfections may be removed with a fine stone.
        - Replace the thrust bearings and measure the end play.
        - If the correct measurements cannot be obtained, repair the crankshaft thrust surfaces or replace the crankshaft.

Measuring Connecting Rod Bearing Clearance - Gaging Plastic Method

cardiagn.com

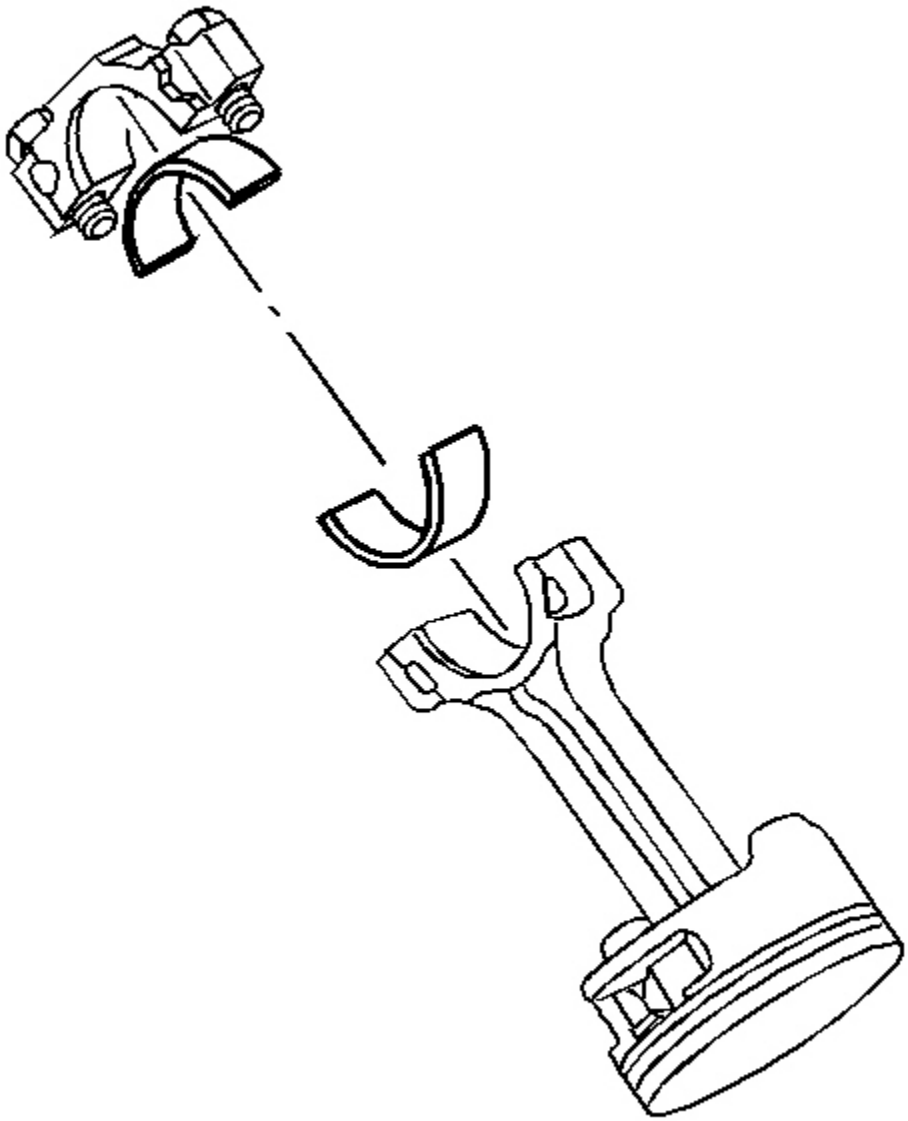

Fig. 111: View Of Connecting Rod Cap & Bolts
Courtesy of GENERAL MOTORS CORP.

IMPORTANT:

- **Connecting rod bearings are a precision insert type. Connecting rods are of a powdered metal design and cannot be shimmed or filed for bearing fit. If clearances are found to be excessive, a new bearing and/or connecting rod are required.**

cardiagn.com

- **Do not rotate the crankshaft while gaging plastic is between the crankshaft journal and the bearing surface.**

1. Remove the bearing cap, bearing half and bolts.

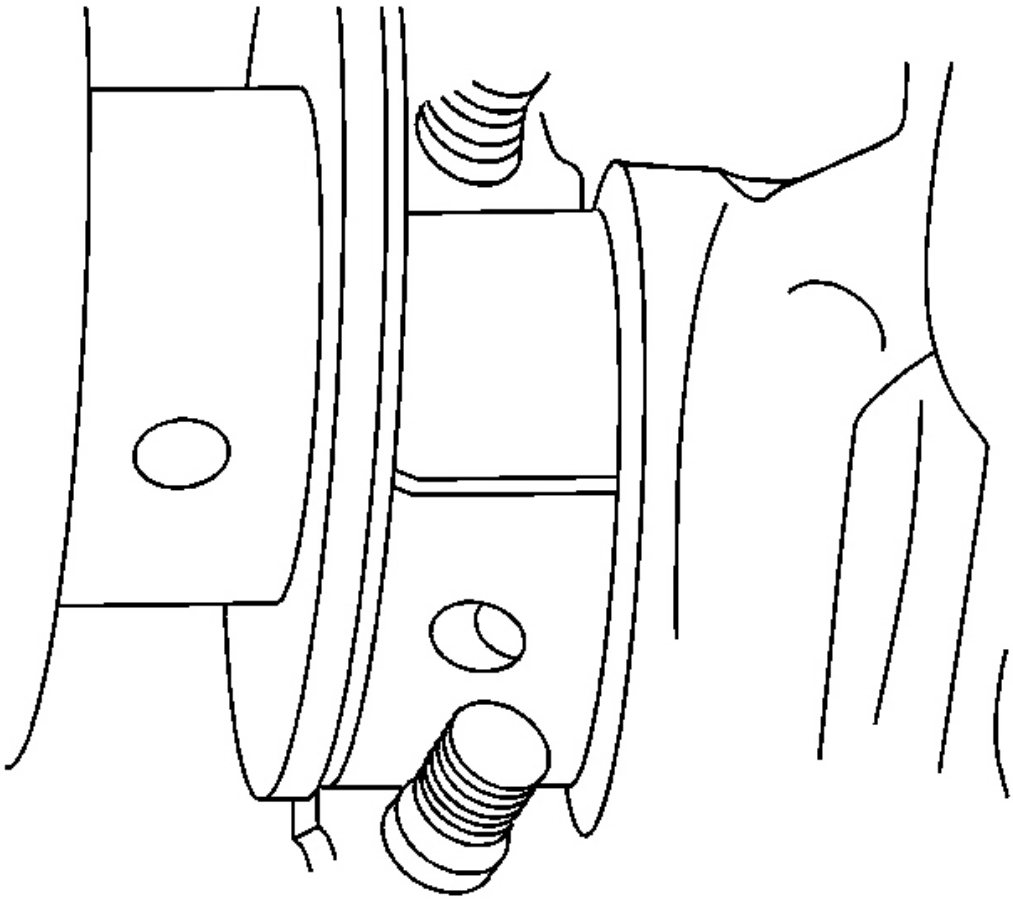

Fig. 112: View Of Gaging Plastic & Crankshaft Journal
Courtesy of GENERAL MOTORS CORP.

2. Install the gaging plastic onto the connecting rod bearing journal. Install the gaging plastic the full width of the journal.

cardiagn.com

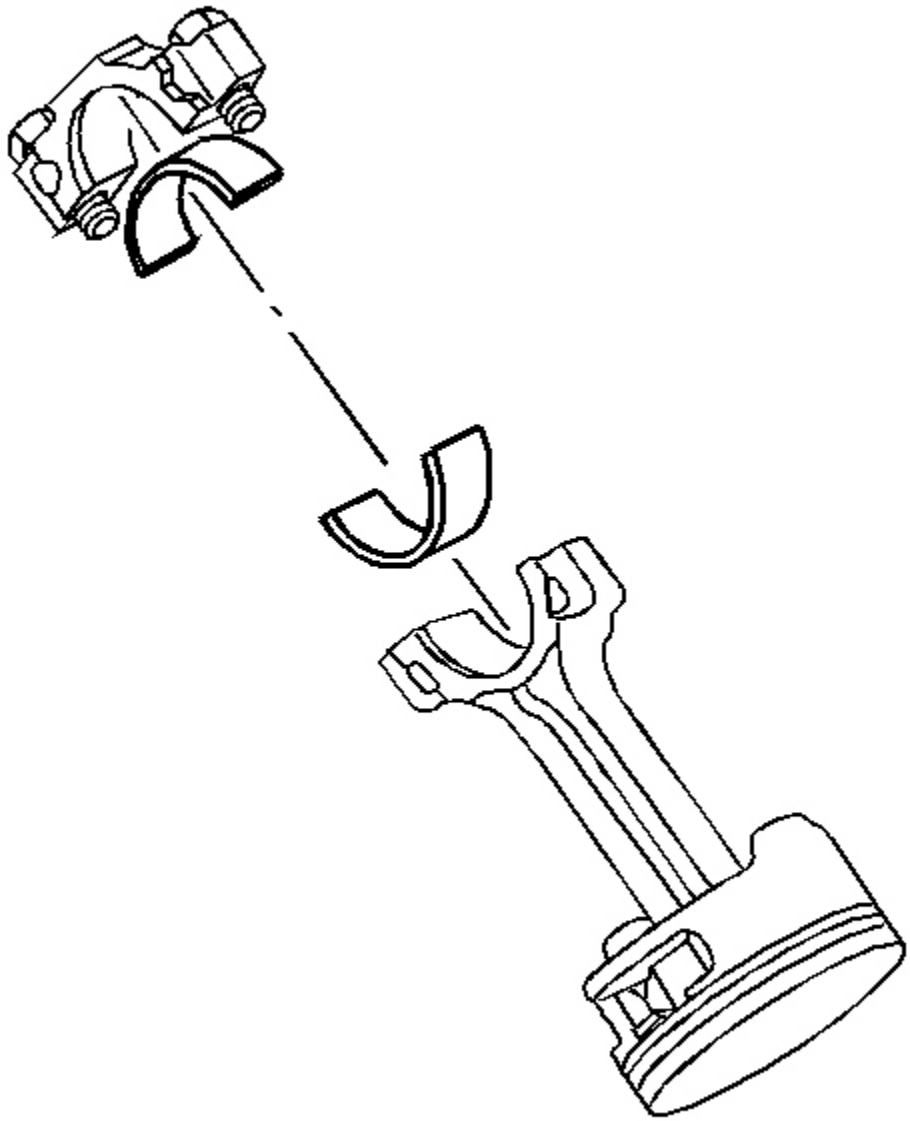

Fig. 113: View Of Connecting Rod Cap & Bolts
Courtesy of GENERAL MOTORS CORP.

NOTE: Refer to Fastener Notice in Cautions and Notices.

3. Install the bearing cap, bearing, and bolts.

cardiagn.com

Tighten:

1. Tighten the connecting rod bolts first pass to 20 N.m (15 lb ft).
2. Tighten the connecting rod bolts final pass to 75 degrees using the **J 45059** .

4. Remove the bearing cap, bearing, and bolts.

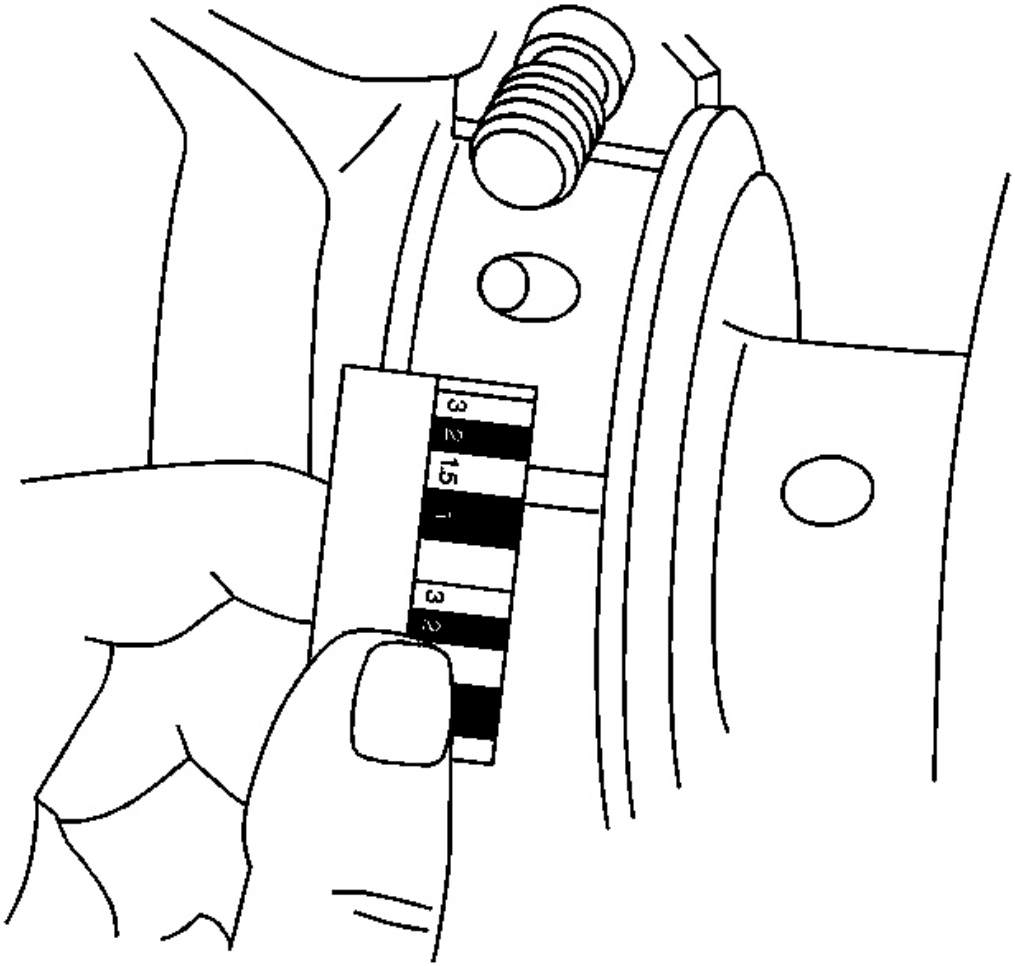

Fig. 114: Measuring The Gaging Plastic On Crankshaft
Courtesy of GENERAL MOTORS CORP.

5. Measure the gaging plastic at its widest area using the scale supplied with the plastic gaging kit. Refer to **Engine Mechanical Specifications (LS1)** or **Engine Mechanical Specifications (LS6)** .

Measuring Connecting Rod Bearing Clearance - Using J 43690/J 43690-100

cardiagn.com

J 43690 and **J 43690-100** have been developed as a more accurate method to measure connecting rod bearing clearances. The instructions below provide an overview of tool set-up and usage. For more detailed information, refer to the tool instruction sheets as supplied by the tool manufacturer.

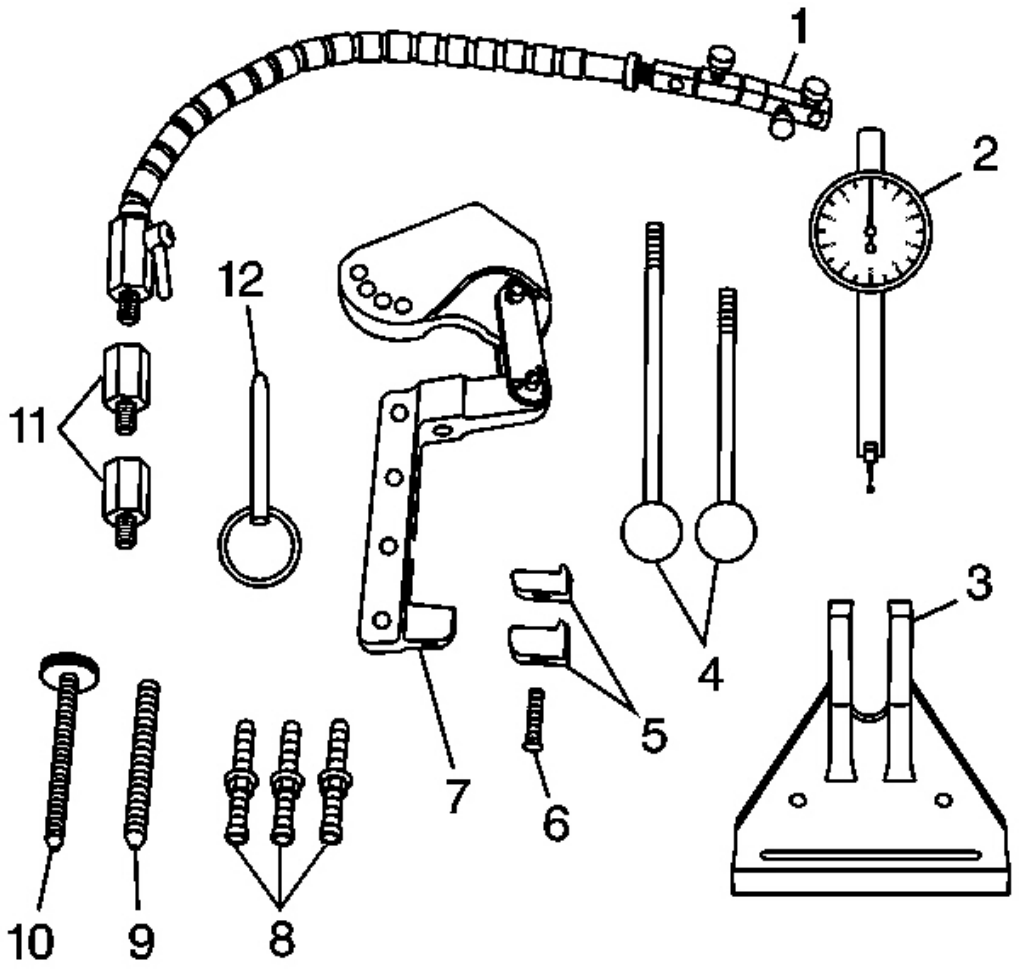

Fig. 115: View Of J 43690 & Components
Courtesy of GENERAL MOTORS CORP.

J 43690

- J 43690-20 Swivel Base (1)
- J 43690-19 Dial Indicator (2)
- J 43690-2 Base (3)

cardiagn.com

- J 43690-5, -6 Handle (4)
- J 43690-10, -11 Foot (5)
- 280307 Screw (6)
- J 43690-1 Pivot Arm Assembly (7)
- J 43690-3, -7, -8 Screws (8)
- 280319 Screw (9)
- 280311 Screw (10)
- J 43690-17, -18 Adapter (11)
- 280310 Pin (12)

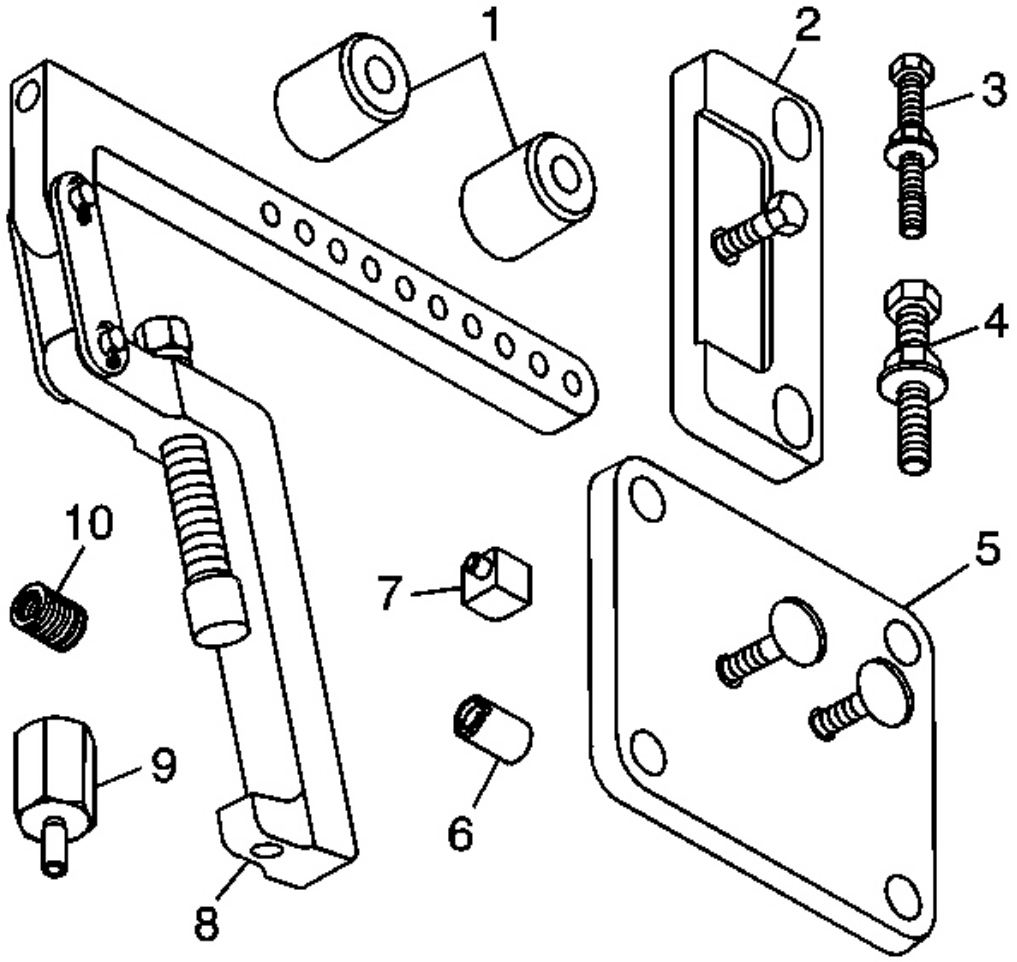

Fig. 116: View Of J 43690-100 & Components

cardiagn.com

Courtesy of GENERAL MOTORS CORP.

J 43690-100

- J 43690-104 Spacer (1)
- J 43690-105 Retainer Plate (2)
- 505478 Bolt (3)
- 511341 Bolt (4)
- J 43690-106 Retainer Plate (5)
- J 43690-107 Cap (6)
- J 43690-102 Foot (7)
- J 43690-101 Pivot Arm Assembly (8)
- J 43690-103 Adapter (9)
- 505439 Adapter (10)

cardiagn.com

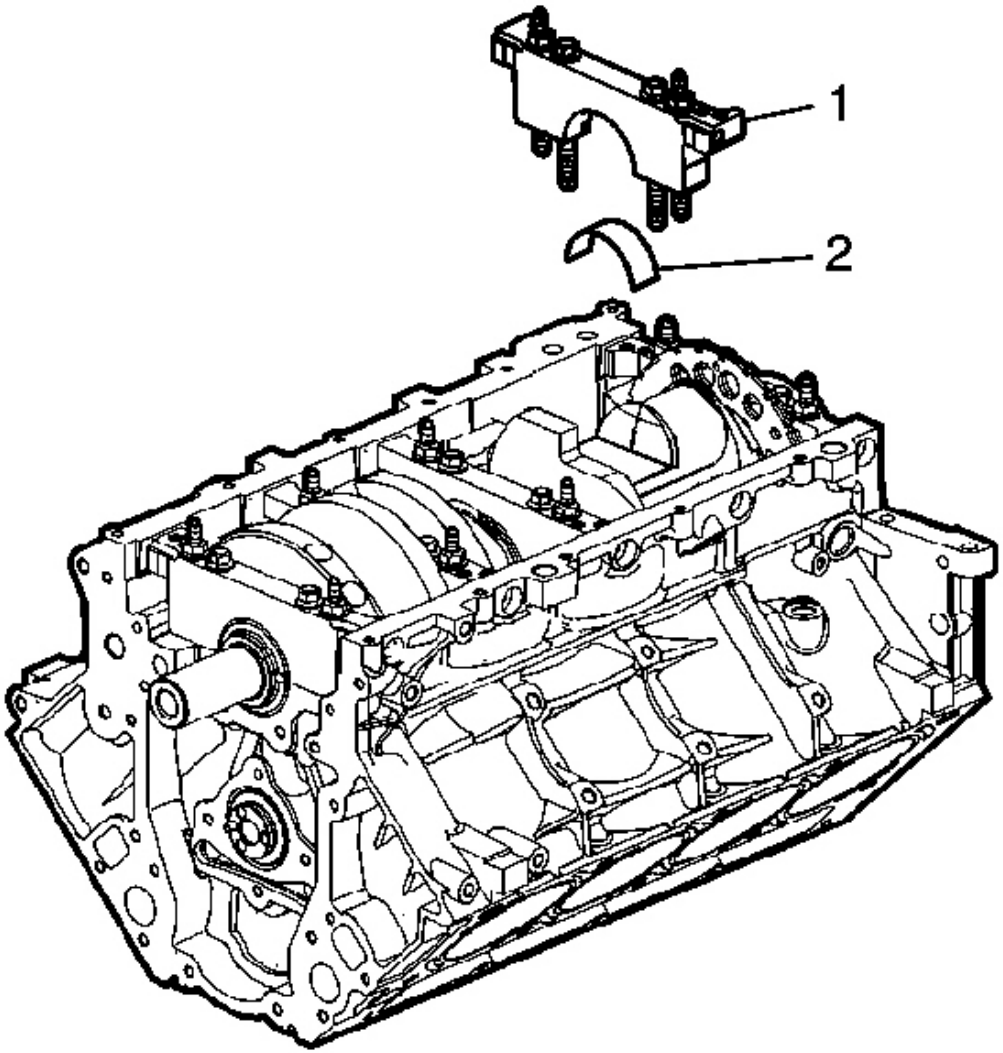

Fig. 117: View OF Bearing Cap Bolt & Bearing Half
Courtesy of GENERAL MOTORS CORP.

IMPORTANT: The crankshaft must be secure with no movement or rotation in order to obtain an accurate reading.

1. Rotate the crankshaft until the journal/connecting rod to be measured is in the 12 o'clock position.
2. Remove a bearing cap and bolts (1).
3. Remove the bearing half (2).

cardiagn.com

4. Insert a piece of paper card stock onto the crankshaft journal.
5. Install the bearing half (2) and cap and bolts (1). Refer to **Fastener Tightening Specifications** .

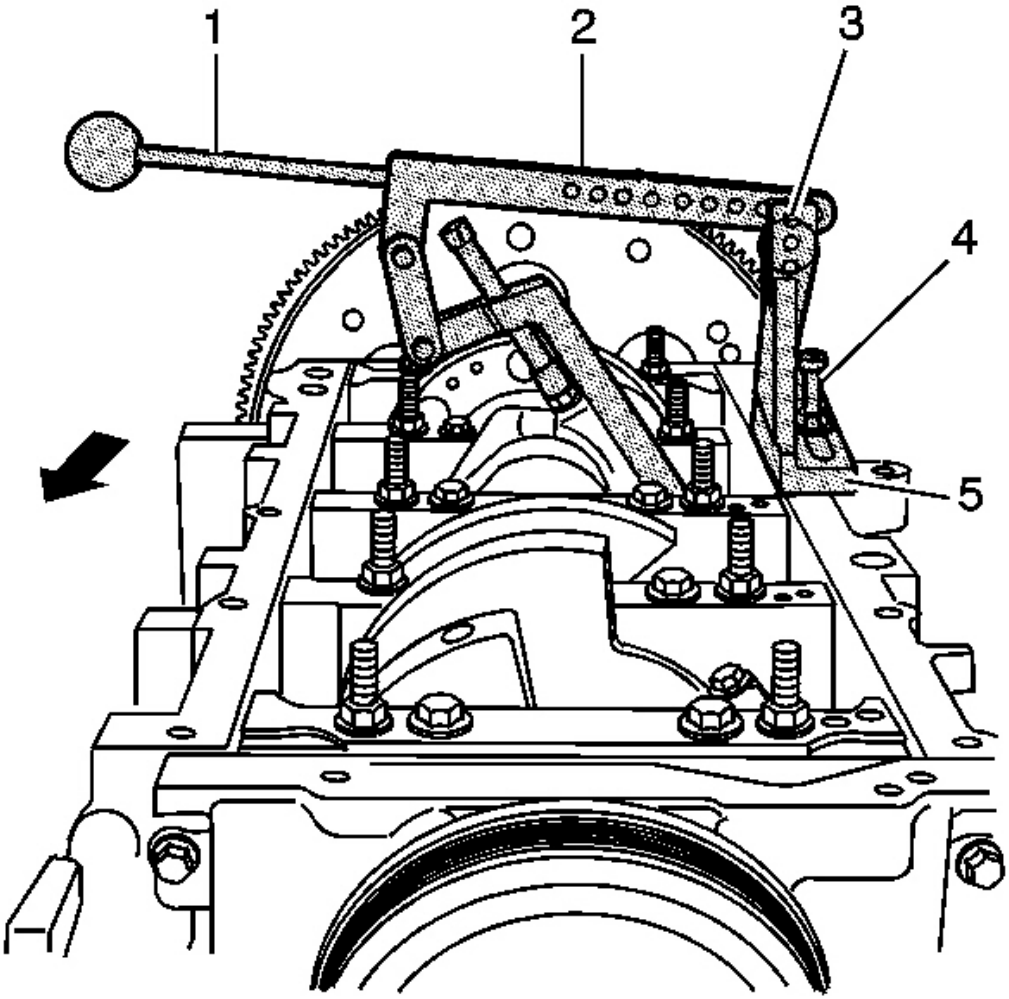

Fig. 118: View Of J 43690-2, J 43690-3, J 43690-101, 280310 & J 43690-5
Courtesy of GENERAL MOTORS CORP.

6. Install the following:
    1. J 43690-2 (5)
    2. J 43690-3 (4)
    3. J 43690-101 (2)

cardiagn.com

4. 280310 (3)
5. J 43690-5 (1)

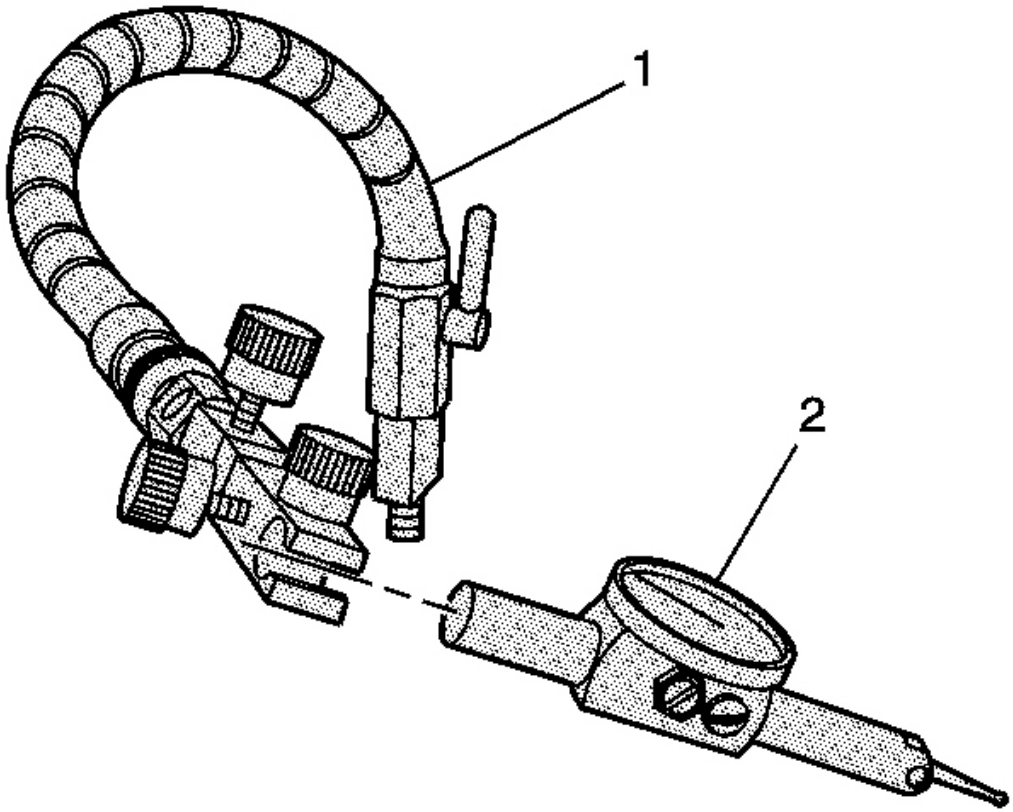

Fig. 119: Swivel Base & Dial Indicator
Courtesy of GENERAL MOTORS CORP.

7. Install the swivel base (1) and dial indicator (2).
8. Adjust per the manufacturers instructions and measure the connecting rod bearing clearance.

   A connecting rod with a clearance in excess of 0.076 mm (0.003 in) is considered excessive. Service components as required.

CRANKSHAFT BALANCER CLEANING AND INSPECTION

cardiagn.com

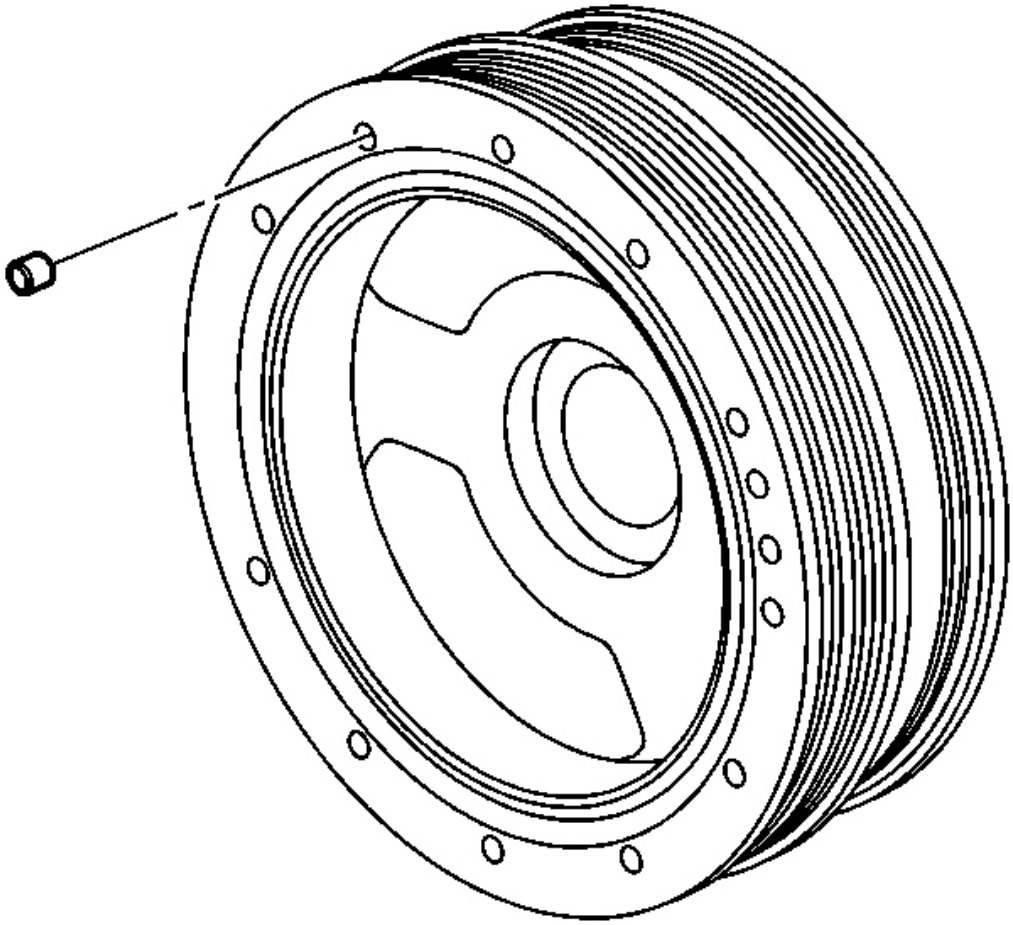

Fig. 120: Crankshaft Balancer
Courtesy of GENERAL MOTORS CORP.

1. Clean the crankshaft balancer in solvent.
2. Clean the belt grooves of all dirt or debris with a wire brush.
3. Dry the crankshaft balancer with compressed air.
4. Inspect the crankshaft balancer for the following:
   - Loose or improperly installed balance weights, manual transmission applications

     A properly installed balance weight should be installed until flush or below flush with the face of the balancer.

   - Worn, grooved, or damaged hub seal surface

cardiagn.com

A crankshaft balancer hub seal surface with excessive scoring, grooves, rust or other damage must be replaced.

Minor imperfections on the hub seal surface may be removed with polishing compound or fine grade emery cloth.

IMPORTANT: In order for the belt to track properly, the belt grooves should be free of all dirt or debris.

- Dirty or damaged belt grooves

  The balancer belt grooves should be free of any nicks, gouges, or other damage that may not allow the belt to track properly.

  Minor imperfections may be removed with a fine file.

- Worn, chunking or deteriorated rubber between the hub and pulley

Replacing the Crankshaft Balancer and Balance Weights - Corvette

cardiagn.com

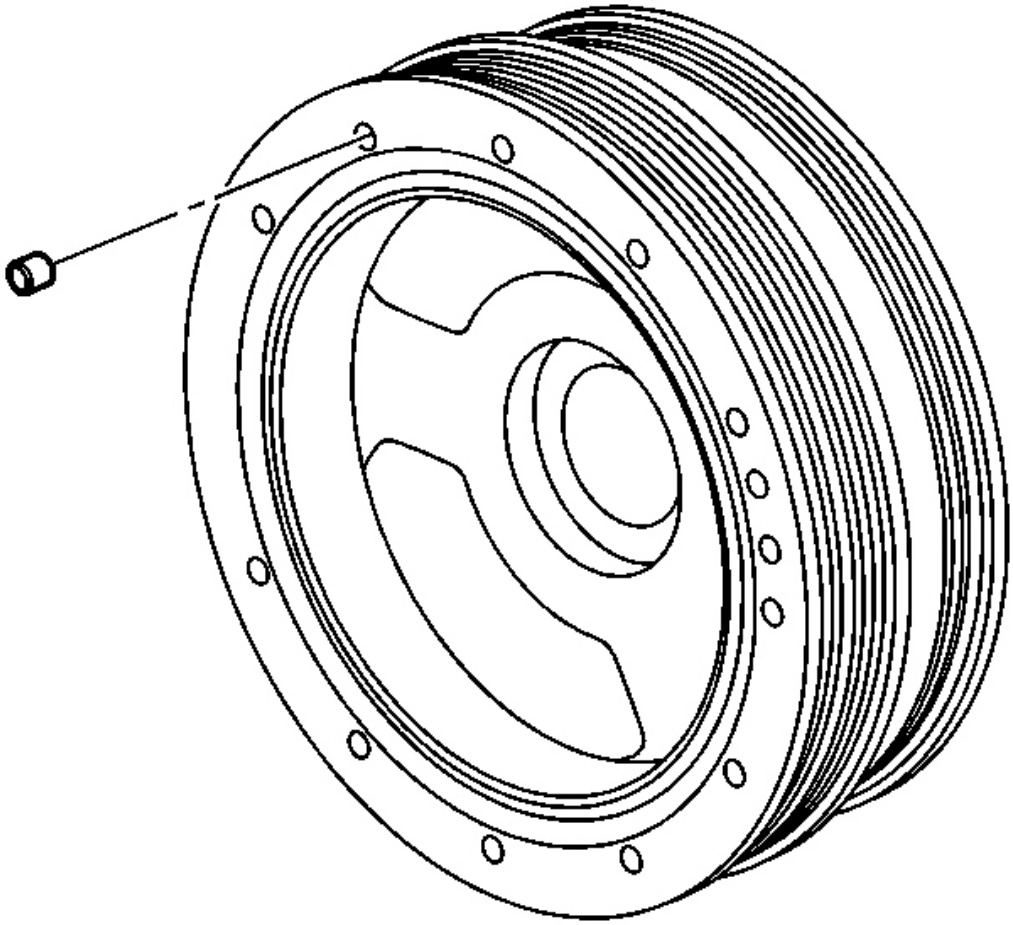

Fig. 121: Crankshaft Balancer
Courtesy of GENERAL MOTORS CORP.

IMPORTANT: The position of the crankshaft balancer must be marked before removal, relative to the crankshaft. The balancer does not use a key or keyway for positioning. Mark or scribe the end of the crankshaft and the balancer before removal. The crankshaft balancer must be installed to the original position. If replacing the crankshaft balancer, note the location of any existing balance weights, if applicable. Crankshaft balancer weights must be installed into the new balancer in the same location as the old balancer. A properly installed balance weight will be either flush or below flush with the face of the balancer.

1. Check the crankshaft balancer weight holes for any existing balance weights.

cardiagn.com

CAUTION: Refer to Safety Glasses Caution in Cautions and Notices.

2. Use a punch and position the balance weights to the bottom of the weight holes.
3. With a marking crayon, note the weight holes containing balance weights.
4. Lay the old crankshaft balancer on a bench or flat table.

   Rotate the old balancer until one of the marked balance weight holes is in the 12 o'clock position.

5. Lay the new crankshaft balancer on the bench next to the old balancer.

   Rotate the new balancer until one of the balance weight holes is in the 12 o'clock position.

6. With a marking crayon, mark the new balancer weight hole located in the 12 o'clock position.
7. Viewing the old balancer, note the position of the crankshaft-to-balancer alignment mark.

   Mark the new balancer in the same location.

8. Measure the distance from the top of the balance weights to the face of the old crankshaft balancer.
9. Record the readings.
10. Determine the proper balance weight size for the new balancer.
    - A balance weight hole depth that measures 13.0 mm (0.512 in), has a short balance weight in the hole.
    - A balance weight hole depth that measures 6.69 mm (0.263 in), has a medium balance weight in the hole.
    - A balance weight hole that depth measures 0.29 mm (0.011 in), has a long balance weight in the hole.
      - A short balance weight will measure 12.7 mm (0.5 in) in length.
      - A medium balance weight will measure 19.0 mm (0.75 in) in length.
      - A long balance weight will measure 25.4 mm (1.0 in) in length.
11. Insert new crankshaft balance weights of the proper size into the new balancer in the same location as with the old balancer.

    A properly installed balance weight will be either flush or below flush with the face of the balancer.

ENGINE FLYWHEEL CLEANING AND INSPECTION

cardiagn.com

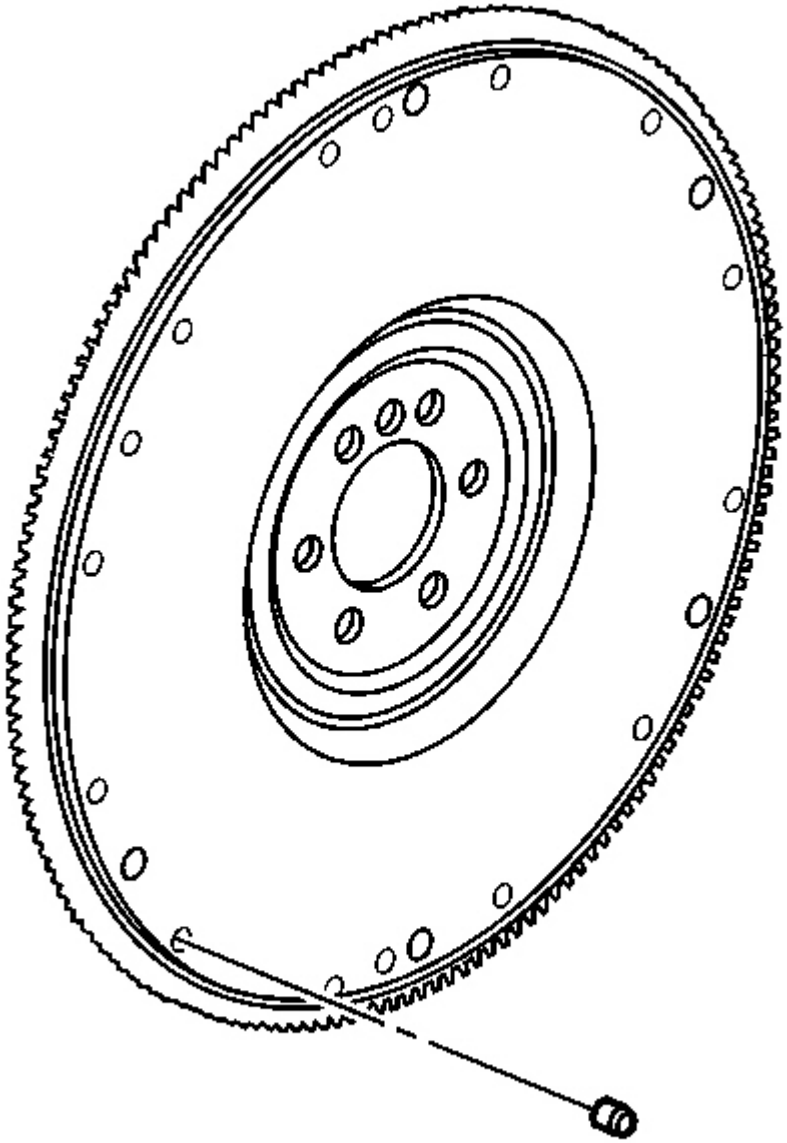

Fig. 122: Flywheel Weights (Manual Transmission)
Courtesy of GENERAL MOTORS CORP.

IMPORTANT: In order to maintain the proper component balance, contact surface taper, and heat transfer, manual transmission flywheels are NOT to be machined.

cardiagn.com

1. Clean the flywheel in solvent.

CAUTION: Refer to Safety Glasses Caution in Cautions and Notices.

2. Dry the flywheel with compressed air.
3. Inspect the manual transmission flywheel for loose or improperly installed balance weights.

   A properly installed balance weight should be installed until flush or below flush with the face of the flywheel.

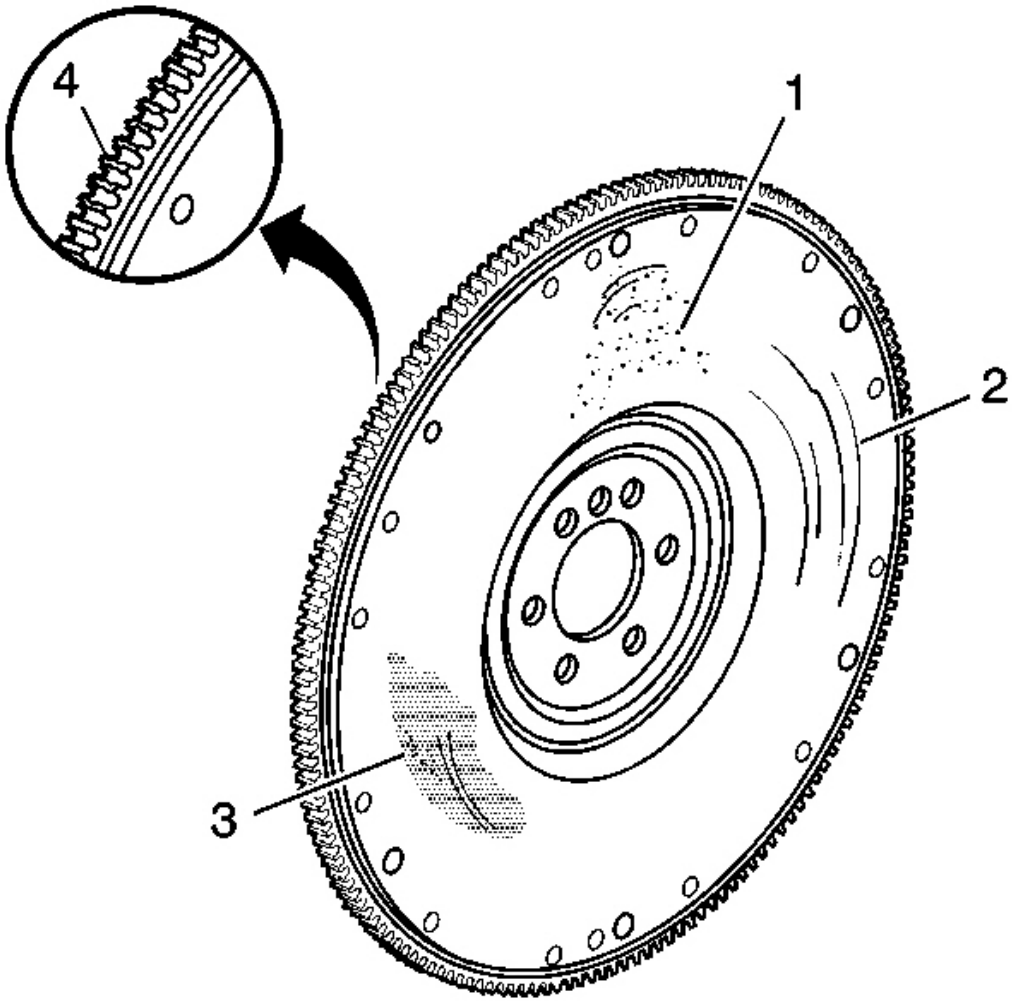

cardiagn.com

Fig. 123: Flywheel Inspection Areas (Manual Transmission)
Courtesy of GENERAL MOTORS CORP.

4. Inspect the manual transmission flywheel for the following:
   - Pitted surface (1)
   - Grooved or scored surface (2)
   - Rusted surface (3)
   - Damaged ring gear teeth (4)
   - Loose or improperly positioned ring gear

     The ring gear has an interference fit onto the flywheel and should be positioned completely against the flange of the flywheel.

   - Missing, bent, or damaged pressure plate locating pins

     The 2 locating pins are installed into the flywheel and spaced 170 degrees apart to ensure proper orientation of the clutch pressure plate to the engine flywheel during assembly.

cardiagn.com

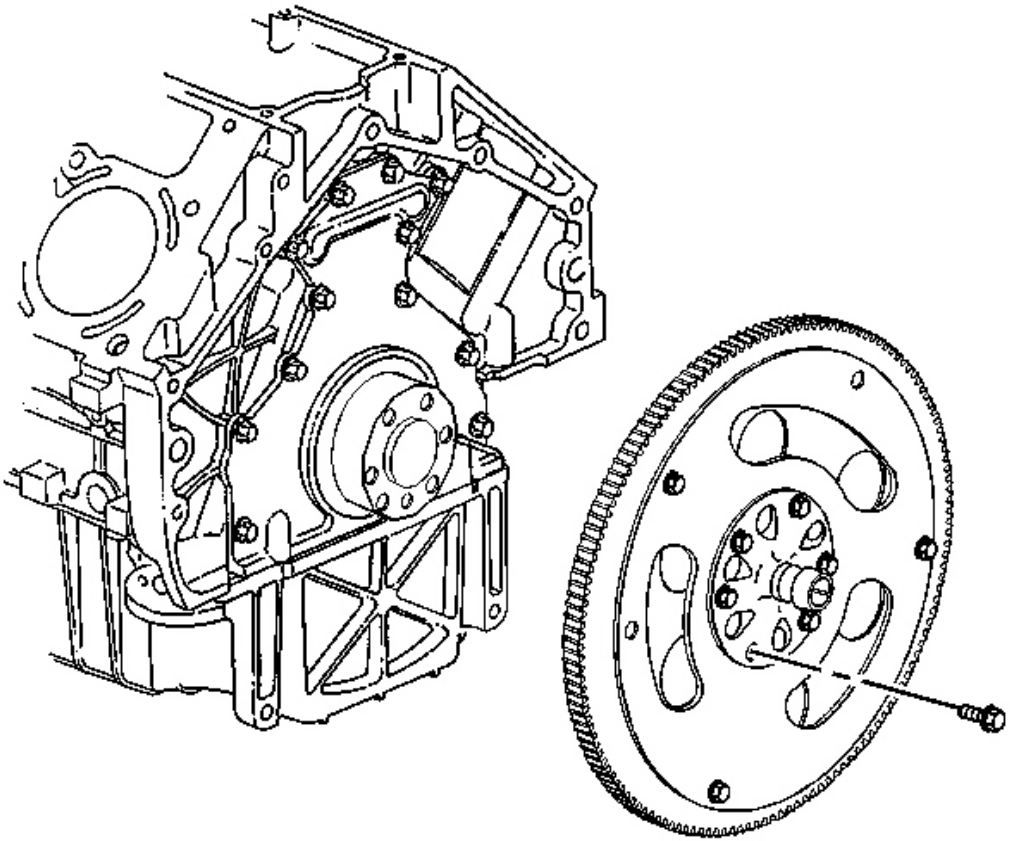

Fig. 124: Automatic Transmission Flywheel
Courtesy of GENERAL MOTORS CORP.

5. Inspect the automatic transmission flywheel for the following:
    - Damaged ring gear teeth
    - Stress cracks around the flywheel-to-crankshaft bolt hole locations
    - Worn prop shaft drive hub splines
    - Loose prop shaft drive hub

IMPORTANT: Do not attempt to repair the welded areas that retain the ring gear to the flywheel plate. Install a new flywheel.

- Welded areas that retain the ring gear onto the flywheel for cracking

PISTON AND CONNECTING ROD DISASSEMBLE

cardiagn.com

Tools Required

J 24086-C Piston Pin Remover/Installer Set

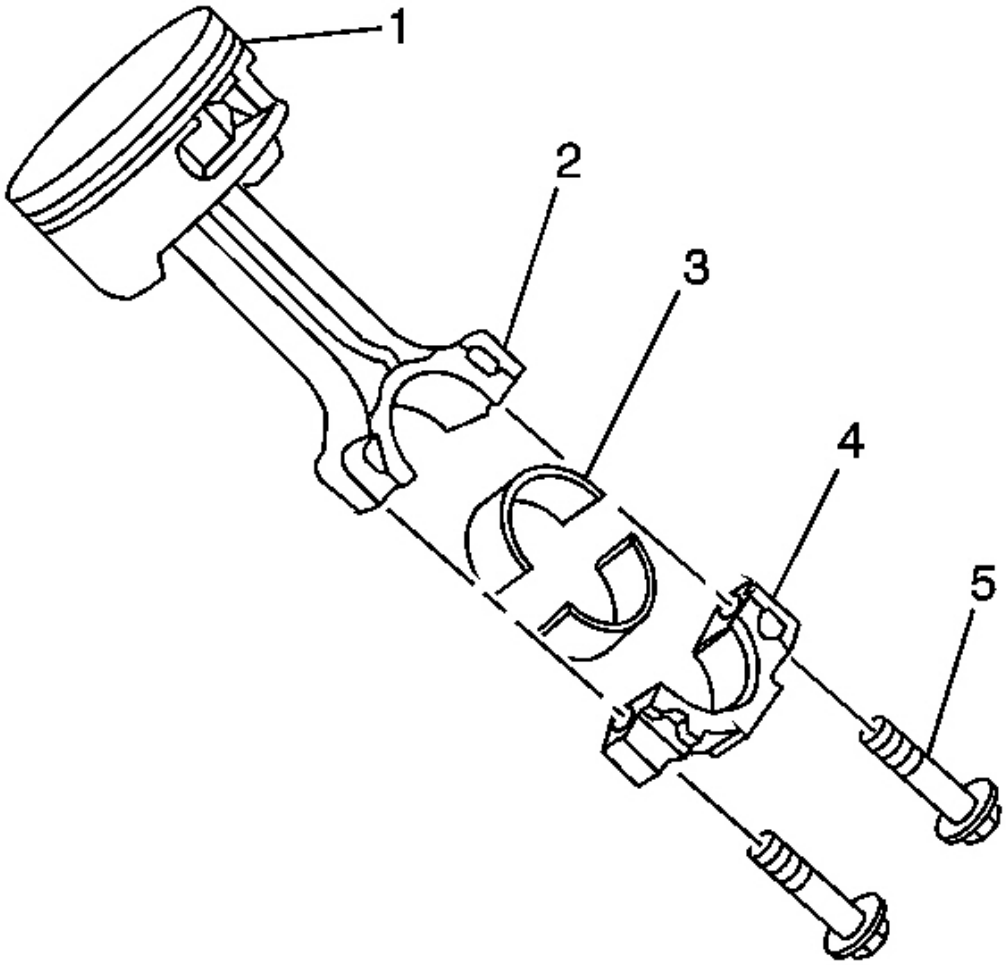

Fig. 125: View Of Piston, Connecting Rod & Components
Courtesy of GENERAL MOTORS CORP.

IMPORTANT:

- **Disassembly of the piston, press-fit design piston pin, and connecting rod may create scoring or damage to the piston pin and piston pin bore. If the piston, pin, and connecting rod have been disassembled, replace the components as an assembly.**
- **The disassembly procedure, as shown, is to be used for diagnostic**

cardiagn.com

purposes only.

1. Remove the connecting rod bearings (3) from the rod (2) and cap (4).

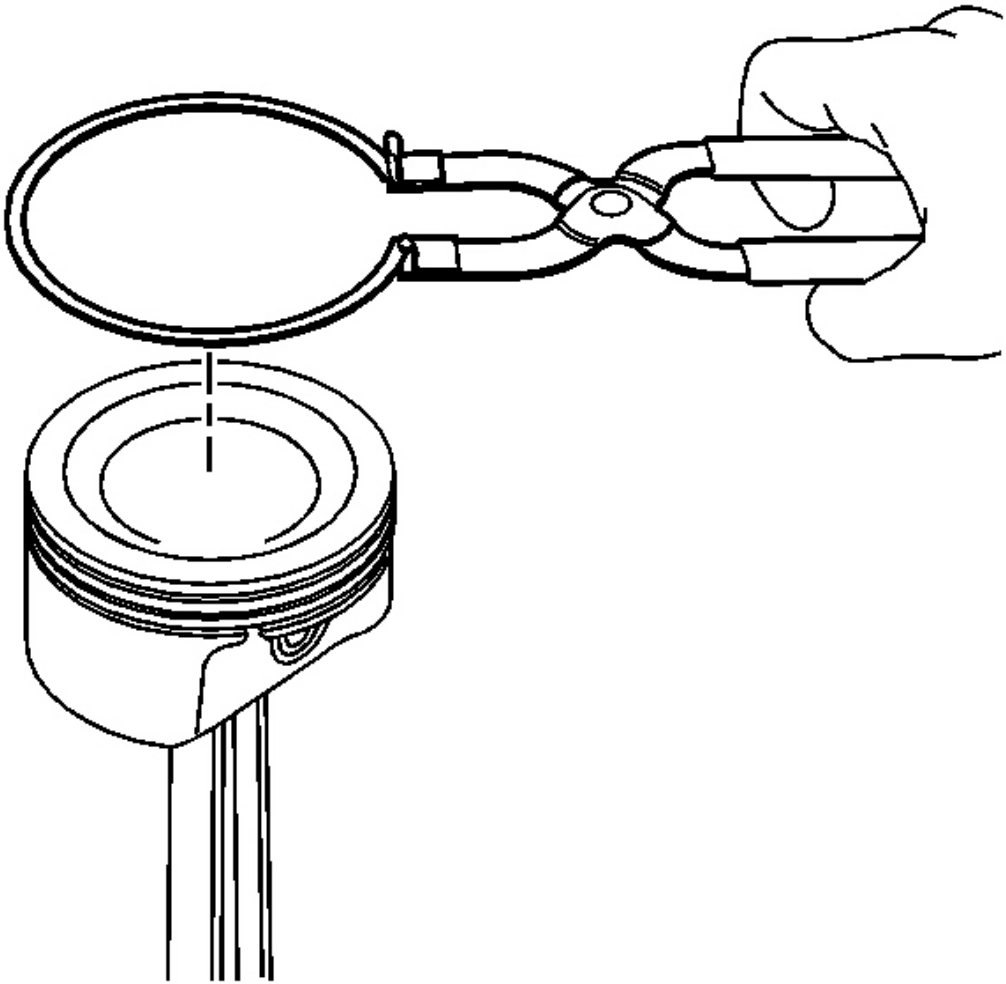

Fig. 126: Piston Rings & Piston
Courtesy of GENERAL MOTORS CORP.

2. Using piston ring pliers, remove the piston rings from the piston.

cardiagn.com

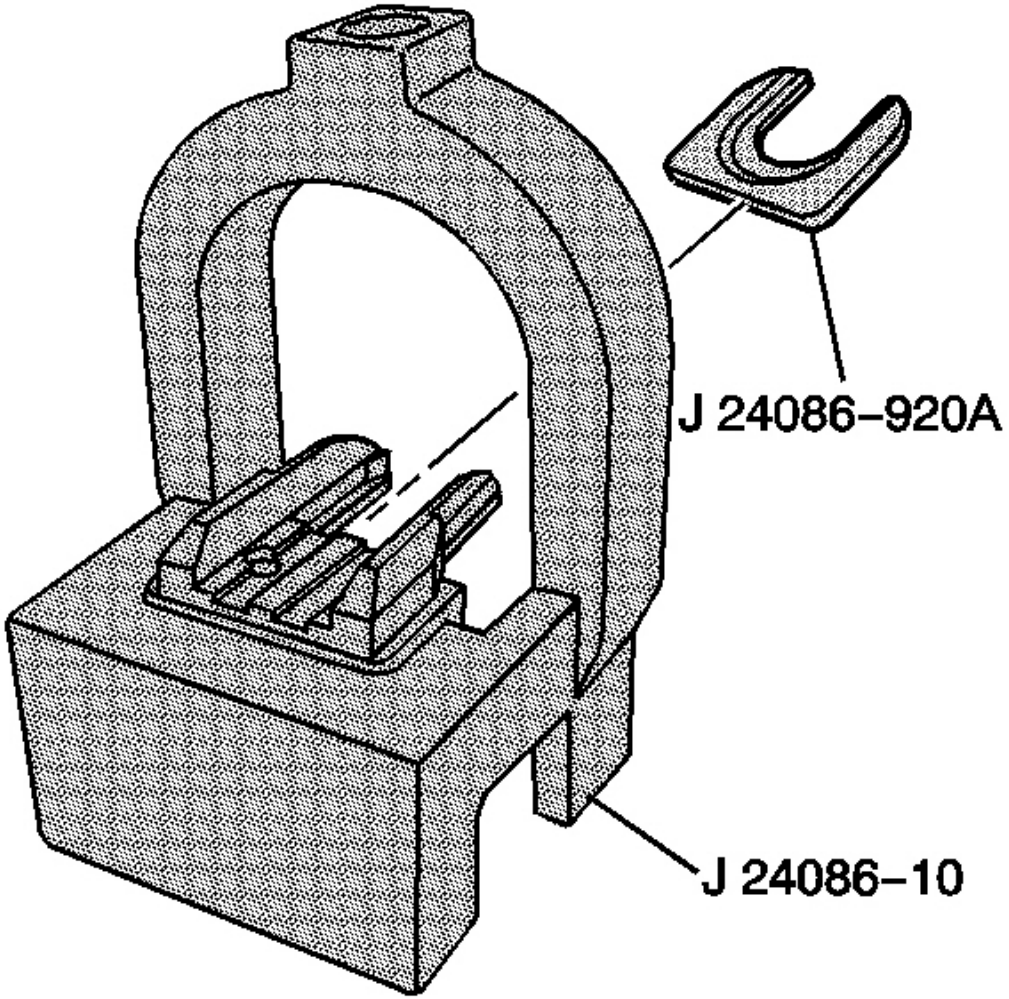

Fig. 127: View Of J 24086-920A & J 24086-10
Courtesy of GENERAL MOTORS CORP.

3. Install fork insert J 24086-920A into J 24086-10 .

cardiagn.com

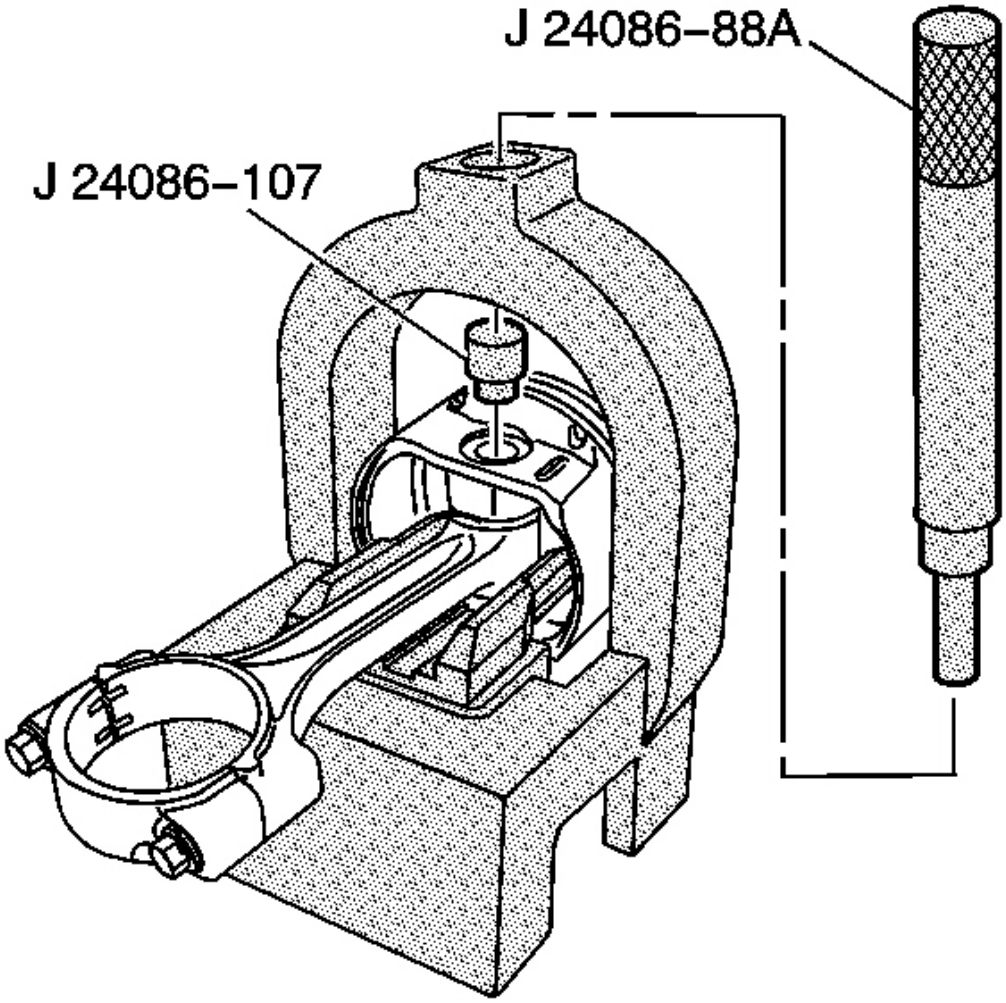

Fig. 128: J 24086-88A & J 24086-107
Courtesy of GENERAL MOTORS CORP.

4. Install the piston and connecting rod assembly onto J 24086-10 .
5. Install J 24086-107 to the piston pin.
6. Install J 24086-88A through the fixture and to the J 24086-107.

cardiagn.com

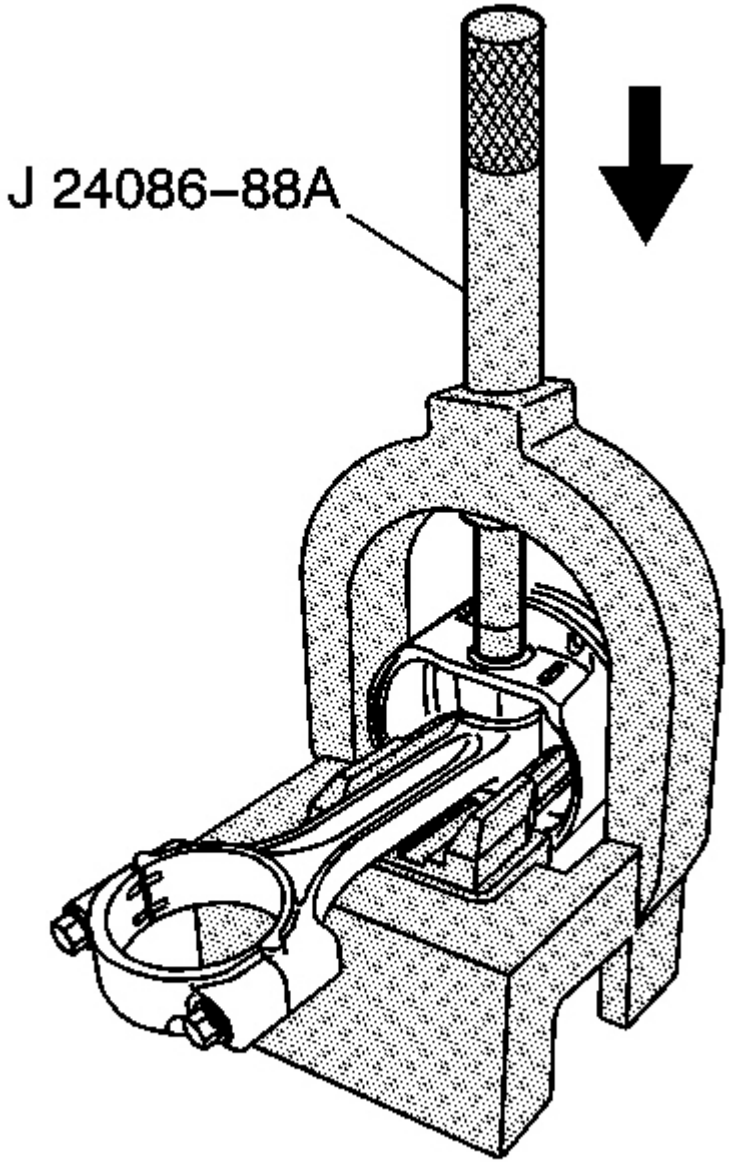

Fig. 129: Pressing Piston Pin From Piston & Connecting Rod Assembly
Courtesy of GENERAL MOTORS CORP.

NOTE: **After the installer hub bottoms on the support assembly, do not exceed 35 000 kPa (5,000 psi) pressure, this could cause damage to the tool.**

cardiagn.com

7. Press the piston pin from the piston and connecting rod assembly.

Full-Floating Piston Pin

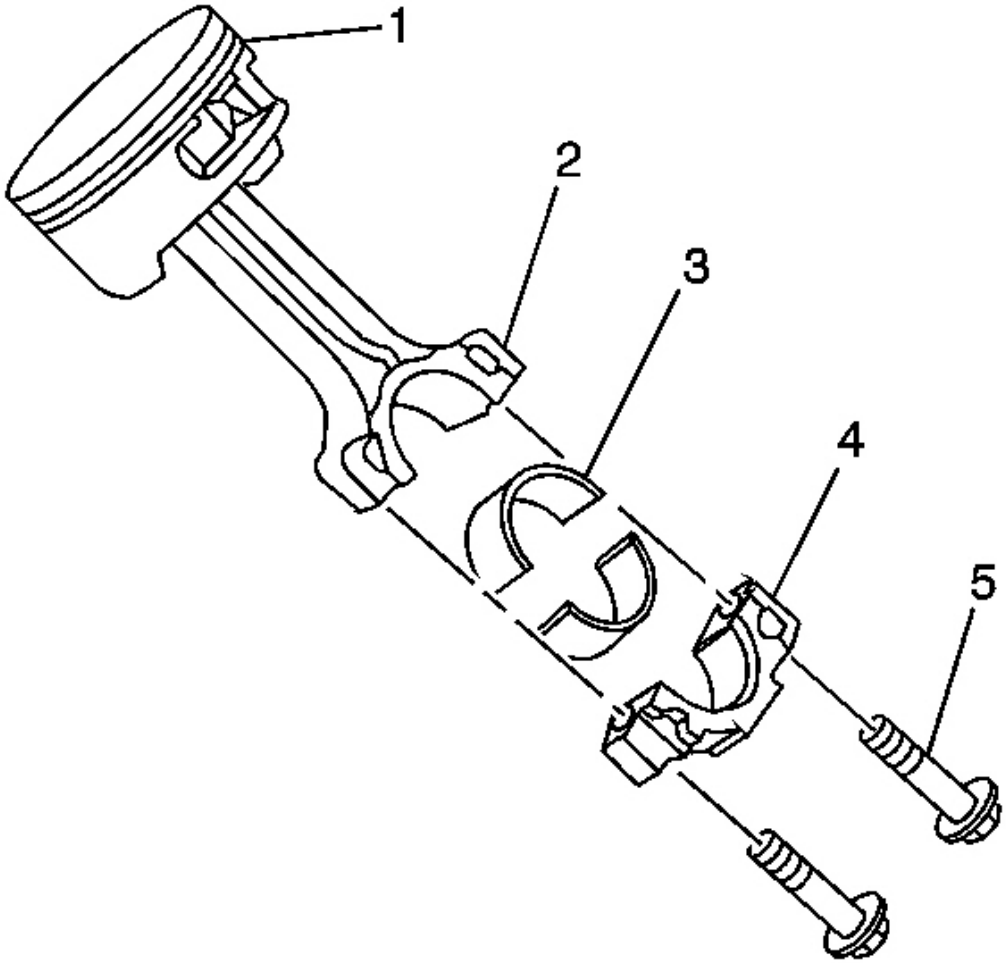

Fig. 130: View Of Piston, Connecting Rod & Components
Courtesy of GENERAL MOTORS CORP.

1. Remove the connecting rod bearings (3) from the rod (2) and cap (4).

cardiagn.com

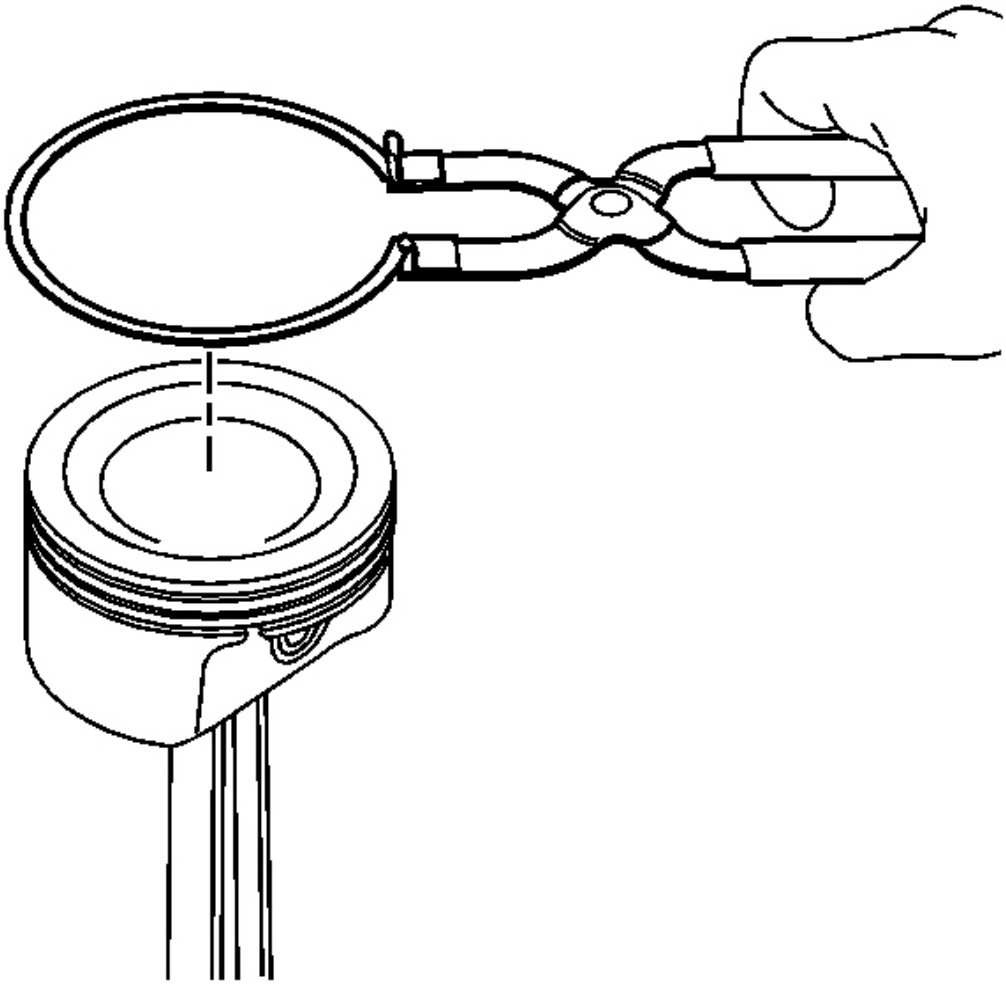

Fig. 131: Piston Rings & Piston
Courtesy of GENERAL MOTORS CORP.

2. Using piston ring pliers, remove the piston rings from the piston.

cardiagn.com

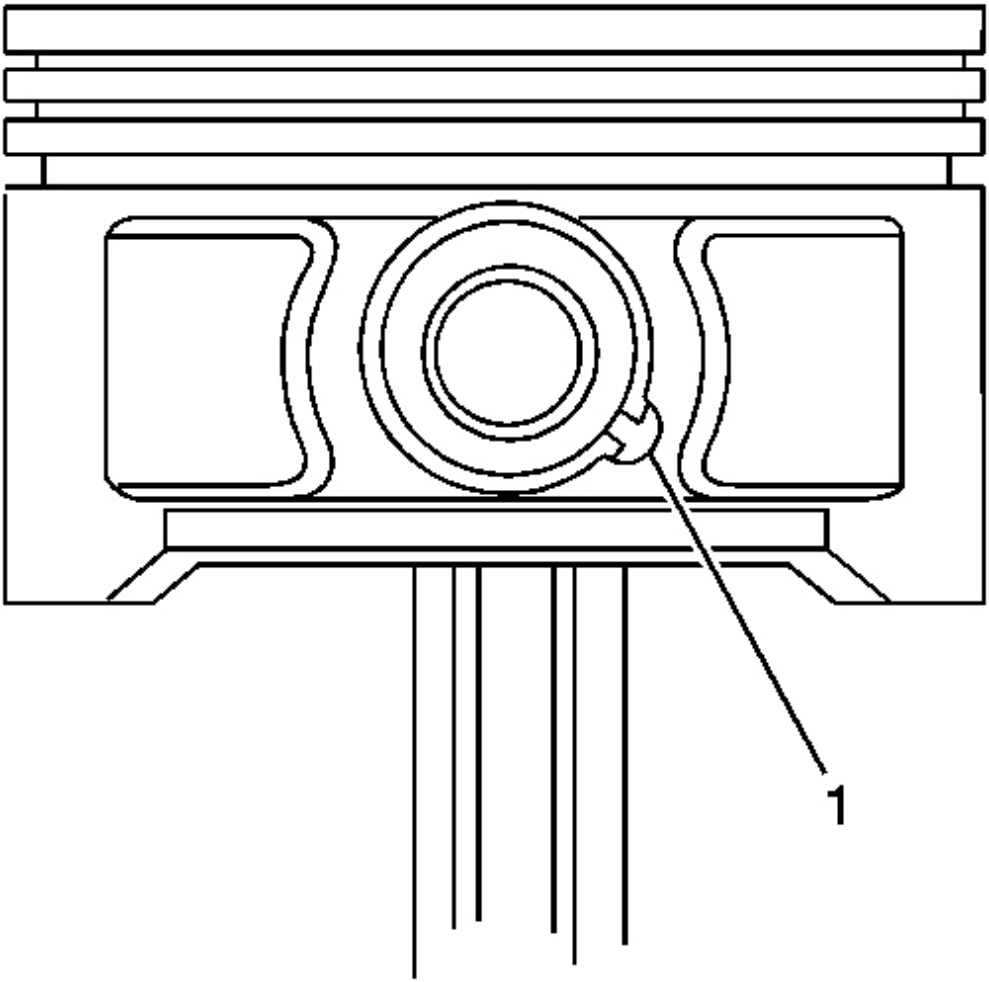

Fig. 132: Cutout Area Of Pin Bore
Courtesy of GENERAL MOTORS CORP.

3. Rotate the piston pin retaining clips until the ring end gap is positioned in the cutout area (1) of the pin bore.

cardiagn.com

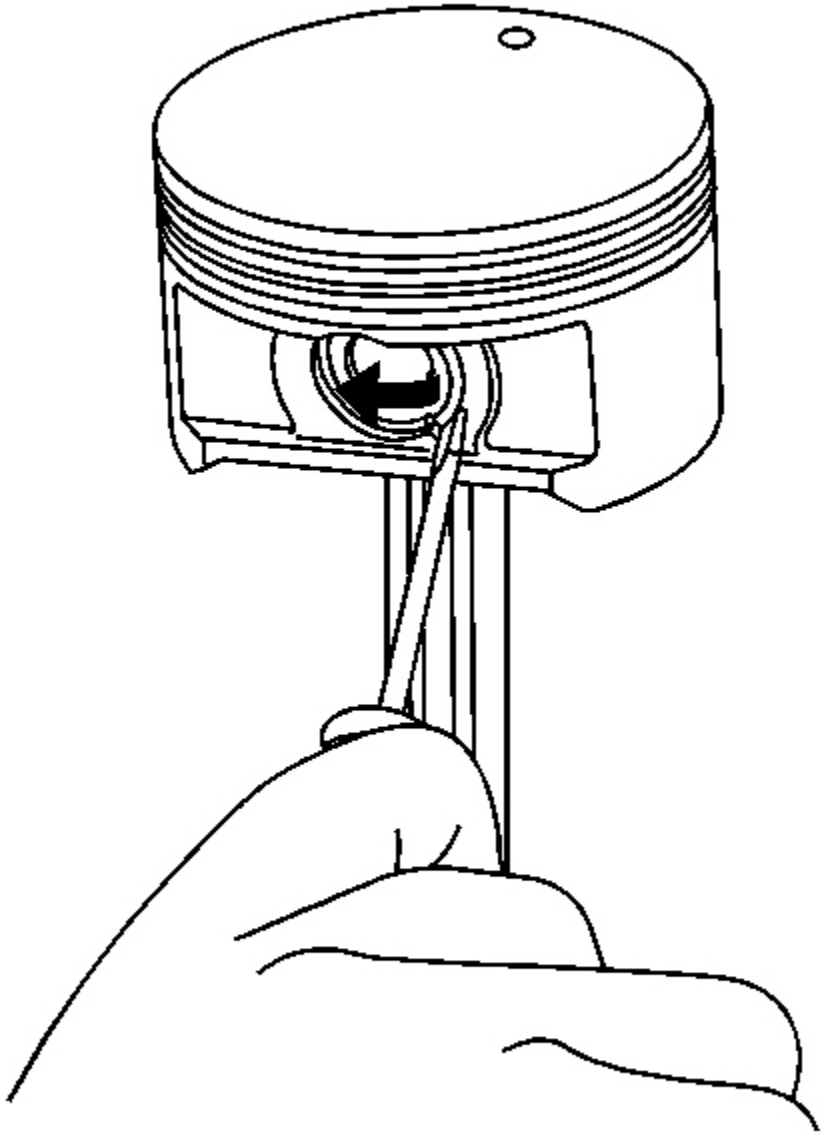

Fig. 133: Removing Clips Starting In Cutout Area
Courtesy of GENERAL MOTORS CORP.

4. Remove the clips starting in the cutout area of the pin bore.

cardiagn.com

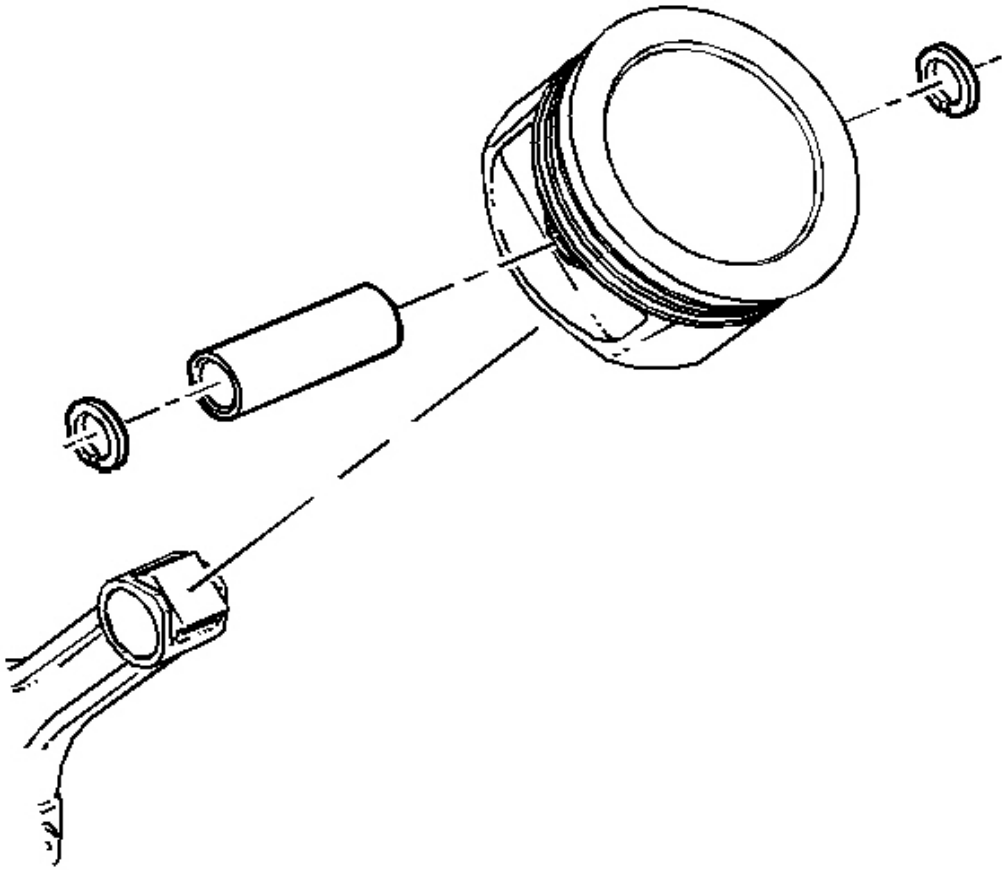

Fig. 134: Pin, Piston & Connecting Rod
Courtesy of GENERAL MOTORS CORP.

5. Remove the pin from the piston and connecting rod.
6. The piston and pin are a matched set and are not to be serviced separately.

   Mark, sort, or organize the piston and the matching piston pin.

PISTON, CONNECTING ROD, AND BEARINGS CLEANING AND INSPECTION

Piston, Pin, and Piston Rings

cardiagn.com

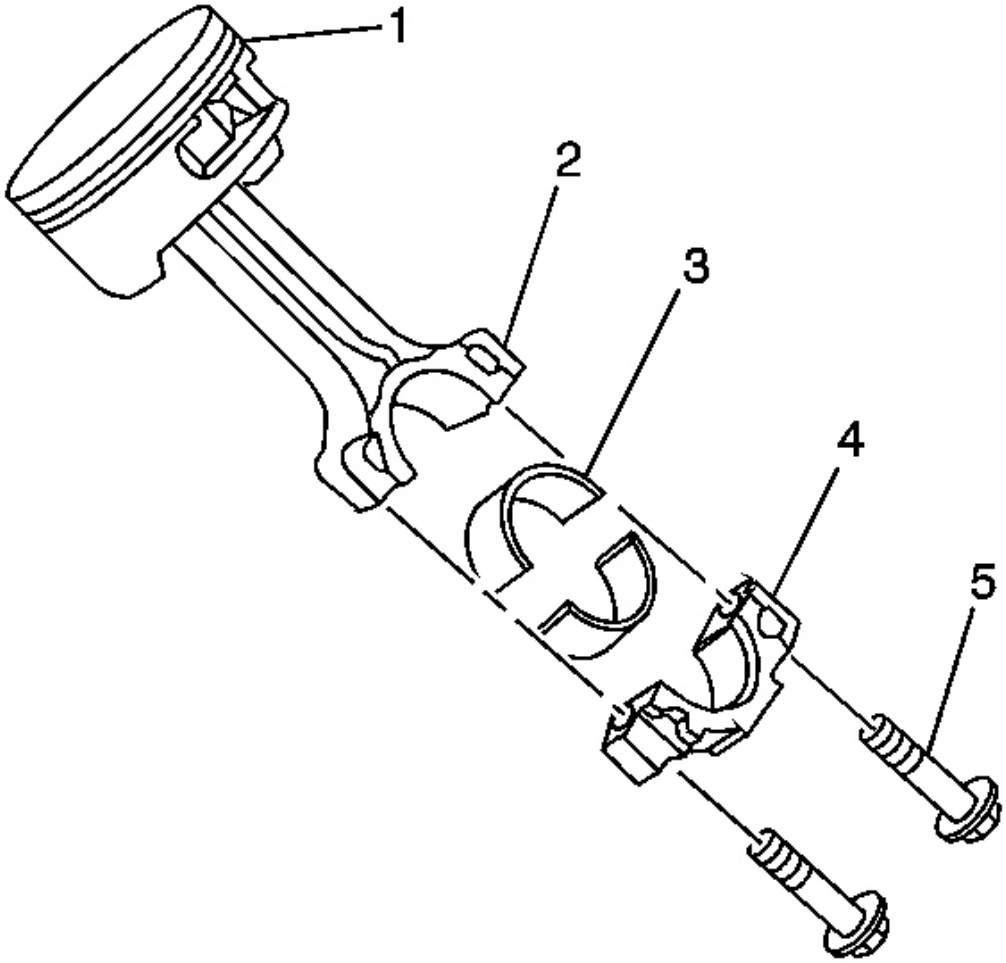

Fig. 135: View Of Piston, Connecting Rod & Components
Courtesy of GENERAL MOTORS CORP.

IMPORTANT:

- **Replace pistons, pins, and connecting rods that are damaged or show signs of excessive wear.**
- **The first design press-fit piston, pin, and connecting rod are to be serviced as an assembly.**
- **Do not wire brush any part of the piston.**
- **Measurement of the components should be taken with the components at normal room temperature.**

cardiagn.com

1. Clean the varnish and carbon from the piston (1) using cleaning solvent.

CAUTION: Wear safety glasses in order to avoid eye damage.

2. Dry the components with compressed air.

cardiagn.com

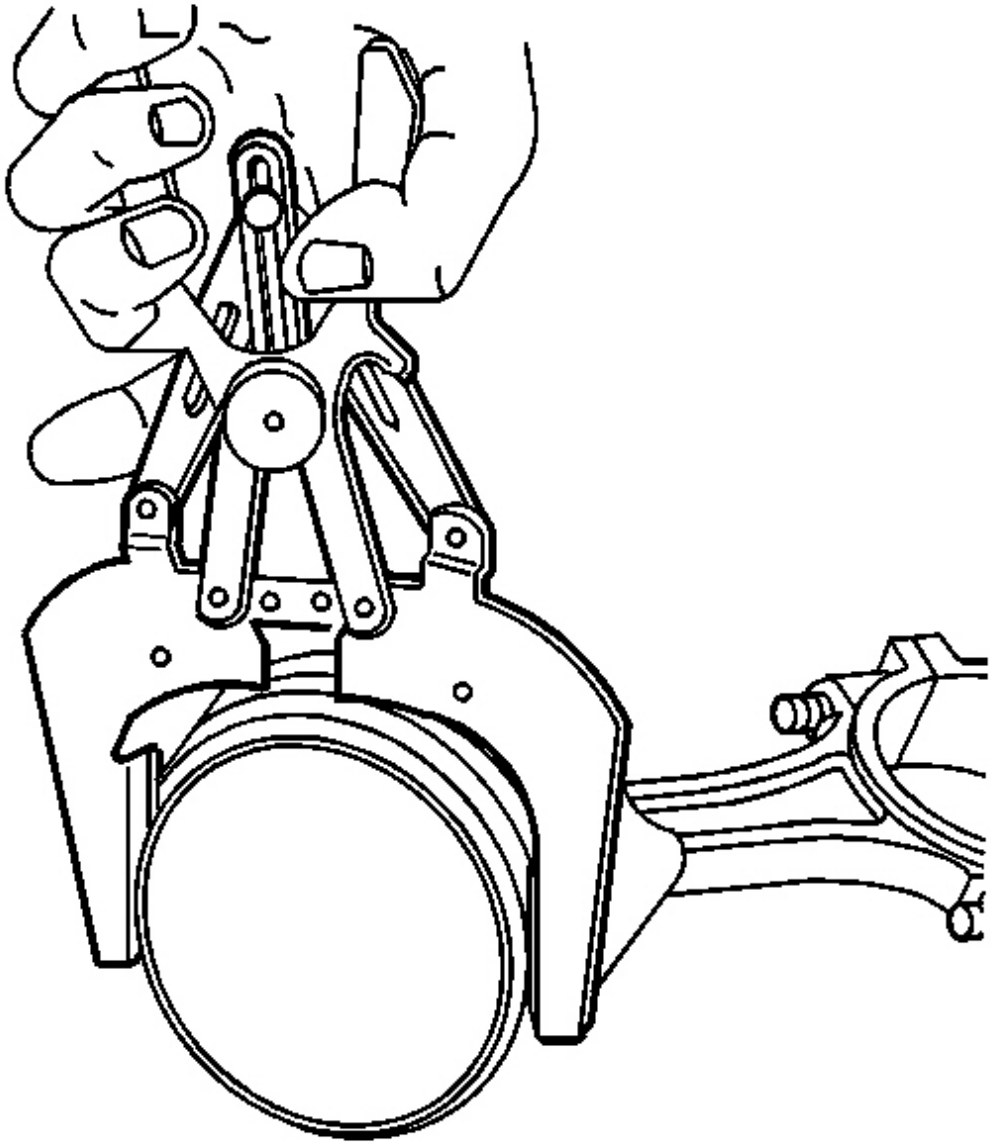

Fig. 136: Cleaning The Piston Ring Grooves With Suitable Ring Groove Cleaning Tool
Courtesy of GENERAL MOTORS CORP.

3. Clean the piston ring grooves with a suitable ring groove cleaning tool.
4. Clean the oil lubrication holes and slots.

cardiagn.com

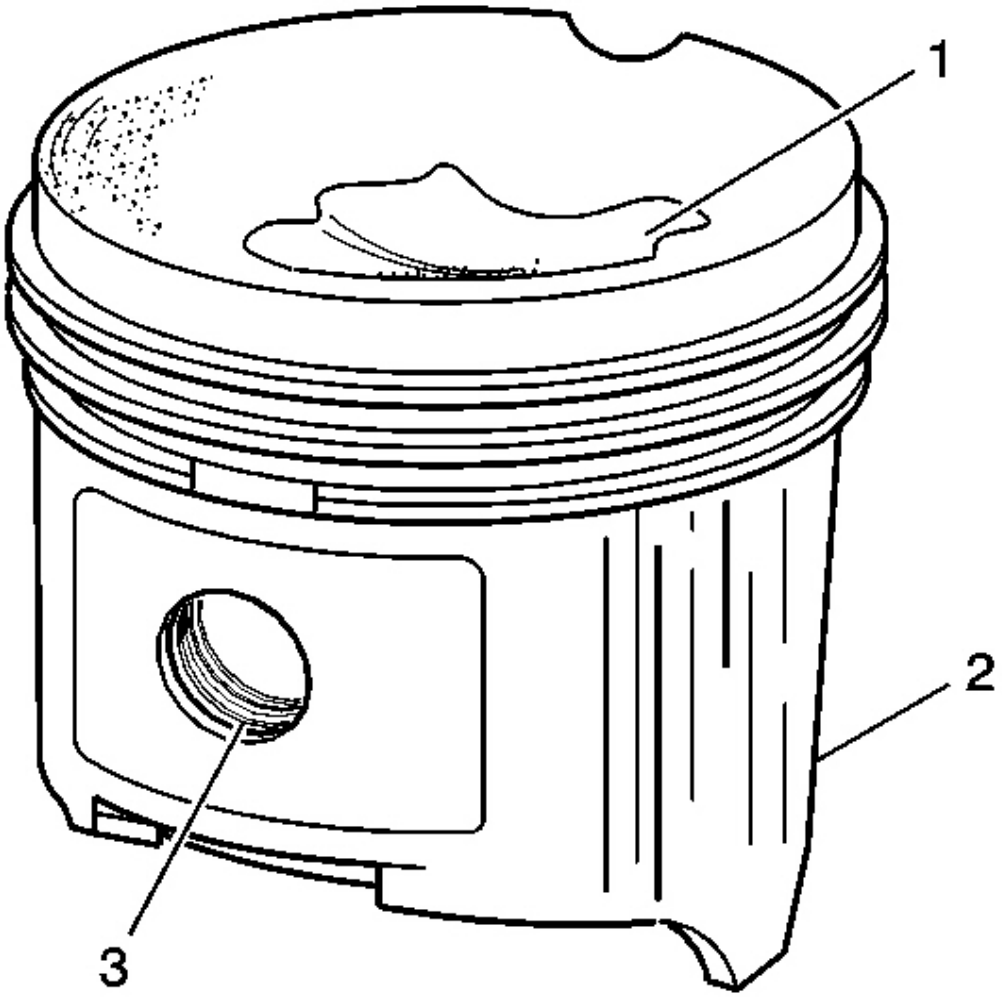

Fig. 137: Inspecting Piston For Damage
Courtesy of GENERAL MOTORS CORP.

5. Inspect the piston for the following conditions:
   - Cracks in the piston ring lands, the piston skirt, or pin bosses
   - Piston ring grooves for nicks, burrs, or warpage which may cause the piston ring to bind

     MINOR imperfections may be removed from the piston with a fine file.

   - Scuffed or damaged skirts (2)
   - Eroded areas at the top of the piston (1)

cardiagn.com

- Scoring to the full-floating design piston pin bore (3) or piston pin

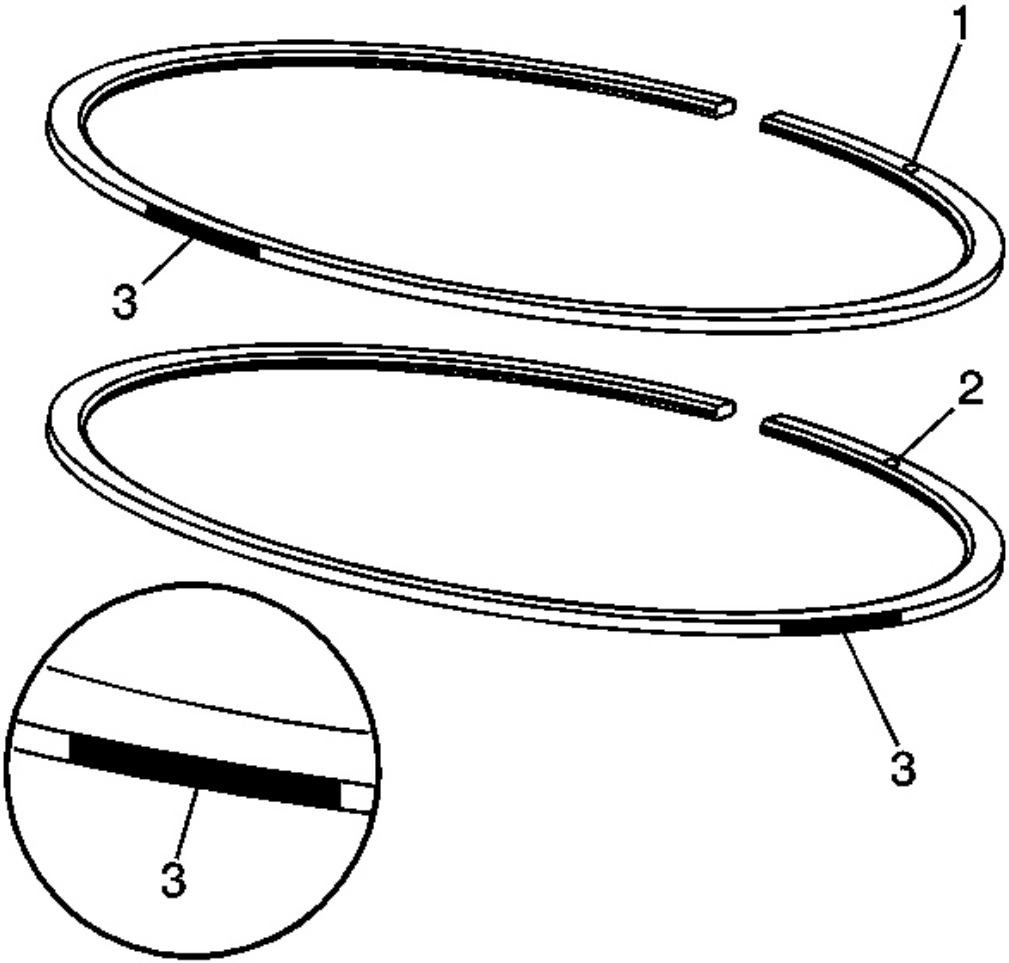

Fig. 138: View Of Upper/Lower Compression Rings & Marks
Courtesy of GENERAL MOTORS CORP.

6. Identify the NEW upper and lower compression rings. The upper compression ring can be identified by a paint mark (3) located 180 degrees from the end gap. The lower compression ring can be identified by a paint mark (3) located 90 degrees from the end gap. Both rings should be installed with the orientation marks (1, 2) facing the top of the piston.

cardiagn.com

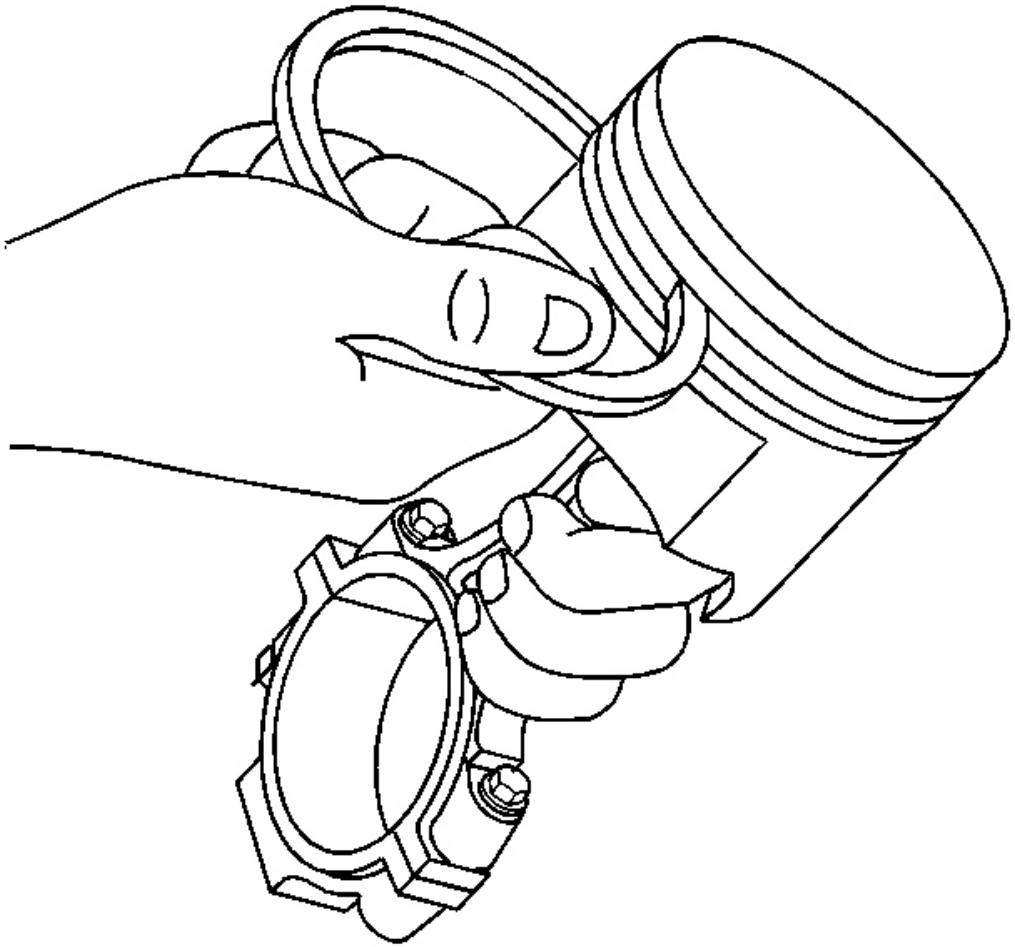

Fig. 139: Inserting Piston Ring-To-Piston Ring Groove Side
Courtesy of GENERAL MOTORS CORP.

7. Insert the edge of the piston ring into the piston ring groove.

   Roll the piston ring completely around the piston. If binding is caused by distorted ring groove, MINOR imperfections may be removed with a fine file. If binding is caused by a distorted piston ring, replace the rings as required.

cardiagn.com

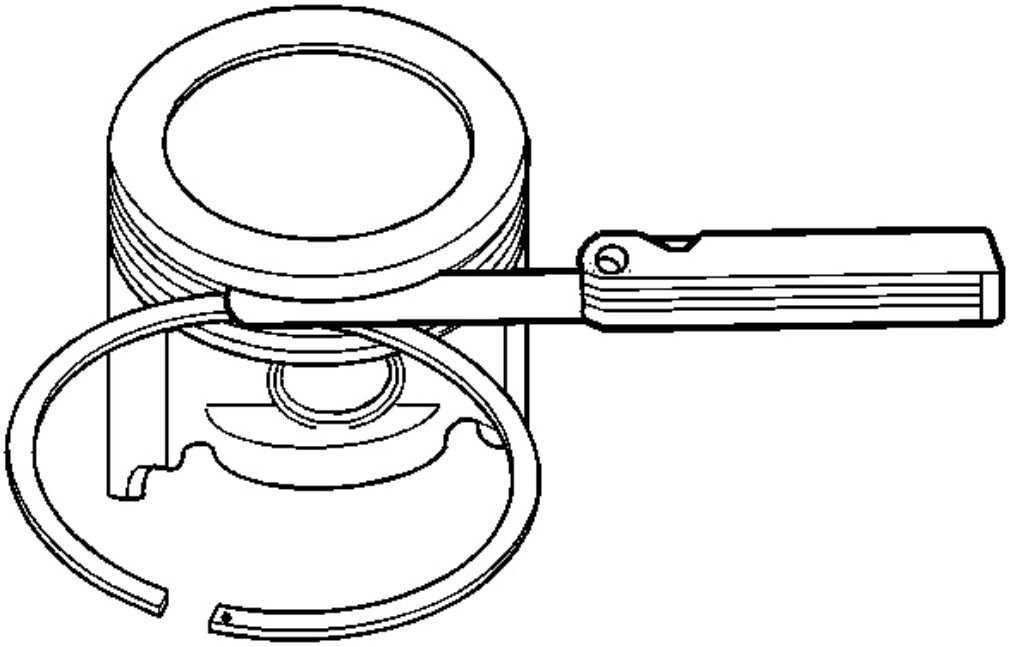

Fig. 140: Measuring The Piston Ring Side Clearance With Feeler Gauge
Courtesy of GENERAL MOTORS CORP.

8. Measure the piston ring side clearance with a feeler gauge. If side clearance is not within specifications, try another piston ring. If the proper ring-to- groove clearance cannot be obtained, replace the first design press-fit piston, pin, and connecting rod assembly. Refer to **Engine Mechanical Specifications (LS1)** or **Engine Mechanical Specifications (LS6)** .

cardiagn.com

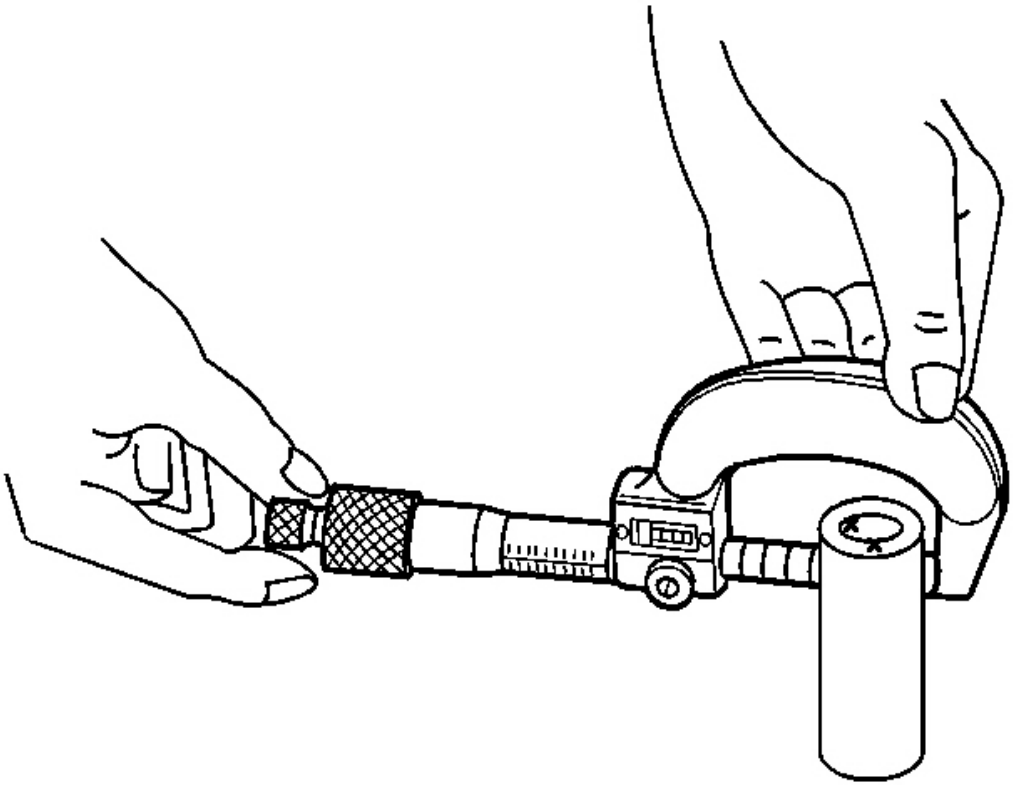

Fig. 141: Measuring The Piston Pin Diameter
Courtesy of GENERAL MOTORS CORP.

9. To determine piston pin-to-bore clearance, use a micrometer and measure the piston pin outside diameter (OD).

cardiagn.com

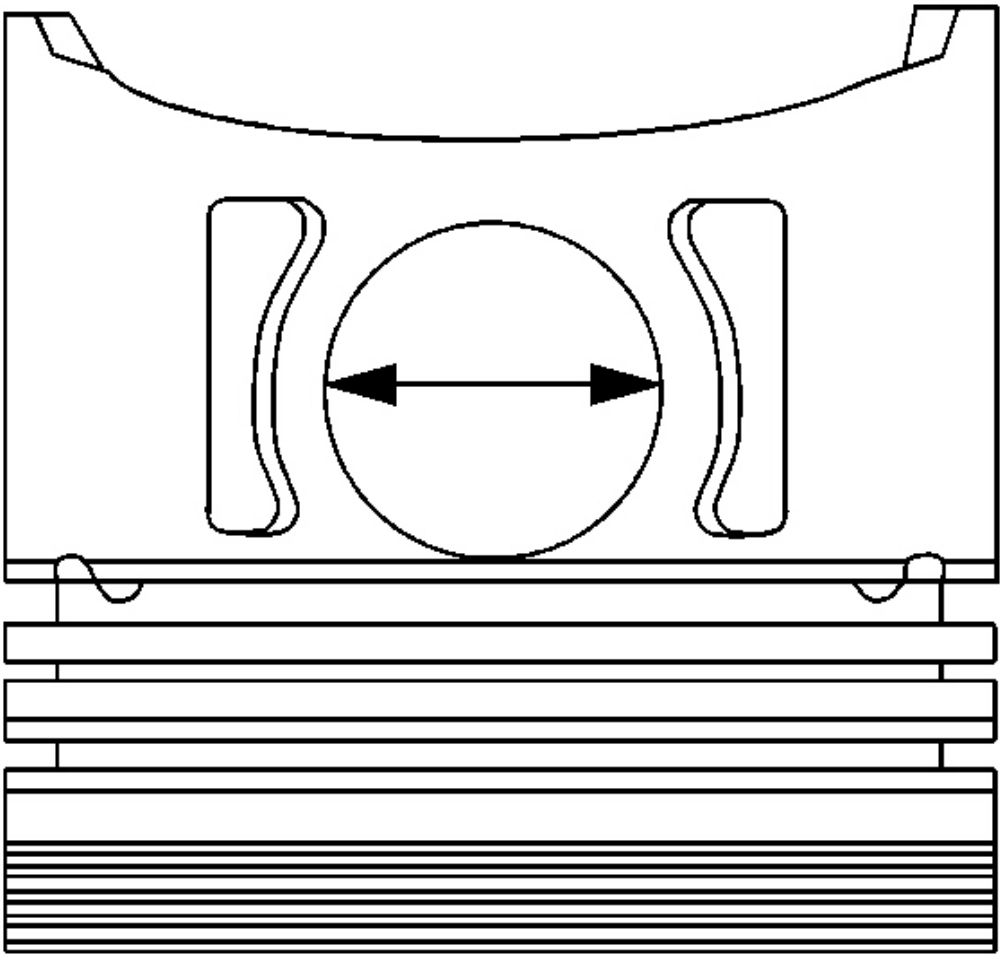

Fig. 142: Measuring The Piston Pin Bore
Courtesy of GENERAL MOTORS CORP.

10. To determine the piston pin-to-bore clearance, use an inside micrometer and measure the piston pin bore inside diameter (ID).
11. Subtract the piston pin OD measurement from the piston pin bore ID measurement to determine pin-to-bore clearance.

Refer to **Engine Mechanical Specifications (LS1)** or **Engine Mechanical Specifications (LS6)** .

Measuring Piston Ring End Gap

cardiagn.com

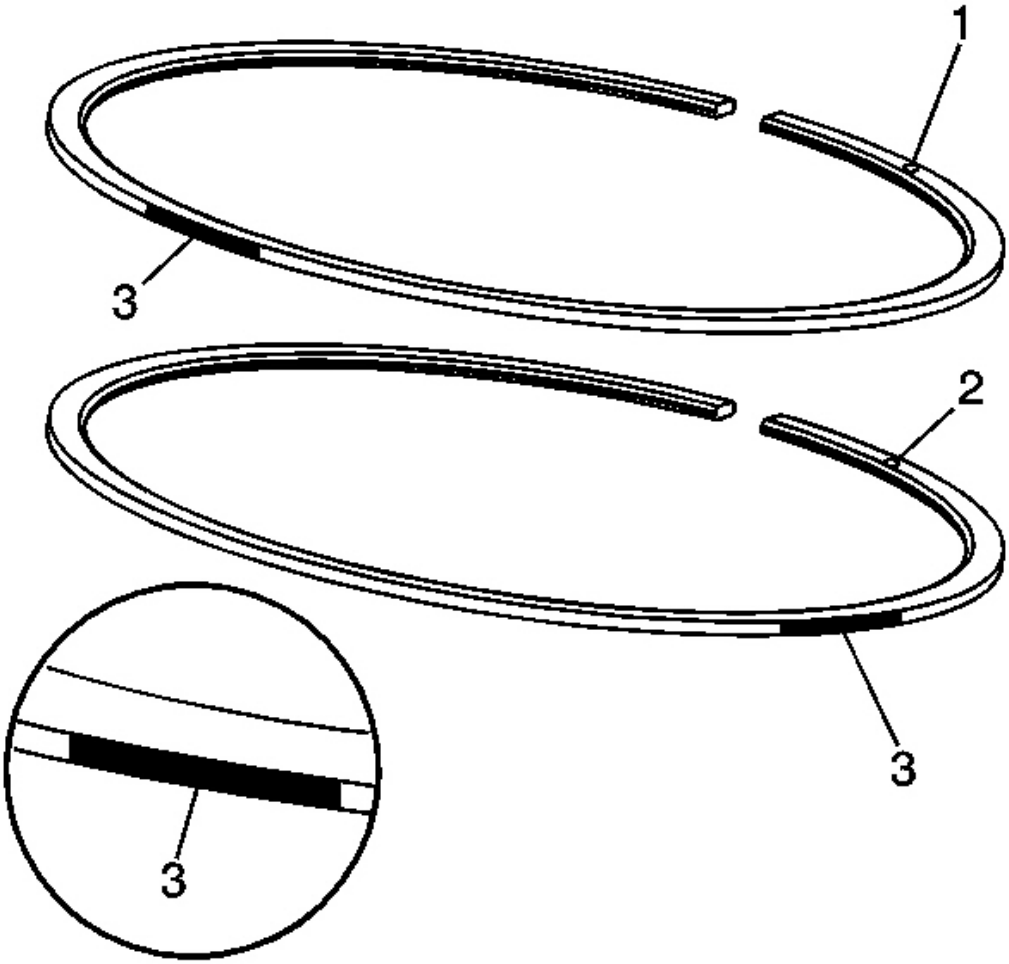

Fig. 143: View Of Upper/Lower Compression Rings & Marks
Courtesy of GENERAL MOTORS CORP.

IMPORTANT:

- **Do not attempt to file the end of the piston ring to achieve the proper end gap clearance.**
- **Measure the piston ring in the cylinder in which it will be used.**

1. Identify the NEW upper and lower compression rings. The upper compression ring can be identified by a paint mark (3) located 180 degrees from the end gap. The lower compression ring can be identified by a paint mark (3) located 90 degrees from the end gap. Both rings should be installed with the orientation marks (1, 2) facing the top of the piston.

cardiagn.com

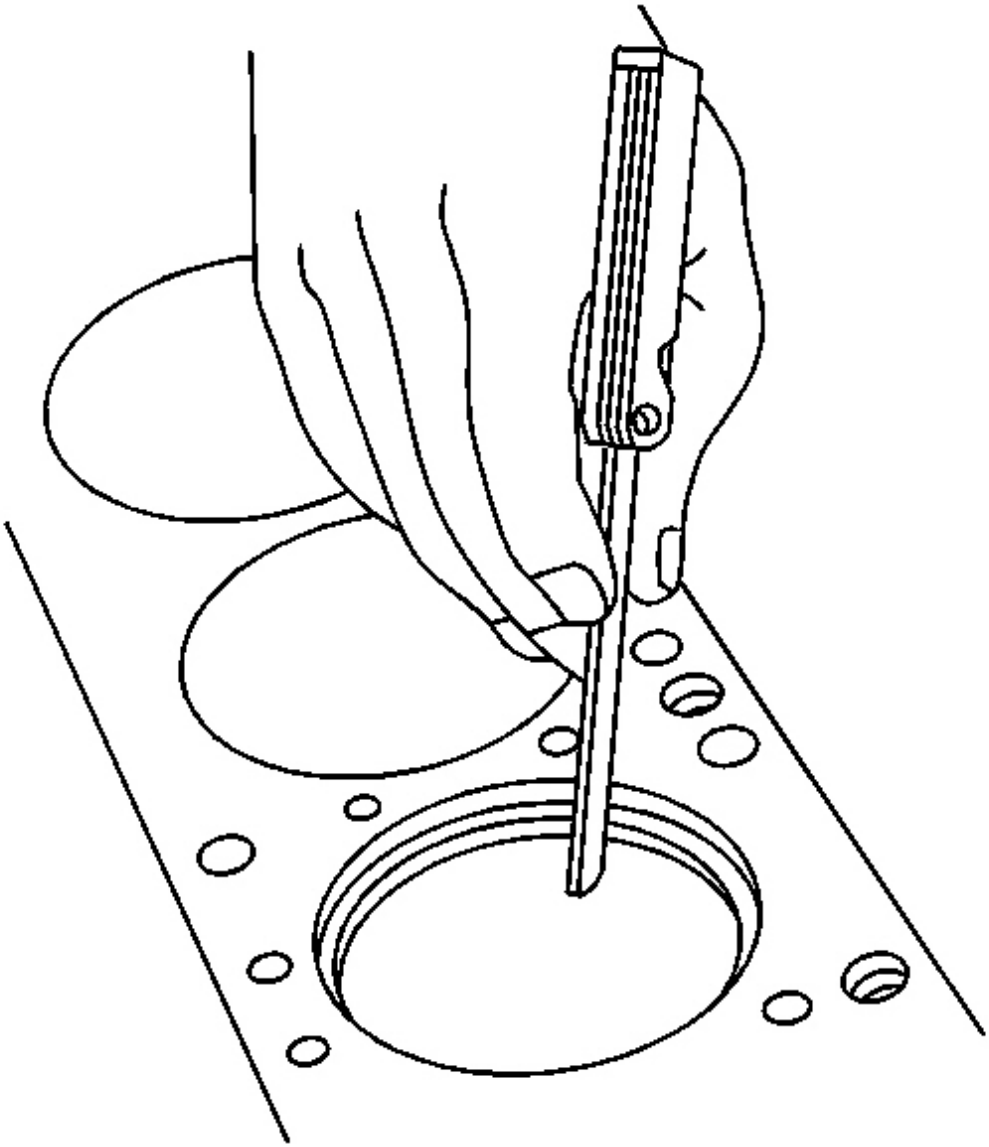

Fig. 144: Measuring The Piston Compression Ring End Gap
Courtesy of GENERAL MOTORS CORP.

2. Place the piston ring into the cylinder bore 6.5 mm (0.25 in) below the top of the ring travel area.
3. Insert a feeler gage and measure the piston ring end gap. Refer to **Engine Mechanical Specifications (LS1)** or **Engine Mechanical Specifications (LS6)** .

cardiagn.com

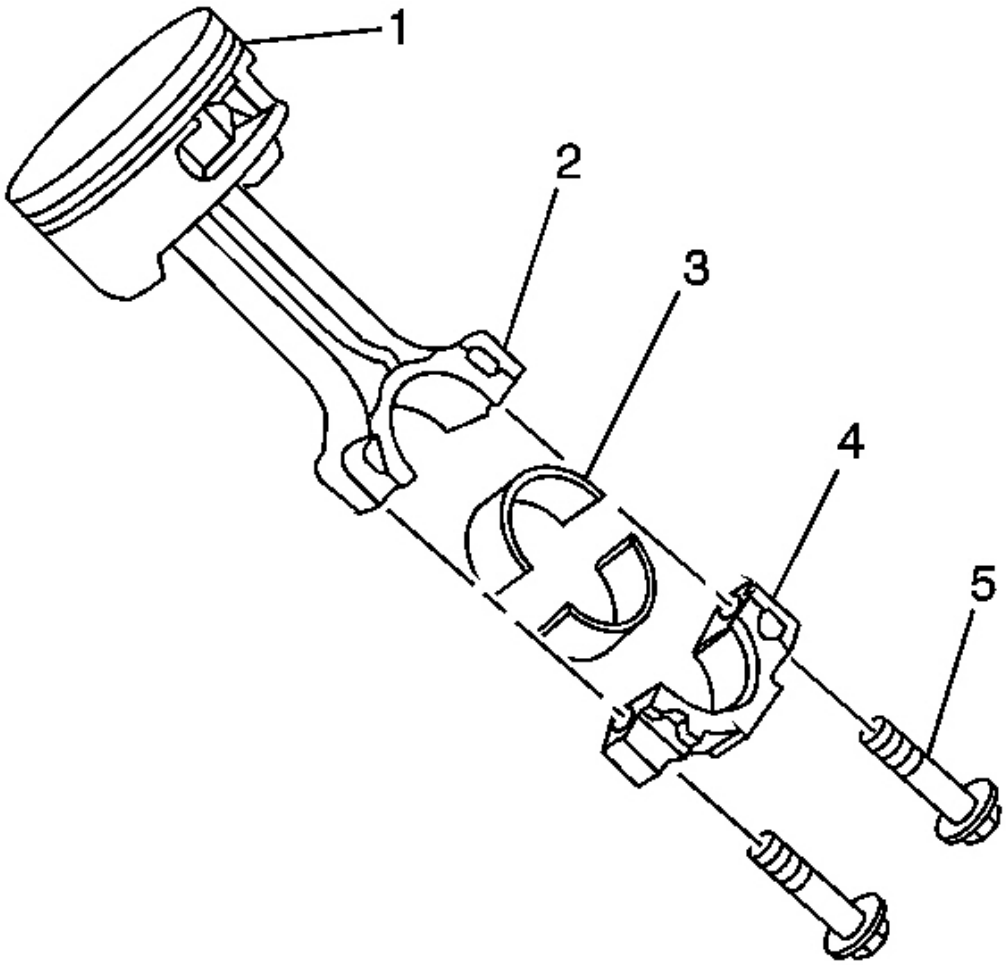

Fig. 145: View Of Piston, Connecting Rod & Components
Courtesy of GENERAL MOTORS CORP.

IMPORTANT:

- **The powdered metal connecting rod and cap are machined for proper clearances. The connecting rod and cap must be used as an assembly with no repair or modifications to either mating surface. Do not attempt to repair the rod or cap. If service is required, replace the first design press-fit piston, pin, and connecting rod as an assembly.**
- **Do not attempt to repair the bolt hole threads of the connecting rod.**

cardiagn.com

1. Clean the connecting rod (2) and cap (4) in solvent.

CAUTION: Wear safety glasses in order to avoid eye damage.

2. Dry the components with compressed air.

cardiagn.com

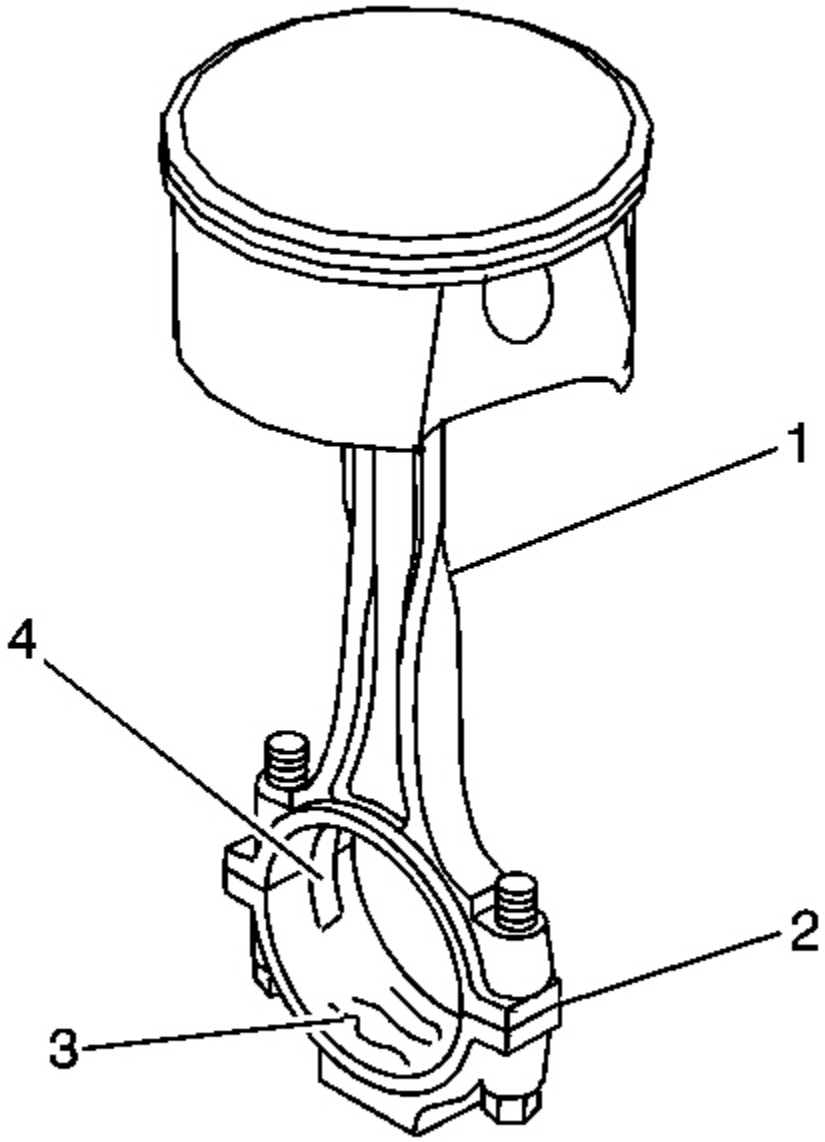

Fig. 146: Inspecting The Connecting Rod For Damage
Courtesy of GENERAL MOTORS CORP.

3. Inspect the connecting rod for the following conditions:
   - Twisting (1)
   - Proper fit of the connecting rod and cap mating surfaces (2)

cardiagn.com

- Nicks or gouges in the bearing bore (3)
- Damage to the bearing locating slots (4)

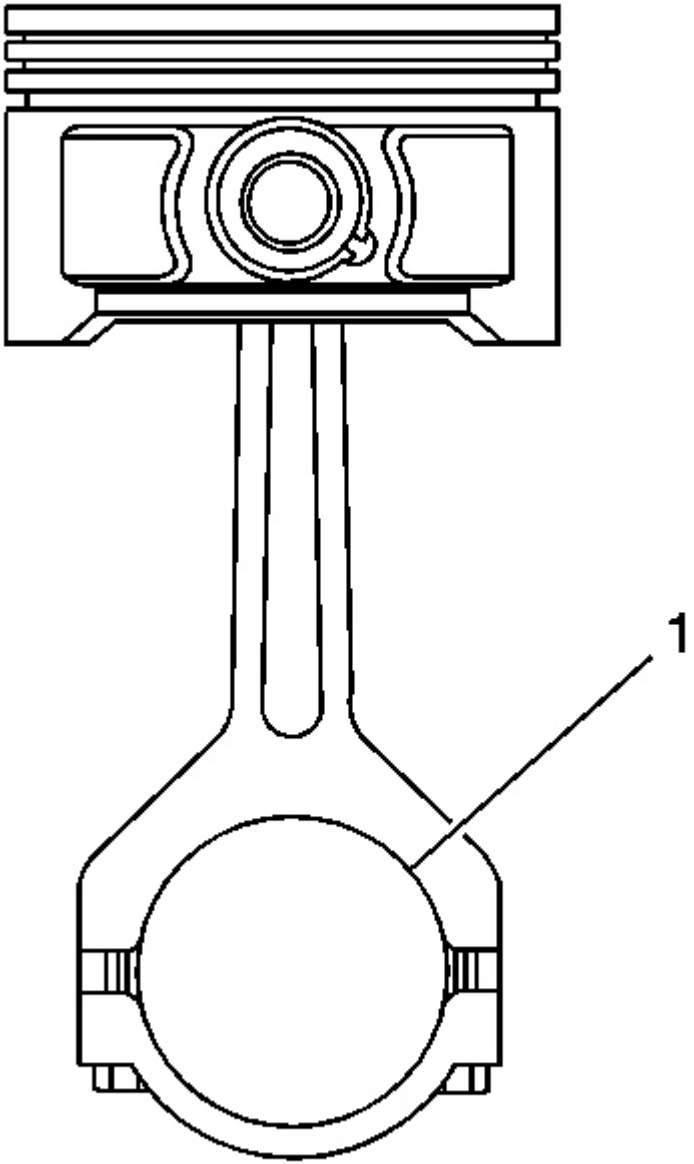

Fig. 147: Measuring The Connecting Rod Bearing Bore For Out-Of-Round Condition
Courtesy of GENERAL MOTORS CORP.

cardiagn.com

4. Measure the connecting rod bearing bore (1) for an out-of-round condition. Refer to **Engine Mechanical Specifications (LS1)** or **Engine Mechanical Specifications (LS6)** .

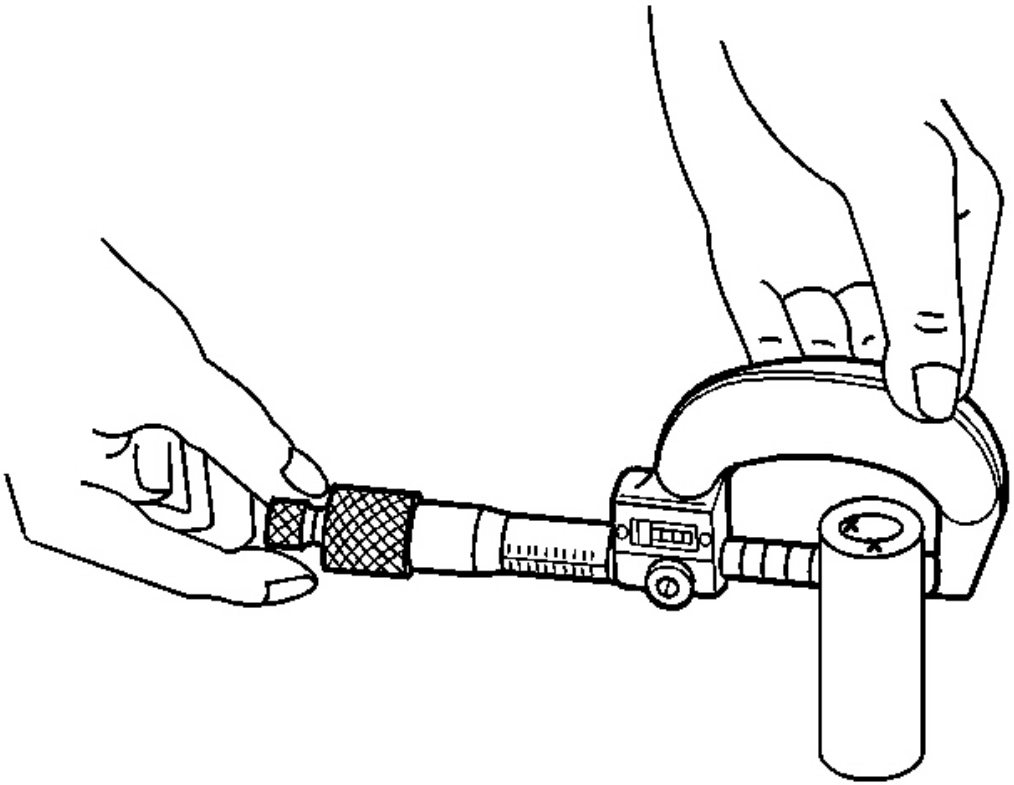

Fig. 148: Measuring The Piston Pin Diameter
Courtesy of GENERAL MOTORS CORP.

5. To determine piston pin-to-connecting rod bore clearance, use a micrometer and measure the piston pin outside diameter (OD).

cardiagn.com

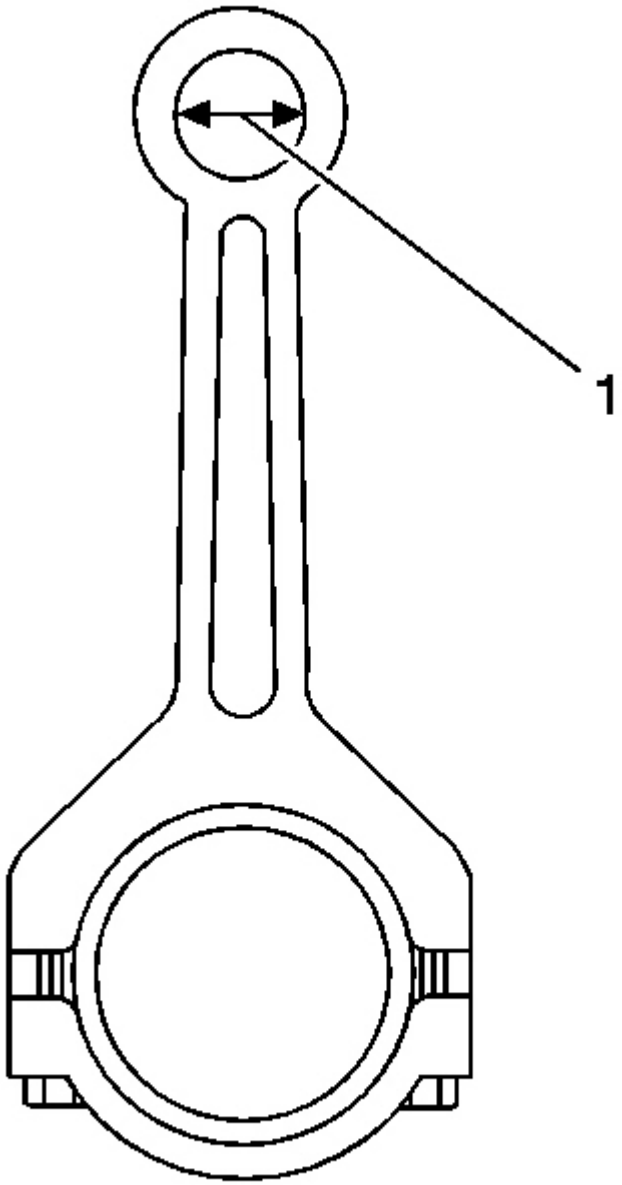

Fig. 149: Measuring The Connecting Rod Pin Bore Inside Diameter
Courtesy of GENERAL MOTORS CORP.

6. To determine piston pin-to-connecting rod bore clearance, use a micrometer and measure the connecting rod pin bore (1) inside diameter (ID).
7. Subtract the piston pin OD measurement from the connecting rod pin bore ID measurement to determine

cardiagn.com

pin-to-bore clearance. Refer to **Engine Mechanical Specifications (LS1)** or **Engine Mechanical Specifications (LS6)** .

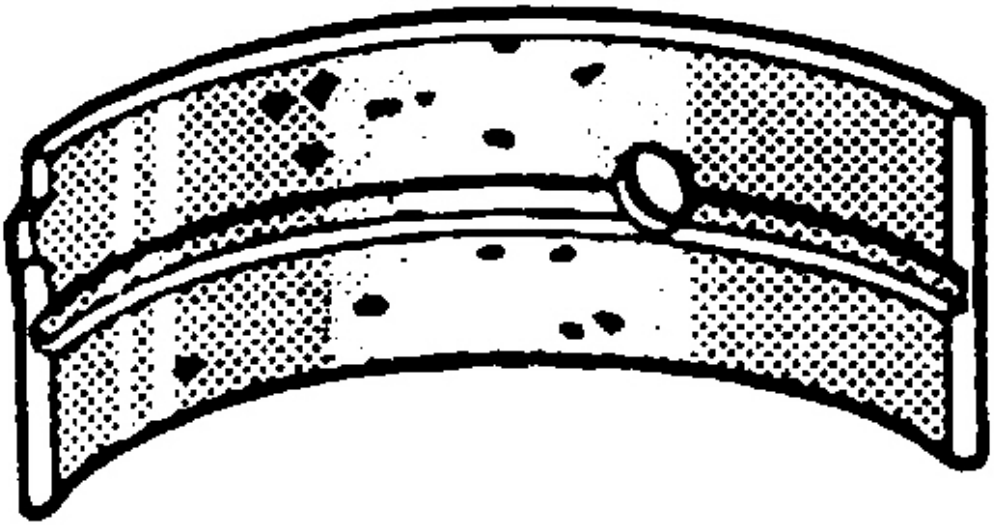

Fig. 150: Inspecting Bearings For Damage
Courtesy of GENERAL MOTORS CORP.

8. Inspect the connecting rod bearings for craters or pockets. Flattened sections on the bearing halves indicate fatigue.

cardiagn.com

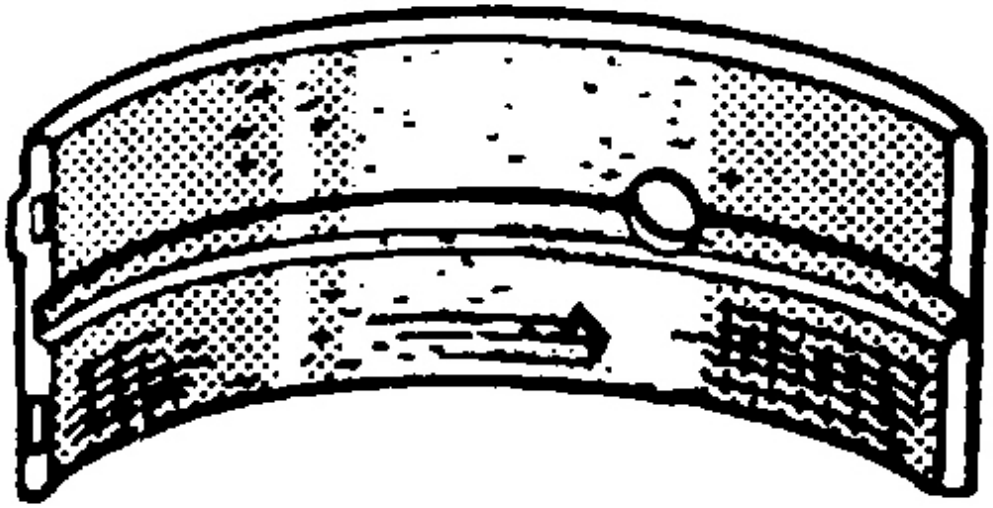

Fig. 151: Inspecting Connecting Rod Bearings For Excess Scoring Or Discoloration
Courtesy of GENERAL MOTORS CORP.

9. Inspect the connecting rod bearings for excessive scoring or discoloration.
10. Inspect the connecting rod bearings for dirt or debris imbedded into the bearing material.

cardiagn.com

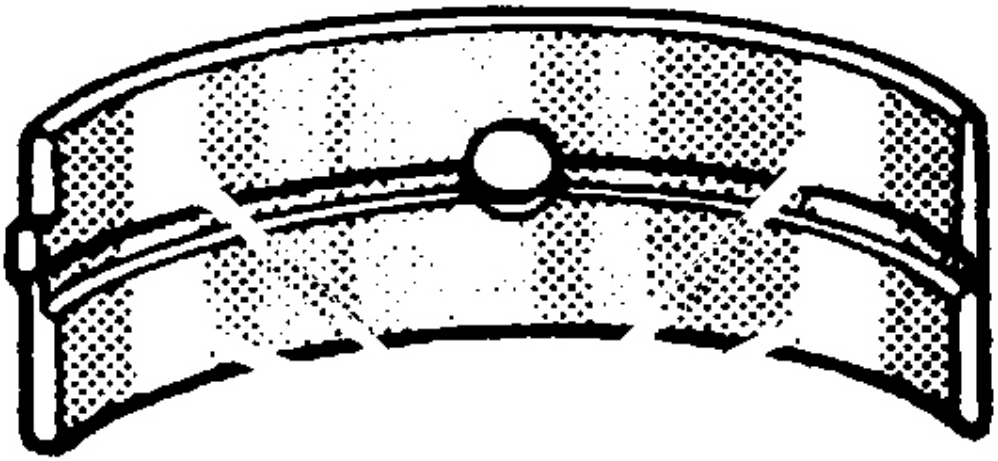

Fig. 152: Inspecting Bearings For Improper Seating
Courtesy of GENERAL MOTORS CORP.

11. Inspect the connecting rod bearings for improper seating indicated by bright, polished sections of the bearing surface.

PISTON AND CONNECTING ROD ASSEMBLE

Tools Required

J 24086-C Piston Pin Remover/Installer Set

cardiagn.com

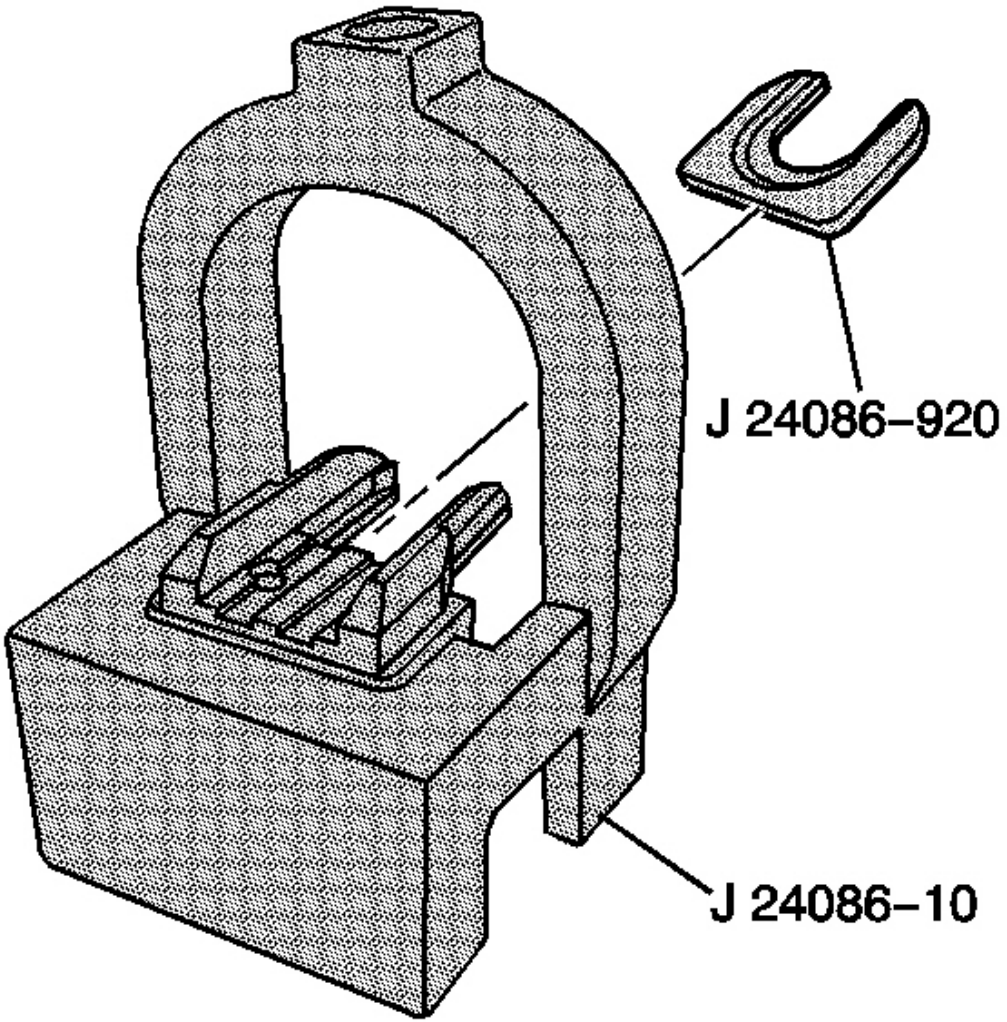

Fig. 153: View Of J 24086-920 & J 24086-10
Courtesy of GENERAL MOTORS CORP.

IMPORTANT:

- **Disassembly of the piston, press-fit design piston pin, and connecting rod may create scoring or damage to the piston pin and piston pin bore. If the piston, pin, and connecting rod have been disassembled, replace the components as an assembly.**
- **If reusing the piston and connecting rod assembly, install the assembly to the original cylinder and corresponding crankshaft journal.**

cardiagn.com

- **The assembly procedure, as shown, is to be used for diagnostic purposes only.**

1. Install fork insert J 24086-920 into J 24086-10 .

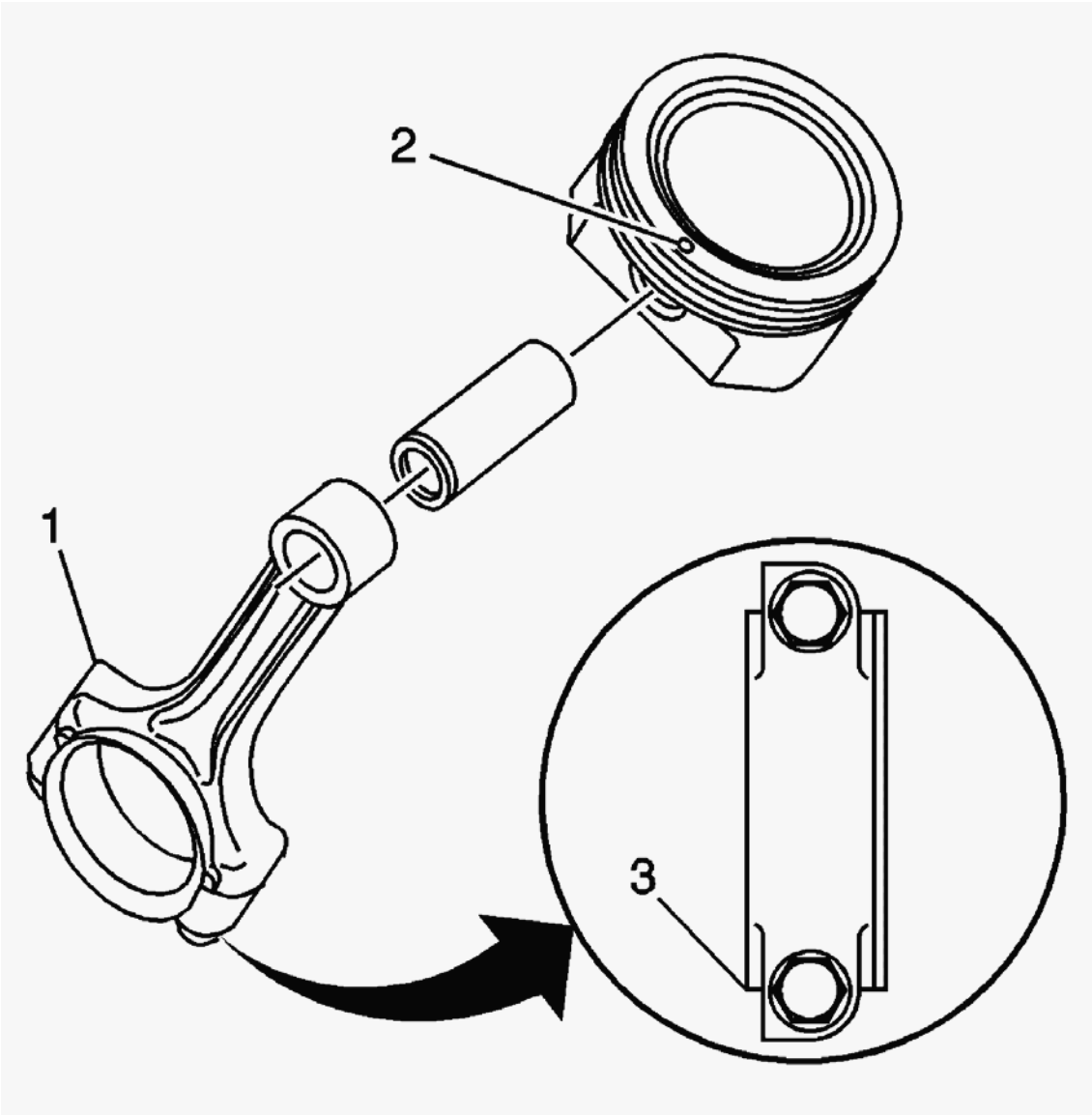

Fig. 154: Connecting Rod, Positioning Tab & Flat Flange
Courtesy of GENERAL MOTORS CORP.

CAUTION: Avoid contact with HOT components. Wear safety glasses and protective gloves to avoid personal injury.

NOTE: Applying excessive heat to the connecting rod may damage or distort the rod. Rod temperature SHOULD NOT exceed 315°C (600°F). At this

cardiagn.com

temperature the end of the connecting rod will turn a straw color upon visual inspection.

2. Use a torch and apply MILD heat to the pin end of the connecting rod. Mild heating of the connecting rod will ease in piston and pin assembly.
3. Identify the positioning tab (1) or flat flange (3) of the connecting rod. When properly assembled, the positioning tab or flat flange of the rod and the mark (2) on the top of the piston should both be facing the front of the engine.

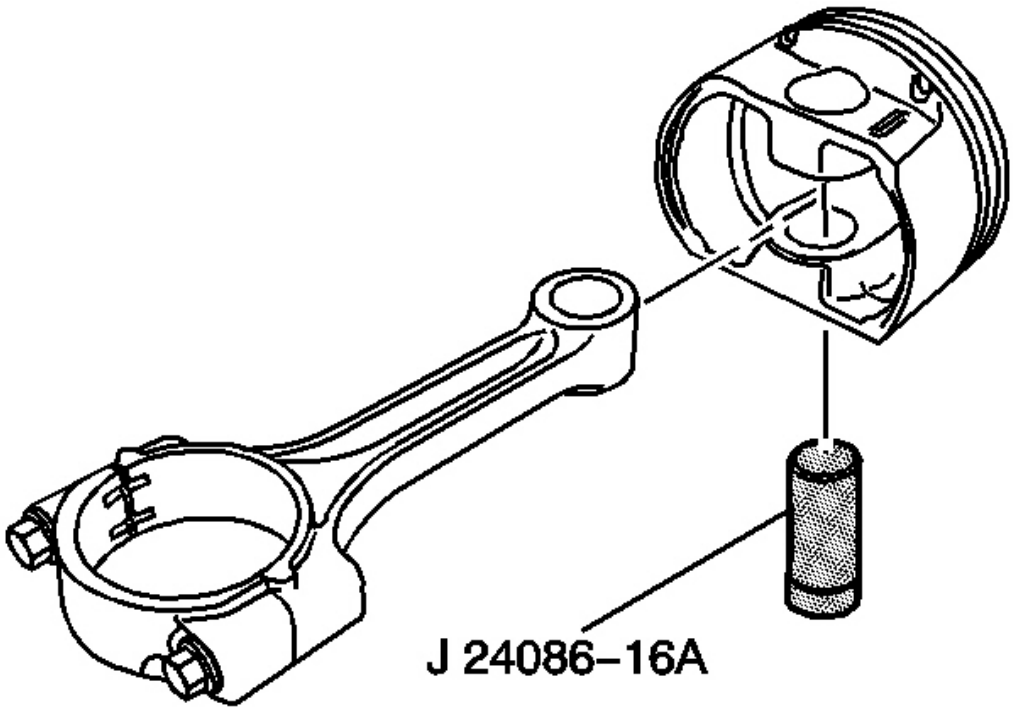

Fig. 155: View Of Piston, Connecting Rod & J 24086-16A
Courtesy of GENERAL MOTORS CORP.

4. Assemble the piston, the connecting rod, and the J 24086-16A.

cardiagn.com

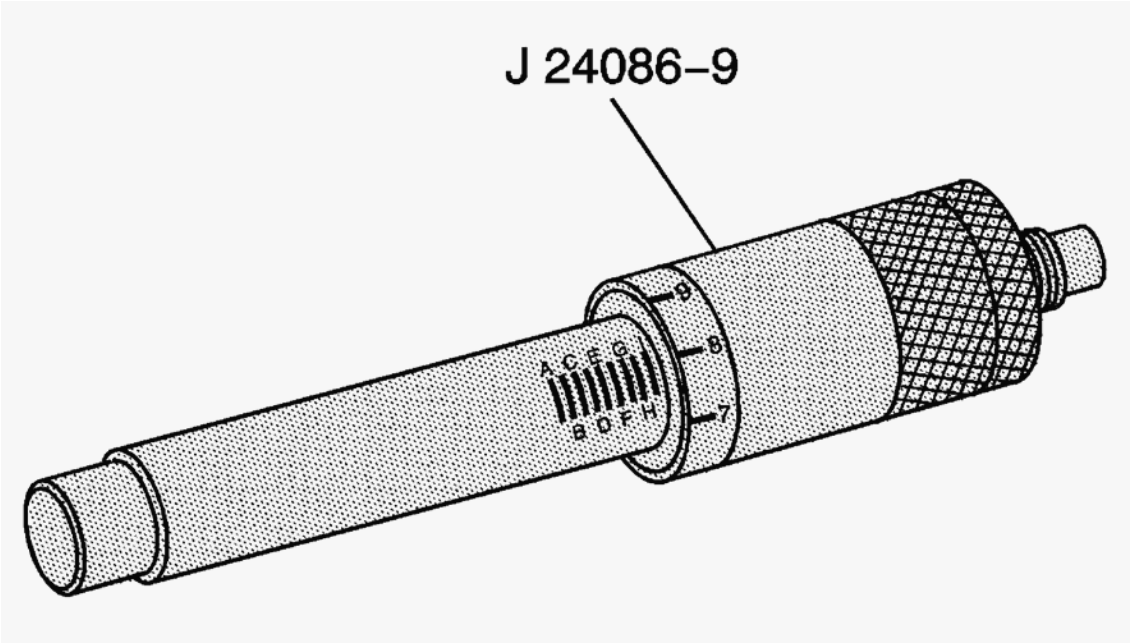

Fig. 156: J 24086-9
Courtesy of GENERAL MOTORS CORP.

5. Adjust the J 24086-9 to I 8.

cardiagn.com

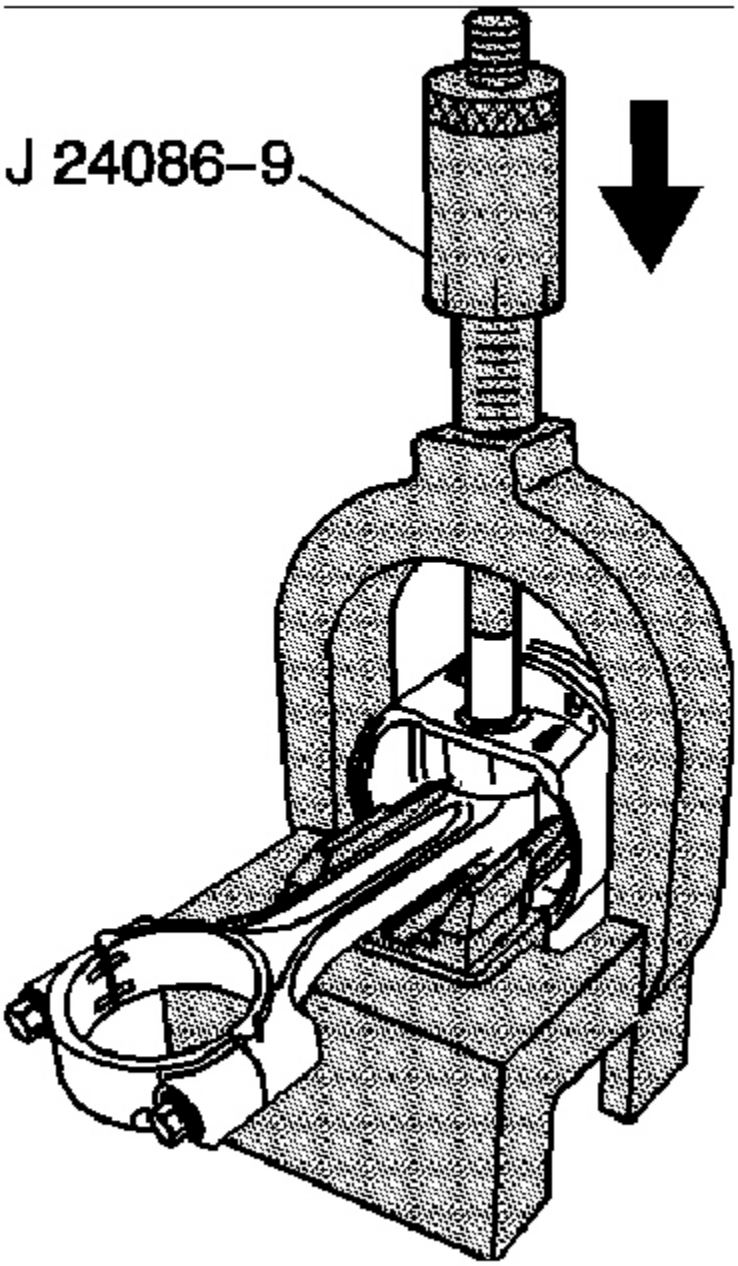

Fig. 157: J 24086-9
Courtesy of GENERAL MOTORS CORP.

6. Install the piston, connecting rod, piston pin, and J 24086-16A to the J 24086-10 .

cardiagn.com

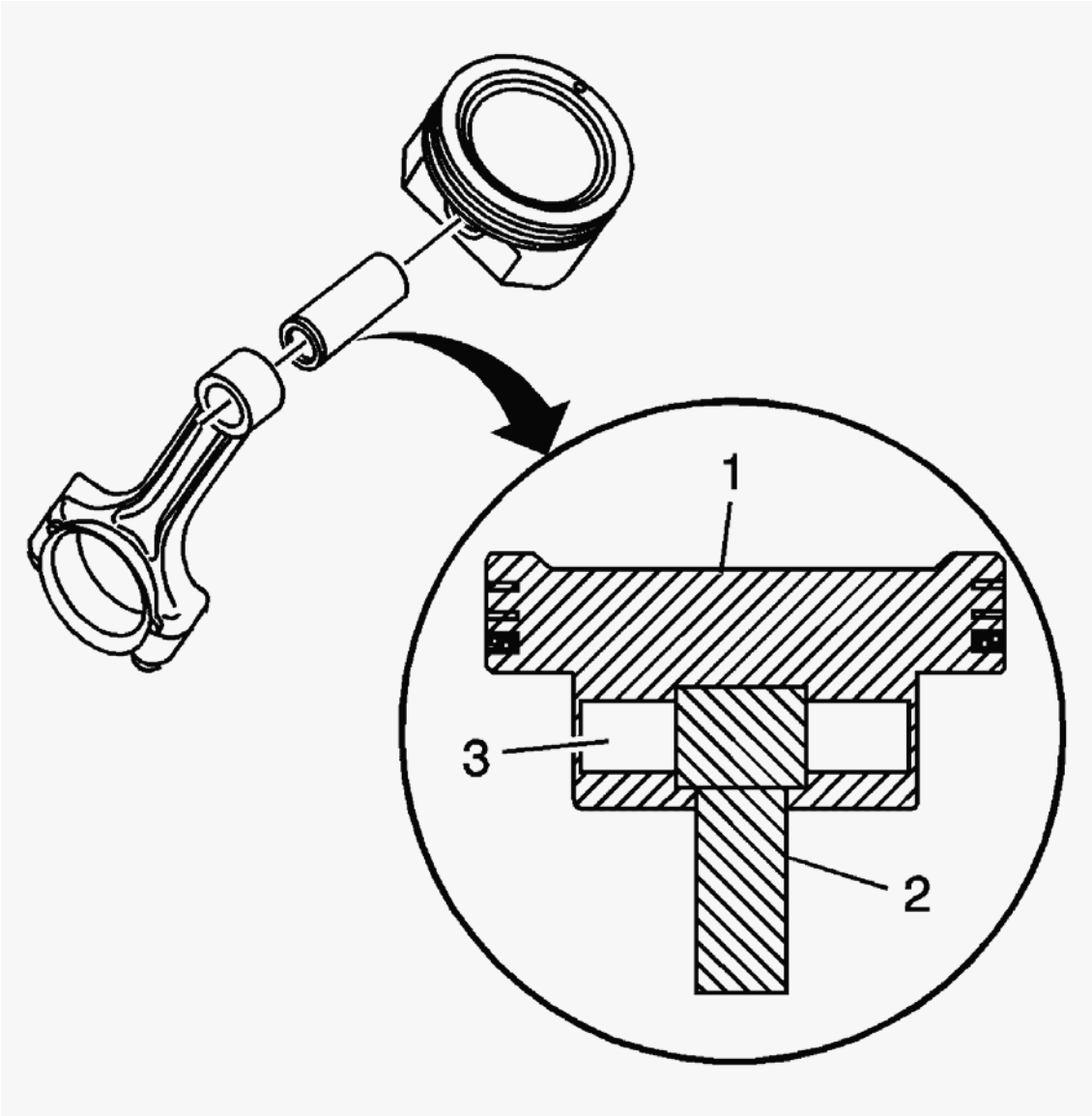

Fig. 158: View Of Piston, Pin & Connecting Rod Proper Assembly
Courtesy of GENERAL MOTORS CORP.

NOTE: **After the installer hub bottoms on the support assembly, do not exceed 35 000 kPa (5,000 psi) pressure, this could cause damage to the tool.**

7. Insert J 24086-9 through J 24086-10 and to the piston pin.
8. Press J 24086-9 until the installer bottoms on the J 24086-10 .
9. Inspect the piston (1), pin (3), and connecting rod (2) for proper assembly.

When properly installed, the piston pin (3) should be centered in the connecting rod (2).

cardiagn.com

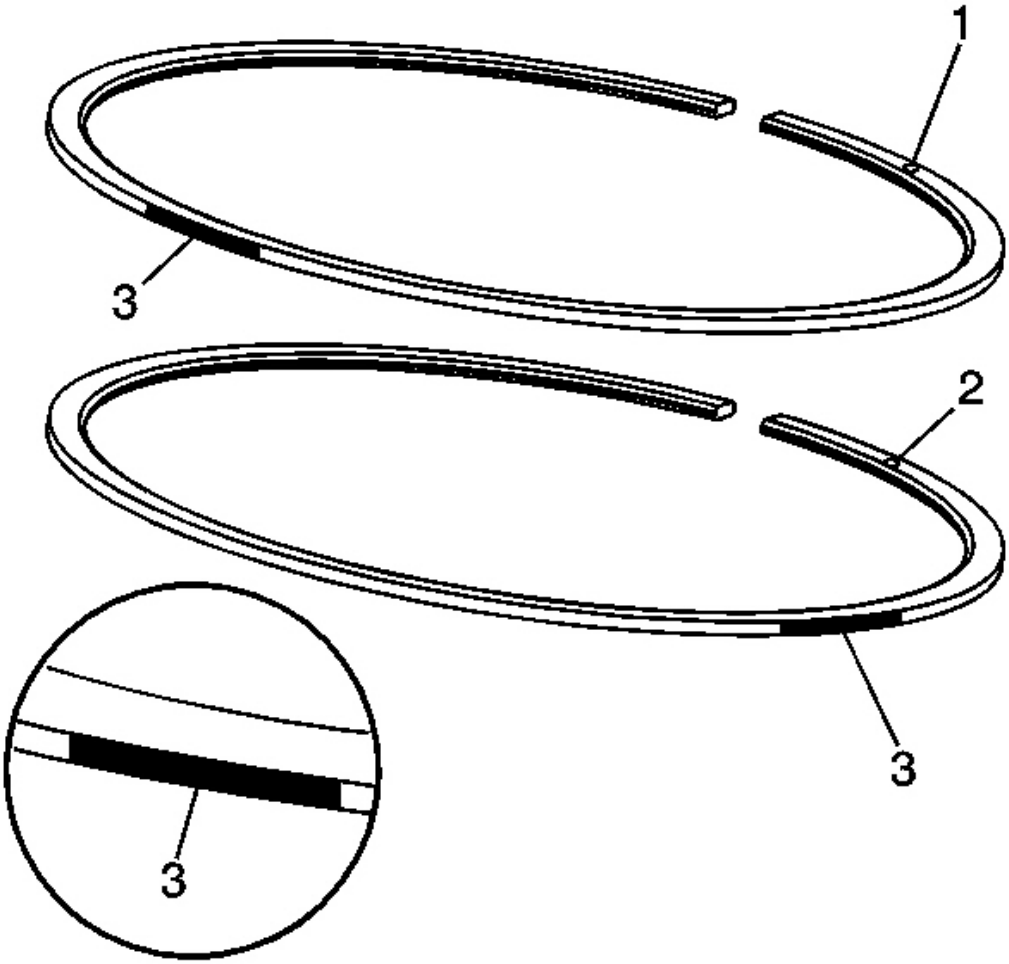

Fig. 159: View Of Upper/Lower Compression Rings & Marks
Courtesy of GENERAL MOTORS CORP.

10. Identify the compression and oil control rings for proper installation. The upper compression ring can be identified by a paint mark (3) located 180 degrees from the end gap. The lower compression ring can be identified by a paint mark (3) located 90 degrees from the end gap. Both rings should be installed with the orientation marks (1, 2) facing the top of the piston.

cardiagn.com

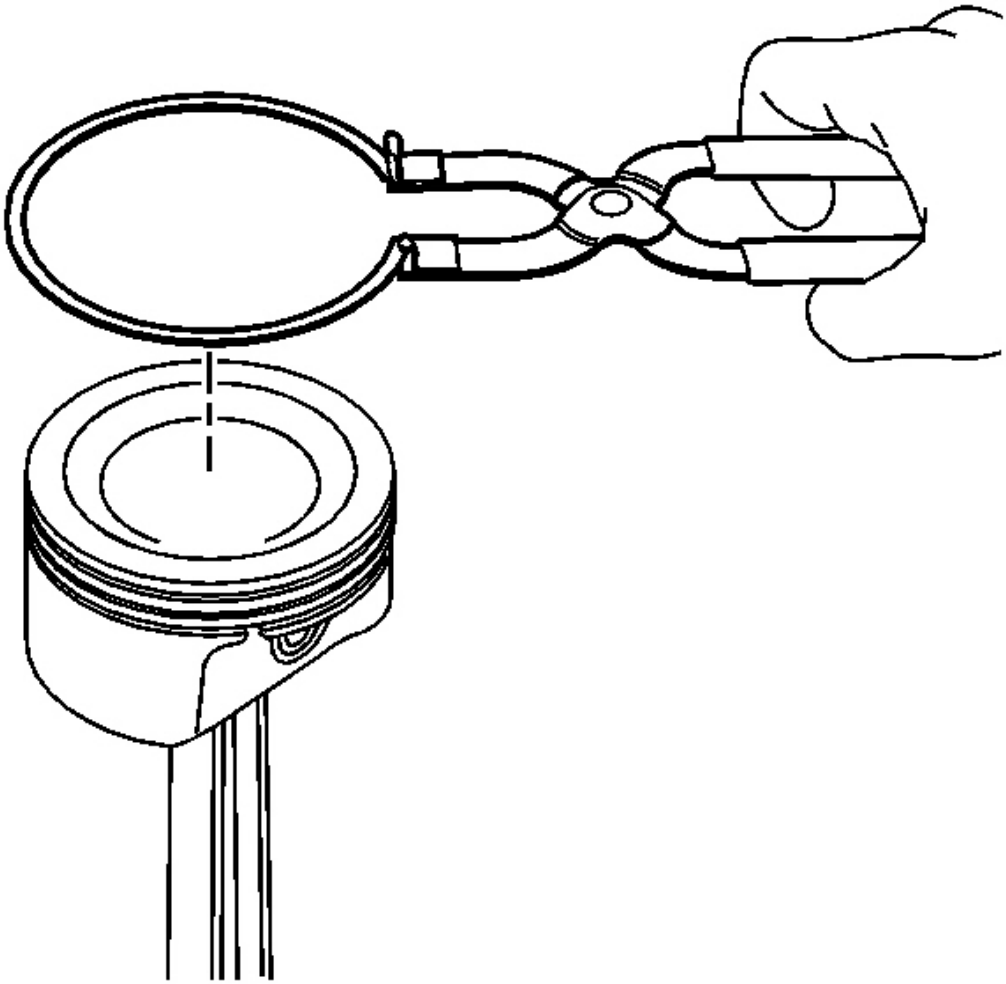

Fig. 160: Piston Rings & Piston
Courtesy of GENERAL MOTORS CORP.

IMPORTANT: When installing piston rings, use a ring expander plier type tool. Do not roll the rings into the grooves of the piston. Use caution and care to expand the rings only slightly larger than the outside diameter (OD) of the piston.

11. Using piston ring pliers, install the piston rings onto the piston.
12. Position the oil control ring end gaps a minimum of 25 mm (1.0 in) from each other.
13. Position the compression ring end gaps 180 degrees opposite each other.

cardiagn.com

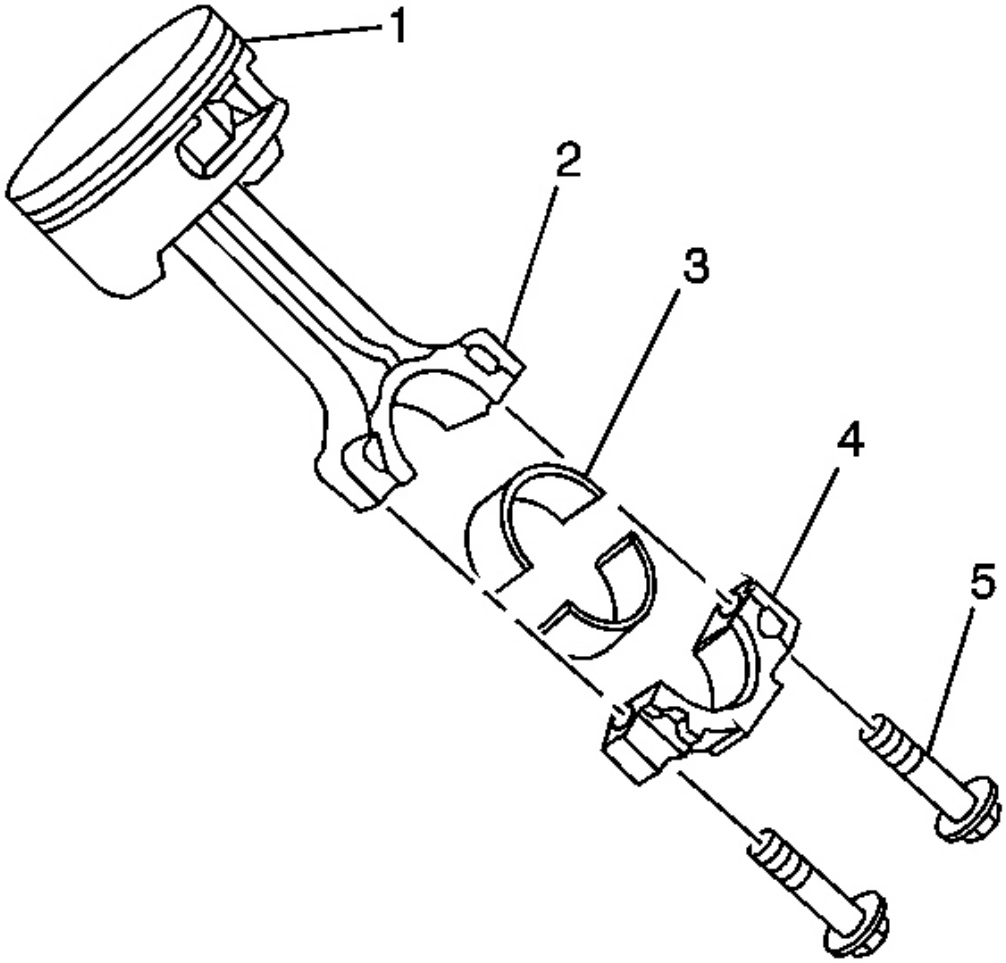

Fig. 161: View Of Piston, Connecting Rod & Components
Courtesy of GENERAL MOTORS CORP.

14. Install the connecting rod bearings (3) to the rod (2) and cap (4).

Full-Floating Piston Pin

cardiagn.com

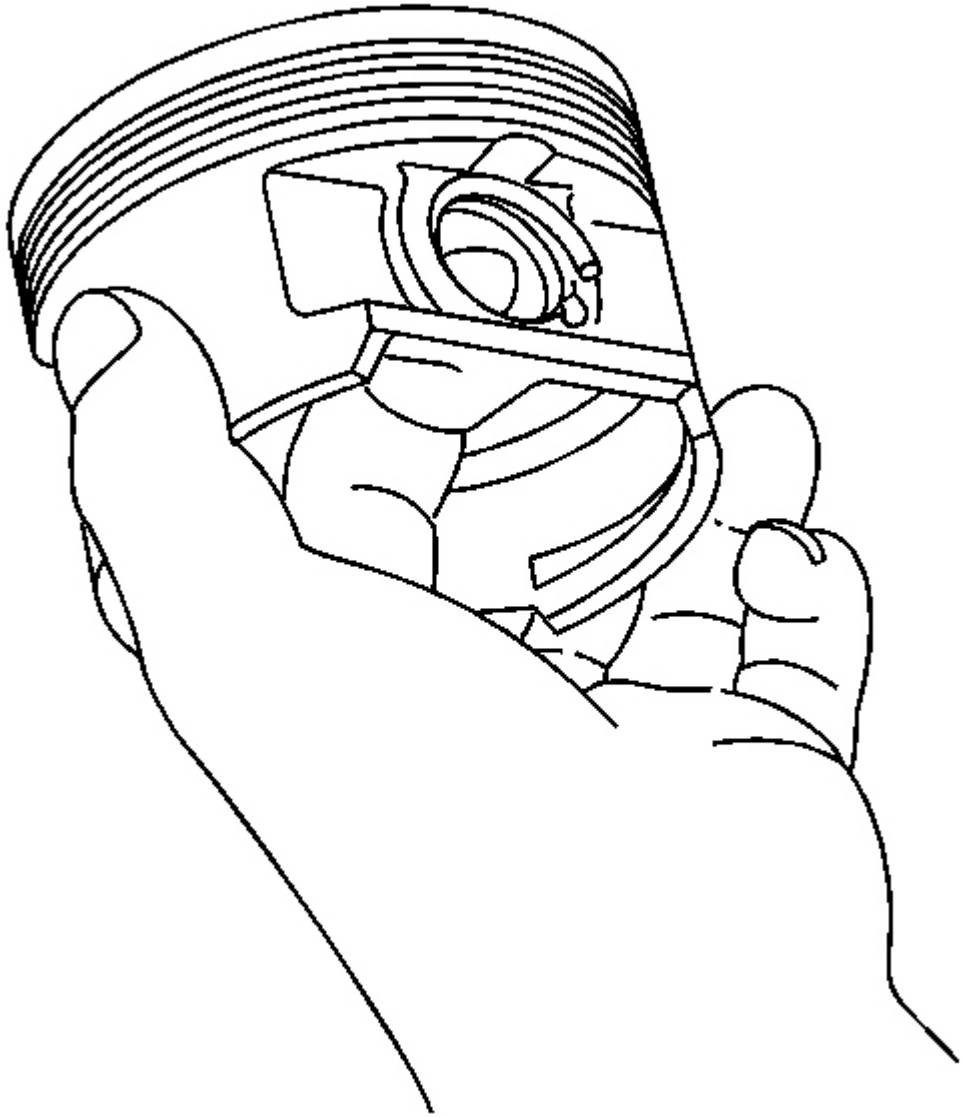

Fig. 162: Installing Retaining Clip In Groove Of Pin Bore
Courtesy of GENERAL MOTORS CORP.

1. Install the retaining clip. The clip should be seated in the groove of the pin bore.

cardiagn.com

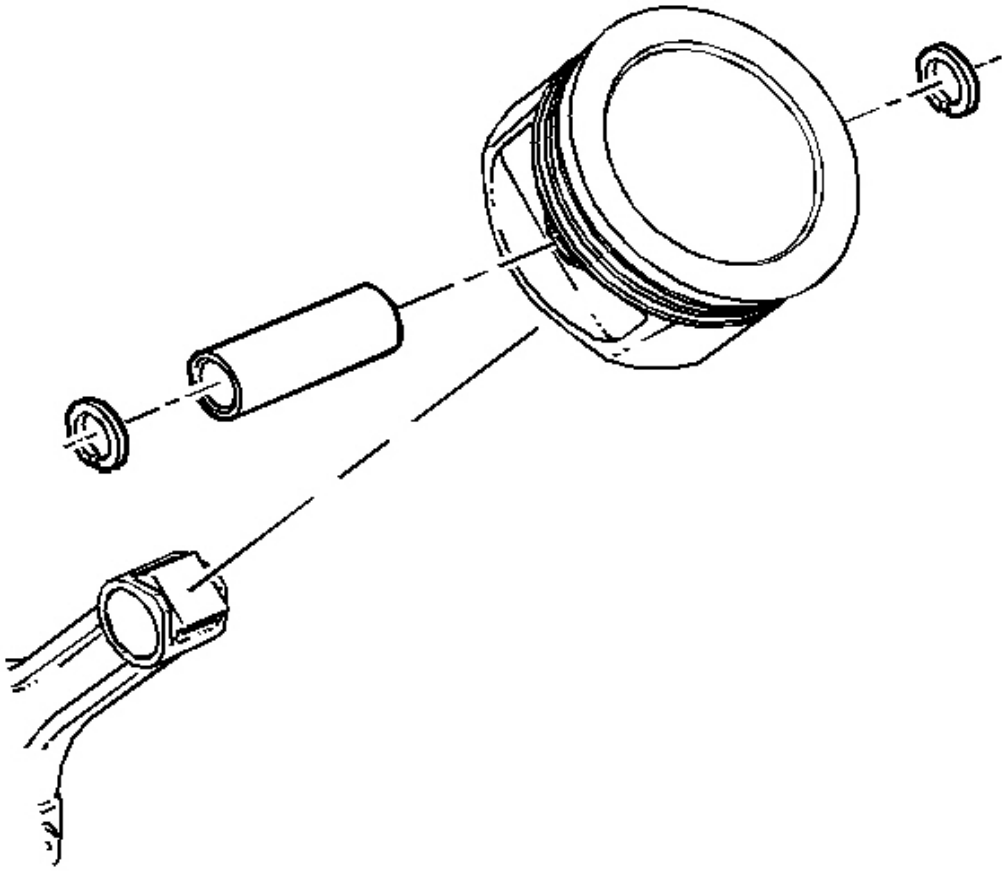

Fig. 163: Pin, Piston & Connecting Rod
Courtesy of GENERAL MOTORS CORP.

2. Install the piston pin to the piston and connecting rod.
3. Install the retaining clip. The clip should be seated in the groove of the pin bore.

cardiagn.com

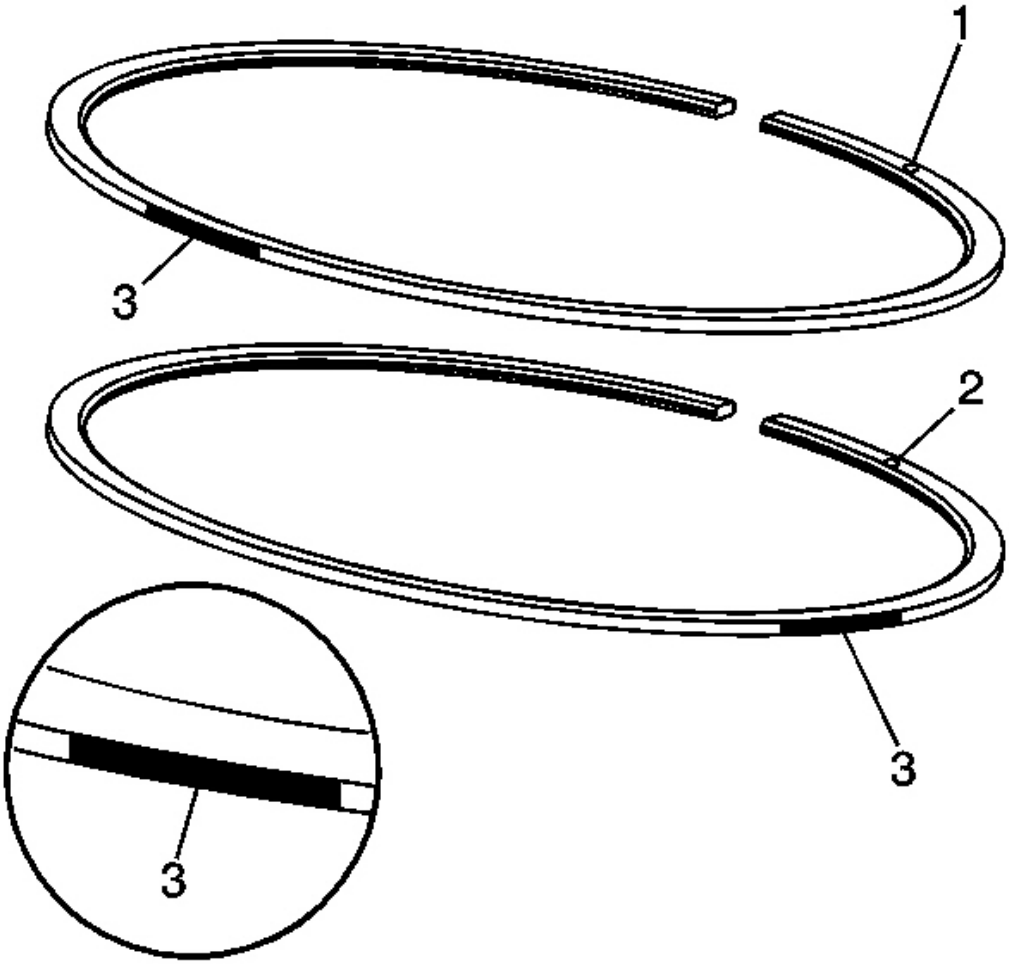

Fig. 164: View Of Upper/Lower Compression Rings & Marks
Courtesy of GENERAL MOTORS CORP.

IMPORTANT: When installing piston rings, use a ring expander plier type tool. Do not roll the rings into the grooves of the piston. Use caution and care to expand the rings only slightly larger than the outside diameter (OD) of the piston.

4. Identify the compression and oil control rings for proper installation. The upper compression ring can be identified by a paint mark (3) located 180 degrees from the end gap. The lower compression ring can be identified by a paint mark (3) located 90 degrees from the end gap. Both rings should be installed with the orientation marks (1, 2) facing the top of the piston.

cardiagn.com

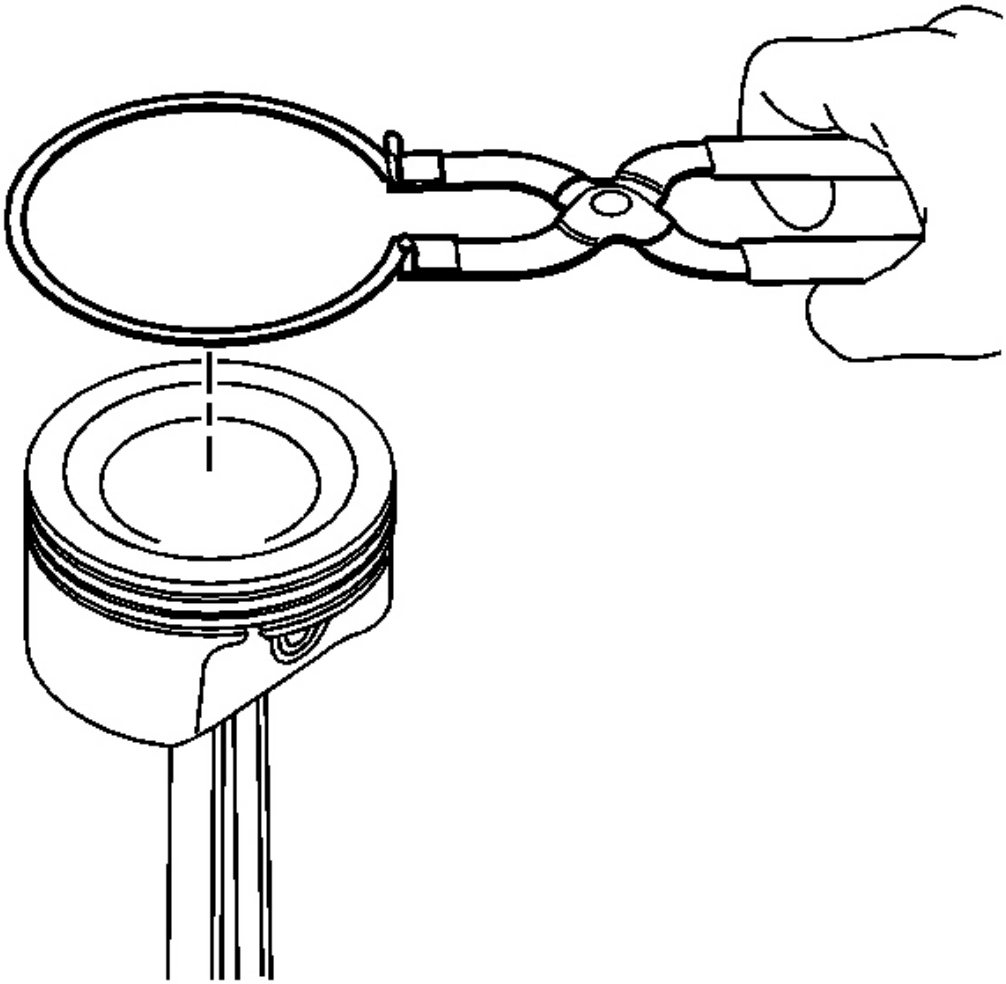

Fig. 165: Piston Rings & Piston
Courtesy of GENERAL MOTORS CORP.

5. Using piston ring pliers, install the piston rings onto the piston.
6. Position the oil control ring end gaps a minimum of 25 mm (1.0 in) from each other.
7. Position the compression ring end gaps 180 degrees opposite each other.

cardiagn.com

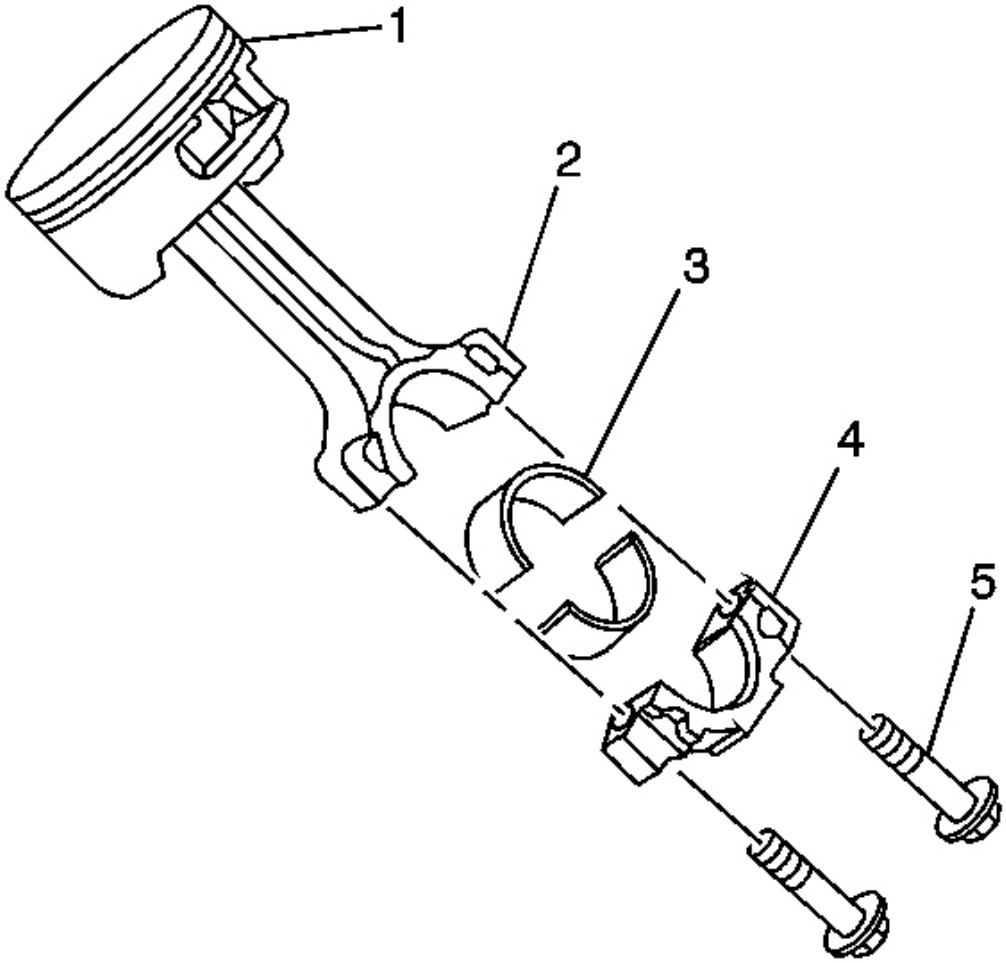

Fig. 166: View Of Piston, Connecting Rod & Components
Courtesy of GENERAL MOTORS CORP.

8. Install the connecting rod bearings (3) to the rod (2) and cap (4).

CAMSHAFT BEARING REMOVAL

Tools Required

J 33049 Camshaft Bearing Service Set

cardiagn.com

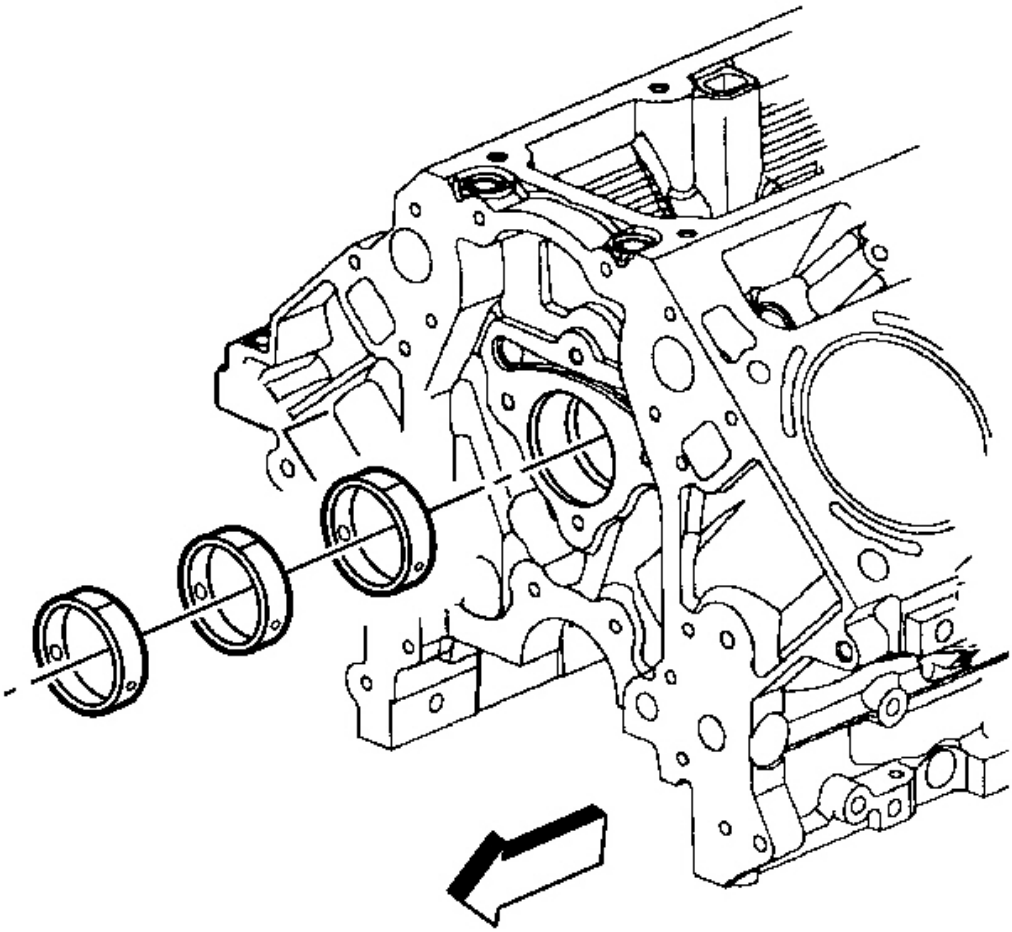

Fig. 167: View Of Camshaft Bearings
Courtesy of GENERAL MOTORS CORP.

IMPORTANT: A loose camshaft bearing may be caused by an enlarged, out of round or damaged engine block bearing bore.

1. Prior to bearing removal, inspect the camshaft bearings for loose fit in the engine block bearing bores. Refer to **Camshaft and Bearings Cleaning and Inspection** .
2. Repair or replace the components as required.

cardiagn.com

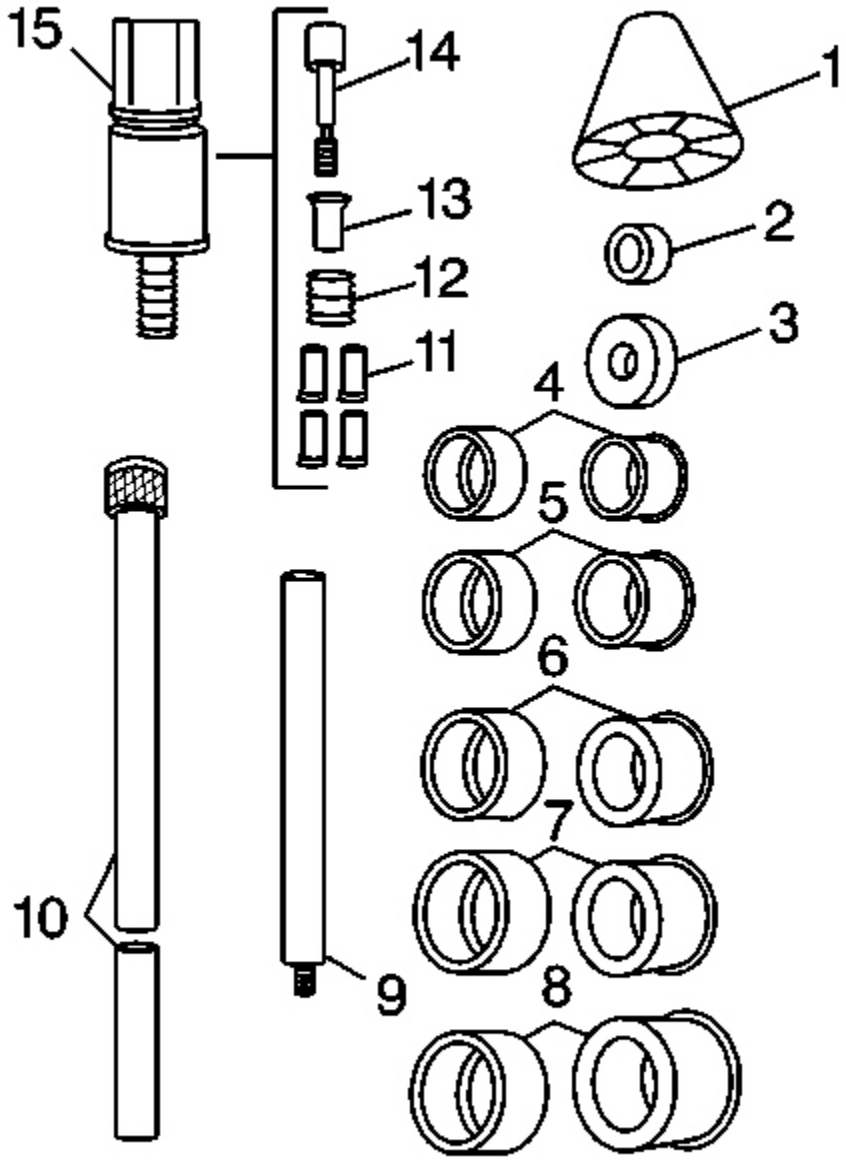

Fig. 168: J 33049 Camshaft Bearing Service Kit Components
Courtesy of GENERAL MOTORS CORP.

3. Select the expanding driver (4-8) and washer (2 or 3) from the tool usage information.
4. Assemble the **J 33049** .
5. Insert the tool through the front of the engine block and into the bearing.

cardiagn.com

6. Tighten the expander assembly (15) nut until snug.
7. Push the guide cone (1) into the front camshaft bearing to align the tool.

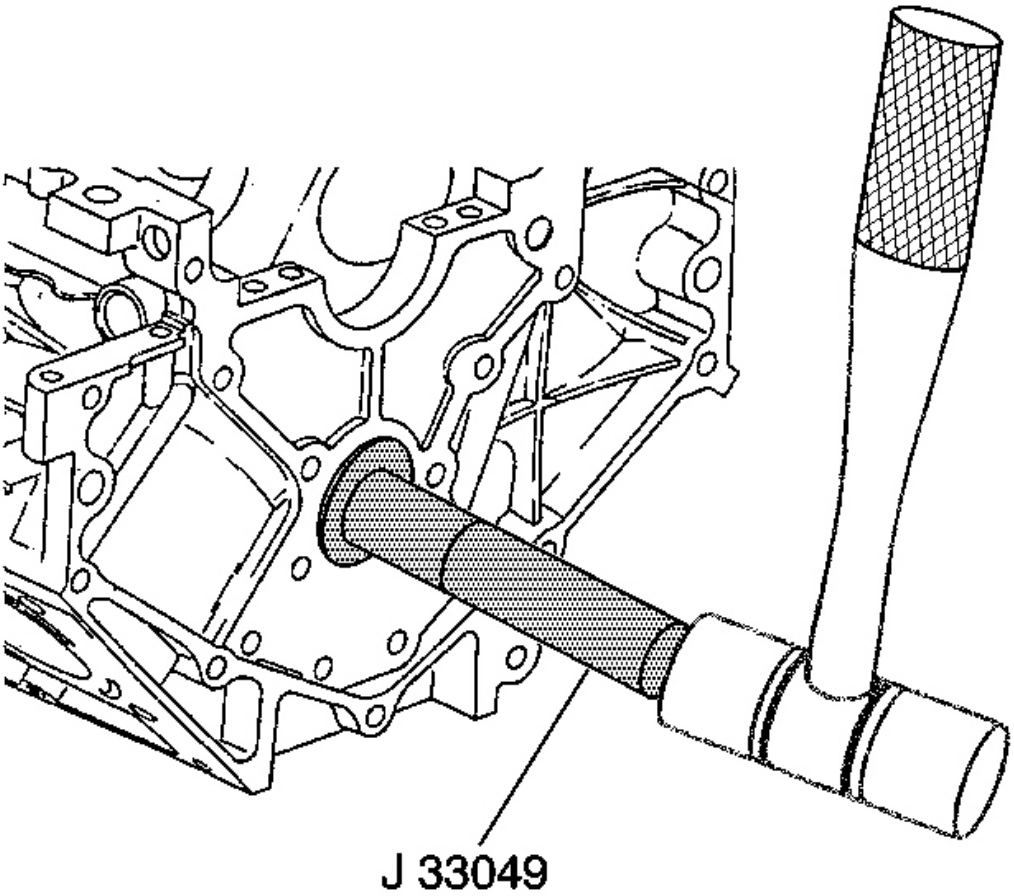

Fig. 169: Bearing & Block Bore
Courtesy of GENERAL MOTORS CORP.

8. Drive the bearing from the block bore.

IMPORTANT: To remove the front camshaft bearing, operate the tool from the rear of the block using the guide cone in the rear camshaft bearing bore.

9. Repeat the above procedures to remove the remaining bearings.

Tool Usage Information

cardiagn.com

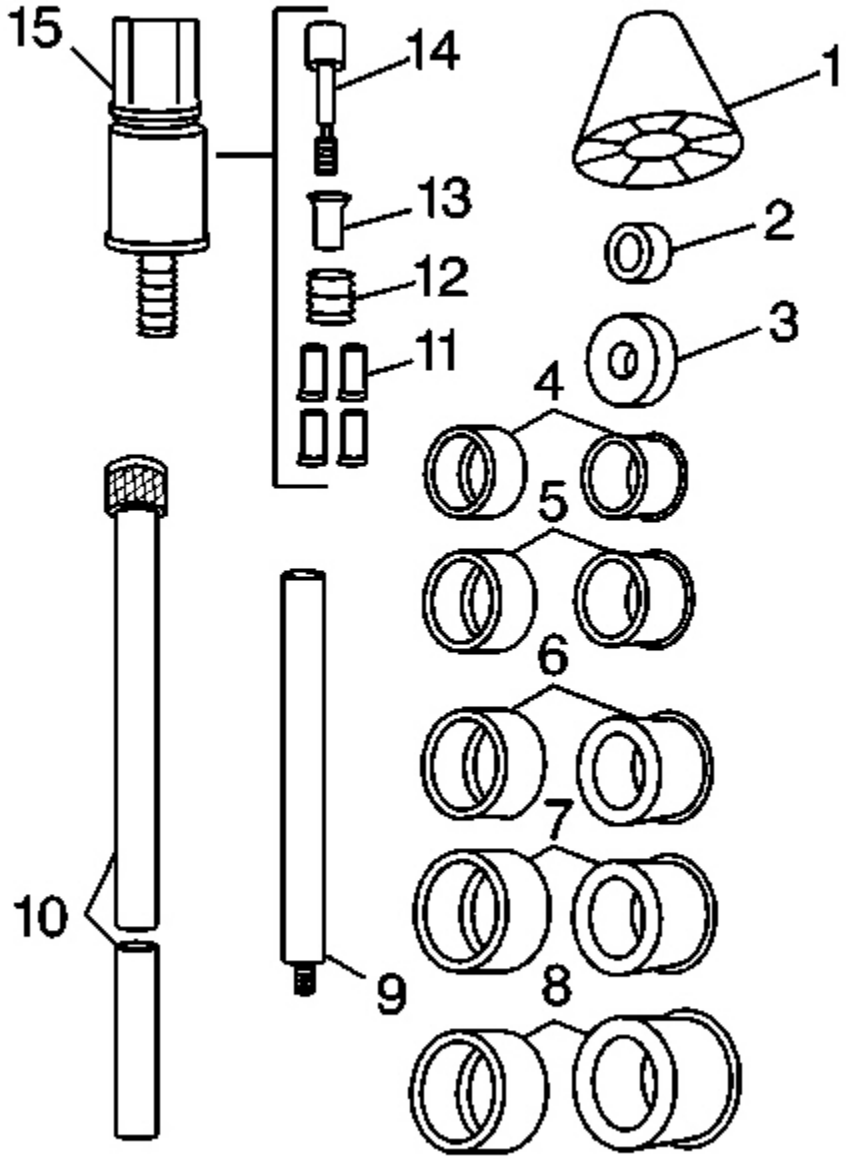

Fig. 170: J 33049 Camshaft Bearing Service Kit Components
Courtesy of GENERAL MOTORS CORP.

- The tool consists of a guide cone (1), driving washers (2 or 3), expander bearing drivers (4-8), driver bars (9 or 10), expander jaws (11), expander sleeve (12), expander cone (13), expander shaft (14), and expander assembly (15).

cardiagn.com

- Expander bearing driver number one inside diameter is 28.575-37.465 mm (1.125-1.475 in) and is used with the expander assembly and the small washer.
- Expander bearing driver number 2 inside diameter is 37.465-43.18 mm (1.475-1.7 in) and is used with number 1 expanding driver and the small washer.
- Expander bearing driver number 3 inside diameter is 43.18-48.895 mm (1.7-1.925 in) and is used with number 2 expanding driver and the large washer.
- Expander bearing driver number 4 inside diameter is 48.895-54.61 mm (1.925-2.15 in) and is used with number 3 expanding driver and the large washer.
- Expander bearing driver number 5 inside diameter is 54.61-60.325 mm (2.15-2.375 in) and is used with number 4 expanding driver and the large washer.
- Expander bearing driver number 6 inside diameter is 60.325-68.326 mm (2.375-2.69 in) and is used with number 5 expanding driver and the large washer.

Tool Assembly and Operation

1. Select the proper expanding driver and washer from the expanding driver and washer information.

IMPORTANT:

- **To install or remove the expanding driver, always push on or pull from the ends.**
- **Pressure on the outside diameter may cause a bind against the rubber expanding sleeve.**

2. Place the expanding driver onto the expander assembly.
3. Check to ensure that the separation lines between the segments of the expanding driver align with the separation lines of the expander assembly.
4. Place the guide cone over the driving bar, with the small end of the cone facing the driver assembly.
5. Place the driving washer over the threaded portion of the expander assembly.
6. Screw the expander assembly, with driving washer, onto the driving bar.

   It may be necessary to install the driver bar extension for removal of the inner bearings.

cardiagn.com

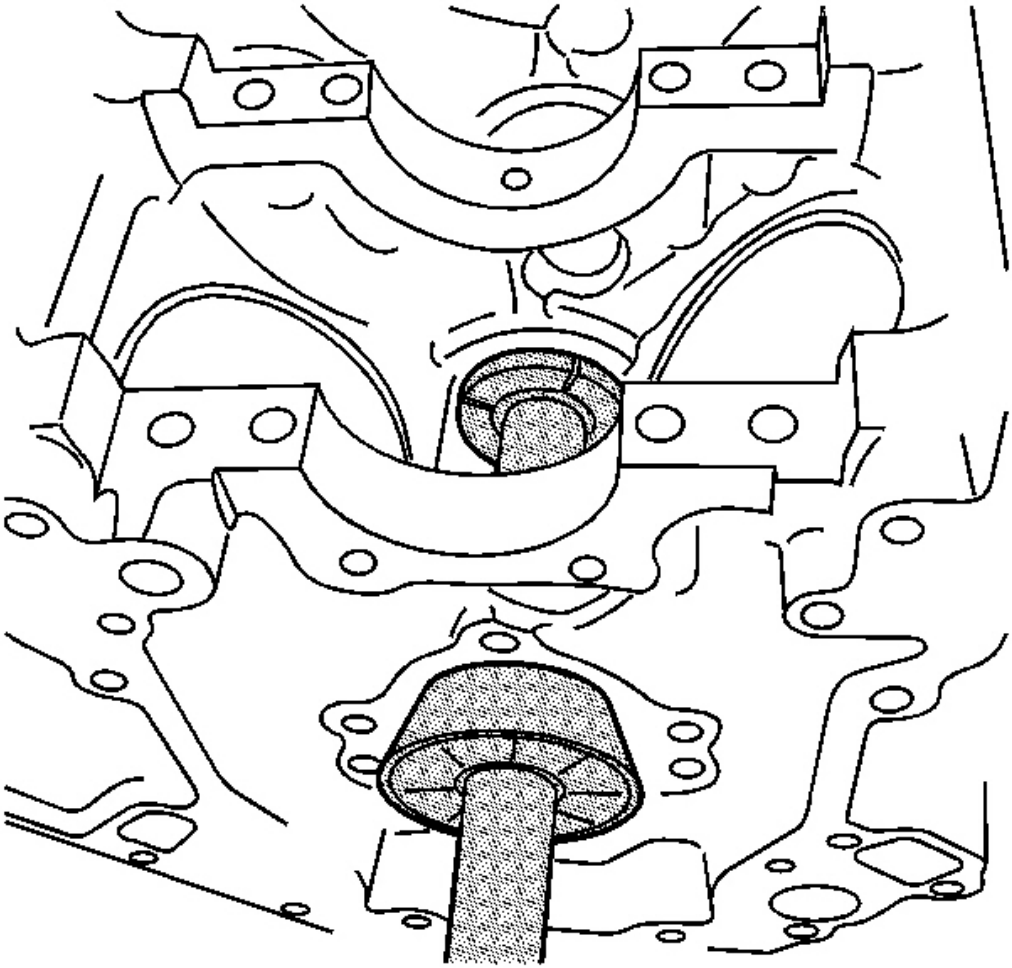

Fig. 171: Inner Camshaft Bearing & Snug
Courtesy of GENERAL MOTORS CORP.

7. Insert the tool into a inner camshaft bearing and tighten until snug.

   Operate the tool from the front or rear of the engine block.

   On some engine blocks, the nut on the expander assembly is inaccessible except from either end. In this case you must use a socket and extension to enlarge and reduce the expander assembly.

8. Slide the nylon cone into the front or rear camshaft bearing. This will properly align the tool.
9. Drive the bearing out of or into the engine block.

cardiagn.com

10. Repeat the procedure for the additional inner bearings.

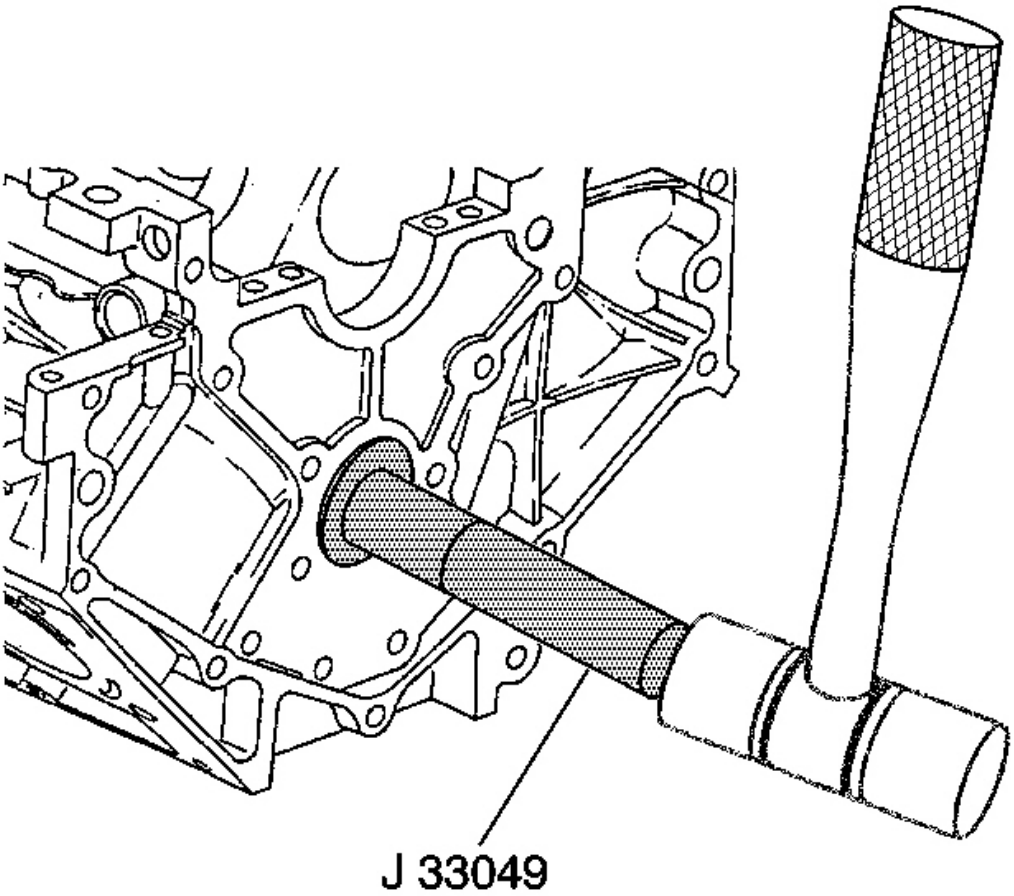

Fig. 172: Bearing & Block Bore
Courtesy of GENERAL MOTORS CORP.

11. For the 2 end bearings, front and rear, remove the nylon cone and driver bar extension.
12. Drive the bearings out of or into the engine block.

CAMSHAFT AND BEARINGS CLEANING AND INSPECTION

Tools Required

- **J 7872** Magnetic Base Dial Indicator Set
- **J 8520** Camshaft Lobe Lift Indicator

cardiagn.com

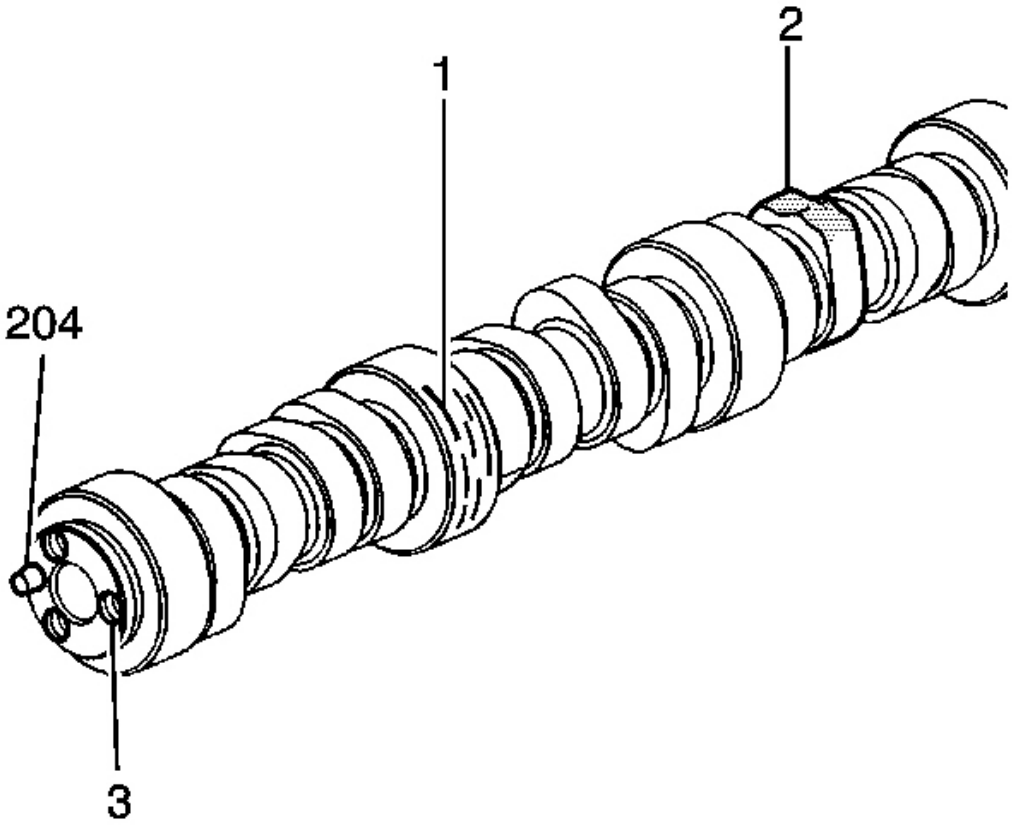

Fig. 173: Inspecting The Camshaft Bearing Journals, Threaded Bolt Holes, Camshaft Valve Lifter Lobes & Camshaft Sprocket Pin For Damage
Courtesy of GENERAL MOTORS CORP.

1. Clean the components in solvent.

CAUTION: Refer to Safety Glasses Caution in Cautions and Notices.

2. Dry the components with compressed air.
3. Inspect the camshaft bearing journals (1) for scoring or excessive wear.
4. Inspect the camshaft valve lifter lobes (2) for scoring or excessive wear.
5. Inspect the threaded bolt holes (3) in the front of the camshaft for damaged threads or debris.
6. Inspect the camshaft sprocket pin (204) for damage.
7. Inspect the camshaft position (CMP) reluctor ring for nicks or damage.

cardiagn.com

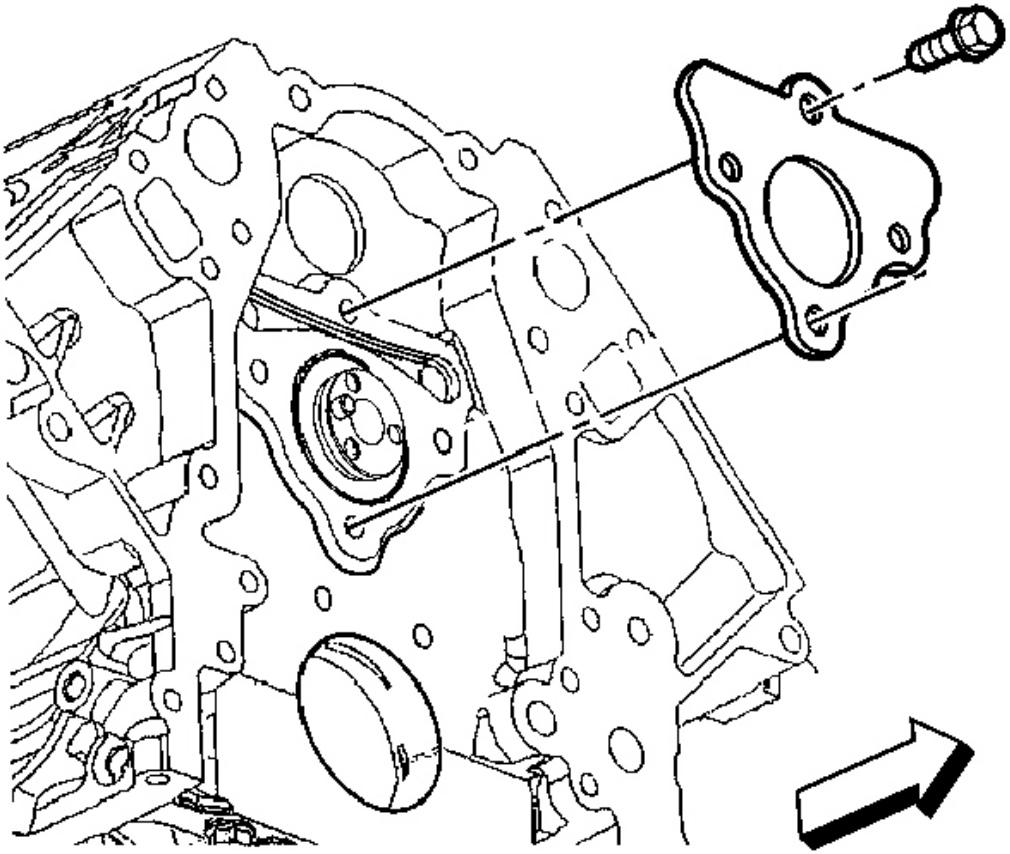

Fig. 174: View Of Camshaft Retainer & Bolts
Courtesy of GENERAL MOTORS CORP.

8. Inspect the camshaft retainer plate for wear or a damaged sealing gasket.

   If the camshaft retainer plate sealing gasket is not cut or damaged, it may be used again.

cardiagn.com

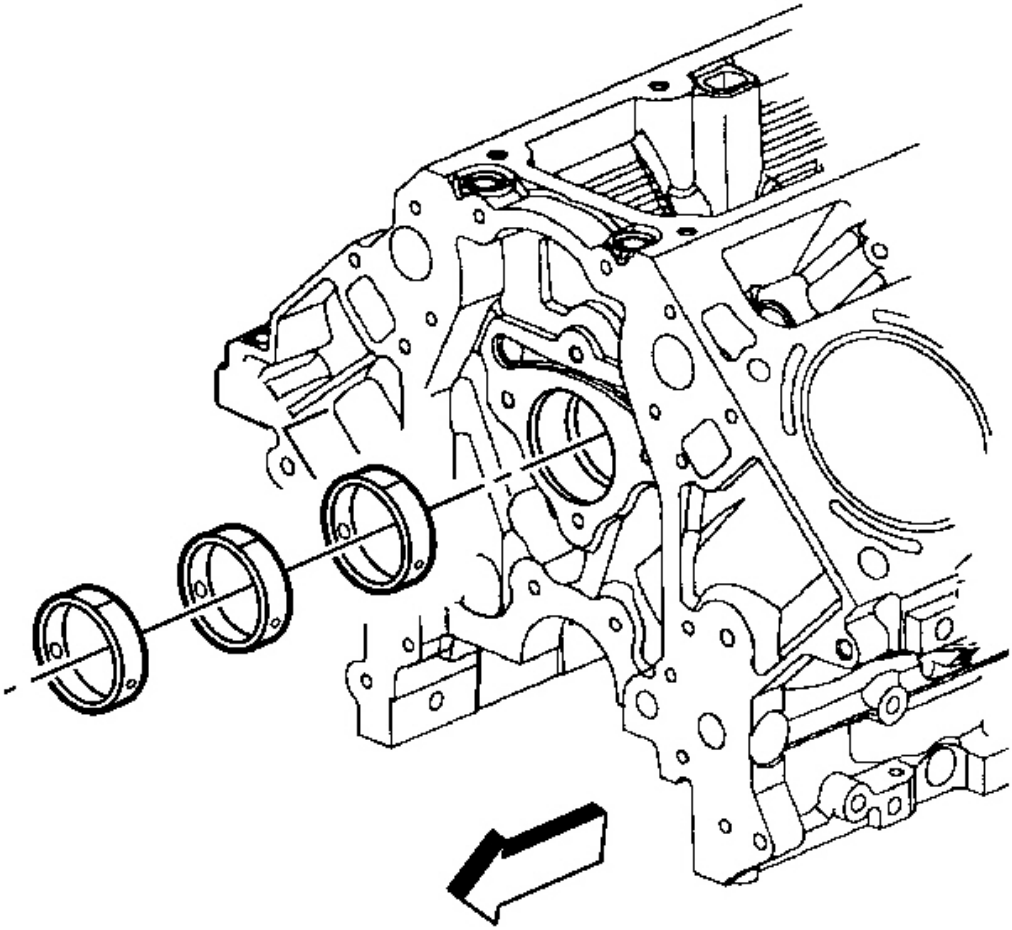

Fig. 175: View Of Camshaft Bearings
Courtesy of GENERAL MOTORS CORP.

9. Inspect the camshaft bearings for proper fit in the engine block. The camshaft bearings have an interference fit to the engine block and should not be loose in their engine block bearing bores.
10. Inspect the camshaft bearings for excessive wear or scoring.

    Bearings with excessive scoring or wear must be replaced.

cardiagn.com

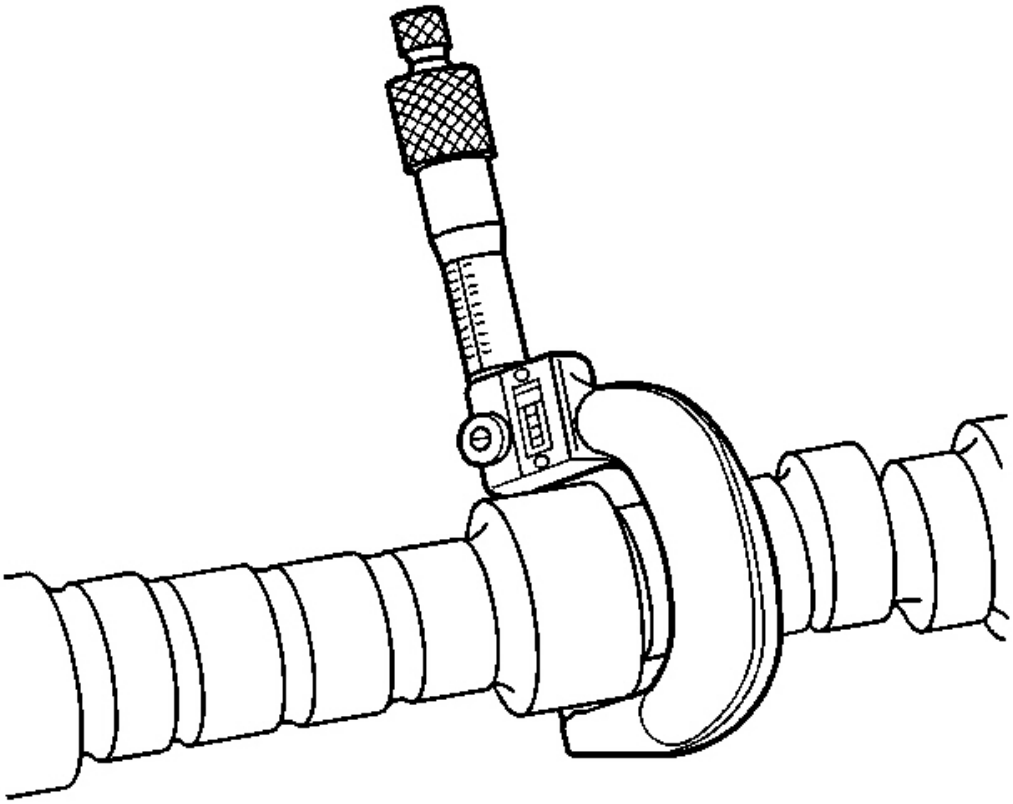

Fig. 176: Measuring The Camshaft Journals For Wear & Out-Of-Round
Courtesy of GENERAL MOTORS CORP.

11. Measure the camshaft journals for wear and out-of-round with a micrometer.
    - A camshaft with bearing journals that measure more than 0.025 mm (0.001 in) out-of-round, must be replaced.
    - A camshaft with bearing journal diameters that measure less that 54.99 mm (2.164 in), must be replaced.

cardiagn.com

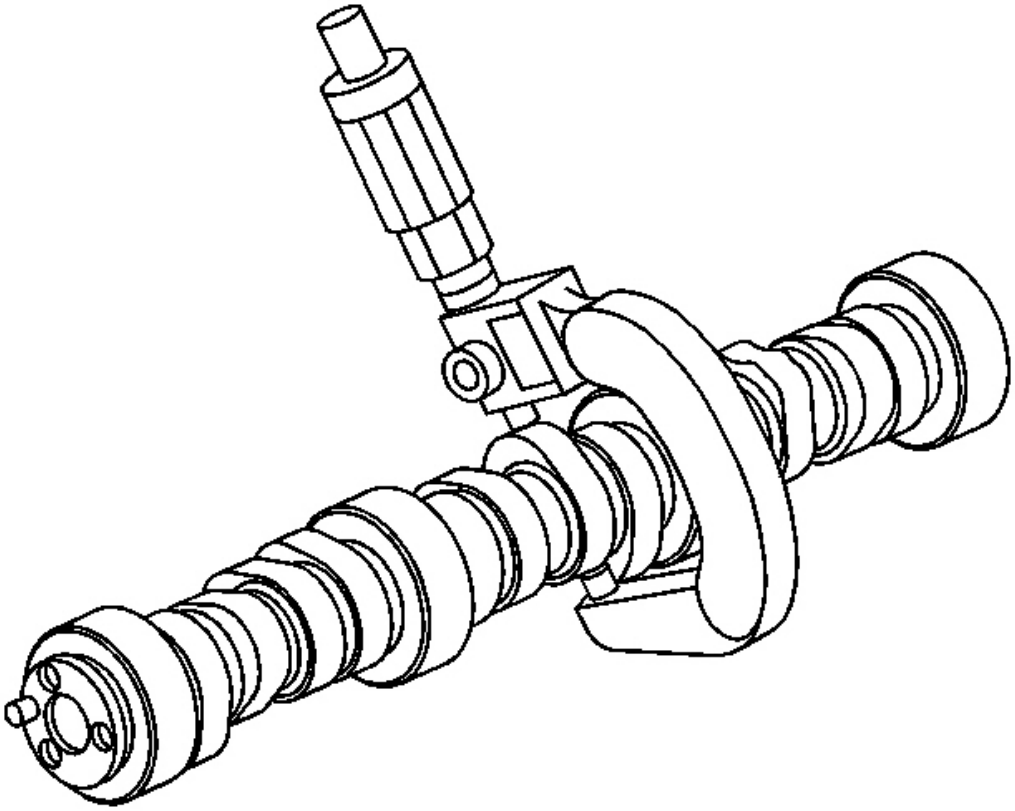

Fig. 177: Measuring The Camshaft Lobes For Wear
Courtesy of GENERAL MOTORS CORP.

12. Measure the camshaft lobes for wear with a micrometer.
    - An LS1 camshaft with an intake lobe that measures 46.31 mm (1.823 in) or less, must be replaced.
    - An LS1 camshaft with an exhaust lobe that measures 46.31 mm (1.823 in) or less, must be replaced.
    - An LS6 camshaft with an intake lobe that measures 46.24 mm (1.82 in) or less, must be replaced.
    - An LS6 camshaft with an exhaust lobe that measures 46.19 mm (1.818 in) or less, must be replaced.

cardiagn.com

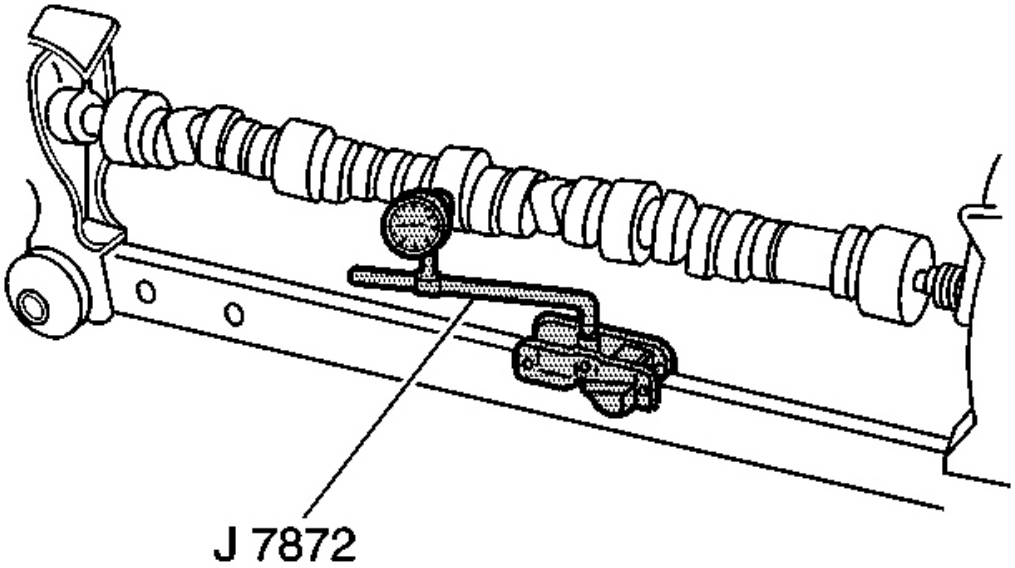

Fig. 178: Measuring The Camshaft Runout Using
Courtesy of GENERAL MOTORS CORP.

13. Measure the camshaft runout.
    1. Mount the camshaft in wooden V-blocks or between centers on a fixture.
    2. Check the runout of the intermediate camshaft bearing journals using the **J 7872** .
    3. If camshaft runout exceeds 0.05 mm (0.002 in), the camshaft is bent and should be replaced.

Measuring Camshaft Lobe Lift

cardiagn.com

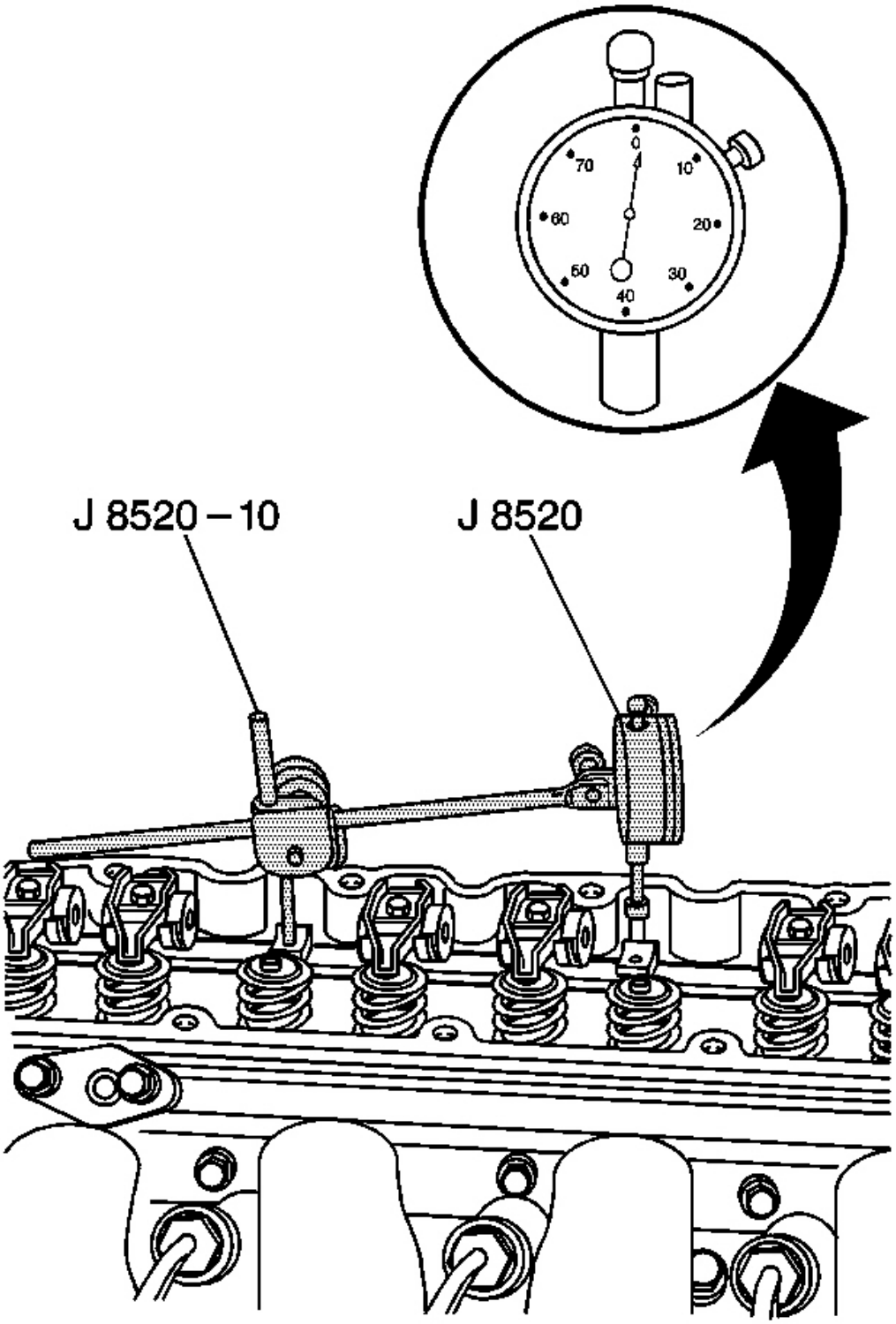

cardiagn.com

Fig. 179: Measuring Camshaft Lobe Lift Using
Courtesy of GENERAL MOTORS CORP.

IMPORTANT: Measuring camshaft lobe lift is a procedure used to determine if the camshaft lobes have worn. This test is to be performed prior to engine disassembly and with the camshaft and valve train components installed in the engine.

1. Measure camshaft lobe lift using **J 8520** .
    1. Remove the valve rocker arms and bolts
    2. Install the dial indicator mounting stud into the valve rocker arm bolt hole.
    3. Assemble the components of the **J 8520** and position onto the stud.
    4. Position the shaft of the dial indicator onto the end of the pushrod.
    5. Rotate the face of the dial indicator to zero.
    6. Slowly rotate the crankshaft clockwise until the dial indicator obtains its highest and lowest readings.
    7. Compare the total lift shown to specifications.
        - The proper lobe lift for the LS1 intake lobes is 6.96 mm (0.274 in).
        - The proper lobe lift for the LS1 exhaust lobes is 7.13 mm (0.281 in).
        - The proper lobe lift for the LS6 intake lobes is 8.24 mm (0.324 in).
        - The proper lobe lift for the LS6 exhaust lobes is 8.19 mm (0.322 in).
    8. Remove the tool.
2. Compare measurements to specifications.

    If the readings are not within specifications, remove the camshaft. Inspect and/or replace components as required.

CAMSHAFT BEARING INSTALLATION

Tools Required

J 33049 Camshaft Bearing Service Set

cardiagn.com

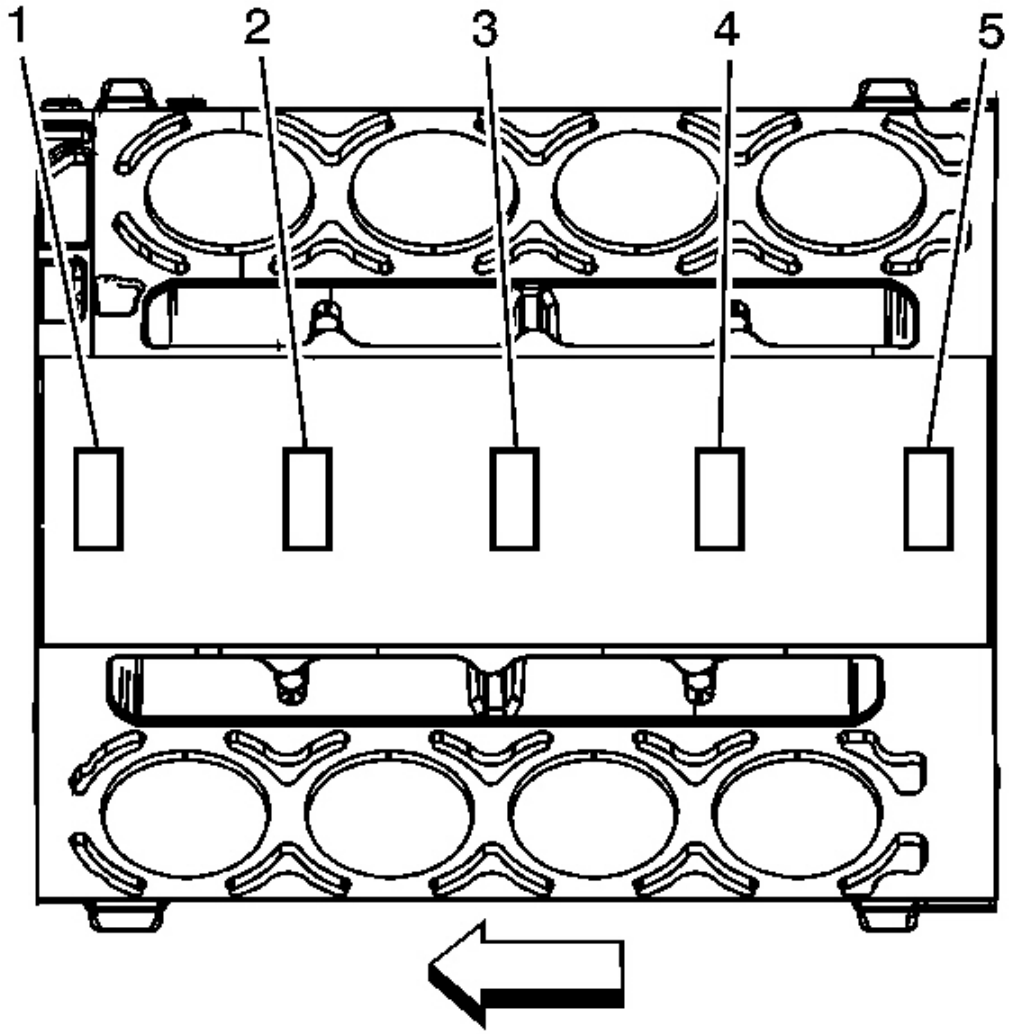

Fig. 180: Measuring The Engine Block Camshaft Bearing Bores (1-5)
Courtesy of GENERAL MOTORS CORP.

IMPORTANT: The engine block camshaft bearing bores are machined for 3 different OD size bearings. Positions 1 and 5 are the largest diameter bores. Position 3 is the smallest diameter bore. Positions 2 and 4 are the intermediate size bores. The ID for all camshaft bearings is the same size.

1. Measure the engine block camshaft bearing bores (1-5) to identify the correct OD size bearing for each position. Refer to **Engine Mechanical Specifications (LS1)** or **Engine Mechanical Specifications**

cardiagn.com

(LS6) .

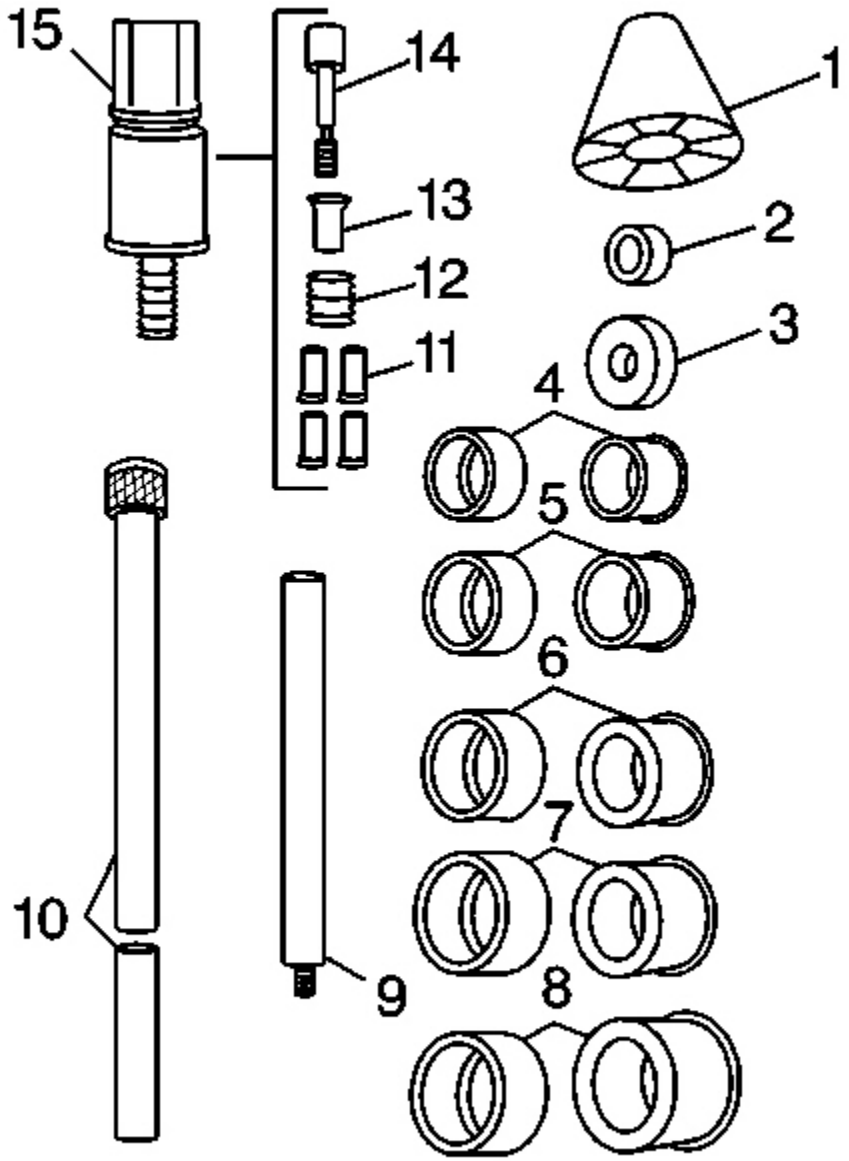

Fig. 181: J 33049 Camshaft Bearing Service Kit Components
Courtesy of GENERAL MOTORS CORP.

2. Select the expanding driver (4-8) and washer (2 or 3) from the **J 33049** . Refer to **Camshaft Bearing**

cardiagn.com

Removal .

3. Assemble the tool.

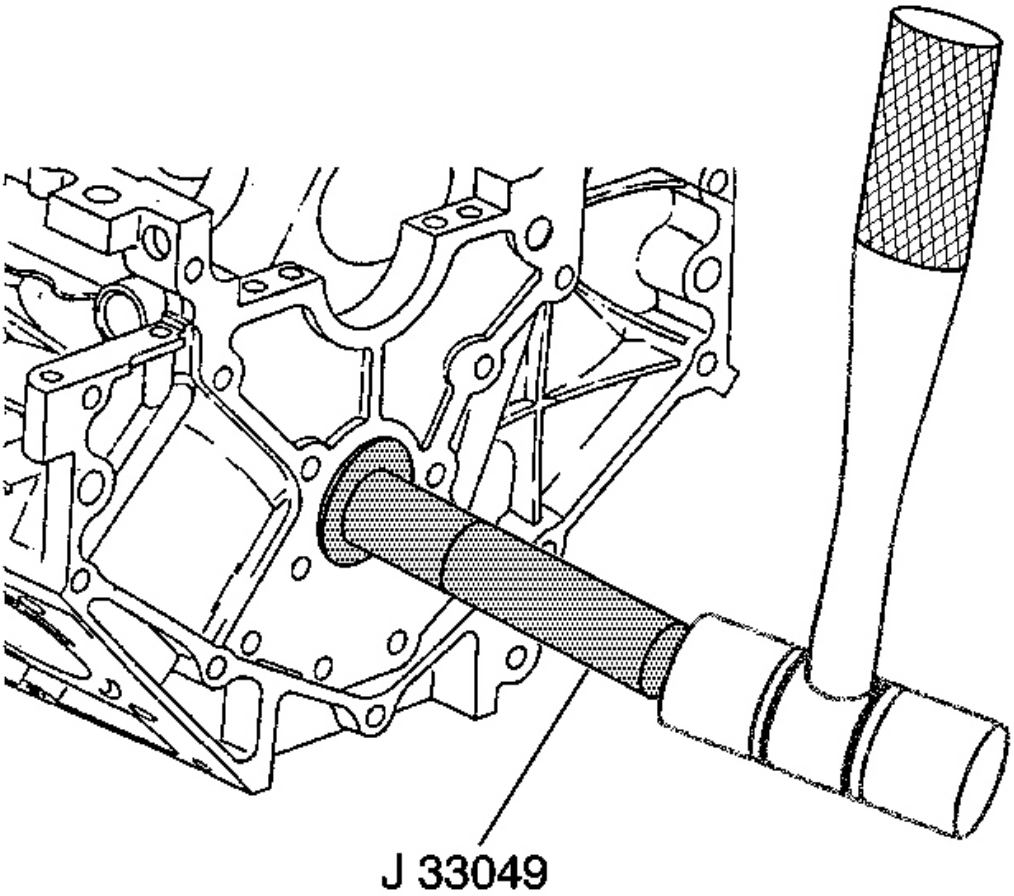

Fig. 182: Bearing & Block Bore
Courtesy of GENERAL MOTORS CORP.

4. Insert the tool through the front of the engine block and into the bearing.
5. Tighten the expander assembly nut until snug.
6. Push the guide cone into the front camshaft bearing to align the tool.
7. Drive the bearing into the block bore.
8. Repeat the above procedures to install the remaining bearings.

TIMING CHAIN AND SPROCKETS CLEANING AND INSPECTION

cardiagn.com

1. Clean the components with cleaning solvent.

CAUTION: Refer to Safety Glasses Caution in Cautions and Notices.

2. Dry the components with compressed air.

cardiagn.com

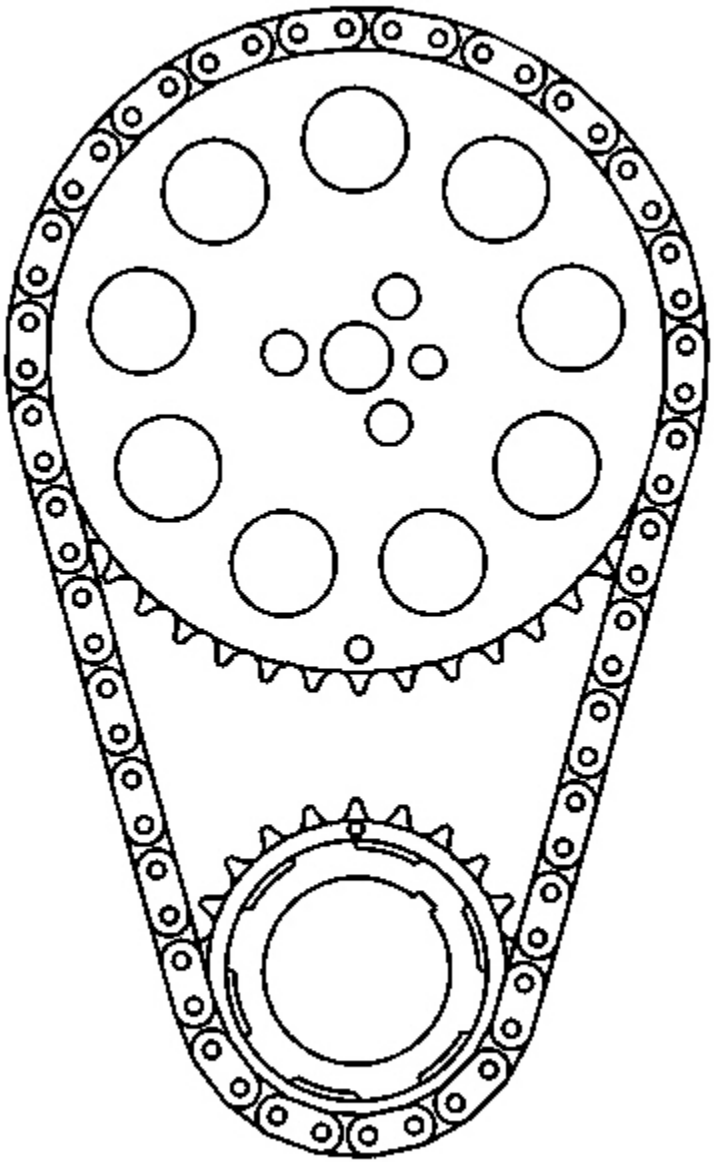

Fig. 183: View Of Camshaft & Crankshaft Sprockets Aligned
Courtesy of GENERAL MOTORS CORP.

3. Inspect the timing chain for binding or wear.

cardiagn.com

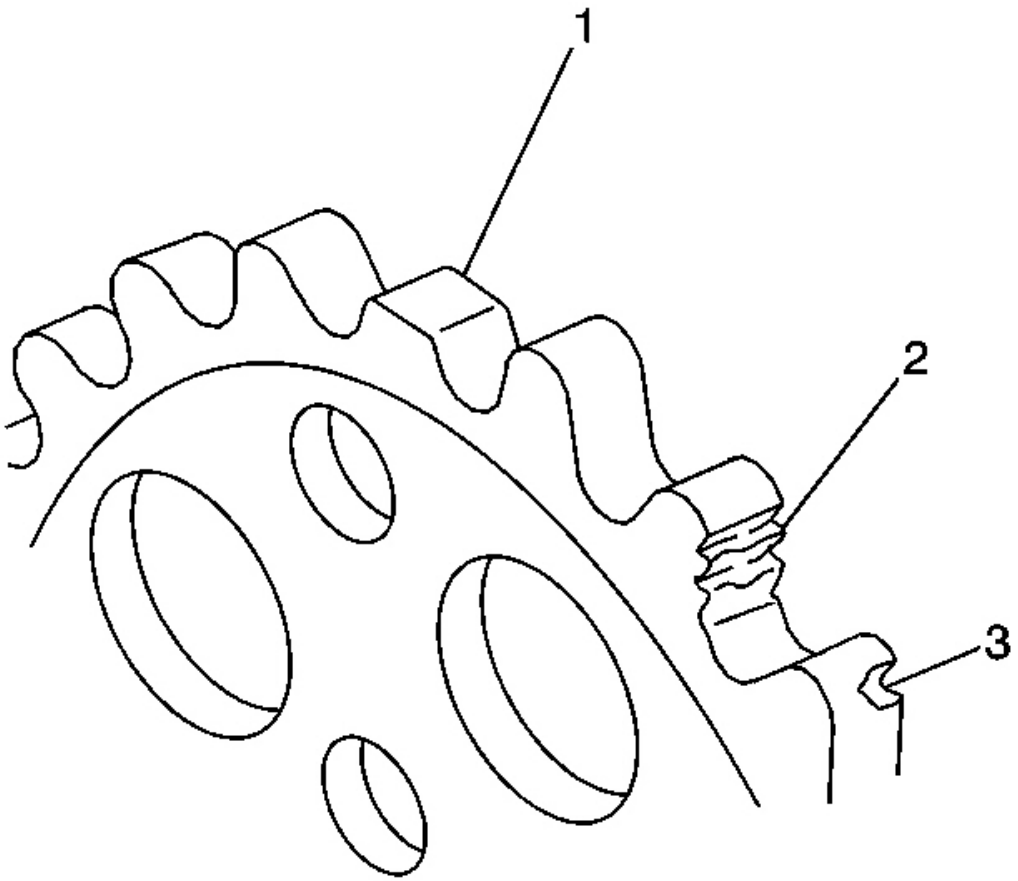

Fig. 184: Inspecting Camshaft & Crankshaft Sprockets For Damage
Courtesy of GENERAL MOTORS CORP.

4. Inspect the camshaft and crankshaft sprockets for:
    - Worn teeth (1)
    - Damaged teeth (2)
    - Chipped teeth (3)
    - Worn valleys between the sprocket teeth

cardiagn.com

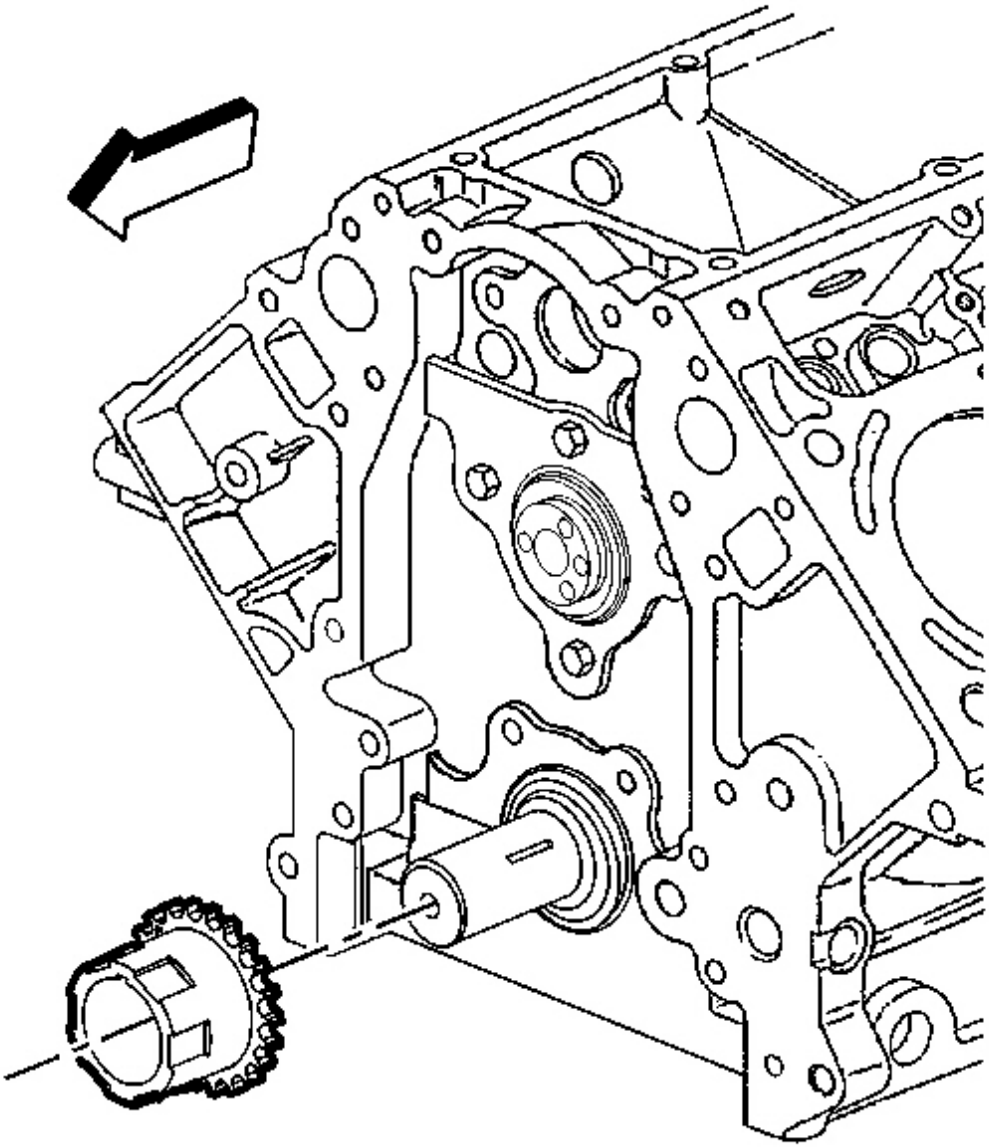

Fig. 185: View Of Crankshaft Sprocket
Courtesy of GENERAL MOTORS CORP.

5. Inspect the crankshaft sprocket keyway for wear.
6. Inspect the crankshaft sprocket oil pump drive splines for wear.

cardiagn.com

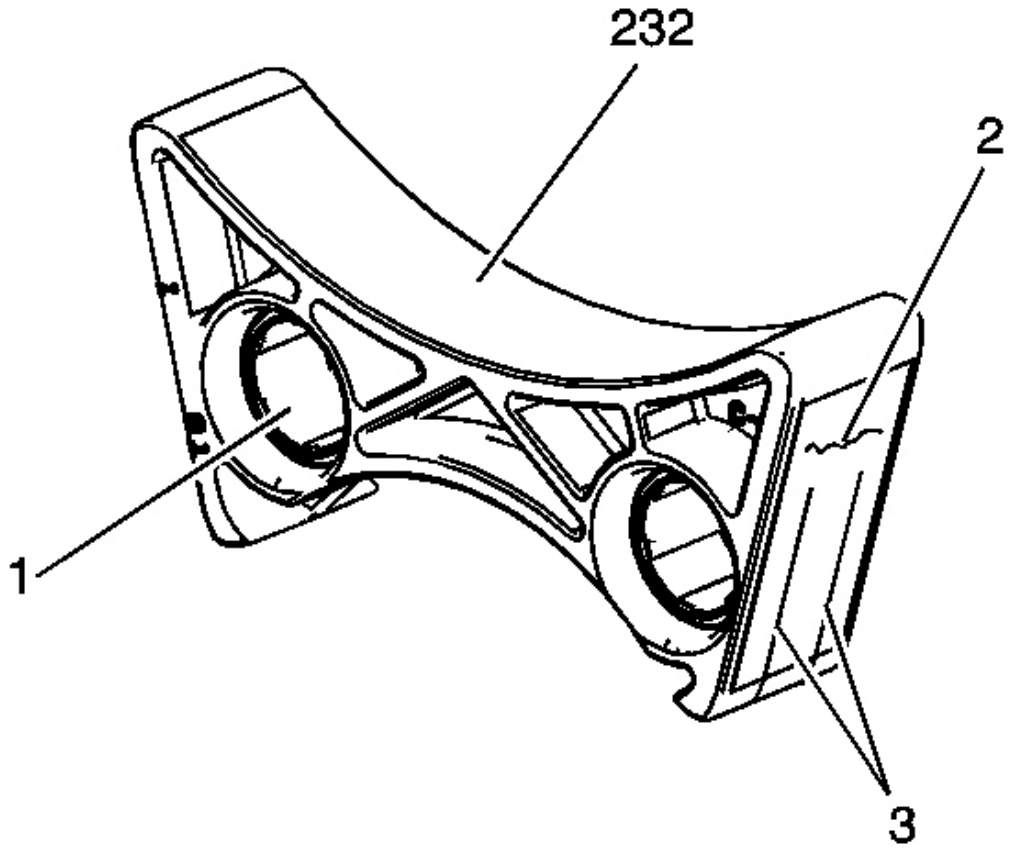

Fig. 186: Inspecting Chain Dampener For Damage
Courtesy of GENERAL MOTORS CORP.

7. Inspect the chain dampener (232) for the following conditions:
   - Loose metal inserts (1)
   - Cracking (2) in the chain contact area
   - Excessive grooves (3) in the chain contact area

   Grooves 1 mm (0.040 in) or less in depth are to be considered normal wear.

VALVE ROCKER ARM AND PUSH RODS CLEANING AND INSPECTION

cardiagn.com

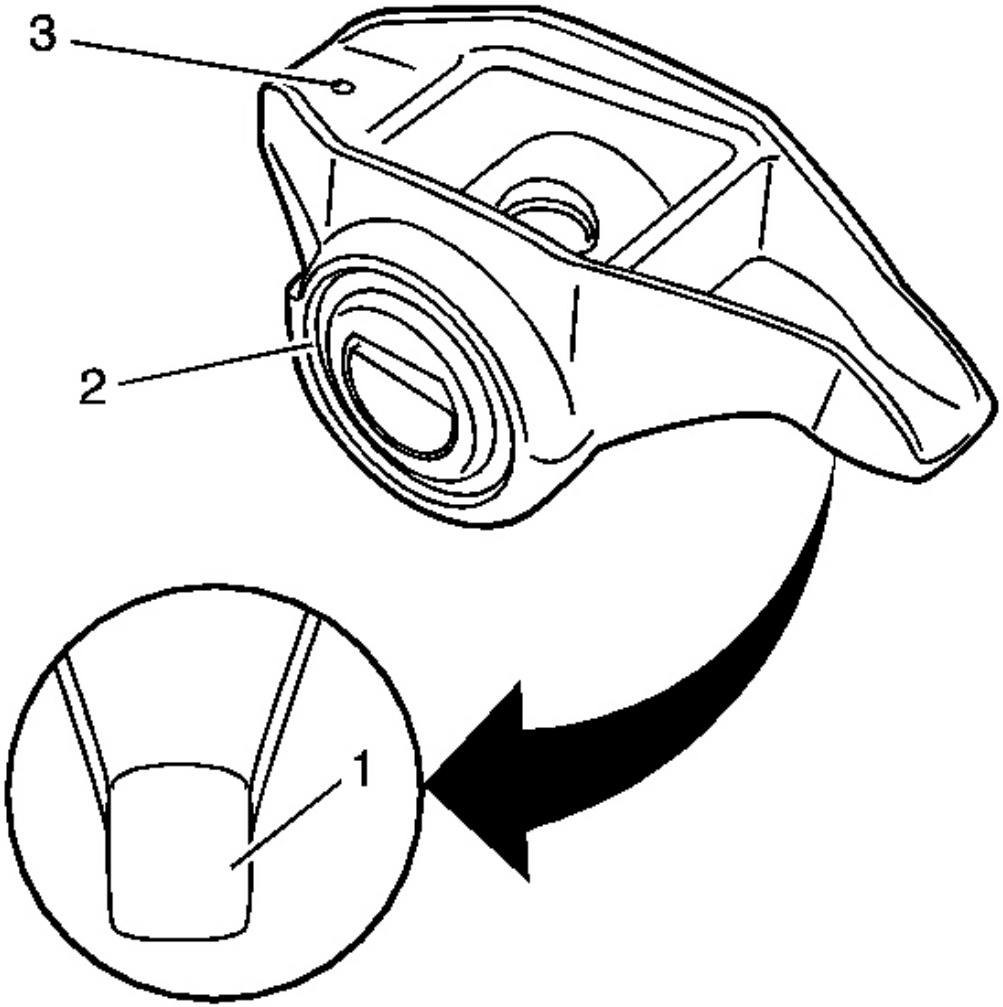

Fig. 187: View Of Valve Stem Mating Surfaces, Valve Rocker Arms Bearing & Pushrod Sockets
Courtesy of GENERAL MOTORS CORP.

IMPORTANT: Parts that are to be used again must be marked, sorted or organized for assembly.

1. Mark, sort, or organize the components for assembly. Refer to **Separating Parts** .
2. Clean the components with cleaning solvent.

CAUTION: Refer to Safety Glasses Caution in Cautions and Notices.

cardiagn.com

3. Dry the components with compressed air.
4. Inspect the valve rocker arms bearings (2) for binding or roughness.
5. Inspect the valve rocker arm pushrod sockets (3) and valve stem mating surfaces (1). These surfaces should be smooth with no scoring or exceptional wear.

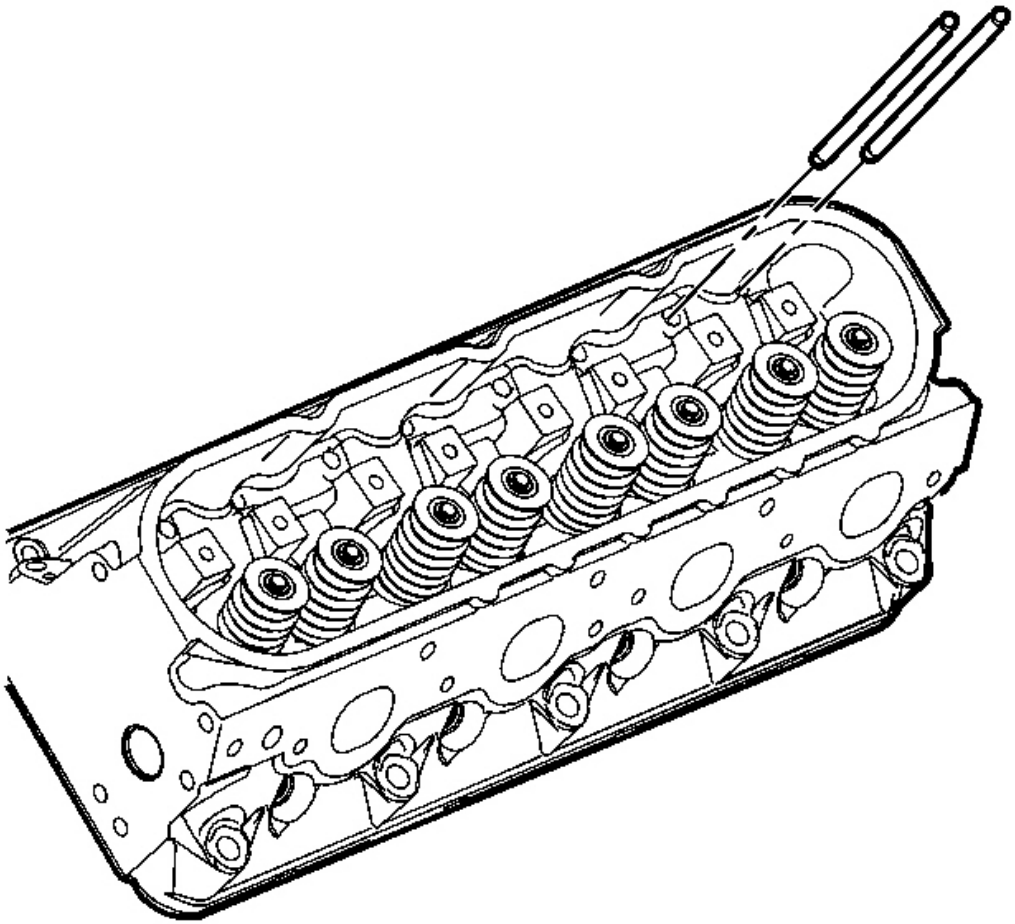

Fig. 188: View Of Pushrods
Courtesy of GENERAL MOTORS CORP.

6. Inspect the pushrods for worn or scored ends. These surfaces should be smooth with no scoring or exceptional wear.
7. Inspect the pushrods for bends. Roll the pushrod on a flat surface to determine if the pushrod is bent.
8. Inspect the pushrod oil passages for restrictions.

cardiagn.com

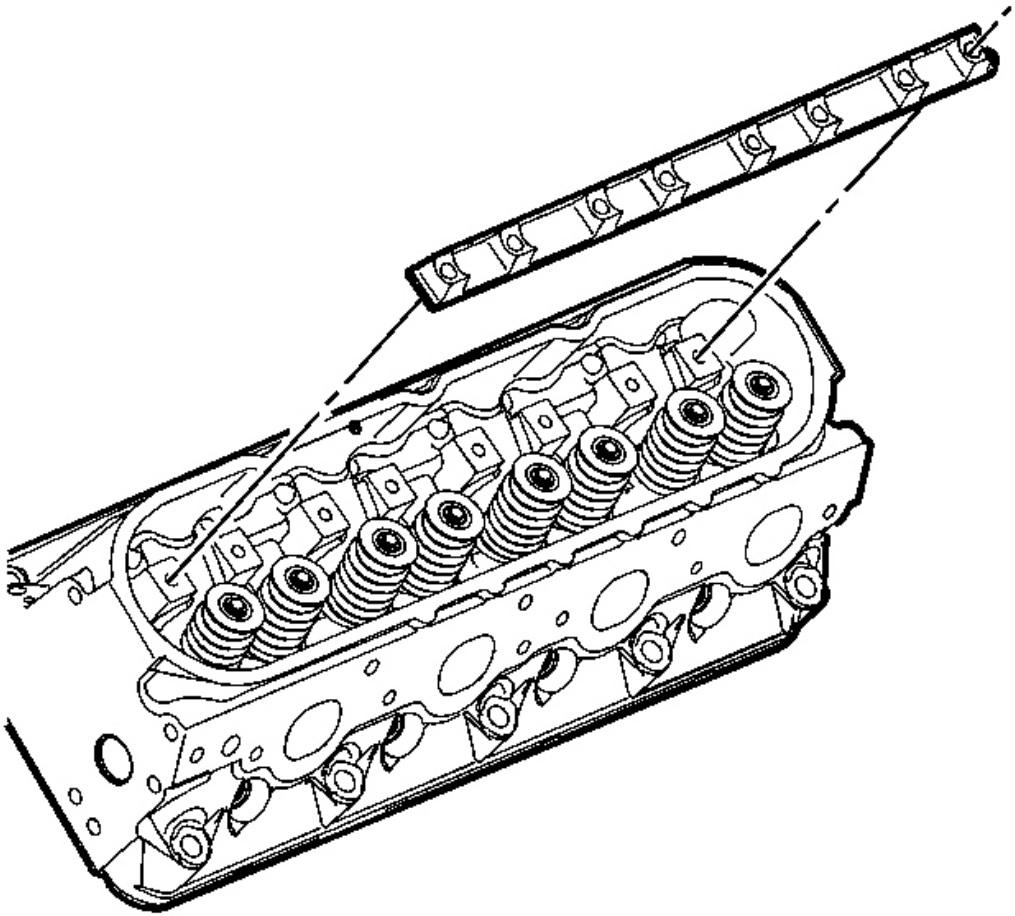

Fig. 189: View Of Valve Rocker Arm Pivot Support
Courtesy of GENERAL MOTORS CORP.

9. Inspect the pivot supports for cracks, wear, or other damage.

VALVE LIFTERS AND GUIDES CLEANING AND INSPECTION

cardiagn.com

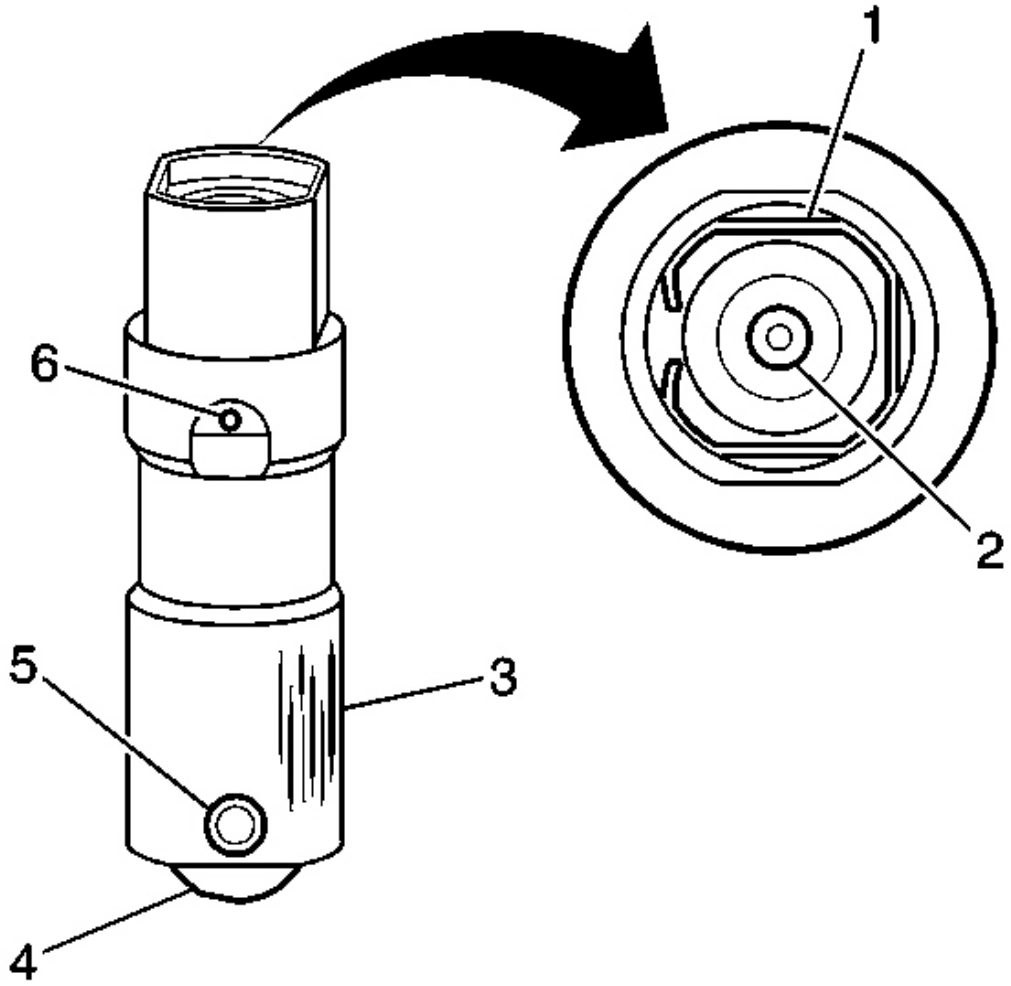

Fig. 190: Inspecting The Valve Lifters For Damage
Courtesy of GENERAL MOTORS CORP.

IMPORTANT: Components that are to be used again must be marked, sorted or organized for assembly.

1. Mark, sort, or organize the components for assembly. Refer to **Separating Parts** .
2. Clean the components in cleaning solvent.

CAUTION: Refer to Safety Glasses Caution in Cautions and Notices.

cardiagn.com

3. Dry the components with compressed air.
4. Inspect the valve lifters for the following conditions:
    - Bent or broken clip (1)
    - Worn pushrod socket (2)
    - Scuffed or worn sides (3)

      If the valve lifter shows wear, inspect the engine block lifter bores for wear or damage.

    - Flat spots on the roller (4)
    - Loose or damaged pin (5)
    - Plugged oil hole (6)
    - Worn or damaged roller bearing

      The roller should rotate freely with no binding or roughness.

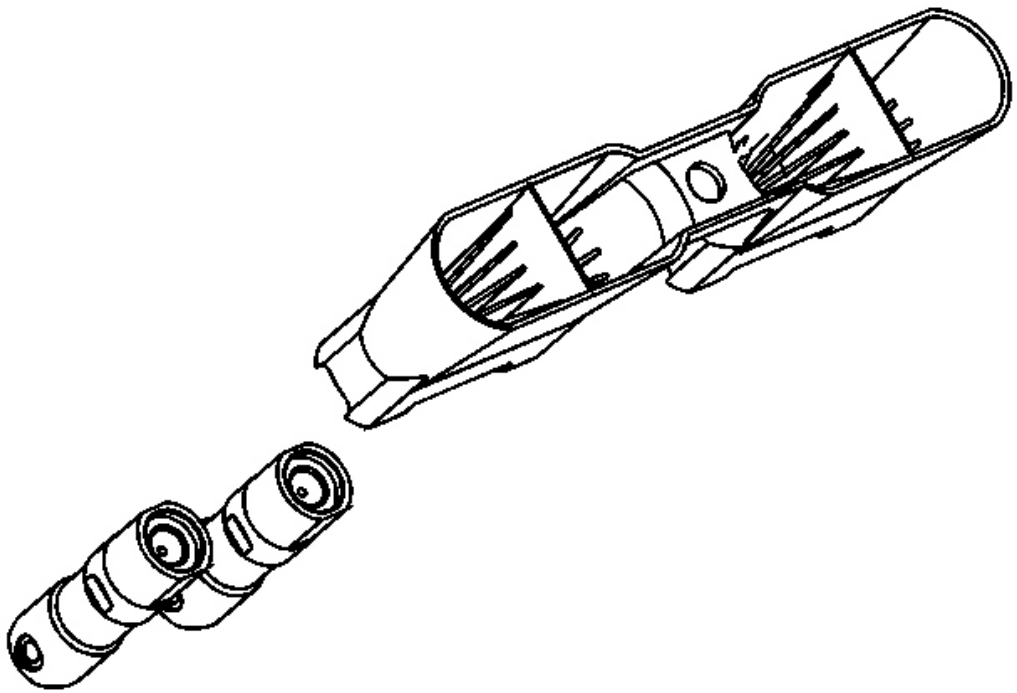

Fig. 191: View Of Valve Lifters Removed From Guide
Courtesy of GENERAL MOTORS CORP.

5. Inspect the valve lifter guides for the following:

cardiagn.com

- For cracks or damage
- Excessive wear in the lifter mounting bores

CYLINDER HEAD DISASSEMBLE

Tools Required

J 8062 Valve Spring Compressor

cardiagn.com

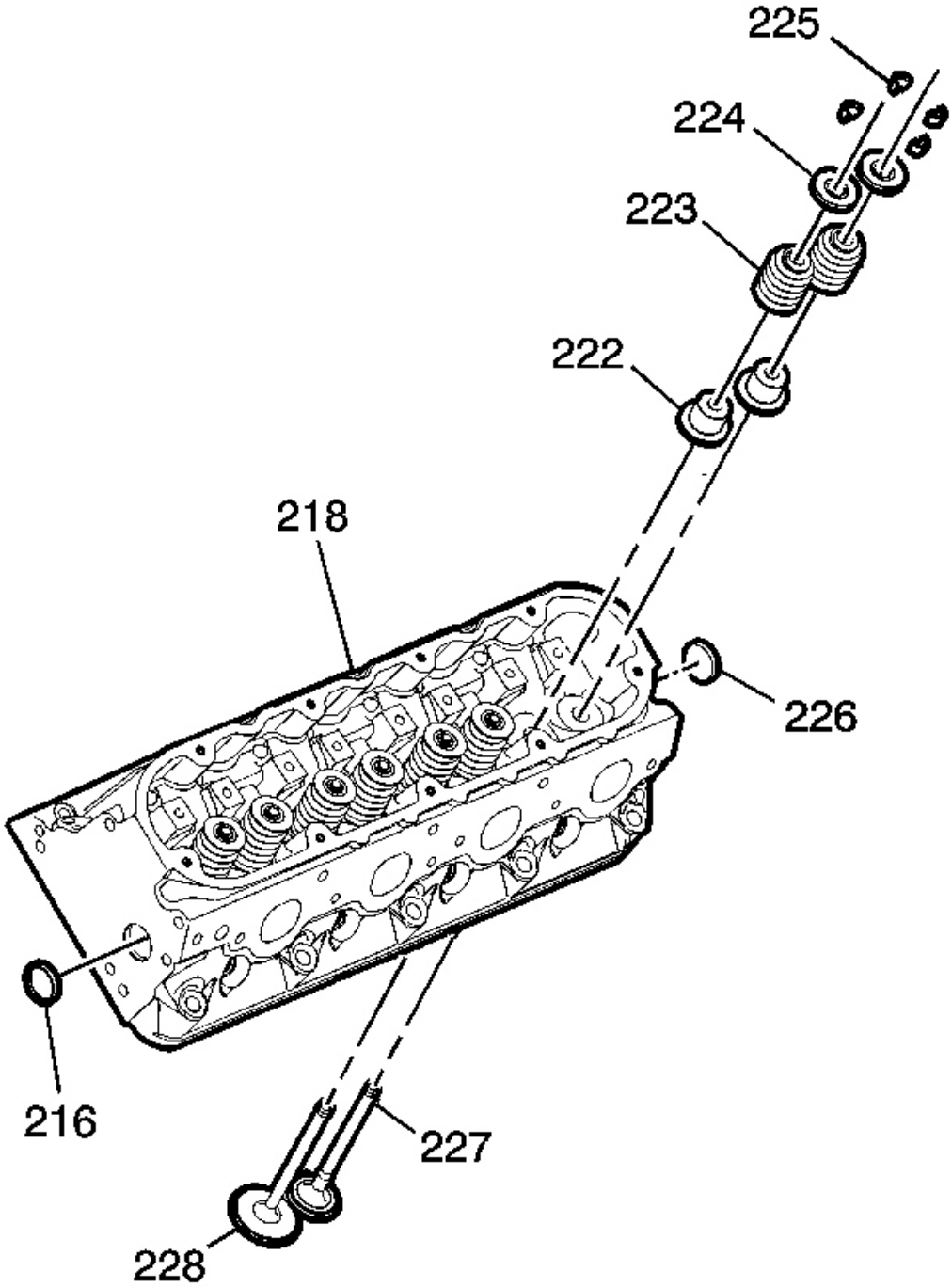

Fig. 192: View Of Cylinder Head Components
Courtesy of GENERAL MOTORS CORP.

cardiagn.com

IMPORTANT:

- **Remove the spark plugs from the cylinder head with the components at room temperature.**
- **Mark, organize, or sort the cylinder head components for assembly. Return the components to their original location during assembly.**
- **Do not remove the cylinder head expansion plugs (226) unless service is required.**

1. Remove the spark plugs from the cylinder heads.

cardiagn.com

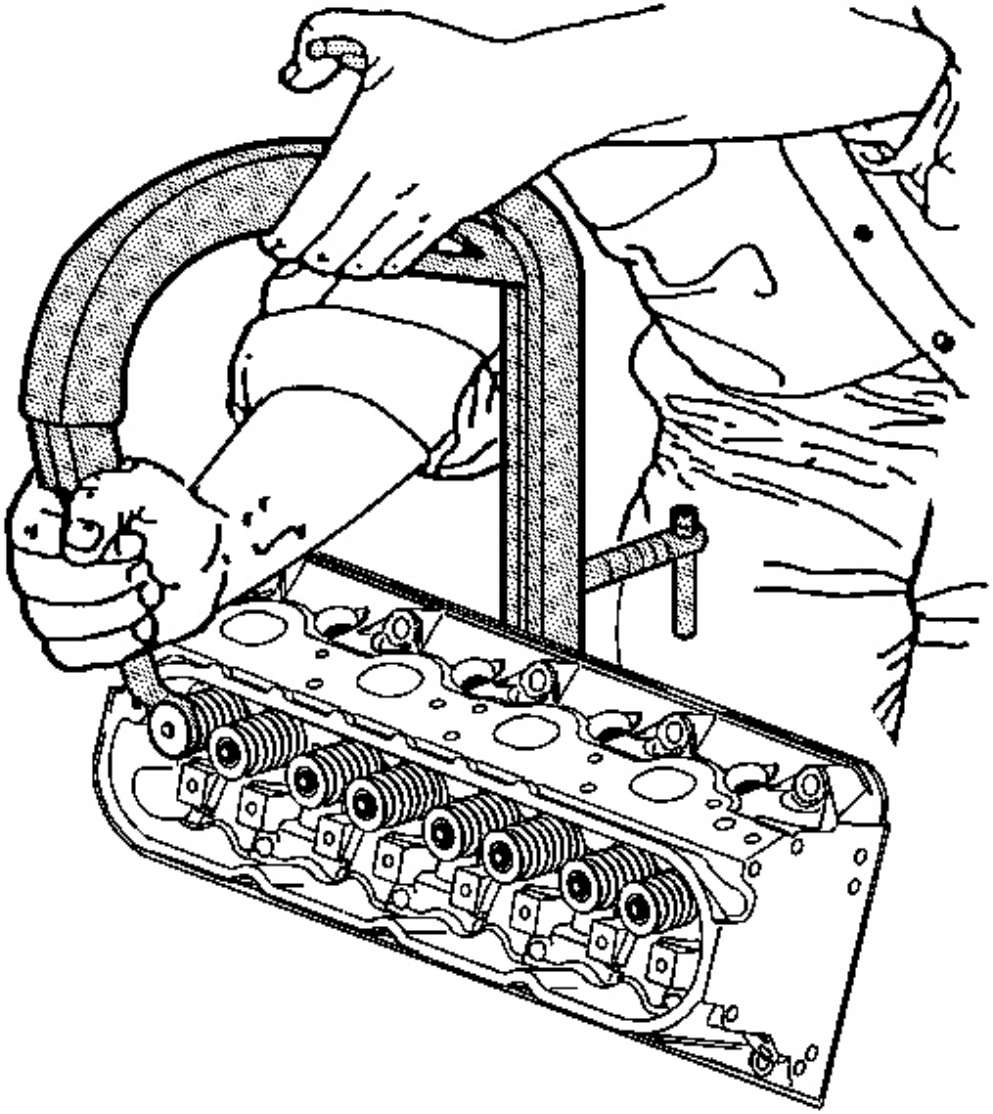

Fig. 193: Compressing The Valve Spring Using J 8062
Courtesy of GENERAL MOTORS CORP.

2. Use the **J 8062** in order to compress the valve spring.

cardiagn.com

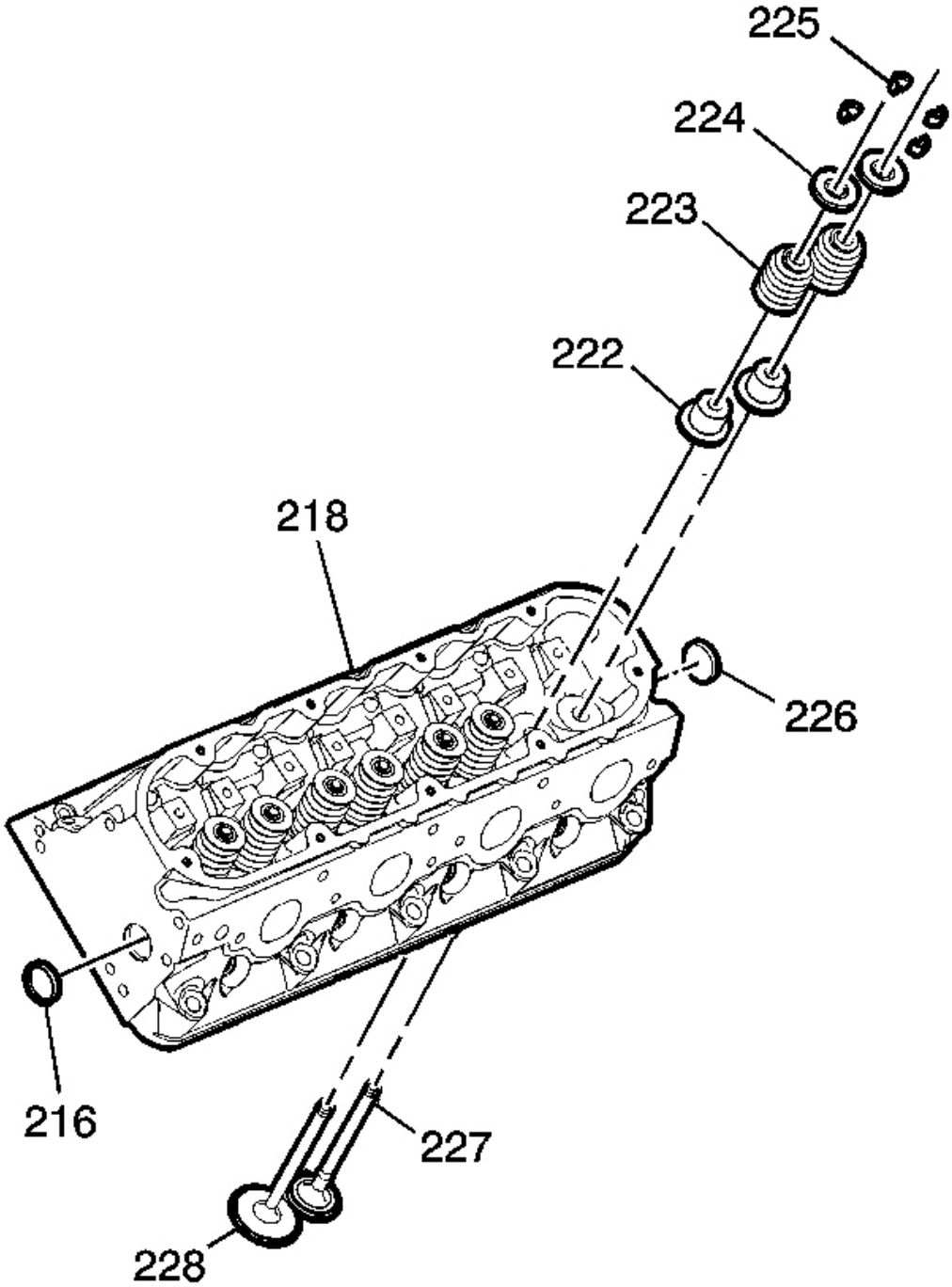

Fig. 194: View Of Cylinder Head Components
Courtesy of GENERAL MOTORS CORP.

cardiagn.com

3. Remove the valve stem keys (225).
4. Remove the valve spring cap (224).
5. Remove the valve spring (223).
6. Remove the valves (227 and 228).
7. Remove the valve stem oil seal (222). Refer to **Separating Parts** .

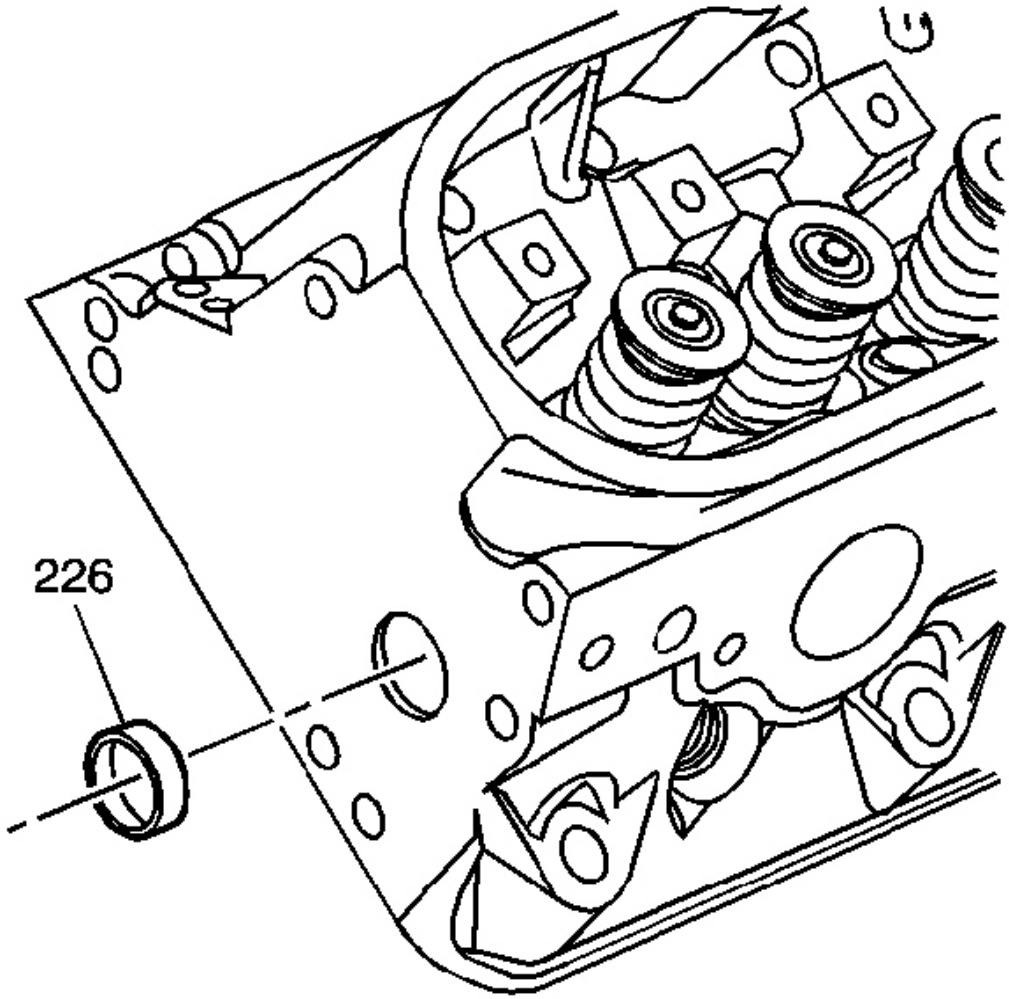

Fig. 195: View Of Cylinder Head Expansion Plugs
Courtesy of GENERAL MOTORS CORP.

8. Remove the cylinder head expansion plugs (226), if required.

cardiagn.com

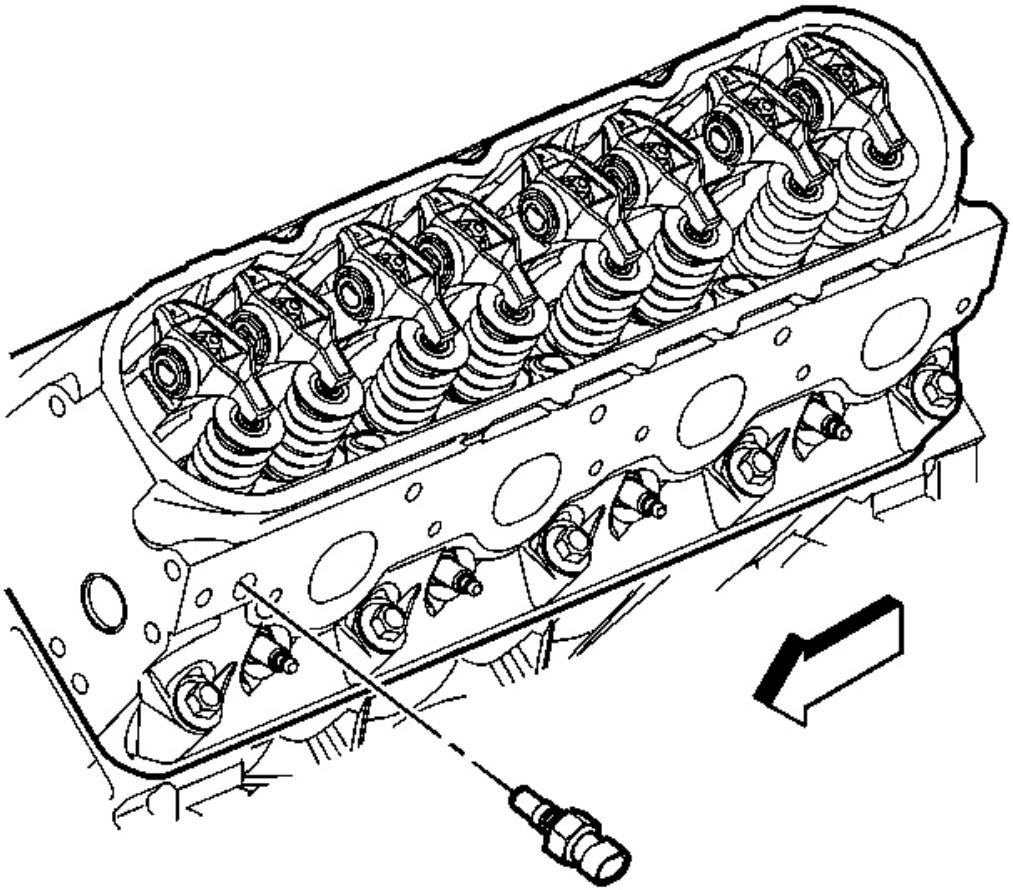

Fig. 196: View Of Coolant Temperature Sensor (Left Cylinder Head)
Courtesy of GENERAL MOTORS CORP.

9. Remove the coolant sensor from the left cylinder head.

cardiagn.com

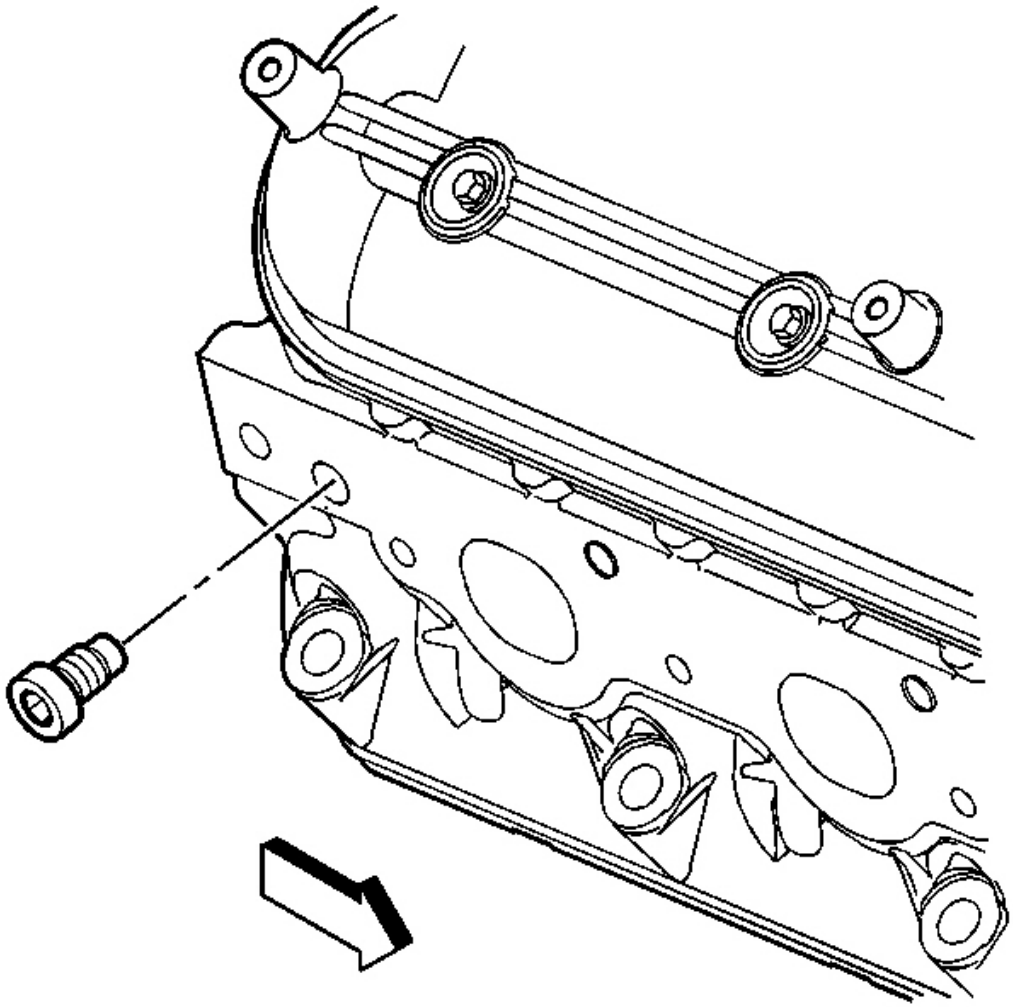

Fig. 197: View Of Coolant Plug (Right Cylinder Head)
Courtesy of GENERAL MOTORS CORP.

10. Remove the coolant plug from the right cylinder head.

CYLINDER HEAD CLEANING AND INSPECTION

Tools Required

- J 8089 Carbon Removing Brush
- J 9666 Valve Spring Tester

cardiagn.com

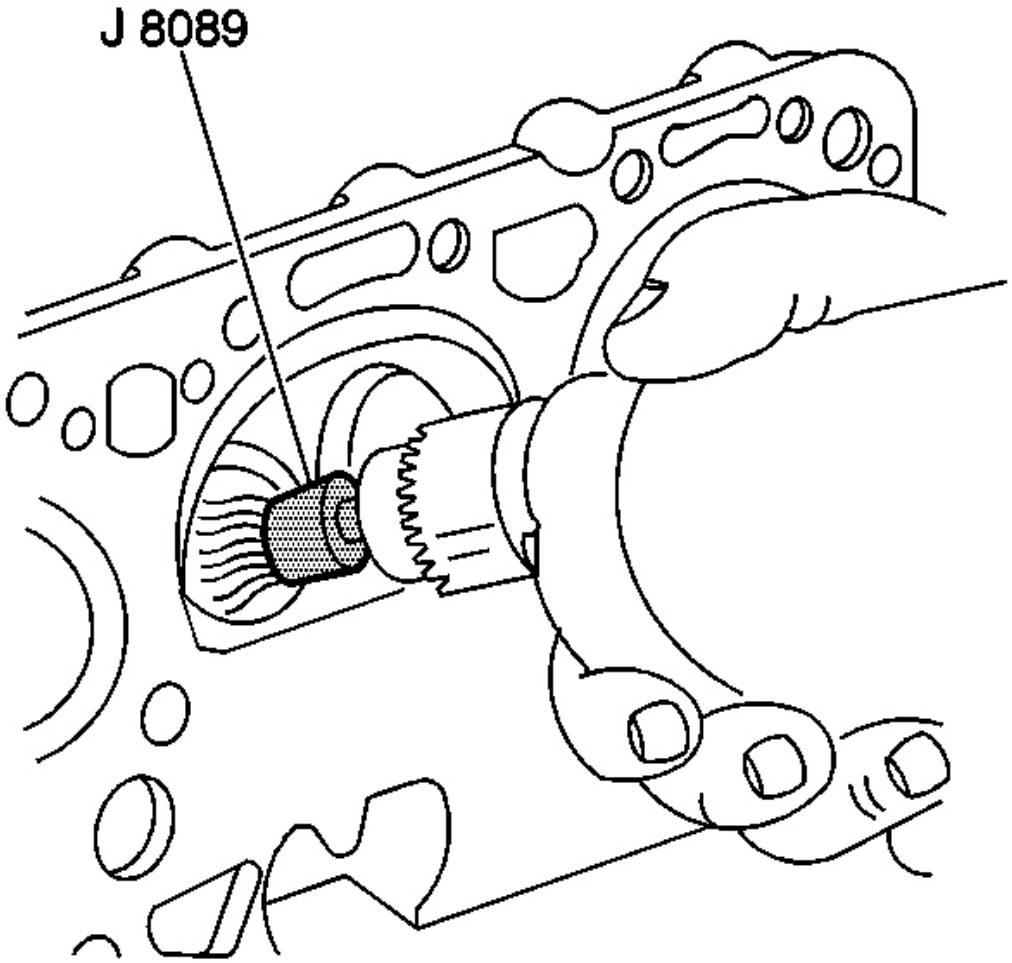

Fig. 198: Cleaning The Carbon From Combustion Chambers Using J 8089
Courtesy of GENERAL MOTORS CORP.

CAUTION: Refer to Safety Glasses Caution in Cautions and Notices.

IMPORTANT: When cleaning a cylinder head in a thermal type oven, do not exceed 204° C (400°F).

1. Clean the following components:

IMPORTANT: Be careful not to scuff the chamber.

cardiagn.com

- Use the J 8089 in order to remove the carbon from the combustion chambers.
- Gasket surfaces

  Refer to **Replacing Engine Gaskets** .

- Valve stems and heads on a buffing wheel
- Bolt hole threads

  Remove all dirt, debris, or threadlocking material from the bolt holes.

cardiagn.com

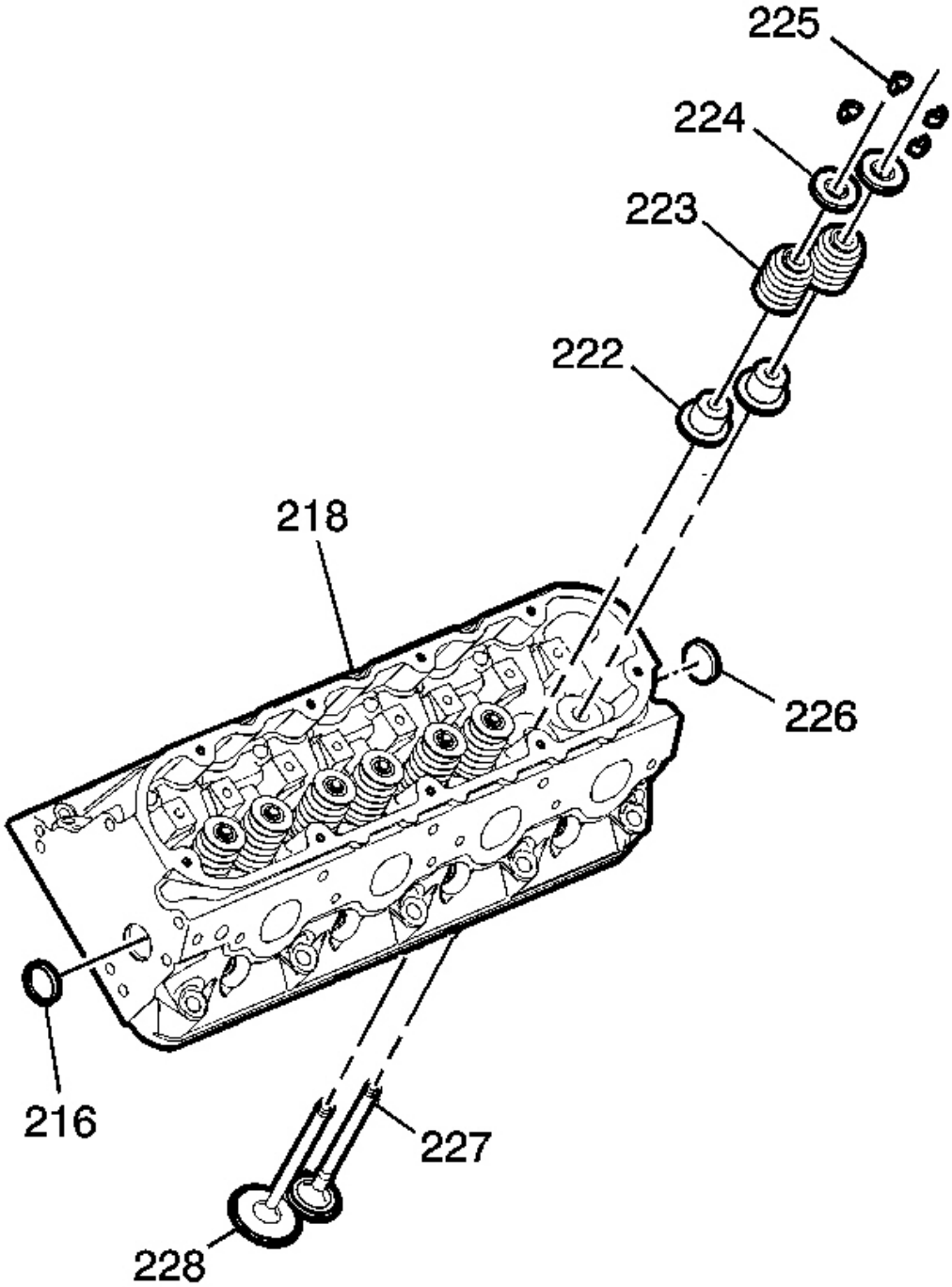

Fig. 199: View Of Cylinder Head Components
Courtesy of GENERAL MOTORS CORP.

cardiagn.com

2. Inspect for the following conditions:
    1. The cylinder head (218) for cracks in the exhaust ports and combustion chambers
    2. The cylinder head for external cracks in the water chambers
    3. The gasket surfaces for excessive scratches or gouging

       Refer to **Replacing Engine Gaskets** .

    4. The bolt hole threads for debris or damaged threads

       Refer to **Thread Repair** or **Thread Repair Specifications** .

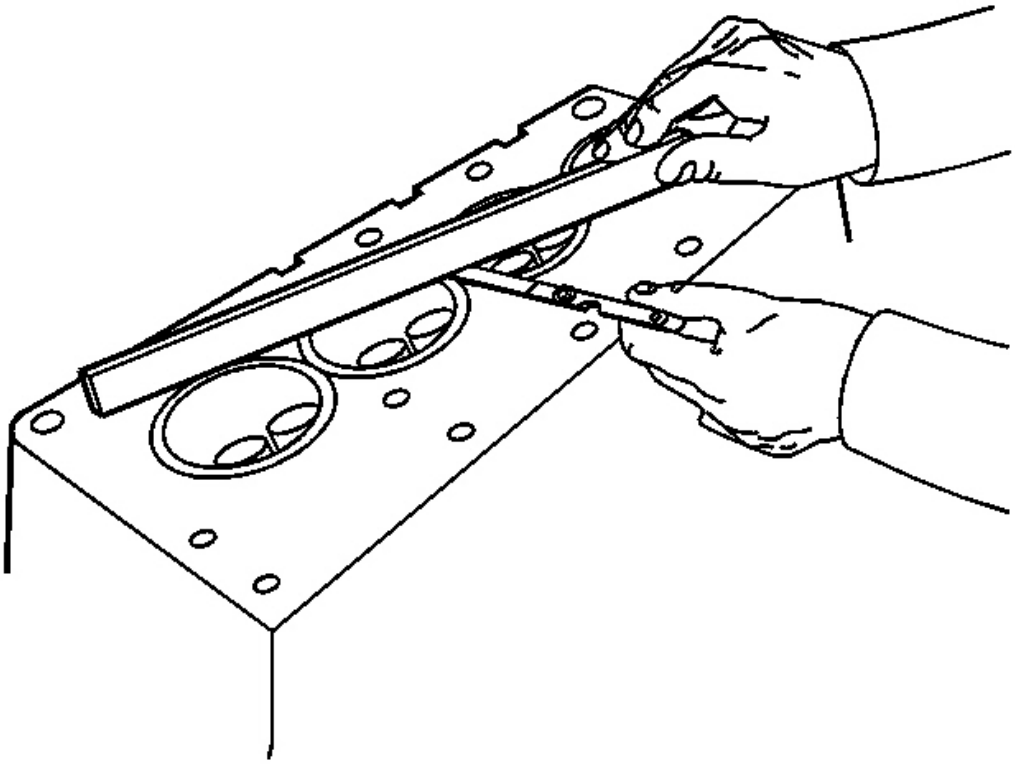

Fig. 200: Inspecting The Cylinder Head For Warpage
Courtesy of GENERAL MOTORS CORP.

3. Inspect the cylinder head for warpage.

cardiagn.com

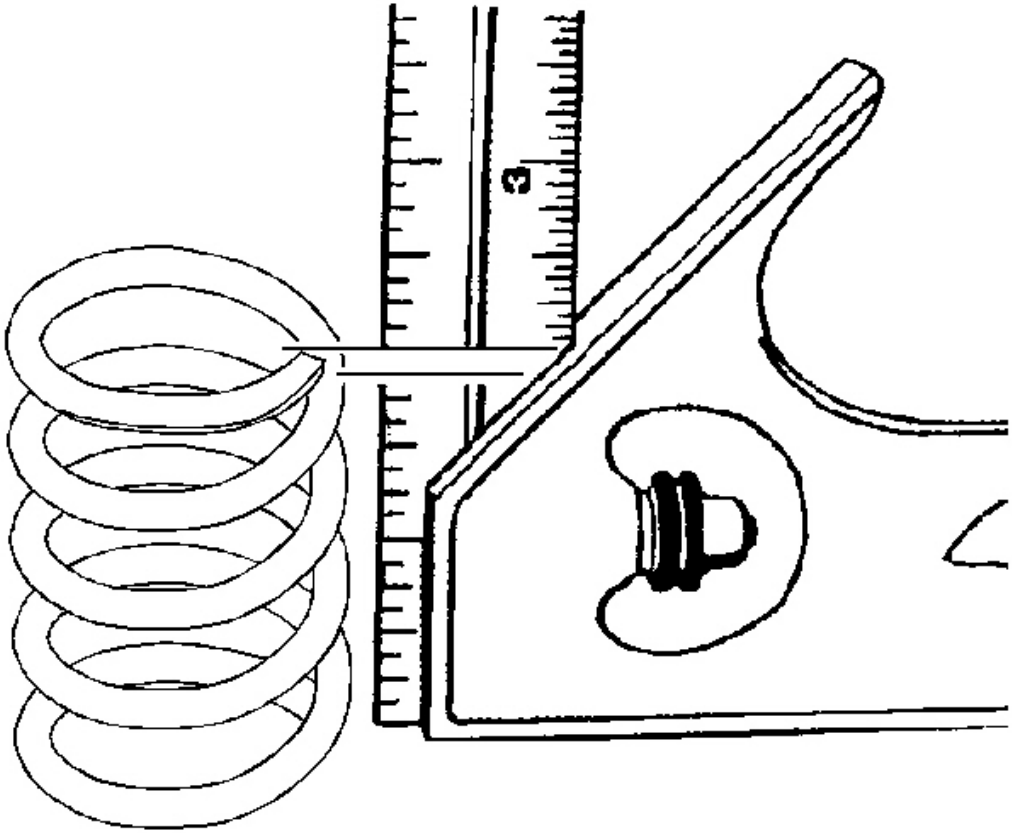

Fig. 201: Inspecting Valve Spring For Squareness
Courtesy of GENERAL MOTORS CORP.

4. Inspect the valve springs for squareness.

cardiagn.com

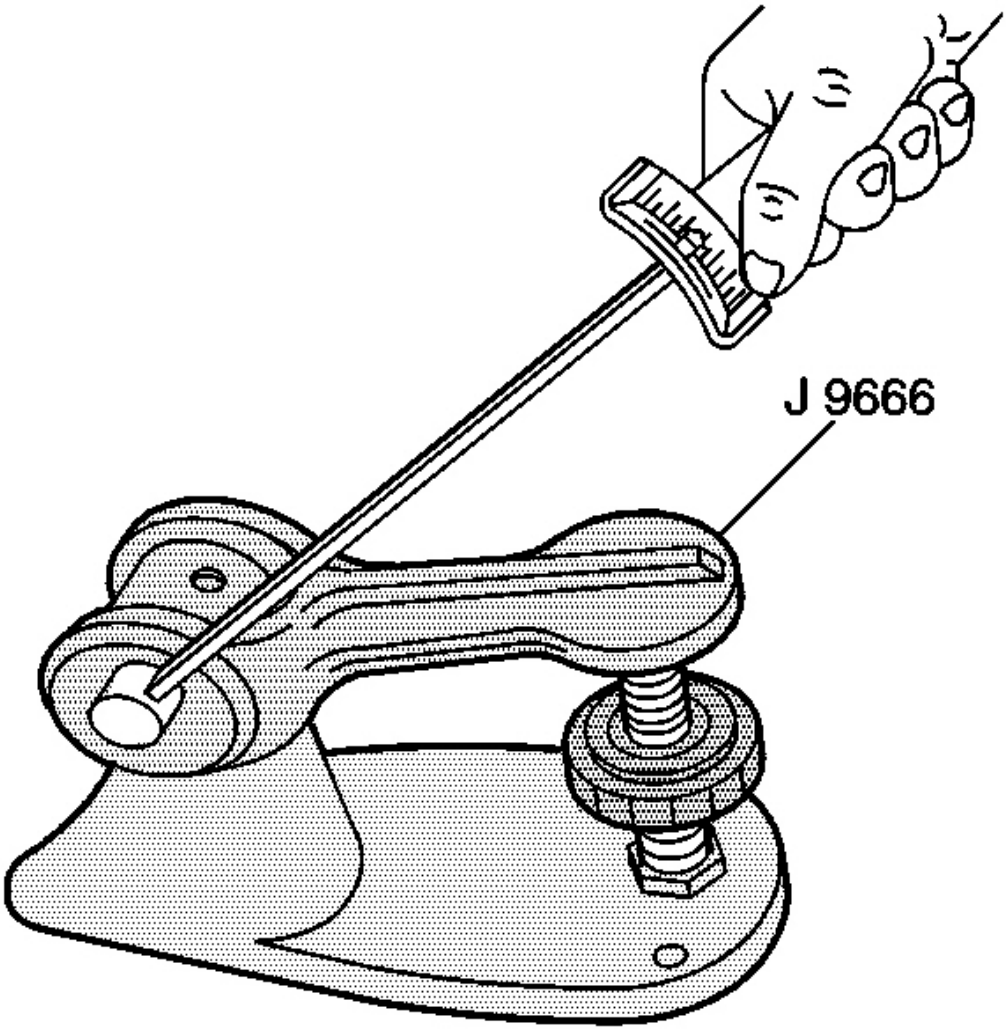

Fig. 202: Measuring The Valve Spring Using J 9666
Courtesy of GENERAL MOTORS CORP.

5. Use the J 9666 in order to measure the valve spring tension.
    - Replace the LS1 spring if the spring tension is less than 310 N (70 lb) at 45.75 mm (1.80 in).
    - Replace the LS6 spring if the spring tension is less than 400 N (90 lb) at 45.75 mm (1.80 in).

VALVE GUIDE REAMING/VALVE AND SEAT GRINDING

Valve Guide Reaming

cardiagn.com

Tools Required

J 37378-1 Valve Guide Reamer

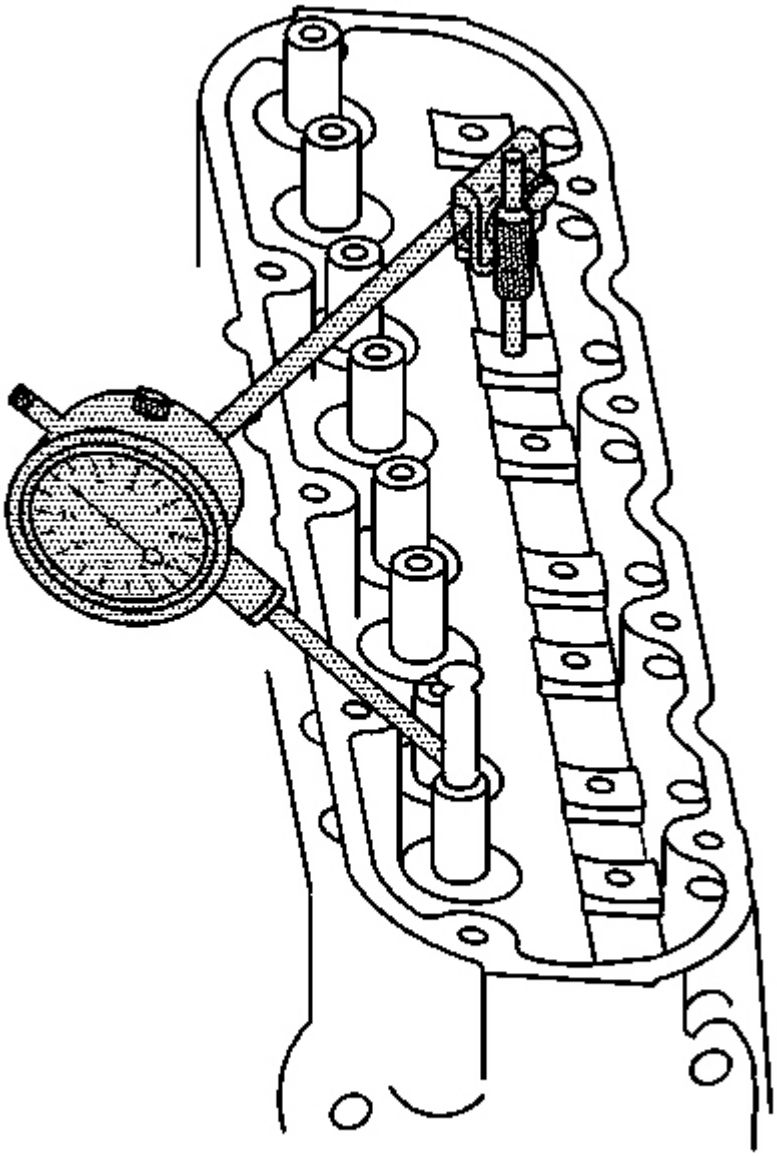

Fig. 203: Measuring The Valve Stem-To-Guide Clearance Using Dial Indicator
Courtesy of GENERAL MOTORS CORP.

cardiagn.com

IMPORTANT:

- **Excessive valve stem-to-guide clearance may cause a noisy valve train, premature valve stem oil seal wear, component damage, and/or excessive engine oil consumption.**
- **Insufficient valve stem-to-guide clearance will result in noisy or sticking valves. Valves that are too tight may disturb engine smoothness or lead to component damage.**

1. Measure the valve stem-to-guide clearance using a dial indicator.

   Valve stem-to-guide clearance may also be obtained by using a micrometer to measure the valve stem diameter and a ball type measuring gage to measure the guide bore.

cardiagn.com

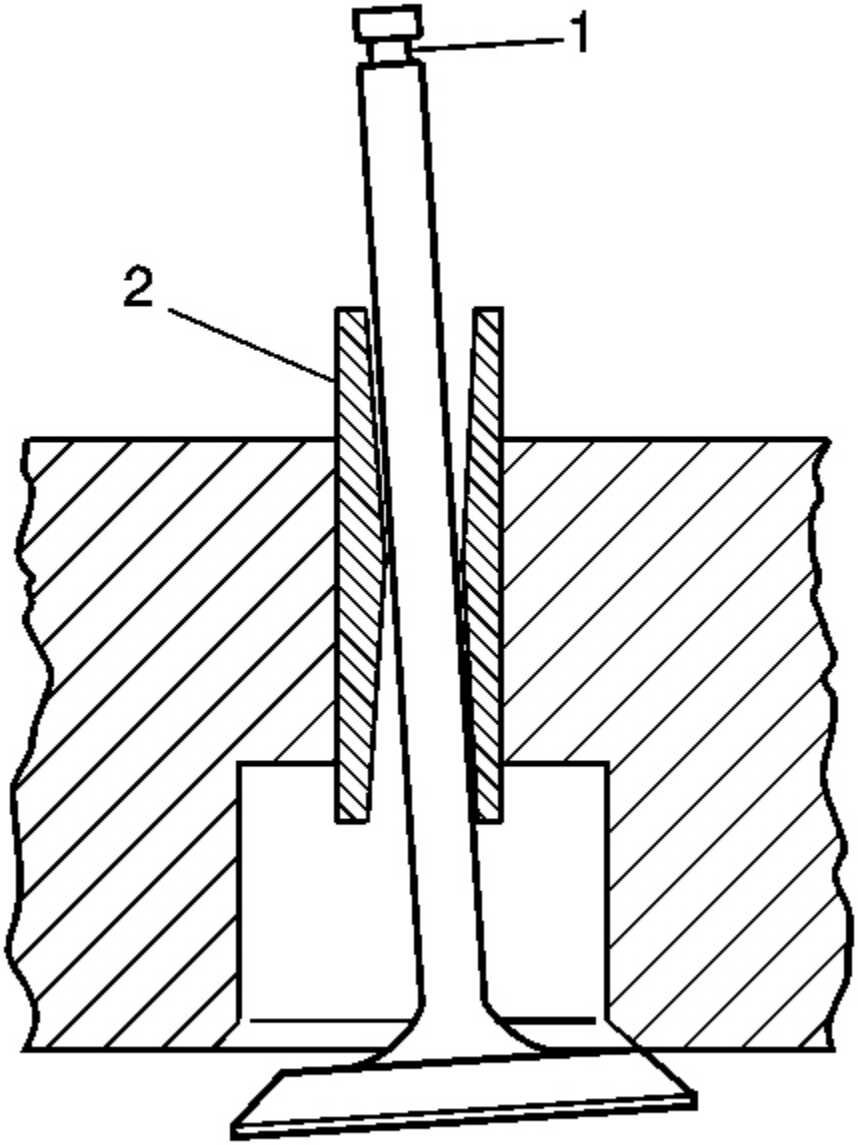

Fig. 204: Valve Stem & Guide
Courtesy of GENERAL MOTORS CORP.

2. A valve stem (1) and guide (2) with clearance in excess of 0.093 mm (0.0037 in) must be repaired or the components replaced.

cardiagn.com

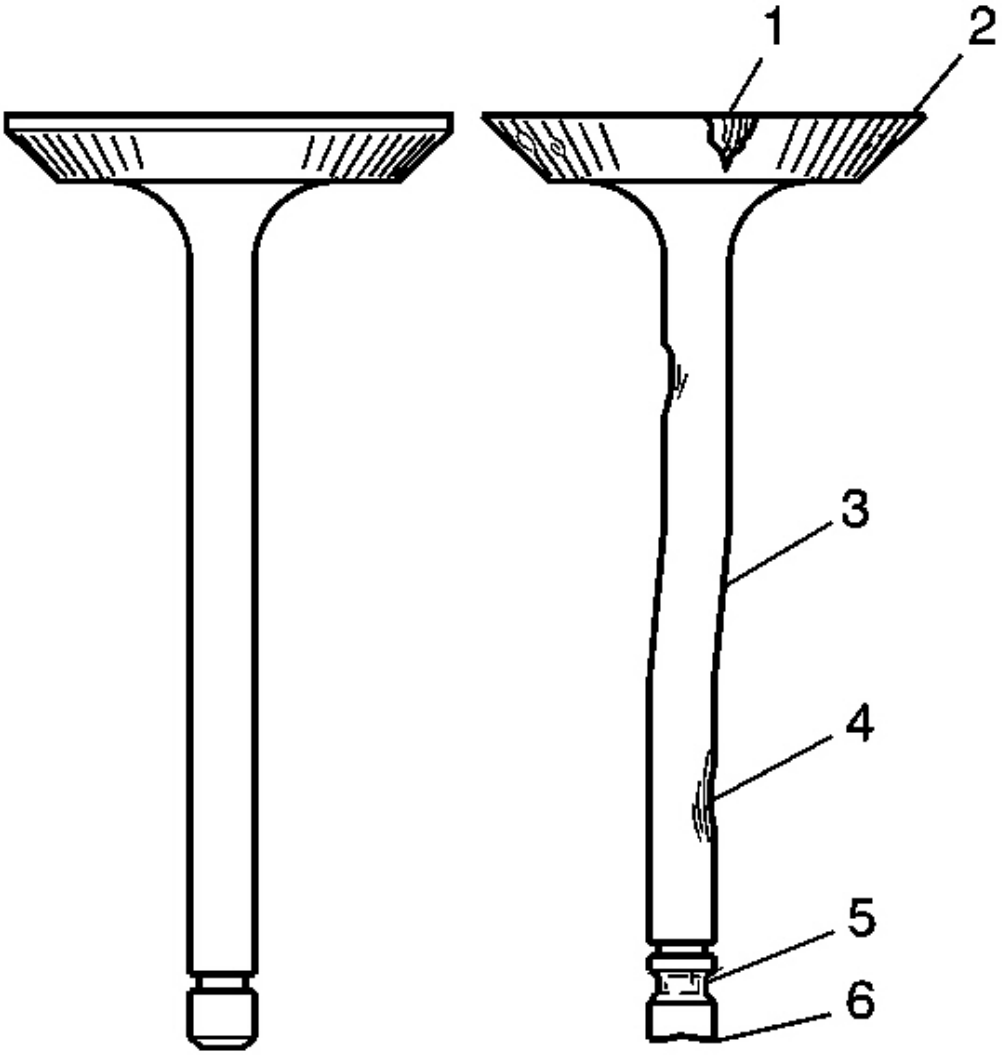

Fig. 205: Inspecting Valves For Damage
Courtesy of GENERAL MOTORS CORP.

3. Inspect the valve stems for excessive scoring, wear, or warpage.
   - A valve stem that has excessive scoring (3 or 4) or wear (4 or 6) must be replaced.
   - A valve guide that is worn and has excessive stem-to-guide clearance should be reamed and valves with oversize stems installed.
4. Measure the valve stem diameter. A valve stem with a diameter less than 7.95 mm (0.313 in) must be replaced. Position the tip of the dial indicator at the top of the valve guide.

cardiagn.com

If the valve stem diameter is within specifications, and the stem-to-guide clearance is excessive, the valve guide must be reamed oversize and a valve with oversize stem installed.

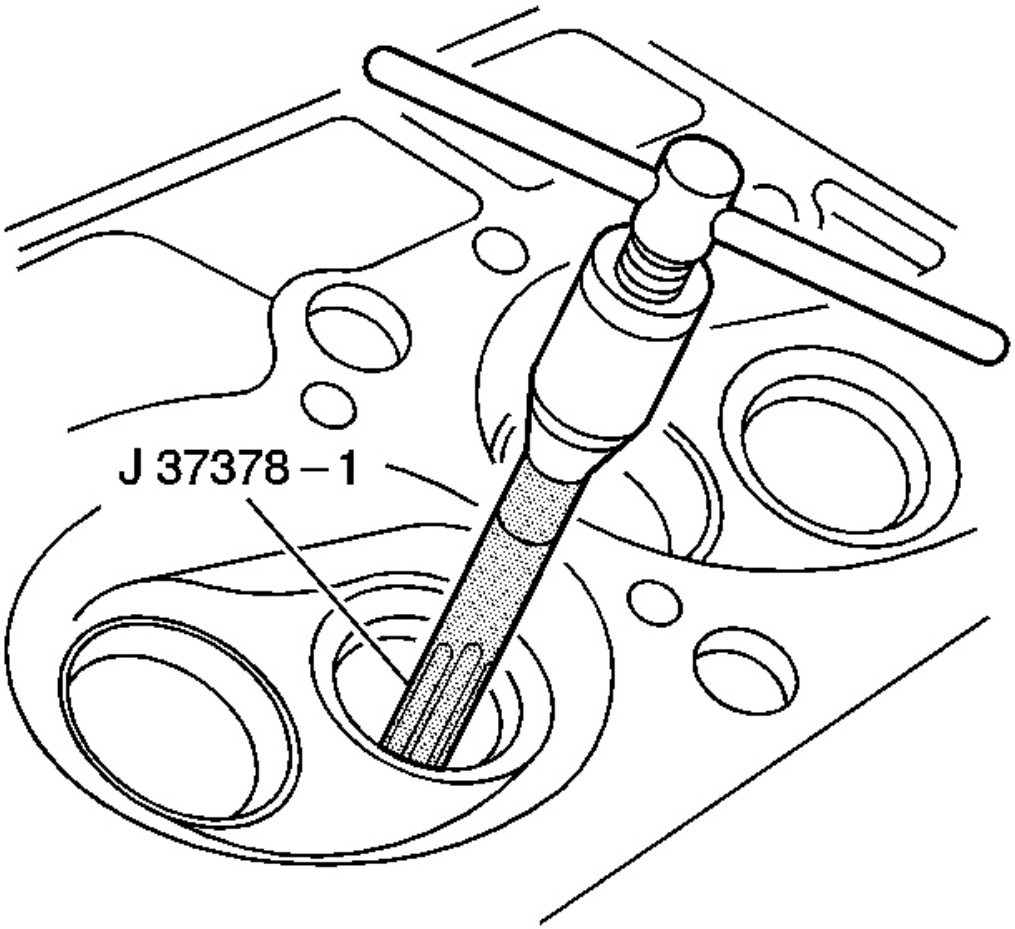

Fig. 206: Reaming The Valve Guide Using J 37378-1
Courtesy of GENERAL MOTORS CORP.

5. Ream the valve guide using the **J 37378-1** .
6. Clean the guide bore of all metal shavings and debris.

cardiagn.com

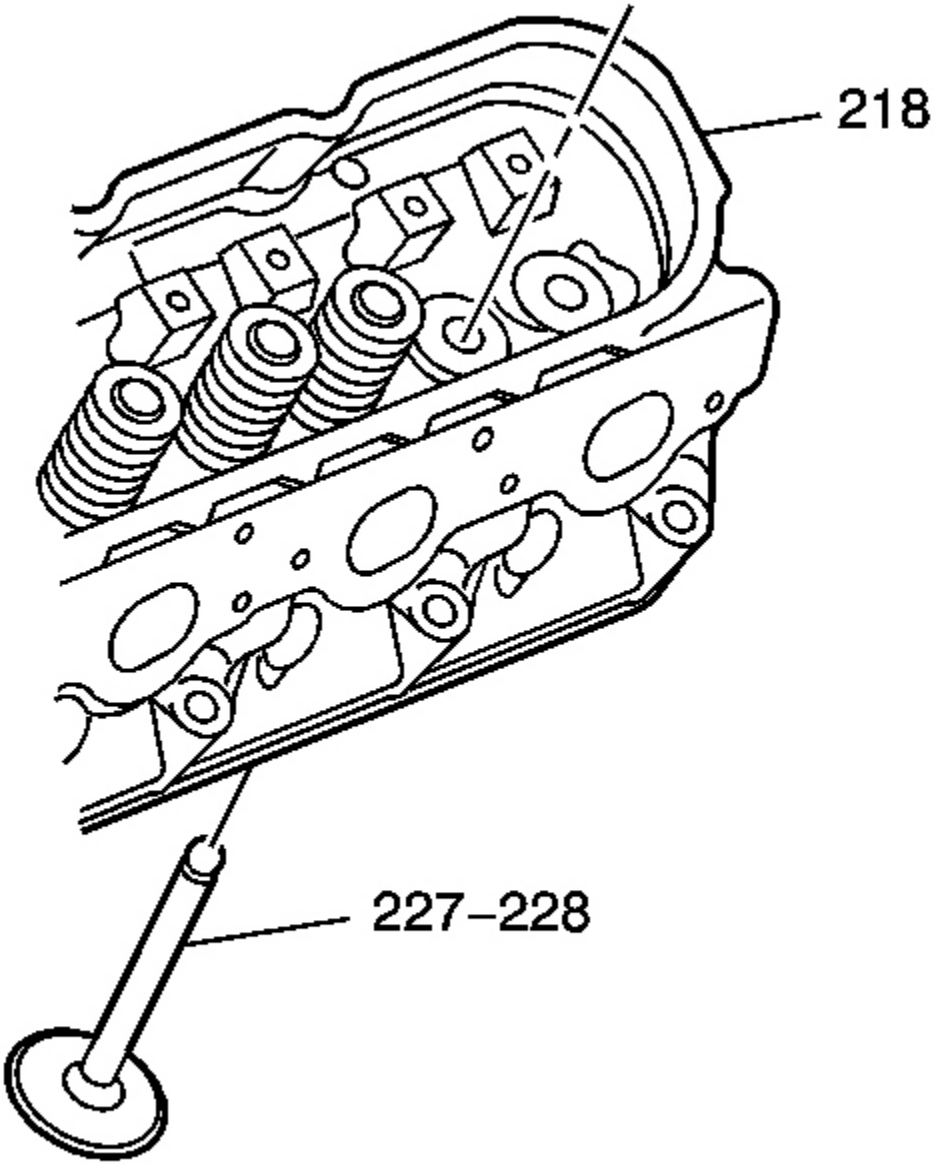

Fig. 207: View Of Valve & Cylinder Head
Courtesy of GENERAL MOTORS CORP.

7. Install the valve (227 and 228), with oversize stem, into the cylinder head (218).
8. Inspect the valve for proper fit.

cardiagn.com

Move the valve back and forth in the guide. The valve should move freely with no resistance or drag.

Valve and Seat Grinding

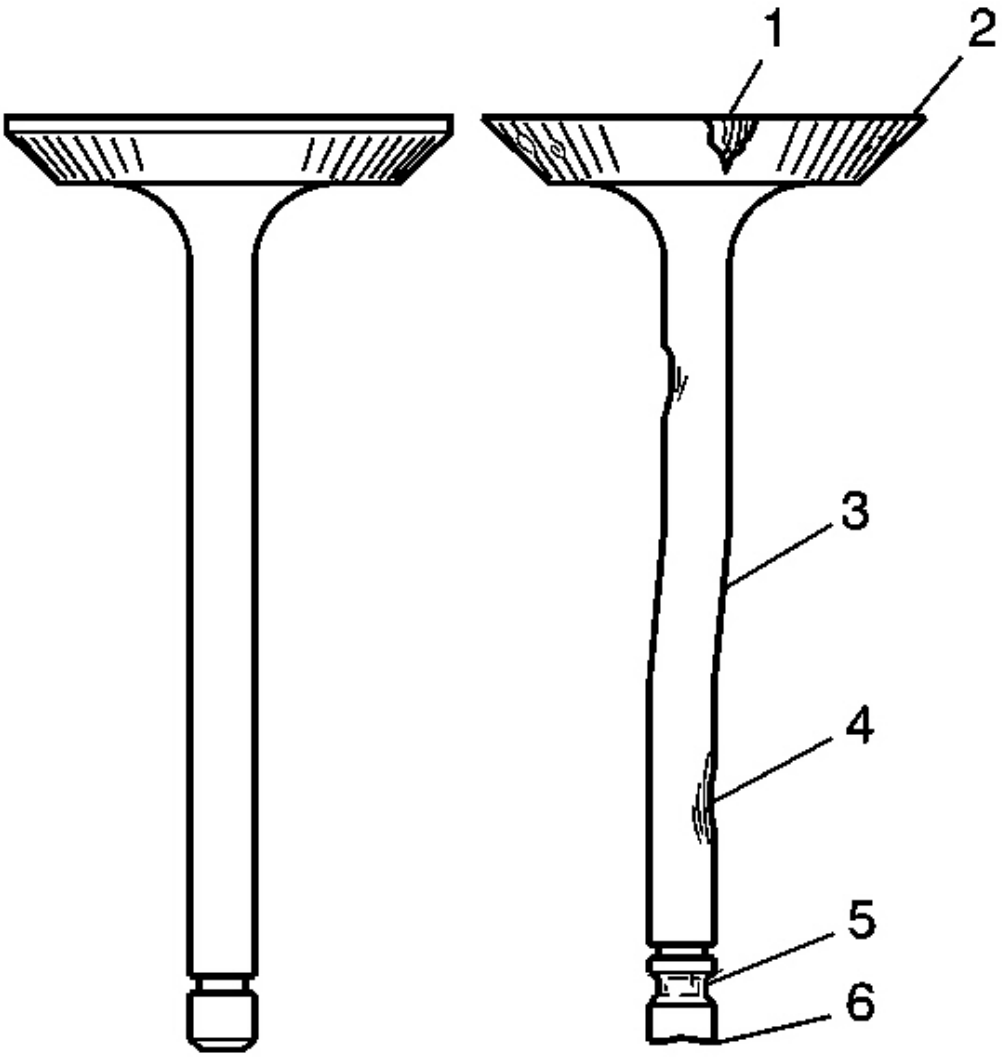

Fig. 208: Inspecting Valves For Damage
Courtesy of GENERAL MOTORS CORP.

IMPORTANT:

- **Reconditioning the valve seats is very important. The seating of the valves must be perfect for the engine to deliver optimum power and**

cardiagn.com

performance. Several different types of equipment are available for grinding valve seats.

- **Another important factor is the cooling of the valve head. Good contact between the valve and the seat will ensure that heat will be properly dissipated.**
- **The recommendations of the manufacturer of the equipment should be followed carefully to obtain the proper results. Regardless of what type of equipment is used, it is essential that valve guide bores be free from carbon or dirt to ensure proper centering of the tool pilot in the guide.**
- **Valves that are pitted must be refaced to the proper angle. Valve stems that show excessive wear, or valves that are warped excessively must be replaced. When a valve head that is warped excessively is refaced, a knife edge may be ground on part or all of the valve head due to the amount of metal that must be removed. Knife edges lead to breakage, burning or pre-ignition due to heat localizing on this knife edge. If the edge of the valve head is less than 1.25 mm (0.05 in) after grinding, replace the valve.**
- **Several different types of equipment are available for refacing valves. The recommendation of the manufacturer of the equipment should be carefully followed to obtain the proper results.**
- **DO NOT reface intake valves. Intake valves with excessive wear or damage MUST be replaced.**

1. Inspect the valve for the following conditions:
   - Burnt or eroded areas (1)
   - A worn margin (2)
   - A bent stem (3)
   - A worn or scored stem (4)
   - A worn key groove (5)
   - A worn stem tip (6)

cardiagn.com

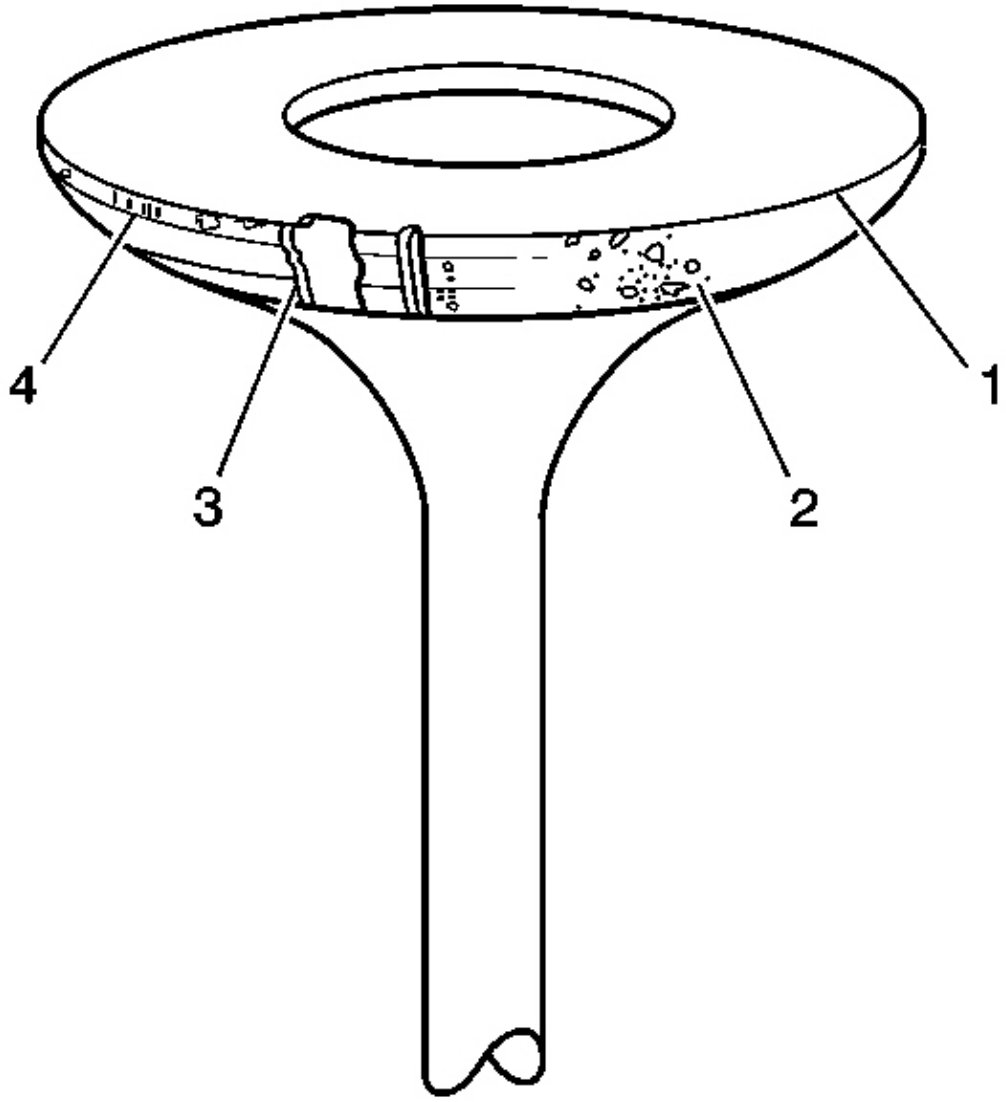

Fig. 209: Inspecting Valve Face For Damage
Courtesy of GENERAL MOTORS CORP.

2. Inspect the valve face for the following conditions:
    - Worn or no margin (1 or 4)
    - Pitted surfaces (2)
    - Burnt or eroded areas (3)

cardiagn.com

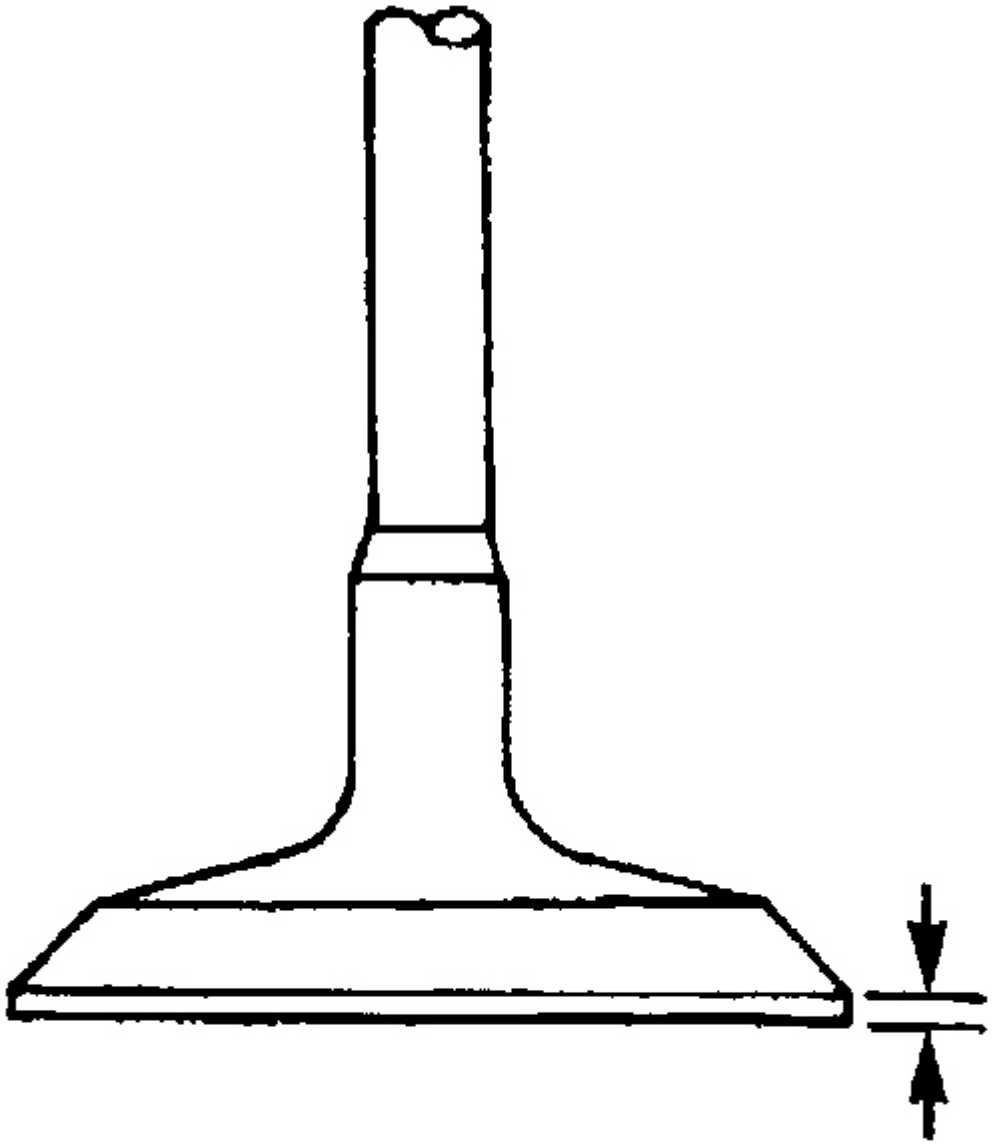

Fig. 210: Inspecting The Valve Margin
Courtesy of GENERAL MOTORS CORP.

3. Inspect the valve margin.

   The exhaust valve may be refaced if the margin is greater than 1.25 mm (0.05 in) thick before grinding.

cardiagn.com

4. Reface pitted exhaust valves on a suitable valve refacing machine.
5. Replace the valve if the margin is less than 1.25 mm (0.05 in) thick after grinding.
6. If the valve face has been ground, it may be necessary to shim the valve spring to obtain the proper spring installed height. Refer to **Cylinder Head Assemble** .

cardiagn.com

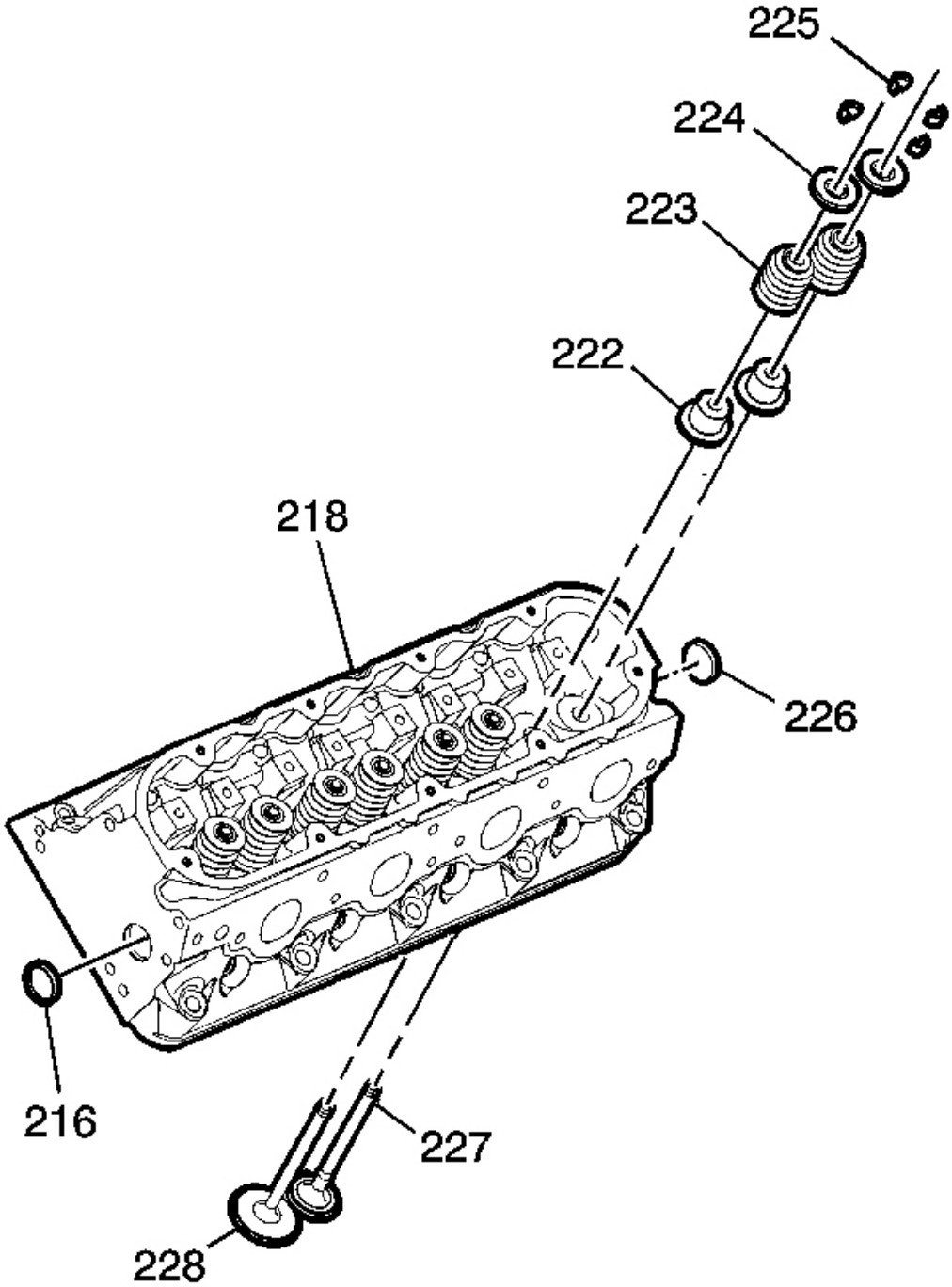

Fig. 211: View Of Cylinder Head Components
Courtesy of GENERAL MOTORS CORP.

cardiagn.com

7. Inspect for a loose valve seat in the cylinder head (218). The valve seat has an interference fit to the cylinder head.
8. Clean the valve guide bores with a suitable tool. Remove all carbon or dirt from the bores.

   The valve guide must be clean for the seat grinding tool to obtain proper results.

9. Grind the valve seat.

   The recommendations of the manufacturer of the equipment should be followed carefully to obtain the proper results. Regardless of what type of equipment is used, it is essential that valve guide bores be free from carbon or dirt to ensure proper centering of the tool pilot in the guide.

10. Inspect the valve seats.
    - The valve seats should be concentric to within 0.05 mm (0.0021 in) total indicator reading.
    - If the valve seat has been ground, it may be necessary to shim the valve spring to attain the proper spring installed height.

      Refer to **Cylinder Head Assemble** .

CYLINDER HEAD ASSEMBLE

Tools Required

J 8062 Valve Spring Compressor

cardiagn.com

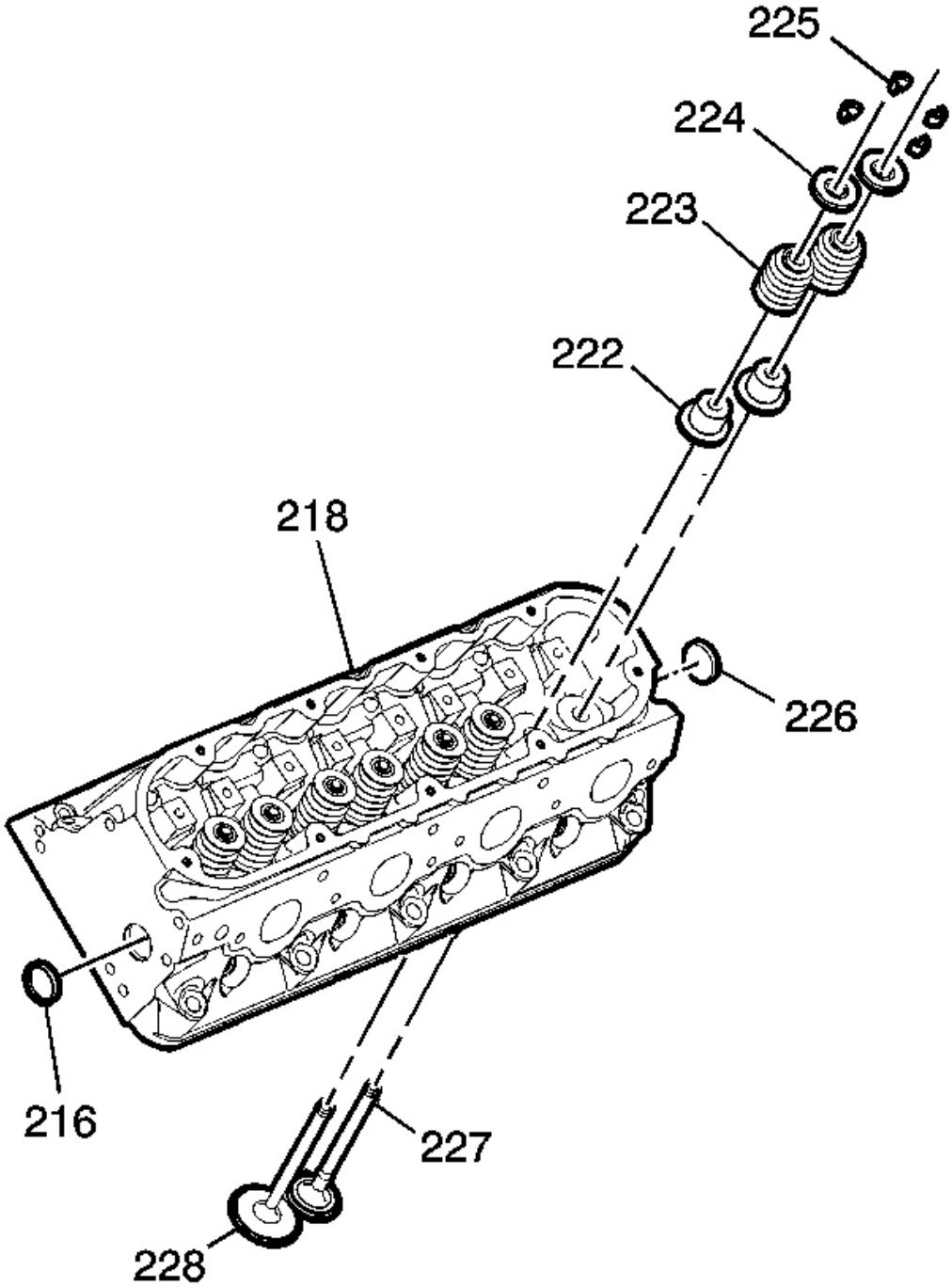

Fig. 212: View Of Cylinder Head Components
Courtesy of GENERAL MOTORS CORP.

cardiagn.com

1. Clean the cylinder head valve spring shim area.

IMPORTANT: When using the valves and related components again, install the parts to their original location.

2. Install the valves (227 and 228) into the proper port.

   Refer to **Separating Parts** .

IMPORTANT:

- **The valve stem oil seal alignment and position on the valve guide is critical.**
- **An improperly installed valve stem oil seal may lead to excessive oil consumption, increased vehicle emissions, or component damage.**

3. Install the valve stem oil seal (222).
4. Install the valve spring (223).
5. Install the valve spring cap (224).

cardiagn.com

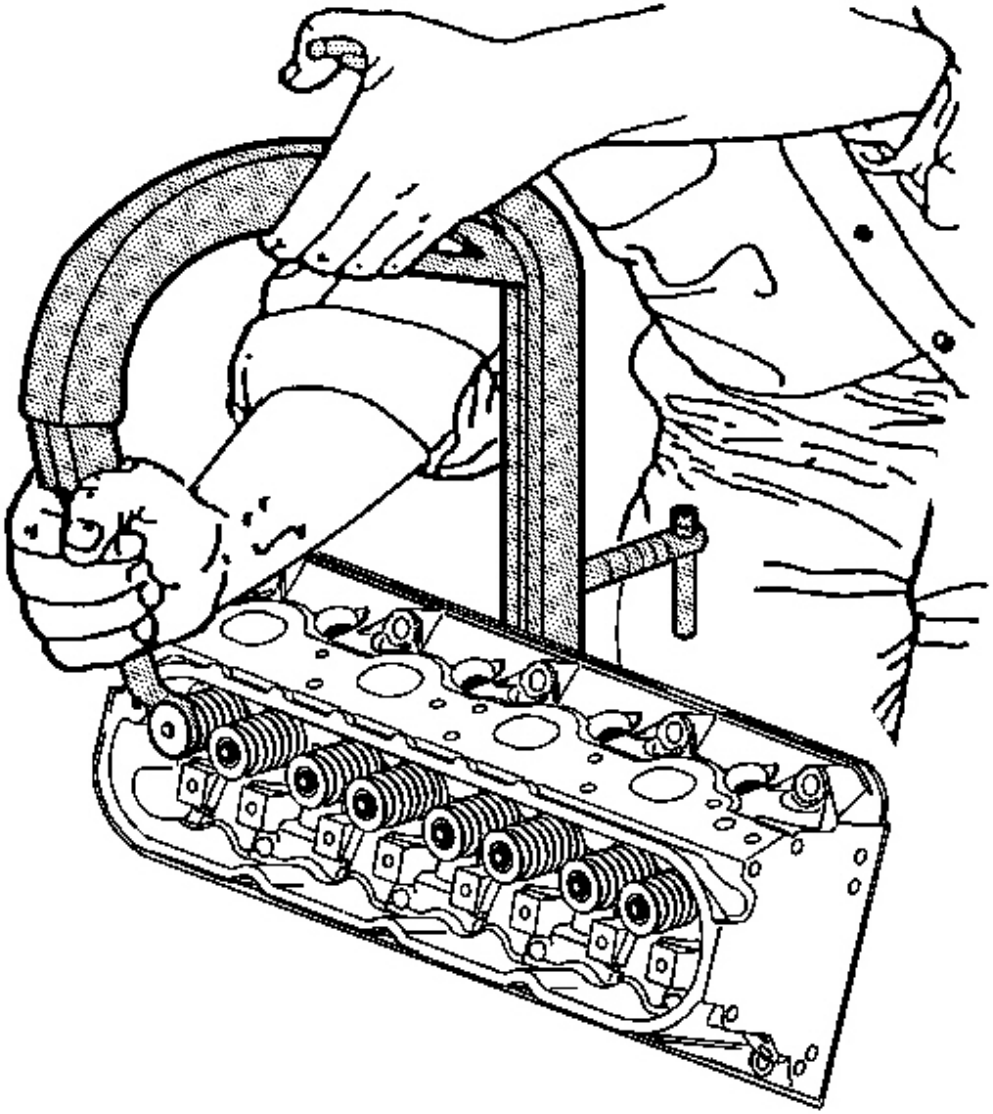

Fig. 213: Compressing The Valve Spring Using J 8062
Courtesy of GENERAL MOTORS CORP.

6. Compress the valve spring using the **J 8062** .
7. Install the valve stem keys.
    1. Use grease to hold the keys in place and remove the **J 8062** .
    2. Ensure the keys seat properly in the groove of the valve stem.

cardiagn.com

3. Tap the end to the valve stem with a plastic faced hammer to seat the keys, if necessary.

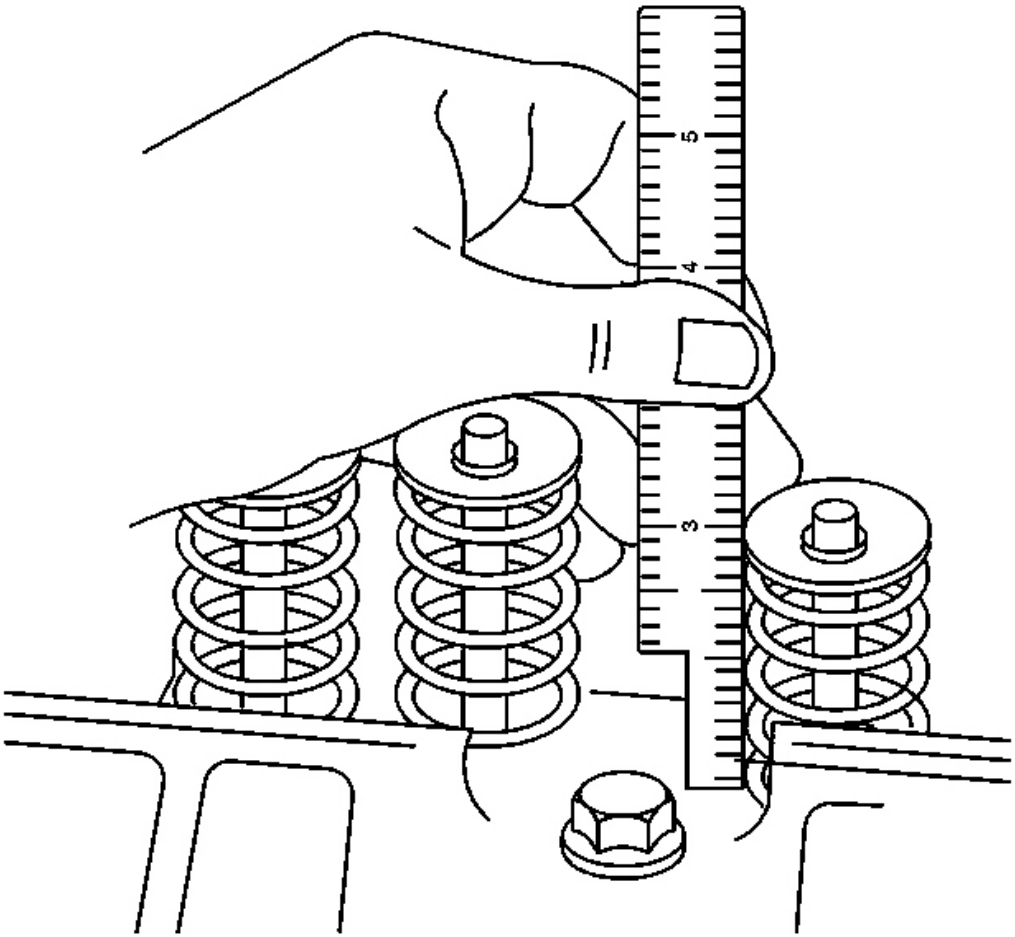

Fig. 214: Measuring Valve Spring Installed Height
Courtesy of GENERAL MOTORS CORP.

8. Measure the valve spring installed height using a ruler.

   Measure from the base of the valve spring to the top of the valve spring.

   Specification:

   - If the installed height exceeds 46.25 mm (1.82 in), install a valve spring shim of approximately 0.5 mm (0.02 in) thick.
   - Do not shim the valve spring to obtain less than the specified height.

cardiagn.com

Do not assemble the components without a spring shim on the cylinder head.

9. Install the remaining valves, springs, and other components.

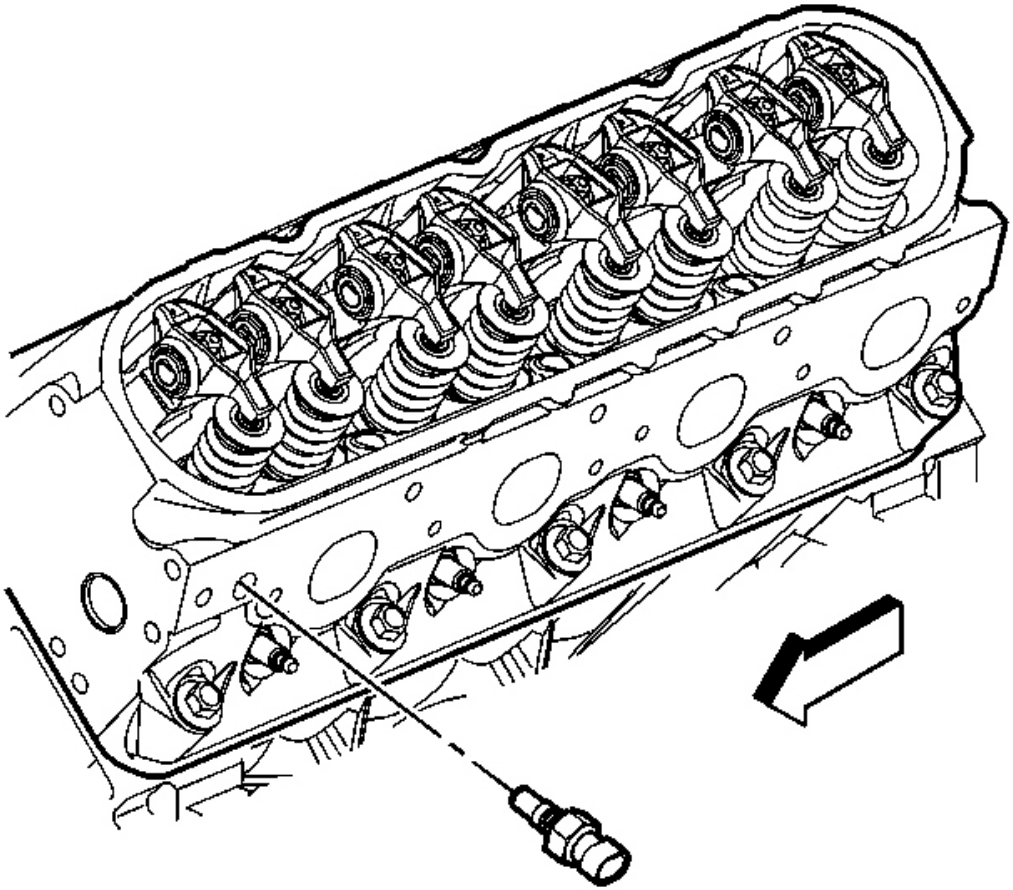

Fig. 215: View Of Coolant Temperature Sensor (Left Cylinder Head)
Courtesy of GENERAL MOTORS CORP.

10. Install sealant GM P/N 12346004 (Canadian P/N 10953480) or equivalent to the threads of the coolant sensor.

NOTE: **Refer to Fastener Notice in Cautions and Notices.**

11. Install the coolant sensor into the left cylinder head.

Tighten: Tighten the coolant sensor to 20 N.m (15 lb ft).

cardiagn.com

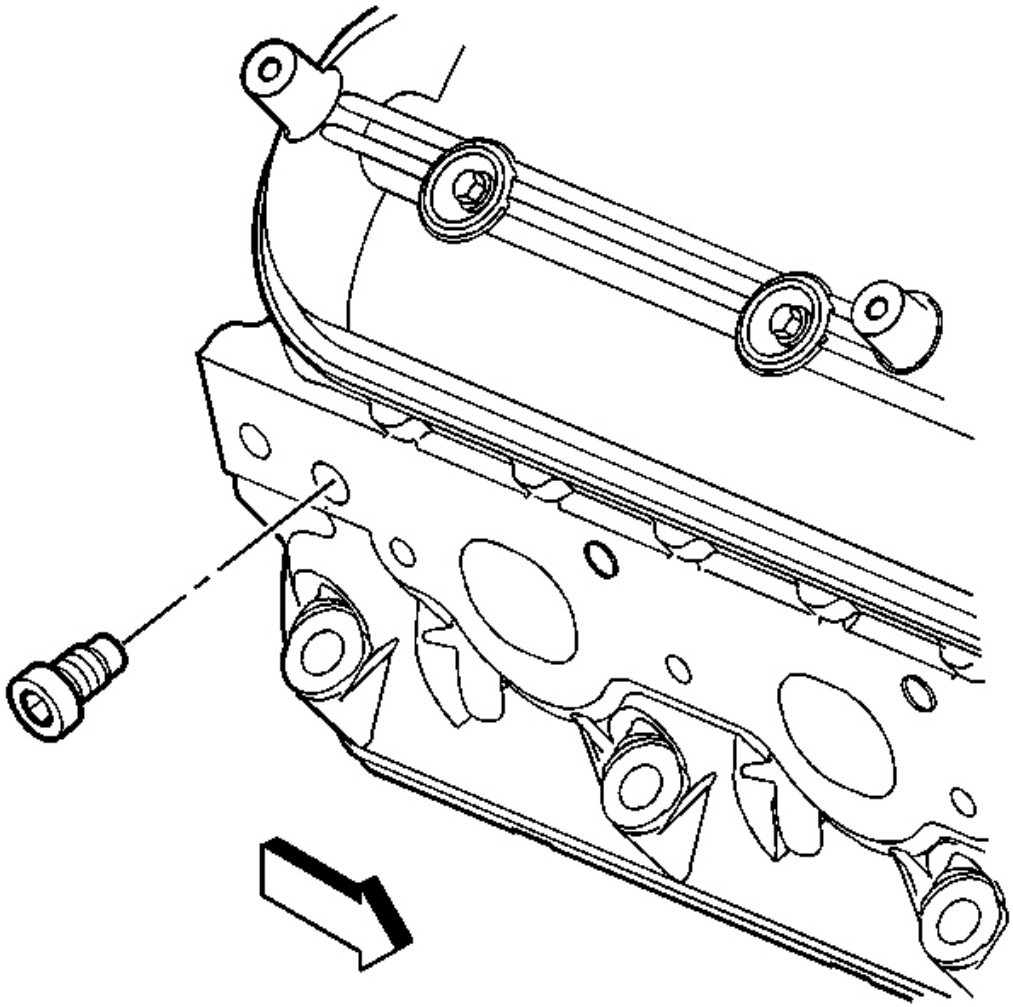

Fig. 216: View Of Coolant Plug (Right Cylinder Head)
Courtesy of GENERAL MOTORS CORP.

12. Install the coolant plug to the right cylinder head.

    Tighten: Tighten the coolant plug to 20 N.m (15 lb ft).

cardiagn.com

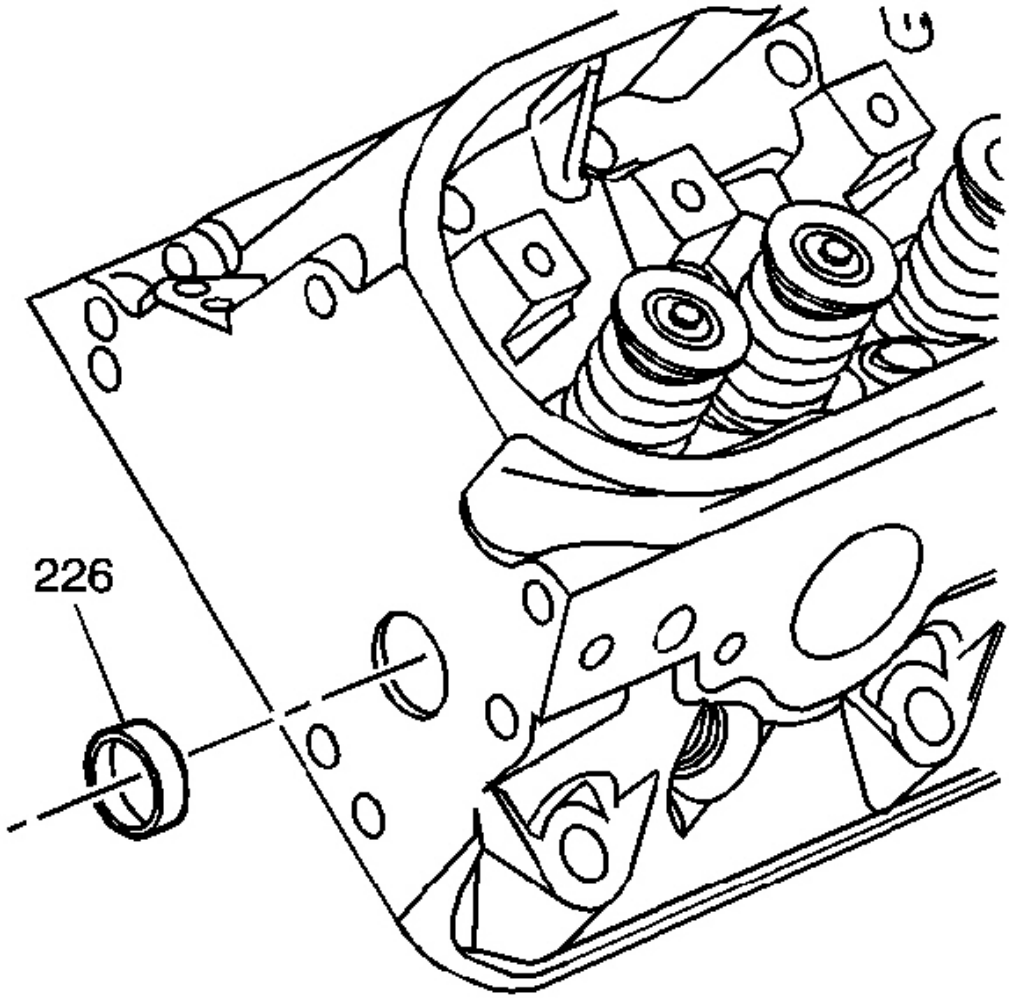

Fig. 217: View Of Cylinder Head Expansion Plugs
Courtesy of GENERAL MOTORS CORP.

13. Apply threadlock GM P/N 12345382 (Canadian P/N 10953489) or equivalent to the sides of the cylinder head expansion plugs (226).
14. Install the expansion plugs into the cylinder head.

    A properly installed plug should be installed 2.5 mm (0.1 in) below the end face of the head.

OIL PUMP DISASSEMBLE

cardiagn.com

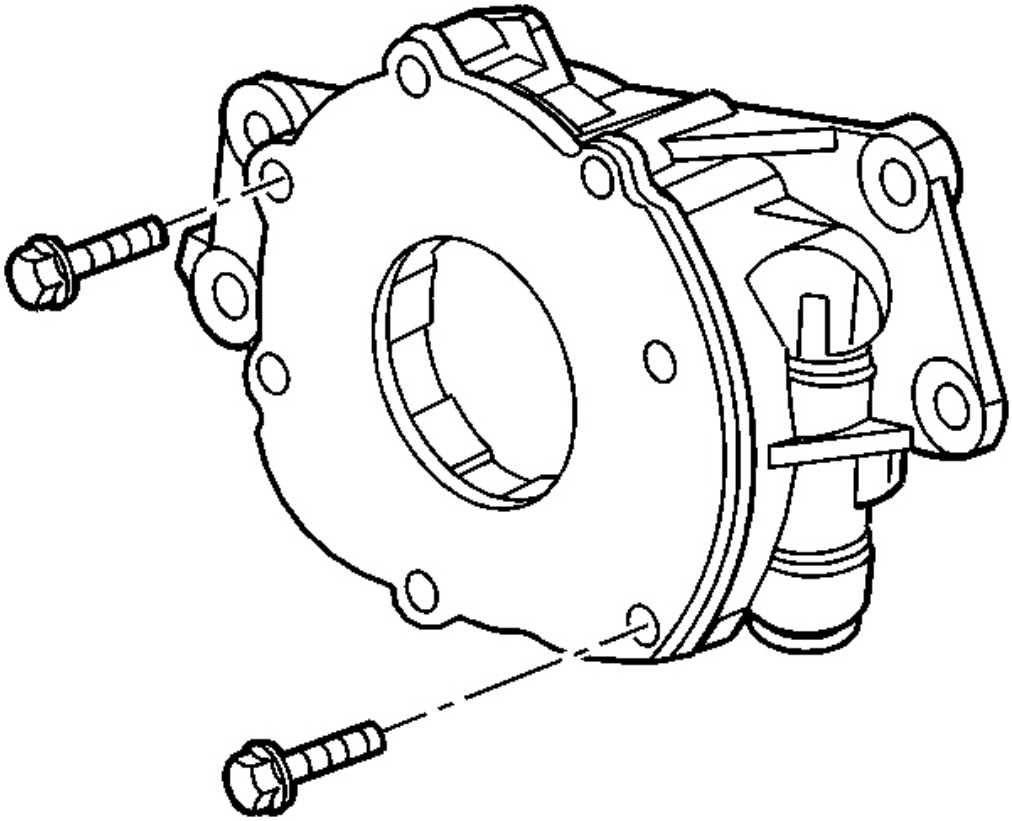

Fig. 218: View Of Oil Pump Cover & Bolts
Courtesy of GENERAL MOTORS CORP.

IMPORTANT: The internal parts of the oil pump assembly are not serviced separately, excluding the spring. If the oil pump components are worn or damaged, replace the oil pump as an assembly.

1. Remove the oil pump cover bolts.

cardiagn.com

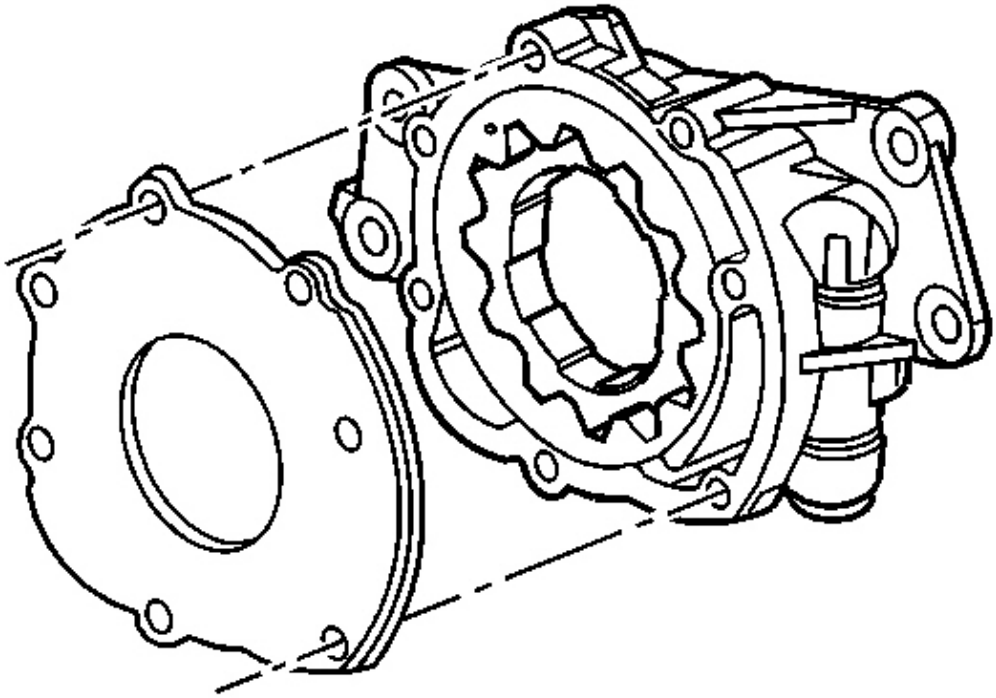

Fig. 219: View Of Oil Pump & Cover
Courtesy of GENERAL MOTORS CORP.

2. Remove the oil pump cover.

cardiagn.com

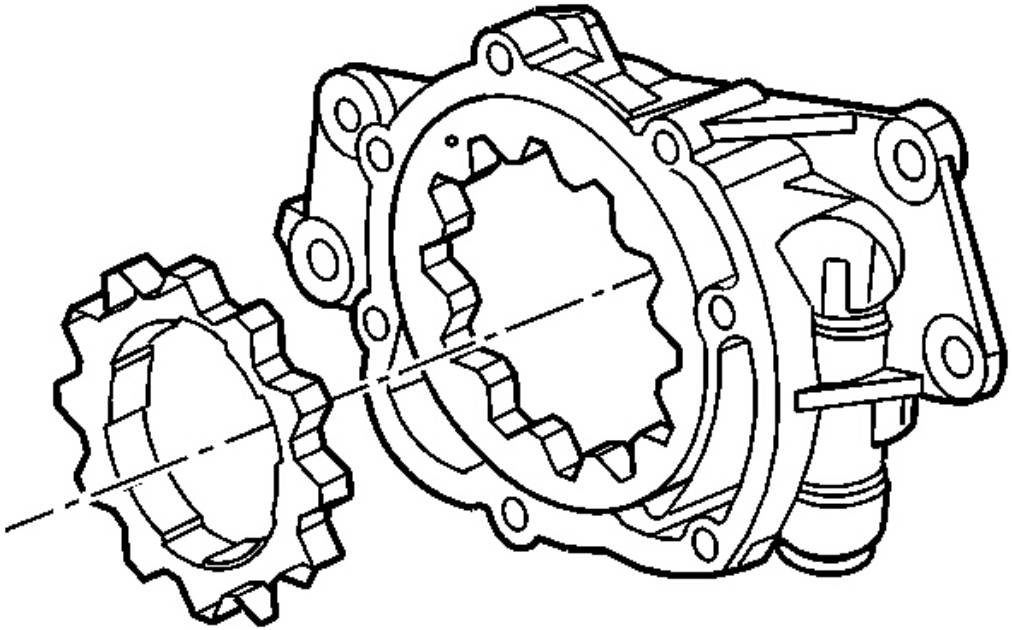

Fig. 220: View Of Oil Pump Drive Gear Splines
Courtesy of GENERAL MOTORS CORP.

IMPORTANT: Mark or identify the gears for assembly. Refer to Separating Parts .

3. Remove the drive gear.

cardiagn.com

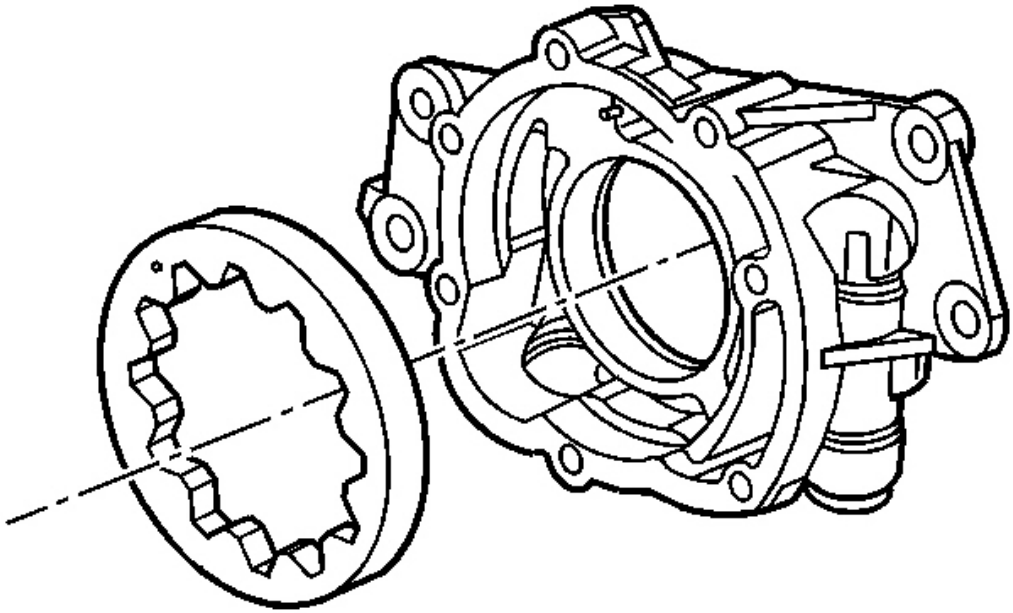

Fig. 221: View Of Oil Pump Driven Gear
Courtesy of GENERAL MOTORS CORP.

4. Remove the driven gear.

cardiagn.com

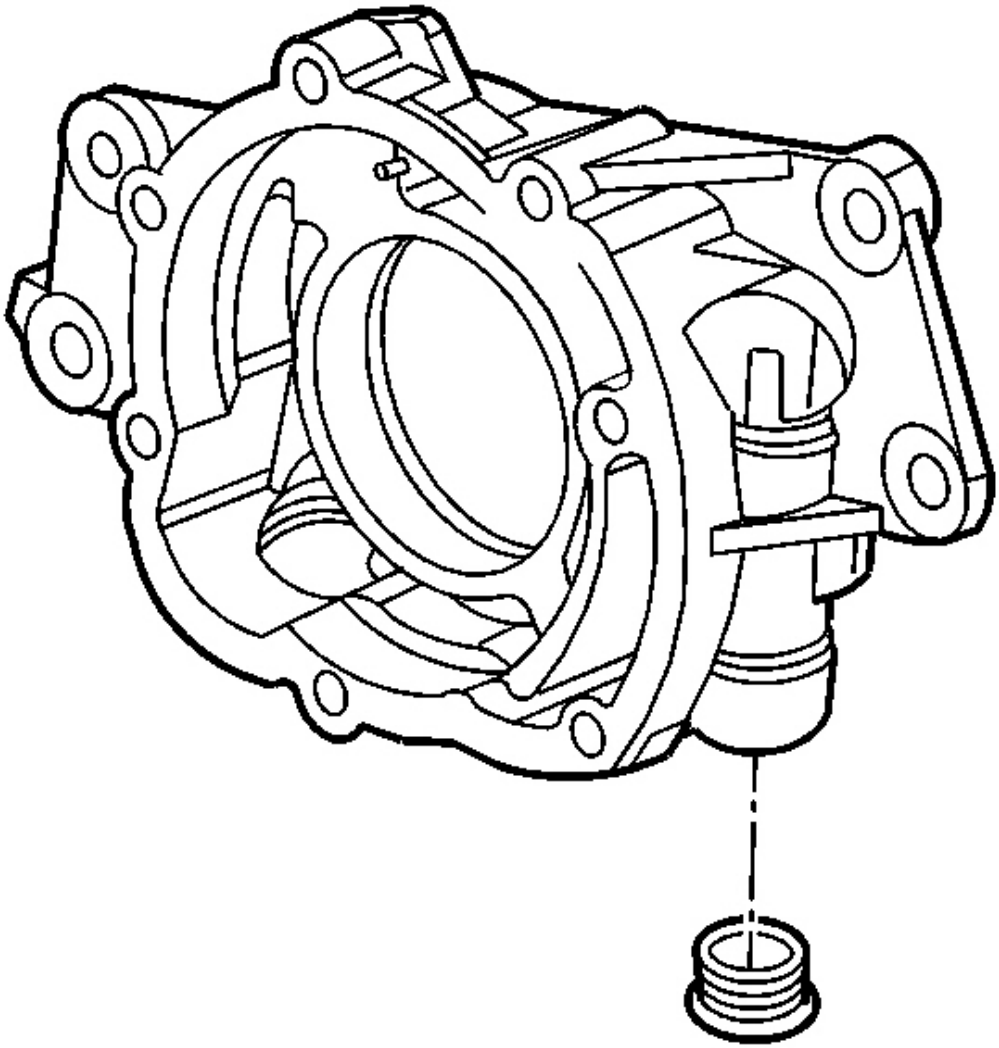

Fig. 222: View Of Oil Pump Pressure Relief Valve Plug
Courtesy of GENERAL MOTORS CORP.

5. Remove the pressure relief valve plug.

cardiagn.com

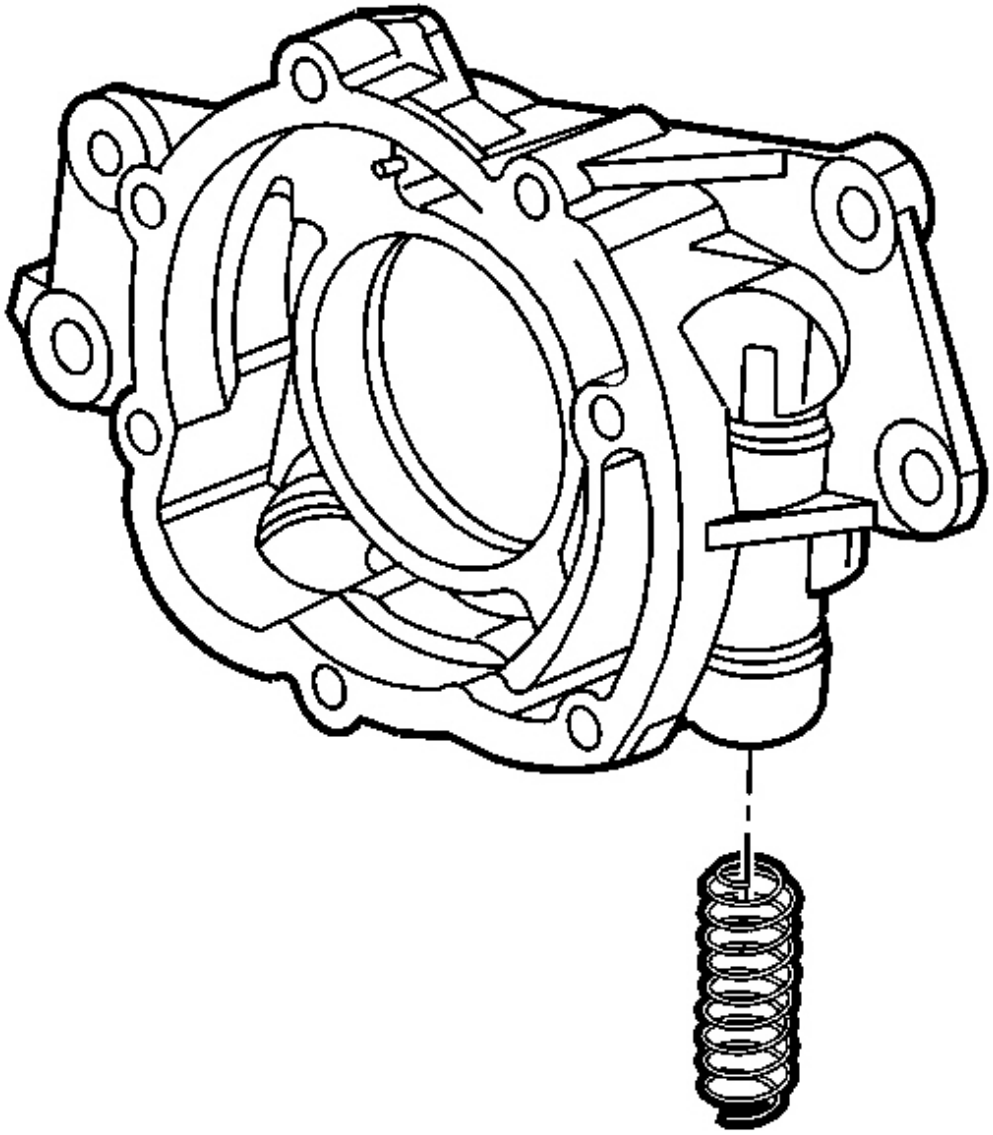

Fig. 223: View Of Oil Pump Pressure Relief Valve Spring
Courtesy of GENERAL MOTORS CORP.

6. Remove the pressure relief valve spring.

cardiagn.com

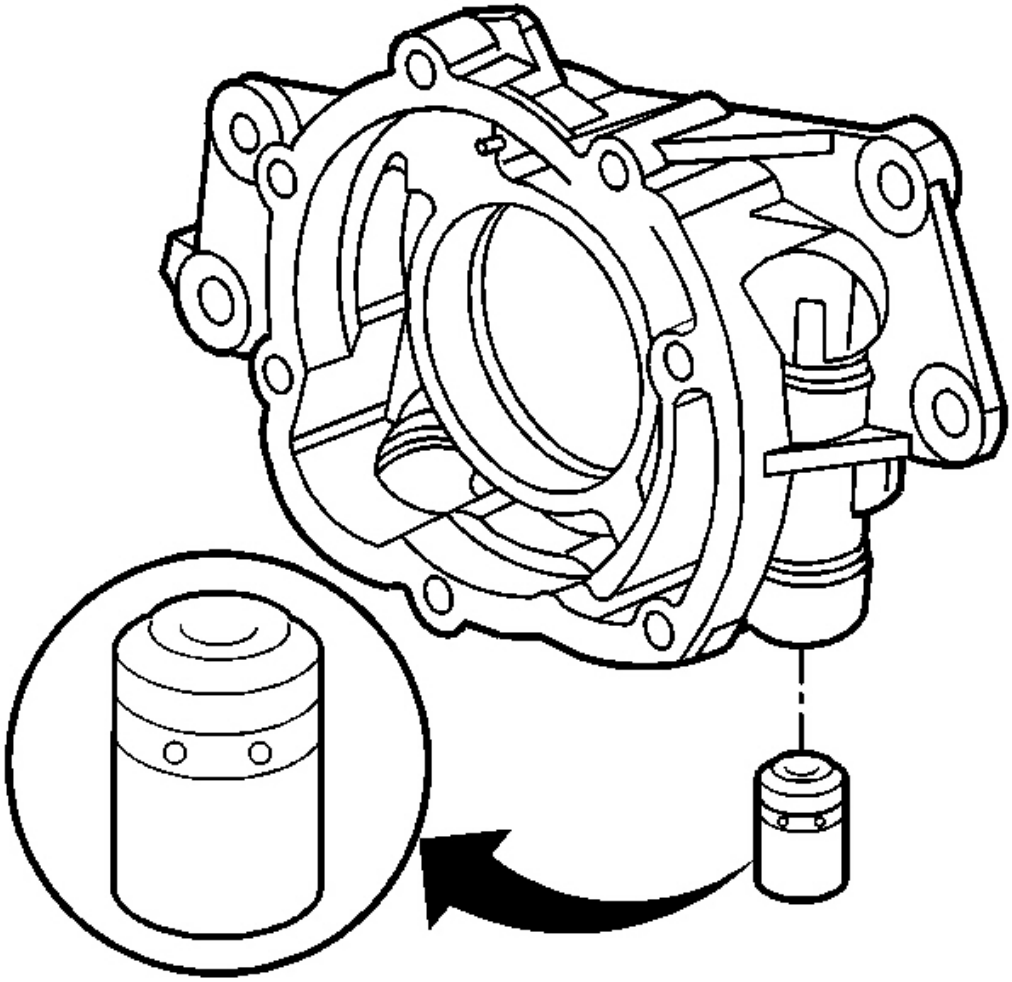

Fig. 224: View Of Oil Pump Pressure Relief Valve
Courtesy of GENERAL MOTORS CORP.

7. Remove the pressure relief valve.
8. Inspect the oil pump components. Refer to **Oil Pump Cleaning and Inspection** .

OIL PUMP CLEANING AND INSPECTION

IMPORTANT:

- **The internal parts of the oil pump assembly are not serviced separately, excluding the spring. If the oil pump components are worn or damaged, replace the oil pump as an assembly.**

cardiagn.com

- **The oil pump pipe and screen are to be serviced as an assembly. Do not attempt to repair the wire mesh portion of the pump and screen assembly.**

1. Clean the parts in solvent.

CAUTION: Refer to Safety Glasses Caution in Cautions and Notices.

2. Dry the parts with compressed air.

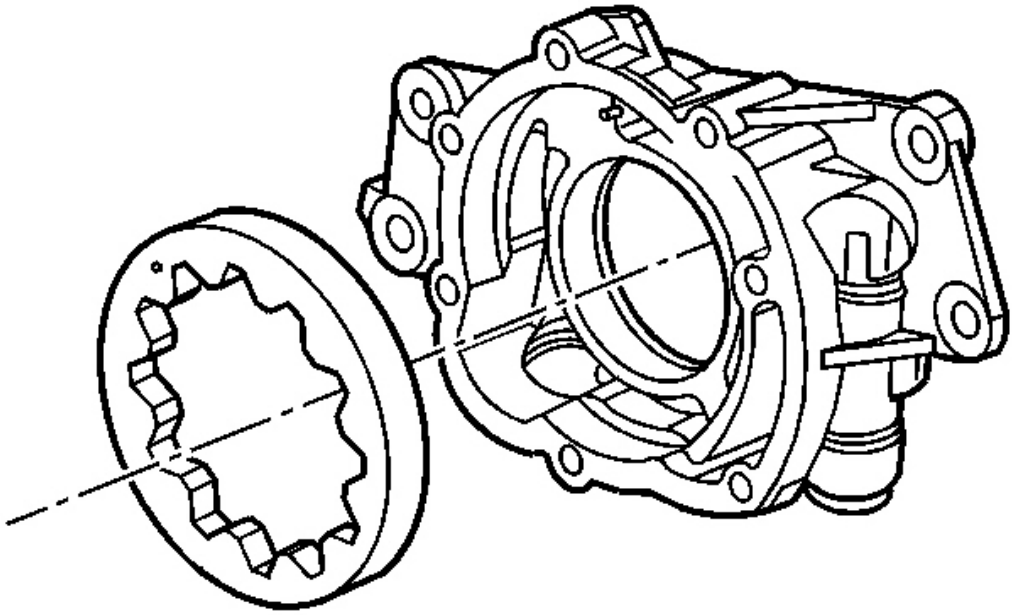

Fig. 225: View Of Oil Pump Driven Gear
Courtesy of GENERAL MOTORS CORP.

3. Inspect the oil pump housing and the cover for cracks, excessive wear, scoring, or casting imperfections.
4. Inspect the oil pump housing-to-engine block oil gallery surface for scratches or gouging.
5. Inspect the oil pump housing for damaged bolt hole threads.

cardiagn.com

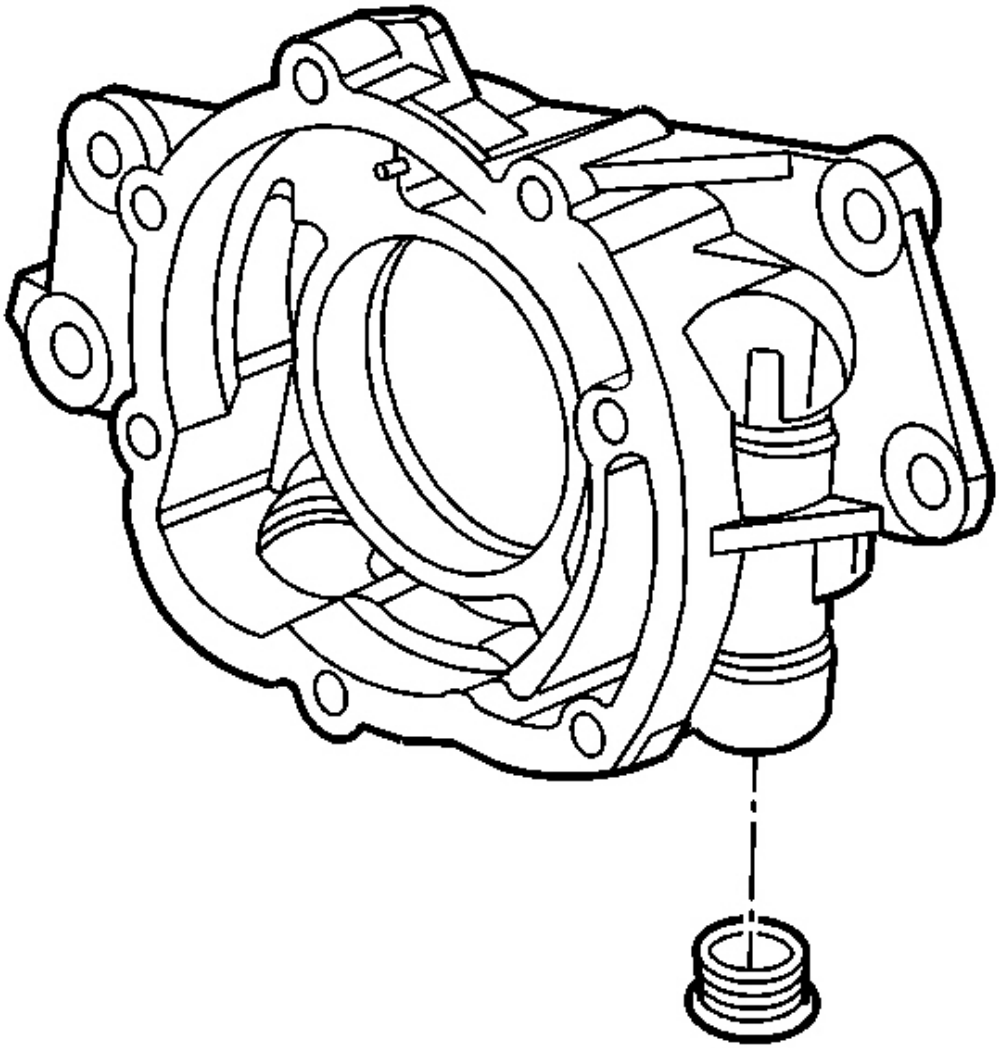

Fig. 226: View Of Oil Pump Pressure Relief Valve Plug
Courtesy of GENERAL MOTORS CORP.

6. Inspect the relief valve plug and plug bore for damaged threads.
7. Inspect the oil pump internal oil passages for restrictions.

cardiagn.com

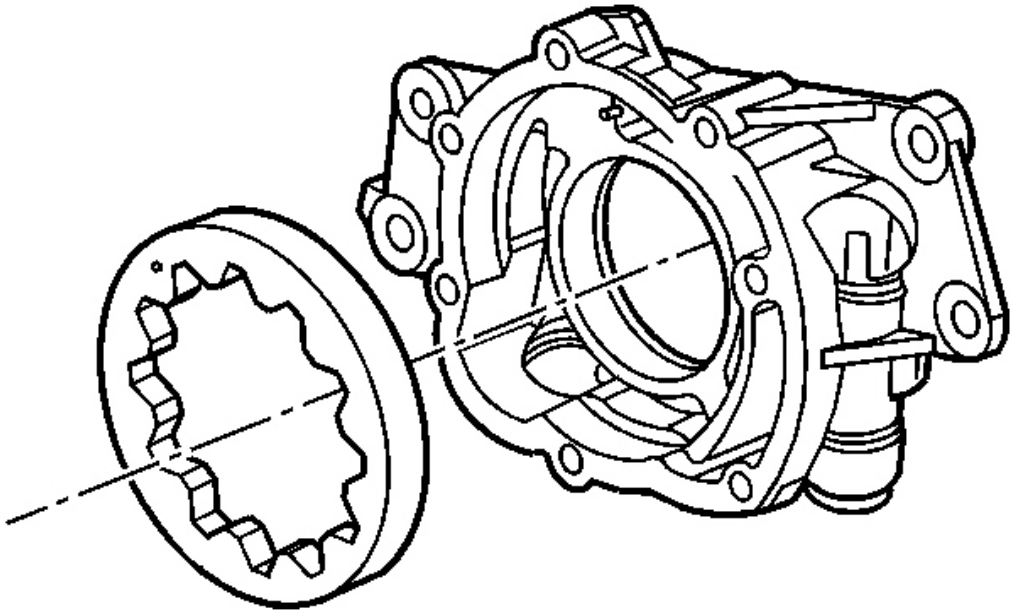

Fig. 227: View Of Oil Pump Driven Gear
Courtesy of GENERAL MOTORS CORP.

8. Inspect the drive gear and driven gear for chipping, galling or wear.

   Minor burrs or imperfections on the gears may be removed with a fine oil stone.

cardiagn.com

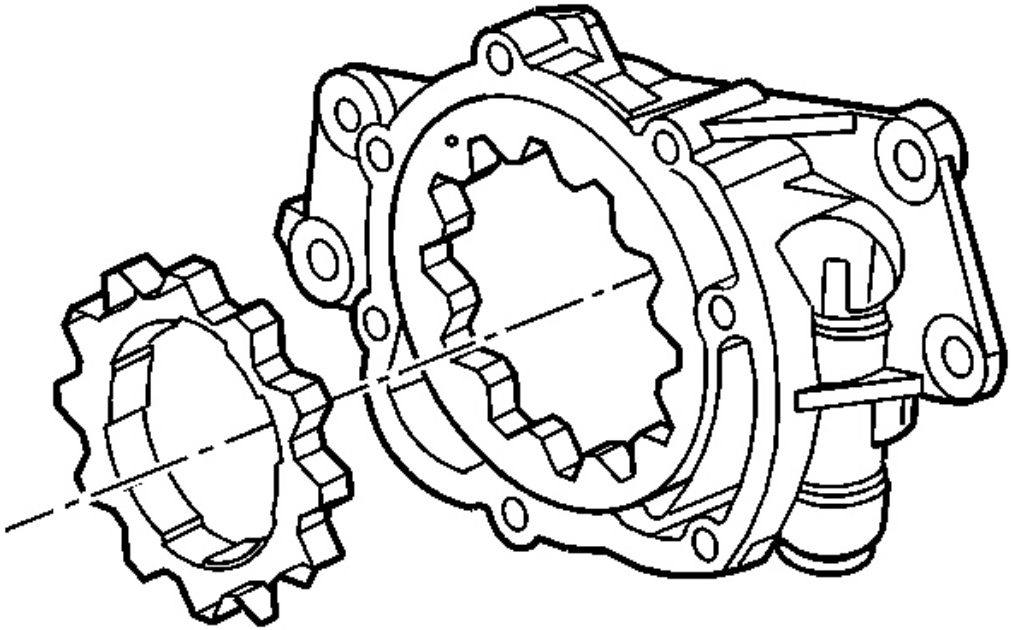

Fig. 228: View Of Oil Pump Drive Gear Splines
Courtesy of GENERAL MOTORS CORP.

9. Inspect the drive gear splines for excessive wear.

cardiagn.com

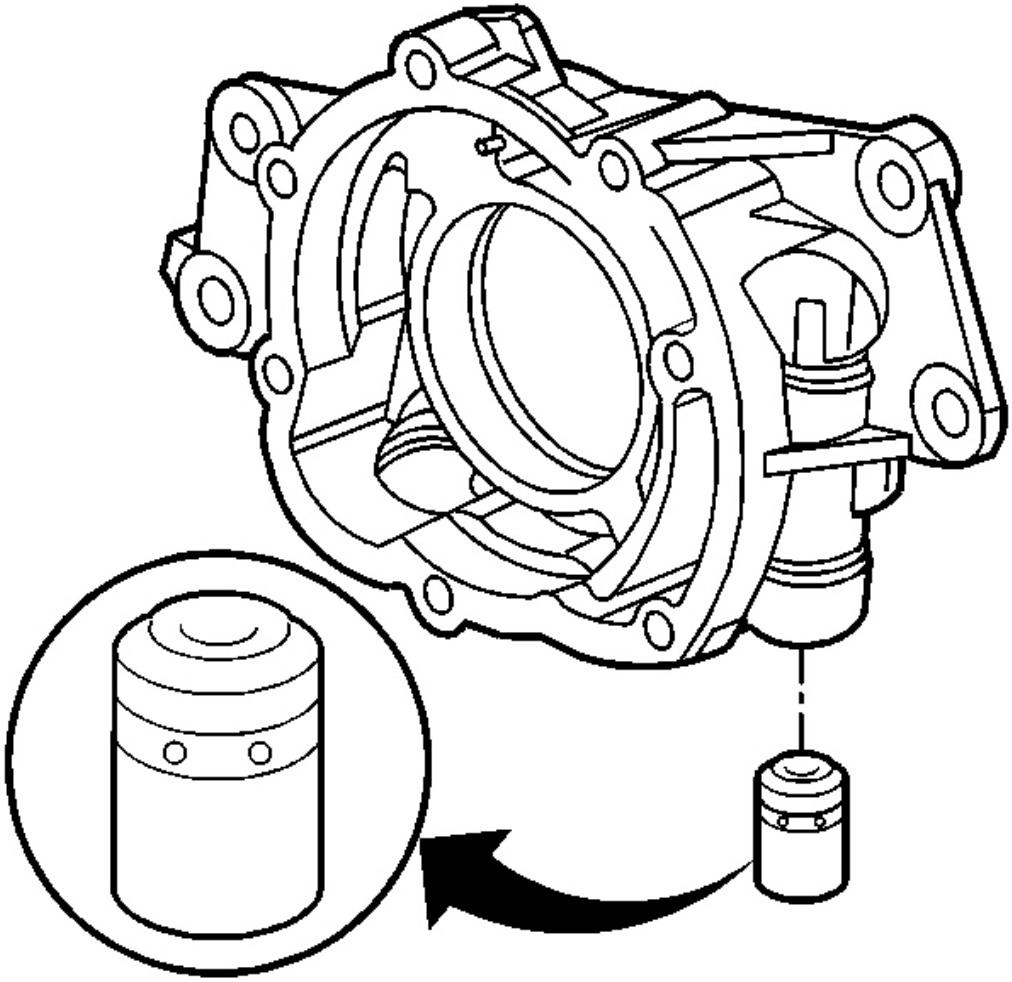

Fig. 229: View Of Oil Pump Pressure Relief Valve
Courtesy of GENERAL MOTORS CORP.

10. Inspect the pressure relief valve and bore for scoring or wear.

    The valve must move freely in the bore with no restrictions.

cardiagn.com

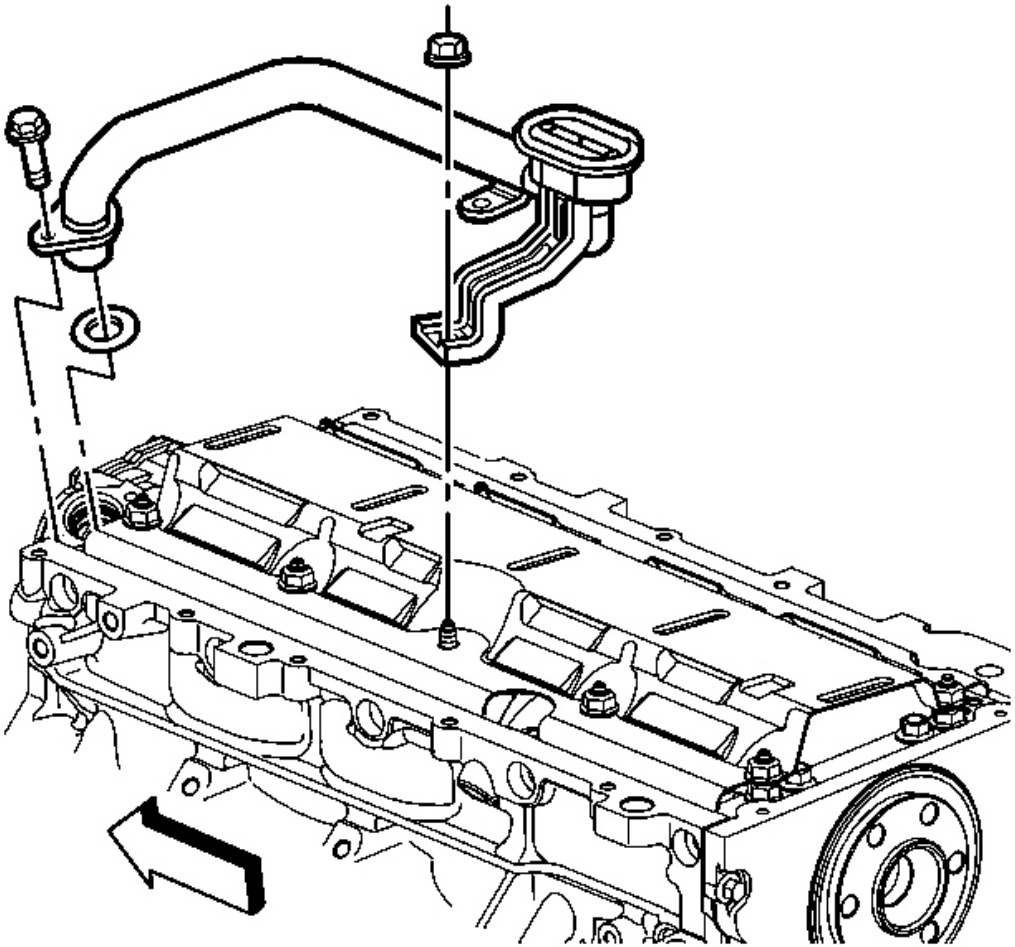

Fig. 230: View Of Oil Pump Screen, Nuts & Bolts
Courtesy of GENERAL MOTORS CORP.

11. Inspect the oil pump screen for debris or restrictions.
12. Inspect the oil pump screen for broken or loose wire mesh.

OIL PUMP ASSEMBLE

cardiagn.com

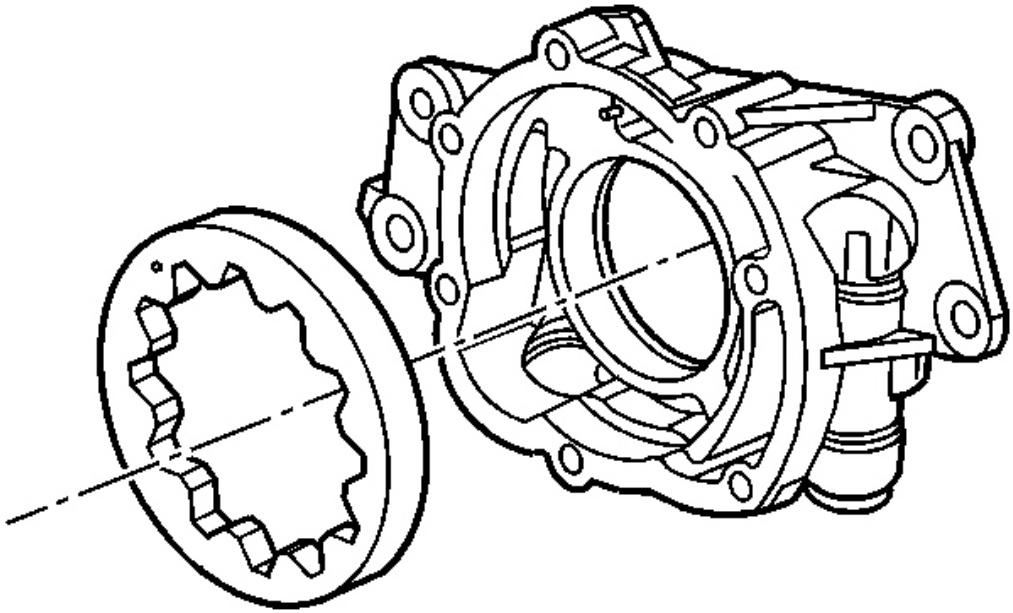

Fig. 231: View Of Oil Pump Driven Gear
Courtesy of GENERAL MOTORS CORP.

IMPORTANT: Prior to assembling the oil pump, coat all wear or internal surfaces with clean engine oil.

1. Install the driven gear into the pump housing.

   Install the driven gear with the orientation mark facing the pump cover.

cardiagn.com

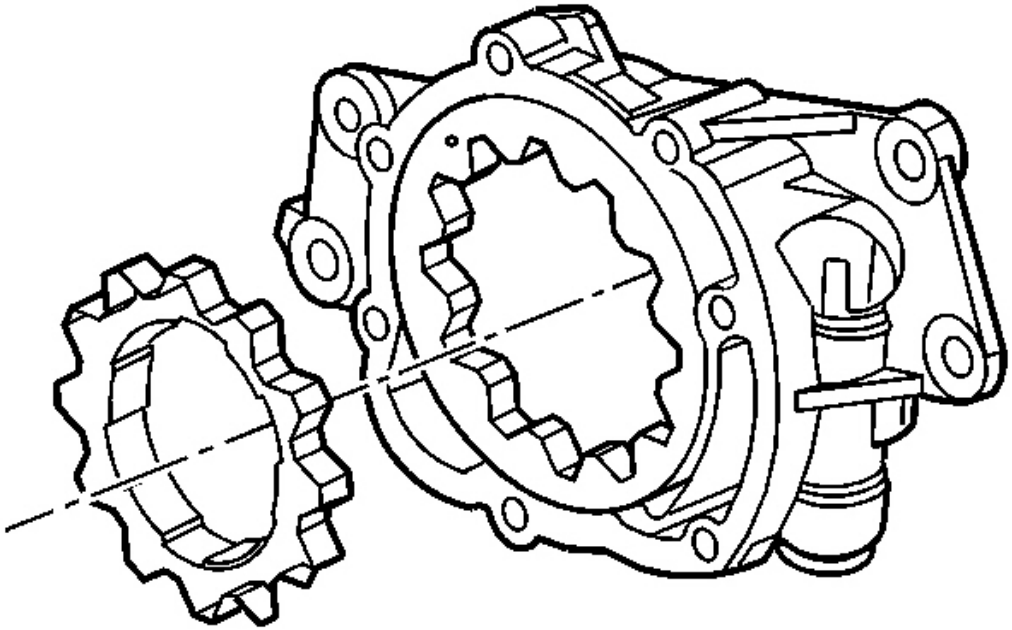

Fig. 232: View Of Oil Pump Drive Gear Splines
Courtesy of GENERAL MOTORS CORP.

2. Install the drive gear into the pump housing.

cardiagn.com

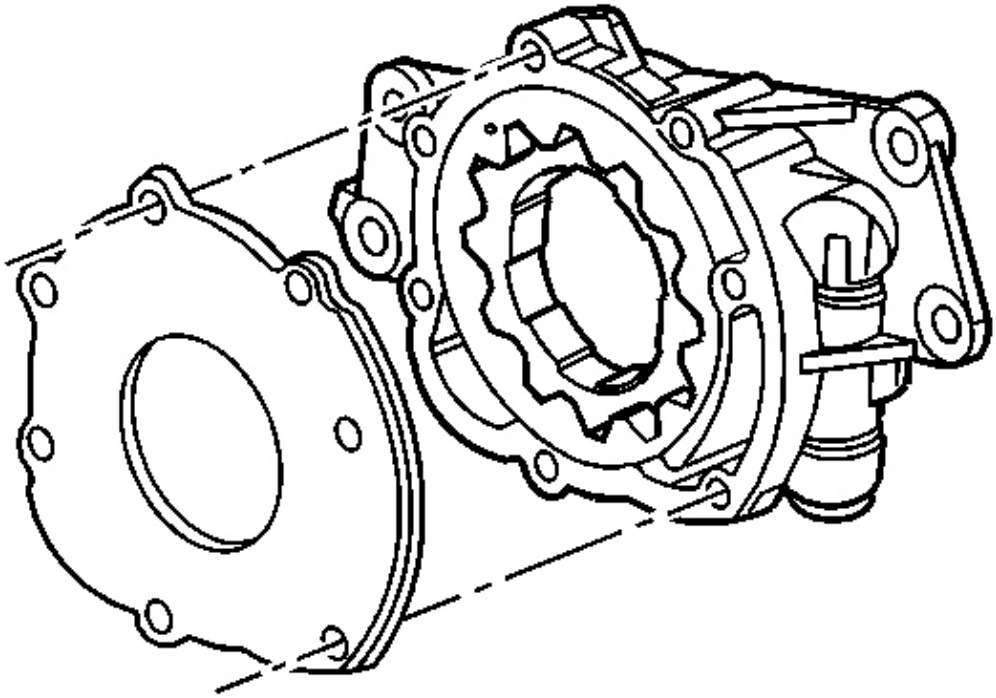

Fig. 233: View Of Oil Pump & Cover
Courtesy of GENERAL MOTORS CORP.

3. Install the oil pump cover.

cardiagn.com

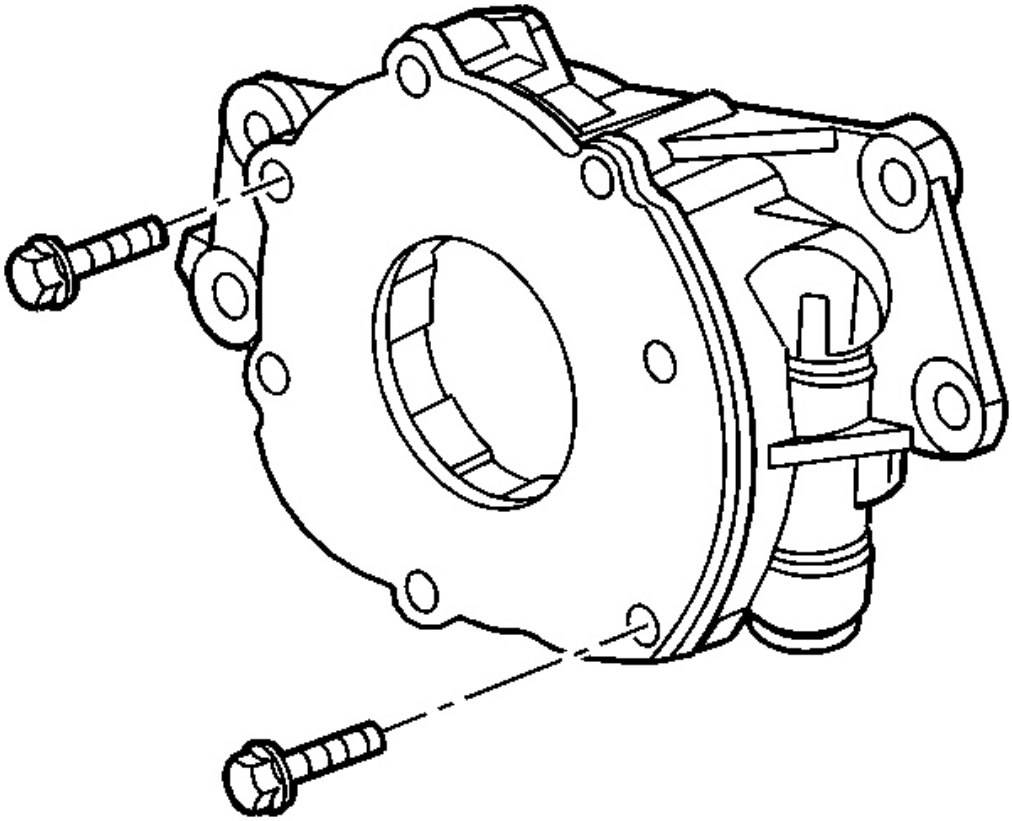

Fig. 234: View Of Oil Pump Cover & Bolts
Courtesy of GENERAL MOTORS CORP.

NOTE: Refer to Fastener Notice in Cautions and Notices.

4. Install the pump cover bolts.

   Tighten: Tighten the oil pump cover bolts to 12 N.m (106 lb in).

cardiagn.com

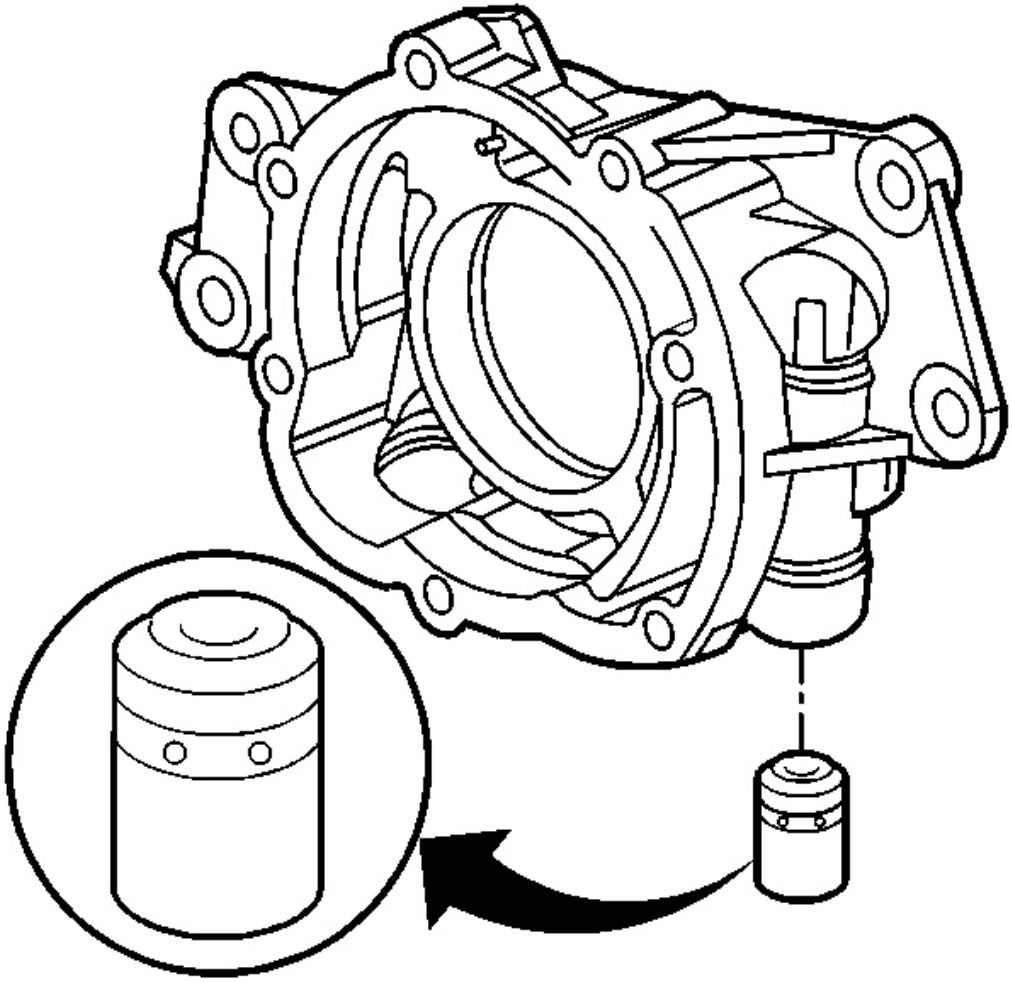

Fig. 235: View Of Oil Pump Pressure Relief Valve
Courtesy of GENERAL MOTORS CORP.

5. Install the regulator valve.

cardiagn.com

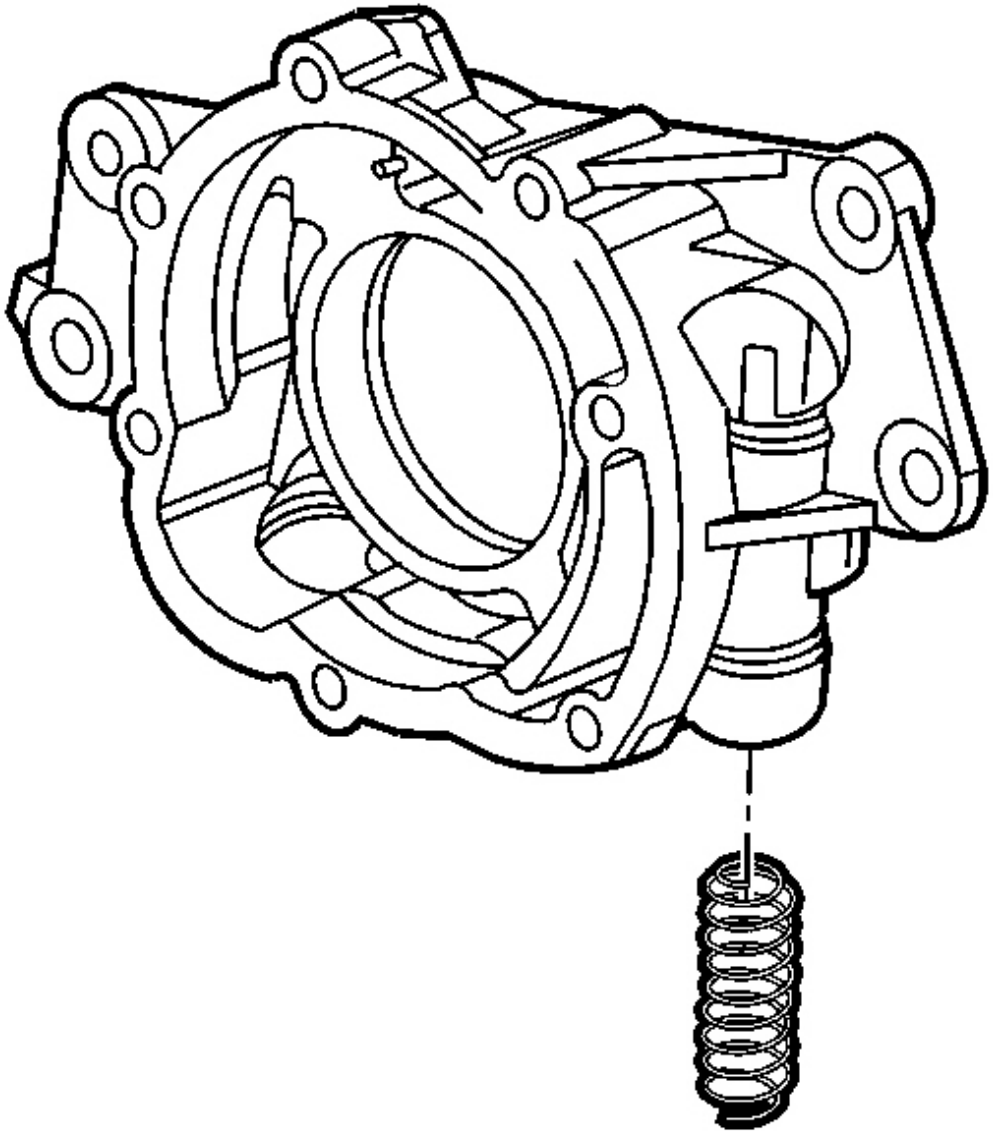

Fig. 236: View Of Oil Pump Pressure Relief Valve Spring
Courtesy of GENERAL MOTORS CORP.

6. Install a NEW regulator valve spring.

cardiagn.com

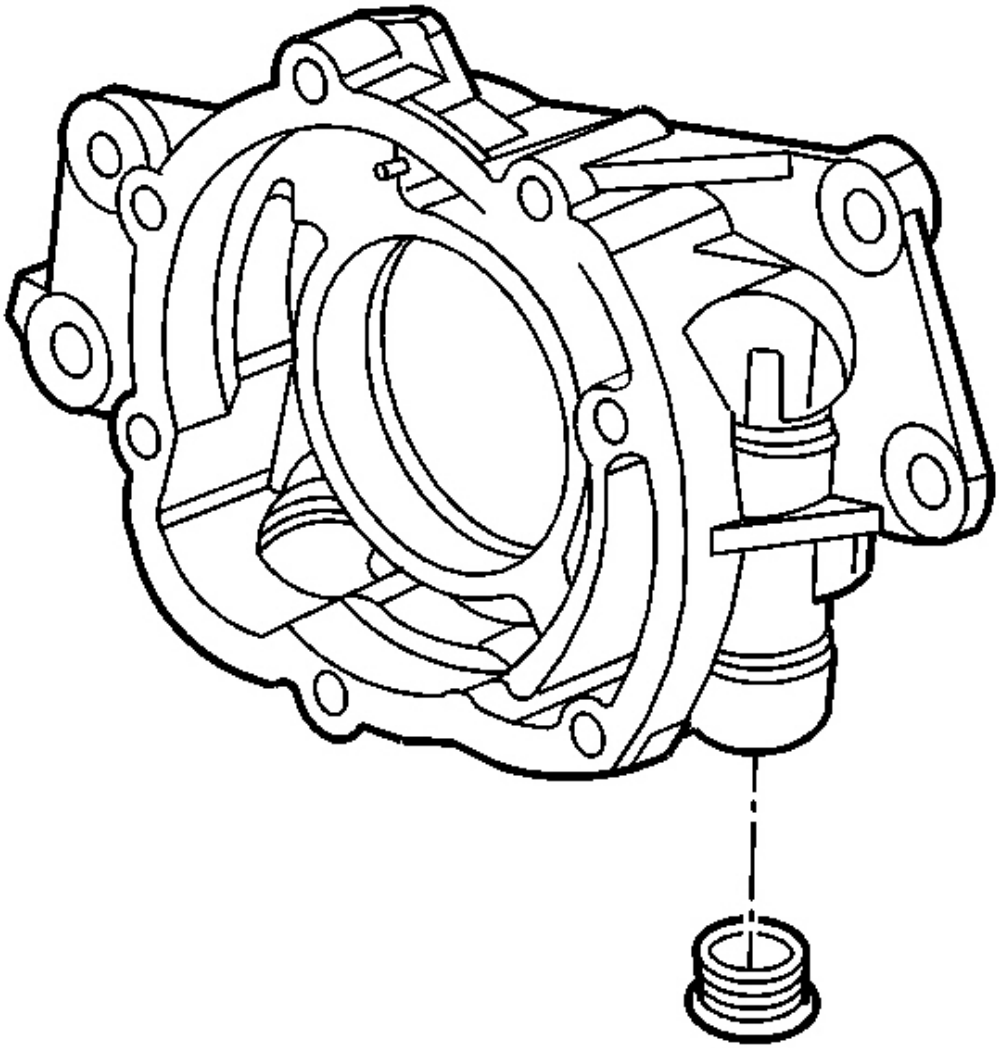

Fig. 237: View Of Oil Pump Pressure Relief Valve Plug
Courtesy of GENERAL MOTORS CORP.

7. Install the pressure relief valve plug.

   Tighten: Tighten the pressure relief valve plug to 12 N.m (106 lb in).

8. Inspect the oil pump for smooth operation by rotating the drive gear.

ENGINE FRONT COVER CLEANING AND INSPECTION

cardiagn.com

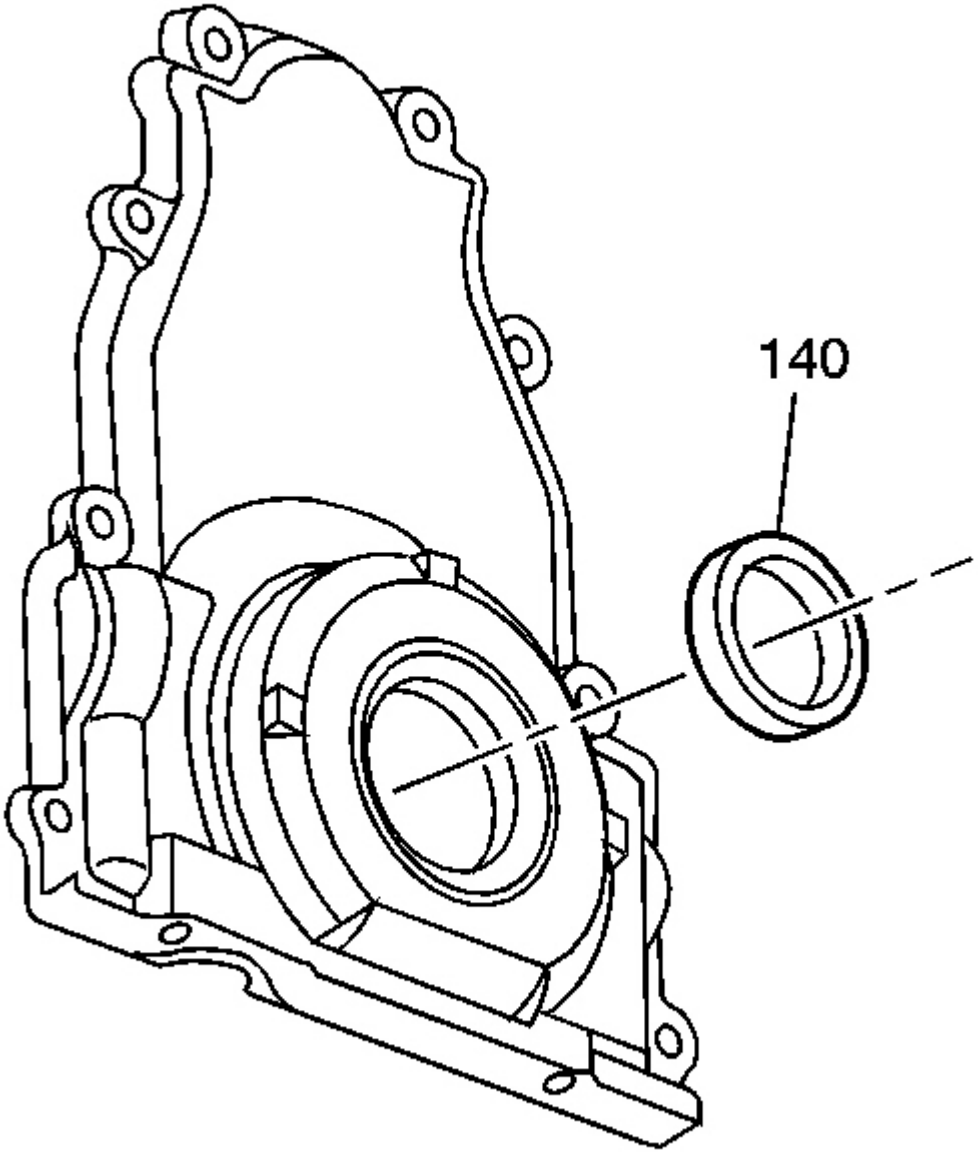

Fig. 238: View Of Crankshaft Front Oil Seal
Courtesy of GENERAL MOTORS CORP.

IMPORTANT:

- **Do not use the crankshaft oil seal again. Install a NEW crankshaft oil seal during assembly.**
- **Do not use the front cover-to-engine block gasket again. Install a**

cardiagn.com

NEW gasket during assembly.

1. Remove the crankshaft oil seal (140) from the front cover.
2. Clean the cover in solvent. Remove the sealant from the cover oil pan surface. Refer to **Replacing Engine Gaskets** .

CAUTION: Refer to Safety Glasses Caution in Cautions and Notices.

3. Dry the cover with compressed air.
4. Inspect the gasket sealing surfaces for excessive scratches or gouging.
5. Inspect the cover-to-oil pan threaded bolt holes for damaged threads or debris.
6. Inspect the crankshaft oil seal mounting bore for damage.

ENGINE REAR COVER CLEANING AND INSPECTION

cardiagn.com

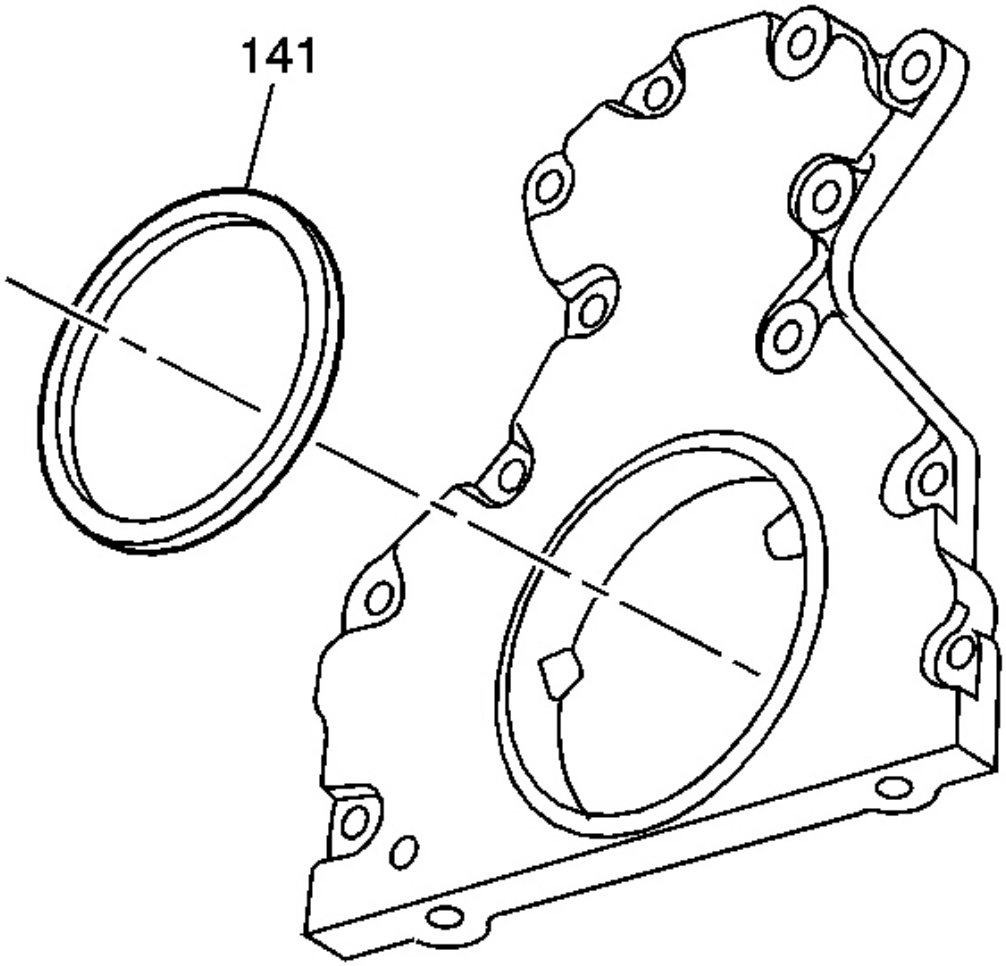

Fig. 239: View Of Crankshaft Rear Oil Seal
Courtesy of GENERAL MOTORS CORP.

IMPORTANT:

- **Do not use the crankshaft oil seal again. Install a NEW crankshaft oil seal during assembly.**
- **Do not use the rear cover-to-engine block gasket again. Install a NEW gasket during assembly.**

1. Remove the crankshaft oil seal (141) from the rear cover.
2. Clean the cover in solvent. Remove the sealant from the cover oil pan surface. Refer to **Replacing Engine Gaskets** .

cardiagn.com

CAUTION: Refer to Safety Glasses Caution in Cautions and Notices.

3. Dry the cover with compressed air.
4. Inspect the gasket sealing surfaces for excessive scratches or gouging.
5. Inspect the cover-to-oil pan threaded bolt holes for damaged threads or debris.
6. Inspect the crankshaft oil seal mounting bore for damage.

ENGINE VALLEY COVER CLEANING AND INSPECTION

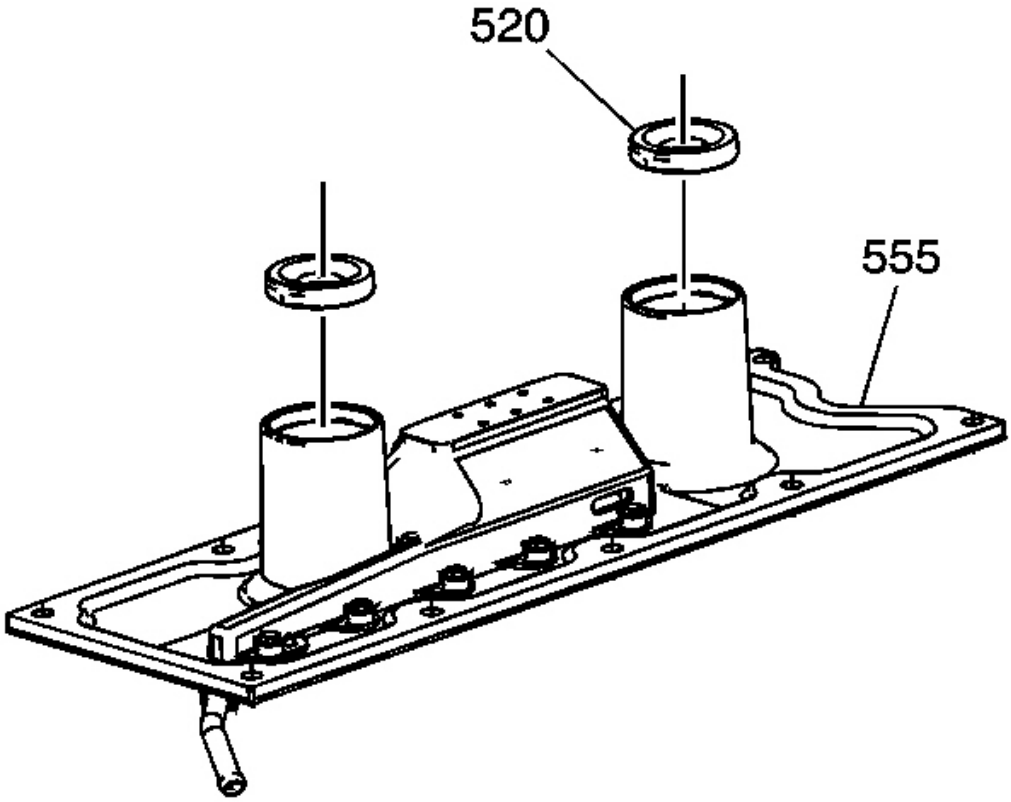

Fig. 240: Knock Sensor Oil Seals & Cover
Courtesy of GENERAL MOTORS CORP.

IMPORTANT: Do not use the valley cover knock sensor oil seals again. Install NEW oil seals during assembly.

cardiagn.com

1. Remove the knock sensor oil seals (520) from the valley cover (555).

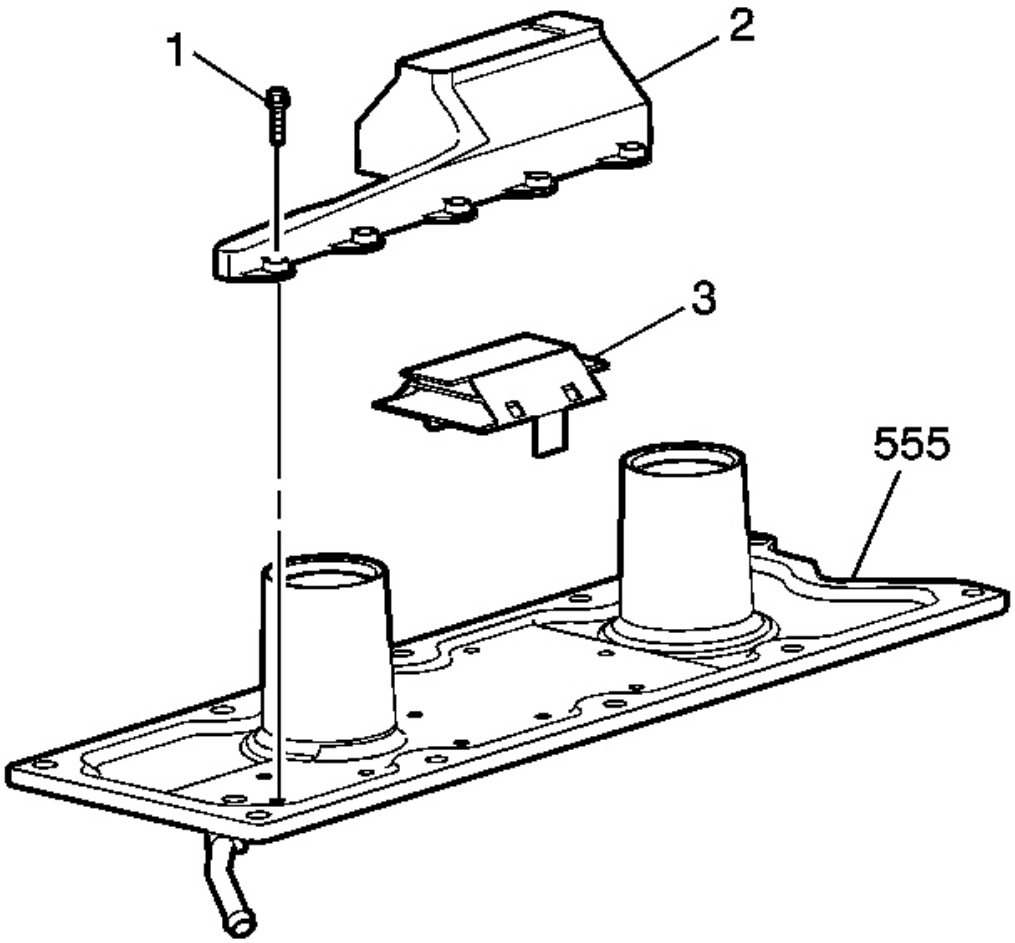

Fig. 241: Bolts, Baffle Cover, Baffle & Valley Cover
Courtesy of GENERAL MOTORS CORP.

2. Remove the bolts (1), baffle cover (2), and baffle (3) from the valley cover (555).
3. Clean the valley cover components in solvent.

CAUTION: Refer to Safety Glasses Caution in Cautions and Notices.

4. Dry the components with compressed air.

cardiagn.com

5. Inspect the gasket sealing surfaces for excessive scratches or gouging.
6. Inspect the oil seal bores for excessive scratching or gouging.
7. Inspect the ventilation tube for a loose fit or restrictions.

NOTE: Refer to Fastener Notice in Cautions and Notices.

8. Install the baffle (3), baffle cover (2) and bolts (1) to the valley cover (555).

   Tighten: Tighten the baffle cover bolts to 5 N.m (44 lb in).

VALVE ROCKER ARM COVER CLEANING AND INSPECTION

cardiagn.com

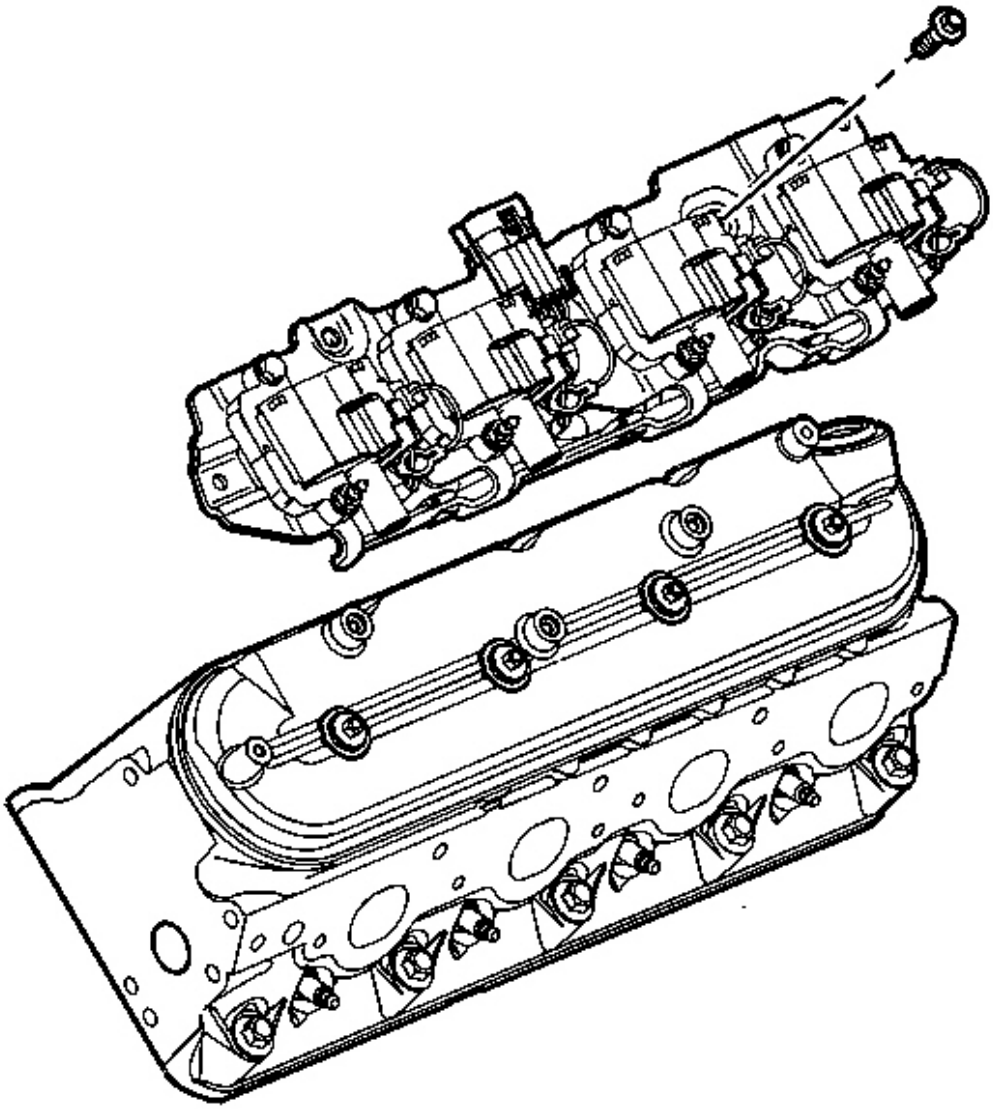

Fig. 242: Ignition Coil, Bracket Assembly & Bolts
Courtesy of GENERAL MOTORS CORP.

IMPORTANT:

- **Do not use the valve rocker arm cover gasket again. Install a NEW gasket during assembly.**
- **Remove the ignition coils from the bracket before cleaning the bracket in solvent. Do not submerge the ignition coils in solvent.**

cardiagn.com

- **Do not remove the oil fill tube from the cover unless service is required.**
- **If the oil fill tube has been removed from the rocker arm cover, install a NEW tube during assembly.**

1. Remove the ignition coil and bracket assembly and bolts from the rocker cover, if required.

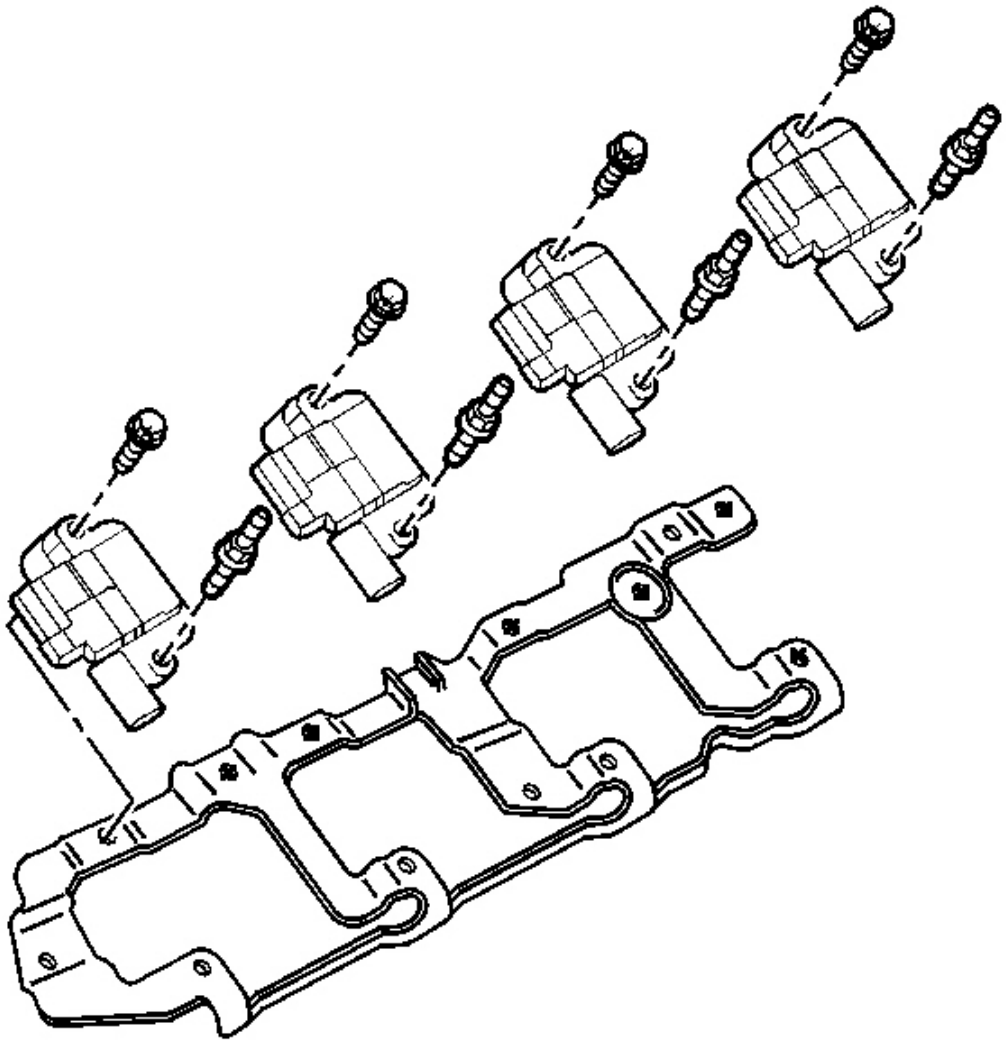

Fig. 243: View Of Left Ignition Coils & Bolts
Courtesy of GENERAL MOTORS CORP.

cardiagn.com

2. Remove the ignition coils and bolts from the bracket, if required.

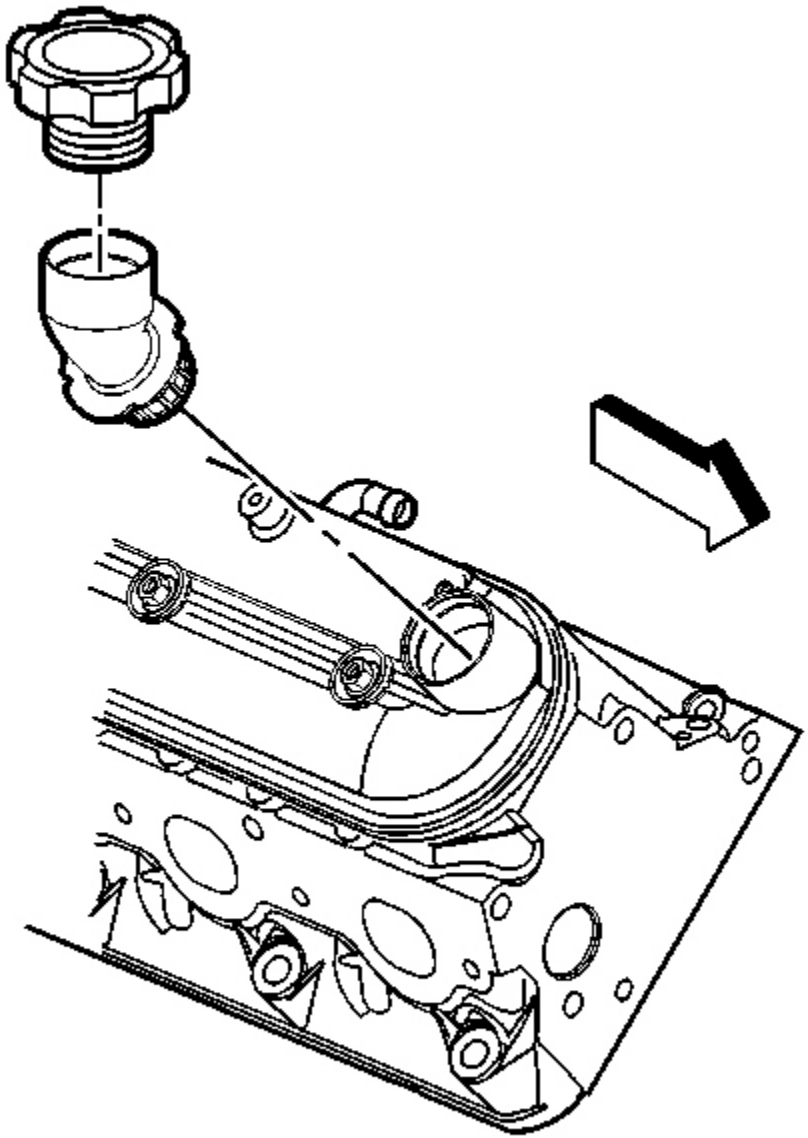

Fig. 244: View Of Oil Fill Tube
Courtesy of GENERAL MOTORS CORP.

3. Inspect the tube for a loose fit or damage.

cardiagn.com

4. Remove the oil fill cap and tube from the right cover, if required.

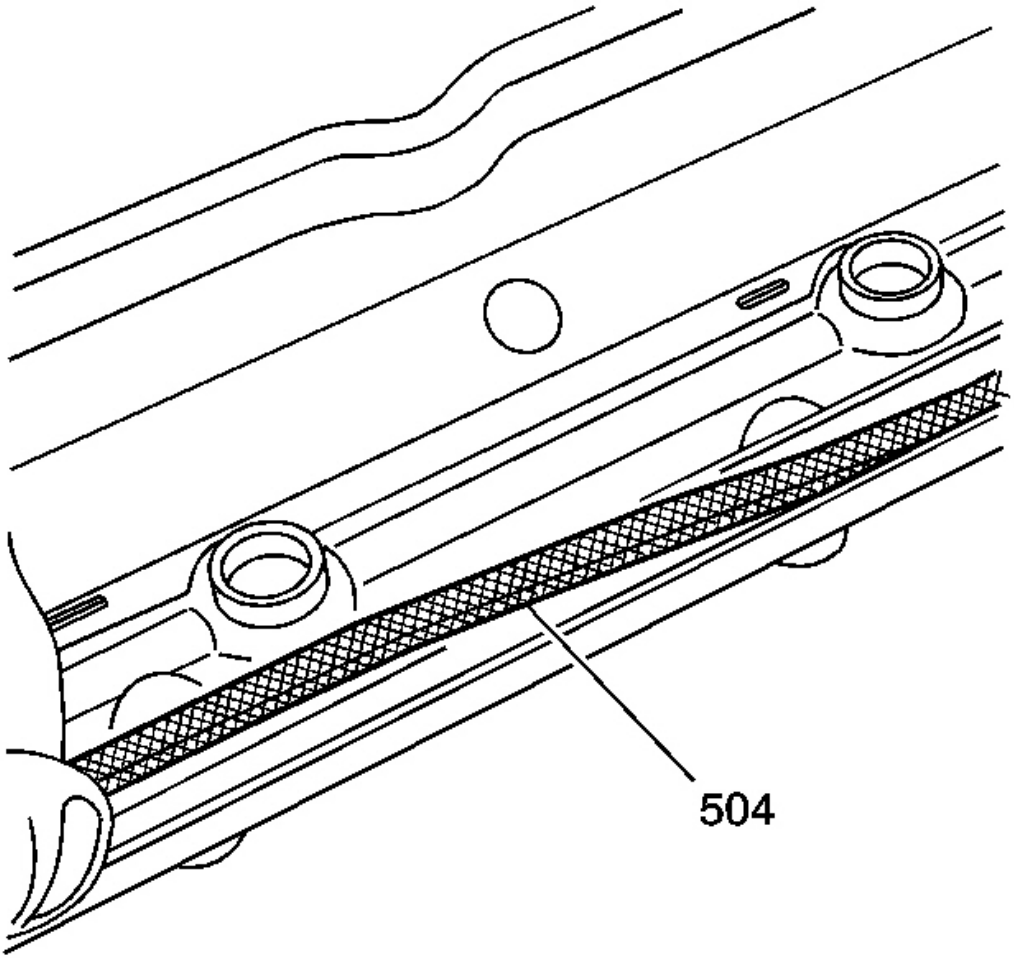

Fig. 245: View Of Valve Rocker Arm Cover Gasket
Courtesy of GENERAL MOTORS CORP.

5. Remove the gaskets (504) from the covers.
6. Remove the cover mounting bolts, with grommets.

   Cover mounting bolts and grommets that are not damaged may be used again during assembly.

7. Clean the covers and coil brackets in solvent.

cardiagn.com

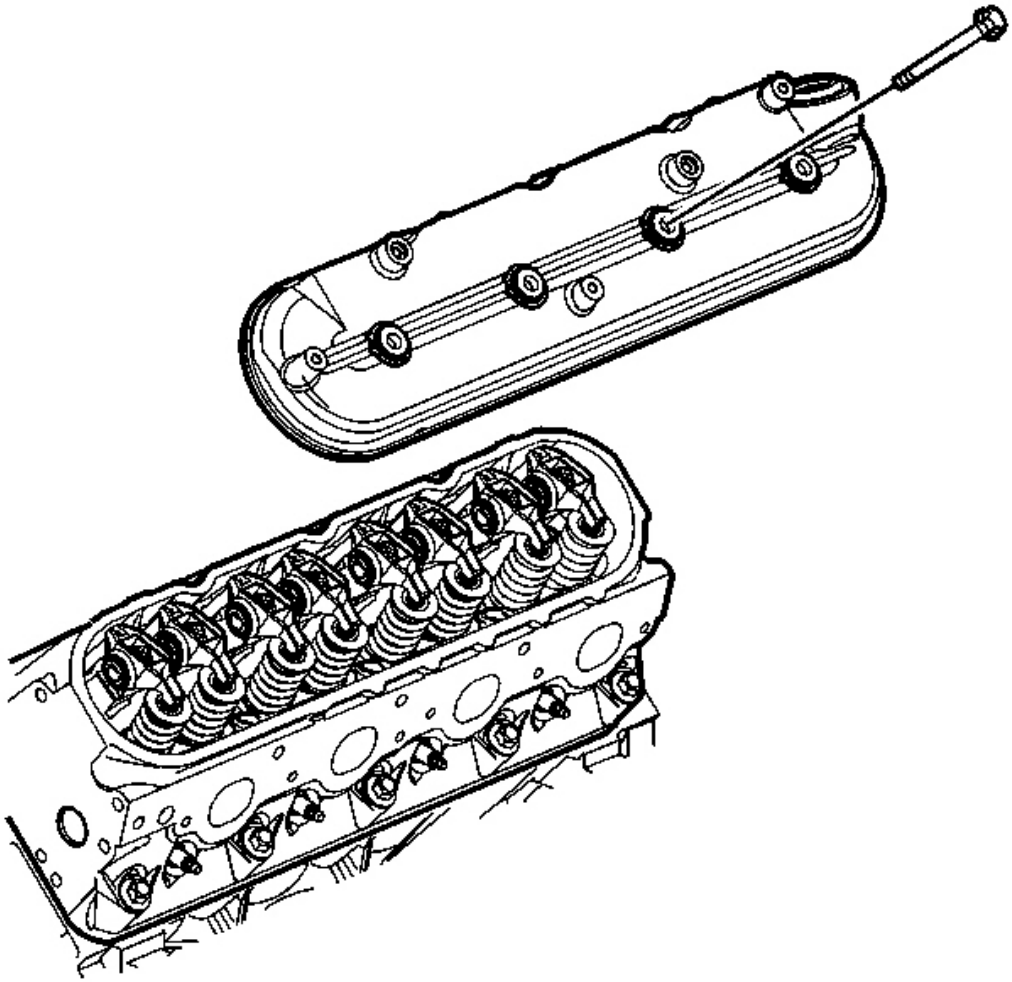

Fig. 246: Valve Cover To Cylinder Head View
Courtesy of GENERAL MOTORS CORP.

CAUTION: Refer to Safety Glasses Caution in Cautions and Notices.

8. Dry the components with compressed air.
9. Inspect the ventilation system passages for restrictions.
10. Inspect the gasket grooves for damage.
11. Inspect the coil bracket threaded bolt holes for damaged threads or debris.

cardiagn.com

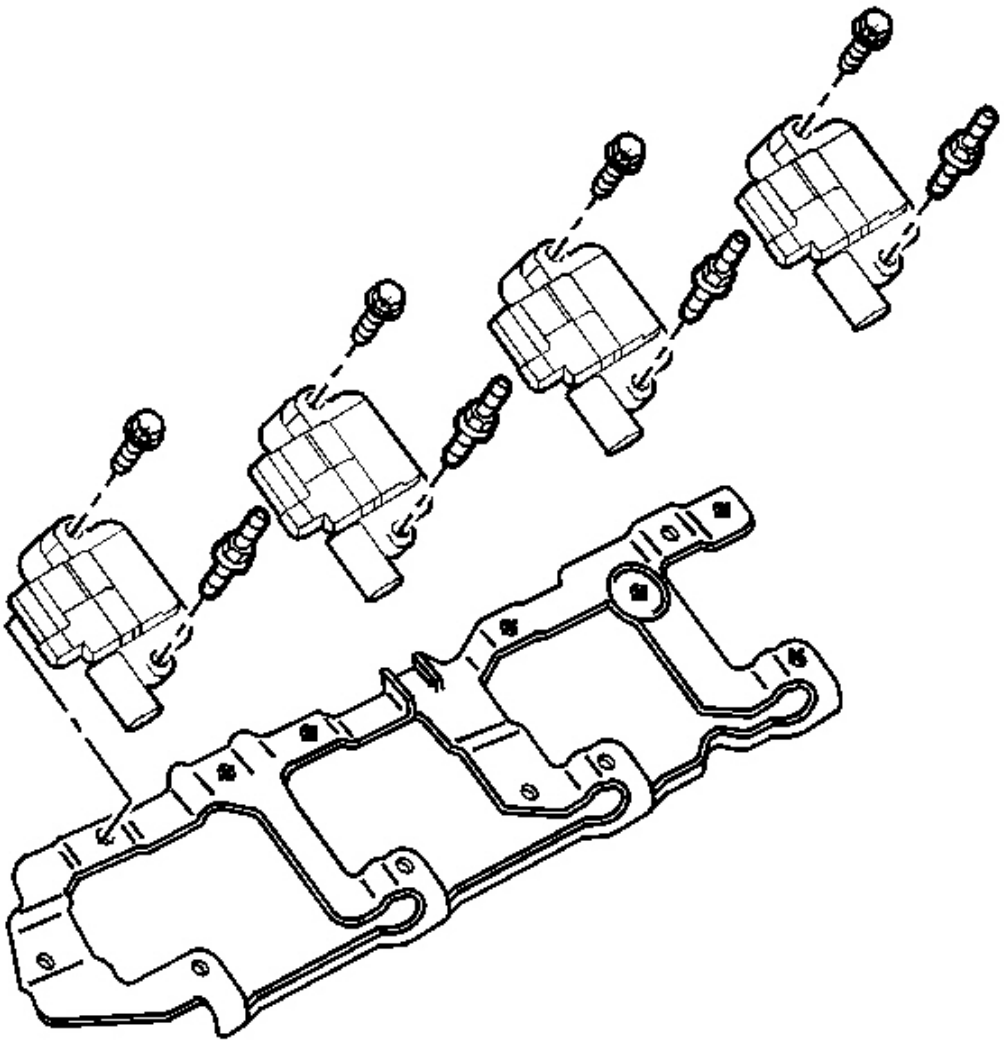

Fig. 247: View Of Left Ignition Coils & Bolts
Courtesy of GENERAL MOTORS CORP.

12. Inspect the coil mounting brackets for cracking, stripped bolt hole threads, or other damage.
13. Inspect the ignition coils for exterior damage and bent or broken connector pins.

OIL PAN CLEANING AND INSPECTION

cardiagn.com

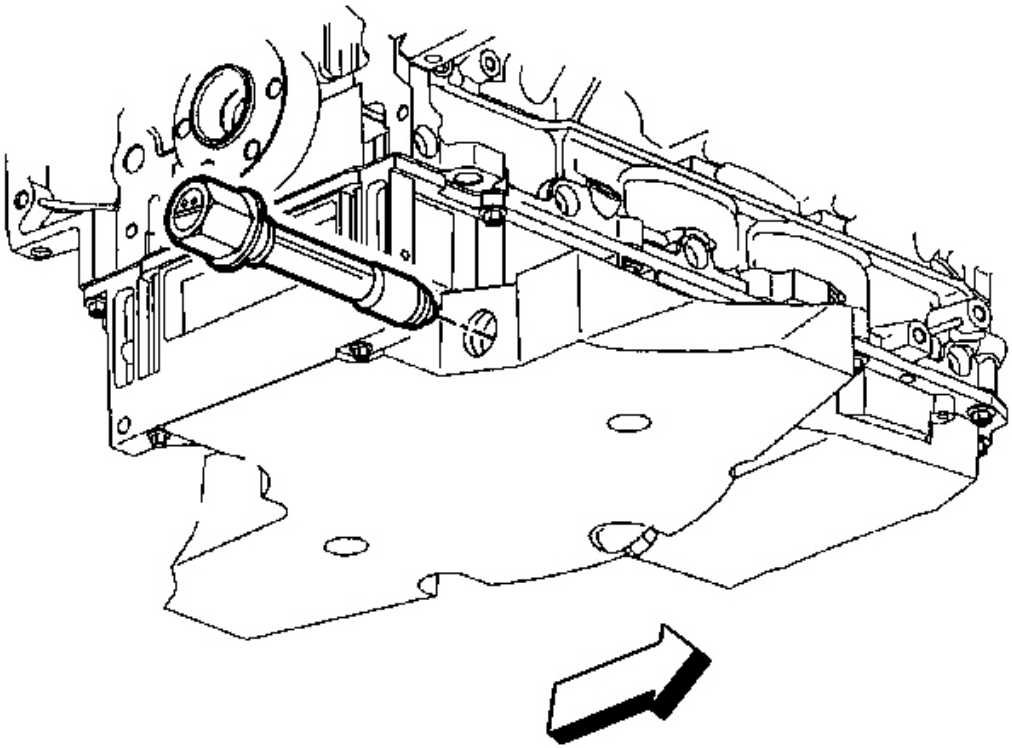

Fig. 248: Oil Level Sensor & Oil Pan
Courtesy of GENERAL MOTORS CORP.

IMPORTANT:

- **Do not use the oil pan gaskets again. Install NEW gaskets during assembly.**
- **When installing a NEW oil pan gasket, it is not necessary to install the rivets that retain the NEW gasket to the pan.**

1. Remove the oil level sensor from the pan.

cardiagn.com

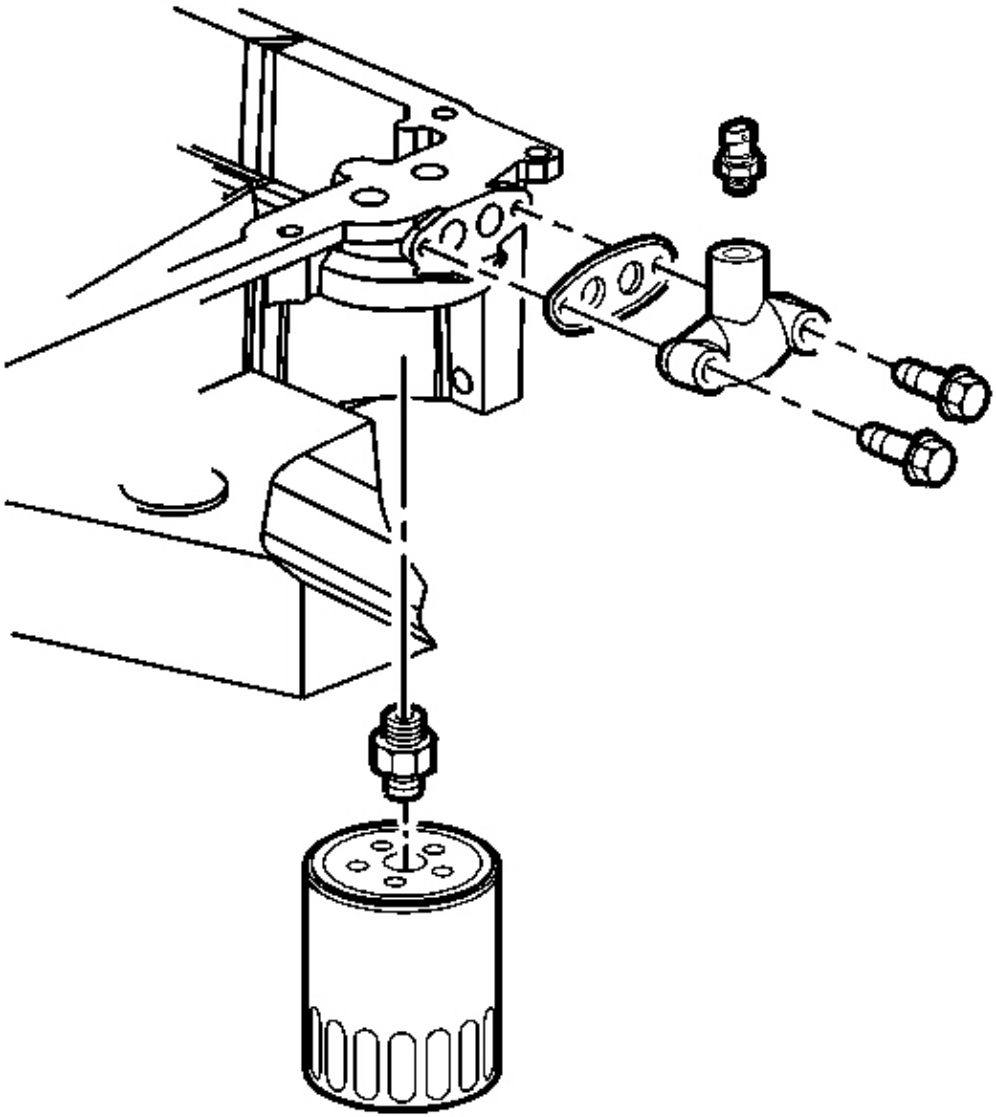

Fig. 249: Oil Temperature Sensor, Oil Pan Cover, Bolts, And Gasket
Courtesy of GENERAL MOTORS CORP.

2. Remove the oil temperature sensor, oil pan cover, gasket, and bolts.

cardiagn.com

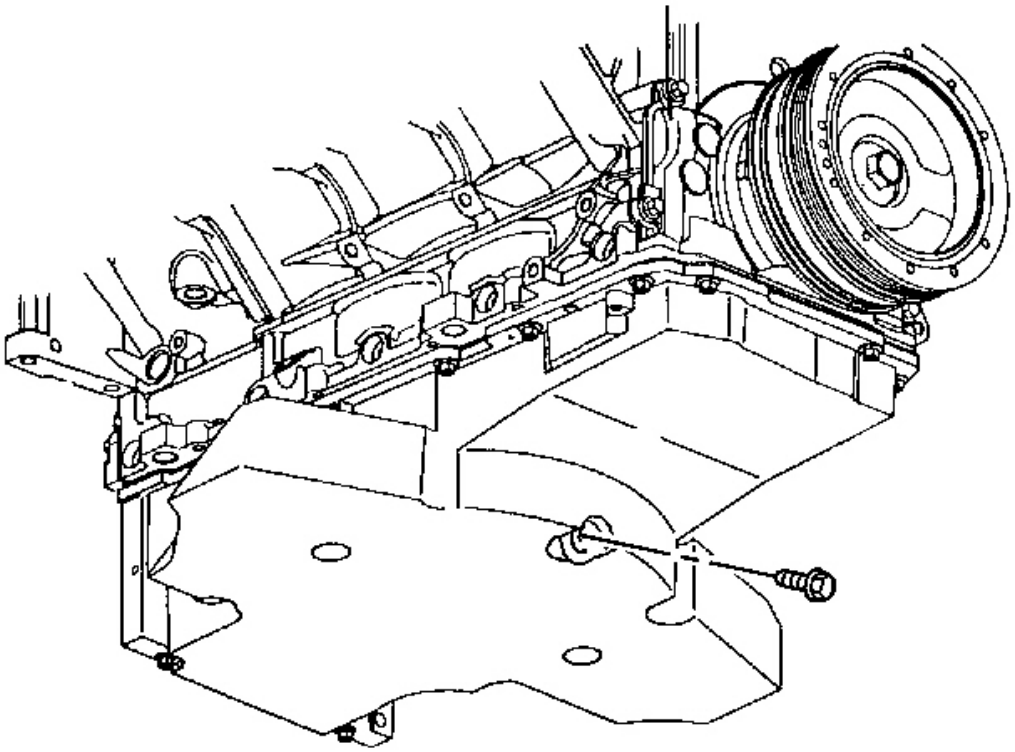

Fig. 250: Oil Pan Drain Plug & O-Ring Seal
Courtesy of GENERAL MOTORS CORP.

3. Remove the oil pan drain plug and O-ring seal.

cardiagn.com

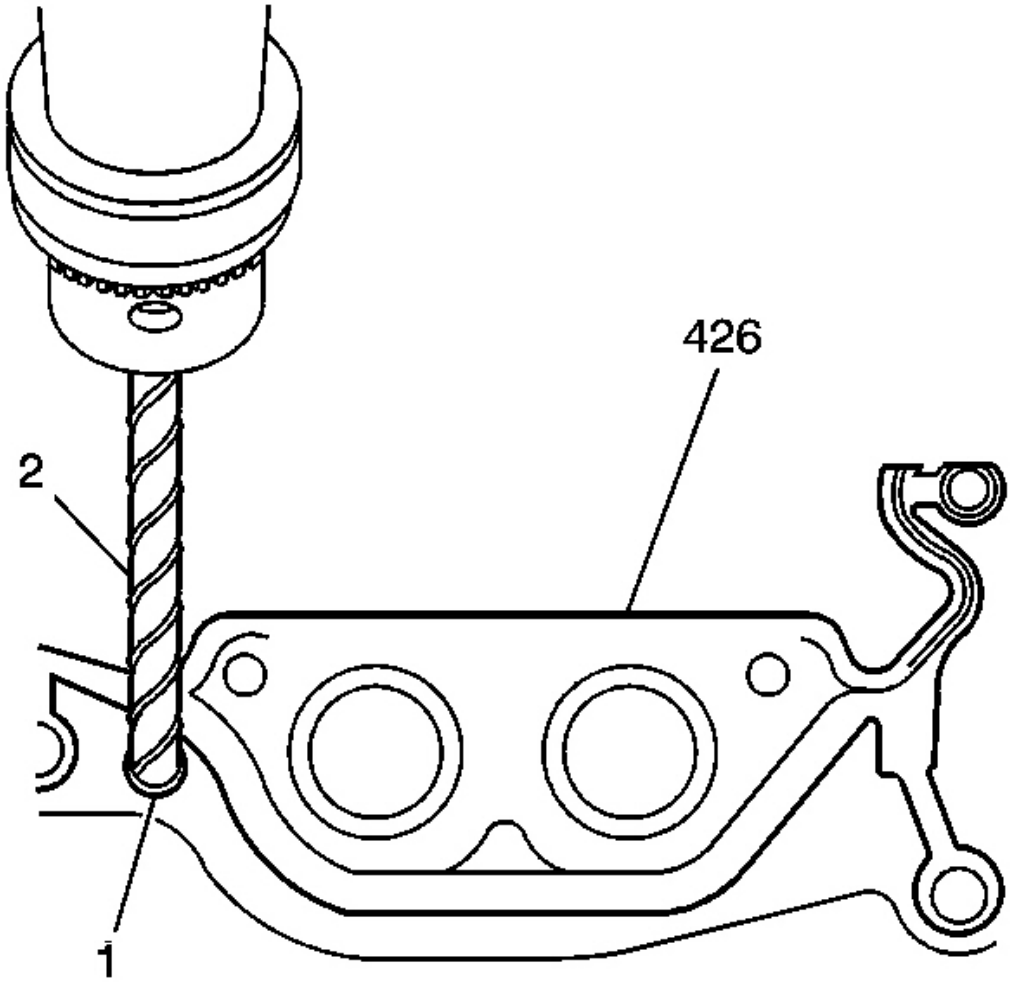

Fig. 251: Drill, Gasket & Oil Pan Gasket Retaining Rivets
Courtesy of GENERAL MOTORS CORP.

4. Drill (2) out the oil pan gasket retaining rivets (1), if required.
5. Remove the oil pan gasket (426).
6. Discard the gasket.

cardiagn.com

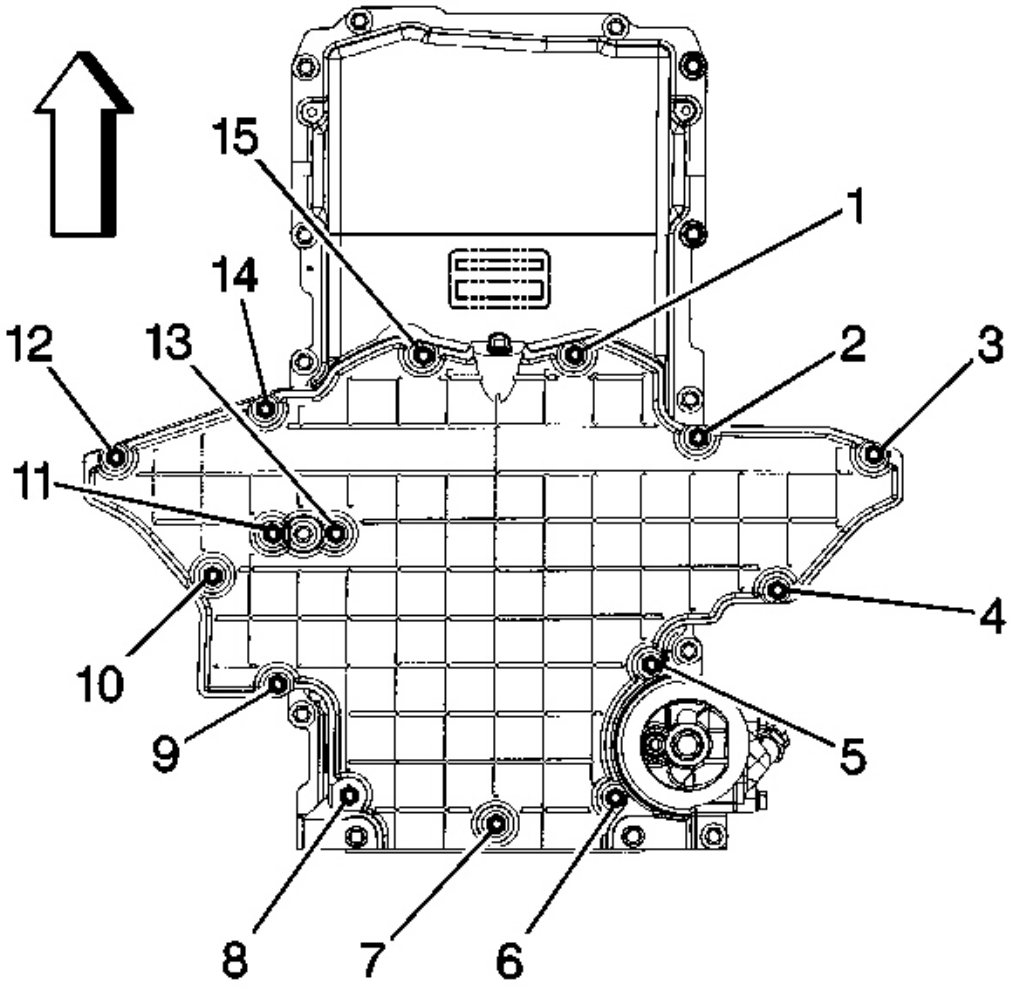

Fig. 252: Oil Pan - Lower - Bolts
Courtesy of GENERAL MOTORS CORP.

7. Remove the oil pan - lower - bolts (1-15).

cardiagn.com

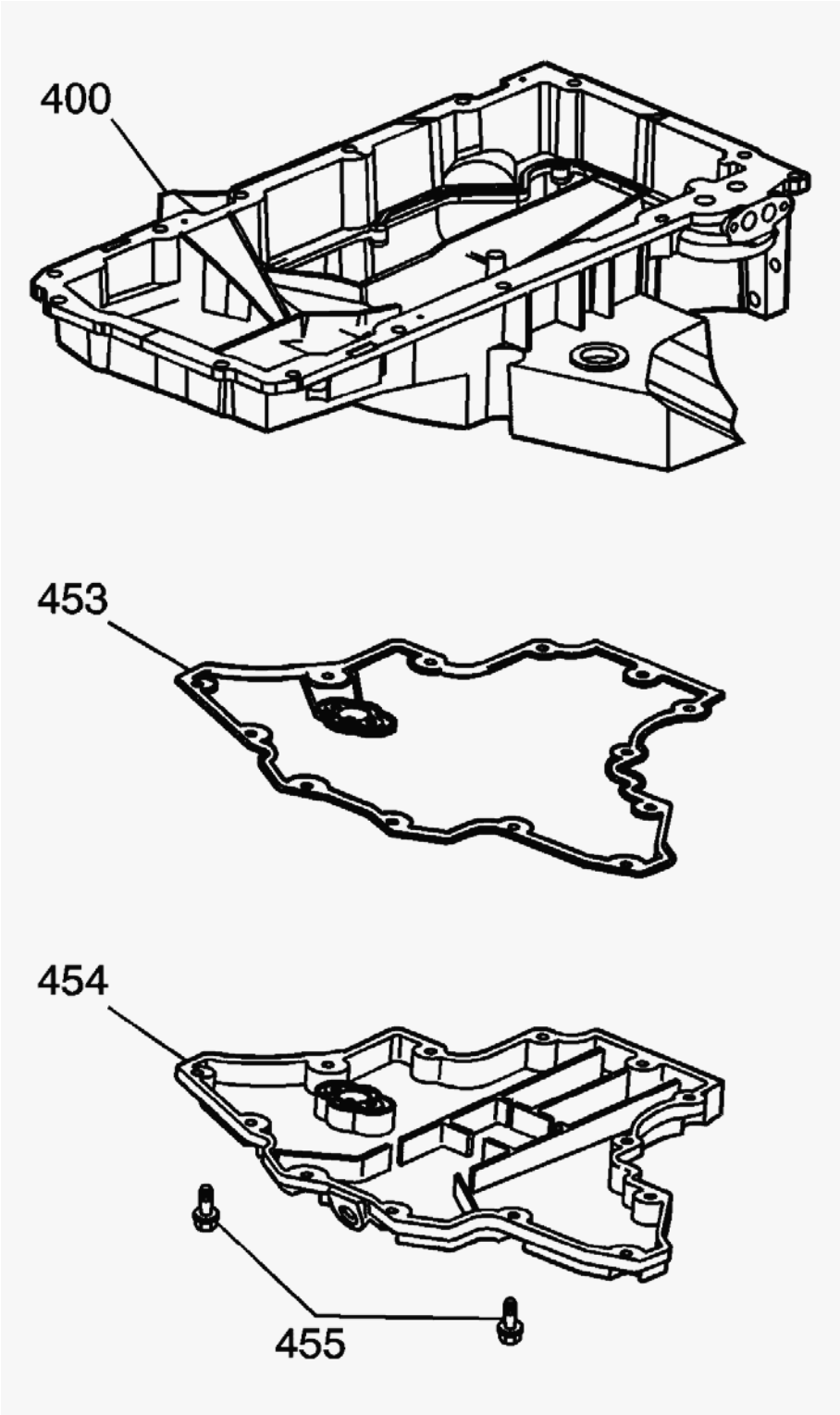

Fig. 253: Oil Pan - Upper, Gasket, Oil Pan - Lower & Bolts
Courtesy of GENERAL MOTORS CORP.

8. Separate the oil pan (400) - upper, gasket (453), oil pan (454) - lower, and bolts (455).

cardiagn.com

9. Discard the oil pan gasket.

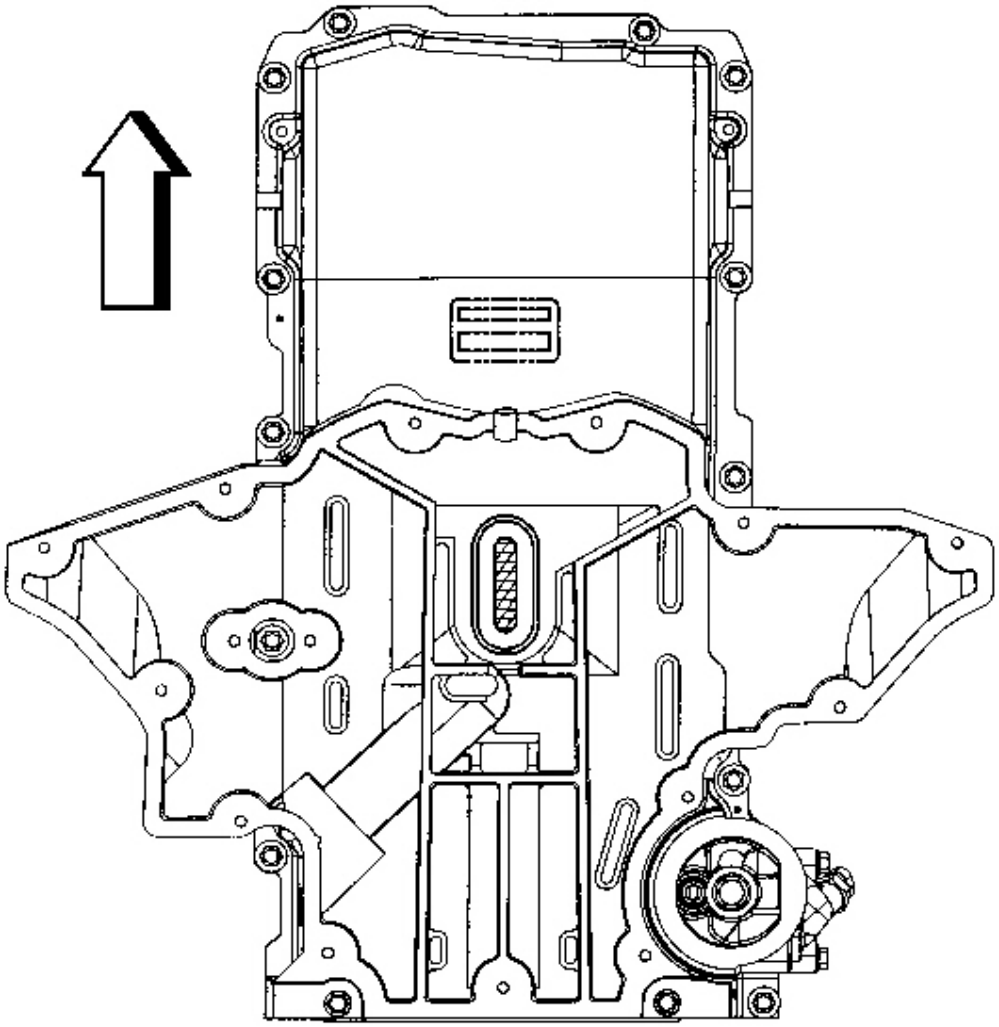

Fig. 254: Oil Pan - Lower - To Crankshaft Oil Deflector, Crankshaft, Or Other Internal Engine Components
Courtesy of GENERAL MOTORS CORP.

10. Clean the oil pan halves in solvent. Be sure to thoroughly clean all of the oil passages and recesses of dirt and debris.
11. Clean the oil pan gasket surfaces. Refer to **Replacing Engine Gaskets** .

cardiagn.com

CAUTION: Refer to Safety Glasses Caution in Cautions and Notices.

12. Dry the oil pan with compressed air.
13. Inspect the gasket sealing surfaces for excessive scratches or gouging. Refer to **Replacing Engine Gaskets** .

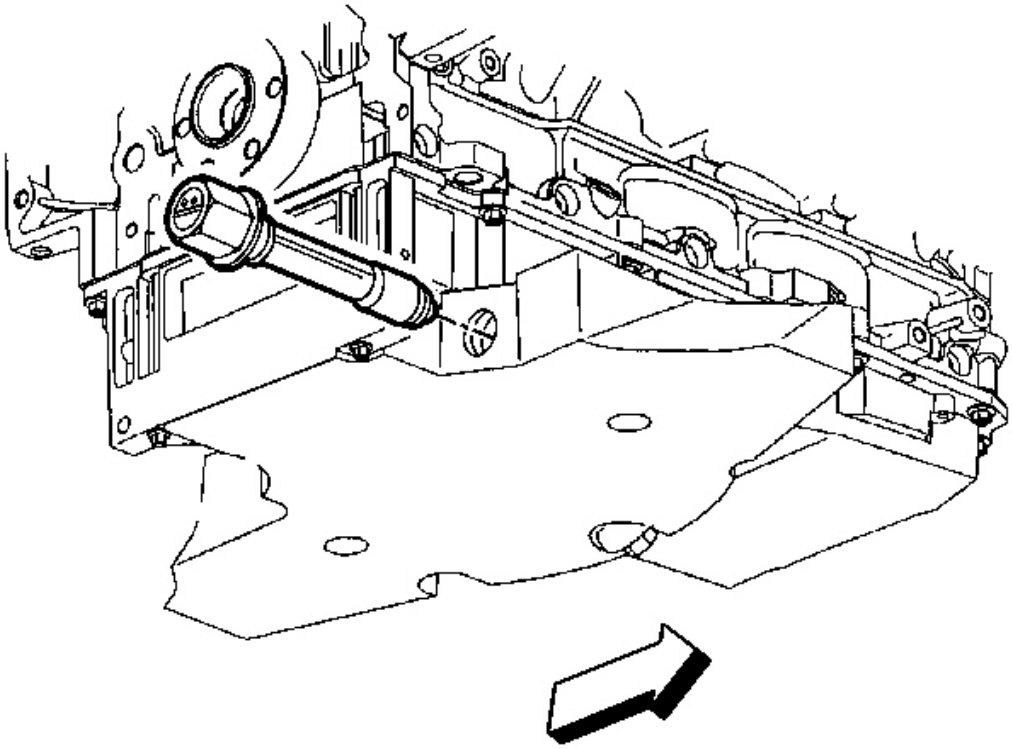

Fig. 255: Oil Level Sensor & Oil Pan
Courtesy of GENERAL MOTORS CORP.

14. Inspect the oil pan oil level sensor seal surface damage.

    The O-ring seal of the sensor may be used again if it is not cut or damaged.

cardiagn.com

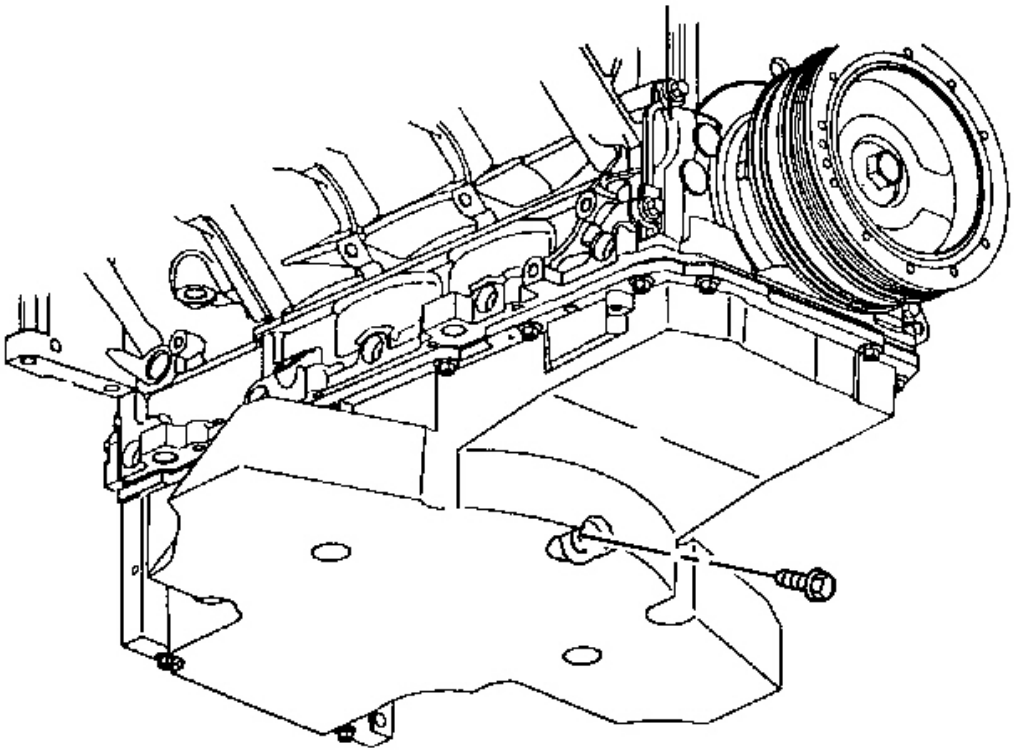

Fig. 256: Oil Pan Drain Plug & O-Ring Seal
Courtesy of GENERAL MOTORS CORP.

15. Inspect the oil pan drain plug and threaded drain hole for damaged threads.

    The drain plug O-ring seal may be used again if it is not cut or damaged.

cardiagn.com

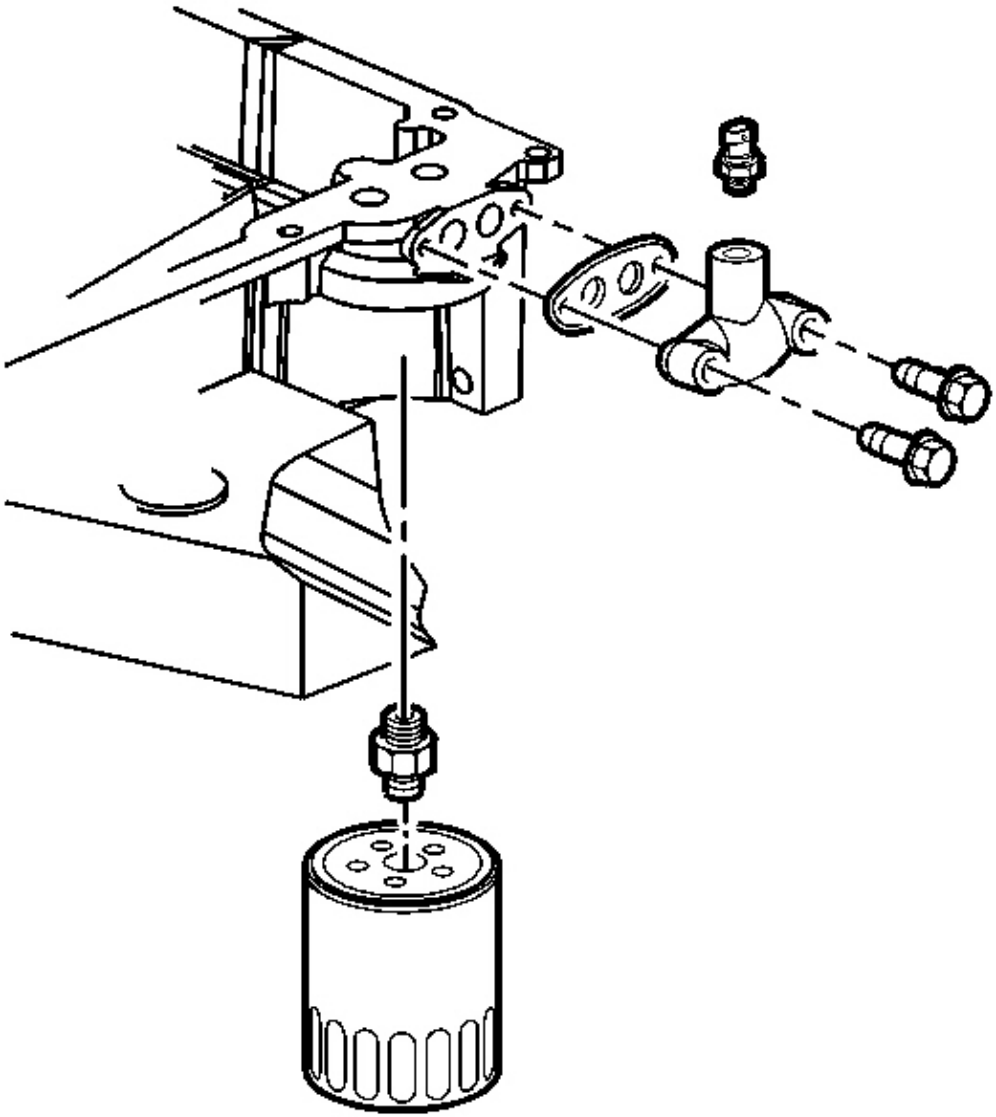

Fig. 257: Oil Temperature Sensor, Oil Pan Cover, Bolts, And Gasket
Courtesy of GENERAL MOTORS CORP.

16. Inspect the oil filter and pan cover sealing surface for scratches or gouging.
17. Inspect the oil passages for restrictions.

cardiagn.com

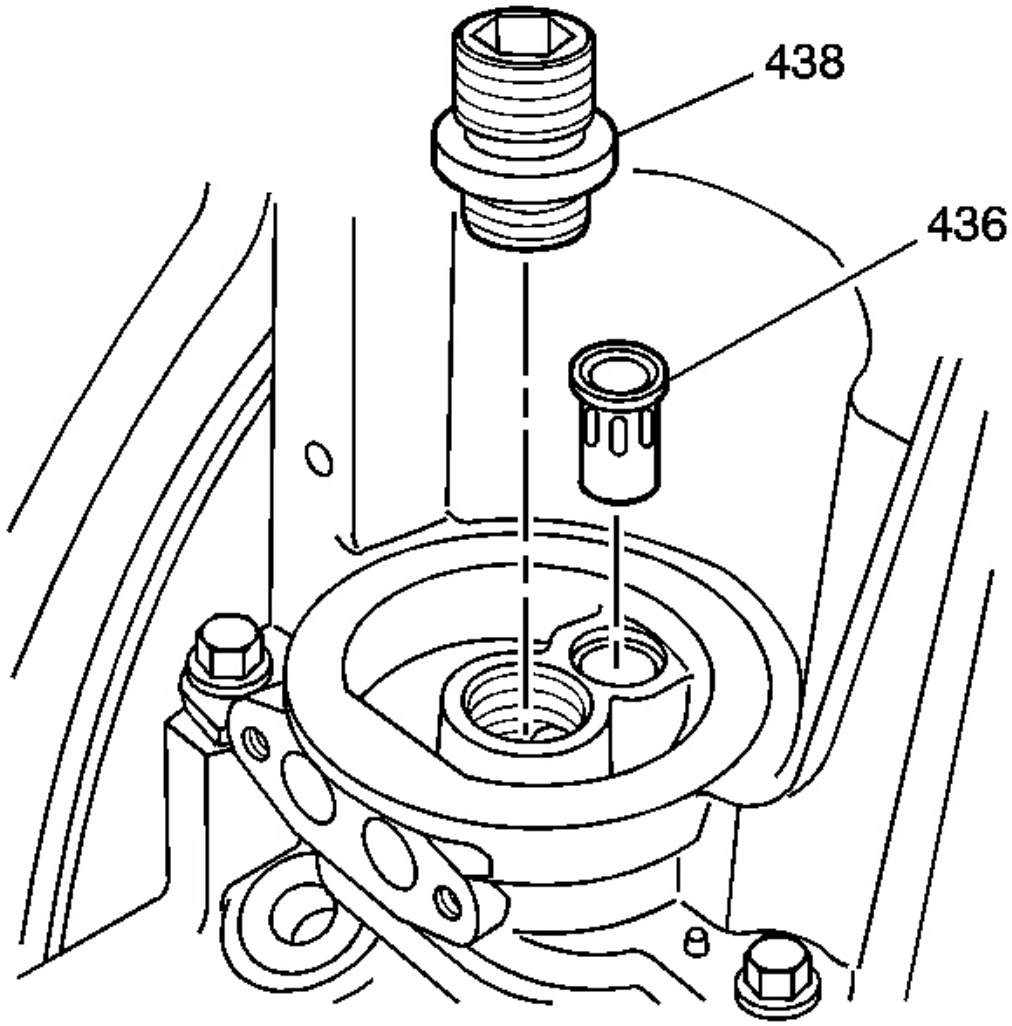

Fig. 258: View Of Oil Filter Fitting & Valve
Courtesy of GENERAL MOTORS CORP.

18. Inspect the oil filter fitting (438) for a loose fit or damaged threads.
19. Inspect the oil filter bypass valve (436) for proper operation.

Lightly push the bypass valve into the bore. The valve spring should seat the valve to the proper position.

INTAKE MANIFOLD CLEANING AND INSPECTION

Cleaning Procedure

cardiagn.com

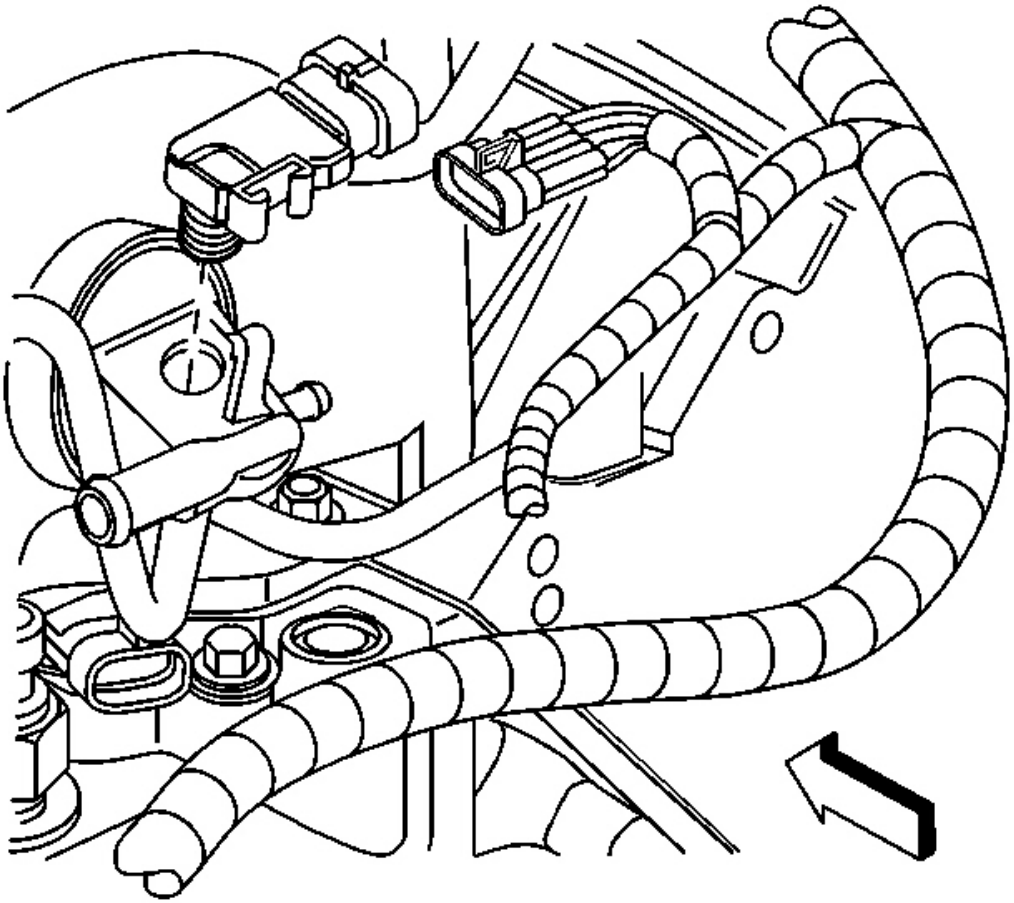

Fig. 259: MAP Sensor
Courtesy of GENERAL MOTORS CORP.

1. Remove the manifold absolute pressure (MAP) sensor from the rear of the intake manifold. The MAP sensor is to be installed upon completion of the cleaning and inspection procedures.
2. Inspect the sealing grommet on the MAP sensor. The grommet should not be torn or damaged.

cardiagn.com

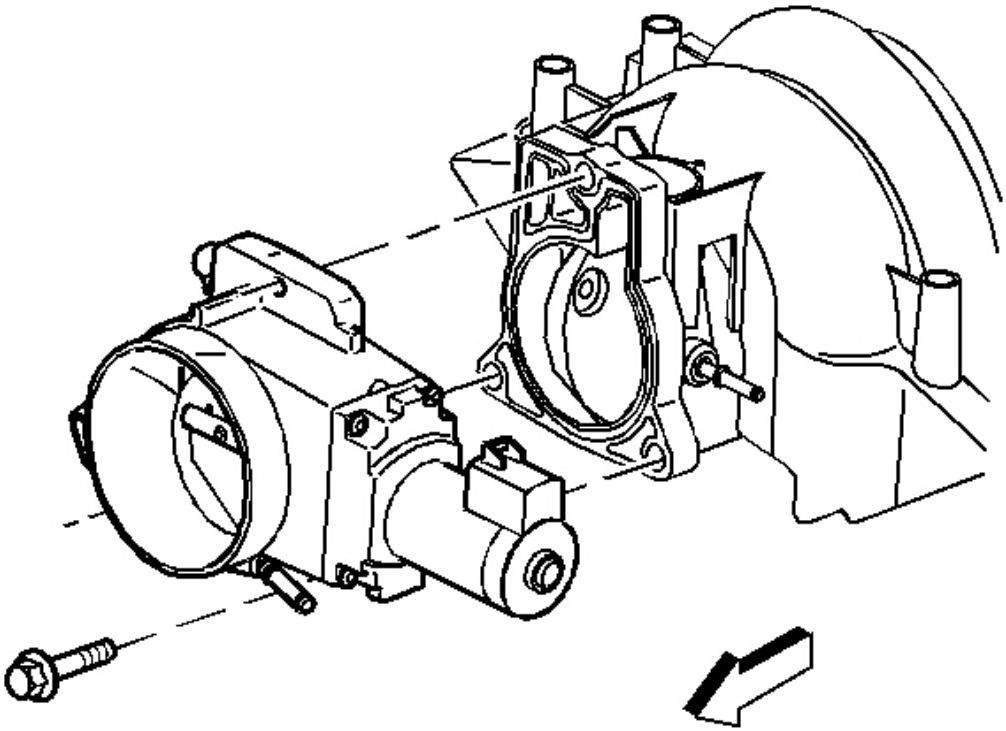

Fig. 260: Throttle Body & Bolts
Courtesy of GENERAL MOTORS CORP.

3. Remove the throttle body.

cardiagn.com

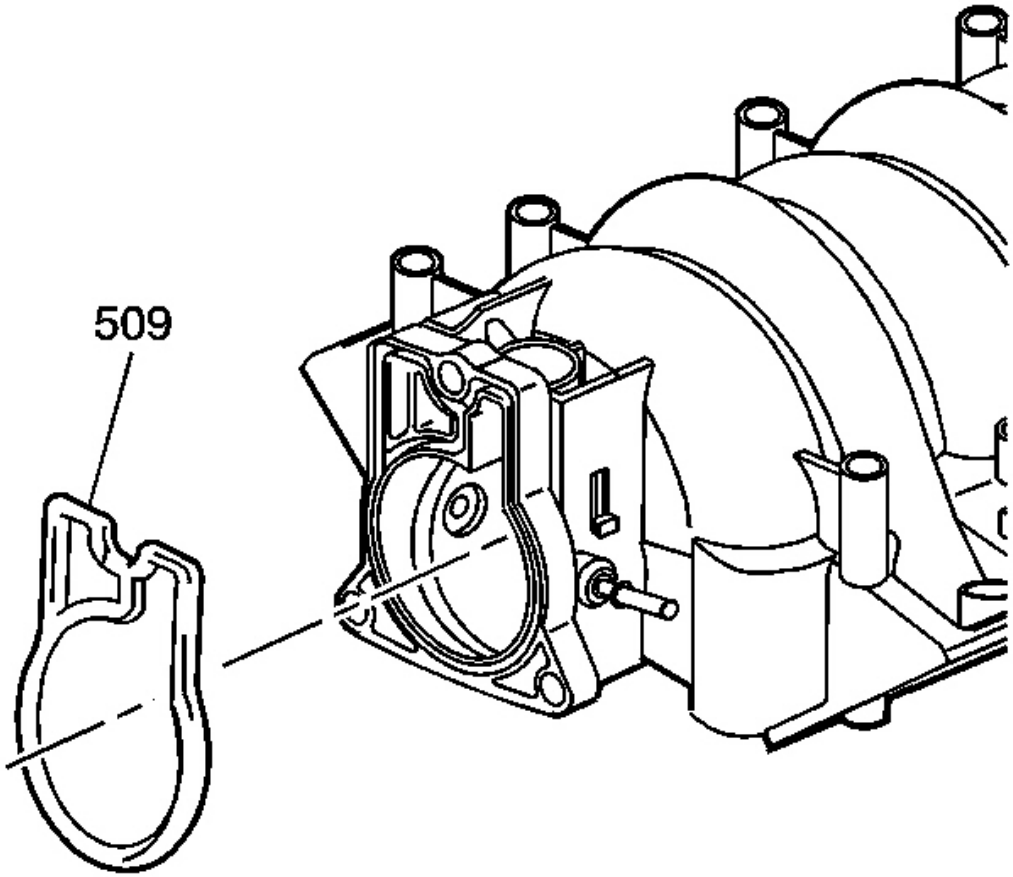

Fig. 261: Throttle Body Gasket
Courtesy of GENERAL MOTORS CORP.

4. Remove the throttle body gasket (509).
5. Discard the gasket.

cardiagn.com

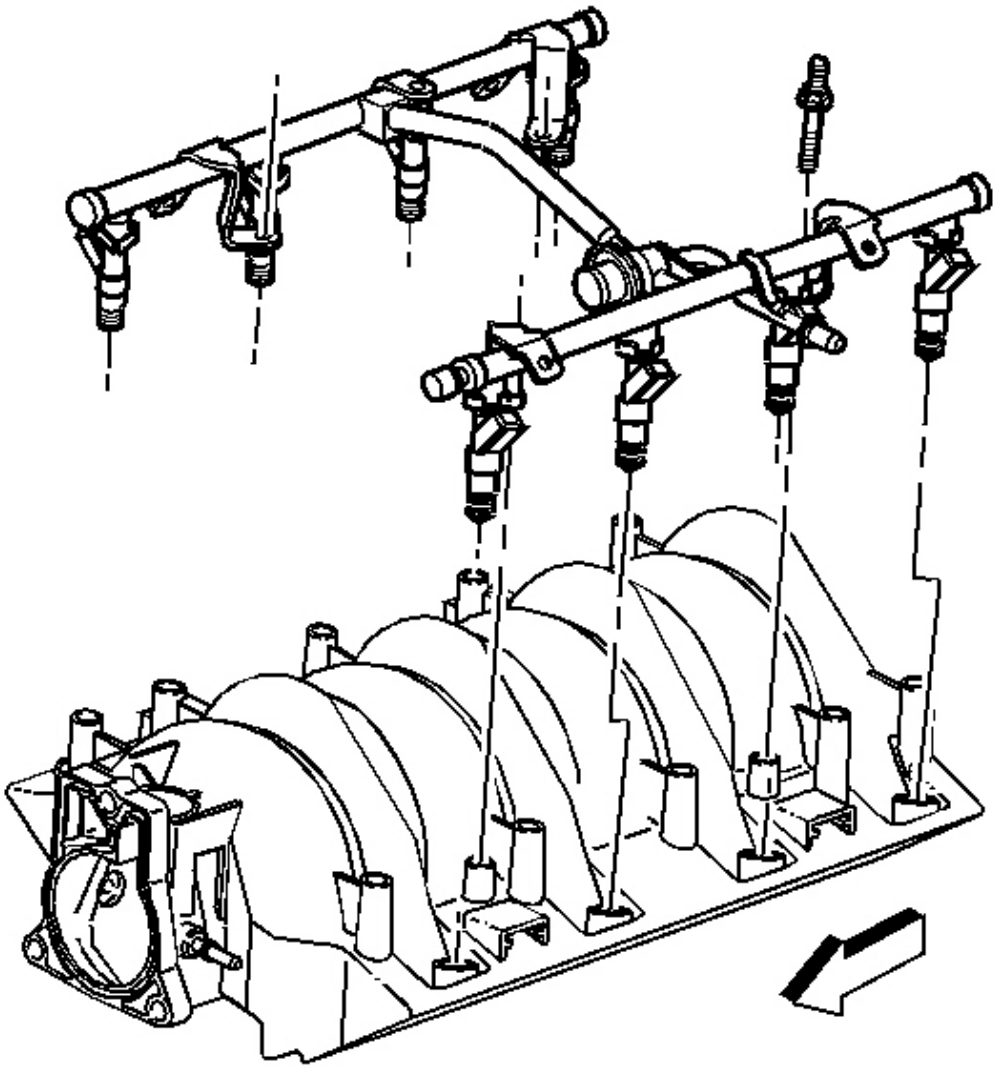

Fig. 262: Fuel Rail & Bolts
Courtesy of GENERAL MOTORS CORP.

6. Remove the fuel rail with injectors.

cardiagn.com

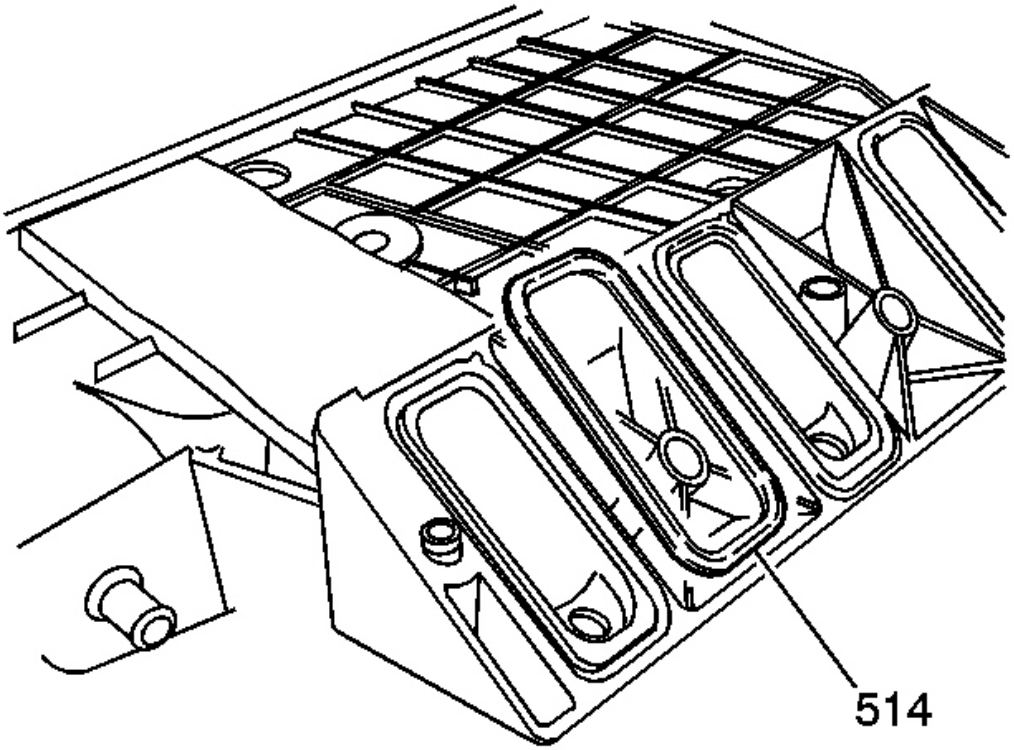

Fig. 263: Manifold-To-Cylinder Head Gaskets
Courtesy of GENERAL MOTORS CORP.

7. Remove and discard the intake manifold-to-cylinder head gaskets (514).
8. Clean the intake manifold in solvent.
   - Clean the intake manifold gasket grooves.
   - Clean the intake manifold vacuum passages at the rear of the intake.

CAUTION: Refer to Safety Glasses Caution in Cautions and Notices.

9. Dry the intake manifold with compressed air.
10. Upon installation of the intake manifold, install NEW manifold-to-cylinder head gaskets.

Inspection Procedure

cardiagn.com

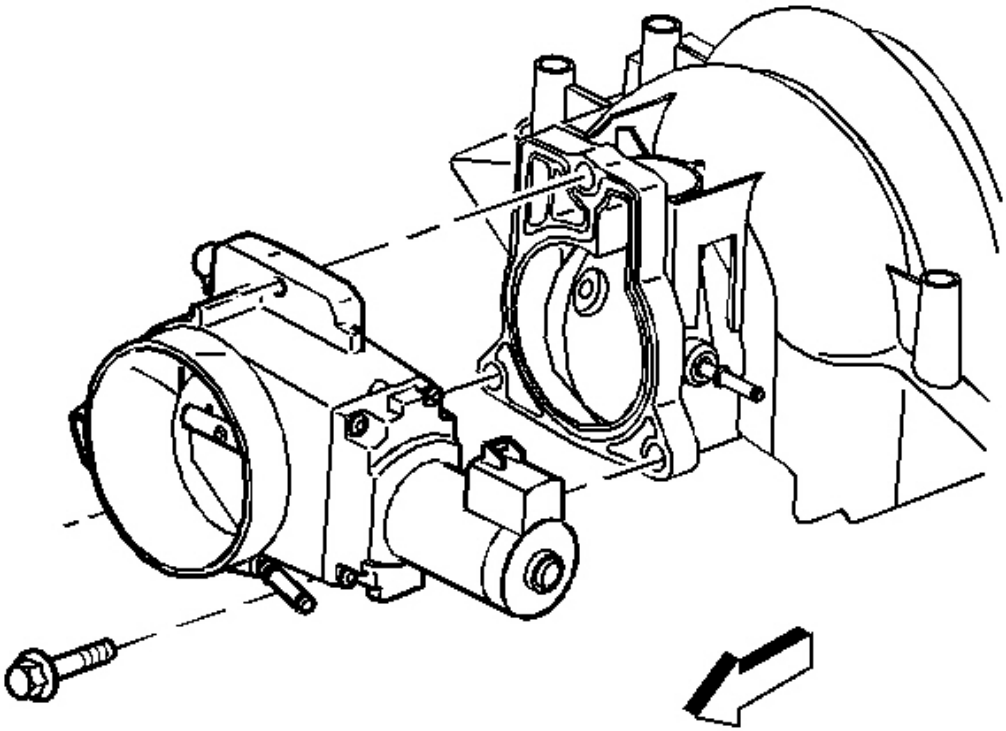

Fig. 264: Throttle Body & Bolts
Courtesy of GENERAL MOTORS CORP.

1. Inspect the throttle body bolt inserts for looseness or damaged threads.

cardiagn.com

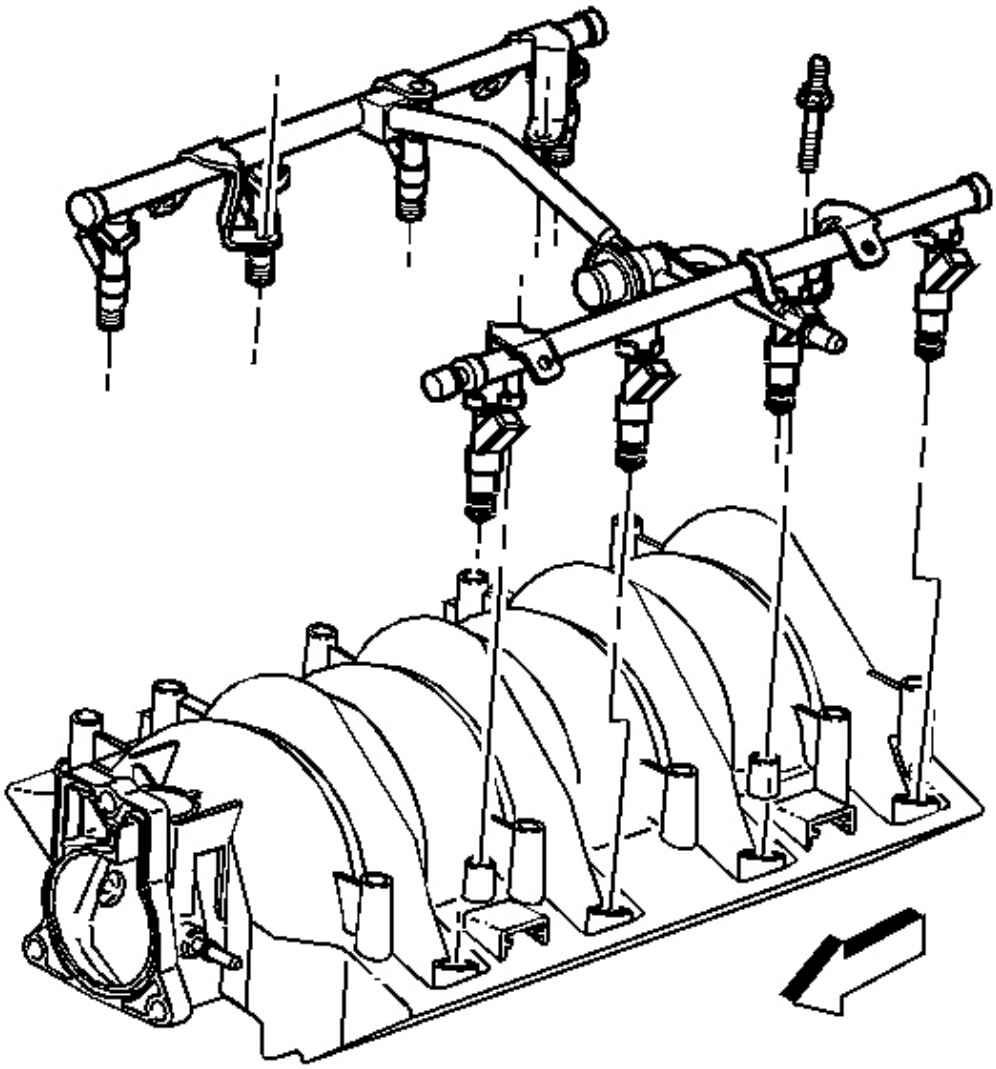

Fig. 265: Fuel Rail & Bolts
Courtesy of GENERAL MOTORS CORP.

2. Inspect the fuel rail bolt inserts for looseness or damaged threads.
3. Inspect the intake manifold vacuum passages for debris or restrictions.

cardiagn.com

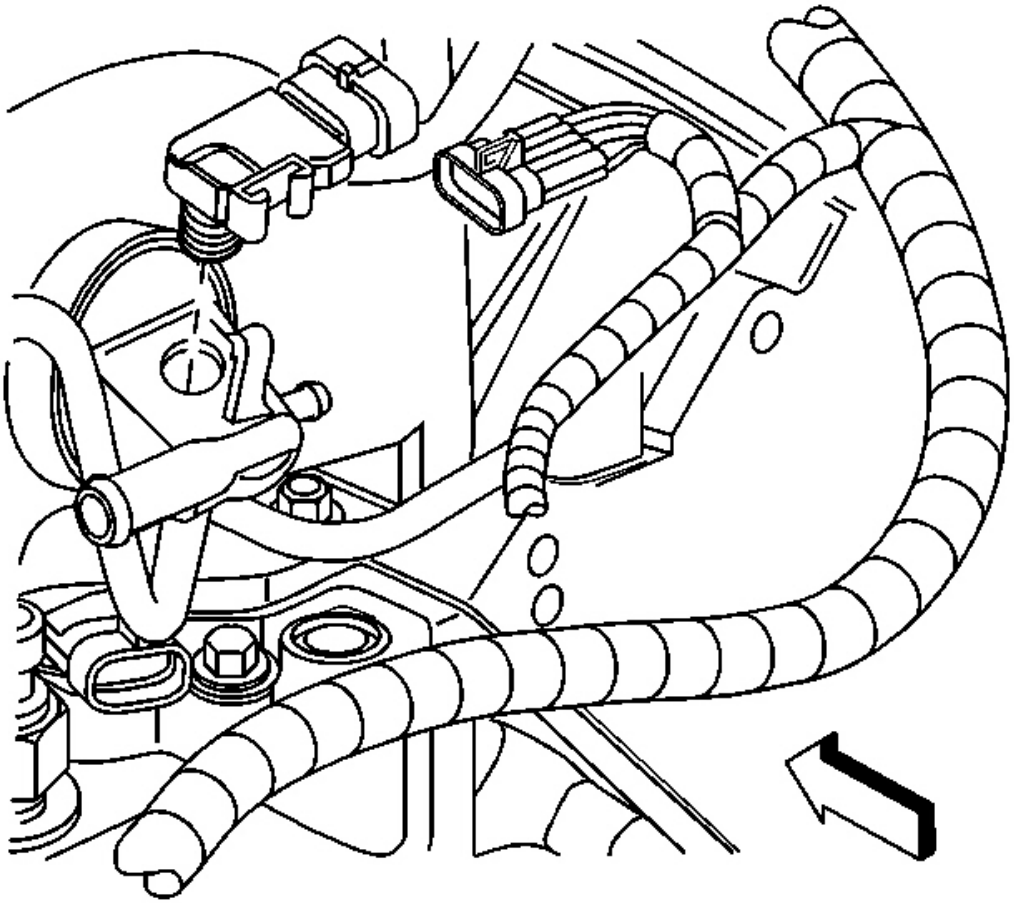

Fig. 266: MAP Sensor
Courtesy of GENERAL MOTORS CORP.

IMPORTANT:

- **The manifold absolute pressure (MAP) sensor housing is retained to the intake manifold by push-in-place snap lock design.**
- **The MAP sensor housing is sealed at the intake manifold by an O-ring seal.**

4. Inspect the MAP sensor housing.
   - Inspect for damaged or broken vacuum fittings, damaged MAP sensor mounting bore, or broken MAP sensor retaining tab.
   - Inspect the rear MAP sensor housing for looseness or poor sealing to the intake manifold. Repair or replace the components as necessary.

cardiagn.com

5. Inspect the composite intake manifold assembly for cracks or damage.

   Inspect the areas between the intake runners.

6. Inspect all the gasket sealing surfaces and grooves for cracking or damage.

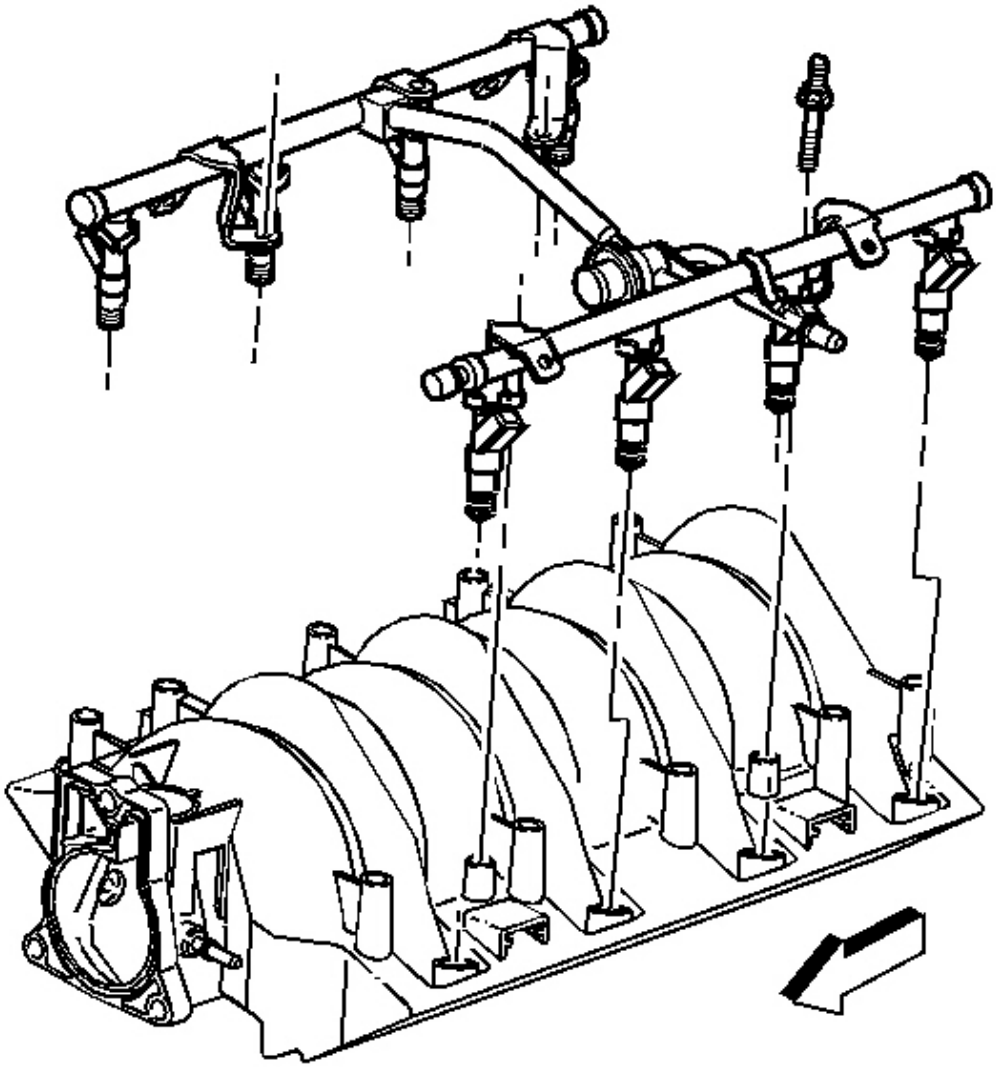

Fig. 267: Fuel Rail & Bolts
Courtesy of GENERAL MOTORS CORP.

cardiagn.com

7. Inspect the fuel injector bores for excessive scoring or damage.
8. Inspect the intake manifold cylinder head deck for warpage.
    1. Locate a straight edge across the intake manifold cylinder head deck surface.
    2. Insert a feeler gauge between the intake manifold and the straight edge.

    A intake manifold with warpage in excess of 0.5 mm (0.02 in), must be replaced.

9. Upon completion of inspection, install the MAP sensor to the manifold.

EXHAUST MANIFOLD CLEANING AND INSPECTION

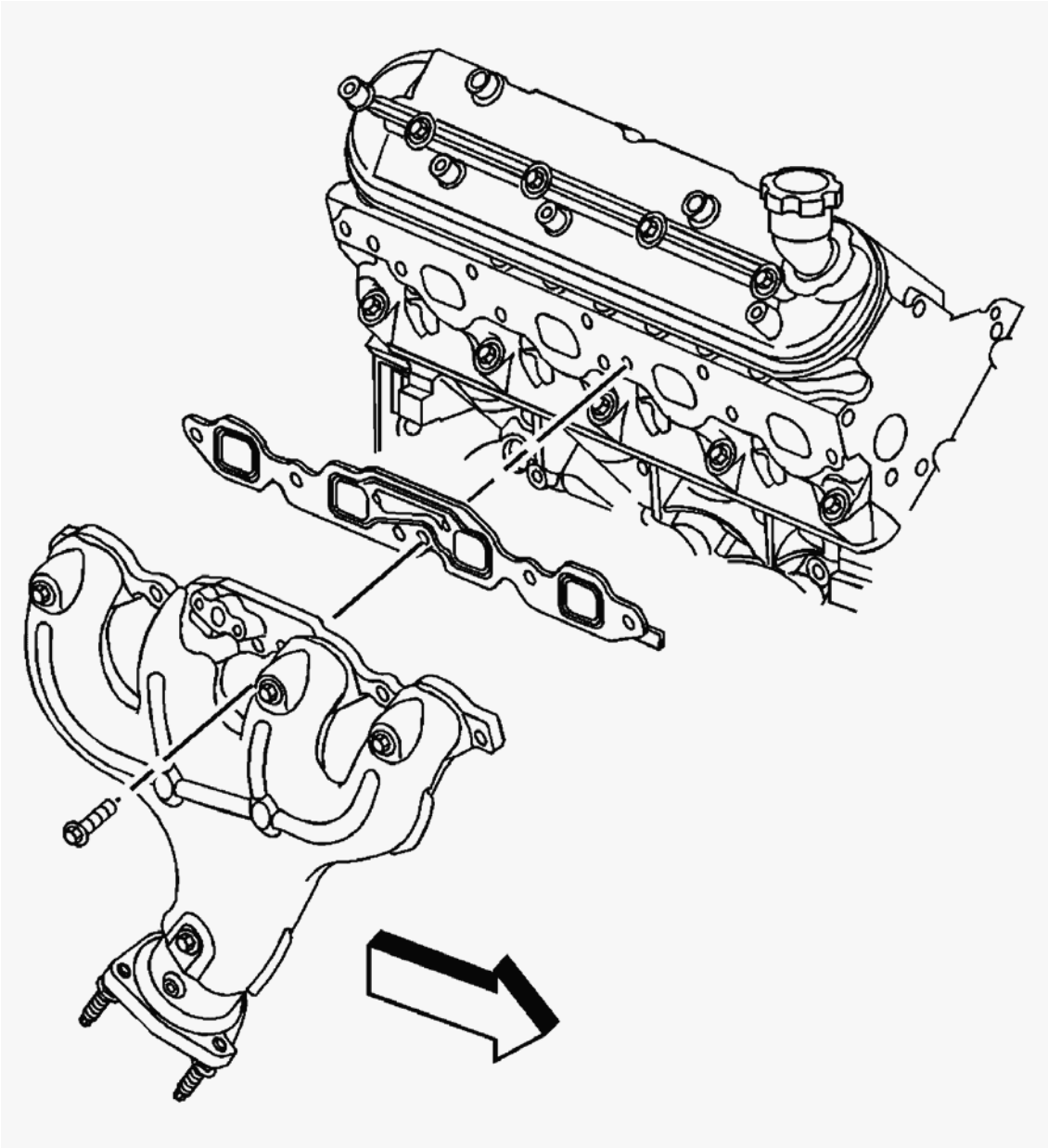

cardiagn.com

Fig. 268: Exhaust Manifold Air Injection Reaction
Courtesy of GENERAL MOTORS CORP.

IMPORTANT:

- **Do not use the exhaust manifold-to-cylinder head gaskets again. Upon installation of the exhaust manifold, install a NEW gasket. An improperly installed gasket or leaking exhaust system may effect On-Board Diagnostics (OBD) II system performance.**
- **Remove the oxygen sensor prior to cleaning the manifold, do not submerge the oxygen sensor in cleaning solvent.**

1. Remove the oxygen sensor from the manifold.
2. Clean the exhaust manifold in solvent.

CAUTION: Refer to Safety Glasses Caution in Cautions and Notices.

3. Dry the exhaust manifold with compressed air.
4. Inspect the exhaust manifold air injection reaction (AIR) passages for restrictions.
5. Inspect the AIR flange threaded bolt holes threads for damage.
6. Inspect the AIR flange gasket surface for excessive scratches or gouging.
7. Inspect the exhaust manifold-to-cylinder head gasket surface for excessive scratches or gouging.
8. Inspect for a loose or damaged heat shield.

cardiagn.com

Fig. 269: Inspecting The Take Down Studs For Damaged Threads
Courtesy of GENERAL MOTORS CORP.

9. Inspect the take down studs for damaged threads.

cardiagn.com

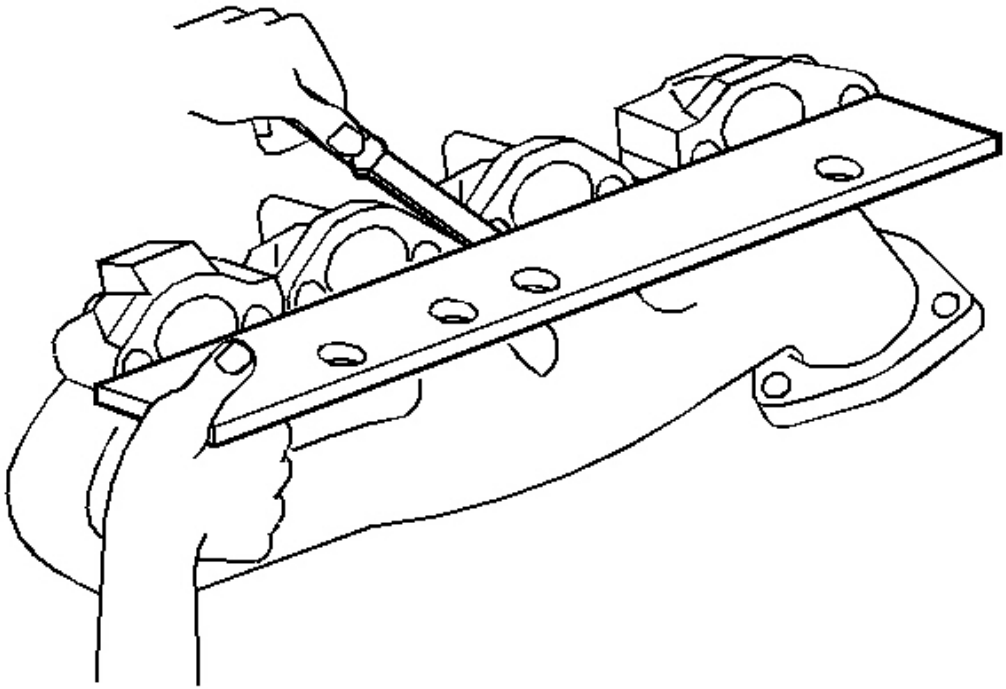

Fig. 270: Measuring The Exhaust Manifold Cylinder Head For Warpage
Courtesy of GENERAL MOTORS CORP.

10. Using a straight edge and a feeler gage, measure the exhaust manifold cylinder head deck for warpage.

    A exhaust manifold deck with warpage in excess of 0.25 mm (0.01 in), may cause an exhaust leak and may effect OBD II system performance. Exhaust manifolds not within specifications must be replaced.

COOLANT AIR BLEED PIPE CLEANING AND INSPECTION

cardiagn.com

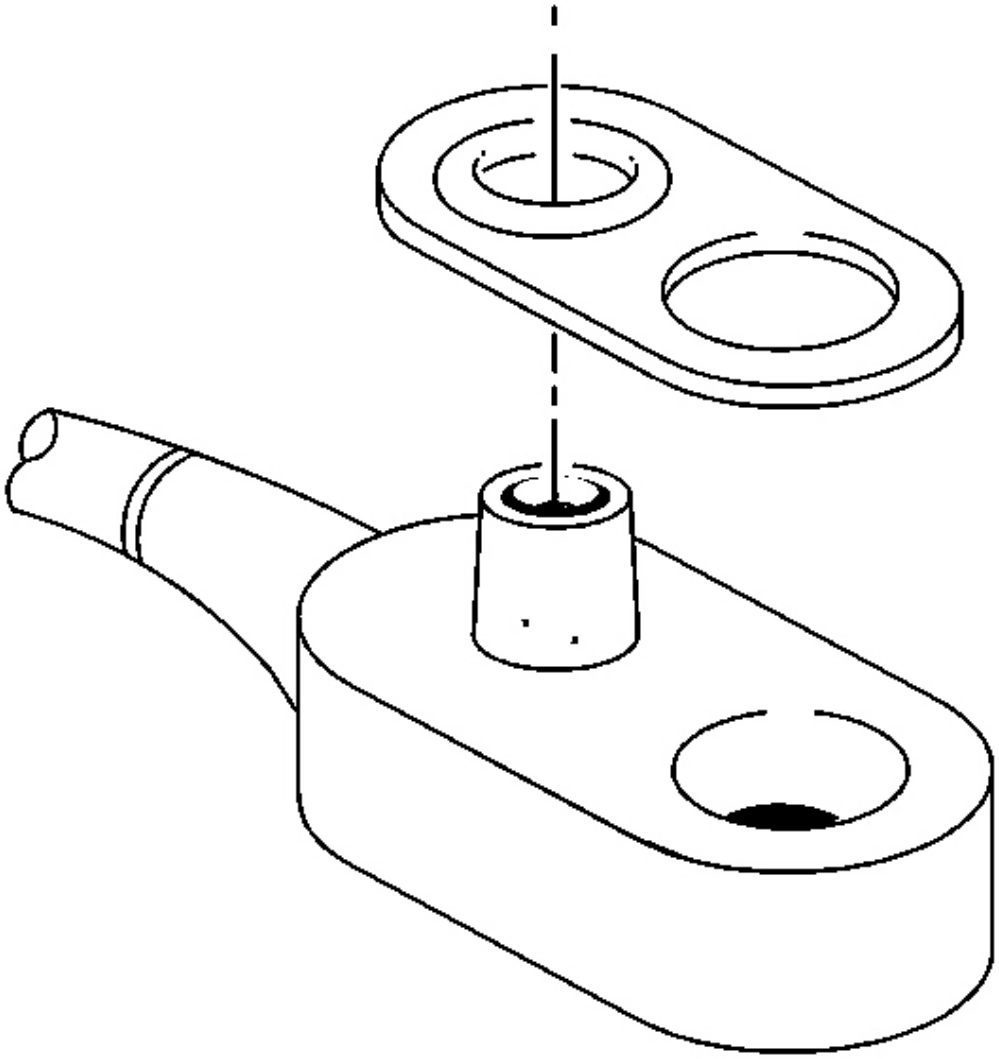

Fig. 271: View Of Pipe, Cover & Gasket
Courtesy of GENERAL MOTORS CORP.

IMPORTANT: Do not use the engine coolant air bleed pipe and cover gaskets again. Upon installation of the pipe and covers, install NEW gaskets.

1. Remove the sealing gaskets from the pipe.
2. Remove the sealing gaskets from the covers.

cardiagn.com

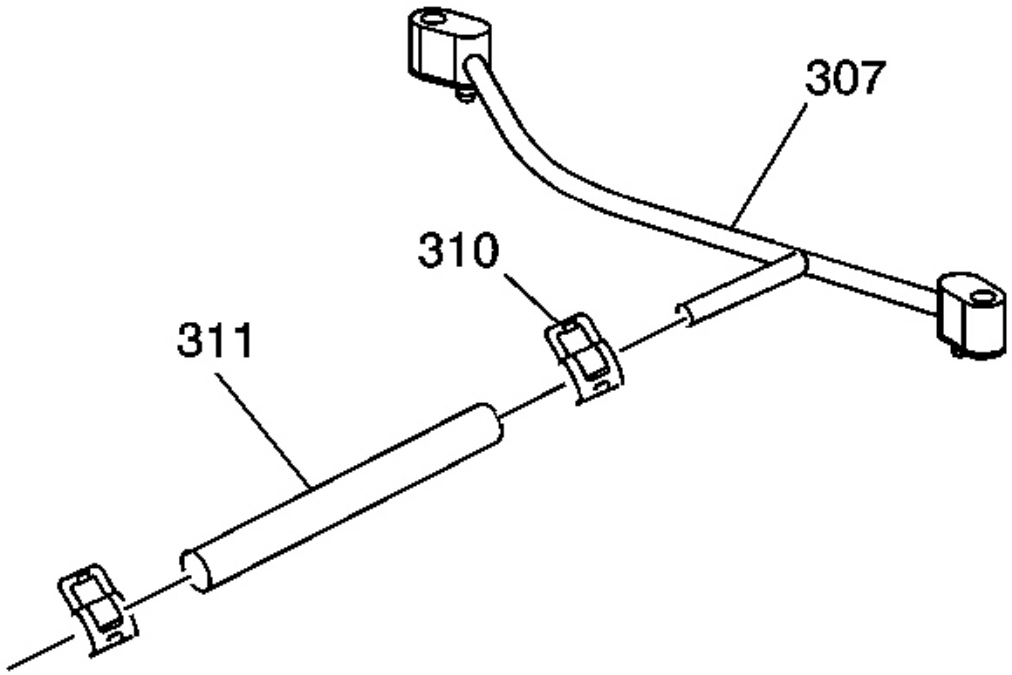

Fig. 272: Hose, Clamps & Pipe
Courtesy of GENERAL MOTORS CORP.

3. Clean the pipe (307), hose (311), and covers in solvent.

CAUTION: Refer to Safety Glasses Caution in Cautions and Notices.

4. Dry the pipe and covers with compressed air.
5. Inspect the pipe and covers for damage or restrictions.
6. Inspect the gasket and hose sealing surfaces for damage.
7. Inspect the hose (311) for restrictions, cracking or wear.

   The hose may be used again if it is not damaged.

cardiagn.com