Workshop Manual

Audi A4 2008 ➤ ,
Audi A5 Cabriolet 2009 ➤ ,
Audi A5 Coupé 2008 ➤ , Audi A6 2011 ➤ ,
Audi A6 China 2012 ➤ , Audi A8 2010 ➤ ,
Audi Q5 2008 ➤ , Audi Q5 China 2010 ➤

Servicing 4-cylinder engine, 1.8 ltr., 2.0 ltr. 4-valve TFSI (EA 888, Gen. II)									
Engine ID	CAB B	CAB A	CAB D	CAE A	CAE B	CDH B	CDN B	CDN C	CDH A
	CDZ A	CAD A	CCU A	CFK A	CPM A	CAE D	CPM B	CHJA	CPE A

Protected by copyright. Copying for private or commercial purposes, in part or in whole, is not permitted unless authorised by AUDI AG. AUDI AG does not guarantee or accept any liability with respect to the correctness of information in this document. Copyright by AUDI AG.

Edition 09.2019

List of Workshop Manual Repair Groups

Protected by copyright. Copying for private or commercial purposes, in part or in whole, is not permitted unless authorised by AUDI AG. AUDI AG does not guarantee or accept any liability with respect to the correctness of information in this document. Copyright by AUDI AG.

Repair Group

00 - Technical data
10 - Removing and installing engine
13 - Crankshaft group
15 - Cylinder head, valve gear
17 - Lubrication
19 - Cooling
21 - Turbocharging/supercharging
24 - Mixture preparation - injection
26 - Exhaust system
28 - Ignition system

Technical information should always be available to the foremen and mechanics, because their careful and constant adherence to the instructions is essential to ensure vehicle road-worthiness and safety. In addition, the normal basic safety precautions for working on motor vehicles must, as a matter of course, be observed.

All rights reserved.
No reproduction without prior agreement from publisher.

Copyright © 2019 Audi AG, Ingolstadt

Contents

00 - Technical data 1
1 Identification 1
1.1 Engine number/engine data 1
2 Safety precautions 2
2.1 Safety precautions when working on the fuel supply system 2
2.2 Safety precautions when working on vehicles with start/stop system 2
2.3 Safety precautions when using testers and measuring instruments during a road test 3
2.4 Safety precautions when working on the cooling system 3
2.5 Safety precautions when working on the exhaust system 3
2.6 Safety precautions when working on the ignition system 3
2.7 Safety precautions when working on the subframe 4
3 Repair instructions 5
3.1 Rules for cleanliness 5
3.2 Foreign particles in engine 5
3.3 Contact corrosion 5
3.4 Routing and attachment of pipes, hoses and wiring 6
3.5 Installing radiators and condensers 6
3.6 Nuts, bolts 6
3.7 Identification plates 6
3.8 Use of impact wrenches 7

10 - Removing and installing engine 8
1 Removing and installing engine 8
1.1 Removing engine 8
1.2 Securing engine to engine and gearbox support 8
1.3 Installing engine 9
2 Assembly mountings 10
3 Engine cover panel 11
3.1 Removing and installing engine cover panel 11

13 - Crankshaft group 12
1 Cylinder block (pulley end) 12
1.1 Exploded view - cylinder block (pulley end) 12
1.2 Removing and installing poly V-belt 18
1.3 Removing and installing tensioner for poly V-belt 20
1.4 Removing and installing vibration damper 21
1.5 Removing and installing bracket for ancillaries 27
2 Cylinder block (gearbox end) 29
2.1 Exploded view - cylinder block (gearbox end) 29
2.2 Removing and installing drive plate 30
2.3 Removing and installing sealing flange (gearbox end) 32
2.4 Renewing needle bearing in drive plate 37
3 Crankshaft 40
3.1 Exploded view - crankshaft 40
3.2 Crankshaft dimensions 42
3.3 Allocation of main bearing shells 42
3.4 Measuring axial clearance of crankshaft 43
3.5 Measuring radial clearance of crankshaft 44
3.6 Removing and installing sender wheel 45
4 Balance shaft 46
4.1 Exploded view - balance shaft 46
4.2 Removing and installing balance shaft 47

Protected by copyright. Copying for private or commercial purposes, in part or in whole, is not permitted unless authorised by AUDI AG. AUDI AG does not guarantee or accept any liability with respect to the correctness of information in this document. Copyright by AUDI AG.

4.3 Renewing oil seal for balance shaft (inlet side) . . . 52
5 Pistons and conrods . . . 55
5.1 Exploded view - pistons and conrods . . . 55
5.2 Removing and installing pistons . . . 58
5.3 Removing and installing oil spray jets . . . 59
5.4 Checking pistons and cylinder bores . . . 60
5.5 Separating parts of new conrod . . . 62
5.6 Checking radial clearance of conrod bearings . . . 63

15 - Cylinder head, valve gear . . . 64
1 Timing chain cover . . . 64
1.1 Exploded view - timing chain cover . . . 64
1.2 Removing and installing timing chain cover . . . 66
1.3 Renewing oil seal for vibration damper . . . 69
2 Chain drive . . . 72
2.1 Exploded view - camshaft timing chains . . . 72
2.2 Exploded view - drive chain for balance shaft . . . 74
2.3 Removing and installing bearing saddle . . . 75
2.4 Removing camshaft timing chain from camshafts . . . 80
2.5 Removing and installing camshaft timing chain . . . 91
2.6 Removing and installing drive chain for balance shaft . . . 101
2.7 Checking valve timing . . . 103
3 Cylinder head . . . 106
3.1 Exploded view - cylinder head . . . 106
3.2 Removing and installing cylinder head . . . 109
3.3 Removing and installing non-return valve . . . 116
3.4 Checking compression . . . 117
4 Valve gear . . . 119
4.1 Exploded view - valve gear . . . 119
4.2 Removing and installing camshaft . . . 123
4.3 Installing ball for slider . . . 136
4.4 Removing and installing actuators for camshaft adjustment . . . 137
4.5 Removing and installing camshaft control valve 1 N205 . . . 138
4.6 Removing and installing valve stem oil seals . . . 138
5 Inlet and exhaust valves . . . 149
5.1 Checking valve guides . . . 149
5.2 Checking valves . . . 149
5.3 Valve dimensions . . . 150

17 - Lubrication . . . 151
1 Sump/oil pump . . . 151
1.1 Exploded view - sump/oil pump . . . 151
1.2 Engine oil . . . 153
1.3 Removing and installing sump (bottom section) . . . 153
1.4 Removing and installing oil pump . . . 155
1.5 Removing and installing sump (top section) . . . 157
1.6 Removing and installing oil level and oil temperature sender G266 . . . 160
2 Engine oil cooler . . . 161
2.1 Exploded view - engine oil cooler . . . 161
2.2 Removing and installing engine oil cooler . . . 161
3 Crankcase breather . . . 163
3.1 Exploded view - crankcase breather system . . . 163
3.2 Removing and installing oil separator . . . 164
4 Oil filter/oil pressure switches . . . 166

Protected by copyright. Copying for private or commercial purposes, in part or in whole, is not permitted unless authorised by AUDI AG. AUDI AG does not guarantee or accept any liability with respect to the correctness of information in this document. Copyright by AUDI AG.

4.1 Exploded view - oil filter . . . 166
4.2 Exploded view - oil pressure switches/oil pressure control . . . 167
4.3 Removing and installing oil pressure switch F22 . . . 167
4.4 Removing and installing oil pressure switch for reduced oil pressure F378 . . . 168
4.5 Removing and installing valve for oil pressure control N428 . . . 169
4.6 Checking oil pressure . . . 170

19 - Cooling . . . 172
1 Cooling system/coolant . . . 172
1.1 Connection diagram - coolant hoses . . . 172
1.2 Checking cooling system for leaks . . . 172
1.3 Draining and filling cooling system . . . 176
2 Coolant pump/thermostat assembly . . . 177
2.1 Exploded view - coolant pump/thermostat . . . 177
2.2 Exploded view - electric coolant pump . . . 178
2.3 Removing and installing electric coolant pump . . . 178
2.4 Removing and installing coolant pump . . . 179
2.5 Removing and installing toothed belt for coolant pump . . . 180
2.6 Removing and installing thermostat . . . 181
2.7 Checking thermostat . . . 182
2.8 Removing and installing coolant temperature sender G62 . . . 182
2.9 Removing and installing coolant valves . . . 183
3 Coolant pipes . . . 184
4 Radiator/radiator fans . . . 185

21 - Turbocharging/supercharging . . . 186
1 Turbocharger . . . 186
1.1 Exploded view - turbocharger . . . 186
1.2 Removing and installing turbocharger . . . 190
1.3 Checking vacuum unit for turbocharger . . . 192
1.4 Renewing vacuum unit for turbocharger . . . 194
1.5 Adjusting vacuum unit for turbocharger . . . 194
2 Charge air system . . . 199
2.1 Exploded view - charge air system . . . 199
2.2 Exploded view - hose connections for charge air system . . . 199
2.3 Removing and installing charge air cooler . . . 200
2.4 Removing and installing charge pressure sender G31 . . . 201
2.5 Checking charge air system for leaks . . . 201

24 - Mixture preparation - injection . . . 204
1 Injection system . . . 204
1.1 Overview of fitting locations - injection system . . . 204
1.2 Checking fuel system for leaks . . . 204
2 Vacuum system . . . 205
2.1 Checking vacuum system . . . 205
2.2 Checking dual non-return valve . . . 205
3 Air cleaner . . . 208
4 Intake manifold . . . 209
4.1 Exploded view - intake manifold . . . 209
4.2 Removing and installing intake manifold . . . 212
4.3 Removing and installing throttle valve module J338 . . . 213
4.4 Cleaning throttle valve module . . . 213
4.5 Checking intake manifold change-over function . . . 214
5 Injectors . . . 216

Protected by copyright. Copying for private or commercial purposes, in part or in whole, is not permitted unless authorised by AUDI AG. AUDI AG does not guarantee or accept any liability with respect to the correctness of information in this document. Copyright by AUDI AG.

5.1 Exploded view - fuel rail with injectors . . . 216
5.2 Removing and installing fuel rail . . . 219
5.3 Removing and installing injectors . . . 220
5.4 Cleaning injectors . . . 224
5.5 Removing and installing cold-start valve N17 . . . 225

6 Senders and sensors . . . 226
6.1 Removing and installing intake air temperature sender G42 . . . 226
6.2 Removing and installing air mass meter G70 . . . 226
6.3 Removing and installing fuel pressure sender G247 . . . 227
6.4 Checking fuel pressure sender G247 . . . 229

7 High-pressure pump . . . 232
7.1 Exploded view - high-pressure pump . . . 232
7.2 Removing and installing high-pressure pump . . . 233

8 Lambda probe . . . 236
8.1 Exploded view - Lambda probe . . . 236
8.2 Removing and installing Lambda probe . . . 238

9 Engine control unit . . . 239
9.1 Removing and installing engine/motor control unit J623 . . . 239
9.2 Wiring and component check . . . 239

26 - Exhaust system . . . 243

1 Exhaust pipes/silencers . . . 243
1.1 Exploded view - silencers . . . 243
1.2 Separating exhaust pipes/silencers . . . 243
1.3 Removing and installing front silencers . . . 243
1.4 Removing and installing silencers . . . 243
1.5 Stress-free alignment of exhaust system . . . 243
1.6 Checking exhaust system for leaks . . . 243

2 Emission control system . . . 244
2.1 Exploded view - emission control system . . . 244
2.2 Removing and installing catalytic converter . . . 246

3 Secondary air system . . . 247

28 - Ignition system . . . 248

1 Ignition system . . . 248
1.1 Exploded view - ignition system . . . 248
1.2 Removing and installing ignition coils with output stages . . . 249
1.3 Removing and installing knock sensor 1 G61 . . . 251
1.4 Removing and installing Hall senders . . . 252
1.5 Removing and installing engine speed sender G28 . . . 252

Protected by copyright. Copying for private or commercial purposes, in part or in whole, is not permitted unless authorised by AUDI AG. AUDI AG does not guarantee or accept any liability with respect to the correctness of information in this document. Copyright by AUDI AG.

00 – Technical data

1 Identification

(ARL006564; Edition 09.2019)

⇒ “1.1 Engine number/engine data”, page 1

1.1 Engine number/engine data

Engine number

- The engine number (“engine code” and “serial number”) can be found at the joint between engine and gearbox -arrow-.
- There is also a sticker on the timing chain cover (top) showing the engine code and the serial number.
- In addition, the engine code is listed on the vehicle data stickers.

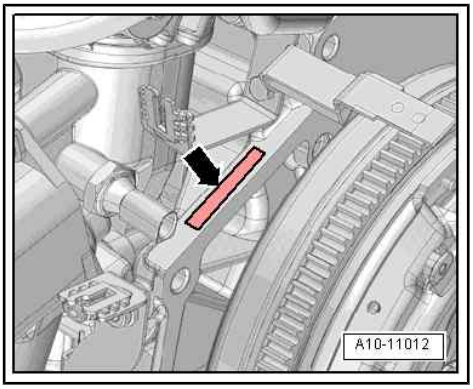

Engine data

- For allocation of engine code, refer to ⇒ Technical data for petrol engines; Rep. gr. 00 ; Overview of engines .

Protected by copyright. Copying for private or commercial purposes, in part or in whole, is not permitted unless authorised by AUDI AG. AUDI AG does not guarantee or accept any liability with respect to the correctness of information in this document. Copyright by AUDI AG.

2 Safety precautions

Protected by copyright. Copying for private or commercial purposes, in part or in whole, is not permitted unless authorised by AUDI AG. AUDI AG does not guarantee or accept any liability with respect to the correctness of information in this document. Copyright by AUDI AG.

⇒ “2.1 Safety precautions when working on the fuel supply system”, page 2

⇒ “2.2 Safety precautions when working on vehicles with start/stop system”, page 2

⇒ “2.3 Safety precautions when using testers and measuring instruments during a road test”, page 3

⇒ “2.4 Safety precautions when working on the cooling system”, page 3

⇒ “2.5 Safety precautions when working on the exhaust system”, page 3

⇒ “2.6 Safety precautions when working on the ignition system”, page 3

⇒ “2.7 Safety precautions when working on the subframe”, page 4

2.1 Safety precautions when working on the fuel supply system

Risk of injury - fuel system operates under high pressure

The fuel system is pressurised. There is a risk of injury as fuel may spray out.

Before opening the fuel system:

– Put on safety goggles.

– Put on protective gloves.

– Release pressure (wrap a clean cloth around connection and open connection carefully).

Risk of fire due to escaping fuel

If the battery is connected, the door contact switch activates the fuel pump when the driver's door is opened. Escaping fuel may ignite, causing a fire.

– Before opening the fuel system, disconnect power supply to fuel pump.

2.2 Safety precautions when working on vehicles with start/stop system

Risk of injury - engine may start unexpectedly

The engine can start unexpectedly if the vehicle's start/stop system is activated. A message in the instrument cluster indicates whether the start/stop system is activated.

– To deactivate the start/stop system, switch off the ignition.

2.3 Safety precautions when using testers and measuring instruments during a road test

Protected by copyright. Copying for private or commercial purposes, in part or in whole, is not permitted unless authorised by AUDI AG. AUDI AG does not guarantee or accept any liability with respect to the correctness of information in this document. Copyright by AUDI AG.

Risk of injury if test equipment is not secured

If an accident occurs and the front passenger's airbag is triggered, test equipment which is not secured adequately may be catapulted through the vehicle with potentially serious consequences.

– Secure test equipment on the rear seat with a strap.

Or:

– Have a second mechanic operate test equipment on the rear seat.

2.4 Safety precautions when working on the cooling system

Risk of scalding as hot coolant can escape

The cooling system is under pressure when the power unit is hot. Risk of scalding due to hot steam and hot coolant.

– Put on protective gloves.

– Put on safety goggles.

– Cover filler cap on expansion tank with a cloth and open carefully to release pressure.

2.5 Safety precautions when working on the exhaust system

Risk of damage to flexible joint

The flexible joint can be damaged or develop leaks if it is handled incorrectly.

– Do not bend flexible joint more than 10°.

– Install flexible joint so that it is not under tension.

Risk of injury caused by components of the exhaust system

Danger of injury to hands and other parts of the body due to hot or sharp parts of the exhaust system.

– Allow exhaust system to cool down.

– Put on protective gloves.

2.6 Safety precautions when working on the ignition system

Risk of injury due to electric shock

When the engine is running, there are high voltage levels in the ignition system. There is a risk of electric shock when touching the ignition system!

– Never touch or disconnect ignition wiring when the engine is running or being turned at cranking speed.

Risk of damage to components

Washing the engine or connecting/disconnecting electrical wiring may result in components being damaged if the engine is running.

– Switch off ignition before connecting/disconnecting electrical wiring.

– Switch off ignition before cleaning engine.

2.7 Safety precautions when working on the subframe

Protected by copyright. Copying for private or commercial purposes, in part or in whole, is not permitted unless authorised by AUDI AG. AUDI AG does not guarantee or accept any liability with respect to the correctness of information in this document. Copyright by AUDI AG.

Risk of damage to components

Lowering the vehicle onto its wheels can damage components if the assembly mountings, steering rack or subframe cross brace are not properly fitted.

– Never lower vehicle onto its wheels with suspension components unfastened or detached.

– Never support weight of vehicle on subframe or subframe cross brace with suspension components unfastened or detached.

3 Repair instructions

⇒ “3.1 Rules for cleanliness”, page 5

⇒ “3.2 Foreign particles in engine”, page 5

⇒ “3.3 Contact corrosion”, page 5

⇒ “3.4 Routing and attachment of pipes, hoses and wiring”, page 6

⇒ “3.5 Installing radiators and condensers”, page 6

⇒ “3.6 Nuts, bolts”, page 6

⇒ “3.7 Identification plates”, page 6

⇒ “3.8 Use of impact wrenches”, page 7

Protected by copyright. Copying for private or commercial purposes, in part or in whole, is not permitted unless authorised by AUDI AG. AUDI AG does not guarantee or accept any liability with respect to the correctness of information in this document. Copyright by AUDI AG.

3.1 Rules for cleanliness

Even small quantities of dirt can lead to defects. For this reason, please observe the following rules when working on the fuel supply system, turbocharger and injection system:

- Carefully clean connection points and the surrounding area with engine cleaner or brake cleaner and dry thoroughly before opening.
- Immediately seal open lines and connections with clean plugs, for example from engine bung set - VAS 6122- .
- Place removed parts on a clean surface and cover them. Use only lint-free cloths.
- Carefully cover or seal open components if repairs cannot be carried out immediately.
- Only install clean components; replacement parts should only be unpacked immediately prior to installation. Do not use parts that have not been stored in their packing (e.g. in tool boxes etc.).
- When the system is open, do not work with compressed air and do not move the vehicle.
- Make sure that no fuel runs onto the fuel hoses. Should this occur, the fuel hoses must be cleaned again immediately.
- Protect unplugged electrical connectors against dirt and moisture and make sure connections are dry when attaching.

3.2 Foreign particles in engine

- When performing assembly work on the engine, all open passages in the intake and exhaust systems must be sealed with suitable plugs (e.g. from engine bung set - VAS 6122-) to prevent foreign particles from entering the engine.
- If the turbocharger has suffered mechanical damage ⇒ page 190

3.3 Contact corrosion

Contact corrosion can occur if unsuitable fasteners are used (e.g. bolts, nuts, washers, etc.).

For this reason, only fasteners with a special surface coating are fitted.

Additionally, all rubber and plastic parts and all adhesives are made of non-conductive materials.

Always install new parts if you are not sure whether used parts can be re-fitted ⇒ Electronic parts catalogue .

Please note:

- We recommend using only genuine replacement parts; these have been tested and are compatible with aluminium.
- We recommend using Audi Genuine Accessories.
- Damage caused by contact corrosion is not covered by warranty.

3.4 Routing and attachment of pipes, hoses and wiring

- Mark fuel lines, hydraulic lines, vacuum lines, lines for activated charcoal filter and electrical wiring etc. before removal so they can be re-installed in the original positions and correctly connected. Make sketches or take photographs if necessary.
- Because of the limited space in the engine compartment, it is important to ensure that there is adequate clearance to any moving or hot components to avoid damage to lines and wiring.

3.5 Installing radiators and condensers

Even when the radiator, condenser and charge air cooler are correctly installed, slight impressions may be visible on the fins of these components. This does not mean that the components are damaged. If the fins are only very slightly distorted, this does not justify renewal of the radiator, condenser or charge air cooler.

3.6 Nuts, bolts

- Loosen bolts in reverse sequence to specified tightening sequence.
- Bolts and nuts used to secure covers and housings must be tightened in steps according to the specified tightening sequence and method.
- Bolts and nuts which secure covers and housings should be loosened and tightened in diagonal sequence and in stages if no tightening sequence is specified.
- Always renew self-locking bolts and nuts.
- Unless otherwise specified, use a wire brush to clean the threads of bolts which are secured with locking fluid. Then install bolts with locking fluid; for locking fluid refer to ⇒ Electronic parts catalogue .
- Threaded holes which take self-locking bolts or bolts coated with locking fluid must be cleaned using a thread tap or similar. Otherwise there is a danger of the bolts shearing off the next time they are removed.
- The tightening torques stated apply to non-oiled nuts and bolts.

Protected by copyright. Copying for private or commercial purposes, in part or in whole, is not permitted unless authorised by AUDI AG. AUDI AG does not guarantee or accept any liability with respect to the correctness of information in this document. Copyright by AUDI AG.

3.7 Identification plates

When renewing vehicle components, the identification plates on the old parts that have a replacement part number (see ⇒ Electronic parts catalogue) must be attached to the new parts due to approval regulations.

3.8 Use of impact wrenches

In general, it is permitted to use an impact wrench to unscrew bolts and nuts. An exception to this is when work is performed inside an open high-voltage battery. For this work, it is not permitted to use an impact wrench.

An impact wrench may be used to screw in bolts and nuts when performing repair work if the following requirements are observed. In general, electric and compressed-air impact wrenches should be used.

Reproduction and distribution as well as commercial purposes, in part or in whole, is not permitted unless authorised by AUDI AG. AUDI AG does not guarantee or accept any liability with respect to the correctness of information in this document. Copyright by AUDI AG.

Requirements:

- Only screw in bolts with locking fluid or self-locking nuts at low speed.
- Use a suitable impact wrench with variable speed and adjustable torque range.
- Use suitable bits when working in the vicinity of sensitive surfaces, e.g. plastic-coated bits for aluminium rims.
- When working in the vicinity of natural gas systems, observe the information in the Workshop Manual “Natural gas engines - General information”.

Use:

- Fit bolts/nuts by hand.
- Only use an impact wrench to screw in bolts/nuts until the head of the bolt/nut makes contact and then continue tightening with a torque wrench.
- Clean threaded pins before unscrewing the bolt/nut.

10 – Removing and installing engine

1 Removing and installing engine

⇒ "1.1 Removing engine", page 8

⇒ "1.2 Securing engine to engine and gearbox support", page 8

⇒ "1.3 Installing engine", page 9

Protected by copyright. Copying for private or commercial purposes, in part or in whole, is not permitted unless authorised by AUDI AG. AUDI AG does not guarantee or accept any liability with respect to the correctness of information in this document. Copyright by AUDI AG.

1.1 Removing engine

All procedures are described in ⇒ 4-cylinder direct injection engine (1.8, 2.0 ltr. 4-valve TFSI); Rep. gr. 10 ; Removing and installing engine; Removing engine .

1.2 Securing engine to engine and gearbox support

Special tools and workshop equipment required

♦ Engine and gearbox support - VAS 6095A-

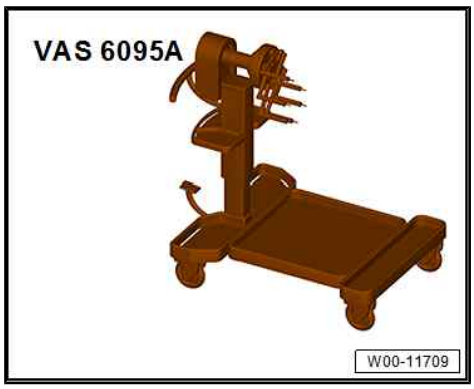

Procedure

- Engine attached to workshop hoist - VAS 6100- using lifting tackle - 2024A-
- To adjust to the centre of gravity of the assembly, the perforated rails of the support hooks must be positioned as shown.

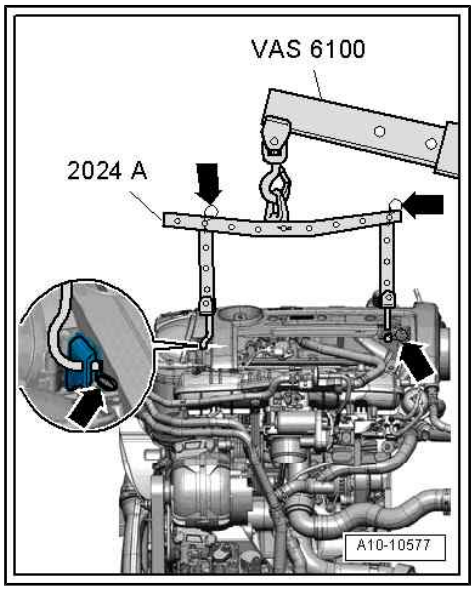

⚠ CAUTION

Risk of injury if engine drops when it is lifted.

Danger of trapping or crushing parts of the body.

– The support hooks and retaining pins on the lifting tackle must be secured with locking pins.

– Remove drive plate ⇒ page 30 .

– Secure engine to engine and gearbox support - VAS 6095A- using universal support - VAS 6095/1- .

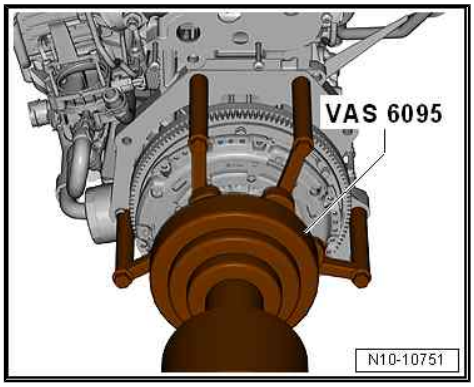

Tightening torque

Component		Nm
Bolts/nuts	M6	10
	M8	20
	M10	45
	M12	65

Attaching

Assembly is performed in reverse sequence; note the following:

– Install drive plate ⇒ page 30 .

1.3 Installing engine

All procedures are described in ⇒ 4-cylinder direct injection engine (1.8, 2.0 ltr. 4-valve TFSI); Rep. gr. 10 ; Removing and installing engine; Installing engine .

Protected by copyright. Copying for private or commercial purposes, in part or in whole, is not permitted unless authorised by AUDI AG. AUDI AG does not guarantee or accept any liability with respect to the correctness of information in this document. Copyright by AUDI AG.

2 Assembly mountings

Protected by copyright. Copying for private or commercial purposes, in part or in whole, is not permitted unless authorised by AUDI AG. AUDI AG does not guarantee or accept any liability with respect to the correctness of information in this document. Copyright by AUDI AG.

All procedures and components are described in ⇒ 4-cylinder direct injection engine (1.8, 2.0 ltr. 4-valve TFSI); Rep. gr. 10 ; Assembly mountings .

3 Engine cover panel

⇒ "3.1 Removing and installing engine cover panel", page 11

3.1 Removing and installing engine cover panel

Removing (version 1)

– Carefully pull off engine cover panel -arrows-.

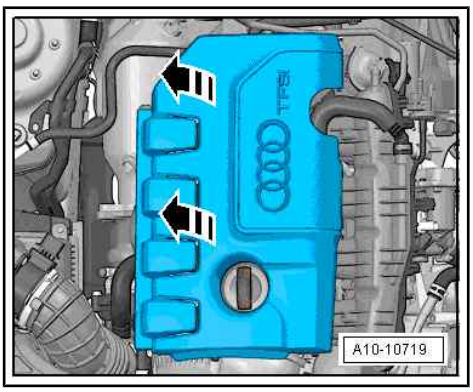

Removing (version 2)

– Carefully pull engine cover panel off ball studs one after another -arrows-. Do not jerk engine cover panel away, and do not try to pull on one side only.

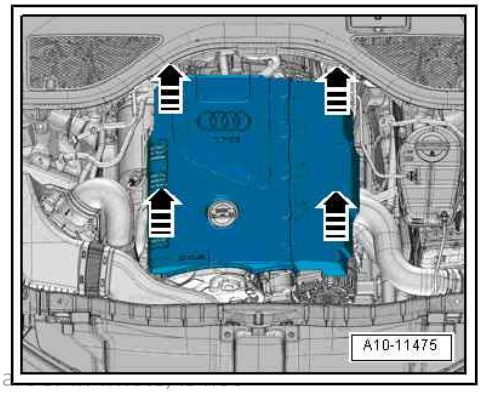

Protected by copyright. Copying for private or commercial purposes, in pa
prohibited without authorised by AUDI AG. AUDI AG does not guarantee or
with respect to the correctness of information in this document. Copyrigh

Removing (version 3)

– Carefully pull off engine cover panel -arrows-.

Installing

– To avoid damage, do not strike the engine cover panel with your fist or with any kind of tool.

– When fitting engine cover panel, take care not to damage oil filler neck.

– First press engine cover panel onto rear ball studs and then onto front ball studs with both hands.

13 – Crankshaft group

1 Cylinder block (pulley end)

⇒ “1.1 Exploded view - cylinder block (pulley end)”, page 12

⇒ “1.2 Removing and installing poly V-belt”, page 18

⇒ “1.3 Removing and installing tensioner for poly V-belt”, page 20

⇒ “1.4 Removing and installing vibration damper”, page 21

⇒ “1.5 Removing and installing bracket for ancillaries”, page 27

Protected by copyright. Copying for private or commercial purposes, in part or in whole, is not permitted unless authorised by AUDI AG. AUDI AG does not guarantee or accept any liability with respect to the correctness of information in this document. Copyright by AUDI AG.

1.1 Exploded view - cylinder block (pulley end)

⇒ “1.1.1 Exploded view - cylinder block (pulley end), vehicles with hydraulic power steering”, page 12

⇒ “1.1.2 Exploded view - cylinder block (pulley end), vehicles with electromechanical power steering”, page 15

⇒ “1.1.3 Exploded view - cylinder block (pulley end), vehicles with hybrid drive”, page 17

1.1.1 Exploded view - cylinder block (pulley end), vehicles with hydraulic power steering

Protected by copyright. Copying for private or commercial purposes, in part or in whole, is not permitted unless authorised by AUDI AG. AUDI AG does not guarantee or assume any liability with respect to the correctness of information in this document. Copyright by AUDI AG.

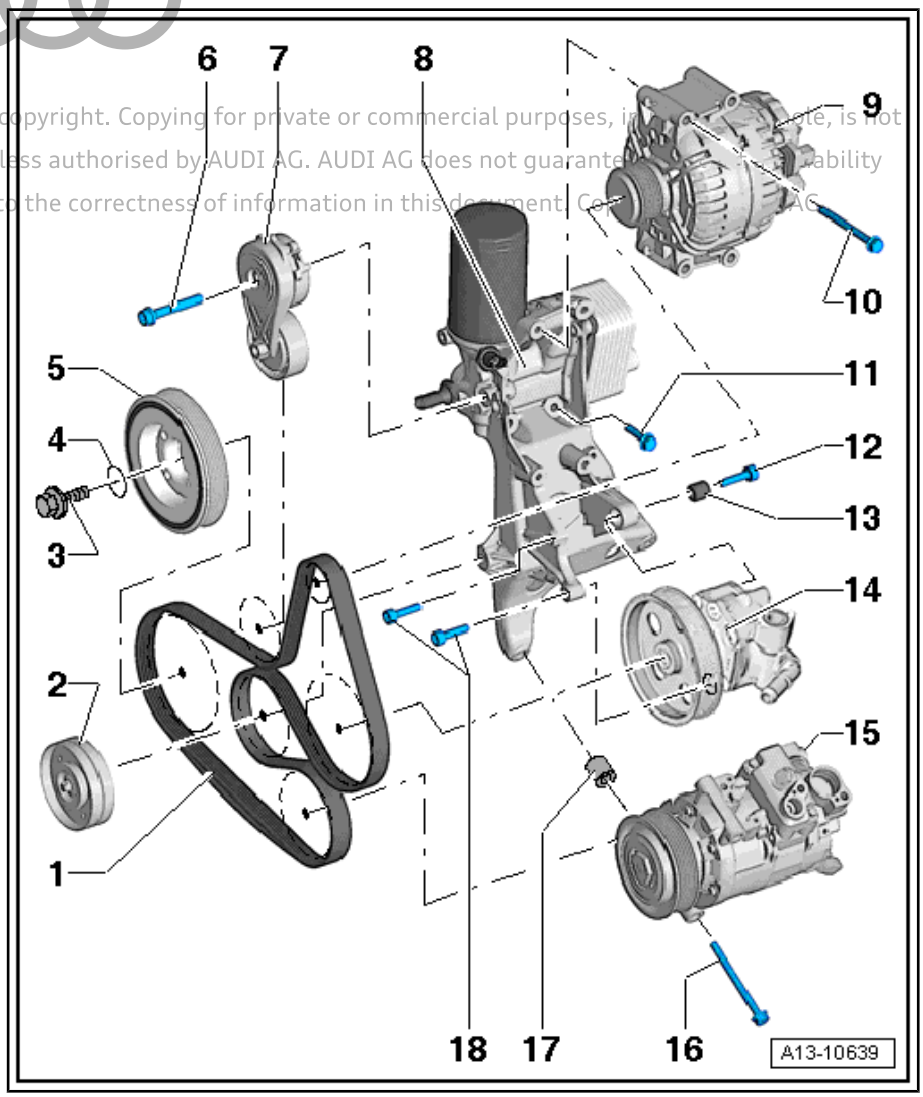

1 - Poly V-belt

- ❑ Check for wear
- ❑ Do not kink
- ❑ Before removing, mark direction of rotation with chalk or felt-tip pen
- ❑ Removing and installing ⇒ page 18
- ❑ Routing of poly V-belt ⇒ page 14
- ❑ When installing, make sure it is properly seated on pulleys.

2 - Idler roller

- ❑ 20 Nm

3 - Bolt

- ❑ Renew after removing
- ❑ Use counterhold tool - T10355- when loosening and tightening
- ❑ Lubricate O-ring with engine oil
- ❑ 150 Nm +90°

4 - O-ring

- ❑ Not available as replacement part; supplied together with bolt ⇒ Item 3 (page 13)

5 - Vibration damper

- ❑ With poly V-belt pulley
- ❑ Removing and installing ⇒ page 21

6 - Bolt

- ❑ 40 Nm

7 - Tensioner for poly V-belt

- ❑ Pivot with wrench to slacken poly V-belt
- ❑ Lock using locking tool - T40098-
- ❑ Removing and installing ⇒ page 20

8 - Bracket for ancillaries

- ❑ With oil filter and engine oil cooler
- ❑ Removing and installing bracket for ancillaries ⇒ “1.5 Removing and installing bracket for ancillaries”, page 27
- ❑ Removing and installing engine oil cooler ⇒ page 161

9 - Alternator

- ❑ Removing and installing ⇒ Electrical system; Rep. gr. 27 ; Alternator; Removing and installing alternator

10 - Bolt

- ❑ Tightening torque ⇒ Electrical system; Rep. gr. 27 ; Alternator; Exploded view - alternator

11 - Bolt

- ❑ Tightening sequence ⇒ page 14

12 - Bolt

- ❑ Tightening torque ⇒ Running gear, axles, steering; Rep. gr. 48 ; Hydraulic power steering; Exploded view - power steering pump

13 - Sleeve

14 - Power steering pump

- ❑ Removing and installing ⇒ Running gear, axles, steering; Rep. gr. 48 ; Hydraulic power steering; Removing and installing power steering pump

15 - Air conditioner compressor

- ❑ Do not unscrew or disconnect refrigerant hoses or pipes
- ❑ Removing and installing ⇒ Heating, air conditioning; Rep. gr. 87 ; Air conditioner compressor; Detaching and attaching air conditioner compressor at bracket

16 - Bolt

- ❑ Tightening torque ⇒ Heating, air conditioning; Rep. gr. 87 ; Air conditioner compressor; Exploded view - air conditioner compressor drive unit

17 - Dowel sleeve

- ❑ For air conditioner compressor
- ❑ 2x

Protected by copyright. Copying for private or commercial purposes, in part or in whole, is not permitted unless authorised by AUDI AG. AUDI AG does not guarantee or accept any liability with respect to the correctness of information in this document. Copyright by AUDI AG.

18 - Bolt

- ❑ Tightening torque ⇒ Running gear, axles, steering; Rep. gr. 48 ; Hydraulic power steering; Exploded view - power steering pump

Routing of poly V-belt

1 - Vibration damper

2 - Idler roller

3 - Poly V-belt tensioner

4 - Alternator

5 - Power steering pump

6 - Air conditioner compressor

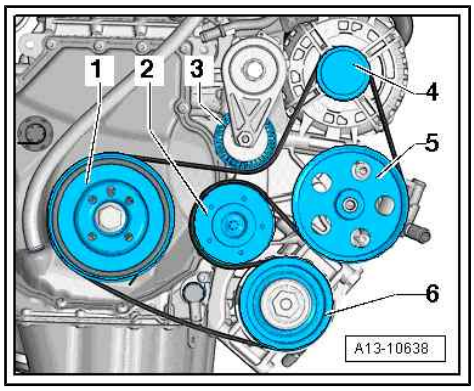

Tightening sequence on bracket for ancillaries

- After removing, renew bolts tightened with specified tightening angle.

– Fit bracket for ancillaries (first tighten bolt -4-).

– Tighten bolts in stages in the sequence shown:

Stage	Bolts	Tightening torques/angle specification
1.	-1 … 5-	Screw in by hand until contact is made
2.	-1 … 5-	20 Nm
3.	-1 … 5-	Turn 90° further

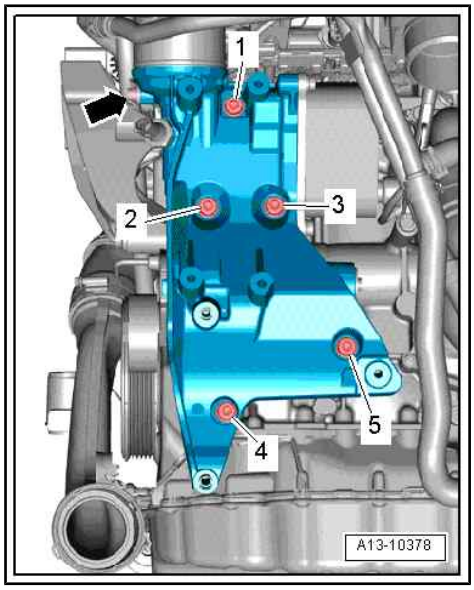

1.1.2 Exploded view - cylinder block (pulley end), vehicles with electromechanical power steering

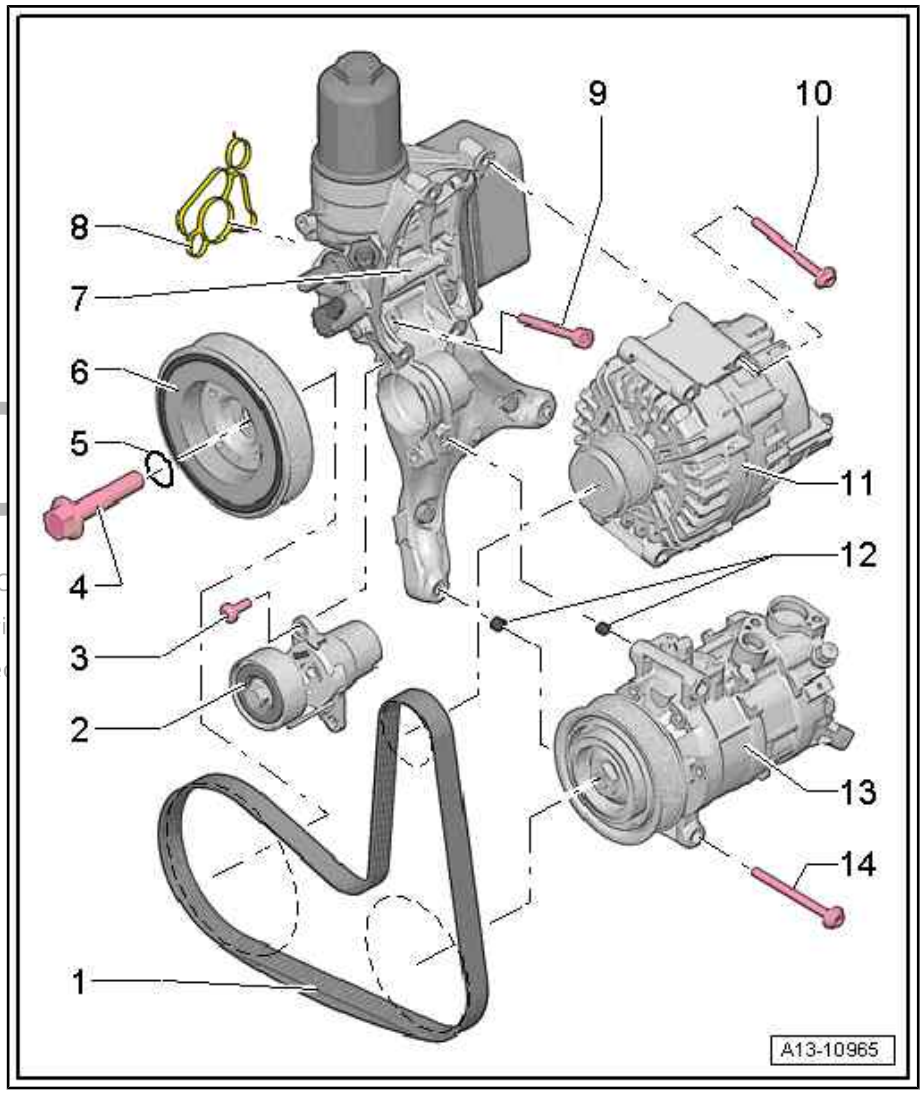

1 - Poly V-belt

- ❑ Check for wear
- ❑ Do not kink
- ❑ Before removing, mark direction of rotation with chalk or felt-tip pen
- ❑ Removing and installing ⇒ page 19
- ❑ Routing of poly V-belt ⇒ page 16
- ❑ When installing, make sure it is properly seated on pulleys.

2 - Tensioner for poly V-belt

- ❑ Pivot with wrench to slacken poly V-belt
- ❑ Lock in position with locking pin - T10060 A-
- ❑ Removing and installing ⇒ page 21

Protected by copyright. Copying permitted unless authorized with respect to the correctness

3 - Bolt

- ❑ Renew after removing
- ❑ 8 Nm +45°

4 - Bolt

- ❑ Renew after removing
- ❑ Use counterhold tool - T10355- when loosening and tightening
- ❑ Lubricate O-ring with engine oil
- ❑ 150 Nm +90°

5 - O-ring

- ❑ Not available as replacement part; supplied together with bolt ⇒ Item 4 (page 15)

6 - Vibration damper

- ❑ With poly V-belt pulley
- ❑ Removing and installing ⇒ page 21

7 - Bracket for ancillaries

- ❑ With oil filter and engine oil cooler
- ❑ Removing and installing bracket for ancillaries ⇒ page 27
- ❑ Removing and installing engine oil cooler ⇒ page 161

8 - Gasket

- ❑ Renew after removing

9 - Bolt

- ❑ Tightening torque and sequence ⇒ page 16

10 - Bolt

- ❑ Tightening torque ⇒ Electrical system; Rep. gr. 27 ; Alternator; Exploded view - alternator

11 - Alternator

- ❑ Removing and installing ⇒ Electrical system; Rep. gr. 27 ; Alternator; Removing and installing alternator

12 - Dowel sleeves

- ❑ For air conditioner compressor

13 - Air conditioner compressor

- ❑ Do not unscrew or disconnect refrigerant hoses or pipes
- ❑ Removing and installing ⇒ Heating, air conditioning; Rep. gr. 87 ; Air conditioner compressor; Detaching and attaching air conditioner compressor at bracket

14 - Bolt

- ❑ Tightening torque ⇒ Heating, air conditioning; Rep. gr. 87 ; Air conditioner compressor; Exploded view - air conditioner compressor drive unit

Routing of poly V-belt

1 - Vibration damper

2 - Tensioner for poly V-belt

3 - Alternator

4 - Air conditioner compressor

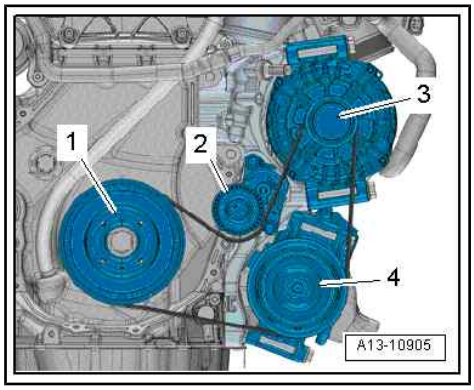

Bracket for ancillaries - tightening torque and tightening sequence

Protected by copyright. Copying for private or co... s not permitted unless authorised by AUDI AG. AUDI ... ity with respect to the correctness of information i...

- After removing, renew bolts tightened with specified tightening angle.

– Fit bracket for ancillaries (first tighten bolt -4-).

– Tighten bolts in stages in the sequence shown:

Stage	Bolts	Tightening torques/angle specification
1.	-1 … 5-	Screw in by hand until contact is made
2.	-1 … 5-	20 Nm
3.	-1 … 5-	Turn 90° further

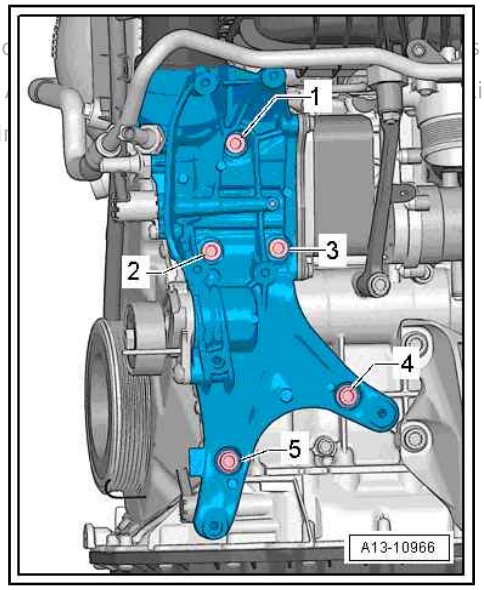

1.1.3 Exploded view - cylinder block (pulley end), vehicles with hybrid drive

Protected by copyright. Copying for private or [illegible] in part or in whole, is not permitted unless authorised by AUDI AG. AU[illegible] or accept any liability with respect to the correctness of information [illegible] right by AUDI AG.

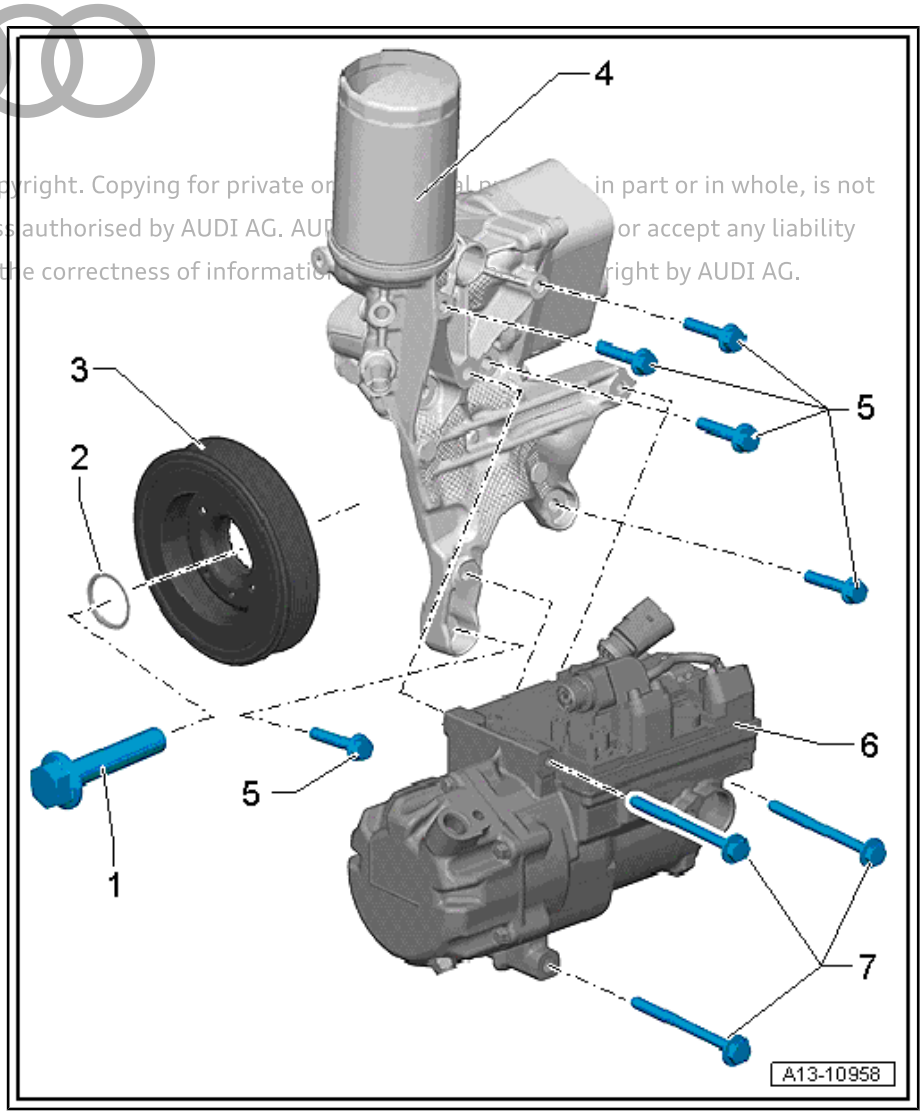

1 - Bolt

- ❑ Renew after removing
- ❑ Lubricate O-ring with oil
- ❑ 150 Nm + 90°

2 - O-ring

- ❑ Not available as replacement part; supplied together with bolt

3 - Vibration damper

- ❑ With poly V-belt pulley
- ❑ Removing and installing ⇒ page 21

4 - Bracket for ancillaries

- ❑ With oil filter and engine oil cooler
- ❑ Removing and installing bracket for ancillaries ⇒ page 27
- ❑ Removing and installing engine oil cooler ⇒ page 161

5 - Bolts

- ❑ Renew after removing
- ❑ Tightening torque and sequence ⇒ page 18

6 - Electrical air conditioner compressor - V470-

- ❑ Removing and installing ⇒ Heating, air conditioning; Rep. gr. 87 ; Air conditioner compressor; Detaching and attaching air conditioner compressor at bracket

7 - Bolts for electrical air conditioner compressor - V470-

- ❑ Note different bolt lengths
- ❑ Tightening torque ⇒ Heating, air conditioning; Rep. gr. 87 ; Air conditioner compressor; Exploded view - air conditioner compressor drive unit

Tightening sequence on bracket for ancillaries

- After removing, renew bolts tightened with specified tightening angle.

– Fit bracket for ancillaries (first tighten bolt -4-).

– Tighten bolts in stages in the sequence shown:

Stage	Bolts	Tightening torques/angle specification
1.	-1 … 5-	Screw in by hand until contact is made
2.	-1 … 5-	20 Nm
3.	-1 … 5-	Turn 90° further

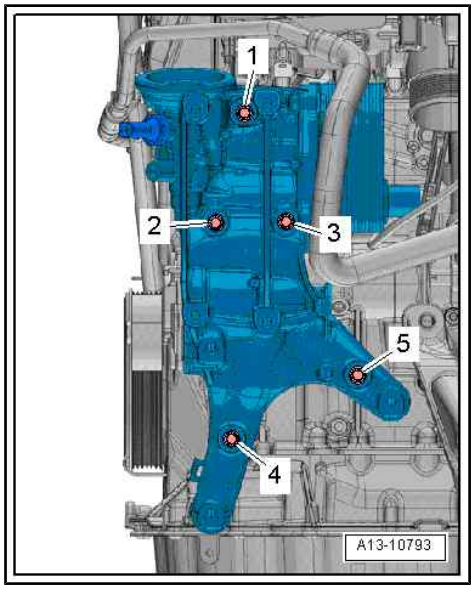

1.2 Removing and installing poly V-belt

⇒ “1.2.1 Removing and installing poly V-belt - vehicles with hydraulic power steering”, page 18
⇒ “1.2.2 Removing and installing poly V-belt - vehicles with electromechanical power steering”, page 19

Protected by copyright. Copying for private or commercial purposes, in part or in whole, is not permitted unless authorised by AUDI AG. AUDI AG does not guarantee or accept any liability with respect to the correctness of information in this document. Copyright by AUDI AG.

1.2.1 Removing and installing poly V-belt - vehicles with hydraulic power steering

Special tools and workshop equipment required

♦ Locking tool - T40098-

Removing

⚠ CAUTION

Risk of injury as the radiator fan may start up automatically.

– When working in the vicinity of the radiator, keep a safe distance from the radiator fan.

NOTICE

Risk of irreparable damage due to running a used belt in the opposite direction when it is refitted.

- **Mark running direction before removing.**
- **Pay attention to running direction when reinstalling.**

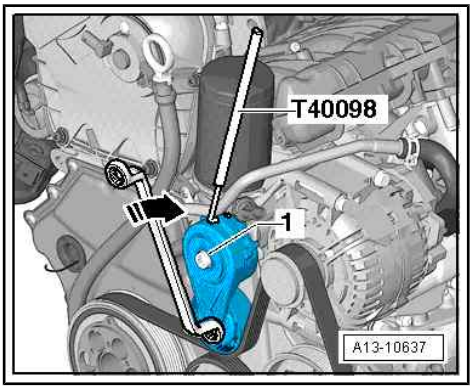

- To slacken poly V-belt turn tensioner in direction of -arrow-.
- Lock tensioner with locking tool - T40098- .
- Take off poly V-belt.

Installing

Installation is carried out in reverse order; note the following:

- Fit poly V-belt ⇒ page 14 .

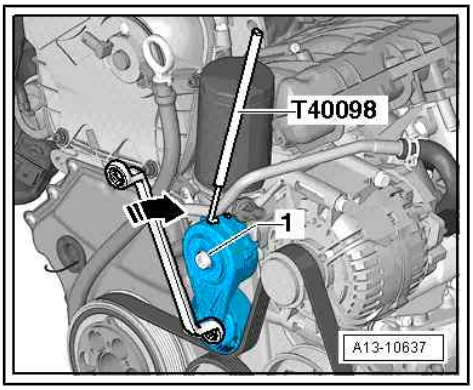

- Turn tensioner in direction of -arrow- and remove locking tool - T40098- .
- Release tensioner.
- Check that poly V-belt is properly seated.
- Start engine and check that poly V-belt runs properly.

1.2.2 Removing and installing poly V-belt - vehicles with electromechanical power steering

Protected by copyright. Copying for private or commercial purposes, in part or in whole, is not permitted unless authorised by AUDI AG. AUDI AG does not guarantee or accept any liability with respect to the correctness of information in this document. Copyright by AUDI AG.

Special tools and workshop equipment required

- Locking pin - T10060 A-

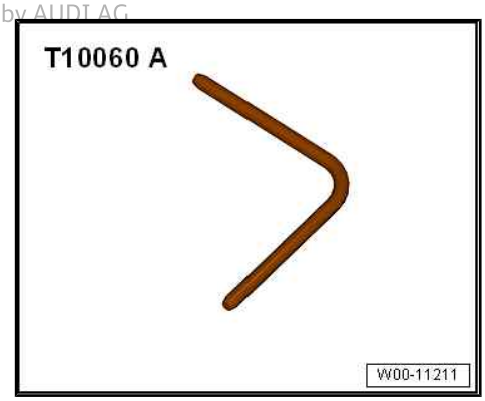

Removing

CAUTION

Risk of injury as the radiator fan may start up automatically.

- **When working in the vicinity of the radiator, keep a safe distance from the radiator fan.**

NOTICE

Risk of irreparable damage due to running a used belt in the opposite direction when it is refitted.

- **Mark running direction before removing.**
- **Pay attention to running direction when reinstalling.**

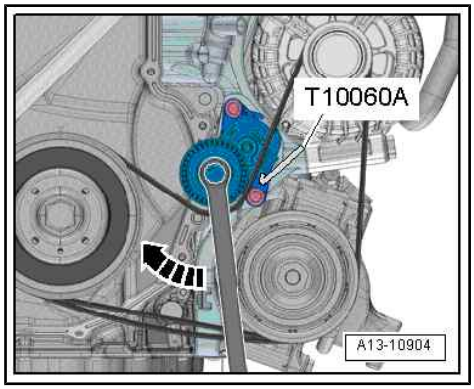

- To slacken poly V-belt turn tensioner in direction of -arrow-.
- Lock tensioner with locking pin - T10060 A- .
- Take off poly V-belt.

Installing

Protected by copyright. Copying for private or commercial purposes, in part or in whole, is not permitted without the consent of AUDI AG. AUDI AG does not guarantee or accept any liability with respect to the correctness of information in this document. Copyright by AUDI AG.

Installation is carried out in reverse order; note the following:

- Fit poly V-belt ⇒ page 16 .

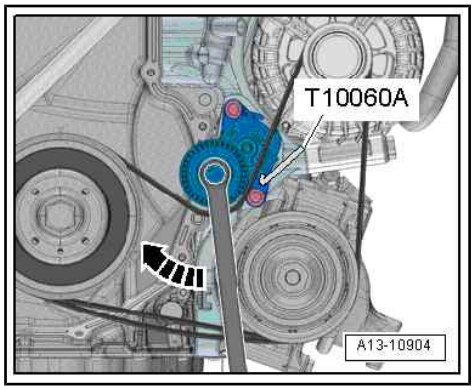

- Turn tensioner clockwise slightly -arrow- and pull out locking pin - T10060A- .
- Release tensioner.
- Check that poly V-belt is properly seated.
- Start engine and check that poly V-belt runs properly.

1.3 Removing and installing tensioner for poly V-belt

⇒ "1.3.1 Removing and installing tensioner for poly V-belt - vehicles with hydraulic power steering", page 20

⇒ "1.3.2 Removing and installing tensioner for poly V-belt - vehicles with electromechanical power steering", page 21

1.3.1 Removing and installing tensioner for poly V-belt - vehicles with hydraulic power steering

Removing

- Detach poly V-belt from tensioner
  ⇒ "1.2.1 Removing and installing poly V-belt - vehicles with hydraulic power steering", page 18 .
- Remove bolt -1- and take off tensioner for poly V-belt from bracket for ancillaries.

Installing

Installation is carried out in the reverse order; note the following:

- Install poly V-belt
  ⇒ "1.2.1 Removing and installing poly V-belt - vehicles with hydraulic power steering", page 18 .

Tightening torques

- ⇒ "1.1.1 Exploded view - cylinder block (pulley end), vehicles with hydraulic power steering", page 12

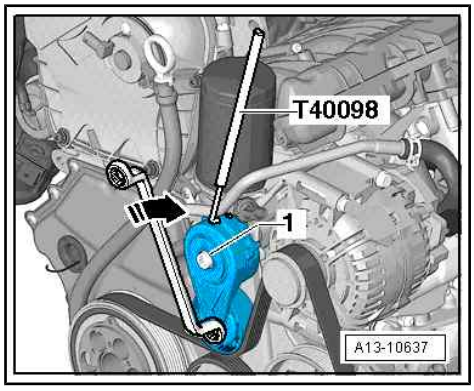

1.3.2 Removing and installing tensioner for poly V-belt - vehicles with electromechanical power steering

Removing

– Detach poly V-belt from tensioner
⇒ “1.2.2 Removing and installing poly V-belt - vehicles with electromechanical power steering”, page 19 .

– Remove bolts -arrows- and take off tensioner -1- for poly V-belt from bracket for ancillaries.

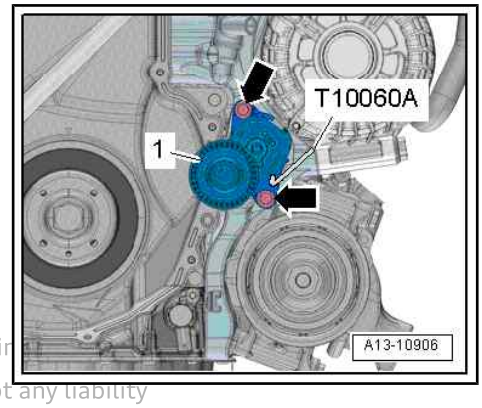

Installing

Installation is carried out in reverse order; note the following:

– Install poly V-belt
⇒ “1.2.2 Removing and installing poly V-belt - vehicles with electromechanical power steering”, page 19 .

Tightening torques

♦ ⇒ “1.1.2 Exploded view - cylinder block (pulley end), vehicles with electromechanical power steering”, page 15

Protected by copyright. Copying for private or commercial purposes, in part or in
permitted unless authorised by AUDI AG. AUDI AG does not guarantee or accept any liability
with respect to the c
by AUDI AG.

1.4 Removing and installing vibration damper

Special tools and workshop equipment required

♦ Counterhold tool - T10355-

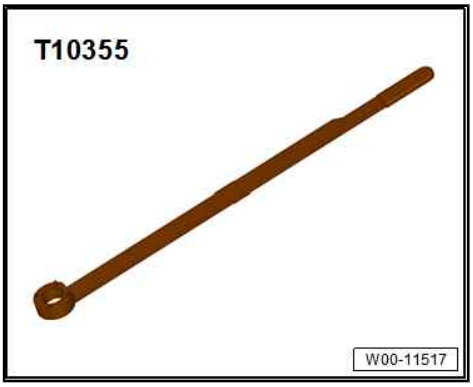

♦ Assembly tool - T10531-

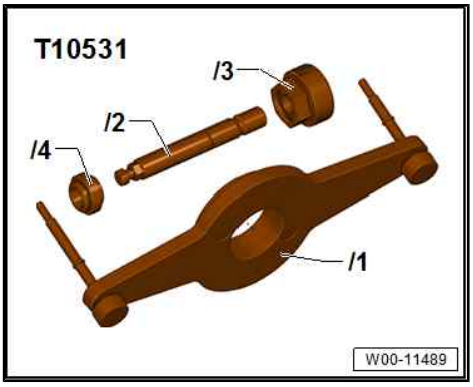

- Wrench, 21 mm - T40263-

Protected by copyright. Copying for private or commercial purposes, in part or in whole is not permitted unless authorised by AUDI AG. AUDI AG does not guarantee or accept any liability with respect to the correctness of information in this document. Copyright by AUDI AG.

- Adapter - T40314-

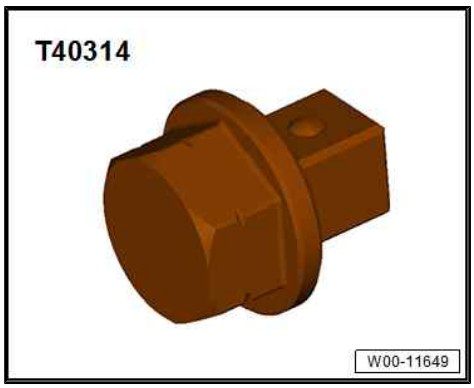

- Open end spanner insert, AF 24

Components of assembly tool - T10531- :

- Support - T10531/1-
- Clamping pin - T10531/2-
- Turning-over tool - T10531/3-
- Flange nut - T10531/4-

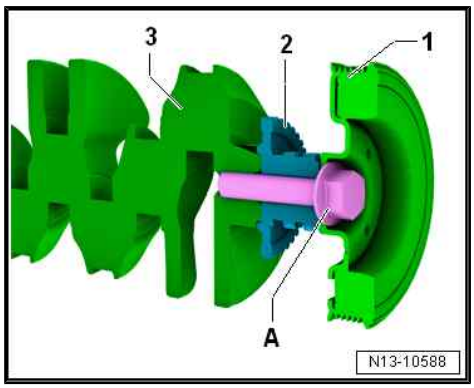

- The securing bolt for the vibration damper -A- secures the vibration damper -1-, timing chain sprocket -2- and crankshaft -3- to each other. Before removing the securing bolt, the timing chain sprocket must be secured to the crankshaft as described below.

Removing

Preparatory work may be necessary depending on model ⇒ 4-cylinder direct injection engine (1.8, 2.0 ltr. 4-valve TFSI); Rep. gr. 13 ; Cylinder block (pulley end); Removing and installing vibration damper .

– Vehicles without hybrid drive: Remove pulley without locking tensioner in place
⇒ “1.2 Removing and installing poly V-belt”, page 18 .

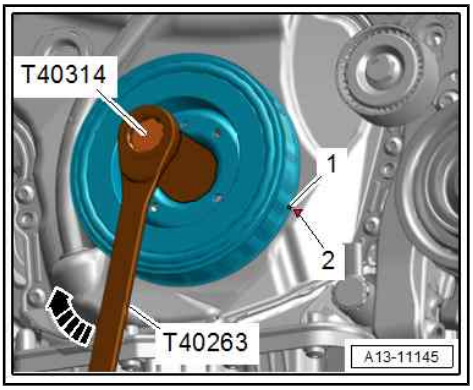

NOTICE

Risk of engine damage if valve gear drive slips

– **Only turn engine in normal direction of rotation.**

– Use wrench, 21 mm - T40263- , adapter - T40314- and socket, 24 mm to turn crankshaft in direction of engine rotation -arrow- until vibration damper is at “TDC” position.

- Notch -1- on vibration damper must align with arrow marking -2- on cover for timing chains (bottom).
- Marking on timing chain cover (bottom) must be in 4 o'clock position.
- Do not loosen securing bolt for vibration damper by more than a half turn at this stage.

– Apply counterhold tool - T10355- and loosen bolt for vibration damper by approx. 1/2 turn.

– If vibration damper has been twisted out of position, correct TDC position.

Protected by copyright. Copying for private or commercial purposes, in part or
permitted unless authorised by AUDI AG. AUDI AG does not guarantee or
with respect to the correctness of information in this document. Cop

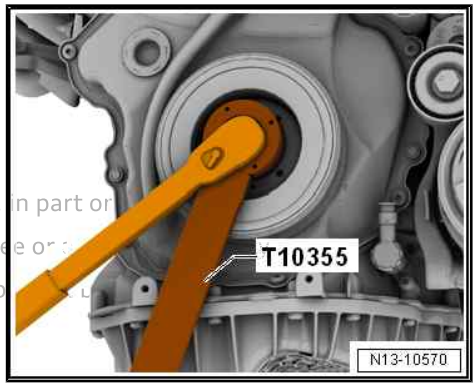

– Remove bolts -arrows- for timing chain cover (bottom).

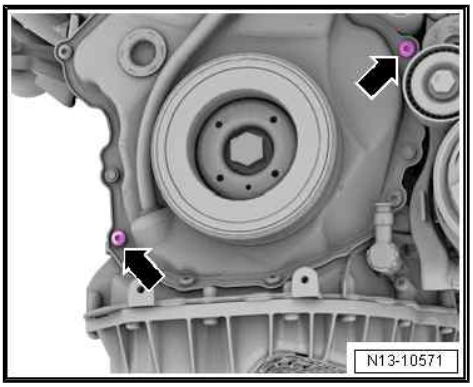

– Apply support - T10531/1- (as illustrated) to vibration damper and secure hand-tight with knurled screws -arrows-.

- Arrow marking on support - T10531/1- must point upwards.

– Remove bolt for vibration damper completely.

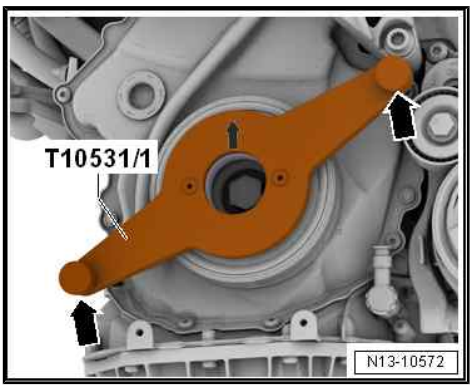

– Check whether turning-over tool -A- slides easily over clamps -B-. Turn tensioning bolt -arrow- if necessary.

• Do not turn the tensioning bolt from this stage onwards; otherwise the clamping pin - T10531/2- will get stuck when it is screwed into the crankshaft.

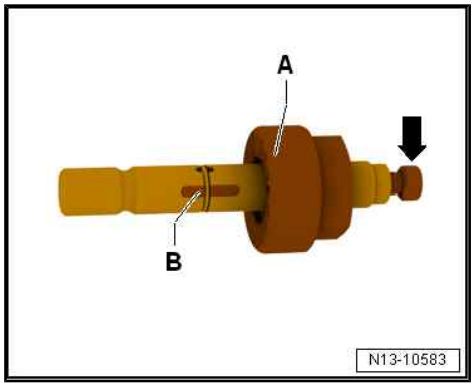

– Screw clamping pin - T10531/2- into crankshaft and hand-tighten with open-end spanner, 12 mm -A-.

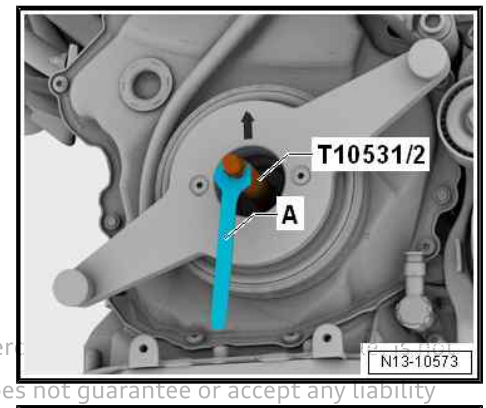

Protected by copyright. Copying for private or commer
permitted unless authorised by AUDI AG. AUDI AG does not guarantee or accept any liability
with respect to the correctness of information in this d

– Hand-tighten tensioning bolt -A- to secure chain sprocket to crankshaft.

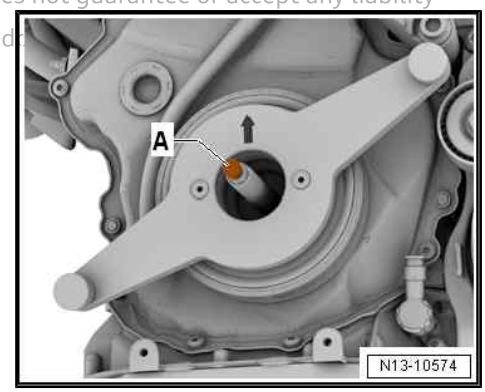

– Remove knurled screws -arrows-. Detach support - T10531/1- and vibration damper -A-.

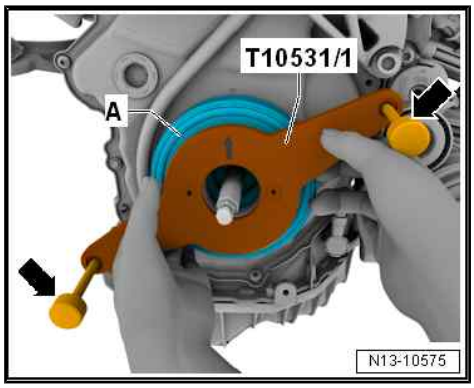

If crankshaft needs to be rotated without vibration damper:

– Fit turning-over tool - T10531/3- -item A- onto clamping pin - T10531/2- (pay attention to tooth-shaped profile on chain sprocket).

• In TDC position, flat surface of tool faces upwards.

– Tighten turning-over tool with flange nut - T10531/4- -item B-.

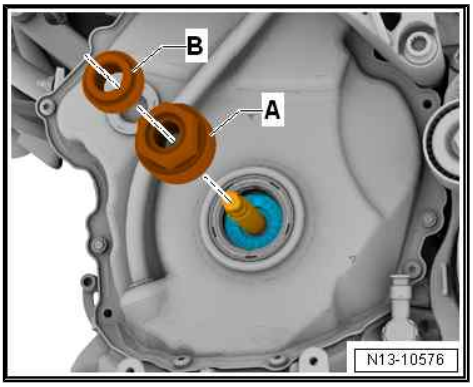

– Crankshaft can now be rotated at hexagon flats -arrow-.

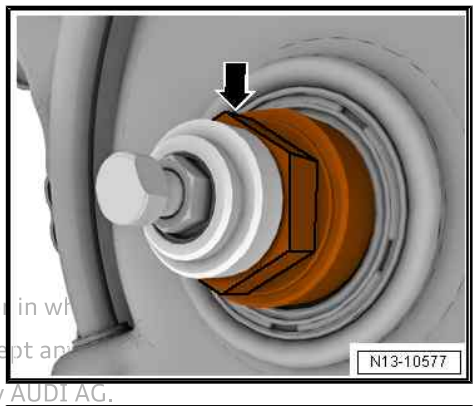

Protected by copyright. Copying for private or commercial purposes, in part or in wh
permitted unless authorised by AUDI AG. AUDI AG does not guarantee or accept an
with respect to the correctness of information in this document. Copyright by AUDI AG.

Installing

Installation is carried out in reverse order; note the following:

• Renew bolt with O-ring after removal.

– If necessary, detach flange nut - T10531/4- -item B- and turning-over tool - T10531/3- -item A- from clamping pin - T10531/2- .

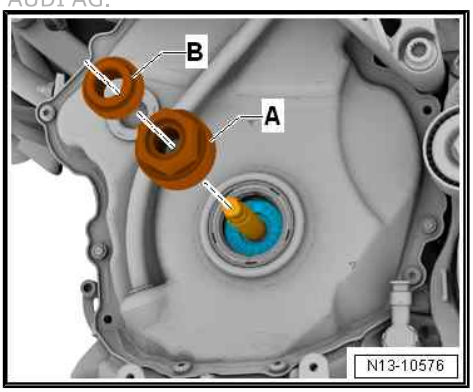

– Fit vibration damper in TDC position (pay attention to tooth-shaped profile -arrow- on chain sprocket).

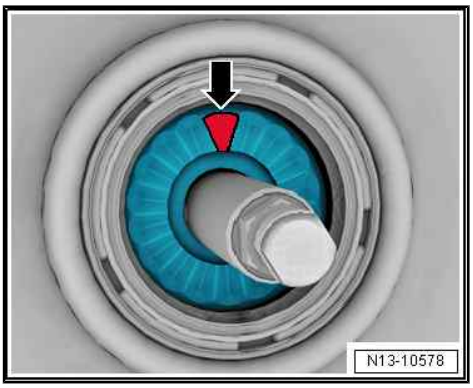

– Fit turning-over tool - T10531/3- -item A- onto clamping pin - T10531/2- .

• The hexagon flats should face the vibration damper.

– Screw flange nut - T10531/4- -item B- on while moving vibration damper back and forth slightly to check whether vibration damper is seated correctly in tooth-shaped profile.

– Tighten flange nut until vibration damper can no longer be rotated.

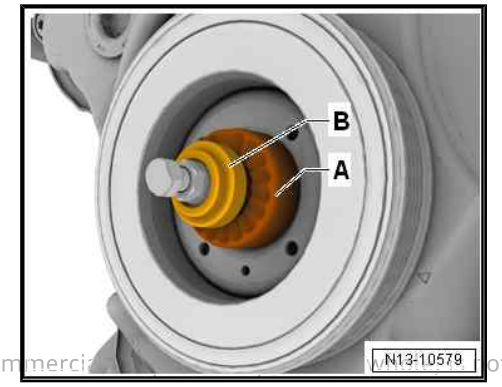

Protected by copyright. Copying for private or commercial purposes, in part or in whole, is not permitted unless authorised by AUDI AG. AUDI AG does not guarantee or accept any liability with respect to the correctness of information in this document.

– Apply support - T10531/1- (as illustrated) to vibration damper and secure hand-tight with knurled screws -arrows-.

• Arrow marking on support - T10531/1- must point upwards.

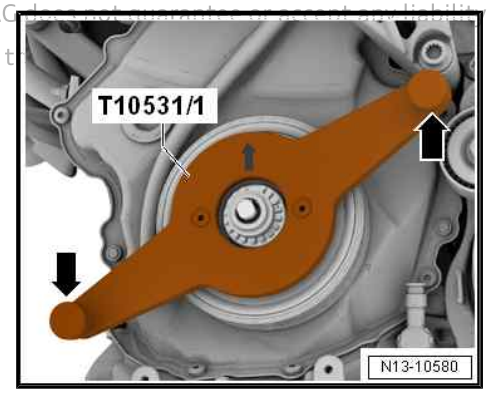

– Unscrew flange nut - T10531/4- -item A- and loosen tensioning bolt -B-.

– Unscrew clamping pin - T10531/2- and remove with turning-over tool - T10531/3- .

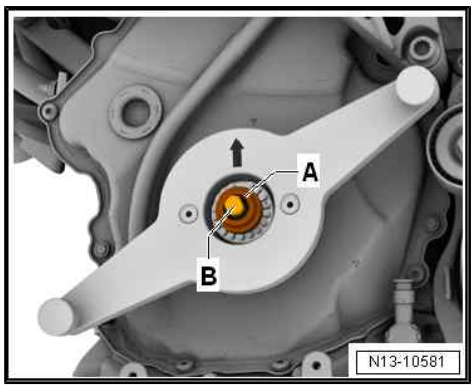

– Screw in new bolt for vibration damper with lubricated O-ring -1- hand-tight.

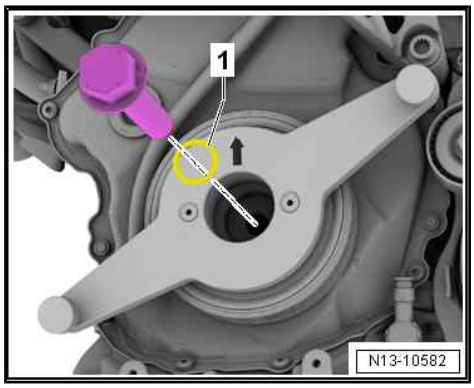

– Remove knurled screws -arrows- and detach support - T10531/1- .

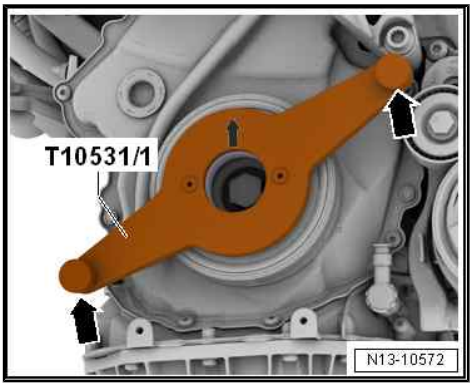

– Apply counterhold tool - T10355- and tighten bolt for vibration damper.

Protected by copyright. Copying for private or commercial purposes, in part or in whole, is not permitted unless authorised by AUDI AG. AUDI AG does not guarantee or assume liability with respect to the correctness of information in this document. Copyright by AUDI AG.

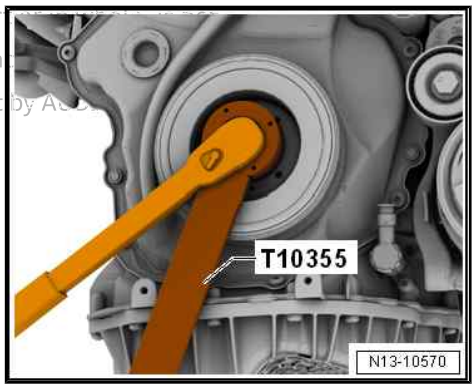

Remaining installation steps are carried out in reverse sequence; note the following:

- Renew bolts -arrows- for timing chain cover after removing.

– Vehicles without hybrid drive: Install poly V-belt ⇒ “1.2 Removing and installing poly V-belt”, page 18 .

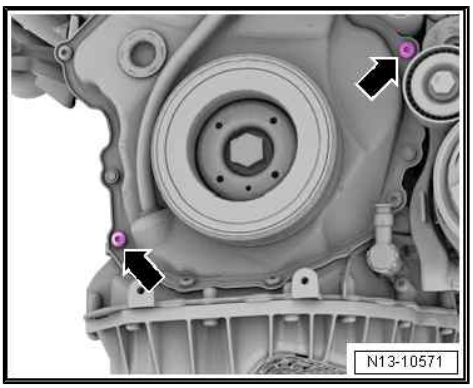

Additional work depending on model ⇒ 4-cylinder direct injection engine (1.8, 2.0 ltr. 4-valve TFSI); Rep. gr. 13 ; Cylinder block (pulley end); Removing and installing vibration damper

Tightening torques

- ⇒ “1.1 Exploded view - cylinder block (pulley end)”, page 12
- ⇒ Fig. ““Timing chain cover (bottom) with 15 bolts - tightening torques and tightening sequence”“ , page 65
- ⇒ Fig. ““Timing chain cover (bottom) with 8 bolts - tightening torques and tightening sequence”“ , page 65

1.5 Removing and installing bracket for ancillaries

Removing

Preparatory work may be necessary depending on model ⇒ 4-cylinder direct injection engine (1.8, 2.0 ltr. 4-valve TFSI); Rep. gr. 13 ; Cylinder block (pulley end); Removing and installing bracket for ancillaries .

– Remove oil filter ⇒ page 153 .

– Place a cloth underneath bracket for ancillaries to catch any escaping oil.
– Remove bolt -arrow- for dipstick guide tube.
– Unscrew bolts -1 ... 5- and detach bracket for ancillaries from coolant pump housing.

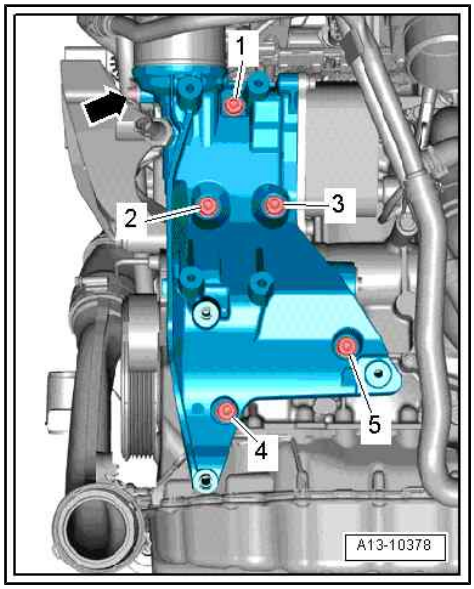

Note

Shape varies depending on engine version.

Installing

Installation is carried out in reverse order; note the following:

- After removing, renew bolts tightened with specified tightening angle.
- Renew seals and O-rings after removal.
- Do not reuse coolant.

– Coat new O-rings -4- with coolant additive.
– Insert connection -2- into coolant pump housing -3-.
– Push bracket for ancillaries -1- onto connection, fit bolts and tighten.
– Install oil filter ⇒ page 153 .

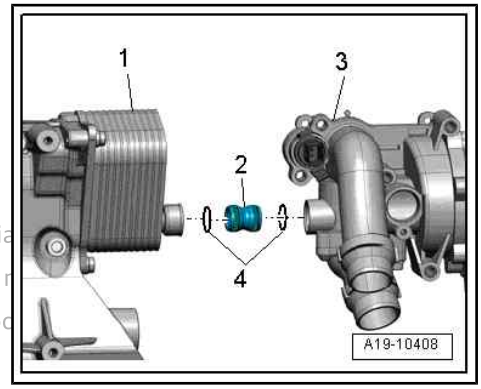

Additional work depending on model ⇒ 4-cylinder direct injection engine (1.8, 2.0 ltr. 4-valve TFSI); Rep. gr. 13 ; Cylinder block (pulley end); Removing and installing bracket for ancillaries

Protected by copyright. Copying for private or commercial purposes, in part or in whole, is not permitted unless AUDI AG does not give its consent. AUDI AG does not guarantee or accept any liability with respect to the correctness of information in this document.

Tightening torques

- ⇒ “1.1.1 Exploded view - cylinder block (pulley end), vehicles with hydraulic power steering”, page 12
- ⇒ “1.1.2 Exploded view - cylinder block (pulley end), vehicles with electromechanical power steering”, page 15
- ⇒ “1.1.3 Exploded view - cylinder block (pulley end), vehicles with hybrid drive”, page 17
- Dipstick guide tube
  ⇒ “1.1 Exploded view - timing chain cover”, page 64

2 Cylinder block (gearbox end)

⇒ "2.1 Exploded view - cylinder block (gearbox end)", page 29

⇒ "2.2 Removing and installing drive plate", page 30

⇒ "2.3 Removing and installing sealing flange (gearbox end)", page 32

⇒ "2.4 Renewing needle bearing in drive plate", page 37

2.1 Exploded view - cylinder block (gearbox end)

Protected by copyright. Copying for
permitted unless authorised by AU
with respect to the correctness of in

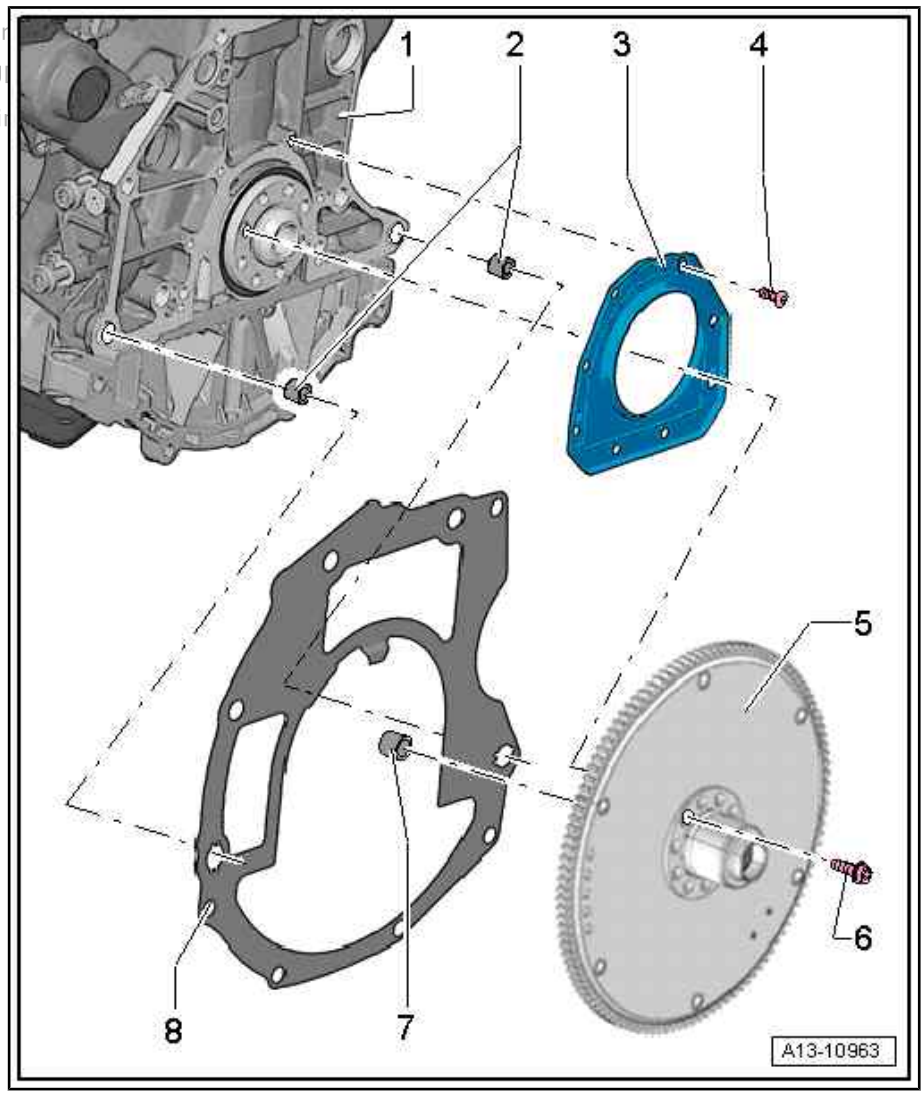

1 - Cylinder block

2 - Dowel sleeves

3 - Sealing flange (gearbox end)

- ❑ With oil seal
- ❑ Renew after removing
- ❑ Removing and installing ⇒ "2.3 Removing and installing sealing flange (gearbox end)", page 32
- ❑ Do not lubricate oil seal
- ❑ Before installing, remove oil residue from crankshaft journal with a clean cloth

4 - Bolt

- ❑ Tightening torques and sequence

♦ Version with 6 bolts ⇒ page 30

♦ Version with 8 bolts ⇒ page 30

5 - Drive plate

- ❑ Removing and installing ⇒ page 30
- ❑ A needle bearing must be fitted in the drive plate on vehicles with manual gearbox; install needle bearing if not yet fitted ⇒ page 37
- ❑ There should be no needle bearing fitted in the drive plate on vehicles with a dual clutch/automatic gearbox; remove needle bearing if necessary ⇒ page 37

6 - Bolt

- ❑ Renew after removing
- ❑ 60 Nm +90°

7 - Needle bearing

- ❑ For equipment version with manual gearbox
- ❑ Renewing ⇒ page 37

8 - Intermediate plate

- ❑ Installing ⇒ page 30

Sealing flange (gearbox end) with 6 bolts - tightening torques and sequence

- After removing, renew bolts tightened with specified tightening angle.

– Tighten bolts in stages in the sequence shown:

Stage	Bolts	Tightening torques
1.	-1 … 6-	Screw in by hand until contact is made
2.	-1 … 6-	Aluminium bolts: 4 Nm Steel bolts: 9 Nm
3.	-1 … 6-	Aluminium bolts: Turn 45° further

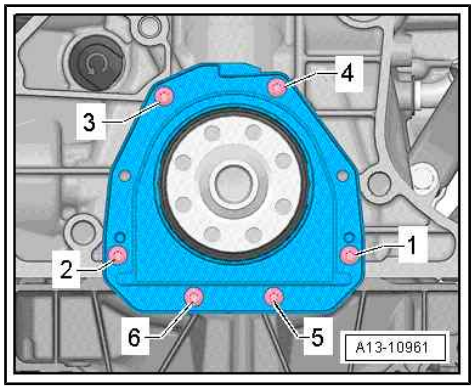

Note:

Only 6 bolts are fitted; 2 bolt holes remain free.

Sealing flange (gearbox end) with 8 bolts - tightening torques and sequence

– Tighten bolts in stages in the sequence shown:

Stage	Bolts	Tightening torques
1.	-1 … 8-	Screw in by hand until contact is made
2.	-1 … 8-	9 Nm

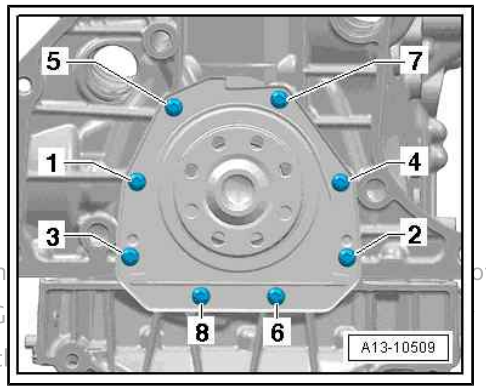

Protected by copyright. Copying for private or com ot
permitted unless authorised by AUDI AG. AUDI AG
with respect to the correctness of information in t

Installing intermediate plate

– Engage intermediate plate on sealing flange -top arrow- and push onto dowel sleeves -bottom arrows-.

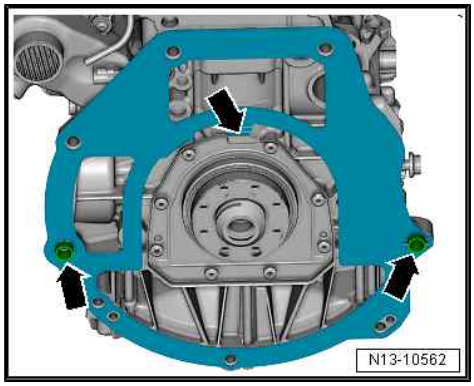

2.2 Removing and installing drive plate

Special tools and workshop equipment required

♦ Counterhold tool - 10-201-

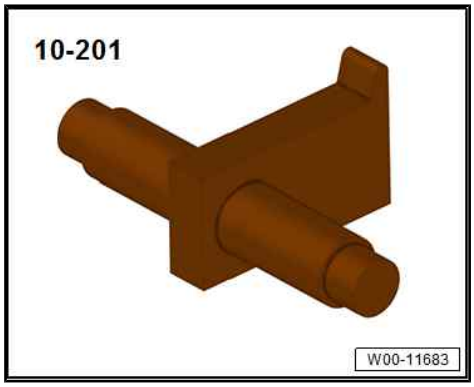

♦ Multi-point socket bit (length at least 40 mm)

Removing

- Gearbox removed ⇒ Gearbox; Rep. gr. 34 ; Removing and installing gearbox; Removing gearbox , or ⇒ Automatic gearbox; Rep. gr. 37 ; Removing and installing gearbox; Removing gearbox

– Insert counterhold tool - 10-201- to slacken bolts.

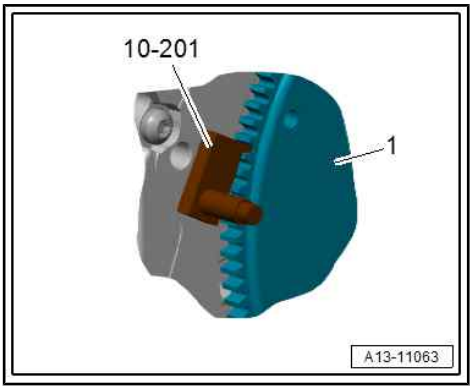

NOTICE

Risk of damage to drive plate if an unsuitable tool is used.

– **Take care not to damage centring flange of drive plate when loosening and tightening bolts.**

– Unscrew bolts for drive plate -1- using a multi-point socket bit with a length of at least 40 mm.

Installing

Installation is carried out in reverse order; note the following:

- After removing, renew bolts tightened with specified tightening angle.
- On vehicles with manual gearbox, a needle bearing is fitted in the drive plate. Before installing, check that the needle bearing is fitted. Removing and installing needle bearing in drive plate (pressing in and out) ⇒ page 37 .

– Pay attention to dowel pin when installing drive plate.

– Fit counterhold tool - 10-201- the other way round to tighten bolts.

Tightening torques

♦ ⇒ “2.1 Exploded view - cylinder block (gearbox end)”, page 29

Protected by copyright. Copying for private or commercial purposes, in part or in whole, is not permitted unless authorised by AUDI AG. AUDI AG does not guarantee or accept any liability with respect to the correctness of information in this document. Copyright by AUDI AG.

2.3 Removing and installing sealing flange (gearbox end)

⇒ "2.3.1 Removing and installing sealing flange (gearbox end) - version A (sealing lip facing towards outside)", page 32

⇒ "2.3.2 Removing and installing sealing flange (gearbox end) - version B (sealing lip facing towards inside)", page 34

Sealing flange (gearbox end) - different versions

There are two versions of the sealing flange. Please check which flange has been delivered and choose the installation accordingly.

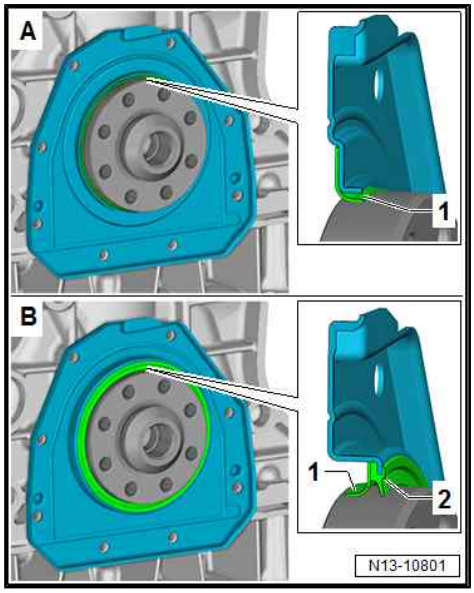

NOTICE

Risk of leaks.

– **Select correct version for installing new sealing flange.**

- Version -A-: Sealing lip -1- faces gearbox (outside).

Removing and installing version -A-
⇒ "2.3.1 Removing and installing sealing flange (gearbox end) - version A (sealing lip facing towards outside)", page 32

- Version -A-: Sealing lip -1- faces engine (inside). This sealing flange also has a dust protection lip -2-.

Removing and installing version -B-
⇒ "2.3.2 Removing and installing sealing flange (gearbox end) - version B (sealing lip facing towards inside)", page 34

Protected by copyright. Copying for private or commercial purposes, in part or in whole, is not permitted unless authorised by AUDI AG. AUDI AG does not guarantee or accept any liability with respect to the correctness of information in this document. Copyright by AUDI AG.

2.3.1 Removing and installing sealing flange (gearbox end) - version A (sealing lip facing towards outside)

Note different versions
⇒ "2.3 Removing and installing sealing flange (gearbox end)", page 32 .

Special tools and workshop equipment required

- Assembly sleeve - T20097-

- Electric drill with plastic brush attachment
- Safety goggles
- Sealant ⇒ Electronic parts catalogue

Removing

- Vehicles without hybrid drive: Gearbox removed ⇒ Gearbox; Rep. gr. 34 ; Removing and installing gearbox; Removing

gearbox , or ⇒ Automatic gearbox; Rep. gr. 37 ; Removing and installing gearbox; Removing gearbox

- Vehicles with hybrid drive: Engine removed and secured to engine and gearbox support ⇒ page 8

– Remove drive plate ⇒ page 30 .

– Detach intermediate plate at sealing flange and dowel sleeves -arrows-.

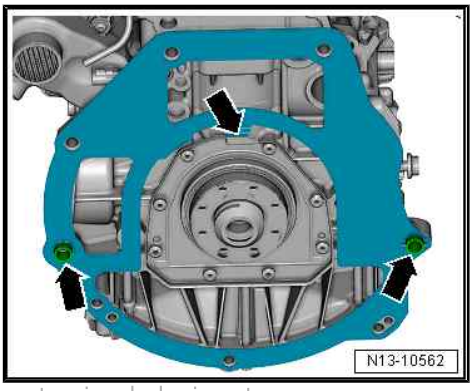

Protected by copyright. Copying for private or commercial purposes, in part or in whole, is not permitted unless authorised by AUDI AG. AUDI AG does not guarantee or assume any liability with respect to the correctness of information in this document. Copyright by AUDI AG.

– Remove bolts -1 ... 8-. (Some versions may only have six bolts.)

– Remove sealing flange.

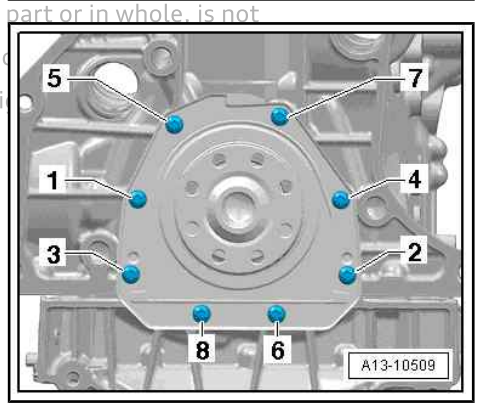

Installing

- Renew sealing flange after removing.

Place a clean cloth over the open section of the sump to prevent the lubrication system from being contaminated by sealant residue.

⚠ CAUTION

Risk of eye injury due to sealant residue.

– Put on safety goggles.

– Remove sealant residue on cylinder block -1- using rotating plastic brush or similar.

– Clean sealing surfaces and crankshaft journals; they must be free of oil and grease.

- Do not oil or grease sealing lip of oil seal in sealing flange.

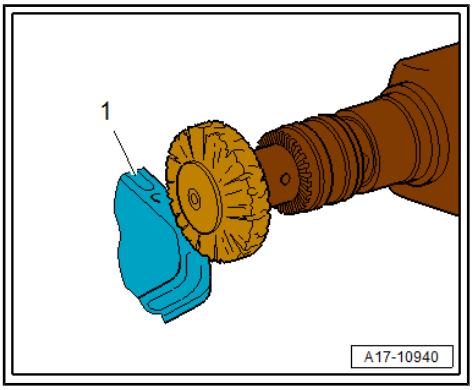

Note:

Note expiry date of sealant.

– Cut off nozzle of tube at front marking (nozzle ∅ approx. 2 mm).

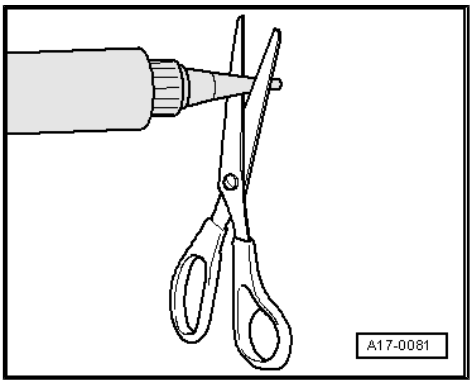

NOTICE

Risk of engine damage due to excessive sealant in lubrication system.

– **The sealant bead must not be thicker than specified.**

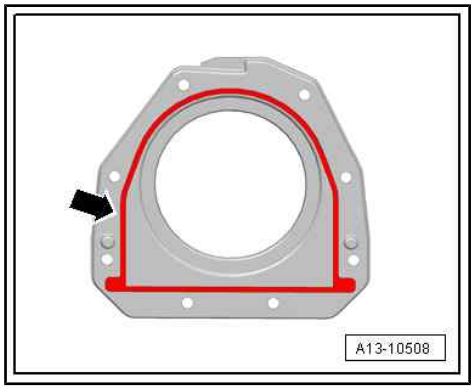

– Apply a bead of sealant -arrow- onto clean sealing surface of sealing flange, as shown.

– Remove assembly sleeve - T20097- .

• Thickness of sealant bead: 2 ... 3 mm

• The sealing flange must be installed within 5 minutes after applying sealant.

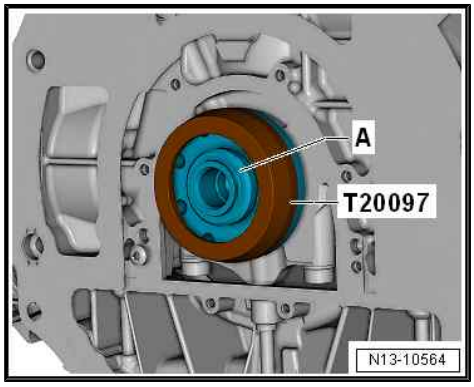

– Fit guide sleeve - T20097- onto crankshaft journal -A-.

– Push sealing flange over guide sleeve - T20097- onto crankshaft journal.

– Secure sealing flange with bolts.

• After installing sealing flange, wait about 30 minutes for sealant to dry. Then (and only then) fill the engine with engine oil.

Remaining installation steps are carried out in reverse sequence; note the following:

– Install intermediate plate ⇒ page 30 .

– Install drive plate
⇒ “2.2 Removing and installing drive plate”, page 30 .

– Check oil level ⇒ “1.2 Engine oil”, page 153 .

Protected by copyright. Copying for private or commercial purposes, in part or in whole, is not permitted unless authorised by AUDI AG. AUDI AG does not guarantee or accept any liability with respect to the correctness of information in this document. Copyright by AUDI AG.

Tightening torques

◆ ⇒ Fig. ““Sealing flange (gearbox end) with 6 bolts - tightening torques and sequence”“ , page 30

◆ ⇒ Fig. ““Sealing flange (gearbox end) with 8 bolts - tightening torques and sequence”“ , page 30

2.3.2 Removing and installing sealing flange (gearbox end) - version B (sealing lip facing towards inside)

Note different versions
⇒ “2.3 Removing and installing sealing flange (gearbox end)”, page 32 .

Special tools and workshop equipment required

◆ Guide piece - T10122/6- or -T10122/6A- from fitting tool - T10122B- or -T10122C-

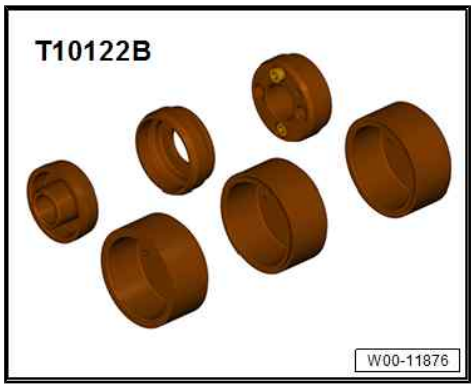

- Assembly aid - T10122/1- from fitting tool - T10122B- or - T10122C-
- Electric drill with plastic brush attachment
- Safety goggles
- Sealant ⇒ Electronic parts catalogue

Removing

- Vehicles without hybrid drive: Gearbox removed ⇒ Gearbox; Rep. gr. 34 ; Removing and installing gearbox; Removing gearbox , or ⇒ Automatic gearbox; Rep. gr. 37 ; Removing and installing gearbox; Removing gearbox
- Vehicles with hybrid drive: Engine removed and secured to engine and gearbox support ⇒ page 8

– Remove drive plate ⇒ page 30 .

– Detach intermediate plate at sealing flange and dowel sleeves -arrows-.

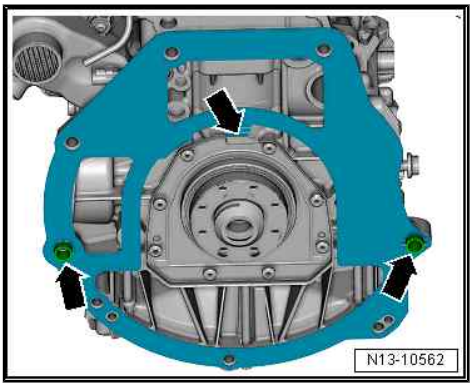

– Remove bolts -1 ... 8-. (Some versions may only have six bolts.)

– Lever off sealing flange.

Installing

- Renew sealing flange after removing.

Place a clean cloth over the open section of the sump to prevent the lubrication system from being contaminated by sealant residue.

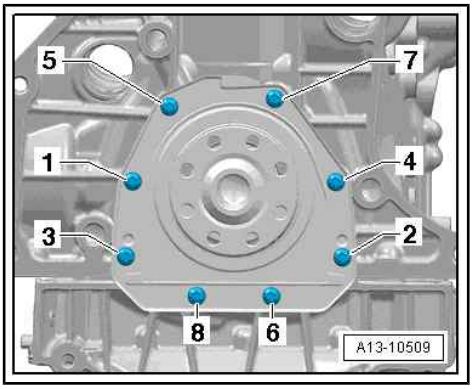

CAUTION

Risk of eye injury due to sealant residue.

– Put on safety goggles.

– Remove sealant residue on cylinder block -1- using rotating plastic brush or similar.

– Clean sealing surfaces and crankshaft journals; they must be free of oil and grease.

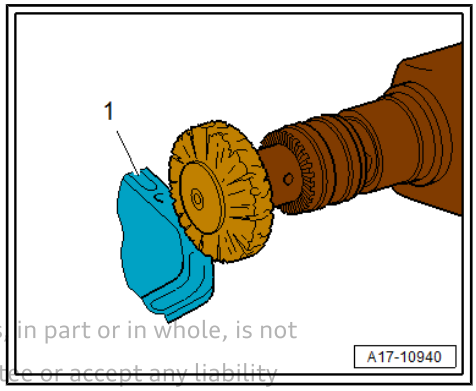

Protected by copyright. Copying for private or commercial purposes, in part or in whole, is not permitted unless authorised by AUDI AG. AUDI AG does not guarantee or accept any liability with respect to the correctness of information in this document. Copyright by AUDI AG.

Note:

Note expiry date of sealant.

– Cut off nozzle of tube at front marking (nozzle ∅ approx. 2 mm).

Protected by copyright. Copying for private or commercial purposes, in part or in whole, is not permitted unless authorised by AUDI AG. AUDI AG does not guarantee or accept any liability with respect to the correctness of information in this document. Copyright by AUDI AG.

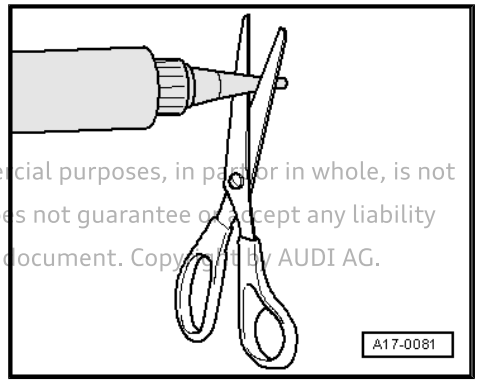

NOTICE

Risk of engine damage due to excessive sealant in lubrication system.

– **The sealant bead must not be thicker than specified.**

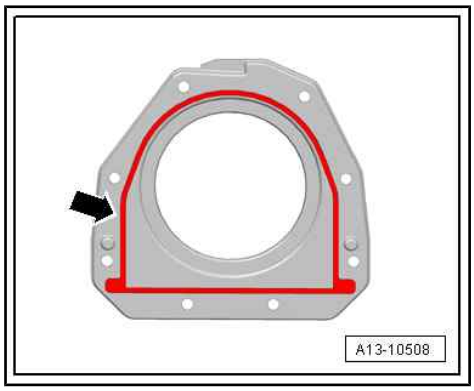

- Thickness of sealant bead: 2 ... 3 mm
- The sealing flange must be installed within 5 minutes after applying sealant.
- Sealing lip must face engine after installation. If the sealing lip faces outwards after installation this will result in oil leakage.

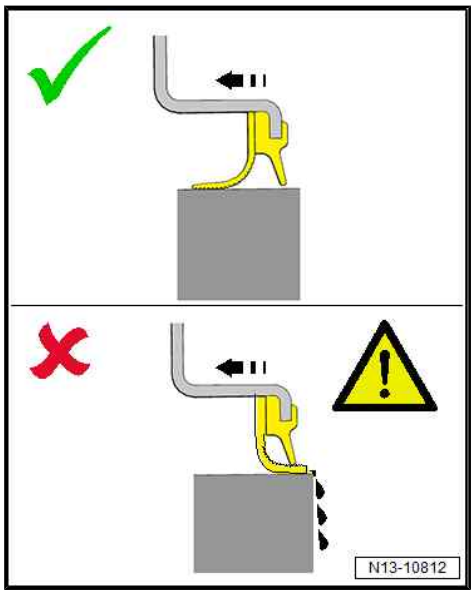

– Check guide piece - T10122/6A- -B-; it must not have sharp edges or be dirty.
– Fit assembly aid - T10122/1- -A- onto guide piece - T10122/6A- -B-.
– Push sealing flange -C- onto guide piece -B-, starting with outer edge.
– Detach assembly aid -A-.

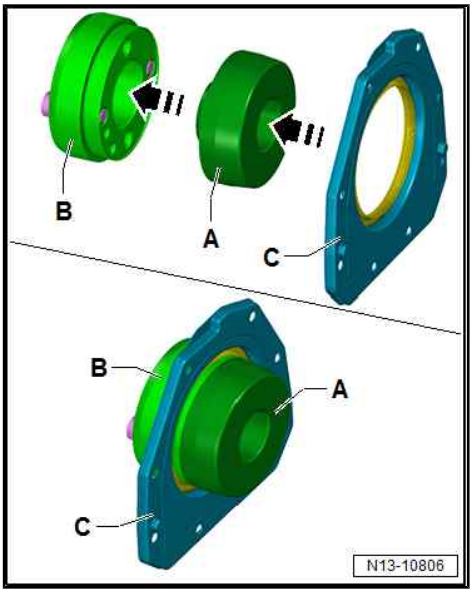

– Fit guide piece -A- with sealing flange -B- on crankshaft journal.

Note:

It is not necessary to tighten bolts -arrows-.

– Push sealing flange -B- over guide piece -A- onto crankshaft journal.
– Detach guide piece -A-.
– Secure sealing flange with bolts.
• After installing sealing flange, wait about 30 minutes for sealant to dry. Then (and only then) fill the engine with engine oil.

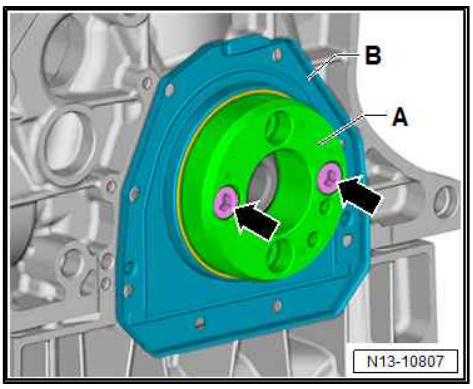

Remaining installation steps are carried out in reverse sequence; note the following:

Protected by copyright. Copying for private or commercial purposes, in part or in whole, is not permitted unless authorised by AUDI AG. AUDI AG does not guarantee or accept any liability with respect to the correctness of information in this document. Copyright by AUDI AG.

– Install intermediate plate ⇒ page 30 .
– Install drive plate ⇒ page 30 .
– Check oil level ⇒ “1.2 Engine oil”, page 153 .

Tightening torques

♦ ⇒ Fig. ““Sealing flange (gearbox end) with 6 bolts - tightening torques and sequence”“ , page 30
♦ ⇒ Fig. ““Sealing flange (gearbox end) with 8 bolts - tightening torques and sequence”“ , page 30

2.4 Renewing needle bearing in drive plate

A needle bearing is fitted in the drive plate only on vehicles with manual gearbox.

Special tools and workshop equipment required

♦ Tube - VW 418A-

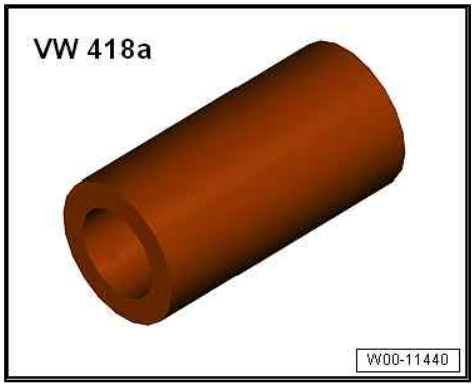

♦ Tube - VW 421-

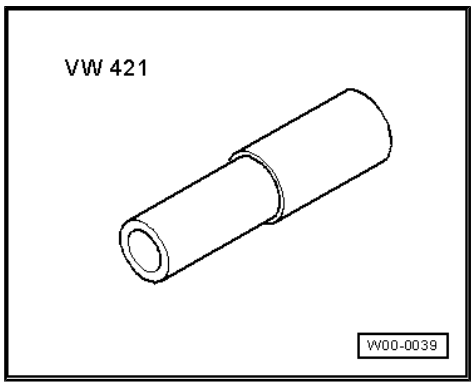

♦ Support - 40-103-

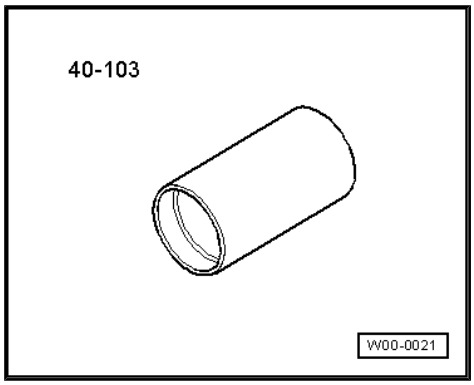

Procedure

- Gearbox removed ⇒ Gearbox; Rep. gr. 34 ; Removing and installing gearbox; Removing gearbox .

– Remove drive plate ⇒ page 30 .

– Place support - 40-103- under drive plate when pressing out and pressing in needle bearing.

– Use tube - VW 421- and workshop press and press out needle bearing.

- Smaller diameter of tube -VW 421- faces drive plate.

Protected by copyright. Copying for private or commercial purposes, in part or in whole, is not permitted unless authorised by AUDI AG. AUDI AG does not guarantee or accept any liability with respect to the correctness of information in this document. Copyright

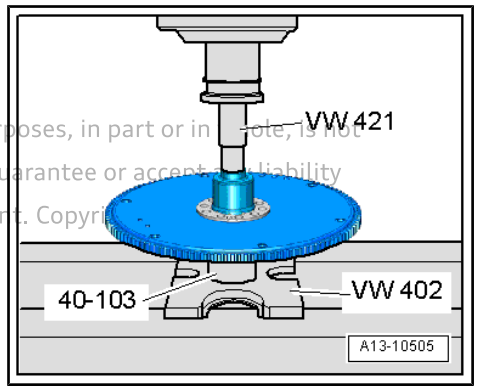

– Carefully press in needle bearing as far as stop, using tube - VW 418A- and workshop press.

• Installation position: closed side of needle bearing faces engine.

– Install drive plate ⇒ page 30 .

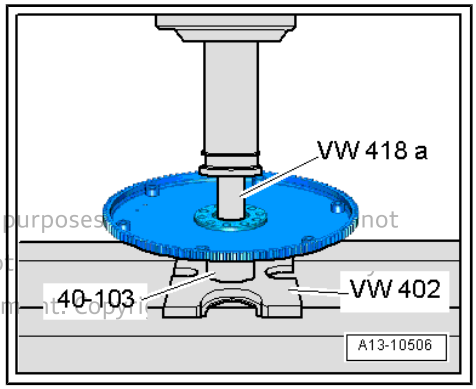

Protected by copyright. Copying for private or commercial purposes, in part or in whole, is not permitted unless authorised by AUDI AG. AUDI AG does not guarantee or assume liability with respect to the correctness of information in this document. Copyright by AUDI AG.

3 Crankshaft

⇒ “3.1 Exploded view - crankshaft”, page 40
⇒ “3.2 Crankshaft dimensions”, page 42
⇒ “3.3 Allocation of main bearing shells”, page 42
⇒ “3.4 Measuring axial clearance of crankshaft”, page 43
⇒ “3.5 Measuring radial clearance of crankshaft”, page 44
⇒ “3.6 Removing and installing sender wheel”, page 45

3.1 Exploded view - crankshaft

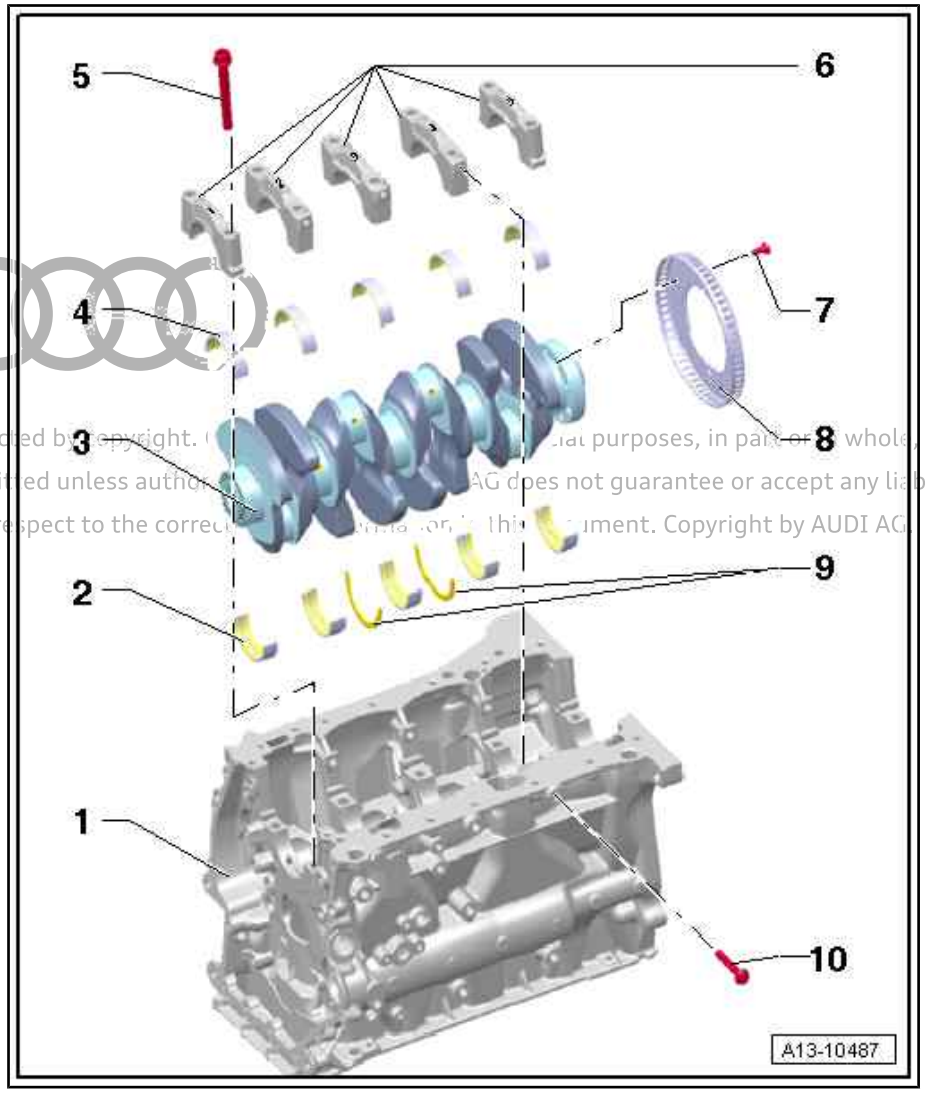

1 - Cylinder block

2 - Bearing shell for cylinder block

- With oil groove
- Renew used bearing shells
- Classification of crankshaft bearing shells ⇒ page 42
- Lubricate with engine oil

3 - Crankshaft

- Secure engine to engine and gearbox support when performing assembly work ⇒ page 8
- After removing, place it down so that the sender wheel ⇒ Item 8 (page 41) does not become damaged
- If crankshaft is renewed, new bearing shells must be assigned to bearing caps ⇒ page 42
- Measuring axial clearance ⇒ page 43
- Measuring radial clearance ⇒ page 44
- Crankshaft dimensions ⇒ page 42

4 - Bearing shell for bearing cap

- Without oil groove
- Renew used bearing shells
- Classification of crankshaft bearing shells ⇒ page 42
- Lubricate with engine oil

5 - Bolt

- Renew after removing
- Use old bolts when measuring radial clearance
- Tightening torques and sequence ⇒ page 41

Protected by copyright. Copying for private or commercial purposes, in part or in whole, is not permitted unless authorized by AUDI AG. AUDI AG does not guarantee or accept any liability with respect to the correctness of information in this document. Copyright by AUDI AG.

6 - Bearing caps

- ❑ Bearing cap 1: Pulley end
- ❑ Bearing caps 2, 3 and 4 are secured additionally with bolts at side
- ❑ Bearing shell retaining lugs (cylinder block/bearing cap) must be on the same side
- ❑ Mark installation position for re-installation ⇒ page 42

7 - Bolt

- ❑ Renew after removing
- ❑ Sender wheel ⇒ Item 8 (page 41) must be renewed if bolts are loosened ⇒ page 45
- ❑ 10 Nm +90°

8 - Sender wheel

- ❑ For engine speed sender - G28-
- ❑ Can only be installed in one position. Holes are off-set
- ❑ Sender wheel must be renewed if bolts ⇒ Item 7 (page 41) are loosened
- ❑ Removing and installing ⇒ page 45
- ❑ After renewing, perform “Adaption” using ⇒ Vehicle diagnostic tester, `Guided Functions`

9 - Thrust washers

- ❑ For bearing No. 3
- ❑ Lubricate with engine oil

10 - Bolt

- ❑ Renew after removing
- ❑ Tightening torques and sequence ⇒ page 41

Crankshaft - tightening torques and sequence

- After removing, renew bolts tightened with specified tightening angle.

– Tighten bolts in stages in the sequence shown:

Stage	Bolts	Tightening torques/angle specification
1.	-1 … 10- and -arrows A-	Screw in by hand until contact is made
2.	-1 … 10-	65 Nm
3.	-1 … 10-	Turn 90° further
4.	-Arrows A-	15 Nm
5.	-Arrows A-	Turn 90° further

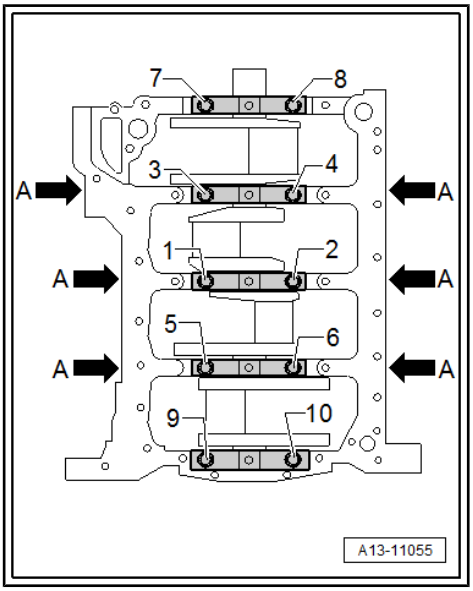

Protected by copyright. Copying for private or commercial purposes, in part or in whole, is not permitted unless authorised by AUDI AG. AUDI AG does not guarantee or accept any liability with respect to the correctness of information in this document. Copyright by AUDI AG.

Markings on crankshaft bearing caps

– Mark position of bearing caps -1 ... 5- for re-installation.

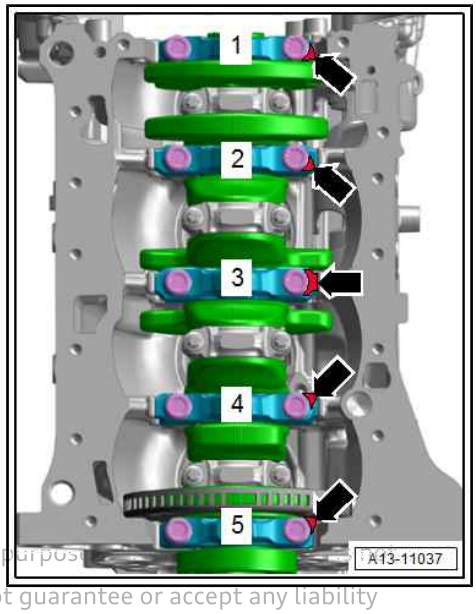

Protected by copyright. Copying for private or commercial purposes, in part or in whole, is not permitted unless authorised by AUDI AG. AUDI AG does not guarantee or accept any liability with respect to the correctness of information in this document. Copyright by AUDI AG.

3.2 Crankshaft dimensions

Honing dimension 1)	Crankshaft main bearing journal ∅ mm	Conrod journal ∅ mm
Basic dimension	58.00	47.80

1) There is currently no provision for machining used crankshafts.

3.3 Allocation of main bearing shells

- Bearing shells of the correct thickness are allocated to the cylinder block at the factory. Coloured dots are used to identify the thickness of the bearing shells.
- Letter codes on lower sealing surface or end of cylinder block indicate which bearing shell is to be fitted in cylinder block (top bearing shell) at each location.
- Letter codes on crankshaft indicate which bearing shell is to be fitted in bearing cap (bottom bearing shell).
- The first letter stands for bearing cap 1, the second letter for bearing cap 2, etc.

Marking on bearing shell for cylinder block:

Markings on cylinder block are applied either onto sealing surface for sump or gearbox end of cylinder block.

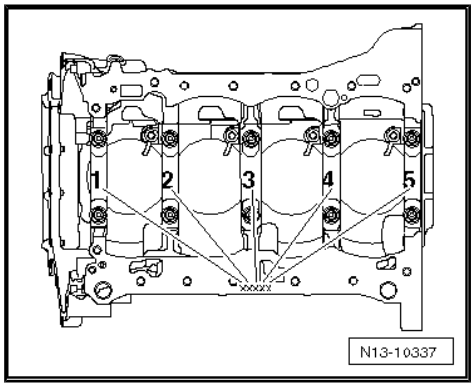

Marking on cylinder block refers to top bearing shell (bearing shell for cylinder block).

– Note down letters and select colour coding to be fitted from the table.

G	=	Yellow
R	=	Red
S	=	Black
VI	=	Violet
WS	=	White

Coloured marking depends on version; for correct type refer to ⇒ Electronic parts catalogue

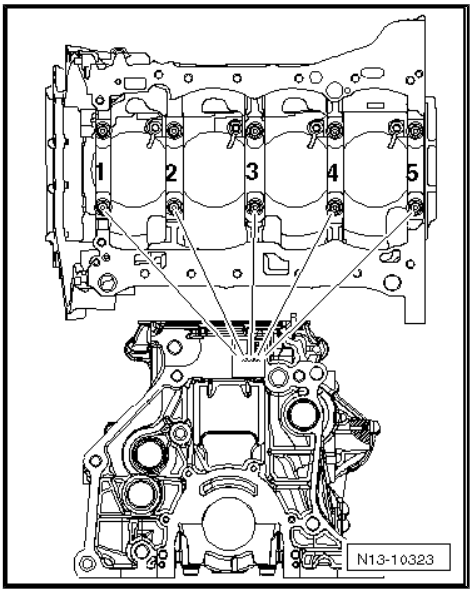

Marking on bearing shell for bearing cap:

Marking on crankshaft refers to bottom bearing shell (bearing shell for bearing cap).

– Note down letters and select colour coding to be fitted from the table.

R	=	Red
G	=	Yellow
B	=	Blue
W	=	White
V	=	Violet
S	=	Black

Coloured marking depends on version; for correct type refer to ⇒ Electronic parts catalogue

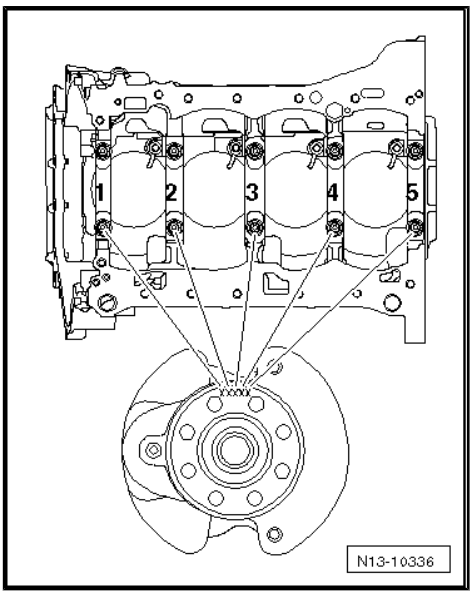

3.4 Measuring axial clearance of crankshaft

Special tools and workshop equipment required

♦ Universal dial gauge bracket - VW 387-

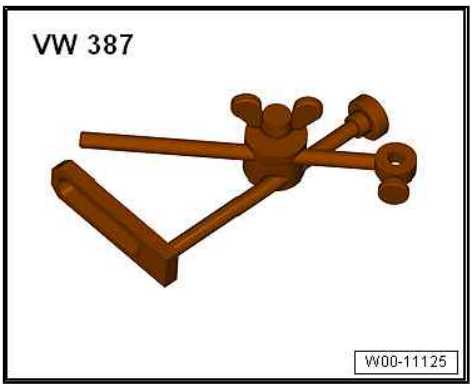

Protected by copyright. Copying for private or commercial purposes, in part or in whole, is not permitted unless authorised by AUDI AG. AUDI AG does not guarantee or accept any liability with respect to the correctness of information in this document. Copyright by AUDI AG.

♦ Dial gauge - VAS 6079-

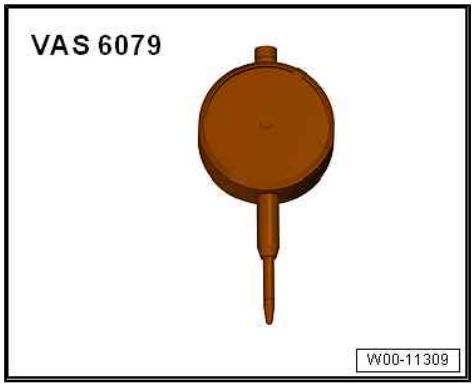

Procedure

– Bolt dial gauge - VAS 6079- with universal dial gauge bracket - VW 387- onto cylinder block and set it against crank web.

– Press crankshaft against dial gauge by hand and set gauge to “0”.

– Push crankshaft away from dial gauge and read off value.

Axial clearance:

- New: 0.070 ... 0.231 mm.
- Wear limit: 0.30 mm.

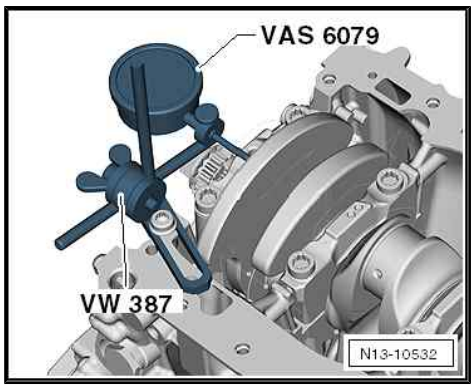

Protected by copyright. Copying for private or commercial purposes, in part or in whole, is not permitted unless authorised by AUDI AG. AUDI AG does not guarantee or accept any liability with respect to the correctness of information in this document. Copyright by AUDI AG.

3.5 Measuring radial clearance of crankshaft

Special tools and workshop equipment required

♦ Plastigauge

Procedure

- Use old bolts when measuring radial clearance.

– Remove crankshaft bearing caps and clean bearing caps and journals.

– Place a length of Plastigauge corresponding to the width of the bearing on the bearing journal or bearing shell.

- The Plastigauge must be positioned in the centre of the bearing shell.

– Fit crankshaft bearing caps and secure with old bolts -1 ... 10- ⇒ page 41 without rotating crankshaft.
– Remove crankshaft bearing caps again.
– Compare width of Plastigauge with measurement scale.

Radial clearance:

- New: 0.017 ... 0.037 mm.
- Wear limit: 0.15 mm.

– When carrying out final assembly, renew bolts.

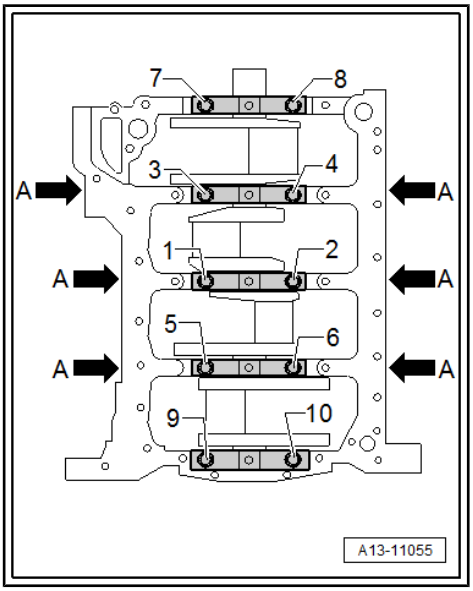

3.6 Removing and installing sender wheel

Removing

- Engine secured to engine and gearbox support ⇒ page 8

– Remove sump (top section) ⇒ page 157 .
– Remove balance shaft timing chain ⇒ page 91 .
– Unbolt conrod bearing caps.
– Remove crankshaft bearing caps.
– Remove crankshaft and unbolt sender wheel.

Installing

Installation is carried out in reverse order; note the following:

– Sender wheel -2- must always be renewed after slackening off bolts -1-.

Note:

If the countersunk bolts are tightened a second time, the seats for the bolt heads in the sender wheel will be deformed to such an extent that the bolt heads make contact with the crankshaft -3- -arrows- and the sender wheel beneath the bolts will be loose.

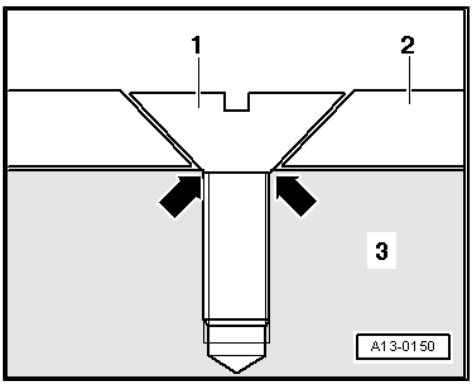

- Sender wheel can only be fitted in one position because holes are offset.

– Install balance shaft timing chain ⇒ page 91 .
– Install sump (upper section) ⇒ page 157 .
– Adaption must be performed after renewing sender wheel ⇒ Vehicle diagnostic tester, Guided Functions.

Tightening torques

♦ ⇒ “3.1 Exploded view - crankshaft”, page 40

Protected by copyright. Copying for private or commercial purposes, in part or in whole, is not permitted unless authorised by AUDI AG. AUDI AG does not guarantee or accept any liability with respect to the correctness of information in this document. Copyright by AUDI AG.

4 Balance shaft

⇒ “4.1 Exploded view - balance shaft”, page 46

⇒ “4.2 Removing and installing balance shaft”, page 47

⇒ “4.3 Renewing oil seal for balance shaft (inlet side)”, page 52

4.1 Exploded view - balance shaft

Protected by copyright. Copying for private or comm
permitted unless authorised by AUDI AG. AUDI AG c
with respect to the correctness of information in this

1 - Bolt
- ❑ Renew after removing
- ❑ 9 Nm

2 - Balance shaft
- ❑ Inlet side
- ❑ Renew after removing
- ❑ Lubricate bearing with engine oil
- ❑ Renewing ⇒ page 47

3 - Balance shaft
- ❑ Exhaust side
- ❑ Renew after removing
- ❑ Lubricate bearing with engine oil
- ❑ Renewing ⇒ page 50

4 - Bolt
- ❑ Renew after removing
- ❑ 9 Nm

5 - Tube for balance shaft
- ❑ Installation position ⇒ page 46

6 - Oil seal for balance shaft (inlet side)
- ❑ Renewing ⇒ page 52

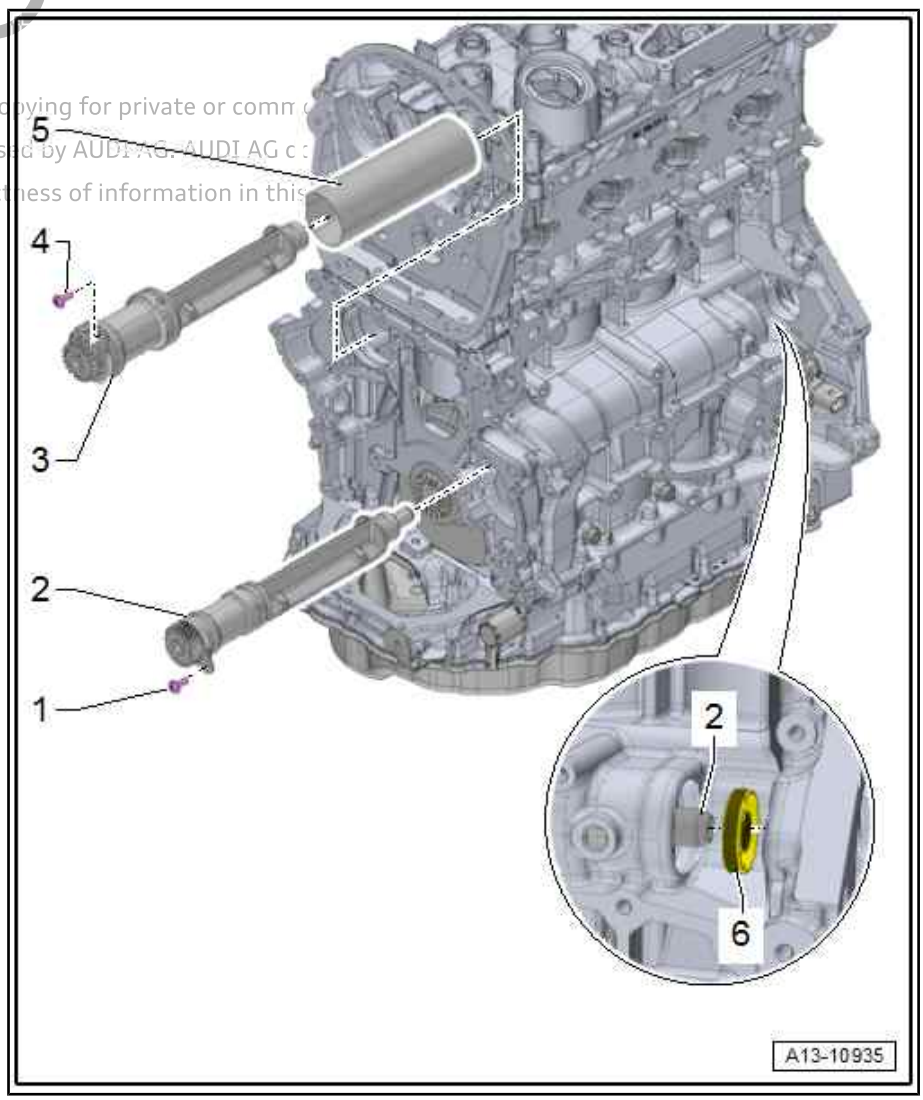

Tube for balance shaft - installation position

- Lug on tube for balance shaft must engage in slot -arrow-.

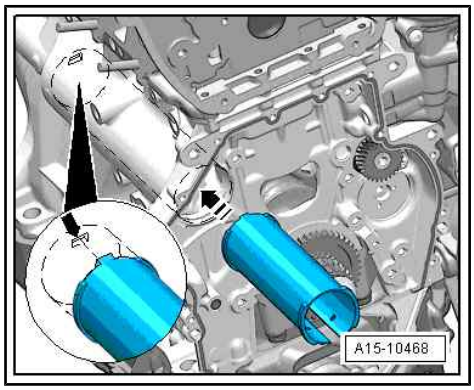

4.2 Removing and installing balance shaft

⇒ "4.2.1 Removing and installing balance shaft (inlet side)", page 47

⇒ "4.2.2 Removing and installing balance shaft (exhaust side)", page 50

4.2.1 Removing and installing balance shaft (inlet side)

Special tools and workshop equipment required

- Puller - T10055-

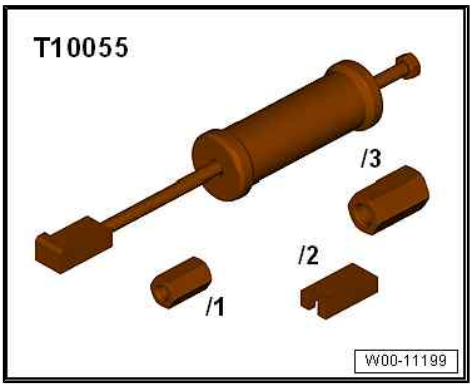

- Puller - T10394-

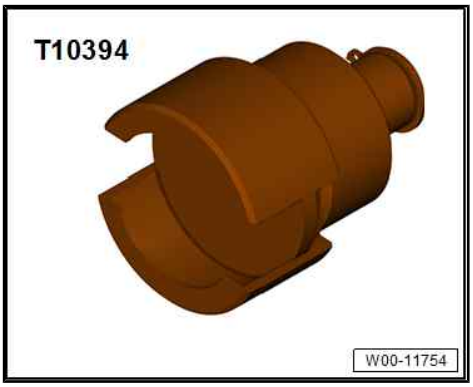

Removing

– Remove radiator ⇒ 4-cylinder direct injection engine (1.8, 2.0 ltr. 4-valve TFSI); Rep. gr. 19 ; Radiator/radiator fans; Removing and installing radiator .

– Remove toothed belt for coolant pump ⇒ page 180 .

– Remove drive chain for balance shafts ⇒ page 101 .

– Remove bolt -2-.

– Detach drive sprocket -1- for toothed belt for coolant pump.

Protected by copyright. Copying for private or commercial purposes, in
permitted unless authorised by AUDI AG. AUDI AG does not guarantee
with respect to the correctness of information in this document. Copyr

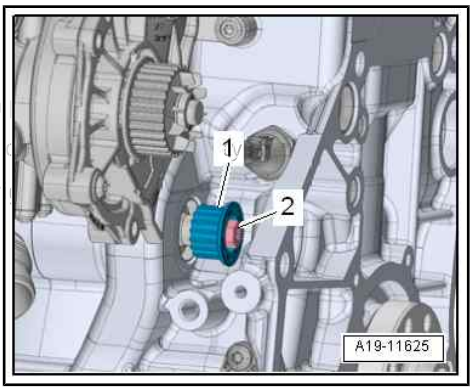

– Unscrew bolt -1- and remove idler gear.
– Detach bearing mounting.

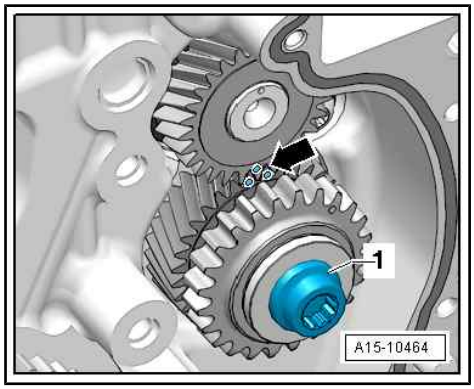

– Remove bolt -2- securing balance shaft for inlet camshaft.

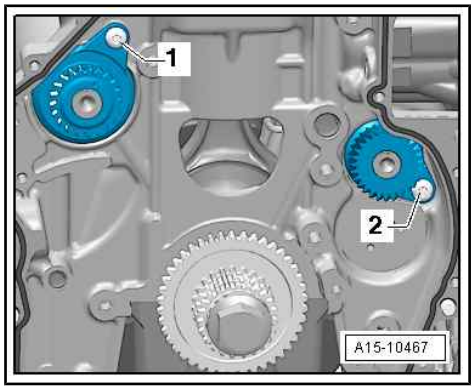

– Insert half shell - T10394/1- of puller - T10394- and turn upwards in direction of arrow.

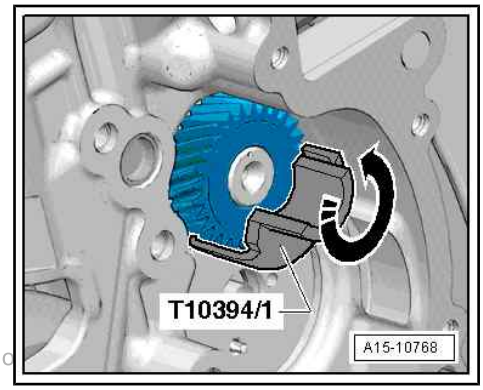

Protected by copyright. Copying for private or commercial purpo
permitted unless authorised by AUDI AG. AUDI AG does not guarantee or accept any liability
with respect to the correctness of information in this document.

– Insert puller - T10394- and press locking collar in direction of -arrow-.

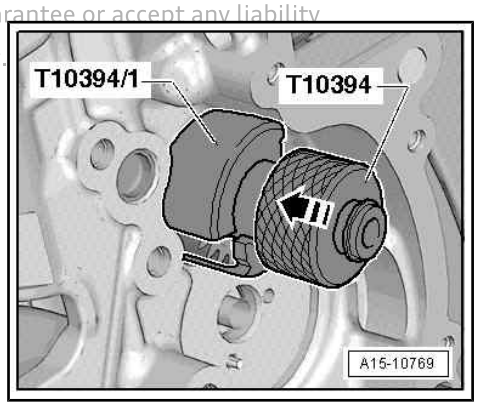

– Screw puller - T10055- into puller - T10394- and knock out balance shaft in direction of -arrow-.

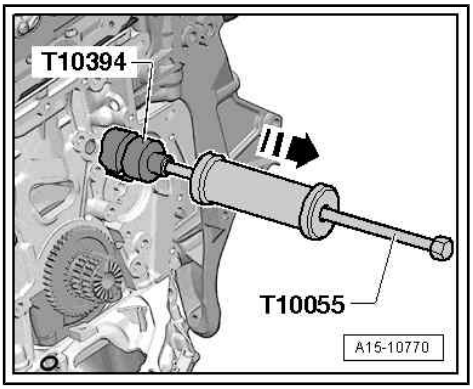

Installing

- Always renew balance shaft (inlet side) after removal.
- It might be necessary to cool the balance shaft before installing due to the minimal clearance between balance shaft and cylinder block. Check if it is possible to insert the balance shaft into the cylinder block without applying force. If this is not the case, the balance shaft must be cooled before installing.

– Put new balance shaft for 30 minutes into freezer compartment or spray with chilling agent (commercially available) if necessary.

– Lubricate balance shaft bearing with engine oil.

– Install new balance shaft for inlet camshaft and tighten bolt -2-.

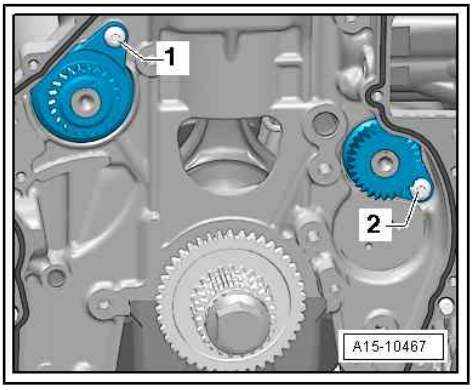

Protected by copyright. Copying for private or commercial purposes, in part or in whole, is not permitted unless authorised by AUDI AG. AUDI AG does not guarantee or assume liability with respect to the correctness of information in this document.

– Lubricate new O-ring -1- with engine oil.

– Lubricate bearing mounting with engine oil and insert it.

- Dowel pin -arrow- for bearing mounting must engage in bore in cylinder block.

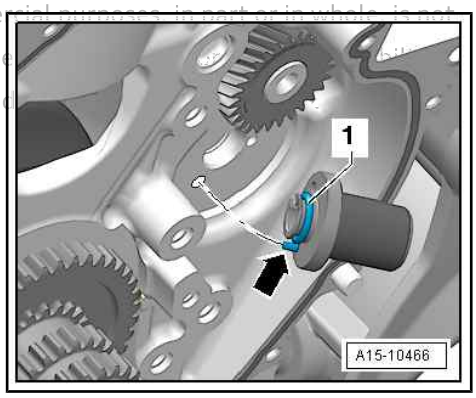

NOTICE

Risk of irreparable damage to engine if there is no backlash of idler gear.

The new idler gear has a special lubricant coating which wears off after a short running period and thus automatically creates the specified backlash.

– **Never re-use idler gear.**

Note:

The new idler gear has a special lubricant coating which wears off after a short running period and thus automatically creates the specified backlash.

– Mark faces of gear teeth of idler gear with paint marker -arrow-.
– Insert idler gear; marking on balance shaft must be positioned between markings on faces of gear teeth.

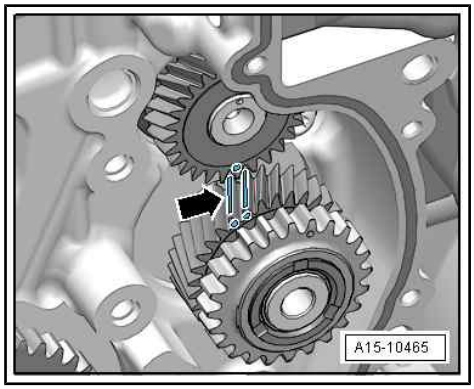

– Tighten bolt -1- for idler gear: tightening sequence ⇒ page 75 .
– Check markings on idler gear/balance shaft -arrow-.

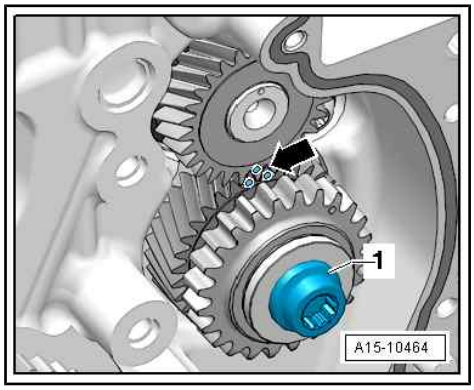

Remaining installation steps are carried out in reverse sequence; note the following:

– Install drive chain for balance shafts ⇒ page 101 .
– Renew oil seal for balance shaft (inlet side) ⇒ page 52 .
– Install toothed belt for coolant pump ⇒ page 180 .
– Install radiator ⇒ 4-cylinder direct injection engine (1.8, 2.0 ltr. 4-valve TFSI); Rep. gr. 19 ; Radiator/radiator fans; Removing and installing radiator .

Protected by copyright. Copying for private or commercial purposes, in part or in whole, is not permitted unless authorised by AUDI AG. AUDI AG does not guarantee or accept any liability with respect to the correctness of information in this document. Copyright by AUDI AG.

Tightening torques

- ⇒ Fig. ""Idler gear - tightening sequence"", page 75
- ⇒ "2.2 Exploded view - drive chain for balance shaft", page 74
- ⇒ "4.1 Exploded view - balance shaft", page 46

4.2.2 Removing and installing balance shaft (exhaust side)

Special tools and workshop equipment required

- Puller - T10055-

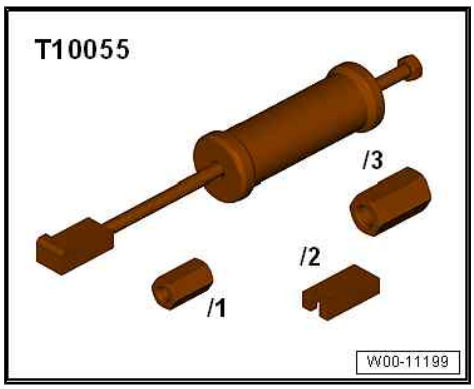

♦ Puller - T10394-

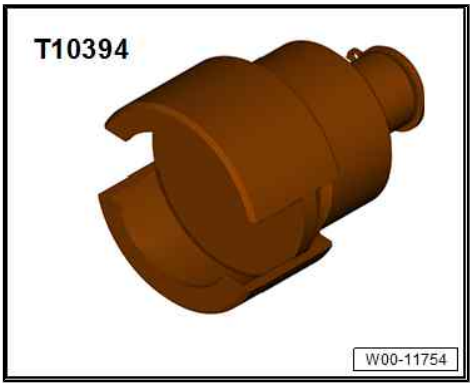

Removing

– Remove radiator ⇒ 4-cylinder direct injection engine (1.8, 2.0 ltr. 4-valve TFSI); Rep. gr. 19 ; Radiator/radiator fans; Removing and installing radiator .

– Remove drive chain for balance shafts ⇒ page 101 .

– Remove bolt -1- securing balance shaft for outlet camshaft.

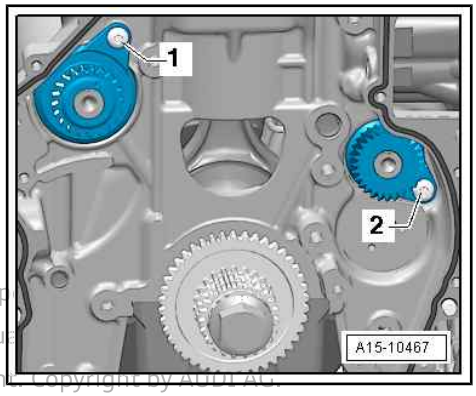

Protected by copyright. Copying for private or commercial purp
permitted unless authorised by AUDI AG. AUDI AG does not gu
with respect to the correctness of information in this documen
Copyright by AUDI AG.

– Insert half shell -T10394/1- from puller - T10394- .

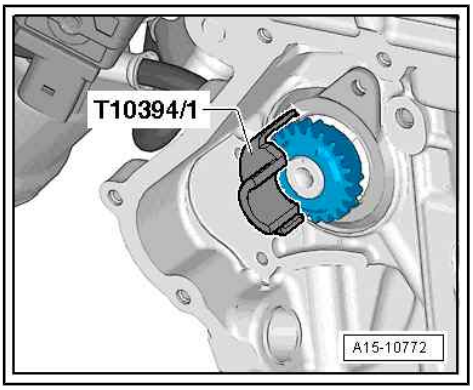

– Insert puller - T10394- and press locking collar in direction of -arrow-.

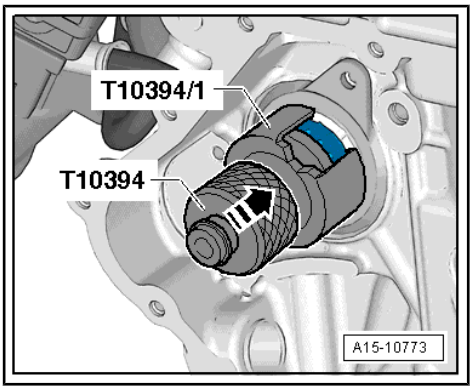

– Screw puller - T10055- into puller - T10394- and knock out balance shaft.

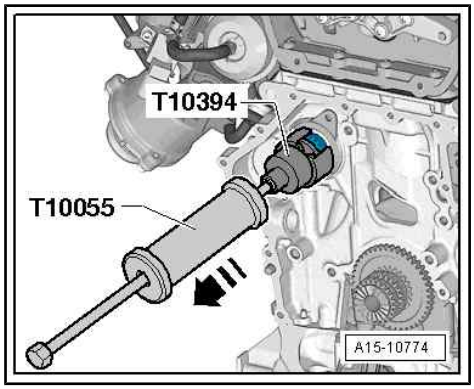

Installing

- Always renew balance shaft (exhaust side) after removal.
- It might be necessary to cool the balance shaft before installing due to the minimal clearance between balance shaft and cylinder block. Check if it is possible to insert the balance shaft into the cylinder block without applying force. If this is not the case, the balance shaft must be cooled before installing.

– Check installation position of tube for balance shaft.

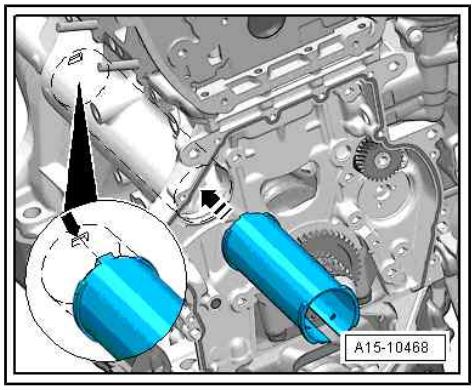

Lug -arrow- must engage in slot.

– Put new balance shaft for 30 minutes into freezer compartment or spray with chilling agent (commercially available) if necessary.

– Lubricate balance shaft bearing with engine oil.

– Install new balance shaft (exhaust side).

– Make sure that balance shaft is in full contact with crankcase before tightening bolt -1-.

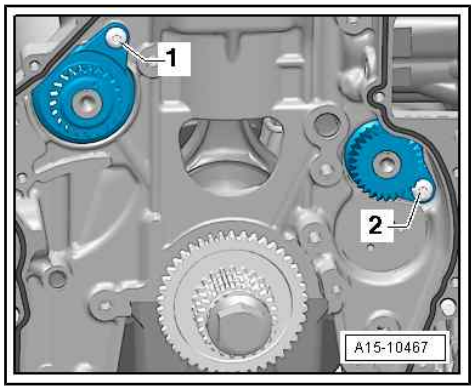

Note

Insert tube for balance shaft again if balance shaft does not make full surface contact.

Remaining installation steps are carried out in reverse sequence; note the following:

– Install drive chain for balance shafts ⇒ page 101 .

– Install radiator ⇒ 4-cylinder direct injection engine (1.8, 2.0 ltr. 4-valve TFSI); Rep. gr. 19 ; Radiator/radiator fans; Removing and installing radiator .

Tightening torques

♦ ⇒ “2.2 Exploded view - drive chain for balance shaft”, page 74

♦ ⇒ “4.1 Exploded view - balance shaft”, page 46

4.3 Renewing oil seal for balance shaft (inlet side)

Special tools and workshop equipment required

Protected by copyright. Copying for private or commercial purposes, in part or in whole, is not permitted unless authorised by AUDI AG. AUDI AG does not guarantee or accept any liability with respect to the correctness of information in this document. Copyright by AUDI AG.

♦ Thrust piece - T10353/1-

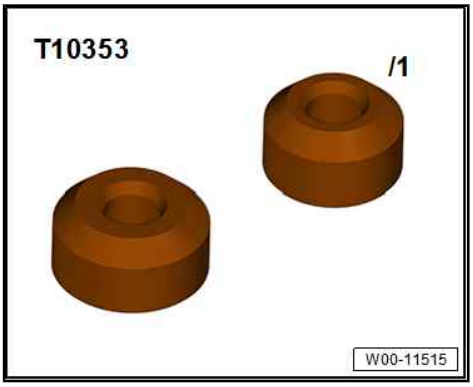

Protected by copyright. Copying for private or commercial purposes, in part or in whole, is not permitted unless authorised by AUDI AG. AUDI AG does not guarantee or accept any liability with respect to the correctness of information in this document. Copyright by AUDI AG.

Procedure

– Remove small coolant pipe ⇒ 4-cylinder direct injection engine (1.8, 2.0 ltr. 4-valve TFSI); Rep. gr. 19 ; Coolant pipes; Removing and installing coolant pipes .

– Remove toothed belt for coolant pump ⇒ page 180 .

Note:

The drive sprocket bolt has a left-hand thread.

– Unscrew bolt -2- and detach drive sprocket -1- for toothed belt for coolant pump.

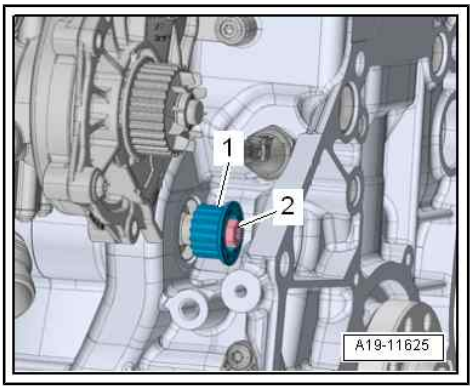

– Press screwdriver -1- firmly onto section -2- of oil seal -arrow B-.

– Lever out oil seal -arrow A-.

– Clean contact surface and sealing surface.

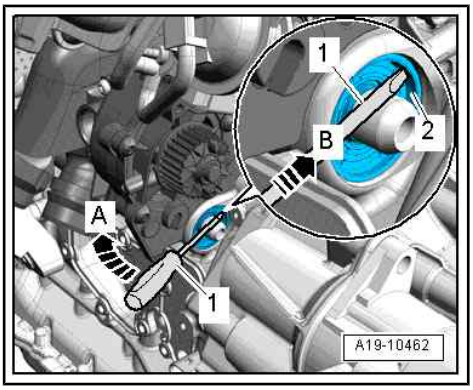

– Lubricate sealing surface of balance shaft -2- with gear oil.

– Fit oil seal -1- onto balance shaft.

• The marking “Luftseite” (“Outside”) -arrow- should be legible from the outside.

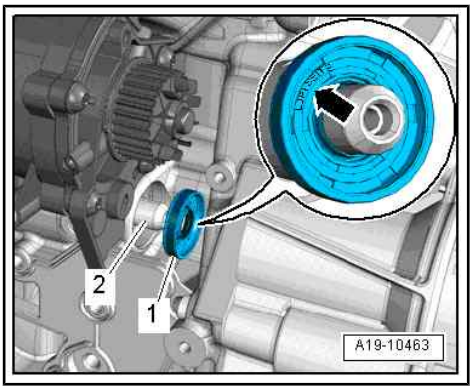

Note:

The drive sprocket bolt has a left-hand thread.

– Depending on version, apply thrust piece - T10353- or thrust piece - T10353/1- to oil seal -1- and press into cylinder block as far as stop using bolt -2- (take care not to tilt oil seal).

– Install toothed belt for coolant pump ⇒ page 180 .

– Install small coolant pipe ⇒ 4-cylinder direct injection engine (1.8, 2.0 ltr. 4-valve TFSI); Rep. gr. 19 ; Coolant pipes; Removing and installing coolant pipes .

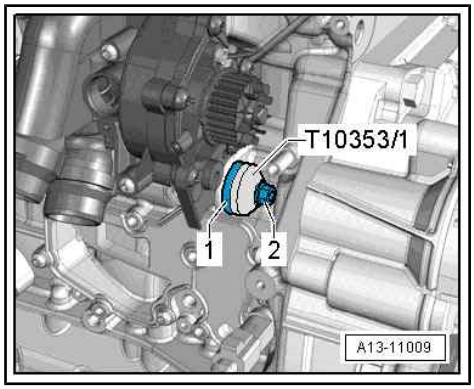

Protected by copyright. Copying for private or commercial purposes, in part or in whole, is not permitted unless authorised by AUDI AG. AUDI AG does not guarantee or accept any liability with respect to the correctness of information in this document. Copyright by AUDI AG.

5 Pistons and conrods

⇒ "5.1 Exploded view - pistons and conrods", page 55

⇒ "5.2 Removing and installing pistons", page 58

⇒ "5.3 Removing and installing oil spray jets", page 59

⇒ "5.4 Checking pistons and cylinder bores", page 60

⇒ "5.5 Separating parts of new conrod", page 62

⇒ "5.6 Checking radial clearance of conrod bearings", page 63

Protected by copyright. Copying for private or commercial purposes, in part or in whole, is not permitted unless authorised by AUDI AG. AUDI AG does not guarantee or accept any liability with respect to the correctness of information in this document. Copyright by AUDI AG.

5.1 Exploded view - pistons and conrods

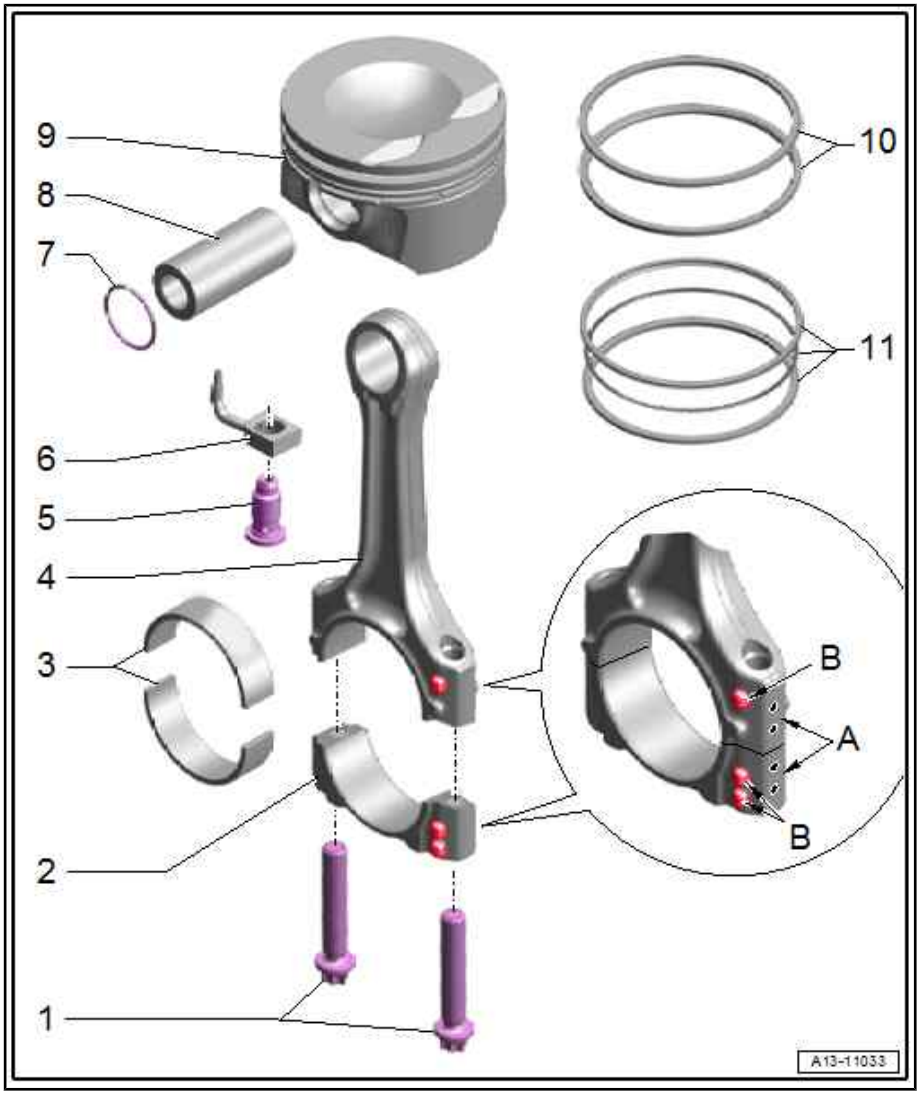

1 - Bolts

- ❑ Renew after removing
- ❑ Lubricate threads and contact surface
- ❑ Use old bolts when measuring radial clearance
- ❑ Tightening torques:
- ♦ M8 bolt: 30 Nm +90°
- ♦ M9 bolt: 45 Nm +90°

2 - Conrod bearing cap

- ❑ Note installation position
- ❑ Due to the cracking method used to separate the bearing cap from the conrod in manufacture, the caps only fit in one position and only on the appropriate conrod
- ❑ Mark cylinder and conrod allocation in colour -A-
- ❑ Installation position: Marking -B- faces towards pulley end
- ❑ Separating parts of new conrod ⇒ page 62

3 - Bearing shells

- ❑ Installation position ⇒ page 58
- ❑ Renew used bearing shells
- ❑ Lubricate with engine oil before installing
- ❑ Axial clearance
- ♦ New: 0.10 ... 0.35 mm
- ♦ Wear limit: 0.40 mm
- ❑ Measuring radial clearance ⇒ page 63

4 - Conrod

- ❑ Only renew as a complete set

- ❑ Mark cylinder and conrod bearing cap allocation
- ❑ Installation position: Marking -B- faces towards pulley end
- ❑ Separating parts of new conrod ⇒ page 62
- ❑ Measuring radial clearance ⇒ page 63

5 - Pressure relief valve

- ❑ 27 Nm

6 - Oil spray jet

- ❑ For piston cooling
- ❑ Removing and installing ⇒ page 59

7 - Circlip

- ❑ Renew after removing

8 - Piston pin

- ❑ Lubricate with engine oil before installing

9 - Piston

- ❑ Removing and installing ⇒ page 58
- ❑ Mark installation position and cylinder number
- ❑ Arrow on piston crown points to pulley end
- ❑ Checking pistons and cylinder bores ⇒ page 60

10 - Compression rings

- ❑ Install using piston ring pliers -VAS 211 003- ⇒ page 57
- ❑ Offset gaps by 120°
- ❑ Installation position in combination with two-part oil scraper ring: “TOP” or “R” must face towards piston crown
- ❑ Allocation and installation position in conjunction with three-part oil scraper ring ⇒ page 57
- ❑ Checking ring gap ⇒ page 61
- ❑ Checking ring-to-groove clearance ⇒ page 61

11 - Oil scraper ring

- ❑ Two-part or three-part, depending on version; allocation ⇒ Electronic parts catalogue
- ❑ Two-part oil scraper ring:

- ♦ Install with gap offset by 120° to next compression ring
- ♦ “TOP” or “R” must face towards piston crown
- ♦ Checking ring gap ⇒ page 61
- ♦ Ring-to-groove clearance cannot be checked

- ❑ Three-part oil scraper ring:

- ♦ Carefully remove and install by hand
- ♦ Installation position ⇒ page 57
- ♦ Allocation ⇒ page 57
- ♦ Gap cannot be measured
- ♦ Ring-to-groove clearance cannot be checked

Protected by copyright. Copying for private or commercial purposes, in part or in whole, is not permitted unless authorised by AUDI AG. AUDI AG does not guarantee or accept any liability with respect to the correctness of information in this document. Copyright by AUDI AG.

Allocation of piston rings in conjunction with three-part oil scraper ring

1 - Compression ring with chamfer -arrow A- on inside at top. »TOP« marking or lettering faces upwards

2 - Compression ring with shoulder -arrow B- on outside at bottom. »TOP« marking or lettering faces upwards

3 - Three-part oil scraper ring

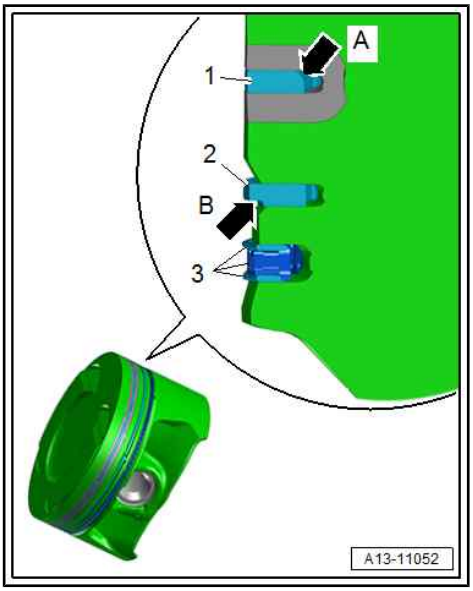

Installing compression rings

- »TOP« marking or lettering faces upwards.
- Open up compression ring -2- using piston ring pliers -VAS 211 003- just far enough to be able to slide it over piston -1-.

Protected by copyright. Copying for private or commercial purposes, in part or in whole, is not permitted unless authorised by AUDI AG. AUDI AG does not guarantee or accept any liability with respect to the correctness of information in this document. Copyright by AUDI AG.

Installing three-part oil scraper ring

– Note installation position of spring:

- Ends of fins -2, 3- and spring -1- must be offset from one another by at least 90°.

– Install by hand.

Installation sequence:

1. Insert spring -1- in groove.
2. Insert bottom fin -3- in groove.
3. Insert top fin -2- in groove.

- Offset top gap of 3-part oil scraper ring by 120° to next compression ring.

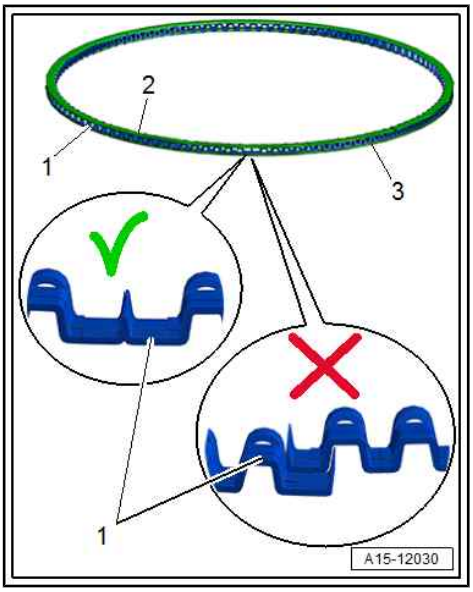

Installation position of bearing shell

– Position bearing shells in centre of conrod and conrod bearing cap when fitting.

• Dimension -a- = dimension -a-

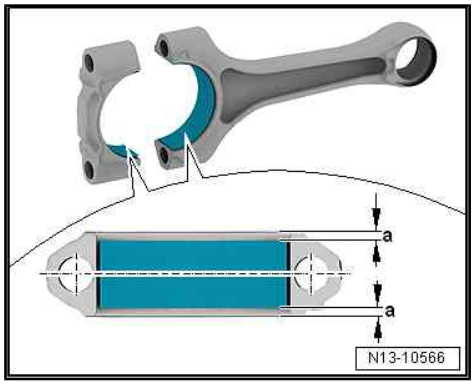

5.2 Removing and installing pistons

Special tools and workshop equipment required

♦ Pin - VW 222A-

♦ Piston installation sleeve -T40347- (not illustrated)

Removing

• Engine secured to engine and gearbox support ⇒ page 8

– Remove cylinder head ⇒ page 109 .

– Remove sump (top section) ⇒ page 157 .

– Mark installation position and cylinder number of piston.

– Mark installation position and cylinder number of conrod ⇒ Item 4 (page 55) .

– Remove conrod bearing cap and pull out piston and conrod upwards.

– Take circlip -2- out of piston pin boss.

– Use drift - VW 222A- to drive out piston pin -3-.

Protected by copyright. Copying for private or commercial purposes, in part or in whole, is not permitted unless authorised by AUDI AG. AUDI AG does not guarantee or accept any liability with respect to the correctness of information in this document.

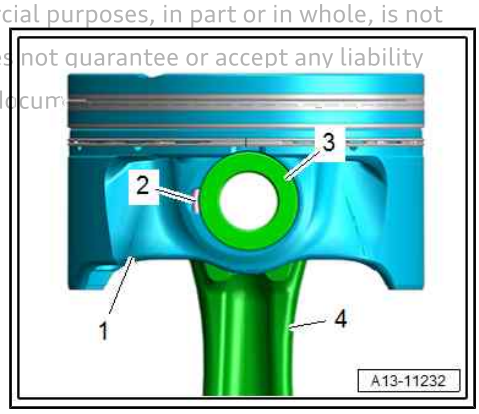

Note:

If piston pin is difficult to remove, heat piston to approx. 60 °C.

– Detach piston -1- from conrod -4-.

Installing

Installation is carried out in reverse order; note the following:

• After removing, renew bolts tightened with specified tightening angle.

• Arrow on piston crown points to pulley end.

– Install compression rings ⇒ Item 10 (page 56) .

– Install oil scraper ring ⇒ Item 11 (page 56) .

– Lubricate running surfaces of bearing shells and cylinder walls with engine oil.
– Carefully push piston -1- into cylinder by hand -arrow- using piston installation sleeve -T40347- .
• Arrow on piston crown points to pulley end.
– Install conrod bearing cap; note installation position ⇒ Item 2 (page 55) .
– Install cylinder head ⇒ page 109 .
– Install sump (upper section) ⇒ page 157 .

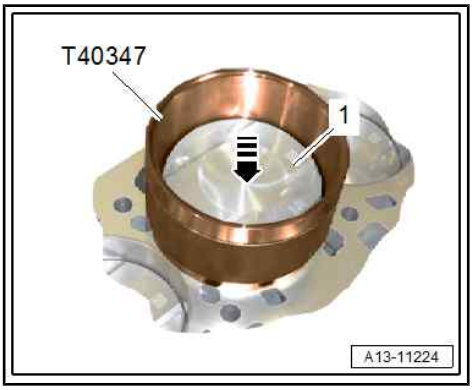

Tightening torques

♦ ⇒ “5.1 Exploded view - pistons and conrods”, page 55

5.3 Removing and installing oil spray jets

Removing

Special tools and workshop equipment required

♦ Socket - T10545- (no illustration)
♦ Wrench, 21 mm - T40263-

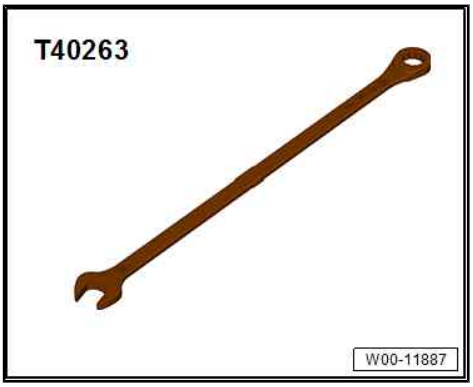

♦ Adapter - T40314-

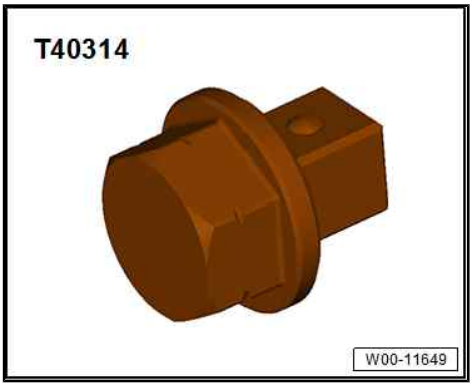

Cylinders 1 … 3:

• Gearbox removed ⇒ Gearbox; Rep. gr. 34 ; Removing and installing gearbox; Removing gearbox , or ⇒ Automatic gearbox; Rep. gr. 37 ; Removing and installing gearbox; Removing gearbox
– Remove sump (top section) ⇒ page 157 .

Protected by copyright. Copying for private or commercial purposes, in part or in whole, is not permitted unless authorised by AUDI AG. AUDI AG does not guarantee or accept any liability with respect to the correctness of information in this document. Copyright by AUDI AG.

NOTICE

Risk of engine damage if valve gear drive slips

– **Only turn engine in normal direction of rotation.**

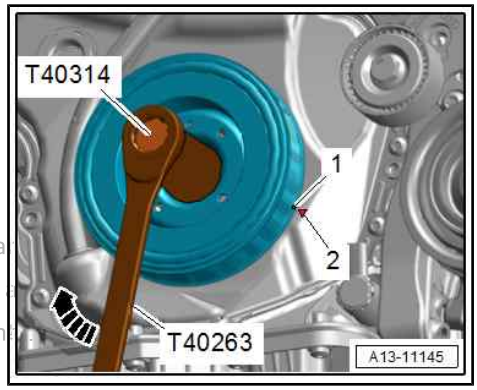

– Using wrench, 21 mm - T40263- , adapter - T40314- and socket (24 mm), turn crankshaft -arrow- until corresponding bolt is accessible.

Protected by copyright. Copying for private or commercial purposes, in pa
permitted unless authorised by AUDI AG. AUDI AG does not guarantee or
with respect to the correctness of information in this document. Copyrigh

Removing cylinder 4:

- Engine removed and secured to engine and gearbox support ⇒ page 8

– Remove sump (top section) ⇒ page 157 .

– Remove balance shaft timing chain ⇒ page 91 .

– Unbolt conrod bearing caps.

– Remove crankshaft bearing caps.

– Remove crankshaft.

Continued for all cylinders:

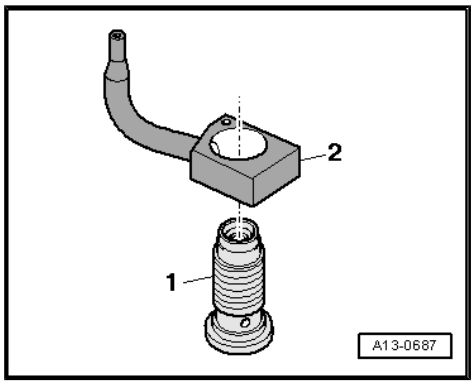

– Unscrew pressure relief valve -1- using socket - T10545- .

– Remove oil spray jet -2-.

Installing

Installation is carried out in reverse order; note the following:

NOTICE

Risk of damage to oil spray jets due to deformation.

– **Never bend oil spray jets.**

– Install balance shaft timing chain ⇒ page 91 .

– Install sump (upper section) ⇒ page 157 .

Tightening torques

♦ ⇒ “5.1 Exploded view - pistons and conrods”, page 55

♦ ⇒ “3.1 Exploded view - crankshaft”, page 40

5.4 Checking pistons and cylinder bores

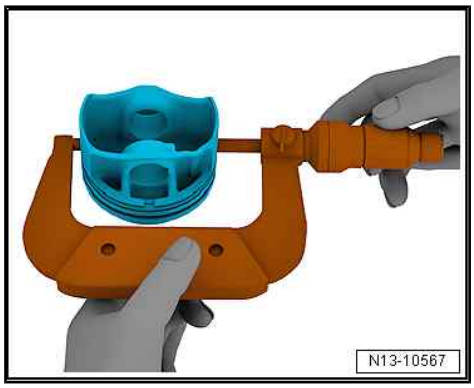

Checking piston

– Using a micrometer (75 ... 100 mm), measure approx. 15 mm from the lower edge, perpendicular to the piston pin axis.

♦ Difference between actual and nominal diameter: not more than 0.04 mm.

	Piston ∅
Basic dimension mm	82.42[1)]
• [1)] Dimensions not including coating (thickness 0.02 mm). The coating will wear down in service.	

Checking piston ring gap

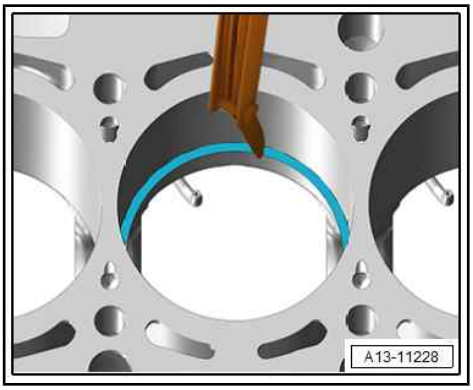

– Insert piston ring at right angle to cylinder wall from above and push down into lower cylinder opening approx. 15 mm from bottom of cylinder. Use a piston without rings to push ring into bore.

Piston ring gap in combination with two-part oil scraper ring (in mm)	New	Wear limit
1st compression ring	0.20 … 0.40	0.80
2nd compression ring	0.20 … 0.40	0.80
Oil scraper ring	0.25 … 0.50	0.80

Piston ring gap in combination with three-part oil scraper ring (in mm)	New	Wear limit
1st compression ring	0.30 … 0.40	0.60
2nd compression ring	0.40 … 0.50	0.70
Oil scraper ring	Cannot be measured	

Protected by copyright. Copying for private or commercial purposes, in part or in whole, is not permitted unless authorised by AUDI AG. AUDI AG does not guarantee or accept any liability with respect to the correctness of information in this document. Copyright by AUDI AG.

Checking ring-to-groove clearance

– Clean groove in piston before checking clearance.

Ring-to-groove clearance in combination with two-part oil scraper ring (in mm)	New	Wear limit
1st compression ring	0.06 … 0.09	0.20
2nd compression ring	0.03 … 0.06	0.15
Oil scraper ring	Cannot be measured	

Ring-to-groove clearance in combination with three-part oil scraper ring (in mm)	
1st compression ring	Cannot be measured
2nd compression ring	Cannot be measured
Oil scraper ring	Cannot be measured

Checking cylinder bore

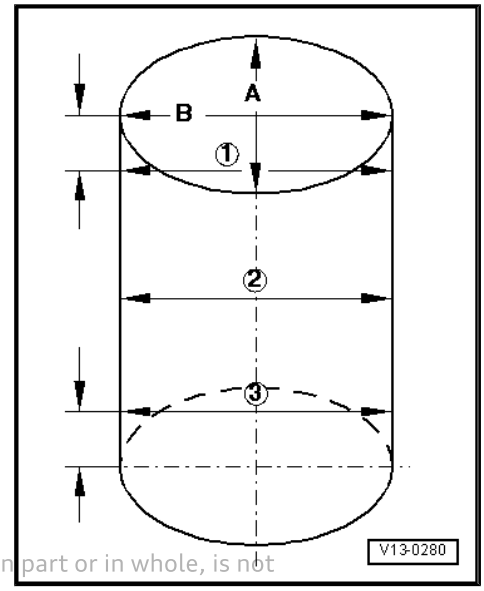

Protected by copyright. Copying for private or commercial purposes, in part or in whole, is not permitted unless authorised by AUDI AG. AUDI AG does not guarantee or accept any liability with respect to the correctness of information in this document. Copyright by AUDI AG.

Special tools and workshop equipment required

♦ Cylinder gauge - VAS 6078-

NOTICE

Risk of damage to surface of cylinder bore through incorrect machining.

– **Never machine the cylinder bore (reboring, honing, grinding) with workshop equipment.**

– Use a cylinder gauge - VAS 6078- to take measurements at 3 points in transverse direction -A- and in longitudinal direction -B-.

♦ Difference between actual and nominal diameter: not more than 0.08 mm.

		Cylinder bore ∅
Basic dimension	mm	82.51

Note

Dark or shiny patches on the cylinder wall do not indicate damage to the cylinder bore so long as the cross-hatching is visible.

- Measuring the cylinder bores must not be done when the cylinder block is mounted to the engine and gearbox support , as incorrect measurements may result.

5.5 Separating parts of new conrod

It is possible that the two parts of a new conrod are not completely separated as intended. If it is not possible to take off the conrod bearing cap by hand, proceed as follows:

– Mark cylinder number of conrod ⇒ Item 4 (page 55) .

– Clamp conrod -1- lightly in a vice using aluminium jaw covers as shown in illustration.

• To avoid any risk of damage, the conrod should only be clamped lightly.

• The conrod is clamped in a position below the dotted line.

– Loosen the two bolts -2- approx. 5 turns.

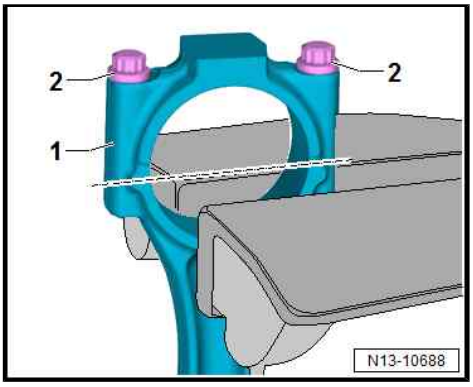

– Using a plastic hammer, carefully knock conrod bearing cap -1- loose in direction of -arrow-.

Protected by copyright. Copying for private or commercial purposes, in pa
permitted unless authorised by AUDI AG. AUDI AG does not guarantee or
with respect to the correctness of information in this document. Copyrigh

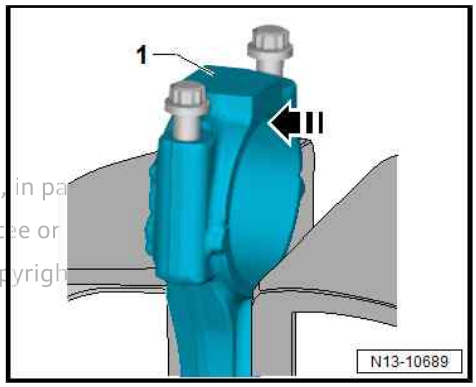

5.6 Checking radial clearance of conrod bearings

Special tools and workshop equipment required

♦ Plastigauge

Procedure

• Use old bolts when measuring radial clearance.

– Remove conrod bearing cap.

– Clean bearing cap and bearing journal.

– Place a length of Plastigauge corresponding to the width of the bearing on the bearing journal or in the bearing shell.

– Fit conrod bearing cap and secure with old bolts ⇒ Item 1 (page 55) without rotating crankshaft.

– Remove conrod bearing cap again.

– Compare width of Plastigauge with measurement scale.

Radial clearance:

• New: 0.02 ... 0.06 mm.

• Wear limit: 0.09 mm.

– When carrying out final assembly, renew bolts.

15 – Cylinder head, valve gear

1 Timing chain cover

⇒ "1.1 Exploded view - timing chain cover", page 64
⇒ "1.2 Removing and installing timing chain cover", page 66
⇒ "1.3 Renewing oil seal for vibration damper", page 69

Protected by copyright. Copying for private or commercial purposes, in part or in whole, is not permitted unless authorised by AUDI AG. AUDI AG does not guarantee or accept any liability with respect to the correctness of information in this document. Copyright by AUDI AG.

1.1 Exploded view - timing chain cover

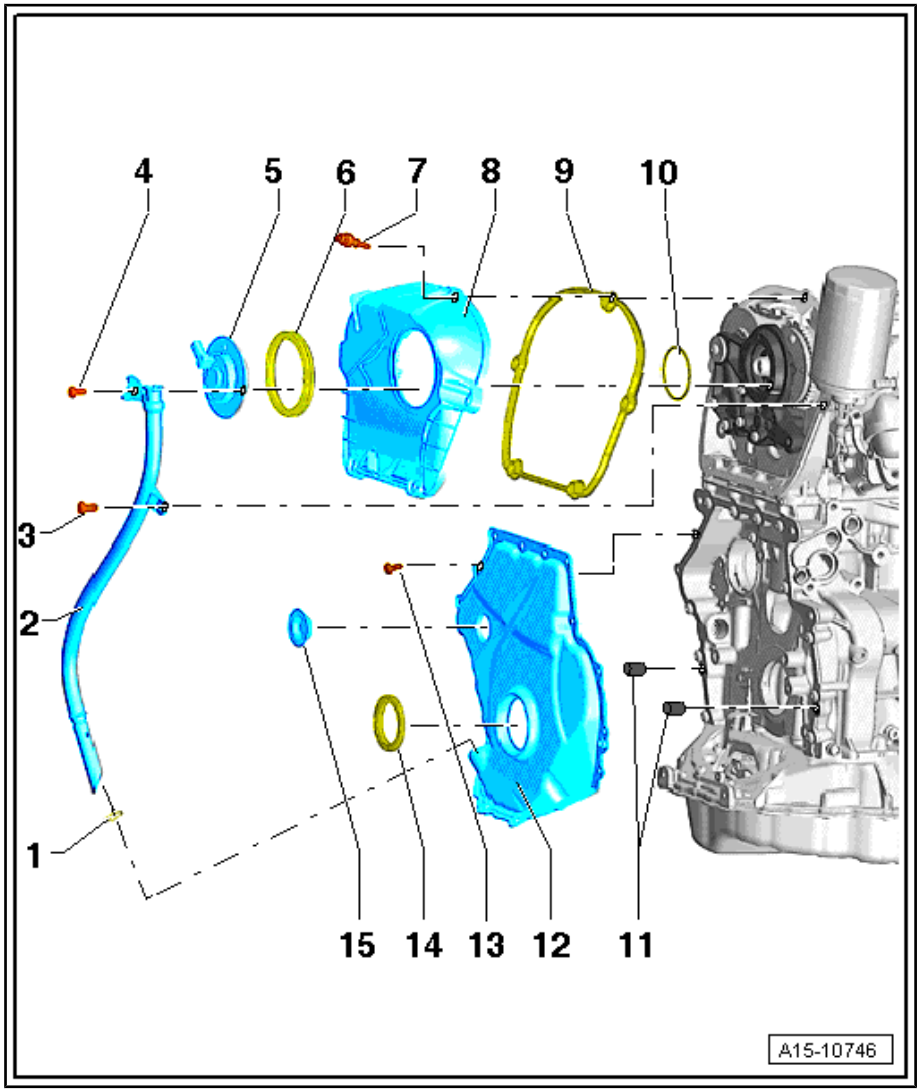

1 - O-ring
- ❑ Renew after removing
- ❑ Lubricate before installing

2 - Dipstick guide tube

3 - Bolt
- ❑ 9 Nm

4 - Bolt
- ❑ 9 Nm

5 - Camshaft control valve 1 - N205-
- ❑ Removing and installing ⇒ page 138

6 - Oil seal
- ❑ Lubricate before installing
- ❑ Renew if damaged

7 - Bolt
- ❑ Tightening torque and sequence ⇒ page 65

8 - Timing chain cover (top)
- ❑ Removing and installing ⇒ page 65

9 - Gasket
- ❑ Renew if damaged

10 - O-ring
- ❑ Renew after removing
- ❑ Lubricate with engine oil

11 - Dowel pins
- ❑ For centring cover

12 - Timing chain cover (bottom)
- ❑ Renew after removing
- ❑ Removing and installing ⇒ page 66

13 - Bolt
- ❑ Renew after removing
- ❑ Tightening sequence ⇒ page 65

14 - Oil seal
- ❑ For vibration damper

❑ Renewing ⇒ page 69

15 - Sealing plug

❑ Renew after removing

Timing chain cover (top) - tightening torques and tightening sequence

– Tighten bolts -1 ... 5- to 9 Nm in the sequence shown.

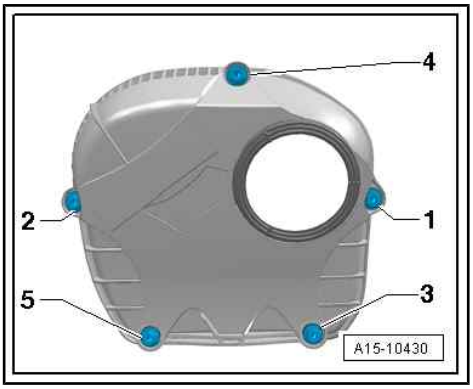

Timing chain cover (bottom) with 15 bolts - tightening torques and tightening sequence

Protected by copyright. Copying for private or commercial purposes, in part or in whole, is not permitted unless authorized by AUDI AG. AUDI AG does not guarantee or assume any liability with respect to the correctness of information in this document.

- After removing, renew bolts tightened with specified tightening angle.

– Tighten bolts in stages in the sequence shown:

Stage	Bolts	Tightening torques/angle specification
1.	-1 … 15-	Screw in by hand until contact is made
2.	-1 … 15-	8 Nm
3.	-1, 2, 4, 5- and -7 … 15-	Turn 45° further
4.	-3, 6-	Turn 45° further after installing vibration damper

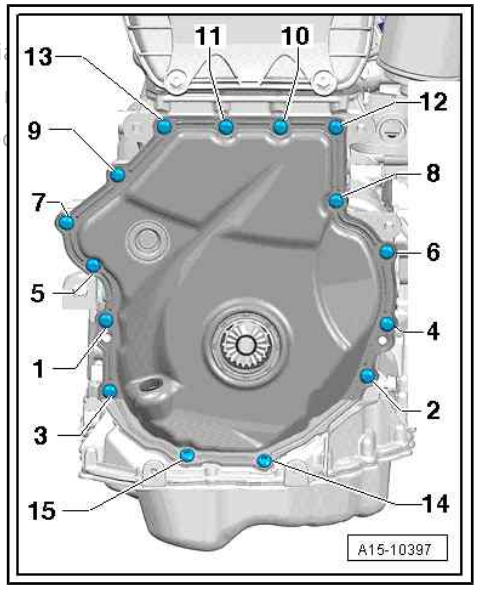

Timing chain cover (bottom) with 8 bolts - tightening torques and tightening sequence

- After removing, renew bolts tightened with specified tightening angle.

– Tighten bolts in stages in the sequence shown:

Stage	Bolts	Tightening torques/angle specification
1.	-1 … 8-	Screw in by hand until contact is made
2.	-1 … 8-	8 Nm
3.	-2, 3- and -5 … 8-	Turn 45° further
4.	-1, 4-	Turn 45° further after installing vibration damper

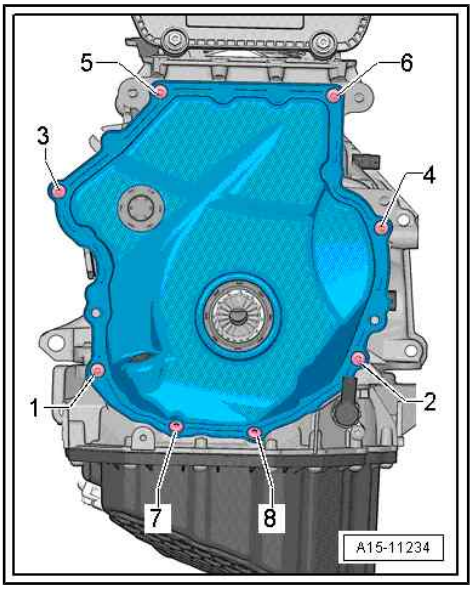

1.2 Removing and installing timing chain cover

⇒ "1.2.1 Removing and installing timing chain cover (top)", page 66

⇒ "1.2.2 Renewing timing chain cover (bottom)", page 66

1.2.1 Removing and installing timing chain cover (top)

Removing

– Remove camshaft control valve 1 - N205- ⇒ page 138 .

– If necessary, pull dipstick guide tube out of timing chain cover (bottom).

– Unscrew bolts -1 to 5- and remove timing chain cover (top).

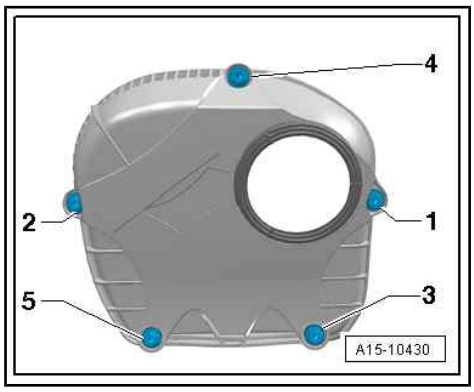

Installing

Installation is carried out in reverse order; note the following:

- Renew seal and O-ring after removing.
- Installation position of seal: side with small inner diameter faces outwards

– Lubricate seal and O-ring with engine oil.

– Install camshaft control valve 1 - N205- ⇒ page 138 .

Tightening torques

♦ ⇒ Fig. ""Timing chain cover (top) - tightening torques and tightening sequence"" , page 65

1.2.2 Renewing timing chain cover (bottom)

Note

The timing chain cover is bent out of shape when it is removed because of the adhesive strength of the sealant; it must therefore always be renewed.

Special tools and workshop equipment required

♦ Sealant ⇒ Electronic parts catalogue

Removing

Protected by copyright. Copying for private or commercial purposes, in part or in whole, is not permitted unless authorised by AUDI AG. AUDI AG does not guarantee or accept any liability with respect to the correctness of information in this document. Copyright by AUDI AG.

Preparatory work may be necessary depending on model ⇒ 4-cylinder direct injection engine (1.8, 2.0 ltr., 4-valve TFSI); Rep. gr. 15 ; Timing chain cover; Removing and installing timing chain cover .

- Engine oil drained ⇒ page 153 .

– Remove vibration damper ⇒ page 21 .

– Vehicles without hybrid drive: Remove poly V-belt tensioner ⇒ page 21 .

– Remove bolts -arrows- and detach dipstick guide tube from timing chain cover.

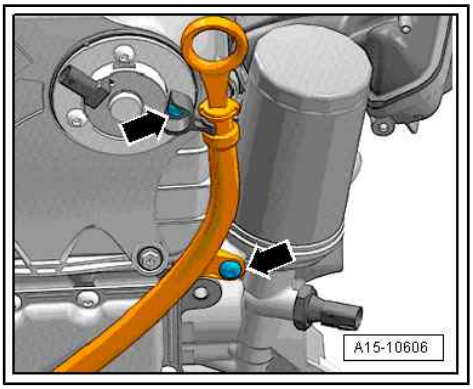

– Remove bolts -1 ... 15-.

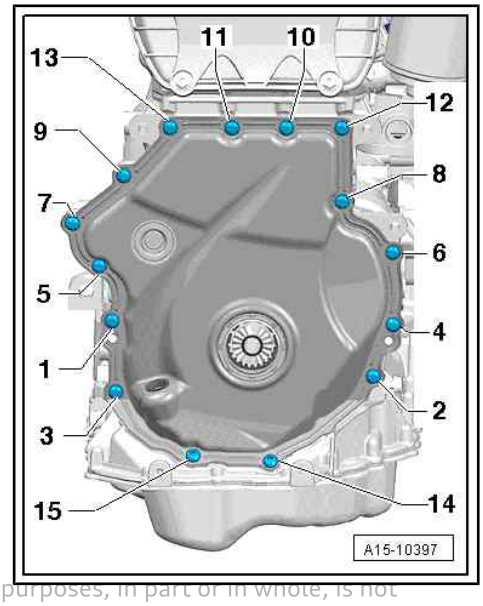

Note

Some versions have only 8 bolts.

– Release timing chain cover (bottom) from bonded joint.

Installing

- After removing, renew bolts tightened with specified tightening angle.
- Renew timing chain cover (bottom) and seal after removal.

– Cover exposed parts of the engine.

– Remove sealant remaining on cylinder block with flat scraper.

– Clean sealing surfaces; they must be free of oil and grease.

Protected by copyright. Copying for private or commercial purposes, in part or in whole, is not permitted unless authorised by AUDI AG. AUDI AG does not guarantee with respect to the correctness of information in this document. Co

– Check that both dowel pins are fitted in cover -arrows-.

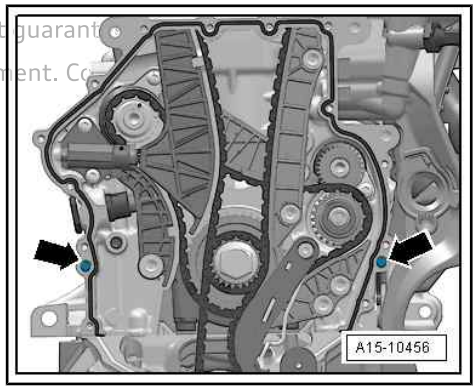

Note:

Note expiry date of sealant.

– Cut off nozzle of tube at front marking (nozzle ∅ approx. 3 mm).

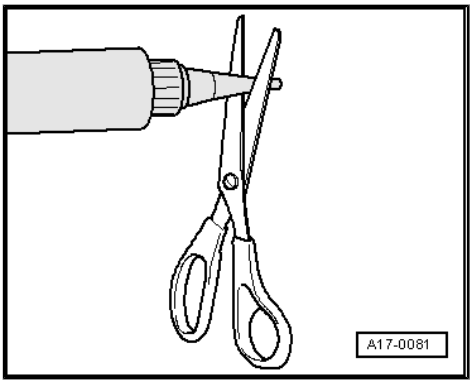

NOTICE

Risk of engine damage due to excessive sealant in lubrication system.

– **The sealant bead must not be thicker than specified.**

Cover with 15 bolts

– Apply sealant as shown onto clean sealing surface -arrow 1- and onto edges -arrows 2- of new cover.

- Thickness of sealant bead: 2 ... 3 mm
- The cover must be installed within 5 minutes after applying sealant.

– Immediately fit cover and tighten bolts ⇒ page 65 .

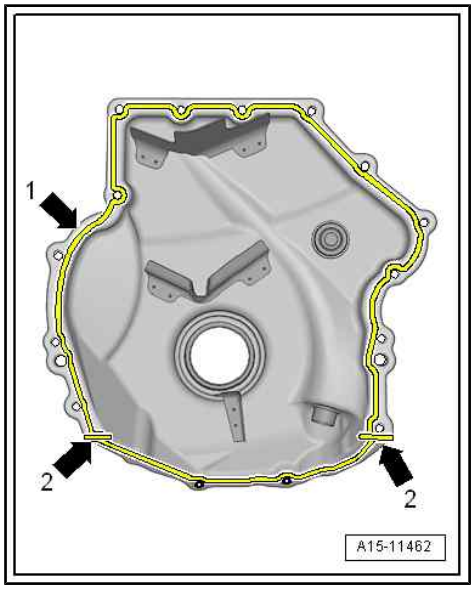

Cover with 8 bolts

Protected by copyright. Copying for private or commercial purposes, in part or in whole, is not
permitted unless authorised by AUDI AG. AUDI AG does not guarantee or accept any liability
with respect to the correctness of information in this document. Copyright

– Apply sealant as shown onto clean sealing surface -arrow 1- and onto edges -arrows 2- of new cover.

- Thickness of sealant bead: 2 ... 3 mm
- The cover must be installed within 5 minutes after applying sealant.

– Immediately fit cover and tighten bolts ⇒ page 65 .

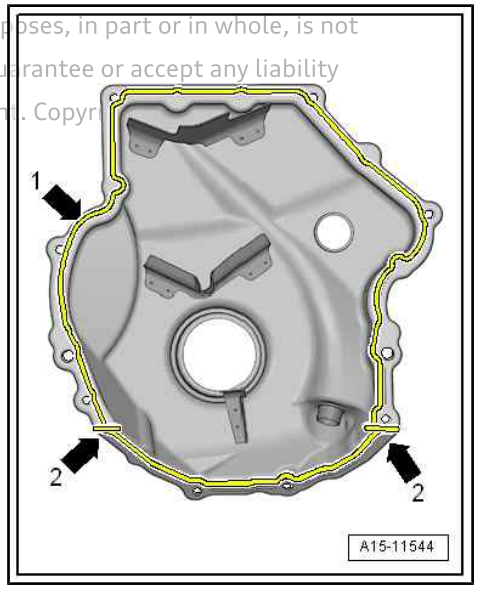

Continued

- Only tighten bolts -arrows- to final tightening angle after installing the vibration damper. The bolts must be unscrewed again to install the vibration damper.
- After fitting cover, the sealant must dry for approx. 30 minutes. Then (and only then) fill the engine with engine oil.

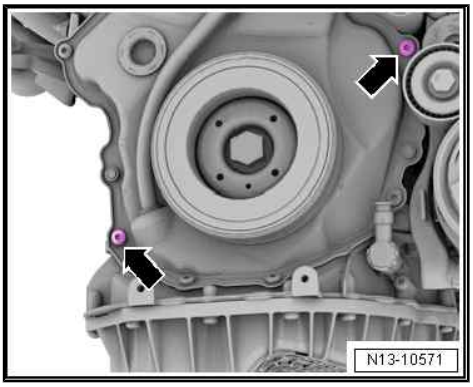

Remaining installation steps are carried out in reverse sequence; note the following:

– Install vibration damper ⇒ page 21 .

– Vehicles without hybrid drive: Install poly V-belt tensioner ⇒ page 21 .

– Top up engine oil and check oil level ⇒ page 153 .

Additional work depending on model ⇒ 4-cylinder direct injection engine (1.8, 2.0 ltr. 4-valve TFSI); Rep. gr. 15 ; Timing chain cover; Removing and installing timing chain cover

Tightening torques

- ⇒ Fig. ""Timing chain cover (bottom) with 15 bolts - tightening torques and tightening sequence"" , page 65
- ⇒ Fig. ""Timing chain cover (bottom) with 8 bolts - tightening torques and tightening sequence"" , page 65
- ⇒ "1.1 Exploded view - timing chain cover", page 64

1.3 Renewing oil seal for vibration damper

Special tools and workshop equipment required

- Thrust piece - T10354-

Protected by copyright. Copying for private or commercial purposes, in p
permitted unless authorised by AUDI AG. AUDI AG does not guarantee o
with respect to the correctness of information in this document. Copyrig

- Thrust washer - T10375-

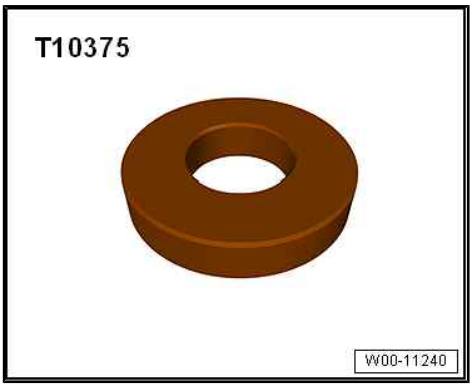

Protected by copyright. Copying for private or commercial purposes, in part or in whole, is not permitted unless authorised by AUDI AG. AUDI AG does not guarantee or assume any liability with respect to the correctness of information in this document. Copyright by

- Flange nut - 10531/4- from assembly tool - T10531-

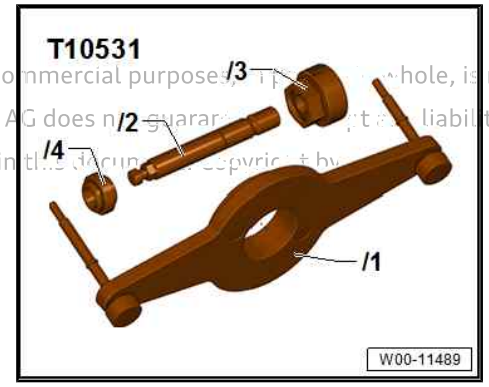

- Extractor hook - T40274-

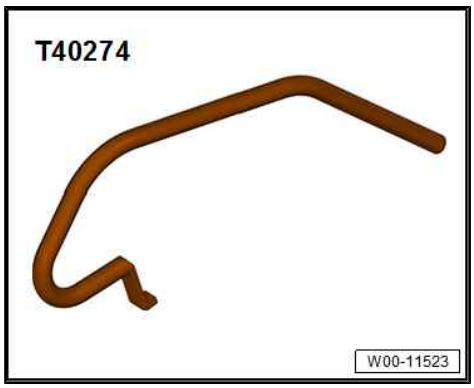

Procedure

– Remove vibration damper ⇒ page 21 .

• Clamping pin - T10531/2- is inserted.

– Pry out oil seal -arrow- using extractor hook - T40274- .

– Clean contact surface and sealing surface.

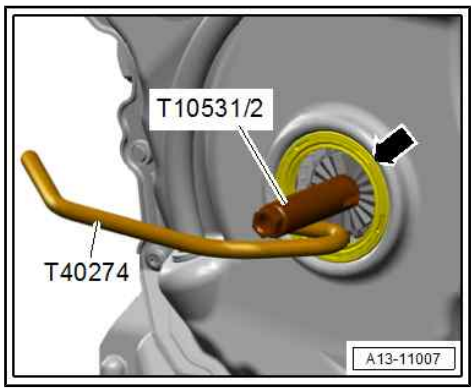

– Fit oil seal -arrow- onto thrust piece - T10354- .

• Closed side of oil seal faces thrust piece - T10354- .

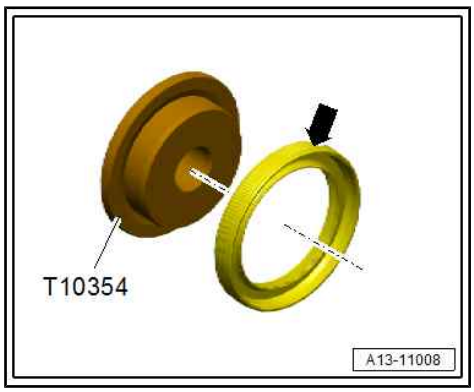

– Slide oil seal -arrow- with thrust piece - T10354- onto clamping pin - T10531/2- and position on timing chain cover (bottom).

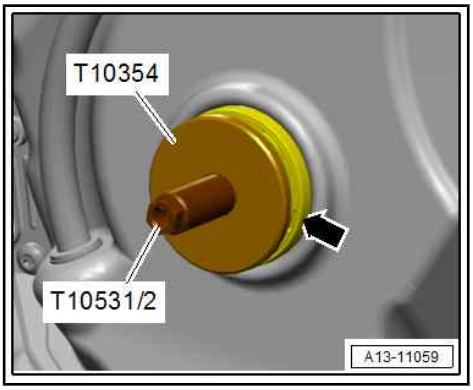

– Also fit thrust pad - T10375- and tighten flange nut - 10531/4- .

– Drive oil seal in as far as stop using thrust piece - T10354- .

Remaining installation steps are carried out in reverse sequence; note the following:

• Renew bolt with O-ring for vibration damper after removal.

– Install vibration damper ⇒ page 21 .

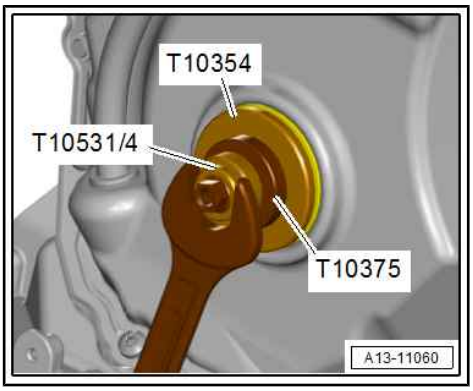

Protected by copyright. Copying for private or commercial purposes, in part or in whole, is not permitted unless authorised by AUDI AG. AUDI AG does not guarantee or accept any liability with respect to the correctness of information in this document. Copyright by AUDI AG.

2 Chain drive

⇒ “2.1 Exploded view - camshaft timing chains”, page 72

⇒ “2.2 Exploded view - drive chain for balance shaft”, page 74

⇒ “2.3 Removing and installing bearing saddle”, page 75

⇒ “2.4 Removing camshaft timing chain from camshafts”, page 80

⇒ “2.5 Removing and installing camshaft timing chain”, page 91

⇒ “2.6 Removing and installing drive chain for balance shaft”, page 101

⇒ “2.7 Checking valve timing”, page 103

2.1 Exploded view - camshaft timing chains

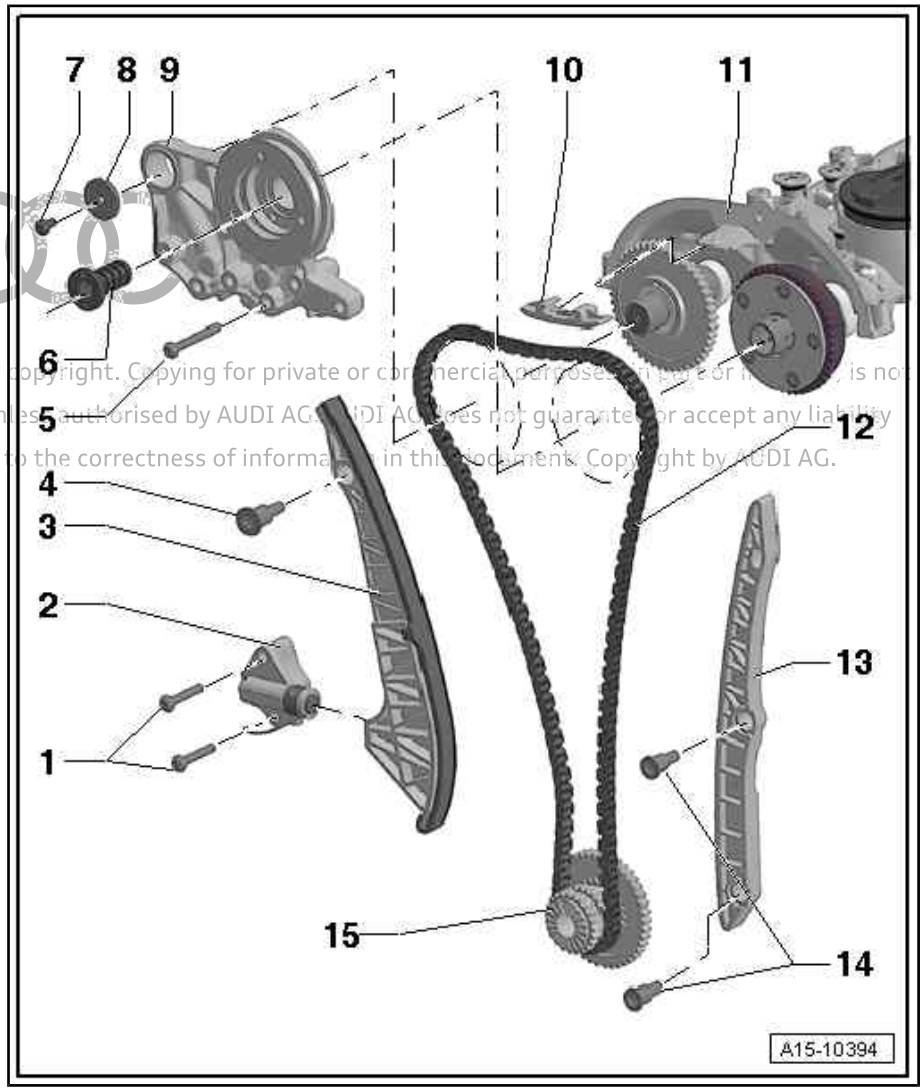

Protected by copyright. Copying for private or commercial purposes, in part or in whole, is not permitted unless authorised by AUDI AG. AUDI AG does not guarantee or accept any liability with respect to the correctness of information in this document. Copyright by AUDI AG.

1 - Bolt
- ❑ 9 Nm

2 - Chain tensioner
- ❑ Exerts spring pressure
- ❑ Before removing, lock in place using locking pin - T40011-

3 - Tensioning rail for timing chain

4 - Guide pin
- ❑ 20 Nm

5 - Bolt
- ❑ 9 Nm

6 - Timing valve
- ❑ Left-hand thread
- ❑ Depending on version, use assembly tool - T10352- or assembly tool - T10352/1A- for removal
- ❑ 35 Nm

7 - Bolt
- ❑ Renew after removing
- ❑ Tightening torques and sequence ⇒ Fig. ““Bearing saddle - tightening torque and sequence”“ , page 73

8 - Washer

9 - Bearing saddle
- ❑ Removing and installing ⇒ page 75

10 - Guide rail for camshaft timing chain

11 - Camshaft housing

12 - Camshaft timing chain
- ❑ Before removing, mark running direction with paint

- ❑ Removing and installing ⇒ page 91

13 - Guide rail for camshaft timing chain

14 - Guide pin

- ❑ 20 Nm

15 - Three-part chain sprocket assembly

- ❑ Crankshaft
- ❑ Installation position ⇒ page 73

Bearing saddle - tightening torque and sequence

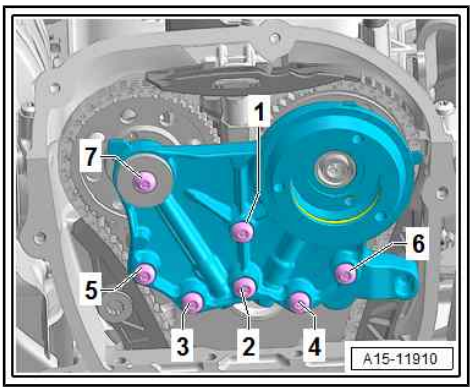

- After removing, renew bolts tightened with specified tightening angle.

– Tighten bolts in stages in the sequence shown:

Stage	Bolts	Tightening torque/angle specification
1.	-1 … 7-	Screw in by hand until contact is made
2.	-1 … 6-	9 Nm
3.	-7-	M6: Tighten initially to 8 Nm M8: Tighten initially to 20 Nm
4.	-7-	Turn 90° further

Three-part chain sprocket assembly (crankshaft) - installation position

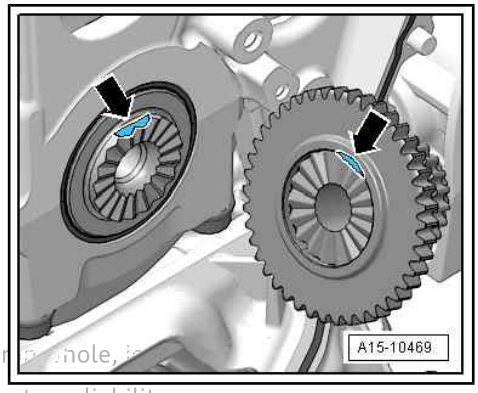

- The two sections -arrows- must be aligned.

Protected by copyright. Copying for private or commercial purposes, in part or whole, is not permitted unless authorised by AUDI AG. AUDI AG does not guarantee or accept any liability with respect to the correctness of information in this document. Copyright by AUDI AG.

2.2 Exploded view - drive chain for balance shaft

Protected by copyright. Copying for private or commerc
permitted unless authorised by AUDI AG. AUDI AG does
with respect to the correctness of information in this do

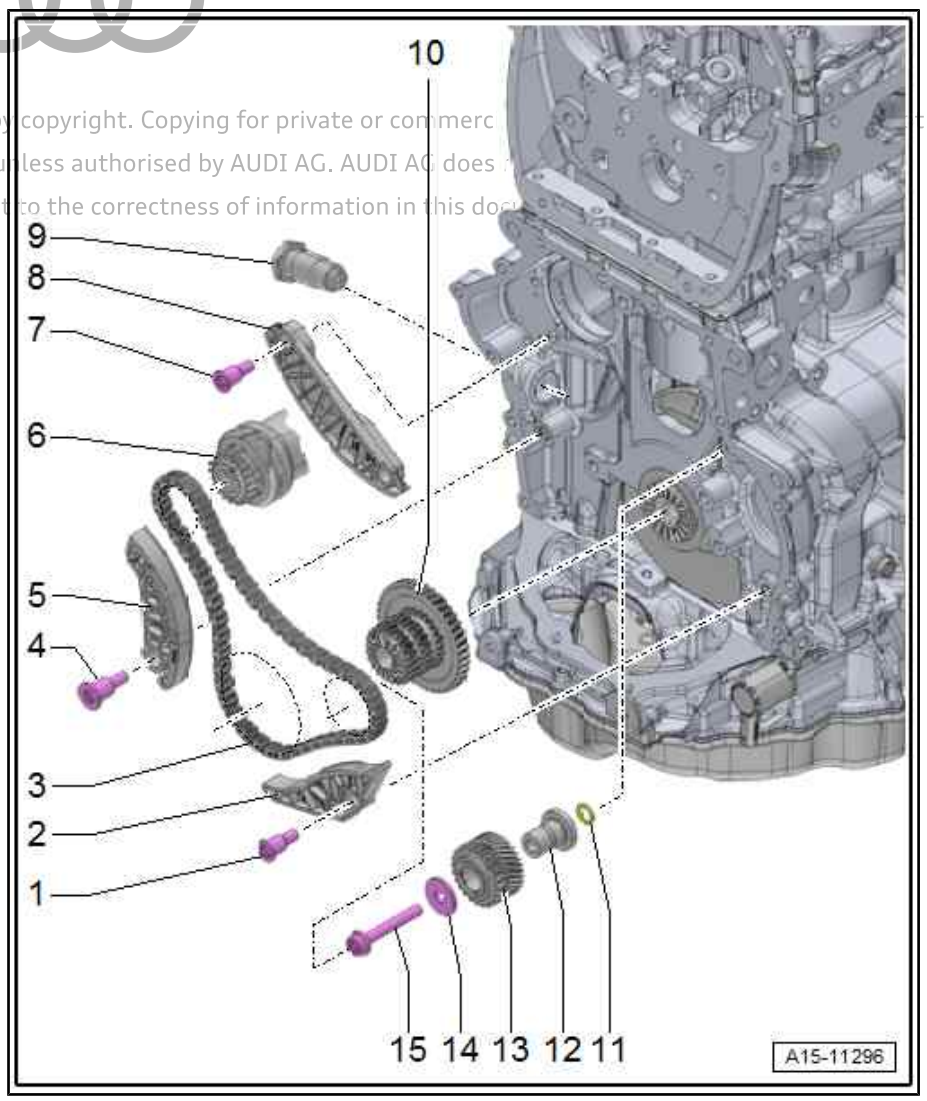

1 - Guide pin
- ❑ 20 Nm

2 - Guide rail
- ❑ For timing chain

3 - Drive chain for balance shaft
- ❑ Removing and installing ⇒ "2.6 Removing and installing drive chain for balance shaft", page 101

4 - Guide pin
- ❑ 20 Nm

5 - Tensioning rail
- ❑ For drive chain for balance shafts

6 - Balance shaft
- ❑ Exhaust side
- ❑ Always renew after removal
- ❑ Lubricate bearing with engine oil
- ❑ Renewing ⇒ page 50

7 - Guide pin
- ❑ 20 Nm

8 - Guide rail
- ❑ For timing chain

9 - Chain tensioner
- ❑ 85 Nm
- ❑ Apply sealant to seal

10 - Three-part chain sprocket assembly
- ❑ Installation position ⇒ page 73

11 - O-ring
- ❑ Lubricate with engine oil

12 - Bearing mounting
- ❑ Lubricate with engine oil
- ❑ Installation position ⇒ page 75

13 - Idler gear
- ❑ If bolt ⇒ Item 15 (page 74) has been loosened, idler gear must be renewed

14 - Washer

15 - Bolt
- ❑ Renew after removing
- ❑ If bolt has been loosened, idler gear ⇒ Item 13 (page 74) must be renewed
- ❑ Tightening sequence ⇒ page 75

Bearing mounting - installation position

- Renew O-ring -1- after removal and lubricate with oil.
- Dowel pin -arrow- for bearing mounting must engage in bore in cylinder block.
- Lubricate bearing mounting.

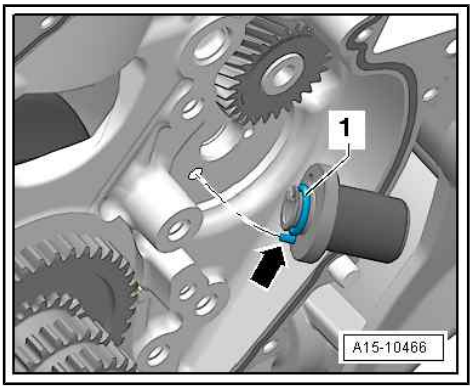

Idler gear - tightening sequence

NOTICE

Risk of irreparable damage to engine if there is no backlash of idler gear.

The new idler gear has a special lubricant coating which wears off after a short running period and thus automatically creates the specified backlash.

– Never re-use idler gear.

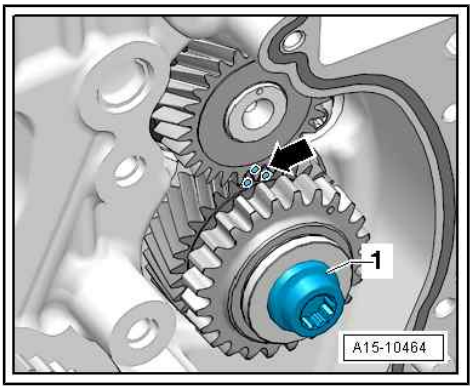

- After removing, renew bolts tightened with specified tightening angle.

– Tighten bolt -1- in stages:

Protected by copyright. Copying for private or commercial purposes, in part or in whole, is not permitted unless authorised by AUDI AG. AUDI AG does not guarantee or accept any liability with respect to the correctness of information in this document. Copyright by AUDI AG.

Stage	Tightening torques/angle specification
1.	10 Nm
2.	– Turn idler gear • Idler gear must be without play; otherwise loosen bolt and tighten again
3.	25 Nm
4.	Turn 90° further

2.3 Removing and installing bearing saddle

Special tools and workshop equipment required

♦ Assembly tool - T10352A-

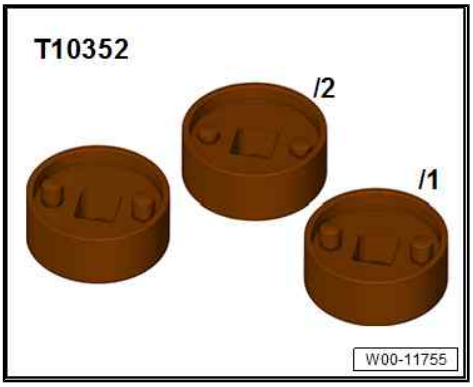

- Locking pin - T40011-

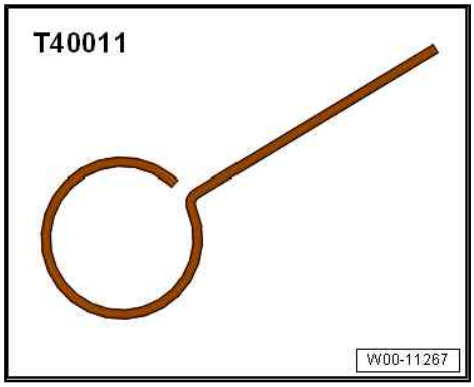

- Lever - T40243-

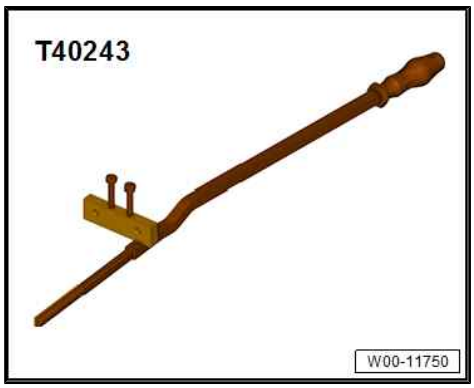

- Wrench, 21 mm - T40263-

Protected by copyright. Copying for private or commercial purposes, in part or in whole, is not permitted unless authorised by AUDI AG. AUDI AG does not guarantee or accept any liability with respect to the correctness of information in this document. Copyright by AUDI AG.

- Locking tool - T40267-

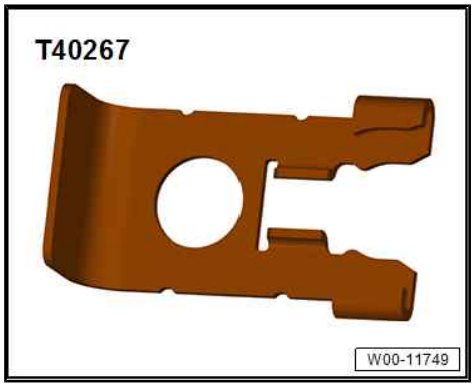

♦ Adapter - T40314-

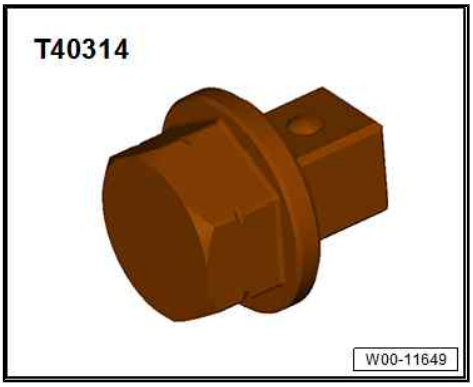

♦ Open end spanner insert, AF 24

Removing

– Preparatory work may be necessary depending on model ⇒ 4-cylinder direct injection engine (1.8, 2.0 ltr. 4-valve TFSI); Rep. gr. 15 ; Chain drive; Removing and installing bearing saddle .

Protected by copyright. Copying for private or commercial purposes, in part or in whole, is not permitted unless authorised by AUDI AG. AUDI AG does not guarantee or accept any liability with respect to the correctness of information in this document. Copyright by AUDI AG.

– Remove timing chain cover (top) ⇒ page 66 .

Note:

The timing valves have a left-hand thread.

– Depending on version, turn assembly tool - T10352- or assembly tool - T10352/1A- in direction of -arrow- to remove timing valve.

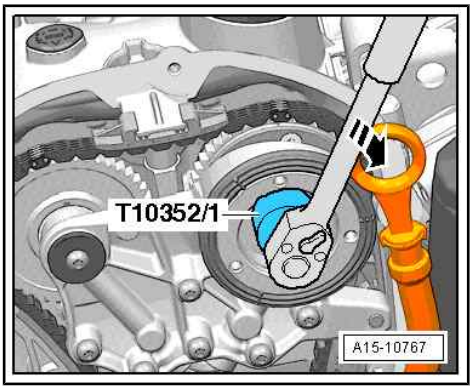

– To do so, counterhold with wrench, 21 mm - T40263- , adapter - T40314- and socket, 24 mm.

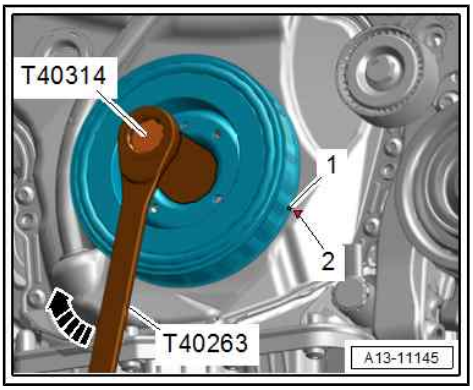

– Remove bolts -arrows-.

• Detach bearing saddle carefully without tilting it.

– Detach bearing saddle.

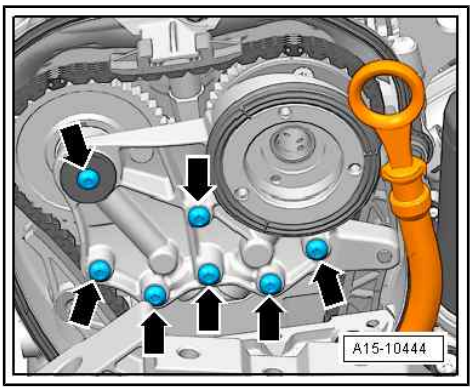

– Remove sealing plug -arrow-.

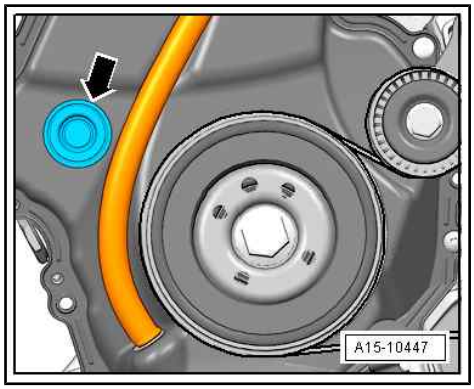

– Remove bolts -arrows-.

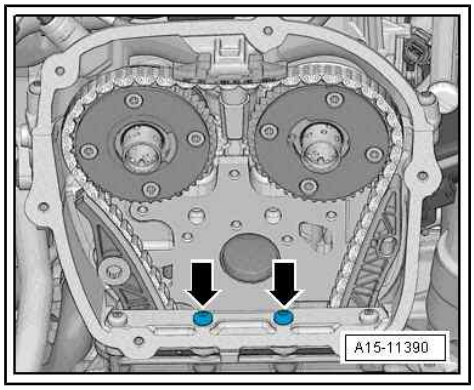

– Remove bolt -arrow-.

Protected by copyright. Copying for private or commercial purposes, in
permitted unless authorised by AUDI AG. AUDI AG does not guarantee
with respect to the correctness of information in this document. Copyri

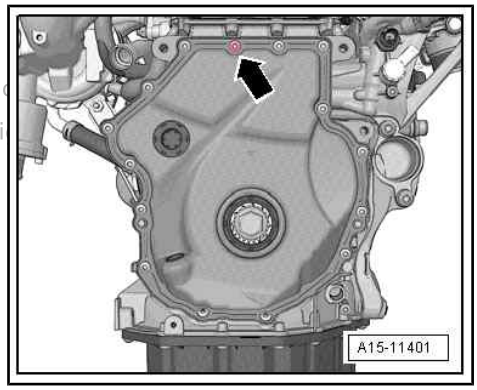

Depending on version, 2 different chain tensioners may be installed.

Version 1

– Screw in lever - T40243- -arrows-.

– Lift locking element for chain tensioner; to do so, insert scriber or suitable screwdriver in hole of chain tensioner in direction of -arrow 1-, press lever - T40243- slowly in direction of -arrow 2- and hold in place.

Note:

The chain tensioner is oil-damped and can therefore only be pressed back slowly by applying constant pressure.

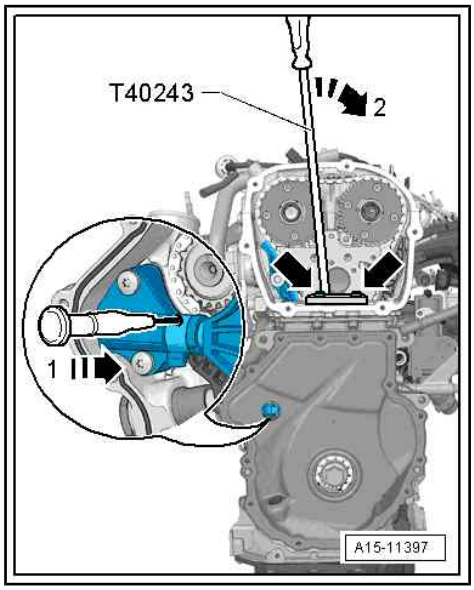

– Hold chain tensioner in position with locking pin - T40011- .

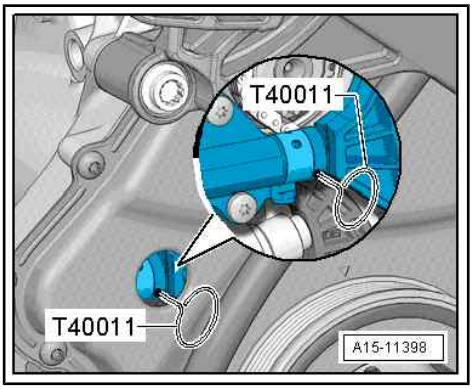

Version 2

– Screw in lever - T40243- -arrows-.

– Compress and hold circlip -1- for chain tensioner.

– Push assembly lever - T40243- slowly in direction of -arrow- and hold in place. This will press the chain tensioner back.

Note:

The chain tensioner is oil-damped and can therefore only be pressed back slowly by applying constant pressure.

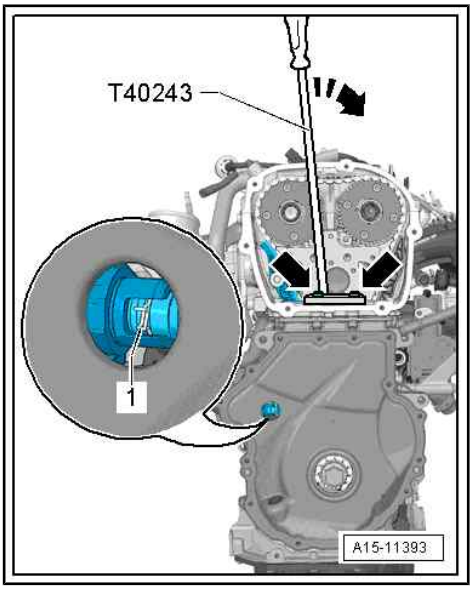

– Hold chain tensioner in position with locking tool - T40267- .

All versions

– Remove lever - T40243- .

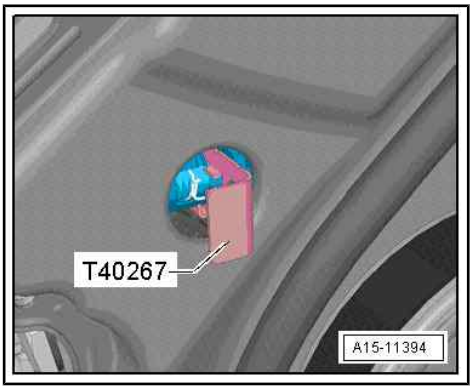

Installing

– Fit and tighten bolts -arrows-. Tightening torques ⇒ Item 4 (page 106)

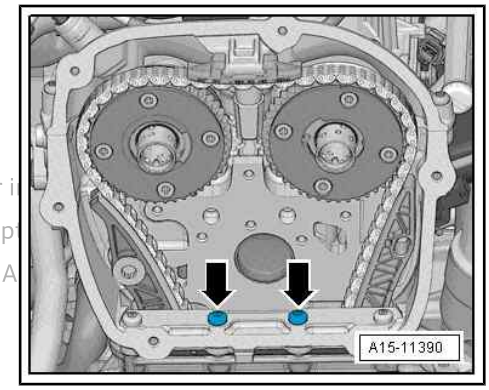

Protected by copyright. Copying for private or commercial purposes, in part or i
permitted unless authorised by AUDI AG. AUDI AG does not guarantee or accept
with respect to the correctness of information in this document. Copyright by A

– Lubricate hole -arrow- with engine oil.

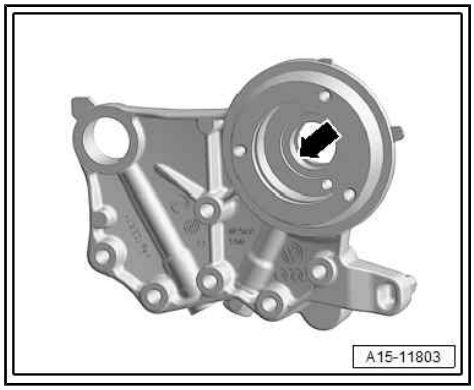

- Carefully attach bearing saddle without tilting it.

– Fit bearing saddle and screw in bolts -arrows- by hand until they make contact.

– Depending on version, remove locking pin - T40011- or locking tool - T40267- .

– Tighten bolts -arrows- for bearing saddle ⇒ page 72 .

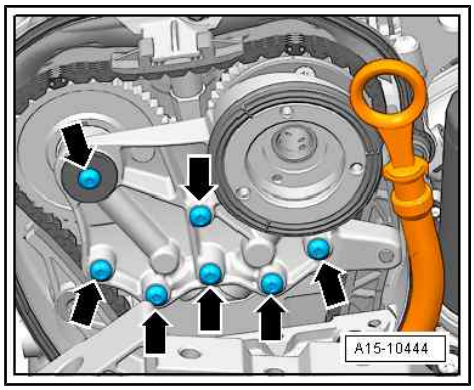

Remaining installation steps are carried out in reverse sequence; note the following:

– Install timing chain cover (top) ⇒ page 66 .

– Additional work depending on model ⇒ 4-cylinder direct injection engine (1.8, 2.0 ltr. 4-valve TFSI); Rep. gr. 15 ; Chain drive; Removing and installing bearing saddle .

Tightening torques

♦ ⇒ “2.1 Exploded view - camshaft timing chains”, page 72

♦ ⇒ “1.1 Exploded view - timing chain cover”, page 64

♦ ⇒ “3.1 Exploded view - cylinder head”, page 106

2.4 Removing camshaft timing chain from camshafts

Special tools and workshop equipment required

♦ Counterhold tool - T10172A-

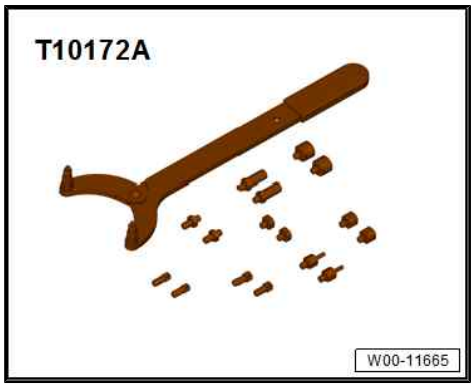

Protected by copyright. Copying for private or commercial purposes, in part or in whole, is not permitted unless authorised by AUDI AG. AUDI AG does not guarantee or accept any liability with respect to the correctness of information in this document. Copyright by AUDI AG.

- Assembly tool - T10352A-

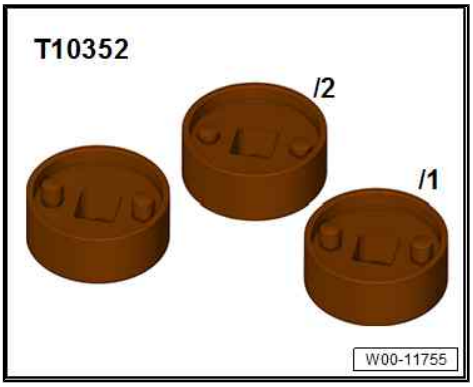

- Locking pin - T40011-

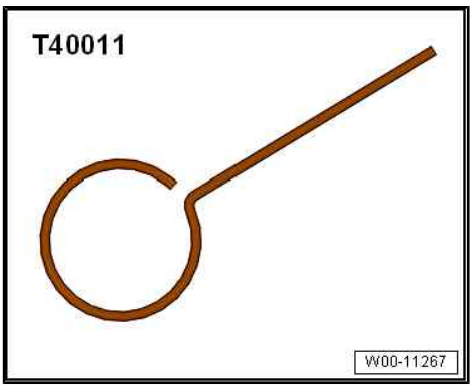

- Lever - T40243-

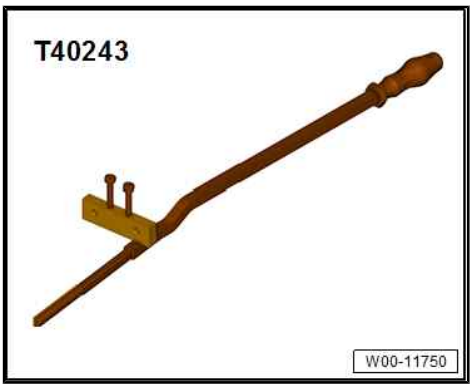

- Wrench, 21 mm - T40263-

Protected by copyright. Copying for private or commercial purposes, in part or in whole, is not permitted unless authorised by AUDI AG. AUDI AG does not guarantee or accept any liability with respect to the correctness of information in this document. Copyright by AUDI AG.

- Assembly tool - T40266-

Protected by copyright. Copying for private or commercial purposes, in part or in whole, is not permitted unless authorised by AUDI AG. AUDI AG does not guarantee or accept any liability with respect to the correctness of information in this document. Copyright by AUDI AG.

- Locking tool - T40267-

- Camshaft clamp - T40271-

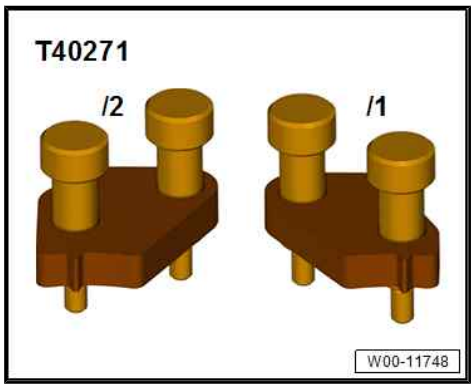

- Adapter - T40314-

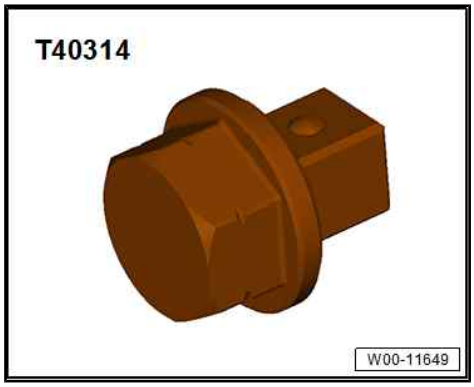

- Open end spanner insert, AF 24

Procedure

Preparatory work may be necessary depending on model ⇒ 4-cylinder direct injection engine (1.8, 2.0 ltr. 4-valve TFSI); Rep. gr. 15 ; Chain drive; Removing camshaft timing chain from camshafts .

– Remove timing chain cover (top) ⇒ page 66 .

Note:

The timing valves have a left-hand thread.

– Depending on version, turn assembly tool - T10352- or assembly tool - T10352/1A- in direction of -arrow- to remove timing valve.

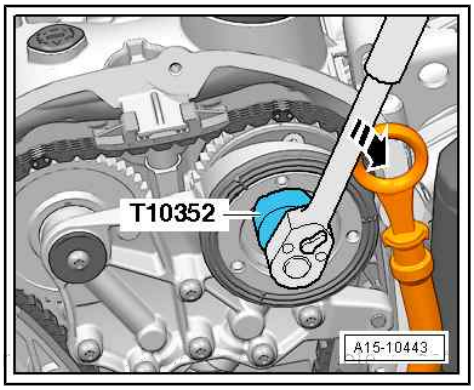

Protected by copyright. Copying for private or commercial purposes, in part, is not permitted unless authorised by AUDI AG. AUDI AG does not guarantee or accept any liability with respect to the correctness of information in this document.

– To do so, counterhold with wrench, 21 mm - T40263- , adapter - T40314- and socket, 24 mm.

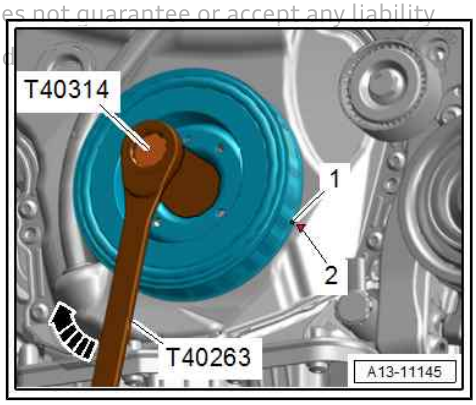

– Remove bolts -arrows-.

• Detach bearing saddle carefully without tilting it.

– Detach bearing saddle.

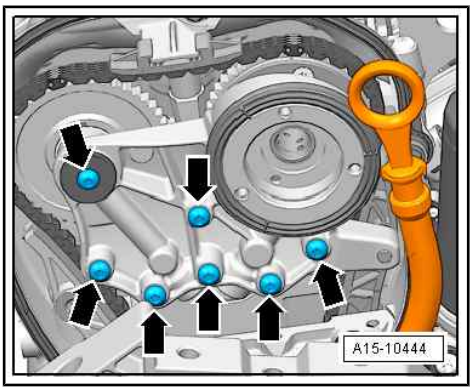

– Turn vibration damper to “TDC” position.

NOTICE

Risk of engine damage if valve gear drive slips

– Only turn engine in normal direction of rotation.

• Notch on vibration damper and marking on cover for timing chains (bottom) must be aligned -arrow-.

• The markings -1- on the camshaft chain sprockets must face upwards.

Note:

The combination of wrench, 21 mm - T40263- , adapter - T40314- and socket, 24 mm can be fitted onto the vibration damper better than the counterhold tool - T10355- .

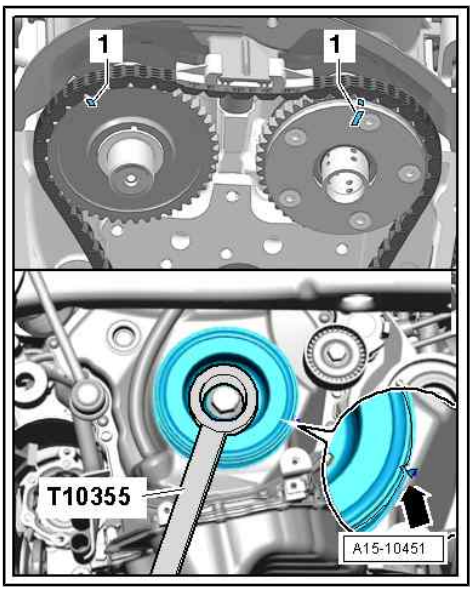

– Use a waterproof pen to mark camshaft timing chain and cylinder head -arrows- relative to markings on chain sprockets -1-.
– Use a waterproof pen to mark camshaft timing chain relative to guide rail of timing chain -2- as well.

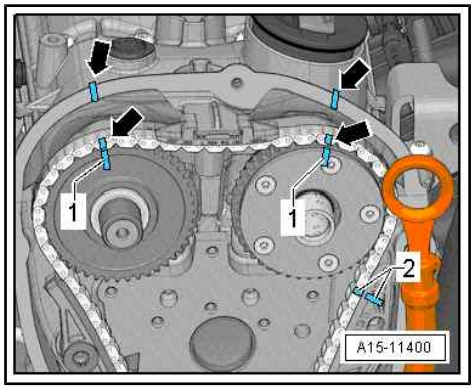

– Remove sealing plug -arrow-.

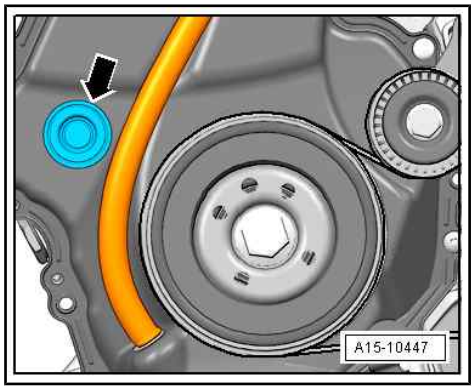

– Remove bolts -arrows-.

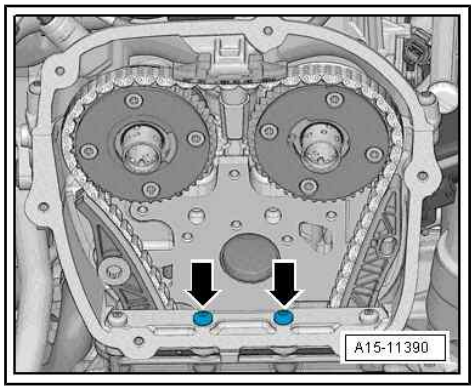

– Remove bolt -arrow-.

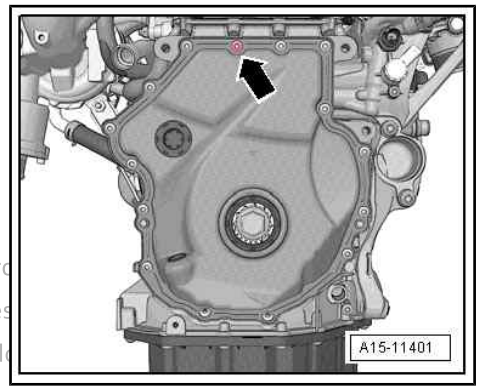

Protected by copyright. Copying for private or commerc
permitted unless authorised by AUDI AG. AUDI AG does
with respect to the correctness of information in this d

Depending on version, 2 different chain tensioners may be installed.

Version 1

Protected by copyright. Copying for private or commercial purposes permitted unless authorised by AUDI AG. AUDI AG does not guarant with respect to the correctness of information in this document. Co

- Screw in lever - T40243- -arrows-.
- Lift locking element for chain tensioner; to do so, insert scriber or suitable screwdriver in hole of chain tensioner in direction of -arrow 1-, press lever - T40243- slowly in direction of -arrow 2- and hold in place.

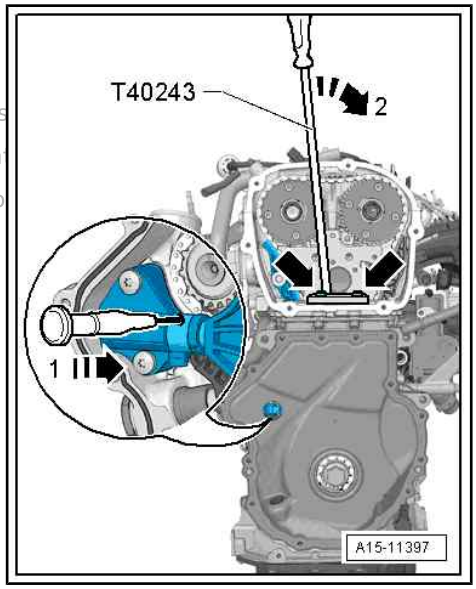

- Hold chain tensioner in position with locking pin - T40011- .

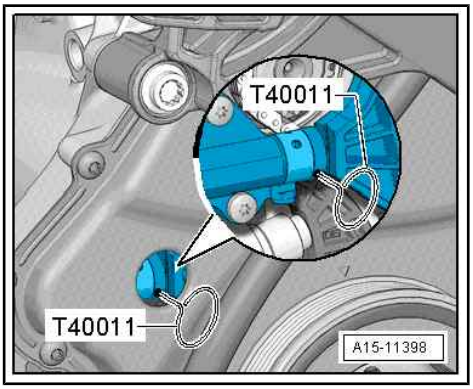

Version 2

- Screw in lever - T40243- -arrows-.
- Compress circlip -1- for chain tensioner, press lever - T40243- slowly in direction of -arrow- and hold in place.

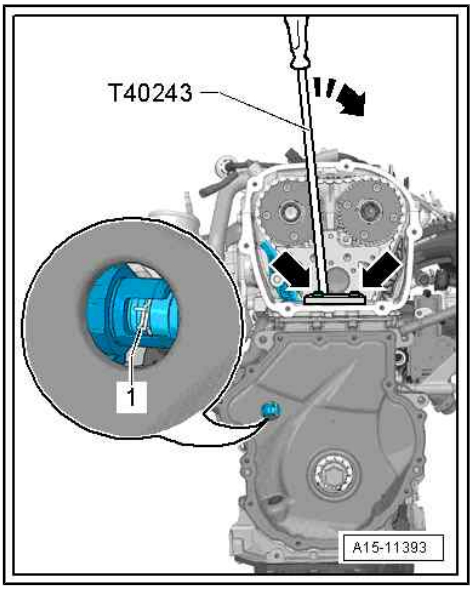

– Hold chain tensioner in position with locking tool - T40267- .

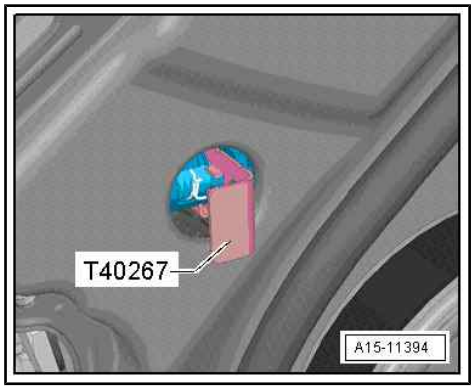

All versions

– Remove assembly lever - T40243- .

– Bolt camshaft clamp - T40271/2- onto cylinder head and slide into teeth on chain sprocket in direction of -arrow 2-; if necessary, use spanner to turn inlet camshaft in direction of -arrow 1-.

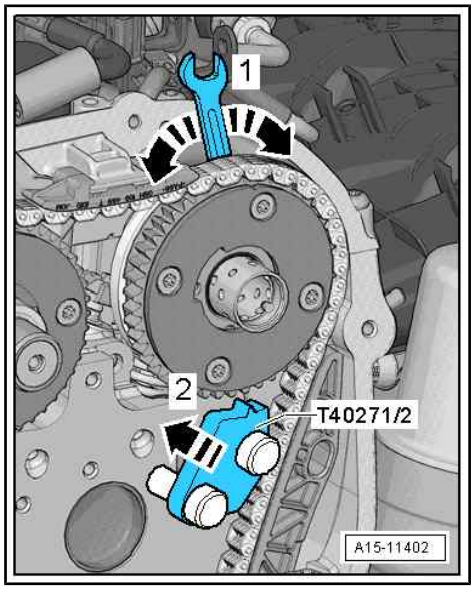

With assembly clearance feature

– Bolt camshaft clamp - T40271/1- onto cylinder head. Counterhold camshaft with an open-end spanner (press towards right side -arrow-).

– Remove bolt -A- and push tensioning rail downwards, while still counterholding camshaft.

– Continue turning exhaust camshaft clockwise -arrow- until camshaft clamp - T40271/1- can be pressed into teeth on chain sprocket.

Protected by copyright. Copying for private or commercial purposes is not permitted unless authorised by AUDI AG. AUDI AG does not guarantee or assume liability with respect to the correctness of information in this document.

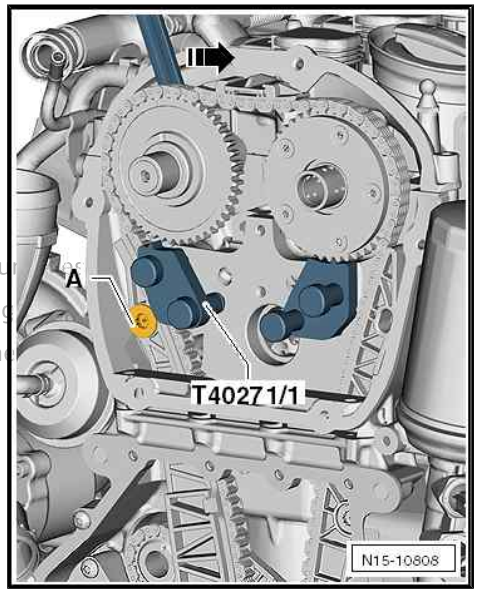

Without assembly clearance feature

– Bolt camshaft clamp - T40271/1- onto cylinder head.

A second mechanic is required for the following steps.

– Turn exhaust camshaft in direction of -arrow A- using counterhold tool - T10172 A- and hold in place. Remove bolt -1- and guide tensioning rail -2- downwards.

– Continue turning exhaust camshaft clockwise -arrow A- until camshaft clamp - T40271/1- can be pressed into teeth -C- on chain sprocket in direction of -arrow B-.

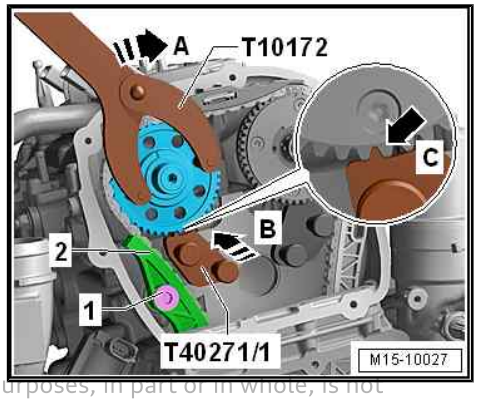

Protected by copyright. Copying for private or commercial purposes, in part or in whole, is not permitted unless authorised by AUDI AG. AUDI AG does not with respect to the correctness of information in this docum

All versions

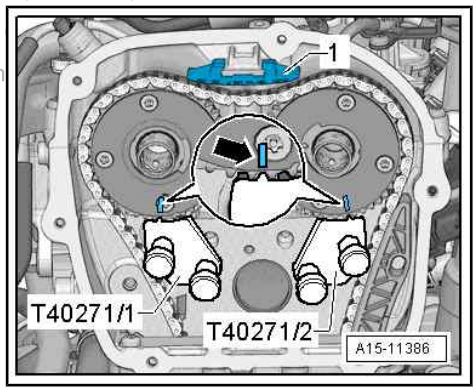

Note

- *Mark camshafts relative to camshaft clamp - T40271/1- and camshaft clamp - T40271/2- .*
- *If using new camshafts: Transfer markings made on old camshafts onto new camshafts.*
- *It will take much more time to install the new camshafts if the markings are not applied.*

– Mark camshaft chain sprockets relative to camshaft clamp - T40271/1- and camshaft clamp - T40271/2- -arrows-.

– Use screwdriver to release catch and press off top guide rail -1- forwards.

– Remove camshaft timing chain from camshaft sprockets.

NOTICE

Risk of damage to valves and piston crowns.

– **Never turn the crankshaft when the camshaft timing chain is removed.**

Installing

- Vibration damper is in “TDC” position.
- Notch -1- on vibration damper must align with arrow marking -2- on cover for timing chains (bottom).

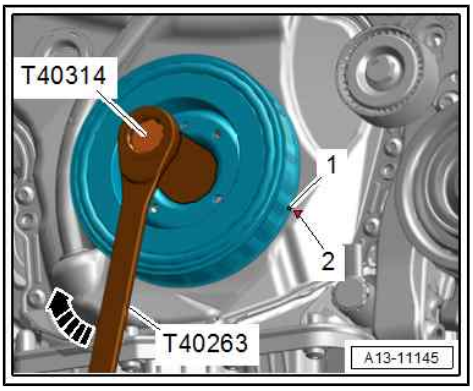

- Camshaft chain sprockets locked in position with camshaft clamp - T40271/1- and camshaft clamp - T40271/2- .
- The markings previously made on the camshaft chain sprockets -arrow- must align with the camshaft clamps.

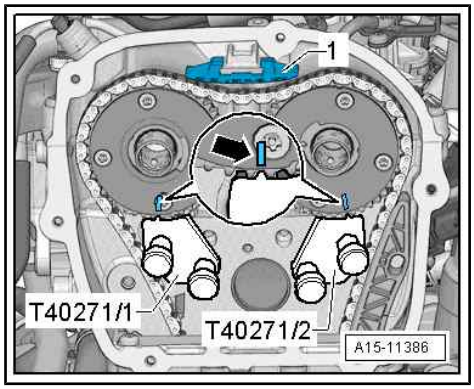

– Fit timing chain; to do so, position markings on chain links -arrows- at markings on chain sprockets -1-.

– Install top guide rail -2-.

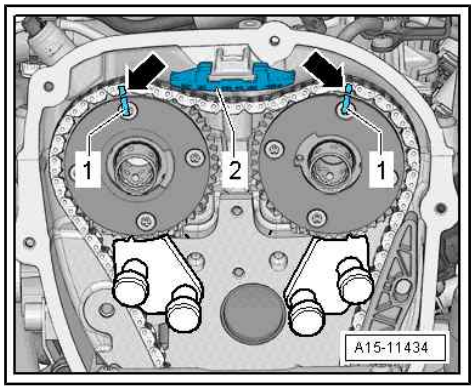

With assembly clearance feature

Protected by copyright. Copying for private or commercial purp
permitted unless authorised by AUDI AG. AUDI AG does not gua
with respect to the correctness of information in this document

A second mechanic is required for the following step.

– Turn exhaust camshaft in direction of -arrow 1- and slide camshaft clamp - T40271/1- out of teeth on chain sprocket in direction of -arrow 2-.

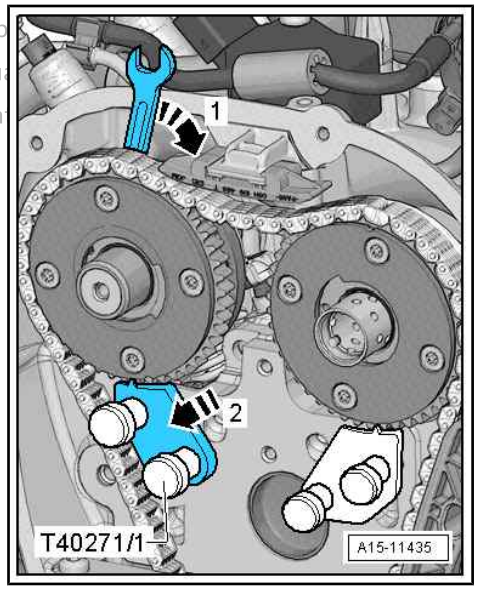

– Carefully release camshaft until timing chain is in contact with upper guide rail. Hold camshaft in this position.

– Move tensioning rail for camshaft timing chain into installation position and tighten bolt -A-.

– Remove camshaft clamp - T40271/1- .

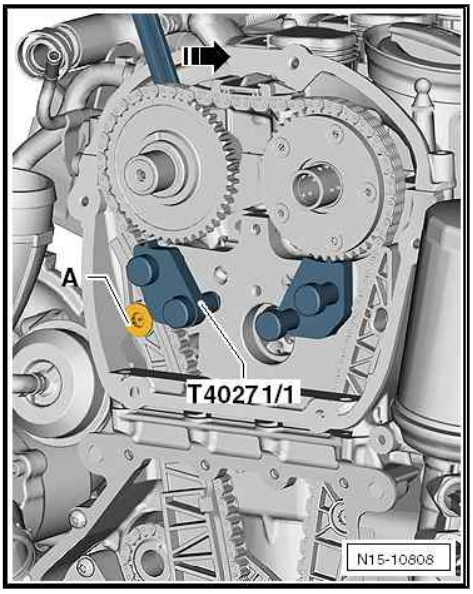

Without assembly clearance feature

A second mechanic is required for the following step.

– Use counterhold tool - T10172 A- to turn exhaust camshaft slightly in direction of -arrow A- and slide camshaft clamp - T40271/1- out of teeth on chain sprocket in direction of -arrow B-.

– Carefully release camshaft in direction of -arrow C- until camshaft timing chain is in contact with guide rail -1-. Hold camshaft in this position.

– Move tensioning rail -2- for camshaft timing chain into installation position and tighten bolt -3-.

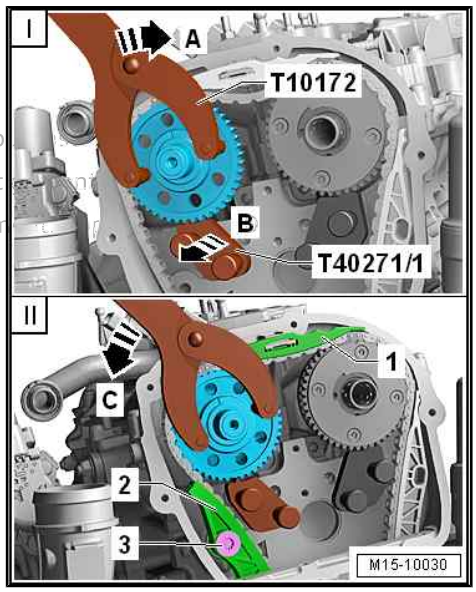

All versions

– Turn inlet camshaft in direction of -arrow 1- and slide camshaft clamp - T40271/2- out of teeth on chain sprocket in direction of -arrow 2- and release camshaft.

– Remove camshaft clamp - T40271/2- .

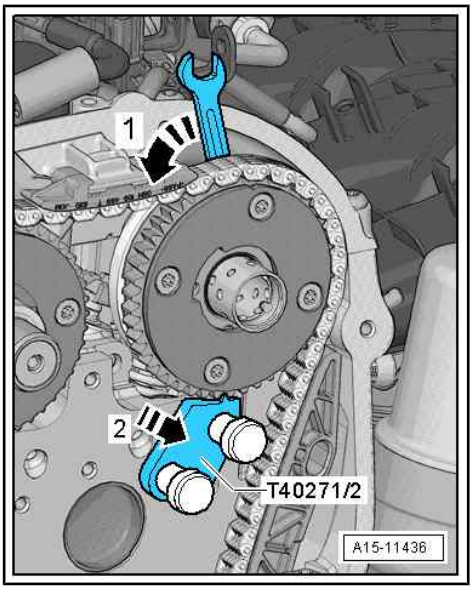

– Check valve timing; markings on camshaft timing chain and cylinder head -arrows- must align with markings on chain sprockets -1-.
– Markings on camshaft timing chain and on guide rail for camshaft timing chain -2- must be opposite one another.
– Notch on vibration damper must align with marking on timing chain cover (bottom) -3-.

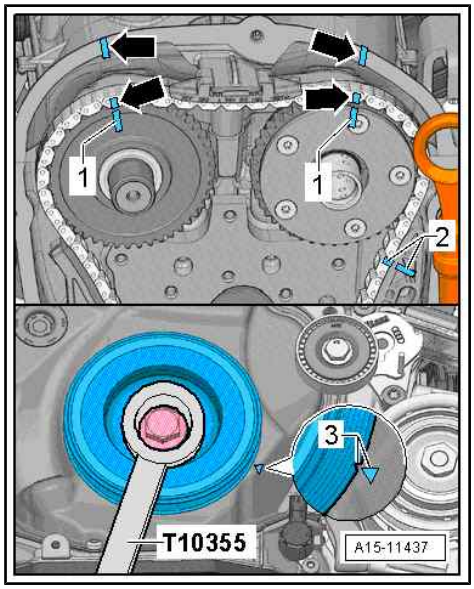

– Lubricate hole -arrow- with engine oil.

Protected by copyright. Copying for private or commercial purposes, in part or in whole is not permitted unless authorised by AUDI AG. AUDI AG does not guarantee or assume liability with respect to the correctness of information in this document. Copyright by AUDI AG.

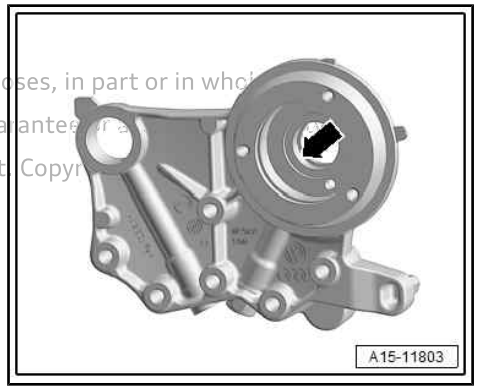

• Carefully attach bearing saddle without tilting it.
– Attach bearing saddle and screw in bolts -arrows- hand-tight.
– Depending on version, remove locking pin - T40011- or locking tool - T40267- .
– Tighten bolts -arrows- for bearing saddle ⇒ page 72 .

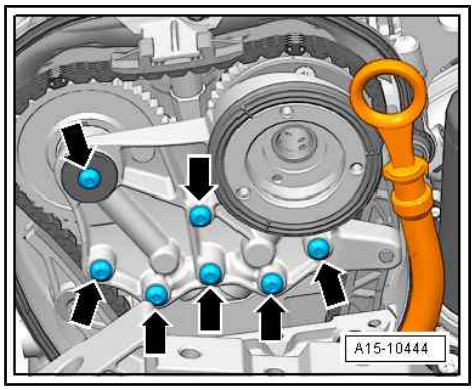

– Screw in bolt -arrow-.
– Install timing valve ⇒ Item 6 (page 72) .

Remaining installation steps are carried out in reverse sequence; note the following:

– Install timing chain cover (top) ⇒ page 66 .

Additional work depending on model ⇒ 4-cylinder direct injection engine (1.8, 2.0 ltr. 4-valve TFSI); Rep. gr. 15 ; Chain drive; Removing camshaft timing chain from camshafts .

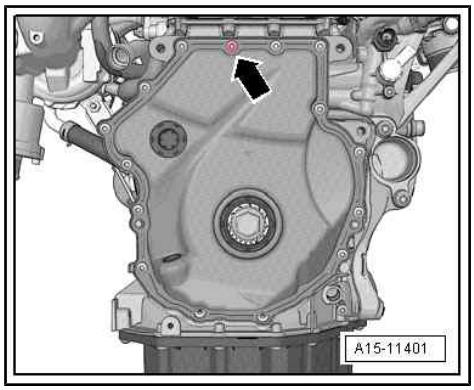

2.5 Removing and installing camshaft timing chain

Special tools and workshop equipment required

- Counterhold tool - T10172A-

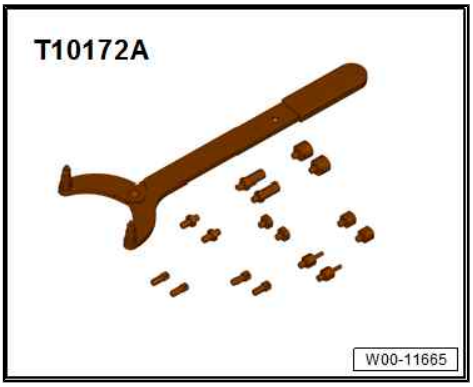

- Assembly tool - T10352A-

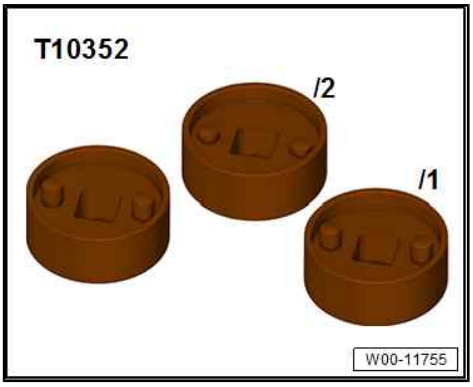

- Locking pin - T40011-

Protected by copyright. Copying for private or commercial purposes, in part or in whole, is not permitted unless authorised by AUDI AG. AUDI AG does not guarantee or accept any liability with respect to the correctness of information in this document. Copyright by AUDI AG.

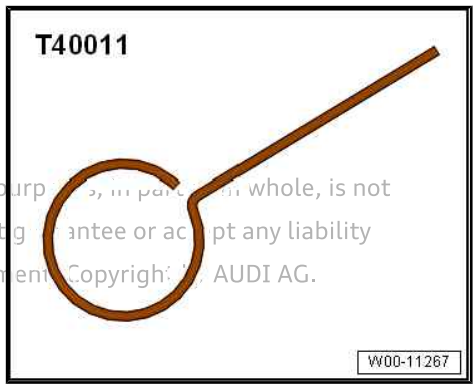

- Lever - T40243-

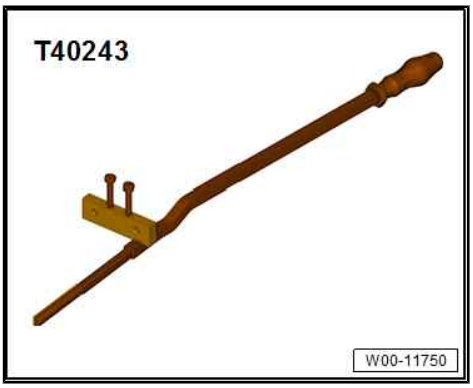

- Wrench, 21 mm - T40263-

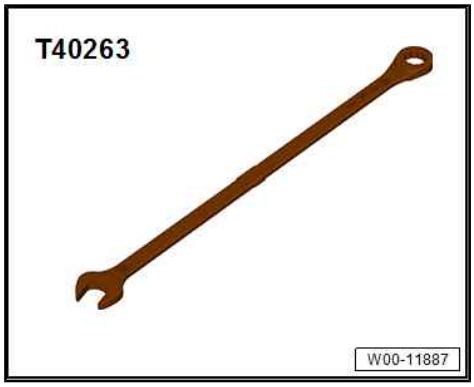

- Locking tool - T40267-

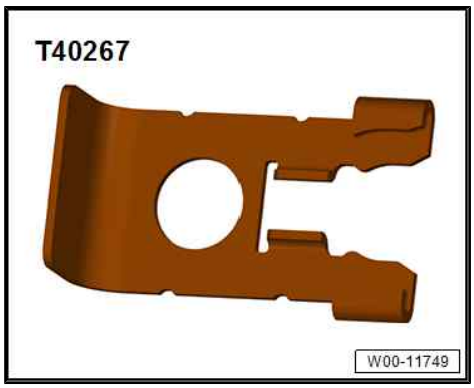

- Camshaft clamp - T40271-

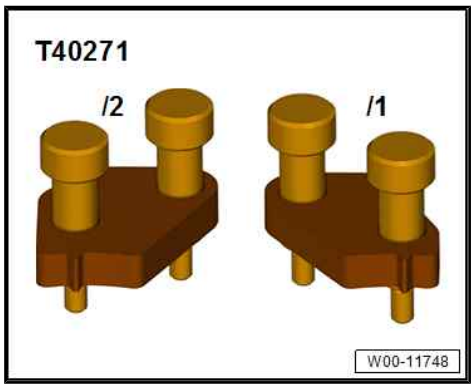

- Adapter - T40314-

Protected by copyright. Copying for private or commercial purposes, in part or in whole, is not permitted unless authorised by AUDI AG. AUDI AG does not guarantee or assume any liability with respect to the correctness of information in this docum

- Open end spanner insert, AF 24

Removing

Preparatory work may be necessary depending on model ⇒ 4-cylinder direct injection engine (2.0 ltr. 4-valve TFSI); Rep. gr. 15 ; Chain drive; Removing and installing camshaft timing chain .

Protected by copyright. Copying for private or commercial purpo
permitted unless authorised by AUDI AG. AUDI AG does not guar
with respect to the correctness of information in this document.

– Remove timing chain cover (top) ⇒ page 66 .

Note:

The timing valves have a left-hand thread.

– Depending on version, turn assembly tool - T10352- or assembly tool - T10352/1A- in direction of -arrow- to remove timing valve.

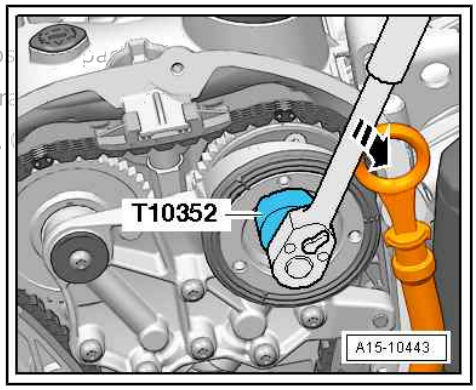

– To do so, counterhold with wrench, 21 mm - T40263- , adapter - T40314- and socket, 24 mm.

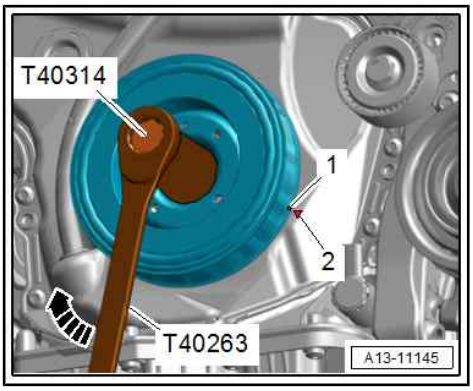

– Remove bolts -arrows-.

• Detach bearing saddle carefully without tilting it.

– Detach bearing saddle.

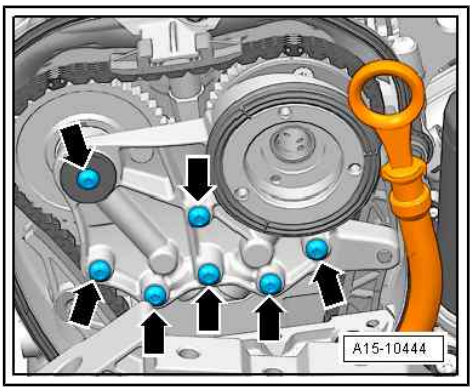

– Turn vibration damper to “TDC” position.

NOTICE

Risk of engine damage if valve gear drive slips

– **Only turn engine in normal direction of rotation.**

• Notch on vibration damper and marking on cover for timing chains (bottom) must be aligned -arrow-.

• The markings -1- on the camshaft chain sprockets must face upwards.

Note:

The combination of wrench, 21 mm - T40263- , adapter - T40314- and socket, 24 mm can be fitted onto the vibration damper better than the counterhold tool - T10355- .

– Remove timing chain cover (bottom) ⇒ page 66 .

– Check “TDC” position again.

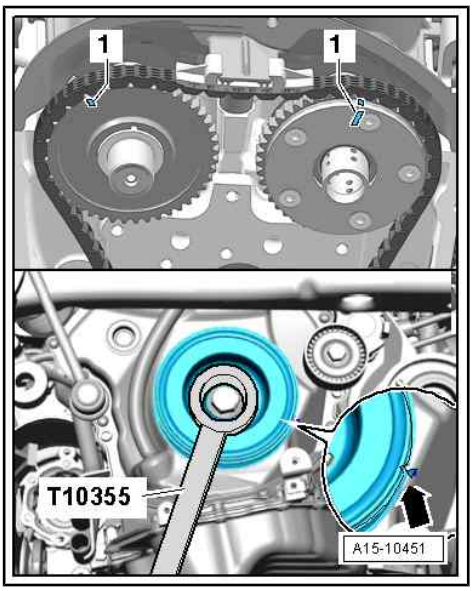

– Press oil pump chain tensioner in direction of -arrow- and lock in place using locking pin - T40011- .
– Remove guide pin -1- and take off chain tensioner.
– Detach drive chain for oil pump.

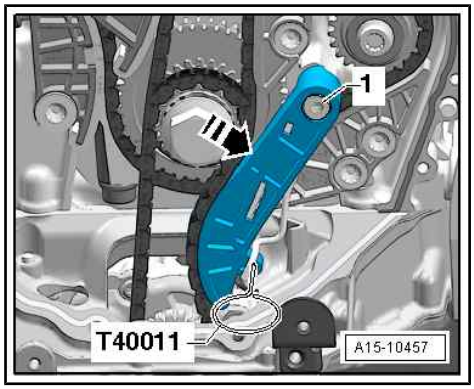

– Remove bolts -arrows-.

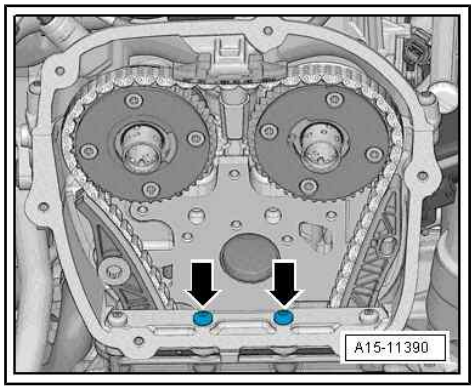

Depending on version, 2 different chain tensioners may be installed.

Version 1

– Screw in lever - T40243- -arrows-.
– Lift locking element for chain tensioner; to do so, insert scriber or suitable screwdriver in hole of chain tensioner in direction of -arrow 1-, press lever - T40243- slowly in direction of -arrow 2- and hold in place.

Note:

The chain tensioner is oil-damped and can therefore only be pressed back slowly by applying constant pressure.

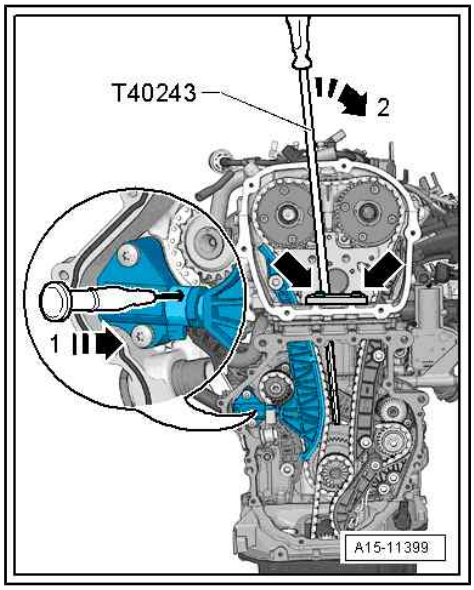

– Hold chain tensioner in position with locking pin - T40011- .

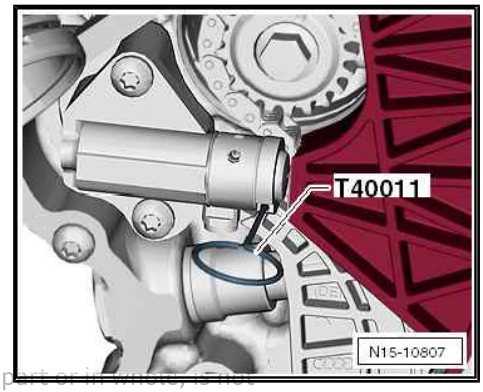

Protected by copyright. Copying for private or commercial purposes, in part or in whole, is not permitted unless authorised by AUDI AG. AUDI AG does not guarantee or accept any liability with respect to the correctness of information in this document. Copyright by AUDI AG.

Version 2

– Screw in lever - T40243- -arrows-.
– Compress and hold circlip -1- for chain tensioner.
– Push lever - T40243- slowly in direction of -arrow- and hold in place.

Note:

The chain tensioner is oil-damped and can therefore only be pressed back slowly by applying constant pressure.

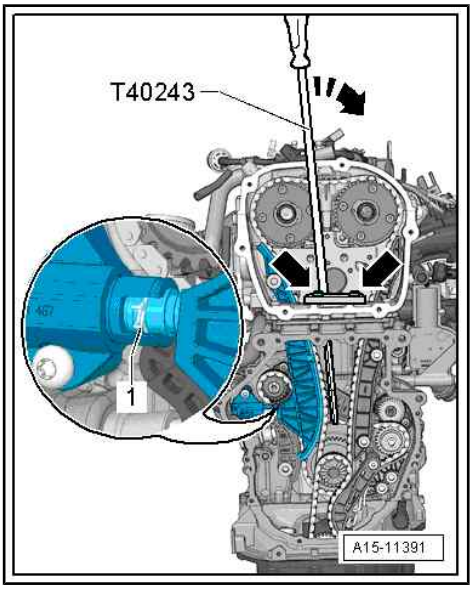

– Hold chain tensioner in position with locking tool - T40267- .

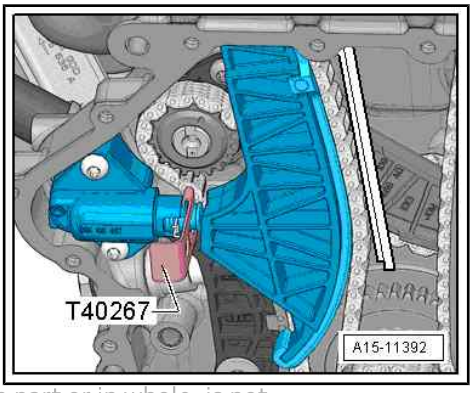

Protected by copyright. Copying for private or commercial purposes, in part or in whole, is not permitted unless authorised by AUDI AG. AUDI AG does not guarantee with respect to the correctness of information in this document. Copyr

All versions

– Remove lever - T40243- .
– Bolt camshaft clamp - T40271/2- onto cylinder head and slide into teeth on chain sprocket in direction of -arrow 2-; if necessary, use spanner to turn inlet camshaft in direction of -arrow 1-.

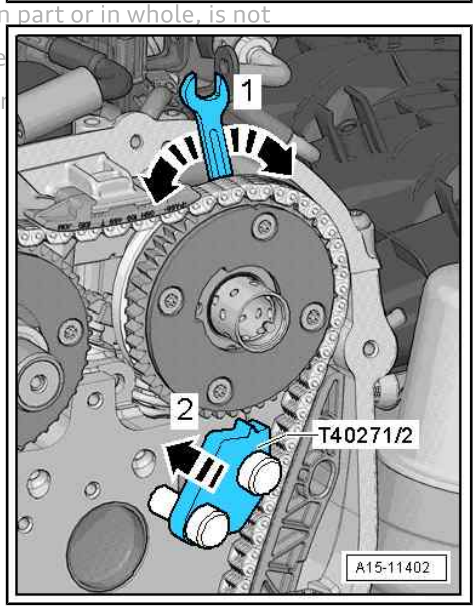

With assembly clearance feature

– Bolt camshaft clamp - T40271/1- onto cylinder head. Counterhold camshaft with an open-end spanner (press towards right side -arrow-).

A second mechanic is required for the following steps.

– Remove bolt -A- and push tensioning rail downwards, while still counterholding camshaft.

– Continue turning exhaust camshaft clockwise -arrow- until camshaft clamp - T40271/1- can be pressed into teeth on chain sprocket.

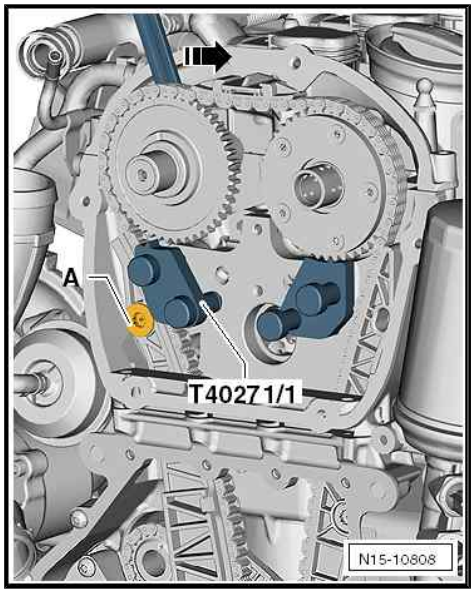

Without assembly clearance feature

– Bolt camshaft clamp - T40271/1- onto cylinder head.

A second mechanic is required for the following steps.

– Turn exhaust camshaft in direction of -arrow A- using counterhold tool - T10172 A- and hold in place. Remove bolt -1- and guide tensioning rail -2- downwards.

– Continue turning exhaust camshaft clockwise -arrow A- until camshaft clamp - T40271/1- can be pressed into teeth -C- on chain sprocket in direction of -arrow B-.

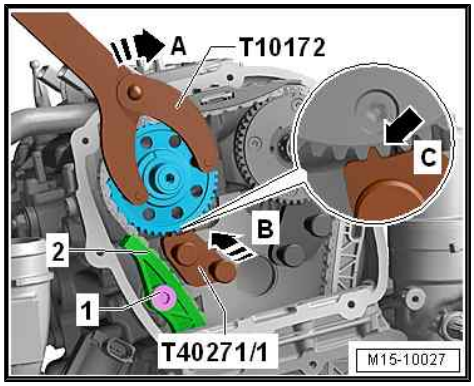

All versions

– Use screwdriver to release catch and press off top guide rail -arrow- towards front.

Protected by copyright. Copying for private or commercial purposes, in
permitted unless authorised by AUDI AG. AUDI AG does not guarantee
with respect to the correctness of information in this document. Copy

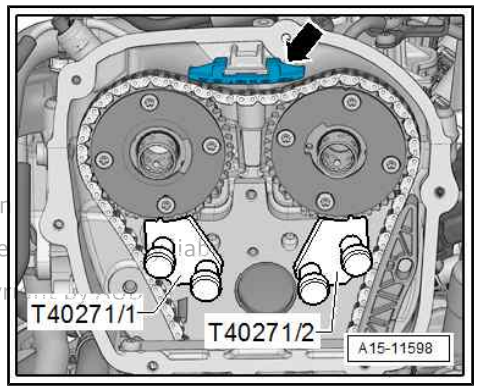

– Unscrew bolts -1- and remove guide rail -2-.
– Remove timing chain.

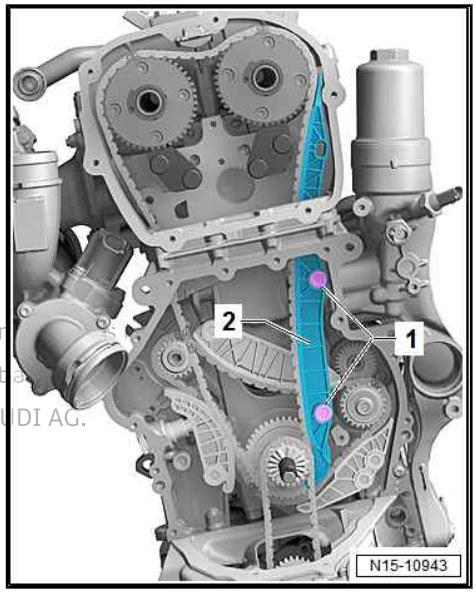

Protected by copyright. Copying for private or commercial purposes, in part or in
permitted unless authorised by AUDI AG. AUDI AG does not guarantee or accept a
with respect to the correctness of information in this document. Copyright by AUDI AG.

Installing

Note

The timing chain links with coloured markings must be positioned at the markings on the chain sprockets.

– Fit timing chain onto inlet camshaft.
– Fit timing chain onto exhaust camshaft.
– Fit timing chain onto crankshaft and hold in place.

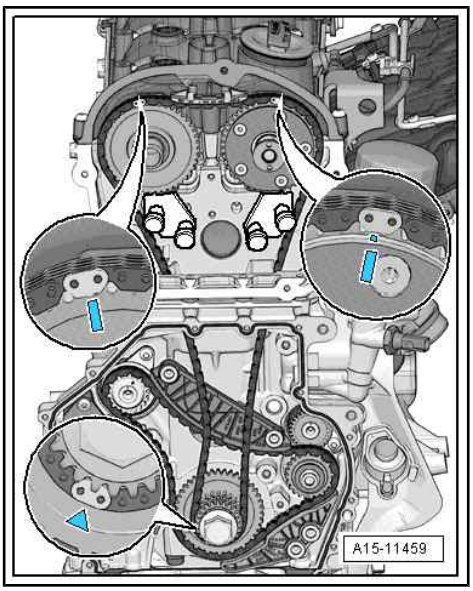

– Install guide rail -2- and tighten bolts -1-.

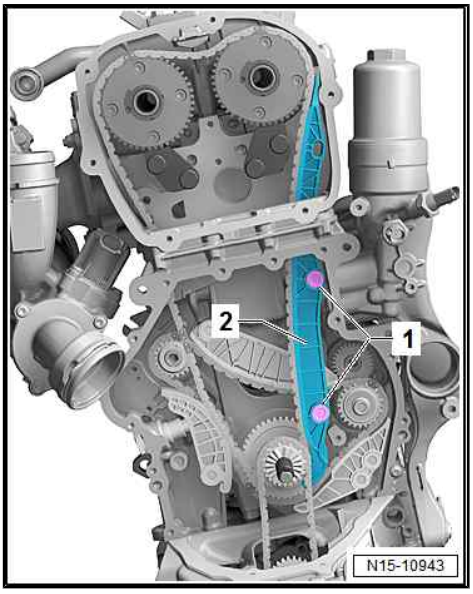

– Install top guide rail -arrow-.

Protected by copyright. Copying for private or com ... not permitted unless authorised by AUDI AG. AUDI AG ... y with respect to the correctness of information in t

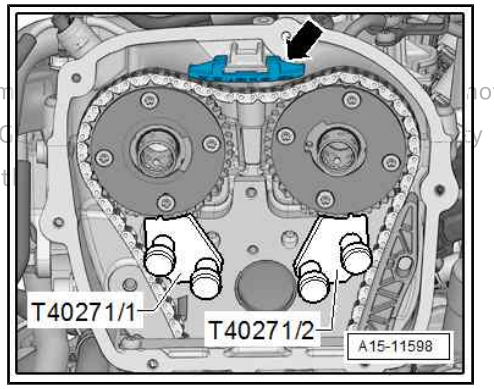

With assembly clearance feature

A second mechanic is required for the following step.

– Turn exhaust camshaft in direction of -arrow 1- and slide camshaft clamp - T40271/1- out of teeth on chain sprocket in direction of -arrow 2-.

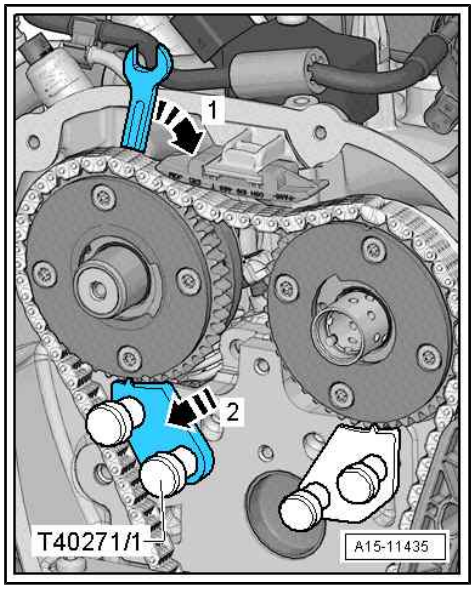

– Keep holding camshaft in position and install tensioning rail for camshaft timing chain. Tighten bolt -A-.

– Remove camshaft clamp - T40271/1- .

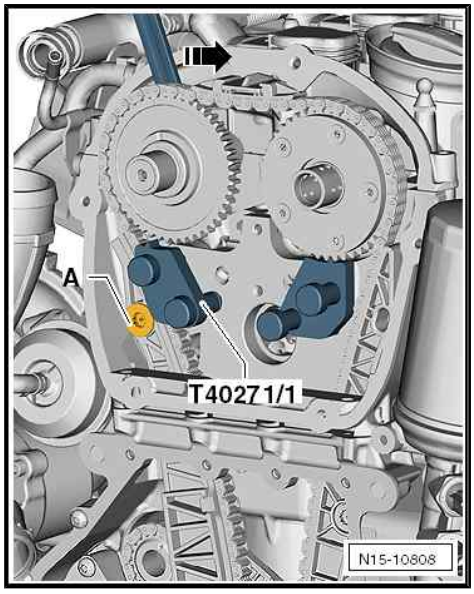

Without assembly clearance feature

A second mechanic is required for the following step.

– Use counterhold tool - T10172 A- to turn exhaust camshaft slightly in direction of -arrow A- and slide camshaft clamp - T40271/1- out of teeth on chain sprocket in direction of -arrow B-.

– Remove camshaft clamp - T40271/1- .

– Release camshaft in direction of -arrow C- until timing chain is in contact with guide rail -1-. Hold camshaft in this position, install tensioning rail -2- and tighten bolt -3-.

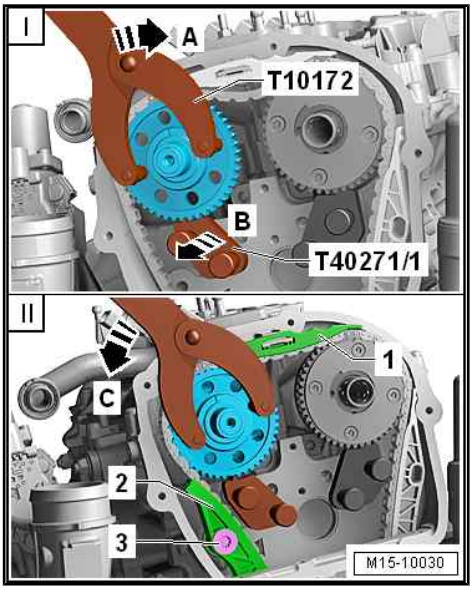

All versions

– Turn inlet camshaft in direction of -arrow 1- and slide camshaft clamp - T40271/2- out of teeth on chain sprocket in direction of -arrow 2- and release camshaft.

– Remove camshaft clamp - T40271/2- .

Protected by copyright. Copying for private or comme
permitted unless authorised by AUDI AG. AUDI AG do
with respect to the correctness of information in this

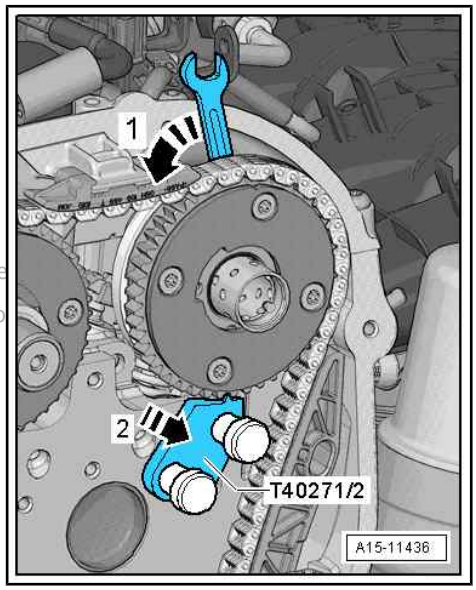

– Check that timing chain links with coloured markings are aligned with markings on chain sprockets.

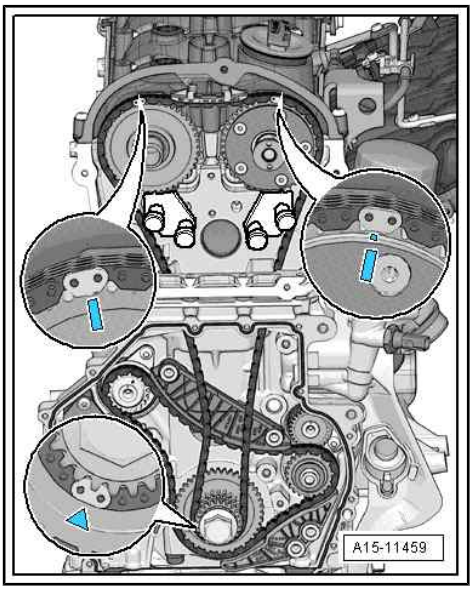

– Install drive chain for oil pump and chain tensioner. Tighten bolt -1- and remove locking pin - T40011- .

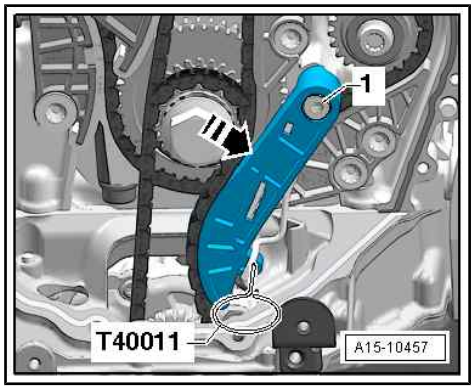

– Fit and tighten bolts -arrows-. Tightening torques ⇒ Item 4 (page 106)

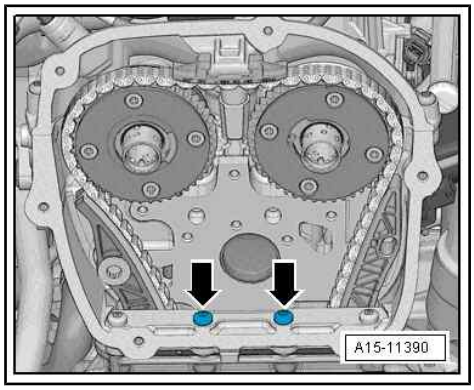

– Lubricate hole -arrow- with engine oil.

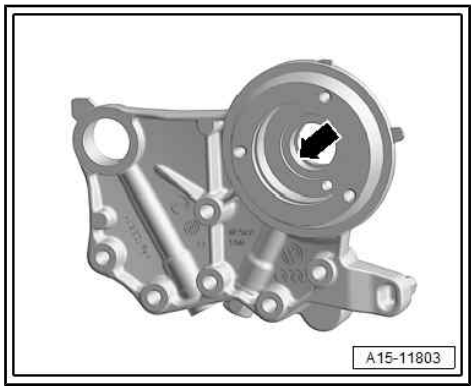

• Carefully attach bearing saddle without tilting it.

– Fit bearing saddle and screw in bolts -arrows- by hand until they make contact.

– Depending on version, remove locking pin - T40011- or locking tool - T40267- .

– Tighten bolts -arrows- for bearing saddle ⇒ page 72 .

– Install timing valve ⇒ Item 6 (page 72) .

Remaining installation steps are carried out in reverse sequence; note the following:

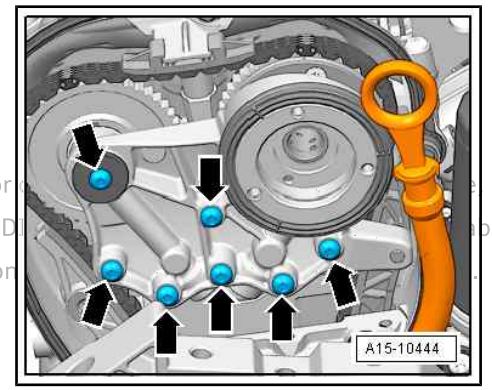

Protected by copyright. Copying for private or [illegible] is not permitted unless authorised by AUDI AG. AUDI [illegible] bility with respect to the correctness of information [illegible]

– Attach turning-over tool - T10531/3- . In “TDC” position, flat surface -1- faces upwards. Screw on flange nut - T10531/4- . Using open-end spanner (32 mm), turn crankshaft two rotations in direction of engine rotation.

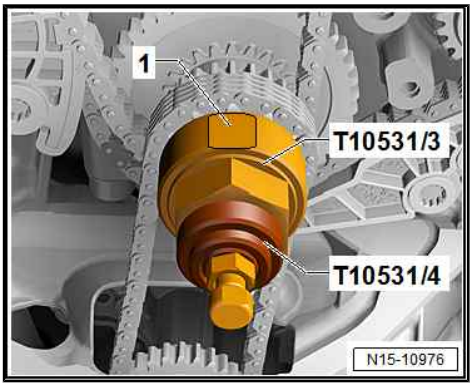

Note

Due to the ratio, the timing chain links with coloured markings are no longer aligned after the engine has been turned.

– Detach turning-over tool and install timing chain cover (bottom) ⇒ page 66 .

– Install timing chain cover (top) ⇒ page 66 .

Tightening torques

♦ ⇒ “2.1 Exploded view - camshaft timing chains”, page 72

♦ ⇒ “2.2 Exploded view - drive chain for balance shaft”, page 74

2.6 Removing and installing drive chain for balance shaft

Removing

– Remove camshaft timing chain ⇒ page 91 .

– Remove chain tensioner for camshaft timing chain -3-.

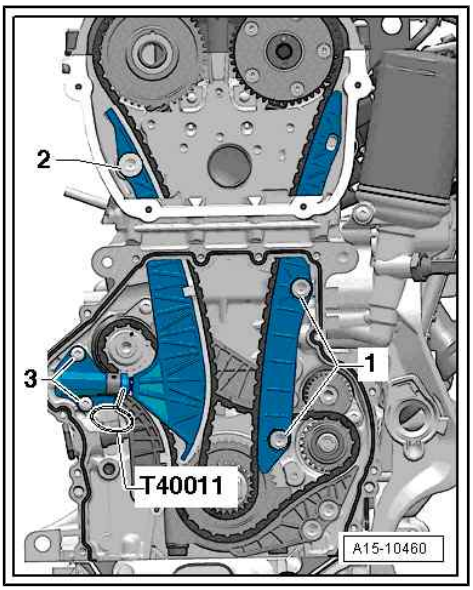

– Remove chain tensioner for drive chain for balance shafts -1-.

– Remove tensioning rail -2-.

– Remove guide rail -3-.

– Remove guide rail -4-.

– Remove timing chain.

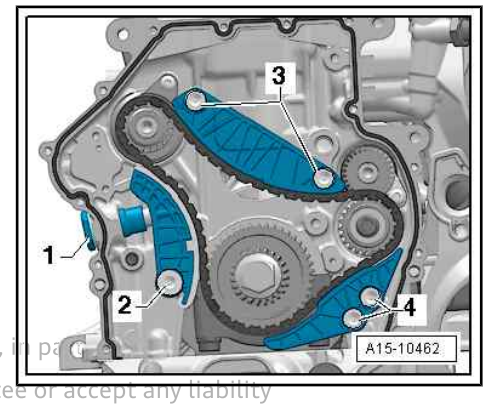

Protected by copyright. Copying for private or commercial purposes, in part or in whole, is not permitted unless authorised by AUDI AG. AUDI AG does not guarantee or accept any liability with respect to the correctness of information in this document. Copyright by AUDI AG.

Installing

– Turn idler gear/balance shaft to markings -arrow-.

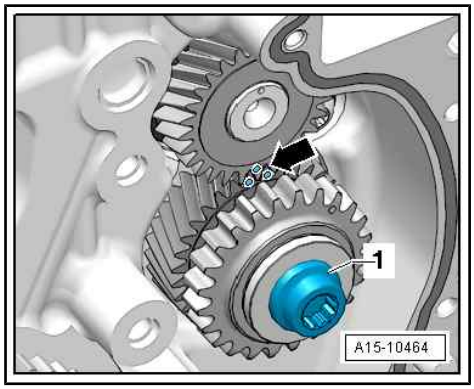

– Fit timing chain; the timing chain links with coloured markings must be positioned at the markings on the chain sprockets.

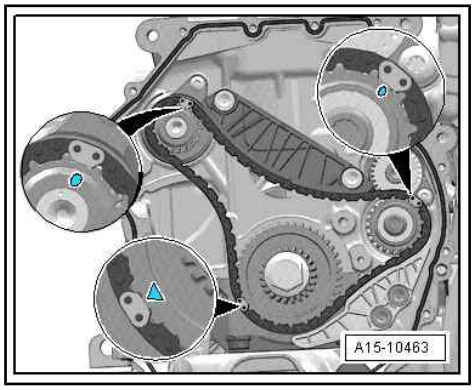

– Fit guide rail for timing chain and tighten bolts -4-.
– Fit guide rail for timing chain and tighten bolts -3-.
– Fit tensioning rail for timing chain and tighten bolt -2-.
– Apply sealant to seal of chain tensioner -1-; for sealant, refer to ⇒ Electronic parts catalogue (ETKA) .
– Screw in chain tensioner for timing chain -1-.

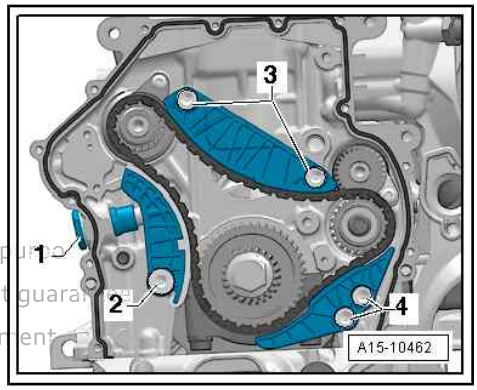

Protected by copyright. Copying for private or commercial purposes, in part, is not permitted unless authorised by AUDI AG. AUDI AG does not guarantee or assume any liability with respect to the correctness of information in this document.

– Check adjustment again.

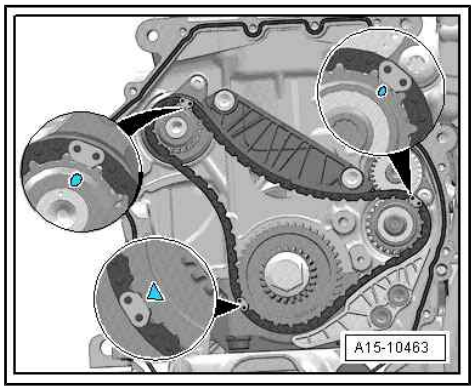

– Check markings on idler gear/balance shaft -arrow-.

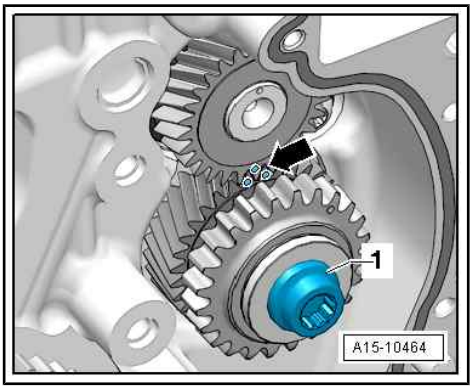

Note

For illustration purposes, the markings on the idler gear/balance shaft are shown with the chain removed.

Remaining installation steps are carried out in reverse sequence; note the following:

– Install camshaft timing chain ⇒ page 91 .

Tightening torques

♦ ⇒ “2.2 Exploded view - drive chain for balance shaft”, page 74

2.7 Checking valve timing

Special tools and workshop equipment required

♦ Spark plug spanner - 3122B-

Protected by copyright. Copying for private or commercial purposes, in part or in whole, is not permitted unless authorised by AUDI AG. AUDI AG does not guarantee or accept any liability with respect to the correctness of information in this document. Copyright by AUDI AG.

♦ Dial gauge set, 4-part - VAS 6341-

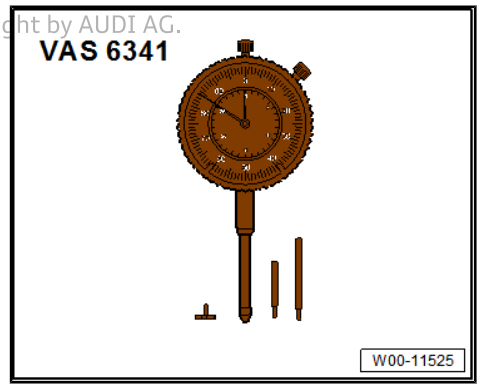

♦ Adapter for dial gauge - T10170 A-

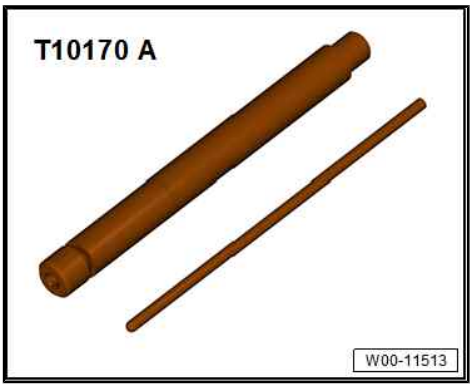

♦ Wrench, 21 mm - T40263-

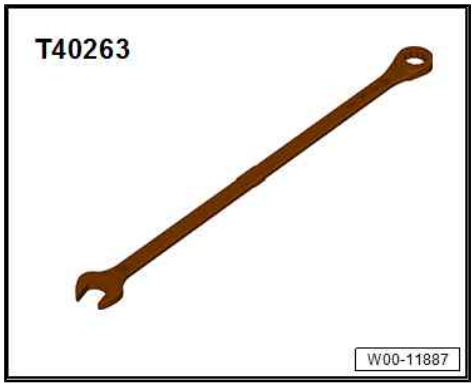

♦ Adapter - T40314-

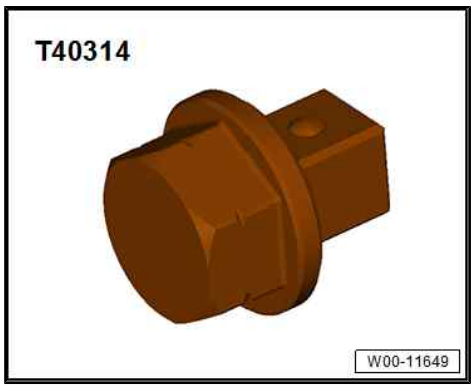

Procedure

– Remove timing chain cover (top) ⇒ page 66 .

– Remove noise insulation (front) ⇒ General body repairs, exterior; Rep. gr. 66 ; Noise insulation; Removing and installing noise insulation .

– Apply wrench, 21 mm - T40263- , adapter - T40314- and socket, 24 mm to vibration damper to turn crankshaft in direction of normal engine rotation until markings -arrow- are positioned almost at top.

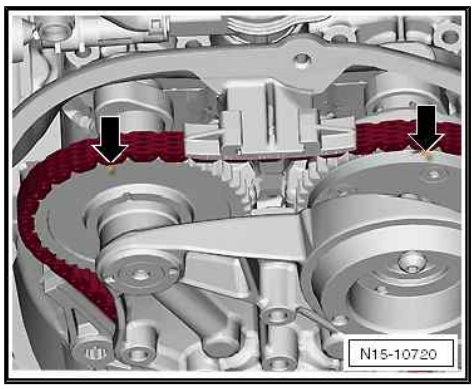

– Remove ignition coil with output stage for cylinder “1” ⇒ page 249 .

– Remove spark plug for cylinder 1 with spark plug socket and extension - 3122B- .

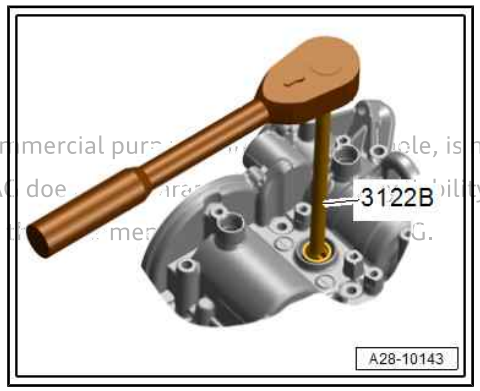

Protected by copyright. Copying for private or commercial purposes, in whole or in part, is not permitted unless authorised by AUDI AG. AUDI AG does not guarantee or assume any liability with respect to the correctness of information in this document. Copyright by AUDI AG.

– Screw dial gauge adapter - T10170/A- into spark plug thread as far as stop.

– Insert dial gauge from dial gauge set, 4-part - VAS 6341- with extension - T10170A/1- as far as stop and secure with locking nut -arrow-.

– Turn crankshaft slowly in normal direction of engine rotation until needle in dial gauge has reached maximum position. When needle has reached maximum position (i.e. turning point in dial gauge), piston is at »TDC«.

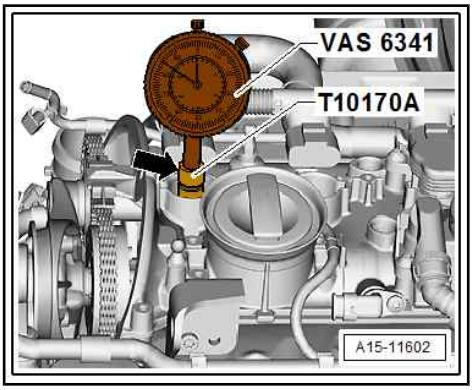

Note:

♦ If the crankshaft has been turned beyond the “TDC” position, it must be turned two rotations further in normal direction of engine rotation. Do not turn engine in opposite direction to normal rotation.

♦ The combination of wrench, 21 mm - T40263- , adapter - T40314- and socket, 24 mm can be fitted onto the vibration damper better than the counterhold tool - T10355- described below.

– Measure distance from left outer edge of rib -1- to marking -2- on inlet camshaft.

• Specification: 61 … 64 mm.

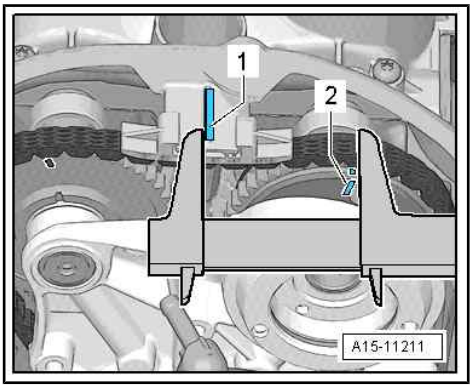

– If specification is obtained, measure distance between marking on exhaust camshaft -3- and marking on inlet camshaft -4-.

• Specification: 124 … 126 mm.

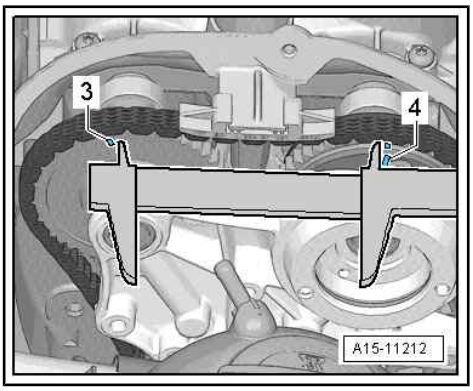

Note

If the timing chain is one tooth out of position, this results in a deviation of approx. 6 mm from specification. The timing chain must be refitted if it is not in the correct position.

• Notch -1- on vibration damper must align with arrow marking -2- on cover for timing chains (bottom).

– Install timing chain cover (top) ⇒ page 66 .

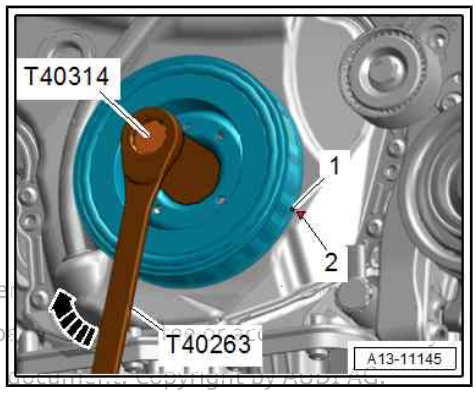

Tightening torques

♦ ⇒ General body repairs, exterior; Rep. gr. 66 ; Noise insulation; Exploded view - noise insulation

Protected by copyright. Copying for private or commer
permitted unless authorised by AUDI AG. AUDI AG do
with respect to the correctness of information in this

3 Cylinder head

⇒ "3.1 Exploded view - cylinder head", page 106
⇒ "3.2 Removing and installing cylinder head", page 109
⇒ "3.4 Checking compression", page 117

3.1 Exploded view - cylinder head

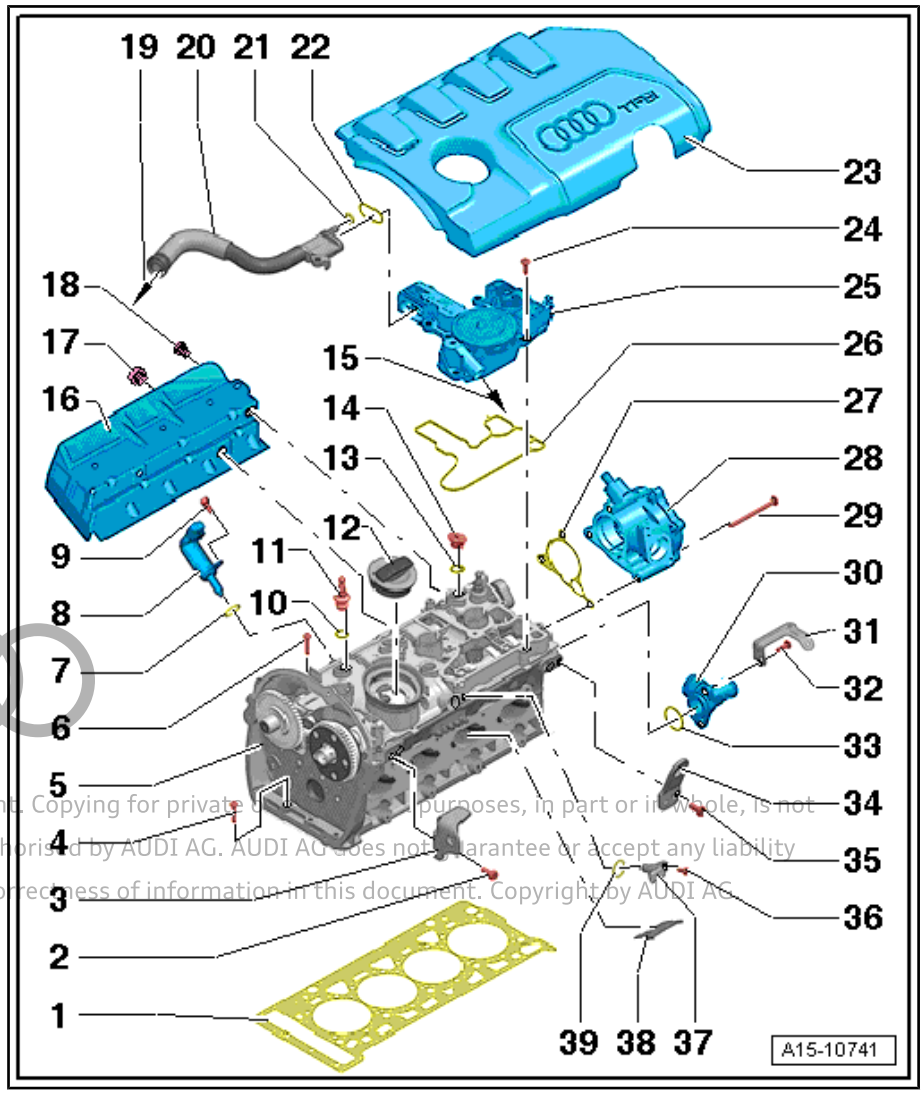

1 - Cylinder head gasket
- ❑ Renewing ⇒ page 109
- ❑ Note installation position: part number must face cylinder head
- ❑ If renewed, change coolant and engine oil

2 - Bolt
- ❑ 25 Nm

3 - Engine lifting eye

4 - Bolt
- ❑ Renew after removing
- ❑ Slackening ⇒ page 108
- ❑ Tightening torque and sequence ⇒ page 108

5 - Cylinder head
- ❑ Removing and installing ⇒ page 109
- ❑ Checking for distortion ⇒ page 109
- ❑ If renewed, change coolant and engine oil
- ❑ Do not machine sealing surface (top)
- ❑ Always renew cylinder head cover as well
- ❑ Removing and installing non-return valve ⇒ page 116

6 - Bolt
- ❑ Renew after removing
- ❑ Slackening ⇒ page 108
- ❑ Tightening torque and sequence ⇒ page 108

7 - O-ring
- ❑ 2.0 ltr. engine only
- ❑ Check for damage
- ❑ Not available as a replacement part, supplied together with actuator for camshaft adjustment
- ❑ Lubricate with engine oil

8 - Actuator for camshaft adjustment
- ❑ 2.0 ltr. engine only
- ❑ Removing and installing ⇒ page 137

Protected by copyright. Copying for private or commercial purposes, in part or in whole, is not permitted unless authorised by AUDI AG. AUDI AG does not guarantee or accept any liability with respect to the correctness of information in this document. Copyright by AUDI AG.

9 - Bolt
- ❑ 2.0 ltr. engine only
- ❑ 5 Nm

10 - O-ring
- ❑ Renew after removing
- ❑ Lubricate with engine oil

11 - Sealing plug
- ❑ With ball head for engine cover panel
- ❑ 5 Nm

12 - Sealing cap
- ❑ With seal

13 - O-ring
- ❑ Renew after removing
- ❑ Lubricate with engine oil

14 - Sealing plug

15 - To intake manifold

16 - Heat shield

17 - Bolt
- ❑ 20 Nm

18 - Bolt
- ❑ 20 Nm

19 - To intake manifold/turbocharger

20 - Breather pipe

21 - O-ring
- ❑ Not available as replacement part

22 - Gasket
- ❑ Not available as replacement part

23 - Engine cover panel

24 - Bolt
- ❑ Tightening torque and sequence ⇒ page 164

25 - Oil separator
- ❑ On cylinder head cover
- ❑ Exploded view ⇒ page 163

Protected by copyright. Copying for private or commercial purposes, in part or in whole, is not permitted unless authorised by AUDI AG. AUDI AG does not guarantee or accept any liability with respect to the correctness of information in this document. Copyright by AUDI AG.

26 - Gasket
- ❑ Renew if damaged

27 - Gasket
- ❑ Renew if damaged

28 - Vacuum pump
- ❑ Removing and installing ⇒ Brake system; Rep. gr. 47 ; Vacuum system; Removing and installing vacuum pump

29 - Bolt
- ❑ Tightening torque ⇒ Brake system; Rep. gr. 47 ; Vacuum system; Exploded view - vacuum pump

30 - Connection

31 - Bracket

32 - Bolt

- ❑ 9 Nm

33 - O-ring

- ❑ Renew after removing
- ❑ Lubricate with coolant

34 - Engine lifting eye

35 - Bolt

- ❑ 25 Nm

36 - Bolt

- ❑ Tightening torque ⇒ Item 3 (page 248)

37 - Hall sender - G40-

- ❑ Exploded view ⇒ page 248

38 - Separating plate

39 - O-ring

- ❑ Renew after removing
- ❑ Lubricate with engine oil

Slackening cylinder head bolts

– Remove bolts -arrows-.

– Slacken cylinder head bolts in the sequence -1 ... 10-.

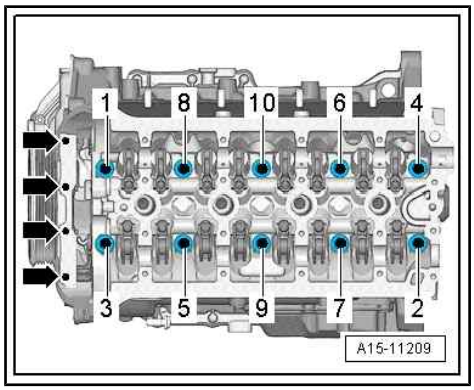

Cylinder head - tightening torque and sequence

Protected by copyright. Copying for private or commercial purposes, in part or in whole, is not permitted unless authorised by AUDI AG. AUDI AG does not guarantee or assume any liability with respect to the correctness of information in this document. Copyright by AUDI AG

- After removing, renew bolts tightened with specified tightening angle.

◆ Bolts - difference:

◆ Bolt without collar

◆ Bolt with collar -arrow-

– Tighten bolts in stages in the sequence shown:

Stage	Bolts	Tightening torques/angle specification
1.	-1 … 10-	Screw in by hand until contact is made
2.	-1 … 10-	Without collar: 40 Nm; with collar: 50 Nm (difference ⇒ page 108)
3.	-1 … 10-	Turn 90° further
4.	-1 … 10-	Turn 90° further
5.	-Arrows-	8 Nm
6.	-Arrows-	Turn 90° further

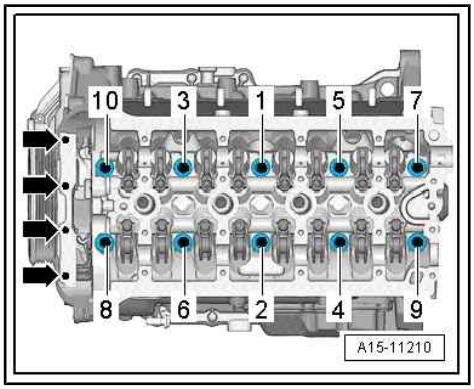

Checking cylinder head for distortion

– Use straight edge and feeler gauge to measure cylinder head for distortion at several points.

♦ Max. permissible distortion: 0.05 mm

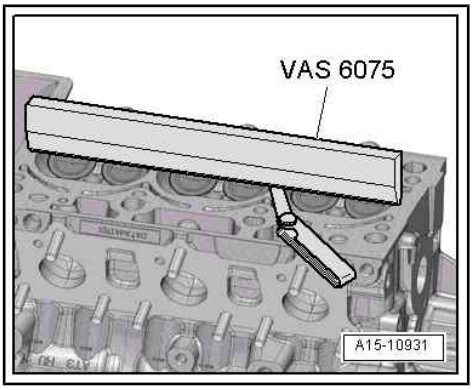

3.2 Removing and installing cylinder head

Special tools and workshop equipment required

♦ Spark plug spanner - 3122B-

Protected by copyright. Copying for private or commercial purposes, in part or in whole, is not permitted unless authorised by AUDI AG. AUDI AG does not guarantee or accept any liability with respect to the correctness of information in this document. Copyright by AUDI AG.

♦ Engine bung set - VAS 6122-

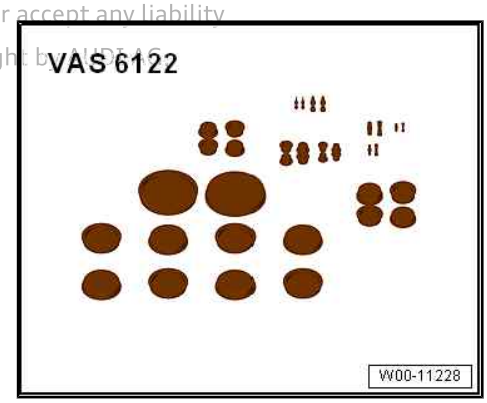

- Hose clip pliers - VAS 6362-

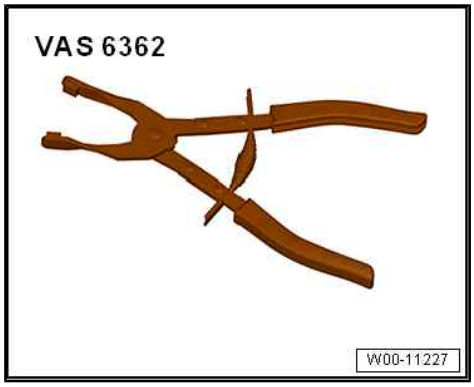

- Special wrench (Polydrive) - T10070-

- Wrench, 21 mm - T40263-

Protected by copyright. Copying for private or commercial purposes, in part or in whole, is not permitted unless authorised by AUDI AG. AUDI AG does not guarantee or accept any liability with respect to the correctness of information in this document. Copyright by AUDI AG.

- Bit XZN 12 - T40270-

♦ Adapter - T40314-

Protected by copyright. Copying for private or commercial purposes, in part or in whole, is not permitted unless authorised by AUDI AG. AUDI AG does not guarantee or accept any liability with respect to the correctness of information in this document. Copyright by AUDI AG.

♦ Open end spanner insert, AF 24

Removing

- Re-install all cable ties in original positions.
- All open inlet and exhaust ports must be sealed with suitable plugs (e.g. from engine bung set - VAS 6122-).

Preparatory work may be necessary depending on model ⇒ 4-cylinder direct injection engine (1.8, 2.0 ltr. 4-valve TFSI); Rep. gr. 15 ; Cylinder head; Removing and installing cylinder head .

Coolant hose, version 1:

– Release retaining clips -1, 2- and disconnect coolant hoses.

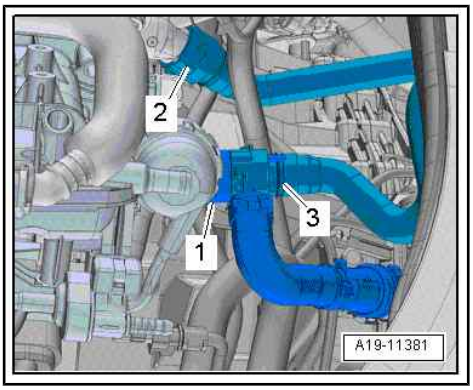

Coolant hose, version 2:

– Lift retaining clips -arrows- and disconnect coolant hoses at rear.

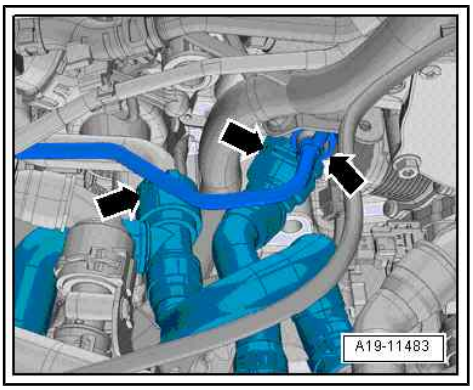

Coolant hose, version 3:

– Lift rear retaining clips -arrows-, release hose clip -2- and detach coolant hoses.

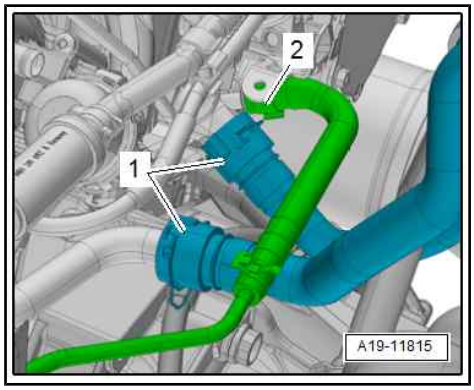

Protected by copyright. Copying for private or commercial purposes, in part or in whole, is not permitted unless authorised by AUDI AG. AUDI AG does not guar with respect to the correctness of information in this document.

All vehicles (continued):

Note

Installation position varies depending on engine version

– Disconnect fuel line -2- ⇒ Fuel supply system; Rep. gr. 20 ; Plug-in connectors; Disconnecting plug-in connectors .

– Release hose clip -1- and disconnect hose from activated charcoal filter.

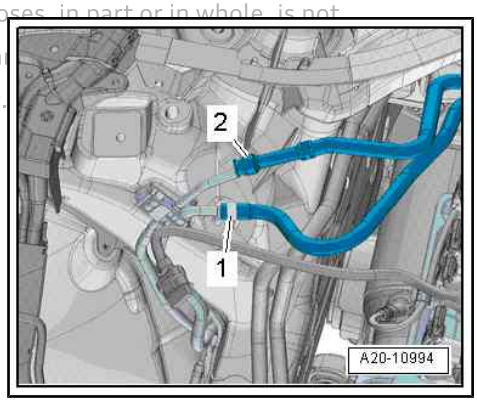

Note

- *Place a cloth under coolant pipe to catch escaping coolant.*
- *Installation position varies depending on engine version*

– Unscrew bolts -1- and -2- and swivel coolant pipe (front) upwards.

– Release hose clip -left arrow- and detach coolant hose.

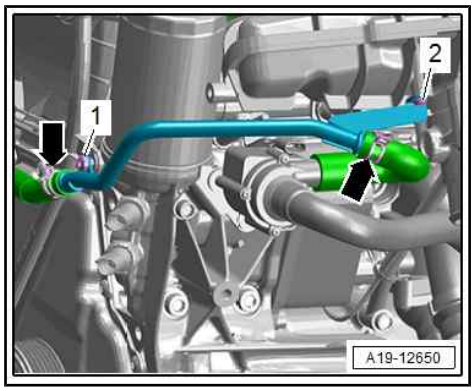

– Remove support for intake manifold (remove securing nut -1- and bolt -2-).

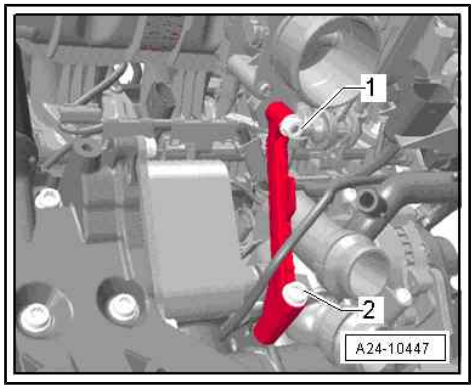

– Remove bolts -3- (only one bolt on some versions).
– Unscrew banjo bolts -1- and -2- and move lines to the side.

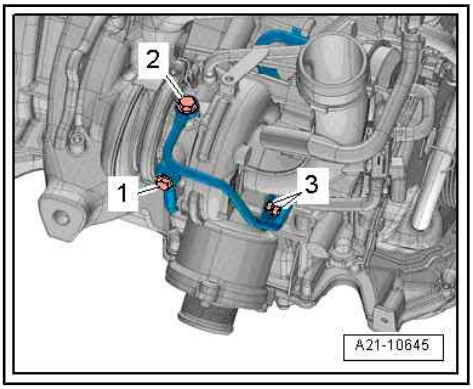

– Unplug electrical connectors -1- and -2- at oil pressure switch - F22- and oil pressure switch for reduced oil pressure - F378- .

Note

Installation position varies depending on engine version

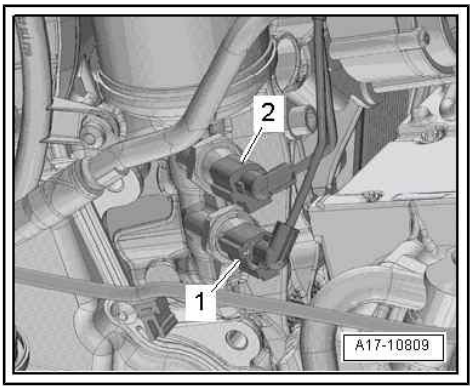

– Open hose clip -arrow-, detach air hose and swivel to side.

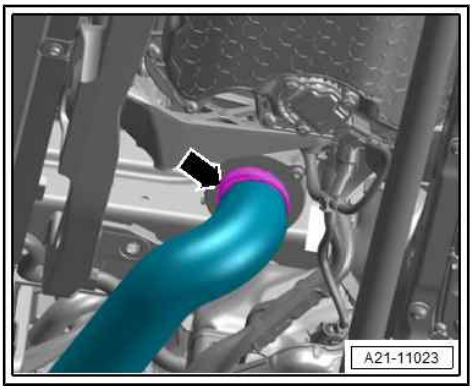

– Unplug electrical connectors -1 and 2- and move wiring clear.

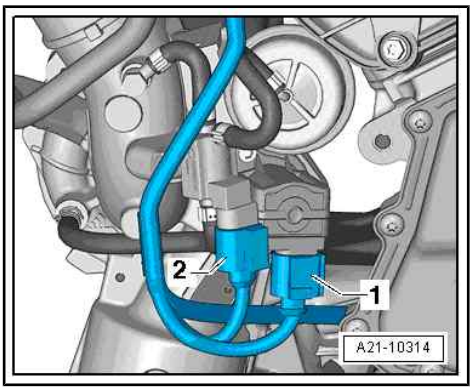

Protected by copyright. Copying for private or commercial purposes, in part or in whole, is not permitted unless authorised by AUDI AG. AUDI AG does not guarantee or accept any liability with respect to the correctness of information in this document. Copyright by AUDI AG.

– Unplug connector from oil level and oil temperature sender - G266- -arrow- and move wiring clear.

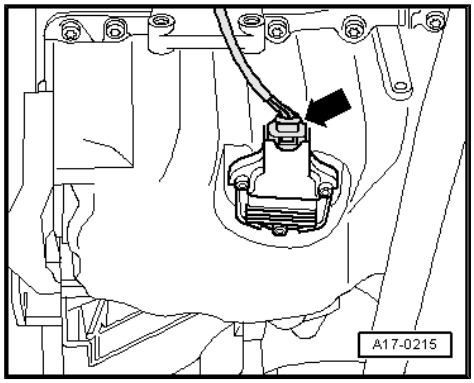

– Slacken bolts -1- from top.
– Remove bolt -2- from underneath.

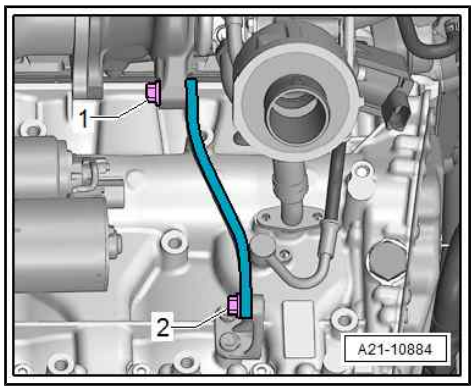

– Remove bolts -arrows- at oil return line.

Protected by copyright. Copyright. Copying for private or commerc
permitted unless authorised by AUDI AG. AUDI AG does
with respect to the correctness of information in this do

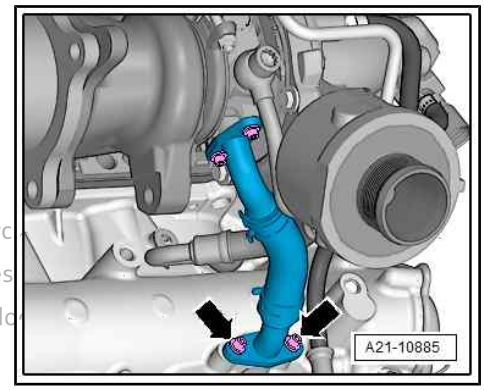

– Remove spark plugs with spark plug spanner - 3122B- .

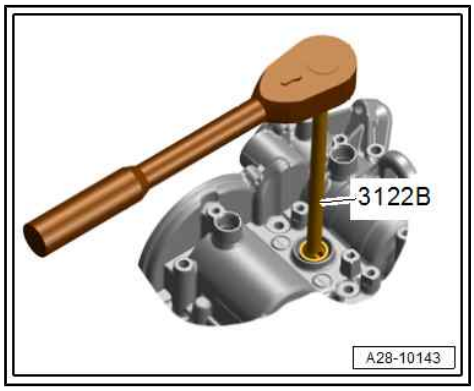

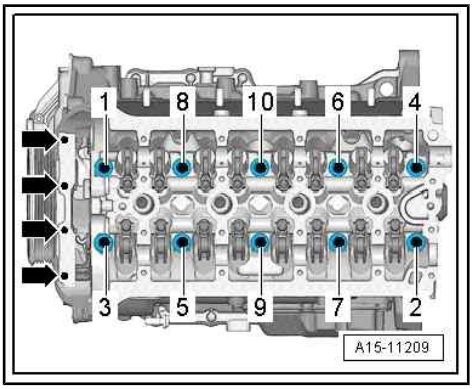

– Remove bolts -arrows-.

– Use special wrench, long reach - T10070- / bit XZN 12 - T40270- to remove cylinder head bolts in the sequence -1 ... 10-.

• Make sure all hoses/pipes and wiring on component are disconnected.

• Make sure tensioning rail and guide rail are not damaged when lifting off cylinder head.

– Take off cylinder head.

– Place cylinder head onto soft surface (foam plastic).

– Seal off all open passages in the intake and exhaust system with clean cloths or plugs (thoroughly cleaned) from engine bung set - VAS 6122- .

Installing

NOTICE

Risk of damage to sealing surfaces if handled incorrectly.

– **Carefully remove sealant residue from cylinder head and cylinder block.**

• After removing, renew bolts tightened with specified tightening angle.

• Renew self-locking nuts, as well as seals, gaskets and O-rings after removing.

• Secure all hose connections with correct type of hose clips (as original equipment) ⇒ Electronic parts catalogue .

• Do not remove new cylinder head gasket from packaging until it is ready to be fitted.

• Handle the cylinder head gasket very carefully to prevent damage to the silicone coating or the indented area of the gasket.

• When installing an exchange cylinder head, the plastic protectors fitted to protect the open valves should not be removed until the cylinder head is ready to be fitted.

• When installing an exchange cylinder head, the contact surfaces between roller rocker finger and cam must be oiled before installing the cylinder head cover.

• After fitting a new cylinder head or cylinder head gasket, change engine oil and coolant in entire cooling system.

Protected by copyright. Copying for private or commercial purposes, in part or in whole, is not permitted unless authorised by AUDI AG. AUDI AG does not guarantee or accept any liability with respect to the correctness of information in this document. Copyright by AUDI AG.

– Carefully remove sealant residue from cylinder head and cylinder block.

– Ensure that no long scores or scratches are made on the surfaces.

– Carefully remove any remaining emery and abrasive material.

– Clean blind holes for cylinder head bolts in cylinder block so that they are free of oil and coolant residue.

– Place cylinder head gasket in position.

♦ Note position of centring pins in cylinder block -arrows-.

♦ Note installation position of cylinder head gasket. Part No. should be legible from inlet side.

– If crankshaft has been rotated: Set piston of cylinder 1 to top dead centre and then turn crankshaft back slightly.

• Make sure that components are not damaged by timing chain when rotating crankshaft.

– Fit cylinder head.

– Fit and tighten cylinder head bolts.

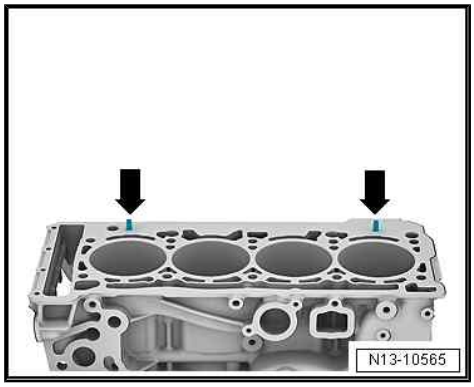

Note:

Cylinder head bolts do not have to be torqued down again later after repair work.

Remaining installation steps are carried out in reverse sequence; note the following:

– Use wrench, 21 mm - T40263-, adapter - T40314- and socket, 24 mm to turn crankshaft until vibration damper is at “TDC” position.

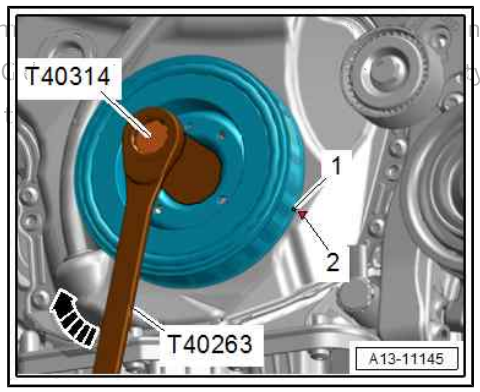

Protected by copyright. Copying for private or con... not permitted unless authorised by AUDI AG. AUDI AG ... with respect to the correctness of information in ...

• Notch -1- on vibration damper must align with arrow marking -2- on cover for timing chains (bottom).

• Marking on timing chain cover (bottom) must be in 4 o'clock position.

– Connect coolant hose with plug-in connector ⇒ 4-cylinder direct injection engine (1.8, 2.0 ltr. 4-valve TFSI); Rep. gr. 19 ; Radiator/radiator fans; Exploded view - radiator/radiator fans .

– Install camshafts ⇒ page 123 .

– Install spark plugs ⇒ page 248 .

– Change engine oil ⇒ page 153 .

– Change coolant ⇒ 4-cylinder direct injection engine (1.8, 2.0 ltr. 4-valve TFSI); Rep. gr. 19 ; Cooling system/coolant; Draining and filling cooling system .

Additional work depending on model ⇒ 4-cylinder direct injection engine (1.8, 2.0 ltr. 4-valve TFSI); Rep. gr. 15 ; Cylinder head; Removing and installing cylinder head

Tightening torques

♦ ⇒ “3.1 Exploded view - cylinder head”, page 106

♦ ⇒ 4-cylinder direct injection engine (1.8, 2.0 ltr. 4-valve TFSI); Rep. gr. 19 ; Coolant pipes; Exploded view - coolant pipes

♦ ⇒ “1.1 Exploded view - turbocharger”, page 186

♦ ⇒ “4.1 Exploded view - intake manifold”, page 209

3.3 Removing and installing non-return valve

Special tools and workshop equipment required

♦ Assembly tool - T10118-

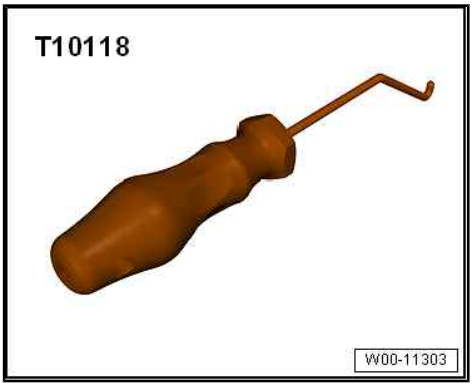

Removing

- Cylinder head removed ⇒ page 109 .

– Pull out non-return valve -arrow- using assembly tool - T10118- .

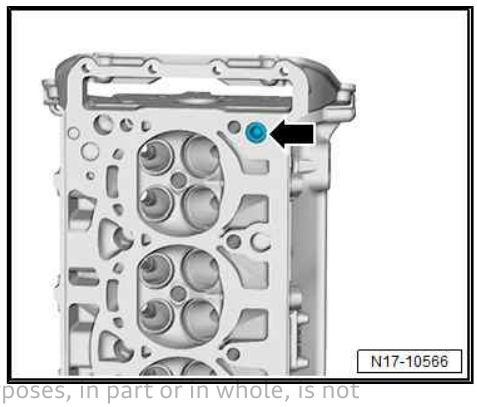

Installing

– Clean oil passage.

– Lubricate seal for new non-return valve with clean engine oil.

– Insert non-return valve into cylinder head by hand as far as it will go.

Protected by copyright. Copying for private or commercial purposes, in part or in whole, is not permitted unless authorized by AUDI AG. AUDI AG does not guarantee or accept any liability with respect to the correctness of information in this document. Copyright by AUDI AG.

3.4 Checking compression

Special tools and workshop equipment required

♦ Spark plug spanner - 3122B-

♦ Compression tester - V.A.G 1763-

Test sequence

- Engine oil temperature at least 30 °C
- Battery voltage at least 12.7 V

– Remove ignition coils with output stages ⇒ page 249 .
– Remove spark plugs with spark plug spanner - 3122B- .

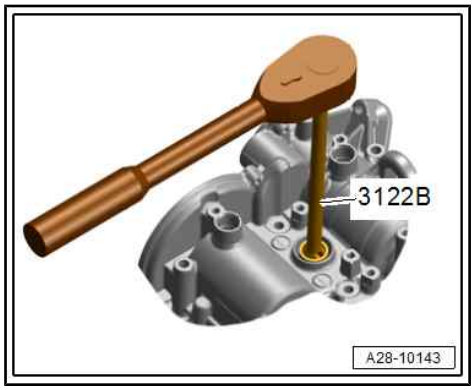

– Check compression pressure with compression tester - V.A.G 1763- , adapter - V.A.G 1381/1- and adapter - V.A.G 1381/5A- . (Using the compression tester ⇒ Operating instructions .)

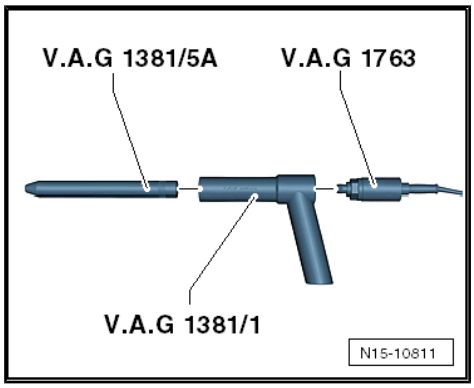

• A second mechanic is required for the following step.
– Have a second mechanic operate starter until tester shows no further pressure increase.

Compression pressure	bar
When new	11.0 … 14.0
Wear limit	7.0
Maximum difference between cylinders	3.0

Attaching

– Install spark plugs ⇒ page 248 .
– Install ignition coils with output stages ⇒ page 249 .
– Erase any entries in engine control unit event memory resulting from testing ⇒ Vehicle diagnostic tester.

Protected by copyright. Copying for private or commercial purposes, in part or in whole, is not permitted unless authorised by AUDI AG. AUDI AG does not guarantee or accept any liability with respect to the correctness of information in this document. Copyright by AUDI AG.

4 Valve gear

⇒ “4.1 Exploded view - valve gear”, page 119

⇒ “4.2 Removing and installing camshaft”, page 123

⇒ “4.3 Installing ball for slider”, page 136

⇒ “4.4 Removing and installing actuators for camshaft adjustment”, page 137

⇒ “4.5 Removing and installing camshaft control valve 1 N205 ”, page 138

⇒ “4.6 Removing and installing valve stem oil seals”, page 138

4.1 Exploded view - valve gear

⇒ “4.1.1 Exploded view - valve gear, vehicles with 1.8 ltr. engine”, page 119

⇒ “4.1.2 Exploded view - valve gear, vehicles with 2.0 ltr. engine”, page 121

Protected by copyright. Copying for private or commercial purposes, in part or in whole, is not permitted unless authorised by AUDI AG. AUDI AG does not guarantee or accept any liability with respect to the correctness of information in this document. Copyright by AUDI AG.

4.1.1 Exploded view - valve gear, vehicles with 1.8 ltr. engine

1 - Exhaust valve
- ❑ Do not machine, only grinding-in is permitted
- ❑ Valve dimensions ⇒ page 149
- ❑ Checking valve guides ⇒ page 149

2 - Cylinder head

3 - Valve guide
- ❑ Checking ⇒ page 149

4 - Valve stem oil seal
- ❑ Renewing ⇒ page 138

5 - Valve spring

6 - Valve spring plate

7 - Valve cotters

8 - Hydraulic compensation element
- ❑ With roller rocker finger
- ❑ Do not interchange
- ❑ Lubricate contact surface

9 - Exhaust camshaft
- ❑ Removing and installing ⇒ “4.2.1 Removing and installing camshaft - vehicles with 1.8 ltr. engine”, page 123
- ❑ Check radial clearance with Plastigauge (roller rocker fingers removed)
- ❑ Radial clearance: 0.024 ... 0.066 mm
- ❑ Runout: max. 0.04 mm

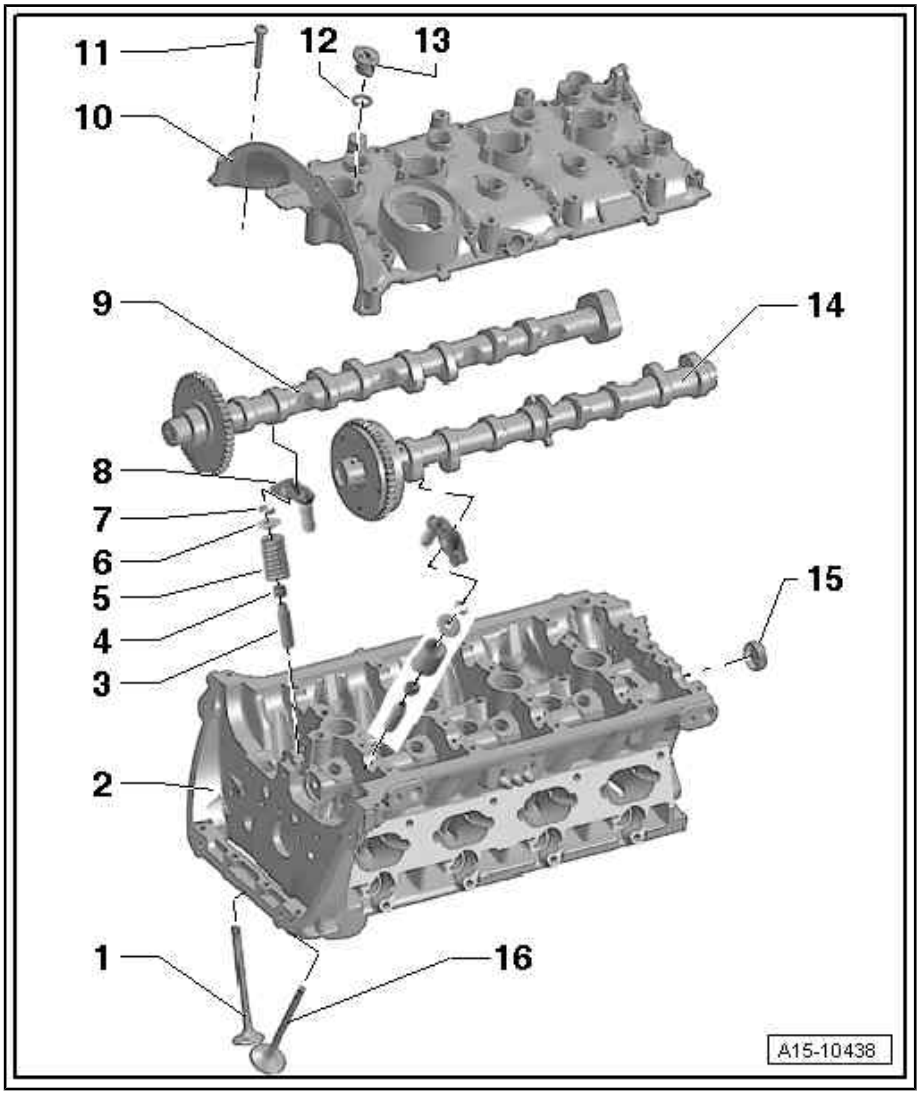

10 - Cylinder head cover

- ❑ With integrated camshaft bearings
- ❑ Removing and installing
  ⇒ “4.2.1 Removing and installing camshaft - vehicles with 1.8 ltr. engine”, page 123
- ❑ Clean sealing surface; machining not permitted
- ❑ Remove old sealant residues
- ❑ Always renew cylinder head as well

11 - Bolt

- ❑ Renew after removing
- ❑ Slackening ⇒ page 120
- ❑ Tightening torque and sequence ⇒ page 121

12 - O-ring

- ❑ Renew after removing
- ❑ Lubricate with engine oil

13 - Sealing plug

14 - Inlet camshaft

- ❑ Removing and installing
  ⇒ “4.2.1 Removing and installing camshaft - vehicles with 1.8 ltr. engine”, page 123
- ❑ Check radial clearance with Plastigauge (roller rocker fingers removed)
- ❑ Radial clearance: 0.024 ... 0.066 mm
- ❑ Runout: max. 0.04 mm

15 - Sealing cap

- ❑ Renew after removing
- ❑ Removing sealing cap with cylinder head cover installed: pierce on one side with an awl and pry out
- ❑ Installing ⇒ page 127

16 - Inlet valve

- ❑ Do not machine, only grinding-in is permitted
- ❑ Valve dimensions ⇒ page 149
- ❑ Checking valve guides ⇒ page 149

Protected by copyright. Copying for private or commercial purposes, in part or in whole, is not permitted unless authorised by AUDI AG. AUDI AG does not guarantee or accept any liability with respect to the correctness of information in this docum

Slackening cylinder head cover bolts

– Loosen cylinder head cover bolts in the sequence -1 ... 6-.

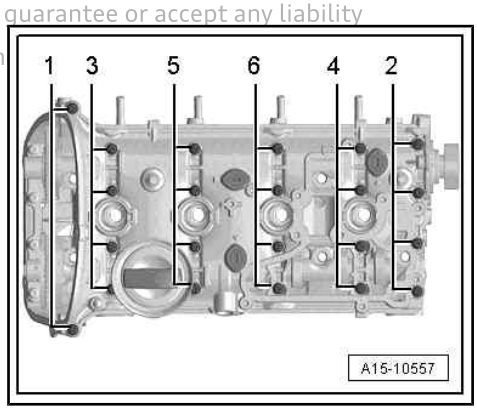

Tightening torques and sequence for cylinder head cover

– Tighten bolts in stages in the sequence shown:

Stage	Bolts	Tightening torques/angle specification
1.	-1 … 6-	Screw in by hand in several stages until contact is made
2.	-1 … 6-	8 Nm
3.	-1 … 6-	Turn 90° further

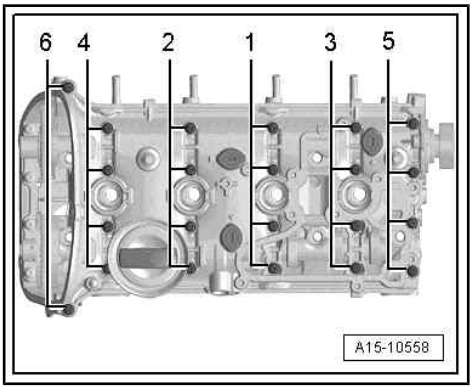

Note

Take care to keep cylinder head cover straight.

4.1.2 Exploded view - valve gear, vehicles with 2.0 ltr. engine

1 - Exhaust valve

- ❑ Do not machine, only grinding-in is permitted
- ❑ Valve dimensions ⇒ page 150
- ❑ Checking valve guides ⇒ page 149

2 - Cylinder head

- ❑ Exploded view ⇒ page 106

3 - Valve guide

- ❑ Checking ⇒ page 149

4 - Valve stem oil seal

- ❑ Renewing ⇒ page 138

5 - Valve spring

6 - Valve spring plate

7 - Valve cotters

8 - Hydraulic compensation element

- ❑ With roller rocker finger
- ❑ Do not interchange
- ❑ Lubricate contact surface

9 - Exhaust camshaft

- ❑ Removing and installing ⇒ page 129
- ❑ Check radial clearance with Plastigauge (roller rocker fingers removed)
- ❑ Radial clearance: 0.024 ... 0.066 mm
- ❑ Runout: max. 0.04 mm

10 - Spring

- ❑ Not available as replacement part

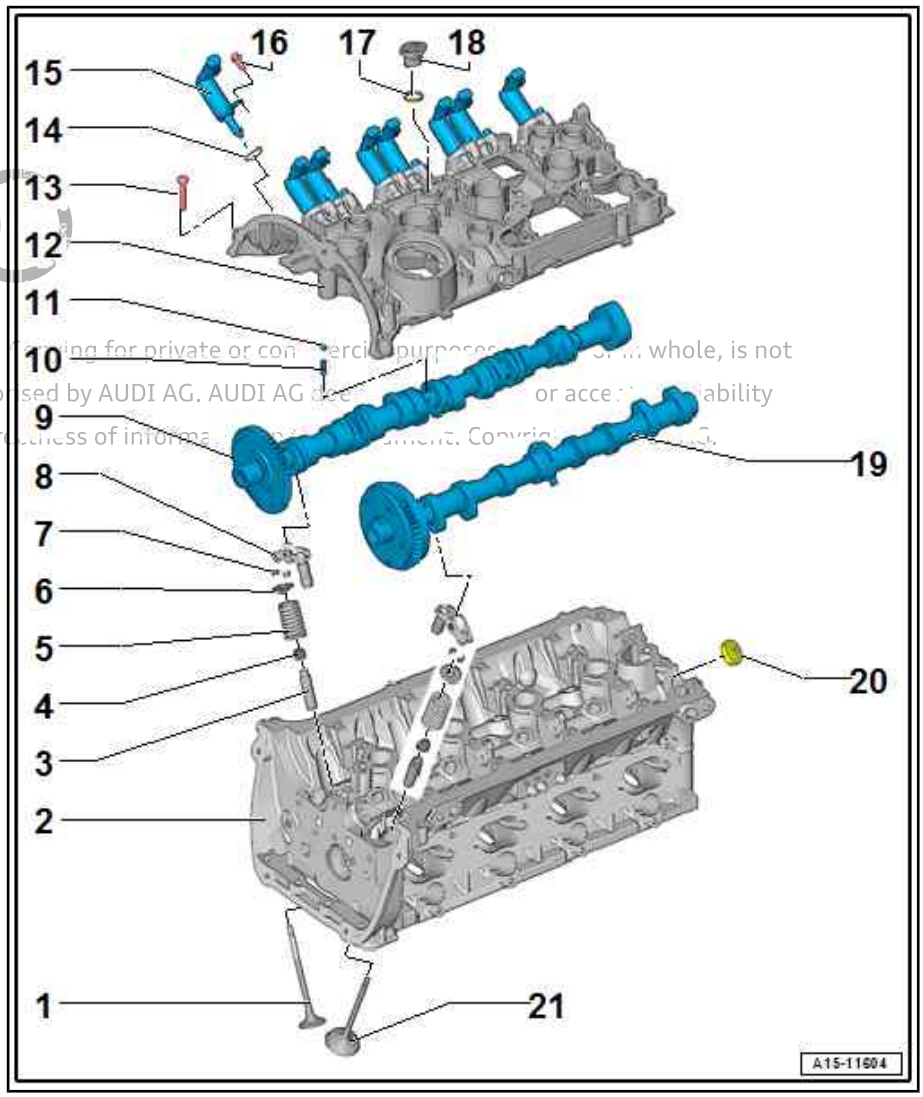

Protected by copyright. Copying for private or commercial purposes, in part or in whole, is not permitted unless authorised by AUDI AG. AUDI AG does not make any representation or warranty regarding accuracy or completeness with respect to the correctness of information in this document. Copyright by AUDI AG.

11 - Ball

- ❑ For slider
- ❑ Installing ⇒ page 136

12 - Cylinder head cover

- ❑ With integrated camshaft bearings
- ❑ Removing and installing
  ⇒ “4.2.2 Removing and installing camshaft - vehicles with 2.0 ltr. engine”, page 129
- ❑ Clean sealing surface; machining not permitted
- ❑ Remove old sealant residues
- ❑ Always renew cylinder head as well

13 - Bolt

- ❑ Renew after removing
- ❑ Slackening ⇒ page 120
- ❑ Tightening torques and sequence ⇒ page 121

14 - O-ring

- ❑ Lubricate with engine oil
- ❑ Check for damage
- ❑ Not available as a replacement part, supplied together with actuator for camshaft adjustment

15 - Actuator for camshaft adjustment

- ❑ Removing and installing ⇒ page 137

16 - Bolt

- ❑ 5 Nm

17 - O-ring

- ❑ Renew after removing
- ❑ Lubricate with engine oil

18 - Sealing plug

19 - Inlet camshaft

- ❑ Removing and installing ⇒ page 129
- ❑ Check radial clearance with Plastigauge (roller rocker fingers removed)
- ❑ Radial clearance: 0.024 ... 0.066 mm
- ❑ Runout: max. 0.04 mm

Protected by copyright. Copying for private or commercial purposes, in part or in whole, is not permitted unless authorised by AUDI AG. AUDI AG does not guarantee or accept any liability with respect to the correctness of information in this document. Copyright by AUDI AG.

20 - Sealing cap

- ❑ Renew after removing
- ❑ Removing sealing cap with cylinder head cover installed: pierce on one side with an awl and pry out
- ❑ Installing ⇒ page 127

21 - Inlet valve

- ❑ Do not machine, only grinding-in is permitted
- ❑ Valve dimensions ⇒ page 150
- ❑ Checking valve guides ⇒ page 149

4.2 Removing and installing camshaft

⇒ "4.2.1 Removing and installing camshaft - vehicles with 1.8 ltr. engine", page 123

⇒ "4.2.2 Removing and installing camshaft - vehicles with 2.0 ltr. engine", page 129

4.2.1 Removing and installing camshaft - vehicles with 1.8 ltr. engine

Special tools and workshop equipment required

- Counterhold tool - T10172A-

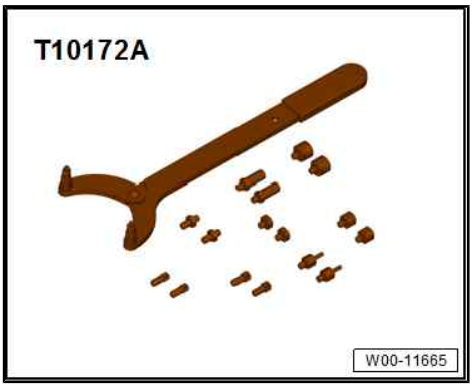

- Thrust piece - T10174-

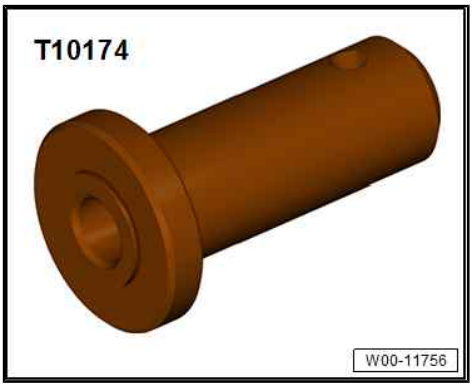

- Sealant ⇒ Electronic parts catalogue

Removing

- Sealing surfaces at bottom of cylinder head cover and top of cylinder head must not be machined.
- The camshaft bearings are integrated into the cylinder head and cylinder head cover. The timing chain must be slackened before removing the cylinder head cover.
- Renew sealing cap ⇒ Item 15 (page 120) if cylinder head cover has been loosened.
- Re-install all cable ties in original positions.
- Renew bolts for cylinder head cover after removal.

Preparatory work may be necessary depending on model ⇒ 4-cylinder direct injection engine (1.8, 2.0 ltr. 4-valve TFSI); Rep. gr. 15 ; Valve gear; Removing and installing camshaft .

Protected by copyright. Copying for private or commercial purposes, in part or in whole, is not permitted unless authorised by AUDI AG. AUDI AG does not guarantee or accept any liability with respect to the correctness of information in this document. Copyright by AUDI AG.

– Remove timing chain from camshafts ⇒ page 80 .
– Remove ignition coils with output stages ⇒ page 249 .
– Remove oil separator on cylinder head cover ⇒ page 164 .

– Disconnect pipe -arrows-.
– Unplug electrical connector -1- from Hall sender - G40- .

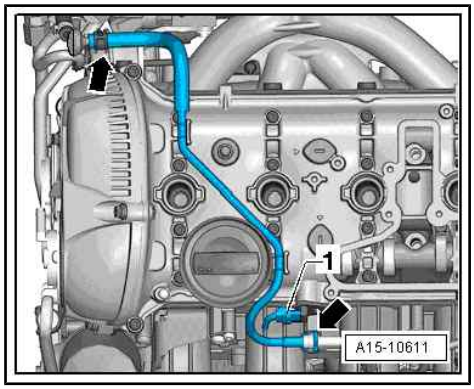

– Use spanner to turn inlet camshaft in direction of -arrow 1- and slide camshaft clamp - T40271/2- out of teeth on chain sprocket in direction of -arrow 2- and move camshaft into rest position.

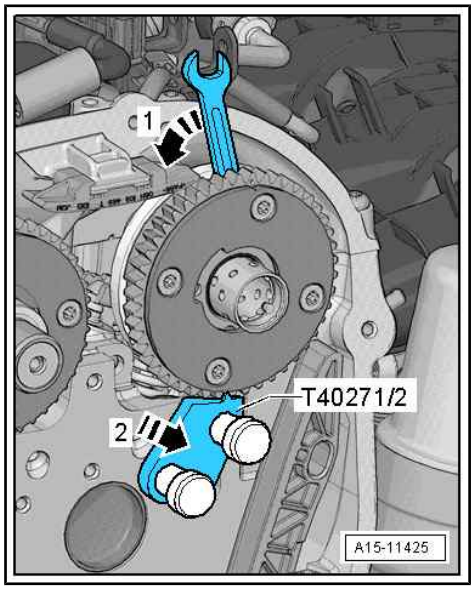

With assembly clearance feature

– Use spanner to turn exhaust camshaft in direction of -arrow 1- and slide camshaft clamp - T40271/1- out of teeth on chain sprocket in direction of -arrow 2- and move camshaft into rest position.

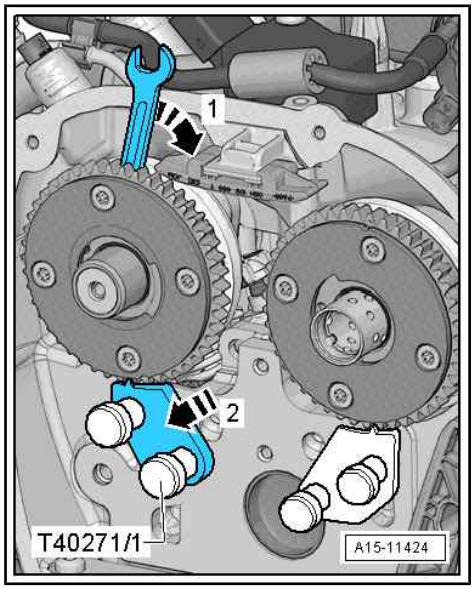

Protected by copyright. Copying for private or commercial purposes, in part or in whole, is not permitted unless authorised by AUDI AG. AUDI AG does not guarantee or accept any liability with respect to the correctness of information in this document. Copyright by AUDI AG.

Without assembly clearance feature

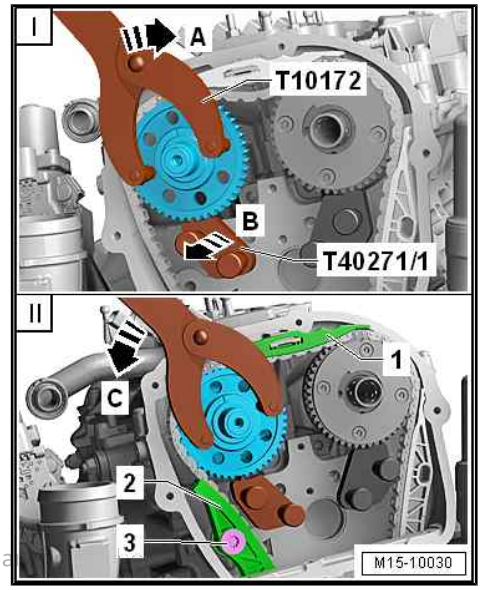

- Use counterhold tool - T10172 A- to turn exhaust camshaft slightly in direction of -arrow A- and slide camshaft clamp - T40271/1- out of teeth on chain sprocket in direction of -arrow B-.
- Remove high-pressure pump ⇒ page 233 .
- Remove vacuum pump ⇒ Brake system; Rep. gr. 47 ; Vacuum system; Removing and installing vacuum pump .

Protected by copyright. Copying for private or commercial purposes, in pa
permitted unless authorised by AUDI AG. AUDI AG does not guarantee or accept any liability
with respect to the correctness of information in this document. Copyrigh

- Remove cylinder head cover bolts in the sequence -1 ... 6-.

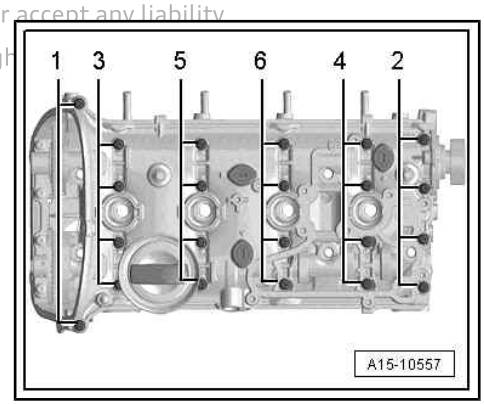

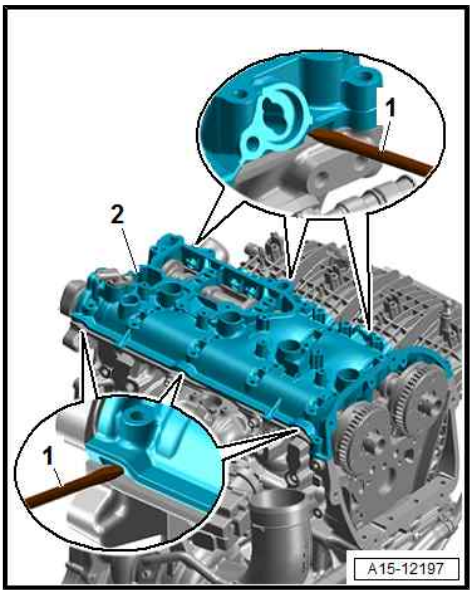

- Prise cylinder head cover -2- off using tool such as screwdriver -1-, starting from chain side.
- Detach cylinder head cover.
- Detach camshafts and cover exposed parts of engine.

Installing

- Sealing surfaces must be free of oil and grease.
- Ensure that all roller rocker fingers make contact with the ends of the valve stems correctly.
- Crankshaft must not be at “TDC” position.
- If crankshaft has been rotated: Set piston of cylinder 1 to top dead centre and then turn crankshaft back slightly.

– Remove sealant residue from groove in cylinder head cover and from sealing surfaces.

CAUTION

Risk of eye injury due to sealant residue.
– Put on safety goggles.

– Remove remaining sealant in groove of cylinder head cover -1- and on sealing surfaces, e.g. using a rotating plastic brush.

– Clean sealing surfaces; they must be free of oil and grease.

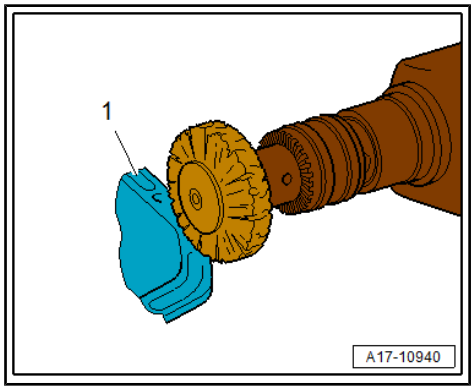

Note:

Note expiry date of sealant.

– Cut off nozzle of tube at front marking (nozzle ∅ approx. 2 mm).

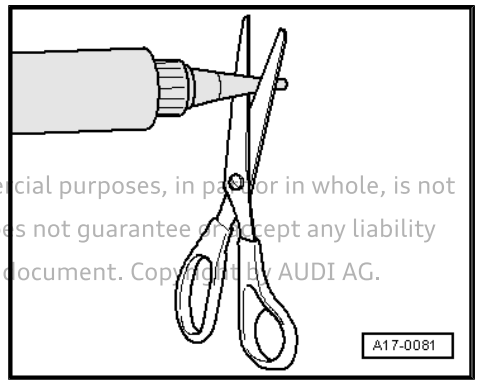

Protected by copyright. Copying for private or commercial purposes, in part or in whole, is not permitted unless authorized by AUDI AG. AUDI AG does not guarantee or accept any liability with respect to the correctness of information in this document. Copyright by AUDI AG.

On new camshafts

– Transfer markings made on old camshafts onto new camshafts.

Version without recesses

– Oil running surfaces of both camshafts.

– Place camshafts in cylinder head; factory markings -arrows- must be positioned as shown in illustration.

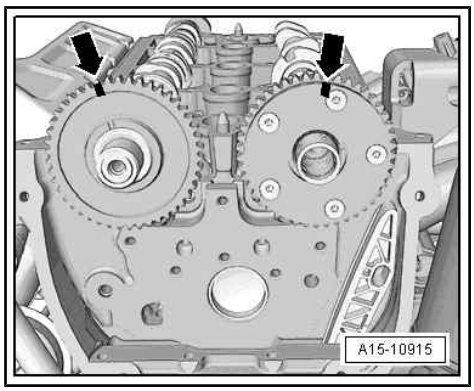

Note

Disregard the markings you have made.

Version without recesses

– Oil running surfaces of both camshafts.

– Fit camshafts in cylinder head; recesses -arrows- must be vertically in line with each other.

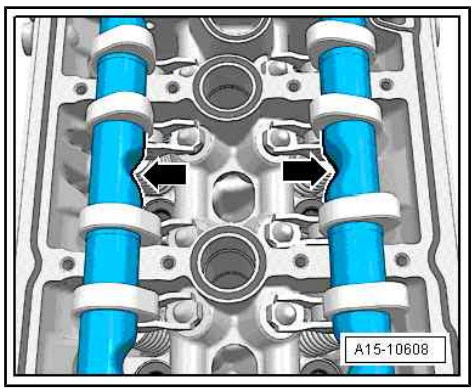

Note

Disregard the markings you have made.

All engine versions (continued)

Different sealant bead contours:

Version 1

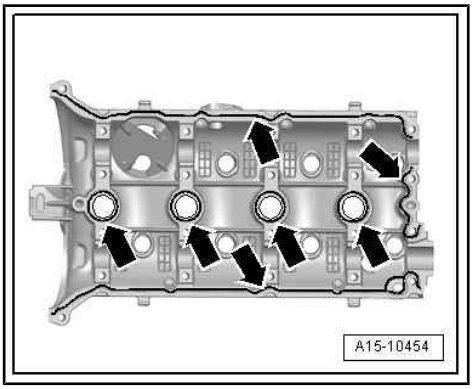

Version 2

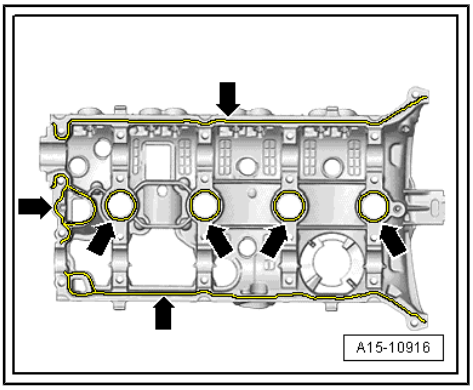

– Apply silicone sealant onto clean sealing surface of cylinder head cover, as illustrated -arrows-.

• The bead of sealant should be approx. 2 mm wide.

Note

♦ *Take care to keep cylinder head cover straight.*

♦ *The cylinder head cover must be installed within 5 minutes after applying the silicone sealant.*

♦ *The bead of sealant must not be thicker than specified, otherwise excess sealant can enter the sump and obstruct the strainer in the oil intake pipe.*

– Tighten bolts in several stages; tightening sequence ⇒ page 121 .

– Use thrust piece - T10174- to drive in sealing cap -1- (do not apply sealant).

• Installation depth -a- = 1 ... 2 mm

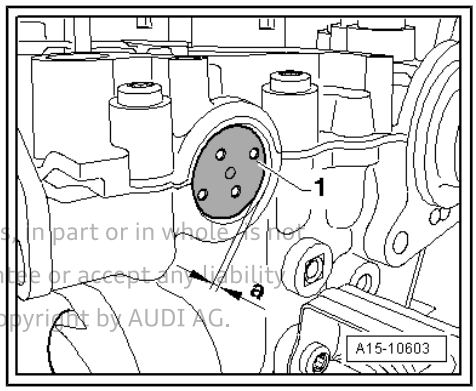

Protected by copyright. Copying for private or commercial purposes, in part or in whole, is not permitted unless authorised by AUDI AG. AUDI AG does not guarantee or accept any liability with respect to the correctness of information in this document. Copyright by AUDI AG.

– Turn vibration damper to “TDC” position -arrow-.

• Make sure that components are not damaged by timing chain when rotating crankshaft.

• Notch on vibration damper must align with arrow marking on cover for timing chains (bottom).

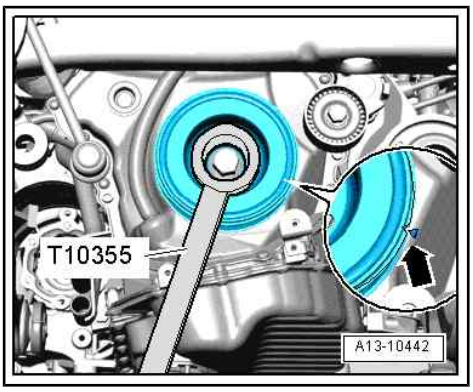

– Turn inlet camshaft in direction of -arrow 1- until marking -3- aligns with camshaft clamp - T40271/2- .
– Slide camshaft clamp - T40271/2- into teeth of chain sprocket in direction of -arrow 2-.

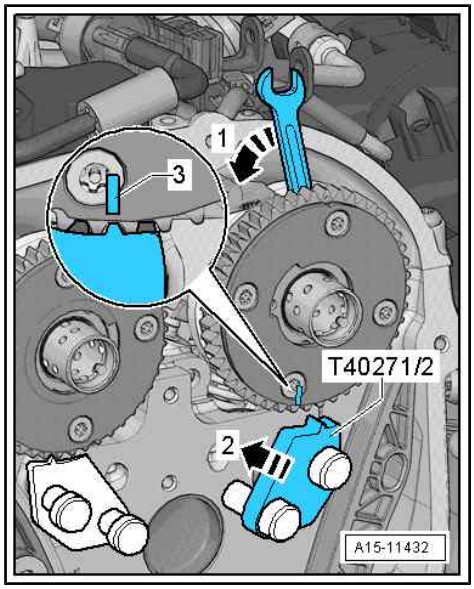

With assembly clearance feature

– Turn exhaust camshaft in direction of -arrow 1- until marking -3- aligns with camshaft clamp - T40271/1- .
– Slide camshaft clamp - T40271/1- into teeth of chain sprocket in direction of -arrow 2-.

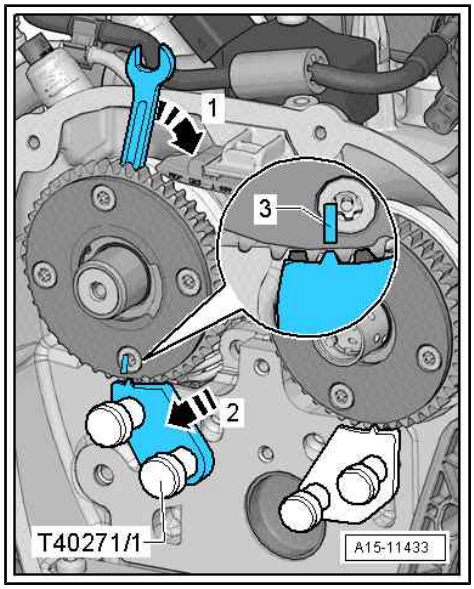

Protected by copyright. Copying for private or commercial purposes, in part or in whole, is not permitted unless authorised by AUDI AG. AUDI AG does not guarantee or accept any liability with respect to the correctness of information in this document. Copyright by AUDI AG.

Without assembly clearance feature

– Bolt camshaft clamp - T40271/1- onto cylinder head.

A second mechanic is required for the following steps.

– Turn exhaust camshaft in direction of -arrow A- until marking -1- aligns with camshaft clamp - T40271/1- .

– Slide camshaft clamp - T40271/1- into teeth of chain sprocket in direction of -arrow B-.

– Fit camshaft timing chain ⇒ page 80 .

– Install air cleaner housing ⇒ 4-cylinder direct injection engine (1.8, 2.0 ltr. 4-valve TFSI); Rep. gr. 24 ; Air cleaner; Removing and installing air cleaner housing .

Additional work depending on model ⇒ 4-cylinder direct injection engine (1.8, 2.0 ltr. 4-valve TFSI); Rep. gr. 15 ; Valve gear; Removing and installing camshaft

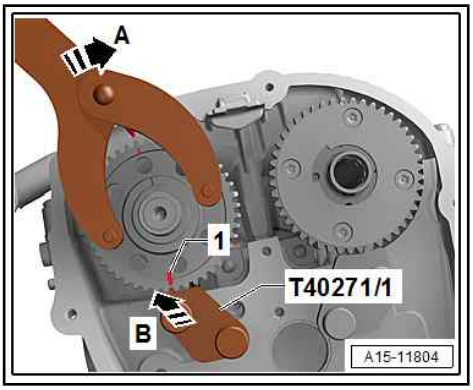

Tightening torques

♦ ⇒ “4.1.1 Exploded view - valve gear, vehicles with 1.8 ltr. engine”, page 119

♦ ⇒ Fig. ““Tightening torques and sequence for cylinder head cover”“ , page 121

4.2.2 Removing and installing camshaft - vehicles with 2.0 ltr. engine

Special tools and workshop equipment required

♦ Counterhold tool - T10172A-

Protected by copyright. Copying for private or commercial purposes, in part or in whole, is not permitted unless authorised by AUDI AG. AUDI AG does not guarantee or accept any liability with respect to the correctness of information in this document. Copyright by AUDI AG.

♦ Thrust piece - T10174-

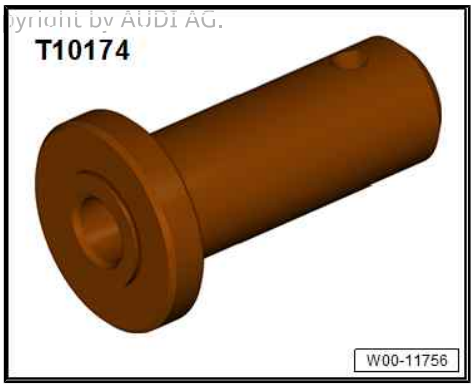

- Spacers - T40191-

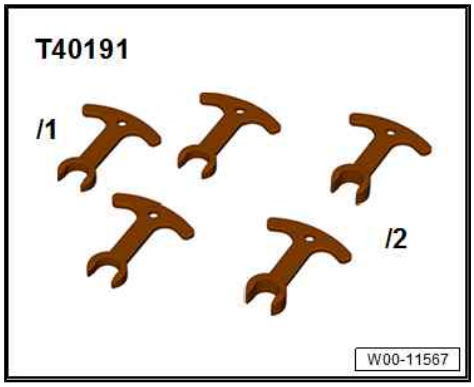

- Pin - T40196-

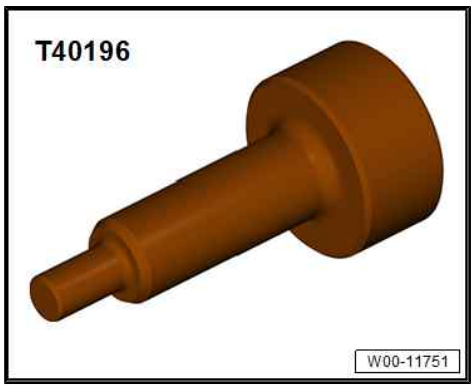

- Wrench, 21 mm - T40263-

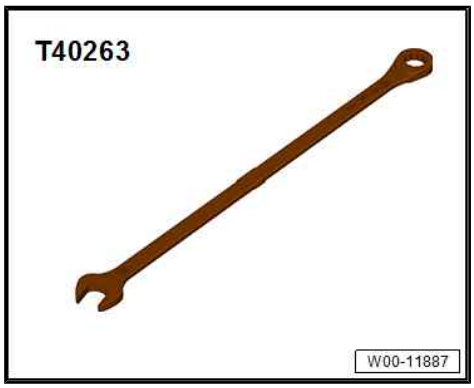

- Adapter - T40314-

Protected by copyright. Copying for private or commercial purposes, in part or in whole, is not permitted unless authorised by AUDI AG. AUDI AG does not guarantee ... ty with respect to the correctness of information in this document. ...

- Open end spanner insert, AF 24
- Sealant ⇒ Electronic parts catalogue

Removing

- Sealing surfaces at bottom of cylinder head cover and top of cylinder head must not be machined.

- The camshaft bearings are integrated into the cylinder head and cylinder head cover. The timing chain must be slackened before removing the cylinder head cover.
- Renew sealing cap ⇒ Item 20 (page 122) if cylinder head cover has been loosened.
- Re-install all cable ties in original positions.
- Renew bolts for cylinder head cover after removal.

Preparatory work may be necessary depending on model ⇒ 4-cylinder direct injection engine (1.8, 2.0 ltr. 4-valve TFSI); Rep. gr. 15 ; Valve gear; Removing and installing camshaft .

– Remove actuators for camshaft adjustment ⇒ page 137 .
– Remove ignition coils with output stages ⇒ page 249 .
– Remove oil separator on cylinder head cover ⇒ page 164 .

Protected by copyright. Copying for private or commercial purposes, in part or in whole, is not permitted unless authorised by AUDI AG. AUDI AG does not guarante with respect to the correctness of information in this document. Cop

Pipe (version 1):

– Disconnect pipe -arrows-.
– Unplug electrical connector -1- from Hall sender - G40- .

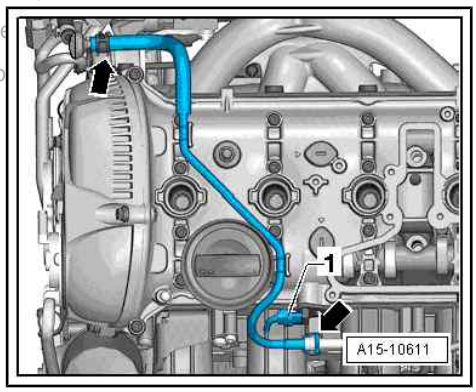

Pipe (version 2):

– Remove bolt -1- and press release tabs to disconnect pipe -arrows-.
– Unplug electrical connector -2- at Hall sender - G40- .

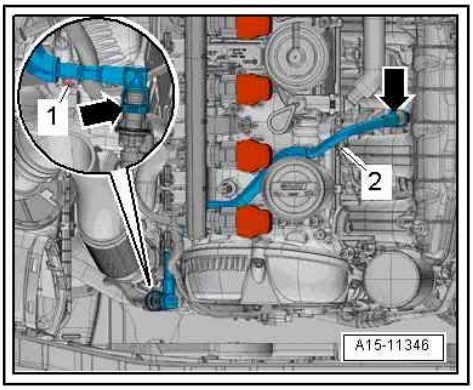

All vehicles (continued):

– Use wrench, 21 mm - T40263- , adapter - T40314- and socket, 24 mm to turn crankshaft until vibration damper is at “TDC” position.

NOTICE

Risk of engine damage if valve gear drive slips

– **Only turn engine in normal direction of rotation.**

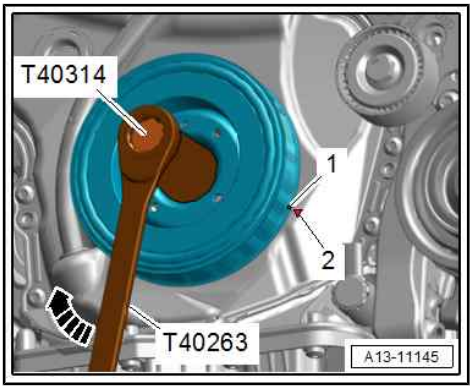

- Notch on vibration damper and marking on cover for timing chains (bottom) must be aligned -arrow-.
- The markings -1- on the camshaft chain sprockets must face upwards.

Note:

The combination of wrench, 21 mm - T40263- , adapter - T40314- and socket, 24 mm can be fitted onto the vibration damper better than the counterhold tool - T10355- .

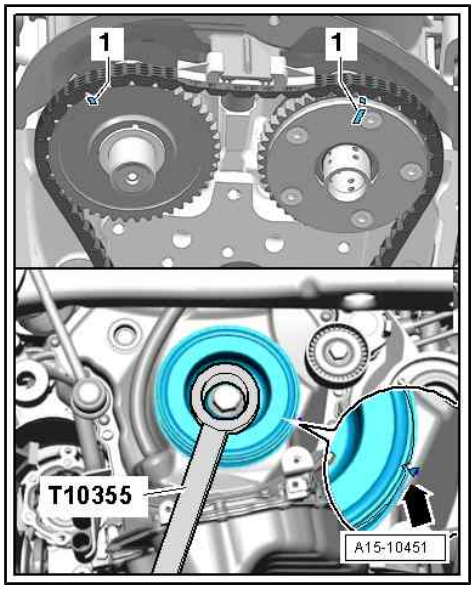

NOTICE

Irreparable engine damage can be caused if tools are used improperly.

– **Only insert tools in positions shown.**

– Insert drifts - T40196- as shown in illustration.
– Turn crankshaft 2 rotations in direction of engine rotation.
- Engine must be at “TDC” position again.
– Remove drifts - T40196- .
– Remove timing chain from camshafts ⇒ page 80 .

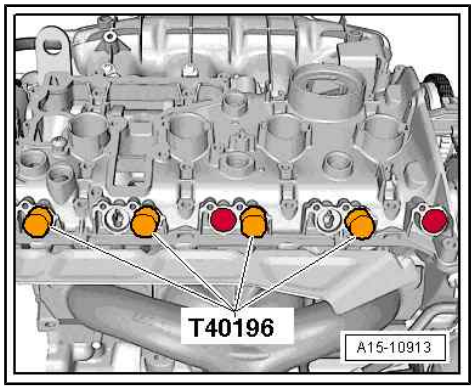

– Use spanner to turn inlet camshaft in direction of -arrow 1- and slide camshaft clamp - T40271/2- out of teeth on chain sprocket in direction of -arrow 2- and move camshaft into rest position.

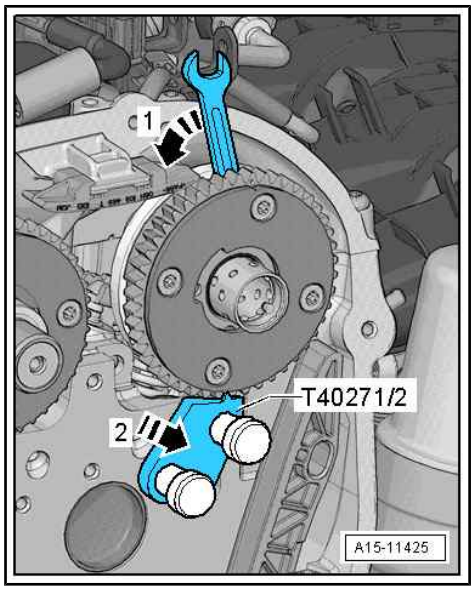

Protected by copyright. Copying for private or commercial purposes, in part or in whole, is not permitted unless authorised by AUDI AG. AUDI AG does not guarantee or accept any liability with respect to the correctness of information in this document. Copyright by AUDI AG.

– Use spanner to turn exhaust camshaft in direction of -arrow 1- and slide camshaft clamp - T40271/1- out of teeth on chain sprocket in direction of -arrow 2- and move camshaft into rest position.

– Remove high-pressure pump ⇒ page 233 .

– Remove vacuum pump ⇒ Brake system; Rep. gr. 47 ; Vacuum system; Removing and installing vacuum pump .

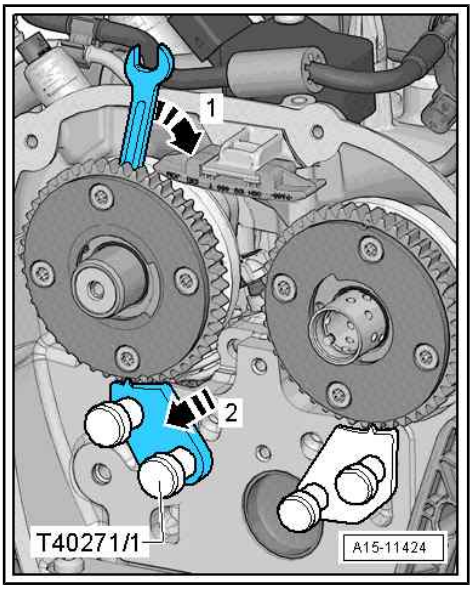

– Remove cylinder head cover bolts in the sequence -1 ... 6-.

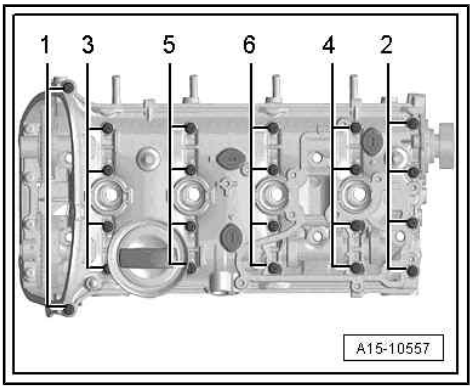

– Prise cylinder head cover -2- off using tool such as screwdriver -1-, starting from chain side.

– Detach cylinder head cover.

– Detach camshafts and cover exposed parts of engine.

Installing

- Sealing surfaces must be free of oil and grease.
- Ensure that all roller rocker fingers make contact with the ends of the valve stems correctly.
- Crankshaft must not be at “TDC” position.

– If crankshaft has been rotated: Set piston of cylinder 1 to top dead centre and then turn crankshaft back slightly.

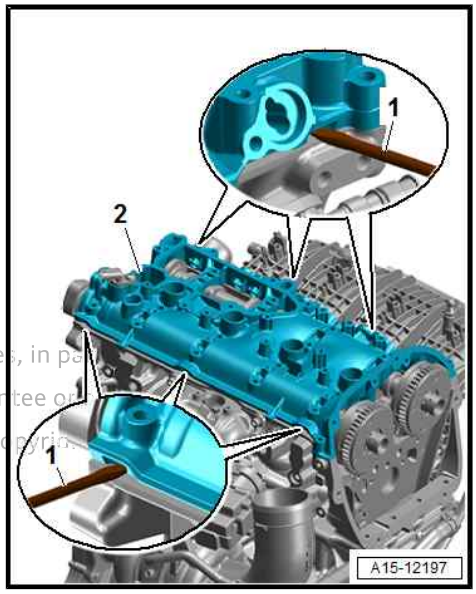

Protected by copyright. Copying for private or commercial purposes, in pa
permitted unless authorised by AUDI AG. AUDI AG does not guarantee or
with respect to the correctness of information in this document. Copyrig

– Remove sealant residue from groove in cylinder head cover and from sealing surfaces.

CAUTION

Risk of eye injury due to sealant residue.
– Put on safety goggles.

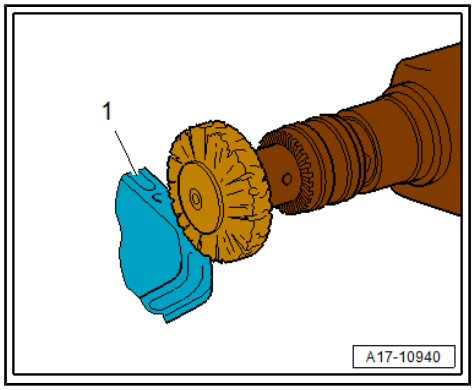

– Remove remaining sealant in groove of cylinder head cover -1- and on sealing surfaces, e.g. using a rotating plastic brush.

– Clean sealing surfaces; they must be free of oil and grease.

On new camshafts

– Transfer markings made on old camshafts onto new camshafts.

All vehicles:

– Oil running surfaces of both camshafts.

CAUTION

Ball for slider may spring out - risk of eye injury.
– Put on safety goggles.

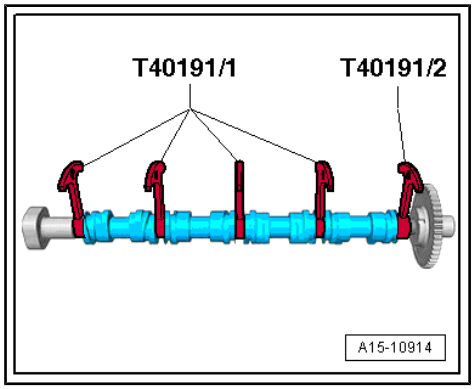

– Lock camshaft with spacers - T40191- as shown in illustration; if necessary, move sliders to correct positions.

Note

If available, use second set of spacers - T40191- , or re-position -T40191/1- .

– Place camshafts in cylinder head; factory markings -arrows- must be positioned as shown in illustration.

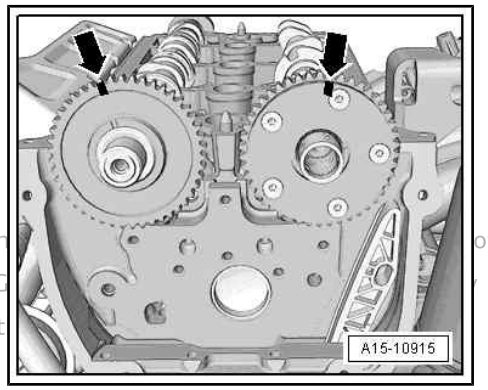

Note

Disregard the markings you have made.

Protected by copyright. Copying for private or com ot
permitted unless authorised by AUDI AG. AUDI AG
with respect to the correctness of information in t

– Check alignment -arrows- of camshafts.

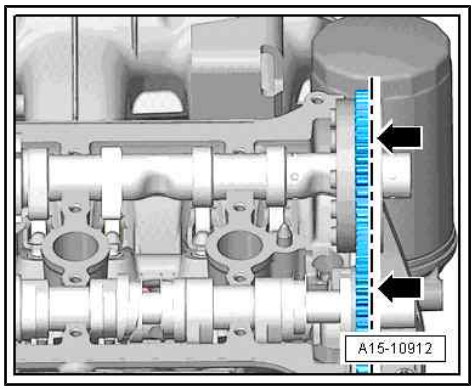

Note:

Note expiry date of sealant.

– Cut off nozzle of tube at front marking (nozzle ∅ approx. 2 mm).

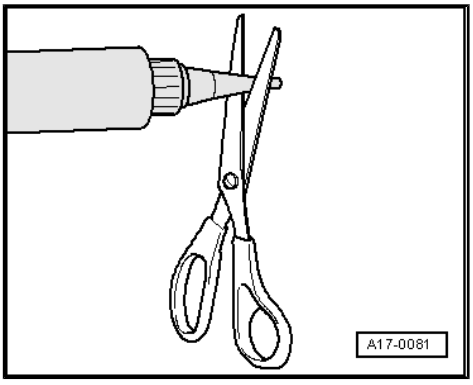

– Apply silicone sealant onto clean sealing surface of cylinder head cover, as illustrated -arrows-.

• The bead of sealant should be approx. 2 mm wide.

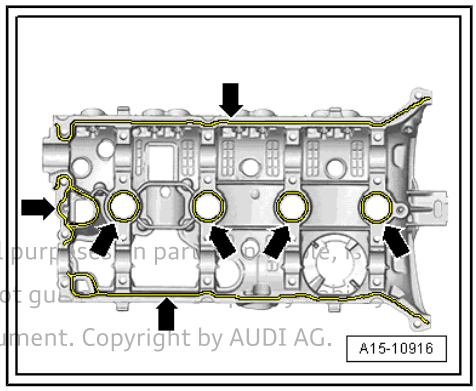

Note

♦ *Take care to keep cylinder head cover straight.*

♦ *The cylinder head cover must be installed within 5 minutes after applying the silicone sealant.*

♦ *The bead of sealant must not be thicker than specified, otherwise excess sealant can enter the sump and obstruct the strainer in the oil intake pipe.*

Protected by copyright. Copying for private or commercial purposes, in part or in whole, is not permitted unless authorised by AUDI AG. AUDI AG does not guarantee or assume any liability with respect to the correctness of information in this document. Copyright by AUDI AG.

– Fit cylinder head cover on cylinder head.

– Tighten bolts in several stages; tightening sequence ⇒ page 121 .

– Use thrust piece - T10174- to drive in sealing cap -1- (do not apply sealant).

• Installation depth -a- = 1 ... 2 mm

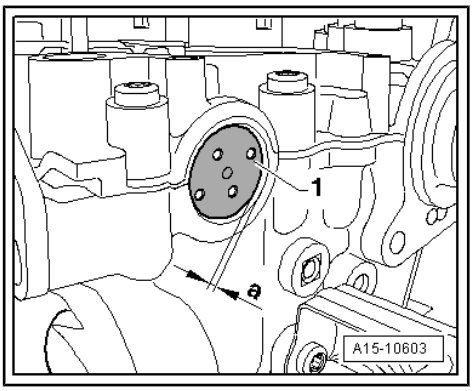

– Turn vibration damper to “TDC” position -arrow-.

• Make sure that components are not damaged by timing chain when rotating crankshaft.

• Notch on vibration damper must align with arrow marking on cover for timing chains (bottom).

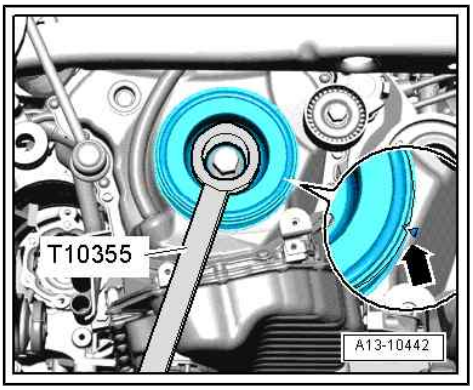

– Turn inlet camshaft in direction of -arrow 1- until marking -3- aligns with camshaft clamp - T40271/2- .
– Slide camshaft clamp - T40271/2- into teeth of chain sprocket in direction of -arrow 2-.

Protected by copyright. Copying for private or com ot
permitted unless authorised by AUDI AG. AUDI AG y
with respect to the correctness of information in t

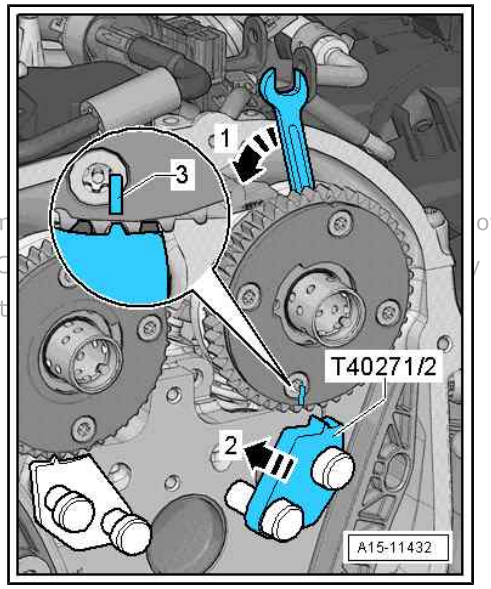

– Turn exhaust camshaft in direction of -arrow 1- until marking -3- aligns with camshaft clamp - T40271/1- .
– Slide camshaft clamp - T40271/1- into teeth of chain sprocket in direction of -arrow 2-.
– Fit camshaft timing chain ⇒ page 80 .
– Install actuators for camshaft adjustment ⇒ page 137 .

Additional work depending on model ⇒ 4-cylinder direct injection engine (1.8, 2.0 ltr. 4-valve TFSI); Rep. gr. 15 ; Valve gear; Removing and installing camshaft

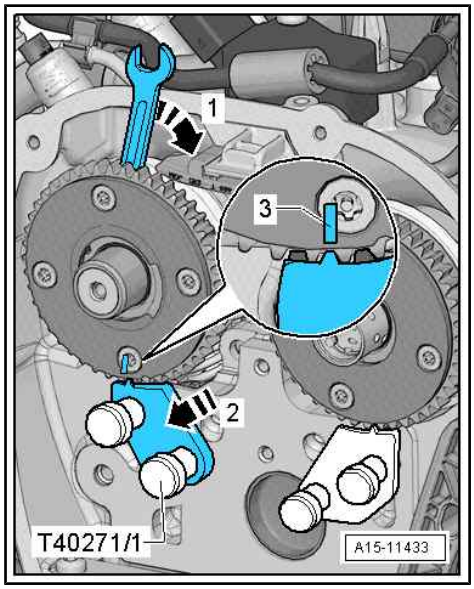

Tightening torques

- ⇒ “4.1.2 Exploded view - valve gear, vehicles with 2.0 ltr. engine”, page 121
- ⇒ Fig. ““Tightening torques and sequence for cylinder head cover”“ , page 121

4.3 Installing ball for slider

Special tools and workshop equipment required

- Spacers - T40191-

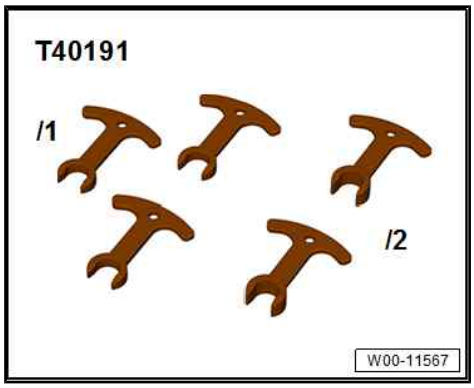

- Safety goggles

Installing

CAUTION

Ball for slider may spring out - risk of eye injury.
– Put on safety goggles.

– Insert spring -1- in camshaft.
– Place ball -2- on spring in camshaft.
– Push ball and spring downwards in direction of -arrow A- with spacer - T40191/1- and hold in place.
– Push slider -3- in direction of -arrow B-.

Protected by copyright. Copying for private or commercial purposes, in part or in whole, is not permitted unless authorised by AUDI AG. AUDI AG does not guarantee or accept any liability with respect to the correctness of information in this document. Copyright by AUDI AG.

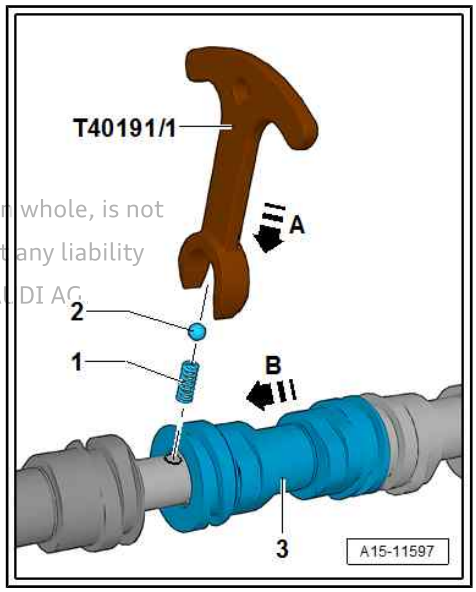

4.4 Removing and installing actuators for camshaft adjustment

2.0 ltr. engine only

Removing

– Remove engine cover panel ⇒ page 11 .
– If fitted, unscrew bolts -arrow- for connector rail.

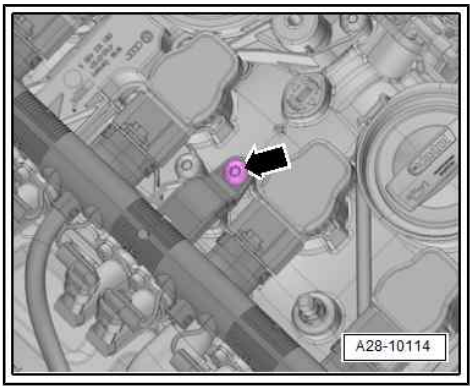

– Unplug electrical connectors -arrows- at actuators for camshaft adjustment.

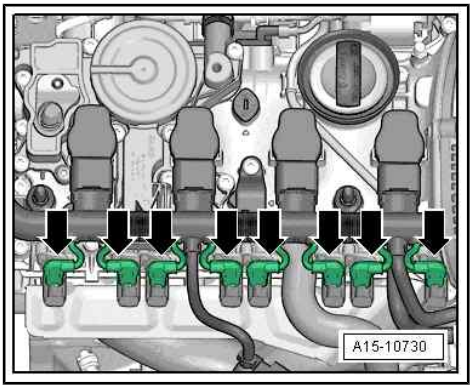

– Remove actuators for camshaft adjustment -arrows-.

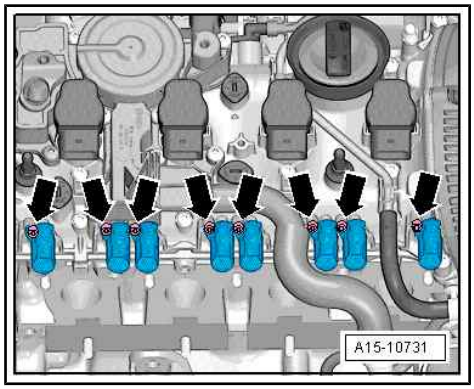

Installing

Installation is carried out in reverse order; note the following:

- Check O-rings for damage.

Copyright. Copying for private or commercial purposes, in part or in whole, is not
permitted unless authorised by AUDI AG. AUDI AG does not guarantee or accept any liability
with respect to the correctness of information in this document. Copyright by AUDI AG.

- Pin of actuator for camshaft adjustment must be brought into installation position.

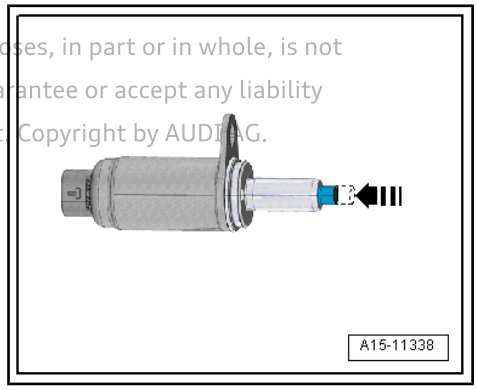

– Press down pin of actuator for camshaft adjustment -arrow- by hand.
- Pin of actuator must not be in extended position.
– Install engine cover panel ⇒ page 11 .

Tightening torques

♦ ⇒ “4.1.2 Exploded view - valve gear, vehicles with 2.0 ltr. engine”, page 121

4.5 Removing and installing camshaft control valve 1 - N205-

Removing

– Detach connector from camshaft control valve 1 - N205- -1-.
– Unscrew bolts -arrows- and remove camshaft control valve 1 - N205- .

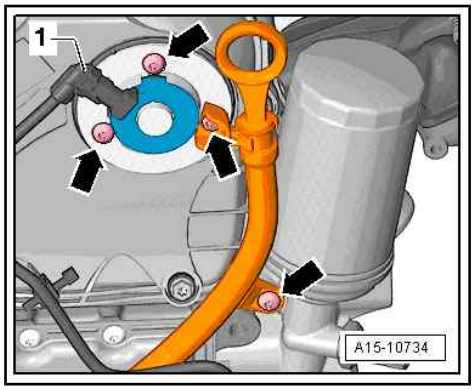

Installing

Installation is carried out in reverse order; note the following:

- Renew seal and O-ring after removing.
– Use engine oil to lubricate O-ring on sealing surface for camshaft control valve.

Tightening torques

♦ ⇒ “1.1 Exploded view - timing chain cover”, page 64

4.6 Removing and installing valve stem oil seals

⇒ “4.6.1 Removing and installing valve stem oil seals (cylinder head installed)”, page 138

⇒ “4.6.2 Removing and installing valve stem oil seals (cylinder head removed)”, page 144

4.6.1 Removing and installing valve stem oil seals (cylinder head installed)

Special tools and workshop equipment required

- Spark plug spanner - 3122B-

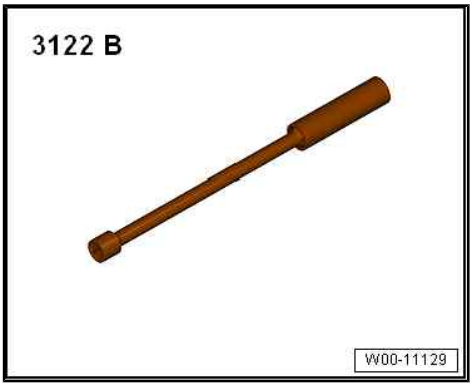

- Valve stem seal puller - 3364-

Protected by copyright. Copying for private or commercial purposes, in part or in whole, is not permitted unless authorised by AUDI AG. AUDI AG does not guarantee or accept any liability with respect to the correctness of information in this document. Copyright by AUDI AG.

- Valve stem oil seal fitting tool - 3365- , or (depending on version/manufacturer of valve shaft seal):

- Valve shaft seal fitting tool - T40376/1- (not illustrated)
- Adapters - T40012-

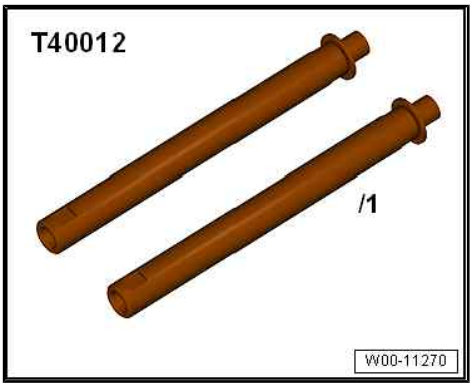

- Removal and installation device for valve cotters - VAS 5161 A-

- Guide plate for 2.0 ltr. and 3.0 ltr. FSI engine - VAS 5161/19B-
- Assembly sleeve ⇒ Electronic parts catalogue

Procedure

– Remove camshafts ⇒ page 123 .

– Mark original positions of roller rocker fingers and hydraulic compensation elements for re-installation.

– Remove roller rocker fingers together with hydraulic compensation elements and put down on a clean surface.

– Remove spark plugs with spark plug spanner - 3122B- .

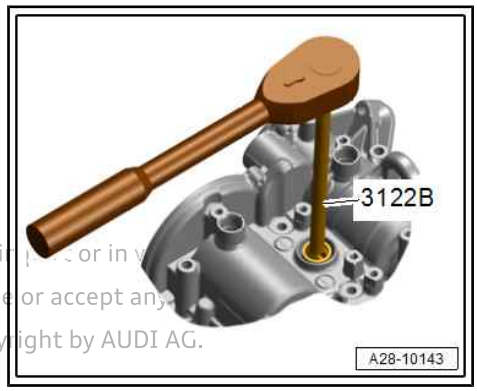

Protected by copyright. Copying for private or commercial purposes, in part, or in w
permitted unless authorised by AUDI AG. AUDI AG does not guarantee or accept any
with respect to the correctness of information in this document. Copyright by AUDI AG.

– Secure guide plate for 2.0 ltr. and 3.0 ltr. FSI engine - VAS 5161/19B- to cylinder head with knurled screws - VAS 5161/12- as shown.

– Set piston of appropriate cylinder to “bottom dead centre”.

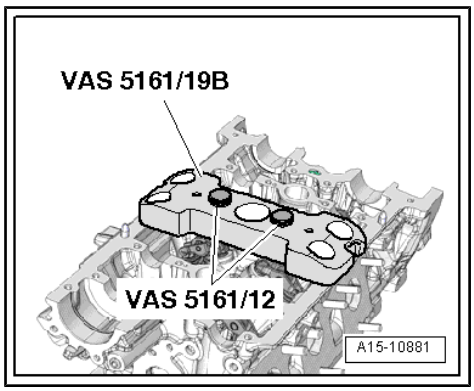

– Screw adapter - T40012- into spark plug thread.
– Connect to compressed air supply of at least 6 bar.
– Knock loose sticking valve cotters using punch - VAS 5161/3- and a plastic-headed hammer.

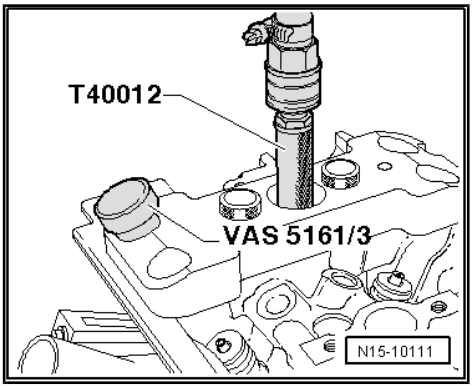

Inlet side:

– Screw snap-in device - VAS 5161/6- with engaging fork - VAS 5161/5- into centre thread on guide plate for 2.0 ltr. and 3.0 ltr. FSI engine - VAS 5161/19B- .

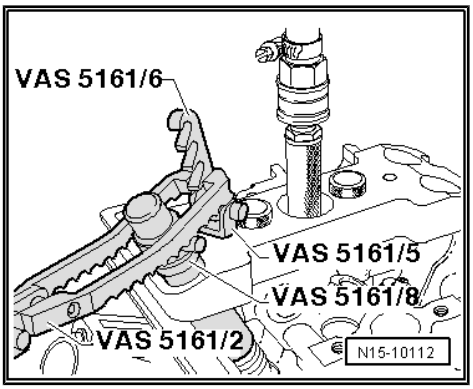

Protected by copyright. Copying for private or commercial purposes, in part or in whole, is not permitted unless authorised by AUDI AG. AUDI AG does not guarantee or accept any liability with respect to the correctness and completeness of this document. Copyright by AUDI AG.

Exhaust side:

– Screw snap-in device - VAS 5161/6- with engaging fork - VAS 5161/5- into outer thread on guide plate for 2.0 ltr. and 3.0 ltr. FSI engine - VAS 5161/19B- .

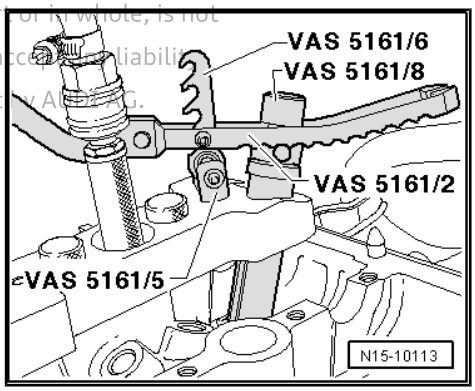

Continued:

– Insert assembly cartridge - VAS 5161/8- into guide plate for 2.0 ltr. and 3.0 ltr. FSI engine - VAS 5161/19B- .
– Engage pressure fork - VAS 5161/2- on snap-in device - VAS 5161/6- .
– Press down assembly cartridge - VAS 5161/8- and at the same time, turn knurled screw of assembly cartridge - VAS 5161/8- clockwise until tips engage in valve cotters.
– Move knurled screw back and forth slightly; the valve cotters are thus forced apart and taken up by the assembly cartridge.
– Release pressure fork - VAS 5161/2- .
– Take out assembly cartridge - VAS 5161/8- .

– Pull off valve stem oil seal with valve stem seal puller - 3364- .

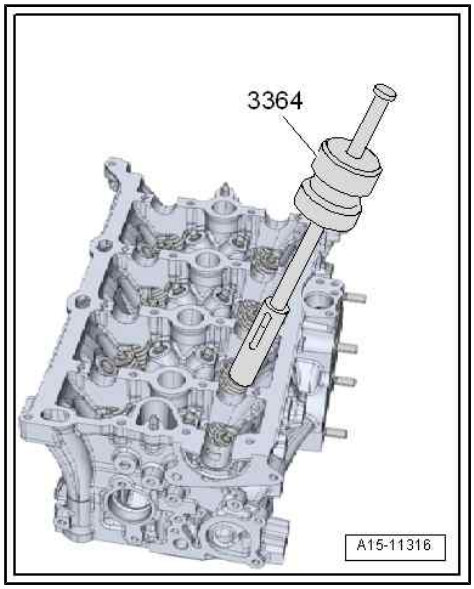

– If valve stem seal puller - 3364- cannot be used on account of restricted space, knock out pin -arrow- with a punch and remove the impact extractor attachment.

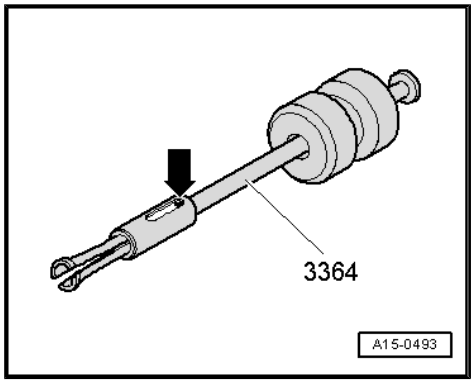

– Position lower part of valve stem seal puller - 3364- on valve stem oil seal.
– Insert a punch -1- through hole in lower section of puller.
– Apply assembly lever to puller and pull out valve stem oil seal -arrow-.

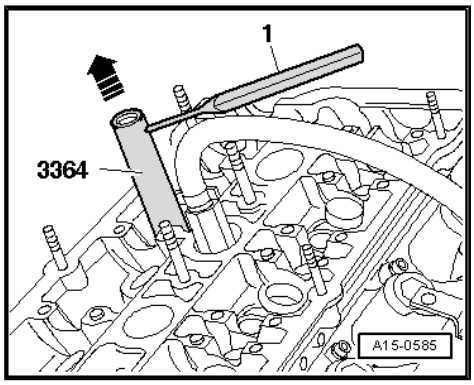

Protected by copyright. Copying for private or commercial purposes, in part or in whole, is not permitted unless authorised by AUDI AG. AUDI AG does not guarantee or accept any liability with respect to the correctness of information in this document. Copyright by AUDI AG.

- To avoid damaging the new valve stem oil seal -4- during installation, fit the assembly sleeve -3- onto the valve stem -2-.
  - Lightly oil sealing lip of valve stem oil seal.
- Use either pusher - 3365- or pusher - T40376/1- , depending on version/manufacturer of valve stem oil seal.
  - Insert valve stem oil seal into valve shaft seal fitting tool -5- and use assembly sleeve to press it carefully onto valve guide -1- as far as stop.
  - Remove assembly sleeve .
  - Insert valve spring and valve spring plate.
  - Set up removal and installation device for valve cotters - VAS 5161 A- as shown.

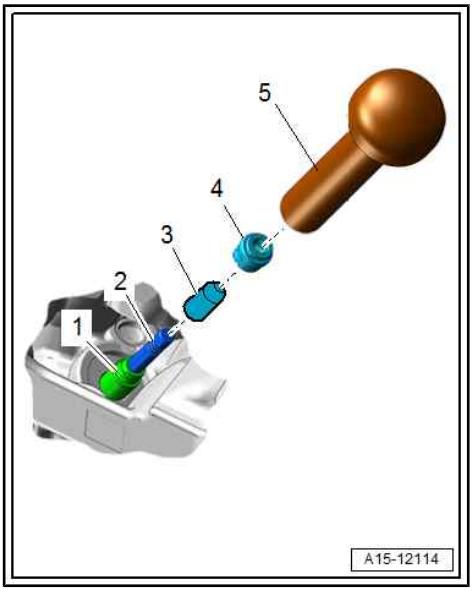

Inlet side:

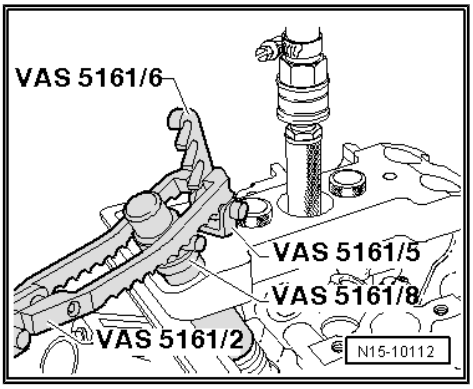

Exhaust side:

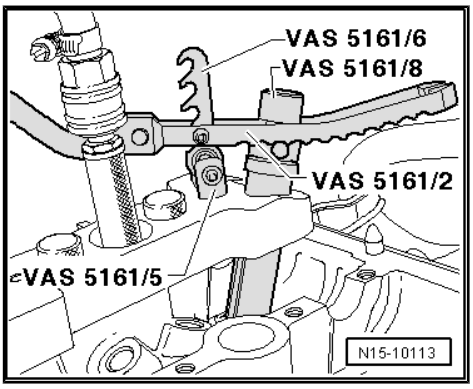

Protected by copyright. Copying for private or commercial purposes, in part or in whole, is not permitted unless authorised by AUDI AG. AUDI AG does not guarantee or accept any liability with respect to the correctness of information in this document. Copyright by AUDI AG.

Continued:

- If valve cotters have been removed from assembly cartridge, they need to be put into insertion device - VAS 5161/18- first.
- Press assembly cartridge -VAS 5161/8- onto insertion device from above and pick up valve cotters.

– Use pressure fork - VAS 5161/8- to press down assembly cartridge - VAS 5161/2- , then turn knurled screw of assembly cartridge back and forth while pulling upwards.

– Release pressure fork - VAS 5161/2- with knurled screw in pulled position.

– Detach removal and installation device for valve cotters - VAS 5161A- .

– Repeat procedure for each valve.

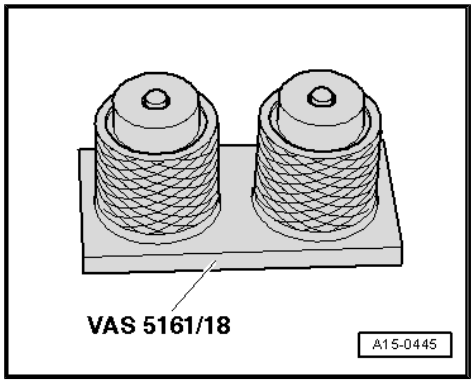

Attaching

Assembly is performed in reverse sequence; note the following:

– Install camshafts ⇒ page 123 .

– Install spark plugs ⇒ page 248 .

4.6.2 Removing and installing valve stem oil seals (cylinder head removed)

Special tools and workshop equipment required

- Valve stem seal puller - 3364-

- Valve stem oil seal fitting tool - 3365- , or (depending on version/manufacturer of valve shaft seal):

Protected by copyright. Copying for private or commercial purposes, in part, is not permitted unless authorised by AUDI AG. AUDI AG does not guarantee or assume any liability with respect to the correctness of information in this document. Copyright by AUDI AG.

- Valve shaft seal fitting tool - T40376/1- (not illustrated)

- Removal and installation device for valve cotters - VAS 5161 A-

- Guide plate for 2.0 ltr. and 3.0 ltr. FSI engine - VAS 5161/19B-
- Engine and gearbox support - VAS 6095A-

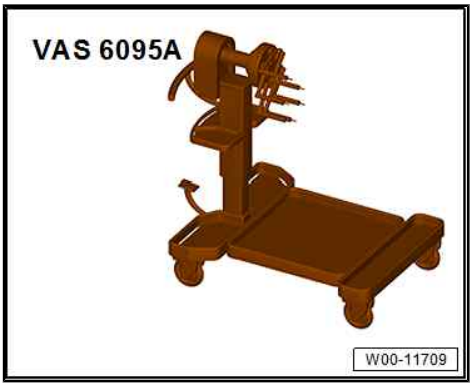

- Cylinder head tensioning device - VAS 6419-

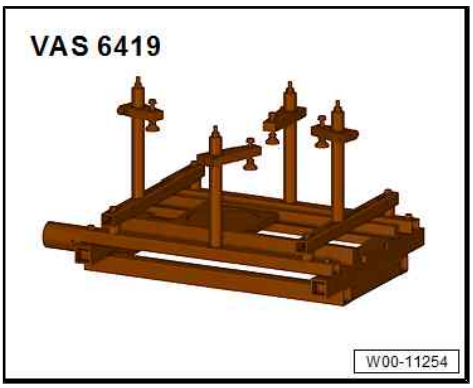

- Assembly sleeve ⇒ Electronic parts catalogue

Procedure

– Mark original positions of roller rocker fingers and hydraulic compensation elements for re-installation.

– Remove roller rocker fingers together with hydraulic compensation elements and put down on a clean surface.

– If necessary, remove intake manifold with fuel rail ⇒ 4-cylinder direct injection engine (1.8, 2.0 ltr. 4-valve TFSI); Rep. gr. 24 ; Intake manifold; Removing and installing intake manifold .

– Remove turbocharger (if necessary) ⇒ page 190 .

Protected by copyright. Copying for private or commercial purposes, in part or in whole, is not permitted unless authorised by AUDI AG. AUDI AG does not guarantee or accept any liability with respect to the correctness of information in this document. Copyright by AUDI AG.

– Insert cylinder head tensioning device - VAS 6419- into engine and gearbox support - VAS 6095A- .
– Secure cylinder head in cylinder head tensioning device, as shown in illustration.
– Connect cylinder head tensioning device to compressed air supply.
– Using lever -arrow-, slide air pad under combustion chamber where valve stem oil seal is to be removed.
– Apply just enough compressed air to bring air pad into contact with valve heads.

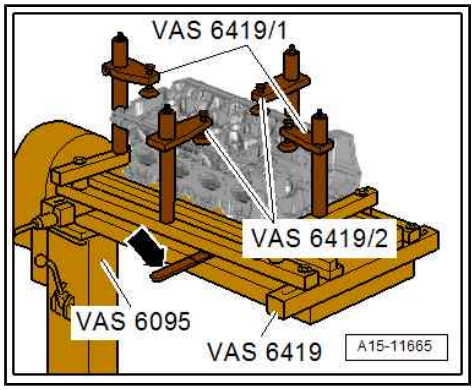

– Fit guide plate for 2.0 ltr. and 3.0 ltr. FSI engine - VAS 5161/19B- onto cylinder head.
– Secure guide plate with knurled screws -VAS 5161/12- .

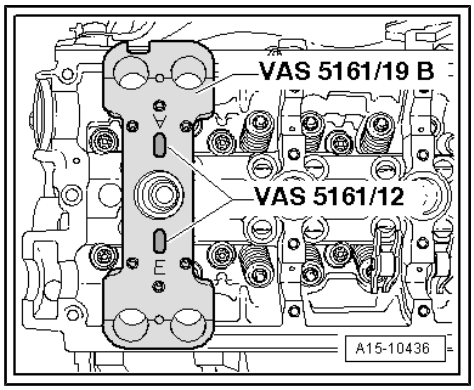

– Apply drift -VAS 5161/3- to guide plate and use plastic-headed hammer to release sticking valve cotters.

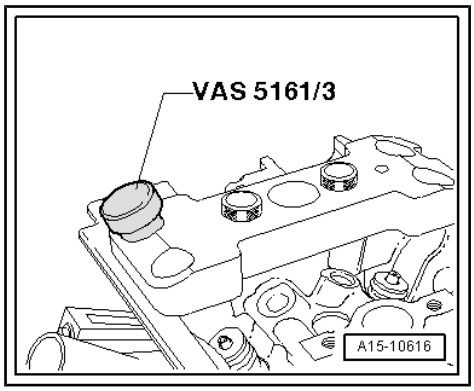

– Screw snap-in device -VAS 5161/6- with engaging fork - VAS 5161/5- into guide plate.
– Insert assembly cartridge -VAS 5161/8- in guide plate.

Inlet side:

– Engage pressure fork -VAS 5161/2- at snap-in device, as shown in illustration.

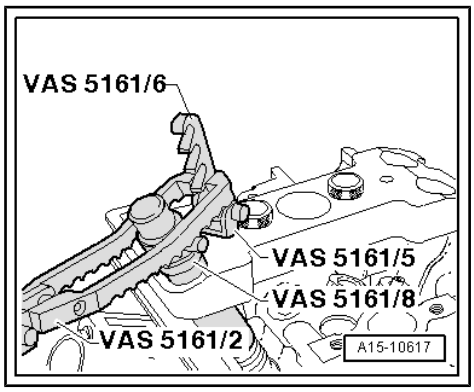

Protected by copyright. Copying for private or commercial purposes, in part or in whole, is not permitted unless authorised by AUDI AG. AUDI AG does not guarantee or accept any liability with respect to the correctness of information in this document. Copyright by AUDI AG.

Exhaust side:

– Screw snap-in device - VAS 5161/6- with engaging fork - VAS 5161/5- into outer thread on guide plate for 2.0 ltr. and 3.0 ltr. FSI engine - VAS 5161/19B- .

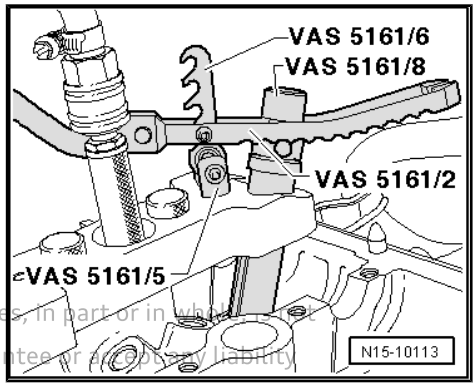

Continued:

– Insert assembly cartridge - VAS 5161/8- into guide plate for 2.0 ltr. and 3.0 ltr. FSI engine - VAS 5161/19B- .

– Engage pressure fork - VAS 5161/2- on snap-in device - VAS 5161/6- .

– Press down assembly cartridge - VAS 5161/8- and at the same time, turn knurled screw of assembly cartridge - VAS 5161/8- clockwise until tips engage in valve cotters.

Protected by copyright. Copying for private or commercial purposes, in part or in whole, is not permitted unless authorised by AUDI AG. AUDI AG does not guarantee or accept any liability with respect to the correctness of information in this document. Copyright by AUDI AG.

– Move knurled screw back and forth slightly; the valve cotters are thus forced apart and taken up by the assembly cartridge.

– Release pressure fork - VAS 5161/2- .

– Take out assembly cartridge - VAS 5161/8- .

– Pull off valve stem oil seal with valve stem seal puller - 3364- .

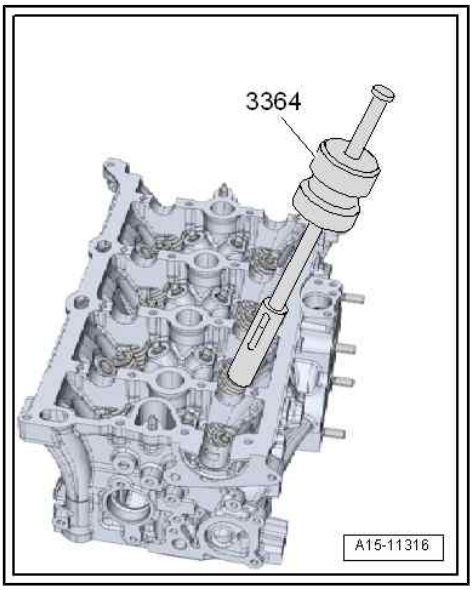

• To avoid damaging the new valve stem oil seal -4- during installation, fit the assembly sleeve -3- onto the valve stem -2-.

– Lightly oil sealing lip of valve stem oil seal.

• Use either pusher - 3365- or pusher - T40376/1- , depending on version/manufacturer of valve stem oil seal.

– Insert valve stem oil seal into valve shaft seal fitting tool -5- and use assembly sleeve to press it carefully onto valve guide -1- as far as stop.

– Remove assembly sleeve .

– Insert valve spring and valve spring plate.

– Set up removal and installation device for valve cotters - VAS 5161 A- as shown.

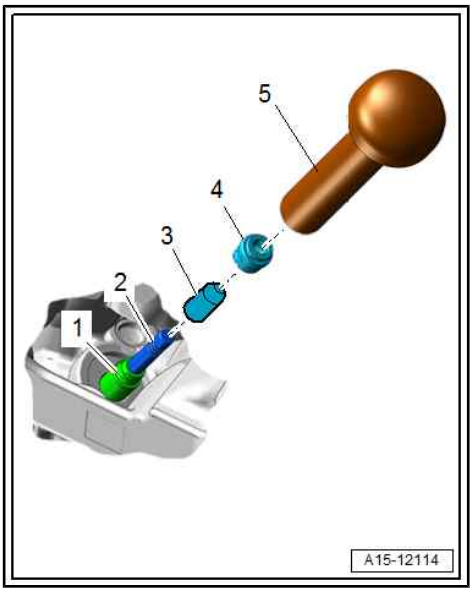

Inlet side:

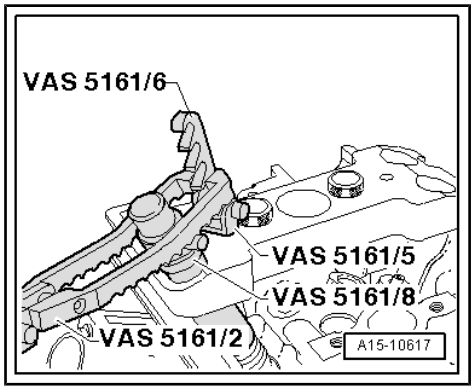

Exhaust side:

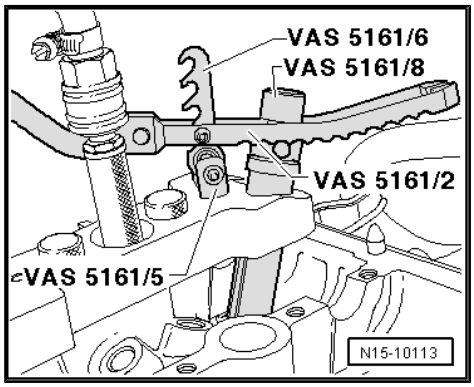

Continued:

- If valve cotters have been removed from assembly cartridge, they need to be put into insertion device - VAS 5161/18- first.

– Use pressure fork - VAS 5161/8- to press down assembly cartridge - VAS 5161/2- , then turn knurled screw of assembly cartridge back and forth while pulling upwards.

– Release pressure fork - VAS 5161/2- with knurled screw in pulled position.

– Detach removal and installation device for valve cotters - VAS 5161A- .

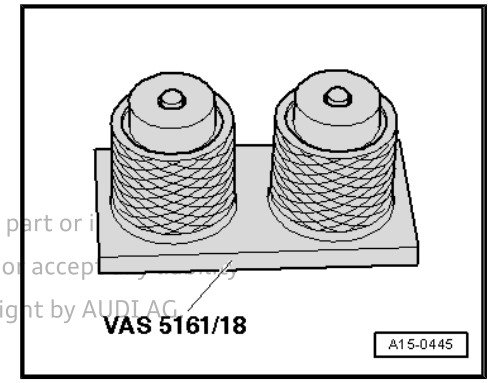

Protected by copyright. Copying for private or commercial purposes, in part or in
permitted unless authorised by AUDI AG. AUDI AG does not guarantee or accep
with regard to the correctness of information in this document. ©Copyright by AUDI AG.

5 Inlet and exhaust valves

⇒ “5.1 Checking valve guides”, page 149
⇒ “5.2 Checking valves”, page 149
⇒ “5.3 Valve dimensions”, page 150

5.1 Checking valve guides

Special tools and workshop equipment required

- Universal dial gauge bracket - VW 387-

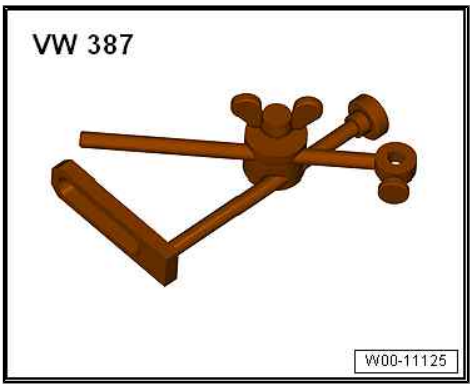

- Dial gauge - VAS 6079-

Protected by copyright. Copying for private or commercial purposes, in part or in whole, is not permitted unless authorised by AUDI AG. AUDI AG does not guarantee or accept any liability with respect to the correctness of information in this document. Copyright by AUDI AG.

Test sequence

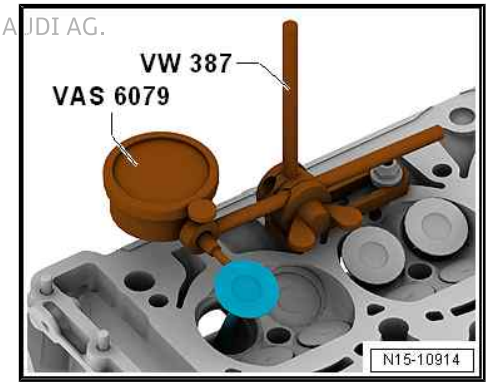

– Insert valve into guide. End of valve stem must be flush with guide. Only insert inlet valve into inlet valve guide and exhaust valve into exhaust valve guide, as the stem diameters are different.

– Measure the amount of sideways play.

Wear limit

Inlet valve guide	Exhaust valve guide
0.60 mm	0.60 mm

- If the wear limit is exceeded, repeat the measurement with new valves. Renew cylinder head if wear limit is still exceeded.
- If the valve has to be renewed as part of a repair, use a new valve for the measurement.

5.2 Checking valves

– Visually inspect for scoring on valve stems and valve seat surfaces.

– Renew valve if scoring is clearly visible.

5.3 Valve dimensions

Valve dimensions

- Inlet and exhaust valves must not be machined. Only grinding-in is permitted.

Dimension		Inlet valve	Exhaust valve
∅ a	mm	33.85 ± 0.10	28.0 ± 0.1
∅ b	mm	5.98 ± 0.01	5.96 ± 0.01
c	mm	104.0 ± 0.2	101.9 ± 0.2
α	∠°	45	45

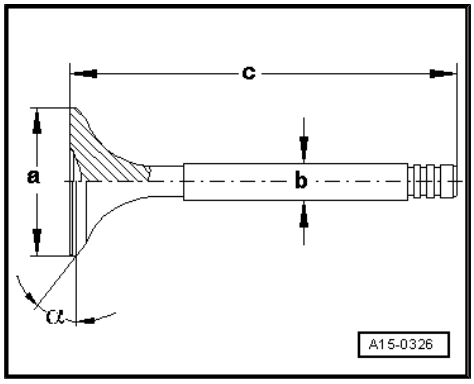

Protected by copyright. Copying for private or commercial purposes, in part or in whole, is not permitted unless authorised by AUDI AG. AUDI AG does not guarantee or accept any liability with respect to the correctness of information in this document. Copyright by AUDI AG.

17 – Lubrication

1 Sump/oil pump

⇒ "1.1 Exploded view - sump/oil pump", page 151

⇒ "1.2 Engine oil", page 153

⇒ "1.3 Removing and installing sump (bottom section)", page 153

⇒ "1.4 Removing and installing oil pump", page 155

⇒ "1.5 Removing and installing sump (top section)", page 157

⇒ "1.6 Removing and installing oil level and oil temperature sender G266 ", page 160

Protected by copyright. Copying for private or commercial purposes, in part or in whole, is not permitted unless authorized by AUDI AG. AUDI AG does not guarantee or accept any liability with respect to the correctness of information in this document. Copyright by AUDI AG.

1.1 Exploded view - sump/oil pump

- If large quantities of metal shavings or particles are found in the engine oil when repairing the engine, the oil passages must be cleaned carefully in order to prevent further damage occurring later. In addition, renew oil spray jets, engine oil cooler and oil filter.
- Oil spray jet and pressure relief valve ⇒ page 55

1 - Oil level and oil temperature sender - G266-
- ❑ Removing and installing ⇒ page 160

2 - Gasket
- ❑ Renew after removing

3 - Bolt
- ❑ Renew after removing
- ❑ Tightening sequence ⇒ page 153

4 - Sump (bottom section)
- ❑ Removing and installing ⇒ page 153

5 - Baffle plate
- ❑ Renew after removing

6 - Suction pipe
- ❑ Clean strainer if dirty

7 - Bolt
- ❑ 9 Nm

8 - O-ring
- ❑ Renew after removing
- ❑ Lubricate

9 - Oil pump
- ❑ Removing and installing ⇒ page 155

10 - Centring sleeve

11 - O-ring
- ❑ Renew after removing

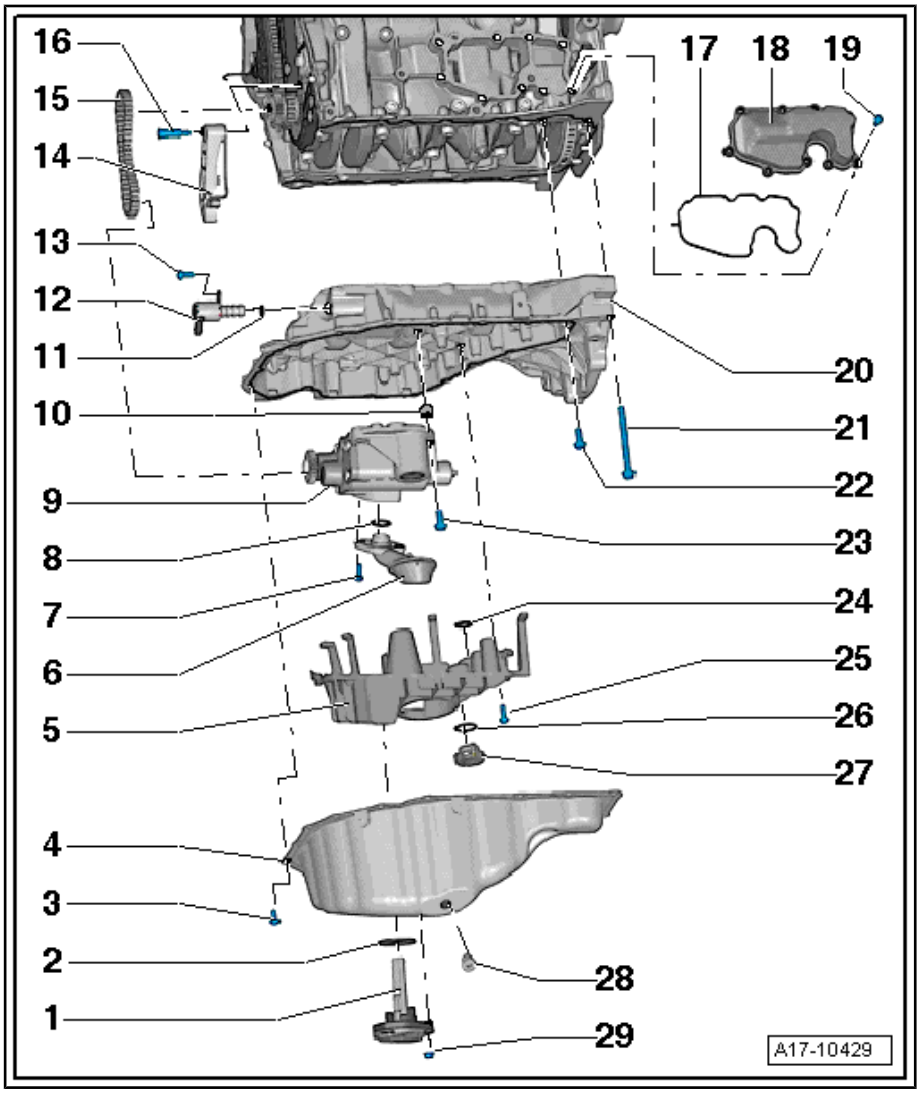

12 - Valve for oil pressure control - N428-

- ❑ Removing and installing ⇒ page 169

13 - Bolt

- ❑ Tightening torque ⇒ Item 1 (page 167)

14 - Chain tensioner

15 - Drive chain for oil pump

- ❑ Mark direction of rotation before removing

16 - Bolt

- ❑ 9 Nm

17 - Gasket

- ❑ Renew after removing

18 - Oil separator

- ❑ On cylinder block
- ❑ Removing and installing ⇒ page 164

19 - Bolt

- ❑ Tightening torque and sequence ⇒ page 163

20 - Sump (top section)

- ❑ Removing and installing ⇒ page 157

21 - Bolt

- ❑ Renew after removing
- ❑ Tightening torque and sequence ⇒ page 153

22 - Bolt

- ❑ Renew after removing
- ❑ Tightening torque and sequence ⇒ page 153

23 - Bolt

- ❑ 20 Nm

24 - Gasket

- ❑ Renew after removing

25 - Bolt

- ❑ 9 Nm

26 - Gasket

- ❑ Renew after removing

27 - Non-return valve

28 - Oil drain plug

- ❑ Renew after removing
- ❑ 30 Nm

29 - Nut

- ❑ 9 Nm

Protected by copyright. Copying for private or commercial purposes, in part or in whole, is not permitted unless authorised by AUDI AG. AUDI AG does not guarantee or accept any liability with respect to the correctness of information in this document. Copyright by AUDI AG.

Sump (bottom section) - tightening torques and sequence

- After removing, renew bolts tightened with specified tightening angle.

– Tighten bolts in stages in the sequence shown:

Stage	Bolts	Tightening torques/angle specification
1.	-1 … 19-	Screw in by hand until contact is made
2.	-1 … 19-	8 Nm
3.	-1 … 19-	Turn 45° further

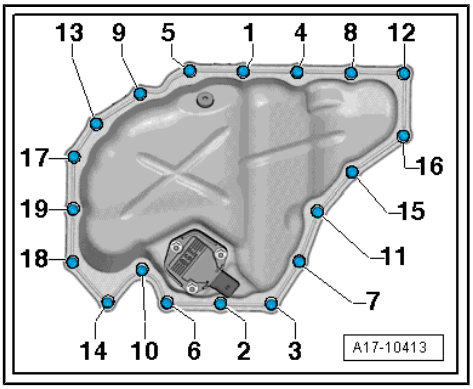

Sump (top section) - tightening torques and sequence

- After removing, renew bolts tightened with specified tightening angle.

– Tighten bolts in stages in the sequence shown:

Stage	Bolts	Tightening torques/angle specification
1.	-1 … 13-	Screw in by hand until contact is made
2.	-1 … 13-	15 Nm
3.	-1 … 13-	Turn 90° further

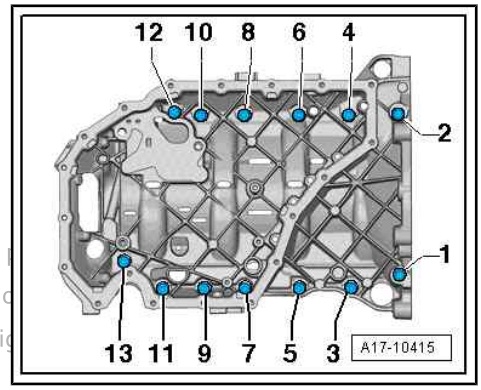

Protected by copyright. Copying for private or commercial purposes, in p
permitted unless authorised by AUDI AG. AUDI AG does not guarantee o
with respect to the correctness of information in this document. Copyrig

1.2 Engine oil

- Draining and filling up engine oil, checking oil level, removing and installing oil filter element ⇒ 4-cylinder direct injection engine (1.8, 2.0 ltr. 4-valve TFSI); Rep. gr. 17 ; Sump/oil pump; Engine oil
- Oil capacities, oil specifications and viscosity grades ⇒ Maintenance tables .

1.3 Removing and installing sump (bottom section)

Note

The plastic fins on the baffle plate are deformed permanently during tightening. The plastic fins make sure that the baffle plate rests on the contact surface without play and does not cause rattling noises. The baffle plate must therefore always be renewed.

Special tools and workshop equipment required

- Flat scraper
- Sealant remover
- Electric drill with plastic brush attachment
- Safety goggles
- Sealant ⇒ Electronic parts catalogue

Removing

- Engine oil drained ⇒ page 153 .

Preparatory work may be necessary depending on model ⇒ 4-cylinder direct injection engine (1.8, 2.0 ltr. 4-valve TFSI); Rep.

gr. 17 ; Sump/oil pump; Removing and installing sump (bottom section) .

– Unplug connector from oil level and oil temperature sender - G266- -arrow-.

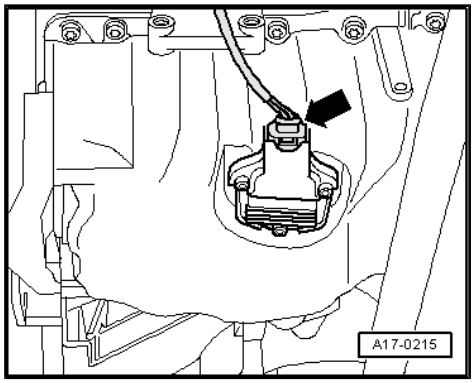

– Remove bolts -1 ... 19-.

– Take off sump: if necessary loosen it by striking lightly with a rubber hammer.

– If renewing sump (bottom section), remove oil level and oil temperature sender - G266- ⇒ page 160 .

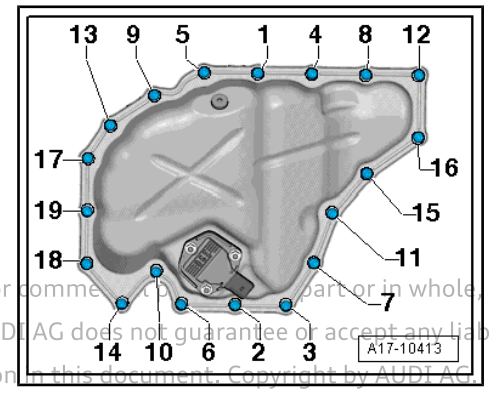

Installing

- After removing, renew bolts tightened with specified tightening angle.

– Spray sealing surface with sealant remover and wait for it to take effect.

– Remove sealant remaining on sump (top section) with flat scraper.

Protected by copyright. Copying for private or commercial purposes, in part or in whole, is not permitted unless authorised by AUDI AG. AUDI AG does not guarantee or accept any liability with respect to the correctness of information in this document. Copyright by AUDI AG.

⚠ CAUTION

Risk of eye injury due to sealant residue.

– Put on safety goggles.

– Remove sealant residue on sump (bottom section) -1- using rotating plastic brush or similar.

– Clean sealing surfaces; they must be free of oil and grease.

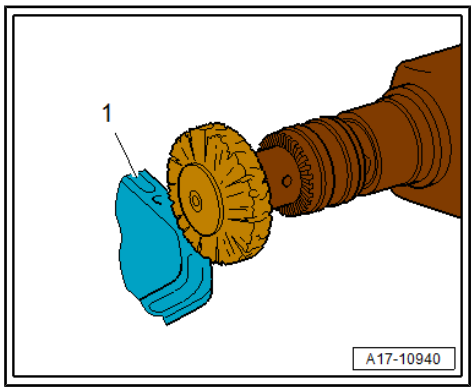

Protected by copyright. Copying for private or commercial purposes, in part or in
permitted unless authorised by AUDI AG. AUDI AG does not guarantee or accept any liability
with respect to the correctness of information in this document. Copyright by AUDI AG.

Note:

Note expiry date of sealant.

– Cut off nozzle of tube at front marking (nozzle ∅ approx. 3 mm).

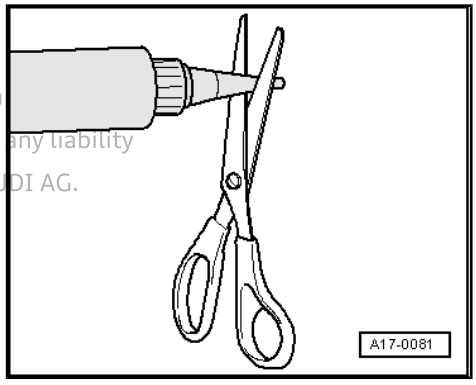

– Apply sealant onto clean sealing surface of sump (bottom section) as illustrated -arrow-.

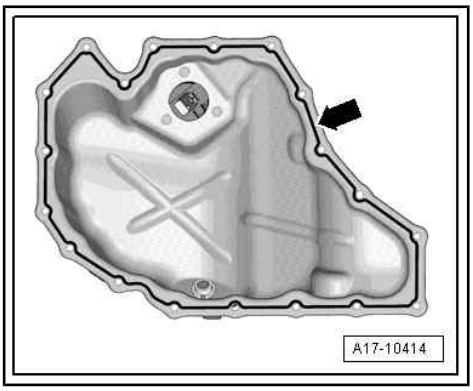

- Thickness of sealant bead: 2 ... 3 mm
- The bead of sealant must not be thicker than specified, otherwise excess sealant can enter the sump and obstruct the strainer in the oil intake pipe.
- The sump must be installed within 5 minutes after applying sealant.
- After fitting sump, sealant must dry for approx. 30 minutes. Then (and only then) fill the engine with engine oil.

– Fit sump (bottom section) immediately and tighten bolts ⇒ page 153 .

– Fill with engine oil and check oil level ⇒ page 153 .

Additional work depending on model ⇒ 4-cylinder direct injection engine (1.8, 2.0 ltr. 4-valve TFSI); Rep. gr. 17 ; Sump/oil pump; Removing and installing sump (bottom section)

Tightening torques

- ⇒ Fig. ""Sump (bottom section) - tightening torques and sequence"" , page 153
- ⇒ "1.1 Exploded view - sump/oil pump", page 151

1.4 Removing and installing oil pump

Special tools and workshop equipment required

- Assembly tool - T10118-

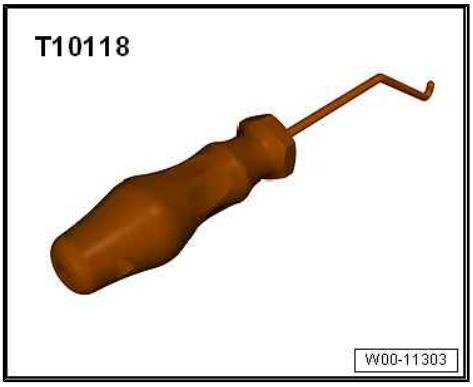

♦ Locking tool - T40265-

Protected by copyright. Copying for private or commercial purposes, in part or in whole, is not permitted unless authorised by AUDI AG. AUDI AG does not guarantee or accept any liability with respect to the correctness of information in this document. Copyright by AUDI AG.

Removing

– Remove sump (bottom section) ⇒ page 153 .

– Unscrew bolts -arrows- and detach baffle plate.

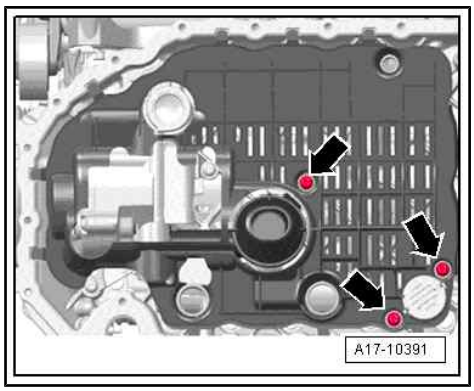

– Using assembly tool - T10118- , pull support wire of spring for chain tensioner in direction of -arrow- and secure in place with locking tool - T40265- .

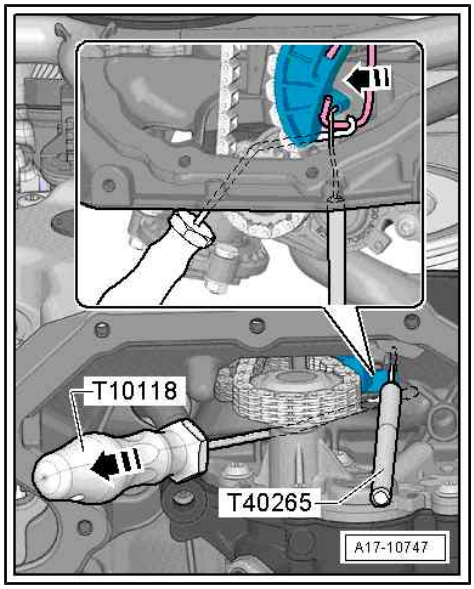

– Remove bolts -arrows- and remove oil pump.

Installing

Installation is carried out in reverse order; note the following:

- Renew baffle plate ⇒ Item 5 (page 151) after removing.
- After removing, renew bolts tightened with specified tightening angle.

– Check that both centring sleeves are fitted in oil pump.

– Guide oil pump sprocket into drive chain and install oil pump.

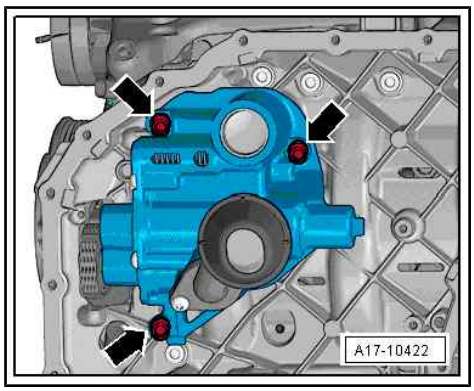

NOTICE

Risk of damage to engine if drive chain for oil pump is not tensioned correctly.

– **Ensure that support wire for spring engages correctly on cast projection on sump (top section).**

Protected by copyright. Copying for private or commer
permitted unless authorised by AUDI AG. AUDI AG doe
with respect to the correctness of information in this d

– Using assembly tool - T10118- , pull support wire of spring for chain tensioner in direction of -arrow- and remove locking tool - T40265- .

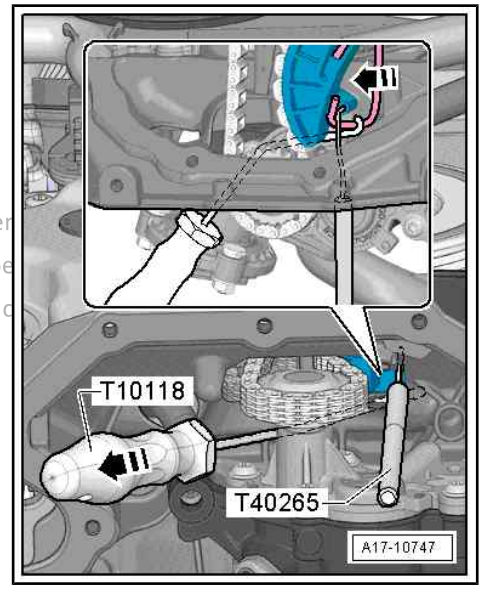

– Fit new baffle plate and secure in position.

– Install sump (bottom section) ⇒ page 153 .

– Fill with engine oil and check oil level ⇒ page 153 .

Tightening torques

♦ ⇒ “1.1 Exploded view - sump/oil pump”, page 151

1.5 Removing and installing sump (top section)

Special tools and workshop equipment required

♦ Electric drill with plastic brush

♦ Safety goggles

♦ Sealant ⇒ Electronic parts catalogue

Removing

• Gearbox removed ⇒ Gearbox; Rep. gr. 34 ; Removing and installing gearbox; Removing gearbox , or ⇒ Automatic gearbox; Rep. gr. 37 ; Removing and installing gearbox; Removing gearbox

– Remove sealing flange (gearbox end) ⇒ page 32 .

– Remove oil pump ⇒ page 155 .

– Unplug electrical connector -1- and move wiring clear.

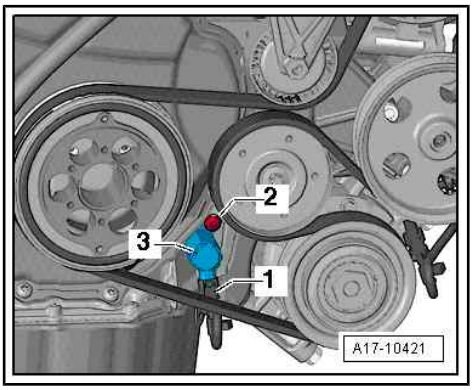

Note

Illustration shows vehicle with power steering pump.

– Remove bolts -arrows-.

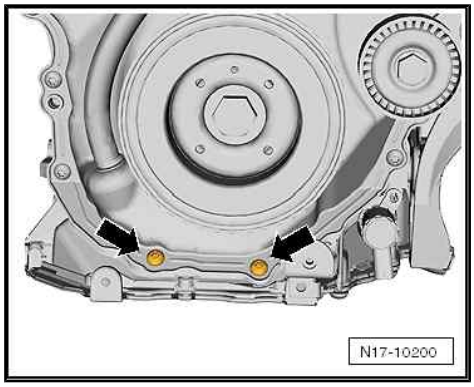

– Slacken and remove bolts in the sequence: -13 ... 1-.

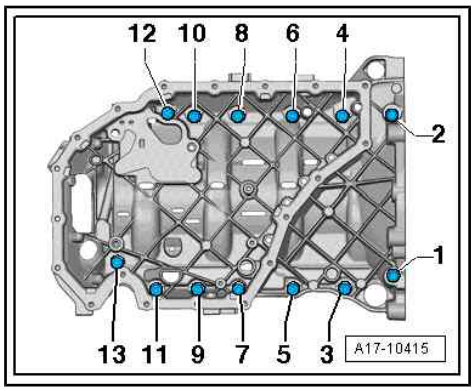

- Lever off sump (top section) at gearbox end first. Be careful when levering off.

– Carefully release sump (top section) from bonded joint.

Installing

- After removing, renew bolts tightened with specified tightening angle.
- Renew O-rings after removing.
- Renew baffle plate ⇒ Item 5 (page 151) after removing.

– Remove sealant remaining on cylinder block with flat scraper.

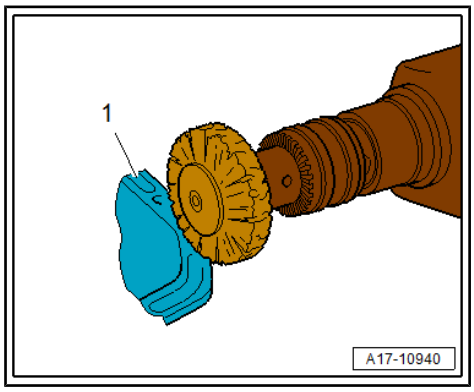

CAUTION

Risk of eye injury due to sealant residue.

– Put on safety goggles.

– Remove residual sealant on sump (top section) and timing chain cover (bottom) -1- using rotating plastic brush or similar.

- Check whether timing chain cover is deformed. For this purpose, first fit sump (top section) without sealant and determine gap between cover and sump (top section). If the cover is deformed and cannot be straightened, renew cover after installing sump (top section).

– Clean sealing surfaces; they must be free of oil and grease.

– Check oil passages in sump (top section) and in cylinder block for dirt.

Protected by copyright. Copying for private or commercial purposes, in part or in whole, is not permitted unless authorised by AUDI AG. AUDI AG does not guarantee or accept any liability with respect to the correctness of information in this document. Copyright by AUDI AG.

Note:

Note expiry date of sealant.

– Cut off nozzle of tube at front marking (nozzle ∅ approx. 2 mm).

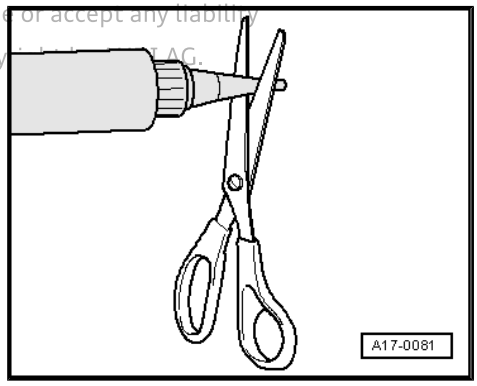

NOTICE

Risk of engine damage due to excessive sealant in lubrication system.

– **The sealant bead must not be thicker than specified.**

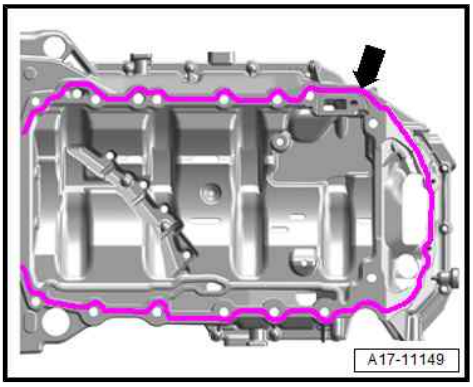

– Apply sealant as shown -arrow- onto clean sealing surface of sump (top section).

♦ Thickness of sealant bead: 2 ... 3 mm

– Apply sealant between cylinder block and timing chain cover (bottom) -arrows-.

Protected by copyright. Copying for private or commercial purposes, in part or in whole, is not permitted unless authorised by AUDI AG. AUDI AG does not guarantee the correctness of information in this document. Copyright by AUDI AG.

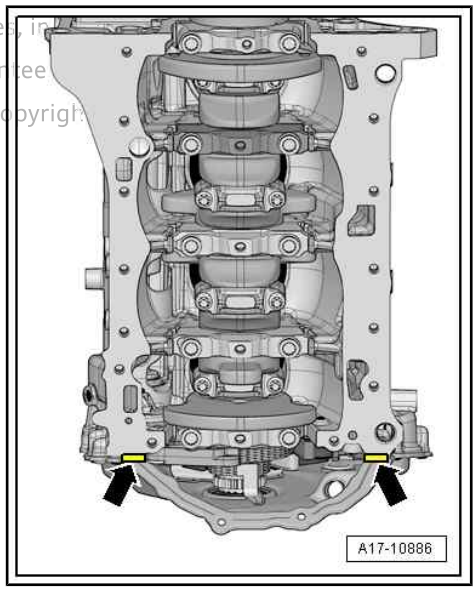

• Sump (top section) and crankcase must be flush at gearbox end.

• The sump (top section) must be installed within 5 minutes after applying sealant.

– Immediately fit sump (top section) and tighten bolts.

– Fit bolts -arrows-. Tightening torques ⇒ Item 13 (page 64)

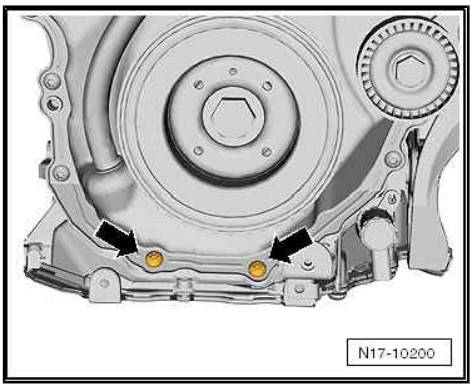

Remaining installation steps are carried out in reverse sequence; note the following:

– Install oil pump ⇒ page 155 (baffle plate ⇒ Item 5 (page 151) must be installed first).

– Install sealing flange (gearbox end) ⇒ page 32 .

Tightening torques

♦ ⇒ Fig. ""Sump (top section) - tightening torques and sequence"" , page 153

♦ ⇒ "1.1 Exploded view - sump/oil pump", page 151

1.6 Removing and installing oil level and oil temperature sender - G266-

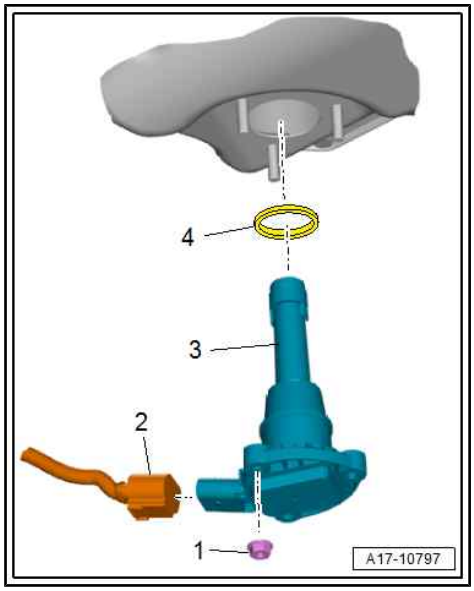

Removing

- Engine oil drained ⇒ page 153 .

– Unplug electrical connector -2-.

– Remove nuts -1- and detach oil level and oil temperature sender - G266- -3-.

Installing

Installation is carried out in reverse order; note the following:

- Renew seal -4- after removing.

– Fill with engine oil and check oil level ⇒ page 153 .

Tightening torques

◆ ⇒ “1.1 Exploded view - sump/oil pump”, page 151

Protected by copyright. Copying for private or commercial purposes, in part or in whole, is not permitted unless authorised by AUDI AG. AUDI AG does not guarantee or accept any liability with respect to the correctness of information in this document. Copyright by AUDI AG.

2 Engine oil cooler

⇒ "2.1 Exploded view - engine oil cooler", page 161

⇒ "2.2 Removing and installing engine oil cooler", page 161

2.1 Exploded view - engine oil cooler

1 - Bracket for ancillaries
- ❑ Removing and installing ⇒ page 27

2 - Bolt
- ❑ 15 Nm

3 - Connection

4 - Seal
- ❑ Renew after removing
- ❑ Lubricate with coolant

5 - Engine oil cooler
- ❑ See note ⇒ page 151
- ❑ Removing and installing ⇒ page 161

6 - Gasket
- ❑ Renew after removing

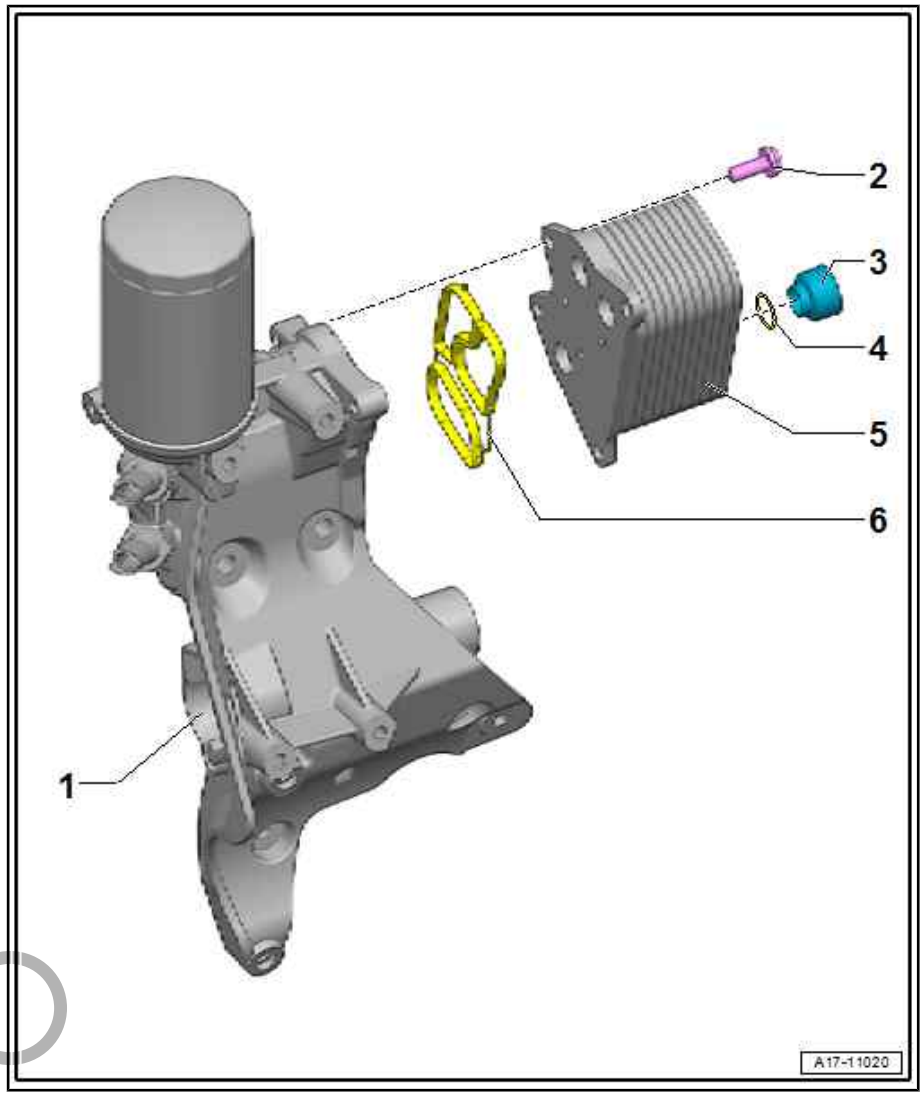

Protected by copyright. Copying for private or commercial purposes, in part or in whole, is not permitted unless authorised by AUDI AG. AUDI AG does not guarantee or accept any liability with respect to the correctness of information in this document. Copyright by AUDI AG.

2.2 Removing and installing engine oil cooler

Removing

– Remove bracket for ancillaries ⇒ page 27 .

– Remove bolts -4 and 5- and detach engine oil cooler -3- with gasket -2- from bracket -1- for ancillaries.

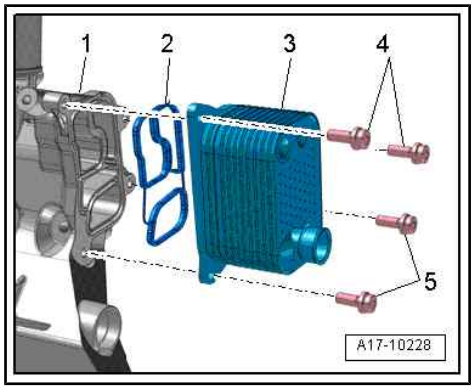

Installing

Installation is carried out in reverse order; note the following:

- Renew gasket after removing.
- Secure all hose connections with correct type of hose clips (as original equipment) ⇒ Electronic parts catalogue .

– Install engine oil cooler -3- with new seal -2-.

– Install bracket for ancillaries ⇒ page 27 .

– Fill with engine oil and check oil level ⇒ page 153 .

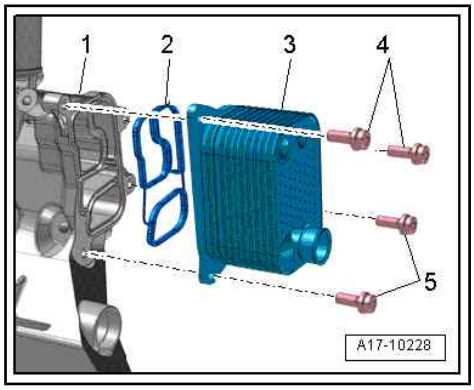

Tightening torques

◆ ⇒ “2.1 Exploded view - engine oil cooler”, page 161

Protected by copyright. Copying for private or commercial purposes, in part or in whole, is not permitted unless authorised by AUDI AG. AUDI AG does not guarantee or accept any liability with respect to the correctness of information in this document. Copyright by AUDI AG.

3 Crankcase breather

⇒ "3.1 Exploded view - crankcase breather system", page 163

⇒ "3.2 Removing and installing oil separator", page 164

3.1 Exploded view - crankcase breather system

1 - Breather pipe

2 - O-ring

- ❑ Not available as replacement part

3 - Gasket

- ❑ Not available as replacement part

4 - Oil separator

- ❑ On cylinder head cover
- ❑ Removing and installing ⇒ page 164

5 - Bolt

- ❑ Tightening torques and sequence ⇒ page 164

6 - Gasket

- ❑ Renew if damaged

7 - Gasket

- ❑ Renew after removing

8 - Oil separator

- ❑ On cylinder block
- ❑ Removing and installing ⇒ page 164

9 - Bolt

- ❑ Tightening torque and sequence ⇒ page 163

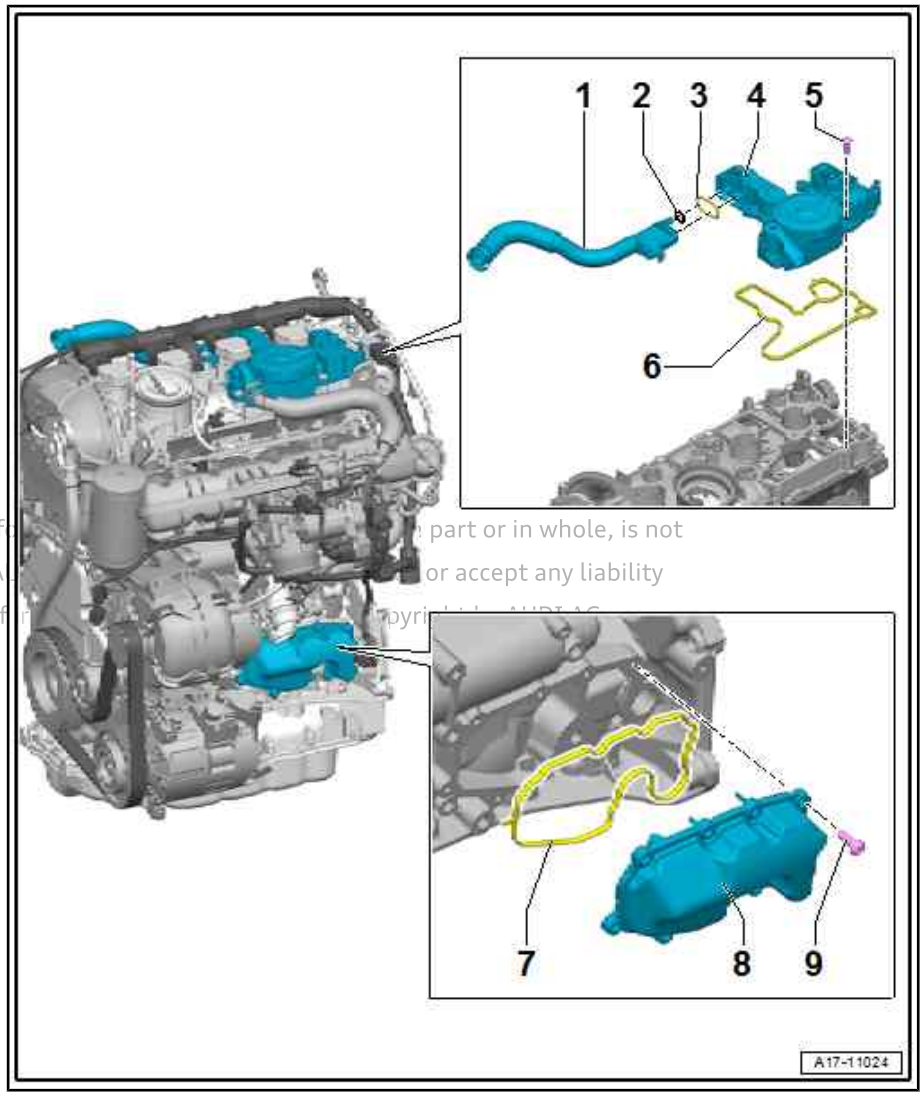

Protected by copyright. Copying f part or in whole, is not permitted unless authorised by A or accept any liability with respect to the correctness of i opyri AUDI AG

Oil separator on cylinder block - tightening torque and sequence

– Tighten bolts in the sequence -1 ... 9- to 9 Nm.

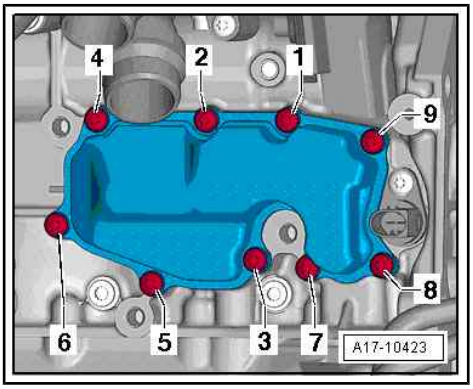

Oil separator on cylinder head cover - tightening torque and sequence

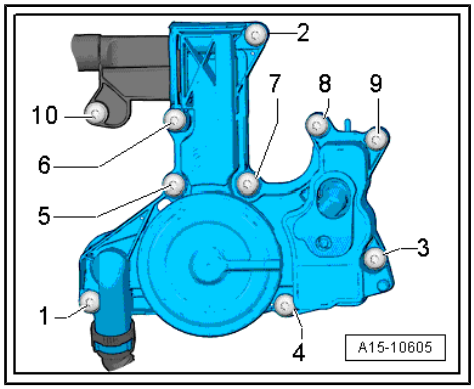

Note

- *The bolts are thread-forming. When renewing the cylinder head, it is important that you use only genuine bolts since the cylinder head is supplied without threaded holes for attachment of the crankcase breather.*
- *Do NOT make threaded holes using a thread tap.*

– Tighten bolts in the sequence -1 ... 10- to 11 Nm.

3.2 Removing and installing oil separator

⇒ "3.2.1 Removing and installing oil separator on cylinder block", page 164

⇒ "3.2.2 Removing and installing oil separator on cylinder head cover", page 164

3.2.1 Removing and installing oil separator on cylinder block

Removing

Preparatory work may be necessary depending on model ⇒ 4-cylinder direct injection engine (2.0 ltr. 4-valve TFSI); Rep. gr. 17 ; Crankcase breather; Removing and installing oil separator .

– Unscrew bolts -1 ... 9- and remove oil separator.

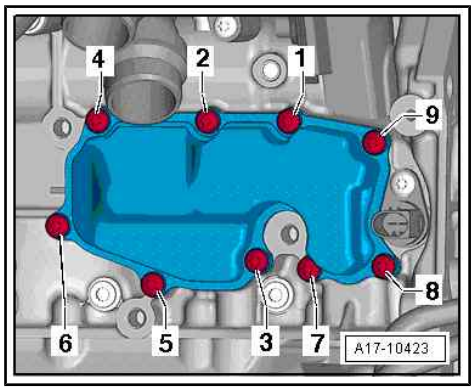

Note:

Cover opening of engine with a clean cloth to prevent dirt from entering lubrication system.

Installing

Installation is carried out in reverse order; note the following:

- Renew gasket and seals after removing.

Additional work depending on model ⇒ 4-cylinder direct injection engine (2.0 ltr. 4-valve TFSI); Rep. gr. 17 ; Crankcase breather; Removing and installing oil separator

Tightening torques

- ⇒ Fig. ""Oil separator on cylinder block - tightening torque and sequence"", page 163

Protected by copyright. Copying for private or commercial purposes, in part or in whole, is not permitted unless authorised by AUDI AG. AUDI AG does not guarantee or accept any liability with respect to the correctness of information in this document. Copyright by AUDI AG.

3.2.2 Removing and installing oil separator on cylinder head cover

Removing

– Remove ignition coils with output stage for cylinders "3" and "4" ⇒ page 249 .

Protected by copyright. Copying for private or commercial purposes, in pa
permitted unless authorised by AUDI AG. AUDI AG does not guarantee or
with respect to the correctness of information in this document. Copyrigh

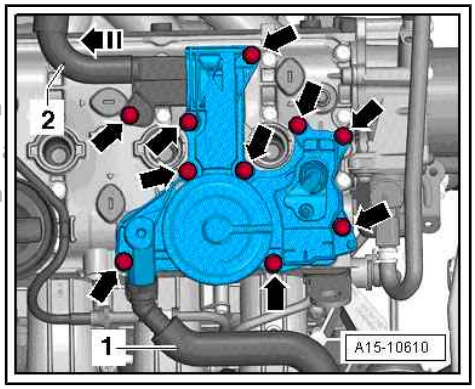

– Disconnect crankcase breather hose -1-.

– Remove bolts -arrows-, detach oil separator and disconnect crankcase breather hose -2- in direction of -arrow-.

– Cover open valve gear with a clean cloth.

Installing

Installation is carried out in reverse order; note the following:

– Install ignition coils for cylinders 3 and 4 ⇒ page 249 .

Tightening torques

♦ ⇒ Fig. ""Oil separator on cylinder head cover - tightening torque and sequence"" , page 164

4 Oil filter/oil pressure switches

⇒ “4.1 Exploded view - oil filter”, page 166

⇒ “4.2 Exploded view - oil pressure switches/oil pressure control”, page 167

⇒ “4.3 Removing and installing oil pressure switch F22 ”, page 167

⇒ “4.4 Removing and installing oil pressure switch for reduced oil pressure F378 ”, page 168

⇒ “4.5 Removing and installing valve for oil pressure control N428 ”, page 169

⇒ “4.6 Checking oil pressure”, page 170

4.1 Exploded view - oil filter

1 - Bracket for ancillaries

- ❑ Removing and installing ⇒ page 27

2 - O-ring

- ❑ Not available as replacement part, supplied together with valve unit

3 - O-ring

- ❑ Not available as replacement part, supplied together with valve unit

4 - Valve unit

- ❑ With O-rings

5 - Oil filter

- ❑ Removing and installing ⇒ page 153
- ❑ See note ⇒ page 151

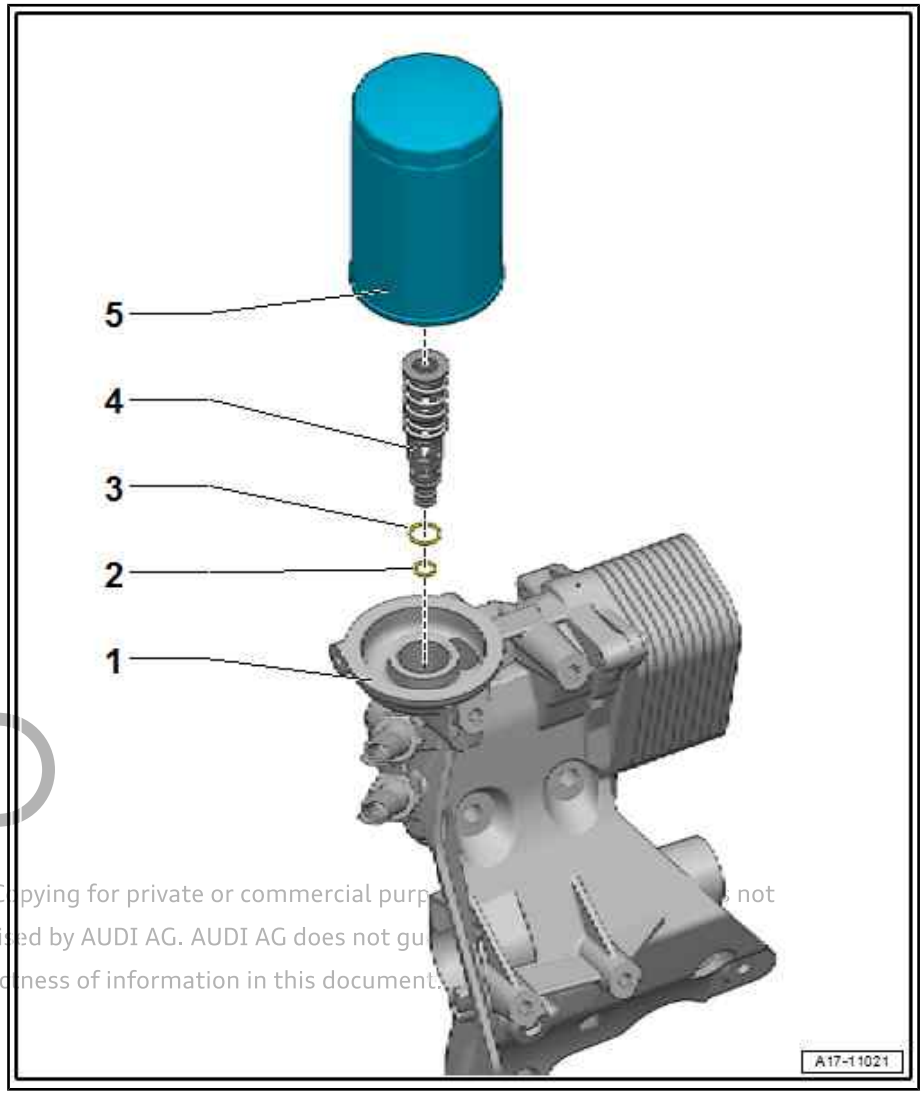

Protected by copyright. Copying for private or commercial purp[illegible] not permitted unless authorised by AUDI AG. AUDI AG does not gu[illegible] with respect to the correctness of information in this document.

4.2 Exploded view - oil pressure switches/oil pressure control

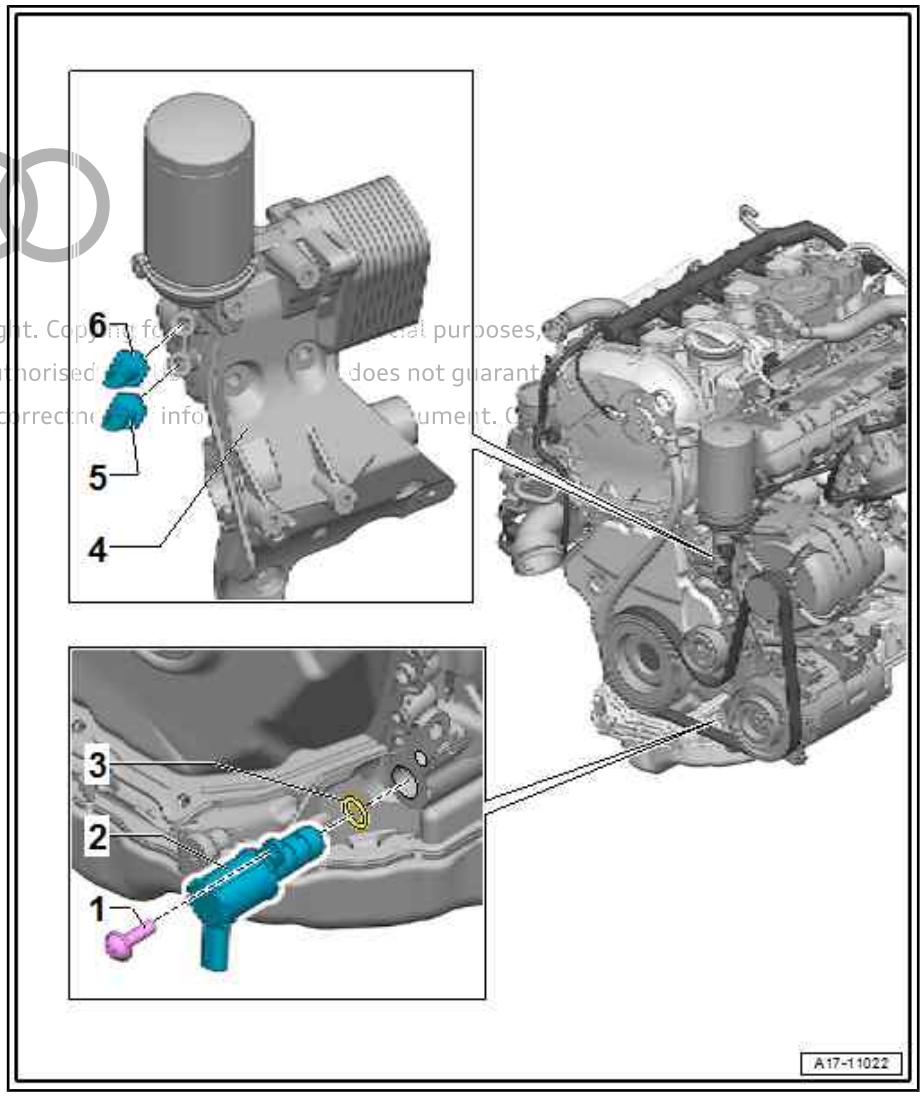

1 - Bolt

- ❑ 9 Nm

2 - Valve for oil pressure control - N428-

- ❑ Removing and installing ⇒ "4.5 Removing and installing valve for oil pressure control N428 ", page 169

3 - O-ring

- ❑ Renew after removing

4 - Bracket for ancillaries

- ❑ Exploded view ⇒ "1.1 Exploded view - cylinder block (pulley end)", page 12

5 - Oil pressure switch - F22-

2.15 … 2.95 bar

Blue insulation

Checking in `Guided Fault Finding` ⇒ Vehicle diagnostic tester

- ❑ Removing and installing ⇒ "4.3 Removing and installing oil pressure switch F22 ", page 167
- ❑ 20 Nm

6 - Oil pressure switch for reduced oil pressure - F378-

- ❑ Different installation position depending on version
- ❑ 0.55 … 0.85 bar
- ❑ Brown insulation
- ❑ Check in `Guided Fault Finding` ⇒ Vehicle diagnostic tester
- ❑ Removing and installing ⇒ "4.4 Removing and installing oil pressure switch for reduced oil pressure F378 ", page 168
- ❑ 20 Nm

4.3 Removing and installing oil pressure switch - F22-

Procedure

– Place a cloth underneath bracket for ancillaries to catch any escaping oil.

Vehicles with hydraulic power steering:

– Unplug electrical connector -1-.

– Remove oil pressure switch - F22- -2-.

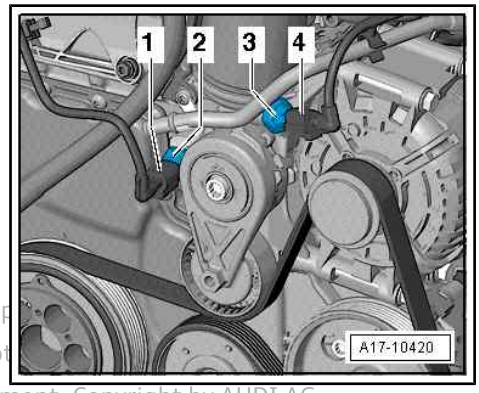

Protected by copyright. Copying for private or commercial p
permitted unless authorised by AUDI AG. AUDI AG does not
with respect to the correctness of information in this document. Copyright by AUDI AG.

Vehicles with electromechanical power steering:

– Unplug electrical connector -3-.

– Remove oil pressure switch - F22- -4-.

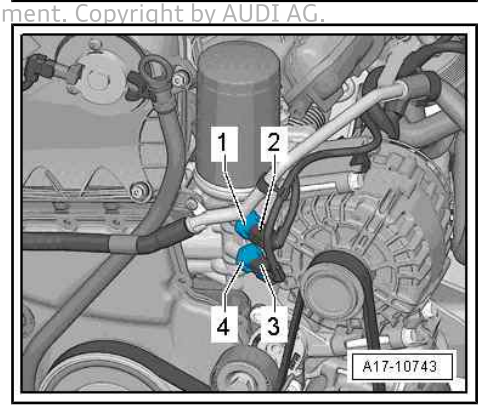

Vehicles with hybrid drive:

– Unplug electrical connector -1-.

– Unscrew oil pressure switch - F22- .

All vehicles (continued):

• Renew seal after removing.

– Fit new oil pressure switch immediately to avoid loss of oil.

– Check oil level ⇒ page 153 .

Tightening torques

◆ ⇒ “4.2 Exploded view - oil pressure switches/oil pressure control”, page 167

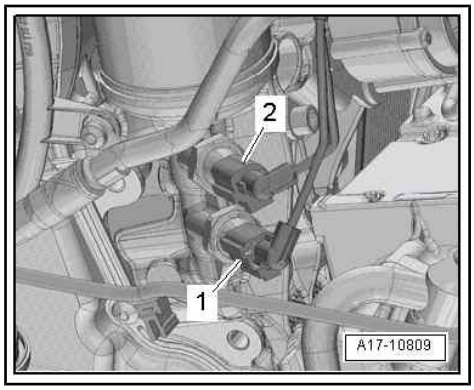

4.4 Removing and installing oil pressure switch for reduced oil pressure - F378-

Procedure

– Place a cloth underneath bracket for ancillaries to catch any escaping oil.

Vehicles with hydraulic power steering:

– Unplug electrical connector -4-.

– Unscrew oil pressure switch for reduced oil pressure - F378- -3-.

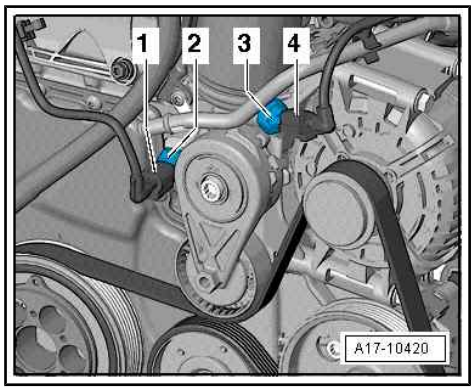

Vehicles with electromechanical power steering:

– Unplug electrical connector -2-.

– Unscrew oil pressure switch for reduced oil pressure - F378- -1-.

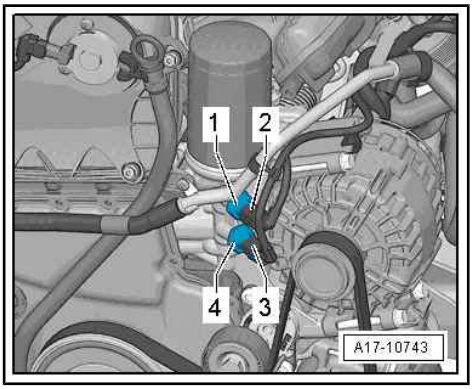

Vehicles with hybrid drive:

– Unplug electrical connector -2-.

– Unscrew oil pressure switch for reduced oil pressure - F378- .

All vehicles (continued):

• Renew seal after removing.

– Fit new oil pressure switch immediately to avoid loss of oil.

– Check oil level ⇒ page 153 .

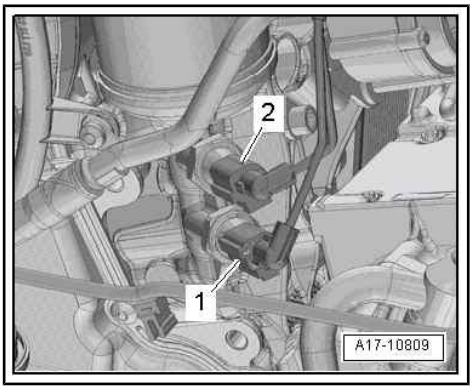

Tightening torques

♦ ⇒ “4.2 Exploded view - oil pressure switches/oil pressure control”, page 167

4.5 Removing and installing valve for oil pressure control - N428-

Special tools and workshop equipment required

♦ Used oil collection and extraction unit - VAS 6622A-

Protected by copyright. Copying for private or commercial purposes, in part or in whole, is not permitted unless authorised by AUDI AG. AUDI AG does not guarantee or accept any liability with respect to the correctness of information in this document. Copyright by AUDI AG.

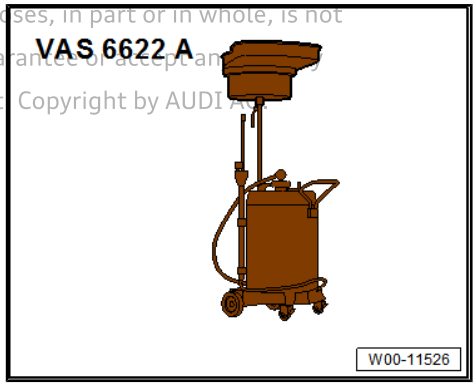

Removing

– Remove noise insulation (front) ⇒ General body repairs, exterior; Rep. gr. 66 ; Noise insulation; Removing and installing noise insulation .

– Unplug electrical connector -1-.

Protected by copyright. Copying for private or commercia
permitted unless authorised by AUDI AG. AUDI AG does
with respect to the correctness of information in this doc

Note

Illustration shows vehicle with power steering pump.

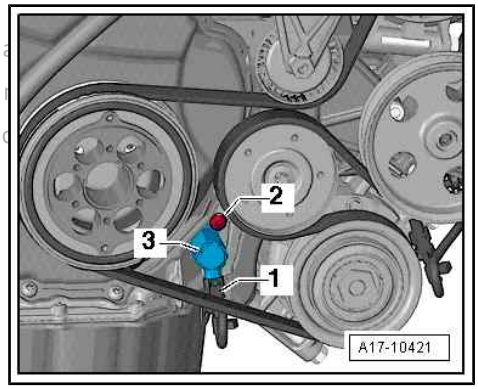

– Position used oil collection and extraction unit - VAS 6622A- below engine.

– Remove bolt -2- and detach valve for oil pressure control - N428- -item 3- (pull poly V-belt slightly downwards).

Installing

Installation is carried out in reverse order; note the following:

- Renew O-ring after removal.

– Check oil level ⇒ page 153 .

Tightening torques

♦ ⇒ “4.2 Exploded view - oil pressure switches/oil pressure control”, page 167

♦ ⇒ General body repairs, exterior; Rep. gr. 66 ; Noise insulation; Exploded view - noise insulation

4.6 Checking oil pressure

Special tools and workshop equipment required

♦ Oil pressure tester - V.A.G 1342-

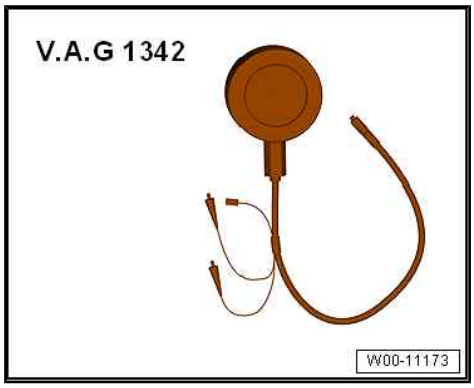

Test requirements

- Oil level has been checked and is OK ⇒ page 153 .
- Engine oil temperature at least 80 °C (radiator fan must have run once).

Test sequence

– Unscrew oil pressure switch for reduced oil pressure - F378- ⇒ “4.4 Removing and installing oil pressure switch for reduced oil pressure F378 ”, page 168 .

– Screw oil pressure tester - V.A.G 1342- into oil filter bracket in place of oil pressure switch.

– Screw oil pressure switch for reduced oil pressure - F378- into oil pressure tester - V.A.G 1342- .

– Start engine.

- Oil pressure at idling speed: 1.2 ... 2.0 bar.
- Oil pressure at 2000 rpm: 1.6 ... 2.2 bar.

- Oil pressure at 3700 rpm: 3.0 ... 4.0 bar.

Protected by copyright. Copying for private or commercial purposes, in part or in whole, is not permitted unless authorised by AUDI AG. AUDI AG does not guarantee or accept any liability with respect to the correctness of information in this document. Copyright by AUDI AG.

Note

During the running-in period, the oil pressure at 2000 rpm can be between 3.0 and 4.0 bar.

Attaching

– Install oil pressure switch for reduced oil pressure - F378-
⇒ “4.4 Removing and installing oil pressure switch for reduced oil pressure F378 ”, page 168 .

19 – Cooling

1 Cooling system/coolant

⇒ “1.1 Connection diagram - coolant hoses”, page 172

⇒ “1.2 Checking cooling system for leaks”, page 172

⇒ “1.3 Draining and filling cooling system”, page 176

1.1 Connection diagram - coolant hoses

All components are described in ⇒ 4-cylinder direct injection engine (1.8, 2.0 ltr. 4-valve TFSI); Rep. gr. 19 ; Cooling system/ coolant; Connection diagram - coolant hoses .

1.2 Checking cooling system for leaks

Special tools and workshop equipment required

- Cooling system tester - V.A.G 1274 B-

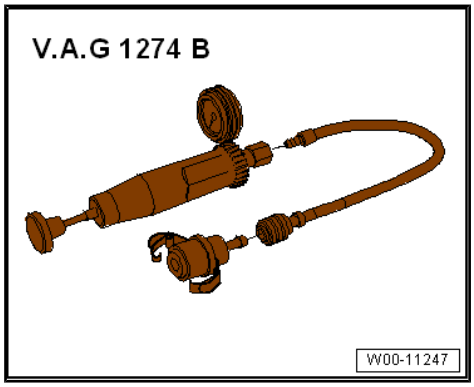

- Adapter for cooling system tester - V.A.G 1274/8-

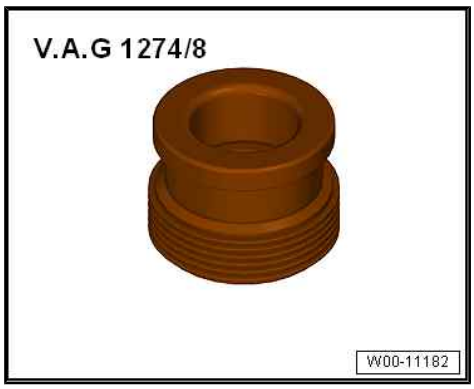

- Cooling system tester adapter - V.A.G 1274/9- for filler cap (version 1)

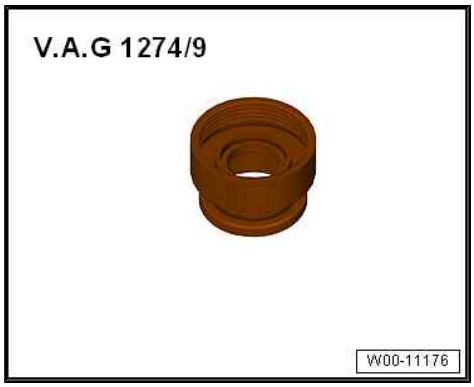

Protected by copyright. Copying for private or commercial purposes, in part or in whole, is not permitted unless authorised by AUDI AG. AUDI AG does not guarantee or accept any liability with respect to the correctness of information in this document. Copyright by AUDI AG.

- Cooling system tester adapter - V.A.G 1274B/15- for filler cap (version 2)

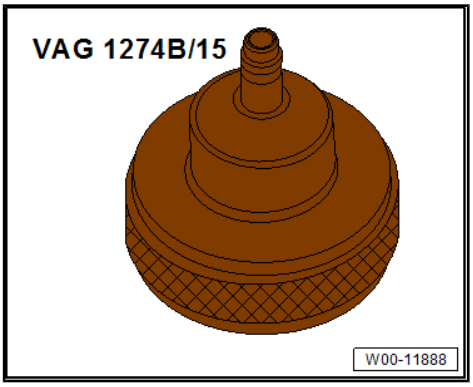

- Safety goggles
- Protective gloves

Procedure

- Engine must be warm.

CAUTION

The cooling system is under pressure when the power unit is hot. Risk of scalding due to hot steam and hot coolant.

Danger of scalding skin and other parts of the body.

– Put on protective gloves.
– Put on safety goggles.
– Cover filler cap on expansion tank with a cloth and open carefully to release pressure.

– Release fastener -arrow- (if necessary) and open filler cap -1- on coolant expansion tank.

Note:

There are variations depending on model and version.

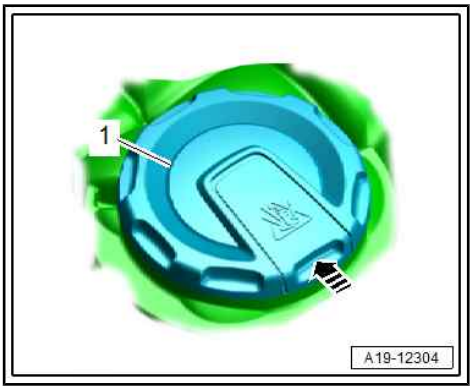

Protected by copyright. Copying for private or commercial purposes, in part or in whole, is not permitted unless authorised by AUDI AG. AUDI AG does not guarantee or accept any liability with respect to the correctness of information in this document. Copyright by AUDI AG.

– Fit cooling system tester - V.A.G 1274 B- with adapter - V.A.G 1274/8- onto coolant expansion tank.

– Using hand pump on cooling system tester, build up a pressure of approx. 1.0 bar.

• The pressure should not drop more than 0.2 bar within 10 minutes.

– If the pressure drops more than 0.2 bar, locate leak and eliminate fault.

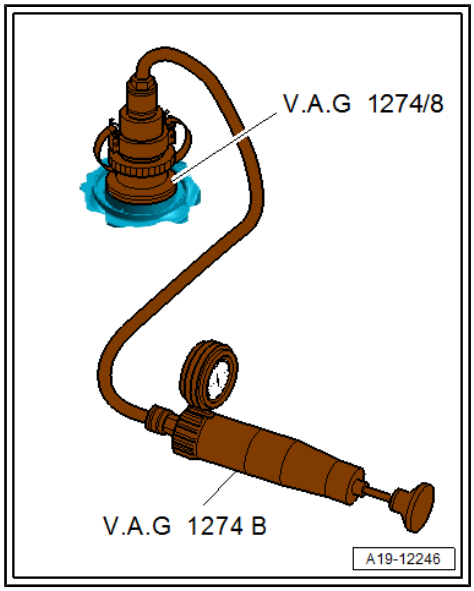

Note:

The drop in pressure of 0.2 bar within 10 minutes is caused by the decrease in coolant temperature. The colder the engine is, the less the pressure will fall. If necessary, check again when the engine is cold.

CAUTION

Risk of scalding due to hot steam and hot coolant.

Danger of scalding skin and other parts of the body.

– To release pressure, press pressure relief valve on cooling system tester until reading on pressure gauge is 0.

Checking pressure relief valve in filler cap, version 1

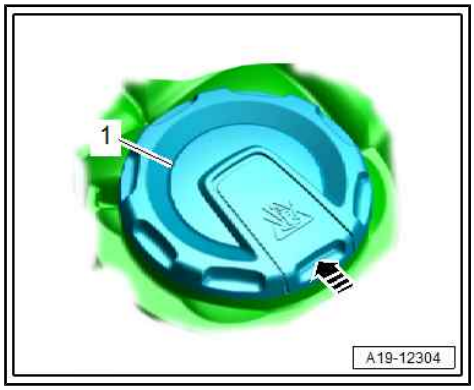

– Fit cooling system tester - V.A.G 1274 B- with adapter - V.A.G 1274 B/15- onto filler cap.

– Using hand pump on cooling system tester, build up a pressure of approx. 2 bar.

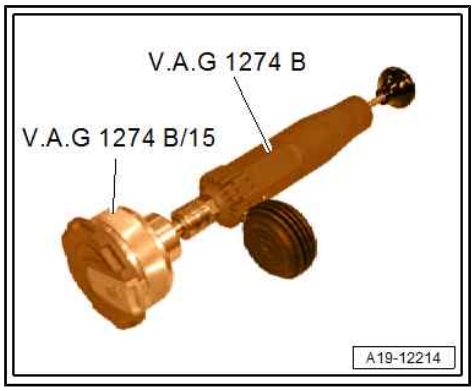

Blue filler cap:

• The pressure must be reduced to 1.6 ... 1.4 bar and kept at this level.

– Renew filler cap if pressure relief valve does not react as described.

Black filler cap:

• The pressure must be reduced to 1.8 ... 1.6 bar and kept at this level.

– Renew filler cap if pressure relief valve does not react as described.

Protected by copyright. Copying for private or commercial purposes, in part or in whole, is not permitted unless authorised by AUDI AG. AUDI AG does not guarantee or accept any liability with respect to the correctness of information in this document. Copyright by AUDI AG.

Checking pressure relief valve in filler cap, version 2

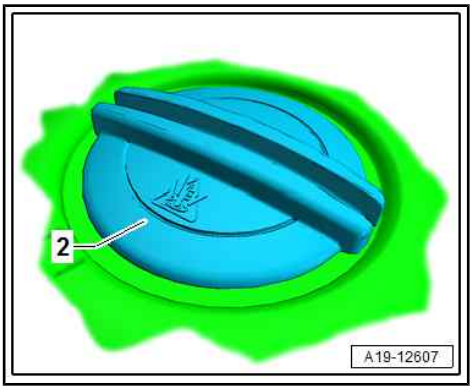

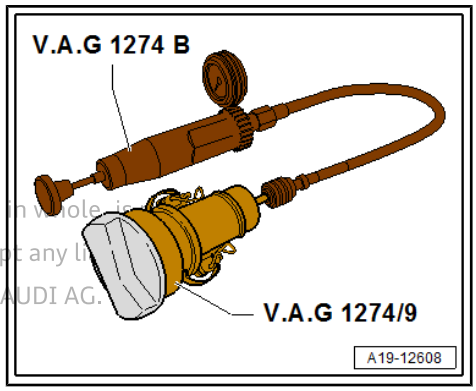

– Fit cooling system tester - V.A.G 1274 B- with adapter - V.A.G 1274/9- onto filler cap.

– Build up pressure with hand pump on cooling system tester.

Blue filler cap:

♦ The pressure relief valve should open at a pressure of 1.4 ... 1.6 bar.

– Renew filler cap if pressure relief valve does not react as described.

Black filler cap:

♦ The pressure relief valve should open at a pressure of 1.6 ... 1.8 bar.

– Renew filler cap if pressure relief valve does not react as described.

Protected by copyright. Copying for private or commercial purposes, in part or in whole, is not permitted unless authorised by AUDI AG. AUDI AG does not guarantee or accept any liability with respect to the correctness of information in this document. Copyright by AUDI AG.

1.3 Draining and filling cooling system

Coolant specifications

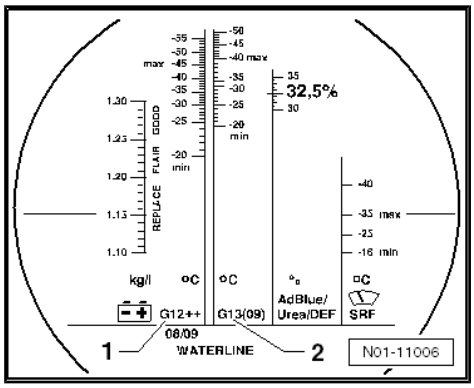

Note

- *The effectiveness of the coolant is greatly influenced by the quality of the water with which it is mixed. Because water may contain different substances depending on the country or even the region, the water quality to be used for cooling systems has been specified. Distilled water meets all the requirements and is therefore recommended for use when topping up or filling up with coolant.*
- *Use only coolant additives listed in the ⇒ Electronic parts catalogue (ETKA) . If you use other coolant additives, this can significantly impair in particular the corrosion protection effect. The resulting damage could lead to loss of coolant and consequently to serious engine damage.*
- *Coolant with the recommended mixture ratio prevents frost and corrosion damage and stops scaling. At the same time it raises the boiling point of the fluid in the system. For this reason the cooling system must be filled all year round with the correct coolant additive.*
- *Because of its high boiling point, the coolant improves engine reliability under heavy loads, particularly in countries with tropical climates.*
- *The refractometer - T10007A- MUST be used to determine the current level of frost protection.*
- *The mixture must guarantee frost protection down to at least -25 °C (in countries with arctic climate: down to -36 °C). The amount of antifreeze should only be increased if greater frost protection is required in very cold climates. This must only be down to -48 °C, however, as otherwise the cooling efficiency of the coolant is impaired.*

Protected by copyright. Copying for private or commercial purposes, in part or in whole, is not permitted unless authorised by AUDI AG. AUDI AG does not guarantee or accept any liability with respect to the correctness of information in this document. Copyright by AUDI AG.

- *The coolant concentration must not be reduced by adding water even in warmer seasons and in warmer countries. Frost protection must be provided to at least -25 °C.*
- *Read off the level of frost protection on the scale for the relevant coolant additive.*
- *The temperature indicated on the refractometer - T10007A- corresponds to the temperature at which the first ice crystals can form in the coolant.*
- *Do not reuse coolant.*
- *Only use water/coolant additive as a lubricant for coolant hoses.*

Draining and filling cooling system

All procedures are described in ⇒ 4-cylinder direct injection engine (1.8, 2.0 ltr. 4-valve TFSI); Rep. gr. 19 ; Cooling system/ coolant; Draining and filling cooling system .

2 Coolant pump/thermostat assembly

⇒ “2.1 Exploded view - coolant pump/thermostat”, page 177

⇒ “2.2 Exploded view - electric coolant pump”, page 178

⇒ “2.3 Removing and installing electric coolant pump”, page 178

⇒ “2.4 Removing and installing coolant pump”, page 179

⇒ “2.5 Removing and installing toothed belt for coolant pump”, page 180

⇒ “2.6 Removing and installing thermostat”, page 181

⇒ “2.7 Checking thermostat”, page 182

⇒ “2.8 Removing and installing coolant temperature sender G62 ”, page 182

⇒ “2.9 Removing and installing coolant valves”, page 183

2.1 Exploded view - coolant pump/thermostat

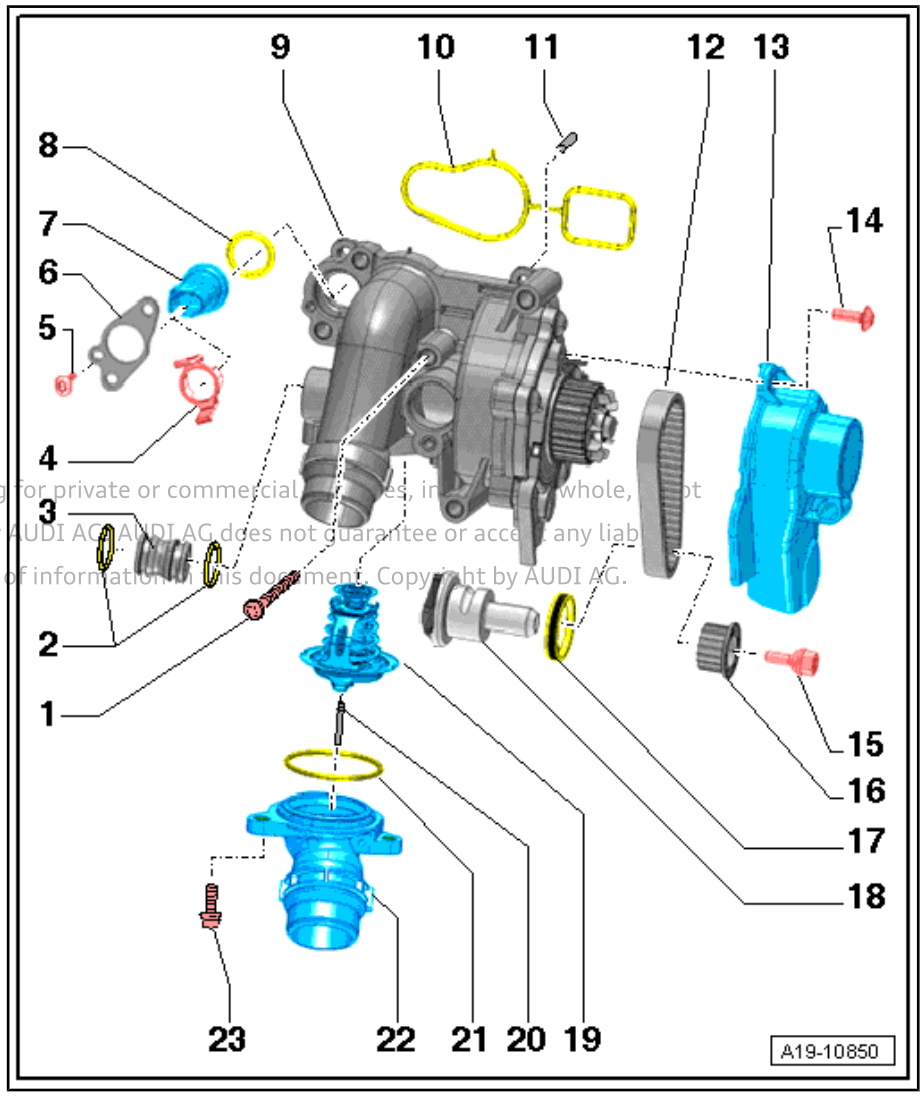

1 - Bolt
- ❑ Tightening torques and sequence ⇒ page 178

2 - O-rings
- ❑ Renew after removing

3 - Connection

4 - Retaining clip
- ❑ Only on clip-on version
- ❑ Check that it is securely seated

5 - Bolt
- ❑ 4 Nm
- ❑ Only on bolted version

6 - Retaining plate
- ❑ Only on bolted version

7 - Coolant temperature sender - G62-
- ❑ Removing and installing ⇒ “2.8 Removing and installing coolant temperature sender G62 ”, page 182

8 - O-ring
- ❑ Renew after removing

9 - Coolant pump
- ❑ Removing and installing ⇒ “2.4 Removing and installing coolant pump”, page 179
- ❑ New coolant pump: remove protective cap

10 - Gasket
- ❑ Renew after removing

Protected by copyright. Copying for private or commercial purposes, in part or in whole, is not permitted unless authorised by AUDI AG. AUDI AG does not guarantee or accept any liability with respect to the correctness of information in this document. Copyright by AUDI AG.

11 - Centring pin

- ❑ 2x

12 - Toothed belt

- ❑ For coolant pump
- ❑ Removing and installing ⇒ page 180

13 - Toothed belt cover

14 - Bolt

- ❑ 9 Nm

15 - Bolt

- ❑ Left-hand thread
- ❑ Renew after removing
- ❑ 10 Nm +90°

16 - Toothed belt drive sprocket

- ❑ Note installation position

17 - Oil seal for balance shaft (inlet side)

- ❑ Renewing ⇒ page 52

18 - Balance shaft

19 - Thermostat

- ❑ Removing and installing ⇒ page 181
- ❑ Checking ⇒ page 182

Protected by copyright. Copying for private or commercial purposes, in part or in whole, is not permitted unless authorised by AUDI AG. AUDI AG does not guarantee or accept any liability with respect to the correctness of information in this document. Copyright by AUDI AG.

20 - Centring pin

21 - O-ring

- ❑ Renew after removing

22 - Connection

23 - Bolt

- ❑ 9 Nm

Coolant pump - tightening torques and sequence

– Tighten bolts for coolant pump in the sequence -1 ... 5- to 9 Nm.

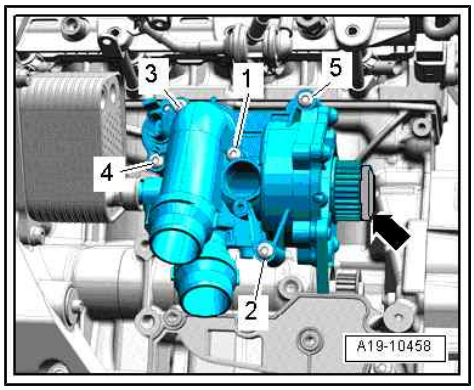

2.2 Exploded view - electric coolant pump

All components are described in ⇒ 4-cylinder direct injection engine (1.8, 2.0 ltr. 4-valve TFSI); Rep. gr. 19 ; Coolant pump/ thermostat assembly; Exploded view - electric coolant pump .

2.3 Removing and installing electric coolant pump

All procedures are described in ⇒ 4-cylinder direct injection engine (1.8, 2.0 ltr. 4-valve TFSI); Rep. gr. 19 ; Coolant pump/

thermostat assembly; Removing and installing electric coolant pump .

2.4 Removing and installing coolant pump

Removing

Preparatory work may be necessary depending on model ⇒ 4-cylinder direct injection engine (1.8 ltr., 2.0 ltr. 4-valve TFSI - generation II); Rep. gr. 19 ; Coolant pump/thermostat assembly; Removing and installing coolant pump .

– Remove toothed belt for coolant pump ⇒ page 180 .

Note:

There are variations depending on model and version.

– Unplug electrical connector -1- at coolant temperature sender - G62- .

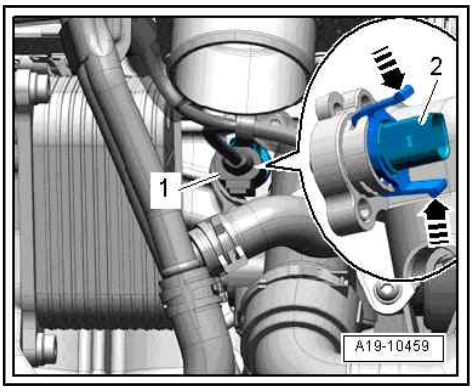

– Lift retaining clips -1- and -2-, detach coolant hoses and move them clear to one side.

Protected by copyright. Copying for private or commercial purposes, permitted unless authorised by AUDI AG. AUDI AG does not guarant with respect to the correctness of information in this document. Cop

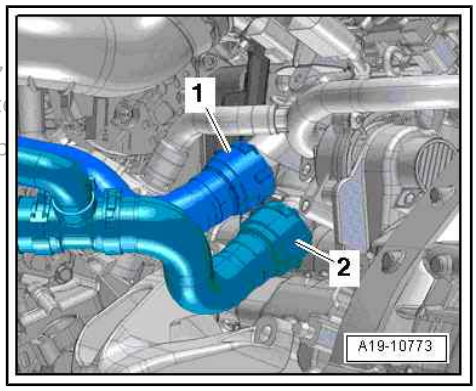

– Remove bolts -1 ... 5-.

– Detach coolant pump from centring pins and pull pump off engine oil cooler.

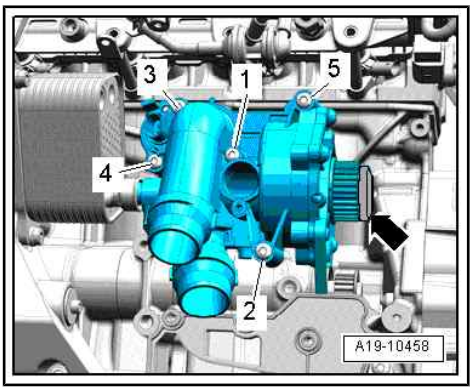

Installing

Installation is carried out in reverse order; note the following:

- Renew gaskets and O-rings after removal.

– Lubricate O-rings -4- with coolant, for coolant refer to ⇒ Electronic parts catalogue .
– Check whether the two centring pins are fitted in the cylinder block; install if necessary.
– Fit connecting piece -2- into engine oil cooler -1-.
– Push coolant pump -3- onto connecting piece and centring pins in cylinder block.

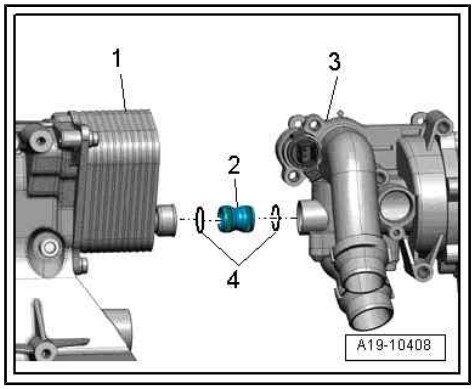

– Tighten coolant pump bolts ⇒ page 178 .

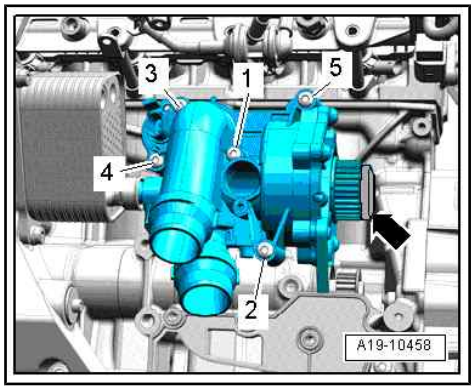

Note

Detach protective cap -arrow- if a new coolant pump has been fitted.

– Install toothed belt for coolant pump ⇒ page 180 .
– Connect coolant hose with plug-in connector ⇒ 4-cylinder direct injection engine (1.8, 2.0 ltr. 4-valve TFSI); Rep. gr. 19 ; Radiator/radiator fans; Exploded view - radiator/radiator fans .

Additional work depending on model ⇒ 4-cylinder direct injection engine (1.8, 2.0 ltr. 4-valve TFSI); Rep. gr. 19 ; Coolant pump/thermostat assembly; Removing and installing coolant pump .

Protected by copyright. Copying for private or commercial purposes, in part or in whole, is not permitted unless authorised by AUDI AG. AUDI AG does not guarantee or accept any liability with respect to the correctness of information in this document. Copyright by AUDI AG.

Tightening torques

♦ ⇒ “2.1 Exploded view - coolant pump/thermostat”, page 177

2.5 Removing and installing toothed belt for coolant pump

Special tools and workshop equipment required

♦ Tool insert - T10360-

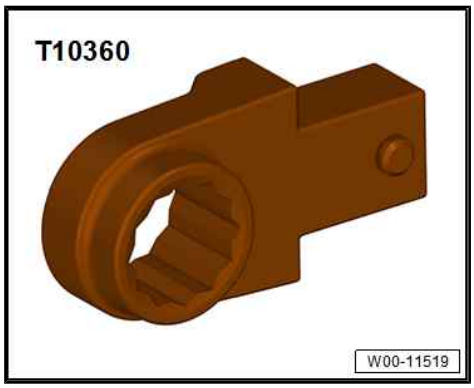

Removing

Preparatory work may be necessary depending on model ⇒ 4-cylinder direct injection engine (1.8, 2.0 ltr. 4-valve TFSI - generation II); Rep. gr. 19 ; Coolant pump/thermostat assembly; Removing and installing toothed belt for coolant pump .

– Remove bolts -arrows- and detach toothed belt cover.

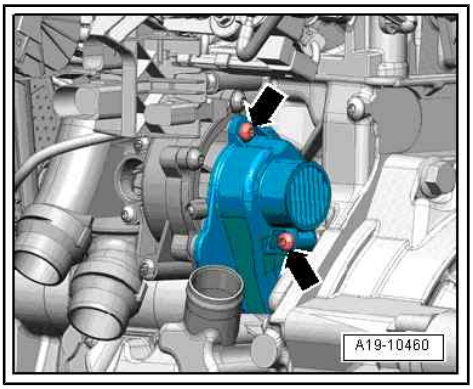

Note:

The drive sprocket bolt has a left-hand thread.

Protected by copyright. Copying for private or commercial purposes, in pa
permission is prohibited. Excluded are only those third parties to whom AUDI AG has granted a right to use this work. AUDI AG does not guarantee or
with respect to the correctness of information, messages, data, computer programs, links, plans, or other data contained in this copyright by

– Use torque wrench -V.A.G 1410- and insert tool - T10360- to loosen bolt on coolant pump drive sprocket -1- in clockwise direction (direction of -arrow-) and unscrew three turns (counterhold at vibration damper).

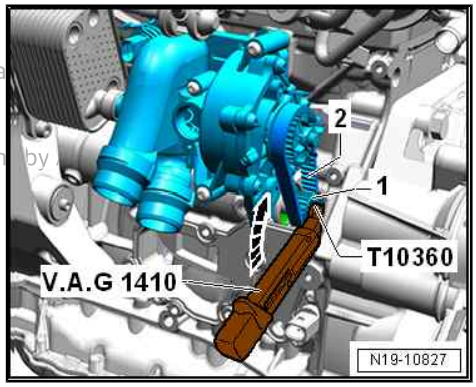

– Remove toothed belt -2-.

Installing

Installation is carried out in reverse order; note the following:

- After removing, renew bolts tightened with specified tightening angle.
- Note installation position of toothed belt sprocket ⇒ Item 16 (page 178) .

Additional work depending on model ⇒ 4-cylinder direct injection engine (2.0 ltr. 4-valve TFSI); Rep. gr. 19 ; Coolant pump/thermostat assembly; Removing and installing toothed belt for coolant pump

Tightening torques

♦ ⇒ “2.1 Exploded view - coolant pump/thermostat”, page 177

2.6 Removing and installing thermostat

Removing

– Remove coolant pump ⇒ page 179 .

– Unscrew bolts -arrows- and remove connection.

– Detach thermostat.

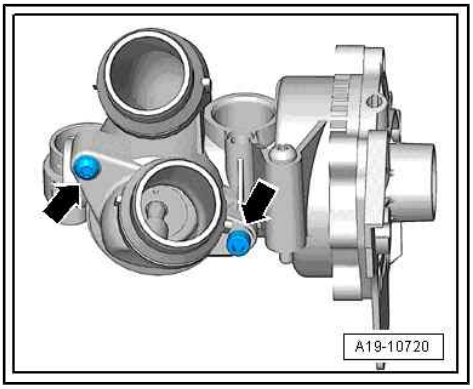

Installing

Installation is carried out in the reverse order; note the following:

- Renew gaskets and O-rings after removal.

– Clean sealing surface for O-ring.

– Coat O-ring with coolant (coolant ⇒ Electronic parts catalogue).

– Insert thermostat -4- in coolant pump housing -5- and swivel forwards slightly -arrow-.

– Fit connection -3- carefully (insert centring pin -2- in guide -1-).

– Install coolant pump ⇒ page 179 .

Tightening torques

♦ ⇒ “2.1 Exploded view - coolant pump/thermostat”, page 177

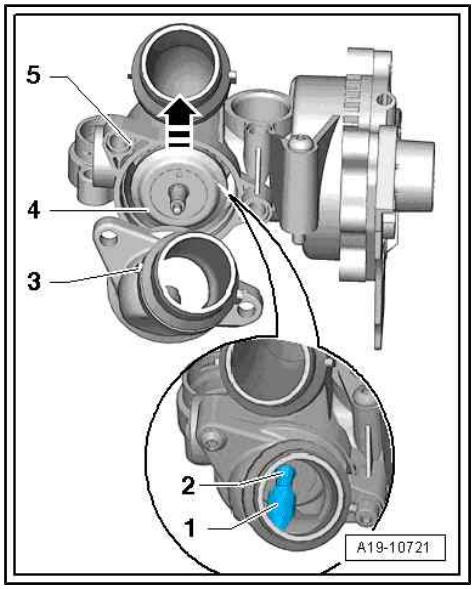

2.7 Checking thermostat

• Thermostat removed ⇒ page 181

– Heat thermostat in water bath.

Starts to open	Fully open	Opening travel
approx. 95°	approx. 105° 1)	at least 8 mm
• 1) Cannot be checked		

2.8 Removing and installing coolant temperature sender - G62-

Procedure

• Engine cold.

Preparatory work may be necessary depending on model ⇒ 4-cylinder direct injection engine (1.8, 2.0 ltr. 4-valve TFSI); Rep. gr. 19 ; Coolant pump/thermostat assembly; Removing and installing coolant temperature sender - G62- .

– To relieve residual pressure in cooling system, open filler cap on coolant expansion tank briefly and then close cap again (it should click into place).

– Place a cloth underneath to catch escaping coolant.

Note:

There are variations depending on model and version.

Copyright by AUDI AG. Copying for private or commercial purposes, in part or in whole, is not permitted unless authorised by AUDI AG. AUDI AG does not guarantee or assume any liability for the correctness of information in this document.

Clip-on version

– Unplug electrical connector -1-.

– Detach retaining clip (press release tabs -arrows-).

– Detach coolant temperature sender - G62- -2-

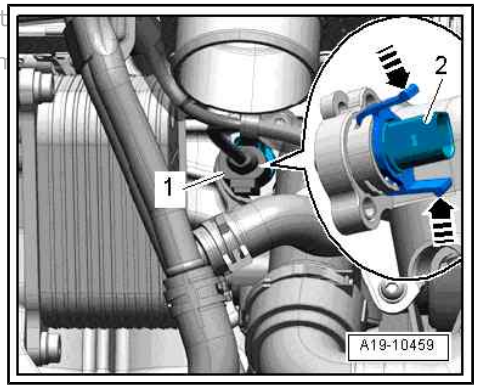

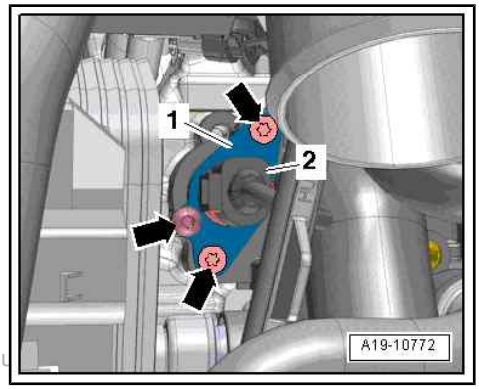

Bolted version

– Unplug electrical connector -2-.

– Unscrew bolts -arrows- and remove retaining plate -1-.

– Detach coolant temperature sender - G62- .

Both versions:

• Renew O-rings after removing.

– Fit new coolant temperature sender immediately so that as little coolant as possible is lost.

– Check coolant level ⇒ page 176 .

Protected by copyright. Copying for private or commercial purposes, in part or in whole, is not permitted unless authorised by AUDI AG. AUDI AG does not guarantee or accept any liability with respect to the correctness of information in this document. Copyright by AUDI AG.

Additional work depending on model ⇒ 4-cylinder direct injection engine (1.8, 2.0 ltr. 4-valve TFSI); Rep. gr. 19 ; Coolant pump/ thermostat assembly; Removing and installing coolant temperature sender - G62-

Tightening torques

♦ ⇒ “2.1 Exploded view - coolant pump/thermostat”, page 177

2.9 Removing and installing coolant valves

All procedures are described in ⇒ 4-cylinder direct injection engine (1.8, 2.0 ltr. 4-valve TFSI); Rep. gr. 19 ; Coolant pump/ thermostat assembly; Removing and installing coolant valves .

3 Coolant pipes

All procedures and components are described in ⇒ 4-cylinder direct injection engine (1.8, 2.0 ltr. 4-valve TFSI); Rep. gr. 19 ; Coolant pipes .

Protected by copyright. Copying for private or commercial purposes, in part or in whole, is not permitted unless authorised by AUDI AG. AUDI AG does not guarantee or accept any liability with respect to the correctness of information in this document. Copyright by AUDI AG.

4 Radiator/radiator fans

All procedures and components are described in ⇒ 4-cylinder direct injection engine (1.8, 2.0 ltr. 4-valve TFSI); Rep. gr. 19 ; Radiator/radiator fans .

Protected by copyright. Copying for private or commercial purposes, in part or in whole, is not permitted unless authorised by AUDI AG. AUDI AG does not guarantee or accept any liability with respect to the correctness of information in this document. Copyright by AUDI AG.

21 – Turbocharging/supercharging

1 Turbocharger

⇒ "1.1 Exploded view - turbocharger", page 186

⇒ "1.2 Removing and installing turbocharger", page 190

⇒ "1.3 Checking vacuum unit for turbocharger", page 192

1.1 Exploded view - turbocharger

Part I

Part II ⇒ page 187

Part III ⇒ page 188

Part IV - only for 1.8 ltr. engine ⇒ page 189

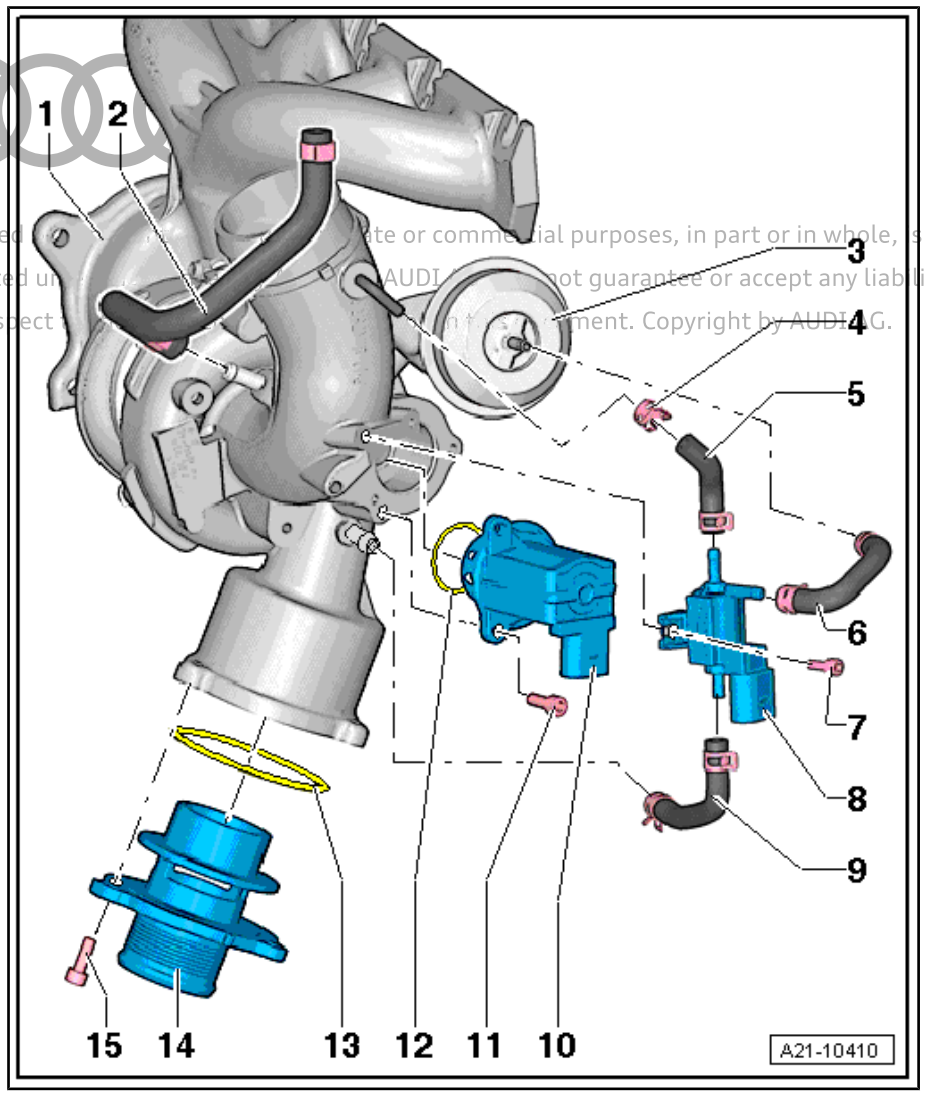

1 - Turbocharger

- ❑ Can only be renewed together with exhaust manifold and vacuum unit as one unit
- ❑ Removing and installing ⇒ page 190

2 - Hose

3 - Vacuum unit for turbocharger

- ❑ Can only be renewed together with turbocharger

4 - Hose clip

5 - Hose

6 - Hose

7 - Bolt

- ❑ 3 Nm

8 - Charge pressure control solenoid valve - N75-

9 - Hose

10 - Turbocharger air recirculation valve - N249-

- ❑ Note installation position ⇒ page 187

11 - Bolt

- ❑ 7 Nm

12 - O-ring

- ❑ Renew after removing

13 - O-ring

- ❑ Renew after removing

14 - Connection

15 - Bolt

- ❑ 9 Nm

Protected by copyright. Copying for private or commercial purposes, in part or in whole, is not permitted unless authorised by AUDI AG. AUDI AG does not guarantee or accept any liability with respect to the correctness of information in this document. Copyright by AUDI AG.

Fitting location of turbocharger air recirculation valve - N249-

– Note installation position -arrows-.

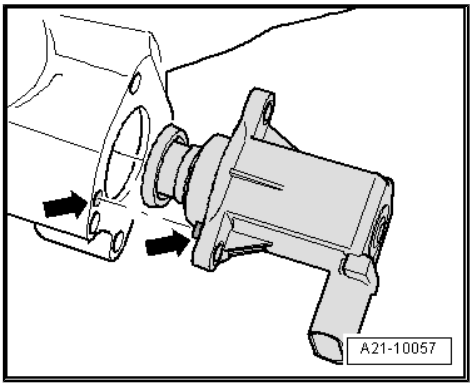

Part II

Part I ⇒ page 186

Part III ⇒ page 188

Part IV - only for 1.8 ltr. engine ⇒ page 189

1 - Turbocharger
- ❑ Can only be renewed together with exhaust manifold and vacuum unit as one unit
- ❑ Removing and installing ⇒ page 190

2 - Bolt
- ❑ 9 Nm

3 - Crankcase breather hose

4 - Gasket
- ❑ Renew after removing

5 - Seal
- ❑ Renew after removing

6 - Bolt
- ❑ 30 Nm

7 - Oil supply line

8 - Bolt
- ❑ 9 Nm

9 - Bolt
- ❑ 9 Nm

10 - O-ring
- ❑ Renew after removing

11 - Seal
- ❑ Renew after removing

12 - Bolt
- ❑ 35 Nm

13 - Bolt
- ❑ 9 Nm

14 - Bolt
- ❑ 35 Nm

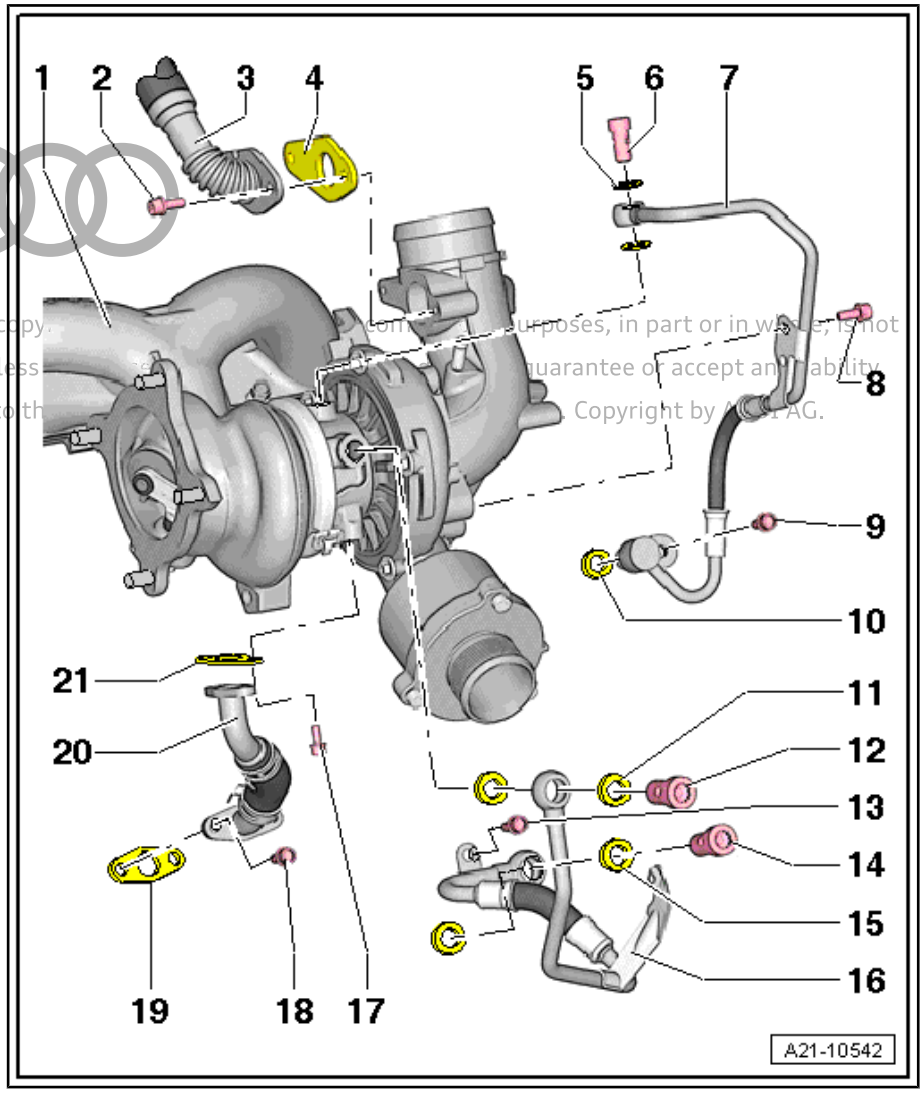

Protected by copyright. Copyright by AUDI AG.

15 - Seal
- ❑ Renew after removing

16 - Coolant supply line

17 - Bolt
- ❑ 9 Nm

18 - Bolt
- ❑ 9 Nm

19 - Gasket
- ❑ Renew after removing

20 - Oil return line

21 - Gasket
- ❑ Renew after removing

Part III

Part I ⇒ page 186

Part II ⇒ page 187

Part IV - only for 1.8 ltr. engine ⇒ page 189

1 - Gasket
- ❑ Renew after removing

2 - Nut
- ❑ Renew after removing
- ❑ Tightening sequence ⇒ page 189
- ❑ Lubricate exhaust manifold studs with high-temperature paste. For high-temperature paste refer to ⇒ Electronic parts catalogue

3 - Bolt
- ❑ 35 Nm

4 - Seal
- ❑ Renew after removing

5 - Coolant return line

6 - Bolt
- ❑ 9 Nm

7 - Turbocharger
- ❑ Can only be renewed together with exhaust manifold and vacuum unit as one unit
- ❑ Removing and installing ⇒ page 190

8 - Bolt
- ❑ 30 Nm

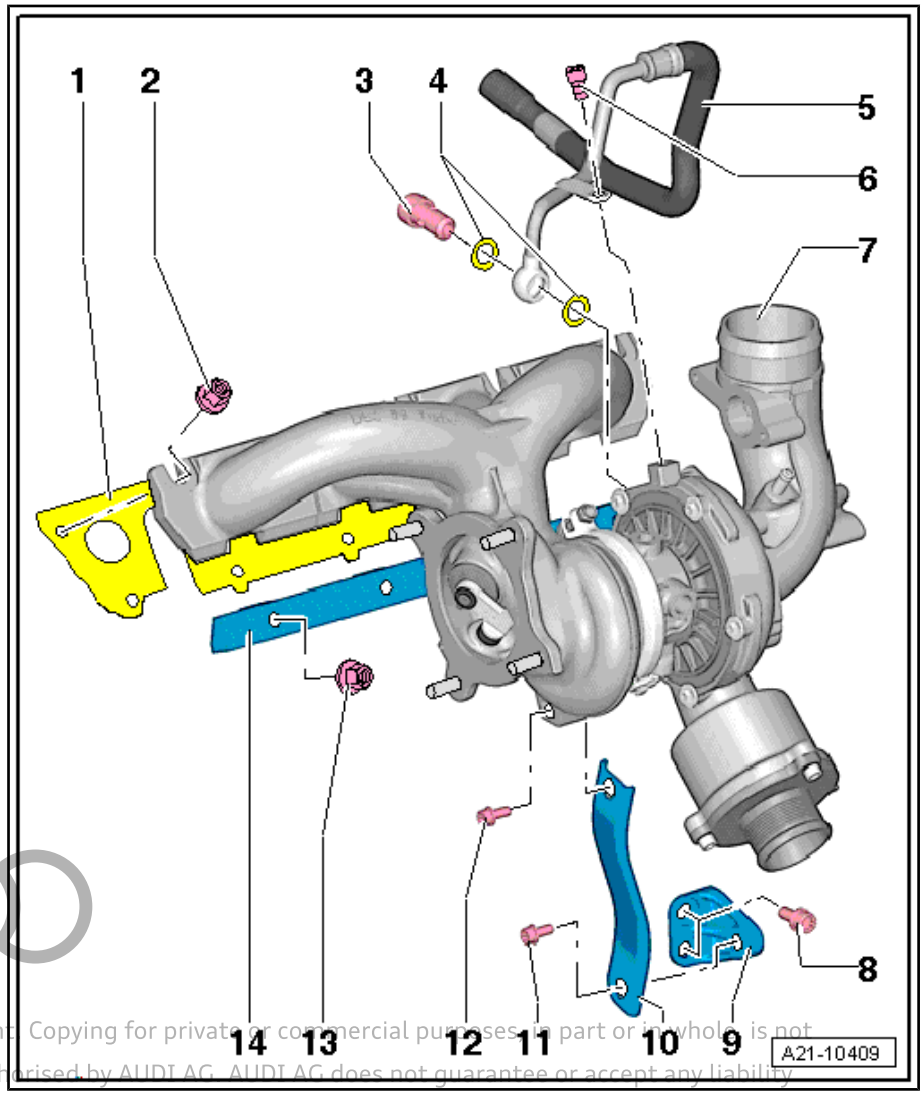

Protected by copyright. Copying for private or commercial purposes, in part or in whole, is not permitted unless authorised by AUDI AG. AUDI AG does not guarantee or accept any liability with respect to the correctness of information in this document. Copyright by AUDI AG.

9 - Bracket

10 - Support

11 - Bolt

- ❑ 30 Nm

12 - Bolt

- ❑ 30 Nm
- ❑ Coat with high-temperature paste; for high-temperature paste refer to ⇒ Electronic parts catalogue

Protected by copyright. Copying for private or commercial purposes, in part or in whole, is not permitted unless authorised by AUDI AG. AUDI AG does not guarantee or accept any liability with respect to the correctness of information in this document. Copyright by AUDI AG.

13 - Nut

- ❑ Do not open when removing turbocharger
- ❑ Renew after removing
- ❑ 30 Nm
- ❑ Lubricate exhaust manifold studs with high-temperature paste. For high-temperature paste refer to ⇒ Electronic parts catalogue

14 - Fastening strip

Turbocharger - tightening torques and sequence

– Tighten nuts in stages in the sequence shown:

Stage	Bolts	Tightening torque
1.	-1 … 5-	3 Nm
2.	-1 … 5-	12 Nm
3.	-1 … 5-	16 Nm
4.	-1 … 5-	25 Nm

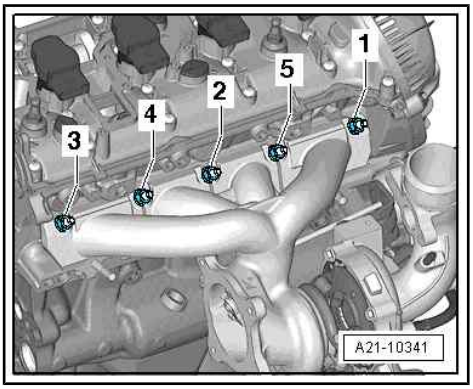

Part IV - only for 1.8 ltr. engine

Part I ⇒ page 186

Part II ⇒ page 187

Part III ⇒ page 188

1 - Turbocharger

- ❑ Can only be renewed together with exhaust manifold and vacuum unit as one unit
- ❑ Removing and installing ⇒ page 190

2 - Vacuum unit for turbocharger

- ❑ Checking ⇒ page 192
- ❑ Removing and installing ⇒ page 194
- ❑ Adjusting ⇒ page 194

3 - Bolt

- ❑ 10 Nm

4 - Nut

- ❑ 9 Nm
- ❑ Secure with sealant paint; for sealing paint refer to ⇒ Electronic parts catalogue

5 - Retaining clip

- ❑ Renew

6 - Knurled nut

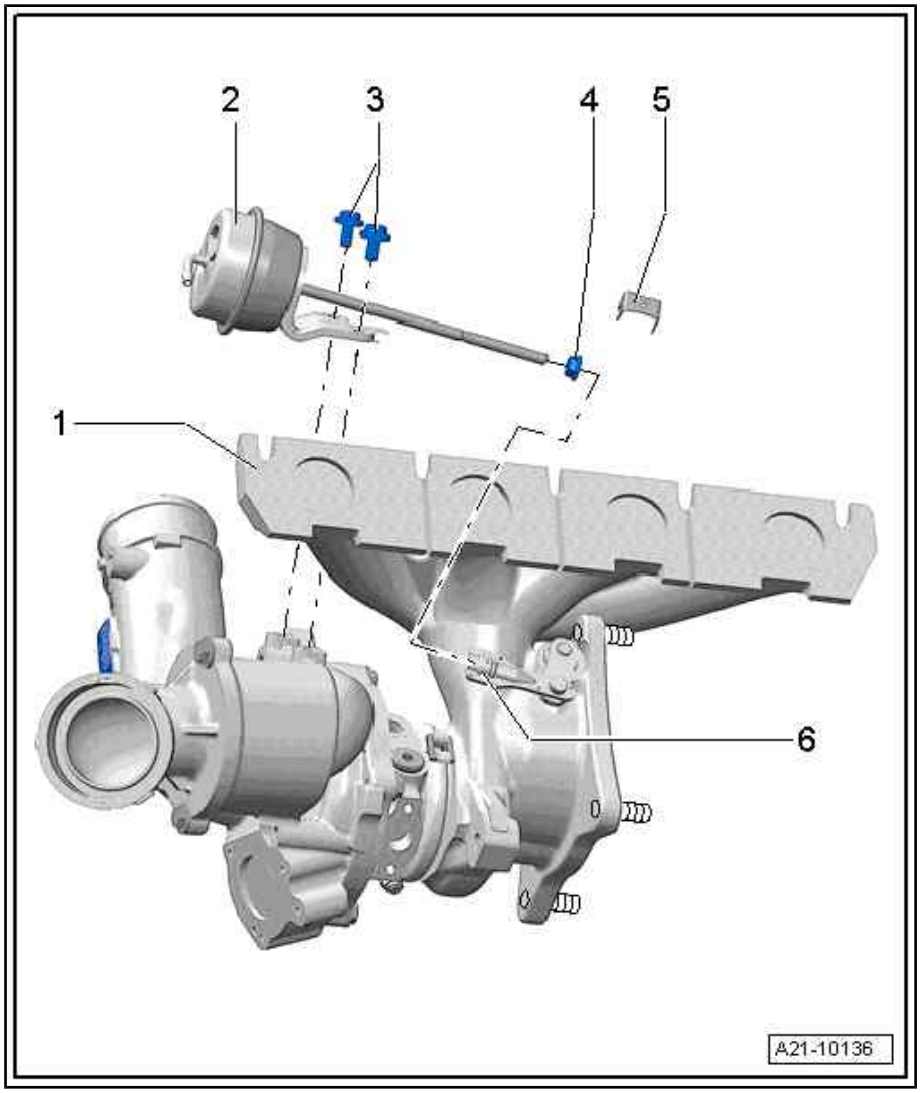

1.2 Removing and installing turbocharger

Protected by copyright. Copying for private or commercial purposes, in part or in whole, is not permitted unless authorised by AUDI AG. AUDI AG does not guarantee or accept any liability with respect to the correctness of information in this document. Copyright by AUDI AG.

If the turbocharger has suffered mechanical damage (e.g. damaged compressor wheel), it is not sufficient merely to fit a new turbocharger. The following work must be performed in order to avoid further damage:

- Check air cleaner housing, air filter element and air hoses for dirt and foreign particles.
- Check the entire charge air system (including the charge air cooler) for foreign matter.
- If foreign matter is found in the charge air system, clean all relevant ducts and hoses and renew charge air cooler if necessary.

Special tools and workshop equipment required

♦ Engine bung set - VAS 6122-

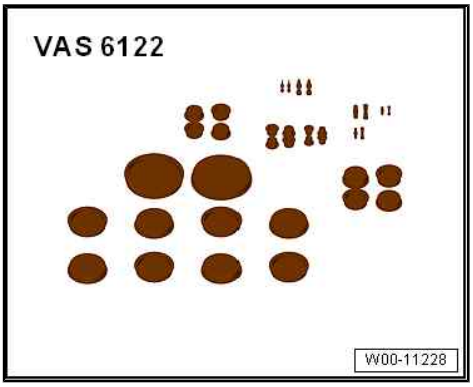

Removing

Preparatory work may be necessary depending on model ⇒ 4-cylinder direct injection engine (1.8, 2.0 ltr. 4-valve TFSI); Rep. gr. 21 ; Turbocharger; Removing and installing turbocharger .

– Open hose clip -arrow-, detach air hose and swivel to side.

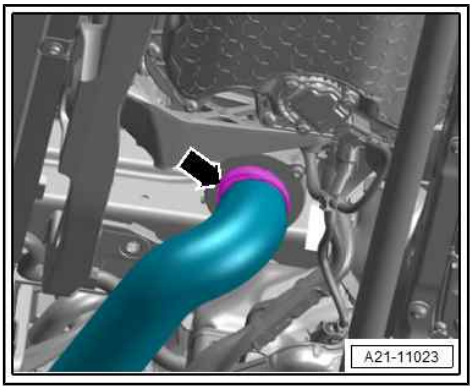

– Unplug electrical connectors -1 and 2- and move wiring clear.

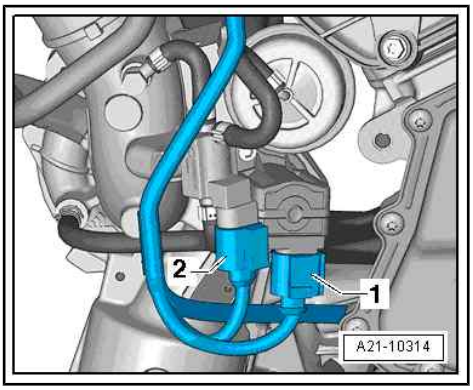

– Slacken bolts -1- from top.
– Remove bolt -2- from underneath.

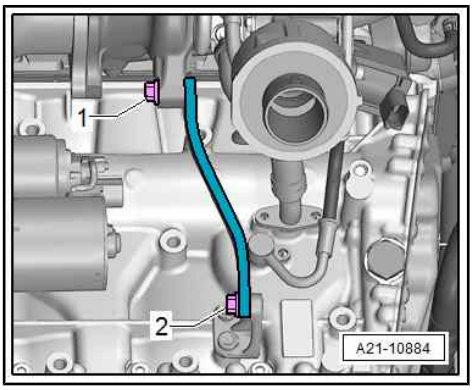

Protected by copyright. Copying for private or commercial purposes, in part or in whole, is not permitted unless authorised by AUDI AG. AUDI AG does not guarantee or accept any liability with respect to the correctness of information in this document. Copyright by AUDI AG.

– Remove bolts -arrows- at oil return line.

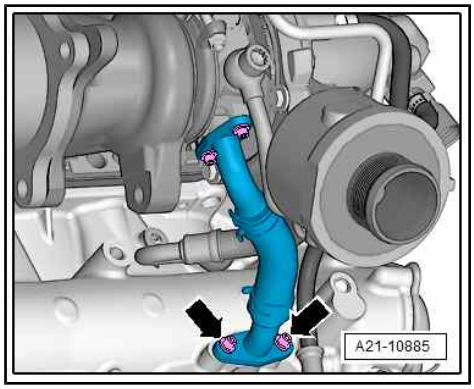

– Remove nuts -arrows-.

– Lift out turbocharger with exhaust manifold.

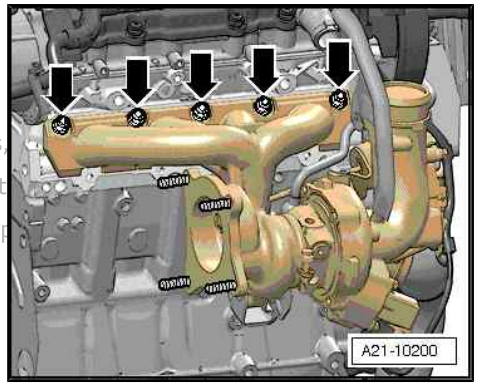

Installing

Protected by copyright. Copying for private or commercial purposes, in part or entirely, is not permitted unless authorised by AUDI AG. AUDI AG does not guarantee or assume any liability with respect to the correctness of information in this document. Copyright by AUDI AG.

Installation is carried out in reverse order; note the following:

- After removing, renew bolts tightened with specified tightening angle.
- Renew gaskets, seals, O-rings and self-locking nuts after removal.
- Lubricate studs for turbocharger with high-temperature paste ⇒ Electronic parts catalogue .
- Hose connections and charge air system hoses must be free of oil and grease prior to fitting.
- Secure all hose connections with correct type of hose clips (as original equipment) ⇒ Electronic parts catalogue .
- Fill turbocharger with engine oil at connection for oil supply line.
- Do not reuse coolant.

– Install catalytic converter ⇒ 4-cylinder direct injection engine (1.8, 2.0 ltr. 4-valve TFSI); Rep. gr. 26 ; Emission control system; Removing and installing catalytic converter .

– Check oil level ⇒ page 153 .

– Fill up coolant ⇒ 4-cylinder direct injection engine (1.8, 2.0 ltr. 4-valve TFSI); Rep. gr. 19 ; Cooling system/coolant; Draining and filling cooling system .

– Install engine cover panel ⇒ page 11 .

Additional work depending on model ⇒ 4-cylinder direct injection engine (1.8, 2.0 ltr. 4-valve TFSI); Rep. gr. 21 ; Turbocharger; Removing and installing turbocharger

- After installing turbocharger, allow engine to idle for approx. 1 minute and do not rev up immediately to ensure turbocharger is supplied with oil.

Tightening torques

◆ ⇒ “3.1 Exploded view - cylinder head”, page 106

◆ ⇒ “1.1 Exploded view - turbocharger”, page 186

◆ ⇒ “2.2 Exploded view - hose connections for charge air system”, page 199

1.3 Checking vacuum unit for turbocharger

Special tools and workshop equipment required

- Hand vacuum pump - VAS 6213-

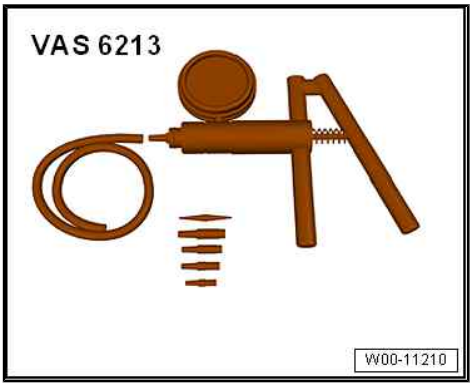

Test condition:

- Hose from turbocharger via charge pressure control solenoid valve - N75- to vacuum unit must not be blocked.
- Charge pressure control solenoid valve - N75- OK.

Procedure

Protected by copyright. Copying for private or commercial purposes, in part or in whole, is not permitted unless AUDI AG. AUDI AG does not guarantee or accept any liability with respect to the correctness of information in this document. Copyright by AUDI AG.

Preparatory work may be necessary depending on model ⇒ 4-cylinder direct injection engine (1.8 ltr., 2.0 ltr. 4-valve TFSI - generation II); Rep. gr. 21 ; Turbocharger; Checking vacuum unit for turbocharger .

– Remove engine cover panel ⇒ page 11 .

– Connect hand vacuum pump - VAS 6213- to vacuum unit -arrow-.

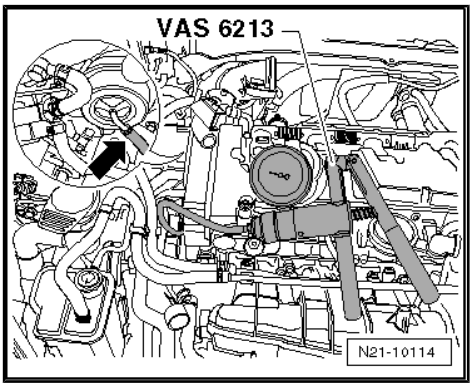

– Move adjuster ring -1- on hand vacuum pump - VAS 6213- to position -B- to select “pressure”.

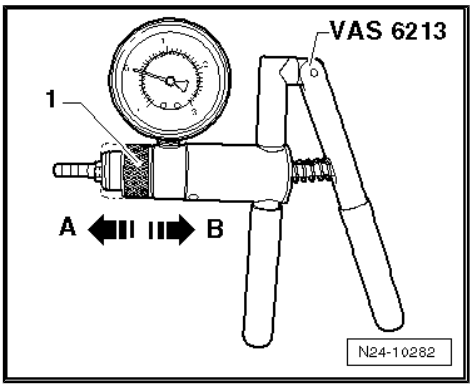

NOTICE

Risk of damage to components if test pressure is set too high

– **Never set test pressure higher than specified.**

– Operate hand vacuum pump - VAS 6213- several times and at the same time observe linkage.

The linkage -A- should start to move at a pressure of approx. 300 mbar and be at its limit stop at a pressure of approx. 700 mbar.

The linkage should travel approx. 10 mm.

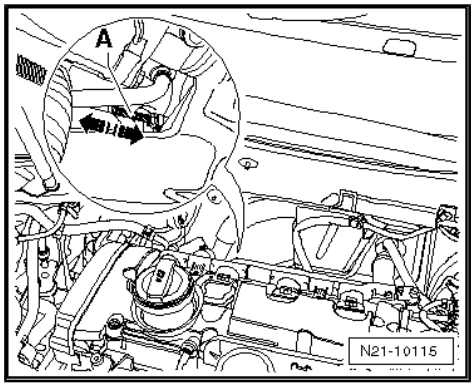

Note

If it is not possible to build up pressure with hand vacuum pump - VAS 6213- or if the pressure drops again immediately, check hand vacuum pump - VAS 6213- and connecting hoses for leaks.

If no faults are detected on hand vacuum pump - VAS 6213- and connecting hoses:

- On 1.8 ltr. engines: Renew vacuum unit ⇒ page 194 .
- On 2.0 ltr. engines: Renew turbocharger ⇒ page 190 .

1.4 Renewing vacuum unit for turbocharger

Note

This procedure only applies to the 1.8 ltr. engine.

Removing

– Remove turbocharger ⇒ page 190 .

– Detach locking plate -1- on turbocharger linkage.

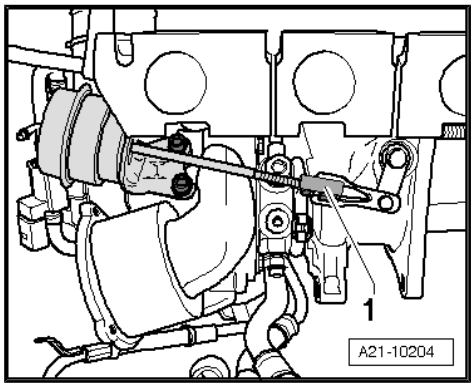

– Loosen lock nut -2-.

– Detach linkage from turbocharger -3-.

– Remove bolts -4- and take out vacuum unit -1-.

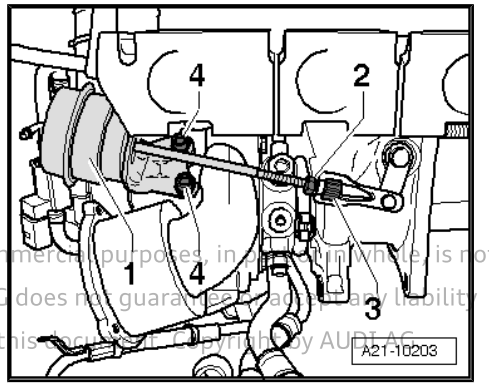

Installing

Installation is carried out in the reverse order; note the following:

– Adjust vacuum unit for turbocharger ⇒ page 194 .

– Install turbocharger ⇒ page 190 .

Protected by copyright. Copying for private or commercial purposes, in part or in whole, is not permitted unless authorised by AUDI AG. AUDI AG does not guarantee or assume any liability with respect to the correctness of information in this document. Copyright by AUDI AG.

Tightening torques

- ⇒ “1.1 Exploded view - turbocharger”, page 186

1.5 Adjusting vacuum unit for turbocharger

Note

This procedure only applies to the 1.8 ltr. engine.

Special tools and workshop equipment required

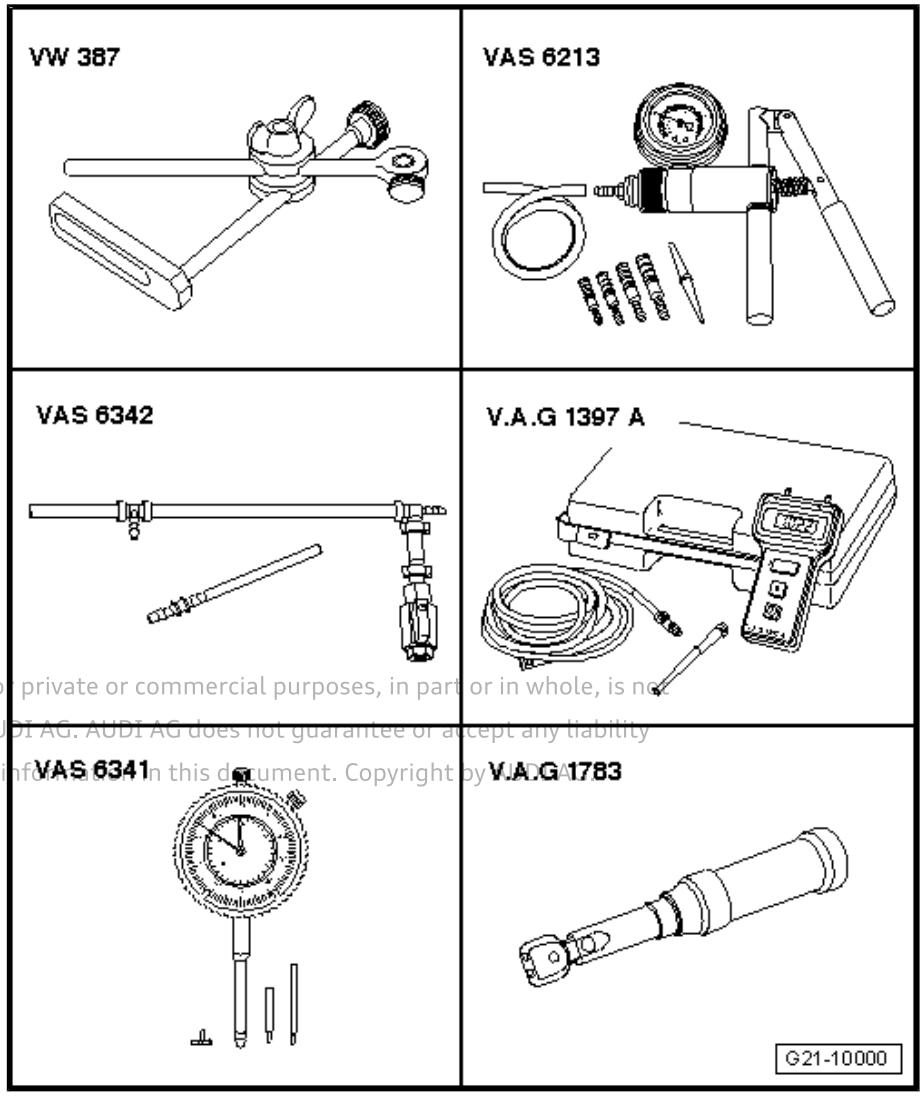

Protected by copyright. Copying for private or commercial purposes, in part or in whole, is not permitted unless authorised by AUDI AG. AUDI AG does not guarantee or accept any liability with respect to the correctness of information in this document. Copyright by AUDI AG.

- Universal dial gauge bracket - VW 387-
- Hand vacuum pump - VAS 6213-
- Pressure control valve - VAS 6342-
- Turbocharger tester - V.A.G 1397A-
- Dial gauge set, 4-part - VAS 6341-
- Torque wrench - V.A.G 1783-
- Open end spanner insert (10 mm) - V.A.G 1783/1-

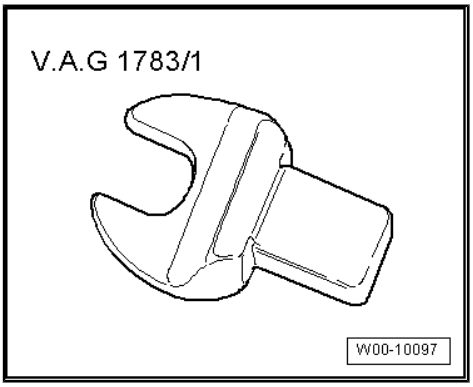

Adjusting

- Turbocharger removed

Note

It is only necessary to adjust the vacuum unit if the vacuum unit has been removed.

– Pre-adjust bypass flap -1- via nut -arrow- so that bypass flap can still just be turned by hand.

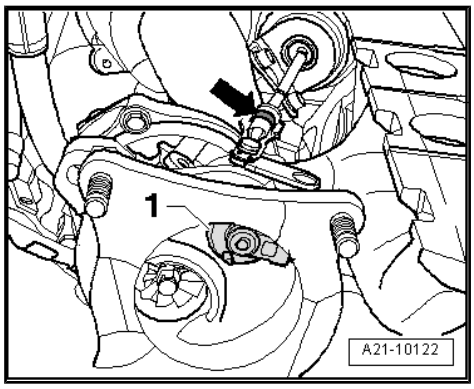

– Secure universal dial gauge bracket - VW 387- to turbocharger -arrow-.

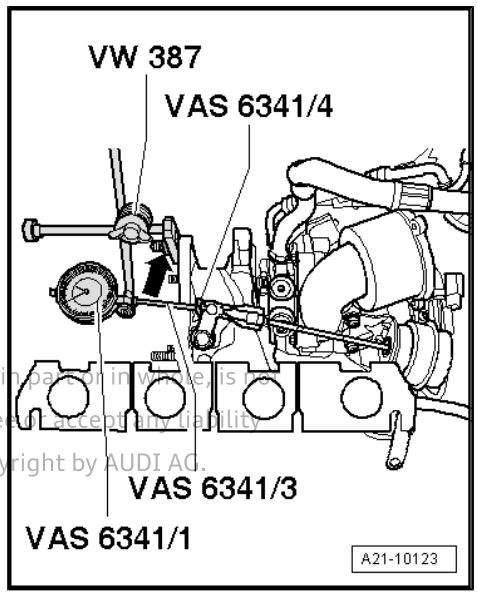

Note

- *The dial gauge values (mm) listed here include the 1 mm pre-load that is initially set on the gauge.*
- *Dial gauge - VAS 6341/1- with dial gauge extension, 30 mm - VAS 6341/3- must align with linkage of vacuum unit.*

– Attach dial gauge - VAS 6341/1- with extension, 30 mm - VAS 6341/3- and flat probe - VAS 6341/4- to universal dial gauge bracket - VW 387-.

– Set dial gauge - VAS 6341/1- to 1 mm preload.

– Set scale of dial gauge - VAS 6341/1- to 0.

– Make sure that dial gauge can move freely.

Protected by copyright. Copying for private or commercial purposes, in part or in whole, is not permitted unless authorised by AUDI AG. AUDI AG does not guarantee or accept any liability with respect to the correctness of information in this document. Copyright by AUDI AG.

– Turn nut -1- approx. 7 turns in direction of -arrow-.

– Turn nut -2- in direction of -arrow- until dial gauge displays 7 mm.

– Hand-tighten nut -1-.

– Set dial gauge - VAS 6341/1- to 1 mm preload.

– Set scale of dial gauge - VAS 6341/1- to 0.

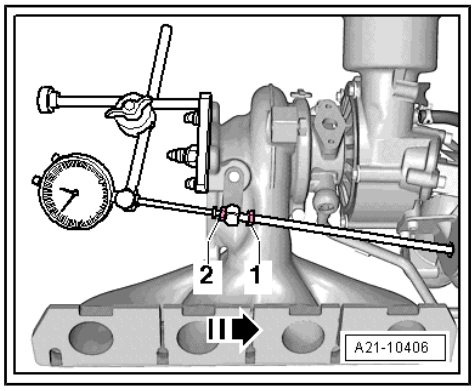

– Connect up hand vacuum pump - VAS 6213- , turbocharger tester - V.A.G 1397A- (connection II) and pressure control valve - VAS 6342- as shown in illustration.
– Switch on turbocharger tester - V.A.G 1397A- and set sliding switch to position II.
– Close pressure control valve - VAS 6342- at lever -1-.

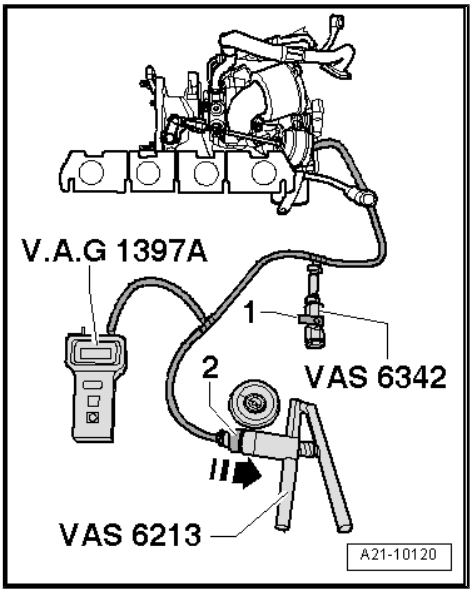

– Move adjuster ring -1- on hand vacuum pump - VAS 6213- to position -B- to select “pressure”.

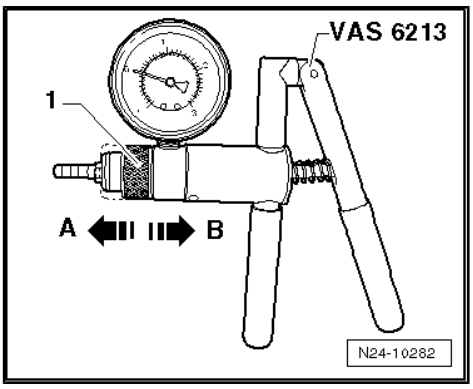

Note

The following measurements must be performed in continuous sequence. Do not allow the pressure to drop to 0 between measurements.

– Operate hand vacuum pump - VAS 6213- until turbocharger tester - V.A.G 1397A- indicates 460 +/- 5 mbar.

Note

If value exceeds 460 +/-5 mbar, repeat entire measurement.

– Read off and note value indicated on dial gauge - VAS 6341/1- .
– Operate hand vacuum pump - VAS 6213- until turbocharger tester - V.A.G 1397A- indicates 650 to 700 mbar.
– Vent system via pressure control valve - VAS 6342- so that pressure reading drops to 460 +/- 5 mbar.

Note

If value does not reach 460 +/- 5 mbar, repeat entire measurement.

– Read off and note value indicated on dial gauge - VAS 6341/1- .
– Add values 1 and 2 together and divide by 2.
– The result (mean value) should be 5 +/- 0.5 mm.

Protected by copyright. Copying for private or commercial purposes, in part or in whole, is not permitted unless authorised by AUDI AG. AUDI AG does not guarantee or accept any liability with respect to the correctness of information in this document. Copyright by AUDI AG.

– If value is higher, relieve pressure until it is 0 bar, loosen nut -1- and turn nut -2- half a turn in direction of arrow and hand-tighten nut -1-.
– Set dial gauge - VAS 6341/1- to 1 mm preload.
– Set scale of dial gauge - VAS 6341/1- to 0 and repeat measurement.
– If result (mean value) is 5 +/- 0.5 mm, tighten lock nut and repeat measurement.
– If result (mean value) is 5 +/- 0.5 mm, secure nuts with sealing paint. Sealing paint ⇒ Electronic parts catalogue .

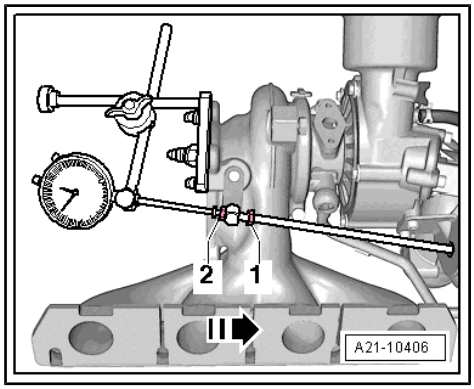

– Secure new locking plate -1- on linkage of vacuum unit.

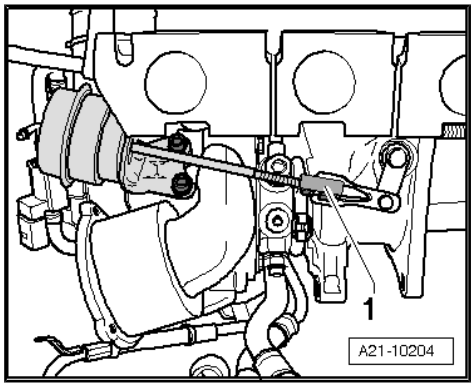

Tightening torques

♦ Vacuum unit for turbocharger ⇒ page 189

Protected by copyright. Copying for private or commercial purposes, in part or in whole, is not permitted unless authorised by AUDI AG. AUDI AG does not guarantee or accept any liability with respect to the correctness of information in this document. Copyright by AUDI AG.

2 Charge air system

⇒ “2.1 Exploded view - charge air system”, page 199

⇒ “2.2 Exploded view - hose connections for charge air system”, page 199

⇒ “2.3 Removing and installing charge air cooler”, page 200

⇒ “2.4 Removing and installing charge pressure sender G31 ”, page 201

⇒ “2.5 Checking charge air system for leaks”, page 201

Protected by copyright. Copying for private or commercial purposes, in part or in whole, is not permitted unless authorised by AUDI AG. AUDI AG does not guarantee or accept any liability with respect to the correctness of information in this document. Copyright by AUDI AG.

2.1 Exploded view - charge air system

All components are described in ⇒ 4-cylinder direct injection engine (1.8, 2.0 ltr. 4-valve TFSI); Rep. gr. 21 ; Charge air system; Exploded view - charge air system .

2.2 Exploded view - hose connections for charge air system

With hose clips

- Hose connections and air pipes/hoses must be free of oil and grease prior to fitting.
- Secure all hose connections with correct type of hose clips (as original equipment) ⇒ Electronic parts catalogue .
- If using used hose clips to secure the air hoses at their connections, spray rust remover onto the worm threads before installing.

Hose clips on pressure side are fitted with retaining hooks -arrows-.

- To disconnect air hose, hose clip must be loosened far enough.
- Hose clips which have been loosened can be re-used.

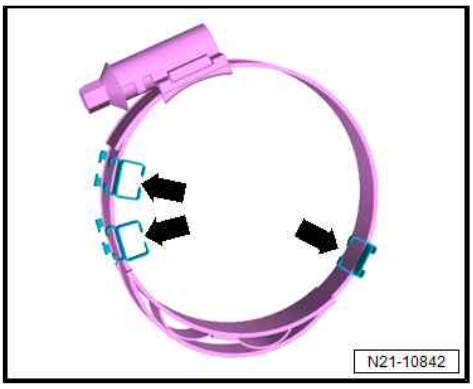

- Hose clip -1- with retaining hooks -arrows- must not be pulled off air hose.
- If a hose clip with retaining hooks is pulled off air hose, air hose must be renewed.
- New air hoses are supplied with hose clip fitted.

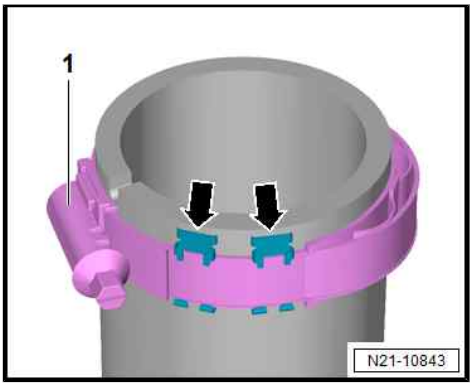

Tightening torque for

1 - Hose clip with width -a- = 13 mm: 5.5 Nm

2 - Hose clip with width -b- = 9 mm: 3.4 Nm

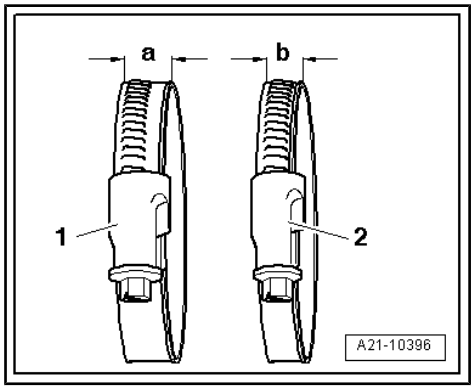

With plug-in connector

NOTICE

Risk of damage to seal if air pipe is fitted incorrectly.

– **Note assembly instructions.**

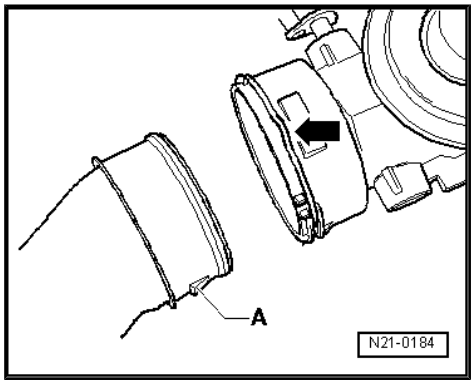

Removing

– Release plug-in connector by pulling out retaining clip -arrow-. Disconnect air pipe (do not use tools of any kind).

Installing

– Position seal in groove on air hose if seal is being renewed.

• Make sure the seal is correctly seated in the groove all round and that it is not twisted.

– Lubricate sealing surface and seal.

– Release retaining clip (position -1-).

– Push air pipe into plug-in connector as far as stop.

– Move retaining clip to locked position -2- and press air pipe down again.

– Then pull air pipe to check that it is fitted correctly and that plug-in connector is locked.

Protected by copyright. Copying for private or commercial purposes, in part or in whole, is not permitted unless authorised by AUDI AG. AUDI AG does not guarantee or accept any liability with respect to the correctness of information in this document. Copyright by AUDI AG.

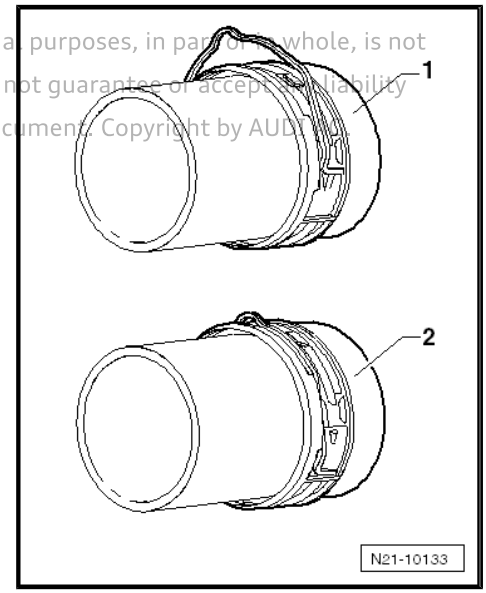

2.3 Removing and installing charge air cooler

All procedures are described in ⇒ 4-cylinder direct injection engine (1.8, 2.0 ltr. 4-valve TFSI); Rep. gr. 21 ; Charge air system; Removing and installing charge air cooler .

2.4 Removing and installing charge pressure sender - G31-

All procedures are described in ⇒ 4-cylinder direct injection engine (1.8, 2.0 ltr. 4-valve TFSI); Rep. gr. 21 ; Charge air system; Removing and installing charge pressure sender - G31- .

2.5 Checking charge air system for leaks

Special tools and workshop equipment required

- Charge air system tester - V.A.G 1687-

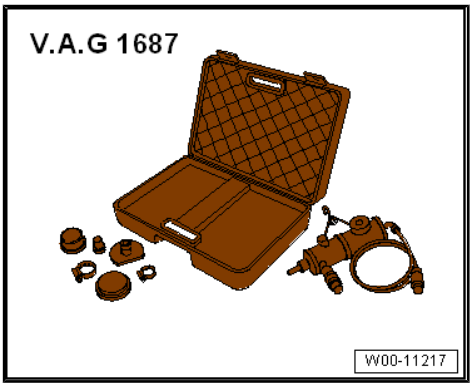

- Adapter - V.A.G 1687/10- , -1687/11- or -1687/12-

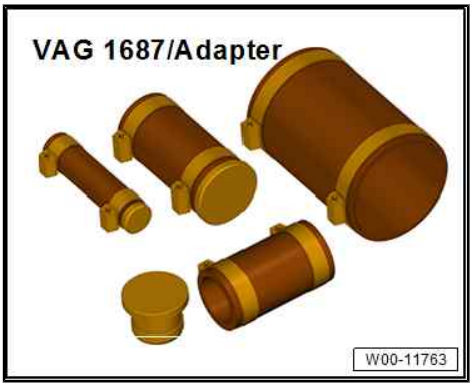

- Ultrasonic tester - V.A.G 1842-
- Leak detection spray (commercially available)

Protected by copyright. Copying for private or commercial purposes, in part or in whole, is not permitted unless authorised by AUDI AG. AUDI AG does not guarantee or accept any liability with respect to the correctness of information in this document. Copyright by AUDI AG.

Procedure

– Observe rules for cleanliness ⇒ page 5 .

– Remove noise insulation (front) ⇒ General body repairs, exterior; Rep. gr. 66 ; Noise insulation; Removing and installing noise insulation .

– Release hose clip -arrow-, disconnect air hose and press to one side.

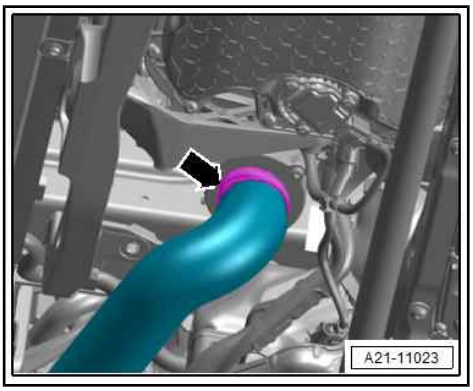

– Depending on hose diameter, insert adapter - 1687/10- , adapter - 1687/11- or adapter - 1687/12- in air hose -1- and secure with hose clip.
– Connect charge air system tester - V.A.G 1687- as shown on illustration.

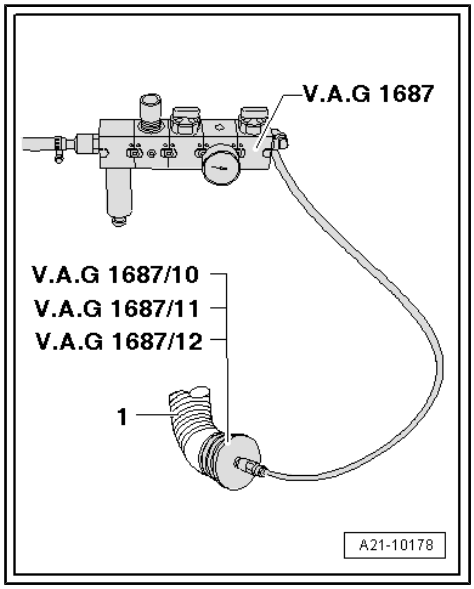

Protected by copyright. Copying for private or commercial purposes, in part or in whole, is not permitted unless authorised by AUDI AG. AUDI AG does not guarantee or accept any liability with respect to the correctness of information in this document. Copyright by AUDI AG.

Prepare charge air system tester - V.A.G 1687- as follows:

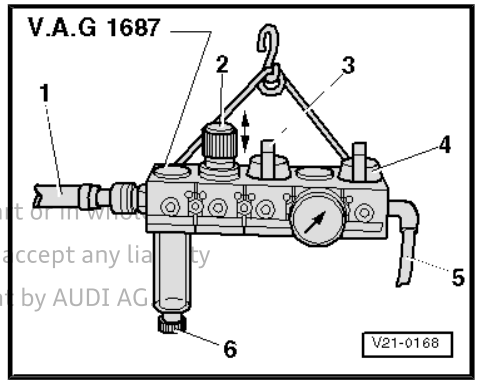

– Unscrew pressure control valve -2- completely and close valves -3- and -4-.

• Make sure knob is pulled out before turning pressure control valve.

– Using a commercially available connection piece, connect charge air system tester - V.A.G 1687- to compressed air -1-.

– If there is water in sight glass, remove drain plug -6- and drain water.

– Open valve -3-.

Protected by copyright. Copying for private or commercial purposes, in part or in whole, is not permitted unless authorised by AUDI AG. AUDI AG does not guarantee or accept any liability with respect to the correctness of information in this document. Copyright by AUDI AG.

NOTICE

Risk of damage to components if test pressure is set too high

– Never set test pressure higher than specified.

– Adjust pressure to 0.2 bar via pressure control valve -2-.

– Open valve -4- and wait until test system is pressurised. If necessary, adjust pressure to 0.2 bar again.

– Check charge air system for audible leaks or leaks that can be felt with the hand; apply commercially available leak detection spray or use ultrasonic tester - V.A.G 1842- . (For operation of -V.A.G 1842- , refer to ⇒ Operating instructions .)

Note:

A small amount of air escapes through the valves and enters the engine. Therefore it is not possible to perform a pressure retention test.

Attaching

Assembly is performed in reverse sequence; note the following:

• Secure all hose connections with correct type of hose clips (as original equipment) ⇒ Electronic parts catalogue .

– Release pressure in test circuit by detaching hose coupling from adapter before removing adapter.

Tightening torques

♦ ⇒ “2.2 Exploded view - hose connections for charge air system”, page 199

♦ ⇒ General body repairs, exterior; Rep. gr. 66 ; Noise insulation; Exploded view - noise insulation

24 – Mixture preparation - injection

1 Injection system

⇒ “1.1 Overview of fitting locations - injection system”, page 204

⇒ “1.2 Checking fuel system for leaks”, page 204

1.1 Overview of fitting locations - injection system

All components are described in ⇒ 4-cylinder direct injection engine (1.8, 2.0 ltr. 4-valve TFSI); Rep. gr. 24 ; Injection system; Overview of fitting locations - injection system .

1.2 Checking fuel system for leaks

– Allow engine to run for several minutes at moderate rpm.
– Switch off ignition.
– Check complete fuel system for leaks.
– If leaks are found although the connections have been tightened to the correct torque, the relevant component must be renewed.
– Road-test vehicle and accelerate with full throttle at least once.
– Then inspect high-pressure section of fuel system again for leaks.

Protected by copyright. Copying for private or commercial purposes, in part or in whole, is not permitted unless authorised by AUDI AG. AUDI AG does not guarantee or accept any liability with respect to the correctness of information in this document. Copyright by AUDI AG.

2 Vacuum system

⇒ “2.1 Checking vacuum system”, page 205

⇒ “2.2 Checking dual non-return valve”, page 205

2.1 Checking vacuum system

Special tools and workshop equipment required

- Hand vacuum pump - VAS 6213-

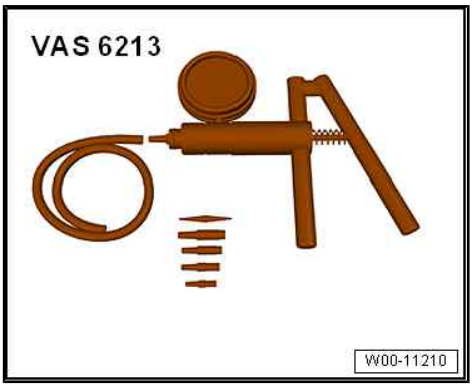

Procedure

– Check all vacuum lines in the complete vacuum system for:

- Cracks
- Traces of animal bites
- Kinked or crushed lines
- Porous or leaking lines

– Check vacuum line to solenoid valve and from solenoid valve to corresponding component.

– If a fault is stored in the event memory, check the vacuum lines leading to the corresponding component and also check the remaining vacuum lines in the system.

– If it is not possible to build up a vacuum with the hand vacuum pump - VAS 6213- or if the vacuum pressure drops again immediately, check the hand vacuum pump and connecting hoses for leaks.

Protected by copyright. Copying for private or commercial purposes, in part or in whole, is not permitted unless authorised by AUDI AG. AUDI AG does not guarantee or accept any liability with respect to the correctness of information in this document. Copyright by AUDI AG.

2.2 Checking dual non-return valve

Special tools and workshop equipment required

- Auxiliary measuring set - V.A.G 1594C-

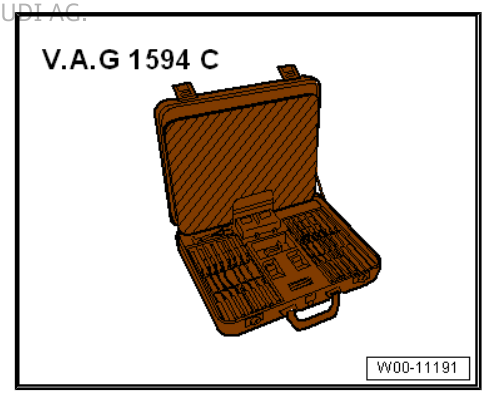

♦ Hand vacuum pump - VAS 6213-

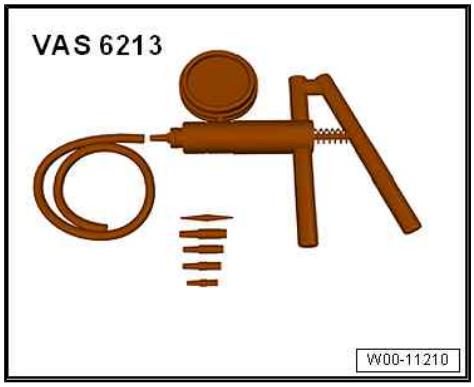

Procedure

- Activated charcoal filter solenoid valve 1 - N80- has been checked with vehicle diagnostic tester and is OK.

– Remove engine cover panel ⇒ page 11 .

Note

Installation position varies depending on engine version

– Unplug connector -1- and detach breather hose -3- from activated charcoal filter solenoid valve 1 - N80- -2-.

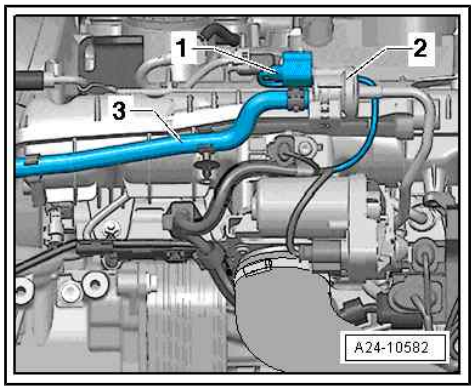

– Move adjuster ring -1- on hand vacuum pump - VAS 6213- to position -A- to select "vacuum".

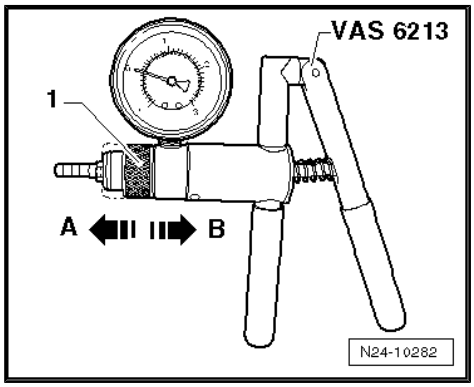

Protected by copyright. Copying for private or commercial purposes, in part or in whole, is not permitted unless authorised by AUDI AG. AUDI AG does not guarantee or accept any liability with respect to the correctness of information in this document. Copyright by AUDI AG.

– Connect hand vacuum pump - VAS 6213- to activated charcoal filter solenoid valve 1 - N80- .
– Connect contacts of activated charcoal filter solenoid valve 1 - N80- -1- to battery using test leads. This will open activated charcoal filter solenoid valve 1 - N80- .
– Operate hand vacuum pump - VAS 6213- several times.
• Vacuum should build up.
– Again disconnect test leads from battery to cut off current supply.

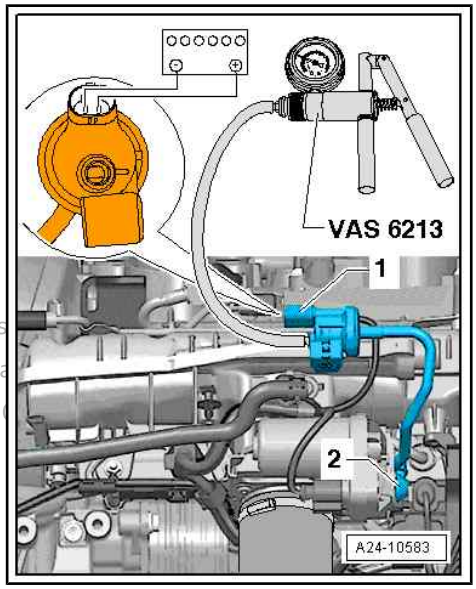

Protected by copyright. Copying for private or commercial purpos
permitted unless authorised by AUDI AG. AUDI AG does not guara
with respect to the correctness of information in this document.

If vacuum does not build up:

Dual non-return valve, activated charcoal filter solenoid valve 1 - N80- and plastic hoses are combined as one unit and can only be renewed together.

3 Air cleaner

All procedures and components are described in ⇒ 4-cylinder direct injection engine (1.8, 2.0 ltr. 4-valve TFSI); Rep. gr. 24 ; Air cleaner .

Protected by copyright. Copying for private or commercial purposes, in part or in whole, is not permitted unless authorised by AUDI AG. AUDI AG does not guarantee or accept any liability with respect to the correctness of information in this document. Copyright by AUDI AG.

4 Intake manifold

⇒ "4.1 Exploded view - intake manifold", page 209

⇒ "4.2 Removing and installing intake manifold", page 212

⇒ "4.3 Removing and installing throttle valve module J338 ", page 213

⇒ "4.4 Cleaning throttle valve module", page 213

⇒ "4.5 Checking intake manifold change-over function", page 214

4.1 Exploded view - intake manifold

⇒ "4.1.1 Exploded view - intake manifold, vehicles with petrol engine", page 209

⇒ "4.1.2 Exploded view - intake manifold, vehicles with MultiFlex engine", page 211

Protected by copyright. Copying for private or commercial purposes, in part or in whole, is not permitted unless authorised by AUDI AG. AUDI AG does not guarantee or accept any liability with respect to the correctness of information in this document. Copyright by AUDI AG.

4.1.1 Exploded view - intake manifold, vehicles with petrol engine

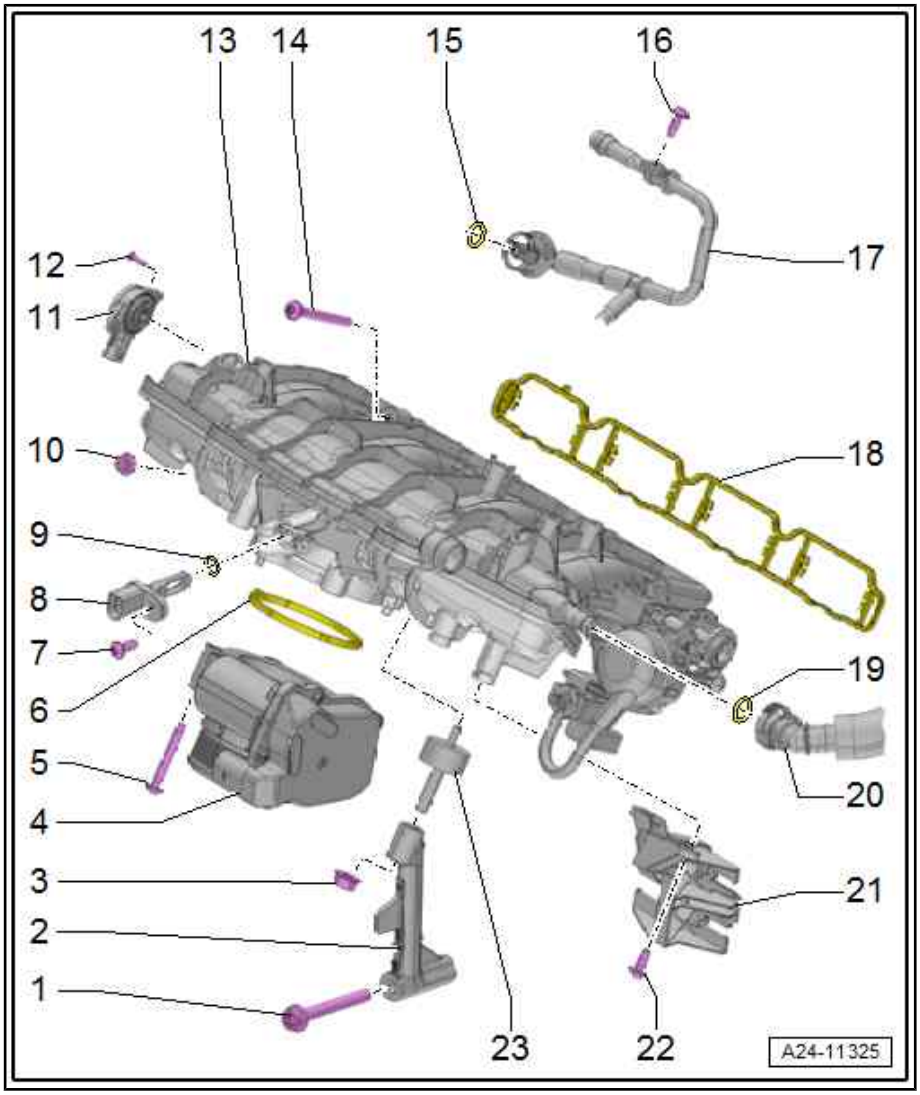

1 - Bolt
- ❑ 20 Nm

2 - Support for intake manifold

3 - Nut
- ❑ 10 Nm

4 - Throttle valve module - J338-
- ❑ Including throttle valve drive for electric throttle - G186- , throttle valve drive angle sender 1 for electric throttle - G187- and throttle valve drive angle sender 2 for electric throttle - G188-
- ❑ Removing and installing ⇒ page 213
- ❑ Cleaning ⇒ page 213
- ❑ After renewing, perform "Adaption" using ⇒ Vehicle diagnostic tester, `Guided Functions`

5 - Bolt
- ❑ 7 Nm

6 - Seal
- ❑ Renew after removing

7 - Bolt
- ❑ 5 Nm

8 - Intake air temperature sender - G42-
- ❑ Removing and installing ⇒ "6.1 Removing and installing intake air temperature sender G42 ", page 226

9 - O-ring
- ❑ Renew after removing

Protected by copyright. Copying for private or commercial purposes, in part or in whole, is not permitted unless authorised by AUDI AG. AUDI AG does not guarantee or accept any liability with respect to the correctness of information in this document. Copyright by AUDI AG.

10 - Nut

- ❑ Pre-tightening torque: 3 Nm
- ❑ Final tightening torque: 10 Nm

11 - Intake manifold flap potentiometer - G336-

12 - Bolt

- ❑ Thread-forming
- ❑ Fit and screw in bolt by hand so that it is screwed into old thread. Then tighten bolt to torque
- ❑ 0.8 Nm

13 - Intake manifold

- ❑ Removing and installing ⇒ 4-cylinder direct injection engine (1.8, 2.0 ltr. 4-valve TFSI); Rep. gr. 24 ; Intake manifold; Removing and installing intake manifold

14 - Bolt

- ❑ Pre-tightening torque: 3 Nm
- ❑ Final tightening torque: 10 Nm

15 - O-ring

- ❑ Renew after removing

16 - Bolt

- ❑ Thread-forming
- ❑ Fit and screw in bolt by hand so that it is screwed into old thread. Then tighten bolt to torque
- ❑ 4 Nm

17 - Vacuum hose

18 - Gasket

- ❑ Renew after removing

19 - O-ring

- ❑ Renew after removing

20 - Hose

- ❑ For crankcase breather

21 - Bracket

- ❑ For electrical connectors

22 - Bolt

- ❑ Thread-forming
- ❑ Fit and screw in bolt by hand so that it is screwed into old thread. Then tighten bolt to torque
- ❑ 4 Nm

23 - Bonded rubber bush

- ❑ 10 Nm

4.1.2 Exploded view - intake manifold, vehicles with MultiFlex engine

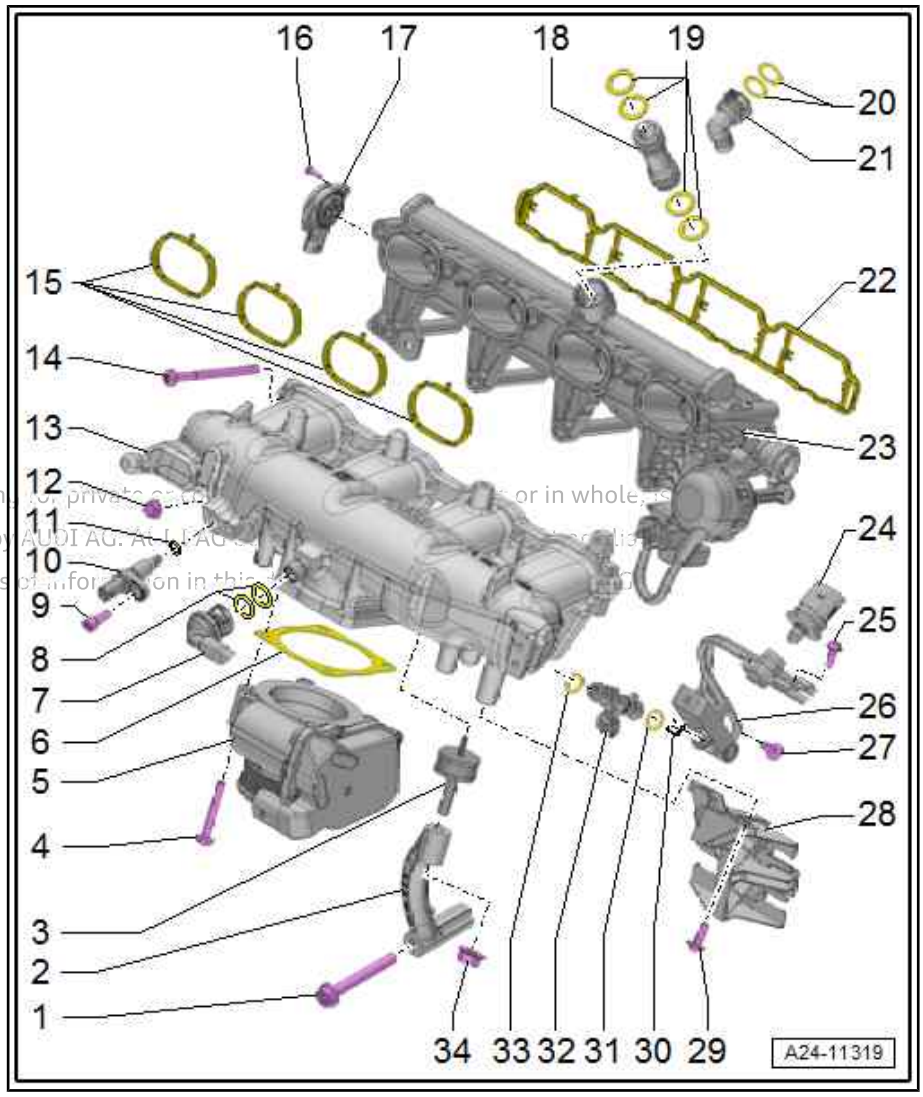

1 - Bolt
- ❑ 20 Nm

2 - Support for intake manifold

3 - Bonded rubber bush
- ❑ 10 Nm

4 - Bolt
- ❑ 9 Nm

5 - Throttle valve module - J338-
- ❑ Including throttle valve drive for electric throttle - G186- , throttle valve drive angle sender 1 for electric throttle - G187- and throttle valve drive angle sender 2 for electric throttle - G188-
- ❑ Removing and installing ⇒ page 213
- ❑ Cleaning ⇒ page 213
- ❑ After renewing, perform “Adaption” using ⇒ Vehicle diagnostic tester, Guided Functions

Protected by copyright. Copying for private or commercial purposes, in part or in whole, is not permitted unless authorised by AUDI AG. AUDI AG does not guarantee or assume any liability with respect to the correctness of information in this document.

6 - Gasket
- ❑ Renew after removing

7 - Hose
- ❑ For crankcase breather

8 - O-rings
- ❑ Renew after removing

9 - Bolt
- ❑ 5 Nm

10 - Intake air temperature sender - G42-
- ❑ Removing and installing ⇒ “6.1 Removing and installing intake air temperature sender G42 ”, page 226

11 - O-ring
- ❑ Renew after removing

12 - Nut
- ❑ Pre-tightening torque: 3 Nm
- ❑ Final tightening torque: 10 Nm

13 - Intake manifold (top section)
- ❑ Removing and installing ⇒ 4-cylinder direct injection engine (1.8, 2.0 ltr. 4-valve TFSI); Rep. gr. 24 ; Intake manifold; Removing and installing intake manifold

14 - Bolt
- ❑ Pre-tightening torque: 3 Nm
- ❑ Final tightening torque: 10 Nm

15 - Gaskets
- ❑ Renew after removing

16 - Bolt

- ❑ Thread-forming
- ❑ Fit and screw in bolt by hand so that it is screwed into old thread. Then tighten bolt to torque
- ❑ 0.8 Nm

17 - Intake manifold flap potentiometer - G336-

18 - Connection

- ❑ For crankcase breather

19 - O-rings

- ❑ Renew after removing

20 - O-rings

- ❑ Renew after removing

21 - Connection

- ❑ For crankcase breather

Protected by copyright. Copying for private or commercial purposes, in part or in whole, is not permitted unless authorised by AUDI AG. AUDI AG does not guarantee or accept any liability with respect to the correctness of information in this document. Copyright by AUDI AG.

22 - Gasket

- ❑ Renew after removing

23 - Intake manifold (bottom section)

- ❑ Removing and installing ⇒ 4-cylinder direct injection engine (1.8, 2.0 ltr. 4-valve TFSI); Rep. gr. 24 ; Intake manifold; Removing and installing intake manifold

24 - Fuel pressure sender for low pressure - G410-

- ❑ 27 Nm

25 - Bolt

- ❑ 9 Nm

26 - Fuel line

- ❑ With bracket for cold-start valve - N17-

27 - Bolt

- ❑ 9 Nm

28 - Bracket

- ❑ For electrical connectors

29 - Bolt

- ❑ Thread-forming
- ❑ Fit and screw in bolt by hand so that it is screwed into old thread. Then tighten bolt to torque
- ❑ 4 Nm

30 - Clip

31 - O-ring

- ❑ Renew after removing

32 - Cold-start valve - N17-

- ❑ Removing and installing ⇒ page 225

33 - O-ring

- ❑ Renew after removing

34 - Nut

- ❑ 10 Nm

4.2 Removing and installing intake manifold

All procedures are described in ⇒ 4-cylinder direct injection engine (1.8, 2.0 ltr. 4-valve TFSI); Rep. gr. 24 ; Intake manifold; Removing and installing intake manifold .

4.3 Removing and installing throttle valve module - J338-

Removing

Preparatory work may be necessary depending on model ⇒ 4-cylinder direct injection engine (1.8, 2.0 ltr. 4-valve TFSI); Rep. gr. 24 ; Intake manifold; Removing and installing throttle valve module - J338- .

– Unplug electrical connector -1-.

– Remove bolts -arrows- and detach throttle valve module - J338- .

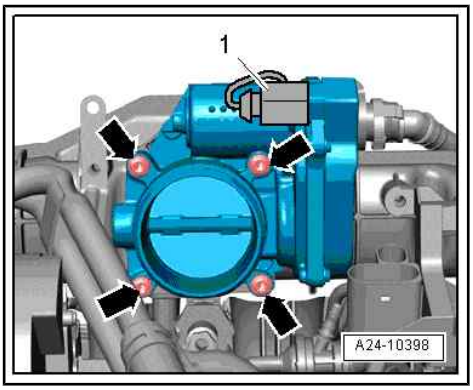

Installing

Installation is carried out in reverse order; note the following:

• Renew seal after removing.

– Clean sealing surface for seal.

Additional work depending on model ⇒ 4-cylinder direct injection engine (1.8, 2.0 ltr. 4-valve TFSI); Rep. gr. 24 ; Intake manifold; Removing and installing throttle valve module - J338-

– Perform adaption using ⇒ Vehicle diagnostic tester, Guided Functions, after installing throttle valve module - J338- .

Tightening torques

♦ ⇒ “4.1 Exploded view - intake manifold”, page 209

Protected by copyright. Copying for private or commercial purposes, in part or in whole, is not permitted unless authorised by AUDI AG. AUDI AG does not guarantee or accept any liability with respect to the correctness of information in this document. Copyright by AUDI AG.

4.4 Cleaning throttle valve module

Special tools and workshop equipment required

♦ Acetone (commercially available)

♦ Safety goggles

♦ Protective gloves

Procedure

• Take care not to scratch the throttle valve housing when cleaning it.

– Remove throttle valve module - J338- ⇒ page 213 .

– Open throttle valve by hand and lock it in open position with a wedge (plastic or wood) -arrow-.

⚠ CAUTION

Risk of injury caused by acetone. Acetone is highly flammable and can cause irritation to the eyes and skin.

– Put on safety goggles.

– Put on protective gloves.

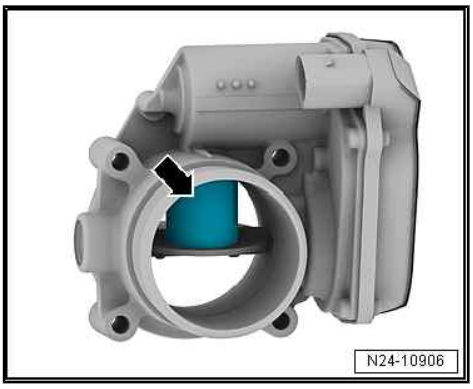

– Clean throttle valve housing thoroughly, especially around the points -arrows- where the throttle valve closes, using commercially available acetone and a small brush.
– Wipe out throttle valve housing with a lint-free cloth.
– Allow acetone to flash off completely.
– Install throttle valve module - J338- ⇒ page 213 .

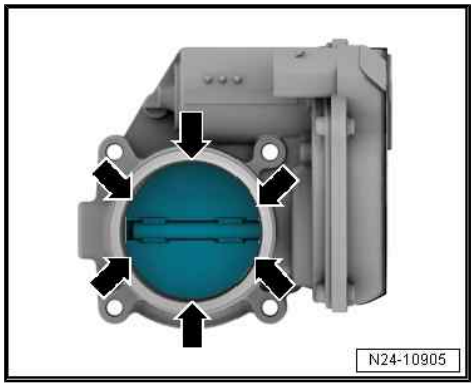

4.5 Checking intake manifold change-over function

Copyright by AUDI AG. Copying for commercial purposes, in part or in whole, is not permitted unless authorised by AUDI AG. AUDI AG does not guarantee or accept any liability with respect to the correctness of information in this document. Copyright by AUDI AG.

Only perform this test if there is a loss of engine torque (poor flexibility or lack of pulling power).

Special tools and workshop equipment required

♦ Hand vacuum pump - VAS 6213-

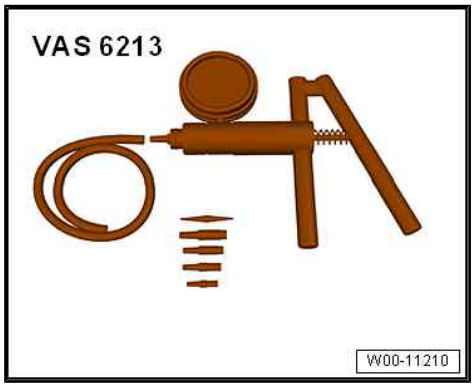

Test condition

• Intake manifold flap valve - N316- has been checked with a vehicle diagnostic tester.

Perform the following steps if the intake manifold flap valve - N316- is OK.

Procedure

– Remove engine cover panel ⇒ page 11 .
– Start engine and run at idling speed.
– Have a second mechanic rev up engine quickly (short burst of throttle) and observe vacuum unit for intake manifold change-over.

• The linkage -1- of the vacuum unit for intake manifold flap should pick up -arrow-.

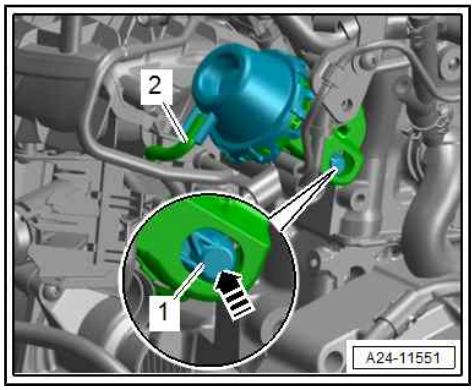

If the change-over does not operate as described:

– Check vacuum system for leaks.
– Check that vacuum lines are connected correctly.
– Check vacuum hoses for porosity.

– Move adjuster ring -1- on hand vacuum pump - VAS 6213- to position -A- to select "vacuum".

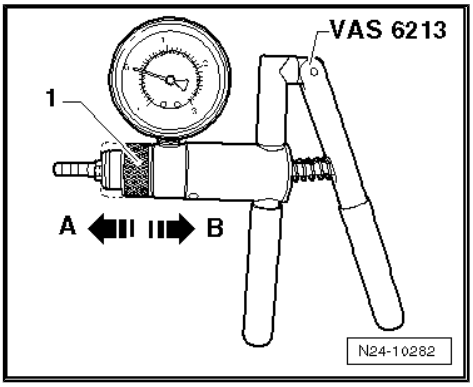

– Connect hand vacuum pump - VAS 6213- to vacuum unit for intake manifold flap valve - N316- .

– Operate hand vacuum pump - VAS 6213- several times.

• The linkage -1- of the vacuum unit for intake manifold flap should pick up.

– Vent vacuum.

• The linkage should return to the initial position.

• The linkage should move in both directions -arrows-.

– Renew intake manifold if linkage does not move.

– Install engine cover panel ⇒ page 11 .

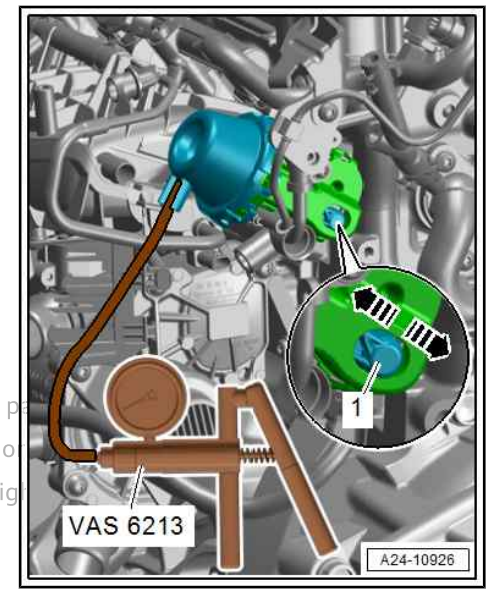

Protected by copyright. Copying for private or commercial purposes, in pa
permitted unless authorised by AUDI AG. AUDI AG does not guarantee or
Copyright by AUDI AG. All rights reserved. Copyright in this document. Copyrig

Additional work depending on model ⇒ 4-cylinder direct injection engine (1.8, 2.0 ltr. 4-valve TFSI); Rep. gr. 24 ; Intake manifold; Checking intake manifold change-over function

5 Injectors

⇒ “5.1 Exploded view - fuel rail with injectors”, page 216

⇒ “5.2 Removing and installing fuel rail”, page 219

⇒ “5.3 Removing and installing injectors”, page 220

⇒ “5.4 Cleaning injectors”, page 224

⇒ “5.5 Removing and installing cold-start valve N17 ”, page 225

5.1 Exploded view - fuel rail with injectors

⇒ “5.1.1 Exploded view - fuel rail with injectors, vehicles with petrol engine”, page 216

⇒ “5.1.2 Exploded view - fuel rail with injectors, vehicles with MultiFlex engine”, page 218

5.1.1 Exploded view - fuel rail with injectors, vehicles with petrol engine

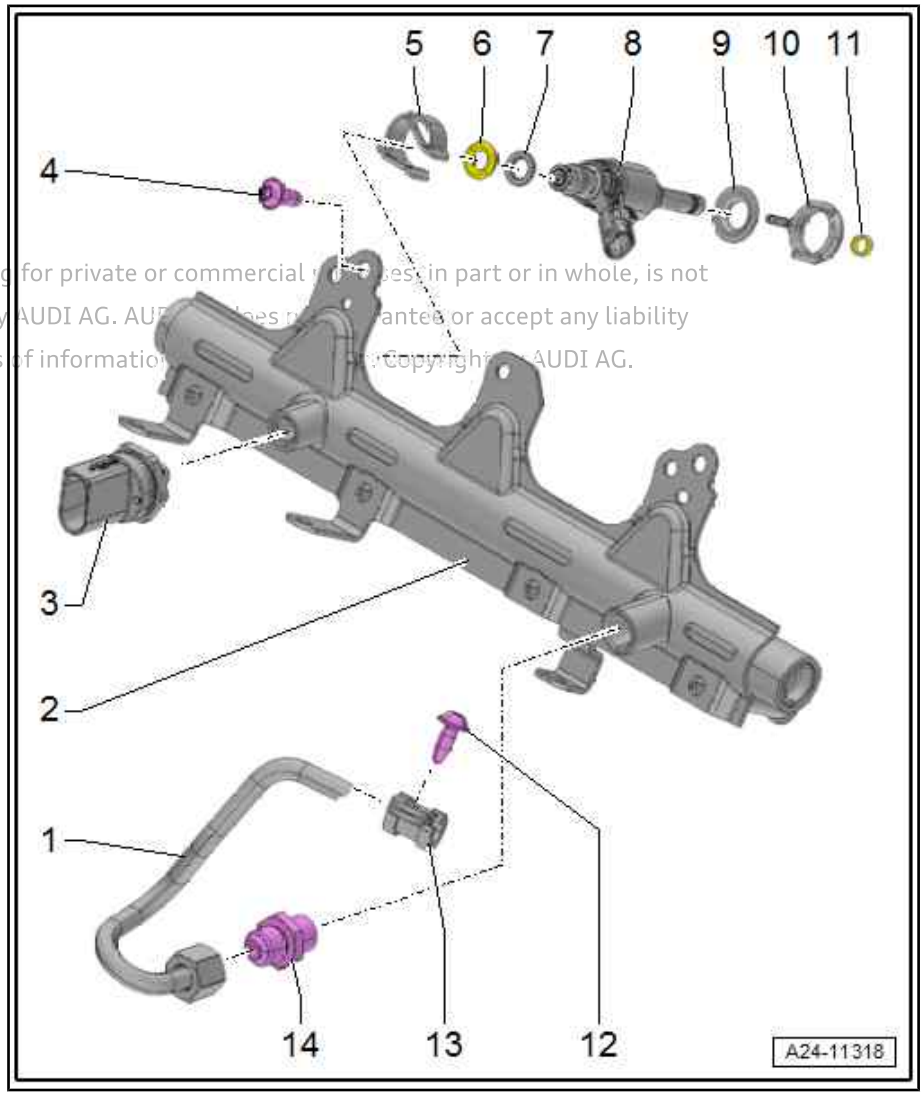

1 - High-pressure pipe

- ❑ Connections must not be damaged
- ❑ Do not alter shape
- ❑ Lubricate thread of union nut with clean engine oil
- ❑ Tighten union nut to 27 Nm

2 - Fuel rail

- ❑ Connections must not be damaged
- ❑ Removing and installing ⇒ page 219

3 - Fuel pressure sender - G247-

- ❑ Removing and installing ⇒ page 227
- ❑ Lubricate threads lightly with clean engine oil
- ❑ 27 Nm

4 - Bolt

- ❑ 5 Nm

5 - Support ring

- ❑ Must be properly seated
- ❑ Via this support ring, the fuel rail exerts the force which holds the injector in the cylinder head

6 - O-ring

- ❑ Renew after removing
- ❑ Lubricate lightly with clean engine oil

7 - Spacer ring

- ❑ Renew if damaged

Protected by copyright. Copying for private or commercial purposes, in part or in whole, is not permitted unless authorised by AUDI AG. AUDI AG does not guarantee or accept any liability with respect to the correctness of information. Copyright by AUDI AG.

8 - Injector

- ❑ Different versions available; for allocation refer to ⇒ Electronic parts catalogue
- ❑ Ensure correct installation position.
- ❑ Removing and installing ⇒ “5.3 Removing and installing injectors”, page 220

9 - Sealing washer

10 - Mounting

- ❑ For sealing element

11 - Combustion chamber ring seal

- ❑ Renewing ⇒ “5.3 Removing and installing injectors”, page 220

12 - Bolt

- ❑ Thread-forming
- ❑ Fit and screw in bolt by hand so that it is screwed into old thread. Then tighten bolt to torque
- ❑ 5 Nm

13 - Retaining clamp

- ❑ For high-pressure pipe

14 - Connection

- ❑ For high-pressure pipe
- ❑ Counterhold when loosening union nut
- ❑ Renew after removing
- ❑ 40 Nm

Protected by copyright. Copying for private or commercial purposes, in part or in whole, is not permitted unless authorised by AUDI AG. AUDI AG does not guarantee or accept any liability with respect to the correctness of information in this document. Copyright by AUDI AG.

5.1.2 Exploded view - fuel rail with injectors, vehicles with MultiFlex engine

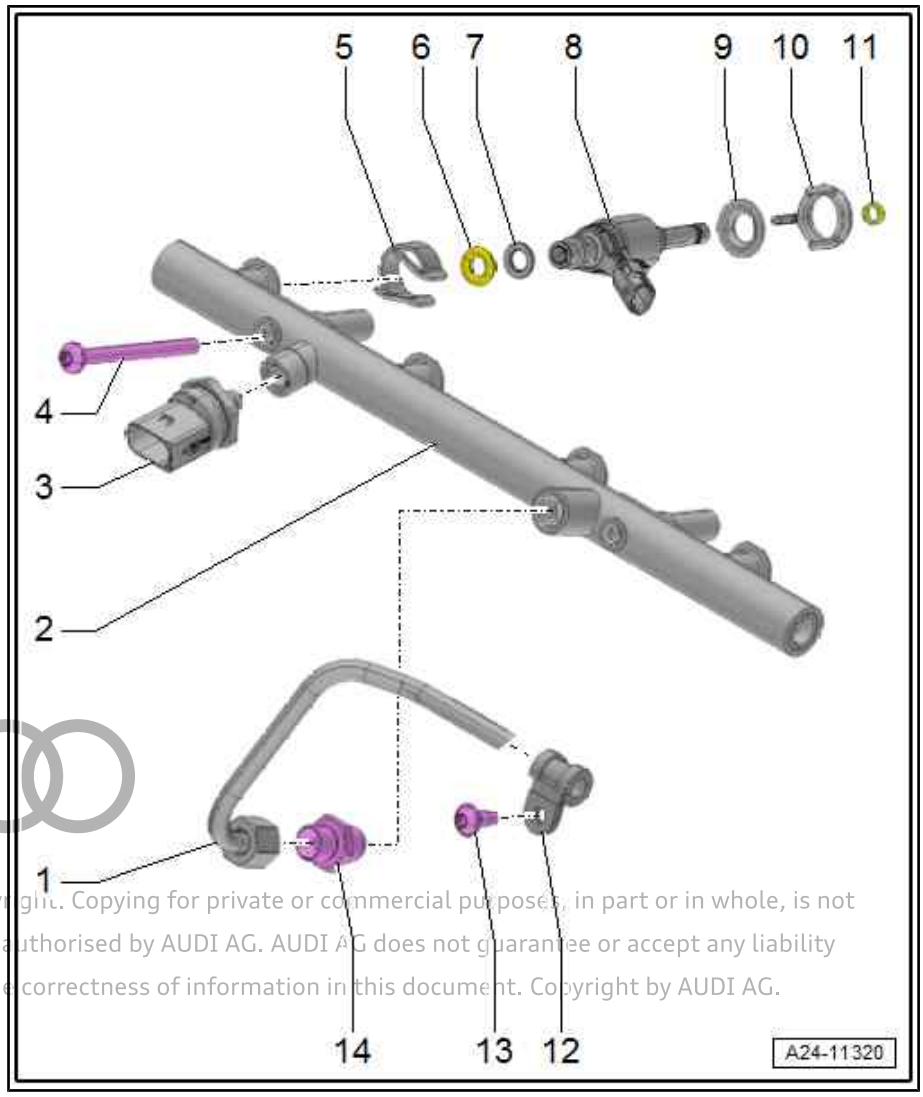

1 - High-pressure pipe
- ❑ Connections must not be damaged
- ❑ Do not alter shape
- ❑ Lubricate thread of union nut with clean engine oil
- ❑ Tighten union nut to 27 Nm

2 - Fuel rail
- ❑ Connections must not be damaged
- ❑ Removing and installing ⇒ page 219

3 - Fuel pressure sender - G247-
- ❑ Removing and installing ⇒ page 227
- ❑ Lubricate threads lightly with clean engine oil
- ❑ 27 Nm

4 - Bolt
- ❑ 9 Nm

5 - Support ring
- ❑ Must be properly seated
- ❑ Via this support ring, the fuel rail exerts the force which holds the injector in the cylinder head

Protected by copyright. Copying for private or commercial purposes, in part or in whole, is not permitted unless authorised by AUDI AG. AUDI AG does not guarantee or accept any liability with respect to the correctness of information in this document. Copyright by AUDI AG.

6 - O-ring
- ❑ Renew after removing
- ❑ Lubricate lightly with clean engine oil

7 - Spacer ring
- ❑ Renew if damaged

8 - Injector
- ❑ Different versions available; for allocation refer to ⇒ Electronic parts catalogue
- ❑ Ensure correct installation position.
- ❑ Removing and installing ⇒ “5.3 Removing and installing injectors”, page 220

9 - Sealing washer

10 - Mounting
- ❑ For sealing element

11 - Combustion chamber ring seal
- ❑ Renewing ⇒ “5.3 Removing and installing injectors”, page 220

12 - Retaining clamp
- ❑ For high-pressure pipe

13 - Bolt
- ❑ 5 Nm

14 - Connection

- ❑ For high-pressure pipe
- ❑ Counterhold when loosening union nut
- ❑ Renew after removing
- ❑ 40 Nm

Protected by copyright. Copying for private or commercial purposes, in part or in whole, is not permitted unless authorised by AUDI AG. AUDI AG does not guarantee or accept any liability with respect to the correctness of information in this document. Copyright by AUDI AG.

5.2 Removing and installing fuel rail

⇒ "5.2.1 Removing and installing fuel rail - vehicles with petrol engine", page 219

⇒ "5.2.2 Removing and installing fuel rail - vehicles with MultiFlex engine", page 219

5.2.1 Removing and installing fuel rail - vehicles with petrol engine

Removing

- Remove intake manifold ⇒ 4-cylinder direct injection engine (1.8, 2.0 ltr. 4-valve TFSI); Rep. gr. 24 ; Intake manifold; Removing and installing intake manifold .
- Remove bolts -arrows-.
- Detach fuel rail from intake manifold.

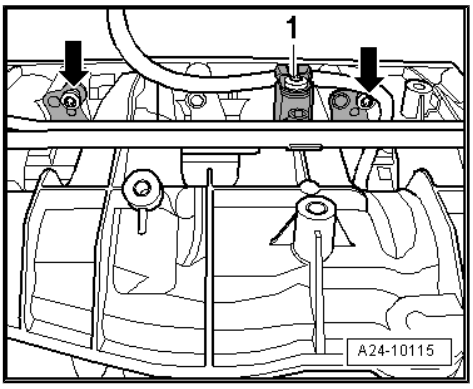

Note

Disregard -item 1-.

Installing

Installation is carried out in reverse order; note the following:

- Always renew both connecting pieces for fuel supply line.
- Connect and tighten fuel line.
- Plug electrical connector back in.
- Install intake manifold ⇒ 4-cylinder direct injection engine (1.8, 2.0 ltr. 4-valve TFSI); Rep. gr. 24 ; Intake manifold; Removing and installing intake manifold .

Tightening torques

- ⇒ "5.1.1 Exploded view - fuel rail with injectors, vehicles with petrol engine", page 216

5.2.2 Removing and installing fuel rail - vehicles with MultiFlex engine

Removing

- Remove intake manifold (bottom section) ⇒ 4-cylinder direct injection engine (1.8, 2.0 ltr. 4-valve TFSI); Rep. gr. 24 ; Intake manifold; Removing and installing intake manifold .

– Unplug electrical connector -1- at fuel pressure sender - G247- .

– Remove bolts -arrows- and pull fuel rail off injectors.

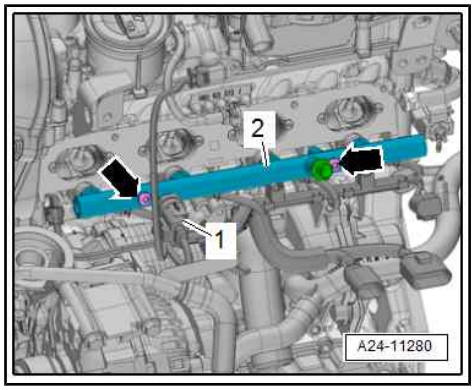

Note

The injectors can remain in the fuel rail. Unplug electrical connector from corresponding injector.

Installing

Installation is carried out in reverse order; note the following:

Note

Make sure that injectors are installed correctly.

– Install intake manifold (bottom section) ⇒ 4-cylinder direct injection engine (1.8, 2.0 ltr. 4-valve TFSI); Rep. gr. 24 ; Intake manifold; Removing and installing intake manifold .

Tightening torques

♦ ⇒ “5.1.2 Exploded view - fuel rail with injectors, vehicles with MultiFlex engine”, page 218

5.3 Removing and installing injectors

Special tools and workshop equipment required

♦ Tool set for FSI engines - T10133 C-

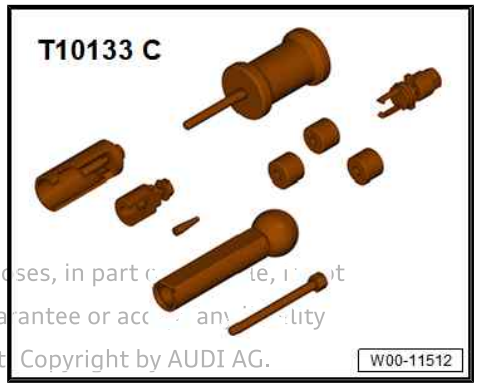

Protected by copyright. Copying for private or commercial purposes, in part or entirety, is not permitted unless authorised by AUDI AG. AUDI AG does not guarantee or accept any liability with respect to the correctness of information in this document. Copyright by AUDI AG.

Removing

• Injectors must only be installed when engine is cold.

– Observe rules for cleanliness ⇒ page 5 .

– Vehicles with petrol engine: Remove intake manifold ⇒ 4-cylinder direct injection engine (1.8, 2.0 ltr. 4-valve TFSI); Rep. gr. 24 ; Intake manifold; Removing and installing intake manifold .

– Vehicles with MultiFlex engine: Remove fuel rail ⇒ page 219 .

• Carefully pull out any injectors that remain lodged in the fuel rail.

– Remove the injectors if they remain lodged in the cylinder head.

– Cover open inlet ports with a clean cloth.

– Detach support ring -7- from injector -4-.

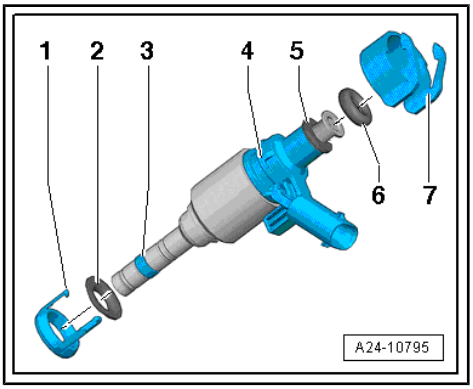

– Slide sleeve -T10133/18- over injector.
– Carefully knock against stop sleeve several times with a plastic hammer -1- to loosen injector.

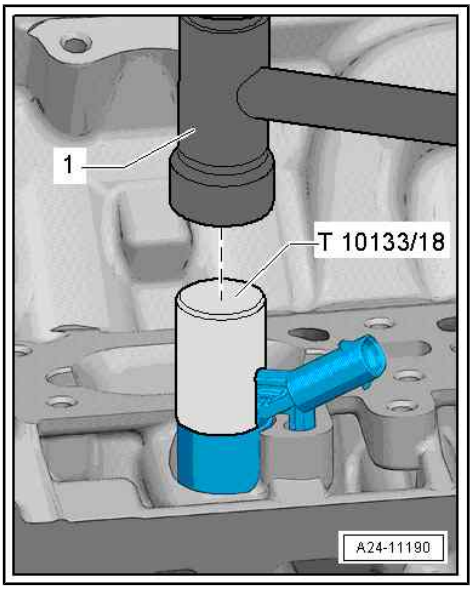

• Use a torque wrench to pull out injector.
– Set torque wrench to 5 Nm.
– Fit puller -T10133/2A- to groove on injector.
– Then fit guide puller T10133/16A .
– Pull out injector by turning bolt with torque wrench -1-.
– If injector does not come loose after limit torque of 5 Nm is reached, remove puller and repeat procedure using stop sleeve to loosen injector.
– Repeat procedure for each injector.

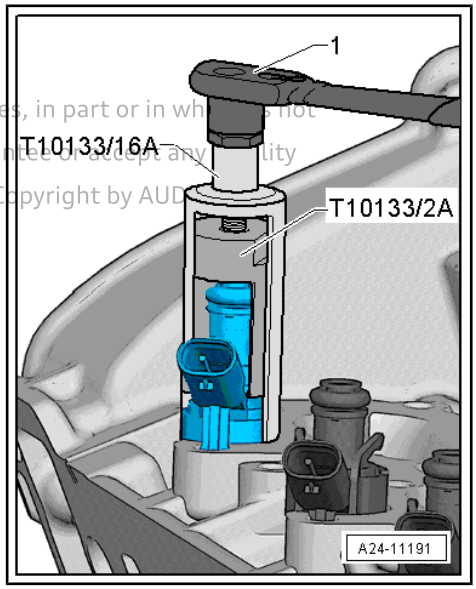

Protected by copyright. Copies or extracts for private or commercial purposes, in part or in whole, are not permitted unless authorised by AUDI AG. AUDI AG does not guarantee or accept any liability with respect to the correctness of information in this document. Copyright by AUDI AG.

Dismantling injector

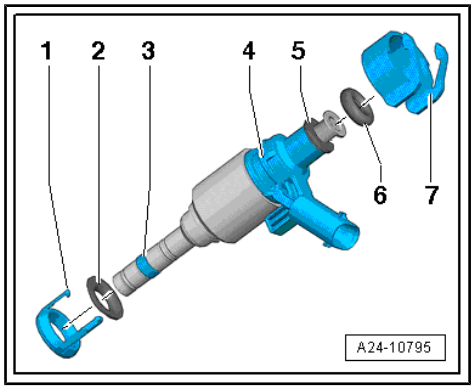

- Pull O-ring -6- and spacer ring -5- off injector -4-.
- Unclip sealing element -1-.
- Carefully remove old combustion chamber ring seal -3-. To do so, cut open combustion chamber ring seal using knife or prise open with small screwdriver and then pull off forwards.
- Take care not to damage groove on injector. Injector must be renewed if groove is damaged.

Installing

- Use complete repair set when installing.
- Renew support ring after removing.
- Renew combustion chamber ring seal before re-installing injector.

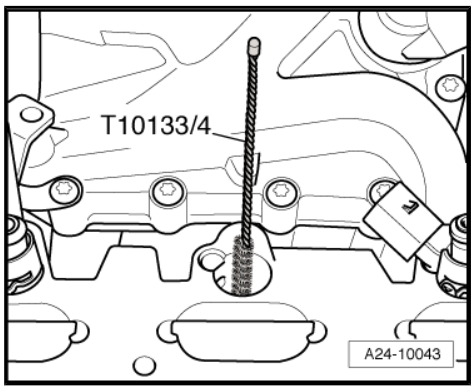

- Clean bore in cylinder head with nylon cylinder brush -T10133/4- .
- When re-installing an injector, clean any combustion residue off groove for combustion chamber ring seal and injector stem with a clean cloth.

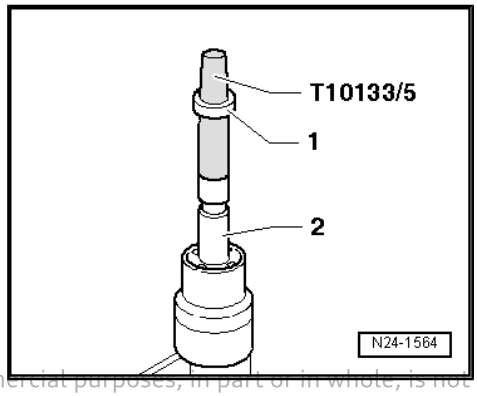

- Fit assembly cone -T10133/5- with new combustion chamber ring seal -1- onto injector -2-.

Protected by copyright. Copying for private or commercial purposes, in part or in whole, is not permitted unless authorised by AUDI AG. AUDI AG does not guarantee or accept any liability with respect to the correctness of information in this document. Copyright by AUDI AG.

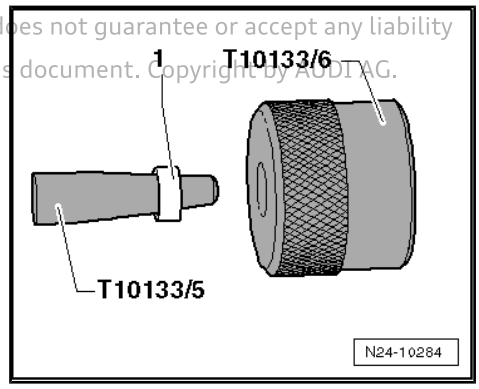

- Using assembly sleeve -T10133/6- push combustion chamber ring seal -1- onto assembly cone -T10133/5- as far as it will go.

– Turn round assembly sleeve -T10133/6- and slide combustion chamber ring seal into groove.

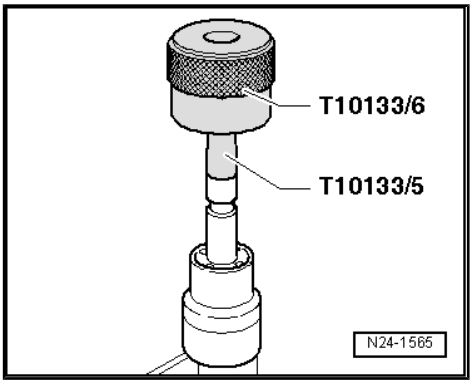

- The combustion chamber ring seal is widened when it is pushed onto the injector. After pushing it on, it therefore has to be compressed again. This is done in two stages, as described below.

– Push calibration sleeve -T10133/7- onto injector as far as it will go and simultaneously turn it slightly (approx. 180°).

– Pull calibration sleeve -T10133/7- off again by turning it in the opposite direction.

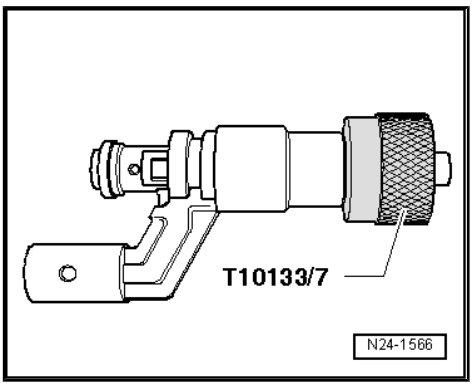

– Push calibration sleeve -T10133/8- onto injector as far as it will go and simultaneously turn it slightly (approx. 180°).

– Pull calibration sleeve -T10133/8- off again by turning it in the opposite direction.

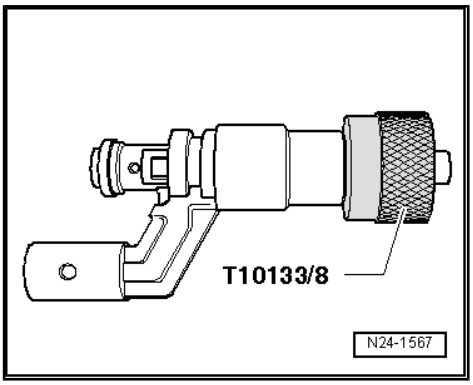

– Before installing new injector -4-, lubricate new O-ring -6- lightly with clean engine oil.

- The combustion chamber ring seal -3- must not be lubricated.

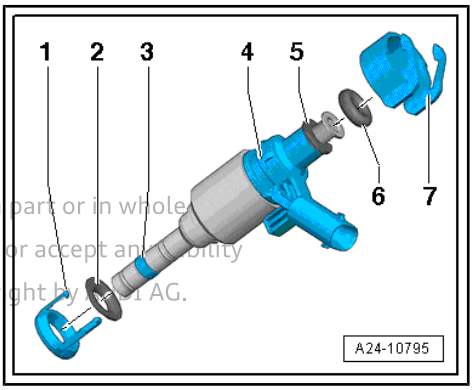

Protected by copyright. Copying for private or commercial purposes, in part or in whole, is not permitted unless authorised by AUDI AG. AUDI AG does not guarantee or accept any liability with respect to the correctness of information in this document. Copyright by AUDI AG.

– Press injector by hand as far as it will go into aperture in cylinder head (aperture must be free of oil and grease). Ensure that the injector is properly seated -arrow- in the cylinder head.

• Lug -1- and hole -arrow- in cylinder head must face each other.

• It should be possible to insert the injector easily. If necessary wait until the combustion chamber ring seal has contracted sufficiently.

– Fit support ring onto injector.

– Vehicles with petrol engine: Install intake manifold ⇒ 4-cylinder direct injection engine (1.8, 2.0 ltr. 4-valve TFSI); Rep. gr. 24 ; Intake manifold; Removing and installing intake manifold .

– Vehicles with MultiFlex engine: Install fuel rail
⇒ “5.2 Removing and installing fuel rail”, page 219 .

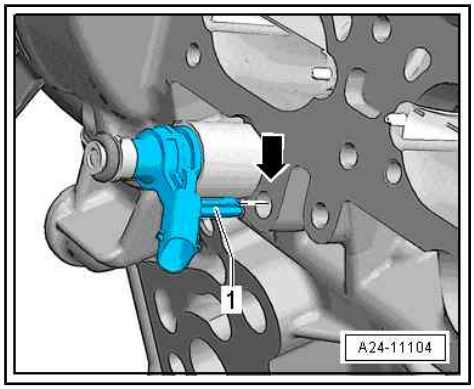

5.4 Cleaning injectors

The following procedure applies to FSI injectors.

Special tools and workshop equipment required

♦ Ultrasonic cleaning unit - VAS 6418-

♦ Mounting plate for injection modules - VAS 6418/1-

♦ Cleaning fluid - VAS 6418/2-

Procedure

– Close drain tap -arrow- on ultrasonic cleaning unit - VAS 6418- (located on right side of housing).

– Fill up ultrasonic unit.

• Ratio of cleaning fluid: 2,100 ml of tap water which has been allowed to settle for a few minutes and 20 ml of cleaning fluid - VAS 6418/2-

• The ideal fluid level is approx. 1 ... 4 mm above the base of the mounting plate. The ultrasonic cleaning unit - VAS 6418- can be damaged if the fluid level is too low.

– Remove injectors
⇒ “5.3 Removing and installing injectors”, page 220 .

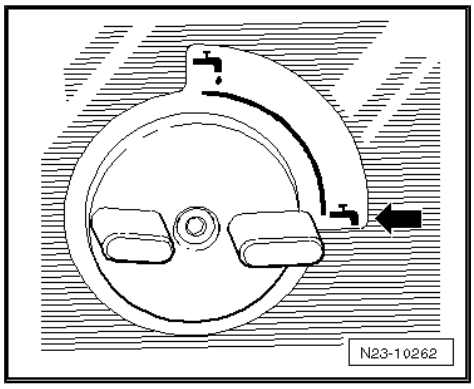

– Place mounting plate for injection modules - VAS 6418/1- on top of cleaning unit.

• It is important to read the safety notes in the operating instructions before switching on the ultrasonic cleaning unit - VAS 6418- .

– Insert FSI injectors all the way into guides of mounting plate for injection modules - VAS 6418/1- .

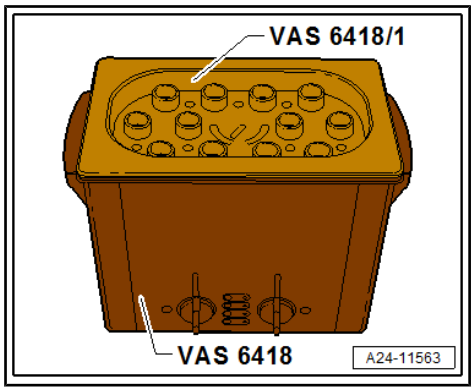

Protected by copyright. Copying for private or commercial purposes, in part or in whole, is not permitted unless authorised by AUDI AG. AUDI AG does not guarantee or accept any liability with respect to the correctness of information in this document. Copyright by AUDI AG.

Protected by copyright. Copying for private or commercial purposes, in part or in whole, is not permitted unless authorised by AUDI AG. AUDI AG does not guarantee or accept any liability with respect to the correctness of information in this document. Copyright by AUDI AG.

– Switch on cleaning unit by pressing on/off button -C-.

– Select a cleaning time of 30 minutes with rotary control -A-.

– Set rotary control -B- to a temperature of 50°C.

– Press ▶ button -D- to start cleaning procedure.

• The actual cleaning process commences when the temperature reaches at least 50 °C and must last for at least 30 minutes.

– Install injectors with new combustion chamber seal ⇒ “5.3 Removing and installing injectors”, page 220 .

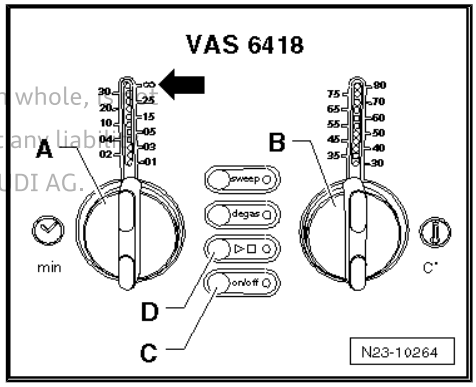

5.5 Removing and installing cold-start valve - N17-

MultiFlex engine only.

Removing

– Remove intake manifold (top section) ⇒ 4-cylinder direct injection engine (1.8, 2.0 ltr. 4-valve TFSI); Rep. gr. 24 ; Intake manifold; Removing and installing intake manifold .

– Pull off retaining clip -1-.

– Remove bolts -arrows- and disconnect fuel lines with bracket -2- from cold-start valve - N17- .

– Disconnect cold-start valve - N17- from intake manifold (top section)/from bracket with fuel lines.

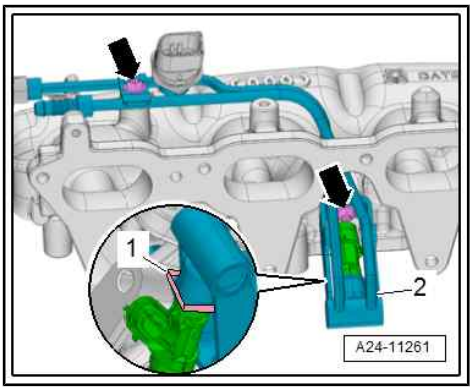

Installing

Installation is carried out in reverse order; note the following:

– Install intake manifold (top section) ⇒ 4-cylinder direct injection engine (1.8, 2.0 ltr. 4-valve TFSI); Rep. gr. 24 ; Intake manifold; Removing and installing intake manifold .

Tightening torques

♦ ⇒ “5.1.2 Exploded view - fuel rail with injectors, vehicles with MultiFlex engine”, page 218

6 Senders and sensors

⇒ "6.1 Removing and installing intake air temperature sender G42 ", page 226

⇒ "6.2 Removing and installing air mass meter G70 ", page 226

⇒ "6.3 Removing and installing fuel pressure sender G247 ", page 227

⇒ "6.4 Checking fuel pressure sender G247 ", page 229

6.1 Removing and installing intake air temperature sender - G42-

Removing

– Remove engine cover panel ⇒ page 11 .

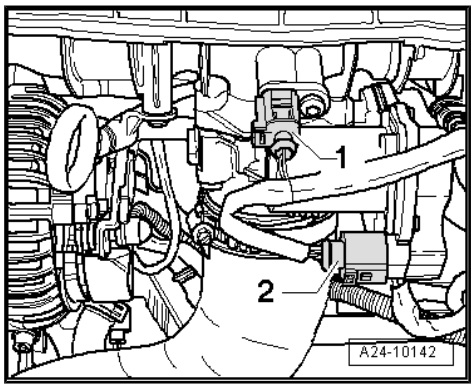

Note

Installation position varies depending on engine version

– Unplug electrical connector -1-.

– Unscrew bolt and detach intake air temperature sender - G42- .

Installing

Installation is carried out in reverse order; note the following:

– Install engine cover panel ⇒ page 11 .

Tightening torques

♦ ⇒ "4.1 Exploded view - intake manifold", page 209

6.2 Removing and installing air mass meter - G70-

Removing

Preparatory work may be necessary depending on model ⇒ 4-cylinder direct injection engine (2.0 ltr. 4-valve TFSI); Rep. gr. 24 ; Senders and sensors; Removing and installing air mass meter - G70- .

Protected by copyright. Copying for private or commercial purposes, in part or in whole, is not permitted unless authorised by AUDI AG. AUDI AG does not guarantee or accept any liability with respect to the correctness of information in this document. Copyright by AUDI AG.

– Unscrew bolts -arrows- for air mass meter - G70- .

– Then carefully pull air mass meter - G70- out of guide on air cleaner housing.

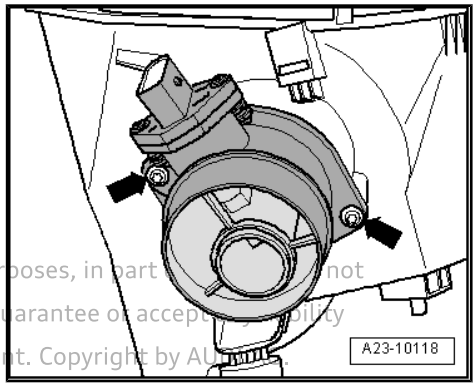

Installing

To ensure the correct function of the air mass meter - G70- , it is important to observe the following notes and instructions.

Protected by copyright. Copying for private or commercial purposes, in part or in whole, is not permitted unless authorised by AUDI AG. AUDI AG does not guarantee or accept any liability with respect to the correctness of information in this document. Copyright by AUDI AG.

Note

- *If the air filter element is very dirty or wet, dirt particles or water can reach the air mass meter - G70- and falsify the detected air mass values. This will cause a loss of power as the calculated injection quantities will be too low.*
- *Always use genuine air filter elements (same as original equipment).*
- *Use a silicone-free lubricant when installing the air hose.*
- *Secure all hose connections with the correct type of hose clips (same as original equipment) ⇒ Electronic parts catalogue .*

– Check for salt residue, dirt and leaves in air mass meter and air intake hose (engine intake side).

– Check intake duct as far as air filter element for dirt. If necessary, clean salt residue, dirt and leaves out of air cleaner housing (top and bottom sections); wash out or use a vacuum cleaner as required.

The remaining installation steps are carried out in the reverse sequence.

Additional work depending on model ⇒ 4-cylinder direct injection engine (2.0 ltr. 4-valve TFSI); Rep. gr. 24 ; Senders and sensors; Removing and installing air mass meter - G70-

Tightening torques

- ⇒ 4-cylinder direct injection engine (1.8, 2.0 ltr. 4-valve TFSI); Rep. gr. 24 ; Air cleaner; Exploded view - air cleaner housing

6.3 Removing and installing fuel pressure sender - G247-

Special tools and workshop equipment required

- Assembly tool - T10118-

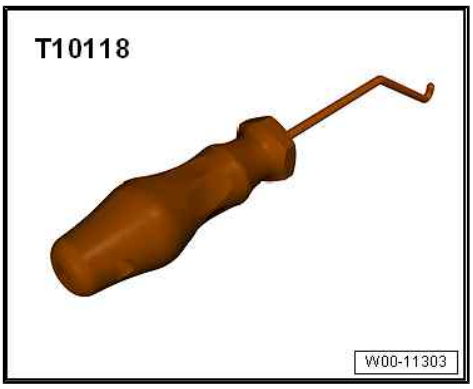

- Socket (27 mm) - T40218- or commercially available socket (27 mm)

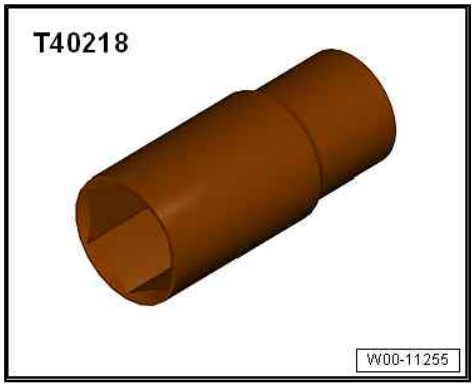

Removing

– Remove engine cover panel ⇒ page 11 .

Note

Installation position varies depending on engine version

– Remove bolts -1, 2- and push coolant pipe to side with coolant hoses -arrows- connected.

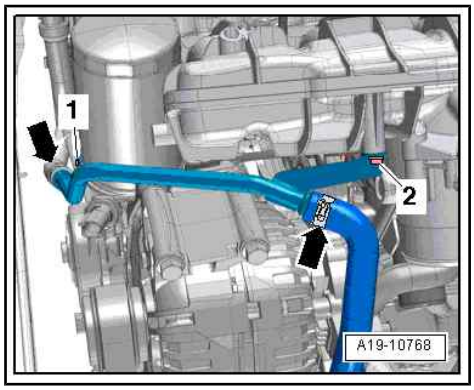

– If fitted, remove bolts -arrow-, unplug electrical connector -1- and press continued coolant circulation pump - V51- to side.

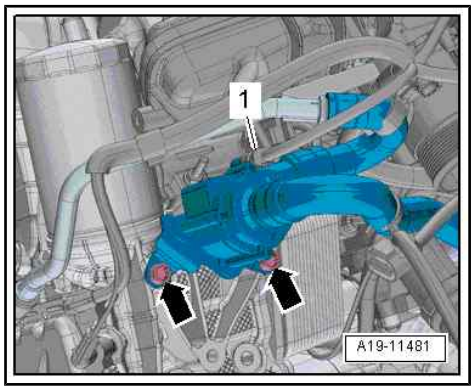

Protected by copyright. Copying for private or commercial purposes, in part or in whole, is not permitted unless authorised by AUDI AG. AUDI AG does not guarantee or accept any liability with respect to the correctness of information in this document. Copyright by AUDI AG.

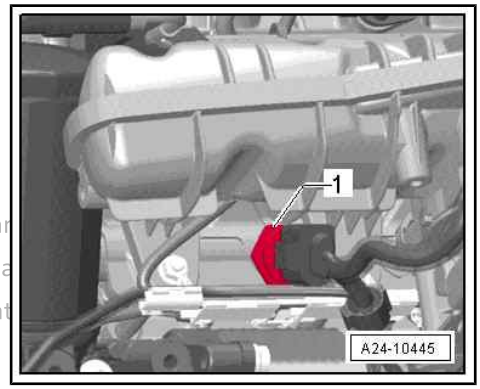

Note

Installation position varies depending on engine version

– Release electrical connector at fuel pressure sender - G247- -item 1- using assembly tool - T10118- .

Protected by copyright. Copying for private or commercial purposes, in par
p ee or a
w information in this document. Copyright

CAUTION

The fuel system is pressurised.

Risk of injury as fuel may spray out.

- **Put on safety goggles.**
- **Put on protective gloves.**
- **Release pressure (wrap a clean cloth around connection and open connection carefully).**

– Unscrew fuel pressure sender using bit, 27 mm - T40218- .

Installing

Installation is carried out in reverse order; note the following:

– Make sure that connecting piece is tightened to specified torque before installing fuel pressure sender - G247- .

Tightening torques

◆ ⇒ “5.1 Exploded view - fuel rail with injectors”, page 216

◆ ⇒ 4-cylinder direct injection engine (1.8, 2.0 ltr. 4-valve TFSI); Rep. gr. 19 ; Coolant pump/thermostat assembly; Exploded view - electric coolant pump

◆ ⇒ 4-cylinder direct injection engine (1.8, 2.0 ltr. 4-valve TFSI); Rep. gr. 19 ; Coolant pipes; Exploded view - coolant pipes

6.4 Checking fuel pressure sender - G247-

Special tools and workshop equipment required

◆ Vehicle diagnostic tester

◆ Test instrument adapter - VAS 5570-

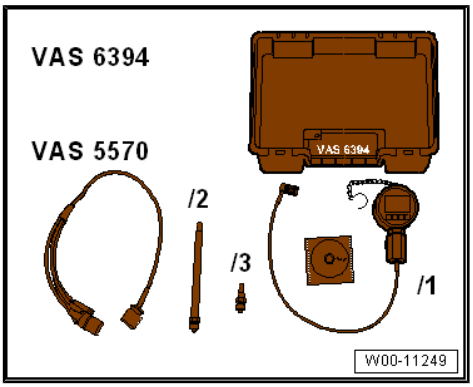

◆ Pressure sensor tester - VAS 6394-

Procedure:

– Observe rules for cleanliness ⇒ page 5 .

– Remove fuel pressure sender - G247- ⇒ page 227 .

– Screw in adapter - VAS 6394/2- in place of fuel pressure sender - G247- and tighten adapter with same torque as specified for -G247- .

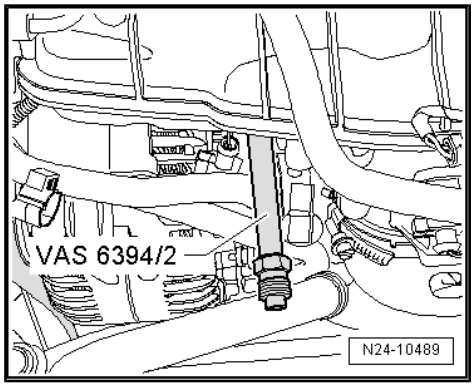

– Unscrew plug -2- on digital pressure gauge - VAS 6394/1- and screw in fuel pressure sender - G247- in its place (tighten to specified torque).

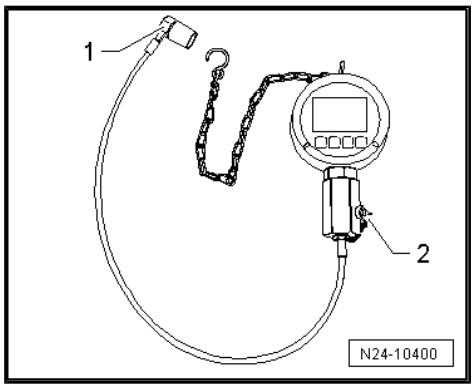

– Use test instrument adapter - VAS 5570- to make electrical connection between vehicle and fuel pressure sender - G247- .

– Connect vehicle diagnostic tester .

– Switch on ignition.

– Select “Engine electronics” in vehicle self-diagnosis.

– Select “Measured values”.

– Select “Fuel pressure” from list.

• The display zone shows the actual pressure value being transmitted to the engine control unit by the fuel pressure sender - G247- .

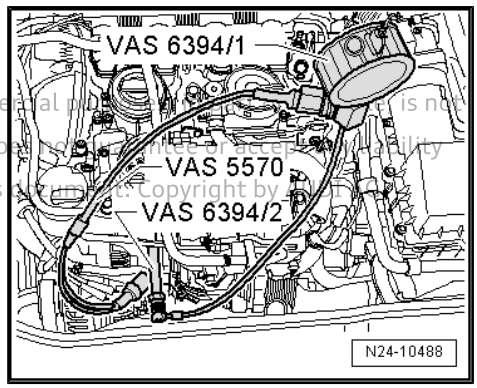

Protected by copyright. Copying for private or commercial purposes, in part or in whole, is not permitted unless authorised by AUDI AG. AUDI AG does not make any representation or warranty with respect to the correctness of information in this document. Copyright by AUDI AG.

– Switch on pressure gauge - VAS 6394/1- by pressing button -A- once briefly.

• The digital pressure gauge - VAS 6394/1- should indicate 0 bar.

– If different value is shown, zero the tester by pressing button -C- briefly.

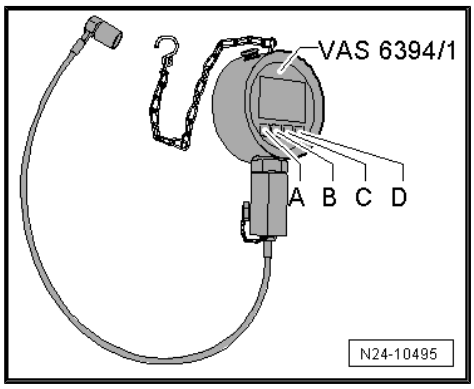

Protected by copyright. Copying for private or commercial purposes, in part or in whole, is not permitted unless authorised by AUDI AG. AUDI AG does not guarantee or accept any liability with respect to the correctness of information in this document. Copyright by AUDI AG.

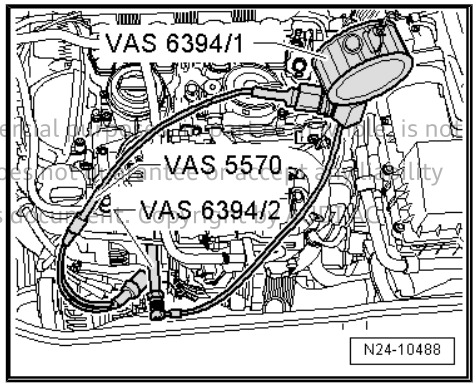

– Connect pressure gauge - VAS 6394/1- to adapter - VAS 6394/2- .
– Start engine.
– Compare pressure indicated by pressure gauge - VAS 6394/1- with actual pressure value on vehicle diagnostic tester .

• The pressure readings must not deviate by more than 5 bar.

– If the deviation is more than 5 bar, fit a new fuel pressure sender - G247- to test it.
– Place a cloth underneath to catch escaping fuel.

CAUTION

The fuel system is pressurised.
Risk of injury as fuel may spray out.
– **Put on safety goggles.**
– **Put on protective gloves.**
– **Release pressure (wrap a clean cloth around connection and open connection carefully).**

– Screw a new fuel pressure sender - G247- into pressure gauge - VAS 6394/1- .
– Repeat the test with the new fuel pressure sender - G247- and compare the two pressure values.
– If measured values are still not the same, check electrical connection between fuel pressure sender - G247- and engine control unit ⇒ Current flow diagrams, Electrical fault finding and Fitting locations.
– If measured values are now the same, install new fuel pressure sender - G247- ⇒ page 227 .

Tightening torques

◆ ⇒ “5.1 Exploded view - fuel rail with injectors”, page 216

7 High-pressure pump

⇒ "7.1 Exploded view - high-pressure pump", page 232

⇒ "7.2 Removing and installing high-pressure pump", page 233

7.1 Exploded view - high-pressure pump

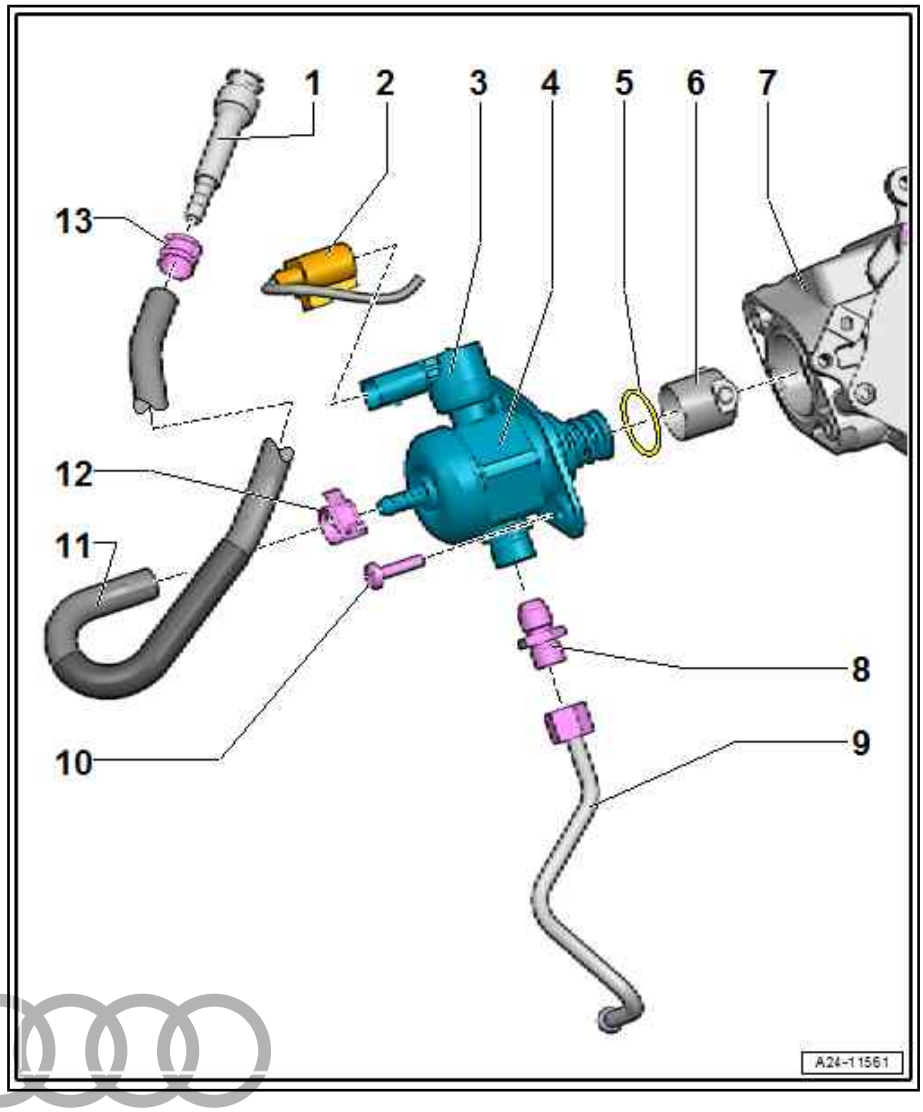

1 - Quick release coupling

- ❑ With cut-off valve
- ❑ Not available as replacement part, supplied together with ⇒ Item 11 (page 233)

2 - Electrical connector

3 - Fuel pressure regulating valve or fuel metering valve

- ❑ Different versions
- ❑ Depending on version of high-pressure pump:

- ♦ Fuel pressure regulating valve - N276- or
- ♦ Fuel metering valve - N290-
  - ❑ Integrated in high-pressure pump; cannot be renewed separately

4 - High-pressure pump

- ❑ Removing and installing ⇒ page 233
- ❑ Take care not to tilt when installing

5 - O-ring

- ❑ Renew after removing
- ❑ Lubricate lightly with engine oil

6 - Roller tappet

- ❑ May remain lodged in vacuum pump when high-pressure pump is removed

7 - Vacuum pump

8 - Connection

- ❑ For high-pressure pipe
- ❑ Counterhold when loosening union nut
- ❑ Must always be renewed once loosened
- ❑ 40 Nm

9 - High-pressure pipe

- ❑ Do not alter shape
- ❑ Install so that parts are free of tension
- ❑ Lubricate thread of union nut with clean engine oil
- ❑ Tighten union nut to 27 Nm

Protected by copyright. Copying for private or commercial purposes, in part or in whole, is not permitted unless authorised by AUDI AG. AUDI AG does not guarantee or accept any liability with respect to the correctness of information in this document. Copyright by AUDI AG.

10 - Bolt

- ❑ M6; renew after removing
- ❑ Tightening torque and sequence ⇒ page 233

11 - Fuel supply hose

- ❑ From fuel tank

12 - Spring-type clip

- ❑ Renew after removing

13 - Spring-type clip

- ❑ Not available as replacement part, supplied together with ⇒ Item 11 (page 233)

High-pressure pump - tightening torques and sequence

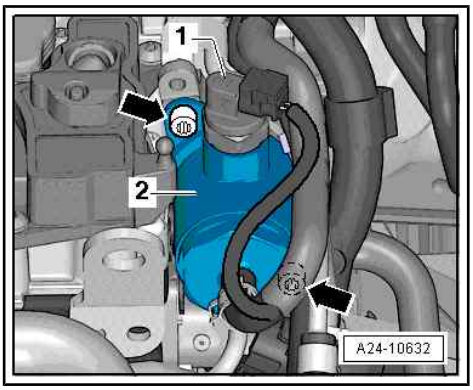

- After removing, renew bolts tightened with specified tightening angle.

– To prevent flange of high-pressure pump from being deformed during installation, tighten bolts -arrows- in stages as follows:

Stage	Bolts	Tightening torque
1.		Screw in by hand until contact is made
2.		Tighten one turn alternately until flange of high-pressure pump makes contact with vacuum pump
3.	M6	8 Nm +90° further
	M8	20 Nm

7.2 Removing and installing high-pressure pump

Special tools and workshop equipment required

♦ Wrench, 21 mm - T40263-

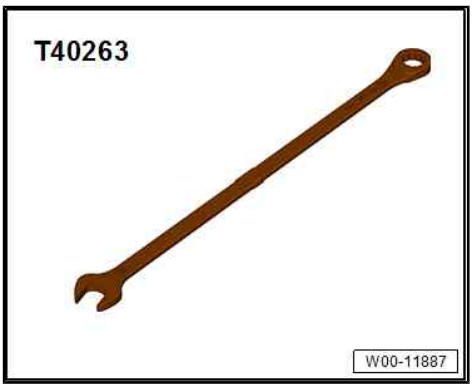

Protected by copyright. Copying for private or commercial purposes, in part or in whole, is not permitted unless authorised by AUDI AG. AUDI AG does not guarantee or accept any liability with respect to the correctness of information in this document. Copyright by AUDI AG.

♦ Adapter - T40314-

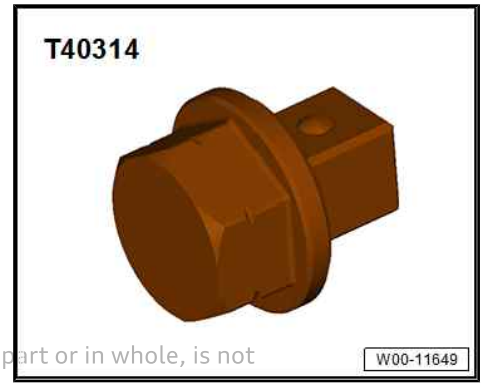

Protected by copyright. Copying for private or commercial purposes, in part or in whole, is not permitted unless authorised by AUDI AG. AUDI AG does not guarantee or accept any liability with respect to the correctness of information in this document. Copyright by AUDI AG.

♦ Open end spanner insert, AF 24

♦ Safety goggles

♦ Protective gloves

Removing

• Remove the high-pressure pump only when the engine is cold.

– Observe rules for cleanliness ⇒ page 5 .

– Remove engine cover panel ⇒ page 11 .

CAUTION

The fuel system is pressurised.

Risk of injury as fuel may spray out.

– Put on safety goggles.

– Put on protective gloves.

– Release pressure (wrap a clean cloth around connection and open connection carefully).

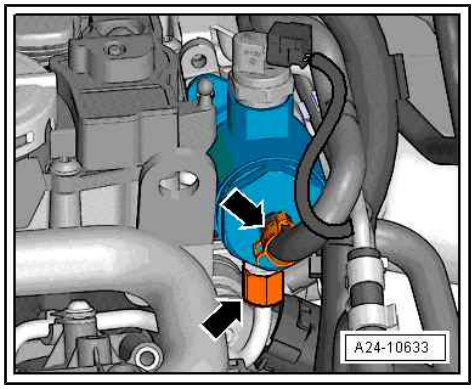

– Disconnect both fuel lines -arrows-.

– Unplug electrical connector -1- on fuel pressure regulating valve - N276- / fuel metering valve - N290- .

– Remove bolts -arrows-.

– Carefully pull out high-pressure pump -2-. It is possible that the roller tappet may remain lodged in the vacuum pump.

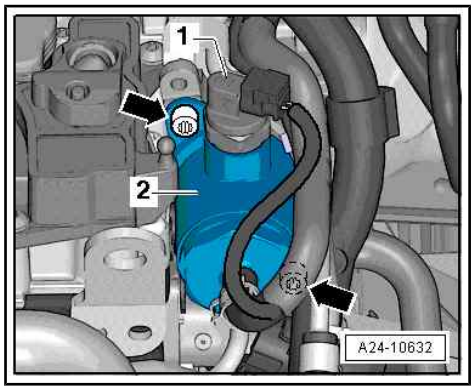

Installing

Installation is carried out in reverse order; note the following:

• Renew O-ring and spring-type clips after removal.

• Renew connecting piece when reinstalling the same high-pressure pump.

• After removing, renew bolts tightened with specified tightening angle.

– Check roller tappet -1- for damage and renew if necessary.
– Lightly lubricate roller tappet with oil and insert it so that lug -arrow A- slides into guide notch -arrow B-.

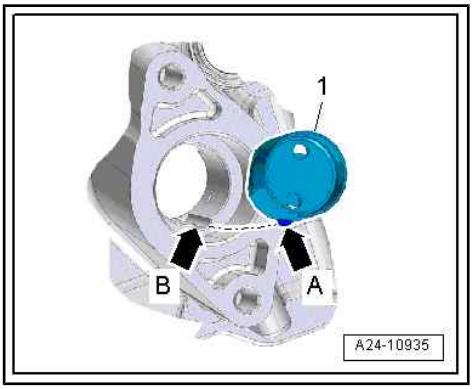

• A second mechanic is required for the following step.

NOTICE

Risk of engine damage if valve gear drive slips

– Only turn engine in normal direction of rotation.

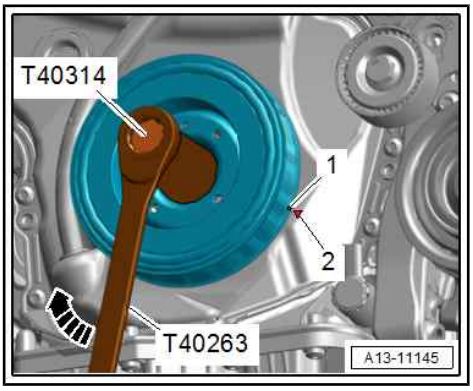

– Have a second mechanic turn crankshaft with wrench, 21 mm - T40263- , adapter - T40314- and socket, 24 mm in direction of normal engine rotation -arrow- until roller tappet in vacuum pump reaches its lowest point.
– Insert high-pressure pump with O-ring into vacuum pump and tighten bolts in stages.
– Secure fuel hoses with spring-type clips.
– Tighten union nut on high-pressure pipe hand-tight, align pipe so that it is free of stress and tighten nut to specified torque.
– Check fuel system for leaks.
– Install engine cover panel ⇒ page 11 .

Tightening torques

♦ ⇒ Fig. ""High-pressure pump - tightening torques and sequence"" , page 233

Protected by copyright. Copying for private or commercial purposes, in part or in whole, is not permitted unless authorised by AUDI AG. AUDI AG does not guarantee or accept any liability with respect to the correctness of information in this document. Copyright by AUDI AG.

8 Lambda probe

⇒ “8.1 Exploded view - Lambda probe”, page 236

⇒ “8.2 Removing and installing Lambda probe”, page 238

8.1 Exploded view - Lambda probe

⇒ “8.1.1 Exploded view - Lambda probe, version 1”, page 236

⇒ “8.1.2 Exploded view - Lambda probe, version 2”, page 237

8.1.1 Exploded view - Lambda probe, version 1

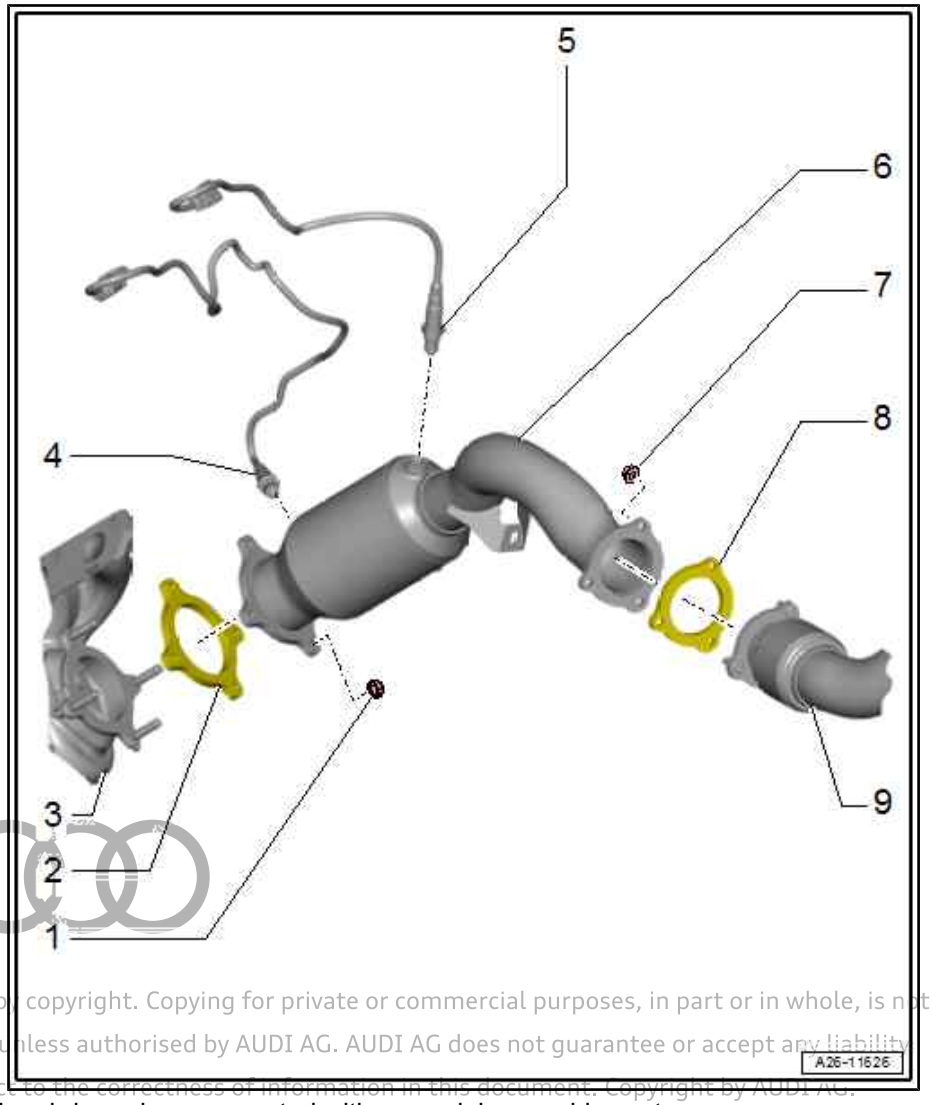

1 - Nut

- ⇒ Item 1 (page 244)

2 - Gasket

- ⇒ Item 2 (page 244)

3 - Turbocharger

4 - Lambda probe - G39- and Lambda probe heater - Z19-

- The threads on the new Lambda probes are coated with a special assembly paste.
- If re-installing old Lambda probe, coat thread with high-temperature paste: Refer to ⇒ Electronic parts catalogue for high-temperature paste
- The assembly paste/ high-temperature paste must not get into the slots on the Lambda probe body
- Removing and installing ⇒ 4-cylinder direct injection engine (2.0 ltr. 4-valve TFSI); Rep. gr. 24 ; Lambda probe; Removing and installing Lambda probe
- 55 Nm

5 - Lambda probe after catalytic converter - G130- and Lambda probe heater 1 after catalytic converter - Z29-

Copyright by copyright. Copying for private or commercial purposes, in part or in whole, is not permitted unless authorised by AUDI AG. AUDI AG does not guarantee or accept any liability with respect to the correctness of information in this document. Copyright by AUDI AG.

- The threads on the new Lambda probes are coated with a special assembly paste.
- If re-installing old Lambda probe, coat thread with high-temperature paste: Refer to ⇒ Electronic parts catalogue for high-temperature paste
- The assembly paste/high-temperature paste must not get into the slots on the Lambda probe body
- Removing and installing ⇒ 4-cylinder direct injection engine (2.0 ltr. 4-valve TFSI); Rep. gr. 24 ; Lambda probe; Removing and installing Lambda probe
- 55 Nm

6 - Catalytic converter

- ⇒ Item 6 (page 244)

7 - Nut

- ❑ ⇒ Item 7 (page 244)

8 - Gasket

- ❑ ⇒ Item 8 (page 245)

9 - Front silencer

8.1.2 Exploded view - Lambda probe, version 2

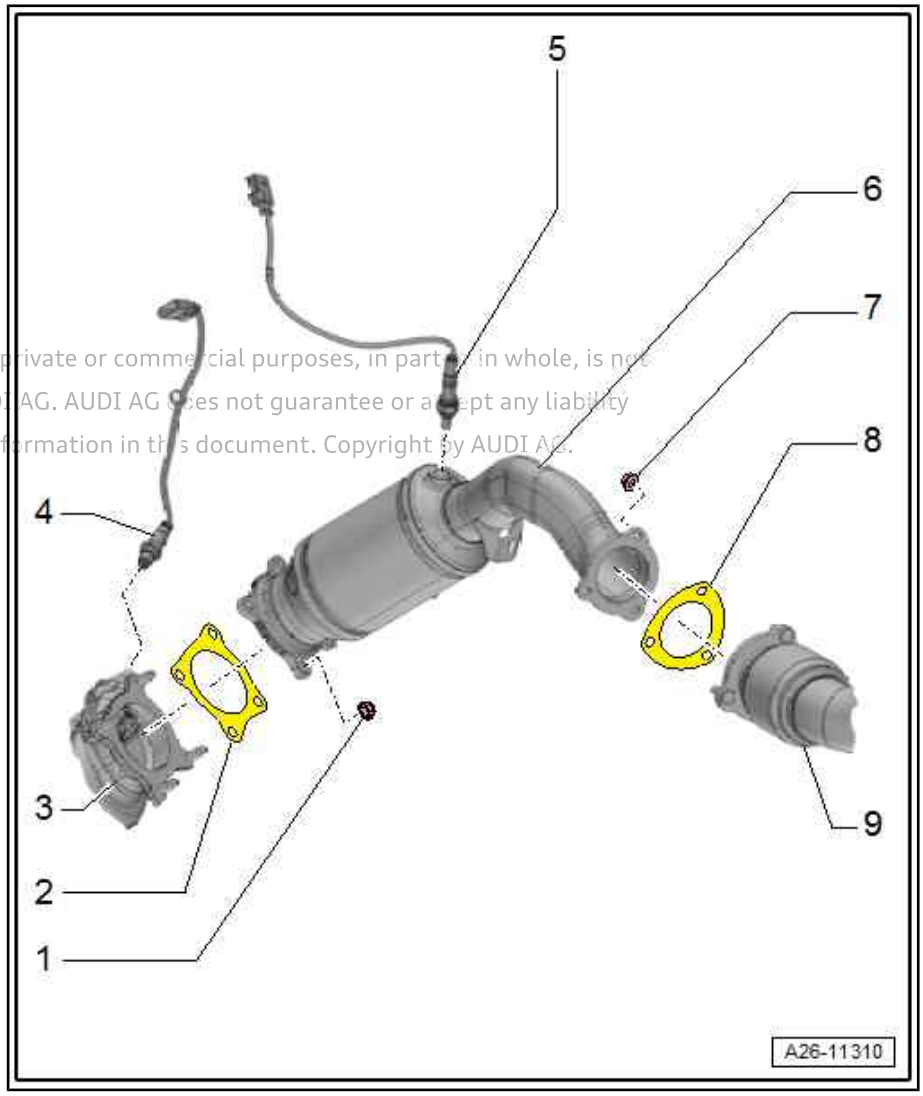

1 - Nut

- ❑ ⇒ Item 1 (page 245)

2 - Gasket

- ❑ ⇒ Item 2 (page 245)

3 - Turbocharger

4 - Lambda probe - G39- and Lambda probe heater - Z19-

- ❑ The threads on the new Lambda probes are coated with a special assembly paste.
- ❑ If re-installing old Lambda probe, coat thread with high-temperature paste: Refer to ⇒ Electronic parts catalogue for high-temperature paste
- ❑ The assembly paste/ high-temperature paste must not get into the slots on the Lambda probe body
- ❑ Removing and installing ⇒ 4-cylinder direct injection engine (1.8, 2.0 ltr. 4-valve TFSI); Rep. gr. 24 ; Lambda probe; Removing and installing Lambda probe
- ❑ 55 Nm

Protected by copyright. Copying for private or commercial purposes, in part or in whole, is not permitted unless authorised by AUDI AG. AUDI AG does not guarantee or accept any liability with respect to the correctness of information in this document. Copyright by AUDI AG.

5 - Lambda probe after catalytic converter - G130- and Lambda probe heater 1 after catalytic converter - Z29-

- ❑ The threads on the new Lambda probes are coated with a special assembly paste.
- ❑ If re-installing old Lambda probe, coat thread with high-temperature paste: Refer to ⇒ Electronic parts catalogue for high-temperature paste
- ❑ The assembly paste/high-temperature paste must not get into the slots on the Lambda probe body
- ❑ Removing and installing ⇒ 4-cylinder direct injection engine (1.8, 2.0 ltr. 4-valve TFSI); Rep. gr. 24 ; Lambda probe; Removing and installing Lambda probe
- ❑ 55 Nm

6 - Catalytic converter

7 - Nut

- ❑ ⇒ Item 7 (page 245)

8 - Gasket

- ❑ ⇒ Item 8 (page 245)

9 - Front exhaust pipe

8.2 Removing and installing Lambda probe

All procedures are described in ⇒ 4-cylinder direct injection engine (1.8, 2.0 ltr. 4-valve TFSI); Rep. gr. 24 ; Lambda probe; Removing and installing Lambda probe.

Protected by copyright. Copying for private or commercial purposes, in part or in whole, is not permitted unless authorised by AUDI AG. AUDI AG does not guarantee or accept any liability with respect to the correctness of information in this document. Copyright by AUDI AG.

9 Engine control unit

⇒ "9.1 Removing and installing engine/motor control unit J623 ", page 239

⇒ "9.2 Wiring and component check", page 239

9.1 Removing and installing engine/motor control unit - J623-

All procedures are described in ⇒ 4-cylinder direct injection engine (1.8, 2.0 ltr. 4-valve TFSI); Rep. gr. 24 ; Engine control unit; Removing and installing engine/motor control unit - J623- .

9.2 Wiring and component check

⇒ "9.2.1 Wiring and component check - vehicles without hybrid drive", page 239

⇒ "9.2.2 Wiring and component check - vehicles with hybrid drive", page 240

9.2.1 Wiring and component check - vehicles without hybrid drive

Special tools and workshop equipment required

- Adapter cable - V.A.G 1598/39-1-

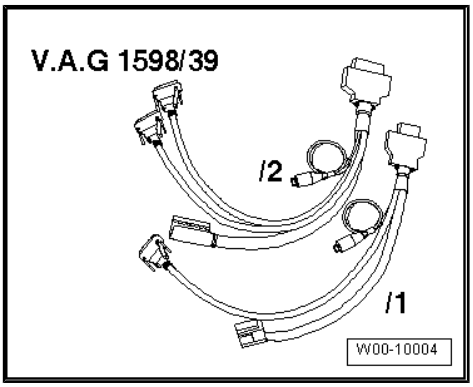

- Adapter cable - V.A.G 1598/39-2-
- Test box - V.A.G 1598/42-

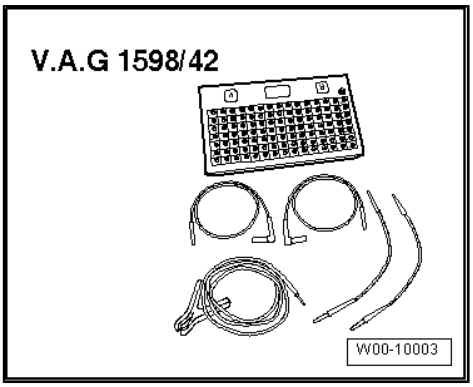

Protected by copyright. Copying for private or commercial purposes, in part or in whole, is not permitted unless authorised by AUDI AG. AUDI AG does not guarantee or accept any liability with respect to the correctness of information in this document. Copyright by AUDI AG.

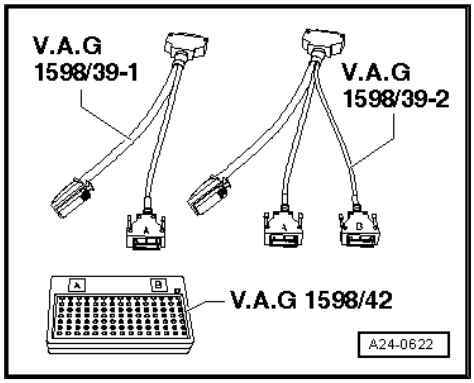

Note

- *The test box has 105 sockets. The connecting cable can be disconnected from the test box. This means that only the cable (and not the test box) has to be purchased for future engine control units with different types of connectors.*
- *The smaller of the two connectors on the engine control unit has the contacts 1 to 60. The larger of the two connectors has the contacts 1 to 94.*
- *To carry out tests on the 60-pin wiring harness connector, the adapter cable - V.A.G 1598/39-1- is connected to connector "A" on the test box. For components connected to 60-pin wiring harness connector ⇒ Current flow diagrams, Electrical fault finding and Fitting locations.*
- *To carry out tests on the 94-pin wiring harness connector, the adapter cable - V.A.G 1598/39-2- must be connected to connectors -A- and -B- on the test box. For components connected to 94-pin wiring harness connector ⇒ Current flow diagrams, Electrical fault finding and Fitting locations.*

Protected by copyright. Copying for private or commercial purposes, in part or in whole, is not permitted unless authorised by AUDI AG. AUDI AG does not guarantee or accept any liability with respect to the correctness of information in this document. Copyright by AUDI AG.

- *The test box - V.A.G 1598/42- is designed so it can be connected both to the wiring harness for the engine control unit and to the engine control unit itself at the same time.*
- *The advantage of this is that the electronic engine control system remains fully functional when the test box is connected (for example, for measuring signals when the engine is running).*
- *The relevant test procedure will state whether it is necessary to also connect the engine control unit to the test box.*

To enable multi-pin connectors to be unplugged from engine control unit, the engine control unit must be removed ⇒ 4-cylinder direct injection engine (1.8, 2.0 ltr. 4-valve TFSI); Rep. gr. 24 ; Engine control unit; Removing and installing engine/motor control unit - J623- .

- To prevent irreparable damage to the electronic components, select appropriate measuring range before connecting the measuring cables and observe the test requirements.

– Connect the test box - V.A.G 1598/42- to wiring harness with adapter cable - V.A.G 1598/39-1- or adapter cable - V.A.G 1598/39-2- . Connect earth clip of test box to negative terminal of battery. The instructions for performing the individual tests indicate whether or not the engine control unit itself also needs to be connected to the test box.

– Carry out test as described in appropriate repair procedures.

9.2.2 Wiring and component check - vehicles with hybrid drive

Special tools and workshop equipment required

- Isolator box, 198-pin - VAS 6606/1-1-
- Isolator box, 198-pin - VAS 6606/1-2-
- Isolator box, 198-pin - VAS 6606/1-3-
- Sheets -VAS 6606/1-1-
- Sheets -VAS 6606/2-1-
- Sheets -VAS 6606/3-1-

- Set of cables -VAS 6606/7-1- and -VAS 6606/7-2-

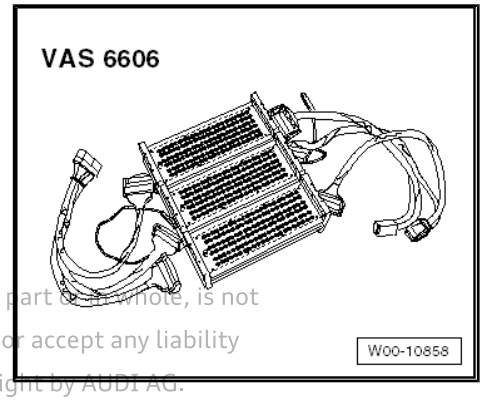

Protected by copyright. Copying for private or commercial purposes, in part or in whole, is not permitted unless authorised by AUDI AG. AUDI AG does not guarantee or accept any liability with respect to the correctness of information in this document. Copyright by AUDI AG.

Note

- *Always make sure that the cables are properly connected.*
- *Do not use damaged or worn tools and accessories.*
- *Observe operating instructions.*

– Connect both cable sets -VAS 6606/7-1- and -VAS 6606/7-2- to the three isolator boxes -VAS 6606- .

– Use the following sheets:

- -VAS 6606/1-1- for isolator box, 198-pin - VAS 6606/1-1-
- -VAS 6606/2-1- for isolator box, 198-pin - VAS 6606/1-2-
- -VAS 6606/3-1- for isolator box, 198-pin - VAS 6606/1-3-

Note

Make sure that all plug-in bridges are inserted completely in all isolator boxes.

– Connect earth strap to an isolator box and to an earth point on the vehicle.

To enable multi-pin connectors to be unplugged from engine control unit, the engine control unit must be removed ⇒ 4-cylinder direct injection engine (1.8, 2.0 ltr. 4-valve TFSI); Rep. gr. 24 ; Engine control unit; Removing and installing engine/motor control unit - J623- .

- To prevent irreparable damage to the electronic components, select appropriate measuring range before connecting the measuring cables and observe the test requirements.

– Connect engine control unit to cable set -VAS 6606/7-1- .

– Connect vehicle wiring harness to cable set -VAS 6606/7-2- .

The connection on the engine control unit consists of a large and a small connector.

The large connector has 105 pins and is assigned to the sheets for the isolator box marked “A 1 to A 105”.

The small connector has 91 pins and is assigned to the sheets for the isolator box marked “B 1 to B 91”.

When a push-in bridge is pulled out, the corresponding wiring connection is disconnected.

Note

- *The “In” contact -1- (red socket) leads to the engine control unit.*
- *The “Out” contact -2- (blue socket) leads to the wiring harness.*

– Carry out test as described in appropriate repair procedures.

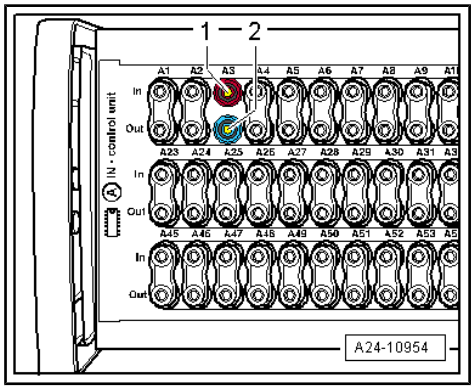

Protected by copyright. Copying for private or commercial purposes, in part or in whole, is not permitted unless authorised by AUDI AG. AUDI AG does not guarantee or accept any liability with respect to the correctness of information in this document. Copyright by AUDI AG.

26 – Exhaust system

1 Exhaust pipes/silencers

⇒ "1.1 Exploded view - silencers", page 243

⇒ "1.2 Separating exhaust pipes/silencers", page 243

⇒ "1.3 Removing and installing front silencers", page 243

⇒ "1.4 Removing and installing silencers", page 243

⇒ "1.5 Stress-free alignment of exhaust system", page 243

⇒ "1.6 Checking exhaust system for leaks", page 243

Provided by AUDI AG for use for private or commercial purposes, in part or in whole, is not permitted unless authorized by AUDI AG. AUDI AG does not guarantee or accept any liability with respect to the correctness of information in this document. Copyright by AUDI AG.

1.1 Exploded view - silencers

All components are described in ⇒ 4-cylinder direct injection engine (1.8, 2.0 ltr. 4-valve TFSI); Rep. gr. 26 ; Exhaust pipes/silencers; Exploded view - silencers .

1.2 Separating exhaust pipes/silencers

All procedures are described in ⇒ 4-cylinder direct injection engine (1.8, 2.0 ltr. 4-valve TFSI); Rep. gr. 26 ; Exhaust pipes/silencers; Separating exhaust pipes/silencers .

1.3 Removing and installing front silencers

All procedures are described in ⇒ 4-cylinder direct injection engine (1.8, 2.0 ltr. 4-valve TFSI); Rep. gr. 26 ; Exhaust pipes/silencers; Removing and installing front silencer .

1.4 Removing and installing silencers

All procedures are described in ⇒ 4-cylinder direct injection engine (1.8, 2.0 ltr. 4-valve TFSI); Rep. gr. 26 ; Exhaust pipes/silencers; Removing and installing silencers .

1.5 Stress-free alignment of exhaust system

All procedures are described in ⇒ 4-cylinder direct injection engine (1.8, 2.0 ltr. 4-valve TFSI); Rep. gr. 26 ; Exhaust pipes/silencers; Stress-free alignment of exhaust system .

1.6 Checking exhaust system for leaks

Procedure

– Start engine and run at idling speed.

– Plug tailpipes (e. g. with rags or stopper) and leave plugged until the check is complete.

– Listen for noise at connection points (cylinder head/turbocharger, turbocharger/front exhaust pipe etc.) to locate any leaks.

– Rectify any leaks that are found.

2 Emission control system

⇒ “2.1 Exploded view - emission control system”, page 244

⇒ “2.2 Removing and installing catalytic converter”, page 246

2.1 Exploded view - emission control system

⇒ “2.1.1 Exploded view - emission control system, version 1”, page 244

⇒ “2.1.2 Exploded view - emission control system, version 2”, page 245

2.1.1 Exploded view - emission control system, version 1

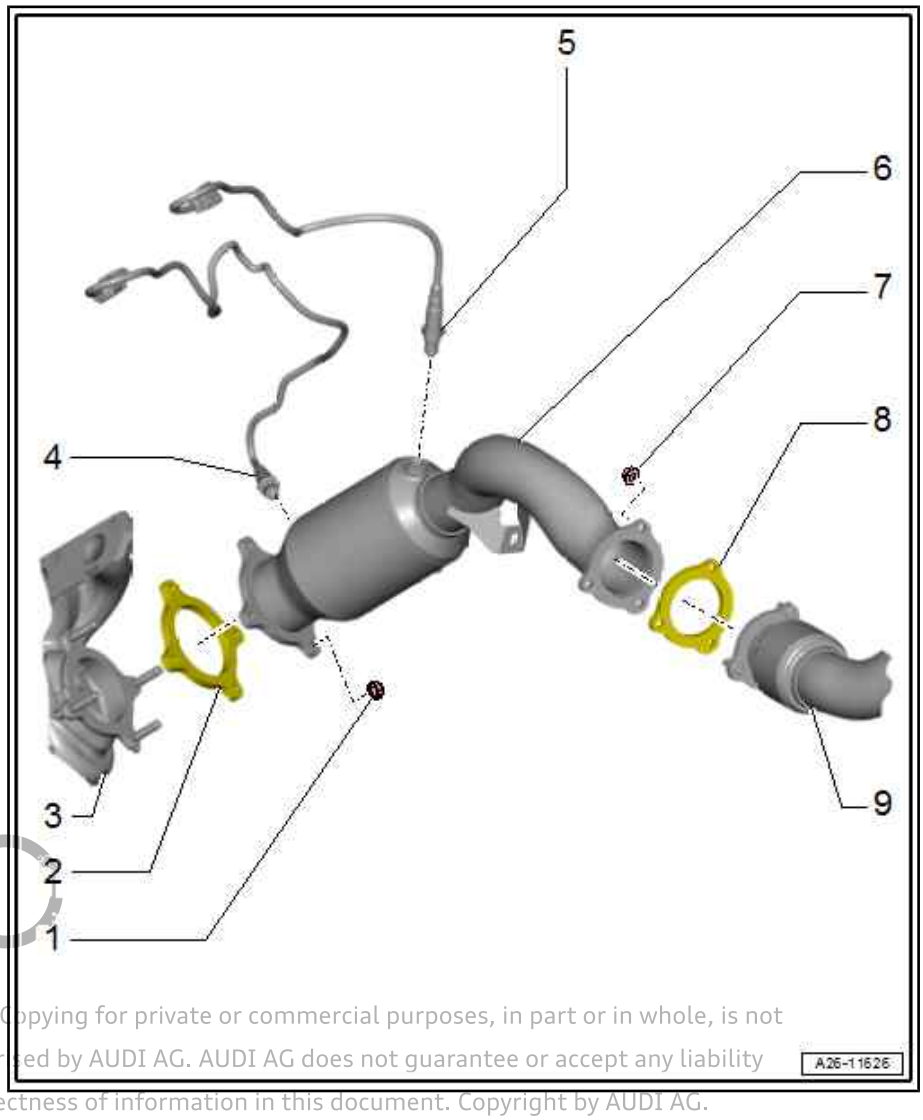

1 - Nut

- ❑ Renew after removing
- ❑ Coat studs of turbocharger with high-temperature paste
- ❑ High-temperature paste ⇒ Electronic parts catalogue
- ❑ 40 Nm

2 - Gasket

- ❑ Renew after removing

3 - Turbocharger

4 - Lambda probe - G39- and Lambda probe heater - Z19-

- ❑ Removing and installing ⇒ 4-cylinder direct injection engine (2.0 ltr. 4-valve TFSI); Rep. gr. 24 ; Lambda probe; Removing and installing Lambda probe

5 - Lambda probe after catalytic converter - G130- and Lambda probe heater 1 after catalytic converter - Z29-

- ❑ Removing and installing ⇒ 4-cylinder direct injection engine (2.0 ltr. 4-valve TFSI); Rep. gr. 24 ; Lambda probe; Removing and installing Lambda probe

Protected by copyright. Copying for private or commercial purposes, in part or in whole, is not permitted unless authorised by AUDI AG. AUDI AG does not guarantee or accept any liability with respect to the correctness of information in this document. Copyright by AUDI AG.

6 - Catalytic converter

- ❑ Protect catalytic converter from damage by knocks and impact
- ❑ Removing and installing ⇒ 4-cylinder direct injection engine (2.0 ltr. 4-valve TFSI); Rep. gr. 26 ; Emission control system; Removing and installing catalytic converter .
- ❑ Aligning exhaust system so it is free of stress ⇒ 4-cylinder direct injection engine (1.8, 2.0 ltr. 4-valve TFSI); Rep. gr. 26 ; Exhaust pipes/silencers; Stress-free alignment of exhaust system

7 - Nut

- ❑ Renew after removing

- ❑ 25 Nm

8 - Gasket

- ❑ Renew after removing

9 - Front silencer

2.1.2 Exploded view - emission control system, version 2

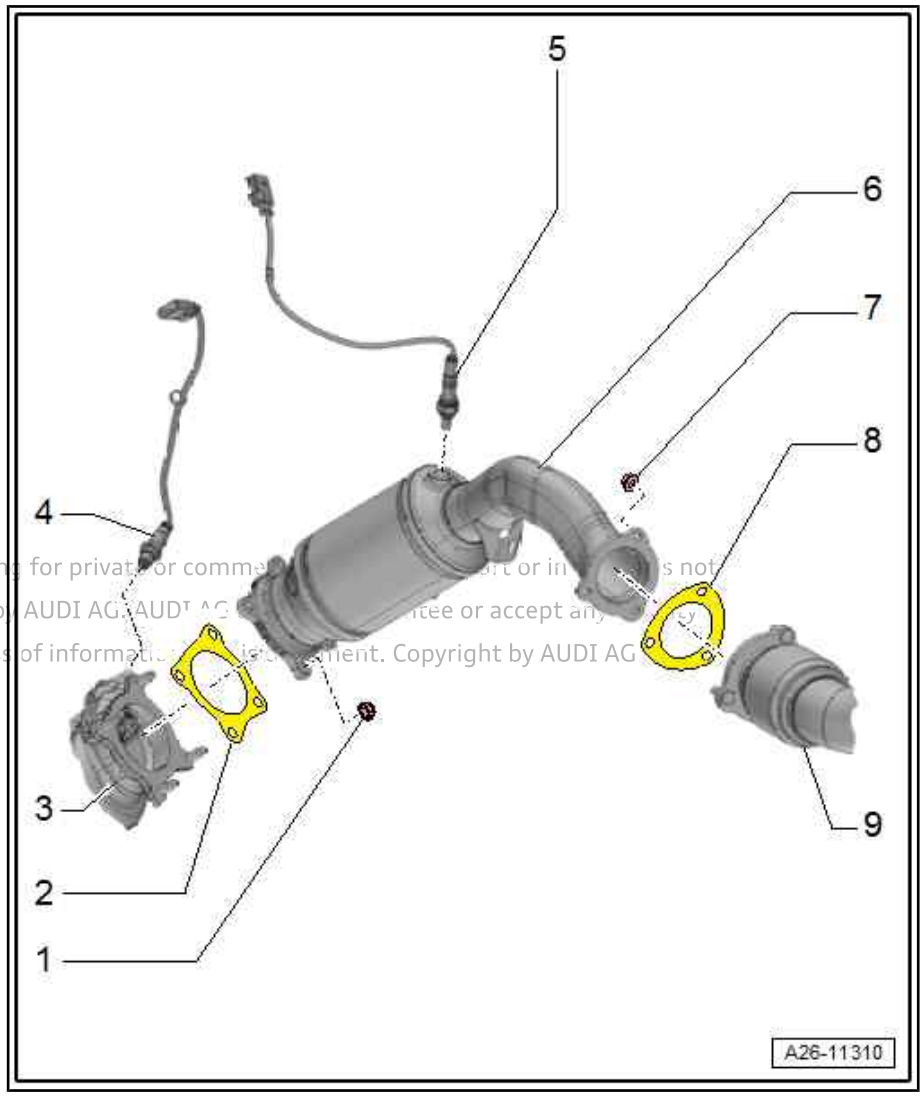

1 - Nut

- ❑ Renew after removing
- ❑ Coat studs of turbocharger with high-temperature paste
- ❑ High-temperature paste ⇒ Electronic parts catalogue
- ❑ 40 Nm

2 - Gasket

- ❑ Renew after removing

3 - Turbocharger

4 - Lambda probe - G39- and Lambda probe heater - Z19-

- ❑ Removing and installing ⇒ 4-cylinder direct injection engine (2.0 ltr. 4-valve TFSI); Rep. gr. 24 ; Lambda probe; Removing and installing Lambda probe

Protected by copyright. Copying for private or commercial purposes, in part or in whole, is not permitted unless authorised by AUDI AG. AUDI AG does not guarantee or accept any liability with respect to the correctness of information and disclaimment. Copyright by AUDI AG

5 - Lambda probe after catalytic converter - G130- and Lambda probe heater 1 after catalytic converter - Z29-

- ❑ Removing and installing ⇒ 4-cylinder direct injection engine (2.0 ltr. 4-valve TFSI); Rep. gr. 24 ; Lambda probe; Removing and installing Lambda probe

6 - Catalytic converter

- ❑ Protect catalytic converter from damage by knocks and impact
- ❑ Removing and installing ⇒ 4-cylinder direct injection engine (2.0 ltr. 4-valve TFSI); Rep. gr. 26 ; Emission control system; Removing and installing catalytic converter .
- ❑ Aligning exhaust system so it is free of stress ⇒ 4-cylinder direct injection engine (1.8, 2.0 ltr. 4-valve TFSI); Rep. gr. 26 ; Exhaust pipes/silencers; Stress-free alignment of exhaust system

7 - Nut

- ❑ Renew after removing
- ❑ 25 Nm

8 - Gasket

- ❑ Renew after removing

9 - Front exhaust pipe

2.2 Removing and installing catalytic converter

All procedures are described in ⇒ 4-cylinder direct injection engine (1.8, 2.0 ltr. 4-valve TFSI); Rep. gr. 26 ; Emission control system; Removing and installing catalytic converter .

Protected by copyright. Copying for private or commercial purposes, in part or in whole, is not permitted unless authorised by AUDI AG. AUDI AG does not guarantee or accept any liability with respect to the correctness of information in this document. Copyright by AUDI AG.

3 Secondary air system

All procedures and components are described in ⇒ 4-cylinder direct injection engine (2.0 ltr. 4-valve TFSI); Rep. gr. 26 ; Secondary air system .

Protected by copyright. Copying for private or commercial purposes, in part or in whole, is not permitted unless authorised by AUDI AG. AUDI AG does not guarantee or accept any liability with respect to the correctness of information in this document. Copyright by AUDI AG.

28 – Ignition system

1 Ignition system

⇒ "1.1 Exploded view - ignition system", page 248

⇒ "1.2 Removing and installing ignition coils with output stages", page 249

⇒ "1.3 Removing and installing knock sensor 1 G61 ", page 251

⇒ "1.4 Removing and installing Hall senders", page 252

⇒ "1.5 Removing and installing engine speed sender G28 ", page 252

1.1 Exploded view - ignition system

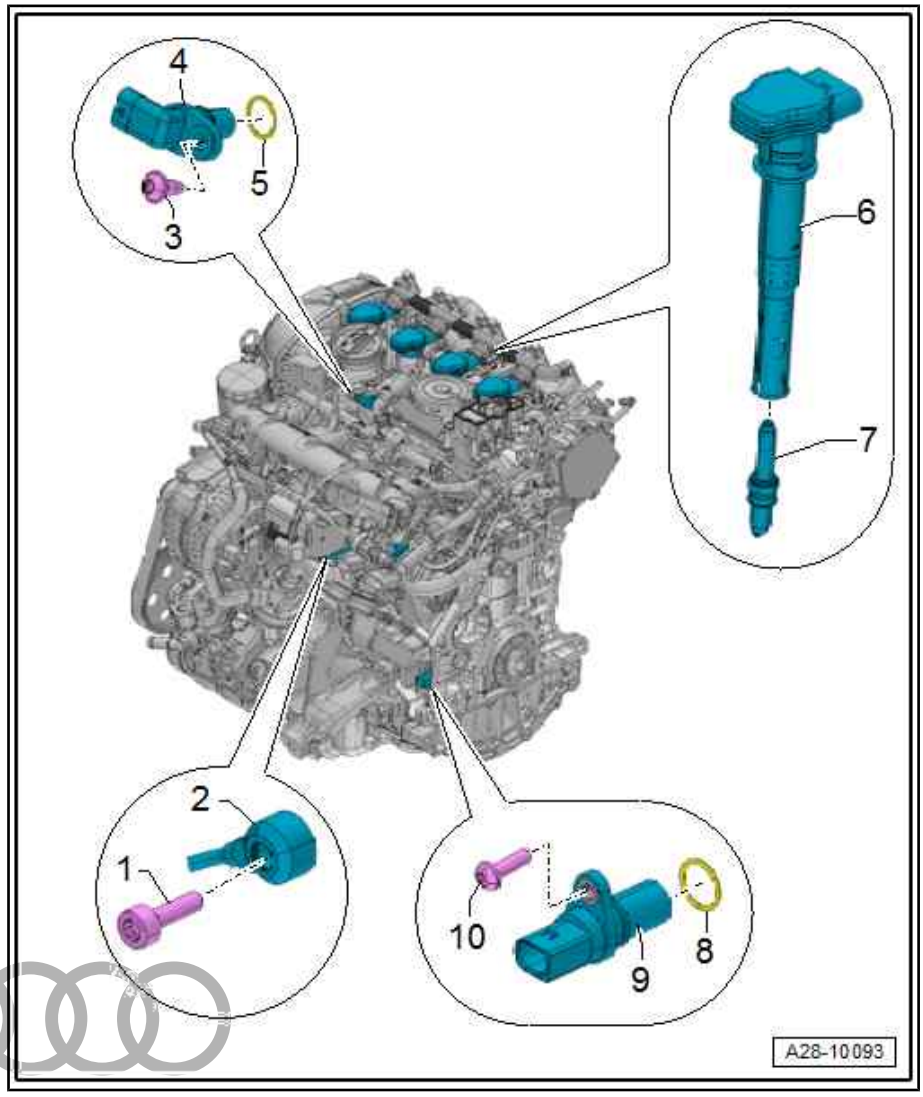

1 - Bolt

- ❑ Tightening torque influences the function of the knock sensor
- ❑ 20 Nm

2 - Knock sensor 1 - G61-

- ❑ Removing and installing ⇒ page 251

3 - Bolt

- ❑ 9 Nm

4 - Hall sender - G40-

- ❑ Removing and installing ⇒ page 252

5 - O-ring

- ❑ Renew after removing

6 - Ignition coil with output stage

- ♦ Ignition coil 1 with output stage - N70-
- ♦ Ignition coil 2 with output stage - N127-
- ♦ Ignition coil 3 with output stage - N291-
- ♦ Ignition coil 4 with output stage - N292-
  - ❑ Removing and installing ⇒ page 249

7 - Spark plug

- ❑ 30 Nm

8 - O-ring

- ❑ Renew after removing

9 - Engine speed sender - G28-

- ❑ Removing and installing ⇒ page 252

Protected by copyright. Copying for private or commercial purposes, in part or in whole, is not permitted unless authorised by AUDI AG. AUDI AG does not guarantee or accept any liability with respect to the correctness of information in this document. Copyright by AUDI AG.

10 - Bolt

❑ 4.5 Nm

Electrical connectors for ignition coils - tightening torque

– Tighten bolts -arrow- to 5 Nm.

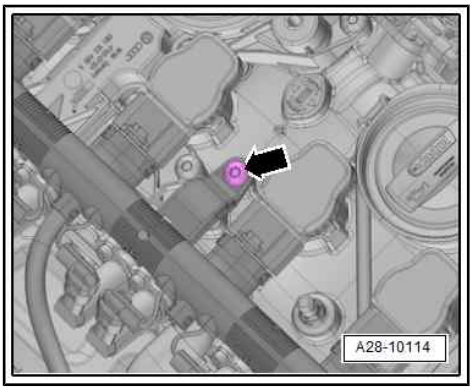

1.2 Removing and installing ignition coils with output stages

The ignition coils are easier to remove when the engine is warm. The grease used at the factory facilitates removal of the ignition coils and spark plug connectors when the engine is warm.

Special tools and workshop equipment required

♦ Puller - T40039-

Protected by copyright. Copying for private or commercial purposes, in part or
permitted unless authorised by AUDI AG. AUDI AG does not guarantee o
with respect to the correctness of information in this document. Copyrig

♦ For silicone paste, refer to ⇒ Electronic parts catalogue .

Removing

– Remove engine cover panel ⇒ page 11 .

– Remove bolts -arrow- for connector rail.

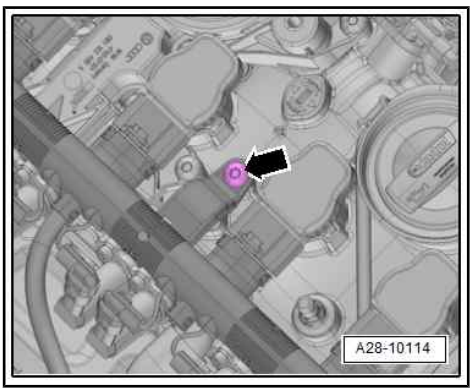

Note

- *To remove ignition coils, fit puller - T40039- onto upper (thick) rib -arrow- of ignition coil with output stage.*
- *The lower ribs can be damaged if they are used.*

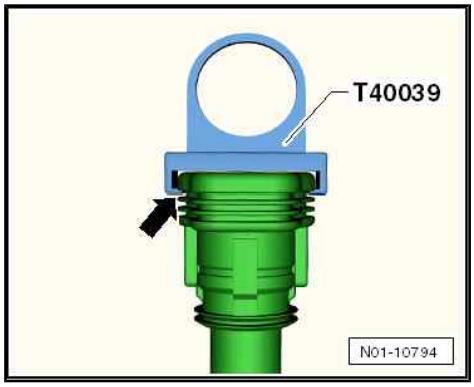

– Using puller - T40039- , pull all ignition coils approx. 30 mm out of spark plug holes.

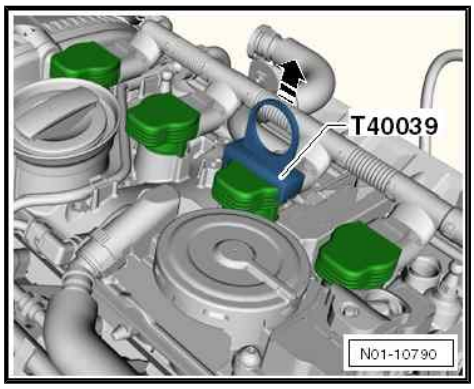

– Release connectors and unplug all connectors from the ignition coils at the same time.

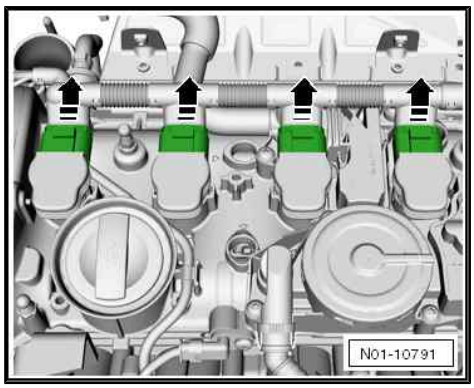

Installing

CAUTION

Ignition coils can be damaged irreparably if the wrong lubricant is used.

– Use only the approved silicone paste.

– Apply a thin bead of silicone paste all around end of sealing hose of ignition coil with output stage -arrow-.

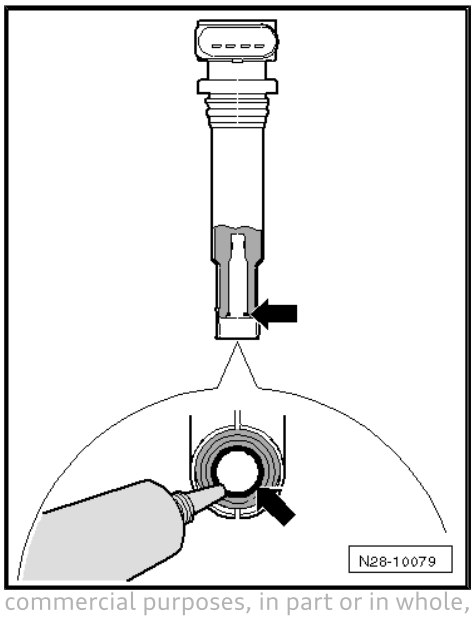

Protected by copyright. Copying for private or commercial purposes, in part or in whole, is not permitted unless authorised by AUDI AG. AUDI AG does not guarantee or accept any liability with respect to the correctness of information in this document. Copyright by AUDI AG.

– Fit all ignition coils loosely into spark plug holes.
– Align ignition coils with electrical connectors and plug all connectors simultaneously onto coils.
– Press ignition coils onto spark plugs by hand with uniform pressure (do not use any tools).
– Install engine cover panel ⇒ page 11 .

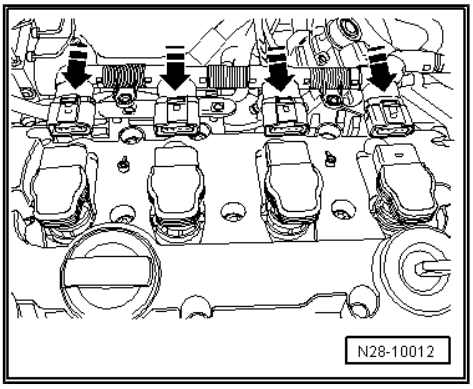

Tightening torques

♦ ⇒ Fig. ""Electrical connectors for ignition coils - tightening torque"" , page 249

1.3 Removing and installing knock sensor 1 - G61-

Removing

Note

Knock sensor 1 - G61- is located below the intake manifold and behind the coolant pump.

Vehicles with hybrid drive:

Safety precautions ⇒ 4-cylinder direct injection engine (2.0 ltr. 4-valve TFSI); Rep. gr. 28 ; Ignition system; Removing and installing knock sensor 1 - G61-

All vehicles:

– Remove thermostat ⇒ page 181 .
– Unplug electrical connector -2-.
– Remove knock sensor 1 - G61- .

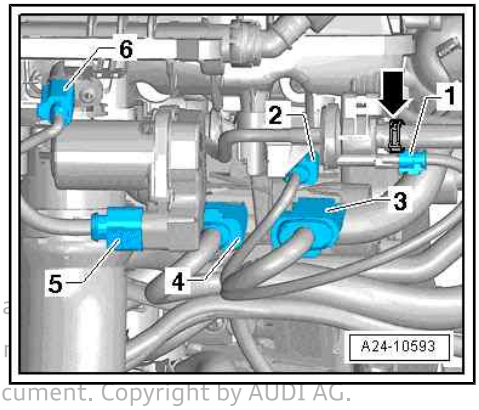

Installing

Installation is carried out in reverse order; note the following:

– Install thermostat ⇒ page 181 .

Tightening torques

♦ ⇒ "1.1 Exploded view - ignition system", page 248

Protected by copyright. Copying for private or commercia
permitted unless authorised by AUDI AG. AUDI AG does n
with respect to the correctness of information in this document. Copyright by AUDI AG.

1.4 Removing and installing Hall senders

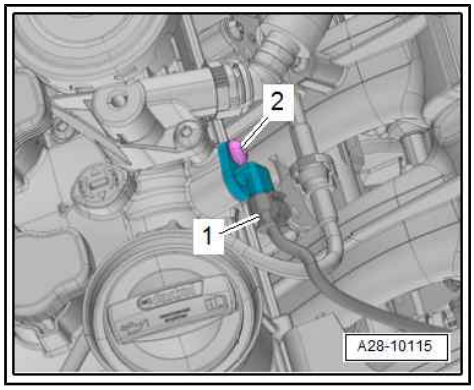

Removing

– Remove engine cover panel ⇒ page 11 .

– Unplug electrical connector -1-.

– Unscrew bolt -2- and detach Hall sender - G40- .

Installing

Installation is carried out in reverse order; note the following:

• Renew O-ring after removal.

– Install engine cover panel ⇒ page 11 .

Tightening torques

♦ ⇒ “1.1 Exploded view - ignition system”, page 248

1.5 Removing and installing engine speed sender - G28-

Special tools and workshop equipment required

♦ Assembly tool - T10118-

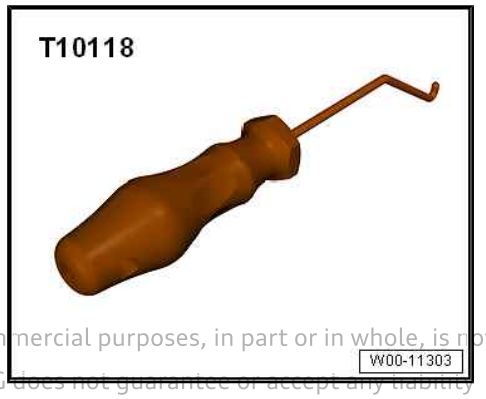

Protected by copyright. Copying for private or commercial purposes, in part or in whole, is not permitted unless authorised by AUDI AG. AUDI AG does not guarantee or accept any liability with respect to the correctness of information in this document. Copyright by AUDI AG.

Vehicles with hybrid drive:

Safety precautions ⇒ 4-cylinder direct injection engine (1.8, 2.0 ltr. 4-valve TFSI); Rep. gr. 28 ; Ignition system; Removing and installing engine speed sender - G28-

Removing

– Unplug electrical connector at engine speed sender - G28- -2- using assembly tool - T10118- .

– Unscrew bolt -1- and detach engine speed sender - G28- .

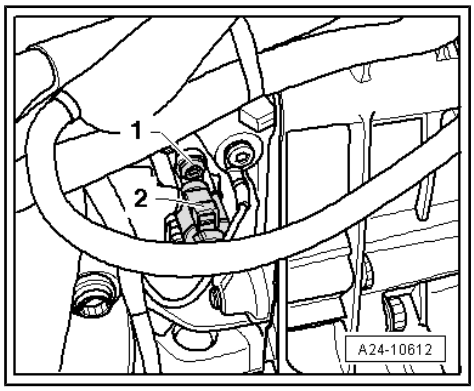

Installing

Installation is carried out in reverse sequence.

Tightening torques

♦ ⇒ “1.1 Exploded view - ignition system”, page 248