2015

Cadillac ESCALADE

cadillac.com (U.S.)
cadillac.gm.ca (Canada)
cadillac.com.mx (Mexico)

2015 Cadillac Escalade Owner Manual

In Brief 1-1
Instrument Panel 1-2
Initial Drive Information 1-4
Vehicle Features 1-18
Performance and Maintenance 1-22

Keys, Doors, and Windows 2-1
Keys and Locks 2-1
Doors 2-14
Vehicle Security 2-19
Exterior Mirrors 2-23
Interior Mirrors 2-25
Windows 2-25
Roof 2-28

Seats and Restraints 3-1
Head Restraints 3-2
Front Seats 3-3
Rear Seats 3-11
Safety Belts 3-18
Airbag System 3-27
Child Restraints 3-41

Storage 4-1
Storage Compartments 4-1
Additional Storage Features ... 4-3
Roof Rack System 4-4

Instruments and Controls 5-1
Controls 5-2
Warning Lights, Gauges, and Indicators 5-10
Information Displays 5-27
Vehicle Messages 5-34
Vehicle Personalization 5-46
Universal Remote System 5-55

Lighting 6-1
Exterior Lighting 6-1
Interior Lighting 6-7
Lighting Features 6-8

Infotainment System 7-1
Introduction 7-1

Climate Controls 8-1
Climate Control Systems 8-1
Air Vents 8-8
Maintenance 8-8

Driving and Operating 9-1
Driving Information 9-2
Starting and Operating 9-19
Engine Exhaust 9-27
Automatic Transmission 9-28
Drive Systems 9-34
Brakes 9-38
Ride Control Systems 9-42
Cruise Control 9-45
Driver Assistance Systems ... 9-56
Fuel 9-70
Trailer Towing 9-74
Conversions and Add-Ons ... 9-84

Vehicle Care 10-1
General Information 10-2
Vehicle Checks 10-3
Headlamp Aiming 10-26
Bulb Replacement 10-26
Electrical System 10-27
Wheels and Tires 10-38

2015 Cadillac Escalade Owner Manual

Jump Starting 10-71
Towing the Vehicle 10-75
Appearance Care 10-79

Service and Maintenance . . . 11-1
General Information 11-1
Cadillac Premium Care Maintenance 11-3
Maintenance Schedule 11-4
Special Application Services 11-9
Additional Maintenance and Care 11-10
Recommended Fluids, Lubricants, and Parts 11-13
Maintenance Records 11-16

Technical Data 12-1
Vehicle Identification 12-1
Vehicle Data 12-2

Customer Information 13-1
Customer Information 13-1
Reporting Safety Defects 13-12
Vehicle Data Recording and Privacy 13-13

OnStar 14-1
OnStar Overview 14-1
OnStar Services 14-2
OnStar Additional Information 14-6

Index i-1

The names, logos, emblems, slogans, vehicle model names, and vehicle body designs appearing in this manual including, but not limited to, GM, the GM logo, CADILLAC, the CADILLAC Emblem, and ESCALADE are trademarks and/or service marks of General Motors LLC, its subsidiaries, affiliates, or licensors.

For vehicles first sold in Canada, substitute the name “General Motors of Canada Limited” for Cadillac Motor Division wherever it appears in this manual.

This manual describes features that may or may not be on the vehicle because of optional equipment that was not purchased on the vehicle, model variants, country specifications, features/applications that may not be available in your region, or changes subsequent to the printing of this owner manual.

Refer to the purchase documentation relating to your specific vehicle to confirm the features.

Keep this manual in the vehicle for quick reference.

Canadian Vehicle Owners

Propriétaires Canadiens

A French language manual can be obtained from your dealer, at www.helminc.com, or from:

On peut obtenir un exemplaire de ce guide en français auprès du concessionnaire ou à l'adresse savant:

Helm, Incorporated
Attention: Customer Service
47911 Halyard Drive
Plymouth, MI 48170

Litho in U.S.A.
Part No. 23168274 C Third Printing

©2015 General Motors LLC. All Rights Reserved.

Using this Manual

To quickly locate information about the vehicle, use the Index in the back of the manual. It is an alphabetical list of what is in the manual and the page number where it can be found.

Danger, Warning, and Caution

Warning messages found on vehicle labels and in this manual describe hazards and what to do to avoid or reduce them.

⚠ Danger

Danger indicates a hazard with a high level of risk which will result in serious injury or death.

⚠ Warning

Warning indicates a hazard that could result in injury or death.

⚠ Caution

Caution indicates a hazard that could result in property or vehicle damage.

A circle with a slash through it is a safety symbol which means “Do Not,” “Do not do this,” or “Do not let this happen.”

Symbols

The vehicle has components and labels that use symbols instead of text. Symbols are shown along with the text describing the operation or information relating to a specific component, control, message, gauge, or indicator.

: This symbol is shown when you need to see your owner manual for additional instructions or information.

: This symbol is shown when you need to see a service manual for additional instructions or information.

Vehicle Symbol Chart

Here are some additional symbols that may be found on the vehicle and what they mean. For more information on the symbol, refer to the Index.

: Adjustable Pedals

: Airbag Readiness Light

: Antilock Brake System (ABS)

: Audio Steering Wheel Controls or OnStar® (if equipped)

: Brake System Warning Light

: Charging System

: Cruise Control

: Do Not Puncture

: Do Not Service

: Engine Coolant Temperature

: Exterior Lamps

: Flame/Fire Prohibited

: Fuel Gauge

: Fuses

: Headlamp High/Low-Beam Changer

: Heated Steering Wheel

: LATCH System Child Restraints

: Malfunction Indicator Lamp

: Oil Pressure

: Outside Power Foldaway Mirrors

: Power

: Remote Vehicle Start

: Safety Belt Reminders

: Tire Pressure Monitor

: Tow/Haul Mode

: Traction Control/StabiliTrak®

: Under Pressure

: Windshield Washer Fluid

✍ NOTES

In Brief

Instrument Panel
Instrument Panel 1-2

Initial Drive Information
Initial Drive Information 1-4
Remote Keyless Entry (RKE) System 1-4
Remote Vehicle Start 1-5
Door Locks 1-5
Liftgate 1-6
Windows 1-7
Seat Adjustment 1-7
Memory Features 1-10
Second Row Seats 1-10
Third Row Seats 1-10
Heated and Cooled Front Seats 1-10
Head Restraint Adjustment 1-11
Safety Belts 1-11
Passenger Sensing System 1-11
Mirror Adjustment 1-12
Steering Wheel Adjustment 1-13
Throttle and Brake Pedal Adjustment 1-13
Interior Lighting 1-13
Exterior Lighting 1-14
Windshield Wiper/Washer 1-15
Climate Controls 1-15
Transmission 1-16
Four-Wheel Drive 1-17

Vehicle Features
Infotainment System 1-18
Steering Wheel Controls 1-18
Cruise Control 1-18
Driver Information Center (DIC) 1-18
Forward Collision Alert (FCA) System 1-19
Lane Departure Warning (LDW) 1-19
Lane Change Alert (LCA) 1-19
Surround Vision 1-20
Rear Vision Camera (RVC) 1-20
Rear Cross Traffic Alert (RCTA) System 1-20
Parking Assist 1-20
Rear Automatic Braking (RAB) System 1-20
Active Emergency Braking System 1-21
Power Outlets 1-21
Universal Remote System . . . 1-21
Sunroof 1-21

Performance and Maintenance
Traction Control/Electronic Stability Control 1-22
Tire Pressure Monitor 1-23
Engine Oil Life System 1-24
Driving for Better Fuel Economy 1-24
Roadside Service 1-25
OnStar® 1-25

Instrument Panel

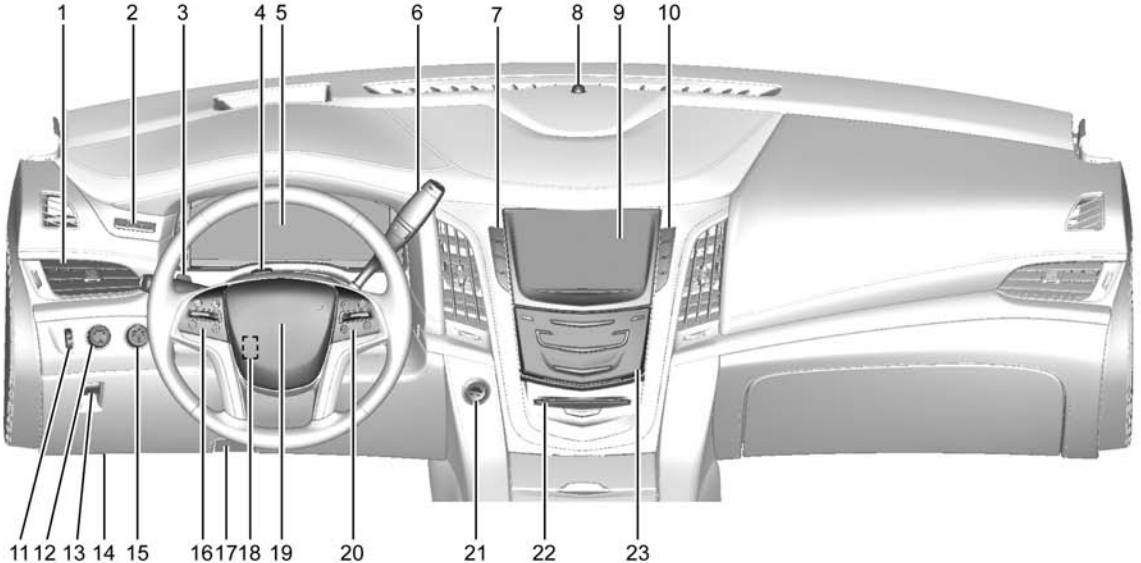

English Version Shown, Metric Similar

1. *Air Vents on page 8-8*.
2. *Head-Up Display (HUD) on page 5-30* (If Equipped).
3. Turn Signal Lever. See *Turn and Lane-Change Signals on page 6-6*.

   Windshield Wiper/Washer on page 5-3.

   Rear Window Wiper/Washer on page 5-5.
4. *Hazard Warning Flashers on page 6-6*.
5. *Instrument Cluster on page 5-11*.
6. Shift Lever. See *Automatic Transmission on page 9-28*.

   Tow/Haul Mode Selector Button. See *Tow/Haul Mode on page 9-33*.

   Range Selection Mode Buttons (If Equipped). See *Manual Mode on page 9-31*.
7. *Power Assist Steps on page 2-19* (If Equipped).

   Pedal Adjust Switch. See *Adjustable Throttle and Brake Pedal on page 9-19*.

   Magnetic Ride Control Button. See *Magnetic Ride Control on page 9-44*.
8. Light Sensor. See *Automatic Headlamp System on page 6-4*.
9. *Infotainment on page 7-1*.
10. Glove Box Button. See *Glove Box on page 4-2*.

    Parking Assist Button. See *Assistance Systems for Parking or Backing on page 9-56*.

    Lane Departure Warning (LDW) on page 9-68 (If Equipped).

    Traction Control/Electronic Stability Control on page 9-42.
11. *Instrument Panel Illumination Control on page 6-7*.
12. *Exterior Lamp Controls on page 6-1*.
13. *Electric Parking Brake on page 9-39* (If Equipped).
14. Data Link Connector (DLC) (Out of View). See *Malfunction Indicator Lamp on page 5-18*.
15. Automatic Transfer Case Knob (If Equipped). See *Four-Wheel Drive on page 9-34*.
16. *Cruise Control on page 9-45* (If Equipped).

    Adaptive Cruise Control on page 9-48 (If Equipped).

    Forward Collision Alert (FCA) System on page 9-62 (If Equipped).

    Phone Button. See the infotainment manual.
17. Hood Release. See *Hood on page 10-4*.

18. *Steering Wheel Adjustment on page 5-2*.
19. *Horn on page 5-3*.
20. *Steering Wheel Controls on page 5-2*.

    Driver Information Center (DIC) Controls. See *Driver Information Center (DIC) on page 5-27*.
21. ENGINE START/STOP Button. See *Ignition Positions on page 9-20*.
22. CD Player. See *Infotainment on page 7-1*.
23. *Dual Automatic Climate Control System on page 8-1*.

    Instrument Panel Storage on page 4-1.

Initial Drive Information

This section provides a brief overview about some of the important features that may or may not be on your specific vehicle.

For more detailed information, refer to each of the features which can be found later in this owner manual.

Remote Keyless Entry (RKE) System

The RKE transmitter is used to remotely lock and unlock the doors from up to 60 m (197 ft) away from the vehicle.

: Press to unlock the driver door. Press again within three seconds to unlock all remaining doors.

: Press to lock all doors.

Lock and unlock feedback can be personalized. See *Vehicle Personalization on page 5-46*.

: Press twice to open or close the liftgate. Press once to stop the liftgate from moving.

: Press twice to open the liftglass.

: Press and release to initiate vehicle locate. The turn signal lamps flash and the horn sound three times.

Press and hold for more than three seconds to sound the panic alarm.

Press again to cancel the panic alarm.

See *Keys on page 2-1* and *Remote Keyless Entry (RKE) System on page 2-2*.

Remote Vehicle Start

If equipped, the engine can be started from outside of the vehicle.

Starting the Vehicle

1. Press and release .
2. Immediately, press and hold for at least four seconds or until the turn signal lamps flash.

When the vehicle starts, the parking lamps will turn on. The doors will be locked and the climate control system may come on.

The engine will continue to run for 10 minutes. After 30 seconds, repeat the steps if a 10-minute extension is desired. Remote start can be extended only once.

Canceling a Remote Start

To cancel a remote start, do one of the following:

- Press and hold until the parking lamps turn off.
- Turn on the hazard warning flashers.
- Turn the vehicle on and then off.

See *Remote Vehicle Start on page 2-10*.

Door Locks

To lock or unlock the doors from inside the vehicle:

- Press or on a power door lock switch.
- Push down the manual lock knob on the driver door to lock all doors. Push down the lock knob on a passenger door to lock that door only.
- Pull the door handle once to unlock that door. Pull the handle again to unlatch it.

To lock or unlock the doors from outside the vehicle press or on the RKE transmitter or use the key in the front doors. The key cylinder is covered by a cap. See *Door Locks on page 2-11*. See *Remote Keyless Entry (RKE) System Operation on page 2-3*.

Power Door Locks

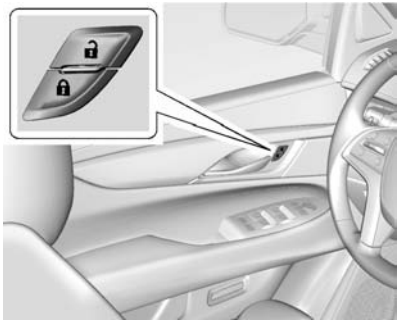

🔒 : Press to lock the doors.

🔓 : Press to unlock the doors.

See *Door Locks on page 2-11*.

Keyless Access

The RKE transmitter must be within 1 m (3 ft) of the door being opened. Pressing the button on the driver door handle will unlock the driver door. If the handle button is pressed again within five seconds, the passenger doors and liftgate will unlock. See “Keyless Access Operation” in *Remote Keyless Entry (RKE) System Operation on page 2-3*.

Liftgate

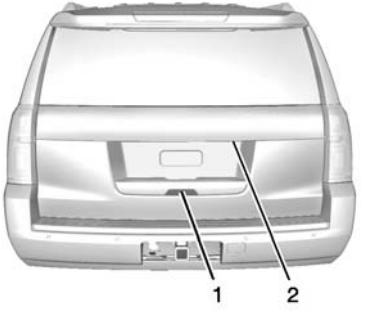

To open the liftgate, press 🔓 on the power door lock switch or press 🔓 on the Remote Keyless Entry (RKE) transmitter twice to unlock all doors. Press the touch pad (1) on the underside of the liftgate handle and lift up. See *Remote Keyless Entry (RKE) System Operation on page 2-3*.

Use the pull cup to lower and close the liftgate. Do not press the touch pad while closing the liftgate. This will cause the liftgate to be unlatched.

To open the liftglass, press the button (2) above the license plate. Close the liftglass before opening the liftgate to avoid damaging it.

Power Liftgate Operation

If equipped with a power liftgate, the switch is on the overhead console. The vehicle must be in P (Park).

Choose the power liftgate mode selecting MAX or 3/4. Press on the overhead console or on the RKE transmitter press x2 twice quickly.

Press any liftgate button while the liftgate is moving to stop it. Pressing again reverses the direction.

To close, press on the bottom of the liftgate next to the latch.

To disable the power liftgate function, select OFF on the liftgate switch. See *Liftgate on page 2-14*.

Windows

The power windows work when the ignition is in ON/RUN or ACC/ACCESSORY, or in Retained Accessory Power (RAP). See *Retained Accessory Power (RAP) on page 9-24*.

If equipped, the front and rear windows have an express-down feature. The front windows have an express-up feature. See *Windows on page 2-25* and *Power Windows on page 2-26*.

Seat Adjustment

Power Seats

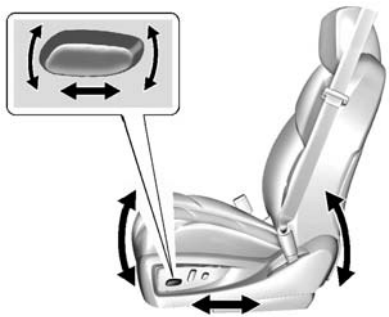

Base Shown, Uplevel Similar

To adjust the seat:

- Move the seat forward or rearward by sliding the control forward or rearward.
- Raise or lower the front part of the seat cushion by moving the front of the control up or down.
- Raise or lower the seat by moving the rear of the control up or down.

See *Power Seat Adjustment on page 3-4*.

Lumbar Adjustment

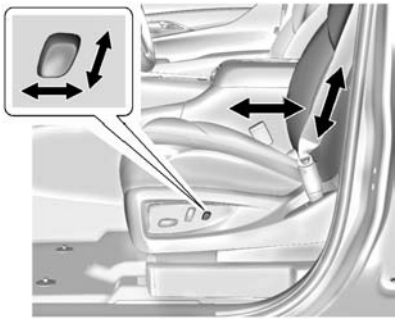

Base

To adjust the lumbar support:

- Press and hold the control forward to increase or rearward to decrease upper and lower lumbar support at the same time.
- Press and hold the control up to increase upper lumbar support and decrease lower lumbar support.

  Press and hold the control down to increase lower lumbar support and decrease upper lumbar support.

See *Lumbar Adjustment on page 3-5*.

Reclining Seatbacks

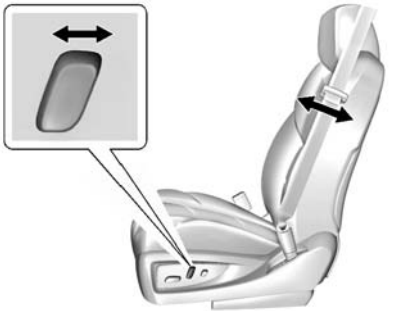

Base Shown, Uplevel Similar

To recline the seatback:

- Tilt the top of the control rearward to recline.
- Tilt the top of the control forward to raise.

See *Reclining Seatbacks on page 3-6*.

Uplevel Seat Adjustment

If equipped, the ignition must be on to use all uplevel seat features.

Uplevel Seat Control

1. Feature Select
2. Up
3. Rearward
4. Down
5. Forward

- Move Feature Select (1) to display seat adjustments on the center stack. Press and release or hold to scroll through features.
- Press Up (2) to make upward adjustments of the selected feature.
- Press Rearward (3) to make rearward adjustments of the selected feature.
- Press Down (4) to make downward adjustments of the selected feature.
- Press Forward (5) to make forward adjustments of the selected feature.

See *Seat Adjustment on page 3-3*.

Massage

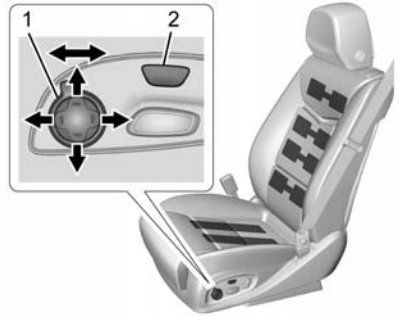

Driver Seat Shown, Passenger Seat Similar

1. Feature Select
2. Next Higher Massage Type
3. Decrease Massage Intensity
4. Next Lower Massage Type
5. Increase Massage Intensity
6. Massage On/Off

If equipped, the ignition must be on to display massage controls (1–5).

See *Massage on page 3-9*.

Memory Features

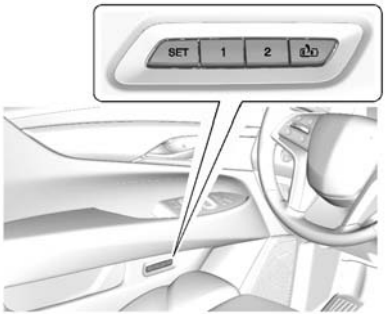

The SET, "1," "2," and (Exit) buttons on the driver door are used to manually store and recall memory settings for the driver seat, outside mirrors, power tilt and telescoping steering column, adjustable pedals, and massage settings (if equipped).

See *Memory Seats on page 3-7* and *Vehicle Personalization on page 5-46*.

Second Row Seats

The second row seatbacks can be folded for additional cargo space, or the seats can be folded and tumbled for easy entry/exit to the third row seats. The seatbacks also recline.

See *Second Row Seats on page 3-11*.

Third Row Seats

Third row seatbacks can be folded. See *Third Row Seats on page 3-16*.

Heated and Cooled Front Seats

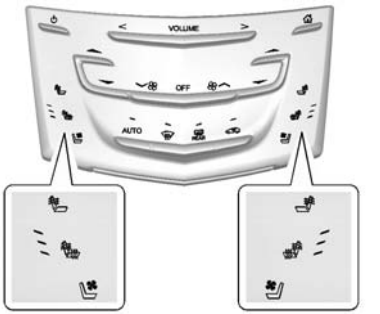

The buttons are near the climate controls on the center stack. To operate, the engine must be running.

Press or to heat the driver or passenger seatback only.

Press or to heat the driver or passenger seat cushion and seatback.

Press or to cool the driver or passenger seat.

See *Heated and Cooled Front Seats on page 3-9*.

Head Restraint Adjustment

Do not drive until the head restraints for all occupants are installed and adjusted properly.

To achieve a comfortable seating position, change the seatback recline angle as little as necessary while keeping the seat and the head restraint height in the proper position.

See *Head Restraints on page 3-2* and *Power Seat Adjustment on page 3-4*.

Safety Belts

Refer to the following sections for important information on how to use safety belts properly:

- *Safety Belts on page 3-18*.
- *How to Wear Safety Belts Properly on page 3-19*.
- *Lap-Shoulder Belt on page 3-20*.
- *Lower Anchors and Tethers for Children (LATCH System) on page 3-48*.

Passenger Sensing System

United States

Canada and Mexico

The passenger sensing system will turn off the front outboard passenger frontal airbag under certain conditions. No other airbag is affected by the passenger sensing system. See *Passenger Sensing System on page 3-34*

The passenger airbag status indicator will light on the overhead console when the vehicle is started. See *Passenger Airbag Status Indicator on page 5-17*.

Mirror Adjustment

Interior Mirror

Adjustment

Adjust the rearview mirror for a clear view of the area behind the vehicle.

Automatic Dimming Rearview Mirror

The mirror automatically dims to reduce the glare of headlamps from behind. The dimming feature comes on when the vehicle is started.

Exterior Mirrors

Power Mirrors

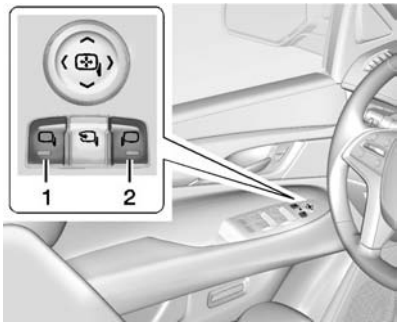

To adjust the mirrors:

1. Press (1) or (2) to select the driver or passenger side mirror.
2. Press the arrows on the control pad to move each mirror in the desired direction.
3. Press either (1) or (2) again to deselect the mirror.

See *Power Mirrors on page 2-23*.

Power Folding Mirrors

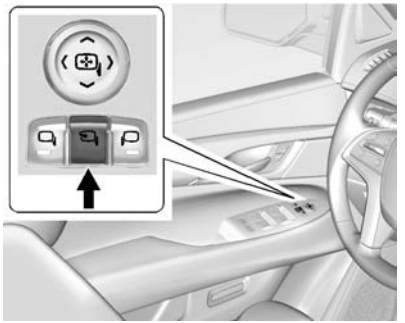

The vehicle has power folding mirrors. To adjust:

1. Press to fold the mirrors inward.
2. Press again to return the mirrors to the driving position.

Heated Mirrors

If equipped, press to heat the outside mirrors.

See “Rear Window Defogger” under *Dual Automatic Climate Control System on page 8-1*.

Steering Wheel Adjustment

To adjust the power tilt and telescoping steering wheel, if equipped:

Press the control to move the steering wheel up and down or forward and rearward.

Do not adjust the steering wheel while driving.

Throttle and Brake Pedal Adjustment

If equipped, the position of the throttle and brake pedals can be changed.

The switch used to adjust the pedals is on the center stack, to the left of the touch screen.

Press the top of the switch to move the pedals closer to your body. Press the bottom of the switch to move the pedals away.

See *Adjustable Throttle and Brake Pedal on page 9-19*.

The vehicle may have a memory function, which lets pedal settings be saved and recalled. See *Memory Seats on page 3-7*.

Interior Lighting

Dome Lamps

There are dome lamps in the overhead console and the headliner, if equipped.

To change the dome lamp settings, press the following:

OFF: Turns the lamps off, even when a door is open.

DOOR: The lamps come on automatically when a door is opened.

ON: Turns all dome lamps on.

Reading Lamps

There are reading lamps in the overhead console and the headliner, if equipped. To operate, the ignition must be in the ACC/ACCESSORY or ON/RUN position or using Retained Accessory Power (RAP).

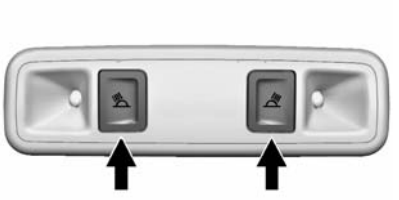

Press or next to each reading lamp to turn it on or off.

For more information about interior lighting, see *Instrument Panel Illumination Control on page 6-7*.

Exterior Lighting

The exterior lamp control is on the instrument panel to the left of the steering wheel.

: Turns off the automatic headlamps and Daytime Running Lamps (DRL). Turning the headlamp control to the off position again will turn the automatic headlamps and DRL back on.

For vehicles first sold in Canada, the off position only works when the vehicle is shifted into the P (Park) position.

AUTO: Automatically turns the exterior lamps on and off, depending on outside lighting.

: Turns on the parking lamps including all lamps, except the headlamps.

: Turns on the headlamps together with the parking lamps and instrument panel lights.

See:

- *Exterior Lamp Controls on page 6-1*
- *Daytime Running Lamps (DRL) on page 6-4*
- *Automatic Headlamp System on page 6-4*

Windshield Wiper/Washer

The windshield wiper control is on the turn signal lever.

The windshield wipers are controlled by turning the band with FRONT on it.

: Fast wipes.

: Slow wipes.

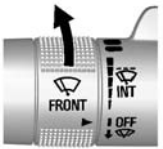

INT: Use this setting for intermittent wipes or Rainsense™. For intermittent wipes, turn the FRONT band up for more frequent wipes or down for less frequent wipes.

To turn on Rainsense, press AUTO on the lever, then turn the FRONT band on the wiper lever to adjust the sensitivity.

- Turn the band up to a higher INT setting for more sensitivity to moisture.
- Turn the band down to the lower INT setting for less sensitivity to moisture.
- Move the band out of the INT position to deactivate Rainsense.

OFF: Turns the windshield wipers off.

: For a single wipe, turn to , then release. For several wipes, hold the band on longer.

: Push the paddle at the top of the lever to spray washer fluid on the windshield.

See *Windshield Wiper/Washer on page 5-3*.

Climate Controls

The climate control buttons and the touch screen are used to adjust the heating, cooling, and ventilation.

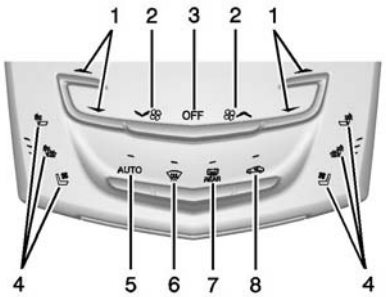

Climate Control Buttons

1. Driver and Passenger Temperature Controls
2. Fan Control
3. OFF (Fan)
4. Driver and Passenger Heated and Cooled Seats (If Equipped)
5. AUTO (Automatic Operation)
6. Defrost
7. Rear Window Defogger
8. Recirculation

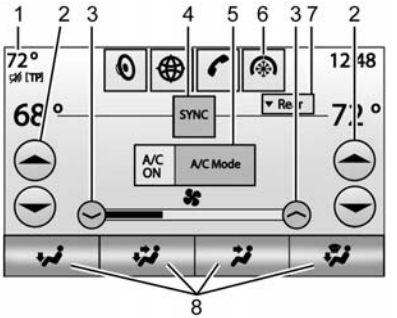

Climate Touch Screen Controls

1. Outside Temperature Display
2. Driver and Passenger Temperature Controls
3. Fan Control
4. SYNC (Synchronized Temperature)
5. A/C Mode (Air Conditioning)
6. Climate Control Selection (Application Tray Button)
7. Rear (Rear Climate Control Touch Screen)
8. Air Delivery Mode Control

See *Dual Automatic Climate Control System on page 8-1* and *Rear Climate Control System on page 8-6* (If Equipped).

Transmission

Range Selection Mode

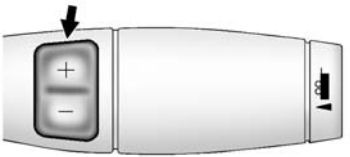

The Range Selection Mode switch, if equipped, is on the shift lever.

1. To enable the Range Selection feature, move the shift lever to the M (Manual Mode) position. The current range will appear next to the M. This is the highest attainable range with all lower gears accessible. As an example, when 5 (Fifth) gear is selected, 1 (First) through 5 (Fifth) gears are available.

2. Tap the plus/minus buttons on the shift lever to select the desired range of gears for current driving conditions. See *Manual Mode on page 9-31*.

While using Range Selection Mode, cruise control and the Tow/Haul Mode can be used.

Grade Braking is not available when Range Selection Mode is active. See *Tow/Haul Mode on page 9-33*.

Four-Wheel Drive

If the vehicle has four-wheel drive, you can send the engine's driving power to all four wheels for extra traction.

Automatic Transfer Case

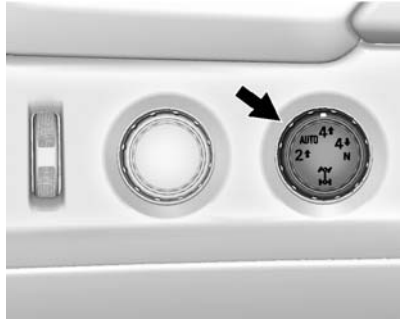

Two Speed Automatic Transfer Case

The transfer case knob is to the left of the steering wheel. Use this knob to shift into and out of the different four-wheel drive modes.

2↑: This setting is used for driving in most street and highway situations.

AUTO: This setting is ideal for use when road surface traction conditions are variable.

4↑: Use the Four-Wheel Drive High position when extra traction is needed, such as on snowy or icy roads or in most off-road situations.

4↓: Vehicles with a two speed automatic transfer case have a Four-Wheel Drive Low position. This setting sends maximum power to all four wheels. You might choose 4↓ if you are driving off-road in deep sand, mud, or snow, and while climbing or descending steep hills.

N (Neutral): Shift the transfer case to N (Neutral) only when towing the vehicle. See *Recreational Vehicle Towing on page 10-75* or *Towing the Vehicle on page 10-75*.

See *Four-Wheel Drive on page 9-34*.

Vehicle Features

Infotainment System

See the infotainment manual for information on the radio, audio players, phone, navigation system, and voice or speech recognition. It also includes information on settings.

Steering Wheel Controls

The infotainment system can be operated by using the steering wheel controls. See "Steering Wheel Controls" in the infotainment manual.

Cruise Control

: Press to turn the system on and off. A white indicator appears in the instrument cluster when cruise is turned on.

+RES: If there is a set speed in memory, press the control up briefly to resume that speed or press and hold to accelerate. If the cruise control is already active, use to increase vehicle speed.

SET− : Press the control down briefly to set the speed and activate cruise control. If the cruise control is already active, use to decrease vehicle speed.

: Press to disengage cruise control without erasing the set speed from memory.

See *Cruise Control on page 9-45* or *Adaptive Cruise Control on page 9-48* (if equipped).

Driver Information Center (DIC)

The DIC display is in the instrument cluster. It shows the status of many vehicle systems.

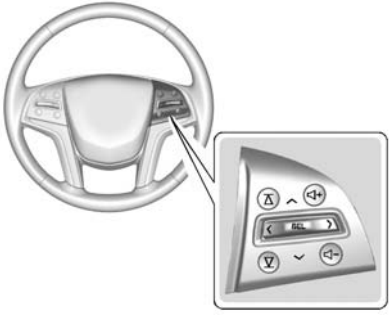

∧ or ∨ : Move SEL up or down to go to the previous or next selection.

< or > : Press to move between the interactive display zones in the cluster. Press < to go back to the previous menu.

SEL: Press to open a menu or select a menu item. Press and hold to reset values on certain screens.

See *Driver Information Center (DIC) on page 5-27*.

Forward Collision Alert (FCA) System

If equipped, FCA may help avoid or reduce the harm caused by front-end crashes. FCA provides a green indicator, , when a vehicle is detected ahead. This indicator displays amber if you follow a vehicle much too closely. When approaching a vehicle ahead too quickly, FCA provides a flashing red alert on the windshield and rapidly beeps or pulses the driver seat.

See *Forward Collision Alert (FCA) System on page 9-62*.

Lane Departure Warning (LDW)

If equipped, LDW may help avoid unintentional lane departures at speeds of 56 km/h (35 mph) or greater. LDW uses a camera sensor to detect the lane markings. The LDW light, , is green if a lane marking is detected. If the vehicle departs the lane, the light will change to amber and flash. In addition, beeps will sound or the driver seat will pulse.

See *Lane Departure Warning (LDW) on page 9-68*.

Lane Change Alert (LCA)

If equipped, the LCA system is a lane-changing aid that assists drivers with avoiding lane change crashes that occur with moving vehicles in the side blind zone (or spot) areas or with vehicles rapidly approaching these areas from behind. The LCA warning display will light up in the corresponding outside side mirror and will flash if the turn signal is on. The Side Blind Zone Alert (SBZA) system is included as part of the LCA system.

See *Side Blind Zone Alert (SBZA) on page 9-66* and *Lane Change Alert (LCA) on page 9-66*.

Surround Vision

If equipped, views around the vehicle display on the center stack to aid with parking and low-speed maneuvers.

See “Surround Vision” under *Assistance Systems for Parking or Backing on page 9-56*.

Front Vision Camera

If equipped, a view of the area in front of the vehicle displays on the center stack to aid with parking and low-speed maneuvers.

See “Front Vision Camera” under *Assistance Systems for Parking or Backing on page 9-56*.

Rear Vision Camera (RVC)

If equipped, RVC displays a view of the area behind the vehicle on the center stack display when the vehicle is shifted into R (Reverse) to aid with parking and low-speed backing maneuvers.

See *Assistance Systems for Parking or Backing on page 9-56*.

Rear Cross Traffic Alert (RCTA) System

If equipped, the RCTA system uses a triangle with an arrow displayed on the RVC screen to warn of traffic behind your vehicle that may cross your vehicle's path while in R (Reverse). In addition, beeps will sound, or the driver seat will pulse.

See *Assistance Systems for Parking or Backing on page 9-56*.

Parking Assist

If equipped, Front and Rear Parking Assist (FRPA) uses sensors on the front and rear bumpers to assist with parking and avoiding objects during low speed parking maneuvers. It operates at speeds less than 8 km/h (5 mph). FRPA may display a warning triangle on the Rear Vision Camera screen and a graphic on the instrument cluster to provide the object distance. In addition, multiple beeps or seat pulses may occur if very close to an object.

The vehicle may also have a higher speed Backing Warning System and the Rear Automatic Braking system.

See *Driver Assistance Systems on page 9-56*.

Rear Automatic Braking (RAB) System

If the vehicle has Adaptive Cruise Control (ACC) it also has the Rear Automatic Braking (RAB) system, which is designed to help avoid or reduce the harm caused by backing crashes when the vehicle is shifted into R (Reverse). If the system detects the vehicle is backing too fast to avoid a crash with a detected object behind your vehicle in your path, it may automatically brake hard to a stop.

See *Assistance Systems for Parking or Backing on page 9-56*.

Active Emergency Braking System

If the vehicle has Adaptive Cruise Control (ACC) it also has the Active Emergency Braking System, which includes Intelligent Brake Assist (IBA) and the Automatic Collision Preparation (ACP) System. These systems can provide a boost to braking or automatically brake the vehicle to help avoid or lessen the severity of crashes when driving in a forward gear.

See *Active Emergency Braking System on page 9-64*.

Power Outlets

Accessory power outlets can be used to plug in electrical equipment, such as a cell phone, MP3 player, etc.

The vehicle has five accessory power outlets:

- One near the cupholders on the center console.
- One inside the center console.
- One on the rear of the center console.
- One in the third row seat on the driver side.
- One in the rear cargo area on the passenger side.

Lift the cover to access and replace when not in use.

See *Power Outlets on page 5-7*.

Universal Remote System

If equipped with the Universal Remote system, these buttons will be in the front overhead console.

This system provides a way to replace up to three remote control transmitters used to activate devices such as garage door openers, security systems, and home automation devices.

See *Universal Remote System on page 5-55*.

Sunroof

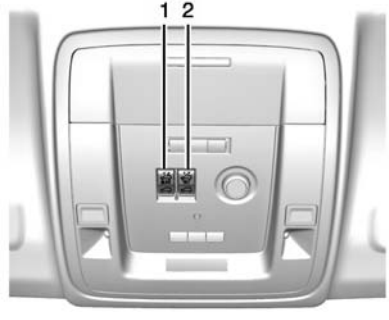

1. Open or Close
2. Vent

On vehicles with a sunroof, the sunroof only operates when the ignition is in ACC/ACCESSORY or ON/RUN, or when Retained

Accessory Power (RAP) is active. See *Retained Accessory Power (RAP) on page 9-24*.

Vent: From the closed position, press the rear of switch (2) to vent the sunroof.

Open/Close: To open the sunroof, press and hold switch (1) until the sunroof reaches the desired position. Press and hold the front of switch (1) to close it.

Express-Open/Express-Close: To express-open the sunroof, fully press and release the rear of switch (1) until the sunroof reaches the desired position. To express-close the sunroof, fully press and release the front of switch (1). Press the switch again to stop it.

When the sunroof is opened, an air deflector will automatically raise. The air deflector will retract when the sunroof is closed.

The sunroof also has a sunshade which can be pulled forward to block sun rays. The sunshade must be opened and closed manually.

If an object is in the path of the sunroof while it is closing, the anti-pinch feature will detect the object and stop the sunroof.

See *Sunroof on page 2-28*.

Performance and Maintenance

Traction Control/ Electronic Stability Control

The vehicle has a traction control system that limits wheel spin and the StabiliTrak system that assists with directional control of the vehicle in difficult driving conditions. Both systems come on automatically when the vehicle is started and begins to move.

- To turn off traction control, press and release on the center stack. The traction off light displays in the instrument cluster. The appropriate Driver Information Center (DIC) message displays. See *Ride Control System Messages on page 5-42*.

- To turn off both traction control and StabiliTrak, press and hold OFF until TC and OFF illuminate in the instrument cluster and the appropriate DIC message displays. See *Ride Control System Messages on page 5-42*.
- Press and release OFF again to turn on both systems.
- StabiliTrak will automatically turn on if the vehicle exceeds 56 km/h (35 mph). Traction control will remain off.

See *Traction Control/Electronic Stability Control on page 9-42*.

Tire Pressure Monitor

This vehicle may have a Tire Pressure Monitor System (TPMS).

The low tire pressure warning light alerts to a significant loss in pressure of one of the vehicle's tires. If the warning light comes on, stop as soon as possible and inflate the tires to the recommended pressure shown on the Tire and Loading Information label. See *Vehicle Load Limits on page 9-14*. The warning light will remain on until the tire pressure is corrected.

The low tire pressure warning light may come on in cool weather when the vehicle is first started, and then turn off as the vehicle is driven. This may be an early indicator that the tire pressures are getting low and the tires need to be inflated to the proper pressure.

The TPMS does not replace normal monthly tire maintenance. Maintain the correct tire pressures.

See *Tire Pressure Monitor System on page 10-47*.

Engine Oil Life System

The engine oil life system calculates engine oil life based on vehicle use and displays the CHANGE ENGINE OIL SOON message when it is time to change the engine oil and filter. The oil life system should be reset to 100% only following an oil change.

Resetting the Oil Life System

1. Using the DIC controls on the right side of the steering wheel, display OIL LIFE on the DIC. See *Driver Information Center (DIC) on page 5-27*. When remaining oil life is low, the CHANGE ENGINE OIL SOON message will appear on the display. See *Engine Oil Messages on page 5-37*.
2. Press SEL on the DIC controls and hold SEL down for a few seconds to clear the CHANGE ENGINE OIL SOON message and reset the oil life at 100%.

   Be careful not to reset the oil life display accidentally at any time other than after the oil is changed. It cannot be reset accurately until the next oil change.

The oil life system can also be reset as follows:

1. Turn the ignition on with the engine off.
2. Fully press and release the accelerator pedal three times within five seconds.

   If the CHANGE ENGINE OIL SOON message is not on, the system is reset.

See *Engine Oil Life System on page 10-8*.

Driving for Better Fuel Economy

Driving habits can affect fuel mileage. Here are some driving tips to get the best fuel economy possible.

- Avoid fast starts and accelerate smoothly.
- Brake gradually and avoid abrupt stops.
- Avoid idling the engine for long periods of time.
- When road and weather conditions are appropriate, use cruise control.
- Always follow posted speed limits or drive more slowly when conditions require.

- Keep vehicle tires properly inflated.
- Combine several trips into a single trip.
- Replace the vehicle's tires with the same TPC Spec number molded into the tire's sidewall near the size.
- Follow recommended scheduled maintenance.

Roadside Service

U.S.: 1-800-224-1400

Canada: 1-800-882-1112

TTY Users (U.S. Only): 1-888-889-2438

New Cadillac owners are automatically enrolled in the Roadside Service Program.

See *Roadside Service on page 13-5*.

OnStar®

This vehicle may be equipped with a comprehensive, in-vehicle system that can connect to a live OnStar Advisor for Emergency, Security, Navigation, Connection, and Diagnostic Services. OnStar services may require a paid subscription. See *OnStar Overview on page 14-1*.

✍ NOTES

Keys, Doors, and Windows

Keys and Locks
Keys 2-1
Remote Keyless Entry (RKE) System 2-2
Remote Keyless Entry (RKE) System Operation 2-3
Remote Vehicle Start 2-10
Door Locks 2-11
Power Door Locks 2-12
Delayed Locking 2-13
Automatic Door Locks 2-13
Lockout Protection 2-13
Safety Locks 2-14

Doors
Liftgate 2-14
Power Assist Steps 2-19

Vehicle Security
Vehicle Security 2-19
Vehicle Alarm System 2-19
Immobilizer 2-22
Immobilizer Operation 2-22

Exterior Mirrors
Convex Mirrors 2-23
Power Mirrors 2-23
Folding Mirrors 2-24
Heated Mirrors 2-24
Reverse Tilt Mirrors 2-24

Interior Mirrors
Interior Rearview Mirrors 2-25
Automatic Dimming Rearview Mirror 2-25
Child-View Mirror 2-25

Windows
Windows 2-25
Power Windows 2-26
Sun Visors 2-28

Roof
Sunroof 2-28

Keys and Locks

Keys

⚠ Warning

Leaving children in a vehicle with a Remote Keyless Entry (RKE) transmitter is dangerous and children or others could be seriously injured or killed. They could operate the power windows or other controls or make the vehicle move. The windows will function with the RKE transmitter in the vehicle, and children or others could be caught in the path of a closing window. Do not leave children in a vehicle with an RKE transmitter.

The key is used for the driver door and glove box.

The transmitter has a button on the side used to remove the key. Do not pull the key out without pressing the button.

See your dealer if a replacement key or additional key is needed.

With an active OnStar subscription, an OnStar Advisor may remotely unlock the vehicle. See *OnStar Overview on page 14-1*.

Remote Keyless Entry (RKE) System

See *Radio Frequency Statement on page 13-12*.

If there is a decrease in the RKE operating range:

- Check the distance. The transmitter may be too far from the vehicle.
- Check the location. Other vehicles or objects may be blocking the signal.
- Check the transmitter's battery. See “Battery Replacement” later in this section.
- If the transmitter is still not working correctly, see your dealer or a qualified technician for service.

Remote Keyless Entry (RKE) System Operation

The Keyless Access system allows for vehicle entry when the transmitter is within 1 m (3 ft). See “Keyless Access Operation” later in this section.

The RKE transmitter functions may work up to 60 m (197 ft) away from the vehicle.

Other conditions can affect the performance of the transmitter. See *Remote Keyless Entry (RKE) System on page 2-2*.

(Remote Vehicle Start): If equipped, press and release , then immediately press and hold until the turn signals flash or for at least four seconds. The engine may be started from outside the vehicle using the RKE transmitter. See *Remote Vehicle Start on page 2-10*.

(Lock): Press to lock all doors.

If enabled through the Driver Information Center (DIC), the turn signal lamps flash once to indicate locking has occurred. If enabled through the DIC, the horn chirps when is pressed again within three seconds. See *Vehicle Personalization on page 5-46*.

Pressing arms the alarm system. See *Vehicle Alarm System on page 2-19*.

If equipped with auto mirror folding, pressing and holding for one second will fold the mirrors. The auto mirror folding feature will not operate unless it is enabled. See *Vehicle Personalization on page 5-46*.

(Unlock): Press once to unlock only the driver door. If is pressed again within three seconds, all remaining doors unlock. The interior lamps may come on and stay on for 20 seconds or until the ignition is turned on.

If enabled through the DIC, the turn signal lamps flash twice to indicate unlocking has occurred. If enabled through the DIC, the exterior lamps may turn on. See *Vehicle Personalization on page 5-46*.

If equipped, memory seat positions may be recalled when unlocking the vehicle if enabled. See *Vehicle Personalization on page 5-46* and *Memory Seats on page 3-7*.

Pressing 🔓 on the RKE transmitter disarms the alarm system. See *Vehicle Alarm System on page 2-19*.

If equipped with auto mirror folding, pressing and holding 🔓 for one second will unfold mirrors. The auto mirror folding feature will not operate unless it is enabled. See *Vehicle Personalization on page 5-46*.

(Liftglass): Press twice to open the liftglass.

(Liftgate): Press twice to open or close the liftgate. Press once to stop the liftgate from moving.

(Vehicle Locator/Panic Alarm): Press and release to initiate vehicle locate. The turn signal lamps flash and the horn sounds three times.

Press and hold for more than three seconds to activate the panic alarm. The turn signal lamps flash and the horn sounds repeatedly for 30 seconds. The alarm turns off when the ignition is moved to ON/RUN or is pressed again. The ignition must be in LOCK/OFF for the panic alarm to work.

Keyless Access Operation

The Keyless Access system allows for the doors and liftgate to be accessed without pressing the RKE transmitter button. The RKE transmitter must be within 1 m (3 ft) of the door being opened. If the vehicle has this feature, there will be a button on the outside door handles.

Keyless Access can be programmed to unlock all doors on the first lock/unlock press from the driver door. See *Vehicle Personalization on page 5-46*.

Keyless Unlocking/Locking from the Driver Door

When the doors are locked and the RKE transmitter is within 1 m (3 ft) of the door handle, pressing the lock/unlock button on the driver door handle will unlock the driver door. If the lock/unlock button is pressed again within five seconds, all passenger doors and liftgate will unlock.

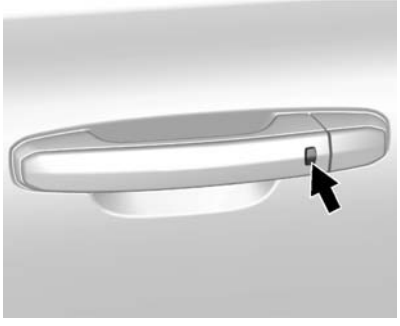

Driver Side Shown, Passenger Similar

Pressing the lock/unlock button will cause all doors to lock if any of the following occur:

- It has been more than five seconds since the first lock/unlock button press.
- Two lock/unlock button presses were used to unlock all doors.
- Any vehicle door has been opened and all doors are now closed.

Keyless Unlocking/Locking from the Passenger Doors

When the doors are locked and the RKE transmitter is within 1 m (3 ft) of the door handle, pressing the lock/unlock button on a passenger door handle will unlock all doors. Pressing the lock/unlock button will cause all doors to lock if any of the following occur:

- The lock/unlock button was used to unlock all doors.
- Any vehicle door has been opened and all doors are now closed.

Passive Locking

Keyless Access will lock the vehicle several seconds after all doors are closed, if the vehicle is off and at least one RKE transmitter has been removed from the interior, or none remain in the interior.

If other electronic devices interfere with the RKE transmitter signal, the vehicle may not detect the RKE transmitter inside the vehicle.

If passive locking is enabled, the doors may lock with the RKE transmitter inside the vehicle. Do not leave the RKE transmitter in an unattended vehicle.

To customize the doors to automatically lock when exiting the vehicle, see “Remote Lock, Unlock, Start” under *Vehicle Personalization on page 5-46*.

Temporarily Disable Passive Locking Feature

Temporarily disable the passive locking by pressing and holding 🔒 on the interior door switch with a door open for at least four seconds, or until three chimes are heard. Passive locking will then remain disabled until 🔓 on the interior door is pressed, or until the vehicle is turned on.

Keyless Liftgate Opening

Press the touch pad on the rear of the liftgate above the license plate to open the liftgate when all doors are unlocked when the transmitter is within 1 m (3 ft).

Keyless Liftglass Opening

Press the exterior liftglass button to open the liftglass when all doors are unlocked when the transmitter is within 1 m (3 ft).

Key Access

To access a vehicle with a dead transmitter battery, see *Door Locks on page 2-11*.

Programming Transmitters to the Vehicle

Only RKE transmitters programmed to the vehicle will work. If a transmitter is lost or stolen, a replacement can be purchased and programmed through your dealer.

The vehicle can be reprogrammed so that lost or stolen transmitters no longer work. Each vehicle can have up to eight transmitters matched to it.

Programming with a Recognized Transmitter

A new transmitter can be programmed to the vehicle when there is one recognized transmitter.

To program, the vehicle must be off and all transmitters, both currently recognized and new, must be with you.

1. Remove the key from the recognized transmitter.
2. Place the recognized transmitter(s) in the cupholder or passenger seat.
3. Remove the key lock cylinder cap on the driver door handle. See *Door Locks on page 2-11*. Insert the vehicle key into the key lock cylinder on the driver door handle; then turn the key counterclockwise, to the unlock position five times within 10 seconds.

   The Driver Information Center (DIC) displays READY FOR REMOTE #2, 3, 4, ETC.
4. Place the new transmitter in the transmitter pocket/insert, next to the center console storage area.
5. Press the ENGINE START/STOP button. When the transmitter is learned, the DIC display will show that it is ready to program the next transmitter.

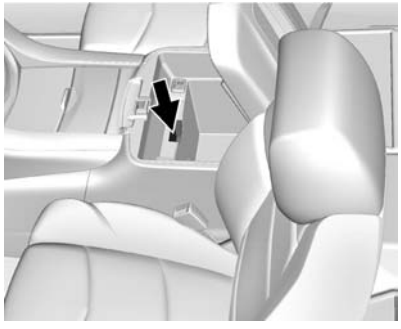

6. Open the center console storage area and the storage tray.
7. Remove the transmitter from the transmitter pocket/insert and press 🔒 or 🔓 on the transmitter.

   To program additional transmitters, repeat Steps 3–5.

   When all additional transmitters are programmed, press and hold the ENGINE START/STOP button for approximately 12 seconds to exit programming mode.
8. Put the key back into the transmitter.

Programming without a Recognized Transmitter

If there are no currently recognized transmitters available, follow this procedure to program up to eight transmitters. This feature is not available in Canada. This procedure will take approximately 30 minutes to complete. The vehicle must be off and all transmitters to be programmed must be with you.

1. Remove the vehicle key from the transmitter.
2. Remove the key lock cylinder cap on the driver door handle. See *Door Locks on page 2-11*. Insert the vehicle key into the key lock cylinder on the driver door handle; then turn the key counterclockwise, to the unlock position five times within 10 seconds.

   The Driver Information Center (DIC) displays REMOTE LEARN PENDING, PLEASE WAIT.
3. Wait for 10 minutes until the DIC displays PRESS ENGINE START BUTTON TO LEARN, then press the ENGINE START/STOP button.

   The DIC display will again show REMOTE LEARN PENDING, PLEASE WAIT.

4. Repeat Step 2 two additional times. After the third time all previously known transmitters will no longer work with the vehicle. Remaining transmitters can be relearned during the next steps.

   The DIC display should now show READY FOR REMOTE # 1.

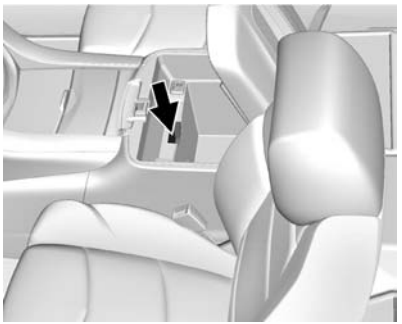

5. Place the new transmitter in the transmitter pocket/insert, next to the center console storage area.

   The storage area will need to be opened to access the transmitter pocket/insert.

6. Press the ENGINE START/STOP button. When the transmitter is learned, the DIC display will show that it is ready to program the next transmitter.

7. Remove the transmitter from the transmitter pocket/insert and press 🔓 or 🔒 on the transmitter.

   To program additional transmitters, repeat Steps 4–6.

   When all additional transmitters are programmed, press and hold the ENGINE START/STOP button for approximately 12 seconds to exit programming mode.

8. Return the key back into the transmitter.

Starting the Vehicle with a Low Transmitter Battery

If the transmitter battery is weak or if there is interference with the signal, the DIC may display NO REMOTE DETECTED or NO REMOTE KEY WAS DETECTED PLACE KEY IN TRANSMITTER POCKET THEN START YOUR VEHICLE when starting the vehicle. See *Key and Lock Messages on page 5-38*.

To start the vehicle:

1. Open the center console storage area and the storage tray.

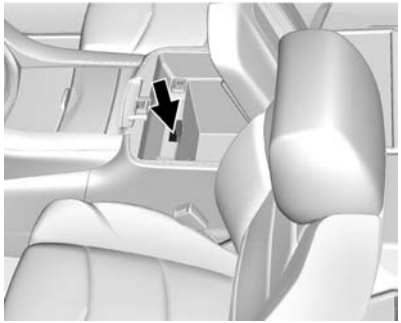

2. Place the transmitter in the transmitter pocket/insert.
3. With the vehicle in P (Park) or N (Neutral) press the brake pedal and the ENGINE START/ STOP button.

   Replace the transmitter battery as soon as possible.

Battery Replacement

⚠ Caution

When replacing the battery, do not touch any of the circuitry on the transmitter. Static from your body could damage the transmitter.

Replace the battery if the REPLACE BATTERY IN REMOTE KEY message displays in the DIC.

1. Press the button on the side of the transmitter near the bottom and pull the key out.

2. Separate the two halves of the transmitter using a flat tool inserted into the bottom center of the transmitter. Do not use the key slot.

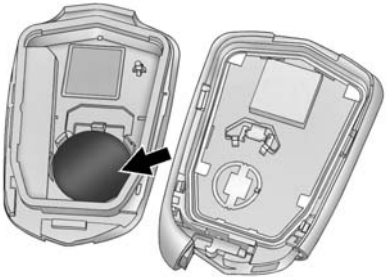

3. Remove the old battery. Do not use a metal object.
4. Insert the new battery on the back housing, positive side facing down. Replace with a CR2032 or equivalent battery.
5. Align the front and back housing then snap the transmitter together.

Remote Vehicle Start

If equipped with the remote start feature, the climate control system will come on when the vehicle is started remotely depending on the outside temperature.

The rear defog and heated and cooled seats, if equipped, may also come on. See *Heated and Cooled Front Seats on page 3-9* and *Vehicle Personalization on page 5-46*.

Laws in some communities may restrict the use of remote starters. Check local regulations for any requirements on remote starting of vehicles.

Do not use remote start if the vehicle is low on fuel.

The vehicle cannot be remote started if:

- The transmitter is in the vehicle.
- The hood is not closed.
- There is an emission control system malfunction and the malfunction indicator lamp is on.

The engine will turn off during a remote vehicle start if:

- The coolant temperature gets too high.
- The oil pressure gets low.

The RKE transmitter range may be less while the vehicle is running.

Other conditions can affect the performance of the transmitter. See *Remote Keyless Entry (RKE) System on page 2-2* or *Vehicle Personalization on page 5-46*.

Starting the Engine Using Remote Start

1. Press and release 🔓.

2. Immediately press and hold until the turn signal lamps flash or for at least four seconds.

   When the vehicle starts, the parking lamps will turn on. The doors will be locked and the climate control system may come on.

   The engine will continue to run for 10 minutes. Repeat the Steps 1 and 2 for one 10-minute time extension.

Place the ignition in ON/RUN/START to operate the vehicle.

Extending Engine Run Time

The engine run time can be extended by 10 minutes, for a total of 20 minutes, if during the first 10 minutes Steps 1 and 2 are repeated while the engine is still running. An extension can be requested 30 seconds after starting.

A maximum of two remote starts, or a single start with an extension, is allowed between ignition cycles.

The vehicle's ignition must be turned on and then back off to use remote start again.

Canceling a Remote Start

To cancel a remote start, do one of the following:

- Press and hold until the parking lamps turn off.
- Turn on the hazard warning flashers.
- Turn the ignition on and then off.

Door Locks

⚠ Warning

Unlocked doors can be dangerous.

- Passengers, especially children, can easily open the doors and fall out of a moving vehicle. When a door is locked, the handle will not open it. The chance of being

(Continued)

Warning (Continued)

thrown out of the vehicle in a crash is increased if the doors are not locked. So, all passengers should wear safety belts properly and the doors should be locked whenever the vehicle is driven.

- Young children who get into unlocked vehicles may be unable to get out. A child can be overcome by extreme heat and can suffer permanent injuries or even death from heat stroke. Always lock the vehicle whenever leaving it.
- Outsiders can easily enter through an unlocked door when you slow down or stop the vehicle. Locking the doors can help prevent this from happening.

To lock the doors from inside the vehicle:

- Press 🔒 on a power door lock switch.
- Push down the manual lock knob on the driver door to lock all doors. Push down the manual lock knob on a passenger door to lock only that door.

To unlock the doors from inside the vehicle:

- Press 🔓 on a power door lock switch.
- Pull the door handle once to unlock it. Pull the door handle again to unlatch it.

From outside the vehicle use the Remote Keyless Entry (RKE) transmitter or the key in the front doors. The key cylinder is covered by a cap.

Key Cylinder Access

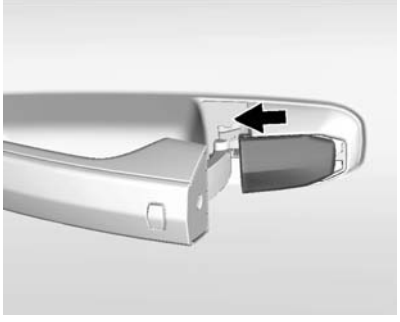

To access the key cylinder:

- Pull the handle open fully.
- Slide the cap inward and remove to expose the key cylinder.
- Replace cap by sliding back on.

Keyless Access

A locked vehicle can be opened if the RKE transmitter is within 1 m (3 ft) of the door handle or the liftgate touch pad. See *Remote Keyless Entry (RKE) System Operation on page 2-3*.

Free Turning Locks

The door lock cylinder turns freely when either the wrong key is used, or the correct key is not fully inserted. The free turning door lock feature prevents the lock from being forced open. To reset the lock, turn it to the vertical position with the correct key fully inserted. Remove the key and insert it again. If this does not reset the lock, turn the key halfway around in the cylinder and repeat the reset procedure.

Power Door Locks

Press 🔒 or 🔓 on the Remote Keyless Entry (RKE) transmitter. See *Remote Keyless Entry (RKE) System Operation on page 2-3*.

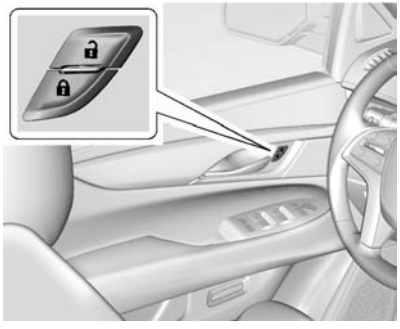

(Lock): Press to lock the doors.

(Unlock): Press to unlock the doors.

Delayed Locking

This feature delays the locking of the doors until five seconds after all doors are closed.

When is pressed on the power door lock switch while a door or the liftgate is open, a chime will sound three times indicating delayed locking is active.

The doors will lock automatically five seconds after all doors are closed. If a door is reopened before that time, the five-second timer will reset when all doors are closed again.

Press on the door lock switch again or press on the RKE transmitter to lock doors immediately.

This feature can also be programmed. See *Vehicle Personalization on page 5-46*.

Automatic Door Locks

The vehicle may have an automatic lock/unlock feature. This feature can be programmed using the Driver Information Center (DIC). See *Vehicle Personalization on page 5-46*.

Lockout Protection

If the vehicle is off and locking is requested while a door is open, when all doors are closed the vehicle will check for RKE transmitters inside. If an RKE transmitter is detected and the number of RKE transmitters inside has not reduced, the driver door will unlock.

Lockout Protection can be manually overridden with the driver door open by pressing and holding on the power door lock switch.

If Unlocked Door Anti-Lockout is turned on and the vehicle is off, the driver door is open, and locking is requested, all the doors will lock and only the driver door will unlock. The Unlocked Door Anti-Lockout feature can be turned on or off using the vehicle personalization menus. See *Vehicle Personalization on page 5-46*.

Safety Locks

The rear door safety locks prevent passengers from opening the rear doors from inside the vehicle.

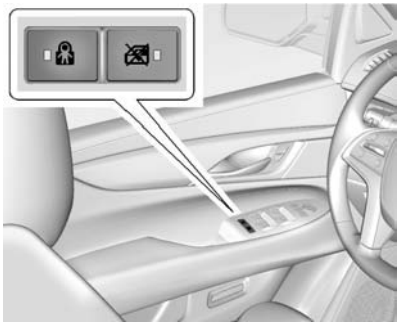

Press 🔒 to activate the safety locks on the rear doors. The indicator light comes on when activated.

Press 🔒 again to deactivate the safety locks.

Doors

Liftgate

⚠ Warning

Exhaust gases can enter the vehicle if it is driven with the liftgate or trunk/hatch open, or with any objects that pass through the seal between the body and the trunk/hatch or liftgate. Engine exhaust contains carbon monoxide (CO) which cannot be seen or smelled. It can cause unconsciousness and even death.

If the vehicle must be driven with the liftgate or trunk/hatch open:

- Close all of the windows.
- Fully open the air outlets on or under the instrument panel.

(Continued)

Warning (Continued)

- Adjust the climate control system to a setting that brings in only outside air and set the fan speed to the highest setting. See “Climate Control Systems” in the Index.
- If the vehicle is equipped with a power liftgate, disable the power liftgate function.

See *Engine Exhaust on page 9-27*.

⚠ Caution

To avoid damage to the liftgate or liftgate glass, make sure the area above and behind the liftgate is clear before opening it.

Manual Liftgate

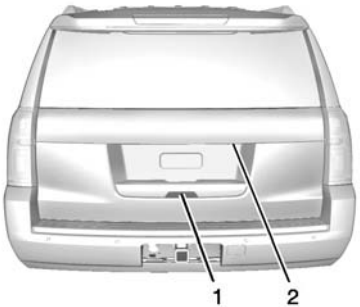

To open the liftgate, press 🔓 on the power door lock switch or press 🔓 on the RKE transmitter twice to unlock all doors. Press the touch pad (1) on the underside of the liftgate handle and lift up.

Press the button (2) above the license plate to open the liftglass, or press x2 twice quickly on the RKE transmitter. Do not leave the liftglass open when raising the liftgate.

There will be a delay in the release of the liftglass if there is an attempt to open it while the rear wipers are in motion.

Use the pull cup to lower and close the liftgate. Do not press the touch pad while closing the liftgate. This will cause the liftgate to be unlatched.

If equipped with Keyless Access, the RKE transmitter must be within 1 m (3 ft) of the liftgate to automatically unlock it. See *Remote Keyless Entry (RKE) System Operation on page 2-3*.

The liftgate has an electric latch. If the battery is disconnected or has low voltage, the liftgate will not open. The liftgate will resume operation when the battery is reconnected and charged.

Power Liftgate Operation

⚠ Warning

You, or others, could be injured if caught in the path of the power liftgate. Make sure there is no one in the way of the liftgate as it is opening and closing.

If equipped, the switch is on the overhead console. The vehicle must be in P (Park).

The modes are:

- MAX: Opens to maximum height.
- 3/4: Opens to a reduced height that can be set from 3/4 to fully open. Use to prevent the liftgate from opening into overhead objects such as a garage door or roof-mounted cargo. The liftgate can be opened all the way manuallly.
- OFF: Opens manually only.

To open or close the liftgate, select MAX or 3/4 mode and then:

- Press twice quickly on the RKE transmitter until the liftgate moves.
- Press on the overhead console. The driver door must be unlocked.
- Press the touch pad on the outside liftgate handle after unlocking all doors. If equipped with Keyless Access, a locked vehicle can be opened if the RKE transmitter is within 1 m (3 ft) of the touch pad.

- Press on the bottom edge of the liftgate next to the latch to close.

Press any liftgate button, the touch pad, or on the RKE transmitter while the liftgate is moving to stop it. Pressing again restarts the operation in the reverse direction. The touch pad on the liftgate handle cannot be used to close the liftgate.

Do not manually force the liftgate to open or close during a power cycle.

The power liftgate may be temporarily disabled in extremely low temperatures, or after repeated power cycling over a short period of time. If this occurs, the liftgate can still be operated manually. Select OFF on the liftgate switch.

If the vehicle is shifted out of P (Park) while the power function is in progress, the liftgate will continue to completion. If the vehicle is accelerated before the liftgate has completed moving, the liftgate may stop or reverse direction. Make sure the liftgate is closed and latched before driving.

If the power liftgate support strut has lost pressure, the turn signals will flash and a chime will sound while the liftgate automatically closes. See your dealer for service before using the power liftgate.

Obstacle Detection Features

If the liftgate encounters an obstacle during a power open or close cycle, a warning chime will sound and the liftgate will automatically reverse direction and move a short distance away from the obstacle. After removing the obstruction, the power liftgate operation can be used again. If the liftgate encounters multiple obstacles on the same power cycle, the power function will deactivate. After removing the obstructions, manually close the liftgate. This will allow normal power operation functions to resume.

If the vehicle is locked while the liftgate is closing, and an obstacle prevents the liftgate from completely closing, the horn will sound as an alert that the liftgate did not close.

Pinch sensors are on the side edges of the liftgate. If an object is caught between the liftgate and the vehicle and presses against a sensor, the liftgate will reverse direction and open fully. The liftgate will remain open until it is activated again or closed manually.

Setting the 3/4 Mode

To change the position the liftgate stops at when opening:

1. Select MAX or 3/4 mode and open the liftgate.
2. Stop the liftgate movement at the desired height by pressing any liftgate button. Manually adjust the liftgate position if needed.
3. Press and hold next to the latch on the outside of the liftgate until the turn signals flash and a beep sounds. This indicates the setting has been recorded.

The liftgate cannot be set below a minimum programmable height. If there is no light flash or sound, then the height adjustment may be too low.

Manual Operation

Select OFF to manually operate the liftgate. See “Manual Liftgate” at the beginning of this section.

Hands-Free Operation

If equipped with Hands-Free Vehicle Access, the liftgate may be operated with a kicking motion under the rear bumper.

The liftgate will not operate if the RKE transmitter is not within 1 m (3 ft).

The hands-free feature will not work while the liftgate is moving. To stop the liftgate while in motion use one of the liftgate switches.

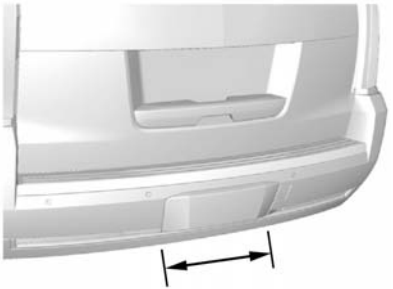

Length of Kick Zone

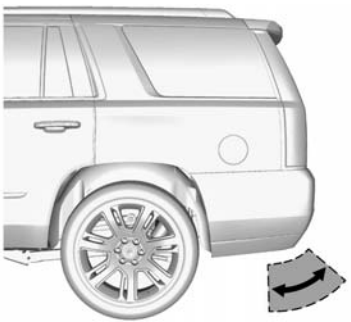

To operate, kick your foot straight up in one swift motion under the center of the rear bumper, then pull it back.

⚠ Caution

Splashing water may cause the liftgate to open. Keep the RKE transmitter away from the rear bumper detection area or turn the liftgate mode to OFF when cleaning or working near the rear bumper to avoid accidental opening.

- Do not sweep your foot side to side.
- Do not keep your foot under the bumper; the liftgate will not activate.
- Do not touch the liftgate until it has stopped moving.
- This feature may be temporarily disabled under some conditions. If the liftgate does not respond to the kick, open or close the liftgate by another method or start the vehicle. The feature will be re-enabled.

When closing the liftgate using this feature, there will be a short delay. The rear lights will flash and a chime will sound. Step away from the gate before it starts moving.

Power Assist Steps

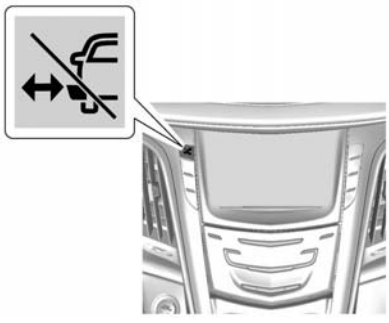

If equipped, the power assist steps will deploy when the door is opened and automatically retract three seconds after the door is closed. The power assist steps will retract immediately if the vehicle starts moving.

Keep hands, children, pets, objects, and clothing clear of the power assist steps when in motion. The steps will reverse direction if they encounter an obstruction when opening or closing. Remove the obstruction, then open and close the door on the same side to complete the motion of the assist steps. If the obstruction is not cleared, the assist steps remain extended while driving.

There are two other modes of operation:

Deploy Mode: To extend both power assist steps for cleaning, press while the vehicle is in P (Park) or N (Neutral). Press again to retract them. The DIC will display a message.

Lock Mode: Press and hold for four seconds to lock and disable the power assist steps. Press and hold for four seconds again to enable them. The DIC will display a message.

Vehicle Security

This vehicle has theft-deterrent features; however, they do not make the vehicle impossible to steal.

Vehicle Alarm System

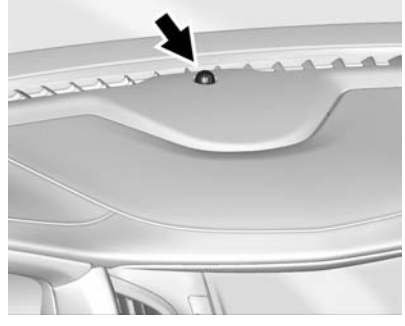

The indicator light, on the instrument panel near the windshield, indicates the status of the system.

Off: Alarm system is disarmed.

On Solid: Vehicle is secured during the delay to arm the system.

Fast Flash: Vehicle is unsecured. A door, the liftgate or the hood is open.

Slow Flash: Alarm system is armed.

Arming the Alarm System

1. Turn off the vehicle.
2. Lock the vehicle in one of three ways:
   - Use the RKE transmitter.
   - Use the Keyless Access system.
   - With a door open, press 🔒 on the interior of the door.
3. After 30 seconds, the alarm system will arm and the indicator light will begin to slowly flash.

   Pressing 🔒 on the RKE transmitter a second time will bypass the 30-second delay and immediately arm the alarm system.

The vehicle alarm system will not arm if the doors are locked with the key.

If the driver door is opened without first unlocking with the RKE transmitter, the horn will chirp and the lights will flash to indicate pre-alarm. If the vehicle is not started, or the door is not unlocked by pressing 🔓 on the RKE transmitter during the 10-second pre-alarm, the alarm will be activated.

The alarm will also be activated if a passenger door, the liftgate, or the hood is opened without first disarming the system. When the alarm is activated, the turn signals flash and the horn sounds for about 30 seconds. The alarm system will then re-arm to monitor for the next unauthorized event.

Disarming the Alarm System

To disarm the alarm system or turn off the alarm if it has been activated:

- Press 🔓 on the RKE transmitter.
- Unlock the vehicle using the Keyless Access system.
- Start the vehicle.

To avoid setting off the alarm by accident:

- Lock the vehicle after all occupants have exited.
- Always unlock a door with the RKE transmitter, or use the Keyless Access system.

  Unlocking the driver door with the key will not disarm the system or turn off the alarm.

How to Detect a Tamper Condition

If 🔓 is pressed on the RKE transmitter and the horn chirps three times, an alarm occurred previously while the alarm system was armed.

If the alarm has been activated, a message will appear on the DIC. See *Security Messages on page 5-43*.

Power Sounder, Inclination Sensor and Intrusion Sensor

In addition to the standard theft-deterrent system features, this system may also have a power sounder, inclination sensor and intrusion sensor.

The power sounder provides an audible alarm which is distinct from the vehicle's horn. It has its own power source, and can sound an alarm if the vehicle's battery is compromised.

The inclination sensor can set off the alarm if it senses movement of the vehicle, such as a change in vehicle orientation.

The intrusion sensor monitors the vehicle interior, and can activate the alarm if it senses unauthorized entry into the vehicle's interior. Do not allow passengers or pets to remain in the vehicle when the intrusion sensor is activated.

Before arming the theft-deterrent system and activating the intrusion sensor:

- Make sure all doors and windows are completely closed.
- Secure any loose items such as sunshades.
- Make sure there are no obstructions blocking the sensors in the front overhead console.
- Close DVD screens before leaving the vehicle.

Inclination and Intrusion Sensors Disable Switch

It is recommended that the intrusion and inclination sensors be deactivated if pets are left in the vehicle or the vehicle is being transported.

With the vehicle turned off, press in the front overhead console. The indicator light will come on momentarily, indicating that these sensors have been disabled for the next alarm system arming cycle.

Immobilizer

See *Radio Frequency Statement on page 13-12*.

Immobilizer Operation

This vehicle has a passive theft-deterrent system.

The system does not have to be manually armed or disarmed.

The vehicle is automatically immobilized when the transmitter leaves the vehicle.

The immobilization system is disarmed when the ignition button is pressed in and a valid transmitter is found in the vehicle.

The security light in the instrument cluster comes on if there is a problem with arming or disarming the theft-deterrent system.

The system has one or more transmitters matched to an immobilizer control unit in the vehicle. Only a correctly matched transmitter will start the vehicle. If the transmitter is ever damaged, you may not be able to start the vehicle.

If the engine does not start and the security light stays on, there is a problem with the system. Turn the vehicle off and try again.

If the RKE transmitter appears to be undamaged, try another transmitter or place the transmitter in the transmitter pocket/insert next to the center console storage area between the driver and front passenger seats. See “Starting the Vehicle with a Low Transmitter Battery” under *Remote Keyless Entry (RKE) System Operation on page 2-3*.

If the engine does not start with the other transmitter or when the transmitter is in the pocket/insert, the vehicle needs service. See your dealer who can service the theft-deterrent system and have a new transmitter programmed to the vehicle.

Do not leave the transmitter or device that disarms or deactivates the theft-deterrent system in the vehicle.

Exterior Mirrors

Convex Mirrors

⚠ Warning

A convex mirror can make things, like other vehicles, look farther away than they really are. If you cut too sharply into the right lane, you could hit a vehicle on the right. Check the inside mirror or glance over your shoulder before changing lanes.

The passenger side mirror is convex shaped. A convex mirror's surface is curved so more can be seen from the driver seat.

Power Mirrors

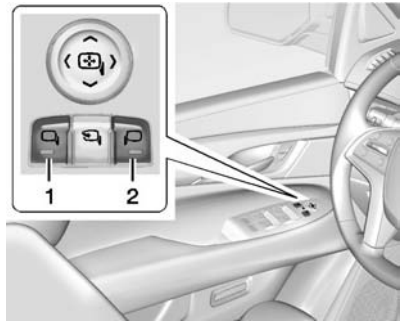

To adjust the mirrors:

1. Press (1) or (2) to select the driver or passenger side mirror. The indicator light comes on.
2. Press the arrows on the control pad to move the mirror up, down, right, or left.
3. Adjust the outside mirror so that the side of the vehicle and the area behind are seen.
4. Press either (1) or (2) again to deselect the mirror. The indicator light goes off.

Exterior Automatic Dimming Mirror

If equipped, the driver outside mirror automatically adjusts for the glare of headlamps behind. This feature comes on when the vehicle is started. See *Automatic Dimming Rearview Mirror on page 2-25*.

Turn Signal Indicator

The vehicle may have a turn signal indicator on the mirrors that flashes in the direction of the turn or lane change.

Folding Mirrors

Power Folding

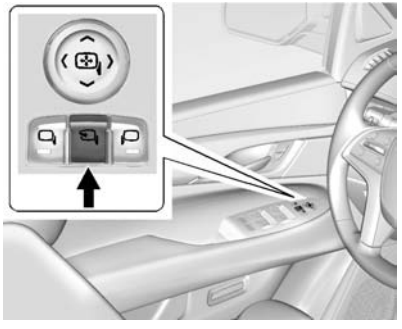

1. Press to fold the mirrors inward.
2. Press again to return the mirrors to the driving position.

Resetting the Power Folding Mirrors

Reset the power folding mirrors if:

- The mirrors are accidentally obstructed while folding.
- They are accidentally manually folded/unfolded.
- The mirrors will not stay in the unfolded position.
- The mirrors vibrate at normal driving speeds.

Fold and unfold the mirrors one time using the mirror controls to reset them to their normal position.
A popping noise may be heard during the resetting of the power folding mirrors. This sound is normal after a manual folding operation.

Heated Mirrors

For vehicles with heated mirrors:

(Rear Window Defogger):
Press to heat the mirrors.

See “Rear Window Defogger” under *Dual Automatic Climate Control System on page 8-1*.

Reverse Tilt Mirrors

If equipped with memory seats, the passenger and/or driver mirror tilts to a preselected position when the vehicle is in R (Reverse). This allows the curb to be seen when parallel parking.

The mirror(s) return to the original position when:

- The vehicle is shifted out of R (Reverse), or remains in R (Reverse) for about 30 seconds.
- The ignition is turned off.
- The vehicle is driven in R (Reverse) above a set speed.

To turn this feature on or off, see *Vehicle Personalization on page 5-46*.

Interior Mirrors

Interior Rearview Mirrors

Adjust the rearview mirror for a clear view of the area behind your vehicle.

If equipped with OnStar, there are three buttons at the bottom of the mirror. See your dealer for more information on the system and how to subscribe to OnStar. See *OnStar Overview on page 14-1*.

To avoid accidental OnStar calls, clean the mirror with the ignition off. Do not spray glass cleaner directly on the mirror. Use a soft towel dampened with water.

Automatic Dimming Rearview Mirror

The rearview mirror automatically dims to reduce the glare of the headlamps from behind. This feature comes on when the vehicle is started.

Child-View Mirror

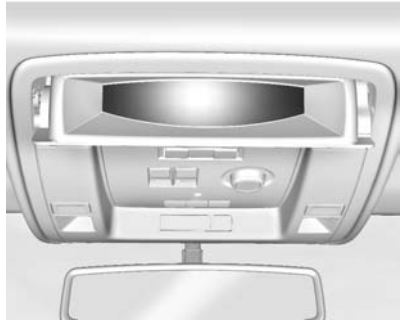

If equipped, push up on the sunglasses bin and release. Push the bin back in halfway to secure the mirror in position.

Push the mirror back up when not in use.

Windows

⚠ Warning

Never leave a child, a helpless adult, or a pet alone in a vehicle, especially with the windows closed in warm or hot weather. They can be overcome by the extreme heat and suffer permanent injuries or even death from heat stroke.

The vehicle aerodynamics are designed to improve fuel economy performance. This may result in a pulsing sound when either rear window is down and the front windows are up. To reduce the sound, open either a front window or the sunroof, if equipped.

Power Windows

⚠ Warning

Children could be seriously injured or killed if caught in the path of a closing window. Never leave keys in a vehicle with children. When there are children in the rear seat, use the window lockout button to prevent operation of the windows. See *Keys on page 2-1*.

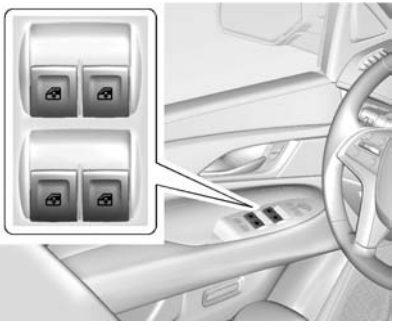

The driver door has switches that control all windows. Each passenger door has a switch that controls only that window. The power windows work when the ignition is in ON/RUN or ACC/ACCESSORY, or in Retained Accessory Power (RAP). See *Retained Accessory Power (RAP) on page 9-24*.

Press the switch to lower the window. Pull the switch up to raise it.

Express-Down Windows

Windows that have the express-down feature allow the windows to be lowered without holding the switch. Press the window switch fully and release it to activate the express-down feature. The express mode can be canceled at any time by briefly pressing or pulling the switch.

Express-Up Window

If equipped, the window express-up feature allows the window to be raised without holding the switch. Pull the window switch up fully and release it to activate the express-up feature. The express-up feature can be canceled at any time by briefly pulling the switch.

Programming the Power Windows

If the battery on the vehicle has been recharged or disconnected, or is not working, the driver power

window will need to be reprogrammed for the express-up feature to work.

To reprogram the power windows:

1. Close all doors.
2. Place the ignition in ACC/ ACCESSORY or ON/RUN/ START.
3. From any open position, pull the power window switch up until the window is fully closed.
4. Hold the switch up for approximately two seconds after the window is fully closed.

The window is now reprogrammed.

Express Window Anti-Pinch Feature

If any object is in the path of the window when express-up is active, the window stops at the obstacle and auto-reverses to a preset factory position. Weather conditions such as severe icing also cause the window to auto-reverse.

The window returns to normal operation once the obstacle or condition is removed.

Express Window Anti-Pinch Override

⚠ Warning

If express override is activated, the window will not reverse automatically. You or others could be injured and the window could be damaged. Before you use express override, make sure that all people and obstructions are clear of the window path.

The anti-pinch feature can be overridden in a supervised mode. Hold the window switch in the partially or fully pulled up position. The window rises for as long as the switch is held. Once the switch is released, the express mode is reactivated.

In this mode, the window can still close on an object in its path. Use care when using the override mode.

Window Lockout

This feature prevents the rear passenger windows from operating, except from the driver position.

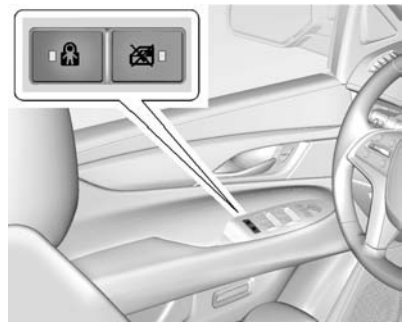

- Press to activate the rear window locks. An indicator light will illuminate when the feature is on.
- Press again to deactivate the rear window locks.

Sun Visors

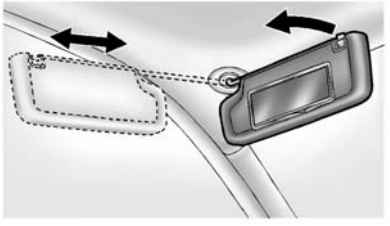

Pull the sun visor down to block glare. Detach the sun visor from the center mount to pivot to the side window or, if equipped, extend along the rod.

Roof

Sunroof

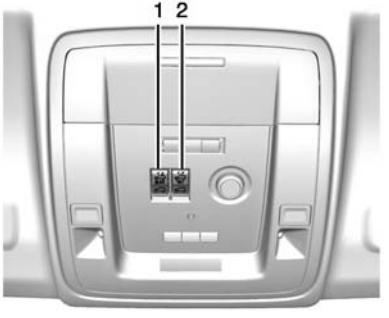

1. Open or Close
2. Vent

On vehicles with a sunroof, the sunroof only operates when the ignition is in ACC/ACCESSORY or ON/RUN, or when Retained Accessory Power (RAP) is active. See *Retained Accessory Power (RAP) on page 9-24*.

Vent: From the closed position, press the rear of switch (2) to vent the sunroof.

Open/Close: To open the sunroof, press and hold switch (1) until the sunroof reaches the desired position. Press and hold the front of switch (1) to close it.

Express-Open/Express-Close: To express-open the sunroof, fully press and release the rear of switch (1) until the sunroof reaches the desired position. To express-close the sunroof, fully press and release the front of switch (1). Press the switch again to stop it.

When the sunroof is opened, an air deflector will automatically raise. The air deflector will retract when the sunroof is closed.

The sunroof also has a sunshade which can be pulled forward to block sun rays. The sunshade must be opened and closed manually.

If an object is in the path of the sunroof while it is closing, the anti-pinch feature will detect the object and stop the sunroof.

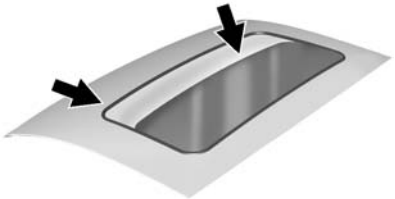

Dirt and debris may collect on the sunroof seal or in the track. This could cause an issue with sunroof operation or noise. It could also plug the water drainage system. Periodically open the sunroof and remove any obstacles or loose debris. Wipe the sunroof seal and roof sealing area using a clean cloth, mild soap, and water. Do not remove grease from the sunroof.

If water is seen dripping into the water drainage system, this is normal.

✍ NOTES

Seats and Restraints

Head Restraints
Head Restraints 3-2

Front Seats
Seat Adjustment 3-3
Power Seat Adjustment 3-4
Lumbar Adjustment 3-5
Reclining Seatbacks 3-6
Memory Seats 3-7
Massage 3-9
Heated and Cooled Front Seats 3-9

Rear Seats
Heated Rear Seats 3-11
Second Row Seats 3-11
Third Row Seats 3-16

Safety Belts
Safety Belts 3-18
How to Wear Safety Belts Properly 3-19
Lap-Shoulder Belt 3-20
Safety Belt Use During Pregnancy 3-25
Safety Belt Extender 3-26
Safety System Check 3-26
Safety Belt Care 3-26
Replacing Safety Belt System Parts after a Crash 3-26

Airbag System
Airbag System 3-27
Where Are the Airbags? 3-29
When Should an Airbag Inflate? 3-31
What Makes an Airbag Inflate? 3-32
How Does an Airbag Restrain? 3-32
What Will You See after an Airbag Inflates? 3-33
Passenger Sensing System 3-34
Servicing the Airbag-Equipped Vehicle 3-38
Adding Equipment to the Airbag-Equipped Vehicle . . . 3-39
Airbag System Check 3-40
Replacing Airbag System Parts after a Crash 3-40

Child Restraints
Older Children 3-41
Infants and Young Children 3-43
Child Restraint Systems 3-45
Where to Put the Restraint . . . 3-47
Lower Anchors and Tethers for Children (LATCH System) 3-48
Replacing LATCH System Parts After a Crash 3-57
Securing Child Restraints (Rear Seat) 3-57
Securing Child Restraints (Front Passenger Seat) 3-59

Head Restraints

Front Seats

The vehicle's front seats have adjustable head restraints in the outboard seating positions.

⚠ Warning

With head restraints that are not installed and adjusted properly, there is a greater chance that occupants will suffer a neck/spinal injury in a crash. Do not drive until the head restraints for all occupants are installed and adjusted properly.

Adjust the head restraint so that the top of the restraint is at the same height as the top of the occupant's head. This position reduces the chance of a neck injury in a crash.

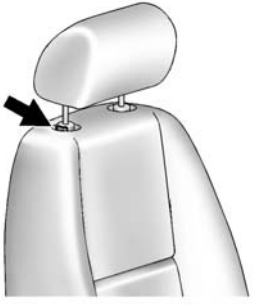

The height of the head restraint can be adjusted. Pull the head restraint up to raise it. Try to move the head restraint to make sure that it is locked in place.

To lower the head restraint, press the button, located on the top of the seatback, and push the head restraint down. Try to move the head restraint after the button is released to make sure that it is locked in place.

The front seat outboard head restraints are not removable.

Second Row Seats

The vehicle's second row seats have head restraints in the outboard seating positions that cannot be adjusted.

The second row seat outboard head restraints are not removable.

Third Row Seats

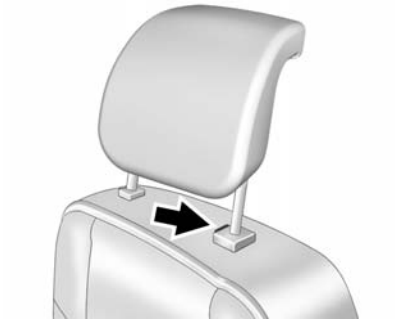

The third row seat head restraint can be lowered to allow for better visibility when the rear seat is unoccupied.

To lower the head restraint, press the button located on the top of the seatback and push the head restraint down.

Return the lowered head restraint to the upright position until it locks into place. Push and pull on the head restraint to make sure it is locked.

If you are installing a child restraint in the third row seat, see “Securing a Child Restraint Designed for the LATCH System” under *Lower Anchors and Tethers for Children (LATCH System) on page 3-48*.

Front Seats

Seat Adjustment

Uplevel Seat Adjustment

If equipped, the ignition must be on to use all uplevel seat features.

Lumbar and Bolster Support

To adjust lumbar support, if equipped:

1. Turn the selection control to view seat options on the center stack display.

2. Select lumbar support.
3. Press forward or rearward to adjust the desired amount of support.
4. Press up or down to adjust the height of the support.

To adjust bolster support, if equipped:

1. Turn the selection control to view seat options on the center stack display.
2. Select bolster support.
3. Press forward or rearward to adjust the amount of bolster support.

Upper Shoulder Support

To adjust lumbar support, if equipped:

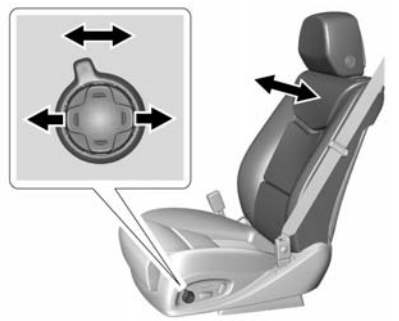

To adjust upper shoulder support, if equipped:

1. Turn the selection control to view seat options on the center stack display.
2. Select upper shoulder support.
3. Press forward or rearward to adjust the amount of upper shoulder support.

Power Seat Adjustment

⚠ Warning

You can lose control of the vehicle if you try to adjust a driver seat while the vehicle is moving. Adjust the driver seat only when the vehicle is not moving.

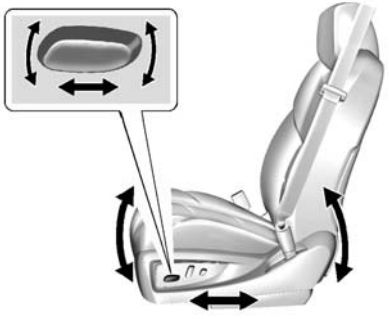

Base Shown, Uplevel Similar

To adjust the seat:

- Move the seat forward or rearward by sliding the control forward or rearward.
- Raise or lower the front part of the seat cushion by moving the front of the control up or down.
- Raise or lower the seat by moving the rear of the control up or down.

To adjust the seatback, see *Reclining Seatbacks on page 3-6*.

To adjust the lumbar support, see *Lumbar Adjustment on page 3-5*.

Some vehicles are equipped with a feature that activates a vibrating pulse alert in the driver seat to help the driver avoid crashes. See *Driver Assistance Systems on page 9-56*.

Lumbar Adjustment

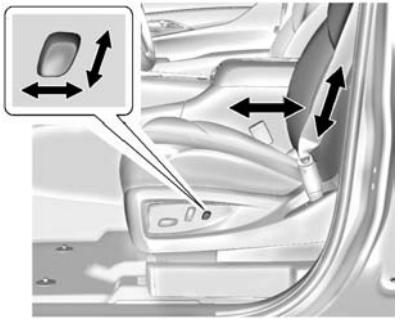

Base

To adjust the lumbar support:

- Press and hold the control forward to increase or rearward to decrease upper and lower lumbar support at the same time.

- Press and hold the control up to increase upper lumbar support and decrease lower lumbar support.

  Press and hold the control down to increase lower lumbar support and decrease upper lumbar support.

Reclining Seatbacks

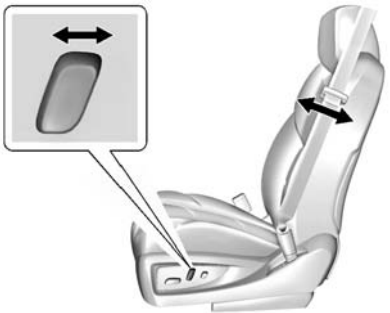

Base Shown, Uplevel Similar

To recline the seatback:

- Tilt the top of the control rearward to recline.
- Tilt the top of the control forward to raise.

⚠ Warning

Sitting in a reclined position when the vehicle is in motion can be dangerous. Even when buckled up, the safety belts cannot do their job.

The shoulder belt will not be against your body. Instead, it will be in front of you. In a crash, you could go into it, receiving neck or other injuries.

The lap belt could go up over your abdomen. The belt forces would be there, not at your pelvic bones. This could cause serious internal injuries.

For proper protection when the vehicle is in motion, have the seatback upright. Then sit well back in the seat and wear the safety belt properly.

Do not have a seatback reclined if the vehicle is moving.

Memory Seats

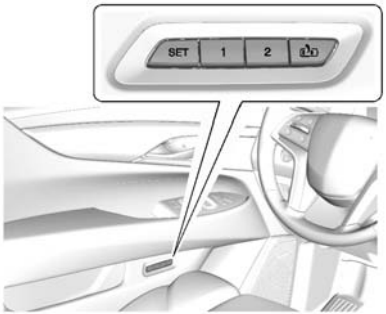

The SET, "1," "2," and (Exit) buttons on the driver door are used to manually store and recall memory settings for the driver seat, outside mirrors, power tilt and telescoping steering column, adjustable pedals (if equipped), and massage settings (if equipped).

Storing Memory Positions

To store positions to the “1” and “2” buttons:

1. Adjust the driver seat, outside mirrors, power tilt and telescoping steering column, adjustable pedals (if equipped), and massage settings (if equipped) to the desired driving positions.
2. Press and release SET. A beep will sound.
3. Immediately press and hold “1” until two beeps sound.
4. Repeat Steps 1–3 for a second driver using “2.”

To store positions to the (Exit) button and easy exit features:

1. Adjust the driver seat, outside mirrors, power tilt and telescoping steering column, adjustable pedals (if equipped), and massage settings (if equipped) to the desired positions for getting out of the vehicle.
2. Press and release SET. A beep will sound.
3. Immediately press and hold until two beeps sound.

Manually Recalling Memory Positions

If the vehicle is off or not in P (Park), press and hold "1," "2," or (Exit) to manually recall the previously stored memory positions and massage settings (if equipped). Releasing "1,” "2," or before the stored positions are reached stops the recall.

If the vehicle is on and in P (Park), press and release “1,” “2,” or to manually recall the previously stored memory positions. Turning the ignition off before the stored positions are reached stops the recall.

If the massage feature is off when the memory recall is performed, the previously stored type and intensity will be recalled, but it will remain off until activated with the On/Off control.

Automatically Recalling Memory Positions (Auto Memory Recall)

The Auto (Automatic) Memory Recall feature automatically recalls the current driver's previously stored "1" or "2" position and massage settings (if equipped) when entering the vehicle.

If the Auto Memory Recall feature is enabled in the vehicle personalization menu, then do one of the following to recall the "1" or "2" position:

- Press 🔓 on the RKE transmitter and open the driver door.
- Press 🔓 on the RKE transmitter when the driver door is already open.
- Press the lock/unlock button on the outside driver door handle and open the driver door. The RKE transmitter must be present for the recall to activate.

RKE transmitters are not labeled with a number. If your memory seat position is stored to "1" or "2" but this position is not automatically recalling, then change the stored position or switch RKE transmitters with the other driver.

See *Vehicle Personalization on page 5-46*.

To stop recall movement, press one of the memory, power mirror, or power seat controls; press the power tilt and telescoping steering column control; or press the adjustable pedal control.

RKE transmitters are not labeled with a number. If your memory seat position is stored to "1" or "2" but this position is not automatically recalling, then change the stored position or switch RKE transmitters with the other driver.

Easy Exit Recall

If programmed on in the vehicle personalization menu, the easy exit feature automatically moves the driver seat, power tilt and telescoping steering column, adjustable pedals, and outside mirrors to the memory positions and settings stored to the (Exit) button. See "Storing Memory Positions" previously in this section. See also *Vehicle Personalization on page 5-46*.

Easy exit recall automatically activates when one of the following occurs:

- The vehicle is turned off and the driver door is opened within a short time.
- The vehicle is turned off with the driver door open.

Obstructions

If something has blocked the driver seat, power tilt and telescoping steering column, and/or adjustable pedals while recalling a memory position, the recall may stop. Remove the obstruction. Then do one of the following:

- If automatically or manually recalling the stored memory position, press and hold the appropriate manual control for two seconds. Try recalling again by pressing the appropriate memory button.
- If recalling the exit position, press and hold the appropriate manual control for the exit feature not recalling for two seconds. Then try recalling the exit position again.

If the memory position is still not recalling, see your dealer for service.

Massage

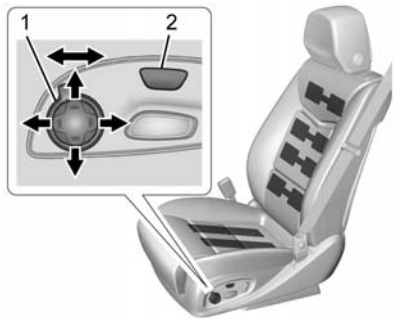

Driver Seat Shown, Passenger Seat Similar

If equipped, the ignition must be on to use the massage feature.

Massage may be activated and adjusted as follows:

1. Turn the selection control (1) to view massage options on the center stack display.
2. Select massage feature.
3. Press up or down to select massage type.
4. Press forward or rearward to change the intensity.
5. To recall last massage type and intensity, press the massage recall control (2).

Heated and Cooled Front Seats

⚠ Warning

If you cannot feel temperature change or pain to the skin, the seat heater may cause burns. To reduce the risk of burns, people with such a condition should use care when using the seat heater, especially for long periods of time. Do not place anything on the seat that insulates against heat, such as a blanket, cushion, cover, or similar item. This may cause the seat heater to overheat. An overheated seat heater may cause a burn or may damage the seat.

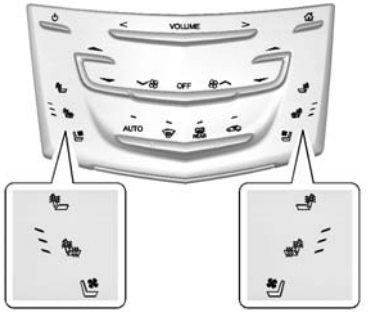

The buttons are near the climate controls on the center stack. To operate, the engine must be running.

Press or to heat the driver or passenger seatback only.

Press or to heat the driver or passenger seat cushion and seatback.

Press or to cool the driver or passenger seat.

When this feature is off, the heated and cooled seat symbols on the buttons are white. When a heated seat is turned on, the symbol turns red. When a cooled seat is turned on, the symbol turns blue.

Press the button once for the highest setting. With each press of the button, the seat will change to the next lower setting, and then to the off setting. The indicator lights next to the buttons indicate three for the highest setting and one for the lowest. If the heated seats are on high for an extended time, their level may automatically be lowered.

The passenger seat may take longer to heat up.

Remote Start Auto Heated and Cooled Seats

During a remote start, the heated or cooled seats may turn on automatically if enabled in vehicle personalization. When it is cold outside, the heated seats turn on, and when it is hot outside, the cooled seats turn on. The heated or cooled seats are canceled when the ignition is turned on. Press the heated or cooled seat button to use the heated or cooled seats after the vehicle is started.

The heated or cooled seat indicator lights do not turn on during a remote start.

The temperature performance of an unoccupied seat may be reduced. This is normal.

The heated or cooled seats will not turn on during a remote start unless they are enabled in the vehicle personalization menu. See *Remote Vehicle Start on page 2-10* and *Vehicle Personalization on page 5-46*.

Rear Seats

Heated Rear Seats

⚠ Warning

If you cannot feel temperature change or pain to the skin, the seat heater may cause burns. See the Warning under *Heated and Cooled Front Seats on page 3-9*.

The buttons are on the rear of the center console.

With the ignition in ON/RUN/START, press or to heat the left or right outboard seat cushion and seatback. An indicator on the rear climate control display appears when this feature is on.

Press the button once for the highest setting. With each press of the button, the seat will change to the next lower setting, and then to the off setting. The indicator lights next to the buttons indicate three for the highest setting and one for the lowest.

If the heated seats are on high for an extended time, their level may automatically be lowered.

Second Row Seats

The second row seats can be folded for additional cargo space or folded and tumbled for easy entry and exit to the third row seat.

Reclining Seatbacks

To recline the seatback:

1. Lift the lever on the outboard side of the seat.
2. Move the seatback to the desired position, and then release the lever to lock the seatback in place.
3. Push and pull on the seatback to make sure it is locked.

To return the seatback to the upright position:

⚠ Warning

If either seatback is not locked, it could move forward in a sudden stop or crash. That could cause injury to the person sitting there. Always push and pull on the seatbacks to be sure they are locked.

1. Lift the lever fully while applying pressure to the seatback, and the seatback will return to the upright position. If the lever is lifted without applying pressure, the seat will release to a folded position.
2. Push and pull on the seatback to make sure it is locked.

Manual Fold and Tumble Feature

⚠ Warning

Do not leave the second row seat in a tumbled position while the vehicle is in motion. A tumbled seat is not locked. It can move when the vehicle is in motion. People in the vehicle could be injured in a sudden stop or crash. Be sure to return the seat to the passenger seating position before driving the vehicle. Push and pull on the seat to make sure it is locked into place.

⚠ Caution

Folding a rear seat with the safety belts still fastened may cause damage to the seat or the safety belts. Always unbuckle the safety

(Continued)

Caution (Continued)

belts and return them to their normal stowed position before folding a rear seat.

Folding and Tumbling the Seat

To fold and tumble the seat:

1. Make sure that there is nothing under, in front of, or on the seat.

2. Lift the lever on the outboard side of the seat to release the seatback.

The seatback will fold forward to create a flat load floor.

If the seatback cannot fold flat, try moving the front seat forward and/or put the front seatback in the upright position.

3. Lift the lever again to release the rear of the seat from the floor. The seat will tumble forward.

Folding and Tumbling the Seat from the Third Row Seat

⚠ Warning

Using the third row seating position while the second row is folded, or folded and tumbled, could cause injury in a sudden stop or crash. Be sure to return

(Continued)

Warning (Continued)

the seat to the passenger seating position. Push and pull on the seat to make sure it is locked into place.

To fold and tumble the seat from the third row seat:

1. Make sure that there is nothing under, in front of, or on the seat.

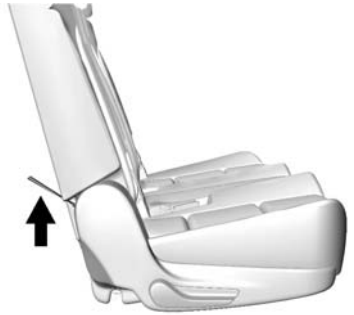

2. Pull the strap on the bottom rear of the second row seat to release the seatback. The seatback will fold forward.

3. Pull the strap again to release the rear of the seat from the floor. The seat will tumble forward.

Automatic Fold and Tumble Feature

⚠ Warning

Do not leave the second row seat in a tumbled position while the vehicle is in motion. A tumbled seat is not locked. It can move when the vehicle is in motion. People in the vehicle could be injured in a sudden stop or crash. Be sure to return the seat to the passenger seating position before driving the vehicle. Push and pull on the seat to make sure it is locked into place.

⚠ Warning

Automatically folding and tumbling the seat when someone is sitting in the seat, could cause injury to the person sitting there.

(Continued)

Warning (Continued)

Always make sure there is no one sitting in the seat before pressing the automatic seat release button.

⚠ Caution

Folding a rear seat with the safety belts still fastened may cause damage to the seat or the safety belts. Always unbuckle the safety belts and return them to their normal stowed position before folding a rear seat.

The transmission must be in P (Park) for this feature to work.

Folding and Tumbling the Seat

To fold and tumble the seat:

1. Make sure that there is nothing under, in front of, or on the seat.

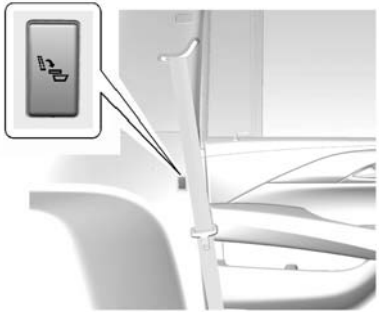

Driver Side Rear Panel Button Shown

2. Press the automatic seat release button on the panel behind the rear doors. The seatback automatically folds flat.
3. Press the button again to release the rear of the seat from the floor. The seat will tumble forward.

Folding and Tumbling the Seat from the Cargo Area

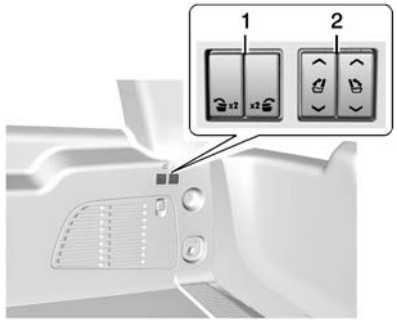

1. Second Row Power Seat Buttons
2. Third Row Power Seat Buttons

To fold and tumble the seat from the cargo area:

1. Make sure that there is nothing under, in front of, or on the seat.
2. Press the button (1) on the side trim of the cargo area to fold the seatback.

   The left button folds the left seatback, and the right button folds the right seatback.
3. Press the button again to release the rear of the seat from the floor. The seat will tumble forward.

The buttons (2) can be used to fold the third row seatbacks from the cargo area. See *Third Row Seats on page 3-16*.

Returning the Seat to the Sitting Position

⚠ Warning

If either seatback is not locked, it could move forward in a sudden stop or crash. That could cause injury to the person sitting there. Always push and pull on the seatbacks to be sure they are locked.

To return the seat to the sitting position from the tumbled position:

1. Pull the seat down until it latches to the floor. The seatback cannot be raised if the seat is not latched to the floor.
2. Lift the seatback and push it rearward. Push and pull on the seatback to make sure it is locked.
3. For the 60/40 split-bench seat, make sure the safety belt in the center seating position is not caught between the two seats and is not twisted.

Third Row Seats

Folding the Seatback

⚠ Caution

Folding a rear seat with the safety belts still fastened may cause damage to the seat or the safety

(Continued)

Caution (Continued)

belts. Always unbuckle the safety belts and return them to their normal stowed position before folding a rear seat.

The transmission must be in P (Park) for this feature to work.

The third row seatbacks can be folded to increase cargo space.

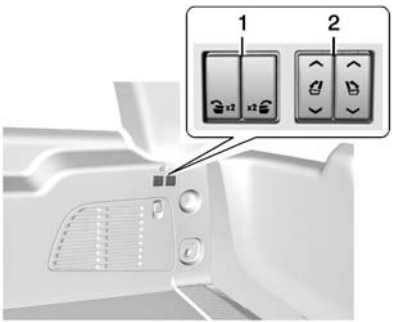

1. Second Row Power Seat Buttons
2. Third Row Power Seat Buttons

To fold the seatback:

1. Open the liftgate to access the controls for the seat.
2. Make sure that there is nothing under, in front of, or on the seat.
3. Fully lower the head restraints. See *Head Restraints on page 3-2*. Put the second row seatback in the upright position. See *Second Row Seats on page 3-11*

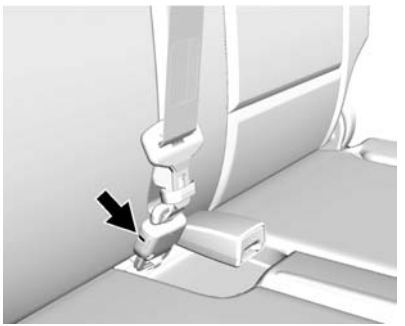

4. Disconnect the rear safety belt mini-latch, using a key in the slot on the mini-buckle, and let the belt retract into the headliner. Stow the mini-latch in the holder in the headliner.
5. Press and hold the switch (2) on the side trim of the cargo area to fold the seatback.

   The left switch folds the left seatback, and the right switch folds the right seatback.
6. Repeat the steps for the other seatback, if desired.

The switches (1) can be used to fold or fold and tumble the second row seats from the cargo area. See *Second Row Seats on page 3-11*.

Returning the Seatback to the Upright Position

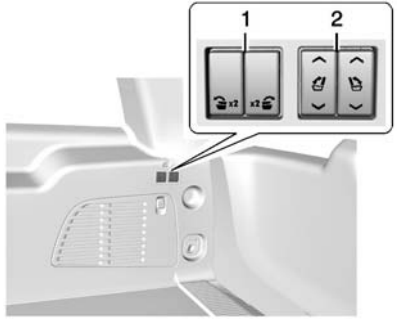

1. Second Row Power Seat Buttons
2. Third Row Power Seat Buttons

To return the seatback to the upright position:

1. Open the liftgate to access the controls for the seat.
2. Press and hold the switch (2) on the side trim of the cargo area to raise the seatback.

   The left switch raises the left seatback, and the right switch raises the right seatback.

⚠ Warning

A safety belt that is improperly routed, not properly attached, or twisted will not provide the protection needed in a crash. The person wearing the belt could be seriously injured. After raising the rear seatback, always check to be sure that the safety belts are properly routed and attached, and are not twisted.

3. Reconnect the center safety belt mini-latch to the mini-buckle. Do not let it twist.
4. Pull on the safety belt to be sure the mini-latch is secure.
5. Repeat the steps for the other seatback, if desired.

Safety Belts

This section of the manual describes how to use safety belts properly. It also describes some things not to do with safety belts.

⚠ Warning

Do not let anyone ride where a safety belt cannot be worn properly. In a crash, if you or your passenger(s) are not wearing safety belts, injuries can be much worse than if you are wearing safety belts. You can be seriously injured or killed by hitting things inside the vehicle harder or by being ejected from the vehicle. In addition, anyone who is not buckled up can strike other passengers in the vehicle.

(Continued)

Warning (Continued)

It is extremely dangerous to ride in a cargo area, inside or outside of a vehicle. In a collision, passengers riding in these areas are more likely to be seriously injured or killed. Do not allow passengers to ride in any area of the vehicle that is not equipped with seats and safety belts.

Always wear a safety belt, and check that all passenger(s) are restrained properly too.

This vehicle has indicators as a reminder to buckle the safety belts. See *Safety Belt Reminders on page 5-16*.

Why Safety Belts Work

When riding in a vehicle, you travel as fast as the vehicle does. If the vehicle stops suddenly, you keep going until something stops you. It could be the windshield, the instrument panel, or the safety belts!

When you wear a safety belt, you and the vehicle slow down together. There is more time to stop because you stop over a longer distance and, when worn properly, your strongest bones take the forces from the safety belts. That is why wearing safety belts makes such good sense.

Questions and Answers About Safety Belts

Q: Will I be trapped in the vehicle after a crash if I am wearing a safety belt?

A: You *could* be — whether you are wearing a safety belt or not. Your chance of being conscious during and after a crash, so you *can* unbuckle and get out, is *much* greater if you are belted.

Q: If my vehicle has airbags, why should I have to wear safety belts?

A: Airbags are supplemental systems only; so they work *with* safety belts — not instead of them. Whether or not an airbag is provided, all occupants still have to buckle up to get the most protection.

Also, in nearly all states and in all Canadian provinces, the law requires wearing safety belts.

How to Wear Safety Belts Properly

This section is only for people of adult size.

There are special things to know about safety belts and children. And there are different rules for smaller children and infants. If a child will be riding in the vehicle, see *Older Children on page 3-41* or *Infants and Young Children on page 3-43*. Follow those rules for everyone's protection.

It is very important for all occupants to buckle up. Statistics show that unbelted people are hurt more often in crashes than those who are wearing safety belts.

There are important things to know about wearing a safety belt properly.

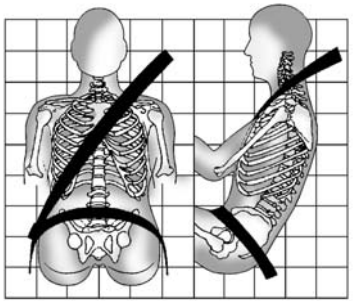

- Sit up straight and always keep your feet on the floor in front of you.
- Always use the correct buckle for your seating position.
- Wear the lap part of the belt low and snug on the hips, just touching the thighs. In a crash, this applies force to the strong pelvic bones and you would be less likely to slide under the lap belt. If you slid under it, the belt would apply force on your abdomen. This could cause serious or even fatal injuries.
- Wear the shoulder belt over the shoulder and across the chest. These parts of the body are best able to take belt restraining forces. The shoulder belt locks if there is a sudden stop or crash.

⚠ Warning

You can be seriously injured, or even killed, by not wearing your safety belt properly.

- Never allow the lap or shoulder belt to become loose or twisted.
- Never wear the shoulder belt under both arms or behind your back.
- Never route the lap or shoulder belt over an armrest.

Lap-Shoulder Belt

All seating positions in the vehicle have a lap-shoulder belt.

If you are using a rear seating position with a detachable safety belt, and the safety belt is not attached, see *Third Row Seats on page 3-16* for instruction on reconnecting the safety belt to the mini-buckle.

The following instructions explain how to wear a lap-shoulder belt properly.

1. Adjust the seat, if the seat is adjustable, so you can sit up straight. To see how, see “Seats” in the Index.

2. Pick up the latch plate and pull the belt across you. Do not let it get twisted.

   The lap-shoulder belt may lock if you pull the belt across you very quickly. If this happens, let the belt go back slightly to unlock it. Then pull the belt across you more slowly.

   If the shoulder portion of a passenger belt is pulled out all the way, the child restraint locking feature may be engaged. If this happens, let the belt go back all the way and start again.

   Engaging the child restraint locking feature in the front outboard seating position may affect the passenger sensing system. See *Passenger Sensing System on page 3-34*.

For front seating positions, if the webbing locks in the latch plate before it reaches the buckle, tilt the latch plate flat to unlock.

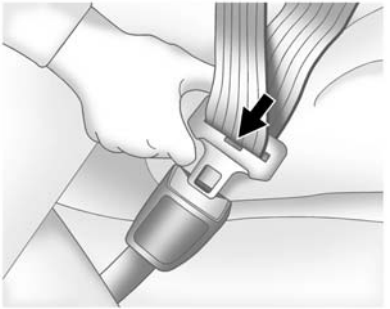

3. Push the latch plate into the buckle until it clicks. If you find that the latch plate will not go fully into the buckle, see if you are using the correct buckle.

   Pull up on the latch plate to make sure it is secure. If the belt is not long enough, see *Safety Belt Extender on page 3-26*.

   Position the release button on the buckle so that the safety belt could be quickly unbuckled if necessary.

4. If equipped with a shoulder belt height adjuster, move it to the height that is right for you. See “Shoulder Belt Height Adjuster” in this section for instructions on use and important safety information.

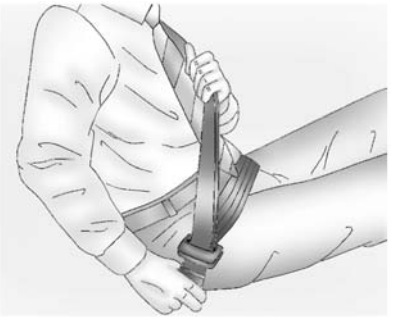

5. To make the lap part tight, pull up on the shoulder belt.

   For third row seats, it may be necessary to pull stitching on the safety belt through the latch plate to fully tighten the lap belt on smaller occupants.

To unlatch the belt, push the button on the buckle. The belt should return to its stowed position.

For third row seats, slide the latch plate up the safety webbing when the safety belt is not in use. The latch plate should rest on the stitching on the safety belt.

Before a door is closed, be sure the safety belt is out of the way. If a door is slammed against a safety belt, damage can occur to both the belt and the vehicle.

Shoulder Belt Height Adjuster

The vehicle has a shoulder belt height adjuster for the driver and front outboard passenger positions.

Adjust the height so the shoulder portion of the belt is on the shoulder and not falling off of it. The belt should be close to, but not contacting, the neck. Improper shoulder belt height adjustment could reduce the effectiveness of the safety belt in a crash. See *How to Wear Safety Belts Properly on page 3-19*.

Push down on the release button to move the height adjuster to the desired position.

Move the adjuster up by pushing up on the shoulder belt guide.

After the adjuster is set to the desired position, try to move it down without pushing the release button to make sure it has locked into position.

Automatic Safety Belt Tightening System

If the vehicle has Adaptive Cruise Control (ACC), it also may have the Automatic Safety Belt Tightening System. See *Adaptive Cruise Control on page 9-48*.

The system activates during emergency braking and/or sudden driving maneuvers and releases when driving conditions return to normal.

The system will not activate if the Traction Control/Electronic Stability Control system is not functioning properly. See *Traction Control/ Electronic Stability Control on page 9-42*. If there is a problem with the Automatic Safety Belt Tightening System, a message displays on the Driver Information Center (DIC). See *Safety Belt Messages on page 5-42*. Other safety belt functions are not affected by the Automatic Safety Belt Tightening System.

Safety Belt Pretensioners

This vehicle has safety belt pretensioners for front outboard occupants. Although the safety belt pretensioners cannot be seen, they are part of the safety belt assembly. They can help tighten the safety belts during the early stages of a moderate to severe frontal, near frontal, or rear crash if the threshold conditions for pretensioner activation are met. Safety belt pretensioners can also help tighten the safety belts in a side crash or a rollover event.

Pretensioners work only once. If the pretensioners activate in a crash, the pretensioners and probably other parts of the vehicle's safety belt system will need to be replaced. See *Replacing Safety Belt System Parts after a Crash on page 3-26*.

Rear Safety Belt Comfort Guides

⚠ Warning

A safety belt that is not properly worn may not provide the protection needed in a crash. The person wearing the belt could be seriously injured. The shoulder belt should go over the shoulder and across the chest. These parts of the body are best able to take belt restraining forces.

Rear safety belt comfort guides may provide added safety belt comfort for older children who have outgrown booster seats and for some adults. When installed on a shoulder belt, the comfort guide positions the shoulder belt away from the neck and head.

Rear Outboard Seating Positions

There are comfort guides for the rear outboard seating positions for the second row and the third row outboard seating positions. The comfort guides are stored on a clip on the interior trim next to the outboard seatback.

To install:

1. Remove the guide from its storage clip on the interior trim next to the outboard seatback.

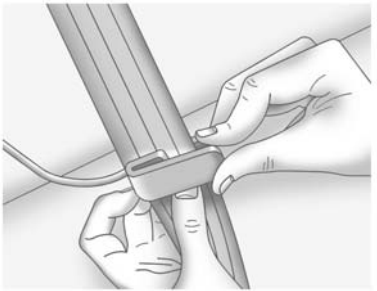

2. Place the guide over the belt, and insert the two edges of the belt into the slots of the guide.

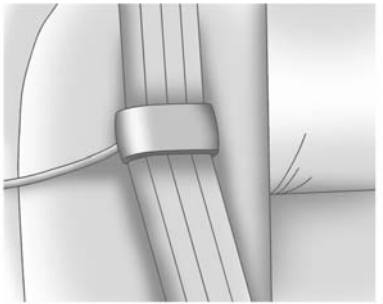

3. Be sure that the belt is not twisted and it lies flat. The elastic cord must be behind the belt with the plastic guide on the front.

4. Buckle, position, and release the safety belt as described previously in this section. Make sure the shoulder portion of the belt is on the shoulder and not falling off of it. The belt should be close to, but not contacting, the neck.

To remove and store the comfort guide, squeeze the belt edges together so that the safety belt can be removed from the guide. Slide the guide onto its storage clip.

Third Row Center Seating Position

Comfort guides for the third row center seating position are available from your dealer. Instructions are included with the guide.

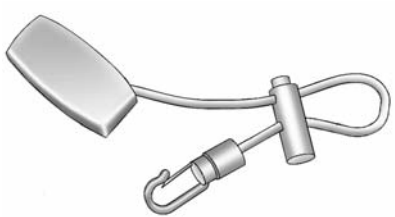

An adjustable comfort guide is used for the center seating position in the third row seat. The adjustable comfort guide attaches to the head restraint post on the inboard side of the left rear outboard seat.

Safety Belt Use During Pregnancy

Safety belts work for everyone, including pregnant women. Like all occupants, they are more likely to be seriously injured if they do not wear safety belts.

A pregnant woman should wear a lap-shoulder belt, and the lap portion should be worn as low as possible, below the rounding, throughout the pregnancy.

The best way to protect the fetus is to protect the mother. When a safety belt is worn properly, it is more likely that the fetus will not be hurt in a crash. For pregnant women, as for anyone, the key to making safety belts effective is wearing them properly.

Safety Belt Extender

If the vehicle's safety belt will fasten around you, you should use it.

But if a safety belt is not long enough, your dealer will order you an extender. When you go in to order it, take the heaviest coat you will wear, so the extender will be long enough for you. To help avoid personal injury, do not let someone else use it, and use it only for the seat it is made to fit. The extender has been designed for adults. Never use it for securing child seats. To wear it, attach it to the regular safety belt. See the instruction sheet that comes with the extender.

Safety System Check

Now and then, check that the safety belt reminder light, safety belts, buckles, latch plates, retractors, and anchorages are all working properly. Look for any other loose or damaged safety belt system parts that might keep a safety belt system from doing its job. See your dealer to have it repaired. Torn or frayed safety belts may not protect you in a crash. They can rip apart under impact forces. If a belt is torn or frayed, get a new one right away.

Make sure the safety belt reminder light is working. See *Safety Belt Reminders on page 5-16*.

Keep safety belts clean and dry. See *Safety Belt Care on page 3-26*.

Safety Belt Care

Keep belts clean and dry.

⚠ Warning

Do not bleach or dye safety belts. It may severely weaken them. In a crash, they might not be able to provide adequate protection. Clean safety belts only with mild soap and lukewarm water.

Replacing Safety Belt System Parts after a Crash

⚠ Warning

A crash can damage the safety belt system in the vehicle. A damaged safety belt system may not properly protect the person using it, resulting in serious injury or even death in a crash. To help make sure the safety belt systems are working properly after a crash, have them

(Continued)

Warning (Continued)

inspected and any necessary replacements made as soon as possible.

After a minor crash, replacement of safety belts may not be necessary. But the safety belt assemblies that were used during any crash may have been stressed or damaged. See your dealer to have the safety belt assemblies inspected or replaced.

New parts and repairs may be necessary even if the safety belt system was not being used at the time of the crash.

Have the safety belt pretensioners checked if the vehicle has been in a crash, or if the airbag readiness light stays on after you start the vehicle or while you are driving. See *Airbag Readiness Light on page 5-16*.

Airbag System

The vehicle has the following airbags:

- A frontal airbag for the driver.
- A frontal airbag for the front outboard passenger.
- A front center airbag for the driver and front outboard passenger.
- A seat-mounted side impact airbag for the driver.
- A seat-mounted side impact airbag for the front outboard passenger.
- A roof-rail airbag for the driver and for the second and third row passengers seated directly behind the driver.
- A roof-rail airbag for the front outboard passenger and the second and third row passengers seated directly behind the front outboard passenger.

All vehicle airbags have the word AIRBAG on the trim or on an attached label near the deployment opening.

For frontal airbags, the word AIRBAG is on the center of the steering wheel for the driver and on the instrument panel for the front outboard passenger.

For the front center airbag, the word AIRBAG is on the inboard side of the driver seatback.

For seat-mounted side impact airbags, the word AIRBAG is on the side of the seatback closest to the door.

For roof-rail airbags, the word AIRBAG is on the ceiling or trim.

Airbags are designed to supplement the protection provided by safety belts. Even though today's airbags are also designed to help reduce the risk of injury from the force of an inflating bag, all airbags must inflate very quickly to do their job.

Here are the most important things to know about the airbag system:

⚠ Warning

You can be severely injured or killed in a crash if you are not wearing your safety belt, even with airbags. Airbags are designed to work with safety belts, not replace them. Also, airbags are not designed to inflate in every crash. In some crashes safety belts are the only restraint. See *When Should an Airbag Inflate? on page 3-31*.

Wearing your safety belt during a crash helps reduce the chance of hitting things inside the vehicle or being ejected from it. Airbags are “supplemental restraints” to the safety belts. Everyone in the vehicle should wear a safety belt properly, whether or not there is an airbag for that person.

⚠ Warning

Because airbags inflate with great force and faster than the blink of an eye, anyone who is up against, or very close to any airbag when it inflates can be seriously injured or killed. Do not sit unnecessarily close to any airbag, as you would be if sitting on the edge of the seat or leaning forward. Safety belts help keep you in position before and during a crash. Always wear a safety belt, even with airbags. The driver should sit as far back as possible while still maintaining control of the vehicle. The safety belts and the front outboard passenger airbags are most effective when you are sitting well back and upright in the seat with both feet on the floor.

(Continued)

Warning (Continued)

Occupants should not lean on or sleep against the front center armrest or console in vehicles with a front center airbag.

Occupants should not lean on or sleep against the door or side windows in seating positions with seat-mounted side impact airbags and/or roof-rail airbags.

⚠ Warning

Children who are up against, or very close to, any airbag when it inflates can be seriously injured or killed. Always secure children properly in the vehicle. To read how, see *Older Children on page 3-41* or *Infants and Young Children on page 3-43*.

There is an airbag readiness light on the instrument cluster, which shows the airbag symbol.

The system checks the airbag electrical system for malfunctions. The light tells you if there is an electrical problem. See *Airbag Readiness Light on page 5-16*.

Where Are the Airbags?

The driver frontal airbag is in the center of the steering wheel.

The front outboard passenger frontal airbag is in the passenger side instrument panel.

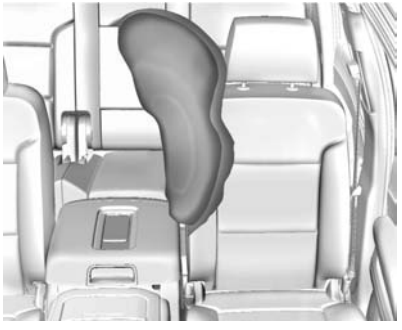

The front center airbag is in the inboard side of the driver seatback.

Driver Side Shown, Passenger Side Similar

The driver and front outboard passenger seat-mounted side impact airbags are in the side of the seatbacks closest to the door.

Driver Side Shown, Passenger Side Similar

The roof-rail airbags for the driver, front outboard passenger, and second and third row outboard passengers are in the ceiling above the side windows.

⚠ Warning

If something is between an occupant and an airbag, the airbag might not inflate properly or it might force the object into

(Continued)

Warning (Continued)

that person causing severe injury or even death. The path of an inflating airbag must be kept clear. Do not put anything between an occupant and an airbag, and do not attach or put anything on the steering wheel hub or on or near any other airbag covering.

Do not use seat or console accessories that block the inflation path of a seat-mounted side impact airbag or the front center airbag.

Never secure anything to the roof of a vehicle with roof-rail airbags by routing a rope or tie-down through any door or window opening. If you do, the path of an inflating roof-rail airbag will be blocked.

When Should an Airbag Inflate?

This vehicle is equipped with airbags. See *Airbag System on page 3-27*. Airbags are designed to inflate if the impact exceeds the specific airbag system's deployment threshold. Deployment thresholds are used to predict how severe a crash is likely to be in time for the airbags to inflate and help restrain the occupants. The vehicle has electronic sensors that help the airbag system determine the severity of the impact. Deployment thresholds can vary with specific vehicle design.

Frontal airbags are designed to inflate in moderate to severe frontal or near frontal crashes to help reduce the potential for severe injuries, mainly to the driver's or front outboard passenger's head and chest.

Whether the frontal airbags will or should inflate is not based primarily on how fast the vehicle is traveling. It depends on what is hit, the direction of the impact, and how quickly the vehicle slows down.

Frontal airbags may inflate at different crash speeds depending on whether the vehicle hits an object straight on or at an angle, and whether the object is fixed or moving, rigid or deformable, narrow or wide.

Frontal airbags are not intended to inflate during vehicle rollovers, rear impacts, or many side impacts.

In addition, the vehicle has advanced technology frontal airbags. Advanced technology frontal airbags adjust the restraint according to crash severity.

The vehicle also has a seat position sensor that enables the sensing system to monitor the position of the driver seat. The seat position sensor provides information that is used to adjust the deployment of the driver frontal airbag.

The front center airbag is designed to inflate in moderate to severe side crashes depending upon the location of the impact, when either side of the vehicle is struck. In addition, the front center airbag is designed to inflate when the sensing system predicts that the vehicle is about to roll over on its side. The front center airbag is not designed to inflate in frontal impacts, near frontal impacts, or rear impacts.

Seat-mounted side impact airbags are designed to inflate in moderate to severe side crashes depending on the location of the impact. Seat-mounted side impact airbags are not designed to inflate in frontal impacts, near frontal impacts, rollovers, or rear impacts.
A seat-mounted side impact airbag is designed to inflate on the side of the vehicle that is struck.

Roof-rail airbags are designed to inflate in moderate to severe side crashes depending on the location of the impact. In addition, these roof-rail airbags are designed to inflate during a rollover or in a severe frontal impact. Roof-rail airbags are not designed to inflate in rear impacts. Both roof-rail airbags will inflate when either side of the vehicle is struck, if the sensing system predicts that the vehicle is about to roll over on its side, or in a severe frontal impact.

In any particular crash, no one can say whether an airbag should have inflated simply because of the vehicle damage or the repair costs.

What Makes an Airbag Inflate?

In a deployment event, the sensing system sends an electrical signal triggering a release of gas from the inflator. Gas from the inflator fills the airbag causing the bag to break out of the cover. The inflator, the airbag, and related hardware are all part of the airbag module.

For airbag locations, see *Where Are the Airbags? on page 3-29*.

How Does an Airbag Restrain?

In moderate to severe frontal or near frontal collisions, even belted occupants can contact the steering wheel or the instrument panel. In moderate to severe side collisions, even belted occupants can contact the inside of the vehicle.

Airbags supplement the protection provided by safety belts by distributing the force of the impact more evenly over the occupant's body.

Rollover capable roof-rail airbags are also designed to help contain the head and chest of occupants in the outboard seating positions in the first, second, and third rows. The rollover capable roof-rail airbags are designed to help reduce the risk of full or partial ejection in rollover events, although no system can prevent all such ejections.

But airbags would not help in many types of collisions, primarily because the occupant's motion is not toward those airbags. See *When Should an Airbag Inflate? on page 3-31* for more information.

Airbags should never be regarded as anything more than a supplement to safety belts.

What Will You See after an Airbag Inflates?

After the frontal airbags and seat-mounted side impact airbags inflate, they quickly deflate, so quickly that some people may not even realize an airbag inflated. The front center airbag and roof-rail airbags may still be at least partially inflated for some time after they inflate. Some components of the airbag module may be hot for several minutes. For location of the airbags, see *Where Are the Airbags? on page 3-29*.

The parts of the airbag that come into contact with you may be warm, but not too hot to touch. There may be some smoke and dust coming from the vents in the deflated airbags. Airbag inflation does not prevent the driver from seeing out of the windshield or being able to steer the vehicle, nor does it prevent people from leaving the vehicle.

⚠ Warning

When an airbag inflates, there may be dust in the air. This dust could cause breathing problems for people with a history of asthma or other breathing trouble. To avoid this, everyone in the vehicle should get out as soon as it is safe to do so. If you have breathing problems but cannot get out of the vehicle after an airbag inflates, then get fresh air by opening a window or a door. If you experience breathing

(Continued)

Warning (Continued)

problems following an airbag deployment, you should seek medical attention.

The vehicle has a feature that may automatically unlock the doors, turn on the interior lamps and hazard warning flashers, and shut off the fuel system after the airbags inflate. The feature may also activate, without airbag inflation, after an event that exceeds a predetermined threshold. You can lock the doors, and turn off the interior lamps and hazard warning flashers by using the controls for those features.

⚠ Warning

A crash severe enough to inflate the airbags may have also damaged important functions in the vehicle, such as the fuel

(Continued)

Warning (Continued)

system, brake and steering systems, etc. Even if the vehicle appears to be drivable after a moderate crash, there may be concealed damage that could make it difficult to safely operate the vehicle.

Use caution if you should attempt to restart the engine after a crash has occurred.

In many crashes severe enough to inflate the airbag, windshields are broken by vehicle deformation. Additional windshield breakage may also occur from the front outboard passenger airbag.

- Airbags are designed to inflate only once. After an airbag inflates, you will need some new parts for the airbag system. If you do not get them, the airbag system will not be there to help protect you in another crash. A new system will include airbag modules and possibly other parts. The service manual for the vehicle covers the need to replace other parts.
- The vehicle has a crash sensing and diagnostic module which records information after a crash. See *Vehicle Data Recording and Privacy on page 13-13* and *Event Data Recorders on page 13-14*.
- Let only qualified technicians work on the airbag systems. Improper service can mean that an airbag system will not work properly. See your dealer for service.

Passenger Sensing System

The vehicle has a passenger sensing system for the front outboard passenger position. The passenger airbag status indicator will light on the overhead console when the vehicle is started.

United States

Canada and Mexico

The words ON and OFF, or the symbols for on and off, will be visible during the system check. When the system check is complete, either the word ON or OFF, or the symbol for on or off, will be visible. See *Passenger Airbag Status Indicator on page 5-17*.

The passenger sensing system turns off the front outboard passenger frontal airbag under

certain conditions. No other airbag is affected by the passenger sensing system.

The passenger sensing system works with sensors that are part of the front outboard passenger seat and safety belt. The sensors are designed to detect the presence of a properly seated occupant and determine if the front outboard passenger frontal airbag should be allowed to inflate or not.

According to accident statistics, children are safer when properly secured in a rear seat in the correct child restraint for their weight and size.

Whenever possible, children aged 12 and under should be secured in a rear seating position.

Never put a rear-facing child seat in the front. This is because the risk to the rear-facing child is so great, if the airbag inflates.

⚠ Warning

A child in a rear-facing child restraint can be seriously injured or killed if the passenger frontal airbag inflates. This is because the back of the rear-facing child restraint would be very close to the inflating airbag. A child in a forward-facing child restraint can be seriously injured or killed if the passenger frontal airbag inflates and the passenger seat is in a forward position.

Even if the passenger sensing system has turned off the passenger frontal airbag, no system is fail-safe. No one can guarantee that an airbag will not inflate under some unusual circumstance, even though the airbag is off.

(Continued)

Warning (Continued)

Secure rear-facing child restraints in a rear seat, even if the airbag is off. If you secure a forward-facing child restraint in the front outboard passenger seat, always move the seat as far back as it will go. It is better to secure the child restraint in a rear seat.

The passenger sensing system is designed to turn off the front outboard passenger frontal airbag if:

- The front outboard passenger seat is unoccupied.
- The system determines an infant is present in a child restraint.
- A front outboard passenger takes his/her weight off of the seat for a period of time.
- There is a critical problem with the airbag system or the passenger sensing system.

When the passenger sensing system has turned off the front outboard passenger frontal airbag, the off indicator will light and stay lit as a reminder that the airbag is off. See *Passenger Airbag Status Indicator on page 5-17*.

The passenger sensing system is designed to turn on the front outboard passenger frontal airbag anytime the system senses that a person of adult size is sitting properly in the front outboard passenger seat.

When the passenger sensing system has allowed the airbag to be enabled, the on indicator will light and stay lit as a reminder that the airbag is active.

For some children, including children in child restraints, and for very small adults, the passenger sensing system may or may not turn off the front outboard passenger frontal airbag, depending upon the person's seating posture and body build. Everyone in the vehicle who has outgrown child restraints should wear a safety belt properly — whether or not there is an airbag for that person.

⚠ Warning

If the airbag readiness light ever comes on and stays on, it means that something may be wrong with the airbag system. To help avoid injury to yourself or others, have the vehicle serviced right away. See *Airbag Readiness Light on page 5-16* for more information, including important safety information.

If the On Indicator is Lit for a Child Restraint

The passenger sensing system is designed to turn off the front outboard passenger frontal airbag if the system determines that an infant is present in a child restraint. If a child restraint has been installed and the on indicator is lit:

1. Turn the vehicle off.
2. Remove the child restraint from the vehicle.
3. Remove any additional items from the seat such as blankets, cushions, seat covers, seat heaters, or seat massagers.
4. Reinstall the child restraint following the directions provided by the child restraint manufacturer and refer to *Securing Child Restraints (Rear Seat) on page 3-57* or *Securing Child Restraints (Front Passenger Seat) on page 3-59*. Even if the child restraint is equipped with a safety belt

lock-off, make sure the safety belt retractor is locked by pulling the shoulder belt all the way out of the retractor before tightening the safety belt. When the retractor lock is set, the belt can be tightened but not pulled out of the retractor.

5. If, after reinstalling the child restraint and restarting the vehicle, the on indicator is still lit, turn the vehicle off. Then slightly recline the vehicle seatback and adjust the seat cushion, if adjustable, to make sure that the vehicle seatback is not pushing the child restraint into the seat cushion.

   Also make sure the child restraint is not trapped under the vehicle head restraint. If this happens, adjust the head restraint. See *Head Restraints on page 3-2*.

6. Restart the vehicle.

The passenger sensing system may or may not turn off the airbag for a child in a child restraint depending upon the child's size. It is better to secure the child restraint in a rear seat.

If the Off Indicator Is Lit for an Adult-Sized Occupant

If a person of adult size is sitting in the front outboard passenger seat, but the off indicator is lit, it could be because that person is not sitting properly in the seat or that the child restraint locking feature is engaged.

If this happens, use the following steps to allow the system to detect that person and enable the front outboard passenger frontal airbag:

1. Turn the vehicle off.
2. Remove any additional material from the seat, such as blankets, cushions, seat covers, seat heaters, or seat massagers.
3. Place the seatback in the fully upright position.
4. Have the person sit upright in the seat, centered on the seat cushion, with legs comfortably extended.
5. If the shoulder portion of the belt is pulled out all the way, the child restraint locking feature will be engaged. This may unintentionally cause the passenger sensing system to turn the airbag off for some adult-sized occupants. If this happens, unbuckle the belt, let the belt go back all the way, and

then buckle the belt again without pulling the belt out all the way.

6. Restart the vehicle and have the person remain in this position for two to three minutes after the on indicator is lit.

⚠ Warning

If the front outboard passenger airbag is turned off for an adult-sized occupant, the airbag will not be able to inflate and help protect that person in a crash, resulting in an increased risk of serious injury or even death. An adult-sized occupant should not ride in the front outboard passenger seat, if the passenger airbag off indicator is lit.

Additional Factors Affecting System Operation

Safety belts help keep the passenger in position on the seat during vehicle maneuvers and braking, which helps the passenger sensing system maintain the passenger airbag status. See “Safety Belts” and “Child Restraints” in the Index for additional information about the importance of proper restraint use.

A thick layer of additional material, such as a blanket or cushion, or aftermarket equipment such as seat covers, seat heaters, and seat massagers can affect how well the passenger sensing system operates. We recommend that you not use seat covers or other aftermarket equipment except when approved by GM for your specific vehicle. See *Adding Equipment to the Airbag-Equipped Vehicle on page 3-39* for more information about modifications that can affect how the system operates.

The on indicator may be lit if an object, such as a briefcase, handbag, grocery bag, laptop, or other electronic device, is put on an unoccupied seat. If this is not desired, remove the object from the seat.

⚠ Warning

Stowing of articles under the passenger seat or between the passenger seat cushion and seatback may interfere with the proper operation of the passenger sensing system.

Servicing the Airbag-Equipped Vehicle

Airbags affect how the vehicle should be serviced. There are parts of the airbag system in several places around the vehicle. Your dealer and the service manual have information about servicing the vehicle and the airbag system.

To purchase a service manual, see *Service Publications Ordering Information on page 13-10*.

⚠ Warning

For up to 10 seconds after the vehicle is turned off and the battery is disconnected, an airbag can still inflate during improper service. You can be injured if you are close to an airbag when it inflates. Avoid yellow connectors. They are probably part of the airbag system. Be sure to follow proper service procedures, and make sure the person performing work for you is qualified to do so.

Adding Equipment to the Airbag-Equipped Vehicle

Adding accessories that change the vehicle's frame, bumper system, height, front end, or side sheet metal may keep the airbag system from working properly.

The operation of the airbag system can also be affected by changing any parts of the front seats, safety belts, airbag sensing and diagnostic module, steering wheel, instrument panel, any airbag module, ceiling or pillar garnish trim, overhead console, front sensors, side impact sensors, airbag wiring, or front center console.

Your dealer and the service manual have information about the location of the airbag sensors, sensing and diagnostic module, and airbag wiring.

In addition, the vehicle has a passenger sensing system that includes sensors as part of the front outboard passenger seat. The passenger sensing system may not operate properly if the original seat trim is replaced with non-GM covers, upholstery, or trim; or with GM covers, upholstery, or trim designed for a different vehicle. Any object, such as an aftermarket seat heater or a comfort-enhancing pad or device, installed under or on top of the seat fabric, could also interfere with the operation of the passenger sensing system. This could either prevent proper deployment of the passenger airbag(s) or prevent the passenger sensing system from properly turning off the passenger airbag(s). See *Passenger Sensing System on page 3-34*.

If the vehicle has rollover roof-rail airbags, see *Different Size Tires and Wheels on page 10-56* for additional important information.

If you have to modify your vehicle because you have a disability and you have questions about whether the modifications will affect the vehicle's airbag system, or if you have questions about whether the airbag system will be affected if the vehicle is modified for any other reason, call Customer Assistance. See *Customer Assistance Offices on page 13-3*.

Airbag System Check

The airbag system does not need regularly scheduled maintenance or replacement. Make sure the airbag readiness light is working. See *Airbag Readiness Light on page 5-16*.

⚠ Caution

If an airbag covering is damaged, opened, or broken, the airbag may not work properly. Do not open or break the airbag coverings. If there are any opened or broken airbag coverings, have the airbag covering and/or airbag module replaced. For the location of the airbags, see *Where Are the Airbags? on page 3-29*. See your dealer for service.

Replacing Airbag System Parts after a Crash

⚠ Warning

A crash can damage the airbag systems in the vehicle.
A damaged airbag system may not work properly and may not protect you and your passenger(s) in a crash, resulting in serious injury or even death.
To help make sure the airbag systems are working properly after a crash, have them inspected and any necessary replacements made as soon as possible.

If an airbag inflates, you will need to replace airbag system parts. See your dealer for service.

If the airbag readiness light stays on after the vehicle is started or comes on when you are driving, the airbag system may not work properly. Have the vehicle serviced right away. See *Airbag Readiness Light on page 5-16*.

Child Restraints

Older Children

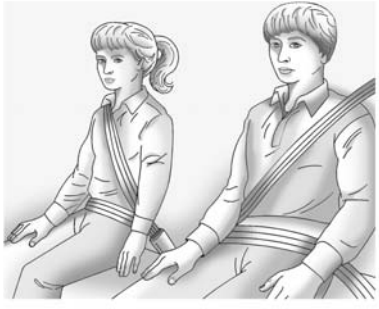

Older children who have outgrown booster seats should wear the vehicle safety belts.

The manufacturer instructions that come with the booster seat state the weight and height limitations for that booster. Use a booster seat with a lap-shoulder belt until the child passes the fit test below:

- Sit all the way back on the seat. Do the knees bend at the seat edge? If yes, continue. If no, return to the booster seat.
- Buckle the lap-shoulder belt. Does the shoulder belt rest on the shoulder? If yes, continue. If no, try using the rear safety belt comfort guide, if available. See “Rear Safety Belt Comfort Guides” under *Lap-Shoulder Belt on page 3-20*. If a comfort guide is not available, or if the shoulder belt still does not rest on the shoulder, then return to the booster seat.
- Does the lap belt fit low and snug on the hips, touching the thighs? If yes, continue. If no, return to the booster seat.
- Can proper safety belt fit be maintained for the length of the trip? If yes, continue. If no, return to the booster seat.

Q: What is the proper way to wear safety belts?

A: An older child should wear a lap-shoulder belt and get the additional restraint a shoulder belt can provide. The shoulder belt should not cross the face or neck. The lap belt should fit snugly below the hips, just touching the top of the thighs. This applies belt force to the child's pelvic bones in a crash. It should never be worn over the abdomen, which could cause severe or even fatal internal injuries in a crash.

Also see “Rear Safety Belt Comfort Guides” under *Lap-Shoulder Belt on page 3-20*.

According to accident statistics, children are safer when properly restrained in a rear seating position.

In a crash, children who are not buckled up can strike other people who are buckled up, or can be thrown out of the vehicle. Older children need to use safety belts properly.

⚠ Warning

Never allow more than one child to wear the same safety belt. The safety belt cannot properly spread the impact forces. In a crash, they can be crushed together and seriously injured. A safety belt must be used by only one person at a time.

⚠ Warning

Never allow a child to wear the safety belt with the shoulder belt behind their back. A child can be seriously injured by not wearing the lap-shoulder belt properly. In a crash, the child would not be restrained by the shoulder belt. The child could move too far forward increasing the chance of head and neck injury. The child might also slide under the lap

(Continued)

Warning (Continued)

belt. The belt force would then be applied right on the abdomen. That could cause serious or fatal injuries. The shoulder belt should go over the shoulder and across the chest.

Infants and Young Children

Everyone in a vehicle needs protection! This includes infants and all other children. Neither the distance traveled nor the age and size of the traveler changes the need, for everyone, to use safety restraints. In fact, the law in every state in the United States and in every Canadian province says children up to some age must be restrained while in a vehicle.

⚠ Warning

Children can be seriously injured or strangled if a shoulder belt is wrapped around their neck. The shoulder belt can tighten but cannot be loosened if it is locked. The shoulder belt locks when it is pulled all the way out of the retractor. It unlocks when the shoulder belt is allowed to go all

(Continued)

Warning (Continued)

the way back into the retractor, but it cannot do this if it is wrapped around a child's neck. If the shoulder belt is locked and tightened around a child's neck, the only way to loosen the belt is to cut it.

Never leave children unattended in a vehicle and never allow children to play with the safety belts.

Every time infants and young children ride in vehicles, they should have the protection provided by appropriate child restraints. Neither the vehicle's safety belt system nor its airbag system is designed for them.

Children who are not restrained properly can strike other people, or can be thrown out of the vehicle.

⚠ Warning

Never hold an infant or a child while riding in a vehicle. Due to crash forces, an infant or a child will become so heavy it is not possible to hold it during a crash. For example, in a crash at only 40 km/h (25 mph), a 5.5 kg (12 lb) infant will suddenly become a 110 kg (240 lb) force on a person's arms. An infant should be secured in an appropriate restraint.

⚠ Warning

Children who are up against, or very close to, any airbag when it inflates can be seriously injured or killed. Never put a rear-facing child restraint in the front outboard seat. Secure a rear-facing child restraint in a rear seat. It is also better to secure a forward-facing child restraint in a rear seat. If you must secure a forward-facing child restraint in

(Continued)

Warning (Continued)

the front outboard seat, always move the front passenger seat as far back as it will go.

Q: What are the different types of add-on child restraints?

A: Add-on child restraints, which are purchased by the vehicle owner, are available in four basic types. Selection of a particular restraint should take into consideration not only the child's weight, height, and age but also whether or not the restraint will be compatible with the motor vehicle in which it will be used.

For most basic types of child restraints, there are many different models available. When purchasing a child restraint, be sure it is designed to be used in a motor vehicle. If it is, the restraint will have a label saying that it meets federal motor vehicle safety standards.

The restraint manufacturer instructions that come with the restraint state the weight and height limitations for a particular child restraint. In addition, there are many kinds of restraints available for children with special needs.

⚠ Warning

To reduce the risk of neck and head injury during a crash, infants need complete support. In a crash, if an infant is in a rear-facing child restraint, the crash forces can be distributed across the strongest part of an infant's body, the back and shoulders. Infants should always be secured in rear-facing child restraints.

⚠ Warning

A young child's hip bones are still so small that the vehicle's regular safety belt may not remain low on the hip bones, as it should. Instead, it may settle up around the child's abdomen. In a crash, the belt would apply force on a body area that is unprotected by any bony structure. This alone could cause serious or fatal injuries. To reduce the risk of serious or fatal injuries during a crash, young children should always be secured in appropriate child restraints.

Child Restraint Systems

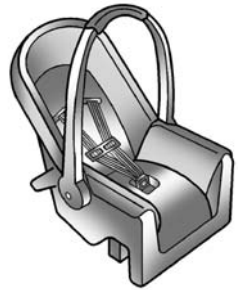

Rear-Facing Infant Seat

A rear-facing infant seat provides restraint with the seating surface against the back of the infant.

The harness system holds the infant in place and, in a crash, acts to keep the infant positioned in the restraint.

Forward-Facing Child Seat

A forward-facing child seat provides restraint for the child's body with the harness.

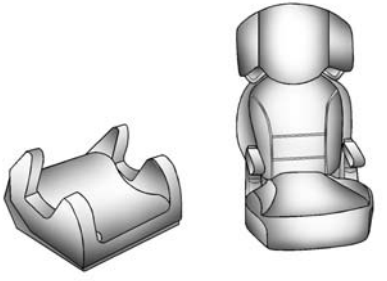

Booster Seats

A booster seat is a child restraint designed to improve the fit of the vehicle's safety belt system.
A booster seat can also help a child to see out the window.

Securing an Add-On Child Restraint in the Vehicle

⚠ Warning

A child can be seriously injured or killed in a crash if the child restraint is not properly secured in the vehicle. Secure the child restraint properly in the vehicle using the vehicle safety belt or LATCH system, following the instructions that came with that child restraint and the instructions in this manual.

To help reduce the chance of injury, the child restraint must be secured in the vehicle. Child restraint systems must be secured in vehicle seats by lap belts or the lap belt portion of a lap-shoulder belt, or by the LATCH system. See *Lower Anchors and Tethers for Children (LATCH System) on page 3-48*.

Children can be endangered in a crash if the child restraint is not properly secured in the vehicle.

When securing an add-on child restraint, refer to the instructions that come with the restraint which may be on the restraint itself or in a booklet, or both, and to this manual. The child restraint instructions are important, so if they are not available, obtain a replacement copy from the manufacturer.

Keep in mind that an unsecured child restraint can move around in a collision or sudden stop and injure people in the vehicle. Be sure to properly secure any child restraint in the vehicle — even when no child is in it.

In some areas of the United States and Canada, Certified Child Passenger Safety Technicians (CPSTs) are available to inspect and demonstrate how to correctly use and install child restraints. In the U.S., refer to the National Highway Traffic Safety Administration (NHTSA) website to locate the nearest child safety seat inspection station. For CPST availability in Canada, check with Transport Canada or the Provincial Ministry of Transportation office.

Securing the Child Within the Child Restraint

⚠ Warning

A child can be seriously injured or killed in a crash if the child is not properly secured in the child restraint. Secure the child properly following the instructions that came with that child restraint.

Where to Put the Restraint

According to accident statistics, children and infants are safer when properly restrained in a child restraint system or infant restraint system secured in a rear seating position.

Whenever possible, children aged 12 and under should be secured in a rear seating position.

The vehicle is equipped with a front center airbag in the inboard side of the driver seat. Even with a front center airbag, a child restraint can be installed in any second row seating position.

Never put a rear-facing child seat in the front. This is because the risk to the rear-facing child is so great if the airbag deploys.

⚠ Warning

A child in a rear-facing child restraint can be seriously injured or killed if the front passenger airbag inflates. This is because the back of the rear-facing child restraint would be very close to the inflating airbag. A child in a forward-facing child restraint can be seriously injured or killed if the

(Continued)

Warning (Continued)

front passenger airbag inflates and the passenger seat is in a forward position.

Even if the passenger sensing system has turned off the front passenger frontal airbag, no system is fail-safe. No one can guarantee that an airbag will not deploy under some unusual circumstance, even though it is turned off.

Secure rear-facing child restraints in a rear seat, even if the airbag is off. If you secure a forward-facing child restraint in the front seat, always move the front passenger seat as far back as it will go. It is better to secure the child restraint in a rear seat.

See *Passenger Sensing System on page 3-34* for additional information.

When securing a child restraint in a rear seating position, study the instructions that came with the child restraint to make sure it is compatible with this vehicle.

Child restraints and booster seats vary considerably in size, and some may fit in certain seating positions better than others.

Depending on where you place the child restraint and the size of the child restraint, you may not be able to access adjacent safety belt assemblies or LATCH anchors for additional passengers or child restraints. Adjacent seating positions should not be used if the child restraint prevents access to or interferes with the routing of the safety belt.

Wherever a child restraint is installed, be sure to secure the child restraint properly.

Keep in mind that an unsecured child restraint can move around in a collision or sudden stop and injure people in the vehicle. Be sure to properly secure any child restraint in the vehicle — even when no child is in it.

Lower Anchors and Tethers for Children (LATCH System)

The LATCH system secures a child restraint during driving or in a crash. LATCH attachments on the child restraint are used to attach the child restraint to the anchors in the vehicle. The LATCH system is designed to make installation of a child restraint easier.

In order to use the LATCH system in your vehicle, you need a child restraint that has LATCH attachments. LATCH-compatible rear-facing and forward-facing child seats can be properly installed using either the LATCH anchors or the vehicle's safety belts. Do not use both the safety belts and the LATCH anchorage system to secure a rear-facing or forward-facing child seat.

Booster seats use the vehicle's safety belts to secure the child in the booster seat. If the manufacturer recommends that the booster seat be secured with the LATCH system, this can be done as long as the booster seat can be positioned properly and there is no interference with the proper positioning of the lap-shoulder belt on the child.

Make sure to follow the instructions that came with the child restraint, and also the instructions in this manual.

When installing a child restraint with a top tether, you must also use either the lower anchors or the safety belts to properly secure the child restraint. A child restraint must never be installed using only the top tether and anchor.

The LATCH anchorage system can be used until the combined weight of the child plus the child restraint is 29.5 kg (65 lbs). Use the safety belt alone instead of the LATCH anchorage system once the combined weight is more than 29.5 kg (65 lbs).

The following explains how to attach a child restraint with these attachments in the vehicle.

Not all vehicle seating positions or child restraints have lower anchors and attachments or top tether anchors and attachments.

Lower Anchors

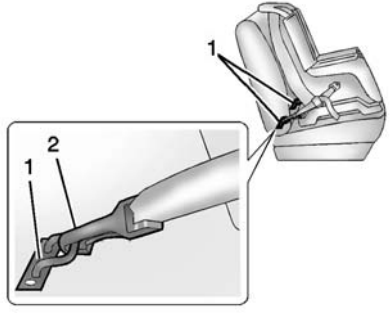

Lower anchors (1) are metal bars built into the vehicle. There are two lower anchors for each LATCH seating position that will accommodate a child restraint with lower attachments (2).

Top Tether Anchor

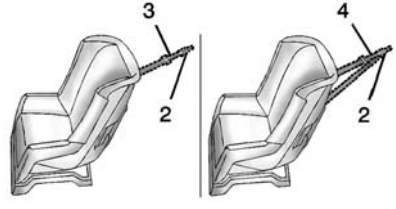

A top tether (3, 4) anchors the top of the child restraint to the vehicle. A top tether anchor is built into the vehicle. The top tether attachment (2) on the child restraint connects to the top tether anchor in the vehicle in order to reduce the

forward movement and rotation of the child restraint during driving or in a crash.

The child restraint may have a single tether (3) or a dual tether (4). Either will have a single attachment (2) to secure the top tether to the anchor.

Some child restraints with top tethers are designed for use with or without the top tether being attached. Others require the top tether always to be attached. In Canada, the law requires that forward-facing child restraints have a top tether, and that the tether be attached. Be sure to read and follow the instructions for your child restraint.

Lower Anchor and Top Tether Anchor Locations

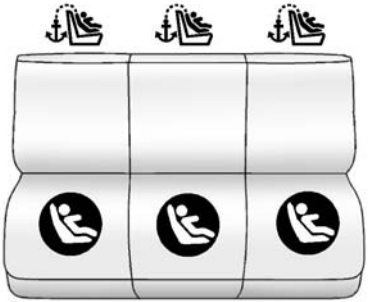

Second Row — 60/40

(Lower Anchor): Seating positions with two lower anchors.

(Top Tether Anchor): Seating positions with top tether anchors.

Second Row — Bucket

(Lower Anchor): Seating positions with two lower anchors.

(Top Tether Anchor): Seating positions with top tether anchors.

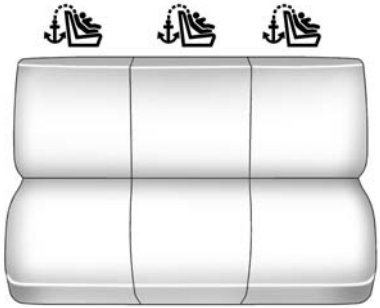

Third Row Seat

(Top Tether Anchor): Seating positions with top tether anchors.

To assist in locating the lower anchors, each seating position with lower anchors has two labels, near the crease between the seatback and the seat cushion.

To assist in locating the top tether anchors, the top tether anchor symbol is near the top tether anchors for second row seats. For third row seats, the top tether anchor symbol is on the flipper panel.

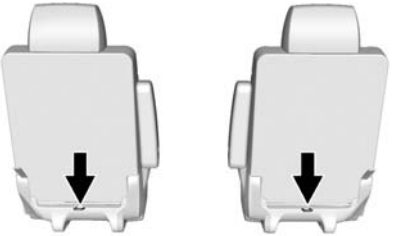

Second Row Seat — Bucket

For models with bucket second row seating, the top tether anchors are at the bottom rear of the seat cushion for each seating position in the second row. Be sure to use an anchor on the same side of the vehicle as the seating position where the child restraint will be placed.

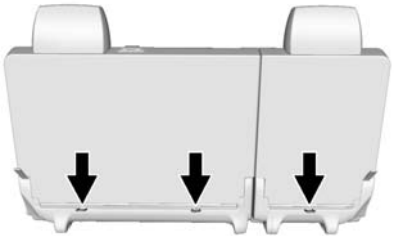

Second Row Seat — 60/40

For models with 60/40 second row seating, the top tether anchors are at the bottom rear of the seat cushion for each seating position in the second row. Be sure to use an anchor on the same side of the vehicle as the seating position where the child restraint will be placed.

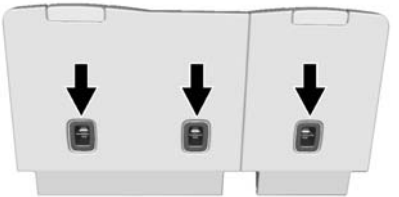

Third Row Seat

For the third row seat, the top tether anchors are on the back of the seatback. Move the flipper panel rearward to access the anchors. Be sure to use an anchor on the same side of the vehicle as the seating position where the child restraint will be placed.

Do not secure a child restraint in a position without a top tether anchor if a national or local law requires that the top tether be attached, or if the instructions that come with the child restraint say that the top tether must be attached.

According to accident statistics, children and infants are safer when properly restrained in a child restraint system or infant restraint system secured in a rear seating position. See *Where to Put the Restraint on page 3-47* for additional information.

Securing a Child Restraint Designed for the LATCH System

⚠ Warning

If a LATCH-type child restraint is not attached to anchors or with the safety belt, the child restraint will not be able to protect the child correctly. In a crash, the child could be seriously injured or killed. Install a LATCH-type child restraint properly using the

(Continued)

Warning (Continued)

anchors, or use the vehicle safety belts to secure the restraint, following the instructions that came with the child restraint and the instructions in this manual.

⚠ Warning

To reduce the risk of serious or fatal injuries during a crash, do not attach more than one child restraint to a single anchor. Attaching more than one child restraint to a single anchor could cause the anchor or attachment to come loose or even break during a crash. A child or others could be injured.

⚠ Warning

Children can be seriously injured or strangled if a shoulder belt is wrapped around their neck. The shoulder belt can tighten but cannot be loosened if it is locked. The shoulder belt locks when it is pulled all the way out of the retractor. It unlocks when the shoulder belt is allowed to go all the way back into the retractor, but it cannot do this if it is wrapped around a child's neck. If the shoulder belt is locked and tightened around a child's neck, the only way to loosen the belt is to cut it.

Buckle any unused safety belts behind the child restraint so children cannot reach them. Pull the shoulder belt all the way out of the retractor to set the lock, and tighten the belt behind the child restraint after the child restraint has been installed.

⚠ Caution

Do not let the LATCH attachments rub against the vehicle's safety belts. This may damage these parts. If necessary, move buckled safety belts to avoid rubbing the LATCH attachments.

Do not fold the empty rear seat with a safety belt buckled. This could damage the safety belt or the seat. Unbuckle and return the safety belt to its stowed position, before folding the seat.

The vehicle is equipped with a front center airbag in the inboard side of the driver seat. Even with a front center airbag, a child restraint can be installed in any second row seating position.

If you need to secure more than one child restraint in the rear seat, see *Where to Put the Restraint on page 3-47*.

This system is designed to make installation of child restraints easier. When using lower anchors, do not use the vehicle's safety belts. Instead use the vehicle's anchors and child restraint attachments to secure the restraints. Some restraints also use another vehicle anchor to secure a top tether.

1. Attach and tighten the lower attachments to the lower anchors. If the child restraint does not have lower attachments or the desired seating position does not have lower anchors, secure the child restraint with the safety belts and top tether when recommended by the child restraint manufacturer. Refer to your child restraint manufacturer instructions and the instructions in this manual. For the third row outboard seating positions, if the head restraint interferes with the proper installation of the child restraint, then the head restraint may be removed. See “Head Restraint Removal and Reinstallation under *Lower Anchors and Tethers for Children (LATCH System) on page 3-48*.

   1.1. Find the lower anchors for the desired seating position.

   1.2. Put the child restraint on the seat.

   1.3. Attach and tighten the lower attachments on the child restraint to the lower anchors.

2. If the child restraint manufacturer recommends that the top tether be attached, attach and tighten the top tether to the top tether anchor. Refer to the child restraint instructions and the following steps:

   2.1. Find the top tether anchor.

   For the third row seat, move the flipper panel rearward to access the top tether anchors.

   2.2. Route, attach, and tighten the top tether according to your child restraint instructions and the following instructions:

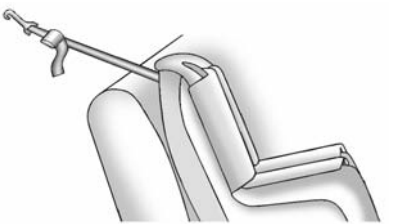

If the position you are using does not have a head restraint and you are using a single tether, route the tether over the seatback.

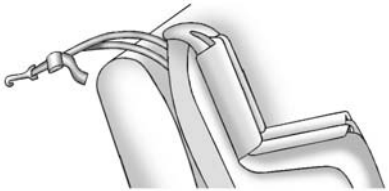

If the position you are using does not have a head restraint and you are using a dual tether, route the tether over the seatback.

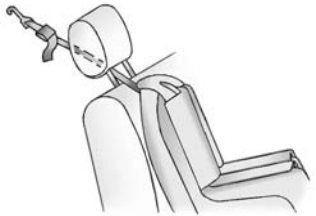

If the position you are using has an adjustable head restraint and you are using a single tether, raise the head restraint and route the tether under the head restraint and in between the head restraint posts.

If the position you are using has a fixed head restraint and you are using a single tether, route the tether around the inboard or outboard side of the head restraint.

If the position you are using has a fixed or an adjustable head restraint and you are using a dual tether, route the tether around the head restraint.

3. Before placing a child in the child restraint, make sure it is securely held in place. To check, grasp the child restraint at the LATCH path and attempt to move it side to side and back and forth. There should be no more than 2.5 cm (1 in) of movement, for proper installation.

Head Restraint Removal and Reinstallation

1. Partially fold the seatback forward. See *Third Row Seats on page 3-16* for additional information.

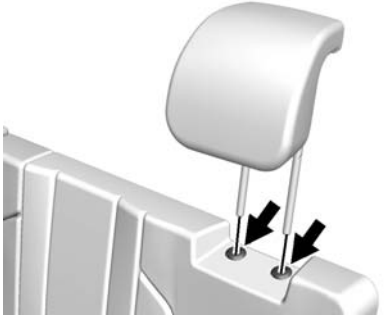

2. Press the buttons on the head restraint posts and pull up on the head restraint.
3. When the child restraint is removed, reinstall the head restraint before the seating position is used.

⚠ Warning

With head restraints that are not installed and adjusted properly, there is a greater chance that occupants will suffer a neck/spinal injury in a crash. Do not drive until the head restraints for all occupants are installed and adjusted properly.

4. Route the top tether of the child restraint under the head restraint.

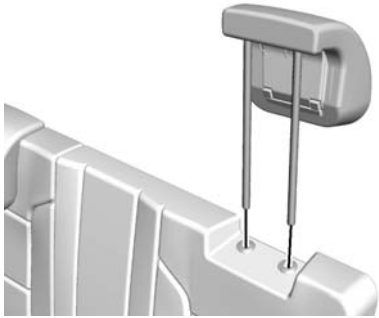

5. With the head restraint facing rearward, insert the head restraint posts into the holes in the top of the seatback.
6. Push the head restraint down.
7. Try to move the head restraint to make sure that it is locked in place.

Replacing LATCH System Parts After a Crash

⚠ Warning

A crash can damage the LATCH system in the vehicle. A damaged LATCH system may not properly secure the child restraint, resulting in serious injury or even death in a crash. To help make sure the LATCH system is working properly after a crash, see your dealer to have the system inspected and any necessary replacements made as soon as possible.

If the vehicle has the LATCH system and it was being used during a crash, new LATCH system parts may be needed.

New parts and repairs may be necessary even if the LATCH system was not being used at the time of the crash.

Securing Child Restraints (Rear Seat)

When securing a child restraint in a rear seating position, study the instructions that came with the child restraint to make sure it is compatible with this vehicle.

If the child restraint has the LATCH system, see *Lower Anchors and Tethers for Children (LATCH System) on page 3-48* for how and where to install the child restraint using LATCH. If a child restraint is secured in the vehicle using a safety belt and it uses a top tether, see *Lower Anchors and Tethers for Children (LATCH System) on page 3-48* for top tether anchor locations.

Do not secure a child seat in a position without a top tether anchor if a national or local law requires that the top tether be anchored, or if the instructions that come with the child restraint say that the top strap must be anchored.

In Canada, the law requires that forward-facing child restraints have a top tether, and that the tether be attached.

If the child restraint or vehicle seat position does not have the LATCH system, you will be using the safety belt to secure the child restraint in this position. Be sure to follow the instructions that came with the child restraint. Secure the child in the child restraint when and as the instructions say.

If more than one child restraint needs to be installed in the rear seat, be sure to read *Where to Put the Restraint on page 3-47*.

1. Put the child restraint on the seat.

   For the third row outboard seating positions, if the head restraint interferes with the proper installation of the child restraint, the head restraint may be removed. See “Head Restraint Removal and Reinstallation” under *Lower Anchors and Tethers for Children (LATCH System) on page 3-48*.

2. Pick up the latch plate, and run the lap and shoulder portions of the vehicle's safety belt through or around the restraint. The child restraint instructions will show you how.

3. Push the latch plate into the buckle until it clicks.

   If the latch plate will not go fully into the buckle, check to see if the correct buckle is being used.

   Position the release button on the buckle so that the safety belt could be quickly unbuckled if necessary.

4. Pull the shoulder belt all the way out of the retractor to set the lock. When the retractor lock is set, the belt can be tightened but not pulled out of the retractor.

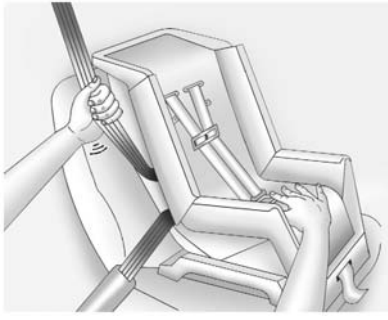

5. To tighten the belt, push down on the child restraint, pull the shoulder portion of the belt to tighten the lap portion of the belt and feed the shoulder belt back into the retractor. When installing a forward-facing child restraint, it may be helpful to use your knee to push down on the child restraint as you tighten the belt.

   Try to pull the belt out of the retractor to make sure the retractor is locked. If the retractor is not locked, repeat Steps 4 and 5.

6. If the child restraint has a top tether, follow the child restraint manufacturer's instructions regarding the use of the top tether. Refer to the instructions that came with the child restraint and see *Lower Anchors and Tethers for Children (LATCH System) on page 3-48*.

7. Before placing a child in the child restraint, make sure it is securely held in place. To check, grasp the child restraint at the safety belt path and attempt to move it side to side and back and forth. When the child restraint is properly installed, there should be no more than 2.5 cm (1 in) of movement.

To remove the child restraint, unbuckle the vehicle safety belt and let it return to the stowed position. If the top tether is attached to a top tether anchor, disconnect it.

If the head restraint was removed for a third row outboard seating position, reinstall it before the seating position is used. See "Head Restraint Removal and Reinstallation" under *Lower Anchors and Tethers for Children (LATCH System) on page 3-48* for additional information on reinstalling the head restraint properly.

Securing Child Restraints (Front Passenger Seat)

This vehicle has airbags. A rear seat is a safer place to secure a forward-facing child restraint. See *Where to Put the Restraint on page 3-47*.

In addition, the vehicle has a passenger sensing system which is designed to turn off the front outboard passenger frontal airbag under certain conditions. See *Passenger Sensing System on page 3-34* and *Passenger Airbag Status Indicator on page 5-17* for more information, including important safety information.

Never put a rear-facing child seat in the front. This is because the risk to the rear-facing child is so great if the airbag deploys.

⚠ Warning

A child in a rear-facing child restraint can be seriously injured or killed if the front outboard passenger frontal airbag inflates. This is because the back of the rear-facing child restraint would be very close to the inflating airbag. A child in a forward-facing child restraint can be seriously injured or killed if the front outboard passenger frontal airbag inflates and the passenger seat is in a forward position.

Even if the passenger sensing system has turned off the front outboard passenger frontal airbag, no system is fail-safe. No one can guarantee that an airbag

(Continued)

Warning (Continued)

will not deploy under some unusual circumstance, even though it is turned off.

Secure rear-facing child restraints in a rear seat, even if the airbag is off. If you secure a forward-facing child restraint in the front seat, always move the front passenger seat as far back as it will go. It is better to secure the child restraint in a rear seat.

See *Passenger Sensing System on page 3-34* for additional information.

If the child restraint uses a top tether, see *Lower Anchors and Tethers for Children (LATCH System) on page 3-48* for top tether anchor locations.

Do not secure a child seat in a position without a top tether anchor if a national or local law requires that the top tether be anchored, or if the instructions that come with the child restraint say that the top strap must be anchored.

In Canada, the law requires that forward-facing child restraints have a top tether, and that the tether be attached.

When using the lap-shoulder belt to secure the child restraint in this position, follow the instructions that came with the child restraint and the following instructions:

1. Move the seat as far back as it will go before securing the forward-facing child restraint.

   When the passenger sensing system has turned off the front outboard passenger frontal airbag, the off indicator on the passenger airbag status indicator should light and stay lit when you start the vehicle. See *Passenger Airbag Status Indicator on page 5-17*.

2. Put the child restraint on the seat.

3. Pick up the latch plate, and run the lap and shoulder portions of the vehicle's safety belt through or around the restraint. The child restraint instructions will show you how.

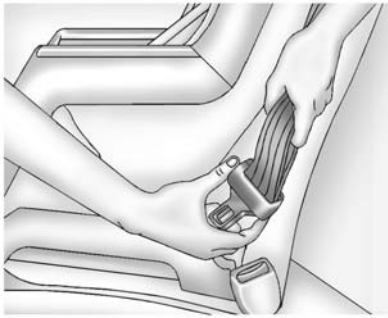

Tilt the latch plate to adjust the belt, if needed.

4. Push the latch plate into the buckle until it clicks.

   Position the release button on the buckle so that the safety belt could be quickly unbuckled if necessary.

5. Pull the shoulder belt all the way out of the retractor to set the lock. When the retractor lock is set, the belt can be tightened but not pulled out of the retractor.

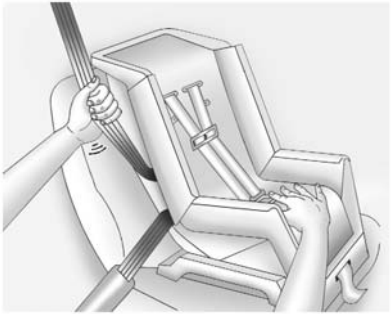

6. To tighten the belt, push down on the child restraint, pull the shoulder portion of the belt to tighten the lap portion of the belt, and feed the shoulder belt back into the retractor. When installing a forward-facing child restraint, it may be helpful to use your knee to push down on the child restraint as you tighten the belt.

   Try to pull the belt out of the retractor to make sure the retractor is locked. If the retractor is not locked, repeat Steps 5 and 6.

7. Before placing a child in the child restraint, make sure it is securely held in place. To check, grasp the child restraint at the safety belt path and attempt to move it side to side and back and forth. When the child restraint is properly installed, there should be no more than 2.5 cm (1 in) of movement.

If the airbag is off, the off indicator in the passenger airbag status indicator will come on and stay on when the vehicle is started.

If a child restraint has been installed and the on indicator is lit, see “If the On Indicator is Lit for a Child Restraint” under *Passenger Sensing System on page 3-34*.

To remove the child restraint, unbuckle the vehicle safety belt and let it return to the stowed position.

Storage

Storage Compartments
Storage Compartments 4-1
Instrument Panel Storage 4-1
Glove Box 4-2
Cupholders 4-2
Sunglasses Storage 4-2
Armrest Storage 4-3
Rear Storage 4-3
Center Console Storage 4-3

Additional Storage Features
Cargo Cover 4-3

Roof Rack System
Roof Rack System 4-4

Storage Compartments

⚠ Warning

Do not store heavy or sharp objects in storage compartments. In a crash, these objects may cause the cover to open and could result in injury.

Instrument Panel Storage

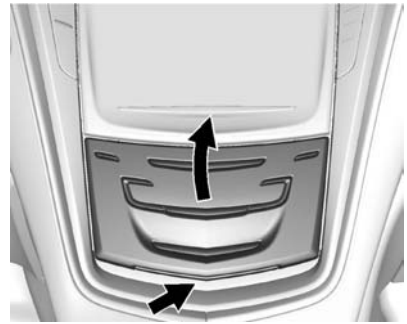

Touch the bottom of the climate control system panel until the door automatically starts to open. The storage area may contain a USB port, SD card reader, and auxiliary jack. See the infotainment manual.

Keep the storage area door closed while driving.

Touch the bottom of the climate control system again until the door automatically starts to close.

Glove Box

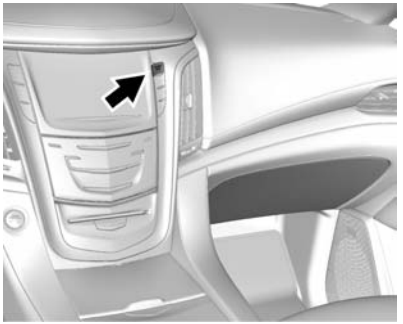

To open, press the button. Close the glove box manually.

Cupholders

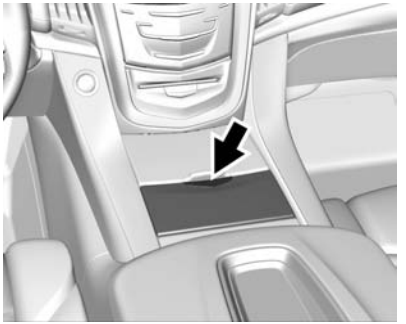

To access the cupholders, press the cover and release.

There is storage in front of the cupholders. Push forward on the handle to open.

Sunglasses Storage

If equipped, sunglasses storage is on the overhead console. Press the fixed button on the cover and release to access. There may be a child-view mirror located within the sunglasses bin. Release the bin and then push up halfway to secure in position.

Armrest Storage

For vehicles with a rear seat armrest, pull the loop at the top of the armrest down to access the cupholders.

Rear Storage

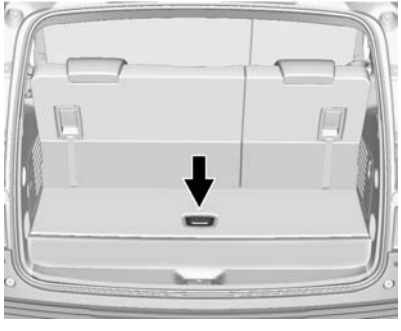

There is storage in the floor of the rear cargo area. Lift the handle to access. There is a removable divider to help organize.

Center Console Storage

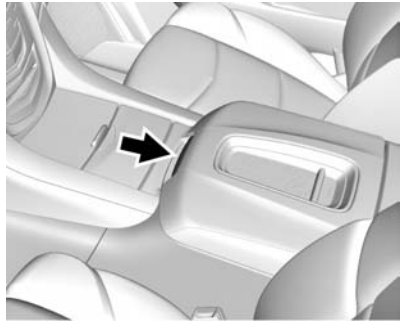

Pull the handle and lift to access. There are auxiliary jacks, USB ports, an accessory power outlet, tote compartment, device holder, and SD card reader inside.

On the rear of the console there is a power outlet, auxiliary jacks, and a storage area.

See *Power Outlets on page 5-7* and the infotainment manual.

Additional Storage Features

Cargo Cover

⚠ Warning

An unsecured cargo cover could strike people in a sudden stop or turn, or in a crash. Store the cargo cover securely or remove it from the vehicle.

To use the cargo cover, if equipped:

1. Pull the cover handle toward the rear of the vehicle.
2. Latch the cover posts into the retaining sockets on the cargo area trim panels.

To return the cover to the retracted position:

1. Pull up on the cover handle to release the cover posts from the retaining sockets.

2. Let the cover move forward to the full retracted position.

To remove the cover:

1. Let the cover go all the way into the holder.
2. Grasping the driver side cover end cap, push the cover end cap toward the passenger side of the vehicle.
3. Swing the cover rearward and take it out of the vehicle.

To put the cover in the vehicle:

1. Make sure the cover slot in the holder faces rearward with the round surface facing down.
2. Hold the cover at an angle and place the cover end cap into the slot in the passenger side trim panel.
3. Move the other end of the cover forward and hold it next to the driver side trim panel slot.
4. Press the end caps in, to allow the cover to fit into the trim slot.
5. Pull lightly on the cover holder to make sure it is secure.

On long wheelbase models there are two cover positions. The slots furthest forward allow the cover to be used if the third seat is removed or folded down. The cover can be installed and removed from either side.

Roof Rack System

⚠ Warning

If something is carried on top of the vehicle that is longer or wider than the roof rack — like paneling, plywood, or a mattress — the wind can catch it while the vehicle is being driven. The item being carried could be violently torn off, and this could cause a collision and damage the vehicle. Never carry something longer or wider than the roof rack on top of the vehicle unless using a GM certified accessory carrier.

If equipped, the roof rack can be used to load items. For roof racks that do not have crossrails included, GM Certified crossrails can be purchased as an accessory. See your dealer for additional information.

⚠ Caution

Loading cargo on the roof rack that weighs more than 100 kg (220 lb) or hangs over the rear or sides of the vehicle may damage the vehicle. Load cargo so that it rests evenly between the crossrails, making sure to fasten cargo securely.

To prevent damage or loss of cargo when driving, check to make sure crossrails and cargo are securely fastened. Loading cargo on the roof rack will make the vehicle's center of gravity higher. Avoid high speeds, sudden starts, sharp turns, sudden braking, or abrupt maneuvers, otherwise it may result in loss of control. If driving for a long distance, on rough roads, or at high speeds, occasionally stop the vehicle to make sure the cargo remains in its place.

Do not exceed the maximum vehicle capacity when loading the vehicle. For more information on vehicle capacity and loading, see *Vehicle Load Limits on page 9-14*.

A Center High-Mounted Stoplamp (CHMSL) is located above the rear window glass. Make sure items loaded on the roof of the vehicle do not block or damage the CHMSL.

✍ NOTES

Instruments and Controls

Controls

Steering Wheel Adjustment . . . 5-2
Steering Wheel Controls 5-2
Heated Steering Wheel 5-2
Horn 5-3
Windshield Wiper/Washer 5-3
Rear Window Wiper/ Washer 5-5
Compass 5-6
Clock 5-6
Power Outlets 5-7
Cigarette Lighter 5-9
Ashtrays 5-9

Warning Lights, Gauges, and Indicators

Warning Lights, Gauges, and Indicators 5-10
Instrument Cluster 5-11
Speedometer 5-14
Odometer 5-14
Trip Odometer 5-14
Tachometer 5-14
Fuel Gauge 5-14
Engine Coolant Temperature Gauge 5-15
Safety Belt Reminders 5-16
Airbag Readiness Light 5-16
Passenger Airbag Status Indicator 5-17
Charging System Light 5-18
Malfunction Indicator Lamp 5-18
Brake System Warning Light 5-21
Electric Parking Brake Light 5-21
Service Electric Parking Brake Light 5-22
Antilock Brake System (ABS) Warning Light 5-22
Tow/Haul Mode Light 5-22
Lane Departure Warning (LDW) Light 5-23
Vehicle Ahead Indicator 5-23
Traction Off Light 5-23
StabiliTrak® OFF Light 5-23
Traction Control System (TCS)/StabiliTrak® Light 5-24
Engine Coolant Temperature Warning Light 5-24
Tire Pressure Light 5-25
Engine Oil Pressure Light 5-25
Low Fuel Warning Light 5-26
Security Light 5-26
High-Beam On Light 5-26
Lamps On Reminder 5-26
Cruise Control Light 5-27
Door Ajar Light 5-27

Information Displays

Driver Information Center (DIC) 5-27
Head-Up Display (HUD) 5-30

Vehicle Messages

Vehicle Messages 5-34
Battery Voltage and Charging Messages 5-34
Brake System Messages 5-35
Compass Messages 5-35
Cruise Control Messages 5-35
Door Ajar Messages 5-36
Engine Cooling System Messages 5-37
Engine Oil Messages 5-37
Engine Power Messages 5-38
Fuel System Messages 5-38
Key and Lock Messages 5-38
Lamp Messages 5-39
Object Detection System Messages 5-39

Ride Control System Messages 5-42
Airbag System Messages 5-42
Safety Belt Messages 5-42
Security Messages 5-43
Service Vehicle Messages . . . 5-43
Steering System Messages 5-43
Starting the Vehicle Messages 5-43
Tire Messages 5-43
Transmission Messages 5-44
Vehicle Reminder Messages 5-46
Vehicle Speed Messages 5-46
Washer Fluid Messages 5-46
Window Messages 5-46

Vehicle Personalization
Vehicle Personalization 5-46

Universal Remote System
Universal Remote System . . . 5-55
Universal Remote System Programming 5-55
Universal Remote System Operation 5-57

Controls

Steering Wheel Adjustment

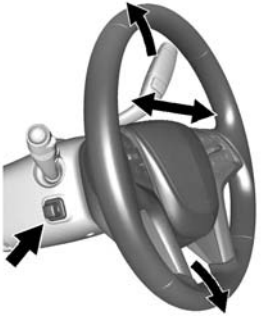

To adjust the power tilt and telescoping steering wheel, if equipped:

Press the control to move the steering wheel up and down or forward and rearward.

Do not adjust the steering wheel while driving.

Steering Wheel Controls

The infotainment system can be operated by using the steering wheel controls. See "Steering Wheel Controls" in the infotainment manual.

Heated Steering Wheel

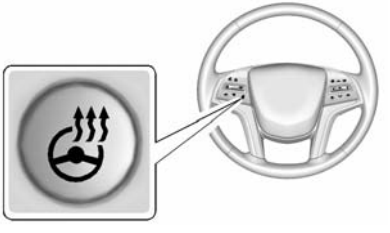

(Heated Steering Wheel):
If equipped with a heated steering wheel, press to turn on or off. An indicator next to the button is lit when the feature is turned on.

The steering wheel takes about three minutes to start heating.

Horn

To sound the horn, press on the steering wheel.

Windshield Wiper/Washer

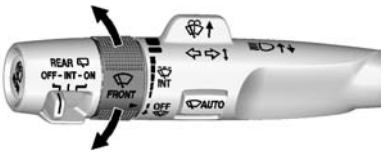

The windshield wiper control is on the turn signal lever.

The windshield wipers are controlled by turning the band with FRONT on it.

(High Speed): Fast wipes.

(Low Speed): Slow wipes.

INT (Intermittent Wipes): Turn the FRONT band up for more frequent wipes or down for less frequent wipes.

OFF: Turns the windshield wipers off.

(Mist): For a single wipe, turn to , then release. For several wipes, hold the band on longer.

Clear ice and snow from the wiper blades before using them. If frozen to the windshield, carefully loosen or thaw them. Damaged wiper blades should be replaced. See *Wiper Blade Replacement on page 10-24*.

Heavy snow or ice can overload the wiper motor. An internal circuit breaker to the motor will stop the motor until it cools down.

Wiper Parking

If the ignition is put in OFF while the wipers are on , , or INT, they will immediately stop.

If FRONT is then moved to OFF before the driver door is opened or within 10 minutes, the wipers will restart and move to the base of the windshield.

If the ignition is put in OFF while the wipers are performing wipes due to windshield washing or Rainsense, the wipers continue to run until they reach the base of the windshield.

Rainsense™

With Rainsense, a sensor near the top center of the windshield detects the amount of water on the windshield and controls the frequency of the windshield wiper.

Keep this area of the windshield clear of debris to allow for best system performance.

INT (Rainsense Wipe Sensitivity): Turn the FRONT band on the wiper lever to adjust the sensitivity when Rainsense is turned on.

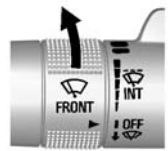

- Turn the band up to a higher INT setting for more sensitivity to moisture.
- Turn the band down to the lower INT setting for less sensitivity to moisture.

Move the band out of the INT position to deactivate Rainsense.

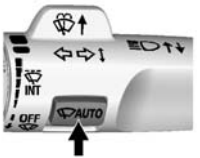

AUTO (Rainsense On/Off): Press to turn Rainsense on or off. When turned on and FRONT is in one of the Rainsense wipe sensitivity positions, the wipers can be adjusted for more or less sensitivity to moisture by adjusting the INT position. When turned off, the wipers operate as timed intermittent wipers and can be adjusted for more or less frequent wipes.

If AUTO is on when the ignition is turned on, or if the ignition is in ON/RUN and the FRONT band is in one of the sensitivity settings when AUTO is turned on or off, a message may display indicating if Rainsense was turned on or off.

If the ignition is in ON/RUN and FRONT is not in one of the sensitivity settings when AUTO is turned on, a message may display indicating that the wiper band must be in one of the sensitivity settings for Rainsense to operate.

Wiper Arm Assembly Protection

When using an automatic car wash, move the windshield wiper lever to OFF. This disables the automatic Rainsense windshield wipers.

With Rainsense, if the transmission is in N (Neutral) and the vehicle speed is very slow, the wipers may automatically stop at the base of the windshield.

The wiper operations return to normal when the transmission is no longer in N (Neutral) or the vehicle speed has increased.

Windshield Washer

⚠ Warning

In freezing weather, do not use the washer until the windshield is warmed. Otherwise the washer fluid can form ice on the windshield, blocking your vision.

(Washer Fluid): Push the paddle marked with the windshield washer symbol at the top of the turn signal lever to spray washer fluid and activate the wipers. The wipers will continue until the paddle is released or the maximum wash time is reached. When the paddle is

released, additional wipes may occur depending on how long the windshield washer had been activated. See *Washer Fluid on page 10-17* for information on filling the windshield washer fluid reservoir.

Rear Window Wiper/ Washer

The rear wiper control is on the turn signal lever.

To turn the rear wiper on, slide the lever to a wiper position.

OFF: Turns the wiper off.

INT (Intermittent Wipes): Turns on the rear wiper with a delay between wipes.

ON (Rear Wipes): Turns on the rear wiper.

REAR (Rear Wiper Wash): Press this button on the end of the lever to spray washer fluid on the rear window. The wipers will clear the rear window and either stop or return to your preset speed. For more washer cycles, press and hold the button.

The rear window wiper/washer will not operate if the liftgate or liftglass is open or ajar. If the liftgate or liftglass is opened while the rear wiper is on, the wiper returns to the parked position and stops.

Rear Wiper Arm Assembly Protection

When using an automatic car wash, move the rear wiper control to OFF to disable the rear wiper. In some vehicles, if the transmission is in N (Neutral) and the vehicle speed is very slow, the rear wiper will automatically park under the rear spoiler.

The wiper operations return to normal when the transmission is no longer in N (Neutral) or the vehicle speed has increased.

Reverse Gear Wipes

If the rear wiper control is off, the rear wiper will automatically operate continuously when the shift lever is in R (Reverse), and the front windshield wiper is performing low or high speed wipes. If the rear wiper control is off, the shift lever is in R (Reverse), and the front windshield wiper is performing interval wipes, then the rear wiper automatically performs interval wipes.

This feature can be turned on or off. See *Vehicle Personalization on page 5-46*.

The windshield washer reservoir is used for the windshield and the rear window. Check the fluid level in the reservoir if either washer is not working. See *Washer Fluid on page 10-17*.

Compass

The vehicle may have a compass display on the Driver Information Center (DIC). The compass receives its heading and other information from the Global Positioning System (GPS) antenna, StabiliTrak®, and vehicle speed information.

The compass system is designed to operate for a certain number of miles or degrees of turn before needing a signal from the GPS satellites. When the compass display shows CAL, drive the vehicle for a short distance in an open area where it can receive a GPS signal. The compass system will automatically determine when a GPS signal is restored and provide a heading again. See *Compass Messages on page 5-35* for the messages that may be displayed for the compass.

Clock

The infotainment system controls are used to access the time and date settings through the menu system. See “Home Page” in the infotainment manual for information about how to use the menu system.

Setting the Clock

Time

To set the time:

1. From the Home Page, press the SETTINGS screen button, then press Time and Date.
2. Press Set Time, then press + or − to increase or decrease hours or minutes, and change AM or PM.
3. Press 12-24Hr for a 12 or 24 hour clock.
4. Press ❮ Back to go back to the previous menu.

Date

To set the date:

1. Press the SETTINGS screen button and press Time and Date.
2. Press Set Date and press + or − to increase or decrease month, day, or year.
3. Press ❮ Back to go back to the previous menu.

Auto Set

When on, the time and date will automatically update.

To set auto set:

1. Press the SETTINGS screen button, then press Time and Date.
2. Press Set Time or Set Date.
3. Press Auto Set, then select On-Cell Network or Off-Manual to manually set the time and date.
4. Press ❮ Back to go back to the previous menu.

If auto timing is on, the time displayed on the clock may not update immediately when driving into a new time zone.

Clock Display

When on, the digital clock will display on the infotainment screen.

To set the clock display:

1. Press the SETTINGS screen button and press Time and Date.
2. Press Clock Display, then select Off or On.
3. Press ❮ Back to go back to the previous menu.

Power Outlets

Accessory power outlets can be used to plug in electrical equipment, such as a cell phone or MP3 player.

The vehicle has five accessory power outlets:

- One near the cupholders on the center console.
- One inside the center console.
- One on the rear of the center console.
- One in the third row seat on the driver side.
- One in the rear cargo area on the passenger side.

Lift the cover to access and replace when not in use.

The accessory power outlets are powered as follows:

- The power outlet near the cupholders on the center console is powered in Retained Accessory Power (RAP) mode. This outlet can be configured to operate using RAP or battery power. If the power outlet is used while in the battery power mode, this could cause interference between the RKE transmitter and the vehicle, and the vehicle may not start. See *Ignition Positions on page 9-20*.
- The power outlets inside the center console and on the rear of the center console are powered when the ignition is in ON/RUN/START or ACC/ACCESSORY, or until the driver door is opened within 10 minutes of turning off the vehicle. See *Retained Accessory Power (RAP) on page 9-24*.
- The power outlets in the third row seat and in the rear cargo area are powered at all times.

⚠ Warning

Power is always supplied to the outlets. Do not leave electrical equipment plugged in when the vehicle is not in use because the vehicle could catch fire and cause injury or death.

⚠ Caution

Leaving electrical equipment plugged in for an extended period of time while the vehicle is off will drain the battery. Always unplug electrical equipment when not in use and do not plug in equipment that exceeds the maximum 15 amp rating.

Certain power accessory plugs may not be compatible with the accessory power outlet and could overload vehicle or adapter fuses. If a problem is experienced, see your dealer.

When adding electrical equipment, be sure to follow the proper installation instructions included with the equipment. See *Add-On Electrical Equipment on page 9-84*.

⚠ Caution

Hanging heavy equipment from the power outlet can cause damage not covered by the vehicle warranty. The power outlets are designed for accessory power plugs only, such as cell phone charge cords.

Power Outlet 110 Volt Alternating Current

This power outlet can be used to plug in electrical equipment that uses a maximum limit of 150 watts.

The 110 volt power outlet is on the rear of the center console.

An indicator light on the outlet turns on to show it is in use. The light comes on when the ignition is in ON/RUN/START, equipment requiring less than 150 watts is plugged into the outlet, and no system fault is detected.

The indicator light does not come on when the ignition is in LOCK/OFF or if the equipment is not fully seated into the outlet.

If equipment is connected using more than 150 watts or a system fault is detected, a protection circuit shuts off the power supply and the indicator light turns off. To reset the circuit, unplug the item and plug it back in or turn the ignition off and then back to ON/RUN. The power restarts when equipment using 150 watts or less is plugged into the outlet and a system fault is not detected.

The power outlet is not designed for the following, and may not work properly if they are plugged in:

- Equipment with high initial peak wattage, such as compressor-driven refrigerators and electric power tools.
- Other equipment requiring an extremely stable power supply, such as microcomputer-controlled electric blankets and touch sensor lamps.
- Medical equipment.

Cigarette Lighter

For vehicles with a cigarette lighter, it is located in the center console near the cupholders. Press on the access door to open it and use the lighter.

To use the cigarette lighter, push it in all the way, and let go. When it is ready, it will pop back out by itself.

Holding a cigarette lighter in while it is heating does not let the lighter back away from the heating element when it is hot. Damage from overheating can occur to the lighter or heating element, or a fuse could be blown. Do not hold a cigarette lighter in while it is heating.

Ashtrays

For vehicles with an ashtray, it is in the center console cupholder.

⚠ Caution

If papers, pins, or other flammable items are put in the ashtray, hot cigarettes or other smoking materials could ignite them and possibly damage the vehicle. Never put flammable items in the ashtray.

To remove the ashtray, pull it from the cupholder. Push it back down to be sure it is secure.

Warning Lights, Gauges, and Indicators

Warning lights and gauges can signal that something is wrong before it becomes serious enough to cause an expensive repair or replacement. Paying attention to the warning lights and gauges could prevent injury.

Warning lights come on when there could be a problem with a vehicle function. Some warning lights come on briefly when the engine is started to indicate they are working.

Gauges can indicate when there could be a problem with a vehicle function. Often gauges and warning lights work together to indicate a problem with the vehicle.

When one of the warning lights comes on and stays on while driving, or when one of the gauges shows there may be a problem, check the section that explains what to do. Waiting to do repairs can be costly and even dangerous.

Instrument Cluster

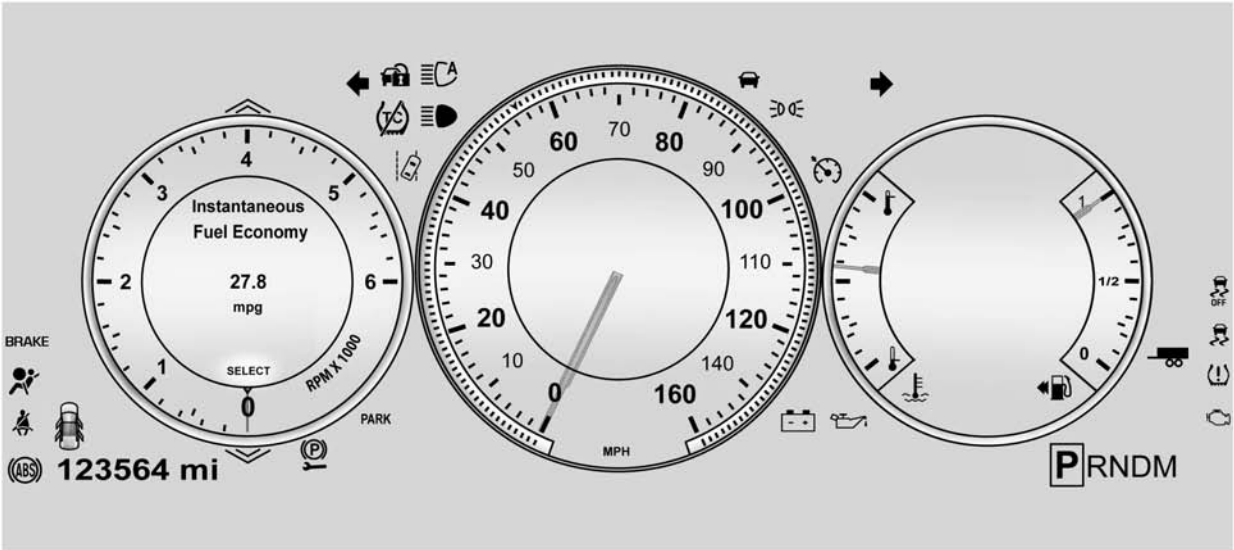

English Balanced Cluster Shown, Metric Similar

Reconfigurable Instrument Cluster

There are four instrument cluster display configurations to choose from: Simple, Performance, Balanced, or Enhanced.

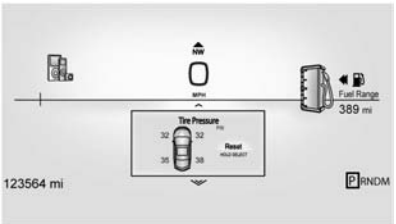

Simple Configuration

The Simple configuration has one interactive display zone in the center.

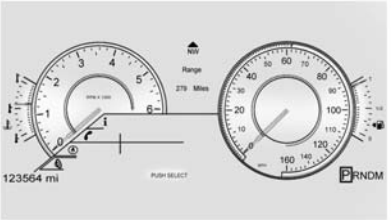

Performance Configuration

The Performance configuration has two interactive display zones: one in the center of the speedometer and one in the lower left of the cluster screen.

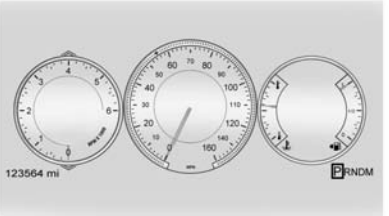

Balanced Configuration

The Balanced configuration has three interactive display zones: one in the center of each of the gauges.

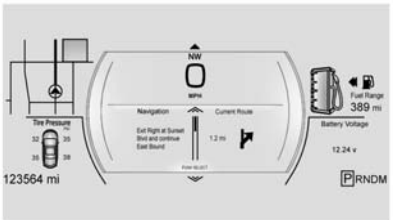

Enhanced Configuration

The Enhanced configuration has three interactive display zones.

Use the five-way control on the right side of the steering wheel to move between the different display zones and scroll through the different displays.

To change the cluster configuration:

1. Find the Settings page in one of the interactive display zones on the cluster.
2. Press SEL to enter the Settings menu.
3. Scroll down to highlight Display Layout. Then press SEL to select it.
4. Each layout in the menu is represented by a small preview image of the display layout. Scroll up or down and highlight the selection. Press SEL to select the desired cluster configuration.
5. Exit the Display Layout menu by pressing <.

Cluster Application Displays

The cluster can display information regarding Navigation, Audio, and Phone.

Navigation

If there is no active route, a compass will be displayed. If there is an active route, press SEL to end route guidance or turn the voice prompts on or off.

Audio

While the Audio application page is displayed, press SEL to enter the Audio menu. In the Audio menu, search for music, select from favorites, or change the audio source.

Phone

While the Phone application page is displayed, press SEL to enter the Phone menu. In the Phone menu, if there is no active phone call, view recent calls, select from favorites, or scroll through contacts. If there is an active call, mute the phone or switch to handset operation.

Cluster Settings Menu

To enter the cluster settings menu:

1. Use the five-way control on the right side of the steering wheel to find the Settings page in one of the interactive display zones on the cluster.
2. Press SEL on the center of the five-way control to enter the Settings menu.

Units: Press SEL while Units is highlighted to enter the Unit menu. Choose US or metric units by pressing SEL while the desired item is highlighted. A checkmark will be displayed next to the selected item.

Info Pages: Press SEL while Info Pages is highlighted to select the items to be displayed in the DIC info displays. See *Driver Information Center (DIC) on page 5-27*.

Display Layout: Press SEL while Display Layout is highlighted to change the configuration of the cluster. See “Reconfigurable Instrument Cluster” earlier in this section.

Open Source Software: Press SEL while Open Source Software is highlighted to display open source software information.

Speedometer

The speedometer shows the vehicle's speed in either kilometers per hour (km/h) or miles per hour (mph).

Odometer

The odometer shows how far the vehicle has been driven, in either kilometers or miles.

Trip Odometer

The trip odometer shows how far the vehicle has been driven since the trip odometer was last reset.

The trip odometer is accessed and reset through the Driver Information Center (DIC). See *Driver Information Center (DIC) on page 5-27*.

Tachometer

The tachometer displays the engine speed in revolutions per minute (rpm).

Fuel Gauge

Balanced Configuration, Performance Similar

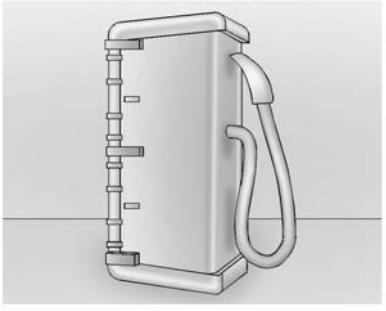

Simple and Enhanced Configurations

When the ignition is on, the fuel gauge indicates about how much fuel is left in the tank.

There is an arrow near the fuel gauge pointing to the side of the vehicle the fuel door is on.

When the indicator nears empty, the low fuel light comes on. There still is a little fuel left, but the vehicle should be refueled soon.

Here are four things that some owners ask about. None of these show a problem with the fuel gauge:

- At the service station, the fuel pump shuts off before the gauge reads full.
- It takes a little more or less fuel to fill up than the gauge indicated. For example, the gauge may have indicated the tank was half full, but it actually took a little more or less than half the tank's capacity to fill the tank.
- The gauge moves a little while turning a corner or speeding up.
- The gauge takes a few seconds to stabilize after the ignition is turned on, and goes back to empty when the ignition is turned off.

Engine Coolant Temperature Gauge

Balanced Configuration Shown

This gauge measures the temperature of the vehicle's engine.

While driving under normal operating conditions, if the needle moves into the red area, the engine is too hot. Pull off the road, stop the vehicle, and turn off the engine as soon as possible.

Safety Belt Reminders

Driver Safety Belt Reminder Light

There is a driver safety belt reminder light on the instrument cluster.

When the vehicle is started, this light flashes and a chime may come on to remind the driver to fasten their safety belt. Then the light stays on solid until the belt is buckled. This cycle may continue several times if the driver remains or becomes unbuckled while the vehicle is moving.

If the driver safety belt is buckled, neither the light nor the chime comes on.

Passenger Safety Belt Reminder Light

There is a passenger safety belt reminder light near the passenger airbag status indicator. See *Passenger Sensing System on page 3-34*.

When the vehicle is started, this light flashes and a chime may come on to remind passengers to fasten their safety belt. Then the light stays on solid until the belt is buckled. This cycle continues several times if the passenger remains or becomes unbuckled while the vehicle is moving.

If the passenger safety belt is buckled, neither the chime nor the light comes on.

The front passenger safety belt reminder light and chime may turn on if an object is put on the seat such as a briefcase, handbag, grocery bag, laptop, or other electronic device. To turn off the reminder light and/or chime, remove the object from the seat or buckle the safety belt.

Airbag Readiness Light

This light shows if there is an electrical problem with the airbag system. The system check includes the airbag sensor(s), passenger sensing system, the pretensioners, the airbag modules, the wiring, and the crash sensing and diagnostic module. For more information on the airbag system, see *Airbag System on page 3-27*.

The airbag readiness light comes on for several seconds when the vehicle is started. If the light does not come on then, have it fixed immediately.

⚠ Warning

If the airbag readiness light stays on after the vehicle is started or comes on while driving, it means the airbag system might not be working properly. The airbags in the vehicle might not inflate in a crash, or they could even inflate without a crash. To help avoid injury, have the vehicle serviced right away.

If there is a problem with the airbag system, a Driver Information Center (DIC) message may also come on. See *Airbag System Messages on page 5-42*.

Passenger Airbag Status Indicator

The vehicle has a passenger sensing system. See *Passenger Sensing System on page 3-34* for important safety information. The passenger airbag status indicator is in the overhead console.

United States

Canada and Mexico

When the vehicle is started, the passenger airbag status indicator will light ON and OFF, or the symbol for on and off, for several seconds as a system check. Then, after several more seconds, the status indicator will light either ON or OFF, or the on or off symbol, to let you know the status of the front outboard passenger frontal airbag.

If the word ON or the on symbol is lit on the passenger airbag status indicator, it means that the front outboard passenger frontal airbag is allowed to inflate.

If the word OFF or the off symbol is lit on the airbag status indicator, it means that the passenger sensing system has turned off the front outboard passenger frontal airbag.

If, after several seconds, both status indicator lights remain on, or if there are no lights at all, there may be a problem with the lights or the passenger sensing system. See your dealer for service.

⚠ Warning

If the airbag readiness light ever comes on and stays on, it means that something may be wrong with the airbag system. To help avoid injury to yourself or others, have the vehicle serviced right away. See *Airbag Readiness Light on page 5-16* for more information, including important safety information.

Charging System Light

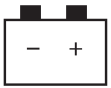

The charging system light comes on briefly when the ignition is turned on, but the engine is not running, as a check to show the light is working. It should go out when the engine is started.

If the light stays on, or comes on while driving, there may be a problem with the electrical charging system. Have it checked by your dealer. Driving while this light is on could drain the battery.

When this light comes on, or is flashing, the Driver Information Center (DIC) also displays a message.

See *Battery Voltage and Charging Messages on page 5-34*.

If a short distance must be driven with the light on, be sure to turn off all accessories, such as the radio and air conditioner.

Malfunction Indicator Lamp

A computer system called OBD II (On-Board Diagnostics-Second Generation) monitors the operation of the vehicle to ensure emissions are at acceptable levels, helping to maintain a clean environment. The malfunction indicator lamp comes on when the vehicle is placed in Service Only Mode, as a check to show it is working. If it does not, have the vehicle serviced by your dealer. See *Ignition Positions on page 9-20*.

If the malfunction indicator lamp comes on while the engine is running, this indicates that there is an OBD II problem and diagnosis and service might be required.

Malfunctions often are indicated by the system before any problem is apparent. Being aware of the light can prevent more serious damage to the vehicle. This system also

assists the service technician in correctly diagnosing any malfunction.

⚠ Caution

If the vehicle is continually driven with this light on, the emission controls might not work as well, the vehicle fuel economy might not be as good, and the engine might not run as smoothly. This could lead to costly repairs that might not be covered by the vehicle warranty.

⚠ Caution

Modifications made to the engine, transmission, exhaust, intake, or fuel system of the vehicle or the replacement of the original tires with other than those of the same Tire Performance Criteria

(Continued)

Caution (Continued)

(TPC) can affect the vehicle's emission controls and can cause this light to come on. Modifications to these systems could lead to costly repairs not covered by the vehicle warranty. This could also result in a failure to pass a required Emission Inspection/Maintenance test. See *Accessories and Modifications on page 10-3*.

This light comes on during a malfunction in one of two ways:

Light Flashing: A misfire condition has been detected. A misfire increases vehicle emissions and could damage the emission control system on the vehicle. Diagnosis and service might be required.

To prevent more serious damage to the vehicle:

- Reduce vehicle speed.
- Avoid hard accelerations.
- Avoid steep uphill grades.
- If towing a trailer, reduce the amount of cargo being hauled as soon as it is possible.

If the light continues to flash, stop and park the vehicle. Turn the vehicle off, wait at least 10 seconds, and restart the engine. If the light is still flashing, follow the previous steps and see your dealer for service as soon as possible.

Light On Steady: An emission control system malfunction has been detected on the vehicle. Diagnosis and service might be required.

The following may correct an emission control system malfunction:

- Make sure the capless funnel adapter is removed, if fuel has been added to the vehicle using the capless funnel adapter. See “Filling the Tank with a Portable Gas Can” under *Filling the Tank*

on page 9-71. The diagnostic system can detect if the adapter has been left installed in the vehicle, allowing fuel to evaporate into the atmosphere. A few driving trips with the adapter removed should turn off the light.

- Check that good quality fuel is used. Poor fuel quality causes the engine not to run as efficiently as designed and may cause stalling after start-up, stalling when the vehicle is changed into gear, misfiring, hesitation on acceleration, or stumbling on acceleration. These conditions might go away once the engine is warmed up.

If one or more of these conditions occurs, change the fuel brand used. It may require at least one full tank of the proper fuel to turn the light off.

See *Fuel on page 9-70*.

If none of the above have made the light turn off, your dealer can check the vehicle. The dealer has the proper test equipment and diagnostic tools to fix any mechanical or electrical problems that might have developed.

Emissions Inspection and Maintenance Programs

Depending on where you live, your vehicle may be required to participate in an emission control system inspection and maintenance program. For the inspection, the emission system test equipment will likely connect to the vehicle's Data Link Connector (DLC).

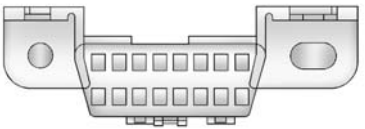

The DLC is under the instrument panel to the left of the steering wheel. See your dealer if assistance is needed.

The vehicle may not pass inspection if:

- The malfunction indicator lamp is on with the engine running, or if the vehicle is placed in Service Only Mode and the malfunction indicator lamp does not come on. See your dealer for assistance in verifying proper operation of the malfunction indicator lamp.
- The OBD II (On-Board Diagnostics) system determines that critical emission control systems have not been completely diagnosed. The vehicle would be considered not ready for inspection. This can happen if the 12-volt battery has recently been replaced or run down. The diagnostic system is designed to evaluate critical emission control systems during normal driving. This can take several days of routine driving. If this has been done and the vehicle still does not pass the inspection for lack of OBD II

system readiness, your dealer can prepare the vehicle for inspection.

Brake System Warning Light

The vehicle brake system consists of two hydraulic circuits. If one circuit is not working, the remaining circuit can still work to stop the vehicle. For normal braking performance, both circuits need to be working.

If the warning light comes on, there is a brake problem. Have the brake system inspected right away.

BRAKE

Metric **English**

This light comes on briefly when the vehicle is turned on. If it does not come on then, have it fixed so it will be ready to warn if there is a problem.

If the light comes on and stays on, there is a base brake problem.

⚠ Warning

The brake system might not be working properly if the brake system warning light is on. Driving with the brake system warning light on can lead to a crash. If the light is still on after the vehicle has been pulled off the road and carefully stopped, have the vehicle towed for service.

Electric Parking Brake Light

PARK

Metric **English**

This light comes on when the parking brake is applied. If the light continues flashing after the parking brake is released, or while driving, there is a problem with the Electric Parking Brake system or another system. A message may also display in the Driver Information Center (DIC). See *Brake System Messages on page 5-35*.

If the light does not come on, or remains flashing, see your dealer.

Service Electric Parking Brake Light

If this light comes on and stays on, there is a problem with a system on the vehicle that is causing the parking brake system to work at a reduced level. The vehicle can still be driven, but should be taken to a dealer as soon as possible. See *Electric Parking Brake on page 9-39*. If a message displays in the Driver Information Center (DIC), see *Brake System Messages on page 5-35*.

Antilock Brake System (ABS) Warning Light

This light comes on briefly when the engine is started.

If the light does not come on, have it fixed so it will be ready to warn if there is a problem.

If the light comes on while driving, stop as soon as it is safely possible and turn off the vehicle. Then start the engine again to reset the system. If the ABS light stays on, or comes on again while driving, the vehicle needs service. A chime may also sound when the light comes on steady.

If the ABS light is the only light on, the vehicle has regular brakes, but the antilock brakes are not functioning.

If both the ABS and the brake system warning light are on, the vehicle's antilock brakes are not functioning and there is a problem with the regular brakes. See your dealer for service.

See *Brake System Warning Light on page 5-21* and *Brake System Messages on page 5-35*.

Tow/Haul Mode Light

For vehicles with the Tow/Haul Mode feature, this light comes on when the Tow/Haul Mode has been activated.

See *Tow/Haul Mode on page 9-33*.

Lane Departure Warning (LDW) Light

This light is green if LDW is on and ready to operate.

This light changes to amber and flashes to indicate that the lane marking has been crossed without using a turn signal in that direction.

See *Lane Departure Warning (LDW) on page 9-68*.

Vehicle Ahead Indicator

If equipped, this indicator will display green when a vehicle is detected ahead and amber when you are following a vehicle ahead much too closely.

See *Forward Collision Alert (FCA) System on page 9-62*.

Traction Off Light

This light comes on briefly while starting the engine. If it does not, have the vehicle serviced by your dealer. If the system is working normally, the indicator light then turns off.

The traction off light comes on when the Traction Control System (TCS) has been turned off by pressing and releasing the TCS/StabiliTrak button.

This light and the StabiliTrak OFF light come on when StabiliTrak is turned off.

If the TCS is off, wheel spin is not limited. Adjust driving accordingly.

See *Traction Control/Electronic Stability Control on page 9-42*.

StabiliTrak® OFF Light

This light comes on briefly while starting the engine. If it does not, have the vehicle serviced by your dealer.

This light comes on when the StabiliTrak system is turned off. If StabiliTrak is off, the Traction Control System (TCS) is also off.

If the StabiliTrak and TCS are off, the system does not assist in controlling the vehicle. Turn on the TCS and the StabiliTrak systems and the warning light turns off.

See *Traction Control/Electronic Stability Control on page 9-42*.

Traction Control System (TCS)/StabiliTrak® Light

This light comes on briefly when the engine is started.

If the light does not come on, have the vehicle serviced by your dealer. If the system is working normally, the indicator light turns off.

If the light is on and not flashing, the TCS and potentially the StabiliTrak system have been disabled. A DIC message may display. Check the DIC messages to determine which feature(s) is no longer functioning and whether the vehicle requires service.

If the light is on and flashing, the TCS and/or the StabiliTrak system is actively working.

See *Traction Control/Electronic Stability Control on page 9-42*.

Engine Coolant Temperature Warning Light

This light comes on briefly while starting the vehicle.

If it does not, have the vehicle serviced by your dealer. If the system is working normally the indicator light goes off.

⚠ Caution

The engine coolant temperature warning light indicates that the vehicle has overheated. Driving with this light on can damage the engine and it may not be covered by the vehicle warranty. See *Engine Overheating on page 10-15*.

The engine coolant temperature warning light comes on when the engine has overheated.

If this happens, pull over and turn off the engine as soon as possible. See *Engine Overheating on page 10-15*.

Tire Pressure Light

For vehicles with the Tire Pressure Monitor System (TPMS), this light comes on briefly when the engine is started. It provides information about tire pressures and the TPMS.

When the Light Is On Steady

This indicates that one or more of the tires are significantly underinflated.

A Driver Information Center (DIC) tire pressure message may also display. See *Tire Messages on page 5-43*. Stop as soon as possible, and inflate the tires to the pressure value shown on the Tire and Loading Information label. See *Tire Pressure on page 10-45*.

When the Light Flashes First and Then Is On Steady

If the light flashes for about a minute and then stays on, there may be a problem with the TPMS. If the problem is not corrected, the light will come on at every ignition cycle. See *Tire Pressure Monitor Operation on page 10-48*.

Engine Oil Pressure Light

⚠ Caution

Lack of proper engine oil maintenance can damage the engine. Driving with the engine oil low can also damage the engine. The repairs would not be covered by the vehicle warranty. Check the oil level as soon as possible.

(Continued)

Caution (Continued)

Add oil if required, but if the oil level is within the operating range and the oil pressure is still low, have the vehicle serviced. Always follow the maintenance schedule for changing engine oil.

This light should come on briefly as the engine is started. If it does not come on, have the vehicle serviced by your dealer.

If the light comes on and stays on, it means that oil is not flowing through the engine properly. The vehicle could be low on oil and might have some other system problem. See your dealer.

Low Fuel Warning Light

This light is near the fuel gauge and comes on briefly when the ignition is turned on as a check to show it is working.

It also comes on when the fuel tank is low on fuel. The light turns off when fuel is added. If it does not, have the vehicle serviced.

Security Light

The security light should come on briefly as the engine is started. If it does not come on, have the vehicle serviced by your dealer. If the system is working normally, the indicator light turns off.

If the light stays on and the engine does not start, there could be a problem with the theft-deterrent system. See *Immobilizer Operation on page 2-22*.

High-Beam On Light

This light comes on when the high-beam headlamps are in use.

See *Headlamp High/Low-Beam Changer on page 6-4*.

IntelliBeam® Light

This light comes on when the IntelliBeam system, if equipped, is enabled.

See *Exterior Lamp Controls on page 6-1*.

Lamps On Reminder

This light comes on when the exterior lamps are in use. See *Exterior Lamp Controls on page 6-1*.

Cruise Control Light

The cruise control light is white when the cruise control is on and ready, and turns green when the cruise control is set and active.

See *Cruise Control on page 9-45*.

Adaptive Cruise Control Light

This light is white when the Adaptive Cruise Control (ACC, if equipped) is on and ready, and turns green when the ACC is set and active. See *Adaptive Cruise Control on page 9-48*.

Door Ajar Light

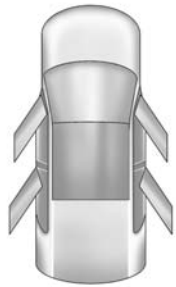

This light comes on when a door is open or not securely latched. Before driving, check that all doors are properly closed. See *Door Ajar Messages on page 5-36*.

Information Displays

Driver Information Center (DIC)

The DIC is displayed in the instrument cluster. It shows the status of many vehicle systems.

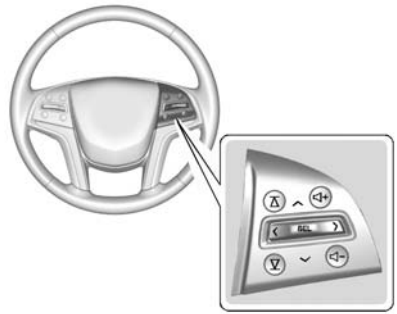

∧ or ∨ : Move SEL up or down to go to the previous or next selection.

< or >: Press to move between the interactive display zones in the cluster. Press < to go back to the previous menu.

SEL (Select): Press to open a menu or select a menu item. Press and hold to reset values on certain screens.

DIC Information Display Options

The info displays on the DIC can be turned on or off through the Settings menu.

1. Press SEL while viewing the Settings page in one of the interactive display zones on the cluster.
2. Scroll to Info Pages and press SEL.
3. Press ∧ or ∨ to move through the list of possible info displays.
4. Press SEL while an item is highlighted to select or deselect that item. When an item is selected, a checkmark will appear next to it.

DIC Information Displays

The following is the list of all possible DIC information displays. Some of the information displays may not be available for your particular vehicle.

Trip 1 or Trip 2 and Average Fuel Economy: The Trip display shows the current distance traveled, in either kilometers (km) or miles (mi), since the trip odometer was last reset. The trip odometer can be reset by pressing and holding SEL while this display is active.

The Average Fuel Economy display shows the approximate average liters per 100 kilometers (L/100 km) or miles per gallon (mpg). This number is calculated based on the number of L/100 km (mpg) recorded since the last time this menu item was reset. This number reflects only the approximate average fuel economy that the vehicle has right now, and will change as driving conditions change. The Average Fuel Economy can be reset along with the trip odometer by pressing and holding SEL while this display is active.

Also shows if the Active Fuel Management is active and in V4 mode, or inactive and in V8 mode. See *Active Fuel Management® on page 9-27*.

Fuel Range: Shows the approximate distance the vehicle can be driven without refueling. LOW will be displayed when the vehicle is low on fuel. The fuel range estimate is based on an average of the vehicle's fuel economy over recent driving history and the amount of fuel remaining in the fuel tank.

Instantaneous Fuel Economy: Shows the current fuel economy in either liters per 100 kilometers (L/100 km) or miles per gallon (mpg).

This number reflects only the approximate fuel economy that the vehicle has right now and changes frequently as driving conditions change.

Average Speed: Shows the average speed of the vehicle in kilometers per hour (km/h) or miles per hour (mph). This average is calculated based on the various vehicle speeds recorded since the last reset of this value. The average speed can be reset by pressing and holding SEL while this display is active.

Timer: This display can be used as a timer. To start the timer, press SEL while this display is active. The display will show the amount of time that has passed since the timer was last reset. To stop the timer, press SEL briefly while this display is active and the timer is running. To reset the timer to zero, press and hold SEL while this display is active.

Turn Arrow: Shows the next maneuver when using route guidance.

Estimated Time to Arrival: Shows the estimated time until arrival at your destination.

Distance to Destination: Shows the distance to the destination when using route guidance.

Speed Limit: Shows the current speed limit. The information for this page comes from a roadway database.

Speed Warning: Allows the driver to set a speed that they do not want to exceed. To set the Speed Warning, press SEL when Speed Warning is displayed. Press ∧ or ∨ to adjust the value. This feature can be turned off by pressing and holding SEL while viewing this page. If the selected speed limit is exceeded, a pop-up warning is displayed and a chime may sound.

Cruise Set Speed: Shows the speed the cruise control or Adaptive Cruise Control is set to.

Follow Distance Indicator: When Adaptive Cruise Control (ACC) is not engaged, the current follow time to the vehicle ahead is displayed as a time value on this page. When ACC has been engaged, the display switches to the gap setting page. This page shows the current gap setting along with the vehicle ahead indicator.

Battery Voltage: Shows the current battery voltage.

Oil Life: Shows an estimate of the oil's remaining useful life. If REMAINING OIL LIFE 99% is displayed, that means 99% of the current oil life remains.

When the remaining oil life is low, the CHANGE ENGINE OIL SOON message will appear on the display. See *Engine Oil Messages on page 5-37*. The oil should be changed as soon as possible. See *Engine Oil on page 10-6*. In addition

to the engine oil life system monitoring the oil life, additional maintenance is recommended. See *Maintenance Schedule on page 11-4*.

The Oil Life display must be reset after each oil change. It will not reset itself. Do not reset the Oil Life display accidentally at any time other than when the oil has just been changed. It cannot be reset accurately until the next oil change. To reset the engine oil life system, press and hold SEL for several seconds while the Oil Life display is active. See *Engine Oil Life System on page 10-8*.

Oil Pressure: Shows the engine oil pressure in kPa (kilopascals) or psi (pounds per square inch).

Engine Hours: Shows the total number of hours the engine has run.

Transmission Fluid Temperature: Shows the temperature of the automatic transmission fluid in either degrees Celsius (°C) or degrees Fahrenheit (°F).

Tire Pressure: Shows the approximate pressures of all four tires. Tire pressure is displayed in either kilopascal (kPa) or in pounds per square inch (psi). If the pressure is low, the value for that tire is shown in amber. See *Tire Pressure Monitor System on page 10-47* and *Tire Pressure Monitor Operation on page 10-48*.

Blank Page: Allows for no information to be displayed in the cluster info display areas.

Head-Up Display (HUD)

⚠ Warning

If the HUD image is too bright or too high in your field of view, it may take you more time to see things you need to see when it is dark outside. Be sure to keep the HUD image dim and placed low in your field of view.

If equipped with HUD, some information concerning the operation of the vehicle is projected onto the windshield. The image is projected through the HUD lens on top of the instrument panel. The information appears as an image focused out toward the front of the vehicle.

⚠ Caution

If you try to use the HUD image as a parking aid, you may misjudge the distance and damage your vehicle. Do not use the HUD image as a parking aid.

The HUD information can be displayed in various languages. The speedometer reading and other numerical values can be displayed in either English or metric units.

The language selection is changed through the radio and the units of measurement is changed through the instrument cluster. See *Vehicle Personalization on page 5-46* and "Cluster Settings Menu" under *Instrument Cluster on page 5-11*.

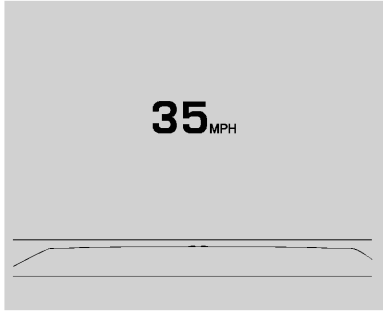

HUD Display on the Vehicle Windshield

The HUD may display some of the following vehicle information and vehicle messages or alerts:

- Speed
- Tachometer
- Audio
- Phone
- Navigation
- Collision Alert
- Cruise Control
- Lane Departure
- Low Fuel

Some vehicle messages or alerts displayed in the HUD may be cleared by using the steering wheel controls. See *Vehicle Messages on page 5-34*.

Some information shown may not be available on your vehicle if it is not equipped with these features.

The HUD control is to the left of the steering wheel.

To adjust the HUD image:

1. Adjust the driver seat.
2. Start the engine.

3. Use the following settings to adjust the HUD.

HUD **(Image Adjustment):** Press down or lift up to center the HUD image. The HUD image can only be adjusted up and down, not side to side.

INFO **(Display View):** Press to select the display view. Each press will change the display view.

±☼ **(Image Brightness):** Lift up and hold to brighten the display. Press down and hold to dim the display. Hold down to turn the display off.

The HUD image will automatically dim and brighten to compensate for outside lighting. The HUD brightness control can also be adjusted as needed.

The HUD image can temporarily light up depending on the angle and position of the sunlight on the HUD display. This is normal.

Polarized sunglasses could make the HUD image harder to see.

HUD Views

There are four views in the HUD. Some vehicle information and vehicle messages or alerts may be displayed in any view.

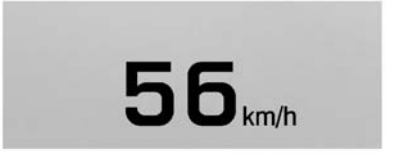

Metric

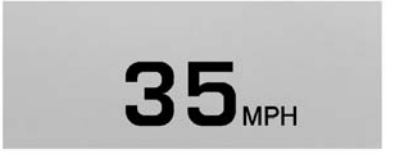

English

Speed View: This display gives the speedometer reading (in English or metric units), speed limit, Adaptive Cruise Control speed, Lane Departure Warning, and vehicle ahead indicator. Some information only appears on vehicles that have these features, and when they are active.

Metric

English

Audio/Phone View: This displays the speed view along with audio/phone information. The current radio station, media type, and incoming calls will be displayed.

All HUD views may briefly display audio information when the driver uses the steering wheel controls to adjust the audio settings appearing in the instrument cluster.

Incoming phone calls appearing in the instrument cluster may also display in any HUD view.

Metric

English

Navigation View: This displays the speed view along with Turn-by-Turn Navigation information. The compass heading is displayed when navigation routing is not active.

Navigation Turn-by-Turn Alerts shown in the instrument cluster may also be displayed in any HUD view.

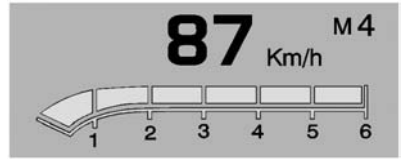

Metric

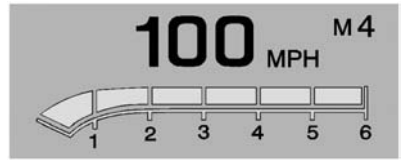

English

Performance View: This displays the speedometer reading, rpm reading, transmission positions, and gear shift indicator.

Care of the HUD

Clean the inside of the windshield to remove any dirt or film that could reduce the sharpness or clarity of the HUD image.

Clean the HUD lens with a soft cloth sprayed with glass cleaner. Wipe the lens gently, then dry it.

HUD Troubleshooting

Check that:

- Nothing is covering the HUD lens.
- HUD brightness setting is not too dim or too bright.
- HUD is adjusted to the proper height.
- Polarized sunglasses are not worn.
- Windshield and HUD lens are clean.

If the HUD image is not correct, contact your dealer.

The windshield is part of the HUD system. See *Windshield Replacement on page 10-25*.

Vehicle Messages

Messages displayed on the DIC indicate the status of the vehicle or some action that may be needed to correct a condition. Multiple messages may display one after the other.

The messages that do not require immediate action can be acknowledged and cleared by pressing SEL. The messages that require immediate action cannot be cleared until that action is performed. All messages should be taken seriously and clearing the messages does not correct the problem.

The following are some of the vehicle messages that may be displayed depending on the vehicle content.

Battery Voltage and Charging Messages

BATTERY SAVER ACTIVE

This message displays when the vehicle has detected that the battery voltage is dropping beyond a reasonable point. The battery saver system starts reducing features of the vehicle that may be noticed. At the point that features are disabled, this message displays. Turn off unnecessary accessories to allow the battery to recharge.

LOW BATTERY

This message is displayed when the battery voltage is low. See *Battery - North America on page 10-21*.

SERVICE BATTERY CHARGING SYSTEM

This message is displayed when there is a fault in the battery charging system. Take the vehicle to your dealer for service.

TRANSPORT MODE ON

This message is displayed when the vehicle is in transport mode. Some features can be disabled while in this mode, including Remote Keyless Entry (RKE), remote start, and the vehicle alarm system. Take the vehicle to your dealer for service to turn transport mode off.

Brake System Messages

BRAKE FLUID LOW

This message is displayed when the brake fluid level is low. See *Brake Fluid on page 10-19*.

BRAKES OVERHEATED

This message is displayed when the brakes are becoming overheated. This may be seen when driving on hills. Shift to a lower gear.

STEP ON BRAKE TO RELEASE PARK BRAKE

This message is displayed if you attempt to release the Electric Parking Brake without the brake pedal applied. See *Electric Parking Brake on page 9-39*.

RELEASE PARKING BRAKE

This message is displayed if the Electric Parking Brake is on while the vehicle is in motion. See *Electric Parking Brake on page 9-39*.

SERVICE BRAKE ASSIST

This message may be displayed when there is a problem with the brake boost assist system. The brake boost assist motor may be heard and brake pedal pulsation may be felt. This is normal under these conditions. Take the vehicle to your dealer for service.

SERVICE PARKING BRAKE

This message is displayed when there is a problem with the parking brake. Take the vehicle to your dealer for service.

Compass Messages

Dashes may be displayed if the vehicle temporarily loses communication with the Global Positioning System (GPS).

Cruise Control Messages

ADAPTIVE CRUISE SET TO XXX

This message displays when the Adaptive Cruise Control (ACC) speed is set. See *Adaptive Cruise Control on page 9-48*.

ADAPTIVE CRUISE TEMPORARILY UNAVAILABLE

This message displays when attempting to activate Adaptive Cruise Control (ACC) when it is temporarily unavailable. The ACC system does not need service.

This can occur under the following conditions:

- The radar is not clean. Keep the radar sensors free of mud, dirt, snow, ice, and slush. Clean the entire front and/or rear of the vehicle. For cleaning instructions, see *Exterior Care on page 10-79*.
- Heavy rain or snow is interfering with the radar object detection or camera performance.

CRUISE SET TO XXX

This message displays when the cruise control speed is set. See *Cruise Control on page 9-45*.

NO CRUISE BRAKING GAS PEDAL APPLIED

This message displays when Adaptive Cruise Control (ACC) is active and the driver is pressing the gas pedal. When this occurs, ACC will not brake. See *Adaptive Cruise Control on page 9-48*.

SERVICE ADAPTIVE CRUISE CONTROL

This message displays when the Adaptive Cruise Control (ACC) needs service. Take the vehicle to your dealer.

SHIFT TO PARK BEFORE EXITING

This message may display if Adaptive Cruise Control (ACC) is engaged holding the vehicle at a stop, and the driver attempts to exit the vehicle. Put the vehicle in P (Park) before exiting.

Door Ajar Messages

DOOR OPEN

A door open symbol will be displayed on the DIC showing which door is open. If the vehicle has been shifted out of P (Park), a DOOR OPEN message will also be displayed. The DOOR OPEN message may also be displayed if the vehicle starts to move. Close the door completely.

HOOD OPEN

This message will display along with a hood open symbol when the hood is open. Close the hood completely.

TRUNK OPEN

This message will display along with a symbol when the trunk is open. Close the trunk completely.

Engine Cooling System Messages

A/C OFF DUE TO HIGH ENGINE TEMP

This message displays when the engine coolant becomes hotter than the normal operating temperature. See *Engine Coolant Temperature Gauge on page 5-15*. To avoid added strain on a hot engine, the air conditioning compressor automatically turns off. When the coolant temperature returns to normal, the air conditioning compressor turns back on. You can continue to drive your vehicle.

If this message continues to appear, have the system repaired by your dealer as soon as possible to avoid damage to the engine.

ENGINE OVERHEATED IDLE ENGINE

This message displays when the engine coolant temperature is too hot. Stop and allow the vehicle to idle until it cools down. See *Engine Coolant Temperature Gauge on page 5-15*.

When towing, use Tow/Haul Mode to prevent damage to the engine or transmission. See *Tow/Haul Mode on page 9-33*.

ENGINE OVERHEATED STOP ENGINE

This message displays and a chime may sound if the engine cooling system reaches unsafe temperatures for operation. Stop and turn off the vehicle as soon as it is safe to do so to avoid severe damage. This message clears when the engine has cooled to a safe operating temperature.

Engine Oil Messages

CHANGE ENGINE OIL SOON

This message displays when the engine oil needs to be changed. When you change the engine oil, be sure to reset the oil life system. See *Engine Oil Life System on page 10-8*, *Driver Information Center (DIC) on page 5-27*, *Engine Oil on page 10-6*, and *Maintenance Schedule on page 11-4*.

ENGINE OIL HOT, IDLE ENGINE

This message displays when the engine oil temperature is too hot. Stop and allow the vehicle to idle until it cools down.

ENGINE OIL LOW — ADD OIL

On some vehicles, this message displays when the engine oil level may be too low. Check the oil level before filling to the recommended level. If the oil is not low and this message remains on, take the vehicle to your dealer for service. See *Engine Oil on page 10-6*.

OIL PRESSURE LOW — STOP ENGINE

This message displays if low oil pressure levels occur. Stop the vehicle as soon as safely possible and do not operate it until the cause

of the low oil pressure has been corrected. Check the oil as soon as possible and have the vehicle serviced by your dealer.

Engine Power Messages

ENGINE POWER IS REDUCED

This message displays when the vehicle's engine power is reduced. Reduced engine power can affect the vehicle's ability to accelerate. If this message is on, but there is no reduction in performance, proceed to your destination. The performance may be reduced the next time the vehicle is driven. The vehicle may be driven at a reduced speed while this message is on, but maximum acceleration and speed may be reduced. Anytime this message stays on, the vehicle should be taken to your dealer for service as soon as possible.

Fuel System Messages

FUEL LEVEL LOW

This message displays when the vehicle is low on fuel. Refuel as soon as possible.

Key and Lock Messages

NO REMOTE DETECTED

This message displays when the transmitter battery may be weak. See “Starting the Vehicle with a Low Transmitter Battery” under *Remote Keyless Entry (RKE) System Operation on page 2-3*.

NO REMOTE KEY WAS DETECTED PLACE KEY IN TRANSMITTER POCKET THEN START YOUR VEHICLE

This message displays when trying to start the vehicle if an RKE transmitter is not detected. The transmitter battery may be weak. See “Starting the Vehicle with a Low Transmitter Battery” under *Remote Keyless Entry (RKE) System Operation on page 2-3*.

NO REMOTE DETECTED PRESS BRAKE TO RESTART

This message displays when attempting to turn off the vehicle and the RKE transmitter is no longer detected. Restarting is allowed without the RKE transmitter for five minutes. Press the brake pedal to restart the vehicle.

NUMBER OF KEYS PROGRAMMED

This message displays when programming new keys to the vehicle.

REMOTE LEFT IN VEHICLE

This message displays when leaving the vehicle with the RKE transmitter still inside.

REPLACE BATTERY IN REMOTE KEY

This message displays when the battery in the RKE transmitter needs to be replaced.

Lamp Messages

AUTOMATIC LIGHT CONTROL ON/OFF

This message is displayed when the exterior lamp control is in AUTO and the lights have turned on or off. See *Automatic Headlamp System on page 6-4*.

XXX TURN INDICATOR FAILURE

When one of the turn signals is out, this message displays to show which bulb needs to be replaced. See *Bulb Replacement on page 10-26* and *Replacement Bulbs on page 10-27*.

TURN SIGNAL ON

This message is displayed if the turn signal has been left on. Turn off the turn signal.

Object Detection System Messages

24 GHz RADARS OFF

This message displays when driving in certain areas where there may be radar interference. Adaptive Cruise Control (ACC), Forward Collision Alert (FCA), and the Active Emergency Braking System may not work or may not work as well. The vehicle does not need service.

AUTOMATIC COLLISION PREP OFF

This message displays when the Active Emergency Braking System has been turned off. See *Active Emergency Braking System on page 9-64*.

AUTOMATIC COLLISION PREP REDUCED

This message displays when the Active Emergency Braking System has been set to the Alert setting. This setting disables most automatic braking functions of the Auto Collision Preparation feature. Some last-second automatic braking capability is still provided with the Alert setting, but braking is less likely to occur. See *Active Emergency Braking System on page 9-64*.

AUTOMATIC COLLISION PREP UNAVAILABLE

This message displays when the Active Emergency Braking System has been unavailable for some time. The Active Emergency Braking System does not need service.

This can occur under the following conditions:

- The radar is not clean. Keep the radar sensors free of mud, dirt, snow, ice, and slush. Clean the

entire front and/or rear of the vehicle. For cleaning instructions, see *Exterior Care on page 10-79*.

- Heavy rain or snow is interfering with the radar object detection or camera performance.

This message may also be displayed if there is a problem with the StabiliTrak system.

FORWARD COLLISION ALERT OFF

This message displays when the Forward Collision Alert has been turned off.

FRONT CAMERA BLOCKED CLEAN WINDSHIELD

This message displays when the camera is blocked. Cleaning the outside of the windshield behind the rearview mirror may correct the issue. The Lane Departure Warning (LDW) system will not operate. Adaptive Cruise Control (ACC), Forward Collision Alert (FCA), and the Active Emergency Braking System may not work or may not work as well.

LANE DEPARTURE WARNING UNAVAILABLE

This message displays when attempting to activate the Lane Departure Warning (LDW) system when it is temporarily unavailable. The LDW system does not need service.

This message could be due to the camera being blocked. Cleaning the outside of the windshield behind the rearview mirror may correct the issue.

REAR AUTO BRAKE/PARK ASSIST OFF

This message displays when the Parking Assist system has been turned off or when there is a temporary condition causing the system to be disabled.

REAR AUTO BRAKE AND PARK ASSIST UNAVAILABLE

This message displays when attempting to activate the parking and backing features of the Driver Assistance System when they are temporarily unavailable. The system does not need service.

This can occur under the following conditions:

- The radar is not clean. Keep the radar sensors free of mud, dirt, snow, ice, and slush. Clean the entire front and/or rear of the vehicle. For cleaning instructions, see *Exterior Care on page 10-79*.
- Heavy rain or snow is interfering with the radar object detection or camera performance.

See *Driver Assistance Systems on page 9-56*.

SERVICE AUTOMATIC COLLISION PREP

If this message displays, take the vehicle to your dealer to repair the system.

SERVICE DRIVER ASSIST SYSTEM

If this message displays, take the vehicle to your dealer to repair the system.

Adaptive Cruise Control (ACC), Forward Collision Alert (FCA), Active Emergency Braking System, Assistance Systems for Parking or Backing, and/or Lane Departure Warning (LDW) system may not work. Do not use these systems until the vehicle has been repaired.

SERVICE FRONT CAMERA

If this message remains on after continued driving, the vehicle needs service. Do not use the Lane Departure Warning (LDW) and Forward Collision Alert (FCA) features. Take the vehicle to your dealer.

SERVICE PARK ASSIST

This message displays if there is a problem with the Parking Assist system. Do not use this system to help you park. See your dealer for service.

SERVICE REAR AUTO BRAKE AND PARK ASSIST

This message displays if there is a problem with the parking and backing features of the Driver Assistance System. Do not use this system to help park or back the vehicle. See your dealer for service.

SIDE BLIND ZONE ALERT OFF

This message indicates that the driver has turned the Side Blind Zone Alert (SBZA) system off.

SERVICE SIDE DETECTION SYSTEM

If this message remains on after continued driving, the vehicle needs service. Side Blind Zone Alert (SBZA) and Rear Cross Traffic Alert (RCTA) features will not work. Take the vehicle to your dealer.

SIDE DETECTION SYSTEM UNAVAILABLE

This message indicates that Side Blind Zone Alert (SBZA) and Rear Cross Traffic Alert (RCTA) are disabled either because the sensor is blocked and cannot detect vehicles in the blind zone, or the vehicle is passing through an open area, such as the desert, where there is insufficient data for operation. This message may also activate during heavy rain or due to road spray. The vehicle does not need service. For cleaning, see "Washing the Vehicle" under *Exterior Care on page 10-79*.

Ride Control System Messages

SERVICE LEVELING SYSTEM

This message displays when there is a problem with the automatic rear level control. See *Automatic Level Control on page 9-44*. Have the vehicle serviced by your dealer.

SERVICE STABILITRAK

This message displays if there is a problem with the StabiliTrak system. See *Traction Control/Electronic Stability Control on page 9-42*.

SERVICE SUSPENSION SYSTEM

This message displays when there is a problem with the Magnetic Ride Control system. See *Magnetic Ride Control on page 9-44*. Have the vehicle serviced by your dealer.

SERVICE TRACTION CONTROL

This message displays when there is a problem with the Traction Control System (TCS). See *Traction Control/Electronic Stability Control on page 9-42*.

SPORT MODE ON

This message displays when the Sport Mode is on. See *Magnetic Ride Control on page 9-44*.

TOUR MODE ON

This message displays when the Tour Mode is on. See *Magnetic Ride Control on page 9-44*.

TRACTION CONTROL OFF

This message displays when the Traction Control System (TCS) has been turned off. See *Traction Control/Electronic Stability Control on page 9-42*.

TRACTION CONTROL ON

This message displays when the Traction Control System (TCS) has been turned on. See *Traction Control/Electronic Stability Control on page 9-42*.

Airbag System Messages

SERVICE AIRBAG

This message displays if there is a problem with the airbag system. Take the vehicle to your dealer for service.

Safety Belt Messages

AUTOMATIC SEATBELT TIGHTENING UNAVAILABLE

This message displays when the Automatic Safety Belt Tightening System, if equipped, becomes unavailable. This could be caused by a temporary condition. If the message continues to display, see your dealer.

SERVICE AUTOMATIC SEATBELT TIGHTENING SYSTEM

If this message displays, take the vehicle to your dealer to repair the Automatic Safety Belt Tightening System, if equipped.

Security Messages

THEFT ATTEMPTED

This message displays if the vehicle detects a tamper condition.

Service Vehicle Messages

SERVICE VEHICLE SOON

This message is displayed if there is a problem with the vehicle. Take the vehicle to your dealer for service.

Steering System Messages

STEERING ASSIST IS REDUCED DRIVE WITH CARE

This message may display if a problem occurs with the electric power steering system. If this message appears, steering effort may be slightly higher than normal. The vehicle is still safe to drive. Use caution while in reduced assist mode. If this message is persistent or appears repeatedly, take the vehicle to your dealer for service. See *Steering on page 9-4*.

SERVICE POWER STEERING

This message displays when there is a problem with electric power steering. If this message displays and a reduction in steering performance or loss of power steering assistance is noticed, see your dealer. See *Steering on page 9-4*.

Starting the Vehicle Messages

PRESS BRAKE TO START VEHICLE

This message is displayed when attempting to start the vehicle without first pressing the brake pedal.

SERVICE KEYLESS START SYSTEM

This message is displayed if there is a problem with the pushbutton start system. Take the vehicle to your dealer for service.

Tire Messages

SERVICE TIRE MONITOR SYSTEM

This message displays if there is a problem with the Tire Pressure Monitor System (TPMS). See *Tire Pressure Monitor Operation on page 10-48*.

TIRE LEARNING ACTIVE

This message displays when the system is learning new tires. See *Tire Pressure Monitor Operation on page 10-48*.

TIRE LOW ADD AIR TO TIRE

This message displays when the pressure in one or more of the tires is low.

This message also displays LEFT FRONT, RIGHT FRONT, LEFT REAR, or RIGHT REAR to indicate the location of the low tire.

The low tire pressure warning light will also come on. See *Tire Pressure Light on page 5-25*.

If a tire pressure message appears on the DIC, stop as soon as you can. Inflate the tires by adding air until the tire pressure is equal to the values shown on the Tire and Loading Information label. See *Tires on page 10-38*, *Vehicle Load Limits on page 9-14*, and *Tire Pressure on page 10-45*.

You can receive more than one tire pressure message at a time. The DIC also shows the tire pressure values. See *Driver Information Center (DIC) on page 5-27*.

Transmission Messages

4WD OFF

If equipped with four-wheel drive, this message displays when the four-wheel-drive system is temporarily disabled due to an overheated condition. The vehicle will run in two-wheel drive when this message is present. Once the four-wheel-drive system cools down, the message turns off and the four-wheel-drive system returns to normal operation.

4WD SHIFT IN PROGRESS

This message will display while the four-wheel-drive system is shifting.

FOR 4WD LOW SHIFT TO NEUTRAL

If a four-wheel drive shift into 4↓ is requested, and the vehicle speed is correct, but the transmission is not in N (Neutral), this message will display until the transmission is shifted to N (Neutral).

FOR 4WD LOW SLOW TO XXX

If a four-wheel drive shift into 4↓ is requested, but the vehicle speed is too high, this message will display until the correct vehicle speed is reached.

GRADE BRAKING ACTIVE

This message displays when grade braking has been activated while driving on downhill grades. This message will only appear the first time the feature is activated in an ignition cycle. See *Tow/Haul Mode on page 9-33*, *Automatic Transmission on page 9-28*, and *Cruise Control on page 9-45*.

GRADE BRAKING OFF

This message displays when grade braking has been disabled with the Tow/Haul Mode button on the end of the shift lever. See *Tow/Haul Mode on page 9-33*, *Automatic Transmission on page 9-28*, and *Cruise Control on page 9-45*.

GRADE BRAKING ON

This message displays when grade braking has been enabled with the Tow/Haul Mode button on the end of the shift lever. See *Tow/Haul Mode on page 9-33*, *Automatic Transmission on page 9-28*, and *Cruise Control on page 9-45*.

SERVICE 4WD

If the vehicle has four-wheel drive, this message may display if a problem occurs with the four-wheel-drive system. If this message appears, stop as soon as possible and turn off the vehicle. Turn the vehicle off for at least one minute, then restart the vehicle and check for the message on the DIC display. If the message is still displayed or appears again when you begin driving, the four-wheel-drive system needs service. See your dealer.

SHIFT DENIED

This message displays when the shift lever is in M (Manual Mode) and a transmission range has been selected that is unavailable at the current vehicle speed.

TO EXIT 4WD LOW SHIFT TO NEUTRAL

If a four-wheel drive shift out of 4↓ is requested, and the vehicle speed is correct, but the transmission is not in N (Neutral), this message will display until the transmission is shifted to N (Neutral).

TO EXIT 4WD LOW SLOW TO XXX

If a four-wheel drive shift out of 4↓ is requested, but the vehicle speed is too high, this message will display until the correct vehicle speed is reached.

TRANSMISSION HOT IDLE ENGINE

This message displays and a chime may sound if the transmission fluid in the vehicle gets hot. Driving with the transmission fluid temperature high can cause damage to the vehicle. Stop the vehicle and let it idle to allow the transmission to cool. This message clears and the chime stops when the fluid temperature reaches a safe level.

When towing, use Tow/Haul Mode to prevent damage to the engine or transmission. See *Tow/Haul Mode on page 9-33*.

VEHICLE IN 4WD LOW

This message will display if the vehicle is driven in 4↓ for about 10 minutes above 72 km/h (45 mph).

Vehicle Reminder Messages

ICE POSSIBLE DRIVE WITH CARE

This message displays when ice conditions are possible.

Vehicle Speed Messages

SELECTED SPEED LIMIT EXCEEDED

This message is displayed when the vehicle speed is greater than the set speed. See "Speed Warning" under *Driver Information Center (DIC) on page 5-27*.

Washer Fluid Messages

WASHER FLUID LOW ADD FLUID

This message may display when the washer fluid level is low. Fill the windshield washer reservoir as soon as possible. See *Engine Compartment Overview on page 10-5* for the location of the windshield washer reservoir. Also, see *Washer Fluid on page 10-17*.

Window Messages

OPEN, THEN CLOSE DRIVER/ PASSENGER WINDOW

This message is displayed when the window needs to be reprogrammed. If the vehicle's battery has been recharged or disconnected, you will need to program each front window for the express-up feature to work. See *Power Windows on page 2-26*.

Vehicle Personalization

Use the audio system controls to access the personalization menus for customizing vehicle features.

The following are all possible personalization features. Depending on the vehicle, some may not be available.

Audio System Controls

1. Press the desired feature to display a list of available options.
2. Press to select the desired feature setting.
3. Press < Back to return to the previous menu or exit.

Press SETTINGS from the Home Page on the infotainment system display.

Personalization Menus

The following list of menu items may be available:

- Time and Date
- Language (Language)
- Valet Mode
- Teen Driver
- Radio
- Vehicle
- Bluetooth
- Voice
- Display
- Rear Camera
- Return to Factory Settings
- Software Information

Detailed information for each menu follows.

Time and Date

Manually set the time and date. See *Clock on page 5-6*.

Language (Language)

Select Language, then select from the available language(s).

The selected language will display on the system, and voice recognition will reflect the selected language.

Valet Mode (If Equipped)

This will lock the infotainment system and steering wheel controls. It may also limit top speed, power, and access to vehicle storage locations (if equipped).

To enable valet mode:

1. Enter a four-digit code on the keypad.
2. Press Enter to go to the confirmation screen.
3. Re-enter the four-digit code.

Press LOCK or UNLOCK to lock or unlock the system. Press Back to go back to the previous menu.

Teen Driver (If Equipped)

Press and the following may display:

- View Report Card
- Manage Settings
- Change PIN
- Key Registration
- Clear All Teen Keys/PIN

View Report Card

This allows the driver's driving habits to be viewed. See "Teen Driver" in "Settings" in the infotainment manual.

Manage Settings

Press and the following may display:

- Audio Volume Limit
- Teen Driver Speed Limiter
- Teen Driver Speed Warning

Audio Volume Limit

This allows a maximum radio volume to be set.

Select Off or On.

Teen Driver Speed Limiter

If equipped, this allows the maximum speed limit of the vehicle to be set.

Select Off or On.

Teen Driver Speed Warning

This allows a warning to be set when a certain speed is exceeded.

Select Off or On.

Change PIN

This allows the Personal Identification Number (PIN) to be changed. See “Teen Driver” in “Settings” in the infotainment manual.

Key Registration

This allows the key to be registered. See “Register or Unregister a Key” in “Teen Driver” in the infotainment manual.

Clear All Teen Keys/PIN

This allows all Teen Driver keys and the PIN to be cleared.

Select Continue or Cancel.

Radio

Press to display the Radio menu and the following may display:

- Manage Favorites
- Number of Favorites Shown
- Audible Touch Feedback
- Bose AudioPilot
- Auto Volume
- Maximum Startup Volume
- Audio Cue Volume

Manage Favorites

This allows favorites to be edited. See “Manage Favorites” in “Settings” under “Radio” in the infotainment manual.

Number of Favorites Shown

Press to set the number of favorites to display.

Select the desired number or select Auto and the infotainment system will automatically adjust the number of favorites shown.

Audible Touch Feedback

This allows Audible Touch Feedback to be turned on or off.

Select Off or On.

Bose AudioPilot

This allows Bose AudioPilot to be turned on or off.

Select Off or On.

Auto Volume

This feature adjusts the volume based on vehicle speed and ambient noise.

Select Off, Low, Medium-Low, Medium, Medium-High, or High.

Maximum Startup Volume

This feature sets the maximum startup volume. If the vehicle is started and the volume is greater than this level, the volume is

adjusted to this level. To set the maximum startup volume, press + or − to increase or decrease.

Audio Cue Volume

This feature sets the volume of audio files played at system startup and shutdown.

Select On, then press + or − to increase or decrease the volume.

Vehicle

Select and the following may display:

- Climate and Air Quality
- Collision/Detection Systems
- Comfort and Convenience
- Lighting
- Power Door Locks
- Remote Lock, Unlock, Start

Climate and Air Quality

Select the Climate and Air Quality menu and the following may display:

- Auto Fan Max Speed
- Auto Defog
- Auto Rear Defog

Auto Fan Max Speed

This feature will set the maximum auto fan speed.

Select Low, Medium, or High.

Auto Defog

When set to on, the auto defog comes on when the climate control detects a humidity risk based on outside temp, windshield temp, and interior humidity. Air will be directed to the windshield.

Select Off or On.

Auto Rear Defog

If equipped, this feature will automatically turn on the rear window defogger when it is cold outside.

Select Off or On.

Collision/Detection Systems

Select the Collision/Detection Systems menu and the following may display:

- Alert Type
- Auto Collision Preparation
- Go Notifier
- Park Assist
- Side Blind Zone Alert
- Rear Cross Traffic Alert

Alert Type

This feature will set crash alerts to beeps or seat vibrations. This setting affects all crash alerts including Forward Collision Alert, Lane Departure Warning, and Park Assist alerts. See *Driver Assistance Systems on page 9-56*.

Select Beeps or Safety Alert Seat.

Auto Collision Preparation

This feature will turn on or off the Forward Collision Alert feature as well as the automatic braking

capability of the Auto Collision Preparation feature. With the Alert and Brake setting, both Forward Collision Alert as well as the automatic braking capability of the Auto Collision Preparation feature are available. The Alert setting disables most automatic braking functions of the Auto Collision Preparation feature. Some last-second automatic braking capability is still provided with the Alert setting, but it is much less likely to be triggered by most driving conditions. Off disables all Forward Collision Alert and automatic braking capabilities of the Auto Collision Preparation feature.

Select Off, Alert and Brake, or Alert. See ”Automatic Collision Preparation (ACP) System” in *Active Emergency Braking System on page 9-64*.

Go Notifier

This feature will give a reminder that Adaptive Cruise Control provides when it has brought the vehicle to a complete stop behind another stopping vehicle, and then that vehicle drives on.

Select Off or On.

Park Assist

If equipped, this allows the feature to be turned on or off. See *Assistance Systems for Parking or Backing on page 9-56*.

Select Off, On, or On with Towbar Attached.

Side Blind Zone Alert

This allows the feature to be turned on or off. See *Side Blind Zone Alert (SBZA) on page 9-66*.

Select Off or On.

Rear Cross Traffic Alert

This allows the feature to be turned on or off. See *Assistance Systems for Parking or Backing on page 9-56*.

Select Off or On.

Comfort and Convenience

Select the Comfort and Convenience menu and the following may display:

- Auto Memory Recall
- Easy Exit Options
- Chime Volume
- Reverse Tilt Mirror
- Auto Mirror Folding
- Auto Wipe in Reverse Gear

Auto Memory Recall

This allows the feature to be turned on or off. See *Memory Seats on page 3-7*.

Select On or Off.

Easy Exit Options

This allows the feature to be turned on or off. See *Memory Seats on page 3-7*.

Select On or Off.

Chime Volume

This allows the selection of the chime volume level.

Press + or − to adjust the volume.

Reverse Tilt Mirror

When on, the driver and/or passenger mirrors will tilt downward when the vehicle is shifted to R (Reverse) to improve visibility of the ground near the rear wheels.

Select Off, On - Driver and Passenger, On - Driver, or On - Passenger.

Auto Mirror Folding

When on, the outside rearview mirrors will automatically fold or unfold when the Remote Keyless Entry (RKE) transmitter 🔓 or 🔒 button is pressed and held.

Select Off or On.

Auto Wipe in Reverse Gear

When on and the front wiper is on, the rear wiper will automatically activate when the vehicle is shifted to R (Reverse).

Select Off or On.

Lighting

Select the Lighting menu and the following may display:

- Vehicle Locator Lights
- Exit Lighting
- Auto High Beam

Vehicle Locator Lights

This feature will flash the exterior lamps when 🔓 on the Remote Keyless Entry (RKE) transmitter is pressed to locate the vehicle.

Select On or Off.

Exit Lighting

This allows the selection of how long the exterior lamps stay on when leaving the vehicle when it is dark outside.

Select Off, 30 Seconds, 60 Seconds, or 120 Seconds.

Auto High Beam

This allows the feature to be turned on or off. See “IntelliBeam System” in *Exterior Lamp Controls on page 6-1*.

Select On or Off.

Power Door Locks

Select Power Door Locks and the following may display:

- Unlocked Door Anti-Lockout
- Auto Door Unlock
- Delayed Door Lock

Unlocked Door Anti-Lockout

When on, this feature will keep the driver door from locking when the vehicle is off, the driver door is open, and locking is requested. All the doors will lock and only the driver door will unlock. See *Lockout Protection on page 2-13*.

If Off is selected, the Delayed Door Lock menu will be available.

Select On or Off.

Auto Door Unlock

This allows selection of which of the doors will automatically unlock when the vehicle is shifted into P (Park).

Select Off, All Doors, or Driver Door.

Delayed Door Lock

When on, this feature will delay the locking of the doors. To override the delay, press the power door lock switch on the door.

Select On or Off.

Remote Lock, Unlock, Start

Select Remote Lock, Unlock, Start and the following may display:

- Remote Unlock Light Feedback
- Remote Lock Feedback
- Remote Door Unlock
- Remote Start Auto Cool Seats
- Remote Start Auto Heat Seats
- Passive Door Unlock
- Passive Door Lock
- Remote Left in Vehicle Alert

Remote Unlock Light Feedback

When on, the exterior lamps will flash when unlocking the vehicle with the RKE transmitter.

Select Off or Flash Lights.

Remote Lock Feedback

This allows selection of what type of feedback is given when locking the vehicle with the RKE transmitter.

Select Off, Lights and Horn, Lights Only, or Horn Only.

Remote Door Unlock

This allows selection of which doors will unlock when pressing 🔓 on the RKE transmitter.

Select All Doors or Driver Door.

Remote Start Auto Cool Seats

If equipped and turned on, this feature will turn the cooled seats on when using remote start on warm days.

Select Off or On.

Remote Start Auto Heat Seats

If equipped and turned on, this feature will turn the heated seats on when using remote start on cold days.

Select Off or On.

Passive Door Unlock

This allows the selection of what doors will unlock when using the button on the driver door to unlock the vehicle.

Select All Doors or Driver Door.

Passive Door Lock

This allows passive locking to be turned on or off and selects feedback. See *Remote Keyless Entry (RKE) System Operation on page 2-3*.

Select Off, On with Horn Chirp, or On.

Remote Left in Vehicle Alert

This feature sounds an alert when the RKE transmitter is left in the vehicle.

Select Off or On.

Bluetooth

Select and the following may display:

- Pair New Device
- Device Management
- Ringtones
- Voice Mail Numbers

Pair New Device

Select to pair a new device. See “Pairing” under “Bluetooth (Infotainment Controls)” in the infotainment manual.

Device Management

Select to connect to a different phone source, disconnect a phone, or delete a phone.

Ringtones

Press to change the ring tone for the specific phone. The phone does not need to be connected to change the ring tone.

Voice Mail Numbers

This feature displays the voice mail number for all connected phones. To change the voice mail number, select EDIT or press the EDIT button. Type a new number, then select SAVE or press the SAVE button.

Voice

Select and the following may display:

- Confidence Threshold
- Prompt Length
- Audio Feedback Speed

Confidence Threshold

This feature allows the adjustment of the sensitivity of the speech recognition system.

Select Short or Long.

Prompt Length

This feature adjusts the voice prompt length.

Select Confirm More or Confirm Less.

Audio Feedback Speed

This feature adjusts the audio feedback speed.

Select Slow, Medium, or Fast.

Display

Select and the following may display:

- Mode
- Proximity Sensing
- Calibrate Touchscreen
- Turn Display Off

Mode

Select to change the display of the infotainment system.

Select Auto, Day, or Night.

Proximity Sensing

This allows the feature to be turned on or off.

Select Off, On, or On-Map Only.

Calibrate Touchscreen

Select to calibrate the touchscreen, then follow the prompts.

Turn Display Off

Select to turn the display off. Press anywhere on the display area or any faceplate button to turn the display on.

Rear Camera

Select and the following may display:

- Guidance Lines
- Rear Cross Traffic Alert
- Rear Park Assist Symbols

Guidance Lines

Select to turn Off or On. See *Assistance Systems for Parking or Backing on page 9-56*.

Rear Cross Traffic Alert

Select to turn Off or On.

Rear Park Assist Symbols

Select to turn Off or On. See *Assistance Systems for Parking or Backing on page 9-56*.

Return to Factory Settings

Select and the following may display:

- Restore Vehicle Settings
- Clear All Private Data
- Restore Radio Settings

Restore Vehicle Settings

This allows selection of restoring vehicle settings.

Select Restore or Cancel.

Clear All Private Data

This allows selection to clear all private information from the vehicle.

Select Delete or Cancel.

Restore Radio Settings

This allows selection to restore radio settings.

Select Restore or Cancel.

Software Information

Select to view the infotainment system current software information.

Universal Remote System

See *Radio Frequency Statement on page 13-12*.

Universal Remote System Programming

If equipped, these buttons are in the overhead console.

This system can replace up to three remote control transmitters used to activate devices such as garage door openers, security systems, and home automation devices. These instructions refer to a garage door opener, but can be used for other devices.

Do not use the Universal Remote system with any garage door opener that does not have the stop and reverse feature. This includes any garage door opener model manufactured before April 1, 1982.

Read the instructions completely before programming the Universal Remote system. It may help to have another person assist with the programming process.

Keep the original hand-held transmitter for use in other vehicles as well as for future programming. Erase the programming when vehicle ownership is terminated. See “Erasing Universal Remote System Buttons” later in this section.

To program a garage door opener, park outside directly in line with and facing the garage door opener receiver. Clear all people and objects near the garage door.

Make sure the hand-held transmitter has a new battery for quick and accurate transmission of the radio-frequency signal.

Programming the Universal Remote System

For questions or help programming the Universal Remote system, call 1-800-355-3515 or see www.homelink.com.

Programming involves time-sensitive actions, and may time out causing the procedure to be repeated.

To program up to three devices:

1. Hold the end of the hand-held transmitter about 3 to 8 cm (1 to 3 in) away from the Universal Remote system buttons with the indicator light in view. The hand-held transmitter was supplied by the manufacturer of the garage door opener receiver.

2. At the same time, press and hold both the hand-held transmitter button and one of the three Universal Remote system buttons to be used to operate the garage door. Do not release either button until the indicator light goes from a slow to a rapid flashing light. Then release both buttons.

   Some garage door openers may require substitution of Step 2 with the procedure under “Radio Signals for Canada and Some Gate Operators” later in this section.

3. Press and hold the newly programmed Universal Remote system button for five seconds while watching the indicator light and garage door activation.
   - If the indicator light stays on continuously or the garage door moves when the button is pressed, then programming is complete. There is no need to complete Steps 4–6.
   - If the indicator light does not come on or the garage door does not move, a second button press may be required. For a second time, press and hold the newly programmed button for five seconds. If the light stays on or the garage door moves, programming is complete.
   - If the indicator light blinks rapidly for two seconds, then changes to a solid light and the garage door does not move, continue with programming Steps 4–6.

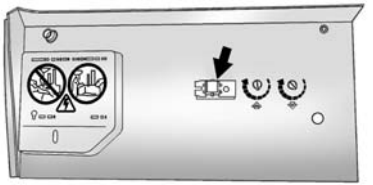

Learn or Smart Button

4. After completing Steps 1–3, locate the Learn or Smart button inside the garage on the garage door opener receiver. The name and color of the button may vary by manufacturer.
5. Press and release the Learn or Smart button. Step 6 must be completed within 30 seconds of pressing this button.
6. Inside the vehicle, press and hold the newly programmed Universal Remote system button for two seconds and then release it. If the garage door does not move or the lamp on the garage door opener receiver

does not flash, press and hold the same button a second time for two seconds, then release it. Again, if the door does not move or the garage door lamp does not flash, press and hold the same button a third time for two seconds, then release it.

The Universal Remote system should now activate the garage door.

Repeat the process for programming the two remaining buttons.

Radio Signals for Canada and Some Gate Operators

For questions or programming help, call 1-800-355-3515 or see www.homelink.com.

Canadian radio-frequency laws and some U.S. gate operators require transmitter signals to time out or quit after several seconds of transmission.

This may not be long enough for the Universal Remote system to pick up the signal during programming.

If the programming did not work, replace Step 2 under “Programming the Universal Remote System” with the following:

Press and hold the Universal Remote system button while pressing and releasing the hand-held transmitter button every two seconds until the signal has been successfully accepted by the Universal Remote system. The Universal Remote system indicator light will flash slowly at first and then rapidly. Proceed with Step 3 under “Programming the Universal Remote System” to complete.

Universal Remote System Operation

Using the Universal Remote System

Press and hold the appropriate Universal Remote system button for at least one-half second. The indicator light will come on while the signal is being transmitted.

Erasing Universal Remote System Buttons

Erase all programmed buttons when vehicle ownership is terminated.

To erase:

1. Press and hold the two outside buttons until the indicator light begins to flash. This should take about 10 seconds.
2. Release both buttons.

Reprogramming a Single Universal Remote System Button

To reprogram any of the system buttons:

1. Press and hold any one of the buttons. Do not release the button.
2. The indicator light will begin to flash after 20 seconds. Without releasing the button, proceed with Step 1 under “Programming the Universal Remote System.”

Lighting

Exterior Lighting
Exterior Lamp Controls 6-1
Exterior Lamps Off Reminder 6-3
Headlamp High/Low-Beam Changer 6-4
Flash-to-Pass 6-4
Daytime Running Lamps (DRL) 6-4
Automatic Headlamp System 6-4
Hazard Warning Flashers 6-6
Turn and Lane-Change Signals 6-6
Cornering Lamps 6-7

Interior Lighting
Instrument Panel Illumination Control 6-7
Dome Lamps 6-7
Reading Lamps 6-8

Lighting Features
Entry Lighting 6-8
Exit Lighting 6-9
Battery Load Management 6-9
Battery Power Protection 6-9

Exterior Lighting

Exterior Lamp Controls

The exterior lamp control is on the instrument panel to the left of the steering wheel.

Turn the control to the following positions:

(Off): Turns off the automatic headlamps and Daytime Running Lamps (DRL). Turning the headlamp control to the off position again will turn the automatic headlamps and DRL back on.

For vehicles first sold in Canada, the off position only works when the vehicle is shifted into the P (Park) position.

AUTO (Automatic): Automatically turns the exterior lamps on and off, depending on outside lighting.

(Parking Lamps): Turns on the parking lamps including all lamps, except the headlamps.

(Headlamps): Turns on the headlamps together with the parking lamps and instrument panel lights.

When the headlamps are turned on while the vehicle is on, the headlamps will turn off automatically 10 minutes after the ignition is turned off. When the headlamps are turned on while the vehicle is off, the headlamps will stay on for 10 minutes before automatically turning off to prevent the battery from being drained. Turn the headlamp control to off and then back to the headlamp on position to make the headlamps stay on for an additional 10 minutes.

IntelliBeam® System

If equipped, this system turns the vehicle's high-beam headlamps on and off according to surrounding traffic conditions.

The system turns the high-beam headlamps on when it is dark enough and there is no other traffic present.

This light comes on in the instrument cluster when the IntelliBeam system is enabled.

Turning On and Enabling IntelliBeam

To enable the IntelliBeam system, with the turn signal lever in the neutral position, turn the exterior lamp control to AUTO. The blue high-beam on light appears on the instrument cluster when the high beams are on.

Driving with IntelliBeam

The system only activates the high beams when driving over 40 km/h (25 mph).

There is a sensor near the top center of the windshield, which automatically controls the system. Keep this area of the windshield clear of debris to allow for best system performance.

The high-beam headlamps remain on, under the automatic control, until one of the following situations occurs:

- The system detects an approaching vehicle's headlamps.
- The system detects a preceding vehicle's taillamps.
- The outside light is bright enough that high-beam headlamps are not required.

- The vehicle's speed drops below 20 km/h (12 mph).
- The turn signal lever is moved forward to the high-beam position or the Flash-to-Pass feature is used. See *Headlamp High/Low-Beam Changer on page 6-4* and *Flash-to-Pass on page 6-4*.
- The IntelliBeam system is disabled by the high/low-beam changer or the Flash-to-Pass feature. If this happens, the high/low-beam changer must be activated two times within five seconds to reactivate the IntelliBeam system. The instrument cluster light will come on to indicate the IntelliBeam is reactivated. See *Headlamp High/Low-Beam Changer on page 6-4* and *Flash-to-Pass on page 6-4*.

The high beams may not turn off automatically if the system cannot detect other vehicle's lamps because of any of the following:

- The other vehicle's lamps are missing, damaged, obstructed from view, or otherwise undetected.
- The other vehicle's lamps are covered with dirt, snow, and/or road spray.
- The other vehicle's lamps cannot be detected due to dense exhaust, smoke, fog, snow, road spray, mist, or other airborne obstructions.
- The vehicle's windshield is dirty, cracked, or obstructed by something that blocks the view of the light sensor.
- The vehicle is loaded such that the front end points upward, causing the light sensor to aim high and not detect headlamps and taillamps.
- The vehicle is being driven on winding or hilly roads.

The automatic high-beam headlamps may need to be disabled if any of the above conditions exist.

This feature can be turned on or off in vehicle personalization. See *Vehicle Personalization on page 5-46*.

Exterior Lamps Off Reminder

If a door is open, a reminder chime sounds when the headlamps or parking lamps are manually turned on and the ignition is off. To turn off the chime, turn the exterior lamp control to off or AUTO and then back on, or close and re-open the door. In the AUTO mode, the headlamps turn off once the ignition is off or remain on until the headlamp delay ends (if enabled in the DIC). See “Exit Lighting” under *Vehicle Personalization on page 5-46*.

Headlamp High/ Low-Beam Changer

(Headlamp High/Low-Beam Changer): Push the turn signal lever toward the instrument panel to change the headlamps from low to high beam.

Pull the turn signal lever toward you and release it to return to low-beam headlamps.

When the high-beam headlamps are on, this indicator light on the instrument cluster will also be on.

Flash-to-Pass

This feature lets you use the high-beam headlamps to signal a driver in front of you that you want to pass. It works even if the headlamps are in the automatic position.

To use it, pull the turn signal lever toward you, then release it.

If the headlamps are in the automatic position or on low beam, the high-beam headlamps will turn on. They will stay on as long as you hold the lever toward you. The high-beam indicator on the instrument cluster will come on. Release the lever to return to normal operation.

Daytime Running Lamps (DRL)

DRL can make it easier for others to see the front of the vehicle during the day. Fully functional DRL are required on all vehicles first sold in Canada.

The DRL system comes on when the following conditions are met:

- The ignition is on.
- The exterior lamp control is in AUTO.
- The transmission is not in P (Park).
- The light sensor determines it is daytime.

When the DRL system is on, only the DRL are on. The taillamps, sidemarker lamps, instrument panel lights, and other lamps will not be on.

When it begins to get dark, the automatic headlamp system switches from DRL to the headlamps.

To turn off the DRL, turn the exterior lamp control to the off position and then release. For vehicles first sold in Canada, off will only work when the vehicle is in P (Park).

Automatic Headlamp System

When it is dark enough outside, the automatic headlamp system turns on the headlamps at the normal

brightness, along with the taillamps, sidemarker, parking lamps, and the instrument panel lights. The radio lights will also be dim.

To turn off the automatic headlamp system, turn the exterior lamp control to ⏻ and then release it.

The vehicle has a light sensor on the top of the instrument panel that controls the automatic headlamp system. Do not cover the sensor, otherwise the headlamps may come on when they are not needed.

The system may also turn on the headlamps when driving through a parking garage, heavy overcast weather, or a tunnel. This is normal.

There is a delay in the transition between the daytime and nighttime operation of the automatic headlamp system so that driving under bridges or bright overhead street lights does not affect the system. The automatic headlamp system is only affected when the light sensor detects a change in lighting lasting longer than the delay.

If the vehicle is started in a dark garage, the automatic headlamp system will come on immediately. Once the vehicle leaves the garage, it takes approximately one minute for the automatic headlamp system to change if it is bright enough outside. During that delay, the instrument cluster may not be as bright as usual. Make sure the instrument panel brightness control is in the full bright position. See *Instrument Panel Illumination Control on page 6-7*.

To idle the vehicle with the automatic headlamp system off, turn the control to the off position.

The headlamps will also stay on after you exit the vehicle.

The regular headlamp system can be turned on when needed.

Lights On with Wipers

If the windshield wipers are activated in daylight with the engine on, and the exterior lamp control is in AUTO, the headlamps, parking lamps, and other exterior lamps come on. The transition time for the lamps coming on varies based on wiper speed. When the wipers are not operating, these lamps turn off. Move the exterior lamp control to ⏻ or ≡DO≡ to disable this feature.

Hazard Warning Flashers

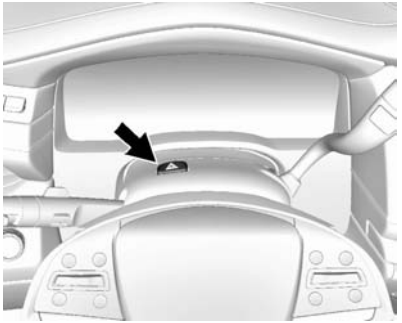

(Hazard Warning Flashers): Press this button to make the front and rear turn signal lamps flash on and off. Press again to turn the flashers off.

When the hazard warning flashers are on, the vehicle's turn signals will not work.

Turn and Lane-Change Signals

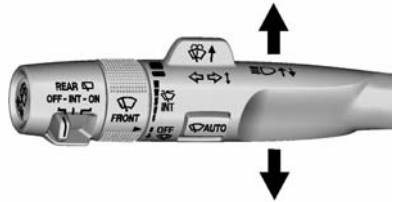

An arrow on the instrument cluster flashes in the direction of the turn or lane change.

Move the turn signal lever all the way up or down to signal a turn.

Raise or lower the lever for less than one second until the arrow starts to flash to signal a lane change. This causes the turn signals to automatically flash three times. It will flash six times if Tow/Haul Mode is active. Holding the turn signal lever for more than one second will cause the turn signals to flash until the lever is released.

The lever returns to its starting position whenever it is released.

If after signaling a turn or a lane change the arrows flash rapidly or do not come on, a signal bulb could be burned out.

Replace any burned out bulbs. If a bulb is not burned out, check the fuse. See *Fuses on page 10-28*.

Turn Signal On Chime

If the turn signal is left on for more than 1.2 km (0.75 mi), a chime sounds at each flash of the turn signal. The message TURN SIGNAL ON will also appear in the Driver Information Center (DIC). To turn the chime and message off, move the turn signal lever to the off position.

Cornering Lamps

For vehicles equipped with cornering lamps, they automatically come on when all of the following occur:

- The low-beam headlamps are on.
- The turn signals are activated or the steering wheel is at a calibrated angle.
- The vehicle speed is below the calibrated speed.

Interior Lighting

Instrument Panel Illumination Control

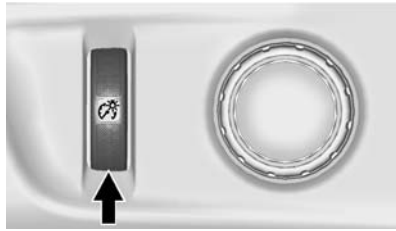

This feature controls the brightness of the instrument panel lights and is next to the exterior lamp control.

(Instrument Panel Illumination): Move the thumbwheel up or down to brighten or dim the lights.

Dome Lamps

There are dome lamps in the overhead console and the headliner, if equipped.

To change the dome lamp settings, press the following:

OFF: Turns the lamps off, even when a door is open.

DOOR: The lamps come on automatically when a door is opened.

ON: Turns all dome lamps on.

Reading Lamps

There are reading lamps in the overhead console and the headliner, if equipped. To operate, the ignition must be in the ACC/ACCESSORY or ON/RUN position, or using Retained Accessory Power (RAP).

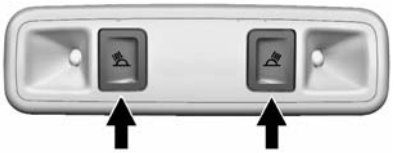

Press or next to each reading lamp to turn it on or off.

Lighting Features

Entry Lighting

Some exterior lamps turn on briefly at night, or in areas with limited lighting, when is pressed on the Remote Keyless Entry (RKE) transmitter. When a door is opened, the interior lamps come on if the dome lamp control is in the Door position. After about 30 seconds the exterior lamps turn off. Entry lighting can be disabled manually by changing the ignition out of the OFF position, or by pressing the RKE transmitter button.

This feature can be changed. See “Vehicle Locator Lights” under *Vehicle Personalization on page 5-46*.

Exit Lighting

Some exterior lamps and interior lamps come on at night, or in areas with limited lighting, when the driver door is opened after the ignition is turned off. The exterior lamps and interior lamps remain on for a set amount of time, then automatically turn off.

The exterior lamps turn off immediately by turning the exterior lamp control off.

This feature can be changed. See *Vehicle Personalization on page 5-46*.

Battery Load Management

The vehicle has Electric Power Management (EPM), which estimates the battery's temperature and state of charge. It then adjusts the voltage for best performance and extended life of the battery.

When the battery's state of charge is low, the voltage is raised slightly to quickly bring the charge back up. When the state of charge is high, the voltage is lowered slightly to prevent overcharging. The voltmeter gauge or the voltage display on the Driver Information Center (DIC), if equipped, may show the voltage moving up or down. This is normal. If there is a problem, an alert will be displayed.

The battery can be discharged at idle if the electrical loads are very high. This is true for all vehicles. This is because the generator (alternator) may not be spinning fast enough at idle to produce all the power that is needed for very high electrical loads.

A high electrical load occurs when several of the following are on, such as: headlamps, high beams, fog lamps, rear window defogger, climate control fan at high speed, heated seats, engine cooling fans, trailer loads, and loads plugged into accessory power outlets.

EPM works to prevent excessive discharge of the battery. It does this by balancing the generator's output and the vehicle's electrical needs. It can increase engine idle speed to generate more power, whenever needed. It can temporarily reduce the power demands of some accessories.

Normally, these actions occur in steps or levels, without being noticeable. In rare cases at the highest levels of corrective action, this action may be noticeable to the driver. If so, a DIC message might be displayed and it is recommended that the driver reduce the electrical loads as much as possible. See *Battery Voltage and Charging Messages on page 5-34*.

Battery Power Protection

This feature shuts off the dome and reading lamps if they are left on for more than 10 minutes when the ignition is off. This will keep the battery from running down.

✍ NOTES

Infotainment System

Introduction
Infotainment 7-1

Introduction

Infotainment

See the infotainment manual for information on the radio, audio players, phone, navigation system, and voice or speech recognition. It also includes information on settings.

✍ NOTES

Climate Controls

Climate Control Systems
Dual Automatic Climate Control System 8-1
Rear Climate Control System 8-6

Air Vents
Air Vents 8-8

Maintenance
Passenger Compartment Air Filter 8-8

Climate Control Systems

Dual Automatic Climate Control System

The climate control buttons and the touch screen are used to adjust the heating, cooling, and ventilation.

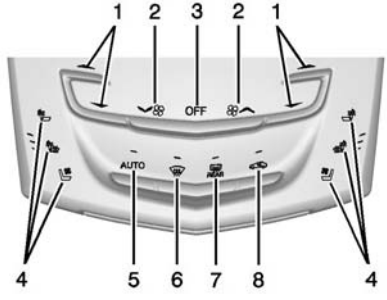

Climate Control Buttons

1. Driver and Passenger Temperature Controls
2. Fan Control
3. OFF (Fan)
4. Driver and Passenger Heated and Cooled Seats (If Equipped)
5. AUTO (Automatic Operation)
6. Defrost
7. Rear Window Defogger
8. Recirculation

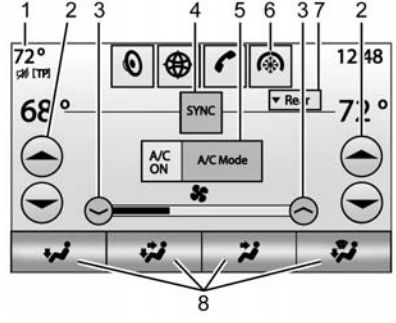

Climate Touch Screen Controls

1. Outside Temperature Display
2. Driver and Passenger Temperature Controls
3. Fan Control

4. SYNC (Synchronized Temperature)
5. A/C Mode (Air Conditioning)
6. Climate Control Selection (Application Tray Button)
7. Rear (Rear Climate Control Touch Screen)
8. Air Delivery Mode Control

Climate Control Touch Screen

The fan, air delivery mode, air conditioning, driver and passenger temperatures, and SYNC settings can be controlled by pressing CLIMATE on the infotainment home screen or the climate button in the touch screen application tray. A selection can then be made on the front climate control page displayed. See the infotainment manual.

Climate Control Status Screen

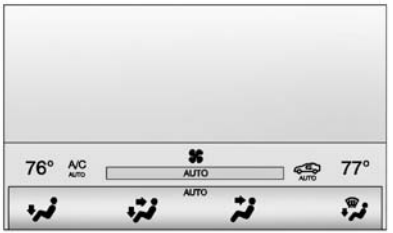

The climate control status screen appears briefly when the climate control buttons on the faceplate are adjusted. The air delivery mode can be adjusted on the climate control status screen.

Automatic Operation

The system automatically controls the fan speed, air delivery, air conditioning, and recirculation in order to heat or cool the vehicle to the desired temperature.

When the indicator light is on or AUTO is displayed on the touch screen, the system is in full automatic operation. If the air delivery mode or fan setting is manually adjusted, the auto indicator turns off and the display will show the selected settings. Auto operation can be turned off individually for climate settings.

For automatic operation:

1. Press AUTO.
2. Set the temperature. Allow the system time to stabilize. Then adjust the temperature as needed for best comfort.

To improve fuel efficiency and to cool the vehicle faster, recirculation may be automatically selected in warm weather. The recirculation light will not come on. Press to select recirculation; press it again to select outside air.

English units can be changed to metric units through the instrument cluster. See “Cluster Settings Menu” under *Instrument Cluster on page 5-11*.

OFF (Fan): Press the OFF button to turn the fan on or off. The temperature control and air delivery mode can still be adjusted with the fan off.

△ / ▽ (Driver and Passenger Temperature Controls): The temperature can be adjusted separately for the driver and the passenger. Press to increase or decrease the temperature. Press and hold to rapidly increase or decrease the temperature.

The driver and passenger temperatures can also be adjusted by pressing the controls on the touch screen.

SYNC (Synchronized Temperature): Press SYNC on the touch screen to link all climate zone settings to the driver settings. Adjust the driver side temperature control to change the linked temperature. When the passenger settings are adjusted, the SYNC button is displayed when the temperatures are unlinked.

Rear (If Equipped): Press this button on the front climate control touch screen to open the rear climate control screen. The rear climate control settings can now be adjusted from the front passenger area.

Manual Operation

∨ ∧ (Fan Control): Press the fan control buttons or the touch screen fan control, to increase or decrease the fan speed. Press and hold the buttons or the touch screen control to adjust speed more quickly. The fan speed setting displays. Pressing either button cancels automatic fan control and the fan can be controlled manually. Press AUTO to return to automatic operation. To turn off the fan and climate control system, press the OFF button.

Air Delivery Mode Control: When the climate information is displayed, press the desired air delivery mode on the touch screen to change the direction of the airflow. The selected air delivery mode button is lit. Pressing any of the air delivery buttons cancels automatic air delivery control and the direction of the airflow can be controlled manually. Press AUTO to return to automatic operation.

To change the current mode, select one of the following:

(Vent): Air is directed to the instrument panel outlets.

(Bi-Level): Air is divided between the instrument panel outlets and the floor outlets.

(Floor): Air is directed to the floor outlets.

(Defog): Clears the windows of fog or moisture. Air is directed to the windshield and floor outlets.

(Defrost): Clears the windshield of fog or frost more quickly. Air is directed to the windshield. Press the button to turn on or off. Changing the air delivery mode also turns the defrost off.

A/C Mode (Air Conditioning): Press the AC Mode touch screen control to turn the automatic air conditioning on or off. If the fan is turned off or the outside temperature falls below freezing, the air conditioner will not run.

Press AUTO to return to automatic operation and the air conditioner runs as needed.

Automatic Air Recirculation: When the AUTO indicator light is on, the air is automatically recirculated as needed to help quickly cool the inside of the vehicle.

The climate control system may have a sensor to detect air pollution. When using automatic air recirculation, the air quality control system may operate. To adjust the sensitivity of the air quality sensor, see “Climate and Air Quality” under *Vehicle Personalization on page 5-46*.

(Recirculation): Press to alternate between recirculating air inside the vehicle or pulling in outside air. The indicator light on the button is lit when recirculation mode is active. This helps to quickly cool the air inside the vehicle and reduce the entry of outside air and odors.

Pressing this button cancels automatic recirculation. Press AUTO to return to automatic operation; recirculation runs automatically as needed.

Manual recirculation mode is not available when in Defrost or Defog modes.

Auto Defog: The climate control system may have a sensor to automatically detect high humidity inside the vehicle. When high humidity is detected, the climate control system may adjust to outside air supply and turn on the air conditioner. If the climate control system does not detect possible window fogging, it returns to normal operation. To turn Auto Defog off or on, see “Climate and Air Quality” under *Vehicle Personalization on page 5-46*.

Rear Window Defogger

(Rear Window Defogger): Press to turn the rear window defogger on or off. An indicator light on the button comes on to show that the rear window defogger is on.

The rear window defogger only works when the ignition is in ON/RUN. The defogger turns off if the ignition is turned to ACC/ACCESSORY or LOCK/OFF.

The heated outside rearview mirrors turn on when the rear window defogger button is on and help to clear fog or frost from the surface of the mirrors.

⚠ Caution

Do not try to clear frost or other material from the inside of the front windshield and rear window with a razor blade or anything else that is sharp. This may damage the rear window defogger grid and affect the radio's ability to pick up stations clearly. The repairs would not be covered by the vehicle warranty.

Driver and Passenger Heated and Cooled Seats (If Equipped): Press or to heat the driver or passenger seatback only.

Press or to heat the driver or passenger seat cushion and seatback.

Press or to cool the driver or passenger seat. See *Heated and Cooled Front Seats on page 3-9*.

Remote Start Climate Control Operation: If equipped with the remote start feature, the climate control system may run when the vehicle is started remotely. The system uses the driver's previous settings to heat or cool the inside of the vehicle. The rear defog may come on during remote start based on cold ambient conditions. The rear defog indicator light does not come on during a remote start.
If equipped with heated or cooled seats, they may come on during a remote start. See *Remote Vehicle Start on page 2-10* and *Heated and Cooled Front Seats on page 3-9*.

Sensor

The solar sensor, on top of the instrument panel near the windshield, monitors the solar heat.

The climate control system uses the sensor information to adjust the temperature, fan speed, recirculation, and air delivery mode for best comfort.

If the sensor is covered, the automatic climate control system may not work properly.

Rear Climate Control System

If equipped with a rear climate control system, the settings can be adjusted with the rear climate control buttons and the touch screen on the center stack.

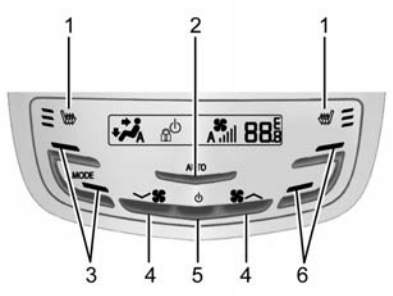

Rear Climate Control Buttons

1. Heated Rear Seats
2. AUTO (Automatic Operation)
3. Air Delivery Mode Control
4. Fan Control
5. ⏻ (On/Off)
6. Temperature Control

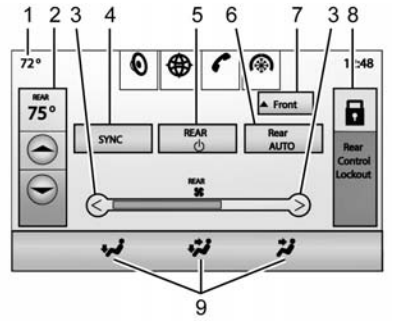

Rear Climate Touch Screen Controls

1. Outside Temperature Display
2. Rear Climate Temperature Control
3. Fan Control
4. SYNC (Synchronized Temperatures)
5. REAR ⏻ (On/Off)
6. Rear AUTO (Automatic Operation)
7. Front (Front Climate Control Touch Screen)
8. Rear Control Lockout
9. Air Delivery Mode Control

Rear: Press this button on the front climate control touch screen to open the rear climate control screen. The rear climate control settings can now be adjusted from the front passenger area.

⏻ (On/Off): Press ⏻ or REAR ⏻ to turn the rear climate control on or off. If the rear climate control is turned off using REAR ⏻ on the touch screen, the ⏻ button and the temperature or air delivery mode buttons on the rear climate control faceplate must be pressed within five seconds to turn it back on.

SYNC: Press SYNC on the touch screen to match the rear climate control temperature to the front climate control driver temperature.

The SYNC button will be lit. Press the TEMP, MODE, or AUTO button twice to unlink the set driver and rear temperatures. The SYNC button turns off.

Rear Control Lockout: Press Rear Control Lockout on the touch screen to lock or unlock control of the rear climate control system from the front climate control touch screen. When locked the rear climate control cannot be adjusted from the rear climate control faceplate.

Automatic Operation

Rear AUTO: Press to turn on or off. The air delivery and fan speed are controlled automatically. The AUTO indicator appears on the display. If the Mode or fan control buttons are manually adjusted, this cancels the automatic operation.

Manual Operation

< ✣ > (Fan Control): Press briefly or press and hold the rear climate control buttons or touch screen to increase or decrease the airflow. Pressing ✣ > when the system is off will turn the system on. The air delivery mode remains in its previous setting.

△ / ▽ (Temperature Control): Press briefly or press and hold the rear temperature control buttons or touch screen to adjust the rear passenger temperature. Press △ for warmer air and press ▽ for cooler air.

/ / (Air Delivery Mode Control): Press the desired mode button on the touch screen or the MODE button on the rear faceplate to change the direction of the airflow in the rear seating area.

or (Heated Rear Seats): Press or to heat the left or right outboard seat cushion and seatback. See *Heated Rear Seats on page 3-11*.

Air Vents

Adjustable air vents are in the center and on the side of the instrument panel.

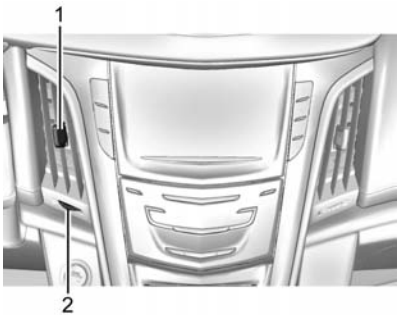

1. Slider Knob
2. Thumbwheel

Move the slider knobs (1) to change the direction of the airflow.

Use the thumbwheels (2) near the air vents to open or close off the airflow.

Operation Tips

- Clear away any ice, snow, or leaves from the air inlets at the base of the windshield that could block the flow of air into the vehicle.
- When you enter a vehicle in cold weather, press the fan up button to the maximum fan level before driving. This helps clear the intake ducts of snow and moisture, and reduces the chance of fogging the inside of the window.
- Keep the air path under the front seats clear of objects to help circulate the air inside of the vehicle more effectively.
- Use of non-GM approved hood deflectors can adversely affect the performance of the system. Check with your dealer before adding equipment to the outside of the vehicle.

Maintenance

Passenger Compartment Air Filter

The filter reduces the dust, pollen, and other airborne irritants from outside air that is pulled into the vehicle.

The filter should be replaced as part of routine scheduled maintenance. See *Maintenance Schedule on page 11-4*. To find out what type of filter to use, see *Maintenance Replacement Parts on page 11-15*.

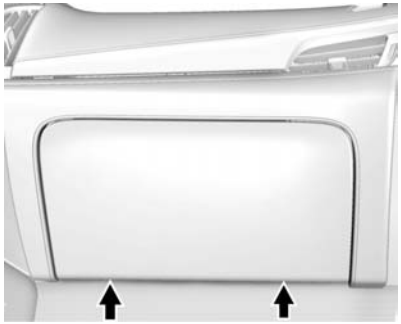

1. Before opening the glove box, remove the two lower screws (out of view).

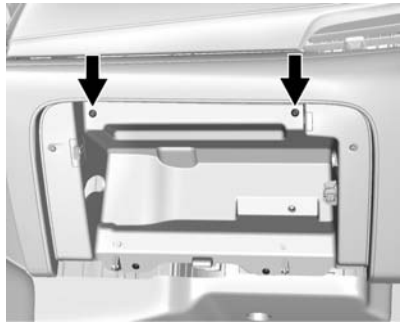

2. Open the glove box completely and remove the two upper screws.
3. Disconnect the electrical plug and remove the entire glove box.

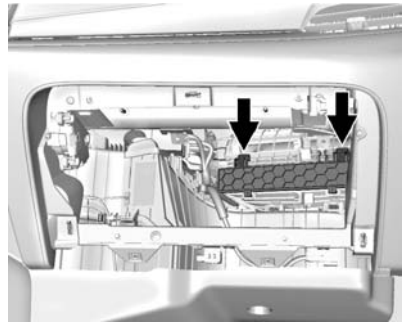

4. Release the two tabs holding the service door. Open the service door and remove the old filter.
5. Install the new air filter.
6. Close the service door and secure the tabs.
7. Reverse the steps to reinstall the glove box.

See your dealer if additional assistance is needed.

✍ NOTES

Driving and Operating

Driving Information
Distracted Driving 9-2
Defensive Driving 9-3
Drunk Driving 9-3
Control of a Vehicle 9-3
Braking 9-3
Steering 9-4
Off-Road Recovery 9-4
Loss of Control 9-5
Off-Road Driving 9-5
Driving on Wet Roads 9-10
Hill and Mountain Roads 9-11
Winter Driving 9-11
If the Vehicle Is Stuck 9-13
Vehicle Load Limits 9-14

Starting and Operating
New Vehicle Break-In 9-19
Adjustable Throttle and Brake Pedal 9-19
Ignition Positions 9-20
Starting the Engine 9-22
Engine Heater 9-23
Retained Accessory Power (RAP) 9-24
Shifting Into Park 9-25
Shifting out of Park 9-26
Parking over Things That Burn 9-27
Active Fuel Management® . . . 9-27

Engine Exhaust
Engine Exhaust 9-27
Running the Vehicle While Parked 9-28

Automatic Transmission
Automatic Transmission 9-28
Manual Mode 9-31
Tow/Haul Mode 9-33

Drive Systems
Four-Wheel Drive 9-34

Brakes
Antilock Brake System (ABS) 9-38
Parking Brake 9-39
Electric Parking Brake 9-39
Brake Assist 9-41
Hill Start Assist (HSA) 9-41

Ride Control Systems
Traction Control/Electronic Stability Control 9-42
Magnetic Ride Control 9-44
Locking Rear Axle 9-44
Automatic Level Control 9-44

Cruise Control
Cruise Control 9-45
Adaptive Cruise Control 9-48

Driver Assistance Systems
Driver Assistance Systems 9-56
Assistance Systems for Parking or Backing 9-56
Assistance Systems for Driving 9-62
Forward Collision Alert (FCA) System 9-62
Active Emergency Braking System 9-64
Side Blind Zone Alert (SBZA) 9-66
Lane Change Alert (LCA) 9-66
Lane Departure Warning (LDW) 9-68

Fuel
Fuel 9-70
California Fuel Requirements 9-71
Fuels in Foreign Countries . . . 9-71
Fuel Additives 9-71
Filling the Tank 9-71
Filling a Portable Fuel Container 9-73

Trailer Towing
General Towing Information 9-74
Driving Characteristics and Towing Tips 9-74
Trailer Towing 9-77
Towing Equipment 9-81
Trailer Sway Control (TSC) 9-83

Conversions and Add-Ons
Add-On Electrical Equipment 9-84

Driving Information

Distracted Driving

Distraction comes in many forms and can take your focus from the task of driving. Exercise good judgment and do not let other activities divert your attention away from the road. Many local governments have enacted laws regarding driver distraction. Become familiar with the local laws in your area.

To avoid distracted driving, always keep your eyes on the road, hands on the wheel, and mind on the drive.

- Do not use a phone in demanding driving situations. Use a hands-free method to place or receive necessary phone calls.
- Watch the road. Do not read, take notes, or look up information on phones or other electronic devices.
- Designate a front seat passenger to handle potential distractions.
- Become familiar with vehicle features before driving, such as programming favorite radio stations and adjusting climate control and seat settings. Program all trip information into any navigation device prior to driving.
- Wait until the vehicle is parked to retrieve items that have fallen to the floor.
- Stop or park the vehicle to tend to children.
- Keep pets in an appropriate carrier or restraint.
- Avoid stressful conversations while driving, whether with a passenger or on a cell phone.

⚠ Warning

Taking your eyes off the road too long or too often could cause a crash resulting in injury or death. Focus your attention on driving.

See the infotainment manual for information on that system or the navigation system, if equipped, including pairing and using a cell phone.

Defensive Driving

Defensive driving means “always expect the unexpected.” The first step in driving defensively is to wear the safety belt. See *Safety Belts on page 3-18*.

- Assume that other road users (pedestrians, bicyclists, and other drivers) are going to be careless and make mistakes. Anticipate what they might do and be ready.
- Allow enough following distance between you and the driver in front of you.
- Focus on the task of driving.

Drunk Driving

Death and injury associated with drinking and driving is a global tragedy.

⚠ Warning

Drinking and then driving is very dangerous. Your reflexes, perceptions, attentiveness, and judgment can be affected by even a small amount of alcohol. You can have a serious — or even fatal — collision if you drive after drinking.

Do not drink and drive or ride with a driver who has been drinking. Ride home in a cab; or if you are with a group, designate a driver who will not drink.

Control of a Vehicle

Braking, steering, and accelerating are important factors in helping to control a vehicle while driving.

Braking

Braking action involves perception time and reaction time. Deciding to push the brake pedal is perception time. Actually doing it is reaction time.

Average driver reaction time is about three-quarters of a second. In that time, a vehicle moving at 100 km/h (60 mph) travels 20 m (66 ft), which could be a lot of distance in an emergency.

Helpful braking tips to keep in mind include:

- Keep enough distance between you and the vehicle in front of you.
- Avoid needless heavy braking.
- Keep pace with traffic.

If the engine ever stops while the vehicle is being driven, brake normally but do not pump the brakes. Doing so could make the pedal harder to push down. If the engine stops, there will be some power brake assist but it will be used when the brake is applied. Once the power assist is used up, it can take longer to stop and the brake pedal will be harder to push.

Steering

Electric Power Steering

This vehicle has electric power steering. It does not have power steering fluid. Regular maintenance is not required.

If power steering assist is lost due to a system malfunction, the vehicle can be steered, but may require increased effort.

See your dealer if there is a problem.

If the steering assist is used for an extended period of time, power assist may be reduced.

If the steering wheel is turned until it reaches the end of its travel, and is held in that position for an extended period of time, power steering assist may be reduced.

Normal use of the power steering assist should return when the system cools down.

See specific vehicle steering messages under *Steering System Messages on page 5-43*. See your dealer if there is a problem.

Curve Tips

- Take curves at a reasonable speed.
- Reduce speed before entering a curve.
- Maintain a reasonable steady speed through the curve.
- Wait until the vehicle is out of the curve before accelerating gently into the straightaway.

Steering in Emergencies

- There are some situations when steering around a problem may be more effective than braking.
- Holding both sides of the steering wheel allows you to turn 180 degrees without removing a hand.
- Antilock Brake System (ABS) allows steering while braking.

Off-Road Recovery

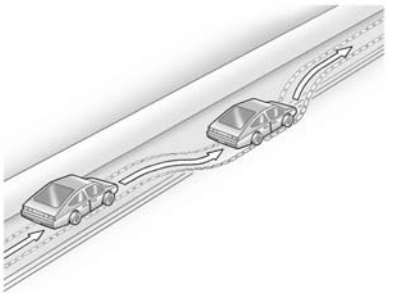

The vehicle's right wheels can drop off the edge of a road onto the shoulder while driving. Follow these tips:

1. Ease off the accelerator and then, if there is nothing in the way, steer the vehicle so that it straddles the edge of the pavement.
2. Turn the steering wheel about one-eighth of a turn, until the right front tire contacts the pavement edge.
3. Turn the steering wheel to go straight down the roadway.

Loss of Control

Skidding

There are three types of skids that correspond to the vehicle's three control systems:

- Braking Skid — wheels are not rolling.
- Steering or Cornering Skid — too much speed or steering in a curve causes tires to slip and lose cornering force.
- Acceleration Skid — too much throttle causes the driving wheels to spin.

Defensive drivers avoid most skids by taking reasonable care suited to existing conditions, and by not overdriving those conditions. But skids are always possible.

If the vehicle starts to slide, follow these suggestions:

- Ease your foot off the accelerator pedal and steer the way you want the vehicle to go. The vehicle may straighten out. Be ready for a second skid if it occurs.
- Slow down and adjust your driving according to weather conditions. Stopping distance can be longer and vehicle control can be affected when traction is reduced by water, snow, ice, gravel, or other material on the road. Learn to recognize warning clues — such as enough water, ice, or packed snow on the road to make a mirrored surface — and slow down when you have any doubt.
- Try to avoid sudden steering, acceleration, or braking, including reducing vehicle speed by shifting to a lower gear. Any sudden changes could cause the tires to slide.

Remember: Antilock brakes help avoid only the braking skid.

Off-Road Driving

Four-wheel-drive vehicles can be used for off-road driving. Vehicles without four-wheel drive and vehicles not equipped with All Terrain (AT) or On-Off Road (OOR) tires must not be driven off-road except on a level, solid surface. For more contact information about the original equipment tires, see the Limited Warranty and Owner Assistance Information manual.

One of the best ways for successful off-road driving is to control the speed.

⚠ Warning

When driving off-road, bouncing and quick changes in direction can easily throw you out of position. This could cause you to lose control and crash. You and your passengers should always wear safety belts.

Before Driving Off-Road

- Have all necessary maintenance and service work completed.
- Fuel the vehicle, fill fluid levels, and check inflation pressure in all tires, including the spare, if equipped.
- Read all the information about four-wheel-drive vehicles in this manual.
- Know the local laws that apply to off-road driving.

To gain more ground clearance if needed, it may be necessary to remove the front fascia lower air dam.

⚠ Caution

Operating the vehicle for extended periods without the front fascia lower air dam installed can cause improper air flow to the engine. Re-attach the front fascia air dam after off-road driving.

Loading the Vehicle for Off-Road Driving

⚠ Warning

- Unsecured cargo on the load floor can be tossed about when driving over rough terrain. You or your passengers can be struck by flying objects. Secure the cargo properly.

(Continued)

Warning (Continued)

- Keep cargo in the cargo area as far forward and as low as possible. The heaviest things should be on the floor, forward of the rear axle.
- Heavy loads on the roof raise the vehicle's center of gravity, making it more likely to roll over. You can be seriously or fatally injured if the vehicle rolls over. Put heavy loads inside the cargo area, not on the roof.

For more information about loading the vehicle, see *If the Vehicle Is Stuck on page 9-13* and *Tires on page 10-38*.

Environmental Concerns

- Always use established trails, roads, and areas that have been set aside for public off-road recreational driving and obey all posted regulations.

- Do not damage shrubs, flowers, trees, or grasses or disturb wildlife.
- Do not park over things that burn. See *Parking over Things That Burn on page 9-27*.

Driving on Hills

Driving safely on hills requires good judgment and an understanding of what the vehicle can and cannot do.

⚠ Warning

Many hills are simply too steep for any vehicle. Driving up hills can cause the vehicle to stall. Driving down hills can cause loss of control. Driving across hills can cause a rollover. You could be injured or killed. Do not drive on steep hills.

Before driving on a hill, assess the steepness, traction, and obstructions. If the terrain ahead cannot be seen, get out of the vehicle and walk the hill before driving further.

When driving on hills:

- Use a low gear and keep a firm grip on the steering wheel.
- Maintain a slow speed.
- When possible, drive straight up or down the hill.
- Slow down when approaching the top of the hill.
- Use headlamps even during the day to make the vehicle more visible.

⚠ Warning

Driving to the top of a hill at high speed can cause an accident. There could be a drop-off, embankment, cliff, or even another vehicle. You could be seriously injured or killed. As you near the top of a hill, slow down and stay alert.

- Never go downhill forward or backward with either the transmission or transfer case in N (Neutral). The brakes could overheat and you could lose control.

⚠ Warning

If the vehicle has the two-speed automatic transfer case, shifting the transfer case to N (Neutral) can cause your vehicle to roll even if the transmission is in P (Park). This is because the N (Neutral) position on the transfer case overrides the transmission. You or someone else could be injured. If leaving the vehicle, set the parking brake and shift the transmission to P (Park). Shift the transfer case to any position but N (Neutral).

- When driving down a hill, keep the vehicle headed straight down. Use a low gear because the engine will work with the

brakes to slow the vehicle and help keep the vehicle under control.

⚠ Warning

Heavy braking when going down a hill can cause your brakes to overheat and fade. This could cause loss of control and you or others could be injured or killed. Apply the brakes lightly when descending a hill and use a low gear to keep vehicle speed under control.

If the vehicle stalls on a hill:

1. Apply the brakes to stop the vehicle, and then apply the parking brake.
2. Shift into P (Park) and then restart the engine.
   - If driving uphill when the vehicle stalls, shift to R (Reverse), release the parking brake, and back straight down.
   - Never try to turn the vehicle around. If the hill is steep enough to stall the vehicle, it is steep enough to cause it to roll over.
   - If you cannot make it up the hill, back straight down the hill.
   - Never back down a hill in N (Neutral) using only the brake.

     The vehicle can roll backward quickly and you could lose control.
   - If driving downhill when the vehicle stalls, shift to a lower gear, release the parking brake, and drive straight down the hill.
3. If the vehicle cannot be restarted after stalling, set the parking brake, shift into P (Park), and turn the vehicle off.

   3.1. Leave the vehicle and seek help.

   3.2. Stay clear of the path the vehicle would take if it rolled downhill.

- Avoid turns that take the vehicle across the incline of the hill. A hill that can be driven straight up or down might be too steep to drive across. Driving across an incline puts more weight on the downhill wheels, which could cause a downhill slide or a rollover.
- Surface conditions can be a problem. Loose gravel, muddy spots, or even wet grass can cause the tires to slip sideways, downhill. If the vehicle slips sideways, it can hit something that will trip it — a rock, a rut, etc. — and roll over.

- Hidden obstacles can make the steepness of the incline more severe. If a rock is driven across with the uphill wheels, or if the downhill wheels drop into a rut or depression, the vehicle can tilt even more.
- If an incline must be driven across, and the vehicle starts to slide, turn downhill. This should help straighten out the vehicle and prevent the side slipping.

⚠ Warning

Getting out of the vehicle on the downhill side when stopped across an incline is dangerous. If the vehicle rolls over, you could be crushed or killed. Always get out on the uphill side of the vehicle and stay well clear of the rollover path.

Driving in Mud, Sand, Snow, or Ice

Use a low gear when driving in mud — the deeper the mud, the lower the gear. Keep the vehicle moving to avoid getting stuck.

Traction changes when driving on sand. On loose sand, such as on beaches or sand dunes, the tires tend to sink into the sand. This affects steering, accelerating, and braking. Drive at a reduced speed and avoid sharp turns or abrupt maneuvers.

Traction is reduced on hard packed snow and ice and it is easy to lose control. Reduce vehicle speed when driving on hard packed snow and ice.

⚠ Warning

Driving on frozen lakes, ponds, or rivers can be dangerous. Ice conditions vary greatly and the

(Continued)

Warning (Continued)

vehicle could fall through the ice; you and your passengers could drown. Drive your vehicle on safe surfaces only.

Driving in Water

⚠ Warning

Driving through rushing water can be dangerous. Deep water can sweep your vehicle downstream and you and your passengers could drown. If it is only shallow water, it can still wash away the ground from under your tires. Traction could be lost, and the vehicle could roll over. Do not drive through rushing water.

⚠ Caution

Do not drive through standing water if it is deep enough to cover the wheel hubs, axles, or exhaust pipe. Deep water can damage the axle and other vehicle parts.

If the standing water is not too deep, drive slowly through it. At faster speeds, water splashes and the vehicle can stall. When going through water, the brakes get wet and it may take longer to stop. See “Driving on Wet Roads” later in this section.

After Off-Road Driving

Remove any brush or debris that has collected on the underbody or chassis, or under the hood. These accumulations can be a fire hazard.

After operation in mud or sand, have the brake linings cleaned and checked. These substances can cause glazing and uneven braking. Check the body structure, steering, suspension, wheels, tires, and exhaust system for damage and check the fuel lines and cooling system for any leakage.

More frequent maintenance service is required. See the *Maintenance Schedule on page 11-4*.

Driving on Wet Roads

Rain and wet roads can reduce vehicle traction and affect your ability to stop and accelerate. Always drive slower in these types of driving conditions and avoid driving through large puddles and deep-standing or flowing water.

⚠ Warning

Wet brakes can cause crashes. They might not work as well in a quick stop and could cause pulling to one side. You could lose control of the vehicle.

(Continued)

Warning (Continued)

After driving through a large puddle of water or a car/vehicle wash, lightly apply the brake pedal until the brakes work normally.

Flowing or rushing water creates strong forces. Driving through flowing water could cause the vehicle to be carried away. If this happens, you and other vehicle occupants could drown. Do not ignore police warnings and be very cautious about trying to drive through flowing water.

Hydroplaning

Hydroplaning is dangerous. Water can build up under the vehicle's tires so they actually ride on the water. This can happen if the road is wet enough and you are going fast enough. When the vehicle is hydroplaning, it has little or no contact with the road.

There is no hard and fast rule about hydroplaning. The best advice is to slow down when the road is wet.

Other Rainy Weather Tips

Besides slowing down, other wet weather driving tips include:

- Allow extra following distance.
- Pass with caution.
- Keep windshield wiping equipment in good shape.
- Keep the windshield washer fluid reservoir filled.
- Have good tires with proper tread depth. See *Tires on page 10-38*.
- Turn off cruise control.

Hill and Mountain Roads

Driving on steep hills or through mountains is different than driving on flat or rolling terrain. Tips for driving in these conditions include:

- Keep the vehicle serviced and in good shape.
- Check all fluid levels and brakes, tires, cooling system, and transmission.
- Shift to a lower gear when going down steep or long hills.

⚠ Warning

Using the brakes to slow the vehicle on a long downhill slope can cause brake overheating, can reduce brake performance, and could result in a loss of braking. Shift the transmission to a lower gear to let the engine assist the brakes on a steep downhill slope.

⚠ Warning

Coasting downhill in N (Neutral) or with the ignition off is dangerous. This can cause overheating of the brakes and

(Continued)

Warning (Continued)

loss of steering. Always have the engine running and the vehicle in gear.

- Stay in your own lane. Do not swing wide or cut across the center of the road. Drive at speeds that let you stay in your own lane.
- Be alert on top of hills; something could be in your lane (stalled car, accident).
- Pay attention to special road signs (falling rocks area, winding roads, long grades, passing or no-passing zones) and take appropriate action.

Winter Driving

Driving on Snow or Ice

Drive carefully when there is snow or ice between the tires and the road, creating less traction or grip.

Wet ice can occur at about 0°C (32°F) when freezing rain begins to fall, resulting in even less traction. Avoid driving on wet ice or in freezing rain until roads can be treated with salt or sand.

Drive with caution, whatever the condition. Accelerate gently so traction is not lost. Accelerating too quickly causes the wheels to spin and makes the surface under the tires slick, so there is even less traction.

If equipped, Traction Control should be turned on. See *Traction Control/ Electronic Stability Control on page 9-42*.

The Antilock Brake System (ABS) improves vehicle stability during hard stops on slippery roads, but apply the brakes sooner than when on dry pavement.

Allow greater following distance on any slippery road and watch for slippery spots. Icy patches can occur on otherwise clear roads in shaded areas. The surface of a curve or an overpass can remain icy when the surrounding roads are clear. Avoid sudden steering maneuvers and braking while on ice.

See *Antilock Brake System (ABS) on page 9-38*.

Turn off cruise control on slippery surfaces.

Blizzard Conditions

Being stuck in snow can be a serious situation. Stay with the vehicle unless there is help nearby. If possible, use Roadside Service. See *Roadside Service on page 13-5*. To get help and keep everyone in the vehicle safe:

- Turn on the hazard warning flashers.
- Tie a red cloth to an outside mirror.

⚠ Warning

Snow can trap engine exhaust under the vehicle. This may cause exhaust gases to get inside. Engine exhaust contains carbon monoxide (CO) which cannot be seen or smelled. It can cause unconsciousness and even death.

If the vehicle is stuck in the snow:

- Clear away snow from around the base of your vehicle, especially any that is blocking the exhaust pipe.
- Check again from time to time to be sure snow does not collect there.
- Open a window about 5 cm (2 in) on the side of the vehicle that is away from the wind to bring in fresh air.

(Continued)

Warning (Continued)

- Fully open the air outlets on or under the instrument panel.
- Adjust the climate control system to a setting that circulates the air inside the vehicle and set the fan speed to the highest setting. See "Climate Control Systems."

For more information about carbon monoxide, see *Engine Exhaust on page 9-27*.

To save fuel, run the engine for only short periods as needed to warm the vehicle and then shut the engine off and close the window most of the way to save heat. Repeat this until help arrives but only when you feel really uncomfortable from the cold. Moving about to keep warm also helps.

If it takes some time for help to arrive, now and then when you run the engine, push the accelerator pedal slightly so the engine runs faster than the idle speed. This keeps the battery charged to restart the vehicle and to signal for help with the headlamps. Do this as little as possible to save fuel.

If the Vehicle Is Stuck

Slowly and cautiously spin the wheels to free the vehicle when stuck in sand, mud, ice, or snow. See "Rocking the Vehicle to Get It Out" later in this section.

The Traction Control System (TCS) can often help to free a stuck vehicle. See *Traction Control/ Electronic Stability Control on page 9-42*. If TCS cannot free the vehicle, see "Rocking the Vehicle to Get it Out" following.

⚠ Warning

If the vehicle's tires spin at high speed, they can explode, and you or others could be injured. The vehicle can overheat, causing an engine compartment fire or other damage. Spin the wheels as little as possible and avoid going above 56 km/h (35 mph).

For information about using tire chains on the vehicle, see *Tire Chains on page 10-59*.

Rocking the Vehicle to Get It Out

Turn the steering wheel left and right to clear the area around the front wheels. For four-wheel-drive vehicles, shift into Four-Wheel Drive High. Turn the TCS off. Shift back and forth between R (Reverse) and a forward gear, spinning the wheels as little as possible. To prevent transmission wear, wait until the wheels stop spinning before shifting

gears. Slowly spinning the wheels in the forward and reverse directions causes a rocking motion that could free the vehicle. If that does not get the vehicle out after a few tries, it might need to be towed out. See *Towing the Vehicle on page 10-75*.

Vehicle Load Limits

It is very important to know how much weight your vehicle can carry. This weight is called the vehicle capacity weight and includes the weight of all occupants, cargo, and all nonfactory-installed options. Two labels on your vehicle show how much weight it was designed to carry, the Tire and Loading Information label and the Certification/Tire label.

⚠ Warning

Do not load the vehicle any heavier than the Gross Vehicle Weight Rating (GVWR), or either the maximum front or rear Gross Axle Weight Rating (GAWR). This can cause systems to break and change the way the vehicle handles. This could cause loss of control and a crash. Overloading can also shorten the life of the vehicle.

Tire and Loading Information Label

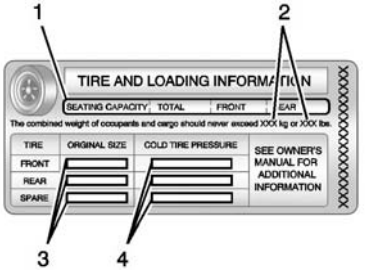

Label Example

A vehicle specific Tire and Loading Information label is attached to the center pillar (B-pillar). With the driver door open, you will find the label attached below the door lock post (striker). The tire and loading information label shows the number of occupant seating

positions (1), and the maximum vehicle capacity weight (2) in kilograms and pounds.

The Tire and Loading Information label also shows the size of the original equipment tires (3) and the recommended cold tire inflation pressures (4). For more information on tires and inflation see *Tires on page 10-38* and *Tire Pressure on page 10-45*.

There is also important loading information on the vehicle Certification/Tire label. It tells you the Gross Vehicle Weight Rating (GVWR) and the Gross Axle Weight Rating (GAWR) for the front and rear axles. See “Certification/Tire Label” later in this section.

“Steps for Determining Correct Load Limit–

1. Locate the statement "The combined weight of occupants and cargo should never exceed XXX kg or XXX lbs." on your vehicle’s placard.
2. Determine the combined weight of the driver and passengers that will be riding in your vehicle.
3. Subtract the combined weight of the driver and passengers from XXX kg or XXX lbs.
4. The resulting figure equals the available amount of cargo and luggage load capacity. For example, if the "XXX" amount equals 1400 lbs. and there will be five 150 lb passengers in your vehicle, the amount of available cargo and luggage load capacity is 650 lbs. (1400-750 (5 x 150) = 650 lbs.)
5. Determine the combined weight of luggage and cargo being loaded on the vehicle. That weight may not safely exceed the available cargo and luggage load capacity calculated in Step 4.
6. If your vehicle will be towing a trailer, load from your trailer will be transferred to your vehicle. Consult this manual to determine how this reduces the available cargo and luggage load capacity of your vehicle.”

See *Trailer Towing on page 9-77* for important information on towing a trailer, towing safety rules, and trailering tips.

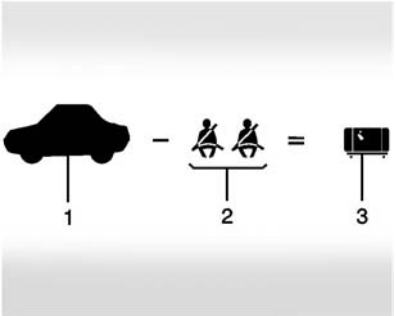

Example 1

1. Maximum Vehicle Capacity Weight for Example 1 = 453 kg (1,000 lbs)
2. Subtract Occupant Weight @ 68 kg (150 lbs) × 2 = 136 kg (300 lbs)
3. Available Occupant and Cargo Weight = 317 kg (700 lbs)

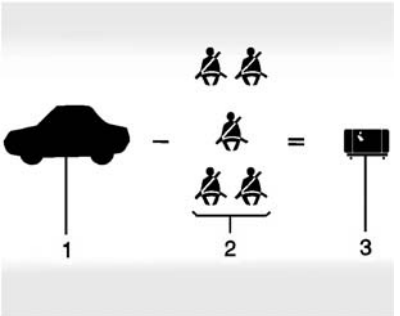

Example 2

1. Vehicle Capacity Weight for Example 2 = 453 kg (1,000 lbs)
2. Subtract Occupant Weight @ 68 kg (150 lbs) × 5 = 136 kg (750 lbs)
3. Available Cargo Weight = 113 kg (250 lbs)

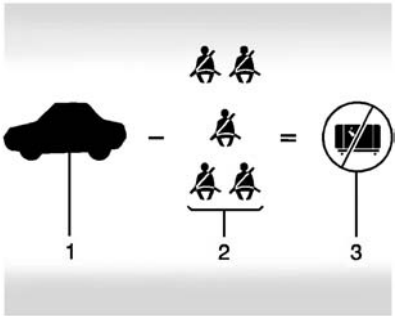

Example 3

1. Maximum Vehicle Capacity Weight for Example 3 = 453 kg (1,000 lbs)
2. Subtract Occupant Weight @ 91 kg (200 lbs) × 5 = 453 kg (1,000 lbs)
3. Available Cargo Weight = 0 kg (0 lbs)

Refer to your vehicle's Tire and Loading Information label for specific information about your vehicle's capacity weight and seating positions.

The combined weight of the driver, passengers, and cargo should never exceed your vehicle's capacity weight.

Certification/Tire Label

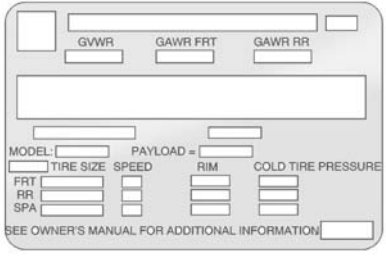

A vehicle specific Certification/Tire label is attached to the B-pillar. The label shows the size of your vehicle's original tires and the inflation pressures needed to obtain the gross weight capacity of your vehicle.

This is called Gross Vehicle Weight Rating (GVWR). The GVWR includes the weight of the vehicle, all occupants, fuel, and cargo.

The Certification/Tire label also tells you the maximum weights for the front and rear axles, called Gross Axle Weight Rating (GAWR). To find out the actual loads on your front and rear axles, you need to go to a weigh station and weigh your vehicle. Your dealer can help you with this. Be sure to spread out your load equally on both sides of the center line.

Never exceed the GVWR for your vehicle, or the GAWR for either the front or rear axle.

And, if you do have a heavy load, you should spread it out.

⚠ Warning

Do not load the vehicle any heavier than the Gross Vehicle Weight Rating (GVWR), or either the maximum front or rear Gross Axle Weight Rating (GAWR). This can cause systems to break and change the way the vehicle handles. This could cause loss of control and a crash. Overloading can also shorten the life of the vehicle.

Your warranty does not cover parts or components that fail because of overloading.

The label will help you decide how much cargo and installed equipment the vehicle can carry.

Using heavier suspension components to get added durability might not change your

weight ratings. Ask your dealer to help you load your vehicle the right way.

If you put things inside your vehicle — like suitcases, tools, packages, or anything else — they will go as fast as the vehicle goes. If you have to stop or turn quickly, or if there is a crash, they will keep going.

⚠ Warning

Things you put inside the vehicle can strike and injure people in a sudden stop or turn, or in a crash.

- Put things in the cargo area of the vehicle. Try to spread the weight evenly.

(Continued)

Warning (Continued)

- Never stack heavier things, like suitcases, inside the vehicle so that some of them are above the tops of the seats.
- Do not leave an unsecured child restraint in the vehicle.
- When you carry something inside the vehicle, secure it whenever you can.
- Do not leave a seat folded down unless you need to.

There is also important loading information for off-road driving in this manual. See “Loading the Vehicle for Off-Road Driving” under *Off-Road Driving on page 9-5*.

Add-On Equipment

When you carry removable items, you may need to put a limit on how many people you can carry inside your vehicle. Be sure to weigh your vehicle before you buy and install the new equipment.

⚠ Caution

Overloading the vehicle may cause damage. Repairs would not be covered by the vehicle warranty. Do not overload the vehicle.

Remember not to exceed the Gross Axle Weight Rating (GAWR) of the front or rear axle.

Automatic Level Control

See *Automatic Level Control on page 9-44*.

If a weight-distributing hitch is being used, it is recommended to allow the shocks to inflate, thereby leveling the vehicle prior to adjusting the height. See "Hitches" under *Towing Equipment on page 9-81*.

Starting and Operating

New Vehicle Break-In

⚠ Caution

The vehicle does not need an elaborate break-in. But it will perform better in the long run if you follow these guidelines:

- Keep the vehicle speed at 88 km/h (55 mph) or less for the first 805 km (500 mi).
- Do not drive at any one constant speed, fast or slow, for the first 805 km (500 mi). Do not make full-throttle starts. Avoid downshifting to brake or slow the vehicle.
- Avoid making hard stops for the first 322 km (200 mi) or so. During this time the new brake linings are not yet

(Continued)

Caution (Continued)

broken in. Hard stops with new linings can mean premature wear and earlier replacement. Follow this breaking-in guideline every time you get new brake linings.

- Do not tow a trailer during break-in. See *Trailer Towing on page 9-77* for the trailer towing capabilities of the vehicle and more information.

Following break-in, engine speed and load can be gradually increased.

Adjustable Throttle and Brake Pedal

If equipped, the position of the throttle and brake pedals can be changed.

No adjustment to the pedals can be made when the vehicle is in D (Drive), R (Reverse), or while using cruise control.

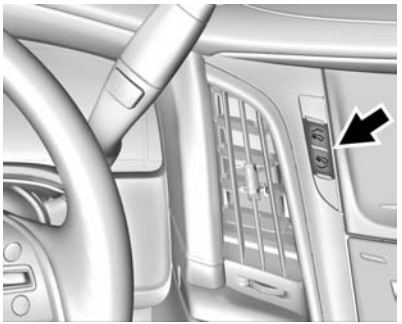

The switch used to adjust the pedals is on the center stack, to the left of the touch screen.

Press the top of the switch to move the pedals closer to your body. Press the bottom of the switch to move the pedals away.

Before you start driving, fully press the brake pedal to confirm the adjustment is right for you.

The vehicle may have a memory function, which lets pedal settings be saved and recalled. See *Memory Seats on page 3-7*.

Ignition Positions

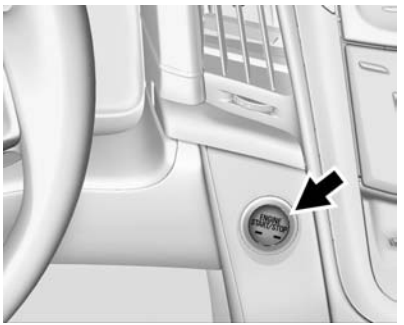

Vehicles with Keyless Access have pushbutton starting.

Pressing the button cycles it through three modes: ACC/ACCESSORY, ON/RUN/START, and Stopping the Engine/OFF.

The transmitter must be in the vehicle for the system to operate. If the pushbutton start is not working, the vehicle may be near a strong radio antenna signal causing interference to the Keyless Access system. See *Remote Keyless Entry (RKE) System Operation on page 2-3*.

To shift out of P (Park), the vehicle must be in ACC/ACCESSORY or ON/RUN and the brake pedal must be applied.

Stopping the Engine/LOCK/OFF (No Indicator Lights): When the vehicle is stopped, press the ENGINE START/STOP button once to turn the engine off.

If the vehicle is in P (Park), the ignition will turn off, and Retained Accessory Power (RAP) will remain active. See *Retained Accessory Power (RAP) on page 9-24*.

If the vehicle is not in P (Park), the ignition will return to ACC/ACCESSORY and display the message SHIFT TO PARK in the

Driver Information Center (DIC). See *Transmission Messages on page 5-44*. When the vehicle is shifted into P (Park), the ignition system will switch to OFF.

Do not turn the engine off when the vehicle is moving. This will cause a loss of power assist in the brake and steering systems and disable the airbags.

The vehicle may have an electric steering column lock. The lock is activated when the vehicle is switched to OFF and either front door is opened. A sound may be heard as the lock actuates or releases. The steering column lock may not release with the wheels turned off center. If this happens, the vehicle may not start. Move the steering wheel from left to right while attempting to start the vehicle. If this does not work, the vehicle needs service.

If the vehicle must be shut off in an emergency:

1. Brake using a firm and steady pressure. Do not pump the brakes repeatedly. This may deplete power assist, requiring increased brake pedal force.
2. Shift the vehicle to N (Neutral). This can be done while the vehicle is moving. After shifting to N (Neutral), firmly apply the brakes and steer the vehicle to a safe location.
3. Come to a complete stop, shift to P (Park), and turn the ignition to OFF. On vehicles with an automatic transmission, the shift lever must be in P (Park) to turn the ignition switch to the OFF position.
4. Set the parking brake. See *Parking Brake on page 9-39*.

⚠ Warning

Turning off the vehicle while moving may cause loss of power assist in the brake and steering systems and disable the airbags. While driving, only shut the vehicle off in an emergency.

If the vehicle cannot be pulled over, and must be shut off while driving, press and hold the ENGINE START/STOP button for longer than two seconds, or press twice in five seconds.

ACC/ACCESSORY (Amber Indicator Light): This mode allows some electrical accessories to be used when the engine is off.

With the ignition off, pressing the button one time without the brake pedal applied will place the ignition system in ACC/ACCESSORY.

The ignition will switch from ACC/ACCESSORY to OFF after five minutes to prevent battery rundown.

ON/RUN/START (Green Indicator Light): This mode is for driving and starting. With the ignition off, and the brake pedal applied, pressing the button once will place the ignition system in ON/RUN/START. Once engine cranking begins, release the button. Engine cranking will continue until the engine starts. See *Starting the Engine on page 9-22*. The ignition will then remain in ON/RUN.

Service Only Mode

This power mode is available for service and diagnostics, and to verify the proper operation of the malfunction indicator lamp as may be required for emission inspection purposes. With the vehicle off, and the brake pedal not applied, pressing and holding the button for more than five seconds will place the vehicle in Service Only Mode. The instruments and audio systems will operate as they do in ON/RUN, but the vehicle will not be able to be driven. The engine will not start in Service Only Mode. Press the button again to turn the vehicle off.

Starting the Engine

Move the shift lever to P (Park) or N (Neutral). The engine will not start in any other position. To restart the engine when the vehicle is already moving, use N (Neutral) only.

⚠ Caution

Do not try to shift to P (Park) if the vehicle is moving. If you do, you could damage the transmission. Shift to P (Park) only when the vehicle is stopped.

⚠ Caution

If you add electrical parts or accessories, you could change the way the engine operates. Any resulting damage would not be covered by the vehicle warranty. See *Add-On Electrical Equipment on page 9-84*.

Starting Procedure (Keyless Access)

1. With the Keyless Access system, the RKE transmitter must be in the vehicle. Press the ENGINE START/STOP button with the brake pedal applied. When the engine begins cranking, let go of the button.

   The idle speed will go down as the engine gets warm. Do not race the engine immediately after starting it.

   If the RKE transmitter is not in the vehicle, if there is interference, or the RKE battery

is low, the Driver Information Center (DIC) will display a message. See *Key and Lock Messages on page 5-38*.

⚠ Caution

Cranking the engine for long periods of time, by returning the ignition to the START position immediately after cranking has ended, can overheat and damage the cranking motor, and drain the battery. Wait at least 15 seconds between each try, to let the cranking motor cool down.

2. If the engine does not start after five to 10 seconds, especially in very cold weather (below −18°C or 0°F), it could be flooded with too much gasoline. Try pushing the accelerator pedal all the way to the floor and holding it there as you press the ENGINE START/STOP button, for up to a maximum of 15 seconds. Wait at least 15 seconds between each try, to allow the cranking motor to cool down. When the engine starts, let go of the button, and the accelerator. If the vehicle starts briefly but then stops again, do the same thing. This clears the extra gasoline from the engine. Do not race the engine immediately after starting it. Operate the engine and transmission gently until the oil warms up and lubricates all moving parts.

Engine Heater

The engine coolant heater can provide easier starting and better fuel economy during engine warm-up in cold weather conditions at or below −18° C (0° F). Vehicles with an engine heater should be plugged in at least four hours before starting. There may be an internal thermostat in the plug end of the cord, which will prevent engine coolant heater operation at temperatures above −18° C (0° F).

To Use the Engine Coolant Heater

1. Turn off the engine.
2. Open the hood and unwrap the electrical cord. The cord is by the left front fender, next to the engine compartment fuse block.

   Check the heater cord for damage. If it is damaged, do not use it. See your dealer for a replacement. Inspect the cord for damage yearly.
3. Plug the cord into a normal, grounded 110-volt AC outlet.

⚠ Warning

Improper use of the heater cord or an extension cord can damage the cord and may result in overheating and fire.

- Plug the cord into a three-prong electrical utility receptacle that is protected

(Continued)

Warning (Continued)

by a ground fault detection function. An ungrounded outlet could cause an electric shock.

- Use a weatherproof, heavy-duty, 15 amp-rated extension cord if needed. Failure to use the recommended extension cord in good operating condition, or using a damaged heater or extension cord, could make it overheat and cause a fire, property damage, electric shock, and injury.
- Do not operate the vehicle with the heater cord permanently attached to the

(Continued)

Warning (Continued)

vehicle. Possible heater cord and thermostat damage could occur.

- While in use, do not let the heater cord touch vehicle parts or sharp edges. Never close the hood on the heater cord.
- Before starting the vehicle, unplug the cord, reattach the cover to the plug, and securely fasten the cord. Keep the cord away from any moving parts.

4. Before starting the engine, be sure to unplug and store the cord as it was before to keep it away from moving engine parts. If you do not, it could be damaged.

The length of time the heater should remain plugged in depends on several factors. Ask a dealer in the area where you will be parking the vehicle for the best advice on this.

Retained Accessory Power (RAP)

The following vehicle accessories can be used for up to 10 minutes after the engine is turned off:

- Audio System
- Power Windows
- OnStar System (if equipped)
- Sunroof (if equipped)
- Accessory Power Outlets. The console and center seat outlets are RAP powered.

These features work when the ignition is in ON/RUN or ACC/ACCESSORY. Once the ignition is turned from ON/RUN to LOCK/OFF, the windows and sunroof continue to work up to 10 minutes until any

door is opened. The radio continues to work for up to 10 minutes or until the driver door is opened.

Shifting Into Park

⚠ Warning

It can be dangerous to get out of the vehicle if the shift lever is not fully in P (Park) with the parking brake firmly set. The vehicle can roll. If you have left the engine running, the vehicle can move suddenly. You or others could be injured. To be sure the vehicle will not move, even when you are on fairly level ground, use the steps that follow. If the vehicle has a four-wheel drive transfer case with a N (Neutral) position, and the transfer case is in N (Neutral), the vehicle will be free to roll, even if the shift lever is in P (Park). Be sure the transfer

(Continued)

Warning (Continued)

case is in a drive gear. If towing a trailer, see *Driving Characteristics and Towing Tips on page 9-74*.

1. Hold the brake pedal down, then set the parking brake.

   See *Parking Brake on page 9-39*.

2. Move the shift lever into the P (Park) position by pulling the shift lever toward you and moving it up as far as it will go.
3. Be sure the transfer case is in a drive gear — not in N (Neutral).
4. Turn the ignition to LOCK/OFF.

Leaving the Vehicle with the Engine Running

⚠ Warning

It can be dangerous to leave the vehicle with the engine running. The vehicle could move suddenly if the shift lever is not fully in P (Park) with the parking brake firmly set.

If you have four-wheel drive and the transfer case is in N (Neutral), the vehicle will be free to roll, even if the shift lever is in P (Park). So be sure the transfer case is in a drive gear — not in N (Neutral).

And, if you leave the vehicle with the engine running, it could overheat and even catch fire. You or others could be injured. Do not leave the vehicle with the engine running unless you have to.

If you have to leave the vehicle with the engine running, be sure the vehicle is in P (Park) and the parking brake is firmly set before you leave it. After you move the shift lever into P (Park), hold the regular brake pedal down. Then, see if you can move the shift lever away from P (Park) without first pulling it toward you. If you can, it means that the shift lever was not fully locked into P (Park).

Torque Lock

If you are parking on a hill and you do not shift the transmission into P (Park) properly, the weight of the vehicle may put too much force on the parking pawl in the transmission. You may find it difficult to pull the shift lever out of P (Park). This is called torque lock. To prevent torque lock, set the parking brake and then shift into P (Park) properly before you leave the driver seat. To find out how, see *Shifting Into Park on page 9-25*.

When you are ready to drive, move the shift lever out of P (Park) before you release the parking brake.

If torque lock does occur, you may need to have another vehicle push yours a little uphill to take some of the pressure from the parking pawl in the transmission. You will then be able to pull the shift lever out of P (Park).

Shifting out of Park

This vehicle is equipped with an electronic shift lock release system. The shift lock release is designed to prevent movement of the shift lever out of P (Park), unless the ignition is in ON/RUN and the regular brake pedal is applied.

The shift lock release is always functional except in the case of an uncharged or low voltage (less than 9 volt) battery.

If the vehicle has an uncharged battery or a battery with low voltage, try charging or jump starting the battery. See *Jump Starting - North America on page 10-71*.

To shift out of P (Park):

1. Apply the brake pedal.
2. Move the shift lever to the desired position.

If you still are unable to shift out of P (Park):

1. Ease the pressure on the shift lever.
2. While holding down the brake pedal, push the shift lever all the way into P (Park).
3. Move the shift lever to the desired position.

If you are still having a problem shifting, then have the vehicle serviced soon.

Parking over Things That Burn

⚠ Warning

Things that can burn could touch hot exhaust parts under the vehicle and ignite. Do not park over papers, leaves, dry grass, or other things that can burn.

Active Fuel Management®

This system allows the engine to operate on either all or half of its cylinders, depending on the driving conditions.

When less power is required, such as cruising at a constant vehicle speed, the system will operate in the half cylinder mode, allowing the vehicle to achieve better fuel economy. When greater power demands are required, such as accelerating from a stop, passing, or merging onto a freeway, the system will maintain full-cylinder operation.

Engine Exhaust

⚠ Warning

Engine exhaust contains carbon monoxide (CO) which cannot be seen or smelled. Exposure to CO can cause unconsciousness and even death.

Exhaust may enter the vehicle if:

- The vehicle idles in areas with poor ventilation (parking garages, tunnels, deep snow that may block underbody airflow or tail pipes).
- The exhaust smells or sounds strange or different.
- The exhaust system leaks due to corrosion or damage.
- The vehicle exhaust system has been modified, damaged, or improperly repaired.

(Continued)

Warning (Continued)

- There are holes or openings in the vehicle body from damage or aftermarket modifications that are not completely sealed.

If unusual fumes are detected or if it is suspected that exhaust is coming into the vehicle:

- Drive it only with the windows completely down.
- Have the vehicle repaired immediately.

Never park the vehicle with the engine running in an enclosed area such as a garage or a building that has no fresh air ventilation.

Running the Vehicle While Parked

It is better not to park with the engine running.

If the vehicle is left with the engine running, follow the proper steps to be sure the vehicle will not move. See *Shifting Into Park on page 9-25* and *Engine Exhaust on page 9-27*.

If parking on a hill and pulling a trailer, see *Driving Characteristics and Towing Tips on page 9-74*.

Automatic Transmission

If equipped, there is an electronic shift lever position indicator within the instrument cluster. This display comes on when the ignition is turned to the ON/RUN position.

There are several different positions for the shift lever.

See “Range Selection Mode” under *Manual Mode on page 9-31*.

P (Park): This position locks the rear wheels. It is the best position to use when starting the engine because the vehicle cannot move easily. When parked on a hill, especially when the vehicle has a heavy load, you might notice an

increase in the effort to shift out of P (Park). See “Torque Lock” under *Shifting Into Park on page 9-25*.

⚠ Warning

It is dangerous to get out of the vehicle if the shift lever is not fully in P (Park) with the parking brake firmly set. The vehicle can roll.

Do not leave the vehicle when the engine is running. If you have left the engine running, the vehicle can move suddenly. You or others could be injured. To be sure the vehicle will not move, even when you are on fairly level ground, always set the parking brake and move the shift lever to P (Park). See *Shifting Into Park on page 9-25* and *Driving Characteristics and Towing Tips on page 9-74*.

⚠ Warning

If you have four-wheel drive, the vehicle will be free to roll — even if the shift lever is in P (Park) — if the transfer case is in N (Neutral). So, be sure the transfer case is in a drive gear, Two-Wheel Drive High or Four-Wheel Drive High or Four-Wheel Drive Low — not in N (Neutral). See *Shifting Into Park on page 9-25*.

R (Reverse): Use this gear to back up.

⚠ Caution

Shifting to R (Reverse) while the vehicle is moving forward could damage the transmission. The repairs would not be covered by the vehicle warranty. Shift to R (Reverse) only after the vehicle is stopped.

To rock the vehicle back and forth to get out of snow, ice, or sand without damaging the transmission, see *If the Vehicle Is Stuck on page 9-13*.

N (Neutral): In this position, the engine does not connect with the wheels. To restart when you are already moving, use N (Neutral) only. Also, use N (Neutral) when the vehicle is being towed.

⚠ Warning

Shifting into a drive gear while the engine is running at high speed is dangerous. Unless your foot is firmly on the brake pedal, the vehicle could move very rapidly. You could lose control and hit people or objects. Do not shift into a drive gear while the engine is running at high speed.

⚠ Caution

Shifting out of P (Park) or N (Neutral) with the engine running at high speed may damage the transmission. The repairs would not be covered by the vehicle warranty. Be sure the engine is not running at high speed when shifting the vehicle.

D (Drive): This position is for normal driving. It provides the best fuel economy. If you need more power for passing, and you are:

- Going less than about 55 km/h (35 mph), push the accelerator pedal about halfway down.
- Going about 55 km/h (35 mph) or more, push the accelerator all the way down.

  By doing this, the vehicle shifts down to the next gear and has more power.

Use D (Drive) and Tow/Haul Mode when towing a trailer, carrying a heavy load, driving on steep hills, or driving off-road. Shift the transmission to a lower gear selection if the transmission shifts too often.

Downshifting the transmission in slippery road conditions could result in skidding. See “Skidding” under *Loss of Control on page 9-5*.

The vehicle has a shift stabilization feature that adjusts the transmission shifting to the current driving conditions in order to reduce rapid upshifts and downshifts. This shift stabilization feature is designed to determine, before making an upshift, if the engine is able to maintain vehicle speed by analyzing things such as vehicle speed, throttle position, and vehicle load. If the shift stabilization feature determines that a current vehicle speed cannot be maintained, the transmission does not upshift and instead holds the current gear.

In some cases, this could appear to be a delayed shift, however the transmission is operating normally.

The transmission uses adaptive shift controls. The adaptive shift control process continually compares key shift parameters to pre-programmed ideal shifts stored in the transmission’s computer. The transmission constantly makes adjustments to improve vehicle performance according to how the vehicle is being used, such as with a heavy load or when the temperature changes. During this adaptive shift control process, shifting might feel different as the transmission determines the best settings.

When temperatures are very cold, the transmission's gear shifting could be delayed providing more stable shifts until the engine warms up. Shifts could be more noticeable with a cold transmission. This difference in shifting is normal.

M (Manual Mode): This position allows selection of a range of gears appropriate for current driving conditions. If equipped, see “Range Selection Mode” under *Manual Mode on page 9-31*.

⚠ Caution

Spinning the tires or holding the vehicle in one place on a hill using only the accelerator pedal may damage the transmission. The repair will not be covered by the vehicle warranty. If you are stuck, do not spin the tires. When stopping on a hill, use the brakes to hold the vehicle in place.

Normal Mode Grade Braking

This mode is enabled when the vehicle is started, but is not enabled in Range Selection Mode. It assists in maintaining desired vehicle speeds when driving on downhill grades by using the engine and transmission to slow the vehicle.

The first time the system engages for each ignition cycle, a DIC message will be displayed. See *Transmission Messages on page 5-44*.

To disable or enable Normal Mode Grade Braking within the current ignition cycle, press and hold the Tow/Haul button for five seconds. When the button is released, the requested mode change is made. A DIC message displays. See *Transmission Messages on page 5-44*.

For other forms of grade braking, see *Tow/Haul Mode on page 9-33* and *Cruise Control on page 9-45*.

Kickdown Mode

The accelerator pedal provides an additional downshift after pressing through the kickdown feature.

It requires extra pedal pressure near the end of its travel to engage.

Manual Mode

Range Selection Mode

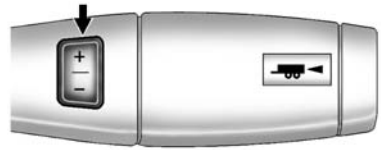

If equipped, Range Selection Mode helps control the vehicle's transmission and vehicle speed while driving downhill or towing a trailer by letting you select a desired range of gears.

To use this feature:

1. Move the shift lever to M (Manual Mode).
2. Tap the plus/minus buttons on the shift lever to select the desired range of gears for current driving conditions. Or, hold the plus/minus buttons to select the highest or lowest range available for the current vehicle speed.

When the shift lever is moved from D (Drive) to M (Manual Mode), a number displays next to the M, indicating the current transmission range.

This number is the highest gear that the transmission will command while operating in M (Manual Mode). All gears below that number are available. As driving conditions change, the transmission can automatically shift to lower gears. For example, when 5 (Fifth) is selected, 1 (First) through 5 (Fifth) gears are automatically shifted by the transmission, but 6 (Sixth) cannot be used until the plus/minus button on the shift lever is used to change to the range.

In vehicles with gasoline engines, when the shift lever is moved from D (Drive) to M (Manual Mode), a downshift may occur. The gear that the transmission is operating in when the shift lever is moved from D (Drive) to M (Manual Mode) determines if a downshift occurs. See the following chart.

Gear before shifting from D (Drive) to M (Manual Mode)	8th	7th	6th	5th	4th	3rd	2nd	1st
Range after shifting from D (Drive) to M (Manual Mode) – Tow/Haul not engaged	M6	M6	M5	M4	M3	M3	M2	M1
Range after shifting from D (Drive) to M (Manual Mode) – Tow/Haul engaged	M6	M5	M4	M3	M3	M3	M2	M1

Grade Braking is not available when Range Selection Mode is active. See *Tow/Haul Mode on page 9-33*.

While using Range Selection Mode, cruise control and the Tow/Haul Mode can be used.

⚠ Caution

Spinning the tires or holding the vehicle in one place on a hill using only the accelerator pedal may damage the transmission. The repair will not be covered by the vehicle warranty. If you are stuck, do not spin the tires. When stopping on a hill, use the brakes to hold the vehicle in place.

Low Traction Mode

Low Traction Mode assists in vehicle acceleration when road conditions are slippery, such as with ice or snow. While the vehicle is at a stop, select M2 using Range Selection Mode. This will limit torque to the wheels and help to prevent the tires from spinning.

Tow/Haul Mode

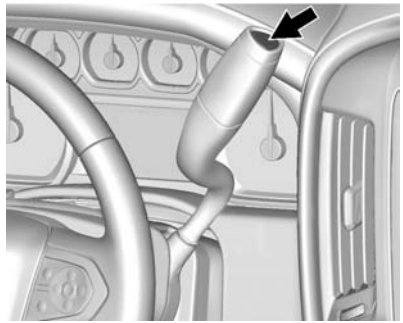

The Tow/Haul Mode adjusts the transmission shift pattern to reduce shift cycling. This provides increased performance, vehicle control, and enhanced transmission and engine cooling when driving down steep hills or mountain grades, towing, or hauling heavy loads.

The selector button is on the end of the shift lever. Turn the Tow/Haul Mode on and off by pressing the button. When the Tow/Haul Mode is enabled, a light on the instrument cluster will come on.

See *Tow/Haul Mode Light on page 5-22* and *Hill and Mountain Roads on page 9-11*.

Also see “Tow/Haul Mode” under *Towing Equipment on page 9-81*.

Tow/Haul Mode Grade Braking

Tow/Haul Mode Grade Braking is only enabled while the Tow/Haul Mode is selected and the vehicle is not in the Range Selection Mode. See “Tow/Haul Mode” listed previously and *Manual Mode on page 9-31*. Tow/Haul Mode Grade Braking assists in maintaining desired vehicle speeds when driving on downhill grades by using the engine and transmission to slow the vehicle.

To disable or enable Tow/Haul Grade Braking within the current ignition cycle, press and hold the Tow/Haul button for five seconds. When the button is released, the requested mode change is made. A DIC message is displayed. See *Transmission Messages on page 5-44*.

See *Towing Equipment on page 9-81*.

For other forms of grade braking, see *Automatic Transmission on page 9-28* and *Cruise Control on page 9-45*.

Drive Systems

Four-Wheel Drive

If equipped, four-wheel drive engages the front axle for extra traction. Read the appropriate section for transfer case operation before using.

⚠ Caution

Do not drive on clean, dry pavement in 4 ↑ and 4 ↓ (if equipped) for an extended period of time. These conditions may cause premature wear on the vehicle's powertrain.

Driving on clean, dry pavement in four-wheel drive may:

- Cause a vibration to be felt in the steering system.
- Cause tires to wear faster.
- Make the transfer case harder to shift, and cause it to run noisier.

⚠ Warning

Shifting the transfer case to N (Neutral) can cause the vehicle to roll even if the transmission is in P (Park). You or someone else could be seriously injured. Be sure to set the parking brake before placing the transfer case in N (Neutral). See *Parking Brake on page 9-39*.

⚠ Caution

Extended high-speed operation in 4 ↓ may damage or shorten the life of the drivetrain.

Engagement noise and bump when shifting between 4 ↓ and 4 ↑ or from N (Neutral), with the engine running, is normal.

Shifting into 4 ↓ will turn Traction Control and StabiliTrak® off. See *Traction Control/Electronic Stability Control on page 9-42*.

Two Speed Automatic Transfer Case

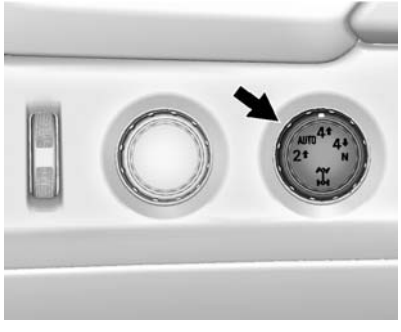

Use the transfer case knob next to the steering wheel to shift into and out of four-wheel drive.

Indicator lights display which setting the transfer case is in. N (Neutral) is indicated on the knob. The indicator lights will display briefly when the ignition is turned on and one will stay on. If the lights display momentarily when the ignition is in ON/RUN, but none stay on, the knob may have been turned while the vehicle was off. To see the indicator, turn the knob to another position so that it matches the actual transfer case setting. If no lights display, take the vehicle to your dealer for service. An indicator light flashes while shifting the transfer case and remains illuminated when the shift is complete.

If the transfer case cannot make a requested shift, it will return to the last chosen setting. Turn the knob back to the previous transfer case setting to see the indicator.

The settings are:

N (Neutral): Use only when the vehicle needs to be towed. See *Recreational Vehicle Towing on page 10-75* or *Towing the Vehicle on page 10-75*.

2 ↑ (Two-Wheel Drive High): Use for driving on most streets and highways. The front axle is not engaged. This setting provides the best fuel economy.

AUTO (Automatic Four-Wheel Drive): Use when road surface traction conditions are variable. When driving in AUTO, the front axle is engaged, and the vehicle's power is sent to the front and rear wheels automatically based on driving conditions. This setting provides slightly lower fuel economy than 2 ↑.

4 ↑ (Four-Wheel Drive High): Use this position when extra traction is needed, such as when driving on snowy or icy roads, when off-roading, or when plowing snow.

4 ↓ (Four-Wheel Drive Low): This setting engages the front axle and delivers extra torque. Choose 4 ↓ when driving off-road in deep sand, deep mud, or deep snow, and while climbing or descending steep hills.

Shifting into 4 ↓ will turn Traction Control and StabiliTrak off. See *Traction Control/Electronic Stability Control on page 9-42*.

Shifting Into 4 ↑ or AUTO

Turn the knob to the 4 ↑ or AUTO position at any speed, except from 4 ↓. The indicator light will flash while shifting and will remain on when the shift is completed.

Shifting Into 2 ↑

Turn the knob to 2 ↑ at any speed, except when shifting from 4 ↓. The indicator light will flash while shifting and will remain on when the shift is completed.

Shifting Into 4 ↓

When 4 ↓ is engaged, keep vehicle speed below 72 km/h (45 mph).

To shift into 4 ↓:

1. The ignition must be in ON/RUN and the vehicle must be stopped or moving less than 5 km/h (3 mph) with the transmission in N (Neutral). It is best for the vehicle to be moving 1.6 to 3.2 km/h (1 to 2 mph).
2. Turn the knob to 4 ↓. Wait for the 4 ↓ indicator light to stop flashing before shifting the transmission into gear.

> **⚠ Caution**
>
> Shifting the transmission into gear before the requested mode indicator light has stopped flashing could damage the transfer case.

If the transmission is in gear and/or moving more than 5 km/h (3 mph), the 4 ↓ indicator light will flash for 30 seconds and not complete the shift. After 30 seconds the transfer case will shift to 4 ↑. Turn the knob to 4 ↑ to display the indicator. With the vehicle moving less than 5 km/h (3 mph), and the transmission in N (Neutral), attempt the shift again.

Shifting Out of 4 ↓

To shift:

1. The vehicle must be stopped or moving less than 5 km/h (3 mph) with the transmission in N (Neutral) and the ignition in ON/RUN. It is best for the vehicle to be moving 1.6 to 3.2 km/h (1 to 2 mph).
2. Turn the knob to 4 ↑, AUTO, or 2 ↑. Wait for the 4 ↑, AUTO, or 2 ↑ indicator light to stop flashing before shifting the transmission into gear.

⚠ Caution

Shifting the transmission into gear before the requested mode indicator light has stopped flashing could damage the transfer case.

If the transmission is in gear and/or moving more than 5 km/h (3 mph), the 4 ↑, AUTO, or 2 ↑ indicator light will flash for 30 seconds but will not complete the shift. With the vehicle moving less than 5 km/h (3 mph), and the transmission in N (Neutral), attempt the shift again.

Shifting Into N (Neutral)

To shift:

1. Park the vehicle on a level surface.
2. Set the parking brake and press and hold the brake pedal. See *Parking Brake on page 9-39*.
3. Start the vehicle or turn the ignition to ON/RUN.
4. Shift the transmission to N (Neutral).
5. Shift the transfer case to 2 ↑.
6. Turn the transfer case knob clockwise to N (Neutral) until it stops and hold it there until the N (Neutral) light starts blinking. This will take at least 10 seconds. Then slowly release the dial to the 4 ↓ position. The N (Neutral) light will come on when the transfer case shift to N (Neutral) is complete.
7. With the engine running, verify that the transfer case is in N (Neutral) by shifting the transmission to R (Reverse), then shift the transmission to D (Drive). There should be no movement of the vehicle while shifting the transmission.
8. Turn the engine off, and the ignition to ACC/ACCESSORY.
9. Place the transmission shift lever in P (Park). See *Recreational Vehicle Towing on page 10-75*.
10. Turn the ignition to LOCK/OFF.

Shifting Out of N (Neutral)

To shift:

1. Set the parking brake and apply the brake pedal.
2. Turn the ignition to ON/RUN with the engine off.
3. Shift the transmission to N (Neutral).
4. Turn the transfer case knob to the desired setting.

   After the transfer case has shifted out of N (Neutral), the N (Neutral) light will go out.
5. Release the parking brake.
6. Start the engine and shift the transmission to the desired gear.

Brakes

Antilock Brake System (ABS)

This vehicle has ABS, an advanced electronic braking system that helps prevent a braking skid.

When the vehicle begins to drive away, ABS checks itself.
A momentary motor or clicking noise might be heard while this test is going on, and it might even be noticed that the brake pedal moves a little. This is normal.

If there is a problem with ABS, this warning light stays on. See *Antilock Brake System (ABS) Warning Light on page 5-22*.

If driving safely on a wet road and it becomes necessary to slam on the brakes and continue braking to avoid a sudden obstacle, a computer senses the wheels are slowing down. If one of the wheels is about to stop rolling, the computer will separately work the brakes at each wheel.

ABS can change the brake pressure to each wheel, as required, faster than any driver could. This can help you steer around the obstacle while braking hard.

As the brakes are applied, the computer keeps receiving updates on wheel speed and controls braking pressure accordingly.

Remember: ABS does not change the time needed to get a foot up to the brake pedal or always decrease stopping distance. If you get too close to the vehicle in front of you, there will not be enough time to apply the brakes if that vehicle suddenly slows or stops. Always leave enough room up ahead to stop, even with ABS.

Using ABS

Do not pump the brakes. Just hold the brake pedal down firmly and let ABS work. You may hear the ABS pump or motor operating and feel the brake pedal pulsate. This is normal.

Braking in Emergencies

ABS allows you to steer and brake at the same time. In many emergencies, steering can help more than even the very best braking.

Parking Brake

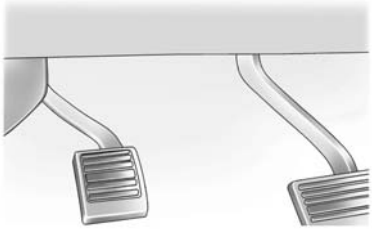

Set the parking brake by holding the regular brake pedal down, then pushing down the parking brake pedal.

If the ignition is on, the brake system warning light will come on. See *Brake System Warning Light on page 5-21*.

⚠ Caution

Driving with the parking brake on can overheat the brake system and cause premature wear or damage to brake system parts. Make sure that the parking brake is fully released and the brake warning light is off before driving.

To release the parking brake, hold the regular brake pedal down, then push down momentarily on the parking brake pedal until you feel the pedal release. Slowly pull your foot up off the parking brake pedal. If the parking brake is not released when you begin to drive, a DIC message will appear and a chime will sound warning you that the parking brake is still on.

If you are towing a trailer and are parking on a hill, see *Driving Characteristics and Towing Tips on page 9-74*.

Electric Parking Brake

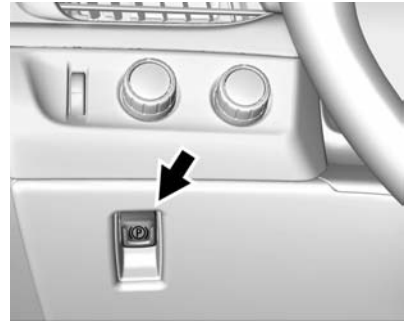

If equipped with an Electric Parking Brake (EPB), the switch is to the left of the steering wheel on the instrument panel, below the exterior lamp controls. The EPB can always be activated, even if the ignition is off. To prevent draining the battery, avoid repeated cycles of the EPB when the engine is not running.

The system has a red parking brake status light and an amber parking brake warning light. See *Electric Parking Brake Light on page 5-21*

and *Service Electric Parking Brake Light on page 5-22*. There are also parking brake-related Driver Information Center (DIC) messages. See *Brake System Messages on page 5-35*. In case of insufficient electrical power, the EPB cannot be applied or released.

Before leaving the vehicle, check the red parking brake status light to ensure that the parking brake is applied.

EPB Apply

To apply the EPB:

1. Be sure the vehicle is at a complete stop.
2. Lift up the EPB switch momentarily.

The red parking brake status light will flash and then stay on once the EPB is fully applied. If the red parking brake status light flashes continuously, then the EPB is only partially applied or there is a problem with the EPB. A DIC message will display. Release the EPB and try to apply it again. If the light does not come on, or keeps flashing, have the vehicle serviced. Do not drive the vehicle if the red parking brake status light is flashing. See your dealer. See *Electric Parking Brake Light on page 5-21*.

If the amber parking brake warning light is on, lift up on the EPB switch and hold it up. Continue to hold the switch until the red parking brake status light remains on. If the amber parking brake warning light is on, see your dealer.

If the EPB is applied while the vehicle is moving, the vehicle will decelerate as long as the switch is held up. If the switch is held up until the vehicle comes to a stop, the EPB will remain applied.

The vehicle may automatically apply the EPB in some situations when the vehicle is not moving. This is normal, and is done to periodically check the correct operation of the EPB system.

If the EPB fails to apply, the rear wheels should be blocked to prevent vehicle movement.

EPB Release

To release the EPB:

1. Place the ignition in the ACC/ACCESSORY or ON/RUN/START position.
2. Apply and hold the brake pedal.
3. Push down momentarily on the EPB switch.

The EPB is released when the red parking brake status light is off.

If the amber parking brake warning light is on, release the EPB by pushing down on the EPB switch and holding it down. Continue to hold the switch until the red parking brake status light is off. If either light stays on after release is attempted, see your dealer.

⚠ Caution

Driving with the parking brake on can overheat the brake system and cause premature wear or damage to brake system parts. Make sure that the parking brake is fully released and the brake warning light is off before driving.

Automatic EPB Release

The EPB will automatically release if the vehicle is running, placed into gear, and an attempt is made to drive away. Avoid rapid acceleration when the EPB is applied, to preserve parking brake lining life.

If parking on a hill, or if the vehicle is pulling a trailer, see *Driving Characteristics and Towing Tips on page 9-74*.

Brake Assist

The Brake Assist feature is designed to assist the driver in stopping or decreasing vehicle speed in emergency driving conditions. This feature uses the stability system hydraulic brake control module to supplement the power brake system under conditions where the driver has quickly and forcefully applied the brake pedal in an attempt to quickly stop or slow down the vehicle. The stability system hydraulic brake control module increases brake pressure at each corner of the vehicle until the ABS activates. Minor brake pedal pulsation or pedal movement during this time is normal and the driver should continue to apply the brake pedal as the driving situation dictates.
The Brake Assist feature will automatically disengage when the brake pedal is released or brake pedal pressure is quickly decreased.

Hill Start Assist (HSA)

This vehicle has an HSA feature, which may be useful when the vehicle is stopped on a grade sufficient enough to activate HSA. This feature is designed to prevent the vehicle from rolling, either forward or rearward, during vehicle drive off. After the driver completely stops and holds the vehicle in a complete standstill on a grade, HSA will be automatically activated. During the transition period between when the driver releases the brake pedal and starts to accelerate to drive off on a grade, HSA holds the braking pressure for a maximum of two seconds to ensure that there is no rolling. The brakes will automatically release when the accelerator pedal is applied within the two-second window. It will not activate if the vehicle is in a drive gear and facing downhill, or if the vehicle is facing uphill and in R (Reverse).

Ride Control Systems

Traction Control/ Electronic Stability Control

System Operation

The vehicle has a Traction Control System (TCS) and StabiliTrak®, an electronic stability control system. These systems help limit wheel spin and assist the driver in maintaining control, especially on slippery road conditions.

TCS activates if it senses any of the drive wheels are spinning or beginning to lose traction. When this happens, TCS applies the brakes to the spinning wheels and reduces engine power to limit wheel spin.

StabiliTrak activates when the vehicle senses a difference between the intended path and the direction the vehicle is actually traveling. StabiliTrak selectively applies braking pressure to any one of the vehicle wheel brakes to assist the driver in keeping the vehicle on the intended path. Trailer Sway Control (TSC) is also on automatically when the vehicle is started. See *Trailer Sway Control (TSC) on page 9-83*.

If cruise control is being used and traction control or StabiliTrak begins to limit wheel spin, cruise control will disengage. Cruise control may be turned back on when road conditions allow.

Both systems come on automatically when the vehicle is started and begins to move. The systems may be heard or felt while they are operating or while performing diagnostic checks. This is normal and does not mean there is a problem with the vehicle.

It is recommended to leave both systems on for normal driving conditions, but it may be necessary to turn TCS off if the vehicle gets stuck in sand, mud, ice, or snow. See *If the Vehicle Is Stuck on page 9-13* and “Turning the Systems Off and On” later in this section.

When the transfer case (if equipped) is in Four-Wheel Drive Low, the stability system is automatically disabled, comes on, and the appropriate message will appear on the DIC. Both traction control and StabiliTrak are automatically disabled in this condition.

The indicator light for both systems is in the instrument cluster. This light will:

- Flash when TCS is limiting wheel spin.
- Flash when StabiliTrak is activated.

- Turn on and stay on when either system is not working.

If either system fails to turn on or to activate, a message displays in the Driver Information Center (DIC), and comes on and stays on to indicate that the system is inactive and is not assisting the driver in maintaining control. The vehicle is safe to drive, but driving should be adjusted accordingly.

If comes on and stays on:

1. Stop the vehicle.
2. Turn the engine off and wait 15 seconds.
3. Start the engine.

Drive the vehicle. If comes on and stays on, the vehicle may need more time to diagnose the problem. If the condition persists, see your dealer.

Turning the Systems Off and On

The button for TCS and StabiliTrak is on the center stack.

⚠ Caution

Do not repeatedly brake or accelerate heavily when TCS is off. The vehicle driveline could be damaged.

To turn off only TCS, press and release the button. The traction off light displays in the instrument cluster. The appropriate message will display in the DIC. See *Ride Control System Messages on page 5-42*. To turn TCS on again, press and release the button. The traction off light displayed in the instrument cluster will turn off.

If TCS is limiting wheel spin when the button is pressed, the system will not turn off until the wheels stop spinning.

To turn off both TCS and StabiliTrak, press and hold the button until the traction off light and the StabiliTrak OFF light come on and stay on in the instrument cluster, then release. The appropriate message will display in the DIC. See *Ride Control System Messages on page 5-42*.

To turn TCS and StabiliTrak on again, press and release the button. The traction off light and the StabiliTrak OFF light in the instrument cluster turn off.

StabiliTrak will automatically turn on if the vehicle exceeds 56 km/h (35 mph). Traction control will remain off.

The vehicle has a Trailer Sway Control (TSC) feature and a Hill Start Assist (HSA) feature. See *Trailer Sway Control (TSC) on page 9-83* or *Hill Start Assist (HSA) on page 9-41*.

Adding accessories can affect the vehicle performance. See *Accessories and Modifications on page 10-3*.

Magnetic Ride Control

The Magnetic Ride Control monitors the suspension system.

Based on road conditions, steering wheel angle, and vehicle speed, the system automatically adjusts to provide the best handling while providing a smooth ride. The Tour and Sport Modes will feel similar on a smooth road.

Tour: Use for normal city and highway driving. This setting provides a smooth, soft ride.

Sport: Use where road conditions or personal preference demand more control. This setting provides more “feel,” or response to road conditions.

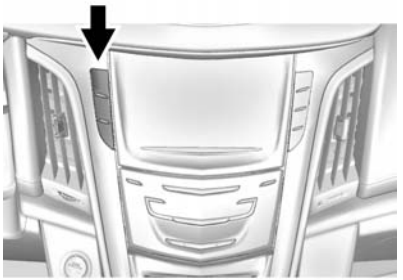

The vehicle is normally in Tour Mode. Sport Mode is engaged when the Magnetic Ride Control button on the center stack is pressed. Press the button again to return to Tour Mode.

The Driver Information Center (DIC) briefly displays the appropriate message on vehicle startup or when a new mode is selected. See *Ride Control System Messages on page 5-42*.

Locking Rear Axle

Vehicles with a locking rear axle can give more traction on snow, mud, ice, sand, or gravel. It works like a standard axle most of the time, but when traction is low, this feature will allow the rear wheel with the most traction to move the vehicle.

Automatic Level Control

The automatic level control rear suspension comes as a part of the Magnetic Ride Control system.

This type of level control is fully automatic and will provide a better leveled riding position as well as better handling under a variety of passenger and loading conditions. An air compressor connected to the rear shocks will raise or lower the

rear of the vehicle to maintain proper vehicle height. The system is activated when the ignition is in ON/RUN and will automatically adjust vehicle height thereafter. The system may exhaust (lower vehicle height) for up to 10 minutes after the ignition has been turned off. You may hear the air compressor operating when the height is being adjusted.

If a weight-distributing hitch is being used, it is recommended to allow the shocks to inflate, leveling the vehicle prior to adjusting the hitch.

Cruise Control

⚠ Warning

Cruise control can be dangerous where you cannot drive safely at a steady speed. Do not use cruise control on winding roads or in heavy traffic.

Cruise control can be dangerous on slippery roads. On such roads, fast changes in tire traction can cause excessive wheel slip, and you could lose control. Do not use cruise control on slippery roads.

If equipped with cruise control, a speed of about 40 km/h (25 mph) or more can be maintained without keeping your foot on the accelerator. Cruise control does not work at speeds below about 40 km/h (25 mph).

If the Traction Control/Electronic Stability Control system begins to limit wheel spin while using cruise control, the cruise control automatically disengages. See *Traction Control/Electronic Stability Control on page 9-42*. If a collision alert occurs when cruise control is activated, cruise control is disengaged. See *Forward Collision Alert (FCA) System on page 9-62*. When road conditions allow you to safely use it again, the cruise control can be turned back on.

If the brakes are applied, cruise control disengages.

(On/Off): Press to turn the system on and off. A white indicator appears in the instrument cluster when cruise is turned on.

+RES (Resume/Accelerate): If there is a set speed in memory, press the control up briefly to resume that speed or press and hold to accelerate. If the cruise control is already active, use to increase vehicle speed.

SET− (Set/Coast): Press the control down briefly to set the speed and activate cruise control. If the cruise control is already active, use to decrease vehicle speed.

(Cancel): Press to disengage cruise control without erasing the set speed from memory.

Setting Cruise Control

If is on when not in use, SET− or +RES could get pressed and go into cruise when not desired. Keep off when cruise is not being used.

To set cruise control:

1. Press .
2. Get up to the desired speed.
3. Press and release SET− .
4. Remove foot from the accelerator.

When the cruise control has been set to the desired speed, a green cruise control indicator appears on the instrument cluster and a cruise set speed message appears on the Driver Information Center (DIC) and Head-Up Display (HUD), if equipped.

Resuming a Set Speed

If the cruise control is set at a desired speed and then the brakes are applied or is pressed, the cruise control is disengaged without erasing the set speed from memory.

Once the vehicle speed reaches about 40 km/h (25 mph) or more, press +RES up briefly. The vehicle returns to the previous set speed.

Increasing Speed While Cruise Control is at a Set Speed

If the cruise control system is already activated:

- Press and hold +RES up until the vehicle accelerates to the desired speed, then release it.
- To increase vehicle speed in small increments, press +RES up briefly. For each press, the vehicle goes about 1.6 km/h (1 mph) faster.

The speedometer reading can be displayed in either English or metric units. See *Instrument Cluster on page 5-11*. The increment value used depends on the units displayed.

Reducing Speed While Cruise Control is at a Set Speed

If the cruise control system is already activated:

- Press and hold SET− down until the desired lower speed is reached, then release it.
- To decrease the vehicle speed in small increments, press SET− down briefly. For each press, the vehicle goes about 1.6 km/h (1 mph) slower.

The speedometer reading can be displayed in either English or metric units. See *Instrument Cluster on page 5-11*. The increment value used depends on the units displayed.

Passing Another Vehicle While Using Cruise Control

Use the accelerator pedal to increase the vehicle speed. When you take your foot off the pedal, the vehicle will slow down to the previous set cruise speed.

While pressing the accelerator pedal or shortly following the release to override cruise, briefly applying the SET− control will result in cruise set to the current vehicle speed.

Using Cruise Control on Hills

How well the cruise control works on hills depends on the vehicle speed, the load, and the steepness of the hills. When going up steep hills, pressing the accelerator pedal may be necessary to maintain vehicle speed. When going downhill, Cruise Grade Braking helps maintain the driver selected speed.

Cruise Grade Braking is enabled when the vehicle is started and cruise control is active. It is not enabled in Range Selection Mode. It assists in maintaining driver selected speed when driving on downhill grades by using the engine and transmission to slow the vehicle.

To disable and enable Cruise Grade Braking for the current ignition key cycle, press and hold the Tow/Haul button for five seconds. A Driver Information Center (DIC) message displays. See *Transmission Messages on page 5-44*.

For other forms of Grade Braking, see *Automatic Transmission on page 9-28*, and *Tow/Haul Mode on page 9-33*.

Ending Cruise Control

There are four ways to end cruise control:

- Step lightly on the brake pedal.
- Press ⊗.
- Shift the transmission to N (Neutral).

- To turn off cruise control, press .

Erasing Speed Memory

The cruise control set speed is erased from memory if is pressed or if the ignition is turned off.

Adaptive Cruise Control

If equipped with Adaptive Cruise Control (ACC), it allows the driver to select the cruise control set speed and following gap. Read this entire section before using this system. The following gap is the following time between your vehicle and a vehicle detected directly ahead in your path, moving in the same direction. If no vehicle is detected in your path, ACC works like regular cruise control. ACC uses camera and radar sensors. See *Radio Frequency Statement on page 13-12*.

If a vehicle is detected in your path, ACC can accelerate or moderately decelerate to maintain the selected following gap. To disengage ACC, apply the brake. If ACC is controlling your vehicle speed when the traction control system (TCS) or electronic stability control system activates, the ACC may automatically disengage. See *Traction Control/Electronic Stability Control on page 9-42*. When road conditions allow ACC to be safely used, the ACC can be turned back on.

ACC will not engage if the TCS or StabiliTrak electronic stability control system is disabled.

⚠ Warning

ACC has limited braking ability and may not have time to slow the vehicle down enough to avoid a collision with another vehicle you are following. This can occur

(Continued)

Warning (Continued)

when vehicles suddenly slow or stop ahead, or enter your lane. Also see “Alerting the Driver” in this section. Complete attention is always required while driving and you should be ready to take action and apply the brakes. See *Defensive Driving on page 9-3*.

⚠ Warning

ACC will not detect or brake for children, pedestrians, animals, or other objects.

Do not use ACC when:

- On winding and hilly roads or when the sensors are blocked by snow, ice, or dirt. The system may not detect a

(Continued)

Warning (Continued)

vehicle ahead. Keep the entire front of the vehicle clean.

- Visibility is low, such as in fog, rain, or snow conditions. ACC performance is limited under these conditions.
- On slippery roads where fast changes in tire traction can cause excessive wheel slip.

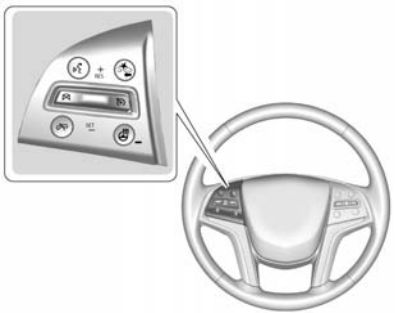

(On/Off): Press to turn the system on or off. The indicator turns white on the instrument cluster when ACC is turned on.

+RES (Resume/Accelerate): Press the control up briefly to resume the previous set speed or hold upwards to accelerate. If ACC is already active, use to increase vehicle speed.

SET– (Set/Coast): Press the control down briefly to set the speed and activate ACC. If ACC is already active, use to decrease vehicle speed.

(Cancel): Press to disengage ACC without erasing the selected set speed.

(Follow Distance Gap): Press to select a following gap time (or distance) setting for ACC of Far, Medium, or Near.

Setting Adaptive Cruise Control

If the cruise button is on when not in use, it could get pressed and go into cruise when not desired. Keep the cruise control button off when cruise is not being used.

Select the set speed desired for cruise. This is the vehicle speed when no vehicle is detected in its path.

ACC will not set at a speed less than 25 km/h (15 mph), although it can be resumed when driving at lower speeds.

To set ACC:

1. Press .
2. Get up to the desired speed.
3. Press and release the SET– control on the steering wheel.
4. Remove foot from the accelerator.

After ACC is set, it may immediately apply the brakes if a vehicle ahead is detected closer than the selected following gap.

The ACC indicator displays on the instrument cluster and Head-Up Display (HUD). When ACC is active, the indicator will be lit green.

Be mindful of speed limits, surrounding traffic speeds, and weather conditions when selecting the set speed.

Resuming a Set Speed

If the ACC is set at a desired speed and then the brakes are applied, ACC is disengaged without erasing the set speed from memory.

To begin using ACC again, press +RES up briefly on the steering wheel. The vehicle returns to the previous set speed.

Increasing Speed While ACC is at a Set Speed

If ACC is already activated, do one of the following:

- Use the accelerator to get to the higher speed. Press SET– down. Release the control and the accelerator pedal. The vehicle will now cruise at the higher speed.

  When the accelerator pedal is pressed, ACC will not brake because it is overridden.
  A warning message will appear on the Driver Information Center (DIC) and Head-Up Display (HUD). See *Cruise Control Messages on page 5-35*.

- Press and hold +RES up until the desired set speed appears on the display, then release it.

- To increase vehicle speed in small increments, press +RES up. For each press, the vehicle goes 1 km/h (1 mph) faster.

When it is determined there is no vehicle ahead or the vehicle ahead is beyond the selected following gap, the vehicle speed will increase to the set speed.

The speedometer reading can be displayed in either English or metric units. See *Instrument Cluster on page 5-11*. The increment value used depends on the units displayed.

Reducing Speed While ACC is at a Set Speed

If ACC is already activated, do one of the following:

- Use the brake to get to the desired lower speed. Press SET– down and release the accelerator pedal. The vehicle will now cruise at the lower speed.

- Press and hold SET– down until the desired lower speed is reached, then release it.
- To decrease the vehicle speed in smaller increments, press SET− down. For each press, the vehicle goes about 1 km/h (1 mph) slower.

The speedometer reading can be displayed in either English or metric units. See *Instrument Cluster on page 5-11*. The increment value used depends on the units displayed.

Selecting the Follow Distance Gap

When a slower moving vehicle is detected ahead within the selected following gap, ACC will adjust the vehicle's speed and attempt to maintain the follow distance gap selected.

Press on the steering wheel to adjust the following gap. Each press cycles the gap button through three settings: Far, Medium, or Near.

When pressed, the current gap setting displays briefly on the DIC and HUD. The gap setting will be maintained until it is changed.

Since each gap setting corresponds to a following time (Far, Medium, or Near), the following distance will vary based on vehicle speed. The faster the vehicle speed, the further back your vehicle will follow a vehicle detected ahead. Consider traffic and weather conditions when selecting the following gap. The range of selectable gaps may not be appropriate for all drivers and driving conditions.

Changing the gap setting automatically changes the alert timing sensitivity (Far, Medium, or Near) for the Forward Collision Alert (FCA) feature. See *Forward Collision Alert (FCA) System on page 9-62*.

Alerting the Driver

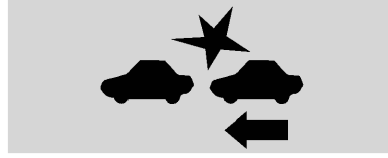

If ACC is engaged, driver action may be required when ACC cannot apply sufficient braking when approaching a vehicle too rapidly.

When this condition occurs, the collision alert symbol on the HUD will flash on the windshield. Either eight beeps will sound from the front, or both sides of the Safety Alert Seat will pulse five times. See “Collision/Detection Systems” under *Vehicle Personalization on page 5-46*.

See *Defensive Driving on page 9-3*.

Approaching and Following a Vehicle

The vehicle ahead symbol is in the instrument cluster and HUD display.

The vehicle ahead symbol only displays when a vehicle is detected in your vehicle's path moving in the same direction.

If this symbol is not displaying, ACC will not respond to or brake to vehicles ahead.

ACC automatically slows the vehicle down and adjusts vehicle speed to follow the vehicle in front at the selected following gap. The vehicle speed increases or decreases to follow the vehicle in front of you, but will not exceed the set speed. It may apply limited braking, if necessary. When braking is active, the brake lights will come on. The automatic braking may feel or sound different than if the brakes were applied manually. This is normal.

Stationary or Very Slow-Moving Objects

⚠ Warning

Adaptive Cruise Control (ACC) may not detect and react to stopped or slow-moving vehicles ahead of you. For example, the system may not brake for a vehicle it has never detected moving. This can occur in stop-and-go traffic or when a vehicle suddenly appears due to a vehicle ahead changing lanes. Your vehicle may not stop and could cause a crash. Use caution when using ACC. Your complete attention is always required while driving and you should be ready to take action and apply the brakes.

ACC Automatically Disengages

ACC may automatically disengage and the driver will need to manually apply the brakes to slow the vehicle when:

- The sensors are blocked.
- The Traction Control System (TCS) or electronic stability control system has activated or been disabled.
- No traffic or other objects are being detected.
- There is a fault in the system.

The ACC active symbol will not be displayed when ACC is no longer active.

Notification to Resume ACC

ACC will maintain a following gap behind a detected vehicle and slow your vehicle to a stop behind the detected vehicle.

If the stopped vehicle ahead has driven away and ACC has not resumed, the vehicle ahead symbol will flash as a reminder to check

traffic ahead before proceeding. In addition, the left and right sides of the Safety Alert Seat will pulse three times, or three beeps will sound. See ”Alert Type” and “Go Notifier” in “Collision/Detection Systems” under *Vehicle Personalization on page 5-46*.

When the vehicle ahead drives away, press +RES or the accelerator pedal to resume cruise control. If stopped for more than two minutes or if the driver door is opened and the driver safety belt is unbuckled, the ACC automatically applies the Electric Parking Brake (EPB) to hold the vehicle. The EPB status light will turn on. See *Parking Brake on page 9-39*. To resume ACC and release the EPB, press the accelerator pedal.

A DIC warning message may display indicating to shift to P (Park) before exiting the vehicle. See *Vehicle Messages on page 5-34*.

⚠ Warning

If ACC has stopped the vehicle, and if ACC is disengaged, turned off, or canceled, the vehicle will no longer be held at a stop. The vehicle can move. When ACC is holding the vehicle at a stop, always be prepared to manually apply the brakes.

⚠ Warning

Leaving the vehicle without placing it in P (Park) can be dangerous. Do not leave the vehicle while it is being held at a stop by ACC. Always place the vehicle in P (Park) and turn off the ignition before leaving the vehicle.

ACC Override

If using the accelerator pedal while ACC is active, a DIC warning message will indicate automatic braking will not occur. See *Vehicle Messages on page 5-34*. ACC will resume operation when the accelerator pedal is not being pressed.

⚠ Warning

The ACC will not automatically apply the brakes if your foot is resting on the accelerator pedal. You could crash into a vehicle ahead of you.

Curves in the Road

⚠ Warning

On curves, ACC may not detect a vehicle ahead in your lane. You could be startled if the vehicle

(Continued)

Warning (Continued)

accelerates up to the set speed, especially when following a vehicle exiting or entering exit ramps. You could lose control of the vehicle or crash. Do not use ACC while driving on an entrance or exit ramp. Always be ready to use the brakes if necessary.

⚠ Warning

On curves, ACC may respond to a vehicle in another lane, or may not have time to react to a vehicle in your lane. You could crash into a vehicle ahead of you, or lose control of your vehicle. Give extra attention in curves and be ready to use the brakes if necessary. Select an appropriate speed while driving in curves.

ACC may operate differently in a sharp curve. It may reduce the vehicle speed if the curve is too sharp.

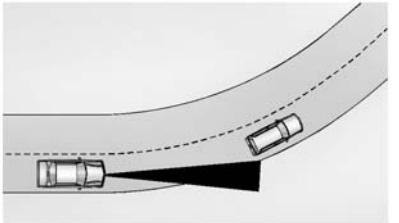

When following a vehicle and entering a curve, ACC may not detect the vehicle ahead and accelerate to the set speed. When this happens, the vehicle ahead symbol will not appear.

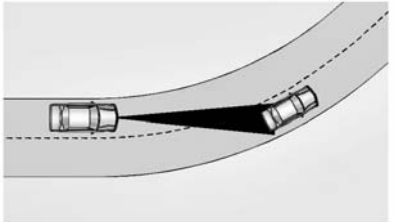

ACC may detect a vehicle that is not in your lane and apply the brakes.

ACC may occasionally provide an alert and/or braking that is considered unnecessary. It could respond to vehicles in different lanes, signs, guardrails, and other stationary objects when entering or exiting a curve. This is normal operation. The vehicle does not need service.

Other Vehicle Lane Changes

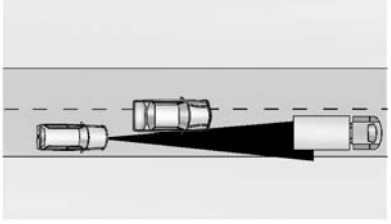

ACC will not detect a vehicle ahead until it is completely in the lane. The brakes may need to be manually applied.

Do Not Use ACC on Hills and When Towing a Trailer

Do not use ACC when driving on steep hills or when towing a trailer. ACC will not detect a vehicle in the lane while driving on steep hills. The driver will often need to take over acceleration and braking on steep hills, especially when towing a trailer. If the brakes are applied, the ACC disengages.

Disengaging ACC

There are three ways to disengage ACC:

- Step lightly on the brake pedal.
- Press .
- Press .

Erasing Speed Memory

The cruise control set speed is erased from memory if is pressed or if the ignition is turned off.

Cleaning the Sensing System

The camera sensor on the windshield ahead of the rearview mirror and the radar sensors on the front of the vehicle can become blocked by snow, ice, dirt, or mud. These areas need to be cleaned for ACC to operate properly.

For cleaning instructions, see “Washing the Vehicle” under *Exterior Care on page 10-79*.

System operation may also be limited under snow, heavy rain, or road spray conditions.

Driver Assistance Systems

This vehicle may have features that work together to help avoid crashes or reduce crash damage while driving, backing, and parking. Read this entire section before using these systems.

⚠ Warning

Do not rely on the Driver Assistance Systems. These systems do not replace the need for paying attention and driving safely. You may not hear or feel alerts or warnings provided by these systems. Failure to use proper care when driving may result in injury, death, or vehicle damage. See *Defensive Driving on page 9-3*.

Under many conditions, these systems will not:

(Continued)

Warning (Continued)

- Detect children, pedestrians, bicyclists, or animals.
- Detect vehicles or objects outside the area monitored by the system.
- Work at all driving speeds.
- Warn you or provide you with enough time to avoid a crash.
- Work under poor visibility or bad weather conditions.
- Work if the detection sensor is not cleaned or is covered by ice, snow, mud, or dirt.

Complete attention is always required while driving, and you should be ready to take action and apply the brakes and/or steer the vehicle to avoid crashes.

Audible or Safety Alert Seat

Some driver assistance features alert the driver of obstacles by beeping. To change the volume of the warning chime, see “Comfort and Convenience” under *Vehicle Personalization on page 5-46*.

If equipped with the Safety Alert Seat, the driver seat cushion may provide a vibrating pulse alert instead of beeping. To change this, see “Collision/Detection Systems” under *Vehicle Personalization on page 5-46*.

Assistance Systems for Parking or Backing

If equipped, the Rear Vision Camera (RVC), Rear Parking Assist (RPA), Front Park Assist (FPA), Surround Vision, Front Vision Camera, Rear Automatic Braking (RAB) and Backing Warning System, and Rear Cross Traffic Alert (RCTA) may help the driver park or avoid objects. Always check around the vehicle when parking or backing.

Rear Vision Camera (RVC)

When the vehicle is shifted into R (Reverse), the RVC displays an image of the area behind the vehicle in the center stack display. The previous screen displays when the vehicle is shifted out of R (Reverse) after a short delay. To return to the previous screen sooner, press a button on the infotainment system, shift into P (Park), or reach a vehicle speed of 8 km/h (5 mph). The rear vision camera is above the license plate.

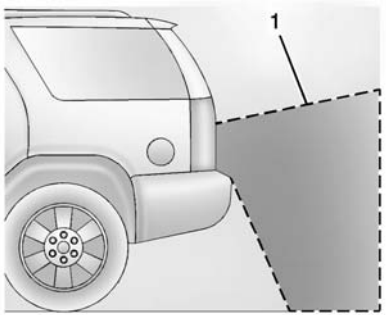

1. View Displayed by the Rear Vision Camera

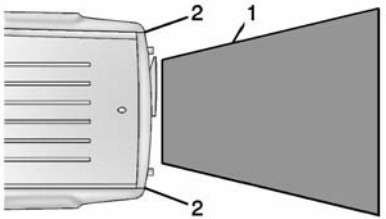

1. View Displayed by the Rear Vision Camera
2. Corners of the Rear Bumper

Displayed images may be farther or closer than they appear. The area displayed is limited and objects that are close to either corner of the bumper or under the bumper do not display.

A warning triangle may display on the RVC screen to show that Rear Parking Assist (RPA) has detected an object. This triangle changes from amber to red and increases in size the closer the object.

Surround Vision

If equipped, Surround Vision displays an image of the area surrounding the vehicle, along with the front or rear camera views in the center stack. The front camera is in the grille or near the front emblem, the side cameras are on the bottom of the outside rearview mirrors, and the rear camera is above the license plate.

⚠ Warning

The Surround Vision Cameras have blind spots and will not display all objects near the corners of the vehicle. Folding side mirrors that are out of position will not display surround view correctly. Always check around the vehicle when parking or backing.

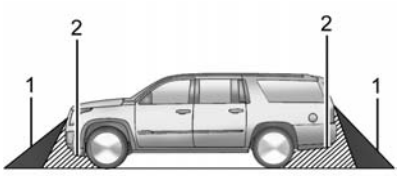

1. Views Displayed by the Surround Vision Cameras
2. Area Not Shown

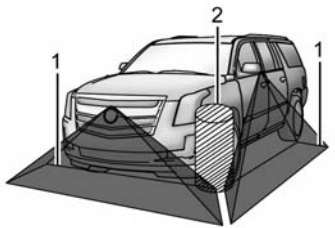

1. Views Displayed by the Surround Vision Cameras
2. Area Not Shown

Front Vision Camera

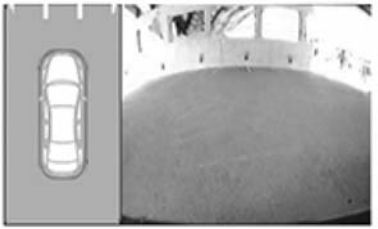

If equipped, a view of the area in front of the vehicle displays in the center stack. The front view shows after shifting from R (Reverse) to D (Drive) and when the vehicle is moving forward slower than 8 km/h (5 mph), or when the Front Parking Assist system detects an object within 30 cm (12 in).

⚠ Warning

The camera(s) do not display children, pedestrians, bicyclists, crossing traffic, animals, or any other object outside of the

(Continued)

Warning (Continued)

cameras' field of view, below the bumper, or under the vehicle. Shown distances may be different from actual distances. Do not drive or park the vehicle using only these camera(s). Always check behind and around the vehicle before driving. Failure to use proper care may result in injury, death, or vehicle damage.

Parking Assist

With Front and Rear Parking Assist, as the vehicle moves at speeds of less than 8 km/h (5 mph) the sensors on the bumpers may detect objects up to 1.2 m (4 ft) in front and 2.5 m (8 ft) behind the vehicle within a zone 25 cm (10 in) high off the ground and below bumper level. These detection distances may be shorter during warmer or humid weather. Blocked sensors will not detect objects and can also cause false detections. Keep the sensors

clean of mud, dirt, snow, ice, and slush; and clean sensors after a car wash in freezing temperatures.

⚠ Warning

The parking assist system does not detect children, pedestrians, bicyclists, animals, or objects located below the bumper or that are too close or too far from the vehicle. It is not available at speeds greater than 8 km/h (5 mph). To prevent injury, death, or vehicle damage, even with parking assist, always check the area around the vehicle and check all mirrors before moving forward or backing.

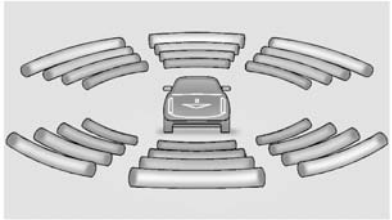

The instrument cluster may have a parking assist display with bars that show “distance to object” and object location information for the Front and Rear Parking Assist system. As the object gets closer, more bars light up and the bars change color from yellow to amber to red.

When an object is first detected in the rear, one beep will be heard from the rear, or both sides of the Safety Alert Seat will pulse two times. When an object is very close (<0.6 m (2 ft) in the vehicle rear, or <0.3 m (1 ft) in the vehicle front), a continuous beep will sound from the front or rear depending on object location, or both sides of the Safety Alert Seat will pulse five times. Beeps for FPA are higher pitched than for RPA.

Backing Warning and Rear Automatic Braking

Vehicles with Adaptive Cruise Control (ACC) have the Backing Warning and Rear Automatic Braking (RAB) system. The Backing Warning part of this system can warn of rear objects when backing up at speeds greater than 8 km/h (5 mph).

The Backing Warning System will beep once from the rear when an object is first detected, or pulse twice on both sides of the Safety Alert Seat. When the system detects a potential crash, beeps will be heard from the rear, or five pulses will be felt on both sides of the Safety Alert Seat. There may also be a brief, sharp application of the brakes.

⚠ Warning

The Backing Warning System only operates at speeds greater than 8 km/h (5 mph). It does not detect children, pedestrians, bicyclists, animals, or objects below the bumper or that are too close or too far from the vehicle. In some situations, such as at higher backing speeds, there may not be enough time for the short, sharp application of the vehicle brake system to occur. To prevent injury, death, or vehicle damage, even with the Backing Warning System, always check the area around the vehicle and check all mirrors before backing.

When the vehicle is in R (Reverse) and if it is backing too fast to avoid a crash with a detected object directly behind the vehicle, the Rear Automatic Braking (RAB) system may automatically brake hard to a stop to help avoid or reduce the harm caused by a backing crash.

⚠ Warning

Rear Automatic Braking may not avoid many types of backing crashes. Do not wait for the automatic braking to apply. This system is not designed to replace driver braking and only works in R (Reverse) when an object is detected directly behind the vehicle. It may not brake or stop in time to avoid a crash. It will not brake for objects when the vehicle is moving at very low speeds. It does not detect children, pedestrians, bicyclists, animals, or objects below the bumper or that are too close or too far from the vehicle. To prevent injury, death, or vehicle damage, even with Rear

(Continued)

Warning (Continued)

Automatic Braking, always check the area around the vehicle before and while backing.

Pressing the brake pedal after the vehicle comes to a stop will release the Rear Automatic Braking. If the brake pedal is not pressed soon after the stop, the electric parking brake may be set. When it is safe, press the accelerator pedal firmly at any time to override the Rear Automatic Braking.

⚠ Warning

There may be instances where unexpected or undesired automatic braking occurs. If this happens, either press the brake pedal or firmly press the accelerator pedal to release the brakes from the Rear Automatic

(Continued)

Warning (Continued)

Braking system. Before releasing the brakes, check the RVC screen and check the area around the vehicle to make sure it is safe to proceed.

Rear Cross Traffic Alert (RCTA)

If equipped, when the vehicle is shifted into R (Reverse), RCTA displays a red warning triangle with a left or right pointing arrow on the RVC screen to warn of traffic coming from the left or right. This system detects objects coming from up to 20 m (65 ft) from the left or right side of the vehicle. When an object is detected, either three beeps sound from the left or right or three Safety Alert Seat pulses occur on the left or right side, depending on the direction of the detected vehicle.

Use caution while backing up when towing a trailer, as the RCTA detection zones that extend out from the back of the vehicle do not move further back when a trailer is towed.

Turning the Features On or Off

The P button on the center stack is used to turn on or off the Front and Rear Parking Assist, Rear Cross Traffic Alert, Rear Automatic Braking, and Backing Warning System at the same time. The indicator light next to the button comes on when the features are on and turns off when the features have been disabled.

Front and Rear Parking Assist can be turned off, on, or on with towbar through vehicle personalization.

See “Park Assist” under *Vehicle Personalization on page 5-46*. If the parking assist is turned off through vehicle personalization, the park assist button will be disabled. To turn the parking assist on again, select On in the vehicle personalization menu. The On with Towbar setting allows for the parking assist to work properly with a small item attached to the trailer hitch.

Turn off parking assist and Rear Automatic Braking when towing a trailer.

To turn the RPA symbols, guidance lines, or Rear Cross Traffic Alert on or off, see “Rear Camera” under *Vehicle Personalization on page 5-46*.

On some vehicles RCTA setting can be turned off through “Collision/ Detection Systems” under *Vehicle Personalization on page 5-46*

Assistance Systems for Driving

If equipped, when driving the vehicle in a forward gear, Forward Collision Alert (FCA), Lane Departure Warning (LDW), Side Blind Zone Alert (SBZA), Lane Change Alert (LCA), and/or the Active Emergency Braking System can help to avoid a crash or reduce crash damage.

Forward Collision Alert (FCA) System

If equipped, the FCA system may help to avoid or reduce the harm caused by front-end crashes. When approaching a vehicle ahead too quickly, FCA provides a red flashing alert on the windshield and rapidly beeps or pulses the driver seat. FCA also lights an amber visual alert if following another vehicle much too closely.

FCA detects vehicles within a distance of approximately 60 m (197 ft) and operates at speeds above 40 km/h (25 mph). If the vehicle has Adaptive Cruise Control (ACC), it can detect vehicles to distances of approximately 110 m (360 ft) and operates at all speeds. See *Adaptive Cruise Control on page 9-48*.

⚠ Warning

FCA is a warning system and does not apply the brakes. When approaching a slower-moving or stopped vehicle ahead too rapidly, or when following a vehicle too closely, FCA may not provide a warning with enough time to help avoid a crash. FCA does not warn of pedestrians, animals, signs, guardrails, bridges, construction barrels, or other objects. Be ready to take action and apply the brakes. For more information, see *Defensive Driving on page 9-3*.

FCA can be disabled with the FCA steering wheel control, or if your vehicle is equipped with Adaptive Cruise Control (ACC), through vehicle personalization. See the “Auto Collision Preparation” portion of “Collision/Detection Systems” under *Vehicle Personalization on page 5-46*.

Detecting the Vehicle Ahead

FCA warnings will not occur unless the FCA system detects a vehicle ahead. When the vehicle is detected, the vehicle ahead indicator will display green. Vehicles may not be detected on curves, highway exit ramps, or hills; or due to poor visibility. FCA will not detect another vehicle ahead until it is completely in the driving lane.

⚠ Warning

FCA does not provide a warning to help avoid a crash, unless it detects a vehicle. FCA may not detect a vehicle ahead if the FCA sensor is blocked by dirt, snow, or ice, or if the windshield is damaged. It may also not detect a vehicle on winding or hilly roads, or in conditions that can limit visibility such as fog, rain, or snow, or if the headlamps or windshield are not cleaned or in proper condition. Keep the windshield, headlamps, and FCA sensors clean and in good repair.

Collision Alert

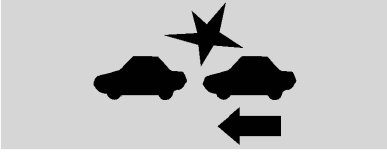

When your vehicle approaches another detected vehicle too rapidly, the red FCA display will flash on the windshield. Also, eight rapid high-pitched beeps will sound from the front, or both sides of the Safety Alert Seat will pulse five times. When this Collision Alert occurs, the brake system may prepare for driver braking to occur more rapidly which can cause a brief, mild deceleration. Continue to apply the brake pedal as needed. Cruise control may be disengaged when the Collision Alert occurs.

Tailgating Alert

The vehicle ahead indicator will display amber when you are following a vehicle ahead much too closely.

Selecting the Alert Timing

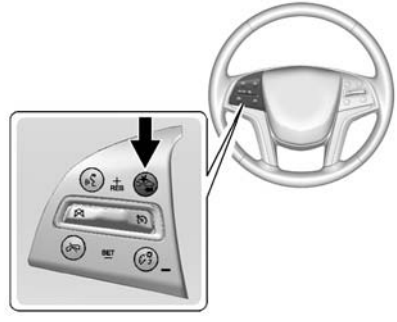

The Collision Alert control is on the steering wheel. Press to set the FCA timing to Far, Medium, Near, or on some vehicles, Off. The first button press shows the current setting on the Driver Information Center (DIC). Additional button presses will change this setting. The chosen setting will remain until it is changed and will affect the timing of both the Collision Alert and the Tailgating Alert features. The timing of both alerts will vary based on vehicle speed. The faster the

vehicle speed, the farther away the alert will occur. Consider traffic and weather conditions when selecting the alert timing. The range of selectable alert timing may not be appropriate for all drivers and driving conditions.

If your vehicle is equipped with Adaptive Cruise Control (ACC), changing the FCA timing setting automatically changes the ACC following gap setting (Far, Medium, or Near).

Unnecessary Alerts

FCA may provide unnecessary alerts for turning vehicles, vehicles in other lanes, objects that are not vehicles, or shadows. These alerts are normal operation and the vehicle does not need service.

Cleaning the System

If the FCA system does not seem to operate properly, cleaning the outside of the windshield in front of the camera sensor on the windshield behind the rearview mirror, and cleaning the front of the vehicle where radar sensors are located, may correct the issue.

For cleaning instructions, see “Washing the Vehicle” under *Exterior Care on page 10-79*.

System operation may also be limited under snow, heavy rain, or road spray conditions.

Active Emergency Braking System

If the vehicle has Adaptive Cruise Control (ACC) it also has the Active Emergency Braking System, which includes Intelligent Brake Assist (IBA) and the Automatic Collision Preparation (ACP) System. These systems can provide a boost to braking or automatically brake the vehicle to help avoid or lessen the severity of crashes when driving in a forward gear.

Intelligent Brake Assist (IBA)

IBA may activate when the brake pedal is applied quickly by providing a boost to braking based on the speed of approach and distance to a vehicle ahead.

Minor brake pedal pulsations or pedal movement during this time is normal and the brake pedal should continue to be applied as needed. IBA will automatically disengage only when the brake pedal is released.

⚠ Warning

IBA may increase vehicle braking in situations when it may not be necessary. You could block the flow of traffic. If this occurs, take your foot off the brake pedal and then apply the brakes as needed.

Automatic Collision Preparation (ACP) System

When driving in a forward gear above 4 km/h (2.5 mph), ACP may help reduce crash damage by applying the brakes. It has a detection range of approximately 60 m (197 ft). This front automatic braking can only occur if a vehicle is detected. This is shown by the FCA vehicle ahead indicator being lit. See *Forward Collision Alert (FCA) System on page 9-62*.

⚠ Warning

ACP is an emergency crash preparation feature and is not designed to avoid crashes. Do not rely on ACP to brake the vehicle.

ACP may not:

- Respond to stopped vehicles, pedestrians, or animals.

(Continued)

Warning (Continued)

- Detect a vehicle ahead on winding or hilly roads.
- Detect a stopped or slow-moving vehicle or other object ahead.
- Detect a vehicle when weather limits visibility, such as in fog, rain, or snow. In these situations, ACP sensor performance is limited.

Complete attention is always required while driving, and you should be ready to take action and apply the brakes and/or steer the vehicle to avoid crashes.

Brake Preparation

When quickly approaching a vehicle ahead, Brake Preparation reduces brake response time by having the brake system prepared for driver braking to occur more rapidly.

Automatic Braking

If ACP detects it is about to crash with the vehicle you are following that is moving or has come to a stop, and the brakes have not been applied, it may automatically brake hard. This can help to reduce crash damage and it may even help to avoid some very low speed crashes. Automatic Braking may slow the vehicle to a complete stop to try to avoid a potential crash. If this happens, Automatic Braking may engage the Electric Parking Brake (EPB) to hold the vehicle at a stop. To release the EPB, press the EPB button. A firm press of the accelerator pedal will also release Automatic Braking and the EPB.

⚠ Warning

Automatic Braking may automatically brake the vehicle suddenly in situations where it is unexpected and undesired.

(Continued)

Warning (Continued)

It could respond to a turning vehicle ahead, guardrails, signs, and other non-moving objects. To override Automatic Braking, firmly press the accelerator pedal, if it is safe to do so.

Automatic Braking can be disabled or reduced through vehicle personalization. See the “Auto Collision Preparation” portion of “Collision/Detection Systems” under *Vehicle Personalization on page 5-46*.

⚠ Warning

Using the Automatic Collision Preparation System while towing a trailer could cause you to lose control of the vehicle and crash. Turn the system off when towing a trailer.

Side Blind Zone Alert (SBZA)

If equipped, the SBZA system is a lane-changing aid that assists drivers with avoiding crashes that occur with moving vehicles in the side blind zone (or spot) areas. When the vehicle is in a forward gear, the left or right side mirror display will light up if a moving vehicle is detected in that blind zone. If the turn signal is activated and a vehicle is also detected on the same side, the display will flash as an extra warning not to change lanes. Since this system is part of the Lane Change Alert system, read the entire Lane Change Alert section before using this feature.

Lane Change Alert (LCA)

If equipped, the Lane Change Alert (LCA) system is a lane-changing aid that assists drivers with avoiding lane change crashes that occur with moving vehicles in the side blind zone (or spot) areas or with vehicles rapidly approaching these areas from behind. The LCA warning display will light up in the corresponding outside side mirror and will flash if the turn signal is on.

⚠ Warning

LCA does not alert the driver to vehicles outside of the system detection zones, pedestrians, bicyclists, or animals. It may not provide alerts when changing lanes under all driving conditions. Failure to use proper care when changing lanes may result in injury, death, or vehicle damage. Before making a lane change, always check mirrors, glance over your shoulder, and use the turn signals.

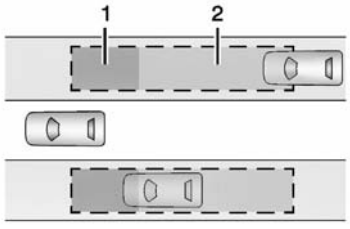

1. SBZA Detection Zone
2. LCA Detection Zone

LCA Detection Zones

The LCA sensor covers a zone of approximately one lane over from both sides of the vehicle, or 3.5 m (11 ft). The height of the zone is approximately between 0.5 m (1.5 ft) and 2 m (6 ft) off the ground. The Side Blind Zone Alert (SBZA) warning area starts at approximately the middle of the vehicle and goes back 5 m (16 ft). Drivers are also warned of vehicles rapidly approaching from up to 70 m (230 ft) behind the vehicle.

How the System Works

The LCA symbol lights up in the side mirrors when the system detects a moving vehicle in the next lane over that is in the side blind zone or rapidly approaching from behind. A lit LCA symbol indicates it may be unsafe to change lanes. Before making a lane change, check the LCA display, check mirrors, glance over your shoulder, and use the turn signals.

Left Side Mirror Display

Right Side Mirror Display

When the vehicle is started, both outside mirror LCA displays will briefly come on to indicate the system is operating. When the vehicle is in a forward gear, the left- or right-side mirror display will light up if a moving vehicle is detected in the next lane over in that blind zone or rapidly approaching that zone. If the turn signal is activated in the same direction as a detected vehicle, this display will flash as an extra warning not to change lanes.

LCA can be disabled through vehicle personalization using the Side Blind Zone Alert option. See “Collision/Detection Systems” under *Vehicle Personalization on page 5-46*. If LCA is disabled by the driver, the LCA mirror displays will not light up.

When the System Does Not Seem to Work Properly

The LCA system requires some driving for the system to calibrate to maximum performance. This calibration may occur more quickly if the vehicle is driving on a straight highway road with traffic and roadside objects (e.g., guardrails, barriers).

LCA displays may not come on when passing a vehicle quickly, for a stopped vehicle, or when towing a

trailer. The LCA detection zones that extend back from the side of the vehicle do not move further back when a trailer is towed. Use caution while changing lanes when towing a trailer. LCA may alert to objects attached to the vehicle, such as a trailer, bicycle, or object extending out to either side of the vehicle. Attached objects may also interfere with the detection of vehicles. This is normal system operation; the vehicle does not need service.

LCA may not always alert the driver to vehicles in the next lane over, especially in wet conditions or when driving on sharp curves. The system does not need to be serviced. The system may light up due to guardrails, signs, trees, shrubs, and other non-moving objects. This is normal system operation; the vehicle does not need service.

LCA may not operate when the LCA sensors in the left or right corners of the rear bumper are covered with mud, dirt, snow, ice, or slush, or in heavy rainstorms.

For cleaning instructions, see "Washing the Vehicle" under *Exterior Care on page 10-79*. If the DIC still displays the system unavailable message after cleaning both sides of the vehicle toward the rear corners of the vehicle, see your dealer.

If the LCA displays do not light up when vehicles are in the side blind zone or rapidly approaching this zone and the system is clean, the system may need service. Take the vehicle to your dealer.

When LCA is disabled for any reason other than the driver turning it off, the Side Blind Zone Alert On option will not be available on the personalization menu.

Radio Frequency Information

See *Radio Frequency Statement on page 13-12*.

Lane Departure Warning (LDW)

If equipped, LDW may help avoid crashes due to unintentional lane departures. It may provide an alert if the vehicle is crossing a lane without using a turn signal in that direction. LDW uses a camera sensor to detect the lane markings at speeds of 56 km/h (35 mph) or greater.

⚠ Warning

The LDW system does not steer the vehicle. The LDW system may not:

- Provide enough time to avoid a crash.
- Detect lane markings under poor weather or visibility conditions. This can occur if the windshield or headlamps are blocked by dirt, snow, or ice; if they are not in

(Continued)

Warning (Continued)

proper condition; or if the sun shines directly into the camera.

- Detect road edges.
- Detect lanes on winding or hilly roads.

If LDW only detects lane markings on one side of the road, it will only warn you when departing the lane on the side where it has detected a lane marking. Always keep your attention on the road and maintain proper vehicle position within the lane, or vehicle damage, injury, or death could occur. Always keep the windshield, headlamps, and camera sensors clean and in good repair. Do not use LDW in bad weather conditions.

How the System Works

The LDW camera sensor is on the windshield ahead of the rearview mirror.

To turn LDW on and off, press on the center stack. The control indicator will light when LDW is on.

When LDW is on, is green if LDW is available to warn of a lane departure. If the vehicle crosses a detected lane marking without using the turn signal in that direction, changes to amber and flashes. Additionally, there will be three beeps, or the driver seat will pulse three times, on the right or left, depending on the lane departure direction.

When the System Does Not Seem to Work Properly

The system may not detect lanes as well when there are:

- Close vehicles ahead.
- Sudden lighting changes, such as when driving through tunnels.
- Banked roads.

If the LDW system is not functioning properly when lane markings are clearly visible, cleaning the windshield may help.

LDW alerts may occur due to tar marks, shadows, cracks in the road, temporary or construction lane markings, or other road imperfections. This is normal system operation; the vehicle does not need service. Turn LDW off if these conditions continue.

Fuel

Use of the recommended fuel is an important part of the proper maintenance of this vehicle. When driving in the U.S. and Canada, to help keep the engine clean and maintain optimum vehicle performance, we recommend using TOP TIER Detergent Gasolines. See www.toptiergas.com for a list of TOP TIER Detergent Gasolines.

TOP TIER™ Detergent Gasoline

CATEGORIE SUPERIÉURE™ Essences Détergentes

Use premium unleaded gasoline meeting ASTM specification D4814 with a posted octane rating of 91 or higher. Regular unleaded gasoline rated at 87 octane or higher can be used, but acceleration and fuel economy will be reduced, and an audible knocking noise may be heard. If this occurs, use a gasoline rated at 91 octane or higher as soon as possible. Otherwise, the engine could be damaged. If heavy knocking is heard when using gasoline with a 91 octane rating or higher, the engine needs service.

Use of Seasonal Fuels

Use summer and winter fuels in the appropriate season. The fuels industry automatically modifies the fuel for the appropriate season. If fuel is left in the vehicle tank for long periods of time, driving or starting could be affected. Drive the vehicle until the fuel is at one-half tank or less, then refuel with the current seasonal fuel.

Prohibited Fuels

Gasolines containing oxygenates such as ethers and ethanol, as well as reformulated gasolines, are available in some cities. If these gasolines comply with the previously described specification, then they are acceptable to use. However, E85 (85% ethanol) and other fuels containing more than 15% ethanol must be used only in FlexFuel vehicles.

⚠ Caution

Do not use fuel containing methanol. It can corrode metal parts in the fuel system and also damage plastic and rubber parts. That damage would not be covered under the vehicle warranty.

Some gasolines, mainly high octane racing gasolines, can contain an octane-enhancing additive called methylcyclopentadienyl manganese tricarbonyl (MMT). Do not use gasolines and/or fuel additives with MMT as they can reduce spark plug life and affect emission control system performance.

The malfunction indicator lamp may turn on. If this occurs, see your dealer for service.

California Fuel Requirements

If the vehicle is certified to meet California Emissions Standards, it is designed to operate on fuels that meet California specifications. See the underhood emission control label. If this fuel is not available in states adopting California Emissions Standards, the vehicle will operate satisfactorily on fuels meeting federal specifications, but emission control system performance might be affected. The malfunction indicator lamp could turn on and the vehicle may not pass a smog-check test. See *Malfunction Indicator Lamp on page 5-18*. If this occurs, return to your authorized dealer for diagnosis. If it is determined that the condition is caused by the type of fuel used, repairs may not be covered by the vehicle warranty.

Fuels in Foreign Countries

If planning to drive in countries outside the U.S. or Canada, the proper fuel might be hard to find. Check regional auto club or fuel retail brand websites for availability in the country where driving. Never use leaded gasoline, fuel containing methanol, manganese, or any other fuel not recommended. Costly repairs caused by use of improper fuel would not be covered by the vehicle warranty.

Fuel Additives

To keep fuel systems clean, TOP TIER Detergent Gasoline is recommended. See *Fuel on page 9-70*.

If TOP TIER Detergent Gasoline is not available, one bottle of Fuel System Treatment PLUS added to the fuel tank at every engine oil change, can help. Fuel System Treatment PLUS is the only gasoline additive recommended by General Motors. It is available at your dealer.

Filling the Tank

⚠ Warning

Fuel vapors and fuel fires burn violently and can cause injury or death.

- To help avoid injuries to you and others, read and follow all the instructions on the fuel pump island.
- Turn off the engine when refueling.
- Keep sparks, flames, and smoking materials away from fuel.
- Do not leave the fuel pump unattended.
- Do not reenter the vehicle while pumping fuel.

(Continued)

Warning (Continued)

- Keep children away from the fuel pump and never let children pump fuel.
- Fuel can spray out if the refueling nozzle is inserted too quickly. This spray can happen if the tank is nearly full, and is more likely in hot weather. Insert the refueling nozzle slowly and wait for any hiss noise to stop prior to beginning to flow fuel

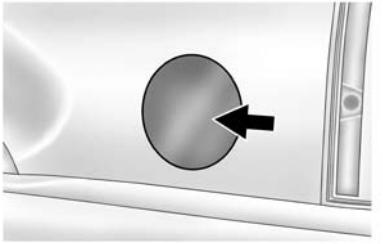

Locate the fuel door. The fuel gauge has an arrow to indicate the side of the vehicle the fuel door is on.
If equipped, the fuel door is locked when the vehicle doors are locked. Press 🔓 on the RKE transmitter to unlock. To open the fuel door, push and release the rearward center edge of the door.

The vehicle has a capless refueling system and does not have a fuel cap. The filling nozzle must be fully inserted and latched prior to starting fuel flow.

⚠ Warning

Overfilling the fuel tank by more than three clicks of a standard fill nozzle may cause:

- Vehicle performance issues, including engine stalling and damage to the fuel system.
- Fuel spills.
- Potential fuel fires.

Be careful not to spill fuel. Do not top off or overfill the tank and wait a few seconds after you have finished pumping before removing the nozzle. Clean fuel from painted surfaces as soon as possible. See *Exterior Care on page 10-79*.

⚠ Warning

If a fire starts while you are refueling, do not remove the nozzle. Shut off the flow of fuel by

(Continued)

Warning (Continued)

shutting off the pump or by notifying the station attendant. Leave the area immediately.

Filling the Tank With a Portable Gas Can

If the vehicle runs out of fuel and must be filled from a portable gas can:

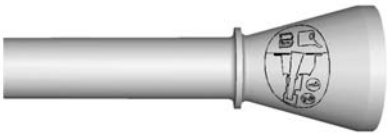

1. Locate the capless funnel adapter from inside the vehicle.
2. Insert and latch the funnel into the capless fuel system.

⚠ Warning

Attempting to refuel without using the funnel adapter may cause fuel spillage and damage the capless fuel system. This could cause a fire and you or others could be badly burned and the vehicle could be damaged.

3. Remove and clean the funnel adapter and return to the storage location.

Filling a Portable Fuel Container

⚠ Warning

Filling a portable fuel container while it is in the vehicle can cause fuel vapors that can ignite either by static electricity or other means. You or others could be badly burned and the vehicle could be damaged. Always:

- Use approved fuel containers.
- Remove the container from the vehicle, trunk, or pickup bed before filling.
- Place the container on the ground.

(Continued)

Warning (Continued)

- Place the nozzle inside the fill opening of the container before dispensing fuel, and keep it in contact with the fill opening until filling is complete.
- Fill the container no more than 95% full to allow for expansion.
- Do not smoke, light matches, or use lighters while pumping fuel.
- Avoid using cell phones or other electronic devices.

Trailer Towing

General Towing Information

Only use towing equipment that has been designed for the vehicle. Contact your dealer or trailering dealer for assistance with preparing the vehicle for towing a trailer. Read the entire section before towing a trailer.

For towing a disabled vehicle, see *Towing the Vehicle on page 10-75*. For towing the vehicle behind another vehicle such as a motor home, see *Recreational Vehicle Towing on page 10-75*.

Driving Characteristics and Towing Tips

Driving with a Trailer

When towing a trailer:

- Become familiar with the state and local laws that apply to trailer towing.
- Do not tow a trailer during the first 800 km (500 mi) to prevent damage to the engine, axle, or other parts.
- Then during the first 800 km (500 mi) of trailer towing, do not drive over 80 km/h (50 mph) and do not make starts at full throttle.
- Vehicles can tow in D (Drive). Shift the transmission to a lower gear if the transmission shifts too often under heavy loads and/or hilly conditions.
- Do not use Adaptive Cruise Control when towing.
- Turn off Park Assist when towing.
- The Automatic Collision Preparation System should be set to Off when towing. See *Active Emergency Braking System on page 9-64*.

⚠ Warning

When towing a trailer, exhaust gases may collect at the rear of the vehicle and enter if the liftgate, trunk/hatch, or rear-most window is open.

When towing a trailer:

- Do not drive with the liftgate, trunk/hatch, or rear-most window open.
- Fully open the air outlets on or under the instrument panel.
- Also adjust the climate control system to a setting that brings in only outside air. See “Climate Control Systems” in the Index.

For more information about Carbon Monoxide, see *Engine Exhaust on page 9-27*.

Towing a trailer requires a certain amount of experience. The combination you are driving is longer and not as responsive as the vehicle itself. Get acquainted with the handling and braking of the rig before setting out for the open road.

Before starting, check all trailer hitch parts and attachments, safety chains, electrical connectors, lamps, tires, and mirrors. If the trailer has electric brakes, start the combination moving and then apply the trailer brake controller by hand to be sure the brakes work.

During the trip, check occasionally to be sure that the load is secure and the lamps and any trailer brakes still work.

Following Distance

Stay at least twice as far behind the vehicle ahead as you would when driving the vehicle without a trailer. This can help to avoid heavy braking and sudden turns.

Passing

More passing distance is needed when towing a trailer. The combination will not accelerate as quickly and is longer so it is necessary to go much farther beyond the passed vehicle before returning to the lane.

Backing Up

Hold the bottom of the steering wheel with one hand. To move the trailer to the left, move that hand to the left. To move the trailer to the right, move your hand to the right. Always back up slowly and, if possible, have someone guide you.

Making Turns

⚠ Caution

Making very sharp turns while trailering could cause the trailer to come in contact with the vehicle.

(Continued)

Caution (Continued)

The vehicle could be damaged. Avoid making very sharp turns while trailering.

When turning with a trailer, make wider turns than normal. Do this so the trailer will not strike soft shoulders, curbs, road signs, trees, or other objects. Avoid jerky or sudden maneuvers. Signal well in advance.

If the trailer turn signal bulbs burn out, the arrows on the instrument cluster will still flash for turns. It is important to check occasionally to be sure the trailer bulbs are still working.

Driving on Grades

Reduce speed and shift to a lower gear *before* starting down a long or steep downgrade. If the transmission is not shifted down, the brakes might get hot and no longer work well.

Vehicles can tow in D (Drive). Shift the transmission to a lower gear if the transmission shifts too often under heavy loads and/or hilly conditions.

When towing, use the Tow/Haul Mode to prevent damage to the engine or transmission. See *Tow/Haul Mode on page 9-33*.

When towing at high altitude on steep uphill grades, consider the following: Engine coolant will boil at a lower temperature than at normal altitudes. If the engine is turned off immediately after towing at high altitude on steep uphill grades, the vehicle may show signs similar to engine overheating. To avoid this, let the engine run while parked, preferably on level ground, with the transmission in P (Park) for a few minutes before turning the engine off. If the overheat warning comes on, see *Engine Overheating on page 10-15*.

Parking on Hills

⚠ Warning

Parking the vehicle on a hill with the trailer attached can be dangerous. If something goes wrong, the rig could start to move. People can be injured, and both the vehicle and the trailer can be damaged. When possible, always park the rig on a flat surface.

If parking the rig on a hill:

1. Press the brake pedal, but do not shift into P (Park) yet. Turn the wheels into the curb if facing downhill or into traffic if facing uphill.
2. Have someone place chocks under the trailer wheels.
3. When the wheel chocks are in place, release the regular brakes until the chocks absorb the load.

4. Reapply the brake pedal. Then apply the parking brake and shift into P (Park).
5. Release the brake pedal.

Leaving After Parking on a Hill

1. Apply and hold the brake pedal.
2. Start the engine.
3. Shift into a gear.
4. Release the parking brake.
5. Let up on the brake pedal.
6. Drive slowly until the trailer is clear of the chocks.
7. Stop and have someone pick up and store the chocks.

Maintenance when Trailer Towing

The vehicle needs service more often when pulling a trailer. See *Maintenance Schedule on page 11-4*. Things that are especially important in trailer operation are automatic transmission fluid, engine oil, axle lubricant, belts, cooling system, and brake system. It is a good idea to inspect these before and during the trip.

Check periodically to see that all hitch nuts and bolts are tight.

Trailer Towing

Do not tow a trailer during break-in. See *New Vehicle Break-In on page 9-19*.

⚠ Warning

The driver can lose control when pulling a trailer if the correct equipment is not used or the vehicle is not driven properly. For example, if the trailer is too heavy, the brakes may not work well — or even at all. The driver and passengers could be seriously injured. The vehicle may also be damaged; the resulting repairs would not be covered by

(Continued)

Warning (Continued)

the vehicle warranty. Pull a trailer only if all the steps in this section have been followed. Ask your dealer for advice and information about towing a trailer with the vehicle.

⚠ Caution

Pulling a trailer improperly can damage the vehicle and result in costly repairs not covered by the vehicle warranty. To pull a trailer correctly, follow the advice in this section and see your dealer for important information about towing a trailer with the vehicle.

To identify the trailering capacity of the vehicle, read the information in “Weight of the Trailer” later in this section.

Trailering is different than just driving the vehicle by itself. Trailering means changes in handling, acceleration, braking, durability and fuel economy. Successful, safe trailering takes correct equipment, and it has to be used properly.

The following information has many time-tested, important trailering tips and safety rules. Many of these are important for your safety and that of your passengers. So please read this section carefully before pulling a trailer.

Weight of the Trailer

How heavy can a trailer safely be?

It depends on how the rig is used. Speed, altitude, road grades, outside temperature, and how much the vehicle is used to pull a trailer are all important. It can depend on any special equipment on the vehicle, and the amount of tongue weight the vehicle can carry. See “Weight of the Trailer Tongue” later in this section.

Trailer Weight Rating (TWR) is calculated assuming the tow vehicle has only the driver but all required trailering equipment. Weight of additional optional equipment, passengers, and cargo in the tow vehicle must be subtracted from the TWR.

Use the following chart to determine how much the vehicle can weigh, based upon the vehicle model and options.

Vehicle	Axle Ratio	Maximum Trailer Weight	GCWR*
Escalade 2WD Short Wheelbase	3.23/3.42	3 765 kg (8,300 lb)	6 350 kg (14,000 lb)
Escalade 4WD Short Wheelbase	3.23/3.42	3 674 kg (8,100 lb)	6 350 kg (14,000 lb)
Escalade 2WD Long Wheelbase	3.23/3.42	3 674 kg (8,100 lb)	6 350 kg (14,000 lb)
Escalade 4WD Long Wheelbase with 20 inch wheels	3.23/3.42	3 583 kg (7,900 lb)	6 350 kg (14,000 lb)
Escalade 4WD Long Wheelbase with 22 inch wheels	3.23/3.42	3 538 kg (7,800 lb)	6 350 kg (14,000 lb)
*The Gross Combination Weight Rating (GCWR) is the total allowable weight of the completely loaded vehicle and trailer including any passengers, cargo, equipment, and conversions. The GCWR for the vehicle should not be exceeded.			

Ask your dealer for trailering information or advice.

Weight of the Trailer Tongue

The tongue load (1) of any trailer is very important because it is also part of the vehicle weight. The Gross Vehicle Weight (GVW) includes the curb weight of the vehicle, any cargo carried in it, and the people who will be riding in the vehicle as well as trailer tongue weight.

Vehicle options, equipment, passengers, and cargo in the vehicle reduce the amount of tongue weight the vehicle can carry, which will also reduce the trailer weight the vehicle can tow. See *Vehicle Load Limits on page 9-14* for more information about the vehicle's maximum load capacity.

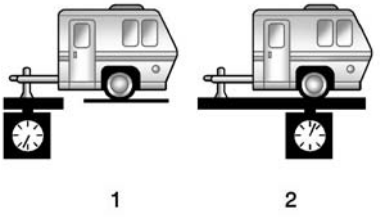

Trailer tongue weight (1) should be 10% to 15% of the loaded trailer weight (2) up to the maximums for vehicle series and hitch type.

Vehicle Series	Hitch Type	Maximum Tongue Weight
1500	Weight Carrying	272 kg (600 lb)
1500	Weight Distributing	453 kg (1,000 lb)

Do not exceed the maximum allowable tongue weight for the vehicle. Choose the shortest hitch extension that will position the hitch ball closest to the vehicle. This will help reduce the effect of trailer tongue weight on the rear axle.

Trailer rating may be limited by the vehicle's ability to carry tongue weight. Tongue weight cannot cause the vehicle to exceed the GVWR (Gross Vehicle Weight Rating) or the RGAWR (Rear Gross Axle Weight Rating). See “Total Weight on the Vehicle's Tires” later in this section.

After loading the trailer, weigh the trailer and then the tongue, separately, to see if the weights are proper. If they are not, adjustments might be made by moving some items around in the trailer.

If a cargo carrier is used in the trailer hitch receiver, choose a carrier that positions the load as close to the vehicle as possible. Make sure the total weight, including the carrier, is no more than half of the maximum allowable tongue weight for the vehicle or 227 kg (500 lb), whichever is less.

Total Weight on the Vehicle's Tires

Be sure the vehicle's tires are inflated to the inflation pressures found on the Certification label on the center pillar or see *Vehicle Load Limits on page 9-14*. Make sure not to exceed the GVWR limit for the vehicle, or the RGAWR, with the tow vehicle and trailer fully loaded for the trip including the weight of the trailer tongue. If using a weight-distributing hitch, make sure not to exceed the RGAWR before applying the weight distribution spring bars.

Weight of the Trailering Combination

It is important that the combination of the tow vehicle and trailer does not exceed any of its weight ratings — GCWR, GVWR, RGAWR, TWR or Tongue Weight. The only way to be sure it is not exceeding any of these ratings is to weigh the tow vehicle and trailer combination, fully loaded for the trip, getting individual weights for each of these items.

Towing Equipment

Hitches

The correct hitch equipment helps maintain combination control. Most small-to-medium trailers can be towed with a weight-carrying hitch which simply features a coupler latched to the hitch ball.
Larger trailers may require a weight-distributing hitch that uses spring bars to distribute the trailer tongue weight among the two vehicle and trailer axles. See “Weight of the Trailer Tongue” in *Trailer Towing on page 9-77* for rating limits with various hitch types.

Consider using sway controls with any trailer. Ask a trailering professional about sway controls or refer to the trailer manufacturer's recommendations and instructions.

Weight-Distributing Hitch Adjustment

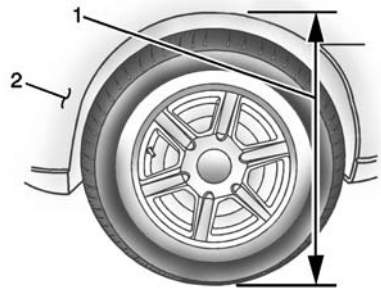

1. Body to Ground Distance
2. Front of Vehicle

When using a weight-distributing hitch, the spring bars should be adjusted so the distance (1) is the same after coupling the trailer to the tow vehicle and adjusting the hitch.

Safety Chains

Always attach chains between the vehicle and the trailer. Cross the safety chains under the tongue of the trailer to help prevent the tongue from contacting the road if it becomes separated from the hitch. Instructions about safety chains may be provided by the hitch manufacturer or by the trailer manufacturer. If the trailer being towed weighs up to 2 271 kg (5,000 lb) with a factory-installed step bumper, safety chains may be attached to the attaching points on the bumper, otherwise, safety chains should be attached to holes on the trailer hitch platform. Always leave just enough slack so the combination can turn. Never allow safety chains to drag on the ground.

Trailer Brakes

A loaded trailer that weighs more than 900 kg (2,000 lb) needs to have its own brake system that is adequate for the weight of the trailer. Be sure to read and follow the instructions for the trailer brakes so they are installed, adjusted, and maintained properly.

Since the vehicle is equipped with StabiliTrak, the trailer brakes cannot tap into the vehicle's hydraulic system.

Trailer Wiring Harness

The seven-pin trailer connector is mounted in the bumper. This connector can be plugged into a seven-pin universal heavy-duty trailer connector available through your dealer.

The seven-wire harness contains the following trailer circuits:

- Yellow: Left Stop/Turn Signal
- Green/Violet: Right Stop/Turn Signal
- Brown: Taillamps
- White: Ground
- Light Green: Back-up Lamps
- Red/Green: Battery Feed
- Dark Blue: Trailer Brake

If charging a remote (non-vehicle) battery, press the Tow/Haul mode button at the end of the shift lever. This will boost the vehicle system voltage and properly charge the battery. If the trailer is too light for Tow/Haul mode, turn on the headlamps as a second way to boost the vehicle system and charge the battery.

Electric Brake Control Wiring Provisions

These wiring provisions are included with the vehicle as part of the trailer wiring package. These provisions are for an electric brake controller.

The harness should be installed by your dealer or a qualified service center.

Tow/Haul Mode

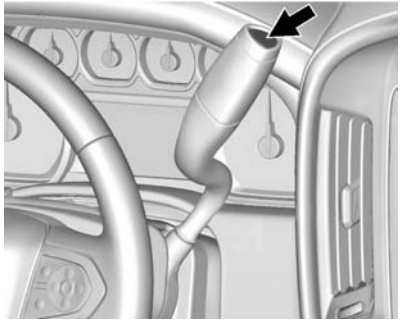

Pressing this button at the end of the shift lever turns on and off the Tow/Haul Mode.

This indicator light on the instrument cluster comes on when the Tow/Haul Mode is on.

Tow/Haul is a feature that assists when pulling a heavy trailer or a large or heavy load. See *Tow/Haul Mode on page 9-33*.

Tow/Haul is designed to be most effective when the vehicle and trailer combined weight is at least 75 percent of the vehicle's Gross Combined Weight Rating (GCWR). See “Weight of the Trailer” under *Trailer Towing on page 9-77*. Tow/Haul is most useful under the following driving conditions:

- When pulling a heavy trailer or a large or heavy load through rolling terrain.
- When pulling a heavy trailer or a large or heavy load in stop-and-go traffic.
- When pulling a heavy trailer or a large or heavy load in busy parking lots where improved low speed control of the vehicle is desired.

Operating the vehicle in Tow/Haul when lightly loaded or with no trailer at all will not cause damage. However, there is no benefit to the selection of Tow/Haul when the vehicle is unloaded. Such a selection when unloaded may result in unpleasant engine and transmission driving characteristics and reduced fuel economy. Tow/Haul is recommended only when pulling a heavy trailer or a large or heavy load.

Trailer Sway Control (TSC)

Vehicles with StabiliTrak have a TSC feature. Trailer sway is unintended side-to-side motion of a trailer while being towed. If the vehicle is towing a trailer and the TSC detects that sway is increasing, the vehicle brakes are selectively applied at each wheel, to help reduce excessive trailer sway.

If TSC is enabled, the Traction Control System (TCS)/StabiliTrak warning light will flash on the instrument cluster. Vehicle speed must be reduced. If trailer sway continues, StabiliTrak can reduce engine torque to help slow the vehicle. See *Traction Control/ Electronic Stability Control on page 9-42*.

⚠ Warning

Even if the vehicle is equipped with TSC, trailer sway could result in loss of control and the vehicle could crash. If excessive trailer sway is detected, slow down to a safe speed. Check the trailer and vehicle to help correct possible causes.

(Continued)

Warning (Continued)

These could include an improperly or overloaded trailer, unrestrained cargo, improper trailer hitch configuration, excessive vehicle-trailer speed, or improperly inflated or incorrect vehicle or trailer tires. See *Towing Equipment on page 9-81* for trailer ratings and hitch setup recommendations.

Adding non-dealer accessories can affect the vehicle performance. See *Accessories and Modifications on page 10-3*.

Conversions and Add-Ons

Add-On Electrical Equipment

⚠ Caution

Some electrical equipment can damage the vehicle or cause components to not work and would not be covered by the warranty. Always check with your dealer before adding electrical equipment.

Add-on equipment can drain the vehicle's 12-volt battery, even if the vehicle is not operating.

The vehicle has an airbag system. Before attempting to add anything electrical to the vehicle, see *Servicing the Airbag-Equipped Vehicle on page 3-38* and *Adding Equipment to the Airbag-Equipped Vehicle on page 3-39*.

Vehicle Care

General Information

General Information 10-2
California Proposition 65 Warning 10-2
California Perchlorate Materials Requirements 10-2
Accessories and Modifications 10-3

Vehicle Checks

Doing Your Own Service Work 10-3
Hood 10-4
Engine Compartment Overview 10-5
Engine Oil 10-6
Engine Oil Life System 10-8
Automatic Transmission Fluid 10-10
Engine Air Cleaner/Filter 10-10
Cooling System 10-11
Engine Coolant 10-12
Engine Overheating 10-15
Engine Fan 10-17
Washer Fluid 10-17
Brakes 10-18
Brake Fluid 10-19
Battery - North America 10-21
Four-Wheel Drive 10-21
Front Axle 10-22
Rear Axle 10-22
Starter Switch Check 10-23
Automatic Transmission Shift Lock Control Function Check 10-24
Park Brake and P (Park) Mechanism Check 10-24
Wiper Blade Replacement 10-24
Glass Replacement 10-25
Windshield Replacement ... 10-25

Headlamp Aiming

Headlamp Aiming 10-26

Bulb Replacement

Bulb Replacement 10-26
LED Lighting 10-26
License Plate Lamp 10-26
Replacement Bulbs 10-27

Electrical System

Electrical System Overload 10-27
Fuses 10-28
Engine Compartment Fuse Block 10-28
Instrument Panel Fuse Block (Left) 10-31
Instrument Panel Fuse Block (Right) 10-34
Rear Compartment Fuse Block 10-37

Wheels and Tires

Tires 10-38
All-Season Tires 10-39
Winter Tires 10-39
Low-Profile Tires 10-40
All-Terrain Tires 10-40
Tire Sidewall Labeling 10-40
Tire Designations 10-42
Tire Terminology and Definitions 10-43
Tire Pressure 10-45
Tire Pressure for High-Speed Operation 10-47
Tire Pressure Monitor System 10-47
Tire Pressure Monitor Operation 10-48
Tire Inspection 10-51
Tire Rotation 10-52

When It Is Time for New Tires 10-53
Buying New Tires 10-54
Different Size Tires and Wheels 10-56
Uniform Tire Quality Grading 10-56
Wheel Alignment and Tire Balance 10-58
Wheel Replacement 10-58
Tire Chains 10-59
If a Tire Goes Flat 10-59
Tire Changing 10-61
Full-Size Spare Tire 10-70

Jump Starting
Jump Starting - North America 10-71

Towing the Vehicle
Towing the Vehicle 10-75
Recreational Vehicle Towing 10-75

Appearance Care
Exterior Care 10-79
Interior Care 10-84
Floor Mats 10-88

General Information

For service and parts needs, visit your dealer. You will receive genuine GM parts and GM-trained and supported service people.

Genuine GM parts have one of these marks:

California Proposition 65 Warning

WARNING: Most motor vehicles, including this one, contain and/or emit chemicals known to the State of California to cause cancer and birth defects or other reproductive harm. Engine exhaust, many parts and systems, many fluids, and some component wear by-products contain and/or emit these chemicals.

See *Battery - North America on page 10-21* and *Jump Starting - North America on page 10-71*.

California Perchlorate Materials Requirements

Certain types of automotive applications, such as airbag initiators, safety belt pretensioners, and lithium batteries contained in Remote Keyless Entry transmitters, may contain perchlorate materials. Special handling may be necessary. For additional information, see www.dtsc.ca.gov/hazardouswaste/perchlorate.

Accessories and Modifications

Adding non-dealer accessories or making modifications to the vehicle can affect vehicle performance and safety, including such things as airbags, braking, stability, ride and handling, emissions systems, aerodynamics, durability, and electronic systems like antilock brakes, traction control, and stability control. These accessories or modifications could even cause malfunction or damage not covered by the vehicle warranty.

Damage to vehicle components resulting from modifications or the installation or use of non-GM certified parts, including control module or software modifications, is not covered under the terms of the vehicle warranty and may affect remaining warranty coverage for affected parts.

GM Accessories are designed to complement and function with other systems on the vehicle. See your dealer to accessorize the vehicle using genuine GM Accessories installed by a dealer technician.

Also, see *Adding Equipment to the Airbag-Equipped Vehicle on page 3-39*.

Vehicle Checks

Doing Your Own Service Work

⚠ Warning

It can be dangerous to work on your vehicle if you do not have the proper knowledge, service manual, tools, or parts. Always follow owner manual procedures and consult the service manual for your vehicle before doing any service work.

If doing some of your own service work, use the proper service manual. It tells you much more about how to service the vehicle than this manual can. To order the proper service manual, see *Service Publications Ordering Information on page 13-10*.

This vehicle has an airbag system. Before attempting to do your own service work, see *Servicing the Airbag-Equipped Vehicle on page 3-38*.

Keep a record with all parts receipts and list the mileage and the date of any service work performed. See *Maintenance Records on page 11-16*.

⚠ Caution

Even small amounts of contamination can cause damage to vehicle systems. Do not allow contaminants to contact the fluids, reservoir caps, or dipsticks.

Hood

To open the hood:

1. Pull the handle with this symbol on it. It is inside the vehicle under the steering wheel.

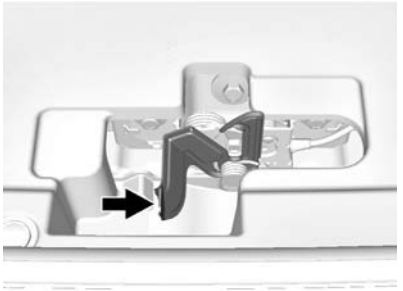

2. Go to the front of the vehicle to find the secondary hood release. The handle is under the front edge of the hood near the center. Push the handle to the right and at the same time raise the hood.

Before closing the hood, be sure all the filler caps are on properly. Then bring the hood from full open to within 15 cm (6 in) from the closed position, pause, and push the front center of the hood with a swift, firm motion to fully close the hood.

Engine Compartment Overview

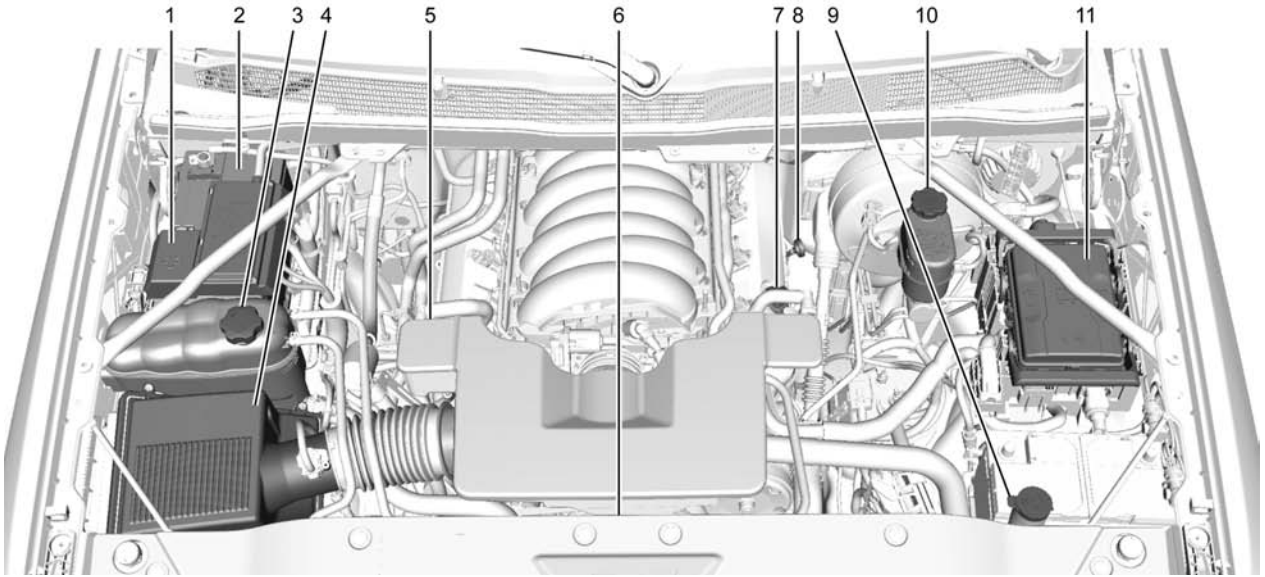

1. Positive (+) Terminal. See *Jump Starting - North America on page 10-71*.
2. *Battery - North America on page 10-21*.
3. Coolant Surge Tank and Pressure Cap. See *Cooling System on page 10-11*.
4. *Engine Air Cleaner/Filter on page 10-10*.
5. Remote Negative (–) Location (Out of View). See *Jump Starting - North America on page 10-71*.
6. Engine Cooling Fans (Out of View). See *Cooling System on page 10-11*.
7. Engine Oil Fill Cap. See “When to Add Engine Oil” under *Engine Oil on page 10-6*.
8. Engine Oil Dipstick. See “Checking Engine Oil” under *Engine Oil on page 10-6*.
9. Windshield Washer Fluid Reservoir. See “Adding Washer Fluid” under *Washer Fluid on page 10-17*.
10. Brake Fluid Reservoir. See *Brake Fluid on page 10-19*.
11. *Engine Compartment Fuse Block on page 10-28*.

Engine Oil

To ensure proper engine performance and long life, careful attention must be paid to engine oil. Following these simple, but important steps will help protect your investment:

- Always use engine oil approved to the proper specification and of the proper viscosity grade. See “Selecting the Right Engine Oil” in this section.
- Check the engine oil level regularly and maintain the proper oil level. See “Checking Engine Oil” and “When to Add Engine Oil” in this section.
- Change the engine oil at the appropriate time. See *Engine Oil Life System on page 10-8*.
- Always dispose of engine oil properly. See “What to Do with Used Oil” in this section.

Checking Engine Oil

It is a good idea to check the engine oil level at each fuel fill. In order to get an accurate reading, the vehicle must be on level ground. The engine oil dipstick handle is a loop. See *Engine Compartment Overview on page 10-5* for the location of the engine oil dipstick.

Obtaining an accurate oil level reading is essential:

1. If the engine has been running recently, turn off the engine and allow several minutes for the oil to drain back into the oil pan. Checking the oil level too soon after engine shutoff will not provide an accurate oil level reading.

⚠ Warning

The engine oil dipstick handle may be hot; it could burn you. Use a towel or glove to touch the dipstick handle.

2. Pull out the dipstick and wipe it with a clean paper towel or cloth, then push it back in all the way. Remove it again, keeping the tip down, and check the level.

When to Add Engine Oil

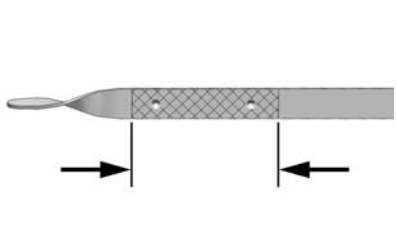

If the oil is below the cross-hatched area at the tip of the dipstick, add 1 L (1 qt) of the recommended oil and then recheck the level. See "Selecting the Right Engine Oil" in this section for an explanation of what kind of oil to use. For engine oil crankcase capacity, see *Capacities and Specifications on page 12-2*.

⚠ Caution

Do not add too much oil. Oil levels above or below the acceptable operating range shown on the dipstick are harmful to the engine. If you find that you have an oil level above the operating range, i.e., the engine has so much oil that the oil level gets above the cross-hatched area that shows the proper operating range, the engine could be damaged. You should drain out the excess oil or limit driving of the vehicle and seek a service professional to remove the excess amount of oil.

See *Engine Compartment Overview on page 10-5* for the location of the engine oil fill cap.

Add enough oil to put the level somewhere in the proper operating range. Push the dipstick all the way back in when through.

Selecting the Right Engine Oil

Selecting the right engine oil depends on both the proper oil specification and viscosity grade. See *Recommended Fluids and Lubricants on page 11-13*.

Specification

Ask for and use engine oils that meet the dexos1™ specification. Engine oils that have been approved by GM as meeting the dexos1 specification are marked with the dexos1 approved logo. See www.gmdexos.com.

⚠ Caution

Failure to use the recommended engine oil can result in engine damage not covered by the vehicle warranty. Check with your dealer or service provider on whether the oil is approved to the dexos1 specification.

Viscosity Grade

Use SAE 0W-20 viscosity grade engine oil.

When selecting an oil of the appropriate viscosity grade, always select an oil of the correct specification. See “Specification” earlier in this section for more information.

Engine Oil Additives/Engine Oil Flushes

Do not add anything to the oil. The recommended oils meeting the dexos1 specification are all that is needed for good performance and engine protection.

Engine oil system flushes are not recommended and could cause engine damage not covered by the vehicle warranty.

What to Do with Used Oil

Used engine oil contains certain elements that can be unhealthy for your skin and could even cause cancer. Do not let used oil stay on your skin for very long. Clean your skin and nails with soap and water, or a good hand cleaner. Wash or properly dispose of clothing or rags containing used engine oil. See the manufacturer's warnings about the use and disposal of oil products.

Used oil can be a threat to the environment. If you change your own oil, be sure to drain all the oil from the filter before disposal. Never dispose of oil by putting it in the trash or pouring it on the ground, into sewers, or into streams or bodies of water. Recycle it by taking it to a place that collects used oil.

Engine Oil Life System

When to Change Engine Oil

This vehicle has a computer system that indicates when to change the engine oil and filter. This is based on a combination of factors which include engine revolutions, engine temperature, and miles driven. Based on driving conditions, the mileage at which an oil change is indicated can vary considerably. For the oil life system to work properly, the system must be reset every time the oil is changed.

When the system has calculated that oil life has been diminished, it indicates that an oil change is necessary. A CHANGE ENGINE OIL SOON message comes on. See *Engine Oil Messages on page 5-37*.

Change the oil as soon as possible within the next 1 000 km (600 mi). It is possible that, if driving under the best conditions, the oil life system might indicate that an oil change is not necessary for up to a year. The engine oil and filter must be changed at least once a year and at this time the system must be reset. Your dealer has trained service people who will perform this work and reset the system. It is also important to check the oil regularly over the course of an oil drain interval and keep it at the proper level.

If the system is ever reset accidentally, the oil must be changed at 5 000 km (3,000 mi) since the last oil change. Remember to reset the oil life system whenever the oil is changed.

How to Reset the Engine Oil Life System

Reset the system whenever the engine oil is changed so that the system can calculate the next engine oil change. To reset the system:

1. Using the DIC controls on the right side of the steering wheel, display OIL LIFE on the DIC. See *Driver Information Center (DIC) on page 5-27*. When remaining oil life is low, the CHANGE ENGINE OIL SOON message will appear on the display. See *Engine Oil Messages on page 5-37*.
2. Press SEL on the DIC controls and hold SEL down for a few seconds to clear the CHANGE ENGINE OIL SOON message and reset the oil life at 100%.

   Be careful not to reset the oil life display accidentally at any time other than after the oil is changed. It cannot be reset accurately until the next oil change.

The oil life system can also be reset as follows:

1. Turn the ignition on with the engine off.
2. Fully press and release the accelerator pedal three times within five seconds.

   If the CHANGE ENGINE OIL SOON message is not on, the system is reset.

The system is reset when the CHANGE ENGINE OIL SOON message is off.

If the CHANGE ENGINE OIL SOON message comes back on when the vehicle is started, the engine oil life system has not been reset. Repeat the procedure.

Automatic Transmission Fluid

When to Check and Change Automatic Transmission Fluid

It is usually not necessary to check the transmission fluid level. The only reason for fluid loss is a transmission leak or overheated transmission. This vehicle is not equipped with a transmission fluid level dipstick. There is a special procedure for checking and changing the transmission fluid in these vehicles. Because this procedure is difficult, this should be done at the dealer. Contact the dealer for additional information or the procedure can be found in the service manual. See *Service Publications Ordering Information on page 13-10*.

⚠ Caution

Use of the incorrect automatic transmission fluid may damage the vehicle, and the damage may not be covered by the vehicle warranty. Always use the automatic transmission fluid listed in *Recommended Fluids and Lubricants on page 11-13*.

Change the fluid and filter at the scheduled maintenance intervals listed in *Maintenance Schedule on page 11-4*. Be sure to use the transmission fluid listed in *Recommended Fluids and Lubricants on page 11-13*.

Engine Air Cleaner/Filter

See *Engine Compartment Overview on page 10-5* for the location of the engine air cleaner/filter.

When to Inspect the Engine Air Cleaner/Filter

Inspect the air cleaner/filter at the scheduled maintenance intervals and replace it at the first oil change after each 80 000 km (50,000 mi) interval. See *Maintenance Schedule on page 11-4*. If driving in dusty/dirty conditions, inspect the filter at each engine oil change.

How to Inspect the Engine Air Cleaner/Filter

To inspect the air cleaner/filter, remove the engine air cleaner/filter from the vehicle by following Steps 1-8. When the engine air cleaner/filter is removed, lightly shake it to release loose dust and dirt. If the engine air cleaner/filter remains covered with dirt, a new filter is required. Never use compressed air to clean the filter.

Replacing the Engine Air Cleaner/ Filter

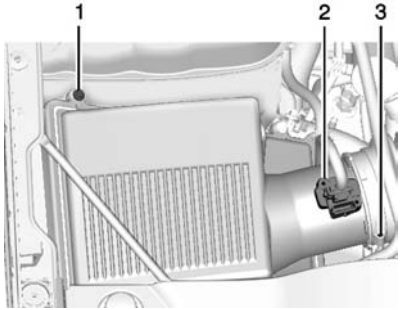

1. Screws
2. Electrical Connector
3. Air Duct Clamp

1. Locate the air cleaner/filter assembly. See *Engine Compartment Overview on page 10-5*.
2. Disconnect the outlet duct by loosening the air duct clamp (3).
3. Disconnect the electrical connector (2) and the connector harness from the cover.
4. Remove the four screws (1) on top of the cover of the housing and lift up the cover.
5. Remove the engine air cleaner/ filter from the housing. Take care to dislodge as little dirt as possible.
6. Clean the engine air cleaner/ filter sealing surfaces and the housing.
7. Inspect or replace the engine air cleaner/filter.
8. Reverse Steps 2-4 to reinstall the filter cover housing.

⚠ Warning

Operating the engine with the air cleaner/filter off can cause you or others to be burned. The air cleaner not only cleans the air; it

(Continued)

Warning (Continued)

helps to stop flames if the engine backfires. Use caution when working on the engine and do not drive with the air cleaner/filter off.

⚠ Caution

If the air cleaner/filter is off, dirt can easily get into the engine, which could damage it. Always have the air cleaner/filter in place when you are driving.

Cooling System

The cooling system allows the engine to maintain the correct working temperature.

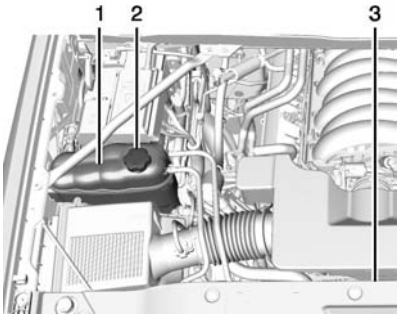

1. Coolant Surge Tank
2. Coolant Surge Tank Pressure Cap
3. Engine Cooling Fan

⚠ Warning

An electric engine cooling fan can start even when the engine is not running. To avoid injury, always keep hands, clothing, and tools away from any engine cooling fan.

⚠ Warning

Heater and radiator hoses, and other engine parts, can be very hot. Do not touch them. If you do, you can be burned.

Do not run the engine if there is a leak. If you run the engine, it could lose all coolant. That could cause an engine fire, and you could be burned. Get any leak fixed before you drive the vehicle.

⚠ Caution

Using coolant other than DEX-COOL® can cause premature engine, heater core, or radiator corrosion. In addition, the engine coolant could require changing sooner. Any repairs would not be covered by the

(Continued)

Caution (Continued)

vehicle warranty. Always use DEX-COOL (silicate-free) coolant in the vehicle.

Engine Coolant

The cooling system in the vehicle is filled with DEX-COOL® engine coolant. This coolant is designed to remain in the vehicle for 5 years or 240 000 km (150,000 mi), whichever occurs first.

The following explains the cooling system and how to check and add coolant when it is low. If there is a problem with engine overheating, see *Engine Overheating on page 10-15*.

What to Use

⚠ Warning

Adding only plain water or some other liquid to the cooling system can be dangerous. Plain water and other liquids, can boil before the proper coolant mixture will. The coolant warning system is set for the proper coolant mixture. With plain water or the wrong mixture, the engine could get too hot but you would not get the overheat warning. The engine could catch fire and you or others could be burned. Use a 50/50 mixture of clean, drinkable water and DEX-COOL coolant.

Use a 50/50 mixture of clean, drinkable water and DEX-COOL coolant. If using this mixture, nothing else needs to be added. This mixture:

- Gives freezing protection down to −37°C (−34°F), outside temperature.
- Gives boiling protection up to 129°C (265°F), engine temperature.
- Protects against rust and corrosion.
- Will not damage aluminum parts.
- Helps keep the proper engine temperature.

⚠ Caution

If improper coolant mixture, inhibitors, or additives are used in the vehicle cooling system, the engine could overheat and be damaged. Too much water in the

(Continued)

Caution (Continued)

mixture can freeze and crack engine cooling parts. The repairs would not be covered by the vehicle warranty. Use only the proper mixture of engine coolant for the cooling system. See *Recommended Fluids and Lubricants on page 11-13*.

Never dispose of engine coolant by putting it in the trash, or by pouring it on the ground or into sewers, streams, or bodies of water.
Have the coolant changed by an authorized service center, familiar with legal requirements regarding used coolant disposal. This will help protect the environment and your health.

Checking Coolant

The coolant surge tank is in the engine compartment on the passenger side of the vehicle. See *Engine Compartment Overview on page 10-5*.

The vehicle must be on a level surface when checking the coolant level.

Check to see if coolant is visible in the coolant surge tank. If the coolant inside the coolant surge tank is boiling, do not do anything else until it cools down. If coolant is visible but the coolant level is not at or above the FULL COLD mark, add a 50/50 mixture of clean, drinkable water and DEX-COOL coolant at the coolant surge tank, but be sure the cooling system is cool before this is done.

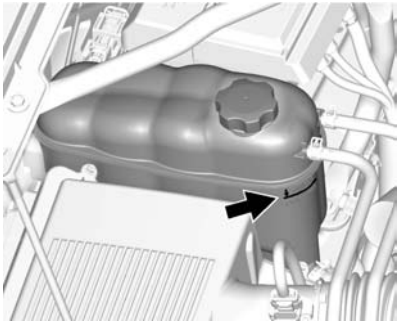

The coolant level should be at or above the FULL COLD mark. If it is not, there may be a leak in the cooling system.

How to Add Coolant to the Coolant Surge Tank for Gasoline Engines

⚠ Warning

You can be burned if you spill coolant on hot engine parts. Coolant contains ethylene glycol

(Continued)

Warning (Continued)

and it will burn if the engine parts are hot enough. Do not spill coolant on a hot engine.

⚠ Caution

This vehicle has a specific coolant fill procedure. Failure to follow this procedure could cause the engine to overheat and be severely damaged.

⚠ Warning

Steam and scalding liquids from a hot cooling system can blow out and burn you badly. Never turn the cap when the cooling system, including the surge tank pressure cap, is hot. Wait for the cooling system and surge tank pressure cap to cool.

If no coolant is visible in the surge tank, add coolant:

1. Remove the coolant surge tank pressure cap when the cooling system, including the coolant surge tank pressure cap and upper radiator hose, is no longer hot.

   Turn the pressure cap slowly counterclockwise about one full turn. If a hiss is heard, wait for that to stop. A hiss means there is still some pressure left.
2. Keep turning the pressure cap slowly, and remove it.
3. Fill the coolant surge tank with the proper mixture to the FULL COLD mark.
4. With the coolant surge tank pressure cap off, start the engine and let it run until the engine coolant temperature gauge indicates approximately 90°C (195°F).

   By this time, the coolant level inside the coolant surge tank may be lower. If the level is lower, add more of the proper mixture to the coolant surge tank until the level reaches the FULL COLD mark.
5. Replace the pressure cap tightly.
6. Verify coolant level after the engine is shut off and the coolant is cold. If necessary, repeat coolant fill procedure Steps 1-6.

⚠ Caution

If the pressure cap is not tightly installed, coolant loss and possible engine damage may occur. Be sure the cap is properly and tightly secured.

Engine Overheating

⚠ Caution

Running the engine without coolant may cause damage or a fire. Vehicle damage would not be covered by the vehicle warranty.

The vehicle has several indicators to warn of engine overheating.

There is a coolant temperature gauge in the vehicle's instrument cluster. See *Engine Coolant Temperature Gauge on page 5-15*.

In addition, there are ENGINE OVERHEATED STOP ENGINE, ENGINE OVERHEATED IDLE ENGINE, and ENGINE POWER IS REDUCED messages in the Driver Information Center (DIC). See *Engine Cooling System Messages on page 5-37* and *Engine Power Messages on page 5-38*.

If the decision is made not to lift the hood when this warning appears, get service help right away.

If the decision is made to lift the hood, make sure the vehicle is parked on a level surface.

Check to see if the engine cooling fan(s) are running. If the engine is overheating, the fans should be running. If they are not, do not continue to run the engine and have the vehicle serviced.

If Steam is Coming from the Engine Compartment

⚠ Warning

Steam from an overheated engine can burn you badly, even if you just open the hood. Stay away from the engine if you see or hear steam coming from it. Just turn it off and get everyone away from the vehicle until it cools down. Wait until there is no sign of steam or coolant before you open the hood.

If you keep driving when the engine is overheated, the liquids in it can catch fire. You or others could be badly burned. Stop the engine if it overheats, and get out of the vehicle until the engine is cool.

If No Steam is Coming from the Engine Compartment

The ENGINE OVERHEATED STOP ENGINE or the ENGINE OVERHEATED IDLE ENGINE message, along with a low coolant condition, can indicate a serious problem.

If there is an engine overheat warning, but no steam is seen or heard, the problem may not be too serious. Sometimes the engine can get a little too hot when the vehicle:

- Climbs a long hill on a hot day.
- Stops after high-speed driving.
- Idles for long periods in traffic.
- Tows a trailer; see *Trailer Towing on page 9-77*.

If the ENGINE OVERHEATED STOP ENGINE or the ENGINE OVERHEATED IDLE ENGINE message appears with no sign of steam, try this for a minute or so:

1. Turn the air conditioning off.

2. Turn the heater on to the highest temperature and to the highest fan speed. Open the windows as necessary.
3. When it is safe to do so, pull off the road, shift to P (Park) or N (Neutral), and let the engine idle.

If the temperature overheat gauge is no longer in the overheat zone or an overheat warning no longer displays, the vehicle can be driven. Continue to drive the vehicle slowly for about 10 minutes. Keep a safe vehicle distance from the vehicle in front. If the warning does not come back on, continue to drive normally and have the cooling system checked for proper fill and function.

If the warning continues, pull over, stop, and park the vehicle right away.

If there is still no sign of steam and the vehicle is equipped with an engine driven cooling fan, push down the accelerator until the engine speed is about twice as fast as normal idle speed for at least five minutes while the vehicle is parked. If the warning is still there, turn off the engine and get everyone out of the vehicle until it cools down.

If there is no sign of steam, idle the engine for five minutes while parked. If the warning is still displayed, turn off the engine until it cools down.

Engine Fan

If the vehicle has electric cooling fans, the fans may be heard spinning at low speed during most everyday driving. The fans may turn off if no cooling is required. Under heavy vehicle loading, trailer towing, high outside temperatures, or operation of the air conditioning system, the fans may change to high speed and an increase in fan noise may be heard. This is normal and indicates that the cooling system is functioning properly.

The fans will change to low speed when additional cooling is no longer required.

The electric engine cooling fans may run after the engine has been turned. off. This is normal and no service is required.

Washer Fluid

What to Use

When windshield washer fluid needs to be added, be sure to read the manufacturer's instructions before use. Use a fluid that has sufficient protection against freezing in an area where the temperature may fall below freezing.

Adding Washer Fluid

The vehicle has a low washer fluid message on the DIC that comes on when the washer fluid is low. The message is displayed for 15 seconds at the start of each ignition cycle. When the WASHER FLUID LOW ADD FLUID message

displays, washer fluid will need to be added to the windshield washer fluid reservoir.

Open the cap with the washer symbol on it. Add washer fluid until the tank is full. See *Engine Compartment Overview on page 10-5* for reservoir location.

⚠ Caution

- Do not use engine coolant (antifreeze) in the windshield washer. It can damage the windshield washer system and paint.
- Do not mix water with ready-to-use washer fluid. Water can cause the solution

(Continued)

Caution (Continued)

to freeze and damage the washer fluid tank and other parts of the washer system.

- When using concentrated washer fluid, follow the manufacturer instructions for adding water.
- Fill the washer fluid tank only three-quarters full when it is very cold. This allows for fluid expansion if freezing occurs, which could damage the tank if it is completely full.

Brakes

Disc brake pads have built-in wear indicators that make a high-pitched warning sound when the brake pads are worn and new pads are needed. The sound can come and go or be heard all the time when the vehicle is moving, except when applying the brake pedal firmly.

⚠ Warning

The brake wear warning sound means that soon the brakes will not work well. That could lead to a crash. When the brake wear warning sound is heard, have the vehicle serviced.

⚠ Caution

Continuing to drive with worn-out brake pads could result in costly brake repair.

Some driving conditions or climates can cause a brake squeal when the brakes are first applied or lightly applied. This does not mean something is wrong with the brakes.

Properly torqued wheel nuts are necessary to help prevent brake pulsation. When tires are rotated, inspect brake pads for wear and evenly tighten wheel nuts in the

proper sequence to torque specifications. See *Capacities and Specifications on page 12-2*.

Brake pads should be replaced as complete sets.

Brake Pedal Travel

See your dealer if the brake pedal does not return to normal height, or if there is a rapid increase in pedal travel. This could be a sign that brake service may be required.

Replacing Brake System Parts

Always replace brake system parts with new, approved replacement parts. If this is not done, the brakes may not work properly. The braking performance expected can change in many other ways if the wrong replacement brake parts are installed or parts are improperly installed.

Brake Fluid

The brake master cylinder reservoir is filled with DOT 3 brake fluid. See *Engine Compartment Overview on page 10-5* for the location of the reservoir.

There are only two reasons why the brake fluid level in the reservoir might go down:

- The brake fluid level goes down because of normal brake lining wear. When new linings are installed, the fluid level goes back up.
- A fluid leak in the brake hydraulic system can also cause a low fluid level. Have the brake hydraulic system fixed, since a leak means that sooner or later the brakes will not work well.

Do not top off the brake fluid. Adding fluid does not correct a leak. If fluid is added when the linings are worn, there will be too much fluid when new brake linings are installed. Add or remove brake fluid, as necessary, only when work is done on the brake hydraulic system.

⚠ Warning

If too much brake fluid is added, it can spill on the engine and burn, if the engine is hot enough. You or others could be burned, and the vehicle could be damaged. Add brake fluid only when work is done on the brake hydraulic system. See “Checking Brake Fluid” in this section.

When the brake fluid falls to a low level, the brake warning light comes on. See *Brake System Warning Light on page 5-21*.

Refer to the Maintenance Schedule to determine when to check the brake fluid. See *Maintenance Schedule on page 11-4*.

Checking Brake Fluid

Check brake fluid by looking at the brake fluid reservoir. See *Engine Compartment Overview on page 10-5*.

The fluid level should be above MIN. If it is not, have the brake hydraulic system checked to see if there is a leak.

After work is done on the brake hydraulic system, make sure the level is above MIN but not over the MAX mark.

What to Add

Use only new DOT 3 brake fluid from a sealed container. See *Recommended Fluids and Lubricants on page 11-13*.

Always clean the brake fluid reservoir cap and the area around the cap before removing it. This helps keep dirt from entering the reservoir.

⚠ Warning

With the wrong kind of fluid in the brake hydraulic system, the brakes might not work well. This could cause a crash. Always use the proper brake fluid.

⚠ Caution

- Using the wrong fluid can badly damage brake hydraulic system parts. For example, just a few drops of mineral-based oil, such as engine oil, in the brake hydraulic system can damage brake hydraulic system parts so badly that they will have to be replaced. Do not let someone put in the wrong kind of fluid.
- If brake fluid is spilled on the vehicle's painted surfaces, the paint finish can be damaged. Be careful not to spill brake fluid on the vehicle. If you do, wash it off immediately.

Battery - North America

The original equipment battery is maintenance free. Do not remove the cap and do not add fluid.

Refer to the replacement number shown on the original battery label when a new battery is needed. See *Engine Compartment Overview on page 10-5* for battery location.

⚠ Warning

WARNING: Battery posts, terminals, and related accessories contain lead and lead compounds, chemicals known to the State of California to cause cancer and birth defects or other reproductive harm. Batteries also contain other chemicals known to the State of California to cause cancer. **WASH HANDS AFTER HANDLING.** See *California Proposition 65 Warning on page 10-2*.

Vehicle Storage

⚠ Warning

Batteries have acid that can burn you and gas that can explode. You can be badly hurt if you are not careful. See *Jump Starting - North America on page 10-71* for tips on working around a battery without getting hurt.

Infrequent Usage: Remove the black, negative (−) cable from the battery to keep the battery from running down.

Extended Storage: Remove the black, negative (−) cable from the battery or use a battery trickle charger.

Four-Wheel Drive

Transfer Case

If the vehicle is equipped with Four-Wheel Drive, be sure to perform the lubricant checks described in this section.

When to Check Lubricant

Refer to *Maintenance Schedule on page 11-4* to determine how often to check the lubricant.

How to Check Lubricant

To get an accurate reading, the vehicle should be on a level surface.

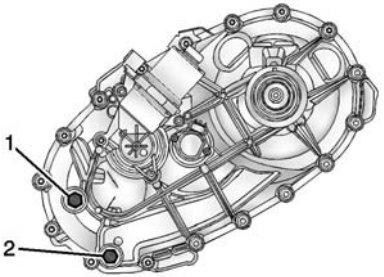

1. Fill Plug
2. Drain Plug

If the level is below the bottom of the fill plug (1) hole, located on the transfer case, some lubricant will need to be added. Add enough lubricant to raise the level to the bottom of the fill plug (1) hole. Use care not to overtighten the plug.

What to Use

Refer to *Recommended Fluids and Lubricants on page 11-13* to determine what kind of lubricant to use.

Front Axle

When to Check and Change Lubricant

It is not necessary to regularly check front axle fluid unless a leak is suspected, or an unusual noise is heard. A fluid loss could indicate a problem. Have it inspected and repaired.

How to Check Lubricant

To get an accurate reading, the vehicle should be on a level surface.

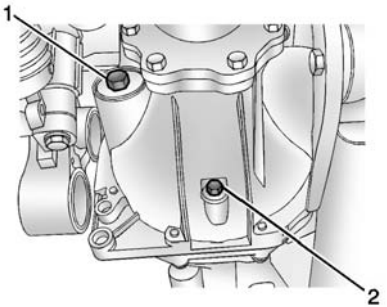

1. Fill Plug
2. Drain Plug

- When the differential is cold, add enough lubricant to raise the level from 0 mm (0 in) to 3.2 mm (1/8 in) below the fill plug (1) hole.
- When the differential is at operating temperature (warm), add enough lubricant to raise the level to the bottom of the fill plug (1) hole.

What to Use

Refer to *Recommended Fluids and Lubricants on page 11-13* to determine what kind of lubricant to use.

Rear Axle

When to Check Lubricant

It is not necessary to regularly check rear axle fluid unless a leak is suspected or an unusual noise is

heard. A fluid loss could indicate a problem. Have it inspected and repaired.

All axle assemblies are filled by volume of fluid during production. They are not filled to reach a certain level. When checking the fluid level on any axle, variations in the readings can be caused by factory fill differences between the minimum and the maximum fluid volume. Also, if a vehicle has just been driven before checking the fluid level, it may appear lower than normal because fluid has traveled out along the axle tubes and has not drained back to the sump area. Therefore, a reading taken five minutes after the vehicle has been driven will appear to have a lower fluid level than a vehicle that has been stationary for an hour or two. The rear axle assembly must be supported on a flat, level surface to get a true reading.

How to Check Lubricant

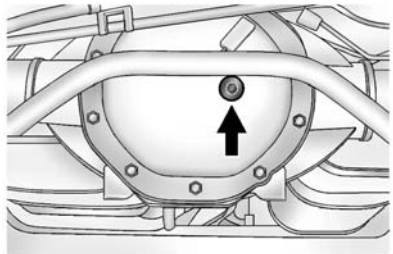

To get an accurate reading, the vehicle should be on a level surface.

The proper level is 1.0 mm to 19.0 mm (0.04 in to 0.7 in) below the bottom of the fill hole, located on the rear axle. Add only enough fluid to reach the proper level.

What to Use

Refer to *Recommended Fluids and Lubricants on page 11-13* to determine what kind of lubricant to use.

Starter Switch Check

⚠ Warning

When you are doing this inspection, the vehicle could move suddenly. If the vehicle moves, you or others could be injured.

1. Before starting this check, be sure there is enough room around the vehicle.
2. Apply both the parking brake and the regular brake.

   Do not use the accelerator pedal, and be ready to turn off the engine immediately if it starts.
3. Try to start the engine in each gear. The vehicle should start only in P (Park) or N (Neutral). If the vehicle starts in any other position, contact your dealer for service.

Automatic Transmission Shift Lock Control Function Check

⚠ Warning

When you are doing this inspection, the vehicle could move suddenly. If the vehicle moves, you or others could be injured.

1. Before starting this check, be sure there is enough room around the vehicle. It should be parked on a level surface.
2. Apply the parking brake. Be ready to apply the regular brake immediately if the vehicle begins to move.
3. With the engine off, turn the ignition on, but do not start the engine. Without applying the regular brake, try to move the shift lever out of P (Park) with normal effort. If the shift lever moves out of P (Park), contact your dealer for service.

Park Brake and P (Park) Mechanism Check

⚠ Warning

When you are doing this check, the vehicle could begin to move. You or others could be injured and property could be damaged. Make sure there is room in front of the vehicle in case it begins to roll. Be ready to apply the regular brake at once should the vehicle begin to move.

Park on a fairly steep hill, with the vehicle facing downhill. Keeping your foot on the regular brake, set the parking brake.

- To check the parking brake's holding ability: With the engine running and the transmission in N (Neutral), slowly remove foot pressure from the regular brake pedal. Do this until the vehicle is held by the parking brake only.
- To check the P (Park) mechanism's holding ability: With the engine running, shift to P (Park). Then release the parking brake followed by the regular brake.

Contact your dealer if service is required.

Wiper Blade Replacement

Windshield wiper blades should be inspected for wear or cracking.

For the proper type and size, see *Maintenance Replacement Parts on page 11-15*.

Front Wiper Blade Replacement

To replace the wiper blade assembly:

1. Pull the windshield wiper assembly away from the windshield.

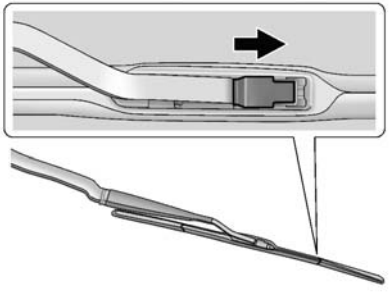

2. Lift up on the latch in the middle of the wiper blade where the wiper arm attaches.
3. With the latch open, pull the wiper blade down toward the windshield far enough to release it from the J-hooked end of the wiper arm.
4. Remove the wiper blade.

   Allowing the wiper blade arm to touch the windshield when no wiper blade is installed could damage the windshield. Any damage that occurs would not be covered by the vehicle warranty. Do not allow the wiper blade arm to touch the windshield.
5. Reverse Steps 1–3 for wiper blade replacement.

Rear Wiper Blade Replacement

To replace the rear wiper blade:

1. Pull the wiper blade assembly away from the backglass.

   The rear wiper blade will not lock in a vertical position so care should be used when pulling it away from the vehicle.

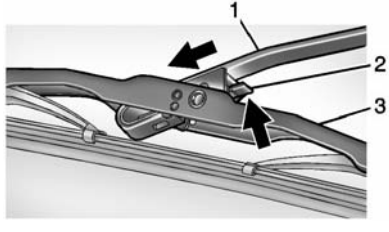

2. Push the release lever (2) to disengage the hook and push the wiper arm (1) out of the blade assembly (3).
3. Push the new blade assembly securely in the wiper arm hook until the release lever clicks into place.
4. Return the wiper arm and blade assembly to the rest position on the glass.

Glass Replacement

If the windshield or front side glass must be replaced, see your dealer to determine the correct replacement glass.

Windshield Replacement

The windshield is part of the HUD system. If the vehicle has to have the windshield replaced, get one that is designed for HUD or the HUD image may look out of focus.

Headlamp Aiming

Headlamp aim has been preset and should need no further adjustment.

If the vehicle is damaged in a crash, the headlamp aim may be affected. If adjustment to the headlamps is necessary, see your dealer.

Bulb Replacement

For the proper type of replacement bulbs, see *Replacement Bulbs on page 10-27*.

For any bulb-changing procedure not listed in this section, contact your dealer.

LED Lighting

This vehicle has several LED lamps. For replacement of any LED lighting assembly, contact your dealer.

License Plate Lamp

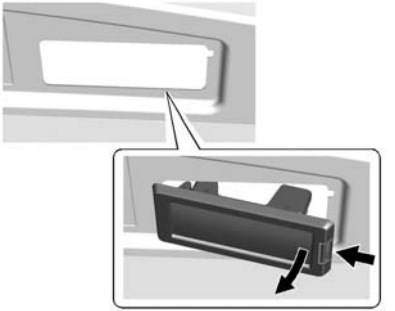

Passenger Side Shown, Driver Side Similar

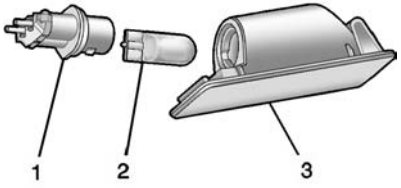

1. Bulb Socket
2. Bulb
3. Lamp Assembly

To replace one of these bulbs:

1. Push the lamp assembly (3) toward the center of the vehicle.
2. Pull the lamp assembly down to remove.
3. Turn the bulb socket (1) counterclockwise to remove it from the lamp assembly (3).
4. Pull the bulb (2) straight out of the bulb socket (1).
5. Push the replacement bulb straight into the bulb socket and turn the bulb socket clockwise to install it into the lamp assembly.
6. Push the lamp assembly back into position until the release tab locks into place.

Replacement Bulbs

Exterior Lamp	Bulb Number
License Plate Lamp	W5W LL

For replacement bulbs not listed here, contact your dealer.

Electrical System

Electrical System Overload

The vehicle has fuses to protect against an electrical system overload. Fuses also protect power devices in the vehicle.

Replace a bad fuse with a new one of the identical size and rating.

If there is a problem on the road and a fuse needs to be replaced, there are some spare fuses and a fuse puller in the Instrument Panel Fuse Block. The same amperage fuse can also be borrowed. Choose some feature of the vehicle that is not needed to use and replace it as soon as possible.

Headlamp Wiring

An electrical overload may cause the lamps to go on and off, or in some cases to remain off. Have the headlamp wiring checked right away if the lamps go on and off or remain off.

Windshield Wipers

If the wiper motor overheats due to heavy snow or ice, the windshield wipers will stop until the motor cools and will then restart.

Although the circuit is protected from electrical overload, overload due to heavy snow or ice may cause wiper linkage damage. Always clear ice and heavy snow from the windshield before using the windshield wipers.

If the overload is caused by an electrical problem and not snow or ice, be sure to get it fixed.

Fuses

The wiring circuits in the vehicle are protected from short circuits by fuses. This greatly reduces the chance of fires caused by electrical problems.

Look at the silver-colored band inside the fuse. If the band is broken or melted, replace the fuse. Be sure you replace a bad fuse with a new one of the identical size and rating.

Fuses of the same amperage can be temporarily borrowed from another fuse location, if a fuse goes out. Replace the fuse as soon as you can.

Engine Compartment Fuse Block

The engine compartment fuse block is in the engine compartment, on the driver side of the vehicle.

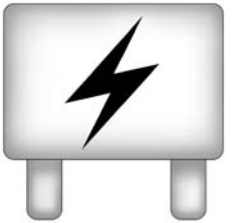

Lift the cover to access the fuse block.

⚠ Caution

Spilling liquid on any electrical component on the vehicle may damage it. Always keep the covers on any electrical component.

A fuse puller is available in the left instrument panel fuse block.

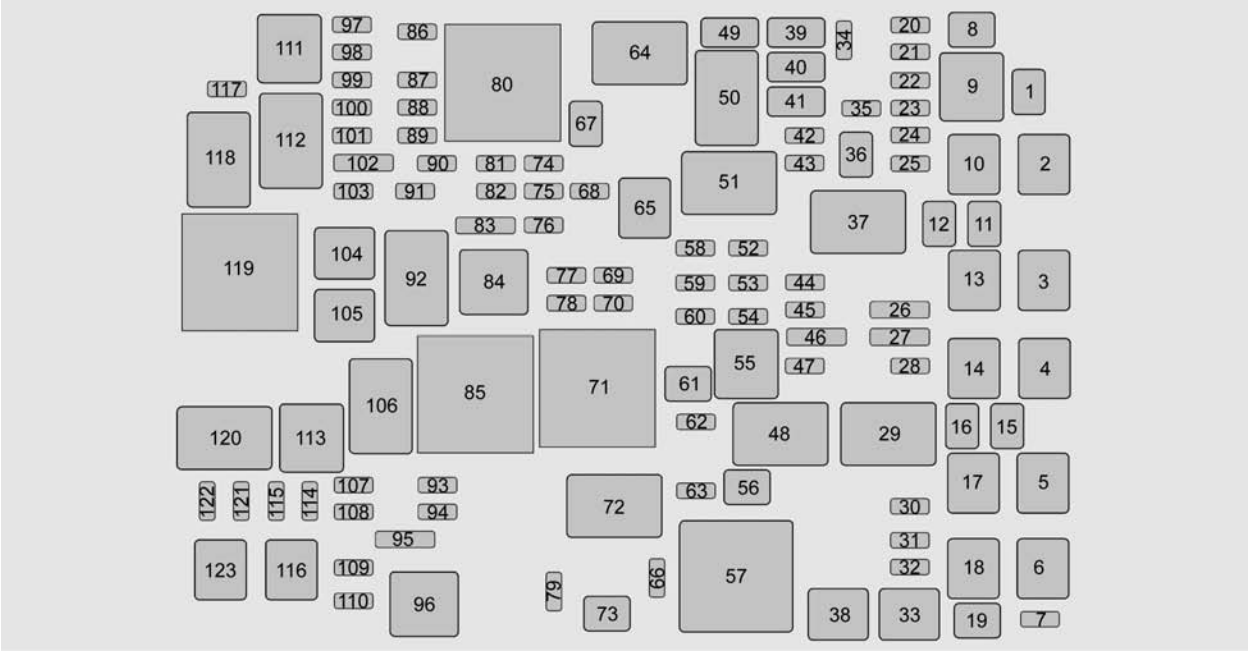
111
97
98
99
100
101
102
103
86
87
88
89
90
91
80
64
49
39
34
20
21
22
23
24
25
8
9
1
117
112
118
67
50
40
41
35
42
43
36
10
2
51
81
74
82
75
68
65
37
12
11
83
76
119
104
92
84
58
52
59
53
44
45
26
13
3
77
69
78
70
60
54
46
27
105
55
47
28
14
4
106
85
71
61
62
48
29
16
15
120
113
17
5
122
121
115
114
107
108
93
94
72
63
56
30
95
31
123
116
109
110
96
79
73
66
57
32
18
6
38
33
19
7

Item	Usage
1	Electric Running Boards
2	Antilock Brake System Pump
3	Interior BEC LT1
4	MBS Passenger
5	Suspension Leveling Compressor
6	4WD Transfer Case Electronic Control
10	Electric Parking Brake
13	Interior BEC LT2
14	Rear BEC 1
17	MBS Driver
21	ALC Exhaust Solenoid
23	Integrated Chassis Control Module

Item	Usage
24	Real Time Dampening
25	Fuel Pump Power Module
26	Spare/Battery Regulated Voltage Control
28	Upfitter 2
29	Upfitter 2 Relay
30	Wiper
31	TIM
34	Back-up Lamps
35	Antilock Brake System Valve
36	Trailer Brakes
37	Upfitter 3 Relay
39	Trailer Stop/Turn Right
40	Trailer Stop/ Turn Left

Item	Usage
41	Trailer Park Lamps
42	Right Parking Lamps
43	Left Parking Lamps
44	Upfitter 3
45	Automatic Level Control Run/Crank
47	Upfitter 4
48	Upfitter 4 Relay
49	Reverse Lamps
51	Parking Lamp Relay
59	Euro Trailer
60	Air Conditioning Control
63	Upfitter 1
67	Trailer Battery
69	RC Upfitter 3 and 4
70	VBAT Upfitter 3 and 4

Item	Usage
72	Upfitter 1 Relay
74	Engine Control Module Ignition
75	Miscellaneous Ignition Spare
76	Transmission Ignition
77	RC Upfitter 1 and 2
78	VBAT Upfitter 1 and 2
83	Euro Trailer RC
84	Run/Crank Relay
87	Engine
88	Injector A – Odd
89	Injector B – Even
90	Oxygen Sensor B
91	Throttle Control
92	Engine Control Module Relay
93	Horn

Item	Usage
94	Fog Lamps
95	High-Beam Headlamps
100	Oxygen Sensor A
101	Engine Control Module
102	Engine Control Module/ Transmission Control Module
103	Auxiliary Interior Heater
104	Starter
107	Aero Shutter
109	Police Upfitter
112	Starter Relay
114	Front Windshield Washer
115	Rear Window Washer
116	Cooling Fan Left

Item	Usage
121	Right HID Headlamp
122	Left HID Headlamp
123	Cooling Fan Right

Instrument Panel Fuse Block (Left)

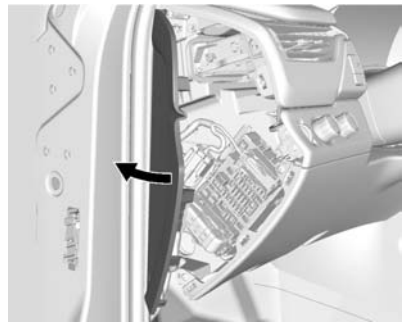

The left instrument panel fuse block access door is on the driver side edge of the instrument panel.

Pull off the cover to access the fuse block.

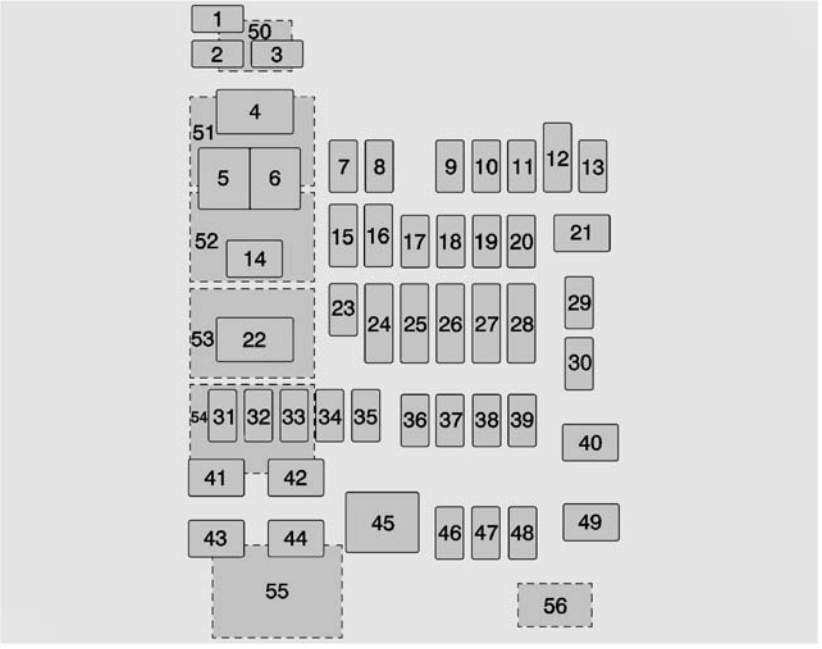

The vehicle may not be equipped with all of the fuses, relays, and features shown.

Number	Usage
1	Not Used
2	Not Used
3	Not Used
4	Accessory Power Outlet 1
5	Retained Accessory Power/Accessory
6	APO/BATT
7	Universal Garage Door Opener/Inside Rear View Mirror
8	SEO Retained Accessory Power
9	Not Used
10	Body Control Module 3
11	Body Control Module 5

Number	Usage
12	Steering Wheel Controls Backlighting
13	Not Used
14	Not Used
15	Not Used
16	Discrete Logic Ignition Sensor
17	VPM
18	Mirror Window Module
19	Body Control Module 1
20	Front Bolster (if equipped)
21	Not Used
22	Not Used
23	Not Used

Number	Usage
24	Heater, Ventilation and Air Conditioning Ignition/Heater, Ventilation and Air Conditioning Auxiliary
25	Instrument Cluster Ignition/Sensing Diagnostic Module Ignition
26	Tilt Column/SEO, Tilt Column Lock 1/SEO
27	Data Link Connector/ Driver Seat Module
28	Passive Entry/Passive Start/Heater, Ventilation and Air Conditioning Battery
29	Content Theft
30	Not Used
31	Not Used
32	Not Used

Number	Usage
33	SEO/Automatic Level Control
34	Park Enable Electric Adjustable Pedal (if equipped)
35	Not Used
36	Miscellaneous R/C
37	Heated Steering Wheel
38	Steering Column Lock 2 (if equipped)
39	Instrument Cluster Battery
40	Not Used
41	Not Used
42	Euro Trailer (if equipped)
43	Left Doors
44	Driver Power Seat
45	Not Used

Number	Usage
46	Right Heated/ Cooled Seat
47	Left Heated/ Cooled Seat
48	Not Used
49	Not Used
50	Accessory Power Outlet 2
51	Not Used
52	Retained Accessory Power/Accessory Relay
53	Run/Crank Relay
54	Not Used
55	Not Used
56	Not Used

Instrument Panel Fuse Block (Right)

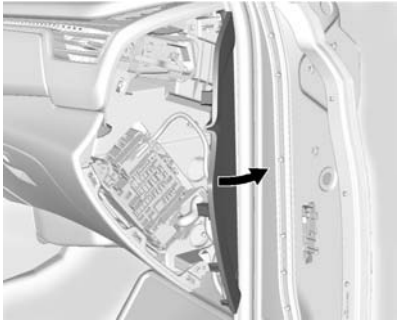

The right instrument panel fuse block access door is on the passenger side edge of the instrument panel.

Pull off the cover to access the fuse block.

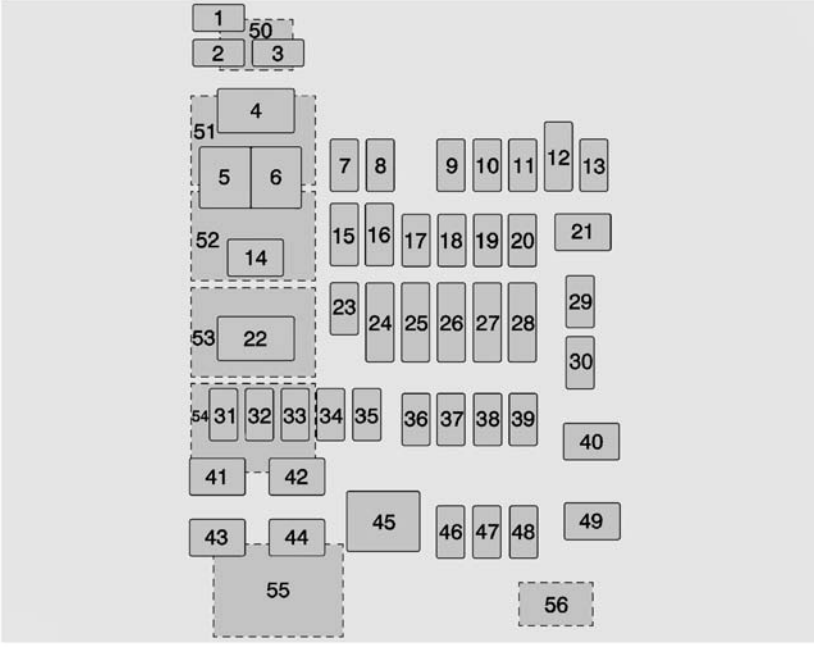

The vehicle may not be equipped with all of the fuses, relays, and features shown.

Number	Usage
1	Not Used
2	Not Used
3	Not Used
4	Accessory Power Outlet 4
5	Not Used
6	Not Used
7	Not Used
8	Glove Box
9	Not Used
10	Not Used
11	Not Used
12	Steering Wheel Controls
13	Body Control Module 8
14	Not Used
15	Not Used
16	Not Used

Number	Usage
17	Not Used
18	Not Used
19	Body Control Module 4
20	Rear Seat Entertainment
21	Sunroof
22	Not Used
23	Not Used
24	Not Used
25	Not Used
26	Info/Airbag
27	Spare/RF WDW RN SW
28	Obstacle Detection/USB
29	Radio
30	Not Used
31	Not Used

Number	Usage
32	Not Used
33	Not Used
34	Not Used
35	Not Used
36	SEO B2
37	SEO
38	Body Control Module 2
39	A/C Inverter
40	Not Used
41	Not Used
42	Not Used
43	Not Used
44	Right Door Window Motor
45	Front Blower
46	Body Control Module 6

Number	Usage
47	Body Control Module 7
48	Amplifier
49	Right Front Seat
50	Accessory Power Outlet 3
51	Not Used
52	Retained Accessory Power/Accessory Relay
53	Not Used
54	Not Used
55	Not Used
56	Not Used

Rear Compartment Fuse Block

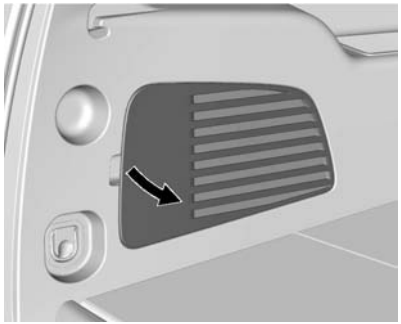

The rear compartment fuse block is behind the access panel on the left side of the compartment.

Pull the panel out by grabbing the finger access slot at the rear edge.

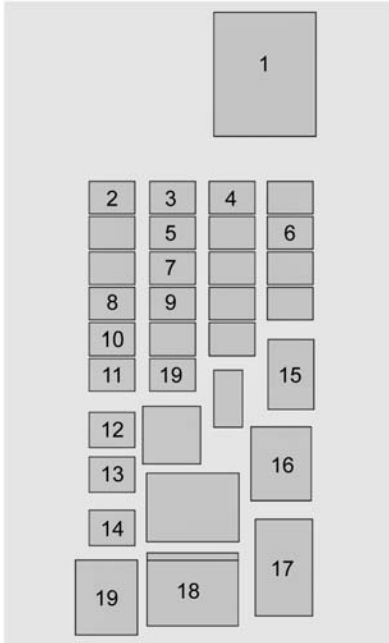

The vehicle may not be equipped with all of the fuses, relays, and features shown.

ISO Mini Relays	Usage
1	Rear Defogger

Micro Fuses	Usage
2	Heated Second Row Seat Left
3	Heated Second Row Seat Right
4	Heated Mirrors
5	Liftgate
6	Glass Breakage
7	Liftglass
8	Liftgate Module Logic
9	Rear Wiper
10	Rear Heater, Ventilation and Air Conditioning Blower
11	Second Row Seat
19	Rear Fog Lamp (if equipped)

M-Type Fuses	Usage
12	Liftgate Module
13	Third Row Seat
14	Rear Accessory Power Outlet
15	Rear Defogger

Ultra Micro Relays	Usage
16	Liftgate

Micro Relays	Usage
17	Liftglass
18	Rear Fog Lamp (if equipped)
19	Heated Mirrors

Wheels and Tires

Tires

Every new GM vehicle has high-quality tires made by a leading tire manufacturer. See the warranty manual for information regarding the tire warranty and where to get service. For additional information refer to the tire manufacturer.

⚠ Warning

- Poorly maintained and improperly used tires are dangerous.
- Overloading the tires can cause overheating as a result of too much flexing. There could be a blowout

(Continued)

Warning (Continued)

and a serious crash. See *Vehicle Load Limits on page 9-14*.

- Underinflated tires pose the same danger as overloaded tires. The resulting crash could cause serious injury. Check all tires frequently to maintain the recommended pressure. Tire pressure should be checked when the tires are cold.
- Overinflated tires are more likely to be cut, punctured, or broken by a sudden impact — such as when hitting a pothole. Keep tires at the recommended pressure.

(Continued)

Warning (Continued)

- Worn or old tires can cause a crash. If the tread is badly worn, replace them.
- Replace any tires that have been damaged by impacts with potholes, curbs, etc.
- Improperly repaired tires can cause a crash. Only the dealer or an authorized tire service center should repair, replace, dismount, and mount the tires.
- Do not spin the tires in excess of 56 km/h (35 mph) on slippery surfaces such as snow, mud, ice, etc. Excessive spinning may cause the tires to explode.

See *Tire Pressure for High-Speed Operation on page 10-47* for inflation pressure adjustment for high-speed driving.

All-Season Tires

This vehicle may come with all-season tires. These tires are designed to provide good overall performance on most road surfaces and weather conditions. Original equipment tires designed to GM's specific tire performance criteria have a TPC specification code molded onto the sidewall. Original equipment all-season tires can be identified by the last two characters of this TPC code, which will be “MS.”

Consider installing winter tires on the vehicle if frequent driving on snow or ice-covered roads is expected. All-season tires provide adequate performance for most winter driving conditions, but they may not offer the same level of traction or performance as winter tires on snow or ice-covered roads. See *Winter Tires on page 10-39*.

Winter Tires

This vehicle was not originally equipped with winter tires. Winter tires are designed for increased traction on snow and ice-covered roads. Consider installing winter tires on the vehicle if frequent driving on ice or snow covered roads is expected. See your dealer for details regarding winter tire availability and proper tire selection. Also, see *Buying New Tires on page 10-54*.

With winter tires, there may be decreased dry road traction, increased road noise, and shorter tread life. After changing to winter tires, be alert for changes in vehicle handling and braking.

If using winter tires:

- Use tires of the same brand and tread type on all four wheel positions.

- Use only radial ply tires of the same size, load range, and speed rating as the original equipment tires.

Winter tires with the same speed rating as the original equipment tires may not be available for H, V, W, Y, and ZR speed rated tires. If winter tires with a lower speed rating are chosen, never exceed the tire's maximum speed capability.

Low-Profile Tires

22-Inch Tires

If the vehicle has 22-inch P285/45R22 size tires, they are classified as touring tires and are designed for on-road use. The low-profile, wide tread design is not recommended for off-road driving. See *Off-Road Driving on page 9-5*, for additional information.

⚠ Caution

Low-profile tires are more susceptible to damage from road hazards or curb impact than standard profile tires. Tire and/or wheel assembly damage can occur when coming into contact with road hazards like potholes, or sharp edged objects, or when sliding into a curb. The warranty does not cover this type of damage. Keep tires set to the correct inflation pressure and when possible, avoid contact with curbs, potholes, and other road hazards.

All-Terrain Tires

This vehicle may have all-terrain tires. These tires provide good performance on most road surfaces, weather conditions, and for off-road driving. See *Off-Road Driving on page 9-5*.

The tread pattern on these tires may wear more quickly than other tires. Consider rotating the tires more frequently than at 12 000 km (7,500 mi) intervals if irregular wear is noted when the tires are inspected. See *Tire Inspection on page 10-51*.

Tire Sidewall Labeling

Useful information about a tire is molded into the sidewall. The example shows a typical passenger vehicle tire sidewall.

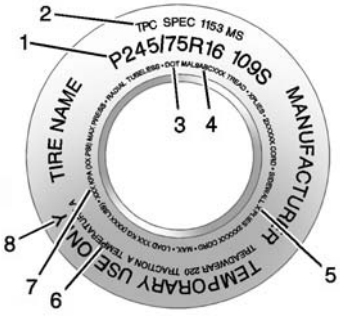

Passenger (P-Metric)/Spare Tire

(1) Tire Size: The tire size code is a combination of letters and numbers used to define a particular tire's width, height, aspect ratio, construction type, and service description. See the “Tire Size” illustration later in this section for more detail.

(2) TPC Spec (Tire Performance Criteria Specification): Original equipment tires designed to GM's specific tire performance criteria have a TPC specification code molded onto the sidewall. GM's TPC specifications meet or exceed all federal safety guidelines.

(3) DOT (Department of Transportation): The Department of Transportation (DOT) code indicates that the tire is in compliance with the U.S. Department of Transportation Motor Vehicle Safety Standards.

DOT Tire Date of Manufacture: The last four digits of the TIN indicate the tire manufactured date. The first two digits represent the week (01-52) and the last two digits, the year. For example, the third week of the year 2010 would have a four-digit DOT date of 0310.

(4) Tire Identification Number (TIN): The letters and numbers following the DOT code are the Tire Identification Number (TIN). The TIN shows the manufacturer and plant code, tire size, and date the tire was manufactured. The TIN is molded onto both sides of the tire, although only one side may have the date of manufacture.

(5) Tire Ply Material: The type of cord and number of plies in the sidewall and under the tread.

(6) Uniform Tire Quality Grading (UTQG): Tire manufacturers are required to grade tires based on three performance factors: treadwear, traction, and temperature resistance. For more information, see *Uniform Tire Quality Grading on page 10-56*.

(7) Maximum Cold Inflation Load Limit: Maximum load that can be carried and the maximum pressure needed to support that load. For information on recommended tire pressure see *Tire Pressure on page 10-45* and *Vehicle Load Limits on page 9-14*.

(8) Temporary Use Only: Only use a temporary spare tire until the road tire is repaired and replaced. This spare tire should not be driven on over 112 km/h (70 mph), or 88 km/h (55 mph) when pulling a trailer, with the proper inflation pressure. See *Full-Size Spare Tire on page 10-70*.

Tire Designations

Tire Size

The example shows a typical passenger vehicle tire size.

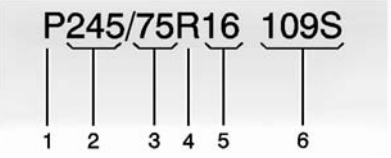

Passenger (P-Metric) Tire

(1) Passenger (P-Metric) Tire: The United States version of a metric tire sizing system. The letter P as the first character in the tire size means a passenger vehicle tire engineered to standards set by the U.S. Tire and Rim Association.

(2) Tire Width: The three-digit number indicates the tire section width in millimeters from sidewall to sidewall.

(3) Aspect Ratio: A two-digit number that indicates the tire height-to-width measurements. For example, if the tire size aspect ratio is 75, as shown in item C of the tire illustration, it would mean that the tire's sidewall is 75 percent as high as it is wide.

(4) Construction Code: A letter code is used to indicate the type of ply construction in the tire. The letter R means radial ply construction; the letter D means diagonal or bias ply construction; and the letter B means belted-bias ply construction.

(5) Rim Diameter: Diameter of the wheel in inches.

(6) Service Description: These characters represent the load index and speed rating of the tire. The load index represents the load carrying capacity a tire is certified to carry. The speed rating is the maximum speed a tire is certified to carry a load.

Tire Terminology and Definitions

Air Pressure: The amount of air inside the tire pressing outward on each square inch of the tire. Air pressure is expressed in kPa (kilopascal) or psi (pounds per square inch).

Accessory Weight: The combined weight of optional accessories. Some examples of optional accessories are automatic transmission, power windows, power seats, and air conditioning.

Aspect Ratio: The relationship of a tire's height to its width.

Belt: A rubber coated layer of cords between the plies and the tread. Cords may be made from steel or other reinforcing materials.

Bead: The tire bead contains steel wires wrapped by steel cords that hold the tire onto the rim.

Bias Ply Tire: A pneumatic tire in which the plies are laid at alternate angles less than 90 degrees to the centerline of the tread.

Cold Tire Pressure: The amount of air pressure in a tire, measured in kPa (kilopascal) or psi (pounds per square inch) before a tire has built up heat from driving. See *Tire Pressure on page 10-45*.

Curb Weight: The weight of a motor vehicle with standard and optional equipment including the maximum capacity of fuel, oil, and coolant, but without passengers and cargo.

DOT Markings: A code molded into the sidewall of a tire signifying that the tire is in compliance with the U.S. Department of Transportation (DOT) Motor Vehicle Safety Standards. The DOT code includes the Tire Identification Number (TIN), an alphanumeric designator which can also identify the tire manufacturer, production plant, brand, and date of production.

GVWR: Gross Vehicle Weight Rating. See *Vehicle Load Limits on page 9-14*.

GAWR FRT: Gross Axle Weight Rating for the front axle. See *Vehicle Load Limits on page 9-14*.

GAWR RR: Gross Axle Weight Rating for the rear axle. See *Vehicle Load Limits on page 9-14*.

Intended Outboard Sidewall: The side of an asymmetrical tire that must always face outward when mounted on a vehicle.

Kilopascal (kPa): The metric unit for air pressure.

Light Truck (LT-Metric) Tire: A tire used on light duty trucks and some multipurpose passenger vehicles.

Load Index: An assigned number ranging from 1 to 279 that corresponds to the load carrying capacity of a tire.

Maximum Inflation Pressure: The maximum air pressure to which a cold tire can be inflated. The maximum air pressure is molded onto the sidewall.

Maximum Load Rating: The load rating for a tire at the maximum permissible inflation pressure for that tire.

Maximum Loaded Vehicle Weight: The sum of curb weight, accessory weight, vehicle capacity weight, and production options weight.

Normal Occupant Weight: The number of occupants a vehicle is designed to seat multiplied by 68 kg (150 lb). See *Vehicle Load Limits on page 9-14*.

Occupant Distribution: Designated seating positions.

Outward Facing Sidewall: The side of an asymmetrical tire that has a particular side that faces outward when mounted on a vehicle. The side of the tire that contains a whitewall, bears white lettering, or bears manufacturer, brand, and/or model name molding that is higher or deeper than the same moldings on the other sidewall of the tire.

Passenger (P-Metric) Tire: A tire used on passenger cars and some light duty trucks and multipurpose vehicles.

Recommended Inflation Pressure: Vehicle manufacturer's recommended tire inflation pressure as shown on the tire placard. See *Tire Pressure on page 10-45* and *Vehicle Load Limits on page 9-14*.

Radial Ply Tire: A pneumatic tire in which the ply cords that extend to the beads are laid at 90 degrees to the centerline of the tread.

Rim: A metal support for a tire and upon which the tire beads are seated.

Sidewall: The portion of a tire between the tread and the bead.

Speed Rating: An alphanumeric code assigned to a tire indicating the maximum speed at which a tire can operate.

Traction: The friction between the tire and the road surface. The amount of grip provided.

Tread: The portion of a tire that comes into contact with the road.

Treadwear Indicators: Narrow bands, sometimes called wear bars, that show across the tread of a tire when only 1.6 mm (1/16 in) of tread remains. See *When It Is Time for New Tires on page 10-53*.

UTQGS (Uniform Tire Quality Grading Standards): A tire information system that provides consumers with ratings for a tire's traction, temperature, and treadwear. Ratings are determined by tire manufacturers using government testing procedures. The ratings are molded into the sidewall of the tire. See *Uniform Tire Quality Grading on page 10-56*.

Vehicle Capacity Weight: The number of designated seating positions multiplied by 68 kg (150 lb) plus the rated cargo load. See *Vehicle Load Limits on page 9-14*.

Vehicle Maximum Load on the Tire: Load on an individual tire due to curb weight, accessory weight, occupant weight, and cargo weight.

Vehicle Placard: A label permanently attached to a vehicle showing the vehicle capacity weight and the original equipment tire size and recommended inflation pressure. See “Tire and Loading Information Label” under *Vehicle Load Limits on page 9-14*.

Tire Pressure

Tires need the correct amount of air pressure to operate effectively.

⚠ Caution

Neither tire underinflation nor overinflation is good. Underinflated tires, or tires that do not have enough air, can result in:

- Tire overloading and overheating which could lead to a blowout.
- Premature or irregular wear.
- Poor handling.
- Reduced fuel economy.

(Continued)

Caution (Continued)

Overinflated tires, or tires that have too much air, can result in:

- Unusual wear.
- Poor handling.
- Rough ride.
- Needless damage from road hazards.

The Tire and Loading Information label on the vehicle indicates the original equipment tires and the correct cold tire inflation pressures. The recommended pressure is the minimum air pressure needed to support the vehicle's maximum load carrying capacity.

For additional information regarding how much weight the vehicle can carry, and an example of the Tire and Loading Information label, see *Vehicle Load Limits on page 9-14*. How the vehicle is loaded affects vehicle handling and ride comfort. Never load the vehicle with more weight than it was designed to carry.

When to Check

Check the tires once a month or more.

Do not forget the spare tire, if the vehicle has one. See *Full-Size Spare Tire on page 10-70* for additional information.

How to Check

Use a good quality pocket-type gauge to check tire pressure. Proper tire inflation cannot be determined by looking at the tire. Check the tire inflation pressure when the tires are cold, meaning the vehicle has not been driven for at least three hours or no more than 1.6 km (1 mi).

Remove the valve cap from the tire valve stem. Press the tire gauge firmly onto the valve to get a pressure measurement. If the cold tire inflation pressure matches the recommended pressure on the Tire and Loading Information label, no further adjustment is necessary. If the inflation pressure is low, add air until the recommended pressure is reached. If the inflation pressure is high, press on the metal stem in the center of the tire valve to release air.

Re-check the tire pressure with the tire gauge.

Put the valve caps back on the valve stems to keep out dirt and moisture and prevent leaks. Use only valve caps designed for the vehicle by GM. TPMS sensors

could be damaged and would not be covered by the vehicle warranty.

Tire Pressure for High-Speed Operation

⚠ Warning

Driving at high speeds, 160 km/h (100 mph) or higher, puts an additional strain on tires. Sustained high-speed driving causes excessive heat buildup and can cause sudden tire failure. You could have a crash and you or others could be killed. Some high-speed rated tires require inflation pressure adjustment for high-speed operation. When speed limits and road conditions are such that a vehicle can be driven at high speeds, make sure the tires are rated for high-speed operation, in excellent condition,

(Continued)

Warning (Continued)

and set to the correct cold tire inflation pressure for the vehicle load.

Vehicles with P265/65R18 or P285/45R22 size tires require inflation pressure adjustment when driving the vehicle at speeds of 160 km/h (100 mph) or higher. Set the cold inflation pressure to 20 kPa (3 psi) above the recommended tire pressure shown on the Tire and Loading Information Label. Return the tires to the recommended cold tire inflation pressure when high-speed driving has ended. See *Vehicle Load Limits on page 9-14* and *Tire Pressure on page 10-45*.

Tire Pressure Monitor System

The Tire Pressure Monitor System (TPMS) uses radio and sensor technology to check tire pressure levels. The TPMS sensors monitor the air pressure in your tires and transmit tire pressure readings to a receiver located in the vehicle.

Each tire, including the spare (if provided), should be checked monthly when cold and inflated to the inflation pressure recommended by the vehicle manufacturer on the vehicle placard or tire inflation pressure label. (If your vehicle has tires of a different size than the size indicated on the vehicle placard or tire inflation pressure label, you should determine the proper tire inflation pressure for those tires.)

As an added safety feature, your vehicle has been equipped with a tire pressure monitoring system (TPMS) that illuminates a low tire pressure telltale when one or more of your tires is significantly under-inflated.

Accordingly, when the low tire pressure telltale illuminates, you should stop and check your tires as soon as possible, and inflate them

to the proper pressure. Driving on a significantly under-inflated tire causes the tire to overheat and can lead to tire failure. Under-inflation also reduces fuel efficiency and tire tread life, and may affect the vehicle's handling and stopping ability.

Please note that the TPMS is not a substitute for proper tire maintenance, and it is the driver's responsibility to maintain correct tire pressure, even if under-inflation has not reached the level to trigger illumination of the TPMS low tire pressure telltale.

Your vehicle has also been equipped with a TPMS malfunction indicator to indicate when the system is not operating properly. The TPMS malfunction indicator is combined with the low tire pressure telltale. When the system detects a malfunction, the telltale will flash for approximately one minute and then remain continuously illuminated. This sequence will continue upon subsequent vehicle start-ups as long as the malfunction exists.

When the malfunction indicator is illuminated, the system may not be able to detect or signal low tire pressure as intended. TPMS malfunctions may occur for a variety of reasons, including the installation of replacement or alternate tires or wheels on the vehicle that prevent the TPMS from functioning properly. Always check the TPMS malfunction telltale after replacing one or more tires or wheels on your vehicle to ensure that the replacement or alternate tires and wheels allow the TPMS to continue to function properly.

See *Tire Pressure Monitor Operation on page 10-48*.

See *Radio Frequency Statement on page 13-12*.

Tire Pressure Monitor Operation

This vehicle may have a Tire Pressure Monitor System (TPMS). The TPMS is designed to warn the driver when a low tire pressure condition exists. TPMS sensors are mounted onto each tire and wheel assembly, excluding the spare tire and wheel assembly. The TPMS sensors monitor the air pressure in the tires and transmits the tire pressure readings to a receiver located in the vehicle.

When a low tire pressure condition is detected, the TPMS illuminates the low tire pressure warning light on the instrument cluster. If the warning light comes on, stop as soon as possible and inflate the

tires to the recommended pressure shown on the Tire and Loading Information label. See *Vehicle Load Limits on page 9-14*.

A message to check the pressure in a specific tire displays in the Driver Information Center (DIC). The low tire pressure warning light and the DIC warning message come on at each ignition cycle until the tires are inflated to the correct inflation pressure. Using the DIC, tire pressure levels can be viewed. For additional information and details about the DIC operation and displays see *Driver Information Center (DIC) on page 5-27*.

The low tire pressure warning light may come on in cool weather when the vehicle is first started, and then turn off as the vehicle is driven. This could be an early indicator that the air pressure is getting low and needs to be inflated to the proper pressure.

A Tire and Loading Information label, attached to your vehicle, shows the size of the original equipment tires and the correct inflation pressure for the tires when they are cold. See *Vehicle Load Limits on page 9-14* for an example of the Tire and Loading Information label and its location. Also see *Tire Pressure on page 10-45*.

The TPMS can warn about a low tire pressure condition but it does not replace normal tire maintenance. See *Tire Inspection on page 10-51*, *Tire Rotation on page 10-52*, and *Tires on page 10-38*.

⚠ Caution

Tire sealant materials are not all the same. A non-approved tire sealant could damage the TPMS sensors. TPMS sensor damage caused by using an incorrect tire sealant is not covered by the

(Continued)

Caution (Continued)

vehicle warranty. Always use only the GM approved tire sealant available through your dealer or included in the vehicle.

TPMS Malfunction Light and Message

The TPMS will not function properly if one or more of the TPMS sensors are missing or inoperable. When the system detects a malfunction, the low tire warning light flashes for about one minute and then stays on for the remainder of the ignition cycle. A DIC warning message also displays. The malfunction light and DIC warning message come on at each ignition cycle until the problem is corrected. Some of the conditions that can cause these to come on are:

- One of the road tires has been replaced with the spare tire. The spare tire does not have a

TPMS sensor. The malfunction light and DIC message should go off after the road tire is replaced and the sensor matching process is performed successfully. See “TPMS Sensor Matching Process” later in this section.

- The TPMS sensor matching process was not done or not completed successfully after rotating the tires. The malfunction light and the DIC message should go off after successfully completing the sensor matching process. See "TPMS Sensor Matching Process" later in this section.
- One or more TPMS sensors are missing or damaged. The malfunction light and the DIC message should go off when the TPMS sensors are installed and the sensor matching process is performed successfully. See your dealer for service.
- Replacement tires or wheels do not match the original equipment tires or wheels. Tires and wheels other than those recommended could prevent the TPMS from functioning properly. See *Buying New Tires on page 10-54*.
- Operating electronic devices or being near facilities using radio wave frequencies similar to the TPMS could cause the TPMS sensors to malfunction.

If the TPMS is not functioning properly, it cannot detect or signal a low tire condition. See your dealer for service if the TPMS malfunction light and DIC message come on and stay on.

TPMS Sensor Matching Process

Each TPMS sensor has a unique identification code. The identification code needs to be matched to a new tire/wheel position after rotating the vehicle’s tires or replacing one or more of the TPMS sensors. The TPMS sensor matching process should also be performed after replacing a spare tire with a road tire containing the TPMS sensor. The malfunction light and the DIC message should go off at the next ignition cycle. The sensors are matched to the tire/wheel positions, using a TPMS relearn tool, in the following order: driver side front tire, passenger side front tire, passenger side rear tire, and driver side rear tire. See your dealer for service or to purchase a relearn tool. A TPMS relearn tool can also be purchased. See Tire Pressure Monitor Sensor Activation Tool at www.gmtoolsandequipment.com or call 1-800-GM TOOLS (1-800-468-6657).

There are two minutes to match the first tire/wheel position, and five minutes overall to match all four tire/wheel positions. If it takes longer, the matching process stops and must be restarted.

The TPMS sensor matching process is:

1. Set the parking brake.
2. Place the vehicle power mode in ON/RUN/START. See *Ignition Positions on page 9-20*.
3. Make sure the Tire Pressure info display option is turned on. The info displays on the DIC can be turned on and off through the Settings menu. See *Driver Information Center (DIC) on page 5-27*.
4. Use the five-way DIC control on the right side of the steering wheel to scroll to the Tire Pressure screen under the DIC info page. See *Driver Information Center (DIC) on page 5-27*.
5. Press and hold the SEL button in the center of the five-way DIC control.

   The horn sounds twice to signal the receiver is in relearn mode and the TIRE LEARNING ACTIVE message displays on the DIC screen.
6. Start with the driver side front tire.
7. Place the relearn tool against the tire sidewall, near the valve stem. Then press the button to activate the TPMS sensor. A horn chirp confirms that the sensor identification code has been matched to this tire and wheel position.
8. Proceed to the passenger side front tire, and repeat the procedure in Step 7.
9. Proceed to the passenger side rear tire, and repeat the procedure in Step 7.
10. Proceed to the driver side rear tire, and repeat the procedure in Step 7. The horn sounds two times to indicate the sensor identification code has been matched to the driver side rear tire, and the TPMS sensor matching process is no longer active. The TIRE LEARNING ACTIVE message on the DIC display screen goes off.
11. Press ENGINE START/STOP to turn the ignition off.
12. Set all four tires to the recommended air pressure level as indicated on the Tire and Loading Information label.

Tire Inspection

We recommend that the tires, including the spare tire, if the vehicle has one, be inspected for signs of wear or damage at least once a month.

Replace the tire if:

- The indicators at three or more places around the tire can be seen.
- There is cord or fabric showing through the tire's rubber.
- The tread or sidewall is cracked, cut, or snagged deep enough to show cord or fabric.
- The tire has a bump, bulge, or split.
- The tire has a puncture, cut, or other damage that cannot be repaired well because of the size or location of the damage.

Tire Rotation

Tires should be rotated every 12 000 km (7,500 mi). See *Maintenance Schedule on page 11-4*.

Tires are rotated to achieve a uniform wear for all tires. The first rotation is the most important.

Anytime unusual wear is noticed, rotate the tires as soon as possible, check for proper tire inflation pressure, and check for damaged tires or wheels. If the unusual wear continues after the rotation, check the wheel alignment. See *When It Is Time for New Tires on page 10-53* and *Wheel Replacement on page 10-58*.

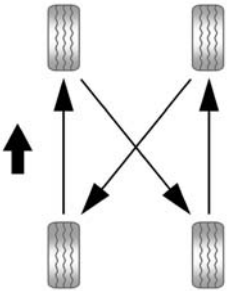

Use this rotation pattern when rotating the tires.

Do not include the spare tire in the tire rotation.

Adjust the front and rear tires to the recommended inflation pressure on the Tire and Loading Information label after the tires have been rotated. See *Tire Pressure on page 10-45* and *Vehicle Load Limits on page 9-14*.

Reset the Tire Pressure Monitor System. See *Tire Pressure Monitor Operation on page 10-48*.

Check that all wheel nuts are properly tightened. See “Wheel Nut Torque” under *Capacities and Specifications on page 12-2*.

⚠ Warning

Rust or dirt on a wheel, or on the parts to which it is fastened, can make wheel nuts become loose after time. The wheel could come off and cause an accident. When changing a wheel, remove any rust or dirt from places where the wheel attaches to the vehicle. In an emergency, a cloth or a paper towel can be used; however, use a scraper or wire brush later to remove all rust or dirt.

Lightly coat the center of the wheel hub with wheel bearing grease after a wheel change or tire rotation to prevent corrosion or rust build-up. Do not get grease on the flat wheel mounting surface or on the wheel nuts or bolts.

When It Is Time for New Tires

Factors, such as maintenance, temperatures, driving speeds, vehicle loading, and road conditions affect the wear rate of the tires.

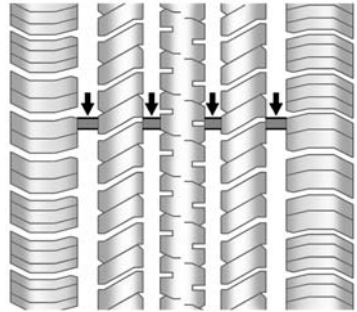

Treadwear indicators are one way to tell when it is time for new tires. Treadwear indicators appear when the tires have only 1.6 mm (1/16 in) or less of tread remaining. Some commercial truck tires may not have treadwear indicators. See *Tire Inspection on page 10-51* and *Tire Rotation on page 10-52* for additional information.

The rubber in tires ages over time. This also applies to the spare tire, if the vehicle has one, even if it is never used. Multiple factors including temperatures, loading conditions, and inflation pressure

maintenance affect how fast aging takes place. GM recommends that tires, including the spare if equipped, be replaced after six years, regardless of tread wear. The tire manufacture date is the last four digits of the DOT Tire Identification Number (TIN) which is molded into one side of the tire sidewall. The first two digits represent the week (01-52) and the last two digits, the year. For example, the third week of the year 2010 would have a four-digit DOT date of 0310.

Vehicle Storage

Tires age when stored normally mounted on a parked vehicle. Park a vehicle that will be stored for at least a month in a cool, dry, clean area away from direct sunlight to slow aging. This area should be free of grease, gasoline, or other substances that can deteriorate rubber.

Parking for an extended period can cause flat spots on the tires that may result in vibrations while driving. When storing a vehicle for at least a month, remove the tires or raise the vehicle to reduce the weight from the tires.

Buying New Tires

GM has developed and matched specific tires for the vehicle. The original equipment tires installed were designed to meet General Motors Tire Performance Criteria Specification (TPC Spec) system rating. When replacement tires are needed, GM strongly recommends buying tires with the same TPC Spec rating.

GM's exclusive TPC Spec system considers over a dozen critical specifications that impact the overall performance of the vehicle, including brake system performance, ride and handling, traction control, and tire pressure monitoring performance.

GM's TPC Spec number is molded onto the tire's sidewall near the tire size. If the tires have an all-season tread design, the TPC Spec number will be followed by MS for mud and snow. See *Tire Sidewall Labeling on page 10-40* for additional information.

GM recommends replacing worn tires in complete sets of four. Uniform tread depth on all tires will help to maintain the performance of the vehicle. Braking and handling performance may be adversely affected if all the tires are not replaced at the same time. If proper rotation and maintenance have been done, all four tires should wear out at about the same time. See *Tire Rotation on page 10-52* for information on proper tire rotation. However, if it is

necessary to replace only one axle set of worn tires, place the new tires on the rear axle.

⚠ Warning

Tires could explode during improper service. Attempting to mount or dismount a tire could cause injury or death. Only your dealer or authorized tire service center should mount or dismount the tires.

⚠ Warning

Mixing tires of different sizes, brands, or types may cause loss of control of the vehicle, resulting in a crash or other vehicle damage. Use the correct size, brand, and type of tires on all wheels.

(Continued)

Warning (Continued)

This vehicle may have a different size spare than the road tires originally installed on the vehicle. When new, the vehicle included a spare tire and wheel assembly with a similar overall diameter as the road tires and wheels, so it is all right to drive on it. The spare tire was developed for use on this vehicle and will not affect vehicle handling.

⚠ Warning

Using bias-ply tires on the vehicle may cause the wheel rim flanges to develop cracks after many miles of driving. A tire and/or wheel could fail

(Continued)

Warning (Continued)

suddenly and cause a crash. Use only radial-ply tires with the wheels on the vehicle.

Winter tires with the same speed rating as the original equipment tires may not be available for H, V, W, Y and ZR speed rated tires. Never exceed the winter tires' maximum speed capability when using winter tires with a lower speed rating.

If the vehicle tires must be replaced with a tire that does not have a TPC Spec number, make sure they are the same size, load range, speed rating, and construction (radial) as the original tires.

Vehicles that have a tire pressure monitoring system could give an inaccurate

low-pressure warning if non-TPC Spec rated tires are installed. See *Tire Pressure Monitor System on page 10-47*.

The Tire and Loading Information label indicates the original equipment tires on the vehicle. See *Vehicle Load Limits on page 9-14* for the label location and more information about the Tire and Loading Information label.

Different Size Tires and Wheels

If wheels or tires are installed that are a different size than the original equipment wheels and tires, vehicle performance, including its braking, ride and handling characteristics, stability, and resistance to rollover may be affected. If the vehicle has electronic systems such as antilock brakes, rollover airbags, traction control, electronic stability control, or All-Wheel Drive, the performance of these systems can also be affected.

⚠ Warning

If different sized wheels are used, there may not be an acceptable level of performance and safety if tires not recommended for those wheels are selected. This increases the chance of a crash and serious injury. Only use GM specific wheel and tire systems developed for the vehicle, and have them properly installed by a GM certified technician.

See *Buying New Tires on page 10-54* and *Accessories and Modifications on page 10-3*.

Uniform Tire Quality Grading

The following information relates to the system developed by the United States National Highway Traffic Safety Administration (NHTSA), which grades tires by treadwear, traction, and temperature performance. This applies only to vehicles sold in the United States. The grades are molded on the sidewalls of most passenger car tires. The Uniform Tire Quality Grading (UTQG) system does not apply to deep tread, winter tires, compact spare tires, tires with nominal rim diameters of 10 to 12 inches (25 to 30 cm), or to some limited-production tires.

While the tires available on General Motors passenger cars and light trucks may vary with respect to these grades, they

must also conform to federal safety requirements and additional General Motors Tire Performance Criteria (TPC) standards.

Quality grades can be found where applicable on the tire sidewall between tread shoulder and maximum section width. For example:

Treadwear 200 Traction AA Temperature A

All Passenger Car Tires Must Conform to Federal Safety Requirements In Addition To These Grades.

Treadwear

The treadwear grade is a comparative rating based on the wear rate of the tire when tested under controlled conditions on a specified government test course. For example, a tire graded 150 would wear one and one-half (1½) times as well on the government course as a tire graded 100. The relative performance of tires depends upon the actual conditions of their use, however, and may depart significantly from the norm due to variations in driving habits, service practices and differences in road characteristics and climate.

Traction

The traction grades, from highest to lowest, are AA, A, B, and C. Those grades represent the tire's ability to stop on wet pavement as measured under controlled conditions on specified government test surfaces of asphalt and concrete. A tire marked C may have poor traction performance. Warning: The traction grade assigned to this tire is based on straight-ahead braking traction tests, and does not include acceleration, cornering, hydroplaning, or peak traction characteristics.

Temperature

The temperature grades are A (the highest), B, and C, representing the tire's resistance to the generation of heat and its ability to dissipate heat when tested under controlled conditions on a specified indoor laboratory test wheel. Sustained high temperature can cause the material of the tire to degenerate and reduce tire life, and excessive temperature can lead to sudden tire failure. The grade C corresponds to a level of performance which all passenger car tires must meet under the Federal Motor Safety Standard No. 109. Grades B and A represent higher levels of performance on the laboratory

test wheel than the minimum required by law. Warning: The temperature grade for this tire is established for a tire that is properly inflated and not overloaded. Excessive speed, underinflation, or excessive loading, either separately or in combination, can cause heat buildup and possible tire failure.

Wheel Alignment and Tire Balance

The tires and wheels were aligned and balanced at the factory to provide the longest tire life and best overall performance. Adjustments to wheel alignment and tire balancing are not necessary on a regular basis. Consider an alignment check if there is unusual tire wear or the vehicle is significantly pulling to one side or the other. Some slight pull to the left or right, depending on the crown of the road and/or other road surface variations such as troughs or ruts, is normal. If the vehicle is vibrating when driving on a smooth road, the tires and wheels may need to be rebalanced. See your dealer for proper diagnosis.

Wheel Replacement

Replace any wheel that is bent, cracked, or badly rusted or corroded. If wheel nuts keep coming loose, the wheel, wheel bolts, and wheel nuts should be replaced. If the wheel leaks air, replace it. Some aluminum wheels can be repaired. See your dealer if any of these conditions exist.

Your dealer will know the kind of wheel that is needed.

Each new wheel should have the same load-carrying capacity, diameter, width, offset, and be mounted the same way as the one it replaces.

Replace wheels, wheel bolts, wheel nuts, or Tire Pressure Monitor System (TPMS) sensors with new GM original equipment parts.

⚠ Warning

Using the wrong replacement wheels, wheel bolts, or wheel nuts can be dangerous. It could affect the braking and handling of the vehicle. Tires can lose air, and cause loss of control, causing a crash. Always use the correct wheel, wheel bolts, and wheel nuts for replacement.

⚠ Caution

The wrong wheel can also cause problems with bearing life, brake cooling, speedometer or odometer calibration, headlamp aim, bumper height, vehicle ground clearance, and tire or tire chain clearance to the body and chassis.

Used Replacement Wheels

⚠ Warning

Replacing a wheel with a used one is dangerous. How it has been used or how far it has been driven may be unknown. It could fail suddenly and cause a crash. When replacing wheels, use a new GM original equipment wheel.

Tire Chains

⚠ Warning

Do not use tire chains. There is not enough clearance. Tire chains used on a vehicle without the proper amount of clearance can cause damage to the brakes, suspension, or other vehicle parts. The area damaged by the tire chains could cause loss of

(Continued)

Warning (Continued)

control and a crash. Use another type of traction device only if its manufacturer recommends it for the vehicle's tire size combination and road conditions. Follow that manufacturer's instructions. To avoid vehicle damage, drive slowly and readjust or remove the traction device if it contacts the vehicle. Do not spin the wheels. If traction devices are used, install them on the rear tires.

If a Tire Goes Flat

It is unusual for a tire to blowout while driving, especially if the tires are maintained properly. If air goes out of a tire, it is much more likely to leak out slowly. But if there ever is a blowout, here are a few tips about what to expect and what to do:

If a front tire fails, the flat tire creates a drag that pulls the vehicle toward that side. Take your foot off the accelerator pedal and grip the steering wheel firmly. Steer to maintain lane position, and then gently brake to a stop, well off the road, if possible.

A rear blowout, particularly on a curve, acts much like a skid and may require the same correction as used in a skid. Stop pressing the accelerator pedal and steer to straighten the vehicle. It may be very bumpy and noisy. Gently brake to a stop, well off the road, if possible.

⚠ Warning

Driving on a flat tire will cause permanent damage to the tire. Re-inflating a tire after it has been driven on while severely underinflated or flat may cause a blowout and a serious crash. Never attempt to re-inflate a tire that has been driven on while severely underinflated or flat.

(Continued)

Warning (Continued)

Have your dealer or an authorized tire service center repair or replace the flat tire as soon as possible.

⚠ Warning

Lifting a vehicle and getting under it to do maintenance or repairs is dangerous without the appropriate safety equipment and training. If a jack is provided with the vehicle, it is designed only for changing a flat tire. If it is used for anything else, you or others could be badly injured or killed if the vehicle slips off the jack. If a jack is provided with the vehicle, only use it for changing a flat tire.

If a tire goes flat, avoid further tire and wheel damage by driving slowly to a level place, well off the road, if possible. Turn on the hazard warning flashers. See *Hazard Warning Flashers on page 6-6*.

⚠ Warning

Changing a tire can be dangerous. The vehicle can slip off the jack and roll over or fall causing injury or death. Find a level place to change the tire. To help prevent the vehicle from moving:

1. Set the parking brake firmly.
2. Put the shift lever in P (Park).
3. For vehicles with four-wheel-drive with a N (Neutral) transfer case position, be sure the transfer case is in a drive gear — not in N (Neutral).
4. Turn off the engine and do not restart while the vehicle is raised.

(Continued)

Warning (Continued)

5. Do not allow passengers to remain in the vehicle.
6. Place wheel blocks, if equipped, on both sides of the tire at the opposite corner of the tire being changed.

When the vehicle has a flat tire (2), use the following example as a guide to assist in the placement of the wheel blocks (1), if equipped.

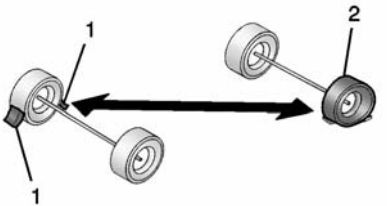

1. Wheel Block (If Equipped)
2. Flat Tire

The following information explains how to use the jack and change a tire.

Tire Changing

Removing the Spare Tire and Tools

The equipment needed to change a flat tire is stored in the rear of the vehicle, on the driver side, behind a door in the trim panel.

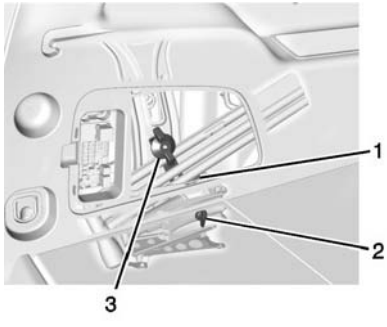

1. Jack Knob
2. Wing Nut Retaining the Wheel Blocks
3. Wing Nut Retaining the Tool Bag

   If equipped, the tow eye bolt will be in a bag secured to the tool bag.

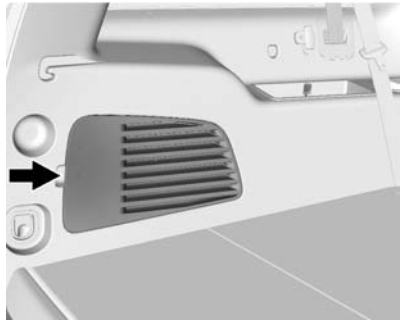

1. Pull to open the trim panel door.

   The third row driver side seat may need to be folded to access the trim panel door.
2. Lift the acoustic pad to access the jack and tools.
3. Turn the wing nut retaining the tool bag (3) counterclockwise to remove it.

   Pull the tool bag toward the front of the vehicle and lift the rear portion of the bag upward to remove it.
4. Turn the jack knob (1) counterclockwise to release the jack and wheel blocks from the bracket.
5. Turn the wing nut retaining the wheel blocks (2) counterclockwise to remove the wheel blocks and the wheel block retainer.

Use the following tools:

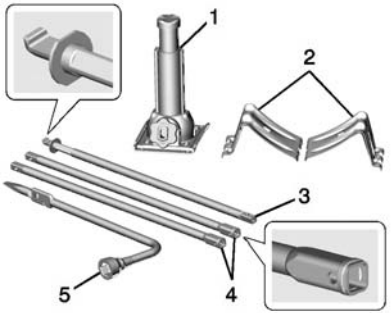

1. Jack
2. Wheel Blocks
3. Jack Handle
4. Jack Handle Extensions
5. Wheel Wrench

To access the spare tire, refer to the following graphics and instructions:

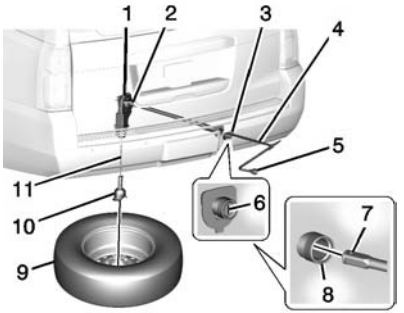

1. Hoist Assembly
2. Hoist Shaft
3. Hoist Shaft Access Cover/Hole
4. Jack Handle Extensions
5. Wheel Wrench
6. Spare Tire Lock
7. Hoist End of Extension Tool
8. Hoist Shaft Access Hole
9. Spare Tire (Valve Stem Pointed Down)
10. Tire/Wheel Retainer
11. Hoist Cable

1. Open the hoist shaft access door (3) on the bumper to access the spare tire lock (6).

If equipped with a hitch cover, turn the hitch cover retainers counterclockwise and pull the cover downward to remove it before removing the hoist shaft access door.

2. To remove the spare tire lock (6), insert the key located inside the remote, turn it clockwise, and then pull it straight out.

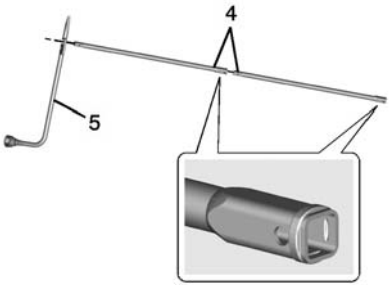

3. Assemble the two jack handle extensions (4) and wheel wrench (5), as shown.

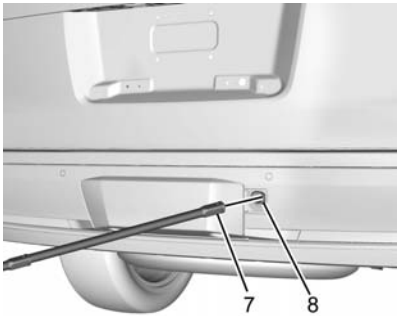

4. Insert the open end of the extension (7) through the hole in the rear bumper (8) (hoist shaft access hole).

   Be sure the hoist end of the extension (7) connects to the hoist shaft. The ribbed square end of the extension is used to lower the spare tire.

5. Turn the wheel wrench counterclockwise to lower the spare tire to the ground. Continue to turn the wheel wrench until the spare tire can be pulled out from under the vehicle.

6. Use the wheel wrench hook to pull the hoist cable closer to assist in reaching the spare tire.

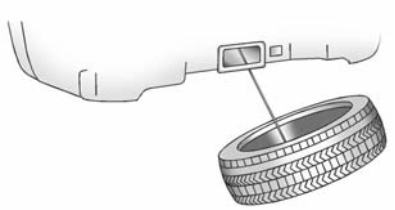

7. Tilt the tire toward the vehicle with some slack in the cable to access the tire/wheel retainer. Tilt the retainer and pull it and the cable and spring through the center of the wheel.

   Once the retainer is separated from the guide pin, tilt the retainer and pull it through the center of the wheel along with the cable and latch.

8. Put the spare tire near the flat tire.

Removing the Flat Tire and Installing the Spare Tire

1. Do a safety check before proceeding. See *If a Tire Goes Flat on page 10-59* for more information.

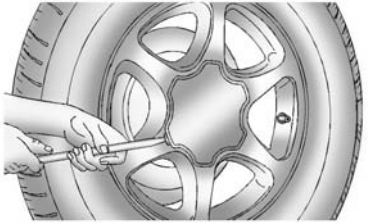

2. If the vehicle has a center cap that covers the wheel fasteners, place the chisel end of the wheel wrench in the slot on the wheel and gently pry the cap out.

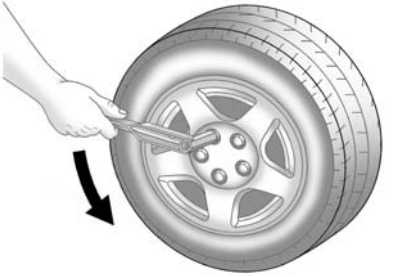

3. Use the wheel wrench to loosen all the wheel nuts. Turn the wheel wrench counterclockwise to loosen the wheel nuts. Do not remove the wheel nuts yet.

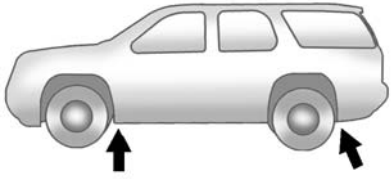

Jacking Locations (Overall View)

4. Position the jack under the vehicle, as shown.

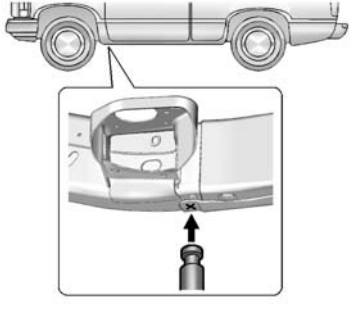

Left Front Shown, Right Front Similar

Front Tire Flat: If the flat tire is on a front tire of the vehicle, use the jack handle and only one jack handle extension. Attach the wheel wrench to the jack handle extension. Attach the jack handle to the jack. Position the jack on the frame behind the flat tire where the frame sections overlap. Turn the wheel wrench clockwise to raise the vehicle. Raise the vehicle far enough off the ground so there is enough room for the spare tire to clear the ground.

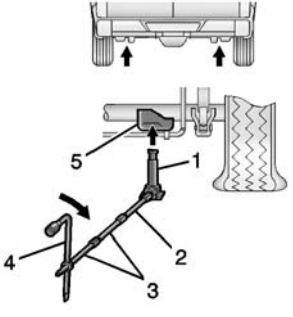

Rear Position

Rear Tire Flat: If the flat tire is on a rear tire of the vehicle, use the jack handle (2) and both jack handle extensions (3). Attach the wheel wrench (4) to the jack handle extensions (3). Attach the jack handle (2) to the jack (1). Use the jacking pad (5) provided on the rear axle. Turn the wheel wrench (4) clockwise to raise the vehicle. Raise the vehicle far enough off the ground so there is enough room for the spare tire to clear the ground.

⚠ Warning

Getting under a vehicle when it is lifted on a jack is dangerous. If the vehicle slips off the jack, you could be badly injured or killed. Never get under a vehicle when it is supported only by a jack.

⚠ Warning

Raising the vehicle with the jack improperly positioned can damage the vehicle and even make the vehicle fall. To help avoid personal injury and vehicle damage, be sure to fit the jack lift head into the proper location before raising the vehicle.

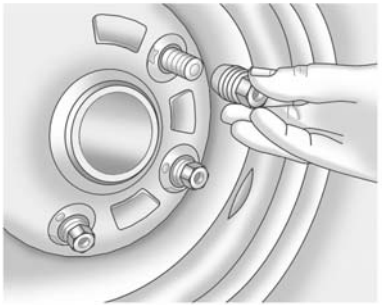

5. Remove all of the wheel nuts.
6. Take off the flat tire.

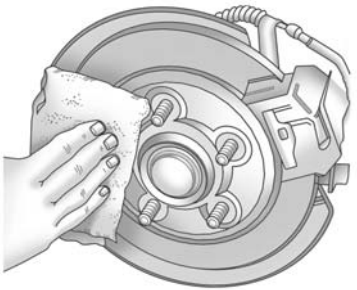

7. Remove any rust or dirt from the wheel bolts, mounting surfaces, and spare wheel.

⚠ Warning

Rust or dirt on a wheel, or on the parts to which it is fastened, can make wheel nuts become loose after time. The wheel could come off and cause an accident. When changing a wheel, remove any rust or dirt from places where the wheel attaches to the vehicle.

(Continued)

Warning (Continued)

In an emergency, a cloth or a paper towel can be used; however, use a scraper or wire brush later to remove all rust or dirt.

8. Put the wheel nuts back on with the rounded end of the nuts toward the wheel after mounting the spare tire.

⚠ Warning

Never use oil or grease on bolts or nuts because the nuts might come loose. The vehicle's wheel could fall off, causing a crash.

9. Tighten each wheel nut by hand. Then use the wheel wrench to tighten the nuts until the wheel is held against the hub.

10. Turn the wheel wrench counterclockwise to lower the vehicle. Lower the jack completely.

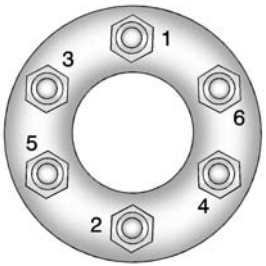

11. Tighten the nuts firmly in a crisscross sequence as shown by turning the wheel wrench clockwise.

⚠ Warning

Wheel nuts that are improperly or incorrectly tightened can cause the wheels to become loose or come off. The wheel nuts should be tightened with a torque wrench to the proper torque specification after replacing. Follow the torque specification supplied by the aftermarket manufacturer when using accessory locking wheel nuts. See *Capacities and Specifications on page 12-2* for original equipment wheel nut torque specifications.

⚠ Caution

Improperly tightened wheel nuts can lead to brake pulsation and rotor damage. To avoid expensive brake repairs, evenly tighten the wheel nuts in the proper

(Continued)

Caution (Continued)

sequence and to the proper torque specification. See *Capacities and Specifications on page 12-2* for the wheel nut torque specification.

When reinstalling the regular wheel and tire, also reinstall the center cap, if equipped. Line up the tab on the center cap with the slot in the wheel. The cap only goes in one way. Place the cap on the wheel and press until it snaps into place.

Storing a Flat or Spare Tire and Tools

⚠ Warning

Storing a jack, a tire, or other equipment in the passenger compartment of the vehicle could cause injury. In a sudden stop or

(Continued)

Warning (Continued)

collision, loose equipment could strike someone. Store all these in the proper place.

⚠ Caution

Storing an aluminum wheel with a flat tire under your vehicle for an extended period of time or with the valve stem pointing up can damage the wheel. Always stow the wheel with the valve stem pointing down and have the wheel/tire repaired as soon as possible.

⚠ Caution

The tire hoist can be damaged if there is no tension on the cable when using it. To have the necessary tension, the spare or road tire and wheel assembly must be installed on the tire hoist to use it.

Store the tire under the rear of the vehicle in the spare tire carrier. Refer to the following graphics and instructions to help you:

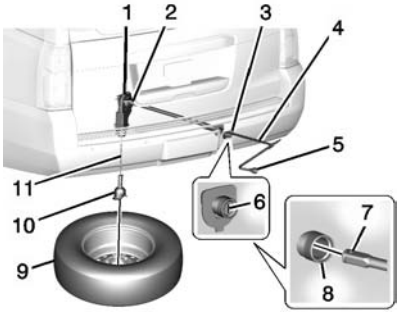

1. Hoist Assembly
2. Hoist Shaft
3. Hoist Shaft Access Cover/Hole
4. Jack Handle Extensions
5. Wheel Wrench
6. Spare Tire Lock
7. Hoist End of Extension Tool
8. Hoist Shaft Access Hole
9. Spare Tire (Valve Stem Pointed Down)
10. Tire/Wheel Retainer
11. Hoist Cable

1. Put the tire (9) on the ground at the rear of the vehicle with the valve stem pointed down, and to the rear.
2. Tilt the tire toward the vehicle. Separate the tire/wheel retainer from the guide pin. Pull the pin through the center of the wheel. Tilt the retainer down through the center wheel opening.

   Make sure the retainer is fully seated across the underside of the wheel.

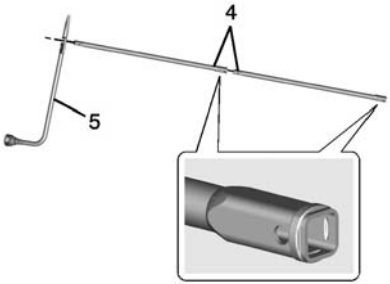

3. Assemble the two jack handle extensions (4) and wheel wrench (5), as shown.

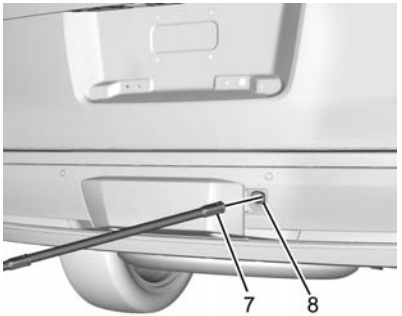

4. Insert the open end of the extension (7) through the hole in the rear bumper (8) (hoist shaft access hole).
5. Raise the tire part way upward. Make sure the retainer is seated in the wheel opening.
6. Raise the tire fully against the underside of the vehicle by turning the wheel wrench clockwise until you hear two clicks or feel it skip twice. The cable cannot be overtightened.

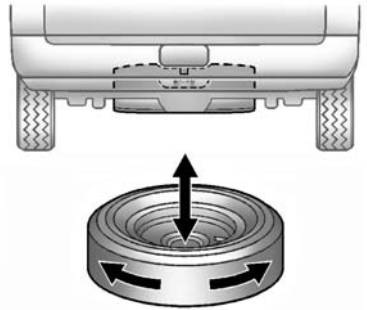

7. Make sure the tire is stored securely. Push, pull, and then try to turn the tire. If the tire moves, use the wheel wrench to tighten the cable.
8. Reinstall the spare tire lock.
9. Reinstall the hoist shaft access cover.

   If equipped, reinstall the hitch cover and turn the retainers clockwise.

To store the tools, do the following:

1. Return the tools (wheel wrench, jack handle, and jack handle extensions) to the tool bag.
2. Assemble the wheel blocks and jack together with the wing nut.
3. Position the jack and wheel blocks in the driver side trim panel over the wheelhouse.
4. Turn the jack knob clockwise until the jack is secured tight in the mounting bracket. Be sure to position the holes in the base of the jack onto the pin in the mounting bracket.
5. Use the retaining bracket to fasten the tool bag on the stud and turn the wing nut clockwise to secure.
6. Close the trim panel door.

Full-Size Spare Tire

If this vehicle came with a full-size spare tire, it was fully inflated when new, however, it can lose air over time. Check the inflation pressure regularly. See *Tire Pressure on page 10-45* and *Vehicle Load Limits on page 9-14*. For instructions on how to remove, install, or store a spare tire, see *Tire Changing on page 10-61*.

If equipped with a temporary use full-size spare tire, it is indicated on the tire sidewall. See *Tire Sidewall Labeling on page 10-40*. This spare tire should not be driven on over 112 km/h (70 mph), or 88 km/h (55 mph) when pulling a trailer, at the proper inflation pressure. Repair and replace the road tire as soon as it is convenient, and stow the spare tire for future use.

⚠ Caution

If the vehicle has four-wheel drive and a different size spare tire is installed, do not drive in four-wheel drive until the flat tire is repaired and/or replaced.

(Continued)

Caution (Continued)

The vehicle could be damaged and the repairs would not be covered by the warranty. Never use four-wheel drive when a different size spare tire is installed on the vehicle.

The vehicle may have a different size spare tire than the road tires originally installed on the vehicle. This spare tire was developed for use on this vehicle, so it is all right to drive on it. If the vehicle has four-wheel drive and a different size spare tire is installed, drive only in two-wheel drive.

After installing the spare tire on the vehicle, stop as soon as possible and check that the spare tire is correctly inflated.

Have the damaged or flat road tire repaired or replaced and installed back onto the vehicle as soon as possible so the spare tire will be available in case it is needed again.

Do not mix tires and wheels of different sizes, because they will not fit. Keep your spare tire and its wheel together. If the vehicle has a spare tire that does not match the original road tires and wheels in size and type, do not include the spare in the tire rotation.

Jump Starting

Jump Starting - North America

For more information about the vehicle battery, see *Battery - North America on page 10-21*.

If the vehicle's battery (or batteries) has run down, you may want to use another vehicle and some jumper cables to start your vehicle. Be sure to use the following steps to do it safely.

⚠ Warning

WARNING: Battery posts, terminals, and related accessories contain lead and lead compounds, chemicals known to the State of California to cause cancer and birth defects or other reproductive harm. Batteries also contain other chemicals known to

(Continued)

Warning (Continued)

the State of California to cause cancer. **WASH HANDS AFTER HANDLING.** See *California Proposition 65 Warning on page 10-2*.

⚠ Warning

Batteries can hurt you. They can be dangerous because:

- They contain acid that can burn you.
- They contain gas that can explode or ignite.
- They contain enough electricity to burn you.

If you do not follow these steps exactly, some or all of these things can hurt you.

⚠ Caution

Ignoring these steps could result in costly damage to the vehicle that would not be covered by the vehicle warranty. Trying to start the vehicle by pushing or pulling it will not work, and it could damage the vehicle.

1. Check the other vehicle. It must have a 12-volt battery with a negative ground system.

⚠ Caution

If the other vehicle does not have a 12-volt system with a negative ground, both vehicles can be damaged. Only use a vehicle that has a 12-volt system with a negative ground for jump starting.

2. If the vehicle is equipped with dual batteries, using the battery that is closer to the starter will reduce electrical resistance. This is located on the passenger side, in the rear of the engine compartment.
3. Get the vehicles close enough so the jumper cables can reach, but be sure the vehicles are not touching each other. If they are, it could cause an unwanted ground connection. You would not be able to start your vehicle, and the bad grounding could damage the electrical systems.

   To avoid the possibility of the vehicles rolling, set the parking brake firmly on both vehicles involved in the jump start procedure. Put the automatic transmission in P (Park) or a manual transmission in Neutral before setting the parking brake. For vehicles with four-wheel-drive with a N (Neutral) transfer case position, be sure the transfer case is in a drive gear — not N (Neutral).

⚠ Caution

If any accessories are left on or plugged in during the jump starting procedure, they could be damaged. The repairs would not be covered by the vehicle warranty. Whenever possible, turn off or unplug all accessories on either vehicle when jump starting.

4. Turn off the ignition on both vehicles. Unplug unnecessary accessories plugged into the accessory power outlets. Turn off the radio and all the lamps that are not needed. This will avoid sparks and help save both batteries. And it could save the radio!

5. Open the hood on the other vehicle and locate the positive (+) and negative (−) terminal locations on that vehicle.

   The positive (+) terminal is under a red plastic cover at the positive battery post. To uncover the positive (+) terminal, open the red plastic cover.

   For more information on the location of the remote positive (+) and remote negative (−) terminals, see *Engine Compartment Overview on page 10-5*.

⚠ Warning

An electric fan can start up even when the engine is not running and can injure you. Keep hands, clothing, and tools away from any underhood electric fan.

⚠ Warning

Using a match near a battery can cause battery gas to explode. People have been hurt doing this, and some have been blinded. Use a flashlight if you need more light.

Battery fluid contains acid that can burn you. Do not get it on you. If you accidentally get it in your eyes or on your skin, flush the place with water and get medical help immediately.

⚠ Warning

Fans or other moving engine parts can injure you badly. Keep your hands away from moving parts once the engine is running.

6. Check that the jumper cables do not have loose or missing insulation. If they do, you could get a shock. The vehicles could be damaged too.

   Before you connect the cables, here are some basic things you should know. Positive (+) will go to positive (+) or to a remote positive (+) terminal if the vehicle has one. Negative (−) will go to a heavy, unpainted metal engine part or to a remote negative (−) terminal if the vehicle has one.

   Do not connect positive (+) to negative (−) or you will get a short that would damage the battery and maybe other parts too. And do not connect the negative (−) cable to the negative (−) terminal on the dead battery because this can cause sparks.

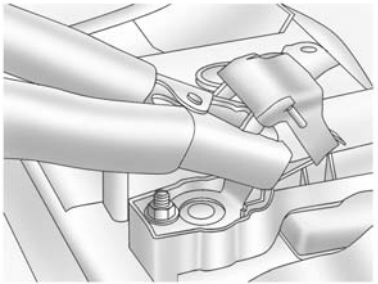

7. Connect the red positive (+) cable to the positive (+) terminal of the vehicle with the dead battery.
8. Do not let the other end touch metal. Connect it to the positive (+) terminal of the good battery. Use a remote positive (+) terminal if the vehicle has one.
9. Connect the black negative (−) cable to the negative (−) terminal of the good battery. Use a remote negative (−) terminal if the vehicle has one.

   Do not let the other end touch anything until the next step.

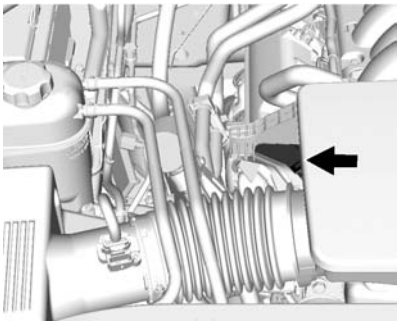

10. Connect the other end of the negative (−) cable to the metal bracket that is bolted to the engine and supports the resonator, on the vehicle with the dead battery.
11. Start the vehicle with the good battery and run the engine for a while.
12. Try to start the vehicle that had the dead battery. If it will not start after a few tries, it probably needs service.

⚠ Caution

If the jumper cables are connected or removed in the wrong order, electrical shorting may occur and damage the vehicle. The repairs would not be covered by the vehicle warranty. Always connect and remove the jumper cables in the correct order, making sure that the cables do not touch each other or other metal.

Jumper Cable Removal

Reverse the sequence exactly when removing the jumper cables.

Towing the Vehicle

⚠ Caution

Incorrectly towing a disabled vehicle may cause damage. The damage would not be covered by the vehicle warranty.

Have the vehicle towed on a flatbed car carrier. A wheel lift tow truck could damage the vehicle.

Consult your dealer or a professional towing service if the disabled vehicle must be towed.

Recreational Vehicle Towing

Recreational vehicle towing means towing the vehicle behind another vehicle, such as a motor home. The two most common types of recreational vehicle towing are dinghy and dolly towing. Dinghy towing is towing the vehicle with all four wheels on the ground.

Dolly towing is towing the vehicle with two wheels on the ground and two wheels on a dolly.

Follow the tow vehicle manufacturer's instructions. See your dealer or trailering professional for additional advice and equipment recommendations.

⚠ Caution

Use of a shield mounted in front of the vehicle grille could restrict airflow and cause damage to the transmission. The repairs would not be covered by the vehicle warranty. If using a shield, only use one that attaches to the towing vehicle.

Dinghy Towing

Two-Wheel-Drive Vehicles

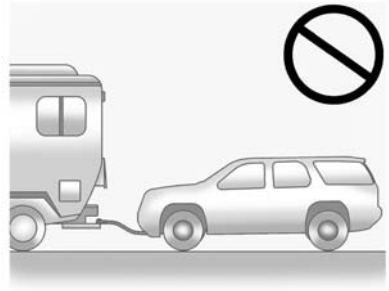

⚠ Caution

If the two-wheel-drive vehicle is towed with all four wheels on the ground, the drivetrain components could be damaged. The repairs would not be covered by the vehicle warranty.

Two-wheel-drive vehicles should not be towed with all four wheels on the ground.

Four-Wheel-Drive Vehicles

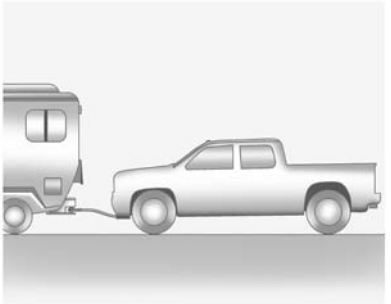

Only dinghy tow four-wheel-drive vehicles with a two-speed transfer case that have an N (Neutral) and a Four-Wheel Drive Low (4 ↓) setting.

⚠ Warning

Shifting a four-wheel-drive vehicle's transfer case into N (Neutral) can cause the vehicle to roll even if the transmission is in P (Park). You or others could be injured. Set the parking brake before shifting the transfer case to N (Neutral).

To dinghy tow:

1. Position the vehicle being towed behind the tow vehicle, facing forward and on a level surface.
2. Securely attach the vehicle being towed to the tow vehicle.
3. Apply the parking brake and start the engine.

   For vehicles with electric parking brakes (EPB), the parking brake cannot be applied and the tires must be chocked.
4. Shift the transfer case to N (Neutral). See “Shifting into N (Neutral)” under *Four-Wheel Drive on page 9-34*. Check that the vehicle is in N (Neutral) by shifting the transmission to R (Reverse) and then to D (Drive). There should be no movement of the vehicle while shifting.
5. Shift the transmission into D (Drive). Turn the engine off. Then shift the transmission into P (Park).
6. Wait for at least 10 seconds, then restart the engine.
7. Shift the transmission to D (Drive), then turn the engine off again.

⚠ Caution

Failure to disconnect the negative battery cable or to have it contact the terminals can cause damage to the vehicle.

8. Disconnect the negative battery cable at the battery and secure the nut and bolt. Cover the negative battery post with a non-conductive material to prevent any contact with the negative battery terminal.
9. Shift the transmission to P (Park).

⚠ Caution

If the steering column is locked, vehicle damage may occur.

10. Move the steering wheel to make sure the steering column is unlocked.
11. With a foot on the brake pedal, release the parking brake.
12. Vehicles with Keyless Access, keep the RKE transmitter outside of the vehicle, and manually lock the doors.

    Access the vehicle the same as dead vehicle/transmitter process (back up key in door lock).

Disconnecting the Towed Vehicle

Before disconnecting the towed vehicle:

1. Park on a level surface.
2. Set the parking brake, then shift the transmission to P (Park).
3. Connect the battery.
4. Apply the brake pedal.
5. Turn the ignition to ON/RUN with the engine off. Shift the transfer case out of N (Neutral) to Two-Wheel Drive High. See “Shifting out of N (Neutral)” under *Four-Wheel Drive on page 9-34*. See your dealer if the transfer case cannot be shifted out of N (Neutral).
6. Check that the vehicle is in Two-Wheel Drive High by shifting the transmission to R (Reverse) and then to D (Drive). There should be movement of the vehicle while shifting.
7. Shift the transmission to P (Park) and turn off the ignition.
8. Disconnect the vehicle from the tow vehicle.
9. Release the parking brake.
10. Reset any lost presets.

    The outside temperature display will default to 0 °C (32 °F) but will reset with normal usage.

Dolly Towing – Front Towing (Front Wheels Off the Ground)

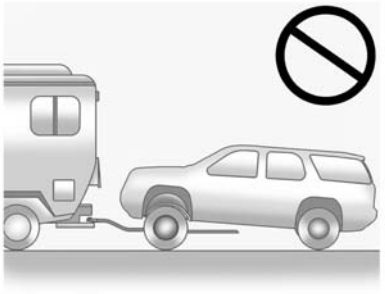

⚠ Caution

If a two-wheel-drive vehicle is towed with the rear wheels on the ground, the transmission could be damaged. The repairs would not be covered by the vehicle warranty. Never tow the vehicle with the rear wheels on the ground.

⚠ Caution

Towing a four-wheel-drive vehicle with all four wheels on the ground, or even with only two of its wheels on the ground, will damage drivetrain components. Do not tow a four-wheel-drive vehicle with any of its wheels on the ground.

This vehicle should not be towed with the rear wheels on the ground.

Dolly Towing – Rear Towing (Rear Wheels Off the Ground) – Four-Wheel-Drive Vehicles

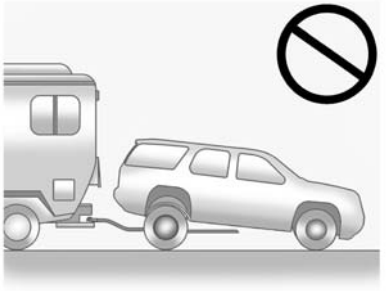

⚠ Caution

Towing a four-wheel-drive vehicle with all four wheels on the ground, or even with only two of its wheels on the ground, will damage drivetrain components. Do not tow a four-wheel-drive vehicle with any of its wheels on the ground.

This vehicle should not be towed with any wheels on the ground.

Dolly Towing – Rear Towing (Rear Wheels Off the Ground) – Two-Wheel-Drive Vehicles

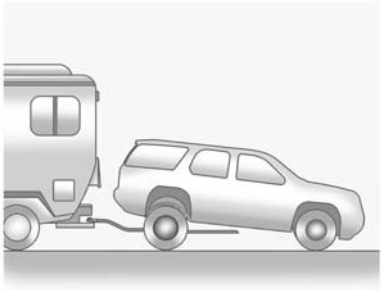

To dolly tow the vehicle from the rear:

1. Attach the dolly to the tow vehicle following the dolly manufacturer's instructions.
2. Drive the rear wheels onto the dolly.
3. Firmly set the parking brake. See *Parking Brake on page 9-39*.
4. Put the transmission in P (Park).
5. Secure the vehicle to the dolly following the manufacturer's instructions.
6. Use an adequate clamping device designed for towing to ensure that the front wheels are locked into the straight position.
7. Turn the ignition to LOCK/OFF.

Appearance Care

Exterior Care

Locks

Locks are lubricated at the factory. Use a de-icing agent only when absolutely necessary, and have the locks greased after using. See *Recommended Fluids and Lubricants on page 11-13*.

Washing the Vehicle

To preserve the vehicle's finish, wash it often and out of direct sunlight.

⚠ Caution

Do not use petroleum-based, acidic, or abrasive cleaning agents as they can damage the vehicle's paint, metal, or plastic parts. If damage occurs, it would not be covered by the vehicle warranty. Approved cleaning

(Continued)

Caution (Continued)

products can be obtained from your dealer. Follow all manufacturer directions regarding correct product usage, necessary safety precautions, and appropriate disposal of any vehicle care product.

⚠ Caution

Avoid using high-pressure washes closer than 30 cm (12 in) to the surface of the vehicle. Use of power washers exceeding 8,274 kPa (1,200 psi) can result in damage or removal of paint and decals.

The symbol is on any underhood compartment electrical center that should not be power washed. This could cause damage that would not be covered by the vehicle warranty.

If using an automatic car wash, follow the car wash instructions. The windshield wiper and rear window wiper, if equipped, must be off. Remove any accessories that may be damaged or interfere with the car wash equipment.

Rinse the vehicle well, before washing and after, to remove all cleaning agents completely. If they are allowed to dry on the surface, they could stain.

Dry the finish with a soft, clean chamois or an all-cotton towel to avoid surface scratches and water spotting.

Finish Care

Application of aftermarket clearcoat sealant/wax materials is not recommended. If painted surfaces are damaged, see your dealer to have the damage assessed and repaired. Foreign materials such as calcium chloride and other salts, ice melting agents, road oil and tar, tree sap, bird droppings, chemicals from industrial chimneys, etc., can damage the vehicle's finish if they remain on painted surfaces. Wash the vehicle as soon as possible. If necessary, use non-abrasive cleaners that are marked safe for painted surfaces to remove foreign matter.

Occasional hand waxing or mild polishing should be done to remove residue from the paint finish. See your dealer for approved cleaning products.

Do not apply waxes or polishes to uncoated plastic, vinyl, rubber, decals, simulated wood, or flat paint as damage can occur.

⚠ Caution

Machine compounding or aggressive polishing on a basecoat/clearcoat paint finish

(Continued)

Caution (Continued)

may damage it. Use only non-abrasive waxes and polishes that are made for a basecoat/clearcoat paint finish on the vehicle.

To keep the paint finish looking new, keep the vehicle garaged or covered whenever possible.

Protecting Exterior Bright Metal Moldings

⚠ Caution

Failure to clean and protect the bright metal moldings can result in a hazy white finish or pitting. This damage would not be covered by the vehicle warranty.

The bright metal moldings on the vehicle are aluminum or stainless steel. To prevent damage always follow these cleaning instructions:

- Be sure the molding is cool to the touch before applying any cleaning solution.
- Use a cleaning solution approved for aluminum or stainless steel. Some cleaners are highly acidic or contain alkaline substances and can damage the moldings.
- Always dilute a concentrated cleaner according to the manufacturer's instructions.
- Do not use chrome cleaners.
- Do not use cleaners that are not intended for automotive use.
- Use a nonabrasive wax on the vehicle after washing to protect and extend the molding finish.

Cleaning Exterior Lamps/Lenses, Emblems, Decals, and Stripes

Use only lukewarm or cold water, a soft cloth, and a car washing soap to clean exterior lamps, lenses, emblems, decals, and stripes. Follow instructions under "Washing the Vehicle" previously in this section.

Lamp covers are made of plastic, and some have a UV protective coating. Do not clean or wipe them when dry.

Do not use any of the following on lamp covers:

- Abrasive or caustic agents.
- Washer fluids and other cleaning agents in higher concentrations than suggested by the manufacturer.
- Solvents, alcohols, fuels, or other harsh cleaners.
- Ice scrapers or other hard items.

- Aftermarket appearance caps or covers while the lamps are illuminated, due to excessive heat generated.

⚠ Caution

Failure to clean lamps properly can cause damage to the lamp cover that would not be covered by the vehicle warranty.

⚠ Caution

Using wax on low gloss black finish stripes can increase the gloss level and create a non-uniform finish. Clean low gloss stripes with soap and water only.

Air Intakes

Clear debris from the air intakes, between the hood and windshield, when washing the vehicle.

Windshield and Wiper Blades

Clean the outside of the windshield with glass cleaner.

Clean rubber blades using a lint-free cloth or paper towel soaked with windshield washer fluid or a mild detergent. Wash the windshield thoroughly when cleaning the blades. Bugs, road grime, sap, and a buildup of vehicle wash/wax treatments may cause wiper streaking.

Replace the wiper blades if they are worn or damaged. Damage can be caused by extreme dusty conditions, sand, salt, heat, sun, snow, and ice.

Weatherstrips

Apply Dielectric silicone grease on weatherstrips to make them last longer, seal better, and not stick or squeak. Lubricate weatherstrips at least once a year. Hot, dry climates may require more frequent application. Black marks from rubber material on painted surfaces can be removed by rubbing with a clean cloth. See *Recommended Fluids and Lubricants on page 11-13*.

Tires

Use a stiff brush with tire cleaner to clean the tires.

⚠ Caution

Using petroleum-based tire dressing products on the vehicle may damage the paint finish and/or tires. When applying a tire dressing, always wipe off any overspray from all painted surfaces on the vehicle.

Wheels and Trim — Aluminum or Chrome

Use a soft, clean cloth with mild soap and water to clean the wheels. After rinsing thoroughly with clean water, dry with a soft, clean towel. A wax may then be applied.

⚠ Caution

Chrome wheels and other chrome trim may be damaged if the vehicle is not washed after driving on roads that have been sprayed with magnesium, calcium, or sodium chloride. These chlorides are used on roads for conditions such as ice and dust. Always wash the chrome with soap and water after exposure.

⚠ Caution

To avoid surface damage, do not use strong soaps, chemicals, abrasive polishes, cleaners, brushes, or cleaners that contain acid on aluminum or chrome-plated wheels. Use only approved cleaners. Also, never drive a vehicle with aluminum or chrome-plated wheels through an

(Continued)

Caution (Continued)

automatic car wash that uses silicone carbide tire cleaning brushes. Damage could occur and the repairs would not be covered by the vehicle warranty.

Brake System

Visually inspect brake lines and hoses for proper hook-up, binding, leaks, cracks, chafing, etc. Inspect disc brake pads for wear and rotors for surface condition. Inspect drum brake linings/shoes for wear or cracks. Inspect other brake parts, including drums, wheel cylinders, calipers, parking brake, master cylinder, brake fluid reservoir, vacuum pipes, electric vacuum pump including bracket and vent hose, if equipped.

Steering, Suspension, and Chassis Components

Visually inspect steering, suspension, and chassis components for damaged, loose, or missing parts or signs of wear at least once a year.

Inspect power steering for proper hook-up, binding, leaks, cracks, chafing, etc.

Visually check constant velocity joint boots and axle seals for leaks.

For 1500 Series vehicles, at least every other oil change lubricate the outer tie rod ends.

Control arm ball joints on 1500 Series vehicles are maintenance-free.

⚠ Caution

Lubrication of applicable Steering/ Suspension points should not be done unless temperature is -12°C (10°F) or higher, or damage could result.

Body Component Lubrication

Lubricate all key lock cylinders, hood hinges, liftgate hinges, steel fuel door hinge and power assist step hinges, unless the components are plastic. Applying silicone grease on weatherstrips with a clean cloth will make them last longer, seal better, and not stick or squeak.

Underbody Maintenance

At least twice a year, spring and fall, use plain water to flush any corrosive materials from the underbody. Take care to thoroughly clean any areas where mud and other debris can collect. If equipped with power running boards, extend them and then use a high pressure wash to clean all joints and gaps.

Sheet Metal Damage

If the vehicle is damaged and requires sheet metal repair or replacement, make sure the body repair shop applies anti-corrosion material to parts repaired or replaced to restore corrosion protection.

Original manufacturer replacement parts will provide the corrosion protection while maintaining the vehicle warranty.

Finish Damage

Quickly repair minor chips and scratches with touch-up materials available from your dealer to avoid corrosion. Larger areas of finish damage can be corrected in your dealer's body and paint shop.

Chemical Paint Spotting

Airborne pollutants can fall upon and attack painted vehicle surfaces causing blotchy, ring-shaped discolorations, and small, irregular dark spots etched into the paint surface. See “Finish Care” previously in this section.

Interior Care

To prevent dirt particle abrasions, regularly clean the vehicle's interior. Immediately remove any soils. Note that newspapers or dark garments that can transfer color to home furnishings can also permanently transfer color to the vehicle's interior.

Use a soft bristle brush to remove dust from knobs and crevices on the instrument cluster. Using a mild soap solution, immediately remove hand lotions, sunscreen, and insect repellent from all interior surfaces or permanent damage may result.

Your dealer may have products for cleaning the interior. Use cleaners specifically designed for the surfaces being cleaned to prevent permanent damage. Apply all cleaners directly to the cleaning cloth. Do not spray cleaners directly on any switches or controls. Cleaners should be removed quickly. Never allow cleaners to remain on the surface being cleaned for extended periods of time.

Cleaners may contain solvents that can become concentrated in the interior. Before using cleaners, read and adhere to all safety instructions on the label. While cleaning the interior, maintain adequate ventilation by opening the doors and windows.

To prevent damage, do not clean the interior using the following cleaners or techniques:

- Never use a razor or any other sharp object to remove a soil from any interior surface.
- Never use a brush with stiff bristles.
- Never rub any surface aggressively or with excessive pressure.
- Do not use laundry detergents or dishwashing soaps with degreasers. For liquid cleaners, use approximately 20 drops per 3.8 L (1 gal) of water.
  A concentrated soap solution will leave a residue that creates streaks and attracts dirt. Do not use solutions that contain strong or caustic soap.
- Do not heavily saturate the upholstery when cleaning.
- Do not use solvents or cleaners containing solvents.

Interior Glass

To clean, use a terry cloth fabric dampened with water. Wipe droplets left behind with a clean dry cloth. Commercial glass cleaners may be used, if necessary, after cleaning the interior glass with plain water.

⚠ Caution

To prevent scratching, never use abrasive cleaners on automotive glass. Abrasive cleaners or aggressive cleaning may damage the rear window defogger.

Cleaning the windshield with water during the first three to six months of ownership will reduce tendency to fog.

Speaker Covers

Vacuum around a speaker cover gently, so that the speaker will not be damaged. Clean spots with just water and mild soap.

Coated Moldings

Coated moldings should be cleaned.

- When lightly soiled, wipe with a sponge or soft lint-free cloth dampened with water.
- When heavily soiled, use warm soapy water.

Fabric/Carpet/Suede

Start by vacuuming the surface using a soft brush attachment. If a rotating brush attachment is being used during vacuuming, only use it on the floor carpet. Before cleaning, gently remove as much of the soil as possible using one of the following techniques:

- Gently blot liquids with a paper towel. Continue blotting until no more soil can be removed.
- For solid soils, remove as much as possible prior to vacuuming.

To clean:

1. Saturate a clean lint-free colorfast cloth with water or club soda. Microfiber cloth is recommended to prevent lint transfer to the fabric or carpet.
2. Remove excess moisture by gently wringing until water does not drip from the cleaning cloth.
3. Start on the outside edge of the soil and gently rub toward the center. Rotate the cleaning cloth to a clean area frequently to prevent forcing the soil in to the fabric.
4. Continue gently rubbing the soiled area until there is no longer any color transfer from the soil to the cleaning cloth.
5. If the soil is not completely removed, use a mild soap solution followed only by club soda or plain water.

If the soil is not completely removed, it may be necessary to use a commercial upholstery cleaner or spot lifter. Test a small hidden area for colorfastness before using a commercial upholstery cleaner or spot lifter. If ring formation occurs, clean the entire fabric or carpet.

Following the cleaning process, a paper towel can be used to blot excess moisture.

Cleaning High Gloss Surfaces and Vehicle Information and Radio Displays

For vehicles with high gloss surfaces or vehicle displays, use a microfiber cloth to wipe surfaces. Before wiping the surface with the microfiber cloth, use a soft bristle brush to remove dirt that could scratch the surface. Then use the microfiber cloth by gently rubbing to clean. Never use window cleaners or solvents. Periodically hand wash the microfiber cloth separately, using mild soap. Do not use bleach or fabric softener. Rinse thoroughly and air dry before next use.

⚠ Caution

Do not attach a device with a suction cup to the display. This may cause damage and would not be covered by the vehicle warranty.

Instrument Panel, Leather, Vinyl, Other Plastic Surfaces, Low Gloss Paint Surfaces and Natural Open Pore Wood Surfaces

Use a soft microfiber cloth dampened with water to remove dust and loose dirt. For a more thorough cleaning, use a soft microfiber cloth dampened with a mild soap solution.

⚠ Caution

Soaking or saturating leather, especially perforated leather, as well as other interior surfaces, may cause permanent damage. Wipe excess moisture from these surfaces after cleaning and allow them to dry naturally. Never use heat, steam, or spot removers. Do not use cleaners that contain silicone or wax-based products. Cleaners containing these

(Continued)

Caution (Continued)

solvents can permanently change the appearance and feel of leather or soft trim, and are not recommended.

Do not use cleaners that increase gloss, especially on the instrument panel. Reflected glare can decrease visibility through the windshield under certain conditions.

⚠ Caution

Use of air fresheners may cause permanent damage to plastics and painted surfaces. If an air freshener comes in contact with any plastic or painted surface in the vehicle, blot immediately and clean with a soft cloth dampened with a mild soap solution. Damage caused by air fresheners would not be covered by the vehicle warranty.

Cargo Cover and Convenience Net

Wash with warm water and mild detergent. Do not use chlorine bleach. Rinse with cold water, and then dry completely.

Care of Safety Belts

Keep belts clean and dry.

⚠ Warning

Do not bleach or dye safety belts. It may severely weaken them. In a crash, they might not be able to provide adequate protection. Clean safety belts only with mild soap and lukewarm water.

Floor Mats

⚠ Warning

If a floor mat is the wrong size or is not properly installed, it can interfere with the pedals. Interference with the pedals can cause unintended acceleration and/or increased stopping distance which can cause a crash and injury. Make sure the floor mat does not interfere with the pedals.

Use the following guidelines for proper floor mat usage:

- The original equipment floor mats were designed for your vehicle. If the floor mats need replacing, it is recommended that GM certified floor mats be purchased. Non-GM floor mats may not fit properly and may interfere with the pedals. Always check that the floor mats do not interfere with the pedals.
- Do not use a floor mat if the vehicle is not equipped with a floor mat retainer on the driver side floor.
- Use the floor mat with the correct side up. Do not turn it over.
- Do not place anything on top of the driver side floor mat.
- Use only a single floor mat on the driver side.
- Do not place one floor mat on top of another.

Removing and Replacing the Floor Mats

Pull up on the rear of the floor mat to unlock each retainer and remove.

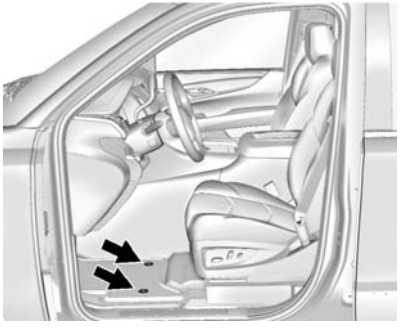

Reinstall by lining up the floor mat retainer openings over the carpet retainers and snapping into position.

Make sure the floor mat is properly secured in place.

Verify the floor mat does not interfere with the pedals.

Service and Maintenance

General Information
General Information 11-1

Cadillac Premium Care Maintenance
Cadillac Premium Care Maintenance 11-3

Maintenance Schedule
Maintenance Schedule 11-4

Special Application Services
Special Application Services 11-9

Additional Maintenance and Care
Additional Maintenance and Care 11-10

Recommended Fluids, Lubricants, and Parts
Recommended Fluids and Lubricants 11-13
Maintenance Replacement Parts 11-15

Maintenance Records
Maintenance Records 11-16

General Information

Your vehicle is an important investment. This section describes the required maintenance for the vehicle. Follow this schedule to help protect against major repair expenses resulting from neglect or inadequate maintenance. It may also help to maintain the value of the vehicle if it is sold. It is the responsibility of the owner to have all required maintenance performed.

Your dealer has trained technicians who can perform required maintenance using genuine replacement parts. They have up-to-date tools and equipment for fast and accurate diagnostics. Many dealers have extended evening and Saturday hours, courtesy transportation, and online scheduling to assist with service needs.

Your dealer recognizes the importance of providing competitively priced maintenance and repair services. With trained technicians, the dealer is the place for routine maintenance such as oil changes and tire rotations and additional maintenance items like tires, brakes, batteries, and wiper blades.

⚠ Caution

Damage caused by improper maintenance can lead to costly repairs and may not be covered by the vehicle warranty. Maintenance intervals, checks, inspections, recommended fluids, and lubricants are important to keep the vehicle in good working condition.

The Tire Rotation and Required Services are the responsibility of the vehicle owner. It is recommended to have your dealer perform these services every 12 000 km/7,500 mi. Proper vehicle maintenance helps to keep the vehicle in good working condition, improves fuel economy, and reduces vehicle emissions.

Because of the way people use vehicles, maintenance needs vary. There may need to be more frequent checks and services. The Additional Required Services - Normal are for vehicles that:

- Carry passengers and cargo within recommended limits on the Tire and Loading Information label. See *Vehicle Load Limits on page 9-14*.
- Are driven on reasonable road surfaces within legal driving limits.
- Use the recommended fuel. See *Fuel on page 9-70*.

Refer to the information in the Maintenance Schedule Additional Required Services - Normal chart.

The Additional Required Services - Severe are for vehicles that are:

- Mainly driven in heavy city traffic in hot weather.
- Mainly driven in hilly or mountainous terrain.
- Frequently towing a trailer.
- Used for high speed or competitive driving.
- Used for taxi, police, or delivery service.

Refer to the information in the Maintenance Schedule Additional Required Services - Severe chart.

⚠ Warning

Performing maintenance work can be dangerous and can cause serious injury. Perform maintenance work only if the required information, proper tools, and equipment are available.
If they are not, see your dealer to have a trained technician do the work. See *Doing Your Own Service Work on page 10-3*.

Cadillac Premium Care Maintenance

Your vehicle comes with the Cadillac Premium Care Maintenance. It is a maintenance program that covers select maintenance services during the first 4 years or 80 000 km (50,000 mi), whichever comes first.

Cadillac Premium Care Maintenance covers routine maintenance services, when scheduled in accordance with the owner manual, including:

- Oil changes based on the vehicle's oil life monitor system.
- Tire rotation every 12 000 km (7,500 mi).
- Engine air cleaner filter replacement.
- Passenger compartment air filter replacement.
- Multi-point vehicle inspection (MPVI) performed by a qualified technician.

Cadillac requires that all Cadillac Premium Care Maintenance services be performed by a Cadillac authorized service dealer.

Maintenance Schedule

Owner Checks and Services

At Each Fuel Stop

- Check the engine oil level. See *Engine Oil on page 10-6*.

Once a Month

- Check the tire inflation pressures. See *Tire Pressure on page 10-45*.
- Inspect the tires for wear. See *Tire Inspection on page 10-51*.
- Check the windshield washer fluid level. See *Washer Fluid on page 10-17*.

Engine Oil Change

When the CHANGE ENGINE OIL SOON message displays, have the engine oil and filter changed within the next 1 000 km/600 mi. If driven under the best conditions, the engine oil life system may not indicate the need for vehicle service for up to a year. The engine oil and filter must be changed at least once a year and the oil life system must be reset. Your trained dealer technician can perform this work. If the engine oil life system is reset accidentally, service the vehicle within 5 000 km/3,000 mi since the last service. Reset the oil life system when the oil is changed. See *Engine Oil Life System on page 10-8*.

Tire Rotation and Required Services Every 12 000 km/ 7,500 mi

Rotate the tires, if recommended for the vehicle, and perform the following services. See *Tire Rotation on page 10-52*.

- Check engine oil level and oil life percentage. If needed, change engine oil and filter, and reset oil life system. See *Engine Oil on page 10-6* and *Engine Oil Life System on page 10-8*.
- Check engine coolant level. See *Engine Coolant on page 10-12*.
- Check windshield washer fluid level. See *Washer Fluid on page 10-17*.

- Visually inspect windshield wiper blades for wear, cracking, or contamination. See *Exterior Care on page 10-79*. Replace worn or damaged wiper blades. See *Wiper Blade Replacement on page 10-24*.
- Check tire inflation pressures. See *Tire Pressure on page 10-45*.
- Inspect tire wear. See *Tire Inspection on page 10-51*.
- Visually check for fluid leaks.
- Inspect engine air cleaner filter. See *Engine Air Cleaner/Filter on page 10-10*.
- Inspect brake system. See *Exterior Care on page 10-79*.
- Visually inspect steering, suspension, and chassis components for damaged, loose, or missing parts or signs of wear. See *Exterior Care on page 10-79*.
- Lubricate the suspension and steering components at least every other oil change (if equipped with grease fittings).
- Check restraint system components. See *Safety System Check on page 3-26*.
- Visually inspect fuel system for damage or leaks.
- Visually inspect exhaust system and nearby heat shields for loose or damaged parts.
- Lubricate body components. See *Exterior Care on page 10-79*.
- Check starter switch. See *Starter Switch Check on page 10-23*.
- Check automatic transmission shift lock control function. See *Automatic Transmission Shift Lock Control Function Check on page 10-24*.
- Check parking brake and automatic transmission park mechanism. See *Park Brake and P (Park) Mechanism Check on page 10-24*.
- Check accelerator pedal for damage, high effort, or binding. Replace if needed.
- Visually inspect gas strut for signs of wear, cracks, or other damage. Check the hold open ability of the strut. See your dealer if service is required.
- Inspect sunroof track and seal, if equipped. See *Sunroof on page 2-28*.
- Verify spare tire key lock operation and lubricate as needed. See *Tire Changing on page 10-61*.

Maintenance Schedule Additional Required Services - Normal	12 000 km/7,500 mi	24 000 km/15,000 mi	36 000 km/22,500 mi	48 000 km/30,000 mi	60 000 km/37,500 mi	72 000 km/45,000 mi	84 000 km/52,500 mi	96 000 km/60,000 mi	108 000 km/67,500 mi	120 000 km/75,000 mi	132 000 km/82,500 mi	144 000 km/90,000 mi	156 000 km/97,500 mi	168 000 km/105,000 mi	180 000 km/112,500 mi	192 000 km/120,000 mi	204 000 km/127,500 mi	216 000 km/135,000 mi	228 000 km/142,500 mi	240 000 km/150,000 mi
Rotate tires and perform Required Services. Check engine oil level and oil life percentage. Change engine oil and filter, if needed.	✓	✓	✓	✓	✓	✓	✓	✓	✓	✓	✓	✓	✓	✓	✓	✓	✓	✓	✓	✓
Replace passenger compartment air filter. (1)			✓			✓			✓			✓			✓			✓		
Inspect evaporative control system. (2)						✓						✓						✓		
Replace engine air cleaner filter. (3)						✓						✓						✓		
Replace spark plugs. Inspect spark plug wires.													✓							
Drain and fill engine cooling system. (4)																				✓
Visually inspect accessory drive belts. (5)																				✓
Replace brake fluid. (6)						✓						✓						✓		

Footnotes — Maintenance Schedule Additional Required Services - Normal

(1) Or every two years, whichever comes first. More frequent replacement may be needed if the vehicle is driven in areas with heavy traffic, areas with poor air quality, or areas with high dust levels. Replacement may also be needed if there is a reduction in air flow, excessive window fogging, or odors.

(2) Check all fuel and vapor lines and hoses for proper hook-up, routing, and condition.

(3) Or every four years, whichever comes first. If driving in dusty conditions, inspect the filter at each oil change or more often as needed.

(4) Or every five years, whichever comes first. See *Cooling System on page 10-11*.

(5) Or every 10 years, whichever comes first. Inspect for fraying, excessive cracking, or damage; replace, if needed.

(6) Or every three years, whichever comes first.

Maintenance Schedule Additional Required Services - Severe	12 000 km/7,500 mi	24 000 km/15,000 mi	36 000 km/22,500 mi	48 000 km/30,000 mi	60 000 km/37,500 mi	72 000 km/45,000 mi	84 000 km/52,500 mi	96 000 km/60,000 mi	108 000 km/67,500 mi	120 000 km/75,000 mi	132 000 km/82,500 mi	144 000 km/90,000 mi	156 000 km/97,500 mi	168 000 km/105,000 mi	180 000 km/112,500 mi	192 000 km/120,000 mi	204 000 km/127,500 mi	216 000 km/135,000 mi	228 000 km/142,500 mi	240 000 km/150,000 mi
Rotate tires and perform Required Services. Check engine oil level and oil life percentage. Change engine oil and filter, if needed.	✓	✓	✓	✓	✓	✓	✓	✓	✓	✓	✓	✓	✓	✓	✓	✓	✓	✓	✓	✓
Replace passenger compartment air filter. (1)			✓			✓			✓			✓			✓			✓		
Inspect evaporative control system. (2)						✓						✓						✓		
Replace engine air cleaner filter. (3)						✓						✓						✓		
Change automatic transmission fluid and filter.						✓						✓						✓		
Change transfer case fluid, if equipped with 4WD. (4)						✓						✓						✓		
Replace spark plugs. Inspect spark plug wires.													✓							
Drain and fill engine cooling system. (5)																				✓
Visually inspect accessory drive belts. (6)																				✓
Replace brake fluid. (7)						✓						✓						✓		

Footnotes — Maintenance Schedule Additional Required Services - Severe

(1) Or every two years, whichever comes first. More frequent replacement may be needed if the vehicle is driven in areas with heavy traffic, areas with poor air quality, or areas with high dust levels. Replacement may also be needed if there is a reduction in air flow, excessive window fogging, or odors.

(2) Check all fuel and vapor lines and hoses for proper hook-up, routing, and condition.

(3) Or every four years, whichever comes first. If driving in dusty conditions, inspect the filter at each oil change or more often as needed.

(4) Do not directly power wash the transfer case output seals. High pressure water can overcome the seals and contaminate the transfer case fluid. Contaminated fluid will decrease the life of the transfer case and should be replaced.

(5) Or every five years, whichever comes first. See *Cooling System on page 10-11*.

(6) Or every 10 years, whichever comes first. Inspect for fraying, excessive cracking, or damage; replace, if needed.

(7) Or every three years, whichever comes first.

Special Application Services

- Severe Commercial Use Vehicles Only: Lubricate chassis components every 5 000 km/ 3,000 mi.
- Have underbody flushing service performed. See "Underbody Maintenance" in *Exterior Care on page 10-79*.

Additional Maintenance and Care

Your vehicle is an important investment and caring for it properly may help to avoid future costly repairs. To maintain vehicle performance, additional maintenance services may be required.

It is recommended that your dealer perform these services — their trained dealer technicians know your vehicle best. Your dealer can also perform a thorough assessment with a multi-point inspection to recommend when your vehicle may need attention.

The following list is intended to explain the services and conditions to look for that may indicate services are required.

Battery

The battery supplies power to start the engine and operate any additional electrical accessories.

- To avoid break-down or failure to start the vehicle, maintain a battery with full cranking power.
- Trained dealer technicians have the diagnostic equipment to test the battery and ensure that the connections and cables are corrosion-free.

Belts

- Belts may need replacing if they squeak or show signs of cracking or splitting.
- Trained dealer technicians have access to tools and equipment to inspect the belts and recommend adjustment or replacement when necessary.

Brakes

Brakes stop the vehicle and are crucial to safe driving.

- Signs of brake wear may include chirping, grinding, or squealing noises, or difficulty stopping.
- Trained dealer technicians have access to tools and equipment to inspect the brakes and recommend quality parts engineered for the vehicle.

Fluids

Proper fluid levels and approved fluids protect the vehicle's systems and components. See *Recommended Fluids and Lubricants on page 11-13* for GM approved fluids.

- Engine oil and windshield washer fluid levels should be checked at every fuel fill.
- Instrument cluster lights may come on to indicate that fluids may be low and need to be filled.

Hoses

Hoses transport fluids and should be regularly inspected to ensure that there are no cracks or leaks. With a multi-point inspection, your dealer can inspect the hoses and advise if replacement is needed.

Lamps

Properly working headlamps, taillamps, and brake lamps are important to see and be seen on the road.

- Signs that the headlamps need attention include dimming, failure to light, cracking, or damage. The brake lamps need to be checked periodically to ensure that they light when braking.
- With a multi-point inspection, your dealer can check the lamps and note any concerns.

Shocks and Struts

Shocks and struts help aid in control for a smoother ride.

- Signs of wear may include steering wheel vibration, bounce/sway while braking, longer stopping distance, or uneven tire wear.
- As part of the multi-point inspection, trained dealer technicians can visually inspect the shocks and struts for signs of leaking, blown seals, or damage, and can advise when service is needed.

Tires

Tires need to be properly inflated, rotated, and balanced. Maintaining the tires can save money and fuel, and can reduce the risk of tire failure.

- Signs that the tires need to be replaced include three or more visible treadwear indicators; cord or fabric showing through the rubber; cracks or cuts in the tread or sidewall; or a bulge or split in the tire.
- Trained dealer technicians can inspect and recommend the right tires. Your dealer can also provide tire/wheel balancing services to ensure smooth vehicle operation at all speeds. Your dealer sells and services name brand tires.

Vehicle Care

To help keep the vehicle looking like new, vehicle care products are available from your dealer. For information on how to clean and protect the vehicle's interior and exterior, see *Interior Care on page 10-84* and *Exterior Care on page 10-79*.

Wheel Alignment

Wheel alignment is critical for ensuring that the tires deliver optimal wear and performance.

- Signs that the alignment may need to be adjusted include pulling, improper vehicle handling, or unusual tire wear.
- Your dealer has the required equipment to ensure proper wheel alignment.

Windshield

For safety, appearance, and the best viewing, keep the windshield clean and clear.

- Signs of damage include scratches, cracks, and chips.
- Trained dealer technicians can inspect the windshield and recommend proper replacement if needed.

Wiper Blades

Wiper blades need to be cleaned and kept in good condition to provide a clear view.

- Signs of wear include streaking, skipping across the windshield, and worn or split rubber.
- Trained dealer technicians can check the wiper blades and replace them when needed.

Recommended Fluids, Lubricants, and Parts

Recommended Fluids and Lubricants

Fluids and lubricants identified below by name, part number, or specification can be obtained from your dealer.

Usage	Fluid/Lubricant
Engine Oil	Use only engine oil meeting the dexos1™ specification of the proper SAE viscosity grade. Look for the dexos1 approved logo for GM approved engine oil. See *Engine Oil on page 10-6*.
Engine Coolant	50/50 mixture of clean, drinkable water and use only DEX-COOL® Coolant. See *Engine Coolant on page 10-12*.
Hydraulic Brake System	DOT 3 Hydraulic Brake Fluid (GM Part No. 19299818, in Canada 19299819).
Windshield Washer	Automotive windshield washer fluid that meets regional freeze protection requirements.
Automatic Transmission (8 Speed)	DEXRON®-HP Automatic Transmission Fluid (GM Part No. 19300536, in Canada 19300537).
Chassis Lubrication	Chassis Lubricant (GM Part No. 12377985, in Canada 88901242) or lubricant meeting requirements of NLGI #2, Category LB or GC-LB.
Front Axle (4WD Only)	SAE 75W-90 Synthetic Axle Lubricant (GM Part No. 88900401, in Canada 89021678).

Usage	Fluid/Lubricant
Rear Axle	SAE 75W-85 Synthetic Axle Lubricant (GM Part No. 19300457, in Canada 19300458).
Transfer Case	DEXRON®-VI Automatic Transmission Fluid.
Key Lock Cylinders, Hood Hinges, Body Door Hinge Pins, Power Assist Steps, Tailgate Hinge, Linkage, and Outer Tailgate Handle Pivot Points, and Fuel Door Hinge	Multi-Purpose Lubricant, Superlube (GM Part No. 12346241, in Canada 10953474).
Weatherstrip Conditioning	Weatherstrip Lubricant (GM Part No. 3634770, in Canada 10953518) or Dielectric Silicone Grease (GM Part No. 12345579, in Canada 10953481).
Weatherstrip Squeaks	Synthetic Grease with Teflon, Superlube (GM Part No. 12371287, in Canada 10953437).

Maintenance Replacement Parts

Replacement parts identified below by name, part number, or specification can be obtained from your dealer.

Part	GM Part Number	ACDelco Part Number
Engine Air Cleaner/Filter	22845992	A3181C
Oil Filter	89017525	PF63
Passenger Compartment Air Filter	22808781	CF188
Spark Plugs	12622441	41–114
Wiper Blades		
Driver Side — 55 cm (21.7 in)	22756331	-
Passenger Side — 55 cm (21.7 in)	22756331	-
Rear — 33 cm (13.0 in)	22956295	-

Maintenance Records

After the scheduled services are performed, record the date, odometer reading, who performed the service, and the type of services performed in the boxes provided. Retain all maintenance receipts.

Date	Odometer Reading	Serviced By	Maintenance Stamp	Services Performed

Technical Data

Vehicle Identification
Vehicle Identification Number (VIN) 12-1
Service Parts Identification Label 12-1

Vehicle Data
Capacities and Specifications 12-2
Engine Drive Belt Routing . . . 12-4

Vehicle Identification

Vehicle Identification Number (VIN)

This legal identifier is in the front corner of the instrument panel, on the left side of the vehicle. It can be seen through the windshield from outside. The VIN also appears on the Vehicle Certification and Service Parts labels and certificates of title and registration.

Engine Identification

The eighth character in the VIN is the engine code. This code identifies the vehicle's engine, specifications, and replacement parts. See “Engine Specifications” under *Capacities and Specifications on page 12-2* for the vehicle's engine code.

Service Parts Identification Label

This label, on the inside of the glove box, has the following information:

- Vehicle Identification Number (VIN).
- Model designation.
- Paint information.
- Production options and special equipment.

Do not remove this label from the vehicle.

Vehicle Data

Capacities and Specifications

The following approximate capacities are given in metric and English conversions. See *Recommended Fluids and Lubricants on page 11-13* for more information.

Application	Capacities	
	Metric	English
Air Conditioning Refrigerant	For the air conditioning system refrigerant type and charge amount, see the refrigerant label under the hood. See your dealer for more information.	
Cooling System	16.5 L	17.4 qt
Engine Oil with Filter	7.6 L	8.0 qt
Fuel Tank		
Short Wheelbase	98.4 L	26.0 gal
Long Wheelbase	119.2 L	31.5 gal
Transfer Case Fluid	1.5 L	1.6 qt
Wheel Nut Torque	190 N•m	140 lb ft
All capacities are approximate. When adding, be sure to fill to the approximate level, as recommended in this manual. Recheck fluid level after filling.		

Engine Specifications

Engine	VIN Code	Spark Plug Gap
6.2L V8	J	0.95–1.10mm (0.037–0.043 in)

Engine Drive Belt Routing

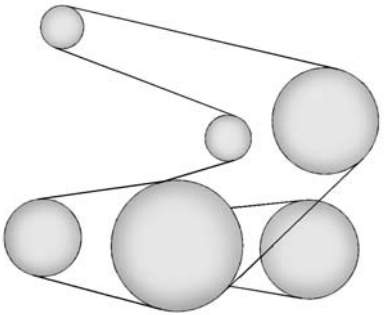

Customer Information

Customer Information
Customer Satisfaction Procedure 13-1
Customer Assistance Offices 13-3
Customer Assistance for Text Telephone (TTY) Users 13-4
Online Owner Center 13-4
Roadside Service 13-5
Scheduling Service Appointments 13-7
Courtesy Transportation Program 13-7
Collision Damage Repair 13-8
Service Publications Ordering Information 13-10
Radio Frequency Identification (RFID) 13-11
Radio Frequency Statement 13-12

Reporting Safety Defects
Reporting Safety Defects to the United States Government 13-12
Reporting Safety Defects to the Canadian Government 13-13
Reporting Safety Defects to General Motors 13-13

Vehicle Data Recording and Privacy
Vehicle Data Recording and Privacy 13-13
Event Data Recorders 13-14
OnStar® 13-15
Infotainment System 13-15

Customer Information

Customer Satisfaction Procedure

Your satisfaction and goodwill are important to your dealer and to Cadillac. Normally, any concerns with the sales transaction or the operation of the vehicle will be resolved by your dealer's sales or service departments. Sometimes, however, despite the best intentions of all concerned, misunderstandings can occur. If your concern has not been resolved to your satisfaction, the following steps should be taken:

STEP ONE: Discuss your concern with a member of dealership management. Normally, concerns can be quickly resolved at that level. If the matter has already been reviewed with the sales, service or parts manager, contact the owner of your dealership or the general manager.

STEP TWO: If after contacting a member of dealership management, it appears your concern cannot be resolved by your dealership without further help, in the U.S., call the Cadillac Customer Assistance Center at 1-800–458–8006. In Canada, call the Canadian Cadillac Customer Care Centre at 1-888-446-2000.

We encourage you to call the toll-free number in order to give your inquiry prompt attention. Have the following information available to give the Customer Assistance representative:

- Vehicle Identification Number (VIN). This is available from the vehicle registration or title, or the plate at the top left of the instrument panel and visible through the windshield.
- Dealership name and location.
- Vehicle delivery date and present mileage.

When contacting Cadillac, remember that your concern will likely be resolved at a dealer's facility. That is why we suggest following Step One first.

STEP THREE — U.S. Owners: Both General Motors and your dealer are committed to making sure you are completely satisfied with the new vehicle. However, if you continue to remain unsatisfied after following the procedure outlined in Steps One and Two, you can file with the Better Business Bureau (BBB) Auto Line® Program to enforce your rights.

The BBB Auto Line Program is an out-of-court program administered by the Council of Better Business Bureaus to settle automotive disputes regarding vehicle repairs or the interpretation of the New Vehicle Limited Warranty. Although you may be required to resort to this informal dispute resolution program prior to filing a court action, use of the program is free of charge and your case will generally be heard within 40 days. If you do not agree with the decision given in your case, you may reject it and proceed with any other venue for relief available to you.

You may contact the BBB Auto Line Program using the toll-free telephone number or write them at the following address:

BBB Auto Line Program
Council of Better Business Bureaus, Inc.
4200 Wilson Boulevard
Suite 800
Arlington, VA 22203-1838

Telephone: 1-800-955-5100
www.dr.bbb.org/goauto

This program is available in all 50 states and the District of Columbia. Eligibility is limited by vehicle age, mileage, and other factors. General Motors reserves the right to change eligibility limitations and/or discontinue its participation in this program.

STEP THREE — Canadian Owners: In the event that you do not feel your concerns have been addressed after following the procedure outlined in Steps One and Two, General Motors of Canada Limited wants you to be aware of its participation in a no-charge mediation/arbitration program. General Motors of Canada Limited has committed to binding arbitration of owner disputes involving factory-related vehicle service claims. The program provides for the review of the facts involved by an impartial third party arbiter, and may include an informal hearing before the arbiter. The program is designed so that the entire dispute settlement process, from the time you file your complaint to the final decision, should be completed in approximately 70 days. We believe our impartial program offers advantages over courts in most jurisdictions because it is informal, quick, and free of charge.

For further information concerning eligibility in the Canadian Motor Vehicle Arbitration Plan (CAMVAP), call toll-free 1-800-207-0685, or call the Cadillac Customer Care Centre, 1-888-446-2000 (English), 1-800-263-7854 (French), or write to:

General Motors Cadillac Customer Care Centre
General Motors of Canada Limited
Mail Code: CA1-163-005
1908 Colonel Sam Drive
Oshawa, Ontario L1H 8P7

The inquiry should be accompanied by the Vehicle Identification Number (VIN).

Customer Assistance Offices

Cadillac encourages customers to call the toll-free number for assistance. However, if a customer wishes to write or e-mail Cadillac, the letter should be addressed to:

United States and Puerto Rico

Cadillac Customer
Assistance Center
Cadillac Motor Car Division
P.O. Box 33169
Detroit, MI 48232-5169
www.Cadillac.com

1-800-458-8006
1-800-833-2622 (For Text Telephone devices (TTYs))
Roadside Service: 1-800-224-1400

From U.S. Virgin Islands:

1-800-496-9994

Canada

General Motors of Canada Limited
Cadillac Customer Care Centre,
Mail Code: CA1-163-005
1908 Colonel Sam Drive
Oshawa, Ontario L1H 8P7
www.gm.ca

1-888-446-2000 (English)
1-800-263-7854 (French)
Roadside Service: 1-800-882-1112

Overseas

Contact the local General Motors Business Unit.

Customer Assistance for Text Telephone (TTY) Users

To assist customers who are deaf, hard of hearing, or speech-impaired and who use Text Telephones (TTYs), Cadillac has TTY equipment available at its Customer Assistance Center. Any TTY user can communicate with Cadillac by dialing: 1-800-833-2622. TTY users in Canada can dial 1-800-263-3830.

Online Owner Center

Online Owner Experience (U.S.) my.cadillac.com

The Cadillac online owner experience allows interaction with Cadillac and keeps important vehicle-specific information in one place.

Membership Benefits

(Vehicle Information): Download owner manuals and view vehicle-specific how-to videos.

(Maintenance Information): View maintenance schedules, alerts, and OnStar onboard vehicle diagnostic information. Schedule service appointments.

(Service History): View printable dealer-recorded service records and self-recorded service records.

(Preferred Dealer Information): Select a dealer and view locations, maps, phone numbers, and hours.

(Warranty Tracking Information): Track your vehicle's warranty information.

(Recall Information): View active recalls or search by Vehicle Identification Number (VIN). See *Vehicle Identification Number (VIN) on page 12-1*.

(Other Account Information): View GM Card, SiriusXM Satellite radio (if equipped), and OnStar account information.

(Live Chat Support): Chat with online help representatives.

See my.cadillac.com to register your vehicle.

Cadillac Owner Centre (Canada) cadillacowner.ca

Visit the Cadillac Owner Centre:

- Chat live with online help representatives.
- Locate owner resources such as lease-end, financing, and warranty information.
- Retrieve favorite articles, quizzes, tips, and multimedia galleries organized into the Featured Articles and Auto Care Sections.
- Download owner manuals.
- Find Cadillac-recommended maintenance services.

Roadside Service

U.S.: 1-800-224-1400.

Canada: 1-800-882-1112.

Text Telephone (TTY) Users (U.S. Only): 1-888-889-2438.

Service is available 24 hours a day, 365 days a year.

Calling for Service

When calling Roadside Service, have the following information ready:

- Your name, home address, and home telephone number.
- Telephone number of your location.
- Location of the vehicle.
- Model, year, color, and license plate number of the vehicle.
- Odometer reading, Vehicle Identification Number (VIN), and delivery date of the vehicle.
- Description of the problem.

Coverage

Services are provided up to 6 years/ 110 000 km (70,000 mi), whichever comes first.

In the U.S., anyone driving the vehicle is covered. In Canada, a person driving the vehicle without permission from the owner is not covered.

Roadside Service is not a part of the New Vehicle Limited Warranty. General Motors North America and Cadillac reserve the right to make any changes or discontinue the Roadside Service program at any time without notification.

General Motors North America and Cadillac reserve the right to limit services or payment to an owner or driver if they decide the claims are made too often, or the same type of claim is made many times.

Cadillac Owner Privileges™

- **Emergency Fuel Delivery:** Delivery of enough fuel for the vehicle to get to the nearest service station.
- **Lock-Out Service:** Service to unlock the vehicle if you are locked out. A remote unlock may be available if you have OnStar. For security reasons, the driver must present identification before this service is given.

- **Emergency Tow from a Public Road or Highway:** Tow to the nearest Cadillac dealer for warranty service, or if the vehicle was in a crash and cannot be driven. Assistance is not given when the vehicle is stuck in the sand, mud, or snow.
- **Flat Tire Change:** Service to change a flat tire with a spare tire. The spare tire, if equipped, must be in good condition and properly inflated. It is your responsibility for the repair or replacement of the tire if it is not covered by the warranty.
- **Battery Jump Start:** Service to jump start a dead battery.
- **Trip Interruption Benefits and Service:** If your trip is interrupted due to a warranty failure, incidental expenses may be reimbursed during the 6 years/110 000 km (70,000 mi) Powertrain warranty period. Items considered are hotel, meals, and rental car.

Cadillac Technician Roadside Service (U.S. Only)

Cadillac's exceptional Roadside Service is more than an auto club or towing service. It provides every Cadillac owner in the United States with the advantage of contacting a Cadillac advisor and, where available, a Cadillac trained dealer technician who can provide on-site service.

A dealer technician will travel to your location within a 30-mile radius of a participating Cadillac dealership. If beyond this radius, we will arrange to have your car towed to the nearest Cadillac dealership. Each technician travels with a specially equipped service vehicle complete with the necessary Cadillac parts and tools required to handle most roadside repairs.

Services Not Included in Roadside Service

- Impound towing caused by violation of any laws.
- Legal fines.
- Mounting, dismounting, or changing of snow tires, chains, or other traction devices.

Service is not provided if a vehicle is in an area that is not accessible to the service vehicle or is not a regularly traveled or maintained public road, which includes ice and winter roads. Off-road use is not covered.

Services Specific to Canadian-Purchased Vehicles

- **Fuel delivery:** Reimbursement is up to 7 liters. Diesel fuel delivery may be restricted. Propane and other fuels are not provided through this service.
- **Lock-Out Service:** Vehicle registration is required.
- **Trip Interruption Benefits and Service:** Pre-authorization, original detailed receipts, and a copy of the repair orders are required. Once authorization has been received, the Roadside

Service advisor will help you make arrangements and explain how to receive payment.

- **Alternative Service:** If assistance cannot be provided right away, the Roadside Service advisor may give you permission to get local emergency road service. You will receive payment, up to $100, after sending the original receipt to Roadside Service. Mechanical failures may be covered, however any cost for parts and labor for repairs not covered by the warranty are the owner responsibility.

Scheduling Service Appointments

When the vehicle requires warranty service, contact your dealer and request an appointment. By scheduling a service appointment and advising the service consultant of your transportation needs, your dealer can help minimize your inconvenience.

If the vehicle cannot be scheduled into the service department immediately, keep driving it until it can be scheduled for service, unless, of course, the problem is safety related. If it is, please call your dealership, let them know this, and ask for instructions.

If your dealer requests you to bring the vehicle for service, you are urged to do so as early in the work day as possible to allow for same-day repair.

Courtesy Transportation Program

To enhance your ownership experience, we and our participating dealers are proud to offer Courtesy Transportation, a customer support program for vehicles with the Bumper-to-Bumper (Base Warranty Coverage period in Canada), extended powertrain, and/or hybrid-specific warranties in both the U.S. and Canada.

Several Courtesy Transportation options are available to assist in reducing inconvenience when warranty repairs are required.

Courtesy Transportation is not a part of the New Vehicle Limited Warranty. A separate booklet entitled “Limited Warranty and Owner Assistance Information” furnished with each new vehicle provides detailed warranty coverage information.

Transportation Options

Warranty service can generally be completed while you wait. However, if you are unable to do so, your dealer may offer the following transportation options:

Shuttle Service

This includes one-way or round-trip shuttle service within reasonable time and distance parameters of your dealer's area.

Public Transportation or Fuel Reimbursement

If overnight warranty repairs are needed, and public transportation is used, the expense must be supported by original receipts and within the maximum amount allowed by GM for shuttle service. If U.S. customers arrange their own transportation, limited reimbursement for reasonable fuel expenses may be available. Claim amounts should reflect actual costs and be supported by original receipts. See your dealer for information.

Courtesy Rental Vehicle

For an overnight warranty repair, the dealer may provide an available courtesy rental vehicle or provide for reimbursement of a rental vehicle. Reimbursement is limited and must be supported by original receipts as well as a signed and completed rental agreement and meet state/provincial, local, and rental vehicle provider requirements. Requirements vary and may include minimum age requirements, insurance coverage, credit card, etc. Additional fees such as fuel usage charges, taxes, levies, usage fees, excessive mileage, or rental usage beyond the completion of the repair are also your responsibility.

It may not be possible to provide a like vehicle as a courtesy rental.

Additional Program Information

All program options, such as shuttle service, may not be available at every dealer. Contact your dealer for specific availability.

General Motors reserves the right to unilaterally modify, change, or discontinue Courtesy Transportation at any time and to resolve all questions of claim eligibility pursuant to the terms and conditions described herein at its sole discretion.

Collision Damage Repair

If the vehicle is involved in a collision and it is damaged, have the damage repaired by a qualified technician using the proper equipment and quality replacement parts. Poorly performed collision repairs diminish the vehicle resale value, and safety performance can be compromised in subsequent collisions.

Collision Parts

Genuine GM Collision parts are new parts made with the same materials and construction methods as the parts with which the vehicle was originally built. Genuine GM Collision parts are the best choice to ensure that the vehicle's designed appearance, durability, and safety are preserved. The use of Genuine GM parts can help maintain the GM New Vehicle Limited Warranty.

Recycled original equipment parts may also be used for repair. These parts are typically removed from

vehicles that were total losses in prior crashes. In most cases, the parts being recycled are from undamaged sections of the vehicle. A recycled original equipment GM part may be an acceptable choice to maintain the vehicle's originally designed appearance and safety performance; however, the history of these parts is not known. Such parts are not covered by the GM New Vehicle Limited Warranty, and any related failures are not covered by that warranty.

Aftermarket collision parts are also available. These are made by companies other than GM and may not have been tested for the vehicle. As a result, these parts may fit poorly, exhibit premature durability/corrosion problems, and may not perform properly in subsequent collisions. Aftermarket parts are not covered by the GM New Vehicle Limited Warranty, and any vehicle failure related to such parts is not covered by that warranty.

Repair Facility

GM also recommends that you choose a collision repair facility that meets your needs before you ever need collision repairs. Your dealer may have a collision repair center with GM-trained technicians and state-of-the-art equipment, or be able to recommend a collision repair center that has GM-trained technicians and comparable equipment.

Insuring the Vehicle

Protect your investment in the GM vehicle with comprehensive and collision insurance coverage. There are significant differences in the quality of coverage afforded by various insurance policy terms. Many insurance policies provide reduced protection to the GM vehicle by limiting compensation for damage repairs by using aftermarket collision parts. Some insurance companies will not specify aftermarket collision parts. When purchasing insurance, we recommend that you ensure that the vehicle will be repaired with GM original equipment collision parts. If such insurance coverage is not available from your current insurance carrier, consider switching to another insurance carrier.

If the vehicle is leased, the leasing company may require you to have insurance that ensures repairs with Genuine GM Original Equipment Manufacturer (OEM) parts or Genuine Manufacturer replacement parts. Read the lease carefully, as you may be charged at the end of the lease for poor quality repairs.

If a Crash Occurs

If there has been an injury, call emergency services for help. Do not leave the scene of a crash until all matters have been taken care of. Move the vehicle only if its position puts you in danger, or you are instructed to move it by a police officer.

Give only the necessary information to police and other parties involved in the crash.

For emergency towing see *Roadside Service on page 13-5*.

Gather the following information:

- Driver name, address, and telephone number.
- Driver license number.
- Owner name, address, and telephone number.
- Vehicle license plate number.
- Vehicle make, model, and model year.
- Vehicle Identification Number (VIN).
- Insurance company and policy number.
- General description of the damage to the other vehicle.

Choose a reputable repair facility that uses quality replacement parts. See “Collision Parts” earlier in this section.

If the airbag has inflated, see *What Will You See after an Airbag Inflates? on page 3-33*.

Managing the Vehicle Damage Repair Process

In the event that the vehicle requires damage repairs, GM recommends that you take an active role in its repair. If you have a pre-determined repair facility of choice, take the vehicle there, or have it towed there. Specify to the facility that any required replacement collision parts be original equipment parts, either new Genuine GM parts or recycled original GM parts. Remember, recycled parts will not be covered by the GM vehicle warranty.

Insurance pays the bill for the repair, but you must live with the repair. Depending on your policy limits, your insurance company may initially value the repair using aftermarket parts. Discuss this with the repair professional, and insist on Genuine GM parts. Remember, if the vehicle is leased, you may be obligated to have the vehicle repaired with Genuine GM parts, even if your insurance coverage does not pay the full cost.

If another party's insurance company is paying for the repairs, you are not obligated to accept a repair valuation based on that insurance company's collision policy repair limits, as you have no contractual limits with that company. In such cases, you can have control of the repair and parts choices as long as the cost stays within reasonable limits.

Service Publications Ordering Information

Service Manuals

Service Manuals have the diagnosis and repair information on the engines, transmission, axle, suspension, brakes, electrical, steering, body, etc.

Service Bulletins

Service Bulletins give additional technical service information needed to knowledgeably service General Motors cars and trucks. Each bulletin contains instructions to assist in the diagnosis and service of the vehicle.

Owner Information

Owner publications are written specifically for owners and intended to provide basic operational information about the vehicle. The Owner Manual includes the Maintenance Schedule for all models.

In-Portfolio: Includes a Portfolio, Owner Manual, and Warranty Manual.

RETAIL SELL PRICE: $35.00 – $40.00 (U.S.) plus handling and shipping fees.

Without Pouch: Owner Manual only.

RETAIL SELL PRICE:
$25.00 (U.S.) plus handling and shipping fees.

Current and Past Models

Technical Service Bulletins and Manuals are available for current and past model GM vehicles.

ORDER TOLL FREE:
1-800-551-4123 Monday – Friday
8:00 AM – 6:00 PM Eastern Time

For Credit Card Orders Only (VISA-MasterCard-Discover), see Helm, Inc. at: www.helminc.com.

Or write to:

Helm, Incorporated
Attention: Customer Service
47911 Halyard Drive
Plymouth, MI 48170

Prices are subject to change without notice and without incurring obligation. Allow ample time for delivery.

All listed prices are quoted in U.S. funds. Make checks payable in U.S. funds.

Radio Frequency Identification (RFID)

RFID technology is used in some vehicles for functions such as tire pressure monitoring and ignition system security, as well as in connection with conveniences such as Remote Keyless Entry (RKE) transmitters for remote door locking/unlocking and starting, and in-vehicle transmitters for garage door openers. RFID technology in GM vehicles does not use or record personal information or link with any other GM system containing personal information.

Radio Frequency Statement

This vehicle has systems that operate on a radio frequency that complies with Part 15/Part 18 of the Federal Communications Commission (FCC) rules and with Industry Canada Standards RSS-GEN/210/216/220/251/310, ICES-001.

Operation is subject to the following two conditions:

1. The device may not cause harmful interference.
2. The device must accept any interference received, including interference that may cause undesired operation of the device.

Changes or modifications to any of these systems by other than an authorized service facility could void authorization to use this equipment.

Reporting Safety Defects

Reporting Safety Defects to the United States Government

If you believe that your vehicle has a defect which could cause a crash or could cause injury or death, you should immediately inform the National Highway Traffic Safety Administration (NHTSA) in addition to notifying General Motors.

If NHTSA receives similar complaints, it may open an investigation, and if it finds that a safety defect exists in a group of vehicles, it may order a recall and remedy campaign.

However, NHTSA cannot become involved in individual problems between you, your dealer, or General Motors.

To contact NHTSA, you may call the Vehicle Safety Hotline toll-free at 1-888-327-4236 (TTY: 1-800-424-9153); go to *http://www.safercar.gov;* or write to:

Administrator, NHTSA
1200 New Jersey Avenue, S.E.
Washington, D.C. 20590

You can also obtain other information about motor vehicle safety from *http://www.safercar.gov*.

Reporting Safety Defects to the Canadian Government

If you live in Canada, and you believe that the vehicle has a safety defect, notify Transport Canada immediately, and notify General Motors of Canada Limited.
Call Transport Canada at 1-800-333-0510 or write to:

Transport Canada
Road Safety Branch
80 rue Noel
Gatineau, QC J8Z 0A1

Reporting Safety Defects to General Motors

In addition to notifying NHTSA (or Transport Canada) in a situation like this, notify General Motors.

Call 1-800-458-8006, or write:

Cadillac Customer
Assistance Center
Cadillac Motor Car Division
P.O. Box 33169
Detroit, MI 48232-5169

In Canada, call 1-888-446-2000, or write:

Canadian Cadillac Customer Care
Centre, Mail Code: CA1-163-005
General Motors of Canada Limited
1908 Colonel Sam Drive
Oshawa, Onatario L1H 8P7

Vehicle Data Recording and Privacy

The vehicle has a number of computers that record information about the vehicle's performance and how it is driven. For example, the vehicle uses computer modules to monitor and control engine and transmission performance, to monitor the conditions for airbag deployment and deploy them in a crash, and, if equipped, to provide antilock braking to help the driver control the vehicle. These modules may store data to help the dealer technician service the vehicle. Some modules may also store data about how the vehicle is operated, such as rate of fuel consumption or average speed. These modules may retain personal preferences, such as radio presets, seat positions, and temperature settings.

Event Data Recorders

This vehicle is equipped with an event data recorder (EDR). The main purpose of an EDR is to record, in certain crash or near crash-like situations, such as an air bag deployment or hitting a road obstacle, data that will assist in understanding how a vehicle's systems performed. The EDR is designed to record data related to vehicle dynamics and safety systems for a short period of time, typically 30 seconds or less. The EDR in this vehicle is designed to record such data as:

- How various systems in your vehicle were operating;
- Whether or not the driver and passenger safety belts were buckled/fastened;
- How far (if at all) the driver was depressing the accelerator and/or brake pedal; and,
- How fast the vehicle was traveling.

These data can help provide a better understanding of the circumstances in which crashes and injuries occur. NOTE: EDR data are recorded by your vehicle only if a non-trivial crash situation occurs; no data are recorded by the EDR under normal driving conditions and no personal data (e.g., name, gender, age, and crash location) are recorded. However, other parties, such as law enforcement, could combine the EDR data with the type of personally identifying data routinely acquired during a crash investigation.

To read data recorded by an EDR, special equipment is required, and access to the vehicle or the EDR is needed. In addition to the vehicle manufacturer, other parties, such as law enforcement, that have the special equipment, can read the information if they have access to the vehicle or the EDR.

GM will not access this data or share it with others except: with the consent of the vehicle owner or, if the vehicle is leased, with the consent of the lessee; in response to an official request by police or similar government office; as part of GM's defense of litigation through the discovery process; or, as required by law. Data that GM collects or receives may also be used for GM research needs or may be made available to others for research purposes, where a need is shown and the data is not tied to a specific vehicle or vehicle owner.

OnStar®

If the vehicle is equipped with OnStar® and has an active subscription, additional data may be collected through the OnStar system. This includes information about the vehicle's operation; collisions involving the vehicle; the use of the vehicle and its features; and, in certain situations, the location and approximate GPS speed of the vehicle. Refer to the OnStar Terms and Conditions and Privacy Statement on the OnStar website.

See *OnStar Additional Information on page 14-6*.

Infotainment System

Using the navigation system may result in the storage of destinations, addresses, telephone numbers, and other trip information. See the infotainment manual for information on stored data and for deletion instructions.

✍ NOTES

OnStar

OnStar Overview
OnStar Overview 14-1

OnStar Services
Emergency 14-2
Security 14-3
Navigation 14-3
Connections 14-4
Vehicle Diagnostics 14-6

OnStar Additional Information
OnStar Additional Information 14-6

OnStar Overview

Voice Command Button

Blue OnStar Button

Emergency Button

This vehicle may be equipped with a comprehensive, in-vehicle system that can connect to a live OnStar Advisor for Emergency, Security, Navigation, Connection, and Diagnostic Services. OnStar services may require a paid subscription. OnStar requires the vehicle battery and electrical system, cellular service, and GPS satellite signals to be available and operating. OnStar acts as a link to existing public emergency service providers. OnStar may collect information about you and your vehicle, including location information. See OnStar's Terms and Conditions and Privacy Statement for more details including system limitations at www.onstar.com (U.S.) or www.onstar.ca (Canada).

The OnStar system status light is next to the OnStar buttons. If the status light is:

- Solid Green: System is on.
- Flashing Green: On a call.
- Red: Indicates a problem.
- Off: System is off. Press twice to speak with an OnStar Advisor.

Press or call 1-888-4-ONSTAR (1-888-466-7827) to speak to an Advisor.

Press to:

- Make a call, end a call, or answer an incoming call.
- Give OnStar Hands-Free Calling voice commands.
- Give OnStar Turn-by-Turn Navigation voice commands. Requires a specific OnStar subscription plan.
- Obtain the WiFi network name, or Service Set Identifier or SSID, and passphrase (if equipped).

Press On to connect to a live Advisor to:

- Verify account information or update contact information.
- Get driving directions. Requires a specific OnStar subscription plan.
- Receive On-Demand Diagnostics for a check of the vehicle's key operating systems.
- Receive Roadside Assistance.
- Manage WiFi Settings (if equipped).

Press SOS to get a priority connection to an OnStar Emergency Advisor available 24/7 to:

- Get help for an emergency.
- Be a Good Samaritan or respond to an AMBER Alert.
- Get assistance in severe weather or other crisis and evacuation routes.

OnStar Services

Emergency

With Automatic Crash Response, the OnStar system can automatically connect to an OnStar Emergency Advisor. The built-in system can automatically connect to help in certain crashes.

Press SOS to connect to an OnStar Emergency Advisor. GPS technology is used to identify the vehicle location and can provide important information to emergency personnel. OnStar Emergency Advisors are trained to provide assistance and link to existing public emergency service providers in emergency situations.

With OnStar Crisis Assist, specially trained Crisis Advisors are available 24 hours a day, 7 days a week, to provide a central point of contact, assistance, and information if a crisis occurs.

Security

OnStar provides services including Stolen Vehicle Assistance, Remote Ignition Block, and Roadside Assistance, if equipped. OnStar can unlock the vehicle doors remotely, if equipped with automatic door locks, and can help police locate the vehicle if it is stolen.

Navigation

OnStar navigation requires a specific OnStar subscription plan.

Press On to receive directions or have them sent to the vehicle navigation screen, if equipped. Destinations can also be forwarded to the vehicle from MapQuest.com.

Turn-by-Turn Navigation

1. Press On to connect to a live Advisor.
2. Request directions.
3. Directions are downloaded to the vehicle.
4. Follow the voice-guided commands.

Using Voice Commands During a Planned Route

Cancel Route

1. Press . System responds: “OnStar ready,” then a tone. Say “Cancel route.” System responds: “Do you want to cancel directions?”
2. Say “Yes.” System responds: “OK, request completed, thank you, goodbye.”

Route Preview

1. Press . System responds: “OnStar ready,” then a tone.
2. Say “Route preview.” System responds with the next three maneuvers.

Repeat

1. Press . System responds: “OnStar ready,” then a tone.
2. Say “Repeat.” System responds with the last direction given, then responds with “OnStar ready,” then a tone.

Get My Destination

1. Press . System responds: “OnStar ready,” then a tone.
2. Say “Get my destination.” System responds with the address and the distance to the destination, then responds with “OnStar ready,” then a tone.

Other Navigation Services Available from OnStar

OnStar eNav: Subscribers can send destinations from MapQuest.com to the vehicle Turn-by-Turn Navigation or screen-based navigation system (if equipped). When ready, the directions will be downloaded to the vehicle.

Destination Download: Press On, then request the Advisor to download directions to the navigation system in the vehicle (if equipped). After the call ends, press the “Go” button on the navigation screen to begin driving directions.

If directions are downloaded to the navigation system, the route can only be canceled through the navigation system.

Destinations can also be downloaded on the go. For information about eNav or Destination Download, see www.onstar.com (U.S.) or www.onstar.ca (Canada).

Connections

The required specific Onstar subscription plan includes the services that follow to help customers stay connected.

For coverage maps, see www.onstar.com (U.S.) or www.onstar.ca (Canada).

WiFi Connectivity (If Equipped)

The vehicle has a WiFi hotspot that provides a high-speed, wireless Internet connection to connect multiple mobile devices (data plan required).

1. To retrieve WiFi hotspot information, press and select or say “WiFi settings.”
2. The WiFi settings will display the WiFi network name/SSID, passphrase, and level of encryption.
3. To change the SSID or passphrase, press On or call 1-888-4-ONSTAR to connect with an Advisor.

OnStar RemoteLink® Mobile App (If Equipped)

Download the OnStar RemoteLink mobile app to select Apple®, Android™, and BlackBerry® or Windows 7 or 8 mobile devices. From the mobile device, check the vehicle’s fuel level, oil life, or tire pressure (if the vehicle is equipped with the tire pressure monitoring system); or activate remote horn and lights. Also remote start the vehicle (if factory equipped) or unlock the doors from anywhere with a wireless connection (if equipped with automatic locks). With a required specific OnStar subscription plan, a destination can be sent to the vehicle. For OnStar RemoteLink information and compatibility, see www.onstar.com (U.S.) or www.onstar.ca (Canada).

OnStar RemoteLink® Key Fob Services

This feature is included for five years and allows for remote door lock/unlock (if equipped with automatic locks), remote start (if factory equipped), or activation of horn and lights from anywhere with a wireless signal. Download the app and start using it any time during the trial period to get started.

OnStar Hands-Free Calling

This service allows calls to be made and received from the vehicle.

To Make a Call

1. Press . System responds: “OnStar ready.”
2. Say “Call.” System responds: “Call. Please say the name or number to call.”
3. Say the entire number without pausing, including a “1” and the area code. System responds: “OK, calling.”

Calling 911 Emergency

1. Press . System responds: “OnStar ready,” followed by a tone.
2. Say “Call.” System responds: “Call. Please say the name or number to call.”
3. Say “911” without pausing. System responds: “911.”
4. Say “Call.” System responds: “OK, dialing 911.”

Retrieve My Number

1. Press . System responds: “OnStar ready.”
2. Say “My number.” System responds: “Your OnStar Hands-Free Calling number is,” then says the number.

End a Call

Press . System responds: “Call ended.”

Store a Name Tag for Speed Dialing

1. Press . System responds: “OnStar ready.”
2. Say “Store.” System responds: “Please say the number you would like to store.”
3. Say the entire number without pausing. System responds: “Please say the name tag.”
4. Pick a name tag. System responds: “About to store <name tag>. Does that sound OK?”
5. Say “Yes” or say “No” to try again. System responds: “OK, storing <name tag>.”

Place a Call Using a Stored Number

1. Press . System responds: “OnStar ready.”
2. Say “Call <name tag>.” System responds: “OK, calling <name tag>.”

Verify Minutes and Expiration

Press and say “Minutes” then “Verify” to check how many minutes remain and their expiration date.

Vehicle Diagnostics

OnStar Vehicle Diagnostics can perform a vehicle check every month. It will check the engine, transmission, antilock brakes, and other major vehicle systems. It also checks the tire pressures, if the vehicle is equipped with the Tire Pressure Monitoring System. If an On-Demand Diagnostics check is needed, press On, and an Advisor can run a check.

OnStar Additional Information

Transferring Service

Press On to request account transfer eligibility information. The Advisor can assist in canceling or removing account information.

Selling/Transferring the Vehicle

Call 1-888-4-ONSTAR immediately to terminate your OnStar services if the vehicle is disposed of, sold, transferred, or if the lease ends.

Reactivation for Subsequent Owners

Press On and follow the prompts to speak to an Advisor as soon as possible. The Advisor will update vehicle records and explain the OnStar service options available.

How OnStar Service Works

Automatic Crash Response, Emergency Services, Crisis Assist, Stolen Vehicle Assistance, Vehicle Diagnostics, Remote Door Unlock, Roadside Assistance, Turn-by-Turn Navigation, and Hands-Free Calling are available on most vehicles. Not all OnStar services are available everywhere or on all vehicles. For more information, a full description of OnStar services, system limitations, and OnStar terms and conditions:

- Call 1-888-4-ONSTAR (1-888-466-7827).
- See www.onstar.com (U.S.).
- See www.onstar.ca (Canada).
- Call TTY 1-877-248-2080.
- Press On to speak with an Advisor.

OnStar services cannot work unless the vehicle is in a place where OnStar has an agreement with a wireless service provider for service

in that area. The wireless service provider must also have coverage, network capacity, reception, and technology compatible with OnStar services. Service involving location information about the vehicle cannot work unless GPS signals are available, unobstructed, and compatible with the OnStar hardware. OnStar services may not work if the OnStar equipment is not properly installed or it has not been properly maintained. If equipment or software is added, connected, or modified, OnStar services may not work. Other problems beyond the control of OnStar may prevent service such as hills, tall buildings, tunnels, weather, electrical system design and architecture of the vehicle, damage to the vehicle in a crash, or wireless phone network congestion or jamming.

See *Radio Frequency Statement on page 13-12*.

Services for People with Disabilities

Advisors provide services to help subscribers with physical disabilities and medical conditions.

Press On for help with:

- Locating a gas station with an attendant to pump gas.
- Finding a hotel, restaurant, etc., that meets accessibility needs.
- Providing directions to the closest hospital or pharmacy in urgent situations.

TTY Users

OnStar has the ability to communicate to deaf, hard-of-hearing, or speech-impaired customers while in the vehicle. The available dealer-installed TTY system can provide in-vehicle access to all of the OnStar services, except Virtual Advisor and OnStar Turn-by-Turn Navigation.

OnStar Personal Identification Number (PIN)

A PIN is needed to access some of the OnStar services, like Remote Door Unlock and Stolen Vehicle Assistance. The PIN will need to be changed the first time when speaking with an Advisor. To change the OnStar PIN, contact an OnStar Advisor by pressing On or calling 1-888-4-ONSTAR.

Warranty

OnStar equipment may be warranted as part of the vehicle warranty.

Languages

The vehicle can be programmed to respond in multiple languages. Press On and ask for an Advisor. Advisors are available in English, Spanish, and French. Available languages may vary by country.

Potential Issues

OnStar cannot perform Remote Door Unlock or Stolen Vehicle Assistance after the vehicle has been off continuously for five days. After five days, OnStar can contact Roadside Assistance and a locksmith to help gain access to the vehicle.

Global Positioning System (GPS)

- Obstruction of the GPS can occur in a large city with tall buildings; in parking garages; around airports; in tunnels, underpasses; or in an area with very dense trees. If GPS signals are not available, the OnStar system should still operate to call OnStar. However, OnStar could have difficulty identifying the exact location.
- In emergency situations, OnStar can use the last stored GPS location to send to emergency responders.

A temporary loss of GPS can cause loss of the ability to send a Turn-by-Turn Navigation route. The Advisor may give a verbal route or may ask for a call back after the vehicle is driven into an open area.

Cellular and GPS Antennas

Do not place items over or near the antenna to prevent blocking cellular and GPS signal reception. Cellular reception is required for OnStar to send remote signals to the vehicle.

Unable to Connect to OnStar Message

If there is limited cellular coverage or the cellular network has reached maximum capacity, this message may come on. Press on to try the call again or try again after driving a few miles into another cellular area.

Vehicle and Power Issues

OnStar services require a vehicle electrical system, wireless service, and GPS satellite technologies to be available and operating for features to function properly. These systems may not operate if the battery is discharged or disconnected.

Add-on Electrical Equipment

The OnStar system is integrated into the electrical architecture of the vehicle. Do not add any electrical equipment. See *Add-On Electrical Equipment on page 9-84*. Added electrical equipment may interfere with the operation of the OnStar system and cause it to not operate.

Privacy

The complete OnStar Privacy Statement may be found at www.onstar.com (U.S.), or www.onstar.ca (Canada). We recommend that you review it. If you have any questions, call 1-888-4-ONSTAR (1-888-466-7827) or press on to speak with an Advisor. Users of wireless communications are cautioned that the privacy of any information sent via wireless cellular communications cannot be assured.

Third parties may unlawfully intercept or access transmissions and private communications without consent.

OnStar - software acknowledgements

Certain OnStar components include libcurl and unzip software and other third party software. Below are the notices and licenses associated with libcurl and unzip and for other third party software please see http://www.lg.com/global/support/opensource/index and https://www.onstar.com/web/portal/getdocuments

libcurl:

COPYRIGHT AND PERMISSION NOTICE

Copyright (c) 1996 - 2010, Daniel Stenberg, <daniel@haxx.se>.

All rights reserved.

Permission to use, copy, modify, and distribute this software for any purpose with or without fee is hereby granted, provided that the above copyright notice and this permission notice appear in all copies.

THE SOFTWARE IS PROVIDED "AS IS," WITHOUT WARRANTY OF ANY KIND, EXPRESS OR IMPLIED, INCLUDING BUT NOT LIMITED TO THE WARRANTIES OF MERCHANTABILITY, FITNESS FOR A PARTICULAR PURPOSE AND NONINFRINGEMENT OF THIRD PARTY RIGHTS. IN NO EVENT SHALL THE AUTHORS OR COPYRIGHT HOLDERS BE LIABLE FOR ANY CLAIM, DAMAGES OR OTHER LIABILITY, WHETHER IN AN ACTION OF CONTRACT, TORT OR OTHERWISE, ARISING FROM, OUT OF OR IN CONNECTION WITH THE SOFTWARE OR THE USE OR OTHER DEALINGS IN THE SOFTWARE.

Except as contained in this notice, the name of a copyright holder shall not be used in advertising or otherwise to promote the sale, use or other dealings in this Software without prior written authorization of the copyright holder.

unzip:

This is version 2005-Feb-10 of the Info-ZIP copyright and license. The definitive version of this document should be available at ftp://ftp.info-zip.org/pub/infozip/license.html indefinitely.

Copyright (c) 1990-2005 Info-ZIP. All rights reserved.

For the purposes of this copyright and license, "Info-ZIP" is defined as the following set of individuals:

Mark Adler, John Bush, Karl Davis, Harald Denker, Jean-Michel Dubois, Jean-loup Gailly, Hunter Goatley, Ed Gordon, Ian Gorman, Chris Herborth, Dirk Haase, Greg Hartwig, Robert Heath, Jonathan Hudson, Paul Kienitz, David Kirschbaum, Johnny Lee, Onno van der Linden, Igor Mandrichenko, Steve P. Miller, Sergio Monesi, Keith Owens, George Petrov, Greg Roelofs,

Kai Uwe Rommel, Steve Salisbury, Dave Smith, Steven M. Schweda, Christian Spieler, Cosmin Truta, Antoine Verheijen, Paul von Behren, Rich Wales, Mike White.

This software is provided “as is,” without warranty of any kind, express or implied. In no event shall Info-ZIP or its contributors be held liable for any direct, indirect, incidental, special or consequential damages arising out of the use of or inability to use this software.

Permission is granted to anyone to use this software for any purpose, including commercial applications, and to alter it and redistribute it freely, subject to the following restrictions:

1. Redistributions of source code must retain the above copyright notice, definition, disclaimer, and this list of conditions.
2. Redistributions in binary form (compiled executables) must reproduce the above copyright notice, definition, disclaimer, and this list of conditions in documentation and/or other materials provided with the distribution. The sole exception to this condition is redistribution of a standard UnZipSFX binary (including SFXWiz) as part of a self-extracting archive; that is permitted without inclusion of this license, as long as the normal SFX banner has not been removed from the binary or disabled.
3. Altered versions–including, but not limited to, ports to new operating systems, existing ports with new graphical interfaces, and dynamic, shared, or static library versions–must be plainly marked as such and must not be misrepresented as being the original source. Such altered versions also must not be misrepresented as being Info-ZIP releases–including, but not limited to, labeling of the altered versions with the names “Info-ZIP” (or any variation thereof, including, but not limited to, different capitalizations), “Pocket UnZip,” “WiZ” or “MacZip” without the explicit permission of Info-ZIP. Such altered versions are further prohibited from misrepresentative use of the Zip-Bugs or Info-ZIP e-mail addresses or of the Info-ZIP URL(s).
4. Info-ZIP retains the right to use the names “Info-ZIP,” “Zip,” “UnZip,” “UnZipSFX,” “WiZ,” “Pocket UnZip,” “Pocket Zip,” and “MacZip” for its own source and binary releases.

A

Accessories and Modifications 10-3
Accessory Power 9-24
Active Emergency Braking System 1-21, 9-64
Active Fuel Management® 9-27
Adaptive Cruise Control 9-48
Add-On Electrical Equipment 9-84
Additional Information OnStar® 14-6
Additional Maintenance and Care 11-10
Adjustable Throttle and Brake Pedal 9-19
Adjustments
Lumbar, Front Seats 3-5
Air Cleaner/Filter, Engine 10-10
Air Filter, Passenger Compartment 8-8
Air Vents 8-8
Airbag System
Check 3-40
How Does an Airbag Restrain? 3-32
Passenger Sensing System 3-34
What Makes an Airbag Inflate? 3-32
What Will You See after an Airbag Inflates? 3-33
When Should an Airbag Inflate? 3-31
Where Are the Airbags? 3-29
Airbags
Adding Equipment to the Vehicle 3-39
Passenger Status Indicator . . . 5-17
Readiness Light 5-16
Servicing Airbag-Equipped Vehicles 3-38
System Check 3-27
Alarm
Vehicle Security 2-19
Alert
Lane Change 9-66
Side Blind Zone (SBZA) 9-66
All-Season Tires 10-39
All-Terrain Tires 10-40
Antilock Brake System (ABS) 9-38
Warning Light 5-22
Appearance Care
Exterior 10-79
Interior 10-84
Armrest Storage 4-3
Ashtrays 5-9
Assistance Systems for Driving 9-62
Assistance Systems for Parking and Backing 9-56
Automatic
Door Locks 2-13
Headlamp System 6-4
Level Control 9-44
Transmission 9-28
Transmission Fluid 10-10
Automatic Transmission
Manual Mode 9-31
Shift Lock Control Function Check 10-24
Axle, Front 10-22
Axle, Rear 10-22

B

Battery
Load Management 6-9
Power Protection 6-9
Voltage and Charging
Messages 5-34
Battery - North
America 10-21, 10-71
Blade Replacement, Wiper . . . 10-24
Brake
Parking, Electric 9-39
Pedal and Adjustable
Throttle 9-19
System Warning Light 5-21
Brakes 10-18
Antilock 9-38
Assist 9-41
Fluid 10-19
Parking 9-39
System Messages 5-35
Braking 9-3
Braking System
Active Emergency 1-21
Break-In, New Vehicle 9-19
Bulb Replacement 10-27
Headlamp Aiming 10-26
Headlamps 10-26
License Plate Lamps 10-26
Buying New Tires 10-54

C

Cadillac Premium Care
Maintenance 11-3
Calibration 5-6
California
Fuel Requirements 9-71
Perchlorate Materials
Requirements 10-2
California
Proposition
65 Warning 10-2,
10-21, 10-71
Canadian Vehicle Owners iii
Capacities and
Specifications 12-2
Carbon Monoxide
Engine Exhaust 9-27
Liftgate 2-14
Winter Driving 9-11
Cargo
Cover 4-3
Cautions, Danger, and
Warnings iv
Center Console Storage 4-3
Chains, Tire 10-59
Charging System Light 5-18
Check
Engine Light 5-18
Child Restraints
Infants and Young
Children 3-43
Lower Anchors and
Tethers for Children 3-48
Older Children 3-41
Securing 3-57, 3-59
Systems 3-45
Child-View Mirror 2-25
Cigarette Lighter 5-9
Cleaning
Exterior Care 10-79
Interior Care 10-84
Climate Control Systems
Dual Automatic 8-1
Rear 8-6
Clock 5-6

Cluster, Instrument 5-11
Collision Damage Repair 13-8
Compartments
  Storage 4-1
Compass 5-6
  Messages 5-35
Connections
  OnStar® 14-4
Control
  Traction and Electronic
    Stability 9-42
Control of a Vehicle 9-3
Convex Mirrors 2-23
Coolant
  Engine 10-12
  Engine Temperature
    Gauge 5-15
  Engine Temperature
    Warning Light 5-24
Cooling System 10-11
  Engine Messages 5-37
Cornering Lamps 6-7
Courtesy Transportation
  Program 13-7
Cover
  Cargo 4-3
Cruise Control 9-45
  Light 5-27
  Messages 5-35
Cruise Control, Active 9-48
Cupholders 4-2
Customer Assistance 13-4
  Offices 13-3
  Text Telephone (TTY)
    Users 13-4
Customer Information
  Service Publications
    Ordering Information 13-10
Customer Satisfaction
  Procedure 13-1

D

Damage Repair, Collision 13-8
Danger, Warnings, and
  Cautions iv
Data Recorders, Event 13-14
Daytime Running
  Lamps (DRL) 6-4
Defensive Driving 9-3
Delayed Locking 2-13
Distracted Driving 9-2
Dome Lamps 6-7
Door
  Ajar Light 5-27
  Ajar Messages 5-36
  Delayed Locking 2-13
  Locks 2-11
  Power Locks 2-12
Drive Belt Routing, Engine 12-4
Driver Assistance Systems 9-56
Driver Information
  Center (DIC) 5-27
Driving
  Assistance Systems 9-62
  Characteristics and
    Towing Tips 9-74
  Defensive 9-3
  Drunk 9-3
  For Better Fuel Economy 1-24
  Hill and Mountain Roads 9-11
  If the Vehicle is Stuck 9-13
  Loss of Control 9-5
  Off-Road 9-5
  Off-Road Recovery 9-4

Driving (cont'd)
Vehicle Load Limits 9-14
Wet Roads 9-10
Winter 9-11
Dual Automatic Climate
Control System 8-1

E

Electric Parking Brake 9-39
Electric Parking Brake Light ... 5-21
Electrical Equipment,
Add-On 9-84
Electrical System
Engine Compartment
Fuse Block 10-28
Fuses 10-28
Instrument Panel
Fuse Block 10-31, 10-34
Overload 10-27
Rear Compartment Fuse
Block 10-37
Emergency
OnStar® 14-2
Engine
Air Cleaner/Filter 10-10
Check and Service Engine
Soon Light 5-18
Compartment Overview 10-5
Coolant 10-12
Coolant Temperature
Gauge 5-15
Coolant Temperature
Warning Light 5-24
Cooling System 10-11
Cooling System Messages ...5-37
Drive Belt Routing 12-4
Exhaust 9-27
Fan 10-17
Heater 9-23
Oil Life System 10-8
Oil Messages 5-37
Overheating 10-15
Power Messages 5-38
Pressure Light 5-25
Running While Parked 9-28
Starting 9-22
Entry Lighting 6-8
Equipment, Towing 9-81
Event Data Recorders 13-14
Exit Lighting 6-9
Extender, Safety Belt 3-26
Exterior Lamp Controls 6-1
Exterior Lamps Off Reminder ... 6-3

F

Fan
Engine 10-17
Features
Memory 1-10
Filter,
Engine Air Cleaner 10-10
Flash-to-Pass 6-4
Flashers, Hazard Warning 6-6
Flat Tire 10-59
Changing 10-61
Floor Mats 10-88
Fluid
Automatic Transmission 10-10
Brakes 10-19
Four-Wheel Drive
Transfer Case 9-34
Washer 10-17
Folding Mirrors 2-24
Forward Collision Alert
(FCA) System 9-62

Four-Wheel Drive 9-34, 10-21
Frequency Statement
Radio 13-12
Front Axle 10-22
Front Seats
Adjustment 3-3
Heated and Cooled 3-9
Fuel 9-70
Additives 9-71
Economy Driving 1-24
Filling a Portable Fuel
Container 9-73
Filling the Tank 9-71
Foreign Countries 9-71
Gauge 5-14
Low Fuel Warning Light 5-26
Management, Active 9-27
Requirements, California 9-71
System Messages 5-38
Full-Size Spare Tire 10-70
Fuses 10-28
Engine Compartment
Fuse Block 10-28
Instrument Panel
Fuse Block 10-31, 10-34
Rear Compartment Fuse
Block 10-37

G

Garage Door Opener 5-55
Programming 5-55
Gauges
Engine Coolant
Temperature 5-15
Fuel 5-14
Odometer 5-14
Speedometer 5-14
Tachometer 5-14
Trip Odometer 5-14
Warning Lights and
Indicators 5-10
General Information
Service and Maintenance 11-1
Towing 9-74
Vehicle Care 10-2
Glass Replacement 10-25
Glove Box 4-2

H

Hazard Warning Flashers 6-6
Head Restraints 3-2
Head-up Display 5-30
Headlamps
Aiming 10-26
Automatic 6-4
Bulb Replacement 10-26
Daytime Running
Lamps (DRL) 6-4
Flash-to-Pass 6-4
High-Beam On Light 5-26
High/Low Beam Changer 6-4
Lamps On Reminder 5-26
Heated
Rear Seats 3-11
Steering Wheel 5-2
Heated and Cooled Front
Seats 3-9

Heated Mirrors 2-24
Heater
Engine 9-23
High-Beam On Light 5-26
High-Speed Operation 10-47
Hill and Mountain Roads 9-11
Hill Start Assist (HSA) 9-41
Hood 10-4
Horn 5-3
How to Wear Safety Belts
Properly 3-19

I

Ignition Positions 9-20
Immobilizer 2-22
Indicator
Vehicle Ahead 5-23
Infants and Young Children,
Restraints 3-43
Infotainment 7-1
Infotainment System 13-15
Instrument Cluster 5-11
Instrument Panel
Storage Area 4-1
Interior Rearview Mirrors 2-25
Introduction iii

J

Jump Starting - North
America 10-71

K

Key and Lock Messages 5-38
Keyless Entry
Remote (RKE) System 2-3
Keys 2-1

L

Labeling, Tire Sidewall 10-40
Lamps
Cornering 6-7
Daytime Running (DRL) 6-4
Dome 6-7
Exterior Controls 6-1
Exterior Lamps Off
Reminder 6-3
License Plate 10-26
Malfunction Indicator 5-18
Lamps (cont'd)
Messages 5-39
On Reminder 5-26
Reading 6-8
Lane Change Alert 9-66
Lane Departure
Warning (LDW) 9-68
Lane Departure Warning
Light 5-23
Lap-Shoulder Belt 3-20
LATCH System
Replacing Parts after a
Crash 3-57
LATCH, Lower Anchors and
Tethers for Children 3-48
LED Lighting 10-26
Level Control
Automatic 9-44
Liftgate 2-14
Lighter, Cigarette 5-9
Lighting
Entry 6-8
Exit 6-9
Illumination Control 6-7
LED 10-26

Lights
Airbag Readiness 5-16
Antilock Brake System (ABS) Warning 5-22
Brake System Warning 5-21
Charging System 5-18
Cruise Control 5-27
Door Ajar 5-27
Electric Parking Brake 5-21
Engine Coolant Temperature Warning 5-24
Engine Oil Pressure 5-25
Flash-to-Pass 6-4
High-Beam On 5-26
High/Low Beam Changer 6-4
Lane Departure Warning 5-23
Low Fuel Warning 5-26
Safety Belt Reminders 5-16
Security 5-26
Service Electric Parking Brake 5-22
StabiliTrak® OFF 5-23
Tire Pressure 5-25
Lights (cont'd)
Tow/Haul Mode 5-22
Traction Control System (TCS)/StabiliTrak® 5-24
Traction Off 5-23
Locking Rear Axle 9-44
Locks
Automatic Door 2-13
Delayed Locking 2-13
Door 2-11
Lockout Protection 2-13
Power Door 2-12
Safety 2-14
Loss of Control 9-5
Low Fuel Warning Light 5-26
Low-Profile Tires 10-40
Lower Anchors and Tethers for Children (LATCH System) 3-48
Lumbar Adjustment 3-5
Front Seats 3-5

M

Magnetic Ride Control 9-44
Maintenance
Records 11-16
Maintenance and Care
Additional 11-10
Maintenance Schedule 11-4
Recommended Fluids and Lubricants 11-13
Transfer Case 9-34
Malfunction Indicator Lamp 5-18
Manual Mode 9-31
Massage 3-9
Memory Features 1-10
Memory Seats 3-7
Messages
Airbag System 5-42
Battery Voltage and Charging 5-34
Brake System 5-35
Compass 5-35
Door Ajar 5-36
Engine Cooling System 5-37
Engine Oil 5-37
Engine Power 5-38
Fuel System 5-38

Messages (cont'd)
Key and Lock 5-38
Lamp 5-39
Object Detection System 5-39
Ride Control System 5-42
Safety Belt 5-42
Security 5-43
Service Vehicle 5-43
Starting the Vehicle 5-43
Steering System 5-43
Tire 5-43
Transmission 5-44
Vehicle 5-34
Vehicle Reminder 5-46
Vehicle Speed 5-46
Washer Fluid 5-46
Window 5-46
Mirror
Child-View 2-25
Mirrors
Automatic Dimming
Rearview 2-25
Convex 2-23
Folding 2-24
Heated 2-24
Power 2-23
Tilt in Reverse 2-24
Mirrors, Interior Rearview 2-25
Monitor System, Tire
Pressure 10-47

N

Navigation
OnStar® 14-3
New Vehicle Break-In 9-19

O

Object Detection System
Messages 5-39
Odometer 5-14
Trip 5-14
Off-Road 9-5
Driving 9-5
Recovery 9-4
Oil
Engine 10-6
Engine Oil Life System 10-8
Messages 5-37
Pressure Light 5-25
Older Children, Restraints 3-41
Online Owner Center 13-4
OnStar 13-15
OnStar®
System, In Brief 1-25
OnStar® Additional
Information 14-6
OnStar® Connections 14-4
OnStar® Emergency 14-2
OnStar® Navigation 14-3
OnStar® Overview 14-1
OnStar® Security 14-3
OnStar® Vehicle
Diagnostics 14-6
Ordering
Service Publications 13-10
Outlets
Power 5-7
Overheating, Engine 10-15

P

Park
Shifting Into 9-25
Shifting Out of 9-26
Parking
Brake 9-39
Brake and P (Park)
Mechanism Check 10-24
Over Things That Burn 9-27

Parking or Backing
Assistance Systems 9-56
Passenger Airbag Status
Indicator 5-17
Passenger Compartment Air
Filter 8-8
Passenger Sensing System ... 3-34
Perchlorate Materials
Requirements, California 10-2
Personalization
Vehicle 5-46
Power
Door Locks 2-12
Mirrors 2-23
Outlets 5-7
Protection, Battery 6-9
Retained Accessory (RAP) ...9-24
Seat Adjustment 3-4
Windows 2-26
Power Assist Steps 2-19
Pregnancy, Using Safety
Belts 3-25
Premium Care Maintenance
Cadillac 11-3
Privacy
Vehicle Data Recording 13-13
Program
Courtesy Transportation 13-7
Proposition
65 Warning,
California 10-2,
10-21, 10-71

R

Radio Frequency
Identification (RFID) 13-11
Radio Frequency
Statement 13-12
Reading Lamps 6-8
Rear Axle 10-22
Locking 9-44
Rear Climate Control System ... 8-6
Rear Seats
Heated 3-11
Rear Storage 4-3
Rear Window Washer/Wiper 5-5
Rearview Mirrors
Automatic Dimming 2-25
Reclining Seatbacks 3-6
Recommended Fluids and
Lubricants 11-13
Records
Maintenance 11-16
Recreational Vehicle
Towing 10-75
Remote Keyless Entry
(RKE) System 2-2, 2-3
Remote Vehicle Start 2-10
Replacement
Glass 10-25
Replacement Bulbs 10-27
Replacement Parts
Airbags 3-40
Maintenance 11-15
Replacing Airbag System 3-40
Replacing LATCH System
Parts after a Crash 3-57
Replacing Safety Belt
System Parts after a Crash ... 3-26
Reporting Safety Defects
Canadian Government 13-13
General Motors 13-13
U.S. Government 13-12
Restraints
Where to Put 3-47
Retained Accessory
Power (RAP) 9-24

Reverse Tilt Mirrors 2-24
Ride Control Systems
Magnetic 9-44
Messages 5-42
Roads
Driving, Wet 9-10
Roadside Service 13-5
Roof
Sunroof 2-28
Roof Rack System 4-4
Rotation, Tires 10-52
Routing, Engine Drive Belt 12-4
Running the Vehicle While
Parked 9-28

S

Safety Belts 3-18
Care 3-26
Extender 3-26
How to Wear Safety Belts
Properly 3-19
Lap-Shoulder Belt 3-20
Messages 5-42
Reminders 5-16
Replacing after a Crash 3-26
Use During Pregnancy 3-25
Safety Defects Reporting
Canadian Government 13-13
General Motors 13-13
U.S. Government 13-12
Safety Locks 2-14
Safety System Check 3-26
Scheduling Appointments 13-7
Seats
Adjustment, Front 3-3
Head Restraints 3-2
Heated, Rear 3-11
Lumbar Adjustment, Front 3-5
Memory 3-7
Power Adjustment, Front 3-4
Reclining Seatbacks 3-6
Second Row 3-11
Third Row Seat 3-16
Second Row Seats 3-11
Securing Child
Restraints 3-57, 3-59
Security
Light 5-26
Messages 5-43
OnStar® 14-3
Vehicle 2-19
Vehicle Alarm 2-19
Service
Accessories and
Modifications 10-3
Doing Your Own Work 10-3
Engine Soon Light 5-18
Maintenance Records 11-16
Maintenance, General
Information 11-1
Parts Identification Label 12-1
Publications Ordering
Information 13-10
Scheduling Appointments 13-7
Vehicle Messages 5-43
Service Electric Parking
Brake Light 5-22
Services
Special Application 11-9
Servicing the Airbag 3-38
Shift Lock Control Function
Check, Automatic
Transmission 10-24
Shifting
Into Park 9-25
Out of Park 9-26
Side Blind Zone
Alert (SBZA) 9-66

Signals, Turn and
Lane-Change 6-6
Special Application Services . . . 11-9
Specifications and
Capacities 12-2
Speedometer 5-14
StabiliTrak
OFF Light 5-23
Start Assist, Hills 9-41
Start Vehicle, Remote 2-10
Starter Switch Check 10-23
Starting the Engine 9-22
Starting the Vehicle
Messages 5-43
Steering 9-4
Heated Wheel 5-2
Wheel Adjustment 5-2
Wheel Controls 5-2
Steering System Messages 5-43
Steps
Power Assist 2-19
Storage
Rear 4-3
Storage Areas
Armrest 4-3
Cargo Cover 4-3
Center Console 4-3
Glove Box 4-2
Instrument Panel 4-1
Roof Rack System 4-4
Sunglasses 4-2
Storage Compartments 4-1
Stuck Vehicle 9-13
Sun Visors 2-28
Sunglass Storage 4-2
Sunroof 2-28
Symbols iv
System
Active Emergency Braking 9-64
Forward Collision
Alert (FCA) 9-62
Infotainment 7-1, 13-15
Roof Rack 4-4
Systems
Driver Assistance 9-56

T

Tachometer 5-14
Text Telephone (TTY) Users . . . 13-4
Theft-Deterrent Systems 2-22
Immobilizer 2-22
Third-Row Seats 3-16
Throttle, Adjustable 9-19
Time 5-6
Tires 10-38
All-Season 10-39
All-Terrain 10-40
Buying New Tires 10-54
Chains 10-59
Changing 10-61
Designations 10-42
Different Size 10-56
Full-Size Spare 10-70
If a Tire Goes Flat 10-59
Inflation Monitor System 10-48
Inspection 10-51
Low Profile 10-40
Messages 5-43
Pressure 10-47
Pressure Light 5-25
Pressure Monitor System . . . 10-47
Rotation 10-52

Tires (cont'd)
Sidewall Labeling 10-40
Terminology and Definitions 10-43
Uniform Tire Quality Grading 10-56
Wheel Alignment and Tire Balance 10-58
Wheel Replacement 10-58
When It Is Time for New Tires 10-53
Winter 10-39
Tow/Haul Mode 9-33
Tow/Haul Mode Light 5-22
Towing
Driving Characteristics 9-74
Equipment 9-81
General Information 9-74
Recreational Vehicle 10-75
Trailer 9-77
Trailer Sway Control (TSC) ...9-83
Vehicle 10-75
Traction
Control System (TCS)/ StabiliTrak® Light 5-24
Off Light 5-23
Traction Control/Electronic Stability Control 9-42
Trailer
Sway Control (TSC) 9-83
Towing 9-77
Transfer Case 9-34
Transmission
Automatic 9-28
Fluid, Automatic 10-10
Messages 5-44
Transportation Program, Courtesy 13-7
Trip Odometer 5-14
Turn and Lane-Change Signals 6-6

U

Uniform Tire Quality Grading 10-56
Universal Remote System 5-55
Operation 5-57
Programming 5-55
Using This Manual iv

V

Vehicle
Alarm System 2-19
Canadian Owners iii
Control 9-3
Identification
Number (VIN) 12-1
Load Limits 9-14
Messages 5-34
Personalization 5-46
Reminder Messages 5-46
Remote Start 2-10
Security 2-19
Speed Messages 5-46
Towing 10-75
Vehicle Ahead Indicator 5-23
Vehicle Care
Tire Pressure 10-45
Vehicle Data Recording
and Privacy 13-13
Vehicle Diagnostics
OnStar® 14-6
Ventilation, Air 8-8
Visors 2-28

W

Warning
Brake System Light 5-21
Lane Departure (LDW) 9-68
Warning Lights, Gauges,
and Indicators 5-10
Warnings iv
Cautions and Danger iv
Hazard Flashers 6-6
Washer Fluid 10-17
Messages 5-46
Wheels
Alignment and Tire
Balance 10-58
Different Size 10-56
Replacement 10-58
When It Is Time for New
Tires 10-53
Where to Put the Restraint 3-47
Windows 2-25
Messages 5-46
Power 2-26
Windshield
Replacement 10-25
Wiper/Washer 5-3
Winter
Driving 9-11
Winter Tires 10-39
Wiper Blade Replacement 10-24
Wipers
Rear Washer 5-5

✍ NOTES