Bantam - Workshop Manual

FOREWORD

This workshop manual is intended for use by Service Technicians of authorized FORD Dealers to help them provide efficient and correct service and maintenance of BANTAM vehicles.

To ensure customer satisfaction with FORD products, proper service and maintenance by FORD Technicians is essential. Consequently it is important that service personnel fully understand the contents of this manual, which should be kept in a place for quick and easy reference.
All the contents of this manual, including photographs, drawings and specifications are the latest available at the time of printing.
As modifications affecting service occurs, Dealers will be issued with Technical Bulletins, Service Information sheets or supplementary volumes.
This manual should be carefully kept up-to-date upon receipt of new information.

The manufactures reserve the right to alter the manual's specifications and contents without obligation or advance notice.

All rights reserved. No part of this manual may be reproduced or utilized in any form or by any means, electronic or mechanical, including photocopying, recording or by any information storage and retrieval system without permission in writing.

© 2002 Ford Motor Company of Southern Africa (PTY) Ltd

MAIN INDEX: FORD BANTAM
Workshop Manual

Group 1 – General Information GI

Group 2 – Chassis CH

Group 3 – Powertrain PT

Group 4 – Electrical EL

Group 5 – Body and Paint BP

General Information

Group 1

SECTION TITLE	PAGE
Service Information	
General Information	100-00
Identification Codes	100-01
Jacking and Lifting	100-02
Noise, Vibration and Harshness	100-04

SECTION 100-00 General Information

VEHICLE APPLICATION: 2002 Bantam

SUBJECT **PAGE**

DESCRIPTION AND OPERATION

About This Manual 100-00-5
Introduction 100-00-5
Replacement Parts 100-00-5
Special Tools 100-00-5
Important Safety Instructions 100-00-5
Warnings, Cautions and Notes in This Manual ..... 100 -00-5
How to Use This Manual 100-00-5
Samples 100-00-6
Health and Safety Precautions 100-00-7
Introduction 100-00-7
Acids and Alkalis 100-00-7
Air Bags 100-00-7
Air Conditioning Refrigerant 100-00-7
Adhesives and Sealers 100-00-8
Antifreeze 100-00-9
Asbestos 100-00-9
Battery Acids 100-00-9
Brake and Clutch Linings and Pads 100-00-9
Brakes Fluids (Polyalkylene Glycols) 100-00-9
Brazing 100-00-9
Chemical Materials 100-00-9
Chlorofluorocarbons (CFC) 100-00-10
Clutch Fluids 100-00-10
Clutch Linings and Pads 100-00-10
Corrosion Protection Materials 100-00-10
Cutting 100-00-10
Dewaxing 100-00-10
Dusts 100-00-10
Electric Shock 100-00-10
Engine Oils 100-00-11
Exhaust Fumes 100-00-11
Fibre Insulation 100-00-11
Fire 100-00-11
First Aid 100-00-11
Fluoroelastomer 100-00-11
Foams - Polyurethane 100-00-12
Freon 100-00-12
Fuels 100-00-12
Gas Cylinders 100-00-13
Gases 100-00-13
Gaskets (Fluoroelastomer) 100-00-13
General Workshop Tools and Equipment 1 00-00-13
High Pressure Air, Lubrication and Oil Test Equipment ..... 100-00 -13
Halon 100-00-13
Legal Aspects 100-00-13
Lubricants and Greases 100-00-14
Noise 100-00-14
Noise Insulation Materials 100-00-14
O-Rings (Fluoroelastomer) 100-00-14
Paints 100-00-14

SECTION 100-00 General Information

Pressurized Equipment 100-00-15
Solder 100-00-15
Solvents 100-00-15
Sound Insulation 100-00-15
Suspended Loads 100-00-15
Transmission Brake Bands 100-00-15
Underseal 100-00-15
Viton 100-00-15
Welding 100-00-16
Warning Symbols on Vehicles 100-00-17
White Spirit 100-00-18
Standard Workshop Practices 100-00-19
Vehicle in Workshop 100-00-19
Alternative Fuel 100-00-19
Alternative Fuel — Do's 100-00-19
Alternative Fuel — Do Nots 100-00-19
Towing the Vehicle 100-00-20
Connecting a Slave Battery Using Jumper Cables 100-00-20
Component Cleaning 100-00-21
Calibration of Essential Measuring Equipment 100-00-21
Solvents, Sealers and Adhesives 100-00-22
Introduction 100-00-22
General Specifications 100-00-22
Road/Roller Testing 100-00-23
Pre-Test Checks 100-00-23
Starting the Engine 100-00-23
On Road or Roller Test Check: 100-00-23
Brake Testing 100-00-24

DESCRIPTION AND OPERATION

About This Manual

Introduction

This manual has been written in a format that is designed to meet the needs of Ford technicians worldwide. The objective is to use common formats and include similar content in each manual worldwide.

This manual provides general descriptions for accomplishing service and repair work with tested, effective techniques. Following them will help assure reliability.

Replacement Parts

Ford and Motorcraft parts are made to the same exacting standards as the original factory fitted components. For this reason, it is recommended that only genuine Ford or Motorcraft parts are installed during service or repair.

Special Tools

The Special Tool(s) Table provided at the beginning of each procedure shows all special tools required to carry out a repair. Where possible, illustrations are provided to assist in identifying the special tool required.

Special tools may be ordered from Grundy South Africa (PTY) Ltd

Korsten

Port Elizabeth

P.O Box 14119

(Ph) 041 4031300

(Fax) 041 4532765

Important Safety Instructions

Appropriate service methods and correct repair procedures are essential for the safe, reliable operation of all motor vehicles as well as the personal safety of the individual carrying out the work.

This manual cannot possibly anticipate all such variations and provide advice or cautions as to each. Anyone who departs from the instructions provided in this manual must first establish that he compromises neither his personal safety nor the vehicle integrity by his choice of methods, tools or parts.

Warnings, Cautions and Notes in This Manual

WARNING: Warnings are used to indicate that failure to follow a procedure correctly may result in personal injury.

CAUTION: Cautions are used to indicate that failure to follow a procedure correctly may result in damage to the vehicle or equipment being used.

NOTE: Notes are used to provide additional essential information required to carry out a complete and satisfactory repair.

As you read through this manual, you will come across WARNINGS, CAUTIONS and NOTES.

A warning, caution or note is placed at the beginning of a series of steps if it applies to multiple steps. If the warning, caution or note only applies to one step, it is placed at the beginning of the specific step (after the step number).

How to Use This Manual

This manual covers service and repair procedures.

This manual is structured into groups and sections, with specific system sections collected together under their relevant group.

A group covers a specific portion of the vehicle. The manual is divided into five groups, General Information, Chassis, Powertrain, Electrical and Body and Paint. The number of the group is the first number of a section number.

Pages at the start of the manual list all sections available. Each section has a contents list detailing General Specifications, Description and Operation and Service Adjustment and Checks.

If components need to be removed or disassembled in sequence, the sequence will be identified numerically in a graphic and the corresponding text will be numbered accordingly (refer to `Samples').

All left and right-hand references to the vehicle are taken from a position sitting in the driver seat looking forward.

All left and right-hand references to the engine are taken from a position at the flywheel looking towards the front camshaft pulley.

Where appropriate, instructions will be given for the use of WDS, diagnostic equipment.

DESCRIPTION AND OPERATION (CONTINUED)

Inspection and Verification

Visual Inspection Charts, Symptom Charts and other information charts (such as diagnostic routines), supplement test procedures with technical specifications, or navigate the user to a specific test procedure.

Sympton Chart

The symptom chart indicates symptoms, sources and actions to address a condition.

Pinpoint Tests

For electrical systems, pinpoint test steps are used to identify the source of a concern in a logical, step-by-step manner. Pinpoint tests have two columns: CONDITIONS and DETAILS/RESULTS/ACTIONS.

The CONDITIONS column is used exclusively for graphics and icons (with or without captions) and the DETAILS/RESULTS/ACTIONS column provides direction to another test step or specific corrective actions.

The boxed numbers indicate the order in which the described action is to be performed.

Component Tests

A component test is used when a component is tested in multiple pinpoint tests, or if a procedure is too complicated to be formatted within a single page of the pinpoint test.

Graphics

Test graphics show the measurement or test to be performed in a test step.

A representative tester graphic is used for voltmeters and ohmmeters.

If multiple measurements are made in a single graphic, the test leads are drawn with a solid line until the test lead splits to indicate the multiple measurements, at which point dashed lines are used.

Breakout box-type testers are represented by a double circle test pin. Test pins are labelled with the pin number.

Samples

Special Tools and Torque Figures

Any requirement for special tools will picture the tool, showing it in use and with its tool number shown. Torque settings will be given at the relevant point in the procedure.

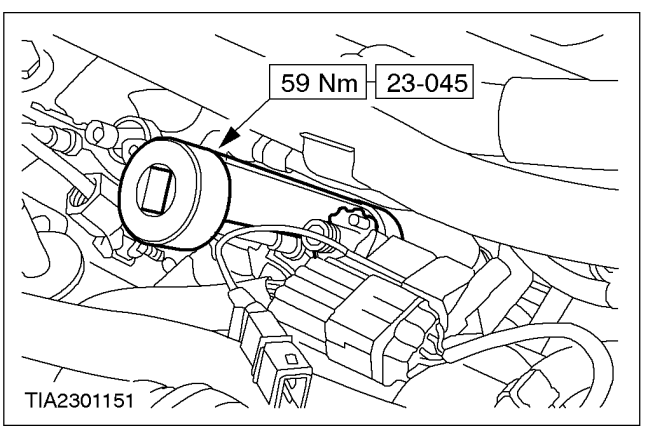

DESCRIPTION AND OPERATION

Health and Safety Precautions

Introduction

Many of the procedures associated with vehicle maintenance and repair involve physical hazards or other risks to health. This subsection lists, alphabetically, some of these hazardous operations and the materials and equipment associated with them. Precautions necessary to avoid these hazards are identified.

The list is not exhaustive and all operations and procedures, and the handling of materials, should be carried out with health and safety in mind.

Before using any product the Materials Safety Data Sheet supplied by the manufacturer or supplier should be consulted.

Acids and Alkalis

See also Battery Acids.

For example caustic soda, sulphuric acid.

Used in batteries and cleaning materials.

Irritant and corrosive to the skin, eyes, nose and throat. Cause burns. Can destroy ordinary protective clothing.

Avoid splashes to the skin, eyes and clothing. Wear suitable protective impervious apron, gloves and goggles. Do not breath mists.

Make sure access to eye wash bottles, shower and soap are readily available for splashing accidents.

Display Eye Hazard sign.

Air Bags

See also Fire, Chemical Materials

Highly flammable, explosive – observe No Smoking policy.

Used as a safety restraint system mounted in the steering wheel and passenger side of the instrument panel.

The inflator contains a high-energetic propellant which, when ignited, produces a VERY HOT GAS (2500°C).

The gas generant used in air bags is Sodium Azide. This material is hermetically sealed in the module and is completely consumed during deployment. No attempt should be made to open an air bag inflator as this will lead to the risk of exposure to Sodium Azide. If a gas generator is ruptured, full protective clothing should be worn when dealing with the spillage.

After normal deployment, gloves and safety goggles should be worn during the handling process.

Deployed air bags should be disposed of in a plastic bag in accordance with local regulations at an approved chemical waste site.

Following any direct contact with gas generant.

- wash affected areas thoroughly with water.
- seek medical assistance if necessary.

Air Bags - Do's

- do store modules in an upright position.
- do keep modules dry.
- do carry modules with the cover side pointing away from the body.
- do place modules with their cover side upwards.
- do carefully inspect modules for damage.
- do stand to one side when connecting modules.
- do make sure all test equipment is properly calibrated and maintained.
- do wash hands after handling deployed air bags.

Air Bags - Do Nots

- do not store highly flammable material together with modules or gas generators.
- do not store gas generators at temperatures exceeding 80°C.
- do not store modules upside down.
- do not attempt to open a gas generator housing.
- do not expose gas generators to open flame or sources of heat.
- do not place anything on top of a module cover.
- do not use damaged modules.
- do not touch a fired module or gas generator for at least 10 minutes.
- do not use any electrical probes on the wiring circuit.

Air Conditioning Refrigerant

See also Chlorofluorocarbon, Chemical Materials

Highly flammable, combustible – observe No Smoking policy.

Skin contact may result in frostbite.

DESCRIPTION AND OPERATION (CONTINUED)

Instructions given by the manufacturer must be followed. Avoid naked lights; wear suitable protective gloves and goggles.

If refrigerant comes into contact with the skin or eyes, rinse the affected areas with water immediately. Eyes should also be rinsed with an appropriate irrigation solution and should not be rubbed. SEEK MEDICAL ASSISTANCE IF NECESSARY.

Air Conditioning Refrigerant - Do Nots

- do not expose refrigerant bottles to sunlight or heat.
- do not stand refrigerant bottles upright; when filling, hold them with the valve downwards.
- do not expose refrigerant bottles to frost.
- do not drop refrigerant bottles.
- do not vent refrigerant to atmosphere under any circumstance.
- do not mix refrigerants, for example R12 (Freon) and R134a.

Adhesives and Sealers

See also Fire, Chemical Materials

Highly flammable, flammable, combustible – observe No Smoking policy.

Generally should be stored in No Smoking areas. Cleanliness and tidiness in use should be observed, for example disposable paper covering benches; should be dispensed from applicators where possible; containers, including secondary containers, should be labelled appropriately.

Solvent-based Adhesives/Sealers - See Solvents

Follow manufacturers instructions.

Water-based Adhesives/Sealers

Those based on polymer emulsions and rubber latexes may contain small amounts of volatile toxic and harmful chemicals. Skin and eye contact should be avoided and adequate ventilation provided during use.

Hot Melt Adhesives

In the solid state, they are safe. In the molten state they may cause burns and health hazards may arise from the inhalation of toxic fumes.

Use appropriate protective clothing and a thermostatically controlled heater with a thermal cut-out and adequate extraction.

Resin-based Adhesives/Sealers, for example Epoxide and Formaldehyde Resin-based

Mixing should be carried out in well-ventilated areas, as harmful or toxic volatile chemicals may be released.

Skin contact with uncured resins and hardeners can result in irritation, dermatitis, and absorption of toxic or harmful chemicals through the skin. Splashes can damage the eyes.

Provide adequate ventilation and avoid skin and eye contact.

Anaerobic, Cyanoacrylate (super-glues) and other Acrylic Adhesives

Many are irritant, sensitising or harmful to the skin and respiratory tract. Some are eye irritants.

Skin and eye contact should be avoided and the manufacturers instructions followed.

Cyanoacrylate adhesives (super-glues) MUST NOT contact the skin or eyes. If skin or eye tissue is bonded, cover with a clean moist pad and SEEK IMMEDIATE MEDICAL ATTENTION. Do not attempt to pull tissue apart. Use in well ventilated areas as vapours can cause irritation to the nose and eyes.

For two-pack systems
see Resin-based and Isocyanate Adhesives/Sealers.(BELOW)

Isocyanate (Polyurethane) Adhesives/Sealers

See also Resin-based Adhesives

Individuals suffering from asthma or respiratory allergies should not work with or near these materials as sensitivity reactions can occur.

Over exposure is irritating to the eyes and respiratory system. Excessive concentrations may produce effects on the nervous system including drowsiness. In extreme cases, loss of consciousness may result. Long-term exposure to vapour concentrations may result in adverse health effects.

Prolonged contact with the skin may have a defatting effect which may lead to skin irritation and in some cases, dermatitis.

Splashes entering the eye will cause discomfort and possible damage.

DESCRIPTION AND OPERATION (CONTINUED)

Any spraying should preferably be carried out in exhaust-ventilated booths, removing vapours and spray droplets from the breathing zone.

Wear appropriate gloves, eye and respiratory protection.

Antifreeze

See also Fire, Solvents.

For example isopropanol, ethylene glycol, methanol.

Highly flammable, flammable, combustible.

Used in vehicle coolant systems, brake air pressure systems, screen wash solutions.

Vapours may be given off from coolant antifreeze (glycol) when heated. Avoid breathing these vapours.

Antifreeze may be absorbed through the skin in toxic or harmful quantities. Antifreeze, if swallowed, can be fatal and MEDICAL ATTENTION SHOULD BE SOUGHT IMMEDIATELY.

These products must not be used in any cooling or industrial water system, which is connected or linked to general, food preparation or drinking water supplies.

Asbestos

See also Warning Symbols on Vehicles at the end of this subsection.

Breathing asbestos dust may cause lung damage or, in some cases, cancer.

Used in brake and clutch linings, transmission brake bands and gaskets. Ford original production and replacement items for this model are asbestos free.

The use of drum cleaning units, vacuum cleaning or damp wiping is preferred.

Asbestos dust waste should be dampened, placed in a sealed container and marked for safe disposal. If any cutting or drilling is attempted on materials containing asbestos the item should be dampened and only hand tools or low speed power tools used.

Battery Acids

See also Acids and Alkalis.

Gases released during charging are explosive. Never use naked flames or allow sparks near charging or recently charged batteries.

Make sure there is adequate ventilation.

Brake and Clutch Linings and Pads

See Asbestos.

Brakes Fluids (Polyalkylene Glycols)

See also Fire.

Splashes to the skin and eyes are slightly irritating. Avoid skin and eye contact as far as possible. Inhalation vapour hazards do not arise at ambient temperatures because of the very low vapour pressure.

Brazing

See Welding.

Chemical Materials

See also Legal Aspects.

Chemical materials such as solvents, sealers, adhesives, paints, resin foams, battery acids, antifreeze, brake fluids, fuels, oils and grease should always be used with caution and stored and handled with care. They may be toxic, harmful, corrosive, irritant or highly flammable and give rise to hazardous fumes and dusts.

The effects of excessive exposure to chemicals may be immediate or delayed; briefly experienced or permanent; cumulative; superficial; life threatening; or may reduce life expectancy.

Chemical Materials - Do's

- Do carefully read and observe hazard and precaution warnings given on material containers (labels) and in any accompanying leaflets, posters or other instructions. Material health and safety data sheets can be obtained from manufacturers.
- Do remove chemical materials from the skin and clothing as soon as practicable after soiling. Change heavily soiled clothing and have it cleaned.
- Do organise work practices and protective clothing to avoid soiling of the skin and eyes; breathing vapours, aerosols, dusts or fumes; inadequate container labelling; fire and explosion hazards.
- Do wash before job breaks, before eating, smoking, drinking or using toilet facilities when handling chemical materials.
- Do keep work areas clean, uncluttered and free of spills.

DESCRIPTION AND OPERATION (CONTINUED)

- Do store chemical materials according to national and local regulations.
- Do keep chemical materials out of the reach of children.

Chemical Materials - Do Nots

- Do not mix chemical materials except under the manufacturers instructions; some chemicals can form other toxic or harmful chemicals, give off toxic or harmful fumes or become explosive when mixed together.
- Do not spray chemical materials, particularly those based on solvents, in confined spaces, for example when people are inside a vehicle.
- Do not apply heat or flame to chemical materials except under the manufacturers instructions. Some are highly flammable and some may release toxic or harmful fumes.
- Do not leave containers open. Fumes given off can build up to toxic, harmful or explosive concentrations. Some fumes are heavier than air and will accumulate in confined areas such as pits.
- Do not transfer chemical materials to unlabelled containers.
- Do not clean hands or clothing with chemicals. Chemicals, particularly solvents and fuels, will dry skin and may cause irritation leading to dermatitis or be absorbed through the skin in toxic or harmful quantities.
- Do not use emptied containers for other materials except when they have been cleaned under supervised conditions.
- Do not sniff or smell chemical materials. Brief exposure to high concentrations of fumes can be toxic or harmful.

Chlorofluorocarbons (CFC)

There is concern in the scientific community that CFCs and Halons are depleting the upper ozone layer, which filters out harmful ultraviolet radiation. Decreased filtration of ultraviolet radiation may result in increases in skin cancer, cataracts and immune system suppression in humans, as well as decreased productivity of crops and aquatic systems.

CFCs are used primarily as refrigerants in vehicle air conditioning systems and as aerosol propellants. Halons are used as fire extinguishants.

Ford supports worldwide elimination of CFC usage and it is recommended that Company subsidiaries and affiliates should phase out CFC usage as soon as acceptable substitutes are commercially available.

Clutch Fluids

See Brake fluids.

Clutch Linings and Pads

See Asbestos.

Corrosion Protection Materials

See also Solvents, Fire.

Highly flammable, flammable – observe No Smoking policy.

These materials are varied and the manufacturers instructions should be followed. They may contain solvents, resins or petroleum products. Skin and eye contact should be avoided. They should only be sprayed in conditions of adequate ventilation and not in confined spaces.

Cutting

See Welding.

Dewaxing

See Solvents and Fuels (Kerosene).

Dusts

Powder, dusts or clouds may be irritant, harmful or toxic. Avoid breathing dusts from powdery chemical materials or those arising from dry abrasion operations. Wear respiratory protection if ventilation is inadequate.

Fine dusts of combustible material can present an explosion hazard. Avoid explosive limits and sources of ignition.

Electric Shock

Electric shock can result from the use of faulty electrical equipment or from the misuse of equipment in good condition.

Make sure that electrical equipment is maintained in good condition and frequently tested. Faulty

DESCRIPTION AND OPERATION (CONTINUED)

equipment should be labelled and preferably removed from the workstation.

Make sure that flexes, cables, plugs and sockets are not frayed, kinked, cut, cracked or otherwise damaged.

Make sure that electrical equipment and flexes do not come into contact with water.

Make sure that electrical equipment is protected by the correct rated fuse.

Never misuse electrical equipment and never use equipment, which is in any way faulty. The results could be fatal.

Make sure that the cables of mobile electrical equipment cannot get trapped and damaged, such as in a vehicle hoist.

Make sure that the designated electrical workers are trained in basic First Aid.

In cases of electrocution:

- switch off the power supply before approaching the victim.
- if this is not possible push or drag the victim from the source of electricity using dry non-conductive material.
- commence resuscitation if trained to do so.
- SUMMON MEDICAL ASSISTANCE.

Engine Oils

See Lubricants and Greases.

Exhaust Fumes

These contain asphyxiating, harmful and toxic chemicals and particles such as carbon oxides, nitrogen oxides, aldehydes, lead and aromatic hydrocarbons. Engines should be run only under conditions of adequate exhaust extraction or general ventilation and not in confined spaces.

Gasolene (petrol) engine

There may not be adequate warning of odour or of irritation before toxic or harmful effects arise. These may be immediate or delayed.

Diesel engine

Soot, discomfort and irritation usually give adequate warning of hazardous fume concentrations.

Fibre Insulation

See also Dusts.

Used in noise and sound insulation.

The fibrous nature of surfaces and cut edges can cause skin irritation. This is usually a physical and not a chemical effect.

Precautions should be taken to avoid excessive skin contact through careful organization of work practices and the use of gloves.

Fire

See also Welding, Foams, Legal Aspects.

Many of the materials found on or associated with the repair of vehicles are highly flammable. Some give off toxic or harmful fumes if burnt.

Observe strict fire safety when storing and handling flammable materials or solvents, particularly near electrical equipment or welding processes.

Make sure, before using electrical or welding equipment, that there is no fire hazard present.

Have a suitable fire extinguisher available when using welding or heating equipment.

First Aid

Apart from meeting any legal requirements it is desirable for someone in the workshop to be trained in First Aid procedures.

Splashes in the eye should be flushed carefully with clean water for at least ten minutes.

Soiled skin should be washed with soap and water.

In case of cold burns, from alternative fuels, place affected area in cool to cold water.

Individuals affected by inhalation of gases and fumes should be removed to fresh air immediately. If effects persist, consult a doctor.

If liquids are swallowed inadvertently, consult a doctor giving him the information on the container or label. Do not induce vomiting unless this action is indicated on the label.

Fluoroelastomer

See Viton.

DESCRIPTION AND OPERATION (CONTINUED)

Foams - Polyurethane

See also Fire.

Used in sound and noise insulation. Cured foams used in seat and trim cushioning.

Follow manufacturers instructions.

Unreacted components are irritating and may be harmful to the skin and eyes. Wear gloves and goggles.

Individuals with chronic respiratory diseases, asthma, bronchial medical problems, or histories of allergic diseases should not work in or near uncured materials.

The components, vapours or spray mists can cause direct irritation, sensitivity reactions and may be toxic or harmful.

Vapours and spray mists must not be inhaled. These materials must be applied with adequate ventilation and respiratory protection. Do not remove the respirator immediately after spraying; wait until the vapour/mists have cleared.

Burning of the uncured components and the cured foams can generate toxic and harmful fumes. Smoking, naked flames or the use of electrical equipment during foaming operations and until vapours/mists have cleared should not be allowed. Any heat cutting of cured foams or partially cured foams should be conducted with extraction ventilation. See also the vehicle Body Repair Manual.

Freon

See Air Conditioning Refrigerant.

Fuels

See also, Fire, Legal Aspects, Chemicals and Solvents.

Avoid skin contact with fuel where possible. Should contact occur, wash the affected skin with soap and water.

Gasoline (Petrol)

Highly flammable - observe No Smoking policy.

Swallowing can result in mouth and throat irritation and absorption from the stomach can result in drowsiness and unconsciousness. Small amounts can be fatal to children. Aspiration of liquid into the lungs, through vomiting, is a very serious hazard.

Gasolene dries the skin and can cause irritation and dermatitis on prolonged or repeated contact. Liquid in the eye causes severe smarting.

Motor gasolene may contain appreciable quantities of benzene, which is toxic upon inhalation, and the concentration of gasolene vapours must be kept very low. High concentrations will cause eye, nose and throat irritation, nausea, headache, depression and symptoms of drunkenness. Very high concentrations will result in rapid loss of consciousness.

Make sure there is adequate ventilation when handling and using gasolene. Great care must be taken to avoid the serious consequences of inhalation in the event of vapour build up arising from spillages in confined spaces.

Special precautions apply to cleaning and maintenance operations on gasolene storage tanks.

Gasolene should not be used as a cleaning agent. It must not be siphoned by mouth. See First Aid.

Gas-oil (Diesel Fuel)

Combustible.

Gross or prolonged skin contact with high boiling point gas oils may also cause serious skin disorders including skin cancer.

Kerosene (Paraffin)

Used also as heating fuel, solvent and cleaning agent.

Flammable - observe No Smoking policy.

Irritation of the mouth and throat may result from swallowing. The main hazard from swallowing arises if liquid aspiration into the lungs occurs.

Liquid contact dries the skin and can cause irritation or dermatitis. Splashes in the eye may be slightly irritating.

In normal circumstances the low volatility does not give rise to harmful vapours. Exposure to mists and vapours from kerosene at elevated temperature should be avoided (mists may arise in dewaxing). Avoid skin and eye contact and make sure there is adequate ventilation.

Alternative Fuel

Highly flammable. Observe ``NO SMOKING" signs.

Make sure there is adequate ventilation when working on alternative fuelled vehicles. Great care must be taken to avoid the serious consequences of inhalation in the event of vapour build up in confined spaces.

DESCRIPTION AND OPERATION (CONTINUED)

Inhalation in high concentrations may cause dizziness, headache, nausea and loss of co-ordination. Very high concentrations may result in loss of consciousness.

Contact with liquidified petroleum gas (LPG) or compressed natural gas (CNG) to skin may cause cold burns and may cause frostbite.

Long sleeved cotton overalls, steel toe capped safety boots and rubber neoprene gloves should be worn during removal and installation of LPG/CNG fuel system components.

LPG/CNG fuel leaks could cause a fire and be a hazard to health that can lead to personal injury, illness or even death.

If a leak is detected, under no circumstances attempt to seal the leak by tightening the union/connection until the fuel in the system or component is depressurised. Once tightened the system should be checked for integrity following the specified procedures.

If the fuel tank is to be removed for service or repair the fuel must be evacuated using dedicated equipment and following the specified procedures.

Gas Cylinders

See also Fire.

Gases such as oxygen, acetylene, argon and propane are normally stored in cylinders at pressures of up to 138 bar (2000 psi) and great care should be taken in handling these cylinders to avoid mechanical damage to them or to the valve gear attached. The contents of each cylinder should be clearly identified by appropriate markings.

Cylinders should be stored in well-ventilated enclosures, and protected from ice and snow, or direct sunlight. Fuel gases, for example acetylene and propane, should not be stored in close proximity to oxygen cylinders.

Care should be exercised to prevent leaks from gas cylinders and lines, and to avoid sources of ignition.

Only trained personnel should undertake work involving gas cylinders.

Gases

See Gas Cylinders.

Gaskets (Fluoroelastomer)

See Viton.

General Workshop Tools and Equipment

It is essential that all tools and equipment are maintained in good condition and the correct safety equipment is used where required.

Never use tools or equipment for any purpose other than that for which they were designed. Never overload equipment such as hoists, jacks, axle and chassis stands or lifting slings. Damage caused by overloading is not always immediately apparent and may result in a fatal failure the next time that the equipment is used.

Do not use damaged or defective tools or equipment, particularly high-speed equipment such as grinding wheels. A damaged grinding wheel can disintegrate without warning and cause serious injury.

Wear suitable eye protection when using grinding, chiselling or sand blasting equipment.

Wear a suitable breathing mask when using abrasive blasting equipment, working with asbestos-based materials or using spraying equipment.

Make sure there is adequate ventilation to control dusts, mists and fumes.

High Pressure Air, Lubrication and Oil Test Equipment

See also Lubricants and Greases.

Always keep high-pressure equipment in good condition, and regularly maintained, particularly at joints and unions.

Never direct a high-pressure nozzle, for example diesel injector, at the skin as the fluid may penetrate to the underlying tissue, and cause serious injury.

Halon

See CFCs.

Legal Aspects

There are many laws and regulations relating to health and safety in the use and disposal of materials and equipment in a workshop.

For a safe working environment and to avoid environmental pollution, workshops should be familiar, in detail, with the many health and safety laws and regulations within their country, published by both national and local authorities.

DESCRIPTION AND OPERATION (CONTINUED)

Lubricants and Greases

Avoid all prolonged and repeated contact with mineral oils. All lubricants and greases may be irritating to the eyes and skin.

Used Engine Oil

Prolonged and repeated contact with mineral oil will result in the removal of natural fats from the skin, leading to dryness, irritation and dermatitis. In addition, used engine oil contains potentially harmful contaminants, which may cause skin cancer. Adequate means of skin protection and washing facilities must be provided.

Do not employ used engine oils as lubricants or for any application where appreciable skin contact is likely to occur.

Health Protection Precautions

- Avoid prolonged and repeated contact with oils, particularly used engine oils.
- Wear protective clothing, including impervious gloves where practicable.
- Do not put oily rags into pockets.
- Avoid contaminating clothes, particularly underpants, with oil.
- Heavily soiled clothing and oil-impregnated footwear should not be worn. Overalls must be cleaned regularly.
- First Aid treatment should be obtained immediately for open cuts and wounds.
- Use barrier creams, applying them before each work period, to help the removal of oil from the skin.
- Wash with soap and water to make sure all oil is removed (skin cleansers and nail brushes will help). Preparations containing lanoline replace the natural skin oils, which have been removed.
- Do not use gasolene (petrol), kerosene (paraffin), diesel fuel (gas oil), thinners or solvents for cleaning skin.
- If skin disorders develop, obtain medical advice without delay.
- Where practicable, degrease components prior to handling.
- Where there is a risk of eye contact, eye protection should be worn, for example chemical goggles or face shields; in addition an eye wash facility should be provided.

Environmental Precautions

Burning used engine oil in small space heaters or boilers can be recommended only for units of approved design. If in doubt check with the appropriate local authority and manufacturer of approved appliances.

Dispose of used oil and used oil filters through authorized waste disposal contractors or licensed waste disposal sites, or to the waste oil reclamation trade. If in doubt, contact the relevant local authority for advice on disposal facilities.

It is illegal to pour used oil on to the ground, down sewers or drains, or into water courses.

Noise

Some operations may produce high noise levels, which could, in time, damage hearing. In these cases, suitable ear protection must be worn.

Noise Insulation Materials

See Foams, Fibre Insulation.

O-Rings (Fluoroelastomer)

See Viton.

Paints

See also Solvents, Chemical Materials.

Highly flammable, flammable - observe No Smoking policy

One Pack

Can contain harmful or toxic pigments, driers and other components as well as solvents. Spraying should be carried out only with adequate ventilation.

Two Pack

Can also contain harmful and toxic unreacted resins and resin hardening agents. The manufacturers instructions should be followed. See also Resin-based Adhesives and Isocyanate Adhesives and Sealers under Adhesives and Sealers.

Spraying should preferably be carried out in exhausted ventilated booths removing vapour and spray mists from the breathing zone. Individuals working in booths should wear appropriate respiratory

DESCRIPTION AND OPERATION (CONTINUED)

protection. Those doing small scale repair work in the open workshop should wear air-fed respirators.

Pressurized Equipment

See High Pressure Air, Lubrication and Oil Test Equipment.

Solder

Solders are mixtures of metals such that the melting point of the mixture is below that of the constituent metals (normally lead and tin). Solder application does not normally give rise to toxic lead fumes, provided a gas/air flame is used. Oxy-acetylene flames should not be used, as they are much hotter and will cause lead fumes to be produced.

Some fumes may be produced by the application of any flame to surfaces coated with grease, and inhalation of these should be avoided.

Removal of excess solder should be undertaken with care, to make sure that fine lead dust is not produced, which can give toxic effects if inhaled. Respiratory protection may be necessary.

Solder spillage and filings should be collected and removed promptly to prevent general air contamination by lead.

High standards of personal hygiene are necessary in order to avoid ingestion of lead or inhalation of solder dust from clothing.

Solvents

See also Chemical Materials, Fuels (Kerosene), Fire.

For example acetone, white spirit, toluene, xylene, trichloroethane.

Used in cleaning and dewaxing materials, paints, plastics, resins and thinners.

Some may be highly flammable or flammable.

Skin contact will degrease the skin and may result in irritation and dermatitis following repeated or prolonged contact. Some can be absorbed through the skin in toxic or harmful quantities.

Splashes in the eye may cause severe irritation and could lead to loss of vision.

Brief exposure of high concentrations of vapours or mists will cause eye and throat irritation, drowsiness, dizziness, headaches and, in the worst circumstances, unconsciousness.

Repeated or prolonged exposure to excessive but lower concentrations of vapours or mists, for which there might not be adequate warning indications, can cause more serious toxic or harmful effects.

Aspiration into the lungs, for example through vomiting, is the most serious consequence of swallowing.

Avoid splashes to the skin, eyes and clothing. Wear protective gloves, goggles and clothing if necessary.

Make sure there is good ventilation when in use, avoid breathing fumes, vapours and spray mists and keep containers tightly sealed. Do not use in confined spaces.

When spraying materials containing solvents, for example paints, adhesive, coatings, use extraction ventilation or personal respiratory protection in the absence of adequate general ventilation.

Do not apply heat or flame except under specific and detailed manufacturers instructions.

Sound Insulation

See Fibre Insulation, Foams.

Suspended Loads

⚠CAUTION: Never improvise lifting tackle.

There is always a danger when loads are lifted or suspended. Never work under an unsupported, suspended or raised load, for example a suspended engine.

Always make sure that lifting equipment such as jacks, hoists, axle stands and slings are adequate and suitable for the job, in good condition and regularly maintained.

Transmission Brake Bands

See Asbestos.

Underseal

See Corrosion Protection.

Viton

In common with many other manufacturers vehicles, some components fitted to the Ford range have O-rings, seals or gaskets, which contain a material known as `Viton'.

DESCRIPTION AND OPERATION (CONTINUED)

Viton is a fluoroelastomer that is a synthetic rubber type, which contains Fluorine. It is commonly used for O-rings, gaskets and seals of all types. Although Viton is the most well known fluoroelastomer, there are others, including Fluorel and Tecmoflon.

When used under design conditions fluoroelastomers are perfectly safe. If, however, they are exposed to temperatures in excess of 400°C, the material will not burn, but will decompose, and one of the products formed is hydrofluoric acid.

This acid is extremely corrosive and may be absorbed directly, through contact, into the general body system.

O-rings, seals or gaskets which have been exposed to very high temperatures will appear charred or as a black sticky substance.

DO NOT; under any circumstances touch them or the attached components.

Enquiries should be made to determine whether Viton or any other fluoroelastomer has been used in the affected O-ring, seal or gasket. If they are of natural rubber or nitrile there is no hazard. If in doubt, be cautious, as the material may be Viton or any fluoroelastomer.

If Viton or any other fluoroelastomers have been used, the affected area should be decontaminated before the commencement of work.

Disposable heavy duty plastic gloves should be worn at all times, and the affected area washed down using wire wool and a limewater (calcium hydroxide) solution to neutralise the acid before disposing of the decomposed Viton residue and final cleaning of the area. After use, the plastic gloves should be discarded carefully and safely.

Welding

See also Fire, Electric Shock, Gas Cylinders.

Welding processes include Resistance Welding (Spot Welding), Arc Welding and Gas Welding.

Resistance Welding

This process may cause particles of molten metal to be emitted at a high velocity, and the eyes and skin must be protected.

Arc Welding

This process emits a high level of ultra-violet radiation, which may cause arc-eye, and skin burns to the operator and to other persons nearby. Gas-shielded welding processes are particularly hazardous in this respect. Personal protection must be worn, and screens used to shield other people.

CONTACT LENS WEARERS ARE ADVISED TO REVERT TO ORDINARY SPECTACLES WHEN ARC WELDING as the arc spectrum is believed to emit microwaves which dry out the fluid between the lens and the eye. This may result in blindness when the lens is removed from the eye.

Metal spatter will also occur, and appropriate eye and skin protection is necessary.

The heat of the welding arc will produce fumes and gases from the metals being welded, the rods and from any applied coatings or contamination on the surfaces being worked on. These gases and fumes may be toxic and inhalation of these should be avoided. The use of extraction ventilation to remove the fumes from the working area may be necessary particularly in cases where the general ventilation is poor, or where considerable welding work is anticipated. In extreme cases or confined spaces where adequate ventilation cannot be provided, air-fed respirators may be necessary.

Gas Welding (and Cutting)

Oxy-acetylene torches may be used for welding and cutting, and special care must be taken to prevent leakage of these gases, with consequent risk of fire and explosion.

The process will produce metal spatter and eye and skin protection is necessary.

The flame is bright, and eye protection should be used, but the ultra-violet emission is much less than that from arc welding, and lighter filters may be used.

The process itself produces few toxic fumes, but such fumes and gases may be produced from coatings on the work, particularly during cutting away of damaged body parts, and inhalation of the fumes should be avoided.

In brazing, toxic fumes may be produced from the metals in the brazing rod, and a severe hazard may arise if brazing rods containing cadmium are used. In this event particular care must be taken to avoid inhalation of fumes and expert advice may be required.

SPECIAL PRECAUTIONS MUST BE TAKEN BEFORE ANY WELDING OR CUTTING TAKES PLACE ON VESSELS, WHICH HAVE CONTAINED COMBUSTIBLE MATERIALS, FOR EXAMPLE BOILING OR STEAMING OUT OF FUEL TANKS.

DESCRIPTION AND OPERATION (CONTINUED)

Warning Symbols on Vehicles

Decals showing warning symbols will be found on various vehicle components.

These decals must not be removed. The warnings are for the attention of owners/operators and persons carrying out service or repair operations on the vehicle.

The most commonly found decals are reproduced below together with an explanation of the warnings.

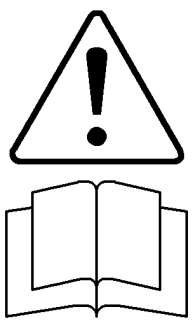

TIM0101001

1. Components or assemblies displaying the caution triangle and open book symbol advise consultation of the relevant section of the owners handbook before touching or attempting adjustments of any kind.

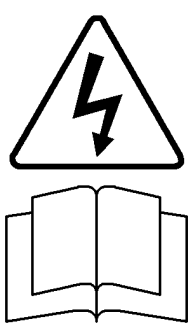

TIM0101002

2. Components or assemblies displaying the warning triangle with the `electrified' arrow and open book symbol give warning of inherent high voltages. Never touch these with the engine running or the ignition switched on.
   See Electric Shock in this subsection.

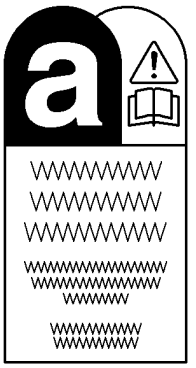

TIM0101003

3. Ford vehicles and replacement parts, which contain asbestos, are identified by this symbol.
   See Asbestos in this subsection.

TIM0101004

4. Components or assemblies displaying this symbol give warning that the component contains a corrosive substance.
   See Acids and Alkalis in this subsection.

TIM0101005

5. Displaying the caution circle with a deleted lighted match symbol, caution against the use of naked lights or flames within the immediate vicinity due to the presence of highly flammable or explosive liquids or vapours. See Fire in this subsection.

DESCRIPTION AND OPERATION (CONTINUED)

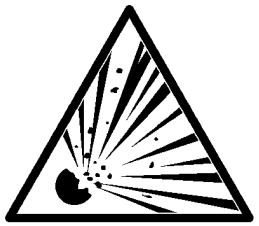

TIM0101006

6. Displaying this symbol (normally in conjunction with 5 above) warn of the presence of potentially explosive matter within the immediate vicinity.

TIM0101008

7. Displaying this symbol warn that children should not be allowed in the immediate vicinity unsupervised.

White Spirit

See Solvents.

DESCRIPTION AND OPERATION

Standard Workshop Practices

Vehicle in Workshop

When working on a vehicle in the workshop always make sure that:

- the parking brake is applied or the wheels are securely chocked to prevent the vehicle moving forwards or backwards.
- the key is removed from key operated hood locks before any work is carried out around the front of the vehicle.
- if the engine is to be run, there is adequate ventilation, or an extraction hose to remove exhaust fumes.
- there is adequate room to raise the vehicle and remove the wheels, if necessary.
- fender covers are always fitted if any work is to be carried out in the engine compartment.
- the battery is disconnected if working on the engine, underneath the vehicle, or if the vehicle is raised.

CAUTION: When electric arc welding on a vehicle, always disconnect the generator wiring to prevent the possibility of a surge of current causing damage to the internal components of the generator.

- If using welding equipment on the vehicle, a suitable fire extinguisher is readily available.

Alternative Fuel

WARNING: When servicing the fuel system always follow the recommended procedures. Failure to follow these instructions may result in personal injury.

If the odour of liquefied petroleum gas (LPG) or compressed natural gas (CNG) is present in the air in the workshop, warn all persons in the area to:

- extinguish all flames and lighted tobacco.
- shut off electrical and air-powered equipment.
- evacuate the area.
- ventilate the area.
- contact fire control authorities.
- remove the vehicle to a dedicated, ventilated area.

Alternative Fuel — Do's

- do work on the vehicle in a designated area that is well ventilated and its access restricted to qualified personnel only
- install new warning labels to their original locations
- if possible always isolate the alternative fuel tank, run the vehicle on the alternative fuel until it automatically switches to its normal fuel prior to taking the vehicle into the workshop/service area
- only use tested and approved components and pipes when repairing or servicing LPG and CNG systems

Alternative Fuel — Do Nots

- do not vent off LPG fuel
- do not use shop air pressure to force LPG fuel from the fuel tank
- do not use paint drying ovens above 40°C for any alternative fuel vehicles. LPG and CNG fuel tanks should be removed from the vehicles prior to being put into paint drying ovens above 40°C
- do not modify the system or install new components with parts not designed for gas vehicles
- do not evacuate fuel tanks unless there is repair that requires removed of the fuel tank
- do not work on the fuel lines or system components unless the alternative fuel has been evacuated and the pressure in the system is reduced to atmospheric, or less
- do not use anything other than the specified leak detector fluid to trace fuel leaks

Be aware of situations that may cause the LPG or CNG fuel system to vent off fuel, such as:

- extremely hot days
- parking by a space heater
- hoisting a vehicle up near a ceiling heater

Only personnel fully trained to Ford and local standards are to work on alternative fuel vehicles.

DESCRIPTION AND OPERATION (CONTINUED)

Towing the Vehicle

WARNING: When the vehicle is being towed the ignition switch must be in position II (steering lock released and warning lights illuminated). Only then will the steering, turn signal lamps, horn and stop lamps be operational. Failure to follow these instructions may result in personal injury.

NOTE: The removable towing eye (if equipped) has a left-hand thread and must be fully tightened before towing can commence.

When towing is necessary, the vehicle towing eyes should be used. The rope must be securely fastened to the towing eyes and must also be attached to the other vehicle such that the rope will not foul the bodywork.

When a vehicle with automatic transmission is towed, the gear selector must be in position N (Neutral). Never tow a vehicle with automatic transmission faster than 30 mph (50 km/h) or further than 30 miles (50 km). If it is necessary to tow the vehicle a greater distance, the drive wheels must be lifted clear off the ground.

Alternatively the vehicle can be transported on a low loader or a trailer.

Connecting a Slave Battery Using Jumper Cables

WARNING: If the slave battery has recently been charged and is gassing, cover the vent plugs or covers with a damp cloth to reduce the risk of explosion should arcing occur when connecting the jumper cables. Failure to follow these instructions may result in personal injury.

CAUTION: A discharged battery condition may have been caused by an electrical short circuit. If this condition exists there will be an apparently live circuit on the vehicle even when all normal circuits are switched off. This can cause arcing when the jumper cables are connected.

CAUTION: While it is not recommended that the vehicle is jump started, it is recognized that this may occasionally be the only practical way to mobilize a vehicle. In such an instance the discharged battery must be recharged immediately after jump-starting to avoid permanent damage.

- Always make sure that the jumper cables are adequate for the task. Heavy duty cables must be used.
- Always make sure that the slave battery is of the same voltage as the vehicle battery. The batteries must be connected in parallel.
- Always make sure that switchable electric circuits are switched off before connecting jumper cables. This reduces the risk of arcing occurring when the final connection is made.

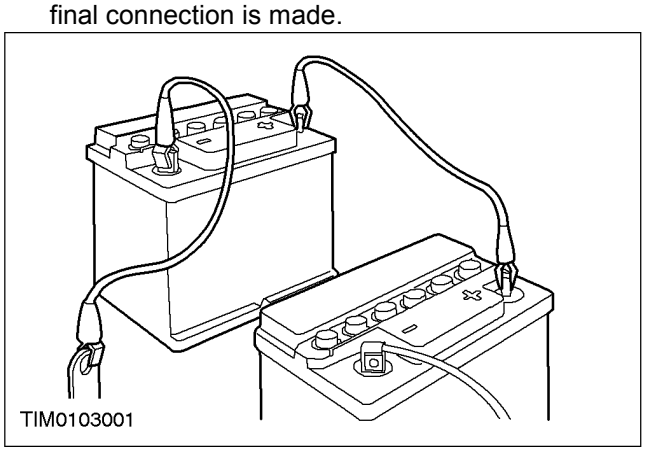

WARNING: Make sure that the ends of the jumper cables do not touch each other or ground against the vehicle body at any time while the cables are attached to the battery. A fully charged battery, if shorted through jumper cables, can discharge at a rate well above 1000 amps causing violent arcing and very rapid heating of the jumper cables and terminals, and can even cause the battery to explode. Failure to follow these instructions may result in personal injury.

Always connect the jumper cables in the following sequence:

- slave battery positive first then vehicle battery positive
- slave battery negative next and then vehicle ground at least 12 inches (300 mm) from the battery terminal, for example engine lifting eye

Always reduce the engine speed to idle before disconnecting the jumper cables.

Before removing the jumper cables from the vehicle that had the discharged battery, switch on the heater blower (high) or the heated rear window, to reduce the voltage peak when the cables are removed.

Always disconnect the jumper cables in the reverse order to the connecting sequence and do not short the ends of the cables.

DESCRIPTION AND OPERATION (CONTINUED)

Do not rely on the generator to restore a discharged battery. For a generator to recharge a battery, it would take in excess of eight hours continuous driving with no additional loads placed on the battery.

Component Cleaning

To prevent ingress of dirt, accumulations of loose dirt and greasy deposits should be removed before disconnecting or dismantling components or assemblies.

Components should be thoroughly cleaned before inspection prior to reassembly.

Cleaning Methods:

- dry cleaning
- removal of loose dirt with soft or cable brushes
- scraping dirt off with a piece of metal or wood
- wiping off with a rag

CAUTION: Compressed air is sometimes 'wet' so use with caution, especially on hydraulic systems.

- blowing dirt off with compressed air. (Eye protection must be worn when using this method)
- removal of dry dust using vacuum equipment. This method should always be used to remove friction lining material dust (asbestos particles)
- steam cleaning

WARNING: Most solvents require careful handling and some are harmful. Refer to Health and Safety Precautions and to the manufacturers literature for safety precautions. Failure to follow these instructions may result in personal injury.

Various solvents are available which are suitable for component cleaning. Some components such as brake hydraulic parts and electrical assemblies should be cleaned only with recommended solvents — refer to Solvents, Sealers and Adhesives or to the section of the manual relevant to the component.

Calibration of Essential Measuring Equipment

WARNING: Failure to follow these instructions may result in personal injury or damage to components.

It is of fundamental importance that certain essential equipment, for example torque wrenches, multimeters, exhaust gas analysers or rolling roads, are regularly calibrated in accordance with the manufacturers instructions.

DESCRIPTION AND OPERATION

Solvents, Sealers and Adhesives

Introduction

WARNING: Always handle all solvents, sealers and adhesives with extreme care. Some contain chemicals or give off fumes, which can be dangerous to health. Always follow the manufacturers instructions. If in doubt about any substance, particularly a solvent, DO NOT use it.

CAUTION: If in doubt about the suitability of any proprietary solvent or sealer for a particular application, contact the manufacturer of the product for information regarding storage, handling and application.

The Health and Safety Precautions subsection refers to some commonly used chemicals and materials; hazards associated with their use, and safety measures to be taken. Some of these chemicals may be included in the following list either in their own right or as an ingredient in a sealer or adhesive.

General Specifications

Anti-Seize Compound

General		
	SAM-1C-9107A	KluberUnimoly
Spark plug threads	ESE-M1244-A	`Never-Seize'

Sealers

Application	Ford Spec.	Manufacturer and Identification
For camshaft bearing caps	ESK-M4G260-A	Loctite 518
For cylinder block	WSK-M4G320-A	Hylosil 502
For fitting rear lamp assembly	WSK-M4G329-ABC	

DESCRIPTION AND OPERATION

Road/Roller Testing

Road or roller testing may be carried out for various reasons and a procedure detailing pre-test checks, through engine starting and stopping, pre-driving checks, on-test checks to final checks on completion of the test is given overleaf.

Unless complete vehicle performance is being checked, the full road test procedure need not be carried out. Instead, those items particularly relevant to the system/s being checked can be extracted.

Pre-Test Checks

WARNING: If the brake system hydraulic fluid level is low, pedal travel is excessive or a hydraulic leak is found, do not attempt to road test the vehicle until the reason for the low fluid level, excessive pedal travel or hydraulic leak is found and rectified.

It is suggested that pre-test checks, and functional tests of those systems/circuits which affect the safe and legal operations of the vehicle, such as brakes, lights and steering, should always be carried out before the road or roller test.

- Engine oil level
- Engine coolant level
- Tires, for correct pressure, compatible types and tread patterns, and wear within limits.
- There is sufficient fuel in the tank to complete the test.
- All around the engine, transmission and under the vehicle for oil, coolant, hydraulic and fuel leaks. Make a note of any apparent leaks and wipe off the surrounding areas to make it easier to identify the extent of the leak on completion of the test.

Starting the Engine

NOTE: On initial drive away from cold and within the first 1.5 km (1 mile), do not depress accelerator pedal beyond half travel until the vehicle has attained a minimum speed of 25 km/h (15 miles/h). Never operate at high engine speed or with the accelerator pedal at full travel whilst the engine is cold.

With the ignition switched off, check:

- The handbrake is applied.
- The gear lever is in neutral.
- All instrument gauges (except fuel gauge) read zero.

With the ignition switched on, check:

- Ignition controlled warning lights come on.
- Engine temperature gauge registers a reading compatible with the engine temperature.
- Fuel gauge registers a reading appropriate to the fuel level in the tank.
- The operation of the handbrake warning light and fluid level warning indicator light.

On Road or Roller Test Check:

CAUTION: If road testing, check the brake operation while still travelling at low speed before continuing with the test. If the brakes pull to one side, or appear to be otherwise faulty, do not continue with the road test until the fault has been found and rectified.

- Clutch pedal operation is not stiff or heavy.
- Initial gear engagement is smooth and there is no evidence of clutch drag.
- Handbrake control operates smoothly and the handbrake releases quickly and completely.
- Clutch takes up the drive smoothly, without slip or judder.
- Gear changing is smooth, and there are no abnormal noises or vibrations from the transmission.
- The engine power output is satisfactory, full power is achieved, acceleration is smooth and pedal operation not stiff or heavy, and engine speed returns to idle correctly.
- There is no excessive or abnormally colored smoke from the engine under normal driving, heavy load or overrun conditions.
- Steering operation, including power steering where fitted, is smooth, accurate, not excessively heavy or with excessive free play or vibration. Does not pull to one side and self centres smoothly after cornering.
- Speedometer, oil pressure warning lamp, coolant temperature gauge and tachometer (where fitted) register the correct readings or operate correctly.
- Switches and controls operate smoothly and positively, warning or indicator lights operate correctly and the direction indicator control self cancels when the steering is returned to the straight ahead position.
- Heating and ventilation systems work correctly and effectively.
- Brake operation and efficiency.

DESCRIPTION AND OPERATION (CONTINUED)

Brake Testing

WARNING: When brake testing, avoid breathing the smoke or fumes from hot brakes, this may contain asbestos dust which is hazardous to health, see Health and Safety Precautions.

Avoid brake testing on busy roads where it can cause inconvenience or danger to other road users.

CAUTION: Brake testing, which includes heavy brake applications should not be carried out with new brake pads/discs or linings/drums until the components have bedded-in. New brake friction components will not reach full efficiency until the bedding-in process is complete.

Test the brakes at several speeds within the normal operating range using both light and heavy pedal pressure. Note any tendency to snatch, pull or drag, and any undue delay in application or release.

Allow the vehicle to coast and note any tendency to pull to one side, or evidence that the brakes are binding.

After stopping the vehicle (not immediately after a period of heavy braking), carefully check the brake temperature. A disc, which feels hot, or appreciably hotter than the others, indicates that the brake is binding.

After completion of the test, check for:

- Oil, coolant, hydraulic, air and fuel leaks.
- Abnormal temperature of any moving components or assemblies, e.g. wheel hubs, transmission, axle etc., which might indicate over tightness or lack of lubrication.

DESCRIPTION AND OPERATION

SECTION 100-01 Identification Codes

VEHICLE APPLICATION: 2002 Bantam

SUBJECT **PAGE**

DESCRIPTION AND OPERATION

Identification Codes 100-01-26
Vehicle Identification Number (VIN) 100-01-26/27
World manufacturer..... 100-01-27
Year of manufacture..... 100-01-27
Month of manufacture 100-01-28
Vehicle certification or Vehicle identification plate (Vin)..... 100-01-29
Body colour code 100-01-30
Interior trim code 100-01-30

DESCRIPTION AND OPERATION

Identification Codes

Vehicle Identification Number (VIN)

NOTE: The vehicle identification number (VIN) can be identified by an asterisk at its start and finish.

The vehicle identification plate is located in the engine compartment on the front body crossmember.

The codes stamped on the plate during production enable precise details of the vehicle build specification to be established.

The Vehicle Identification Number (VIN) may also be checked through the windshield.

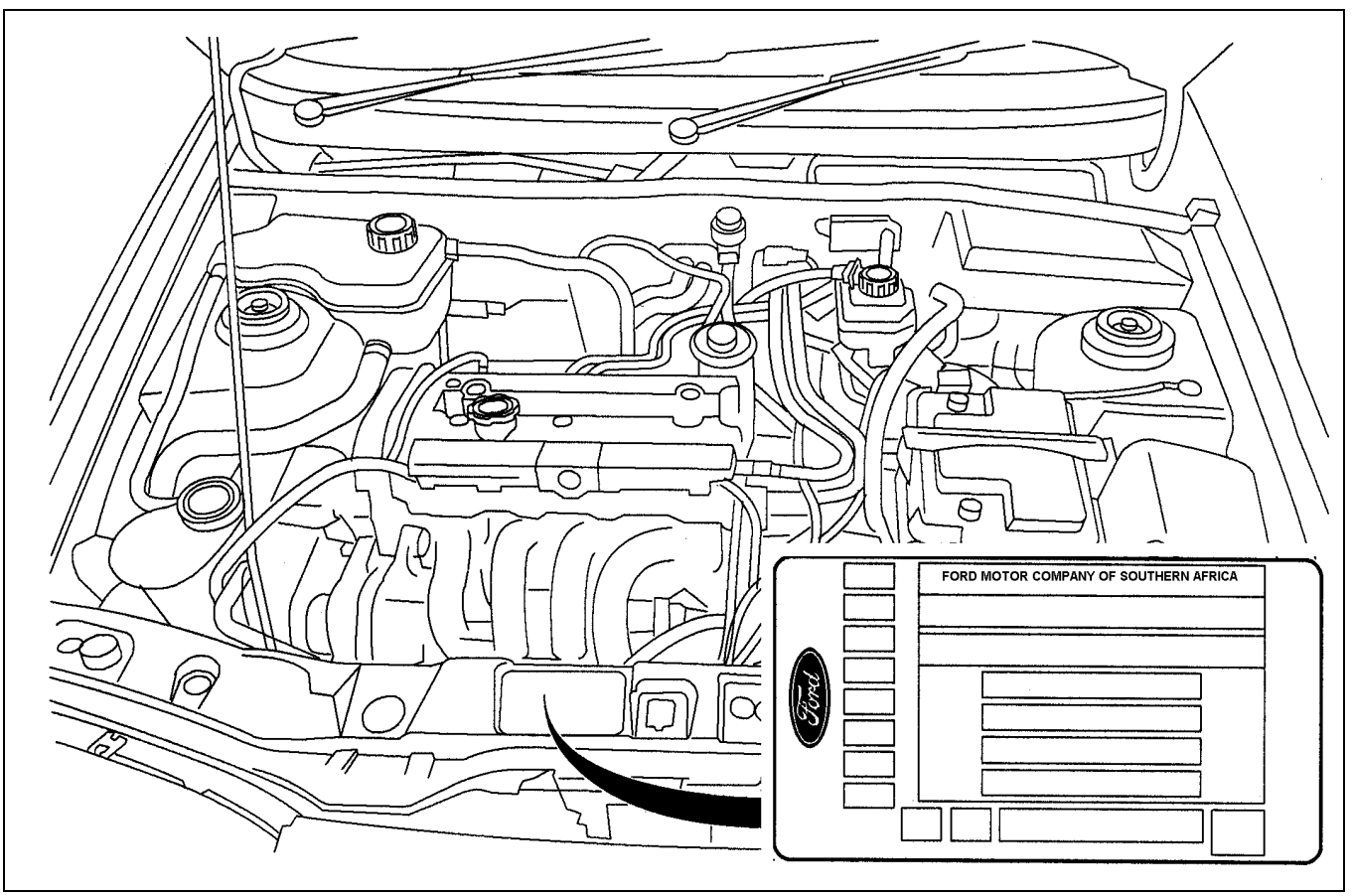

DESCRIPTION AND OPERATION (CONTINUED)

Vehicle Identification Number

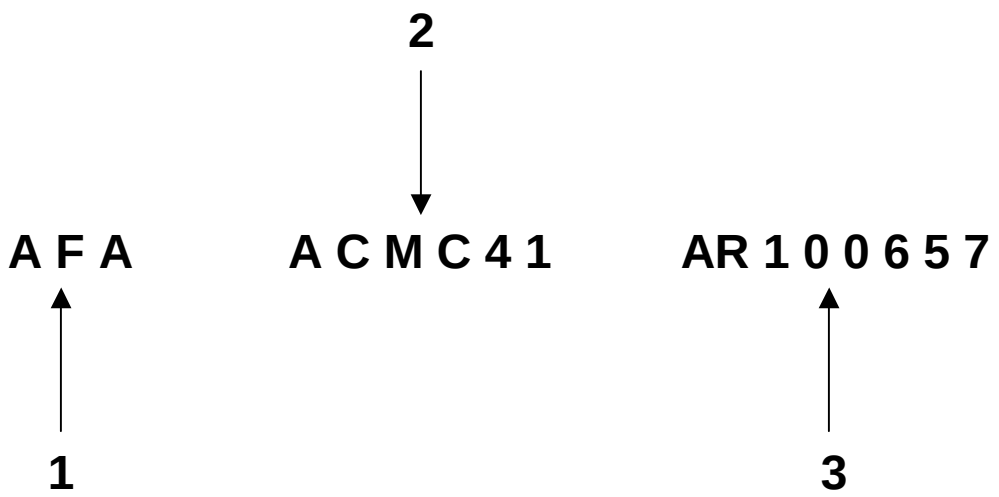

Item	Description
1	World manufacturer identifier code
2	Model code

Item	Description
3	Sequential chassis number

VIN Position 1

Code	World Manufacturer
AFA	Ford Motor Company of Southern Africa (PTY) Limited

Year of Manufacture

Code	Year of manufacture
A	2001
B	2002
C	2003
D	2004
E	2005
F	2006
G	2007
H	2008
J	2009
K	2010
L	2011

DESCRIPTION AND OPERATION (CONTINUED)

Month of Manufacture

Month	2001	2002	2003	2004	2005	2006	2007	2008	2009	2010	2011
January	T	E	G	P	T	E	G	P	T	E	G
February	J	L	C	B	J	L	C	B	J	L	C
March	U	Y	K	R	U	Y	K	R	U	Y	K
April	M	S	D	A	M	S	D	A	M	S	D
May	P	T	E	G	P	T	E	G	P	T	E
June	B	J	L	C	B	J	L	C	B	J	L
July	R	U	Y	K	R	U	Y	K	R	U	Y
August	A	M	S	D	A	M	S	D	A	M	S
September	G	P	T	E	G	P	T	E	G	P	T
October	C	B	J	L	C	B	J	L	C	B	J
November	K	R	U	Y	K	R	U	Y	K	R	U
December	D	A	M	S	D	A	M	S	D	A	M

DESCRIPTION AND OPERATION

Vehicle Certification Label (typical) or VIN Plate

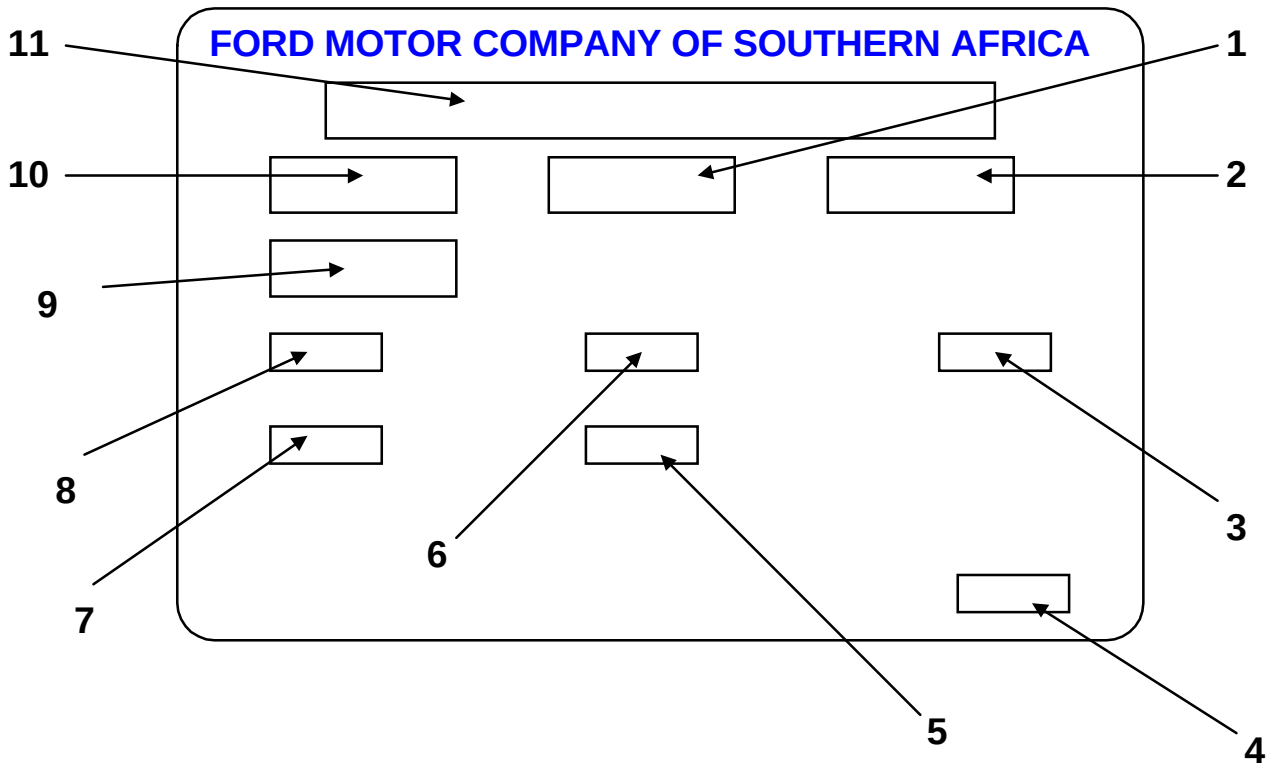

Item	Description
1	Chassis number
2	Trim
3	Engine output kW
4	Build code
5	Maximum permissible rear axle loading
6	Gross vehicle mass

Item	Description
7	Gross combination mass
8	Maximum permissible front axle loading
9	Tare
10	Model
11	Vehicle identification number (Vin)

DESCRIPTION AND OPERATION (CONTINUED)

Body Colour Code

Body Colour

Code	Body Colour
PA3	Satin white
PGV	Dolphin blue
PA4	Solid red
PD5	Atlantic blue
PD6	Desert wind
PD7	Titanium grey
PB1	Pure silver
PHU	Desert glow
PVV	Ice blue
PHL	Aquarius blue
PWG	Berry red
PDC	Champagne silver

Interior Trim

Interior Trim Colour

Code	Trim
TXRJ	Esquire printed vinyl
TXRK	Cosmic pattern
TXRL	Chequers pattern
TXHV	Midnight black leather

SECTION 100-02 Jacking and Lifting

VEHICLE APPLICATION: 2002 Bantam

SUBJECT **PAGE**

DESCRIPTION AND OPERATION

Jacking 100-02-32
Lifting 100-02-33

DESCRIPTION AND OPERATION

Jacking

⚠WARNING: Always position the vehicle on a hard level surface. If the vehicle must be jacked up on a soft surface use load spreading blocks under the jack. Always use a chock at the wheel diagonally opposite the jack. Failure to follow these instructions may result in personal injury.

Before commencing any repairs that involve jacking the vehicle, it is essential that the following instructions are fully understood.

It is important that only the correct jacking points are used at all times. The vehicle may be lifted by positioning a jack under the sill, forward of the rear wheel or behind the front wheel openings. Use a cushioned pad, if possible, to avoid damaging the body paint.

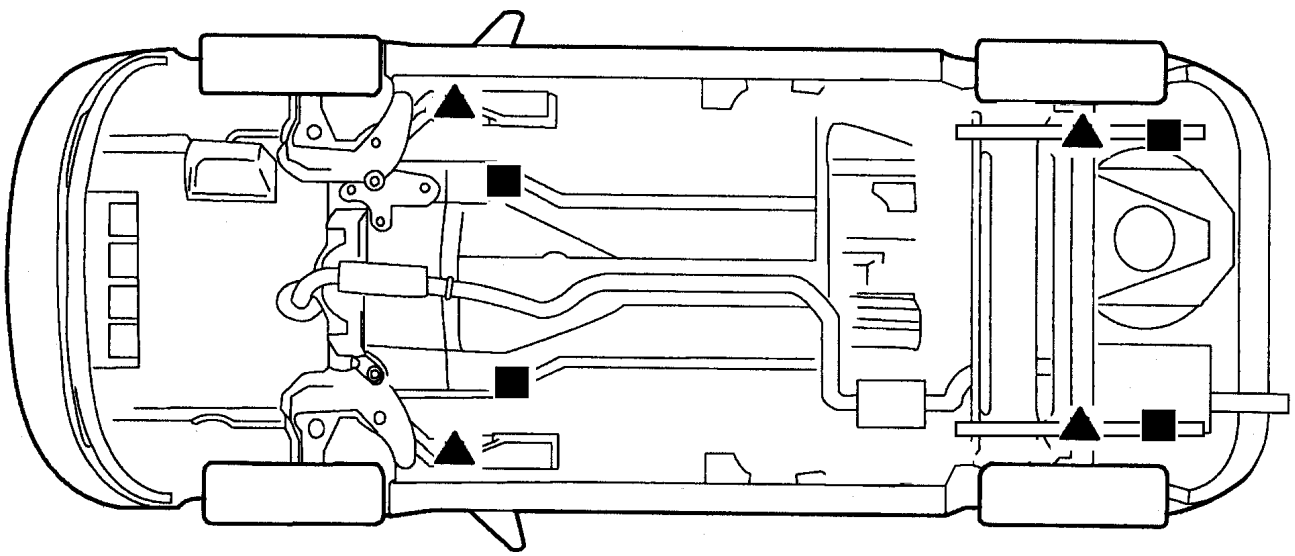

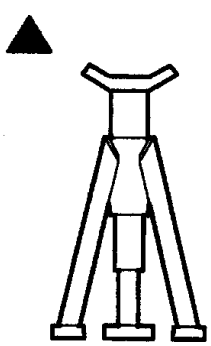

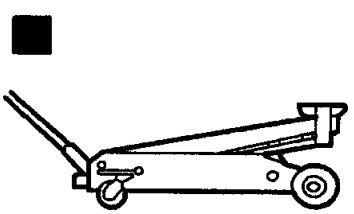

DESCRIPTION AND OPERATION

Lifting

NOTE: When lifting a vehicle with a two-post lift, vehicle levelling pads must be used under the lifting points.

It is important that only the correct lifting points are used at all times.

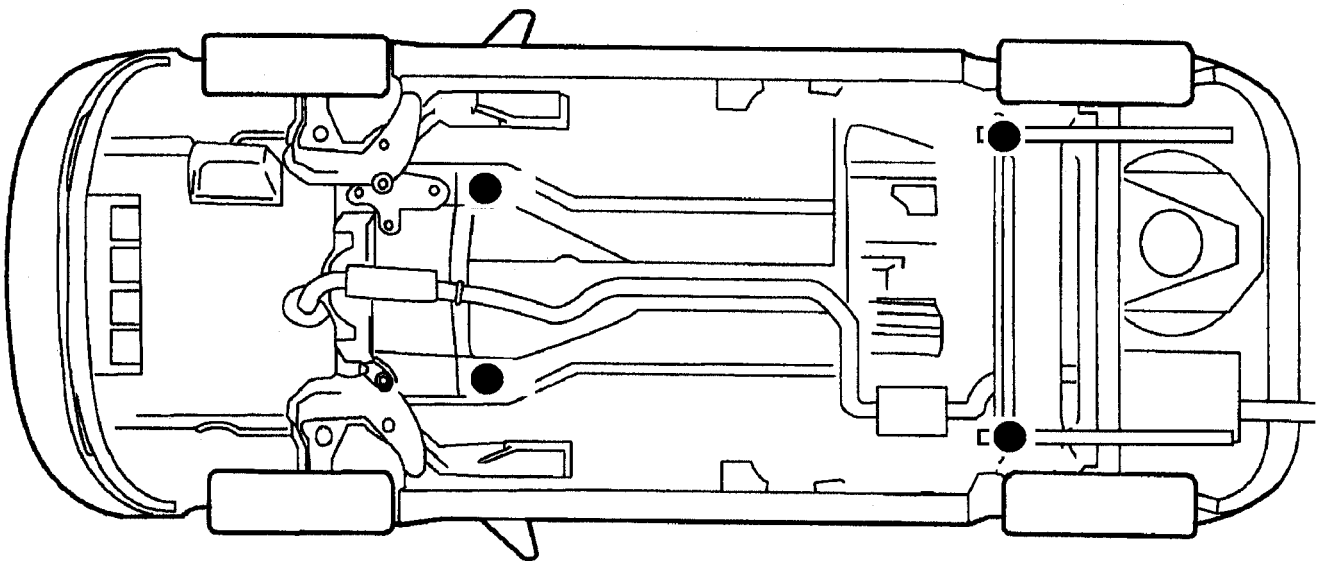

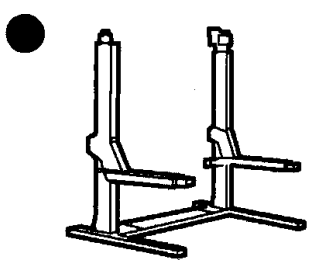

SECTION 100-04 Noise, Vibration and Harshness

VEHICLE APPLICATION: 2002 Bantam

SUBJECT **PAGE**

DESCRIPTION AND OPERATION

Noise, Vibration and Harshness (NVH) 100-04-35
Diagnostic Theory 100-04-35
Know the System 100-04-35
Know the History of the System 100-04-35
Know the History of the Condition 100-04-35
Know the Probability of Certain Conditions Developing 100-04-35
Do Not Cure the Symptom and Leave the Cause 100-04-35
Be Positive the Cause is Found 100-04-35
Diagnostic Charts 100-04-35/36

DIAGNOSIS AND TESTING

Noise, Vibration and Harshness (NVH) 100-04-37
Inspection and Verification 100-04-37
Noise Diagnostic Procedure 100-04-37/38
Road Test 100-04-39
Road Test Quick Checks 100-04-39
Road Conditions 100-04-40
Vehicle Preparation 100-04-40
Lift Test 100-04-40
Symptom Chart 100-04-41A
Pinpoint Tests 100-04-41B/53

GENERAL PROCEDURES

Powertrain/Drive train Mount Neutralizing ..... (14 001 0) 100-04-54
Exhaust System Neutralizing ..... (25 001 0) 100-04-55

SPECIFICATIONS

Specifications 100-04-56
Lubricants, Fluids, Sealers and Adhesives 100-04-56

DESCRIPTION AND OPERATION

Noise, Vibration and Harshness (NVH)

Noise, vibration and harshness (NVH) is becoming more important as vehicles become more sophisticated and passenger comfort levels increase. This section is designed to aid in the diagnosis and testing and repair of NVH concerns.

- Noise is defined as sounds not associated with the operation of passenger compartment equipment that interface with customer satisfaction.
- Vibration is defined as impulses felt by the customers that are not caused by road surface changes.
- Harshness is a ride quality issue where the customer feels that the vehicle response to the road surface is sharply transmitted to the customer.

Diagnostic Theory

Diagnosis is more than just following a series of interrelated steps in order to find the solution to the specific condition. It is a way of looking at systems that are not functioning the way they should and finding out why. Also it knows how the system should work and whether it is working correctly.

There are basic rules for diagnosis. If these rules are followed, the cause of the condition is usually found the first time through the system.

Know the System

- Know how the parts go together.
- Know how the system operates as well as its limits and what happens when the system goes wrong.
- Sometimes this means checking the system against one that is known to be working correctly.

Know the History of the System

A clue in any one of these areas may save time:

- How old or new is the system?
- What kind of treatment has it had?
- Has it been serviced in the past in such a manner that might relate to the present condition?
- What is the service history?

Know the History of the Condition

- Did it start suddenly or appear gradually?
- Was it related to some other occurrence such as a collision or previous part replacement?
- Know how the condition made itself known; it may be an important clue to the cause.

Know the Probability of Certain Conditions Developing

- Look for the simple rather than the complex.
- For example:
  - Electrical conditions usually occur at connections rather than components.
  - An engine no-start is more likely to be caused by a loose wire or small adjustment rather than a sheared-off camshaft.
- Know the difference between impossible and improbable. Certain failures in a system can be improbable but still happen.
- New parts are just that, new. It does not mean they are always good functioning parts.

Do Not Cure the Symptom and Leave the Cause

Lowering the pressure in a front tyre may correct the condition of a vehicle leaning to one side, but it does not correct the original condition.

Be Positive the Cause is Found

- Double check findings.
- What caused a worn component?
- A loose transmission or engine mount could indicate that other mounts are also loose.

Diagnostic Charts

Charts are a simple way of expressing the relationship between basic logic and a physical system of components. They help discover the cause of a condition in the least time. Diagnostic charts combine many areas of diagnosis into one visual display:

DESCRIPTION AND OPERATION (CONTINUED)

- Probability of certain things occurring in a system.
- Speed of checking certain components or functions before others.
- Simplicity of performing certain tests before others.
- Elimination of checking huge portions of a system by performing simple tests.
- Certainty of narrowing down the search to a small portion before performing in-depth testing.

The fastest way to find a condition is to work with the tools that are available. This means working with proven diagnostic charts and the correct special equipment for the system.

DIAGNOSIS AND TESTING

Noise, Vibration and Harshness (NVH)

Inspection and Verification

1. Verify the customer concern by operating the vehicle to duplicate the condition.
2. Visually inspect the vehicle to determine any obvious causes of the concern(s).
3. If the inspection reveals obvious concern(s) that can be readily identified, repair as necessary.
4. If the concern(s) remains after the inspection, determine the symptom(s) and go to the Symptom Chart.

How To Use This Diagnostic Procedure Section

- Noise, vibration and harshness concerns have become more important as vehicles have become more sensitive to these vibrations. This section is designed to aid in identifying these situations.
- The section provides diagnostic procedures based on symptom. If the condition occurs at high speed, for instance, the most likely place to start is under High Speed Shake.
- The road test procedure will tell how to sort the conditions into categories and how to tell a vibration from a shake.
- A series of Road Test Quick Checks is provided to make sure that a cause is either pinpointed or eliminated.
- Use the Vehicle Road Test Evaluation form to record road test results.
- Use the Glossary to become familiar with the terms.
- Name the condition, proceed to the appropriate section and locate the correct diagnosis. When the condition is identified, the job is partly done.
- Follow the diagnostic procedure as outlined.
- Quick Checks are described within the step, while more involved tests and adjustments are outlined in Service Procedures and Adjustments.
- Always follow each step exactly and make notes to recall important findings later.

Customer Interview

The road test and customer interview (if available) provide information that will help identify the concern and will provide direction to the correct starting point or diagnosis.

- Use the Customer Concern Evaluation form to record customer concerns.

Identifying the Condition

Noise, vibration, and harshness (NVH) usually occur in four areas:

- Tires
- Engine accessories
- Suspension
- Driveline/driveshaft centre bearing

NOTE: If the driveshaft centre bearing cap is removed, a new bearing cap must be installed.

It is important, therefore, that an NVH concern be isolated into its specific areas as soon as possible. The easiest and quickest way to do this is to carry out the Road Test as outlined.

Noise Diagnostic Procedure

Non-Axle Noise

The five most common sources of non-axle noise are exhaust, tires, roof racks, trim mouldings and transaxle.

Therefore, make sure that none of the following conditions are the cause of the noise before proceeding with a driveline teardown and diagnosis.

- In certain conditions, the pitch of the exhaust may sound very much like gear noise. At other times, it can be mistaken for a wheel bearing rumble.
- Tires, especially snow tires, can have a high pitched tread whine or roar, similar to gear noise. Radial tires, to some degree, have this characteristic. Also, any non-standard tyre with an unusual tread construction may emit a roar or whine-type noise.
- Trim and mouldings can also cause whistling or whining noise.

DIAGNOSIS AND TESTING (CONTINUED)

- Clunk may be a metallic noise heard when the automatic transaxle is engaged in REVERSE or DRIVE, or it may occur when throttle is applied or released. It is caused by backlash somewhere in the driveline.
- Bearing rumble sounds like marbles being tumbled. This condition is usually caused by a malfunctioning wheel bearing.

Noise Conditions

- Gear noise is typically a howling or whining due to gear damage or incorrect bearing preload. It can occur at various speeds and driving conditions, or it can be continuous.
- Chuckle is a particular rattling noise that sounds like a stick against the spokes of a spinning bicycle wheel. It occurs while decelerating from 64 km/h (40 mph) and can usually be heard all the way to a stop. The frequency varies with vehicle speed.
- Knock is very similar to chuckle, through it may be louder and occurs on acceleration or deceleration. The teardown will disclose what has to be corrected.

Check and rule out tires, exhaust and trim items before disassembling the transaxle to diagnose and correct gear noise.

The noises described under Road Test usually have specific causes that can be diagnosed by observation as the unit is disassembled. The initial clues are the type of noise heard on the road test and the driving conditions.

Vibration Conditions

NOTE: Constant velocity joints (CV) should not be changed for new ones unless disassembly and inspection revealed unusual wear.

Clicking, popping or grinding noises may be caused by the following:

- Cut or damaged front wheel halfshaft joint boots resulting in inadequate or contaminated lube in the outboard or inboard CV joint stub shaft pilot bearing housings.
- Loose front wheel halfshaft joint boot clamps.
- Another component contacting halfshaft assembly.
- Worn, damaged or incorrectly installed wheel bearing, suspension or brake component.

Vibration at highway speeds may be caused by the following:

- Out-of-balance front or rear wheels.
- Out-of-round tires.

NOTE: Halfshafts are not balanced and do not contribute to rotational vibration disturbances.

Shudder or vibration during acceleration may be caused by the following:

- Excessively worn or damaged outboard or inboard CV joint stub shaft pilot bearing housing.
- Excessively high CV joint operating angles caused by incorrect ride height. Check ride height, verify correct spring rate and check items under Inoperative Conditions.

Leakage Conditions

1. Inspect CV joint boots for evidence of cracks, tears or splits.
2. Inspect underbody for any indication of grease splatter in the vicinity of front wheel halfshaft joint boot, outboard and inboard CV joint stub shaft pilot bearing housing locations, which is an indication of front wheel halfshaft joint boot and/or front wheel halfshaft joint boot clamp damage.
3. Inspect inboard CV joint stub shaft pilot bearing housing seal leakage at inboard CV joint stub shaft pilot bearing housing.
4. Make sure the front axle wheel hub retainer is the correct prevailing torque type.

Inoperative Conditions

If a CV joint or halfshaft pullout occurs, check the following:

- Suspension components for correct location, damage or wear.
- Bushings for wear
- Sub-frame for damage
- Bent or worn components:
  - stabilizer bar link
  - left-hand front suspension lower arm and bushing
  - right-hand front suspension lower arm and bushing
  - front wheel hub and spindle

DIAGNOSIS AND TESTING (CONTINUED)

Road Test

A gear-driven unit will produce a certain amount of noise. Some noise is acceptable and may be audible at certain speeds or under various driving conditions, as on a new asphalt road. The slight noise is in no way detrimental and must be considered normal.

The road test and customer interview (if available) provide information needed to identify the condition and give direction to the correct starting point for diagnosis.

1. Make notes throughout the diagnosis routine. Use a Road Test form that includes space for comments. Make sure to write down even the smallest bit of information, because it may turn out to be the most important.
2. Do not touch anything until a road test and a thorough visual inspection of the vehicle have been carried out. Leave the tyre pressures and vehicle load just where they were when the condition was first observed. Adjusting tyre pressures, vehicle load or making other adjustments may reduce the conditions' intensity to a point where it cannot be identified clearly. It may also inject something new into the system, preventing correct diagnosis.
3. Make a visual inspection as part of the preliminary diagnosis routine, writing down anything that does not look right. Note tyre pressures, but do not adjust them yet. Note leaking fluids, loose nuts and/or bolts, or bright spots where components may be rubbing against each other. Check the luggage compartment for unusual loads.
4. Road test the vehicle and define the condition by reproducing it several times during the road test.
5. Carry out the Road Test Quick Checks as soon as the condition is reproduced. This will identify the correct diagnostic procedure. Carry out the Road Test Quick Checks more than once to verify they are providing a valid result. Remember, the Road Test Quick Checks may not tell where the concern is, but they will tell where it is not.

Road Test Quick Checks

1. 24-80 km/h (15-50 mph): With light acceleration, a moaning noise is heard and possibly a vibration is felt in the front floor pan. It is usually worse at a particular engine speed and at a particular throttle setting during acceleration at that speed. It may also produce a moaning sound, depending on what component is causing it.
   Refer to Tip-In Moan in the Symptom Chart.
2. Acceleration/Deceleration: With slow acceleration and deceleration, a shake is sometimes noticed in the steering wheel/column, seats, front floor pan, front door trim panel or front end sheet metal. It is a low frequency vibration (around 9-15 cycles per second). It may or may not be increased by applying brakes lightly.
   Refer to Idle Boom/Shake/Vibration in the Symptom Chart.
3. High Speed: A vibration is felt in the front floor pan or seats with no visible shake, but with an accompanying sound or rumble, buzz, hum, drone or booming noise. Coast with the clutch pedal depressed and engine idling. If vibration is still evident, it may be related to wheels, tires, front brake discs, wheel hubs or front wheel bearings. Refer to High Speed Shake in the Symptom Chart.
4. Engine rpm Sensitive: A vibration is felt whenever the engine reaches a particular rpm. It will disappear in neutral coasts. The vibration can be duplicated by operating the engine at the concern rpm while the vehicle is sitting still. It can be caused by any component, from the accessory drive belt to the clutch, which turns at engine speed when the vehicle is stopped. Refer to Engine Accessory Vibration in the Symptom Chart.
5. Noise and Vibration While Turning: Clicking, popping, or grinding noises may be due to the following:

- Cut or damaged front wheel halfshaft joint boot resulting in inadequate or contaminated lube fill in the outboard front wheel halfshaft joint or inboard front wheel halfshaft joint.
- Loose front wheel halfshaft joint boot clamp.
- Other component contacting the halfshaft assembly.
- Worn, damaged, or incorrectly installed front wheel bearing.

DIAGNOSIS AND TESTING (CONTINUED)

- Worn, contaminated, or dry inboard front wheel halfshaft joint or outboard front wheel halfshaft joint.

Road Conditions

An experienced technician will always establish a route that will be used for all NVH diagnosis road tests. The road selected should be reasonably smooth, level and free of undulations (unless a particular condition needs to be identified). A smooth asphalt road that allows driving over a range of speeds is best. Gravel or bumpy roads are unsuitable because of the additional road noise produced. Once the route is established and consistently used, the road noise variable is eliminated from the test results.

If a customer complains of a noise or vibration on a particular road and only on a particular road, the source of the concern may be the road surface. If possible, try to test the vehicle on the same type of road.

Vehicle Preparation

Carry out a thorough visual inspection of the vehicle before carrying out the road test. Note anything, which is unusual. Do not repair or adjust any condition until the road test is carried out, unless the vehicle is inoperative or the condition could pose a hazard to the technician.

After verifying the condition has been corrected, make sure all components removed have been installed.

Lift Test

After a road test, it is sometimes useful to do a similar test on a vehicle lift.

1. Raise the vehicle on a vehicle lift. REFER to Section 100-02.
2. Explore the speed range of interest using the Road Test Quick Checks as previously described.
3. Carryout a coast down in NEUTRAL. If the vehicle is free of vibration when operating at a steady indicated speed and behaves very differently in DRIVE and COAST, a transaxle concern is likely.

Note, however, that a test on the vehicle lift may produce different vibrations and noises than a road test because of the effect of the lift. It is not unusual to find vibrations on the lift that were not found in the road test. If the condition found on the road can be duplicated on the lift, carrying out experiments on the vehicle lift may save a great deal of time.

NOTE: Some concerns may be apparent only on smooth asphalt roads.

When carrying out the high-speed shake diagnosis or engine accessory vibration diagnosis on a vehicle lift, observe the following precautions:

WARNING: If only one drive wheel is allowed to rotate, speed must be limited to 55 km/h (35 mph) indicated on the speedometer since actual wheel speed will be twice that indicated on the speedometer. Speed exceeding 55 km/h (35 mph) or allowing the drive wheel to hang unsupported could result in tyre disintegration, differential failure and/or constant velocity joint and halfshaft failure, which could cause serious personal injury and extensive vehicle damage.

CAUTION: The suspension should not be allowed to hang free. When the constant velocity joint is run at a very high angle, extra vibration as well as damage to seals and joints can occur.

The front suspension lower arm should be supported as far outboard as possible. To bring the vehicle to its correct ride height, the full weight of the vehicle should be supported in front by floor jacks. REFER to Section 100-02.

DIAGNOSIS AND TESTING

Symptom Chart

Symptom Chart

Condition	Possible Sources	Action
•High speed shake	•Suspension/front wheel halfshaft and joints. •Tires/wheels. •Wheel bearings. •Front wheel halfshaft joint boots. •Brake discs. •Engine. •Transaxle.	•GO to Pinpoint Test A.
•Tip-in moan	•Air cleaner. •Powertrain. •Engine mounts. •Exhaust system.	•GO to Pinpoint Test B.
•Idle boom/shake/vibration	•Cables/hoses. •Engine mounts. •Exhaust system. •Accessory drive belt/pulleys.	•GO to Pinpoint Test C.
•Engine accessory vibration	•Accessory drive belt/pulleys. •Mounting hardware.	•GO to Pinpoint Test D.
•Tyre/wheel run out	•Tires/wheels. •Wheel bearings.	•GO to Pinpoint Test E.
•Brakes, front disc-vibration/shudder	•Brake discs. •Worn/damaged brake pads. •Foreign material on brake pads. •Damaged front/rear brake disc contact surface. •Loose caliper mounting bolt. •Loose front wheel bearing. •Disc thickness variance.	•GO to Pinpoint Test F.
•Wheel end vibration analysis	•Brake drum/disc imbalance. •Engine or transaxle mounts. •Worn or damaged front wheel bearing.	•GO to Pinpoint Test G.
•Engine run-up check	•A/C compressor. •Engine/transaxle mounts. •Exhaust system components.	•GO to Pinpoint Test H.

DIAGNOSIS AND TESTING

PINPOINT TESTS..... 100-04-41B

PINPOINT TEST A: HIGH SPEED SHAKE

A1: INSPECT THE TIRES 100-04-42

A2: INSPECT THE WHEEL BEARINGS 100-04-42

A3: INSPECT THE FRONT WHEEL HALFSHAFT JOINT BOOTS..... 100-04-42

PINPOINT TEST B: TIP-IN MOAN

B1: CHECK THE AIR CLEANER 100-04-43

B2: CHECK THE ENGINE MOUNTS 100-04-43

B3: CHECK THE EXHAUST SYSTEM..... 100-04-43

B4: CHECK FOR DRIVE TRAIN NOISE 100-04-43

PINPOINT TEST C: IDLE BOOM/SHAKE/VIBRATION

C1: CHECK THE CABLES/HOSES 100-04-44

C2: CHECK THE ENGINE MOUNTS..... 100-04-44

PINPOINT TEST D: ENGINE ACCESSORY VIBRATION

D1: CHECK THE ENGINE RUN-UP..... 100-04-44

D2: INSPECT THE ACCESSORY DRIVE BELT AND PULLEYS 100-04-45

D3: CHECK THE MOUNTING HARDWARE..... 100-04-45

D4: CHECK WITH THE ENGINE IDLING 100-04-45

D5: CHECK FOR ACCESSORY DRIVE BELT NOISE..... 100-04-46

D6: CHECK THE ACCESSORIES 100-04-46

PINPOINT TEST E: TYRE/WHEEL RUN OUT

E1: TYRE AND WHEEL BEARING INSPECTION.....100-04-46

E2: BALANCE THE WHEELS..... 100-04-47

E3: ROTATE THE WHEELS..... 100-04-47

E4: CHECK THE RUN OUT..... 100-04-47

E5: CHECK THE TYRE MOUNT ON THE WHEEL.....100-04-47

E6: BALANCE THE WHEELS AFTER CHECKING THE MOUNT ON THE WHEEL 100-04-48

PINPOINT TEST F: FRONT DISC BRAKES – VIBRATION/SHUDDER

F1: ROAD TEST 100-04-48

F2: APPLY THE PARKING BRAKE 100-04-48

F3: CHECK THE FRONT SUSPENSION..... 100-04-49

F4: REFINISH THE BRAKE DISCS 100-04-49

DIAGNOSIS AND TESTING

F5: CHECK THE REAR SUSPENSION 100-04-49
F6: REFINISH THE REAR BRAKES 100-04-49
F7: INSTALL NEW FRONT BRAKE DISCS 100-04-50
F8: INSTALL NEW REAR BRAKE DRUMS 100-04-50

PINPOINT TEST G: WHEEL END VIBRATION ANALYSIS

G1: NEUTRAL COAST TEST 100-04-50
G2: INSPECT THE TIRES 100-04-50
G3: INSPECT THE WHEEL AND TYRE RUN OUT 100-04-51
G4: CARRY OUT A STATIC BALANCE TEST 100-04-51
G5: CARRY OUT A ROAD TEST 100-04-51

PINPOINT TEST H: ENGINE RUN-UP CHECK

H1: CARRY OUT SETUP FOR THE ENGINE RUN-UP CHECK 100-04-51
H2: CARRY OUT THE ENGINE RUN-UP CHECK 100-04-52

PINPOINT TEST I: ACCESSORY DRIVE BELT CHECK

I1: INSPECT THE ACCESSORY DRIVE BELT 100-04-52
I2: CHECK THE BELT TENSION 100-04-52
I3: CHECK FOR PULLEY RUN OUT/BELT WHIP 100-04-53
I4: INSPECT THE BELT RIDE 100-04-53
I5: CHECK THE BELT 100-04-53

Pinpoint Tests

NOTE: These Pinpoint Tests are designed to take the technician through a step-by-step diagnosis procedure to determine the cause of a condition. It may not always be necessary to follow the chart to its conclusion. Perform only the Pinpoint Test Steps necessary to correct the condition. Then check operation of the system to make sure the condition has been corrected.

After verifying that the condition has been corrected, make sure all components removed have been installed.

DIAGNOSIS AND TESTING

PINPOINT TEST A: HIGH SPEED SHAKE

CONDITIONS	DETAILS/RESULTS/ACTIONS
A1: INSPECT THE TIRES	
	1 Inspect the tires. - Raise and support the vehicle. REFER to Section 100-02. - Inspect the tires for extreme wear or damage, cupping or flat spots. • Are the tires OK? **Yes** GO TO **A2** **No** REFER to Section 204-03.
A2: INSPECT THE WHEEL BEARINGS	
	1 Inspect the wheel bearings. - Carry out the vibration diagnosis. REFER to Section 204-00. • Are the wheel bearings OK? **Yes** GO TO **A3** **No** INSTALL a new wheel bearing as necessary. REFER to Section 204-01. (front) or REFER to Section 204-02A / 204-02B. (rear). TEST the system for normal operation.
A3: INSPECT THE FRONT WHEEL HALFSHAFT JOINT BOOTS	
	1 Inspect the front wheel halfshaft joint boots. - Spin the front tyre by hand. - Inspect the front wheel halfshaft joint boots for cracks, tears, splits or splattered grease. • Are the front wheel halfshaft joint boots OK? **Yes** CARRY OUT Pinpoint Test E. **No** INSTALL new front wheel halfshaft joint boot(s). REFER to Section 205-04. TEST the system for normal operation.

DIAGNOSIS AND TESTING (CONTINUED)

PINPOINT TEST B: TIP-IN MOAN

CONDITIONS	DETAILS/RESULTS/ACTIONS
B1: CHECK THE AIR CLEANER	
	1 Check the air cleaner - Check the air cleaner, inlet tube, outlet tube, resonators and all other components associated with the air induction system for correct installation and tightness of all connections. • Are the components OK? **Yes** GO TO **B2** **No** CORRECT the condition as necessary. TEST the system for normal operation. If the moan persists, GO TO **B2**
B2: CHECK THE ENGINE MOUNTS	
	1 Check the engine mounts - Refer to the Engine/Transaxle Mount Neutralizing procedure in this section. • Are the engine mounts OK? **Yes** GO TO **B3** **No** GO TO **B4**
B3: CHECK THE EXHAUST SYSTEM	
	1 Check the exhaust system. - Refer to the Exhaust System Neutralizing procedure in this section. • Is the exhaust system OK? **Yes** GO TO **B4** **No** REPAIR as necessary. TEST the system for normal operation.
B4: CHECK FOR DRIVE TRAIN NOISE	
	1 Check for drive train noise. - Raise and support the vehicle. REFER to Section 100-02. With the engine off, visually inspect isolation components for damaged and/or misaligned mounting. • Are the vehicle components OK? **Yes** REFER to Pinpoint Test D, Engine Accessory Vibration. **No** INSTALL new components as necessary. ALIGN the powertrain. TEST the system normal operation.

DIAGNOSIS AND TESTING (CONTINUED)

PINPOINT TEST C: IDLE BOOM/SHAKE/VIBRATION

CONDITIONS	DETAILS/RESULTS/ACTIONS
C1: CHECK THE CABLES/HOSES	
	1 Check the cables/hoses. - CHECK the engine compartment for any component that may be grounding between the engine and body or chassis. Example: Control cables, A/C hoses, accelerator cable, etc. • Are the components OK? **Yes** GO TO **C2** **No** CORRECT the condition as necessary. TEST the system for normal operation. If the moan persists, GO TO **C2**
C2: CHECK THE ENGINE MOUNTS	
	1 Check the engine mounts. - Inspect the engine support insulators for correct operation. REFER to Section 303-01A. or REFER to Section 303-01B. • Is the condition resolved? **Yes** Vehicle condition corrected. **No** GO to Pinpoint Test D.

PINPOINT TEST D: ENGINE ACCESSORY VIBRATION

CONDITIONS	DETAILS/RESULTS/ACTIONS
D1: CHECK THE ENGINE RUN-UP	
	1 Check the engine run-up. - Run the engine up to the concern rpm observed in the road test, with the vehicle stationary. • Does the vibration occur? **Yes** GO TO **D2** **No** CARRY OUT the stall test with the brakes locked (load the engine by slipping the clutch in gear). If the vibration occurs, GO to Pinpoint Test B.

DIAGNOSIS AND TESTING (CONTINUED)

CONDITIONS	DETAILS/RESULTS/ACTIONS
D2: INSPECT THE ACCESSORY DRIVE BELT AND PULLEYS	
	1 Inspect the belt and pulleys. - With the engine stopped, inspect the accessory drive belt and pulleys for wear or damage, and check the belt tension. REFER to Section 303-05. • Are the belt, automatic tensioner or pulleys worn or damaged? **Yes** INSTALL new components as necessary. REFER to Section 303-05. TEST the system for normal operation. If the vibration still exists. GO TO **D3** **No** GO TO **D3**
D3: CHECK THE MOUNTING HARDWARE	
	1 Check the mounting hardware. - Check the mounting brackets and adjusting components for correct alignment and tightness. • Are the mounting and adjusting components secure? **Yes** GO TO **D4** **No** ALIGN and TIGHTEN the mounting hardware to specifications. REFER to Section 303-05. CORRECT the belt tension. START the engine and run-up to the concern rpm. If the vibration still exists. GO TO **D4**
D4: CHECK WITH THE ENGINE IDLING	
	1 Check with the engine idling. - With the engine idling, visually check the accessory drive belt and pulleys for misalignment, run out or irregular motion. Maximum run out is 3.175 mm. - Increase the engine rpm. • Are the belt and pulleys OK? **Yes** GO TO **D5** **No** Diagnose the accessory drive belt concern. REFER to Section 303-05.

DIAGNOSIS AND TESTING (CONTINUED)

CONDITIONS	DETAILS/RESULTS/ACTIONS
D5: CHECK FOR ACCESSORY DRIVE BELT NOISE	
	1 Check for accessory drive belt noise. - Check for chirps or squeal from the belt by spraying a small amount of water on the grooved side of the belt (use a spray bottle or equivalent). • Does the noise change? **Yes** CHECK for misalignment. CHECK tensioner position. CHECK for worn belt. REPAIR as necessary. REFER to Section 303-05. TEST the system for normal operation. **No** CHECK the accessory bushings/bearings. REFER to Section 412-00. (Climate Control System) and REFER to Section 414-02. (Generator and Regulator). INSTALL new components as necessary. GO TO **D6**
D6: CHECK THE ACCESSORIES	
	1 Check the accessories - Run-up the engine to the concern rpm and check each component. • Is the noisy component located? **Yes** INSTALL a new accessory drive belt. If the vibration still exists, REPAIR the component. TEST the system for normal operation. **No** Engine component imbalance. REFER to Section 303-00. REPAIR or INSTALL a new component as necessary. TEST the system for normal operation.

PINPOINT TEST E: TYRE/WHEEL RUN OUT

CONDITIONS	DETAILS/RESULTS/ACTIONS
E1: TYRE AND WHEEL BEARING INSPECTION	
	1 Tyre and wheel bearing inspection. - Raise and support the vehicle. REFER to Section 100-02. Inspect the tires. REFER to Section 204-03. Inspect the wheel bearings. REFER to Section 204-00. • Are the bearings OK? **Yes** GO TO **E2** **No** INSTALL new bearings as necessary. REFER to Section 204-01. (front) or REFER to Section 204-02A / 204-02B. (rear). GO TO **E2**

DIAGNOSIS AND TESTING (CONTINUED)

CONDITIONS	DETAILS/RESULTS/ACTIONS
E2: BALANCE THE WHEELS	
	1 Balance the wheels. REFER to Section 204-03. - Balance the wheels and install on the vehicle. • Does the vehicle function correctly? **Yes** Condition corrected. **No** GO TO **E3**
E3: ROTATE THE WHEELS	
	1 Rotate the wheels. REFER to Section 204-03. - Rotate the wheels front to rear, and rear to front. • Does the vehicle function correctly? **Yes** Condition corrected. **No** GO TO **E4**
E4: CHECK THE RUN OUT	
	1 Check the run out. REFER to Section 204-03. - Check total radial run out and total lateral run out of the wheel. • Is the run out less than 1.01 mm for the front wheels and less than 1.187 mm for the rear wheels? **Yes** GO TO **E5** **No** GO TO **E6**
E5: CHECK THE TYRE MOUNT ON THE WHEEL	
	1 Check the tyre mount on the wheel. - Check the total radial run out again as outlined in Pinpoint Test E4. • Is the total radial run out less than 1.01 mm? **Yes** GO TO **E6** **No** INSTALL new tyre(s) as necessary. TEST the system for normal operation.

DIAGNOSIS AND TESTING (CONTINUED)

CONDITIONS	DETAILS/RESULTS/ACTIONS
E6: BALANCE THE WHEELS AFTER CHECKING THE MOUNT ON THE WHEEL	
	1 Balance the tires after checking the mount on the wheel. - Check and balance the wheels. - Road test. • Is the vibration eliminated? **Yes** Condition corrected. **No** In some cases a vibration concern may be caused by the tyre internal construction inducing force variations, which cannot be detected through run out measurement. This condition is diagnosed by installing tyre/wheel assemblies (one at a time) from a different vehicle to isolate the offending tyre(s). INSTALL new tires as necessary. BALANCE tires. TEST the system for normal operation.

PINPOINT TEST F: FRONT DISC BRAKES – VIBRATION/SHUDDER

CONDITIONS	DETAILS/RESULTS/ACTIONS
F1: ROAD TEST	
	1 Road test. - With standard wheels and tires installed, road test the vehicle and verify the condition. • Is brake shudder/vibration or brake chirp present when the brakes are applied? **Yes** GO TO **F2** **No** GO to Pinpoint Test G.
F2: APPLY THE PARKING BRAKE	
	1 Apply the parking brake. - Lightly apply the parking brake and road test the vehicle. (Release the parking brake immediately after test). • Is a shudder or vibration present? **Yes** CHECK the rear brakes. REFER to Section 206-02A / 206-02B. GO TO **F5** **No** CHECK the front brakes. REFER to Section 206-03. GO TO **F3**

DIAGNOSIS AND TESTING (CONTINUED)

CONDITIONS	DETAILS/RESULTS/ACTIONS
F3: CHECK THE FRONT SUSPENSION	
	1 Check the front suspension. - Check the front suspension units, wheel bearings, front suspension lower arm bushing and other front suspension components. - Compare component condition vehicle-side-to-vehicle-side and to a known good vehicle. REFER to Section 204-00. • Are all the suspension components in good condition? **Yes** GO TO **F4** **No** REFER to Section 204-00.
F4: REFINISH THE BRAKE DISCS	
	1 Refinish the brake discs. - Refinish brake discs and linings and road test the vehicle. REFER to Section 206-03. • Is a shudder or vibration present? **Yes** GO TO **F7** **No** Condition corrected.
F5: CHECK THE REAR SUSPENSION	
	1 Check the rear suspension. - Check the rear suspension units, wheel bearings and other rear suspension components. REFER to Section 204-02A / 204-02B. - Compare component condition vehicle-side-to-vehicle-side and to a known good vehicle. • Are all the suspension components in good condition? **Yes** GO TO **F6** **No** REFER to Section 204-00.
F6: REFINISH THE REAR BRAKES	
	1 Refinish the rear brakes. - Refinish the brake drums and install new rear brake shoes. Road test the vehicle. • Is a shudder or vibration present? **Yes** GO TO **F8** **No** Condition corrected.

DIAGNOSIS AND TESTING (CONTINUED)

CONDITIONS	DETAILS/RESULTS/ACTIONS
F7: INSTALL NEW FRONT BRAKE DISCS	
	1 Install new front brake discs. - Install new brake discs and road test the vehicle. • Is a shudder or vibration present? **Yes** GO TO **F5** **No** Condition corrected.
F8: INSTALL NEW REAR BRAKE DRUMS	
	1 Install new rear brake drums and road test the vehicle. • Is a shudder or vibration present? **Yes** CHECK the following: engine or transaxle mounts or worn or damaged wheel bearings for wear/damage. INSTALL new components as necessary. TEST the system for normal operation. **No** Condition corrected.

PINPOINT TEST G: WHEEL END VIBRATION ANALYSIS

CONDITIONS	DETAILS/RESULTS/ACTIONS
G1: NEUTRAL COAST TEST	
	1 Carry out the neutral coast test. • Does the vibration disappear during the neutral coast test? **Yes** Procedure under development **No** GO TO **G2**
G2: INSPECT THE TIRES	
	1 Inspect the tires. - Raise and support the vehicle. REFER to Section 100-02. Inspect the tires for: - correct tyre size. - tyre/wheel compatibility. - wear or damage. - tyre beads correctly seated. • Are the tires OK? **Yes** GO TO **G3** **No** REFER to Section 204-03.

DIAGNOSIS AND TESTING (CONTINUED)

CONDITIONS	DETAILS/RESULTS/ACTIONS
G3: INSPECT THE WHEEL AND TYRE RUN OUT	
	1 Inspect the wheel and tyre run out. • Are the wheels and tires OK? **Yes** GO TO **G4** **No** REPAIR or INSTALL new wheels and tires as necessary. REFER to Section 204-03. TEST the system for normal operation.
G4: CARRY OUT A STATIC BALANCE TEST	
	1 Carry out a static balance test. • Are the wheels and tires OK? **Yes** GO TO **G5** **No** INSTALL new wheels or tires as necessary. TEST the system for normal operation.
G5: CARRY OUT A ROAD TEST	
	1 Carry out a road test. • Does the condition still exist? **Yes** CHECK the following items and REPAIR or INSTALL new components as necessary; air conditioning. REFER to Section 412-00. Engine. REFER to Section 303-00. Transaxle REFER to Section 308-00. TEST the system for normal operation. **No** Condition corrected.

PINPOINT TEST H: ENGINE RUN-UP CHECK

CONDITIONS	DETAILS/RESULTS/ACTIONS
H1: CARRY OUT SETUP FOR THE ENGINE RUN-UP CHECK	
	1 Carry out setup. - Block the wheels. - Apply the parking brake. • Are the setup preconditions met? **Yes** GO TO **H2** **No** CARRY OUT the setup procedures again.

DIAGNOSIS AND TESTING (CONTINUED)

CONDITIONS	DETAILS/RESULTS/ACTIONS
H2: CARRY OUT THE ENGINE RUN-UP CHECK	
	1 Carry out the engine run-up check. - Select NEUTRAL and operate the engine at the rpm where the condition occurs. - Carry out this procedure with the clutch engaged and disengaged. • Does the vibration still exist? **Yes** CHECK the following systems, A/C, REFER to Section 412-00. Engine, REFER to Section 303-00. Transaxle, REFER to Section 308-00. REPAIR or INSTALL new components as necessary. **No** CHECK the engine/transaxle mounts and/or the exhaust system components. TEST the system for normal operation.

PINPOINT TEST I: ACCESSORY DRIVE BELT CHECK

CONDITIONS	DETAILS/RESULTS/ACTIONS
I1: INSPECT THE ACCESSORY DRIVE BELT	
	1 Inspect the accessory drive belt. - Inspect the belt system for: - worn, frayed, glazed, or nicked belt. - loose, bent, or nicked pulleys. • Is any damage evident? **Yes** REPAIR or INSTALL new components as necessary. TEST the system for normal operation. **No** GO TO **I2**
I2: CHECK THE BELT TENSION	
	1 Check the belt tension. - Ignition switch OFF. - Check the belt automatic tensioner operation. REFER to Section 303-05. • Is the belt automatic tensioner operating correctly? **Yes** GO TO **I3** **No** INSTALL a new tensioner. REFER to Section 303-05. TEST the system for normal operation.

DIAGNOSIS AND TESTING (CONTINUED)

CONDITIONS	DETAILS/RESULTS/ACTIONS
I3: CHECK FOR PULLEY RUN OUT/BELT WHIP	
	1 Check for pulley run out/belt whip. - Ignition switch ON, engine running. - Select NEUTRAL. - Run the engine at the vibration speed. - Check the belt for belt whip. - Check the drive pulleys at idle for radial or axial run out greater than 3.175 mm. • Does the vehicle experience belt whip or pulley run out? **Yes** For belt whip, CHECK/INSTALL new accessories and drive system as necessary. REFER to Section 303-05. For pulley run out, CHECK/INSTALL new pulley or accessory as necessary. TEST the system for normal operation. **No** GO TO **I4**
I4: INSPECT THE BELT RIDE	
	1 Inspect the belt ride. - Inspect the belt ride in each pulley at idle. • Does the belt ride up and down the pulley? **Yes** INSTALL a new pulley. REFER to Section 303-05. TEST the system for normal operation. **No** GO TO **I5**
I5: CHECK THE BELT	
	1 Check the belt. - Ignition switch OFF. Remove the drive belt. - Ignition switch in RUN, engine running. • Has the vibration been reduced or eliminated? **Yes** INSTALL a new belt. TEST the system for normal operation. If the condition still occurs after installation GO to Pinpoint Test C. **No** REFER to Section 303-00.

GENERAL PROCEDURES

Powertrain/Drive train Mount Neutralizing (14 001 0)

1. **NOTE:** An abnormal vibration can be caused by a component, such as an engine or transaxle support insulator mount, which is acting in a rigid manner because of a distorted or twisted mounting position. As a result, the support insulator does not absorb vibration, as it should.
   Loosen the engine insulator mounting bolts by three turns.
2. Start the engine and shift into drive.
3. While the tires are in contact with the ground, rock the vehicle back and forth.
4. Shift back into neutral and shut off the engine. Retighten the engine insulator mounting bolts.

GENERAL PROCEDURES

Exhaust System Neutralizing (25 001 0)

1. Loosen the muffler inlet pipe and resonator pipe to exhaust manifold fasteners at the flanges and the muffler inlet connection.
2. Place a stand to support the muffler parallel to the vehicle frame with the muffler pipe bracket free of stress.
3. Tighten the muffler connection.
4. Position the exhaust pipes to the manifolds and tighten. Make sure that the heat shield does not contact the frame rails.
5. With the complete exhaust system tight (and cooled) the rear hanger insulator should be angled forward, to allow the system to expand rearward when heated during normal running.

SPECIFICATIONS

Lubricants, Fluids, Sealers and Adhesives

Item	Specification
Information not available at this time.	

Chassis

Group 2

SECTION TITLE	PAGE
Suspension	
Suspension - General Information	204-00
Front Suspension	204-01
Rear Suspension	204-02
Wheels and Tyres	204-03
Driveline	
Front Drive Halfshafts	205-04
Brake System	
Brake System - General Information	206-00
Drum Brake	206-02
Front Disc Brake	206-03
Wheels and Tyres	206-04
Parking Brake and Actuation	206-05
Hydraulic Brake Actuation	206-06
Power Brake Actuation	206-07
Steering System	
Steering System - General Information	211-00
Manual Steering	211-01
Power Steering	211-02
Steering Linkage	211-03
Steering Column	211-04
Steering Column Switches	211-05

SECTION 204-00 Suspension — General Information

VEHICLE APPLICATION: 2002 Bantam

SECTION TITLE	PAGE
DIAGNOSIS AND TESTING	
Suspension System	204-00-2
Inspection and Verification	204-00-2/4
Symptom Chart	204-00-4/8
Pinpoint Tests	204-00-9/18

DIAGNOSIS AND TESTING

Suspension System

CAUTION: Make sure the tyres are inflated to their correct pressures before and after this check is completed.

Vibrations, roughness, tramp, shimmy and thump may be caused by excessive tyre or wheel run out, worn or cupped tyres, or wheel and tyre imbalance.

These conditions may also be caused by rough or undulating road surfaces. Driving the vehicle on different types of road surfaces will indicate if the road surfaces are actually causing the conditions.

Do not immediately suspect the tyres when attempting to diagnose a vibration concern. Other sources of vibration include:

- Loose or worn front wheel bearing.
- Loose or worn suspension or steering components.
- Excessive front brake disc run out.
- Loose engine or transaxle supports.
- Engine driven accessories.

This section covers those vibrations related to the suspension, tyres and wheels.

A thumping noise usually means that the tyre has flat or soft spots making a noise as they slap the roadways. Tyre whine can be distinguished from axle noise because axle noise diminishes or changes according to load or speed. Tyre noise remains the same over a range of speeds.

To verify that tyre noise is not associated with shake or vibration, over inflate the tyres one at a time and check for a change in the sound. The pitch or whine will change as the increased pressure changes the tyre frequency.

Check for other types of vibration.
REFER to Section 100-04.

Inspection and Verification

A vibration diagnostic procedure always begins with a road test. REFER to Section 100-04. The road test and customer interview (if available) will provide much of the information needed to find the source of a vibration.

During the road test, drive the vehicle on a road that is smooth and free of undulations. If a vibration is apparent, note and record the following:

- The speed at which the vibration occurs.
- What type of vibration occurs in each speed range – mechanical or audible.
- How the vibration is affected by changes in engine torque, vehicle speed and engine speed.
- Type of vibration sensitivity – torque sensitive, vehicle speed sensitive, or engine speed sensitive.

If the road test indicates the vibration is related to the tyres or wheels, use the Tyre Wear Condition Chart to help pinpoint the cause of the concern. If the road test indicates that there is tyre whine but no shake or vibration, the noise originates with the contact between the tyre and the road surface.

Use the following explanation of terms to help isolate the source of the vibration:

Torque Sensitive

This means that the condition can be improved or worsened by accelerating, decelerating, coasting or maintaining a steady vehicle speed.

Vehicle Speed Sensitive

This means that the vibration always occurs at the same vehicle speed and is not affected by the application of engine torque, engine speed, or transaxle gear.

Engine Speed Sensitive

This means that the vibration occurs at varying vehicle speeds when a different transaxle gear is selected and the engine speed is constant. Increasing or decreasing engine speed with the transaxle in NEUTRAL or by stall testing with the transaxle in gear can sometimes isolate it. If the condition is engine speed sensitive, the condition is not related to tyres.

Front End

NOTE: Do not check or carry out a front suspension alignment without first making the following inspection for front-end damage or wear.

1. Check for specified air pressure in all four tyres.

DIAGNOSIS AND TESTING (CONTINUED)

2. Raise and support the front of the vehicle. REFER to Section 100-02. Check the front suspension ball joints and mounts for looseness, wear and damage.
   For additional information refer to Ball Joint Lower,Inspection in this section.
   Tighten all loose nuts and bolts to specification. When parts are worn install new parts. REFER to Section 204-01.
3. Check the steering gear mountings and tie-rod connections for tightness. Tighten all mountings to specification. If tie-rod ends are worn or bent, install new parts. REFER to Section 211-03.
4. Remove the front wheels. Check the wheels for out-of-round and bent rims. Balance wheel and tyre assemblies on high-speed balancing equipment.
5. Check action of suspension units and the condition of their attachment. Refer to Suspension Unit Checks.
   A sticking or binding suspension unit may not allow the vehicle to settle in a normal level position, possibly affecting the front wheel alignment.

Ball Joint – Lower, Inspection

1. Raise and support the vehicle. REFER to Section 100-02.
2. Firmly grasp the outer end of the lower suspension arm and try to move it up and down, watching and feeling for any movement. Free movement will usually be accompanied by an audible `click'. There should be no free movement.
3. If there is any free movement install a new ball joint. REFER to Section 204-01.
4. If a new ball joint is installed it will be necessary to check and adjust the front wheel alignment.
   Refer to General Procedures.

Suspension Unit Checks

All vehicles are equipped with low-pressure gas pressurized hydraulic suspension units. These suspension units are not adjustable or refillable.

1. Oil Leak: A light film of oil (seepage) on the upper portion of the front or rear suspension unit is permissible and is a result of correct suspension unit lubrication. Seepage is a condition in which a thick film of oil may be deposited on the suspension unit outer tube (body) and is normally noticed due to the collection of dust in this area. Suspension units, which exhibit this seepage condition, are functional units and new parts should not be installed. Leakage is a condition in which the entire suspension unit body is covered with oil and the oil will drip from the suspension unit onto the pavement.

   If this condition exists:

   - Make sure that fluid observed is not from sources other than the suspension unit.
   - When the unit is worn or damaged install a new suspension unit.
2. Vehicle sag: Many new front or rear suspension units are installed in an effort to solve a vehicle sag concern. Suspension units by design are hydraulic damping units only and unlike suspension springs, do not support any suspension loads. Therefore, installing a new suspension unit will not correct a vehicle sag concern.
3. NOTE: New suspension units do not need to be installed in pairs when only one unit is worn or damaged.

Installing new suspension units in pairs: In the past it was recommended that new suspension units or springs be installed in pairs if one unit became unserviceable. Improved sealing, due to new technology and improved manufacturing quality checks, have added to the functional reliability of suspension units. Installation of new front suspension units or spring assemblies and rear suspension units or springs in pairs is not necessary.

Vehicle Inspection

1. Check all tyres for correct inflation pressure.
2. Check tyre condition to confirm correct front-end alignment, tyre balance and overall tyre condition such as separation or bulges.
3. Check the vehicle for optional suspension equipment such as heavy-duty handling or trailer tow suspensions. These suspensions will have a firmer ride feeling than standard suspensions.
4. Check vehicle attitude for evidence of possible overload or sagging. Check luggage compartment area of heavy objects.
5. Road test the vehicle to confirm customer concern after performing the above steps.

DIAGNOSIS AND TESTING (CONTINUED)

Lift Check

1. Noise: Noise can be caused by loose suspension or suspension unit attachments. Verify that all attachments for the suspension components are tight. If suspension units have a damaged integral lower mounting bushing, install new units. Check front and rear suspension units for external damage.
2. Bottom/Hopping: Check condition of the rubber suspension travel stops (front suspension unit jounce bumper). Install new parts if worn or missing. Examine for evidence of previous overload, which may have damaged components.
3. Only install one new unit in place of the worn or damaged suspension unit. Suspension units do not need to be installed in pairs, unless both units are worn or damaged.

Bench Test

The suspension units are gas-pressurized which results in them being fully extended when not restrained. If a suspension unit does not fully extend, it is damaged and a new unit should be installed. Check the overall length (specification 478 ± 3 mm).

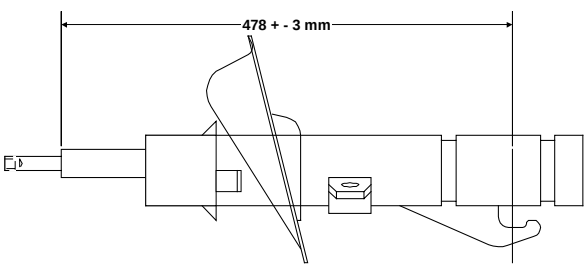

If the suspension unit does not meet the overall length requirements, there is a good indication something internal is out of specification and a new suspension unit should be installed.

With the suspension unit in the normal upright position, compress it and allow it to extend three times to purge the pressure chamber of any gas that may have been introduced during handling.

⚠CAUTION: If the combination dust shield/jounce bumper has been removed from the suspension unit, care must be taken to avoid excessive bottoming of the rod during the compression stroke to avoid internal damage.

Place the suspension unit right side up in a vise. Hand stroke the suspension unit as fast as possible using as much travel as possible. Action should become smooth and uniform throughout each stroke. Higher resistance on extension than on compression is normal.

The following conditions are abnormal:

- A lag or skip at reversal of travel near mid-stroke when the suspension unit is correctly aligned and in the installed position.
- Seizing.
- Noise, other than a faint swish, such as a clicking upon fast stroke reversal.
- Excessive fluid leakage.
- With the rod fully extended, any lateral motion of the rod in relation to outer suspension unit body.

If the suspension unit action remains erratic after purging air, install a new suspension unit.
REFER to Section 204-01. (front).
REFER to Section 204-02. (rear).

Rear Suspension

At regulator intervals, the following rear suspension checks should be made:

1. Check for evidence of fluid leaks on rear suspension units. (A light film of fluid is permissible. Verify fluid is not from other sources).
2. Check the rear leaf spring condition.
3. Check the condition of the upper and lower rear suspension bushings.

Symptom Chart

Symptom Chart

Condition	Possible Sources	Action
•Wander/pull/drift	•Excessive side to side difference in caster or camber angles.	•CARRY OUT wheel alignment. Refer to General Procedures in this section.
	•Toe setting out of specification.	•CARRY OUT wheel alignment. Refer to General Procedures in this section.
	•Vehicle ride height incorrect (front or rear, high or low).	•CHECK for abnormal loading, spring sag or non-standard springs.

DIAGNOSIS AND TESTING (CONTINUED)

Condition	Possible Sources	Action
	•Steering gear or tie-rods worn or damaged.	•CHECK the steering system. REFER to Section 211-00.
	•Worn, damaged or defective tyre(s).	•INSPECT the tyres. REFER to Section 204-03.
•Hard steering	•Excessive positive caster angle.	•CARRY OUT wheel alignment. Refer to General procedures in this section.
	•Vehicle ride height incorrect (front or rear, high or low).	•CHECK for abnormal loading, spring sag or non-standard springs.
	•Steering gear or tie-rods worn or damaged.	•CHECK the steering system. REFER to Section 211-00.
	•Front suspension lower arm ball joint worn or damaged.	•REFER to the Service Procedures in this section.
	•Damaged tyres or unbalanced wheels.	•CHECK the tyres. REFER to Section 204-03.
	•Insufficient power steering assist.	•CHECK the power steering system. REFER to Section 211-02.
•Brake pull	•Unequal tyre pressures.	•INFLATE the tyres to the correct pressures. REFER to Section 204-03.
	•Brake system failure.	•CHECK the brakes. REFER to Section 206-00.
•Shimmy or vibration	•Wheel tyre imbalance, damage or excessive run out.	•CHECK the tyres. REFER to Section 204-03.
	•Front wheel driveshaft(s) worn or damaged.	•CHECK the front wheel Half-shafts. REFER to Section 205-04.
	•Steering system damaged or worn.	•CHECK the steering system. REFER to Section 211-00.
	•Suspension unit assembly loose, worn or damaged.	•CHECK the suspension unit assemblies. Refer to the procedure in this section
	•Loose suspension unit assembly mounting.	•TIGHTEN components to specification. REFER to Section 204-01. (front). REFER to Section 204-02. (rear).
	•Damaged or worn front suspension lower arm ball joint.	•INSTALL a new front suspension lower arm ball joint. REFER to Section 204-01.
	•Damaged, loose or worn front suspension lower arm mounting bolt bushing.	•INSTALL a new front suspension lower arm mounting bolt bushing. REFER to Section 204-01.

DIAGNOSIS AND TESTING (CONTINUED)

Condition	Possible Sources	Action
	•Damaged or worn stabilizer bar end bushings (if equipped).	•INSTALL new stabilizer bar end bushings or connecting links. REFER to Section 204-01(front). REFER to Section 204-02. (rear).
	•Damaged, loose or worn rear suspension and bushings.	•INSTALL new rear suspension and bushings as necessary. REFER to Section 204-02.
	•Damaged or worn wheel bearing.	•INSTALL a new wheel bearing. REFER to Section 204-01(front). REFER to Section 204-02. (rear).
•Crabbing	•Rear suspension damage.	•REPAIR or INSTALL new rear suspension components as necessary. REFER to Section 204-02.
	•Caster angle out of specification.	•CARRY OUT wheel alignment. Refer to the procedure in this section.
•Bump steer	•Worn, loose or damaged steering gear mounting brackets and bushings.	•REPAIR or INSTALL new mounting brackets and bushings as necessary. REFER to Section 211-00.
	•Loose, worn or damaged front suspension unit(s).	•REPAIR or INSTALL new suspension units as necessary. REFER to Section 204-01.
•Front/rear suspension noises	•Loose, worn or damaged suspension unit mounting components.	•REPAIR or INSTALL new suspension unit mounting components as necessary. REFER to Section 204-01. (front). REFER to Section 204-02. (rear).
	•Worn or damaged wheel bearings.	•CHECK the wheel bearings. REFER to Section 204-01.(front). REFER to Section 204-02. (rear).
•Body rolls	•Worn, missing or damaged front stabilizer bar connecting links or bushings (if equipped).	•INSTALL new front stabilizer bar connecting links or bushings. REFER to Section 204-01.
	•Damaged or loose front suspension lower arm mounting bolt bushing.	•REPAIR or INSTALL a new front suspension lower arm mounting bolt bushing. REFER to Section 204-01.
	•Loose, damaged or worn suspension unit(s).	•CHECK the suspension units. REFER to Section 204-01. (front). REFER to Section 204-02. (rear).

DIAGNOSIS AND TESTING (CONTINUED)

Condition	Possible Sources	Action
•Body leans	•Weak or damaged front coil spring or rear leaf spring	•CHECK the coil / leaf springs. REFER to Section 204-01.(front). REFER to Section 204-02. (rear).
	•Incorrect tyre pressures.	•ADJUST the tyre pressures. REFER to Section 204-03.
•Poor riding comfort	•Weak front or rear leaf spring.	•CHECK the coil / leaf springs. REFER to Section 204-01.(front). REFER to Section 204-02. (rear).
	•Damaged or worn front or rear suspension unit(s).	•CHECK the suspension units. REFER to Section 204-01.(front). REFER to Section 204-02. (rear).
•General drive instability	•Wheel, tyre imbalance, damage or excessive run out.	•CHECK the tyres. REFER to Section 204-03.
	•Toe setting out of specification.	• CARRY OUT wheel alignment. Refer to General Procedures in this section.
	•Steering system damaged or worn.	•CHECK the steering system. REFER to Section 211-00.
	•Damaged front suspension lower arm ball joint.	•INSTALL a new front suspen-sion lower arm ball joint. REFER to Section 204-01.
	•Weak front coil spring / rear leaf spring.	•CHECK the coil springs. REFER to Section 204-01.(front). REFER to Section 204- 02. (rear).
	•Damaged or worn front or rear suspension unit(s).	•CHECK the suspension units. REFER to Section 204-01. (front). REFER to Section 204-02. (rear).
	•Damaged, loose or worn rear suspension, bushing or bolts.	•CHECK the rear suspension. REFER to Section 204-02.
	•Damaged or worn stabilizer bar end bushings or connecting links (if equipped).	•INSTALL new stabilizer bar end bushings or connecting links. REFER to Section 204-01.
•Steering wheel does not return correctly	•Incorrect wheel alignment.	•CARRY OUT wheel alignment. Refer to General Procedures in this section.
	•Steering system damaged or worn.	•CHECK the steering system. REFER to Section 211-00.
	•Damaged or stuck front suspen-sion lower arm ball joint.	•INSTALL a new front suspen-sion lower arm ball joint. REFER to Section 204-01.

DIAGNOSIS AND TESTING (CONTINUED)

Condition	Possible Sources	Action
•Steering wheel pulls to one side	•Wheel, tyre imbalance, damage or excessive run out.	•CHECK the tyres. REFER to Section 204-03.
	•Brake system damaged or worn.	•CHECK the brake system. REFER to Section 206-00.
	•Steering system damaged or worn.	•CHECK the steering system. REFER to Section 211-00.
	•Incorrect wheel alignment.	•CARRY OUT wheel alignment. Refer to General Procedure in this section.
	•Damaged or stuck front suspension lower arm ball joint.	•INSTALL a new front suspension lower arm ball joint. REFER to Section 204-01.
	•Weak front coil spring.	•CHECK the front coil springs. REFER to Section 204-01.
	•Damaged or loose front suspension lower arm mounting bolt bushing.	•REPAIR or INSTALL a new front suspension lower arm mounting bolt bushing. REFER to Section 204-01.
•Abnormal noise from the suspension system	•Damaged or stuck front suspension lower arm ball joint.	•INSTALL a new front suspension lower arm ball joint. REFER to Section 204-01.
	•Damaged, loose or worn front stabilizer bar components (if equipped).	•REPAIR or INSTALL new stabilizer bar components. REFER to Section 204-01. (front).
	•Loose front or rear suspension components.	•REPAIR or INSTALL new suspension components. REFER to Section 204-01. REFER to Section 204-02 (rear).
	•Damaged or loose front suspension lower arm mounting bolt bushing.	•REPAIR or INSTALL a new front suspension lower arm mounting bolt bushing. REFER to Section 204-01.
	•Loose, damaged or worn suspension unit(s).	•CHECK the suspension units. REFER to Section 204-01.(front). REFER to Section 204-02. (rear).

Pinpoint Tests

PINPOINT TEST A: DRIFT LEFT OR RIGHT

A1: CHECK FOR DRIFT LEFT OR RIGHT 204-00-9

A2: CHECK THE STEERING LINKAGE..... 204-00-9

A3: CHECK THE WHEEL ALIGNMENT..... 204-00-10

A4: CHECK THE TYRES..... 204-00-10

A5: ROTATE THE TYRES..... 204-00-10

PINPOINT TEST B: STEERING WHEEL OFF-CENTER

B1: INSPECT THE STEERING COMPONENTS..... 204-00-10

B2: CHECK THE WHEEL ALIGNMENT..... 204-00-11

PINPOINT TEST C: TRACKS INCORRECTLY

C1: CHECK THE CASTER ANGLE 204-00-11

C2: CHECK THE REAR SUSPENSION..... 204-00-11

PINPOINT TEST D: ROUGH RIDE

D1: CHECK THE SUSPENSION UNITS 204-00-12

PINPOINT TEST E: EXCESSIVE NOISE

E1: INSPECT THE SUSPENSION..... 204-00-12

E2: INSPECT THE SPRINGS..... 204-00-12

E3: INSPECT THE FRONT SUSPENSION LOWER ARM..... 204-00-13

E4: INSPECT THE BALL JOINT..... 204-00-13

E5: INSPECT THE FRONT WHEEL BEARINGS..... 204-00-13

E6: INSPECT THE TYRES..... 204-00-13

PINPOINT TEST F: INCORRECT TYRE WEAR

F1: INSPECT THE TYRES 204-00-14

F2: CHECK FOR CUPPED TYRES 204-00-14

PINPOINT TEST G: VIBRATION

G1: INSPECT THE TYRES..... 204-00-14

G2: INSPECT THE FRONT WHEEL BEARINGS 204-00-15

G3: MEASURE THE FRONT WHEEL BEARING END PLAY 204-00-15

G4: INSPECT THE REAR WHEEL BEARINGS..... 204-00-15

G5: MEASURE THE REAR WHEEL BEARING END PLAY..... 204-00-16

G6: MEASURE THE WHEEL/TYRE RUN OUT ON THE VEHICLE 204-00-16

G7: MEASURE THE WHEEL/TYRE RUN OUT OFF THE VEHICLE 204-00-16

G8: MATCH MOUNTING..... 204-00-17

G9: MEASURE THE WHEEL RUN OUT..... 204-00-17

G10: REAR HUB AND STUD CIRCLE RUN OUT 204-00-17

G11: FRONT HUB AND STUD CIRCLE RUN OUT..... 204-00-18

G12: WHEEL BALANCE..... 204-00-18

DIAGNOSIS AND TESTING (CONTINUED)

Pinpoint Tests

PINPOINT TEST A: DRIFT LEFT OR RIGHT

CONDITIONS	DETAILS/RESULTS/ACTIONS
A1: CHECK FOR DRIFT LEFT OR RIGHT	
⚠ **WARNING: To avoid personal injury due to the loss of vehicle control, the inspection should be performed by two people to maintain safe driving conditions. One person should drive while the other checks the time. Adequate grip should always be maintained on the steering wheel. Failure to follow these instructions may result in personal injury.**	
NOTE: The following conditions must be met when evaluating the vehicle.	
	1 Check the cold tyre pressure - Drive the vehicle at 88 km/h on a level and straight road. Drive in the center lane of a three-lane highway. - Be sure that no crosswinds or gusting breezes are present. - Drive the vehicle in both (opposing) directions at least twice. - If the vehicle changes one complete 3,65 meter wide lane within seven seconds, it has a drift. • Does the vehicle have drift? **Yes** GO TO **A2** **No** GO to Pinpoint Test B.
A2: CHECK THE STEERING LINKAGE	
	1 Raise and support the vehicle. REFER to Section 100-02. - Check the steering linkage for indications of excessive wear or damage. • Is there indication of excessive wear or damage? **Yes** INSTALL new or REPAIR worn or damaged components as necessary. TEST the system for normal operation. **No** GO TO **A3**

DIAGNOSIS AND TESTING (CONTINUED)

CONDITIONS	DETAILS/RESULTS/ACTIONS
A3: CHECK THE WHEEL ALIGNMENT	
	1 Check the wheel alignment. • Is the steering wheel straight and the alignment within specification? **Yes** GO TO **A4** **No** ADJUST the alignment as necessary. TEST the system for normal operation.
A4: CHECK THE TYRES	
	1 Inspect the tyres for excessive wear or damage. • Are the tyres excessively worn or damaged? **Yes** INSTALL new tyres. TEST the system for normal operation. **No** GO TO **A5**
A5: ROTATE THE TYRES	
	1 Raise and support vehicle. REFER to Section 100-01. - Rotate the wheels in a cross pattern. • Does the vehicle drift? **Yes** INSPECT the front suspension components for wear or damage. INSTALL new or REPAIR worn or damaged components as necessary. REFER to Section 204-01. TEST the system for normal operation. **No** INSTALL new tyres. TEST the system for normal operation.

PINPOINT TEST B: STEERING WHEEL OFF-CENTER

CONDITIONS	DETAILS/RESULTS/ACTIONS
B1: INSPECT THE STEERING COMPONENTS	
	1 Raise and support the vehicle. REFER to Section 100-02. - Inspect the steering components for excessive wear or damage. • Are the steering components excessively worn or damaged? **Yes** INSTALL new or REPAIR worn components. REFER to Section 211-00. **No** GO TO **B2**

DIAGNOSIS AND TESTING (CONTINUED)

CONDITIONS	DETAILS/RESULTS/ACTIONS
B2: CHECK THE WHEEL ALIGNMENT	
	1 Check the wheel alignment. • Is the steering wheel centered and the alignment within specification. **Yes** GO to Pinpoint Test C. **No** ADJUST the alignment as necessary. TEST the system for normal operation.

PINPOINT TEST C: TRACKS INCORRECTLY

CONDITIONS	DETAILS/RESULTS/ACTIONS
C1: CHECK THE CASTER ANGLE	
	1 Check the caster angle. • Is the caster angle within specification? **Yes** GO TO **C2** **No** CHECK all suspension components for wear or damage. INSTALL new or REPAIR worn or damaged components as necessary. REFER to Section 204-01. (front). TEST the system for normal operation.
C2: CHECK THE REAR SUSPENSION	
	1 Measure the vehicle wheelbase left-hand and right-hand. - Compare the measurements. • Are the measurements the same? **Yes** GO to Pinpoint Test D. **No** INSPECT the rear suspension components for wear or damage. INSTALL new or REPAIR worn or damaged components as necessary. REFER to Section 204-02. TEST the system for normal operation.

DIAGNOSIS AND TESTING (CONTINUED)

PINPOINT TEST D: ROUGH RIDE

CONDITIONS	DETAILS/RESULTS/ACTIONS
D1: CHECK THE SUSPENSION UNITS	
	1 Make sure the tyres are at the correct pressure. - Raise and support the vehicle. REFER to Section 100-02. - Inspect the suspension units for oil leaks or damage. • Are the suspension units leaking or damaged? **Yes** INSTALL new suspension units as necessary. REFER to Section 204-01. TEST the system for normal operation. **No** Verify the customer concern.

PINPOINT TEST E: EXCESSIVE NOISE

CONDITIONS	DETAILS/RESULTS/ACTIONS
E1: INSPECT THE SUSPENSION	
	1 Raise and support the vehicle. REFER to Section 100-02. - Inspect the suspension unit mounting bolts. • Are the mounting bolts loose or broken? **Yes** TIGHTEN or INSTALL new suspension unit mounting bolts. REFER to Section 204-01. (front) REFER to Section 204-02. (rear). TEST the system for normal operation. **No** GO TO **E2**
E2: INSPECT THE SPRINGS	
	1 Inspect the springs for damage. • Are the springs damaged? **Yes** INSTALL new springs. REFER to Section 204-01. (front) REFER to Section 204-02. (rear). TEST the system for normal operation. **No** GO TO **E3**

DIAGNOSIS AND TESTING (CONTINUED)

CONDITIONS	DETAILS/RESULTS/ACTIONS
E3: INSPECT THE FRONT SUSPENSION LOWER ARM	
	1 Inspect the front suspension lower arm bushings for excessive wear or damage. • Are the front suspension lower arm bushings worn or damaged? **Yes** INSTALL new front suspension lower arm bushings. REFER to Section 204-01. TEST the system for normal operation. **No** GO TO **E4**
E4: INSPECT THE BALL JOINT	
	1 Raise and support the vehicle. REFER to Section 100-02. - Firmly grasp the outer end of the lower suspension arm and try to move it up and down. Feel for any free movement. There must be no free movement. • Is there any free movement? **Yes** INSTALL a new ball joint. REFER to Section 204-01. TEST the system for normal operation. **No** GO TO **E5**
E5: INSPECT THE FRONT WHEEL BEARINGS	
	1 Inspect the front wheel bearings. - Rock each front wheel by gripping the top and bottom and alternately pushing and pulling in and out. Feel for excessive looseness of the bearings. - Spin each front wheel by hand checking for roughness. • Are the bearings loose or rough? **Yes** INSTALL new wheel bearings as necessary. TEST the system for normal operation. **No** Verify the customer concern.
E6: INSPECT THE TYRES	
	1 Inspect the tyres for uneven wear. • Is there uneven wear? **Yes** INSTALL new tyres. CHECK the wheel alignment. TEST the system for normal operation. **No** GO TO **E5**

DIAGNOSIS AND TESTING (CONTINUED)

PINPOINT TEST F: INCORRECT TYRE WEAR

CONDITIONS	DETAILS/RESULTS/ACTIONS
F1: INSPECT THE TYRES	
	1 Raise and support the vehicle. REFER to Section 100-02. - Inspect the tyres for uneven wear on inner or outer shoulder, or saw tooth pattern. • Is there uneven tyre wear? **Yes** INSTALL new tyres if badly worn. CHECK wheel alignment. TEST the system for normal operation. **No** GO TO **F2**
F2: CHECK FOR CUPPED TYRES	
	1 Inspect the tyres for cupping or dishing. • Are the tyres cupped or dished? **Yes** INSTALL new tyre(s). BALANCE and ROTATE the tyres. REFER to Section 204-03. TEST the system for normal operation. **No** Verify the customer concern.

PINPOINT TEST G: VIBRATION

CONDITIONS	DETAILS/RESULTS/ACTIONS
G1: INSPECT THE TYRES	
	1 Raise and support the vehicle. REFER to Section 100-02. - Inspect the tyres for damage or excessive wear. • Are the tyres damaged or worn? **Yes** INSTALL new tyres. TEST the system for normal operation. **No** GO TO **G2**

DIAGNOSIS AND TESTING (CONTINUED)

CONDITIONS	DETAILS/RESULTS/ACTIONS
G2: INSPECT THE FRONT WHEEL BEARINGS	
	1 Inspect the front wheel bearings. - Rock each front wheel by gripping the top and bottom and alternately pushing and pulling in and out. Feel for excessive looseness of the bearings. - Spin each front wheel by hand, checking for roughness. • Are the bearings loose or rough? **Yes** GO TO **G3** **No** GO TO **G4**
G3: MEASURE THE FRONT WHEEL BEARING END PLAY	
	1 Remove the wheel, the front disc brake caliper and brake disc. - Position a dial test indicator gauge with mounting bracket against the front wheel hub. - Push and pull the wheel hub by hand in the axial direction and check for endplay of the wheel hub and front wheel bearing assembly. There must be no endplay. • Is the front wheel bearing endplay within limits? **Yes** REFER to the Component Tests in this section and CHECK the ball joint. GO TO **G4** **No** INSTALL a new wheel hub bearing assembly as necessary. TEST the system for normal operation.
G4: INSPECT THE REAR WHEEL BEARINGS	
	1 Inspect the rear wheel bearings. - Rock each rear wheel by gripping the top and bottom, then alternately push/pull the wheel in and out. Feel for excessive looseness of the bearings. - Spin each wheel by hand and check for roughness. • Are the bearings loose or rough? **Yes** GO TO **G5** **No** GO TO **G6**

DIAGNOSIS AND TESTING (CONTINUED)

CONDITIONS	DETAILS/RESULTS/ACTIONS
G5: MEASURE THE REAR WHEEL BEARING END PLAY	
	1 Remove the rear wheel - Position a dial test indicator gauge with mounting bracket to the rear brake drum. - Push and pull the wheel hub by hand in the axial direction and check for rear wheel bearing endplay. There must be no endplay. • Is the rear wheel bearing endplay within limits? **Yes** GO TO **G6** **No** INSTALL a new wheel bearing as necessary. REFER to Section 204-02. TEST the system for normal operation.
G6: MEASURE THE WHEEL/TYRE RUN OUT ON THE VEHICLE	
	1 Measure the wheel and tyre run outs on the vehicle using a radial run out gauge. Assembly run out should be less than 1.14 mm radial and lateral. • Is the measurement in specification? **Yes** GO TO **G12** **No** GO TO **G7**
G7: MEASURE THE WHEEL/TYRE RUN OUT OFF THE VEHICLE	
	1 Measure the wheel and tyre from any position that exceeds 1.14 mm radial or lateral. Before removing the wheel, mark the wheel stud and the corresponding stud hole so the wheel can be installed in the same position. Remove the wheel and mount on a wheel balancer. Measure the run out. Wheel and tyre run out should be less than 1.14 mm radial and lateral. • Is the measurement in specification? **Yes** GO TO **G10** **No** GO TO **G8**

DIAGNOSIS AND TESTING (CONTINUED)

CONDITIONS	DETAILS/RESULTS/ACTIONS
G8: MATCH MOUNTING	
	1 Mark the high run out location on the tyre and also on the wheel. Break the wheel and tyre down and rotate the tyre 180 degrees (half-way around) on the wheel. Inflate the tyre and measure the run outs. • Are the wheels and tyres match mounted? **Yes** BALANCE the wheel and tyre and INSTALL on the vehicle. TEST the system for normal operation. **No** If the high spot is not within 101.6 mm of the first high spot INSTALL a new tyre. If a high spot is within 101.6 mm of the first high spot on the tyre, GO TO **G9**
G9: MEASURE THE WHEEL RUN OUT	
	1 Remove the tyre and mount the wheel on a wheel balancer. Measure the run out on both flanges. Run out should be less than 1.14 mm radial and lateral. • Is there run out correct? **Yes** LOCATE and MARK the low spot on the wheel and INSTALL the tyre matching the high spot on the wheel. BALANCE the assembly. TEST the system for normal operation. **No** INSTALL a new wheel. CHECK the run out on the new wheel. If the new wheel is within limits, LOCATE and MARK the low spot. INSTALL the tyre, matching the high spot of the tyre with the low spot of the wheel. BALANCE the assembly and INSTALL on the vehicle. TEST the system for normal operation.
G10: REAR HUB AND STUD CIRCLE RUN OUT	
	1 Measure the drum flange face run out (greater than 0.254 mm), stud circle run out (greater than 0.08 mm) and pilot radial run out (greater than 0.05 mm). • Are the measurements correct? **Yes** GO TO **G11** **No** INSTALL a new rear hub. REFER to Section 204-02. TEST the system for normal operation.

DIAGNOSIS AND TESTING (CONTINUED)

CONDITIONS	DETAILS/RESULTS/ACTIONS
G11: FRONT HUB AND STUD CIRCLE RUN OUT	
	1 Remove the front wheel. - Remove the front brake disc. - Measure the stud circle run out (greater than 0.06 mm) and rotor pilot radial run out (greater than 0.05 mm). • Are the measurements correct? **Yes** CHECK the front brake disc run out. REFER to Section 206-00. TEST the system for normal operation. **No** INSTALL a new hub. REFER to Section 204-01. TEST the system for normal operation.
G12: WHEEL BALANCE	
	1 Balance all the wheels. Road test the vehicle. • Is a vibration felt? **Yes** REFER to Section 100-04. **No** Verify the customer concern.

SECTION 204-01 Front Suspension

VEHICLE APPLICATION: 2002 Bantam

SUBJECT		PAGE
DIAGNOSIS AND TESTING		
Front Suspension		204-01-2
GENERAL PROCEDURES		
Front Toe Adjustment	(14 117 0)	204-01-3/4
Wheel Bearing Inspection	(14 117 0)	204-01-5/6
REMOVAL AND INSTALLATION		
Wheel Bearing	(14 411 0)	204-01-7/9
Lower Arm	(14 707 0)	204-01-10/11
Wheel Knuckle	(14 343 0)	204-01-12/17
Lower Arm Ball Joint	(14 735 0)	204-01-18
Strut and Spring Assembly	(14 781 0)	204-01-19/23
DISASSEMBLY AND ASSEMBLY		
Strut and Spring Assembly	(14 783 4)	204-01-24/25
SPECIFICATIONS		
Specifications		204-01-26
Torque Specifications		204-01-26/27

DIAGNOSIS AND TESTING

Front Suspension

REFER to Section 204-00.

GENERAL PROCEDURES

Front Toe Adjustment (14 117 0)

General Equipment
Wheel alignment gauges

Check

1. This operation should be carried out on a flat surface and in accordance with the instructions for the particular Wheel alignment gauges.
   - Examine all suspension and steering components to make sure there are no signs of damage or wear.
   - Check and, if necessary, adjust the tyre pressure to specification.
   - Make sure the vehicle is at curb weight and that the spare wheel, jack and vehicle tools are stowed in their designated positions. Additional tools or goods should be removed from the vehicle.
   - Bounce the vehicle to make sure that the suspension is in its natural position.

Adjustment

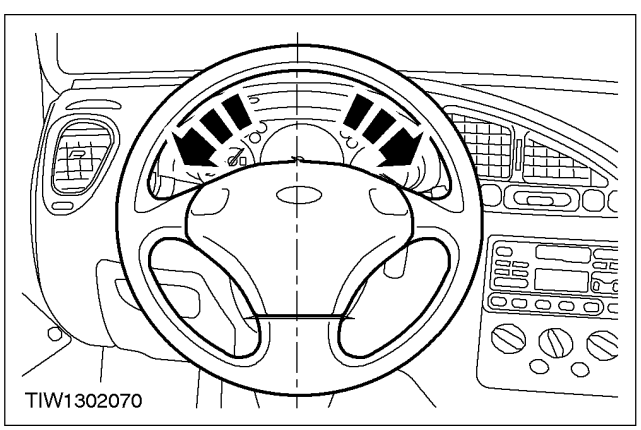

1. Center the steering wheel and lock in position.

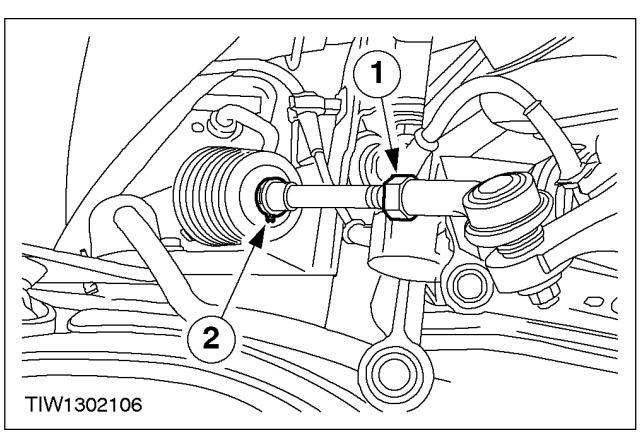

2. Loosen both tie rod end lock nuts.
   1. Loosen the tie rod end lock nuts.
   2. Remove the boot outer retaining clips.

GENERAL PROCEDURES (CONTINUED)

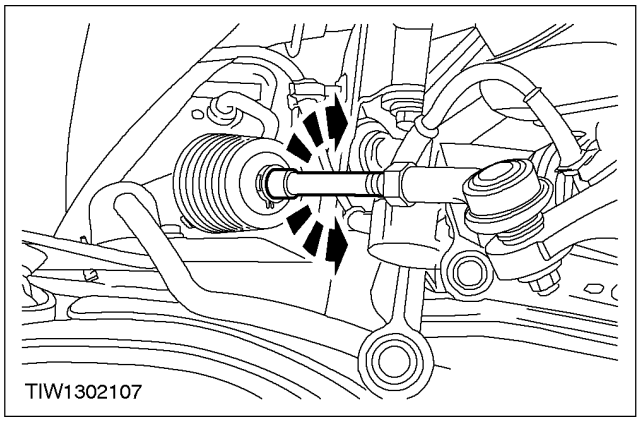

3. Rotate each tie rod equally clockwise or counterclockwise to adjust the toe setting.

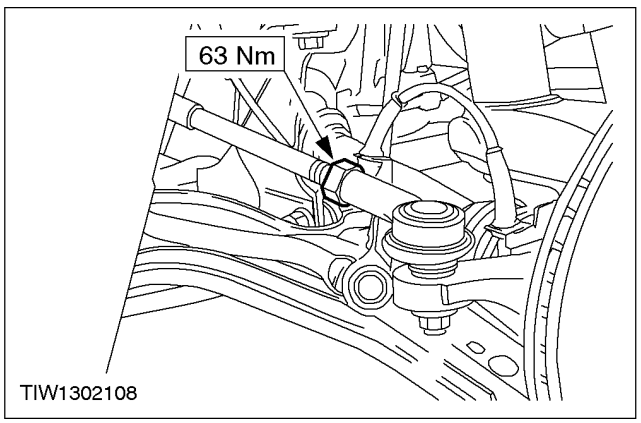

4. Tighten the tie rod end locknuts.

5. Check the toe setting.

GENERAL PROCEDURES

Wheel Bearing Inspection (14 117 0)

Special Tool(s)	
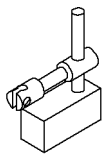 15008	Holding Fixture, Dial Indicator Gauge 205-044 (15-008)

General Equipment
Dial indicator gauge

Check

1. **NOTE:** Do not to confuse lower arm ball joint looseness with bearing looseness.
   Raise and support the front of the vehicle. For additional information, refer to Section 100-02.

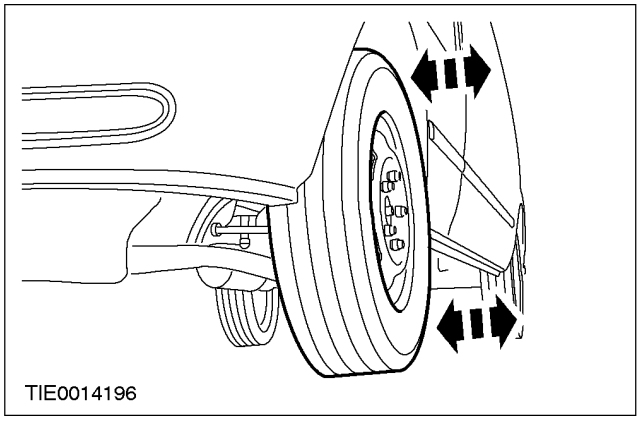

2. Check for loose front wheel bearings by rocking the wheels at the top and bottom.

3. Spin the wheel quickly by hand and make sure the wheel turns smoothly without noise from the wheel bearings.

4. Remove the front brake caliper and anchor plate. For additional information, refer to Section 206-03.

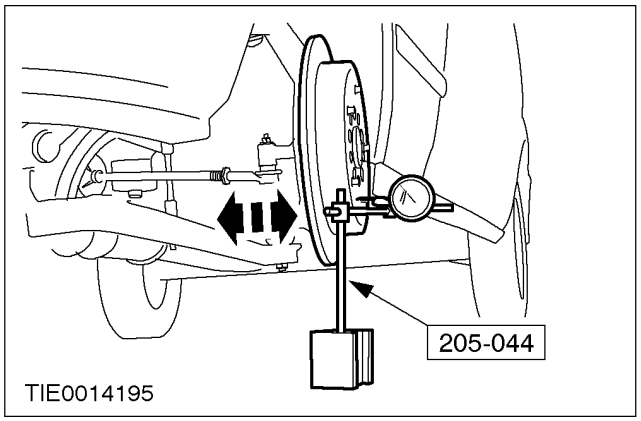

5. Position a suitable Dial indicator gauge fixture or equivalent, against the wheel hub, then push and pull the wheel hub. Measure the endplay of the wheel hub and front wheel bearing assembly. There should be no endplay. If endplay exists, install new wheel bearings.

GENERAL PROCEDURES (CONTINUED)

6. Install the front brake caliper. For additional information, refer to Section 206-03.

REMOVAL AND INSTALLATION

Wheel Bearing (14 411 0)

Special Tool(s)	
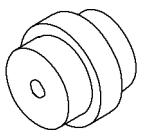 1403801	Adapter for 204-158 (Thrust Pad) 204-158-01 (14-038-01)
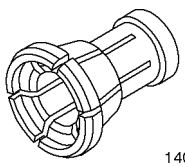 14038	Collet for 205-295 204-158 (14-038)
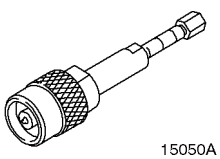 15050A	Remover, Bearing (Main Tool) 205-295 (15-050A)
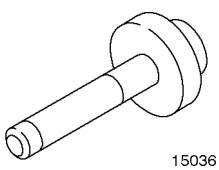 15036	Installer, Rear Hub Oil Seal 205-075 (15-036)

Special Tool(s)	
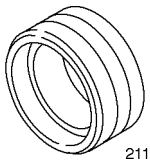 2110203	Installer/Aligner, Crankshaft Rear Oil Seal 303-171-03 (21-102-03)
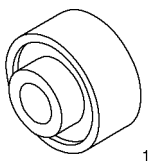 14040	Installer, Front Wheel Bearing 204-160 (14-040)
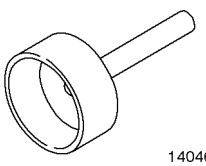 14046	Installer, Front Hub Oil Seal 204-256 (14-046)

Material	Specification
Engine oil	WSS-M2C913-A

Removal

1. Remove the wheel knuckle. For additional information,
   refer to Wheel Knuckle in this section.

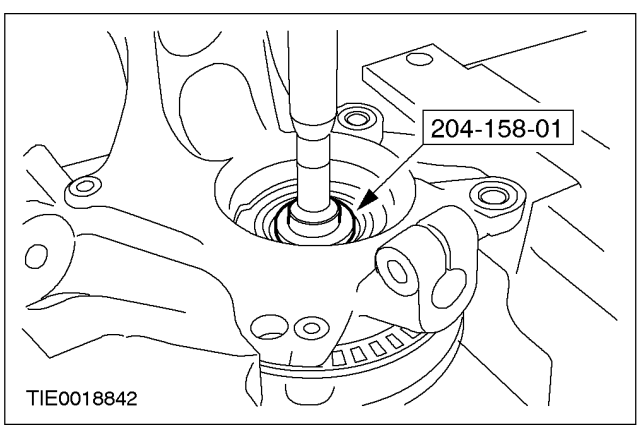

2. **NOTE:** When removing the hub from the wheel knuckle the bearing will be destroyed. The bearing inner ring will be on the hub and the bearing outer ring will be in the wheel knuckle.
   Using the special tools, remove the wheel hub from the wheel knuckle.

REMOVAL AND INSTALLATION (CONTINUED)

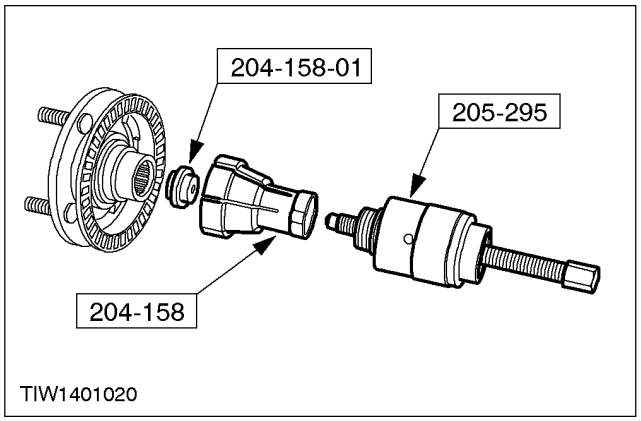

3. **CAUTION: The special tools must be used to prevent damage to the hub. If the hub is damaged a new hub must be installed.**

   CAUTION: Do not use heat to remove the bearing inner ring.

   Using the special tools, remove the inner race from the wheel hub.

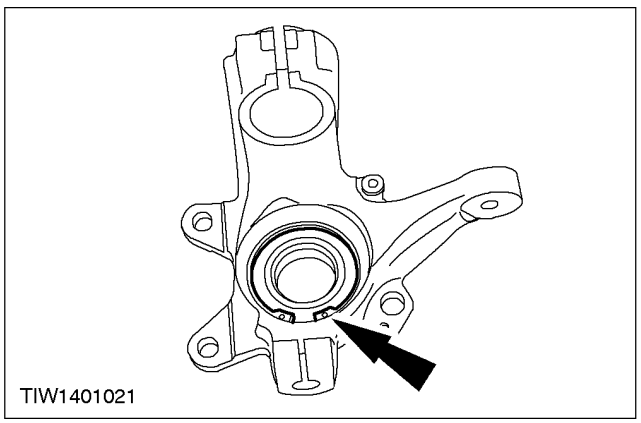

4. Remove the circlip from the wheel knuckle.

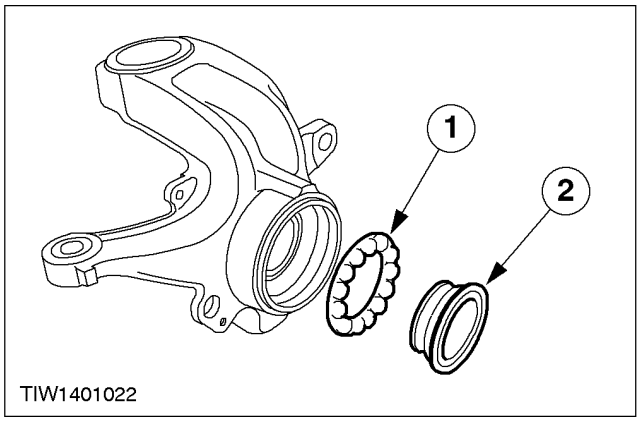

5. Install the old bearing inner ring.
   1. Install the bearing cage on to the bearing.
   2. Install the bearing cage and inner ring assembly to the wheel knuckle.

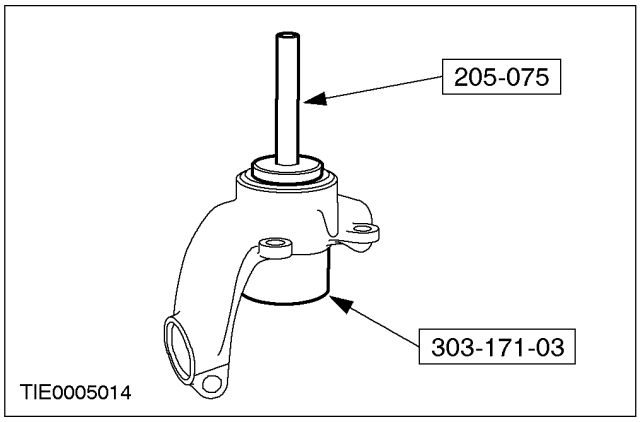

6. Using the special tools, remove the bearing outer ring from the wheel knuckle.

REMOVAL AND INSTALLATION (CONTINUED)

Installation

CAUTION: Avoid any impact on the wheel bearing seals.

CAUTION: Make sure the wheel bearing seals are clean.

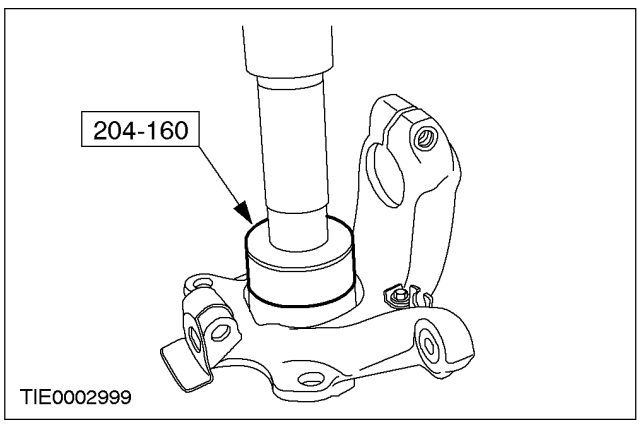

1. **NOTE:** Lubricate the bore of the wheel knuckle with engine oil.
   Using the special tools, install the bearing to the wheel knuckle.

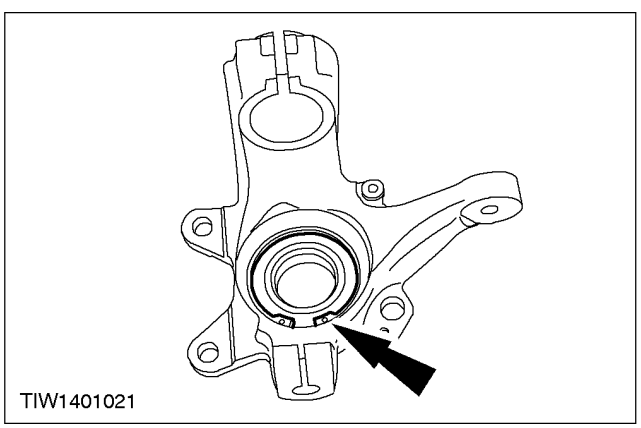

2. **NOTE:** Make sure the ends of the circlip are positioned in line with the lower ball joint housing.
   Install the circlip to the wheel knuckle.

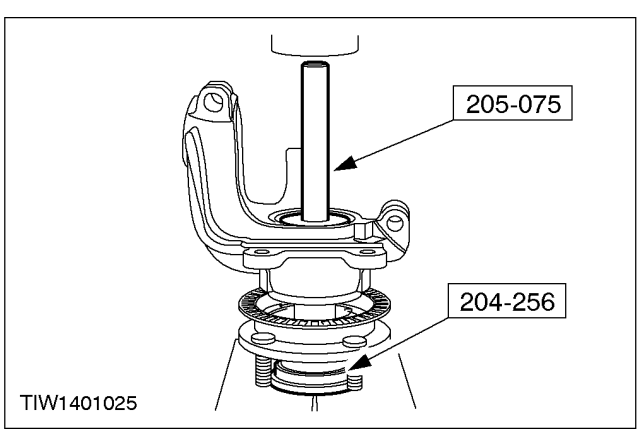

3. Using the special tools, install the wheel hub to the wheel knuckle.

4. Install the wheel knuckle. For additional information,
   refer to Wheel Knuckle in this section.

REMOVAL AND INSTALLATION

Lower Arm (14 707 0)

Removal

1. Loosen the front wheel nuts.
2. Raise and support the vehicle.
   For additional information,
   refer to Section 100-02.
3. Remove the front wheel.

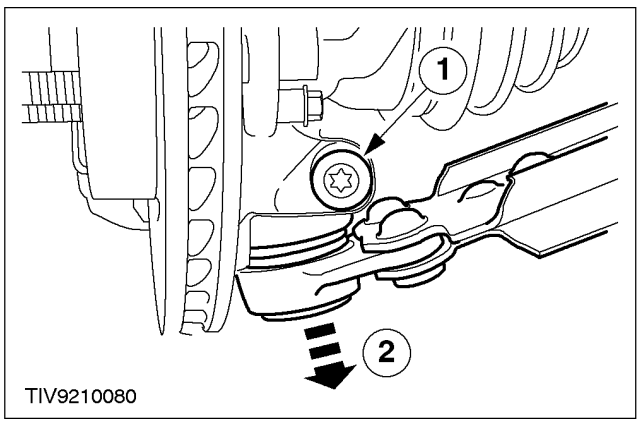

4. **CAUTION: Protect the ball joint seal using a soft cloth to prevent damage.**
   Detach the lower arm ball joint.
   1. Remove the bolt.
   2. Detach the lower arm ball joint.

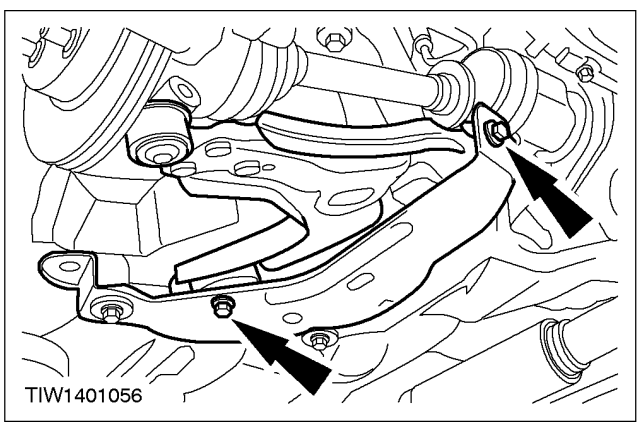

5. Remove the lower arm.
   - Remove the bolts.

Installation

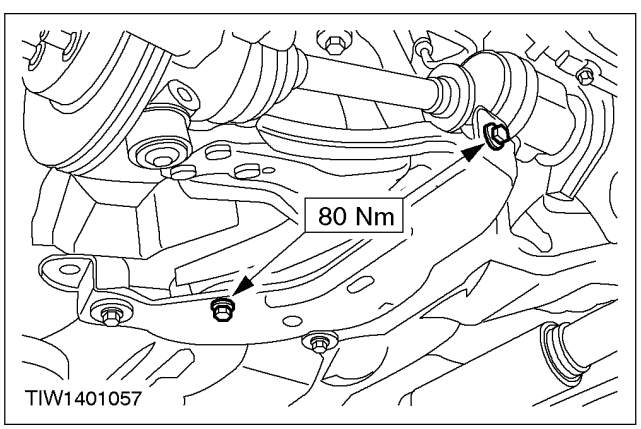

1. Install the lower arm.

REMOVAL AND INSTALLATION (CONTINUED)

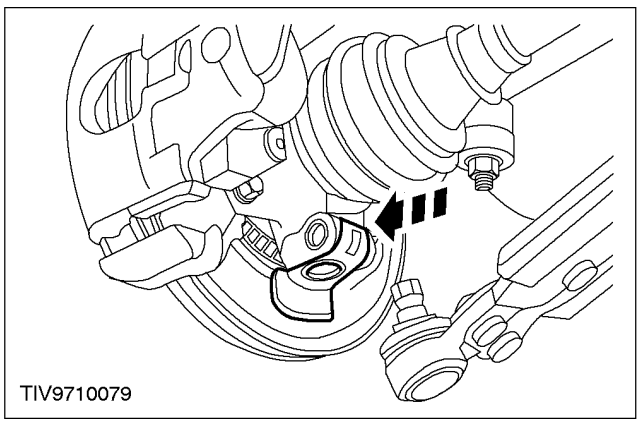

2. **CAUTION: Make sure a heat shield is installed to prevent damage to the ball joint.**

   Install the heat shield.

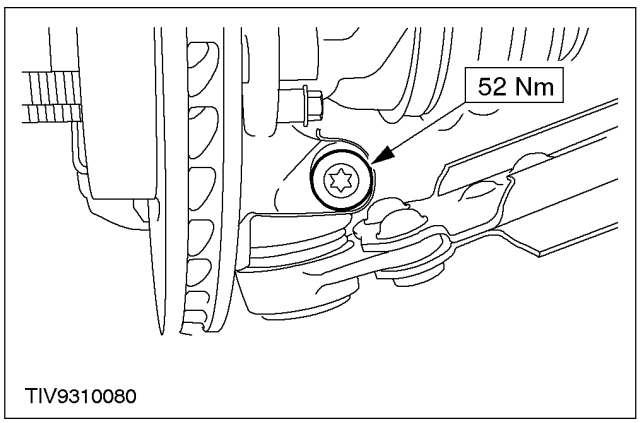

3. Install the lower arm to the wheel knuckle.

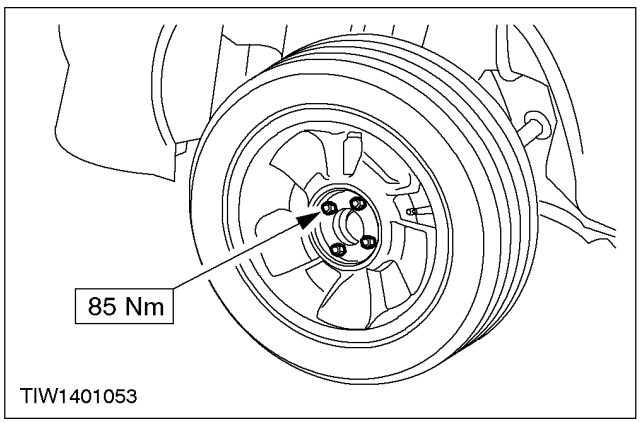

4. Install the wheel.

5. Lower the vehicle.

REMOVAL AND INSTALLATION

Wheel Knuckle (14 343 0)

Special Tool(s)	
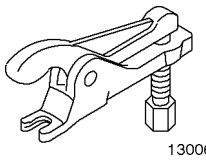 13006	Separator, Ball Joint 211-020 (13-006)
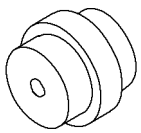 1403801	Adaptor for 204-158 204-158-01 (14-038-01)

Special Tool(s)	
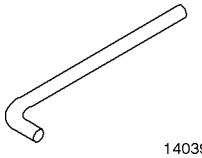 14039	Lever, Wheel Knuckle 204-159 (14-039)
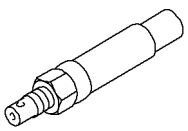 14041	Installer, Halfshaft 204-161 (14-041)

General Equipment
Three leg puller

Removal

All Vehicles

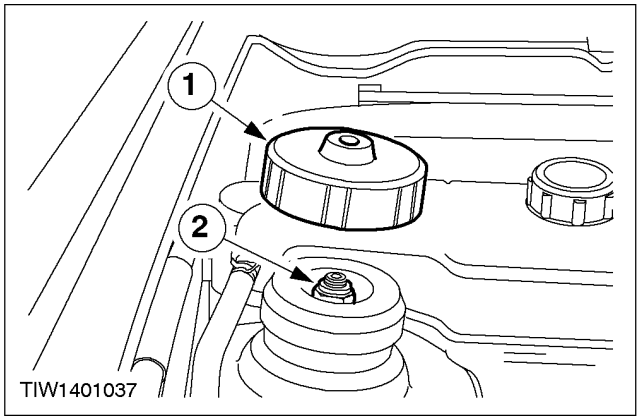

1. **CAUTION: Use an Allen key to prevent the piston rod from rotating.**
   Loosen the top mount nut by five turns.
   1. Remove the cover (if equipped).
   2. Loosen the nut five turns.

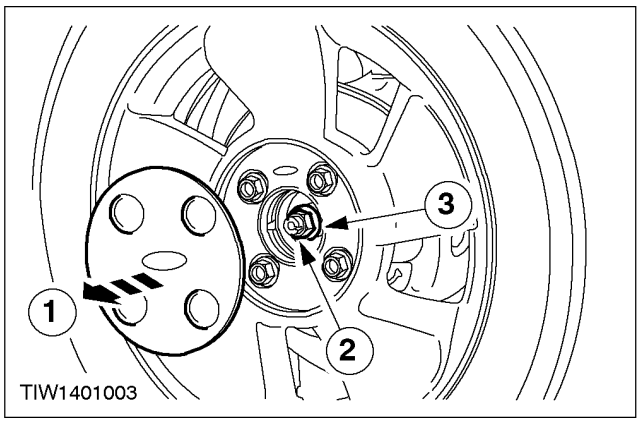

2. **CAUTION: Use a socket to protect the retaining nut.**
   Loosen the wheel hub-retaining nut.
   1. Remove the hub cap (if fitted).
   2. Bend back the locking tab.
   3. Loosen the hub-retaining nut.

3. Remove the front wheel and tyre. For additional information,
   refer to Section 204-03.

REMOVAL AND INSTALLATION (CONTINUED)

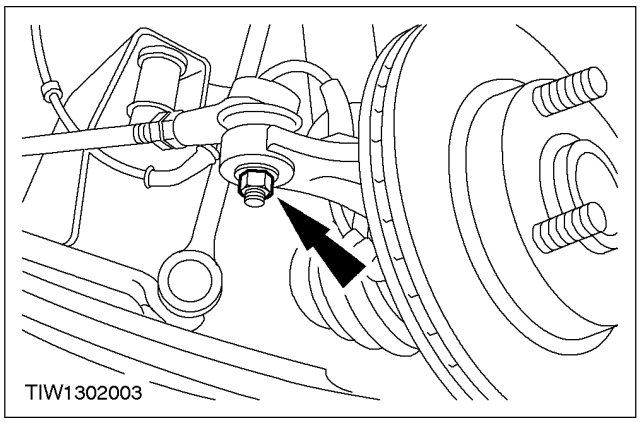

4. ⚠ **CAUTION: Leave the tie-rod end-retaining nut in place to protect the ball joint stud.**
   Loosen the tie rod end-retaining nut.

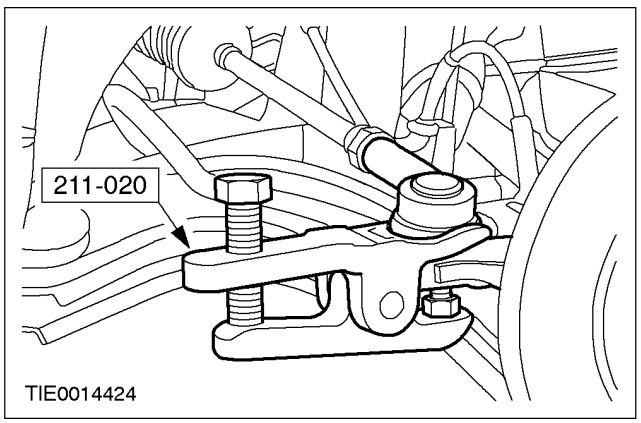

5. ⚠ **CAUTION: Protect the ball joint seal using a soft cloth to prevent damage.**
   Using the special tool, detach the tie rod end from the wheel knuckle.
   - Discard the tie-rod end-retaining nut.

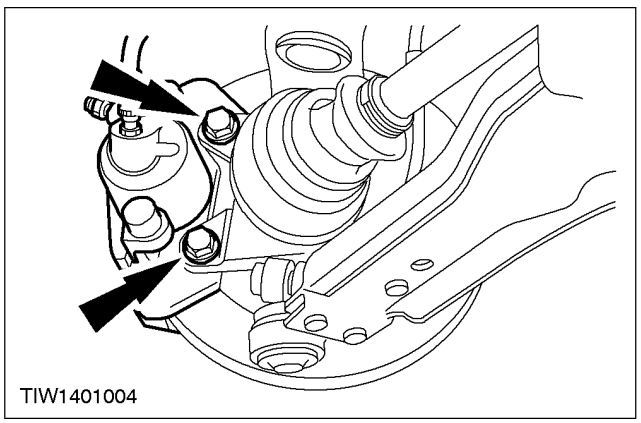

6. ⚠ **CAUTION: Secure the brake caliper and anchor plate assembly out of the way to prevent damage to the brake hose.**
   Detach the brake caliper and anchor plate assembly.

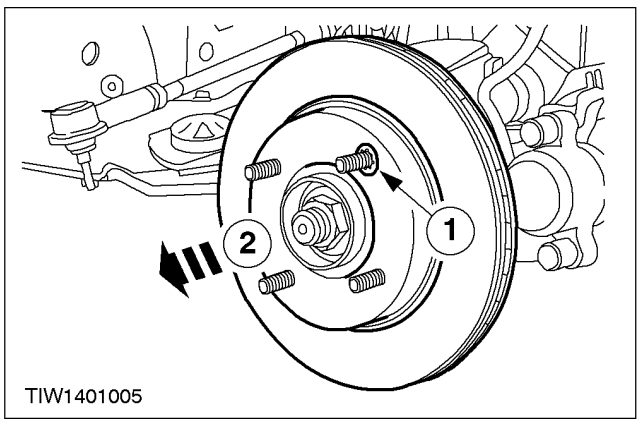

7. Remove the brake disc.
   1. Remove the disc retainer (if equipped).
   2. Remove the disc.

REMOVAL AND INSTALLATION (CONTINUED)

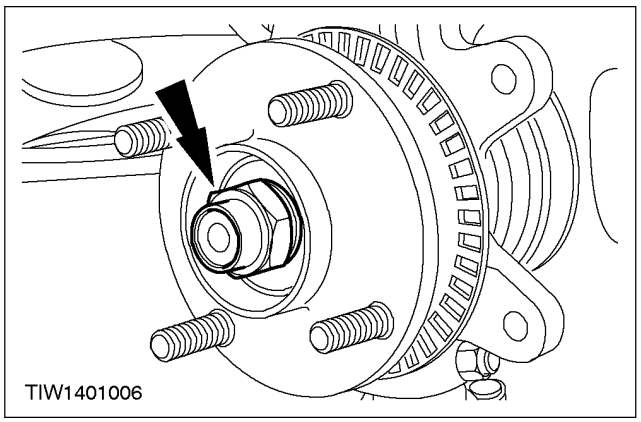

8. ⚠**CAUTION: Use a socket to remove the hub-retaining nut to prevent damage.**
   Remove the wheel hub retaining nut and washer.
   - Discard the hub-retaining nut.

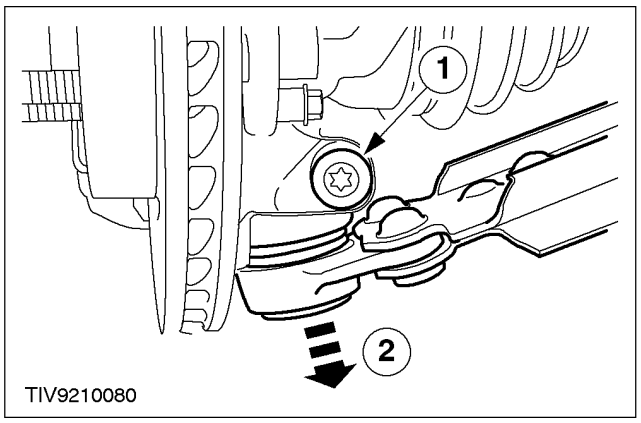

9. ⚠**CAUTION: Protect the ball joint seal using a soft cloth to prevent damage.**
   Detach the lower arm ball joint from the wheel knuckle.
   1. Remove the pinch bolt.
   2. Detach the lower arm ball joint.

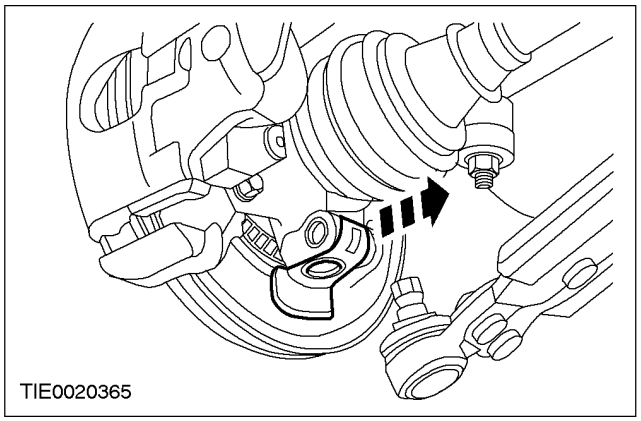

10. Remove the heat shield.

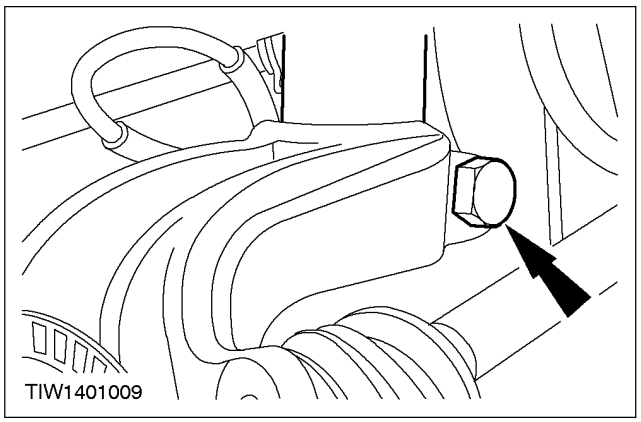

11. Remove the wheel knuckle to suspension unit pinch bolt.

REMOVAL AND INSTALLATION (CONTINUED)

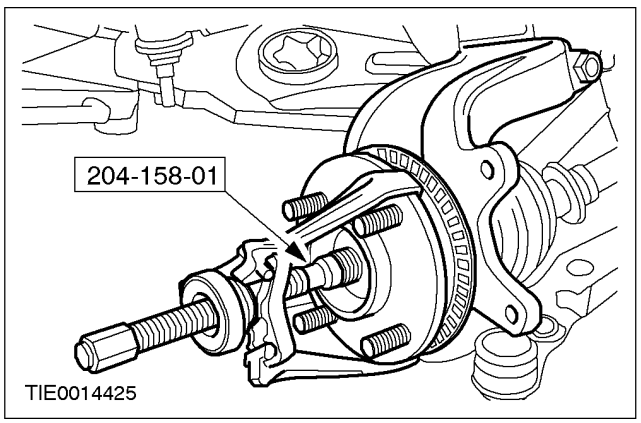

12. NOTE: The inner joint must not bend more than 18 degrees; the outer joint must not bend more than 45 degrees.

Using the special tool and a puller, detach the halfshaft from the wheel hub.

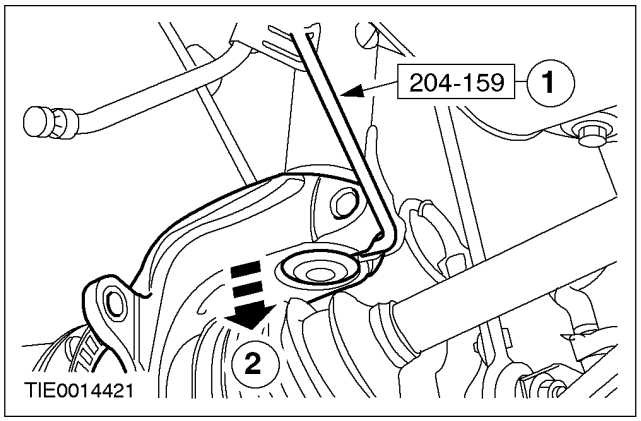

13. Remove the wheel knuckle from the suspension unit.
    1. Insert the special tool and rotate through 90 degrees.
    2. Remove the wheel knuckle.
    - Secure the halfshaft out of the way.

Installation

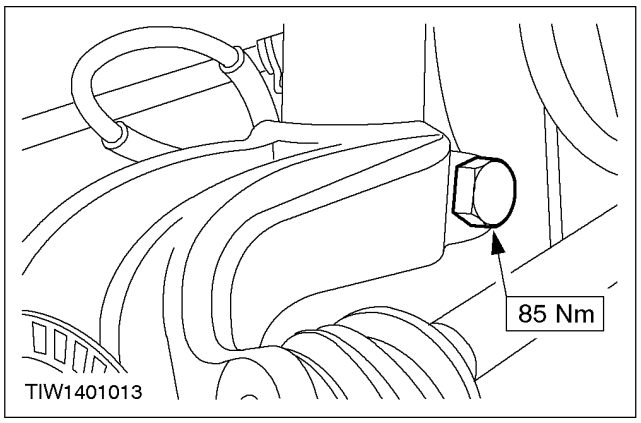

1. Install the wheel knuckle to the suspension unit.

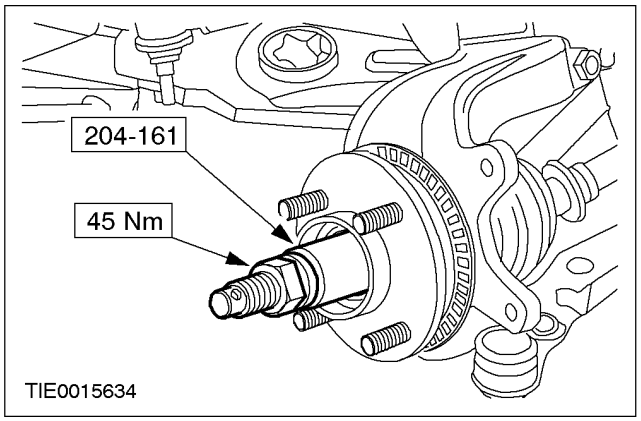

2. ⚠CAUTION: Make sure the halfshaft is completely installed into the wheel hub.

Using the special tool, install the halfshaft into the wheel hub.

REMOVAL AND INSTALLATION (CONTINUED)

3. Install the brake disc.

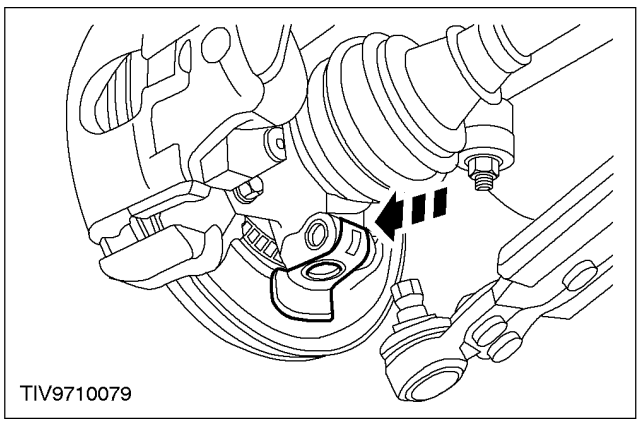

4. ⚠ **CAUTION: Make sure the heat shield is installed to prevent damage to the ball joint.**
   Install the heat shield.

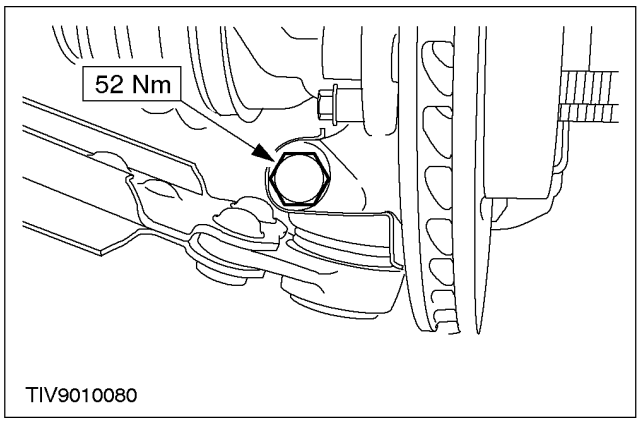

5. Install the lower arm to the wheel knuckle.

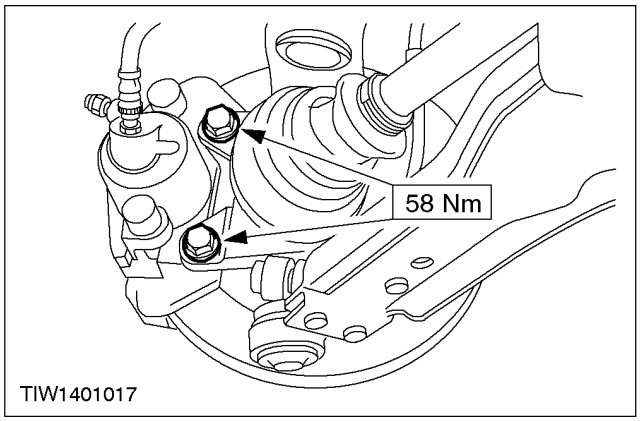

6. Install the brake caliper and anchor plate to the wheel knuckle.

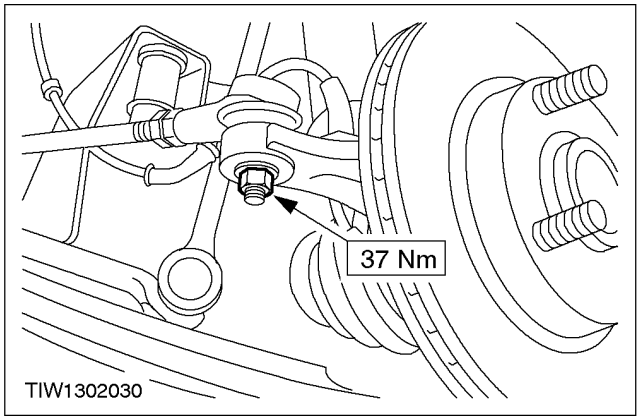

7. ⚠ **WARNING: Install a new tie-rod end-retaining nut. Failure to follow this instruction may result in personal injury.**
   Install the tie-rod end to the wheel knuckle.
   - Install a new tie-rod end-retaining nut.

REMOVAL AND INSTALLATION (CONTINUED)

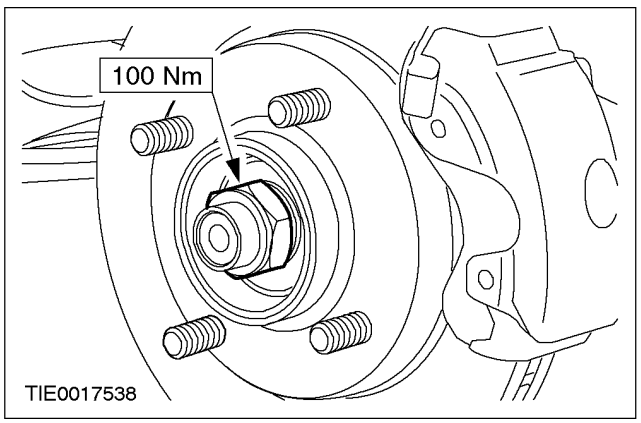

8. **WARNING: Install a new wheel hub-retaining nut. Failure to follow this instruction may result in personal injury.**
   With the aid of another technician, apply the brakes and pre load the wheel bearing.
   - Install a new wheel hub-retaining nut.

9. Install the wheel and tyre. For additional information, refer to Section 204-03.

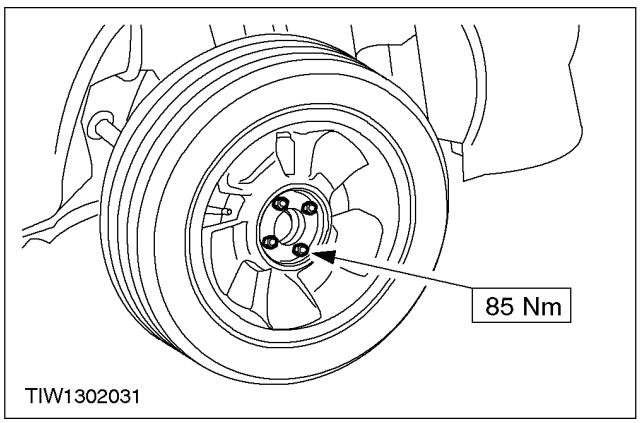

10. Lower the vehicle.

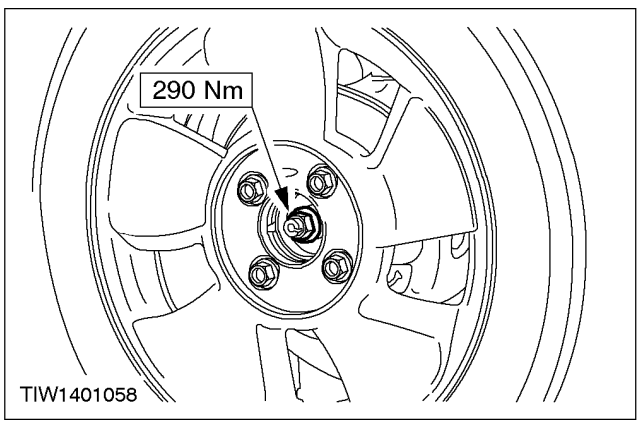

11. Tighten the wheel hub-retaining nut.
    - Using a suitable punch, stake the nut to the halfshaft.

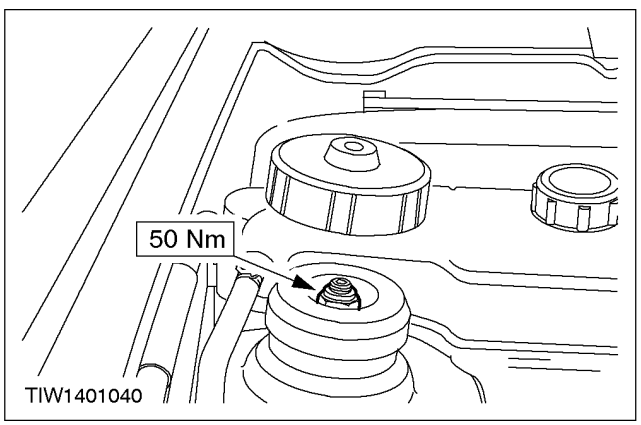

12. Tighten the strut and spring assembly top mount nut.

REMOVAL AND INSTALLATION

Lower Arm Ball Joint (14 735 0)

Removal

1. Remove the lower arm.
   Refer to the procedure in this section.
2. Drill out the rivets.

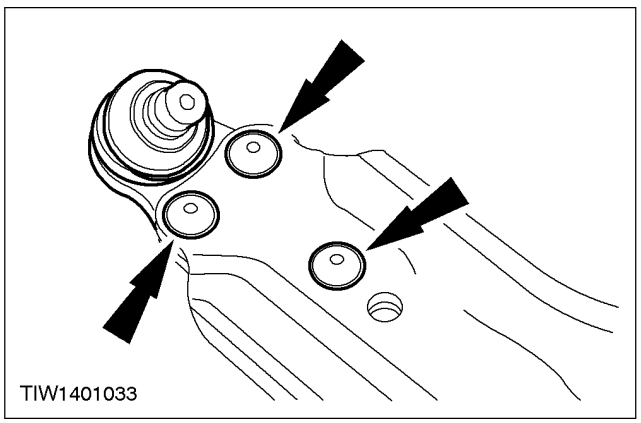

Installation

1. Install the new ball joint.
2. Install the lower arm.
   Refer to the procedure in this section.
3. Check the front wheel alignment.
   For additional information,
   refer to Section 204-00.

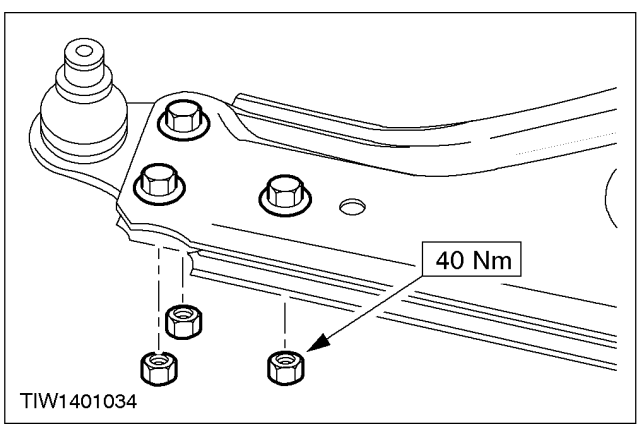

REMOVAL AND INSTALLATION

Strut and Spring Assembly (14 781 0)

Special Tool(s)	
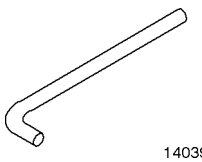 14039	Lever, Wheel Knuckle 204-159 (14-039)

Removal

All Vehicles

1. Loosen the front wheel nuts.
2. Raise and support the vehicle. For additional information, refer to Section 100-02.
3. Remove the front wheel.
4. Detach the stabiliser bar connecting link and the flexible brake hose from the suspension unit.

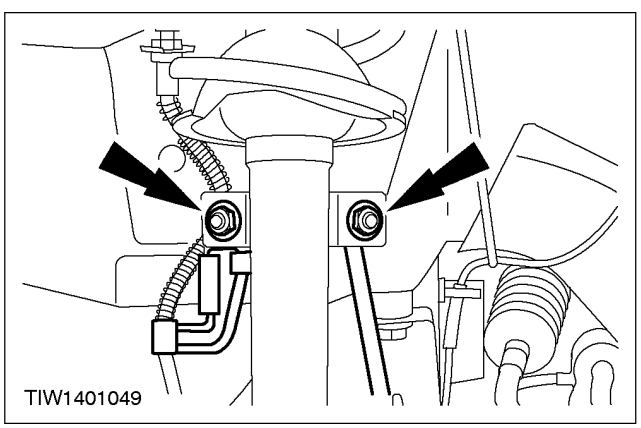

5. ⚠ **CAUTION: Secure the caliper and anchor plate assembly out of the way to prevent damage to the flexible brake hose.**
   Detach the caliper and anchor plate assembly.

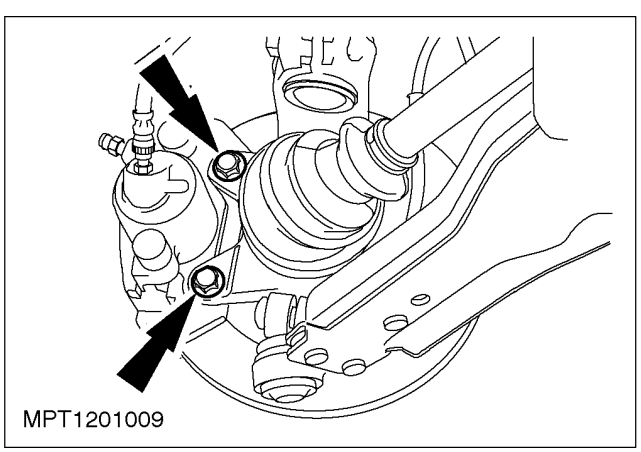

REMOVAL AND INSTALLATION (CONTINUED)

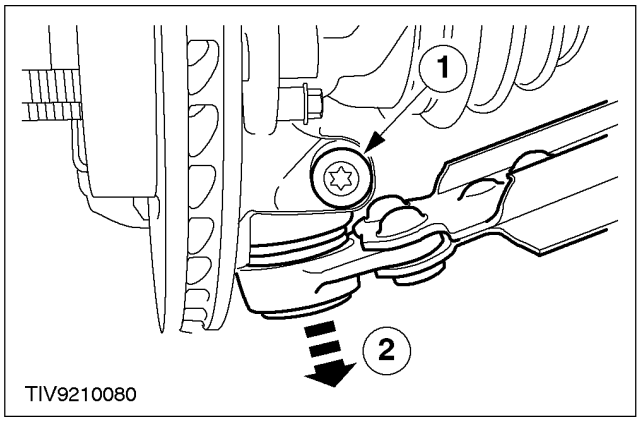

6. ⚠ **CAUTION: Protect the ball joint seal using a soft cloth to prevent damage.**
   Detach the lower arm ball joint.
   1. Remove the bolt.
   2. Detach the lower arm ball joint.

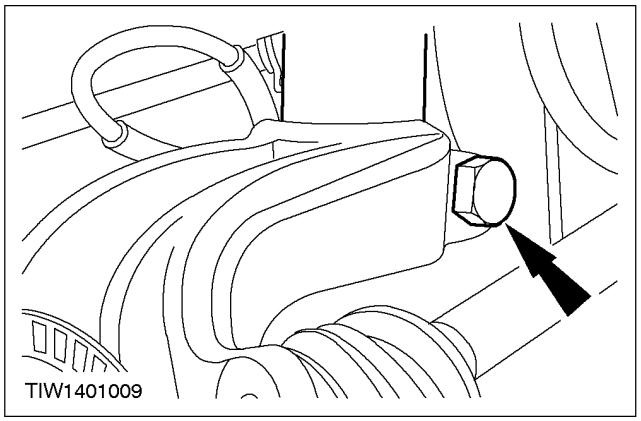

7. Remove the wheel knuckle to suspension unit pinch bolt.

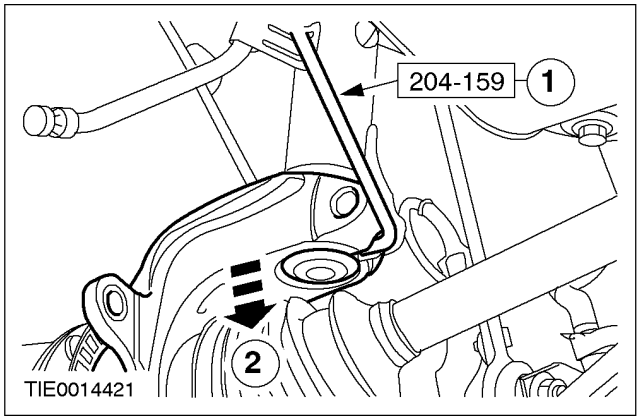

8. Remove the wheel knuckle from the suspension unit.
   1. Insert the special tool and rotate through 90 degrees.
   2. Remove the wheel knuckle.

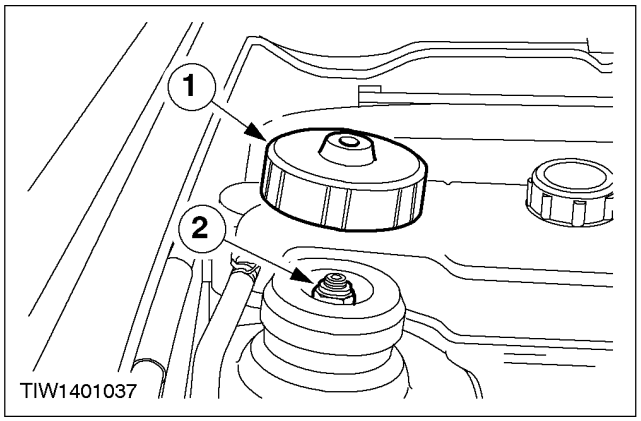

9. ⚠ **CAUTION: Use an Allen key to prevent the piston rod from rotating.**
   Remove the suspension unit top mount nut.
   1. Remove the cover, (if equipped).
   2. Remove the nut.

REMOVAL AND INSTALLATION (CONTINUED)

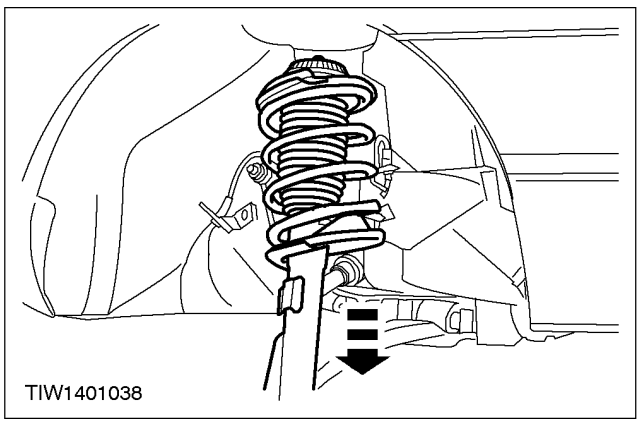

10. Remove the suspension unit.

Installation

All Vehicles

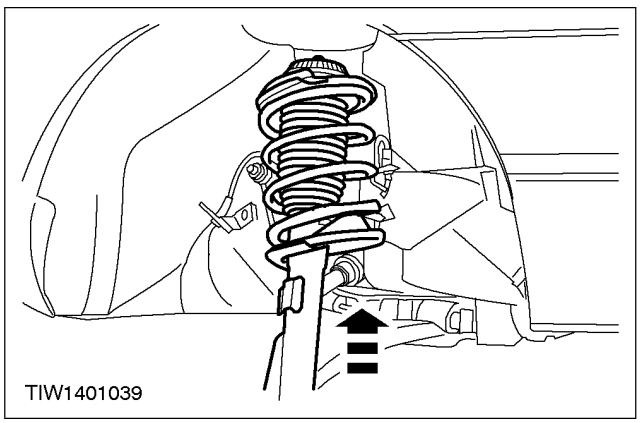

1. Position the suspension unit.

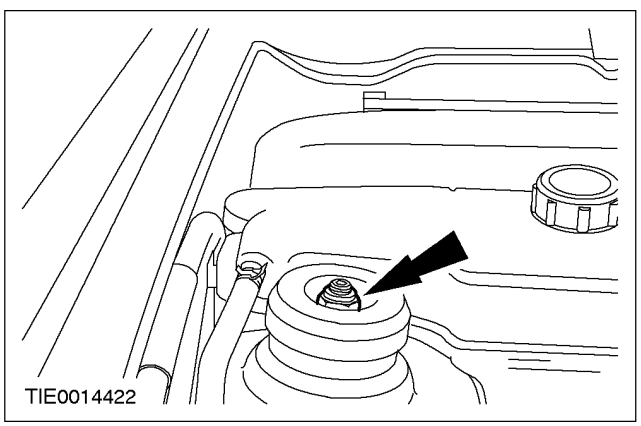

2. ⚠ **CAUTION: Use an Allen key to prevent the piston rod from rotating.**

NOTE: Do not fully tighten the suspension unit top mount nut.

Install the suspension unit top mount nut.

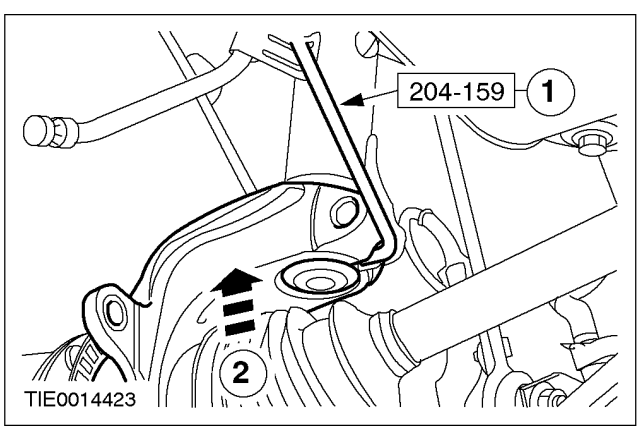

3. Install the wheel knuckle to the suspension unit.
   1. Install the special tool and rotate through 90 degrees.
   2. Install the wheel knuckle.

REMOVAL AND INSTALLATION (CONTINUED)

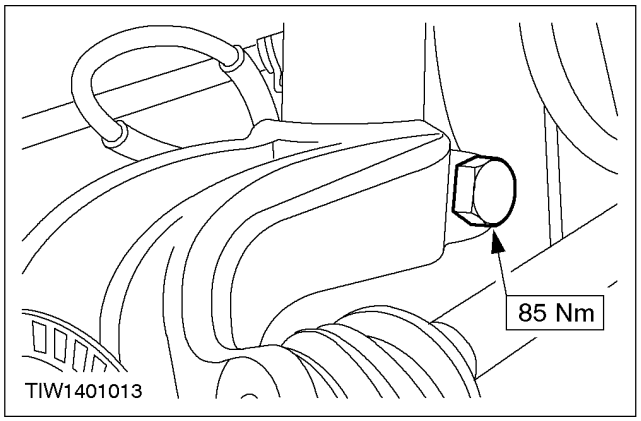

4. Install the wheel knuckle to suspension unit pinch bolt.

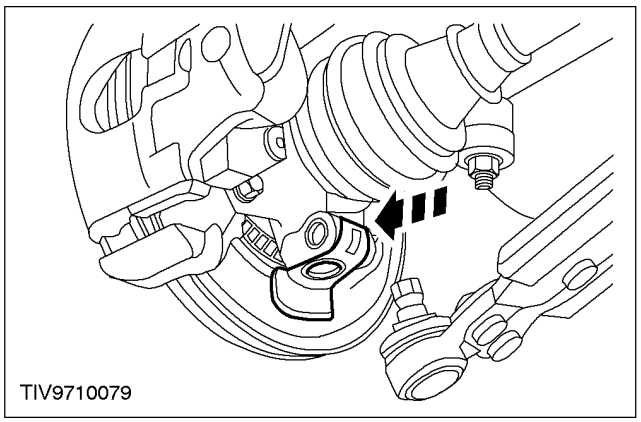

5. **CAUTION: Make sure a heatshield is installed to prevent damage to the ball joint.**
   Install the heatshield.

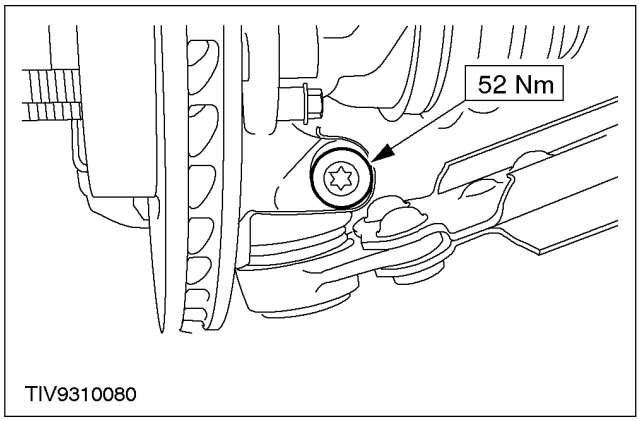

6. Install the lower arm to the wheel knuckle.

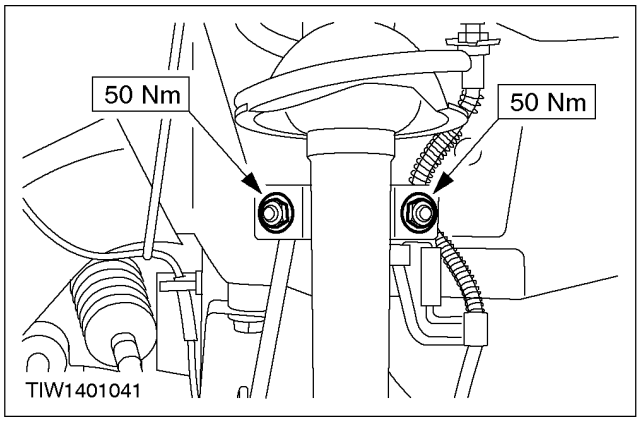

7. Install the stabiliser bar connecting link and the flexible brake hose bracket to the suspension unit.

REMOVAL AND INSTALLATION (CONTINUED)

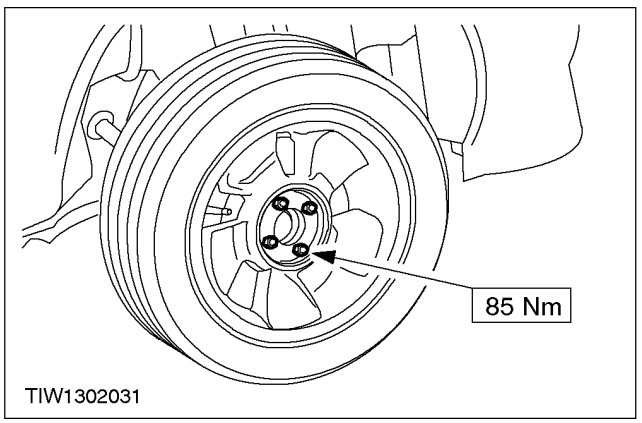

8. Install the wheel.

9.Lower the vehicle.

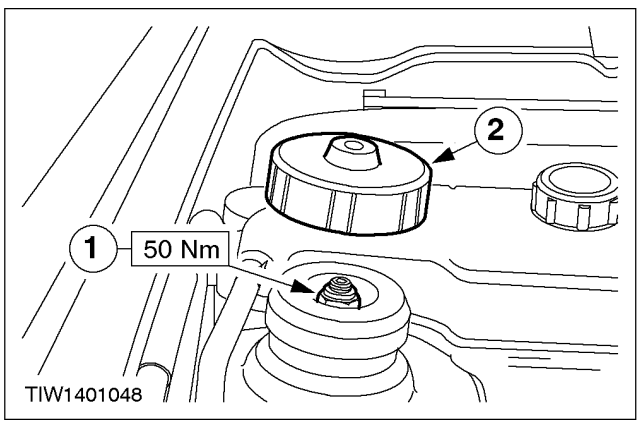

10. Tighten the suspension top-mounting nut.
    1. Tighten the nut.
    2. Install the cover (if equipped).

11. Check the front wheel alignment.
    For additional information,
    refer to Section 204-00.

DISASSEMBLY AND ASSEMBLY

Strut and Spring Assembly (14 783 4)

Special Tool(s)	
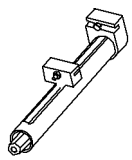 14042	Compressor, Coil Spring 204-167 (14-042)

Special Tool(s)	
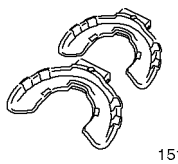 15103	Adapters for 204-157 204-167-01 (14-042-01)

Disassembly

1. Remove the suspension unit.
   For additional information,
   refer to the procedure in this section.

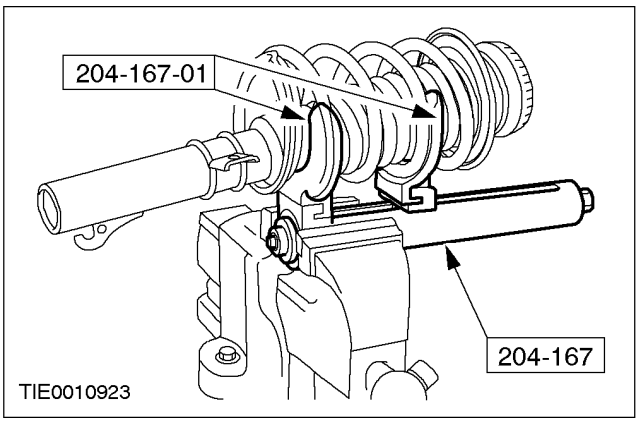

2. ⚠ **WARNING: As the spring is under extreme tension care must be taken at all times. Failure to follow this instruction may result in personal injury.**
   Partially compress the spring.

DISASSEMBLY AND ASSEMBLY (CONTINUED)

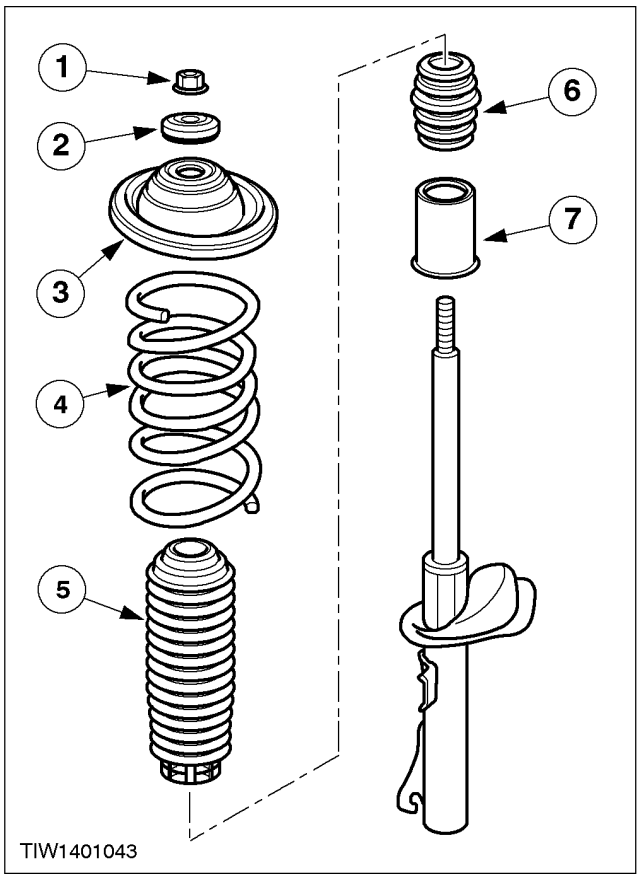

3. Disassemble the strut and spring assembly. Spring clamps removed for clarity.
   1. Remove the thrust-bearing nut.
   2. Remove the thrust bearing.
   3. Remove the spring seat.
   4. Remove the spring.
   5. Remove the boot.
   6. Remove the bump stop.
   7. Remove the dust cover.

Assembly

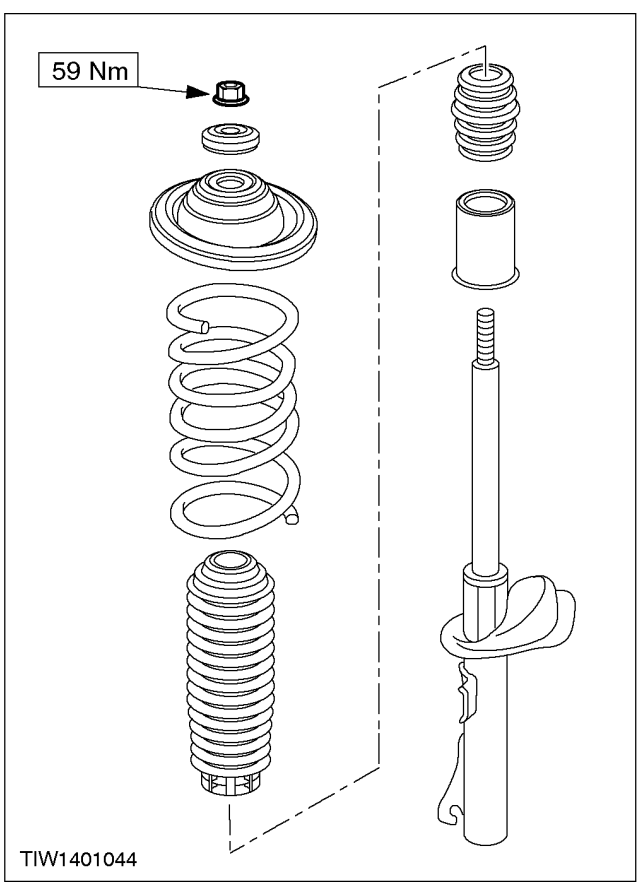

1. **NOTE:** Make sure that the spring ends butt correctly against the upper and lower spring seats.
   To assemble, reverse the disassembly procedure.

SPECIFICATIONS

Front Wheel Alignment (at kerb weight) - Caster and Camber

Derivative	Derivative	Caster	Caster	Camber	Camber
Model	Steering	Nominal	Tolerance Range	Nominal	Tolerance Range
1.3L Standard	Manual	1° 34'	2° 47' - 0° 17'	- 0° 40'	0° 44' to -2° 04'
All Other	Power	2° 14'	3° 29' - 0° 59'	- 0° 37'	0° 47' to - 2° 01'
Maximum variation - left to right-hand side - camber 1° 00' Caster 1° 15'					

Front Wheel Alignment (at kerb weight) - Total Toe Setting

Derivative	Tolerance Range	Setting Adjustment, if required
All	- 0° 12' to 0° 12'	

Torque Specifications

Description	Nm
Tie-rod locknut	63
Front hub retaining nut	290
Rear hub retaining nut	235

SPECIFICATIONS

Torque Specifications

Description	Nm
Tie rod end retaining nut	37
Lower arm to crossmember retaining nuts	80
Stabiliser bar retaining bolts	23
Crossmember retaining bolts	103
Roll restrictor to transmission retaining bolt	50
Lower arm to wheel knuckle pinch bolt	52
Gear shift linkage retaining bolts	23
Wheel nuts	85
Flexible coupling to steering shaft pinch bolt	28
Flexible coupling to steering gear pinion shaft pinch bolt	28
Wheel knuckle to strut and spring assembly pinch bolt	85
Caliper and anchor plate assembly retaining bolts	58
Strut and spring assembly top mount retaining nut	50
Wheel hub retaining nut	290
Connecting link to strut and spring assembly retaining nut	50
Strut and spring assembly thrust bearing retaining nut	59
Exhaust front pipe flange retaining nuts	48
Gearshift linkage support bracket retaining bolts	24
Flexible brake hose to strut and spring assembly retaining nut	50

SECTION 204-02 Rear Suspension

VEHICLE APPLICATION: 2002 Bantam

SUBJECT **PAGE**

DESCRIPTION AND OPERATION

Rear Suspension 204-02-2

DIAGNOSIS AND TESTING

Rear Suspension 204-02-3

REMOVAL AND INSTALLATION

Beam Axle and Suspension Assembly Removal ..... (15 231 0) 204-02-4/6
Tube - Rear Axle - Replace ..... (15 730 0) 204-02-7/9
Leaf Spring ..... (15 366 0) 204-02-10/11
Spring Bushes ..... (15 781 0) 204-02-12
Bump Rubber ..... (15 413 4) 204-02-13/14
Shock Absorber (Rear) 204-02-15

SPECIFICATIONS

Specifications 204-02-16
Torque Specifications 204-02-16

DESCRIPTION AND OPERATION

Rear Suspension

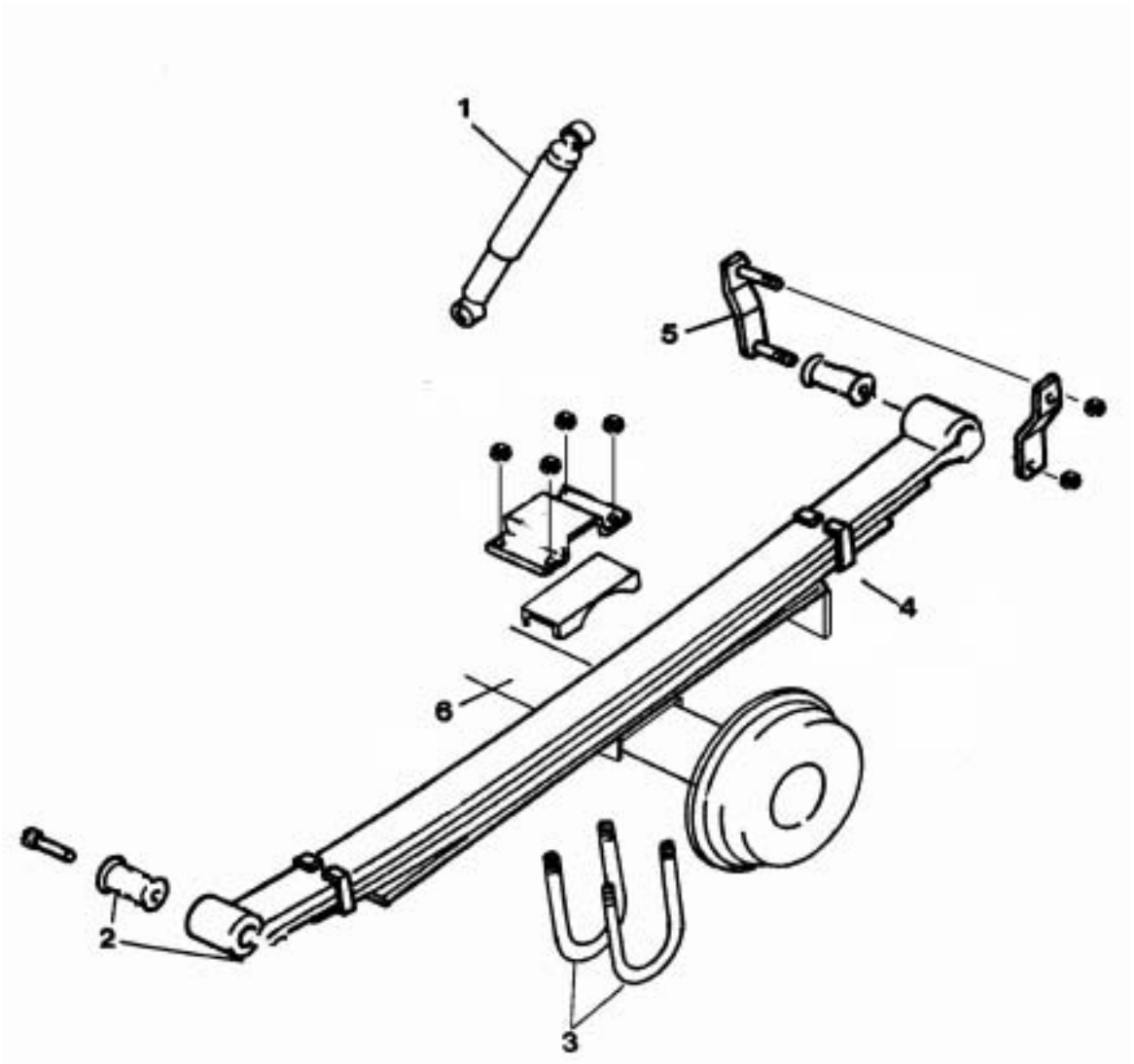

Item	Description
1	Shock absorber
2	Bushes
3	U-Bolts
4	Leaf springs
5	Shackle pins
6	Axle

The rear axle and suspension system consists of a transverse beam axle supported and located at each end by a single leaf spring. The bump rubbers mounted on top of the axle tube limit the vertical movement.

A stub axle is welded to each end of the axle tube. These stub axles each carry two taper roller bearings, which support the rear hubs. The rear brake drums and hubs form an integral unit. Although the rear wheel bearings are adjustable, their initial packing of grease is sufficient for the service life of the bearings and there is no routine maintenance requirement to readjust them in service.

The multi leaf rear springs are colour coded Blue of Yellow to indicate below or above the mean load and rate specification.

DIAGNOSIS AND TESTING

Rear Suspension

REFER to Section 204-00.

REMOVAL AND INSTALLATION

Beam Axle and Suspension Assembly Removal (15 231 0)

Removal

1. Jack up the rear of the vehicle, fit stands under the body and chock the front wheels. For additional information, refer to Section 100-02

NOTE: It is essential that the vehicle does not exceed the maximum kerb weight if it is to be raised and supported on the axle tube.

2. Support the axle assembly with a suitable jack.

3. Remove the wheels.

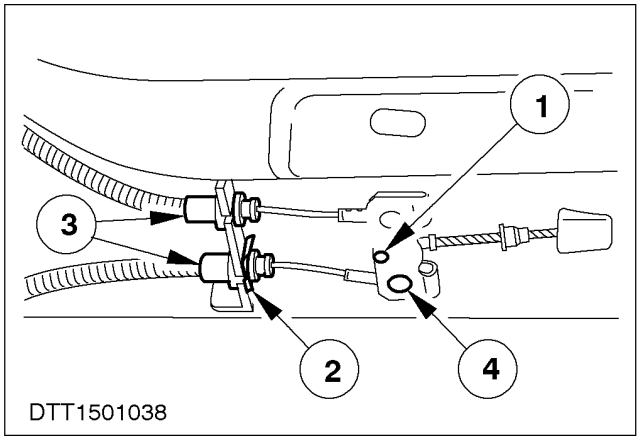

4. Detach the parking brake equalizer yoke.
   1. Detach the primary cable from the equalizer yoke.
   2. Remove the rear cable retaining clip.
   3. Detach the rear cables from the retaining bracket.
   4. Detach the equalizer yoke from the rear cable.

5. Disconnect the fuel line and unhook the exhaust from its rubber mountings. Disconnect the brake hoses from the rear axle tube bracket.

6. Remove the nuts securing the rear end of the spring to the under body. Remove the inner shackle plates.

NOTE: An alternative method of securing the spring to the shackle plates may be encountered. Remove the nut and bolt from both the rear spring eyes, slacken the upper shackle nut and lower the spring.

REMOVAL AND INSTALLATION (CONTINUED)

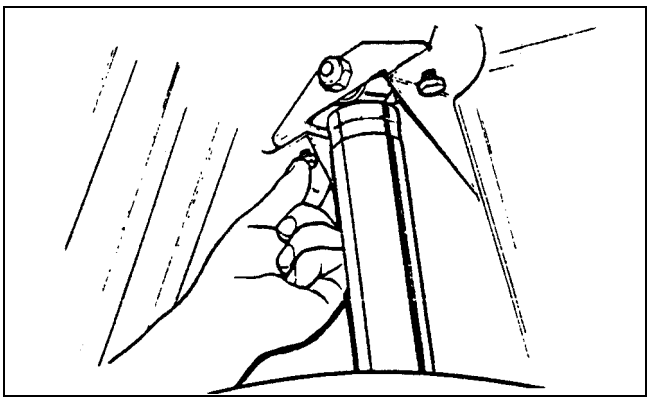

7. Remove the two bolts securing the shock absorber upper mounting plate to the body on either side of the vehicle.

8. Remove the nut and bolt from both the front spring eyes.

9. Remove the complete axle and suspension assembly by withdrawing it towards the rear of the vehicle, lowering the axle to separate the Load Active Valve (LAV) link rod from its spacer.

Installation

1. Reposition the rear axle and suspension assembly ensuring the Load Active Valve (LAV) link rod engages into its spacer tube.

NOTE: If necessary wipe the link rod clean and re-grease.

2. Refit the spring front eye nut and bolt, both sides.

3. Proceed with either "A" or "B" below:

"A" - Fit the rear shackle plates to each rear spring eye and fit the securing nut (s). Position the upper part of the plate over the body stud and fit securing nut (s), both sides.

"B" - Align the spring rear eye to the shackle plates and refit the securing nut (s) and bolt (s), both sides. Tighten the upper shackle nut (s).

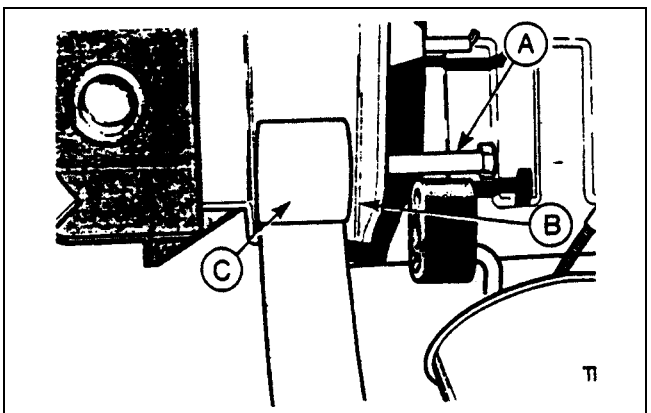

B - Spring front eye mounting
C - Spring front eye

4. Refit two bolts on each side of the shock absorber upper mounting plates.

REMOVAL AND INSTALLATION (CONTINUED)

5. Feed the handbrake cable over the exhaust system and the fuel lines.
   Re-hang the exhaust and reconnect the fuel lines.
   Connect the handbrake cable to the equaliser and fit the clevis pin and spring clip, reconnect both brake hoses to the axle bracket.

6. Bleed the brake system. For additional information, refer to Section 206-00.

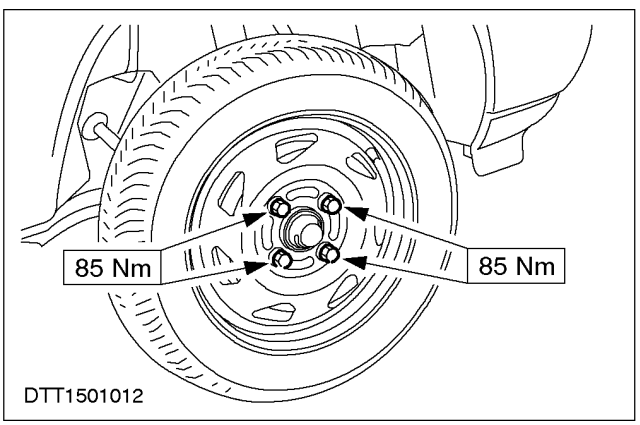

7. Lower the vehicle to the ground and finally tighten all nuts and bolts to the specified torque. Refer to Section 204-02-17

8. Adjust the parking brake cable. For additional information, refer to Section 206-05.

9. Adjust the Load Active Valve (LAV). For additional information, refer to Section 206-00

REMOVAL AND INSTALLATION

Tube - Rear Axle - Replace (15 730 0)

Removal

1. Jack up the rear of the vehicle, fit stands under the body and chock the front wheels. For additional information, refer to Section 100-02

NOTE: It is essential that the vehicle does not exceed the maximum kerb weight if it is to be raised and supported on the axle tube.

2. Remove the rear wheels and the brake hoses from the axle tube bracket.

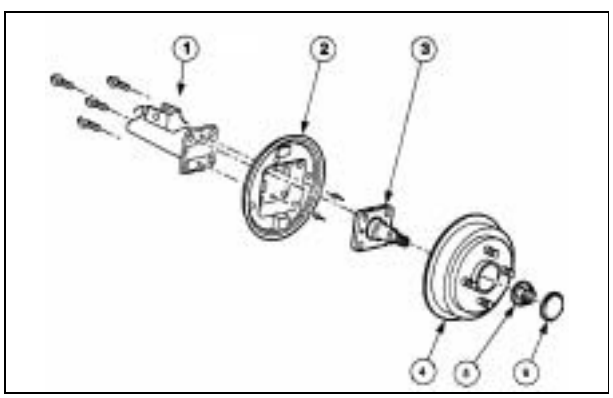

3. Remove the brake drum and hub assembly from the axle flange, four bolts.

NOTE: Protect the hub from dust and dirt.

4. Remove the two rivets securing the brake carrier plate assembly to the rear axle and remove the carrier assembly.

NOTE: Support the brake carrier assembly to prevent damage to the brake flexible hoses.

REMOVAL AND INSTALLATION (CONTINUED)

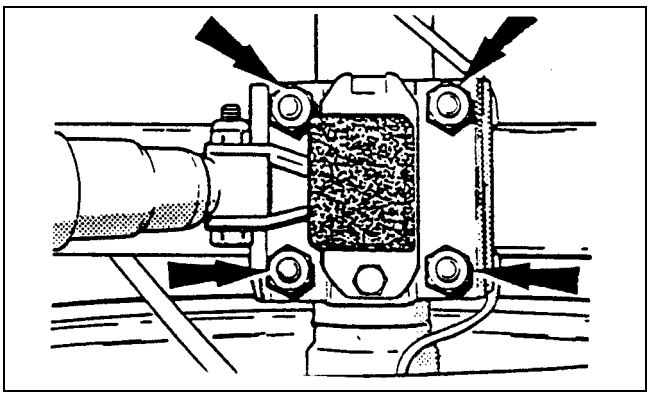

5. Repeat steps 3 to 4 for the remaining brake drum assembly.

6. Remove the "U" bolts nuts securing the axle to the springs.

7. Remove the axle tube from the vehicle, whilst sliding the Load apportioning valve (LAV) link rod and bush from the axle tube.

REMOVAL AND INSTALLATION (CONTINUED)

Installation

1. Refit the Load Active Valve (LAV) link rod and bush to the axle tube. Wipe the link rod clean and re-grease and align the rod with its spacer tube.

2. Secure the axle tube to the springs with the "U" bolts and nuts.

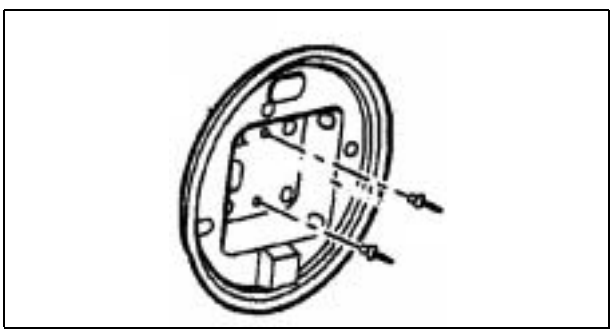

3. Refit the carrier plate assembly with two new rivets.

4. Refit the brake drum and hub assembly.
   Torque specification for retaining bolts (four off) 66 Nm

5. Repeat steps 3 to 4 for the remaining side.

6. Lower the vehicle to the ground and finally tighten all nuts and bolts to the specified torque. Refer to Section 204-02-17

7. Adjust Load apportioning valve (LAV). For additional information, refer to Section 206-00

REMOVAL AND INSTALLATION

Leaf Spring (15 366 0)

Removal

1. Jack up the rear of the vehicle, fit stands under the body and chock the front wheels. For additional information, refer to Section 100-02
NOTE: It is essential that the vehicle does not exceed the maximum kerb weight if it is to be raised and supported on the axle tube.

2. Support the axle with stands or a jack.

3. Remove the nuts securing the "U" bolts to the rear springs.

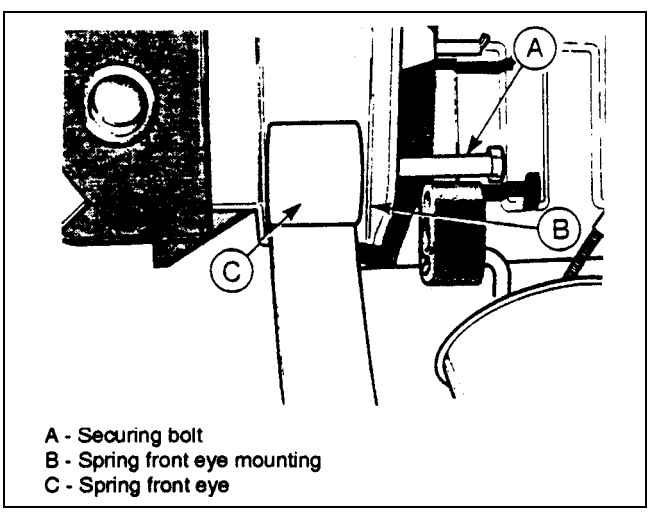

A - Securing bolt
B - Spring front eye mounting
C - Spring front eye

4. Remove nuts and shackle plate from the rear end of the leaf spring.

NOTE: An alternative method of securing the spring to the shackle plates may be encountered. Remove the nut and bolt from both the rear spring eyes, slacken the upper shackle nut and lower the spring.

5. Remove leaf spring front eye nut and bolt.

6. Remove the leaf spring from the vehicle.

REMOVAL AND INSTALLATION (CONTINUED)

Installation

1. Fit the leaf spring into position on the axle ensuring the colour code is facing towards the rear of the vehicle.
2. Fit the leaf spring eyebolt and nut.
3. Either fit the rear shackle plate to the spring and body and refit the spring eye to shackle plates securing nut and bolt, tighten shackle upper nut, depending on design fitted.

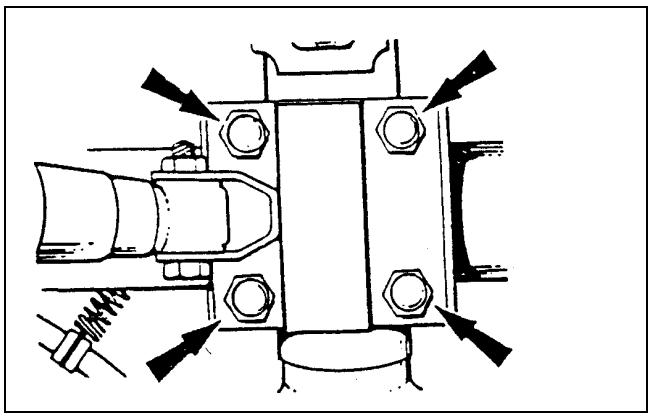

4. Fit the "U" bolts to the axle and spring, ensuring that the bump rubber plate is correctly located regarding shock absorber mounting. Secure the "U" bolts with there nuts.
5. Lower the vehicle to the ground and finally tighten all nuts and bolts to the specified torque. Refer to Section 204-02-17.
6. Adjust the Load Active Valve (LAV). For additional information, refer to Section 206-00

REMOVAL AND INSTALLATION

Spring Bushes (15 781 0)

Removal

1. Remove the leaf spring.
   Refer to Section 204-02-6

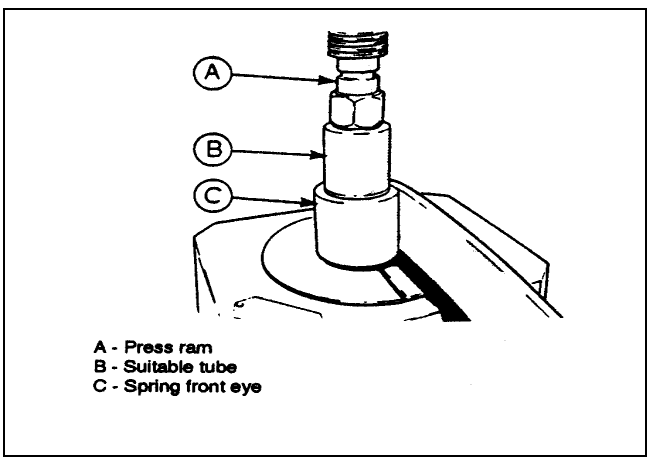

2. Align the leaf spring front eye under a press and using a suitable tube press out the bush, it is preferable to use a tube of suitable diameter so as to locate on the bush metal outer sleeve.

3. Repeat sub-operation 2 for the spring rear eye bush.

Installation

1. Clean the spring in the region of both front and rear eyes.

2. Prior to pressing new bushes into the spring eyes lightly apply a thin film of grease to the outer metal sleeves of each bush to facilitate installation.

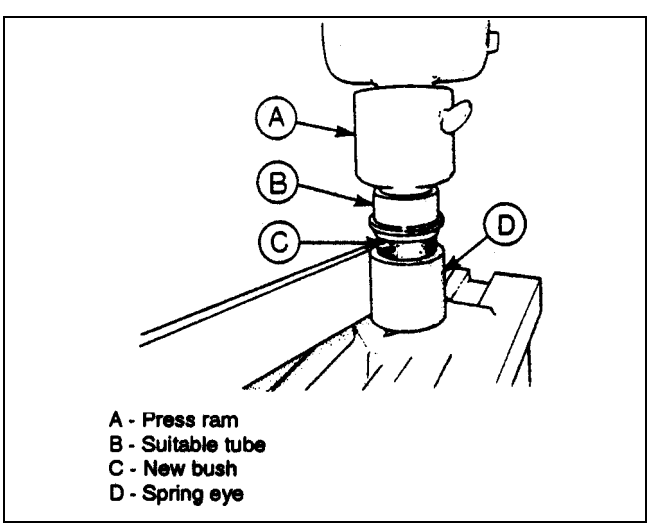

3. Press the new bushes into the spring eyes.
   Note: To prevent damaging the bush when pressing it into the spring eye it is essential to use a suitable tube so as to locate on the bush outer metal sleeve. A sitable tube is a 36.0 mm socket or similar dimensioned tube.

REMOVAL AND INSTALLATION

Bump Rubber (15 413 4)

Removal

1.Jack up the rear of the vehicle, fit stands under the body and chock the front wheels. For additional information,
refer to Section 100-02
NOTE: It is essential that the vehicle does not exceed the maximum kerb weight if it is to be raised and supported on the axle tube.

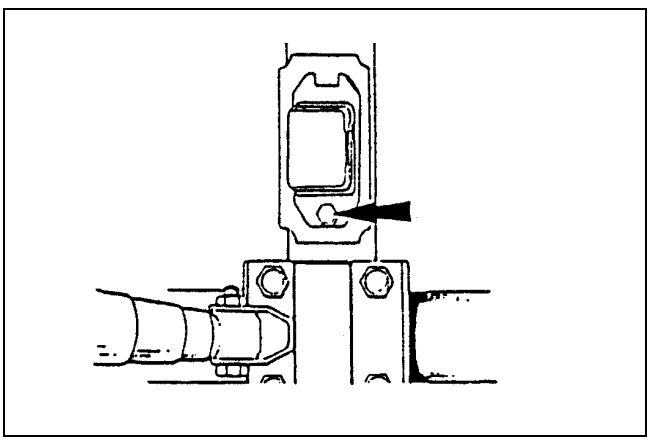

2. Remove bolt securing the bump rubber to axle mounting plate.

3. Remove the bump stop.

REMOVAL AND INSTALLATION (CONTINUED)

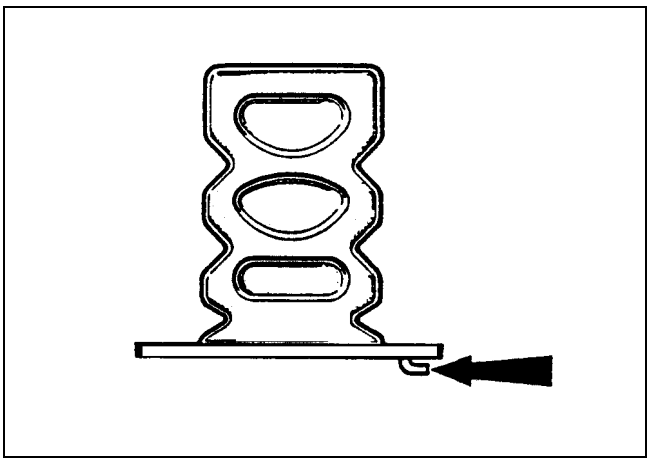

Installation

1. Clean the axle mounting plate before installing the bump stop.
2. Slide the bump stop rubber plate locating tag into the slot in the axle mounting plate.

REMOVAL AND INSTALLATION

Shock Absorber - Rear (15 783 4)

Removal

1.Jack up the rear of the vehicle, fit stands under the body and chock the front wheels. For additional information,
refer to Section 100-02
NOTE: It is essential that the vehicle does not exceed the maximum kerb weight if it is to be raised and supported on the axle tube.

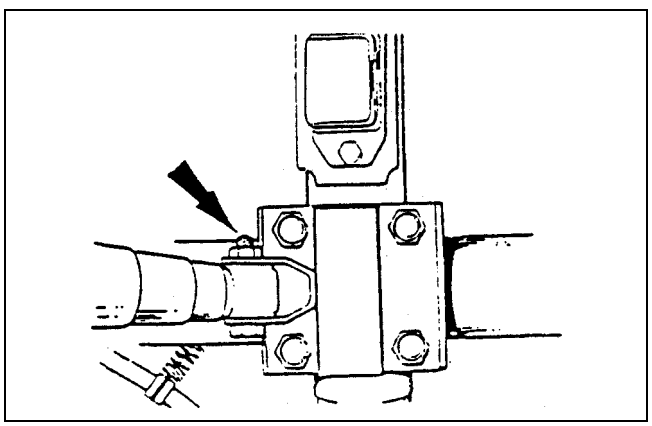

2. Remove the nut and bolt securing the shock absorber to its lower mounting.

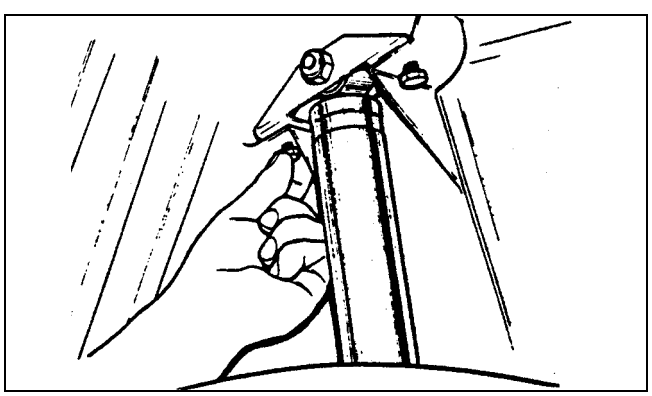

3. Remove the two bolts securing the shock absober top mounting bracket to the body.

Installation

1. Install the new shock absorbers in reverse order.

SPECIFICATIONS

Model	Centre Distances Between Eyes (mm)	Leaf thickness (mm)
Pick-up	1194* ± 3	1 - 7.0 2 - 7.0 3 - 6.5 4 - 15.0

* Spring flat.

Wheel Alingment - Note: Rear wheel alignment is not adjustable.

	Nominal	Tolerence
Camber	0° 0' 0"	0° 30' 00"
Toe	0° 0' 0"	0° 30' 00"

Tigntening Torques

Item	Nm
Spring eye bolts (front / rear)	70 - 95
Shackle plate to body / spring	43 - 54
Shock absorber top mounting	41 - 58
Shock absorber lower mounting	41 - 58
Shock absorber plate to body	21 - 28
Brake drum & hub assy to axle	66

SECTION 204-03 Wheels and Tyres

VEHICLE APPLICATION: 2002 Bantam

SUBJECT **PAGE**

DESCRIPTION AND OPERATION

Safety Precautions 204-03-2
Wheels and Tyres 204-03-3
Winter Tyres 204-03-3

DIAGNOSIS AND TESTING

Wheels and Tyres 204-03-4
Inspection and Verification 204-03-4
Symptom Chart 204-03-5/8

REMOVAL AND INSTALLATION

Wheel and Tyre 204-03-9

SPECIFICATIONS

Specifications 204-03-10
Tyre Pressures - Bar 204-03-10
Tyre Rating 204-03-10
Wheel and Tyre Size 204-03-10
Torque Specifications 204-03-10

DESCRIPTION AND OPERATION

Safety Precautions

WARNING: Do not mix different types of tyres on the same vehicle such as radial, bias or bias belted tyres except in emergencies (temporary spare usage).

WARNING: Never run the engine with one wheel off the ground, for example when changing a wheel. The wheel resting on the ground may cause the vehicle to move.

WARNING: Aftermarket aerosol tyre sealants are extremely flammable. Always question the customer to make sure that these products have not been used.

WARNING: Always wear safety goggles or a face shield when performing any work with wheel and tyre assemblies.

WARNING: Retighten the wheel nuts at 800 Km after any wheel change or anytime the wheel nuts are loosened.

WARNING: Failure to retighten the wheel nuts at the specified mileage could cause the wheels to come off while the vehicle is in motion.

WARNING: Each individual axle, wheel and tyre has its own maximum weight or tyre inflation rating. Do not overload or over-inflate beyond the capacity of the lowest rated components of the system.

CAUTION: Do not clean aluminum wheels with steel wool, abrasive type cleaners or detergents.

CAUTION: Reduce air pressure as much as possible by pushing the valve core plunger in before removing the valve core.

Failure to follow these instructions can result in personal injury.

DESCRIPTION AND OPERATION

Wheels and Tyres

Winter Tyres

Always fit winter tyres to all four wheels. Do not exceed the maximum speed specified by the tyre manufacturer. When using winter tyres, the tyre pressures supplied by the tyre manufacturer must be adhered to.

DIAGNOSIS AND TESTING

Wheels and Tyres

Inspection and Verification

To maximize tyre performance, inspect the tyres for signs of incorrect inflation and uneven wear, which may indicate a need for balancing, rotation or front suspension alignment. Tyres should also be checked frequently for cuts, stone bruises, abrasions, blisters, and for objects that may have become embedded in the tread. More frequent inspections are recommended when rapid or extreme temperature changes occur or when road surfaces are rough or occasionally littered with debris.

As a further visible check of tyre condition, tread wear indicators are molded into the bottom of the tread grooves. When these indicator bands are exposed to the road surface, new tyres should be installed.

Tyre Wear Diagnosis

New tyres should be installed if the wear indictors are exposed or if there is severe shoulder wear. Shoulder wear is usually caused by either excessive camber or excessive toe on radial tyres.

Sometimes incorrect rear toe settings or damaged struts will cause severe `cupping' or `scalloped' tyre wear on non-drive wheels.

Severely misadjusted rear toe will also cause other unusual wear patterns.

Road Test

A tyre vibration diagnostic procedure always begins with a road test. The road test and customer interview (if available) will provide much of the information needed to find the source of a vibration.

During the road test, drive the vehicle on a road that is smooth and free of undulations. If vibration is apparent, note and record the following:

- The speed at which the vibration occurs.
- What type of vibration occurs in each speed range.
  - mechanical or audible
- How the vibration is affected by changes in the following:
  - engine torque
  - vehicle speed
  - engine speed
- Type of vibration – sensitivity: torque sensitive, vehicle speed sensitive or engine speed sensitive.

The following explanations help isolate the source of the vibration.

Torque Sensitive

This means that the condition can be improved or made worse by accelerating, decelerating, coasting, maintaining a steady vehicle speed or applying engine torque.

Vehicle Speed Sensitive

This means that the vibration always occurs at the same vehicle speed and is not affected by engine torque, engine speed or the transaxle gear selected.

Engine Speed Sensitive

This means that the vibration occurs at varying vehicle speeds when a different transaxle gear is selected. Increasing or decreasing engine speed with the transaxle in NEUTRAL or by stall testing with the transaxle in gear can sometimes isolate it. If the condition is engine speed sensitive, the cause is probably not related to the tyres.

If the road test indicates that there is tyre whine, but no shake or vibration, the noise originates with the contact between the tyre and the road surface.

A thumping noise usually means that the tyre has flat or soft spots making a noise as they slap the roadway. Tyre whine can be distinguished from axle noise. Tyre whine remains the same over a range of speeds.

DIAGNOSIS AND TESTING

Symptom Chart

Symptom Chart

Condition	Possible Sources	Action
•Tyres show excess wear on edge of tread	•Under-inflated tyres.	•ADJUST air pressure in tyres.
	•Vehicle overloaded.	•CORRECT as necessary.
	•High-speed cornering.	•CORRECT as necessary.
	•Incorrect toe setting. •Incorrect camber setting.	•SET toe to specification. REFER to Section 204-00.
•Tyres show excess wear in center of tread	•Tyres over-inflated.	•ADJUST air pressure in tyres.
	•Excessive acceleration or braking.	•CORRECT as necessary.
•Other excessive tyre wear concerns	•Incorrect tyre pressure.	•ADJUST air pressure in tyres.
	•Tyres need rotating.	•ROTATE tyres.
	•Front end out of alignment.	•ALIGN front end. REFER to Section 204-00.
	•Vehicle overloaded.	•CHECK load specification against workload requirement.
	•Loose or leaking front suspension unit.	•TIGHTEN or INSTALL new parts as necessary. REFER to Section 204-01. (Front)
	•Wheel bearings worn.	•INSTALL new wheel bearings and/or wheel hub. REFER to Section 204-01(Front) REFER to Section 204-02(Rear)
	•Loose, worn or damaged suspension components, bushings and ball joints.	•INSPECT, REPAIR or INSTALL new parts as necessary.
	•Excessive lateral or radial run out of wheel or tyre.	•CHECK, REPAIR or INSTALL new parts as necessary. Use a dial indicator gauge to determine run out accurately.
•Wheel mounting is difficult	•Incorrect application or mismatched parts, including wheel studs and nuts.	•FOLLOW manufacturers specifications.
	•Corroded, worn or damaged parts.	•CLEAN or INSTALL new parts.
•Wheel rust or corrosion	•Poor maintenance.	•CLEAN and PROTECT with paint

DIAGNOSIS AND TESTING (CONTINUED)

Condition	Possible Sources	Action
•Wobble or shimmy affecting wheel run out	•Damaged wheel (eventually damages front wheel bearing outer cone and roller bearings and causes uneven tyre wear).	•INSPECT wheel rims for dents. INSTALL new parts as necessary.
•Excessive vehicle vibration, rough steering	•Loose suspension components.	•TIGHTEN or INSTALL new parts.
•Vehicle vibrations from wheels and tyres	•Inflation pressure too high or low.	•ADJUST air pressure in tyres.
	•Wheel or tyre imbalance.	•BALANCE wheel and tyre assembly.
	•Uneven tyre wear.	•INSTALL new tyre if necessary to correct vibration.
	•Brake disc imbalance.	•CHECK brake disc fins for mud or debris. If no damage or debris is seen, brake disc may have a heavy spot. REFER to Section 206-00.
	•Water in tyres.	•REMOVE water.
	•Bent wheel.	•INSTALL new wheel. Attempts to straighten a wheel can cause fractures in the wheel and weaken wheel strength.
	•Incorrectly seated tyre bead.	•SPIN wheel on vehicle. EXAMINE area where the tyre and the wheel meet. If that section of the tyre appears to waver while being rotated, the tyre bead may not be seated on the wheel. REMOVE the tyre and CLEAN bead seat areas on both wheel and tyre.
	•Excessive radial run out of wheel or tyre.	•Use a dial indicator gauge to check the radial run outs of both the wheel and the tyre. If either the wheel or tyre is out of specification CHECK the radial run out of the wheel stud. When components are out of specification INSTALL new components.
	•Loose or damaged wheel stud, wheel nut or enlarged stud holes.	•TIGHTEN or INSTALL new parts as necessary.
	•Debris between wheel mounting face and hub mounting surface.	•CLEAN mounting surfaces.

DIAGNOSIS AND TESTING (CONTINUED)

Condition	Possible Sources	Action
	•Excessive lateral run out of wheel or tyre.	•Use a dial indictor gauge to check the lateral run outs of both the wheel and the tyre. If either the wheel or tyre is out of specification CHECK the lateral run out of the wheel hub. When components are out of specification INSTALL new components.
	•Damaged front wheel bearing.	•REFER to Section 204-01.
•Cracks develop in rim base back (rim bead seat) or the gutter area (drop well radii)	•Overloading or abusive use.	•INSTALL new wheel. CHECK loading and operating conditions. Avoid over inflation of tyres. CHECK specifications for rim load capacity, working load, tyre size, ply rating and tyre construction.
	•Incorrect use of tools.	•CHECK mounting, demounting, and maintenance procedures.
•Damaged wheel stud threads	•Sliding wheel across wheel studs during assembly.	•INSTALL new wheel studs. TIGHTEN to specification.
•Loose brake drum	•Wheel studs too long.	•INSTALL new wheel stud of correct length.
•Broken wheel studs	•Loose wheel nuts.	•INSTALL new wheel studs. TIGHTEN to specification.
	•Overloading.	•INSTALL new wheel studs. TIGHTEN to specification. Compare actual load against vehicle load ratings.
•Stripped wheel stud threads	•Excessive torque.	•INSTALL new wheel studs. TIGHTEN to specification.
•Rust streaks from wheel stud holes	•Loose wheel nuts.	•CHECK complete assembly. If parts are damaged INSTALL new parts. TIGHTEN to specification.
•Damaged wheel nuts	•Loose wheel assembly.	•INSTALL new wheel nuts. TIGHTEN to specification.
	•Over tightened wheel nuts.	•FOLLOW correct tightening procedure.

DIAGNOSIS AND TESTING (CONTINUED)

Condition	Possible Sources	Action
•Seized wheel nuts	•Corrosion or galling.	•CAUTION: Do not permit lubricant to get on cone sets of stud holes or on cone angle of wheel nuts. If corrosion is slight, wire brush away corrosion. If corrosion is excessive, INSTALL new wheel studs and nuts. If condition persists, LUBRICATE first three threads of each wheel stud with a graphite-based lubricant.
	•Overloading.	•REDUCE weight.

REMOVAL AND INSTALLATION

Wheel and Tyre

Removal

CAUTION: Do not use heat to loosen a seized wheel nut. Heat may damage the wheel and wheel hub.

1. Loosen the wheel nuts.
2. Raise and support the vehicle.
   For additional information,
   refer to Section 100-02.
3. Remove the wheel and tyre assembly.

Installation

1. **WARNING: Remove the corrosion or dirt from the mounting surfaces of the wheel, wheel hub, brake drum or brake disc, as this may cause the wheel nuts to loosen and the wheel to come off while the vehicle is in motion. Failure to follow this instruction may result in personal injury.**
   Clean the wheel hub and mounting surfaces.
2. Install the wheel and tyre assembly.
3. Lower the vehicle.
4. Tighten the wheel nuts in a diagonally opposed pattern.

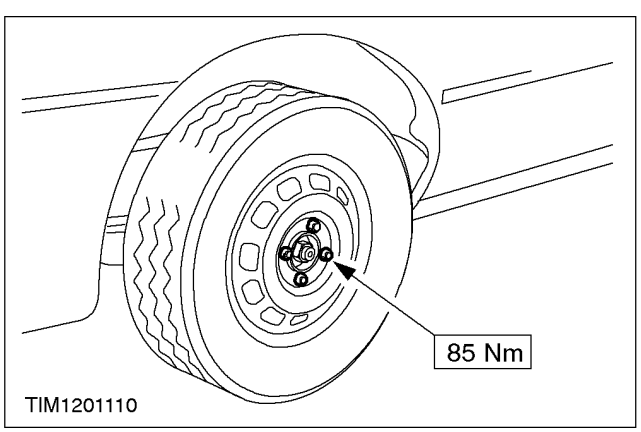

SPECIFICATIONS

Tyre Pressures - kPa

			Normally Laden *		Fully Laden *	
Tyre size	Engine	Variant	Front (kPa)	Rear (kPa)	Front (kPa)	Rear (kPa)
165 / 80R135	1.3 RoCam 1.6 RoCam	Standard Standard	210	210	210	300
175 / 65R14T	1.3 RoCam 1.6 RoCam	Hi-line Hi-line	210	210	210	300
175 / 65R14T	1.8 Diesel	All	240	210	240	300

Wheel and Tyre Size

Wheel Type	Model Variants	Rim Size	Tyre Size
Steel wheels			
	1.3 / 1.6 RoCam (Base)	5 X 13	165 / 80R13S
	1.3 / 1.6 RoCam / 1.8 Diesel (High)	5.5 X 14	175 / 65R14T
Alloy Wheels			
		5.5 X 14	175 / 65R14T

Torque Specifications

Description	Nm
Wheel nuts – steel/alloy wheels	85

SECTION 205-04 Front Drive Halfshafts

VEHICLE APPLICATION: 2002 Bantam

SUBJECT **PAGE**

DESCRIPTION AND OPERATION

Front Drive Halfshafts 205-04-2
Front Drive Halfshafts 205-04-2/3
Working principle of the front drive halfshafts 205-04-4
Handling front drive halfshafts 205-04-4
Wheel balancing, front 205-04-4
Raise the vehicle 205-04-4
Towing the vehicle 205-04-4
Underbody protection and corrosion prevention 205-04-4

DIAGNOSIS AND TESTING

Front Drive Halfshafts 205-04-5
Symptom chart 205-04-5

REMOVAL AND INSTALLATION

Halfshaft LH ..... (14 320 0) 205-04-6/9
Halfshaft RH ..... (14 321 0) 205-04-10/13
Inner Constant Velocity (CV) Joint Boot ..... (14 336 4) 205-04-14/18
Outer Constant Velocity (CV) Joint Boot ..... (14 338 4) 205-04-19/21
Outer Constant Velocity (CV) Joint 205-04-22/26

DISASSEMBLY AND ASSEMBLY

Halfshaft LH ..... (14 320 8) 205-04-27/30
Halfshaft RH ..... (14 320 8) 205-04-31/35

SPECIFICATIONS

Specifications 205-04-36
Lubricants, Fluids, Sealers and Adhesives 205-04-36
Capacities 205-04-36
Fill Capacities 205-04-36
Torque Specifications 205-04-36

DESCRIPTION AND OPERATION

Front Drive Halfshafts

Front Drive Halfshafts

1. The front drive halfshafts have constant velocity joints at both ends, providing low friction operation.
2. Tripod joints (with tripod, running rollers and tripod housing) are fitted nearest the transmission.
3. Nearest the wheel, fixed ball joints are fitted (consisting of a tripod, ball cage and shell).
4. The left-hand tripod joint is secured in the differential with a snap-ring.
5. The intermediate shaft (right-hand side) is secured in the differential and by the intermediate shaft bearing.
6. The tripod bell housing on the right-hand tripod joint of the right-hand front drive halfshaft is rigidly fixed to the intermediate shaft.
7. The wheel-side constant velocity joints are attached to the wheel hubs.

DESCRIPTION AND OPERATION

Exploded view of the front drive halfshaft

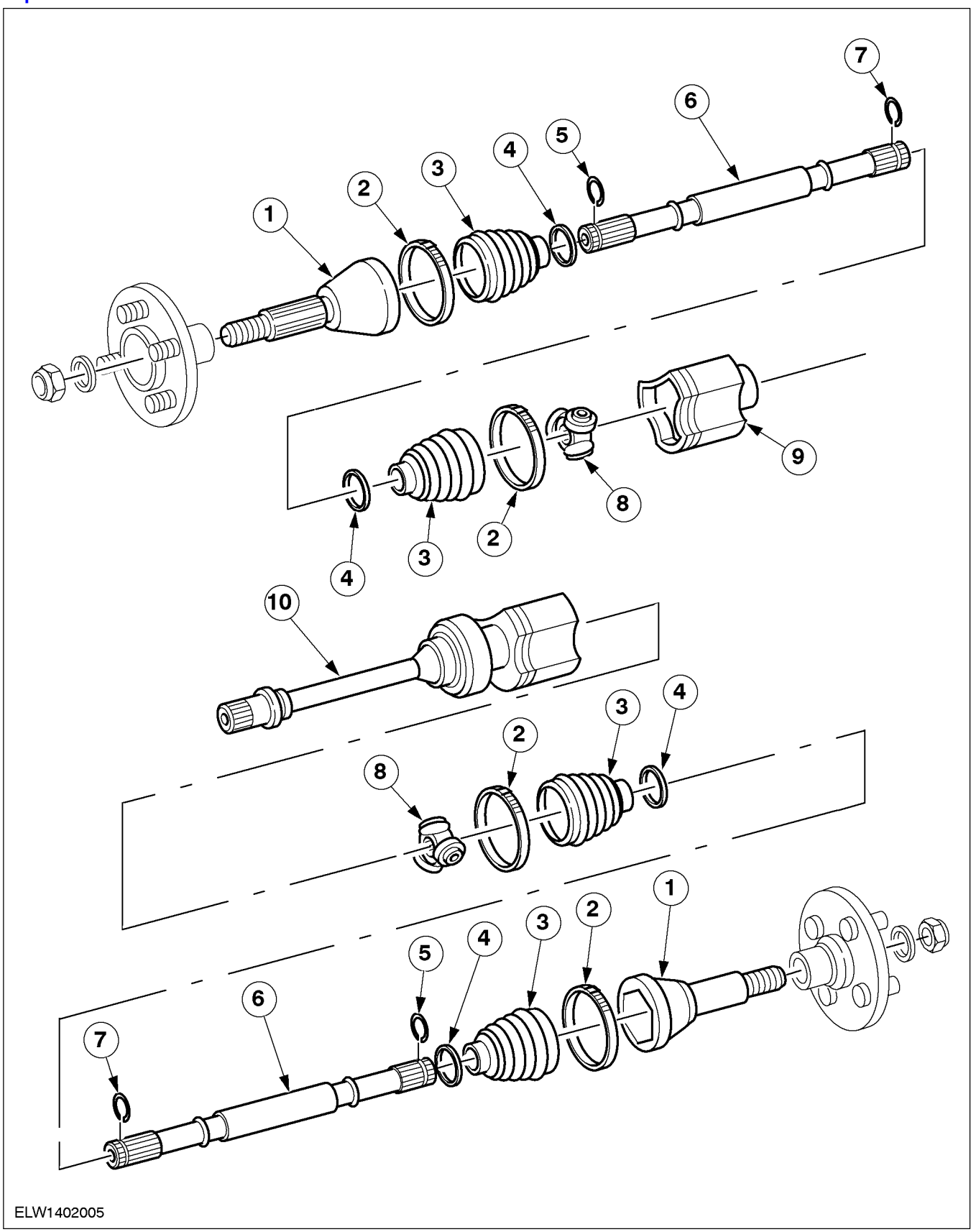

DESCRIPTION AND OPERATION (CONTINUED)

Item	Description
1	Fixed ball joint
2	Clamping strap (large)
3	Boot
4	Clamping strap (small)
5	Drive halfshaft retaining snap-ring, wheel end
6	Front drive halfshaft
7	Drive halfshaft retaining snap-ring, transmission end
8	Tripod star with constant velocity rollers
9	Tripod housing
10	Intermediate shaft with intermediate shaft bearing

Working principle of the front drive halfshafts

1. The front drive halfshafts transmit torque from the engine to the wheels.
2. In order to allow engine movement and vertical movement of the wheels, the front drive halfshafts operate at varying lengths and angles.
3. The tripod joints allow for changes in drive halfshaft length during axial movements.

Handling front drive halfshafts

NOTE: Never hold the front drive halfshaft just by the tripod joint.

The greatest care must be taken when installing, removing, disassembling or assembling the front drive halfshafts. Observe the following points:

1. When removing front drive halfshafts do not pull on the tripod joints.
2. The inner tripod joint must not be bent at more than 18 degrees, the outer one no more than 45 degrees.
3. Check polished surfaces and splines for damage.
4. Do not allow the boots to come into contact with sharp edges, the engine when it is hot or the exhaust system.
5. Do not drop the front axle drive halfshafts, as this can cause interior damage to the boots, which may not be visible from the outside.
6. Do not use the front drive halfshafts as levers to install other vehicle components. The front drive halfshafts must always be left hanging freely.
7. The tripod joint can be damaged by knocks outside the joint housing.

Wheel balancing, front

CAUTION: Using a portable wheel balancing unit when the vehicle is lifted completely off the ground will result in damage to the tripod joints or boots, as the joint is bent at a large angle and therefore overheats.

If using portable wheel balancing equipment, place a workshop jack under the lower suspension arm of the wheel opposite the one being balanced. This prevents the joints being bent too far when the vehicle is lifted.

If possible, wheels should be removed from the vehicle and balanced in a stationary balancing machine.

Raise the vehicle.

CAUTION: Never use the joints or front drive halfshafts as jacking points.

Towing the vehicle

CAUTION: Do not attach the towrope to the front drive halfshaft.

Underbody protection and corrosion prevention

NOTE: The boots should be covered during application of underbody protection or corrosion prevention.

Foreign matter on the boots can cause premature ageing of the material. Foreign matter on the front drive halfshafts can cause imbalance.

DIAGNOSIS AND TESTING

Front Drive Halfshafts

Symptom chart

NOTE: Do not re-install front drive halfshafts without first checking for wear.

1. Carry out a visual check of the boots for tears and cracks.
2. Carry out a visual check of the underbody for signs of splashes of grease around the front axle drive halfshafts; this may indicate that one of the boots or boot clamps is faulty.
3. Carry out a check of the joint housing for leaks.
4. Ensure that the correct self-locking stub axle nut has been fitted.

Pinpoint Tests

Condition	Possible Sources	Action
•Cracking, banging or grinding noises whilst driving.	•Insufficient or contaminated grease in the joints of the front axle drive halfshaft.	•Check, clean and renew the high-durability grease as necessary.
	•Another component is touching a front axle drive halfshaft.	•Check and repair as necessary.
	•Worn or damaged wheel bearing, brakes, suspension or steering components.	•Check and repair as necessary.
•Vibrations at high speeds.	•Wheel imbalance.	•Balance the wheels. REFER to Section 205-04.
	•Front wheel radial run out.	•Observe the removal and installation instructions for the front axle drive halfshafts.
	•Front axle drive halfshafts incorrectly installed.	•
•Shaking vibrations when accelerating.	•Tripod joint angle is too large because of unsuitable ride height.	•Check that the vehicle height and spring height are correct.
	•Front drive halfshaft has excessive wear or is faulty.	•Check and renew as necessary.
•Tripod joint has come apart.	•The front drive halfshaft snap-ring is missing or has not engaged correctly in the differential.	•Renew the snap-ring.
	•Engine and transmission not aligned correctly.	•Check engine mountings for faults and wear.
	•Subframe or chassis distorted or buckled.	•Measure frame.
	•Front suspension components worn or faulty.	•Check for worn bushes or deformed components (stabiliser, suspension arm, etc.) and renew as necessary.

REMOVAL AND INSTALLATION

Halfshaft LH (14 320 0)

Special Tool(s)	
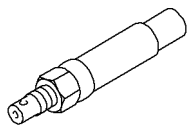 14041	Installer, drive halfshaft 204-161 (14-041)
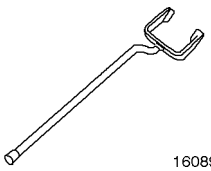 16089	Remover, drive halfshaft 308-256 (16-089)

General Equipment
Two legged puller

Material	Specification
Transmission fluid - manual transmission	SAE 75W90

Removal

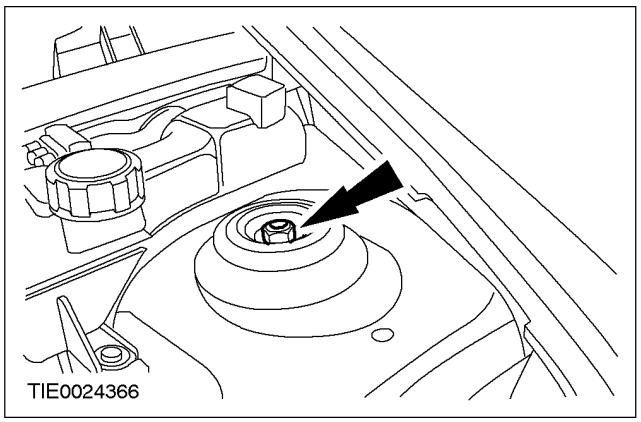

1. **NOTE:** Stop the piston rod from turning using an Allen key.
   Undo the suspension strut top nut by five turns.

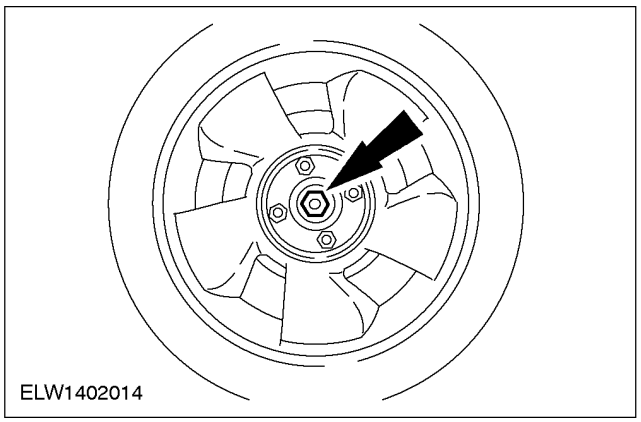

2. Loosen the axle stub nut.

3. Detach the front wheel. For additional information, refer to Section 204-03.

REMOVAL AND INSTALLATION (CONTINUED)

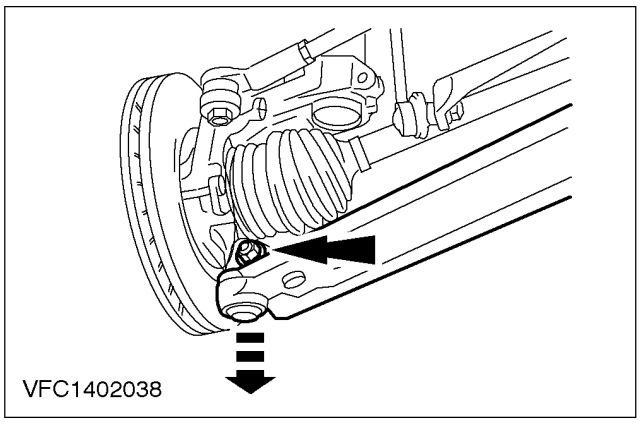

4. Detach the lower suspension arm from the spindle carrier.

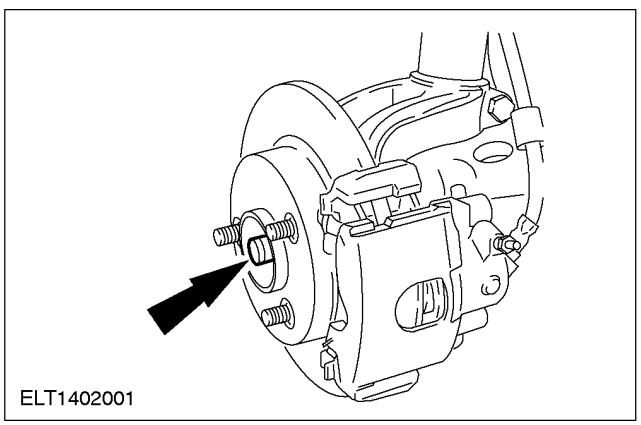

5. **CAUTION: The axle stub nut can be re-used four times. Mark the nut.**

CAUTION: Support the halfshaft. The inner joint must not be bent at more than 18 degrees. The outer joint must not be bent at more than 45 degrees.

Unscrew and remove the axle stub nut and remove the washer.

- Press the axle stub out of the wheel hub using a two-legged puller and tie the halfshaft up using cable ties.

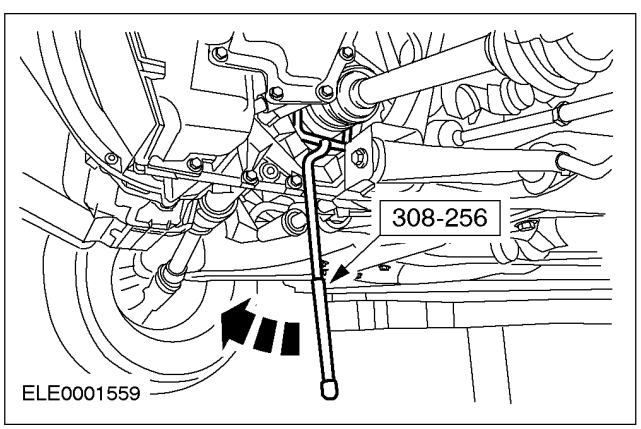

6. **CAUTION: Do not damage the oil seal.**

NOTE: Escaping oil. Collect the oil in a suitable container.

NOTE: Plug the openings in the transmission to prevent oil being lost and to stop dirt entering.

Remove the front drive halfshaft from the transmission using the special tool.

- Discard the snap ring.

REMOVAL AND INSTALLATION (CONTINUED)

Installation

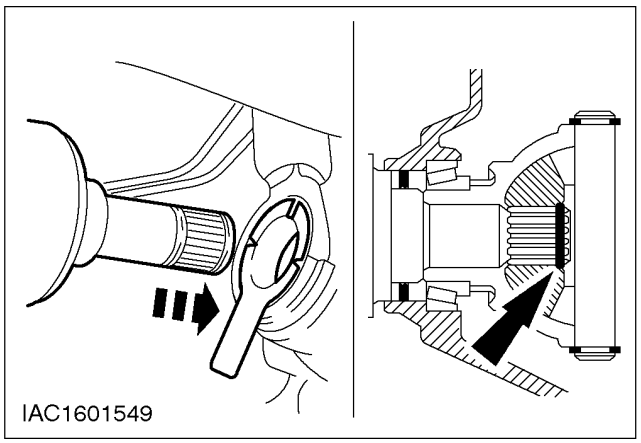

1. ⚠ **CAUTION: Do not damage the oil seal when inserting the front drive halfshaft. Use an installation sleeve on a manual transmission (supplied with each new oil seal).**

⚠ **CAUTION: Support the halfshaft. The inner joint must not be bent at more than 18 degrees. The outer joint must not be bent at more than 45 degrees.**

NOTE: Make sure the snap ring snaps securely into place.

Install the front halfshaft in the transmission using a new snap ring.

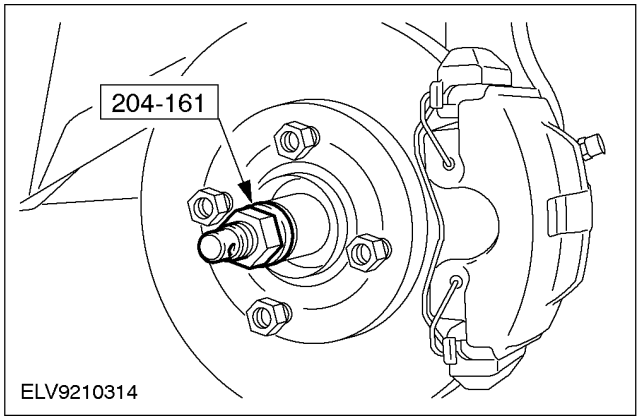

2. Pull the halfshaft into the wheel hub using the special tool.

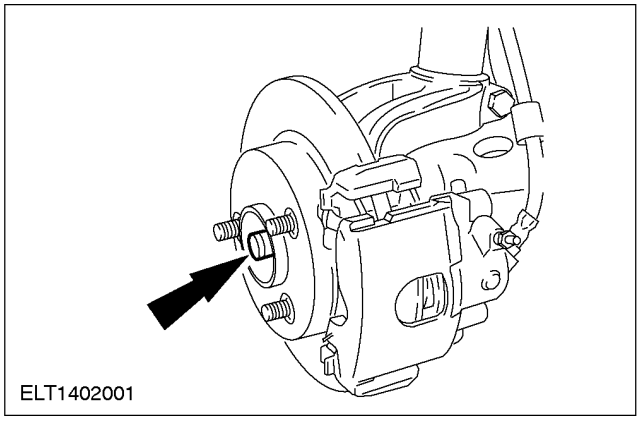

3. ⚠ **CAUTION: The axle stub nut can be re-used four times; mark the nut.**

NOTE: Do not tighten the axle stub nut yet. Put on the axle stub nut.

- Insert the washer and screw on the axle stub nut.

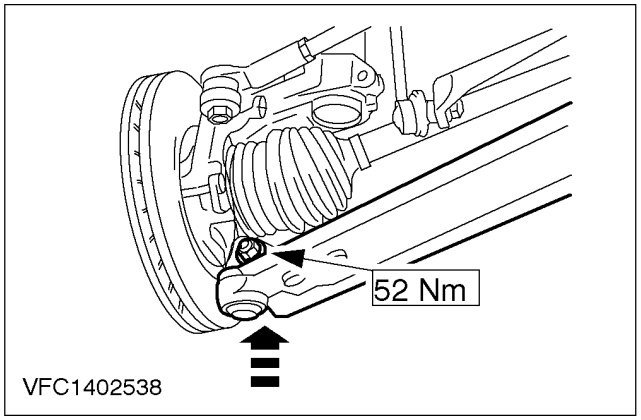

4. Attach the lower suspension arms to the spindle carriers.

REMOVAL AND INSTALLATION (CONTINUED)

5. Install the front wheel. For additional information, refer to Section 204-03.

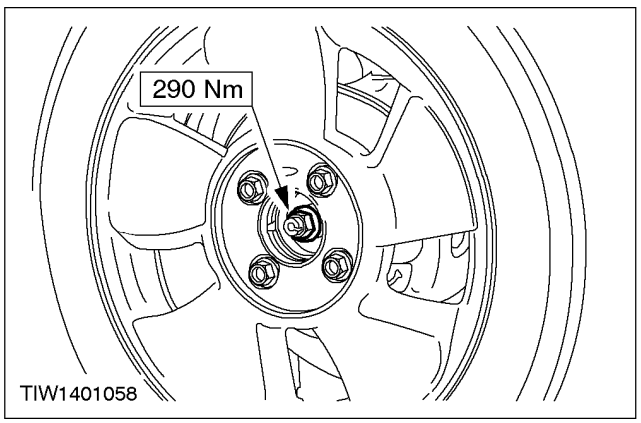

6. Tighten the axle stub nut.

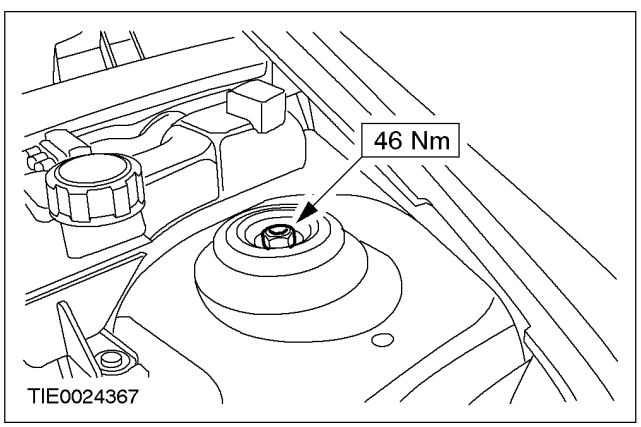

7. **NOTE:** Use an Allen key to stop the piston rod from turning.
   Tighten the suspension strut top nut.

8. Park the vehicle on a level surface and fill the transmission with oil until the level is to the bottom edge of the filler hole.

REMOVAL AND INSTALLATION

Halfshaft RH (14 321 0)

Special Tool(s)	
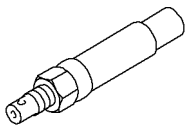 14041	Installer, drive halfshaft 204-161 (14-041)
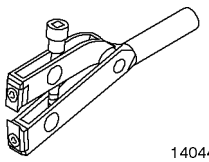 14044	Boot clamp tightening tool 204-169 (14-044)

General Equipment
Two-legged puller
Allen key

Removal

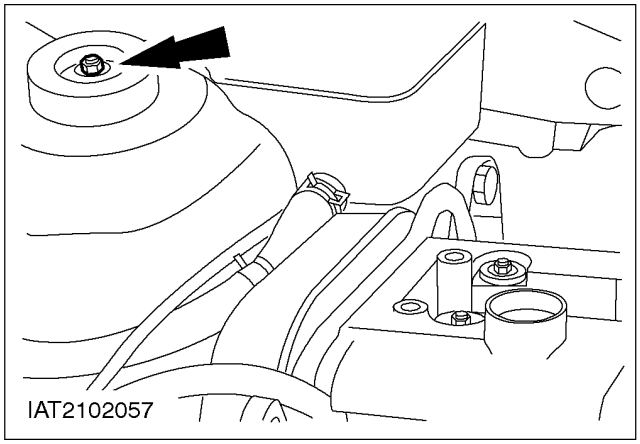

1. **NOTE:** Use an Allen key to stop the piston rod from turning.
   Undo the suspension strut top nut by five turns.

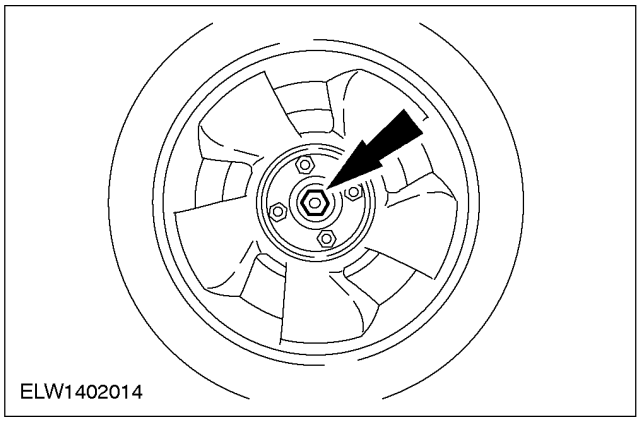

2. Loosen the axle stub nut.

3. Detach the front wheel. For additional information, refer to Section 204-03.

REMOVAL AND INSTALLATION (CONTINUED)

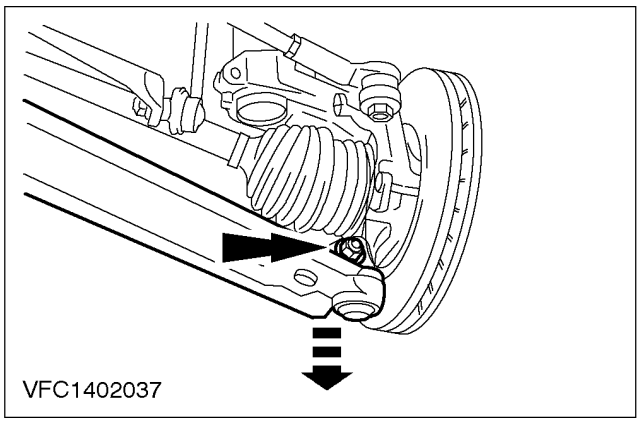

4. Detach the lower suspension arm from the spindle carrier.

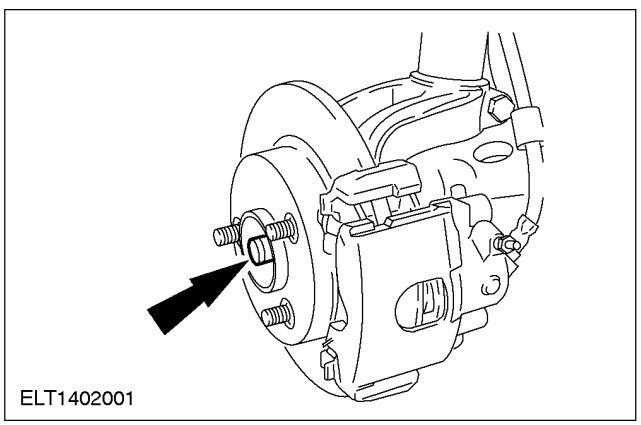

5. ⚠ **CAUTION: The axle stub nut can be re-used four times. Mark the nut.**

⚠ **CAUTION: Support the halfshaft. The inner joint must not be bent at more than 18 degrees. The outer joint must not be bent at more than 45 degrees.**

Unscrew and remove the axle stub nut and remove the washer.

- Press the axle stub out of the wheel hub using a two-legged puller and tie the halfshaft up using cable ties.

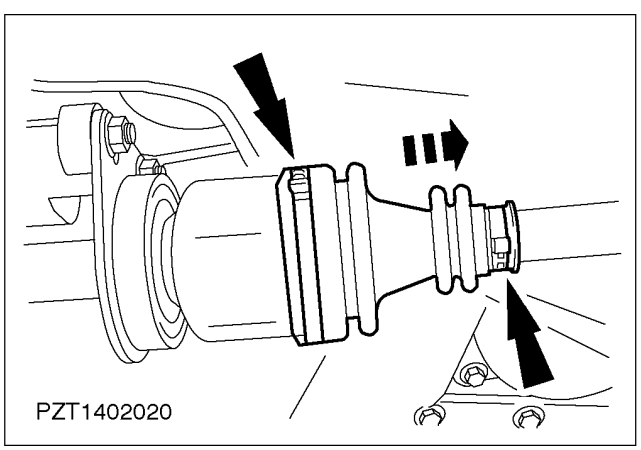

6. **NOTE:** Do not damage the boot.

Remove the boot.

- Remove and discard the clamping straps.
- Slide the boot onto the halfshaft.

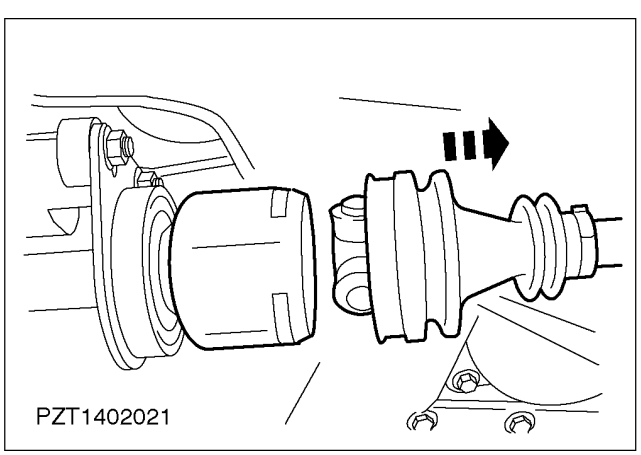

7. Remove the halfshaft.
   - Pull out the front drive halfshaft from the tripod housing.

REMOVAL AND INSTALLATION (CONTINUED)

Installation

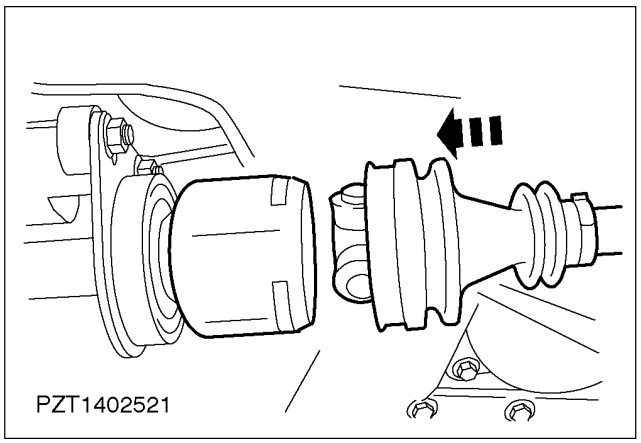

1. **CAUTION: Support the halfshaft. The inner joint must not be bent at more than 18 degrees. The outer joint must not be bent at more than 45 degrees.**
   Install the front halfshaft.
   - Install the front drive halfshaft into the tripod joint.

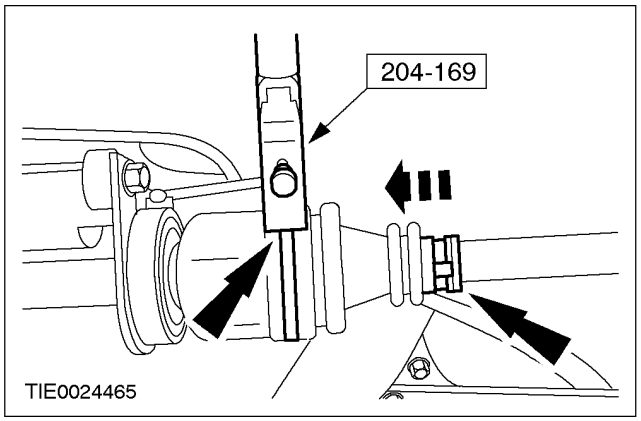

2. **NOTE:** Do not damage the boot.
   Install the boot.
   - Slide the boot onto the halfshaft.
   - Install new clamping straps and secure them using the special tool.

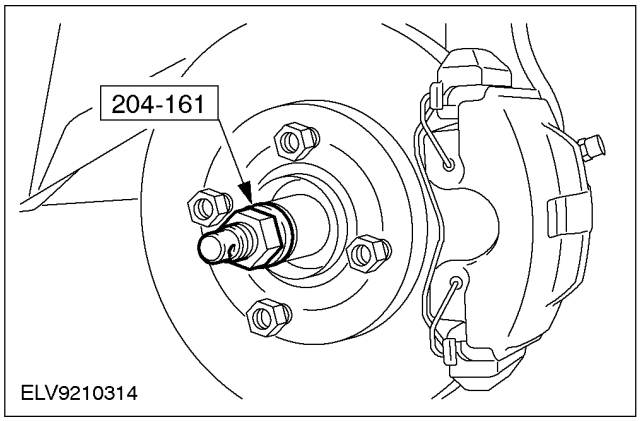

3. Pull the halfshaft into the wheel hub using the special tool.

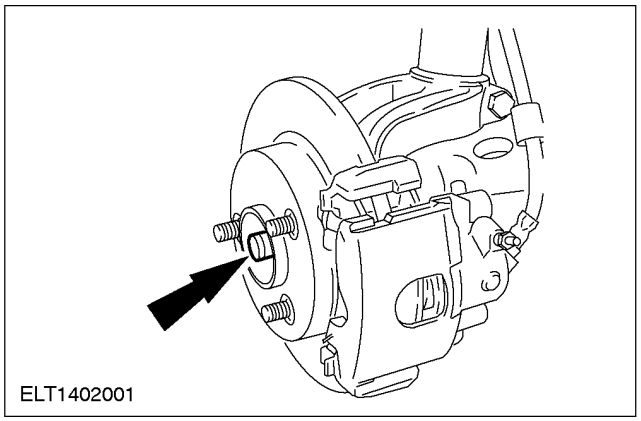

4. **CAUTION: The axle stub nut can be re-used four times. Mark the nut.**

   CAUTION: Do not tighten the axle stub nut yet.
   Put on the axle stub nut.
   - Insert the washer and screw on the axle stub nut.

REMOVAL AND INSTALLATION (CONTINUED)

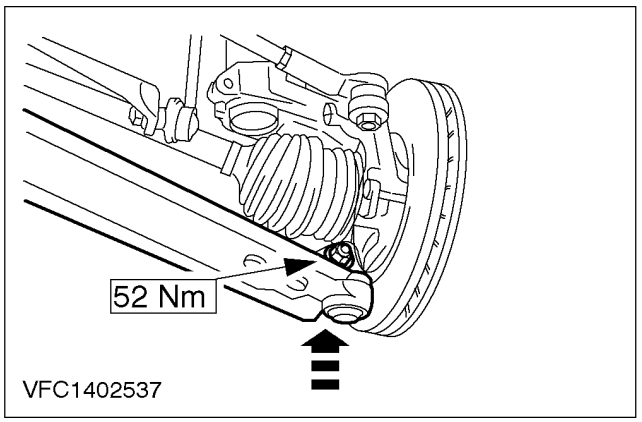

5. Attach the lower suspension arms to the spindle carriers.

6. Install the front wheel. For additional information, refer to Section 204-03.

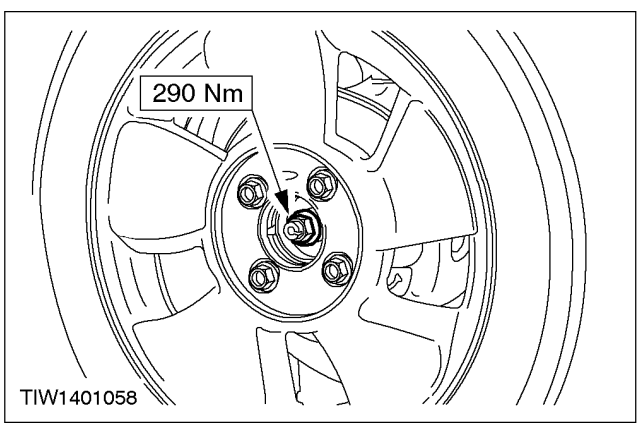

7. Tighten the axle stub nut.

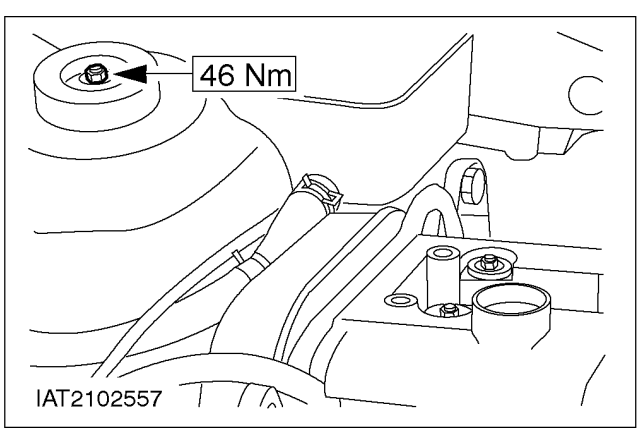

8. **NOTE:** Use an Allen key to stop the piston rod from turning.
   Tighten the suspension strut top nut.

REMOVAL AND INSTALLATION

Inner Constant Velocity (CV) Joint Boot (14 336 4)

Special Tool(s)	
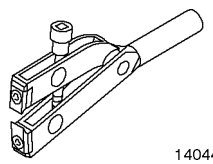 14044	Boot clamp tightening tool 204-169 (14-044)

General Equipment
Snap-ring pliers
Clamping straps

Material	Specification
High-durability grease	WSD-M1C230-A

Removal

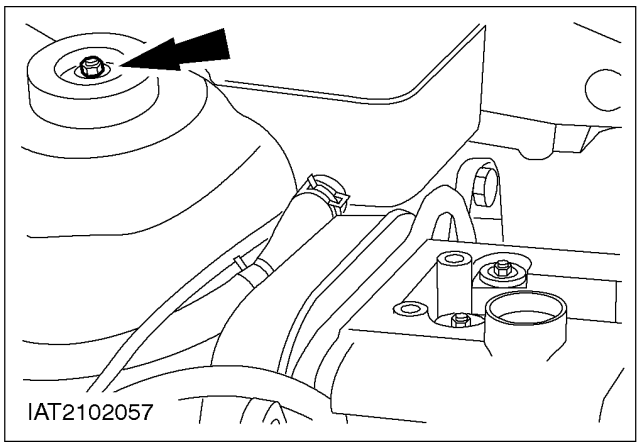

1. **NOTE:** Use an Allen key to stop the piston rod from turning.
   Undo the suspension strut top nut by five turns.

2. Raise the vehicle. For additional information, refer to Section 100-02.

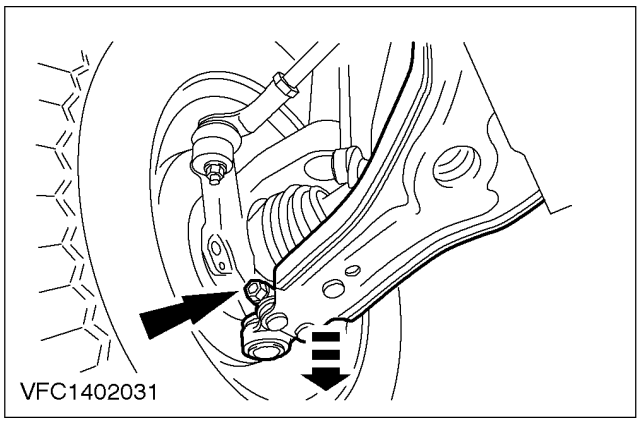

3. Detach the lower suspension arm from the spindle carrier.

REMOVAL AND INSTALLATION (CONTINUED)

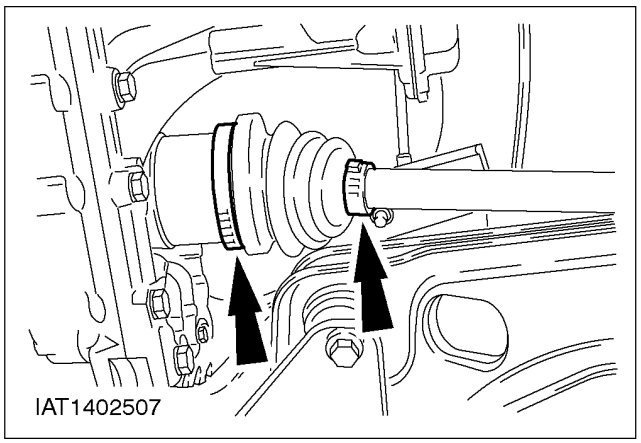

4. Undo the clamping straps on the left-hand front drive halfshaft boot.
   - Slide the boot onto the front drive halfshaft.

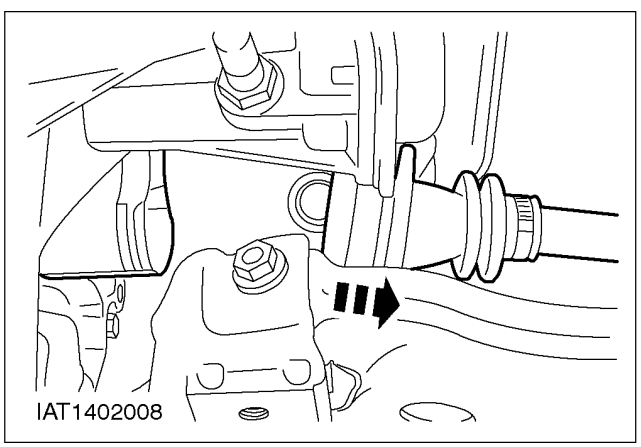

5. **CAUTION: Support the halfshaft. The inner joint must not be bent at more than 18 degrees. The outer joint must not be bent at more than 45 degrees.**
   Separate the tripod joint of the left-hand halfshaft.
   - Remove the grease from inside the joint.

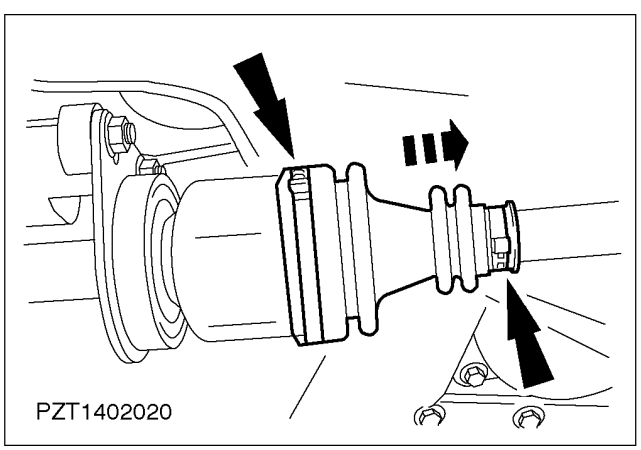

6. Undo the boot clamps on the right-hand halfshaft and slide the boot back.

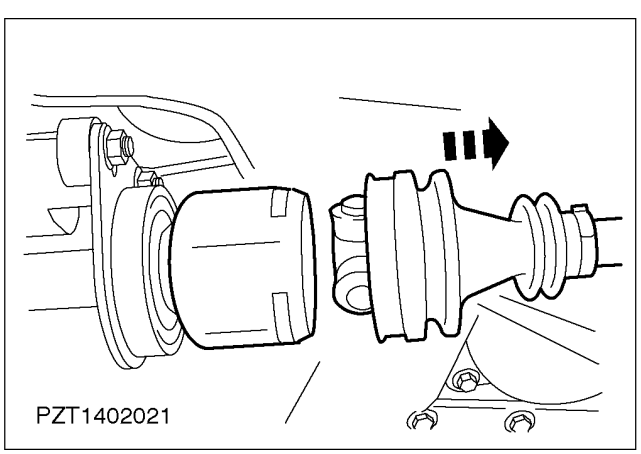

7. **CAUTION: Support the halfshaft. The inner joint must not be bent at more than 18 degrees. The outer joint must not be bent at more than 45 degrees.**
   Pull the right-hand front drive halfshaft out of the tripod joint.
   - Remove the grease from inside the joint.
   - Secure the front drive halfshaft to the side with cable ties.

REMOVAL AND INSTALLATION (CONTINUED)

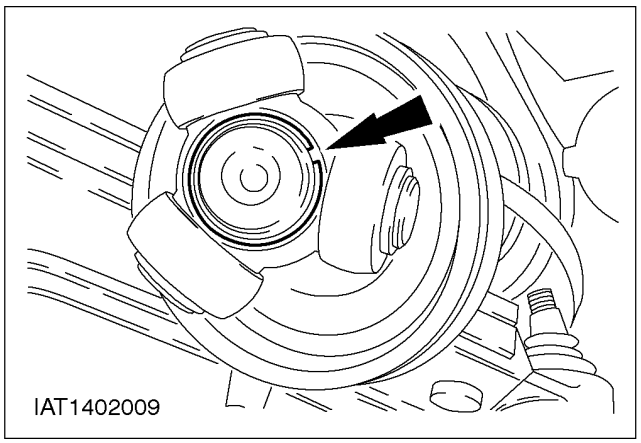

8. Remove the tripod star and the boot.
   - Detach the snap-ring using snap-ring pliers and pull off the tripod star.
   - Pull off the boot.

Installation

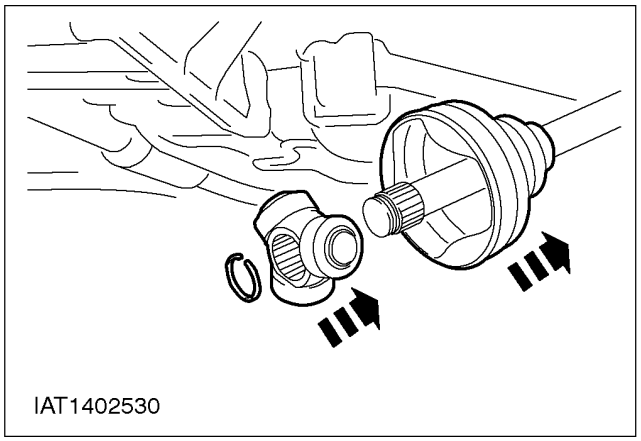

1. **NOTE:** Chamfer points towards the front drive halfshaft.
   Fit the tripod assembly.
   - Push on the boot.
   - Push on the tripod and secure it.

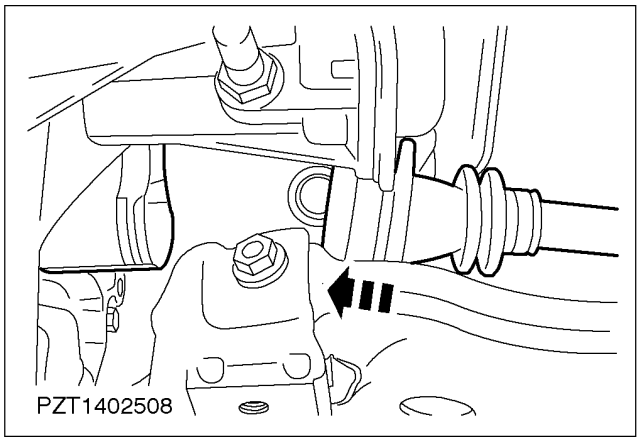

2. ⚠ **CAUTION: Support the halfshaft. The inner joint must not be bent at more than 18 degrees. The outer joint must not be bent at more than 45 degrees.**
   Assemble the left-hand front drive halfshaft tripod joint using high-durability grease.

REMOVAL AND INSTALLATION (CONTINUED)

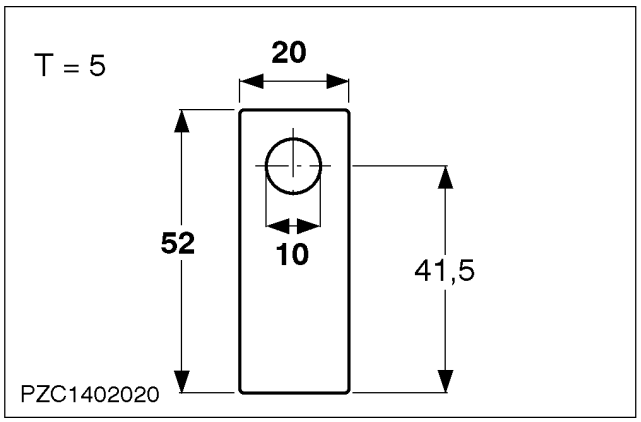

3. Make a clamp head for Special Tool 204-169.
   - Material: aluminium or steel plate

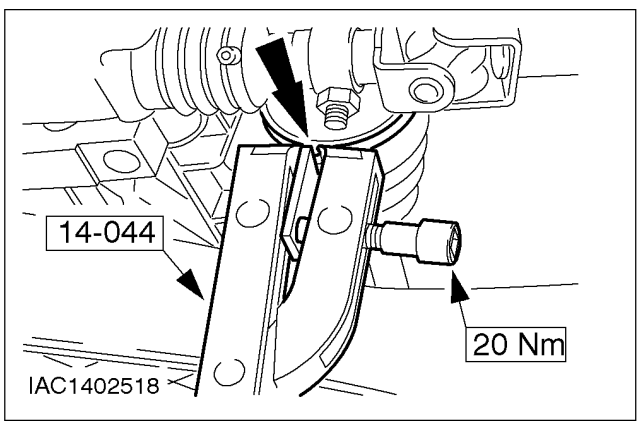

4. Position the tripod joint boot and secure it with clamping straps.
   - Apply the special tool so that the clamp head is vertical to the clamping strap head.

NOTE: Tighten 0,8 mm thick clamping straps to 12 Nm and 1,1 mm thick clamping straps to 20 Nm.

- Tighten the clamping strap using the special tool.

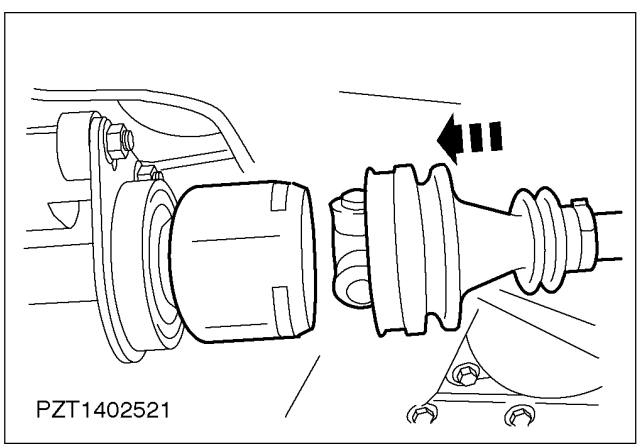

5. ⚠ **CAUTION: Support the halfshaft. The inner joint must not be bent at more than 18 degrees. The outer joint must not be bent at more than 45 degrees.**
   Assemble the right-hand front drive halfshaft tripod joint using high-durability grease.

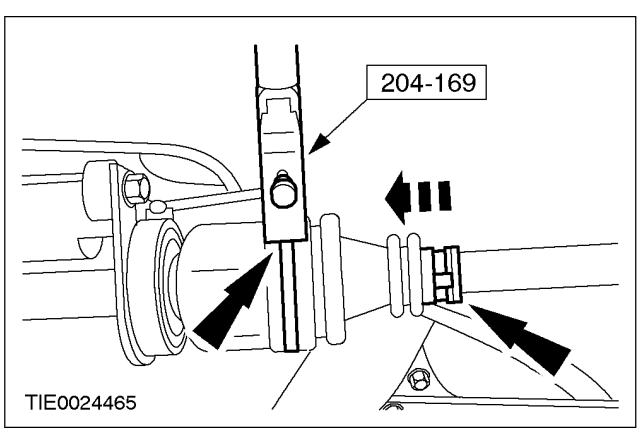

6. Position the tripod joint boot and secure it with clamping straps.
   - Apply the special tool so that the clamp head is vertical to the clamping strap head.

NOTE: Tighten 0,8 mm thick clamping straps to 12 Nm and 1,1 mm thick clamping straps to 20 Nm.

- Tighten the clamping strap using the special tool.

REMOVAL AND INSTALLATION (CONTINUED)

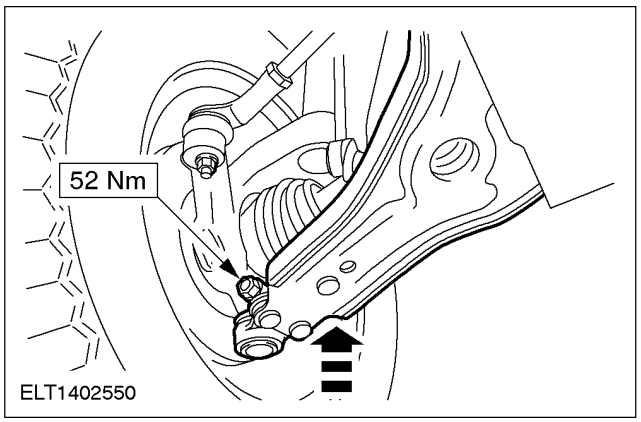

7. Attach the lower suspension arms to the spindle carriers.

8. Lower the vehicle.

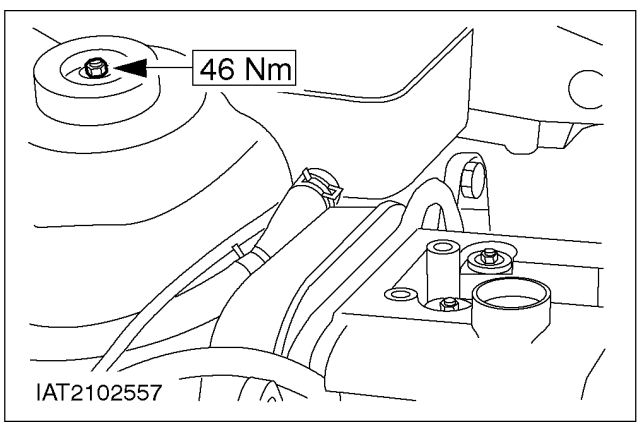

9. **NOTE:** Use an Allen key to stop the piston rod from turning.
   Tighten the suspension strut top nut.

REMOVAL AND INSTALLATION

Outer Constant Velocity (CV) Joint Boot (14 338 4)

Special Tool(s)	
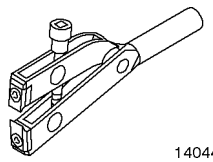 14044	Boot clamp tightening tool 204-169 (14-044)

General Equipment
Snap-ring pliers

Material	Specification
High-durability grease	WSD-M1C230-A
Clamping straps	

Removal

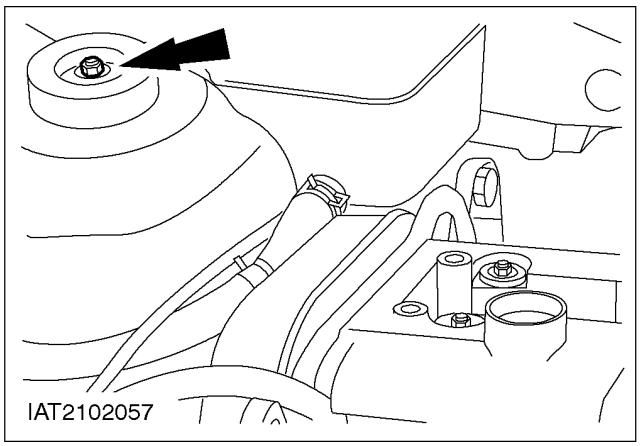

1. **NOTE:** Use an Allen key to stop the piston rod from turning.
   Loosen the suspension strut top nut by five turns.

2. Raise the vehicle. For additional information, refer to Section 100-02.

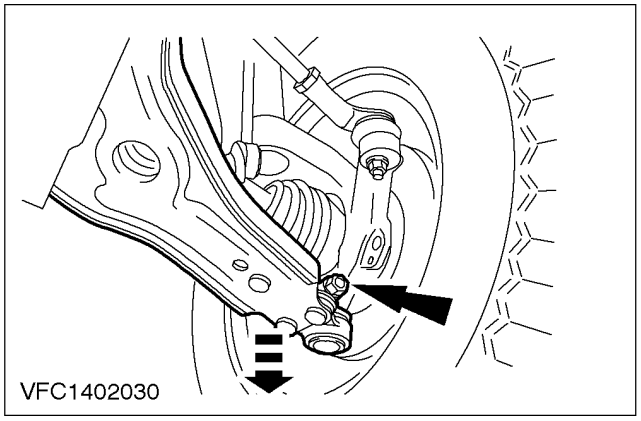

3. Detach the lower suspension arm from the spindle carrier.

REMOVAL AND INSTALLATION (CONTINUED)

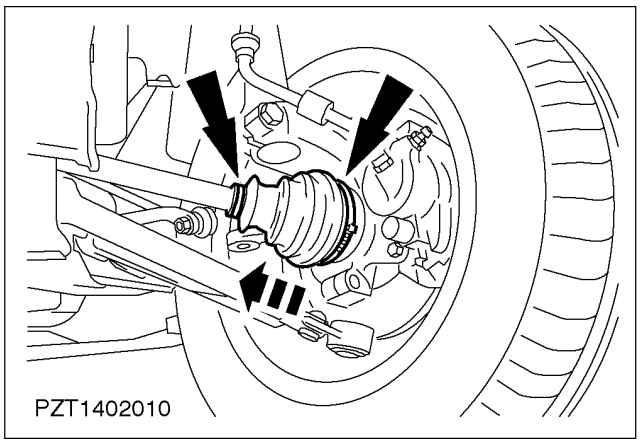

4. Release the clamping straps from the boot.
   - Slide the boot onto the front drive halfshaft.

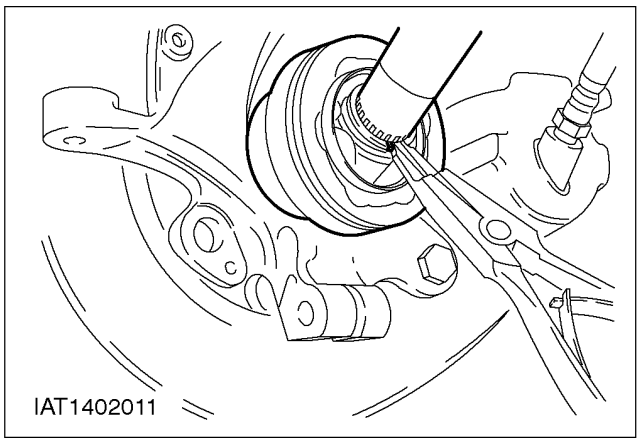

5. **CAUTION: Support the halfshaft. The inner joint must not be bent at more than 18 degrees. The outer joint must not be bent at more than 45 degrees.**

CAUTION: Carefully push the wheel suspension outwards to avoid damage to the tripod joint (inner joint).

Detach the front drive halfshaft from the halfshaft joint.
   - Pull off the boot and tie up the front drive halfshaft.
   - Remove the grease from inside the joint.
   - Open the snap-ring using snap-ring pliers and hold it open.
   - Remove the snap-ring.

Installation

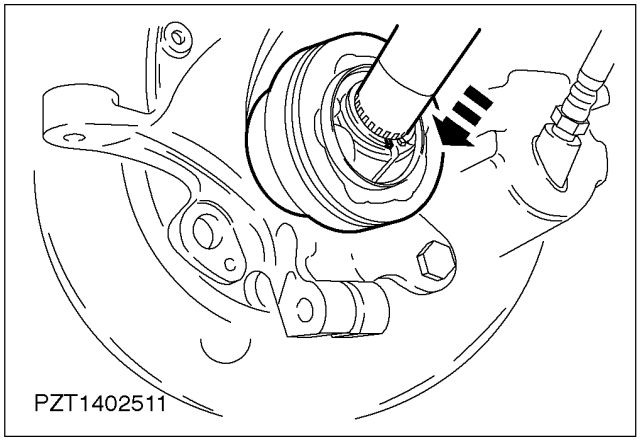

1. **CAUTION: Support the halfshaft. The inner joint must not be bent at more than 18 degrees. The outer joint must not be bent at more than 45 degrees.**

NOTE: Make sure the circlip snaps securely into place.

Install the front drive halfshaft.
   - Insert a new snap-ring into the drive halfshaft joint groove.
   - Slide the boot onto the front drive halfshaft.
   - Insert the front drive halfshaft into the halfshaft joint until the snap-ring engages.

NOTE: Fill level for models with Endura-DE diesel engines: 40 g on each side.
   - Capacity for all other models: 30 g on each side.

REMOVAL AND INSTALLATION (CONTINUED)

2. Pack the halfshaft joint with high-durability grease (WSD-M1C230-A).

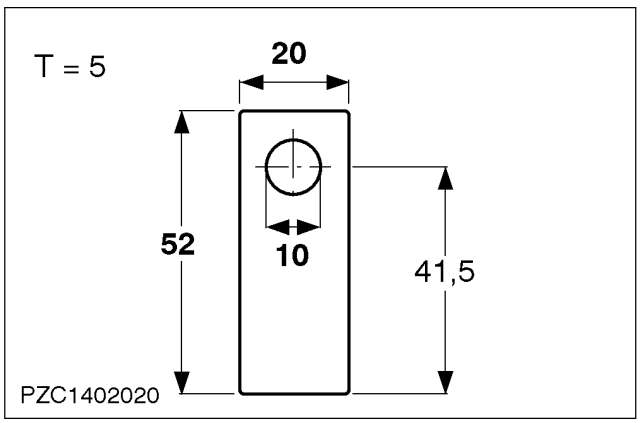

3. Make a clamp head for Special Tool 204-169.
   - Material: aluminium or steel plate

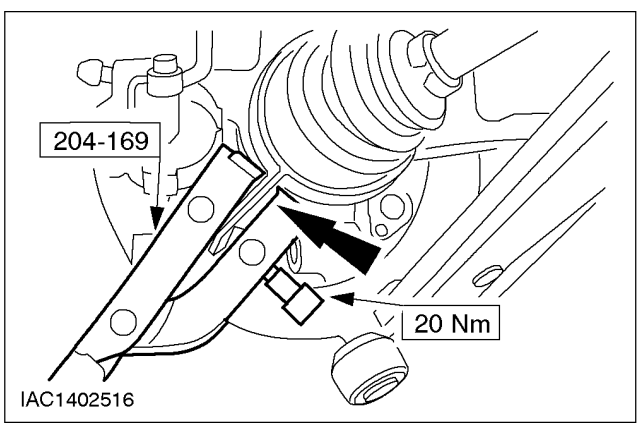

4. Position the halfshaft joint boot and secure it using new clamping straps.
   - Insert the clamp head in the special tool.
   - Apply the special tool so that the clamp head is vertical to the clamping strap head.

NOTE: Tighten 0,8 mm thick clamping straps to 12 Nm and 1,1 mm thick clamping straps to 20 Nm.

   - Tighten the clamping strap using the special tool.

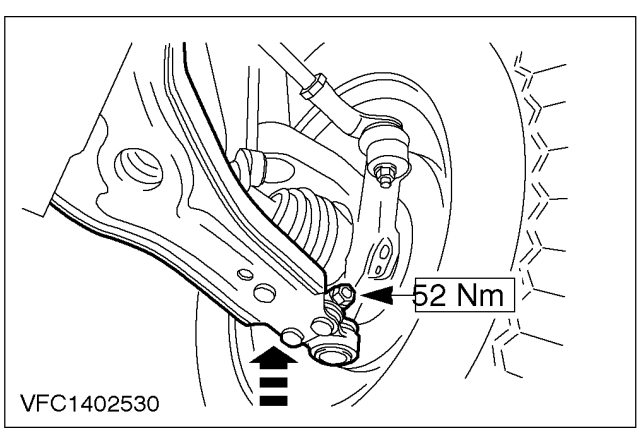

5. Attach the lower suspension arms to the spindle carriers.

6. Lower the vehicle.

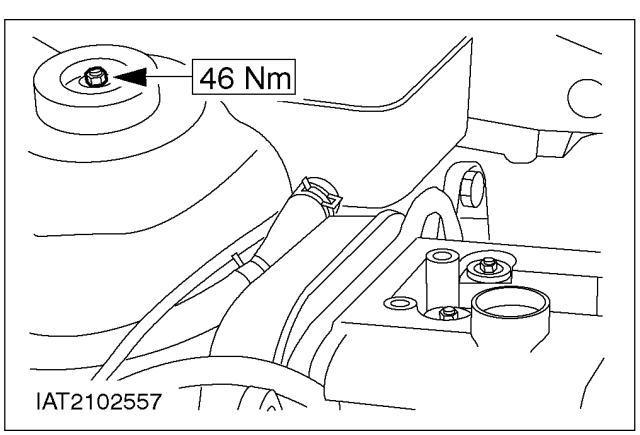

7. **NOTE:** Use an Allen key to stop the piston rod from turning.
   Tighten the suspension strut top nut.

REMOVAL AND INSTALLATION

Outer Constant Velocity (CV) Joint

Special Tool(s)	
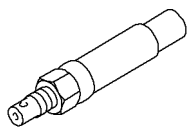 14041	Installer, Halfshaft 204-161 (14-041)
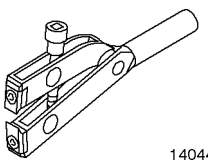 14044	Clamping Tool, Boot Retaining Clamp 204-169 (14-044)

General Equipment
32 mm socket
Two-legged puller

Material	Specification
High-durability grease	WSD-M2C230-A
Boot clamps	

Removal

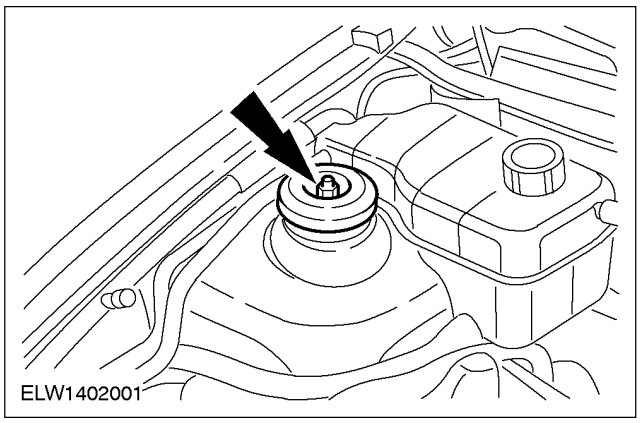

1. **NOTE:** Use an Allen key to prevent the piston rod turning.
   Loosen the left-hand and the right-hand strut and spring assembly upper retaining nut five turns (right-hand side shown).

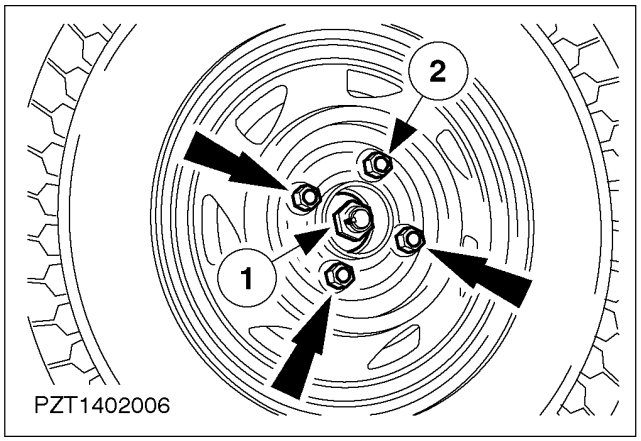

2. Loosen the left-hand wheel nuts and loosen the stub axle nut.
   - Release the front drive halfshaft stub nut and loosen it with a 32 mm socket wrench.

3. Raise and support the vehicle. For additional information, refer to Section 100-02.

REMOVAL AND INSTALLATION (CONTINUED)

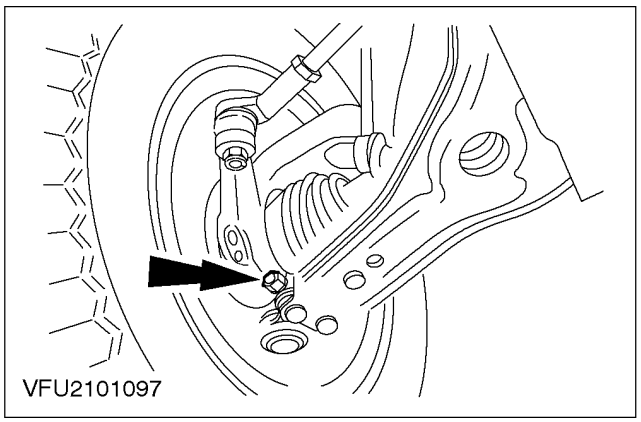

4. Detach the right-hand and the left-hand lower arms (left-hand side shown).

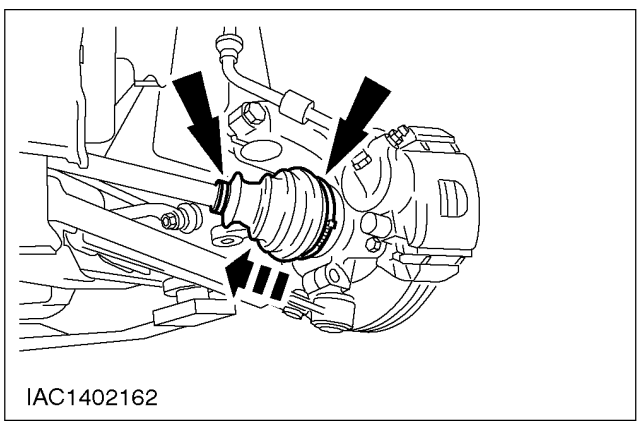

5. Separate and discard the boot clamps.
   1. Slide the boot back onto the halfshaft.
   2. Remove the grease from inside the joint.

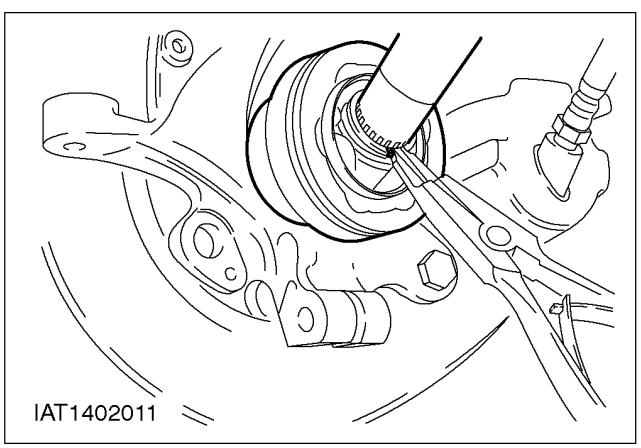

6. **CAUTION: The inner joint must not be bent at more than 18 degrees; the outer joint must not be bent at more than 45 degrees.**
   Remove the front drive halfshaft from the constant velocity joint.
   1. Lever open the retaining ring and hold it open.
   2. Carefully push the spindle carrier outwards and withdraw the front drive halfshaft.
   3. Lift up the front drive halfshaft and tie it up.
   4. Remove the retaining ring from the constant velocity joint.

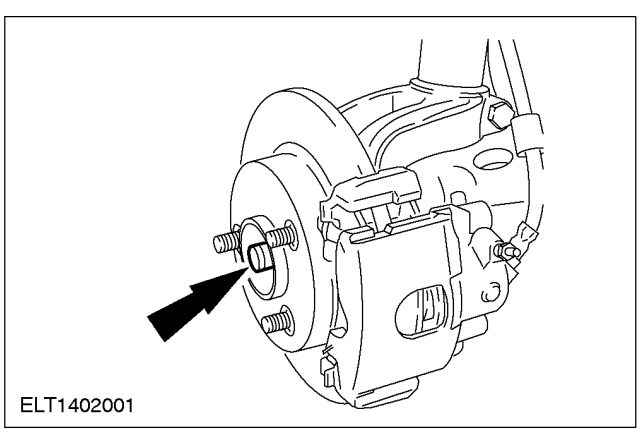

7. Remove the front drive halfshaft nut and take off the washer.
   - Using a two-legged puller to press the left-hand halfshaft out of the wheel hub and tie it up.

REMOVAL AND INSTALLATION (CONTINUED)

Installation

NOTE: Use all new circlips, self-locking nuts and clamps.

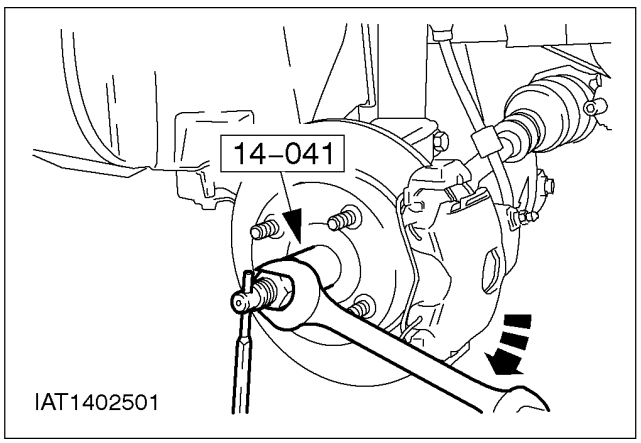

1. Draw the front drive halfshaft stub into the wheel hub.
   - Insert the washer and screw on the front drive halfshaft stub nut.

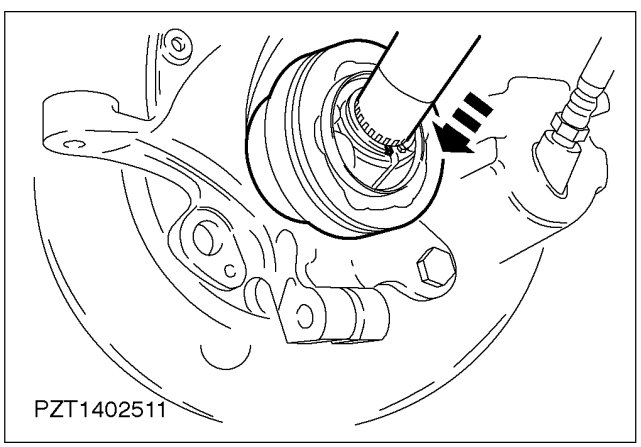

2. ⚠ **CAUTION: The inner constant velocity joint must not be bent at more than 18 degrees, the outer joint must not be bent at more than 45 degrees.**

NOTE: Make sure the retaining ring is securely in place.

Install the drive halfshaft in the constant velocity joint.

- Guide the front drive halfshaft into the constant velocity joint until the retaining ring clips in place.

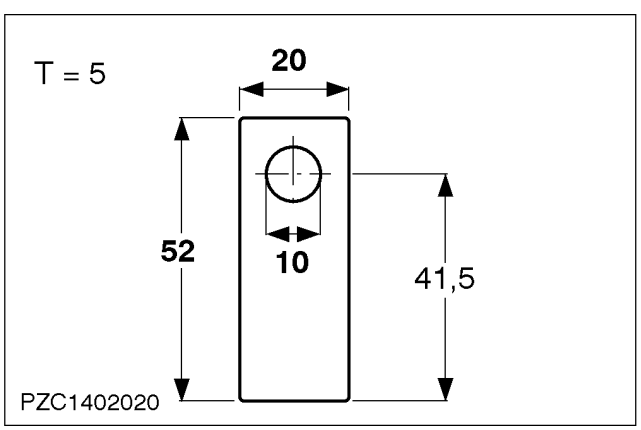

3. Fabricate an adapter for special tool 14-044.
   - Material: aluminium or steel plate, 5 mm thick.

REMOVAL AND INSTALLATION (CONTINUED)

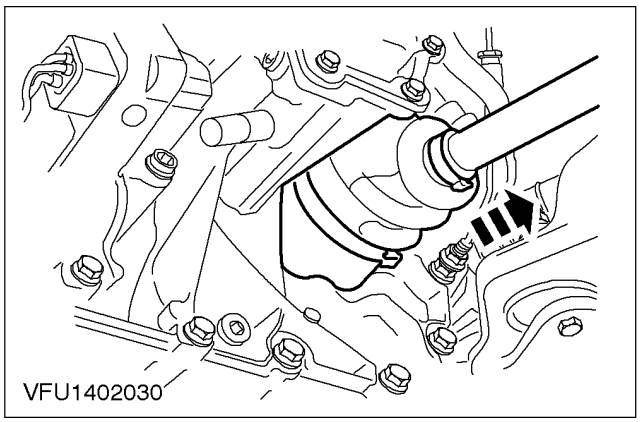

4. Pack the constant velocity joint with high-durability grease.
   - Amount: 40 grams on each side.

5. **NOTE:** Tighten 0,8 mm thick boot clamps to 12 Nm and 1,1 mm thick boot clamps to 20 Nm.
   Position the boot and using the special tool and adapter secure the boot clamps.

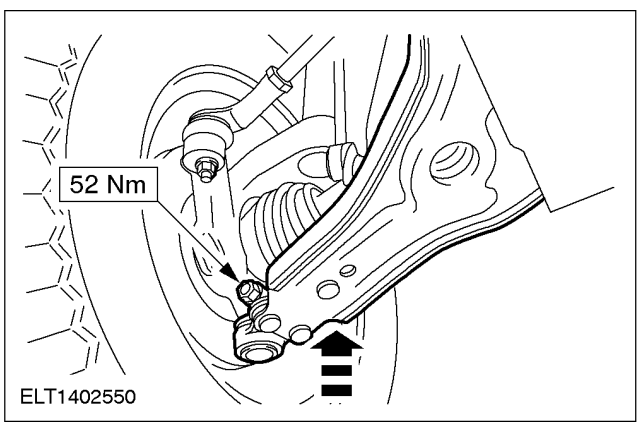

6. Install the lower suspension arm and the front wheel.

7. Lower the vehicle.

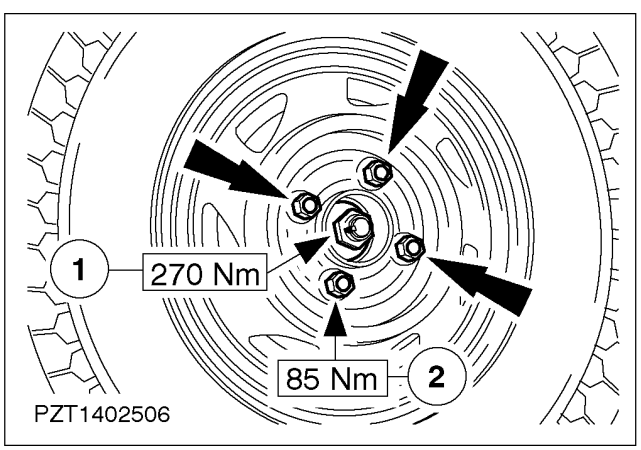

8. Tighten the wheel nuts and the front drive halfshaft stub nut.
   1. Using a 32 mm socket wrench, tighten the front drive halfshaft stub nut and secure it, using a lock pin.
   2. Wheel nuts.

REMOVAL AND INSTALLATION (CONTINUED)

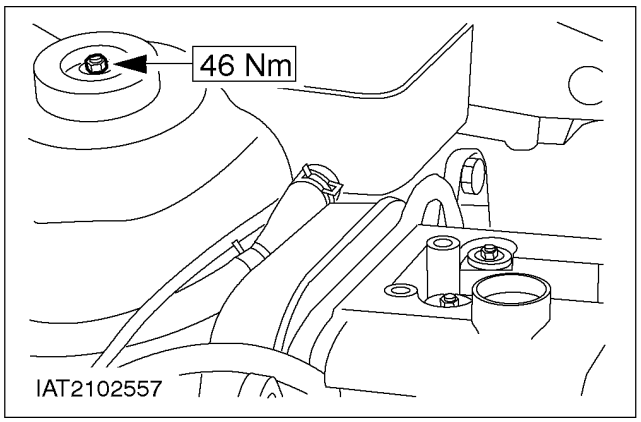

9. **NOTE:** Use an Allen key to prevent the piston rod turning.
   Tighten the left-hand and the right-hand side strut and spring assembly upper retaining nut.

DISASSEMBLY AND ASSEMBLY

Halfshaft LH (14 320 8)

Special Tool(s)	
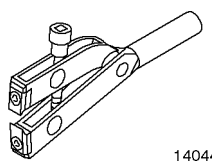 14044	Boot clamp tightening tool 204 - 169 (14 - 044)

General Equipment
Snap-ring pliers

Material	Specification
High-durability grease	WSD-M1C230-A
Clamping straps	

Disassembly

NOTE: Use protective covers.

1. Disconnect the front drive halfshaft at the transmission end.
   - Clamp the front drive halfshaft in a clamp.
   1. Separate and discard the clamping straps. Push back the boot.
   2. Separate the tripod joint.

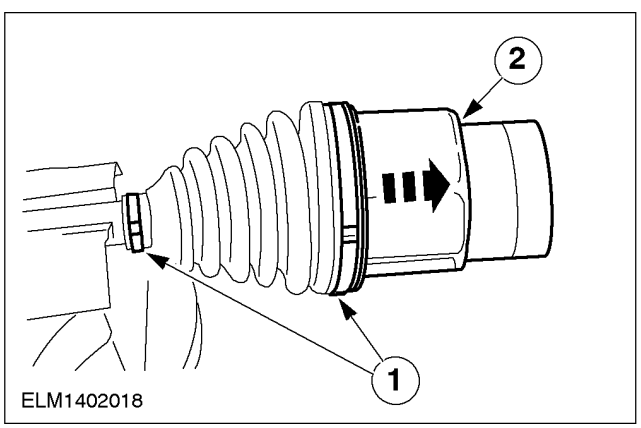

ELM1402018

2. Remove the tripod star and the boot.
   1. Detach the snap-ring using snap-ring pliers and pull off the tripod star.
   2. Pull off the boot.

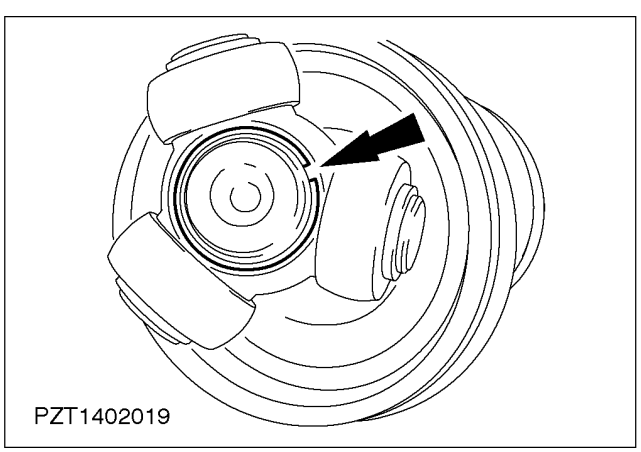
PZT1402019

DISASSEMBLY AND ASSEMBLY (CONTINUED)

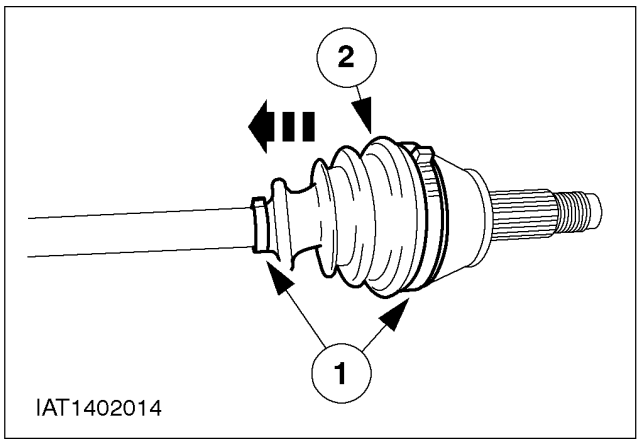

3. Detach the drive halfshaft joint gaiter.
   1. Loosen the clamping straps from the boot.
   2. Pull off the boot.
   - Remove the grease from inside the joint.

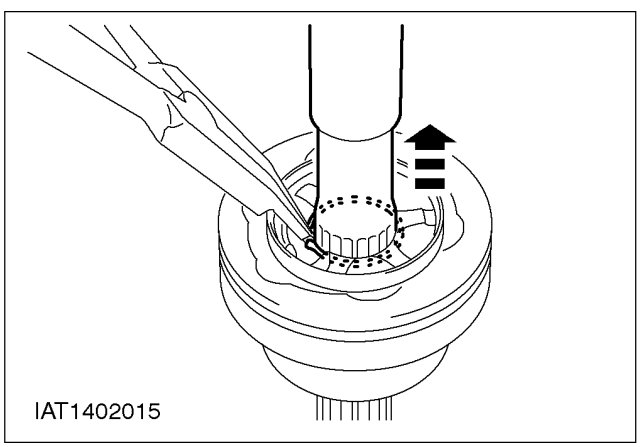

4. Detach the front drive halfshaft from the halfshaft joint.
   - Open the circlip with circlip pliers and hold it.
   - Pull the front drive halfshaft from the halfshaft joint.
   - Remove the circlip from the halfshaft joint.

Assembly

NOTE: Renew all snap-rings and clamping straps.

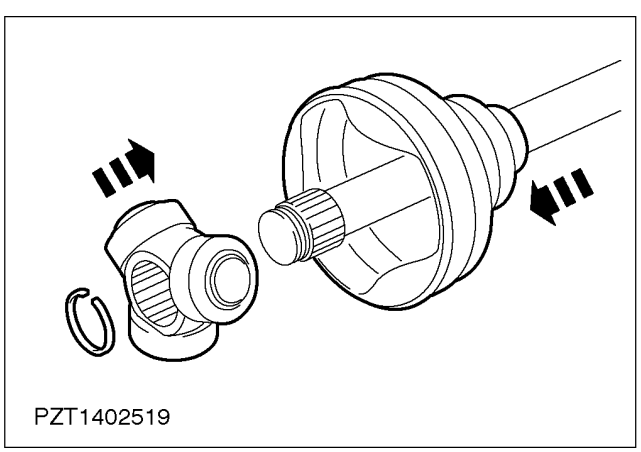

1. **NOTE:** Chamfer points towards the front drive halfshaft.
   Fit the tripod star assembly.
   - Slide the boot onto the front drive halfshaft.
   - Push the tripod star onto the front drive halfshaft.
   - Fit the circlip.

DISASSEMBLY AND ASSEMBLY (CONTINUED)

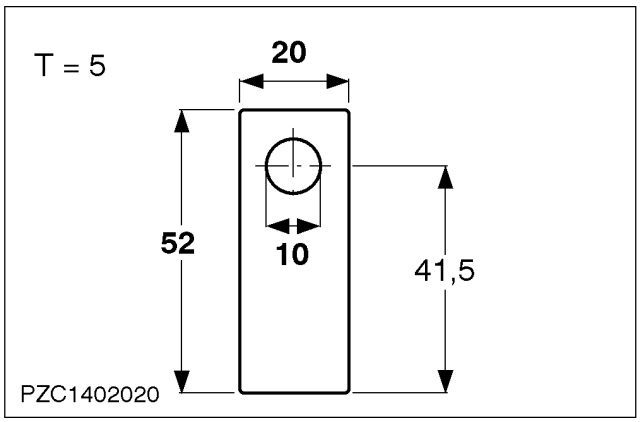

2. Make a clamp head for Special Tool 14-044.
   - Material: aluminium or steel plate

3. NOTE: Tighten 0,8 mm thick clamping straps to 12 Nm and 1,1 mm thick clamping straps to 20 Nm.
Insert the clamping strap in the groove of the boot and tighten using the special tool.

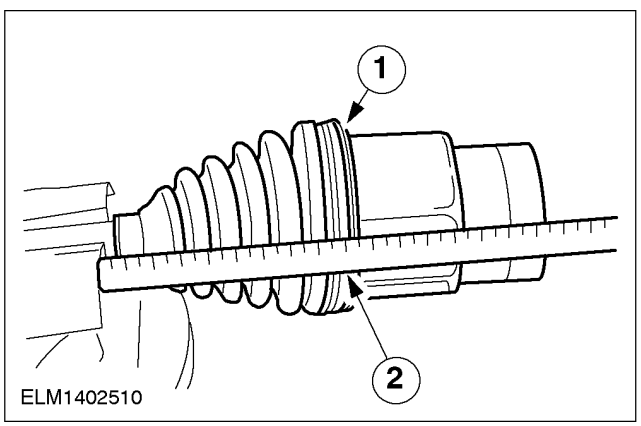

4. Install the constant velocity joint at the transmission end.
   - Fill the tripod joint with 125 grams of high-durability grease and fit.
   1. Slide a small screwdriver under the boot seat to allow the air to escape.
   2. Slide the tripod joint inwards as far as the stop, then pull it out 20 mm.
   - Remove the screwdriver.

5. NOTE: Tighten 0,8 mm thick clamping straps to 12 Nm and 1,1 mm thick clamping straps to 20 Nm.
Insert the clamping strap in the groove of the boot and tighten with the special tool.

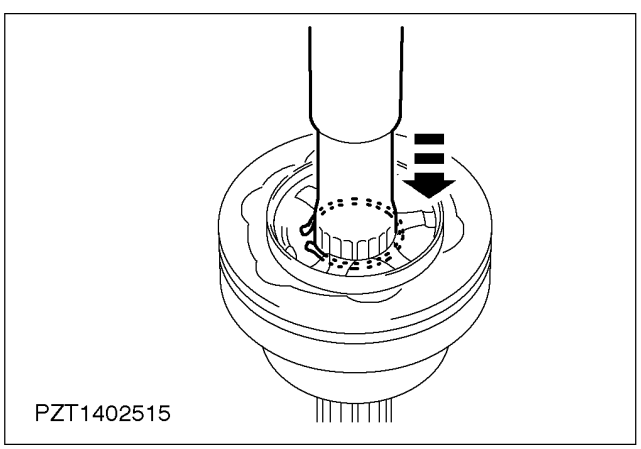

6. NOTE: Make sure the snap-ring snaps securely into place.
Fit the front drive halfshaft into the halfshaft joint.
- Slide on the boot with the inner clamping strap.
- Insert a new circlip into the drive halfshaft joint groove.
- Insert the front drive halfshaft into the drive halfshaft joint until the snap-ring engages.

DISASSEMBLY AND ASSEMBLY (CONTINUED)

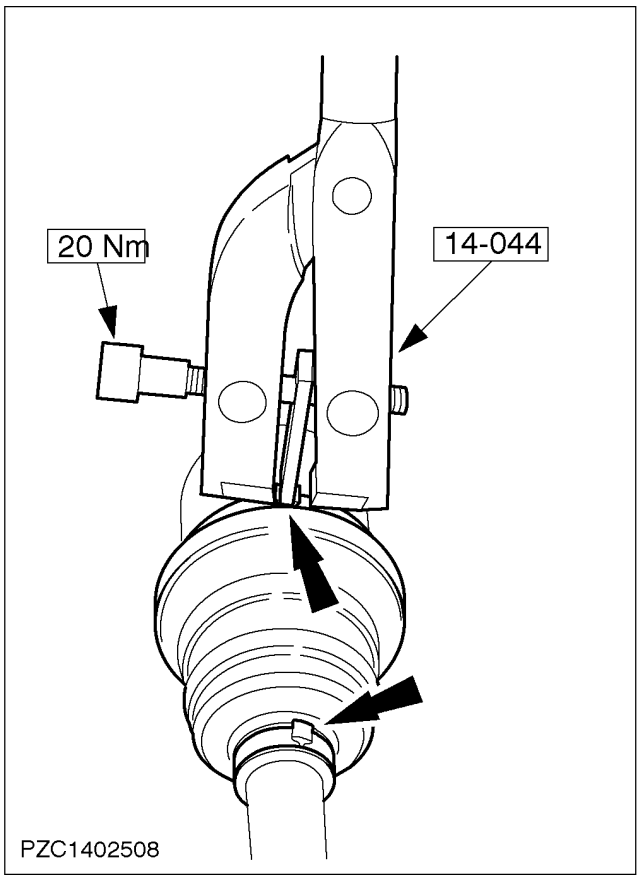

7. Pack the outer drive halfshaft joint with high-durability grease and attach the boot.
   - Fill level for vehicles with Endura-DE diesel engines: 40 g each side.
   - Fill level for all other vehicles: 30 g each side.
   - Push on the boot.
   - Apply the special tool so that the clamp head is vertically on the clamping strap head.

DISASSEMBLY AND ASSEMBLY

Halfshaft RH (14 320 8)

Special Tool(s)	
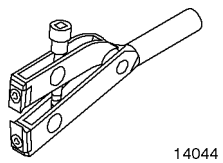 14044	Boot clamp tightening tool 14-044
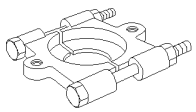 TI15091	Separating tool 15-091

Special Tool(s)	
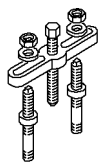 15092	Bridge, drive pinion bearing remover 15-092

Material	Specification
High-durability grease	WSD-M1C230-A

Disassembly

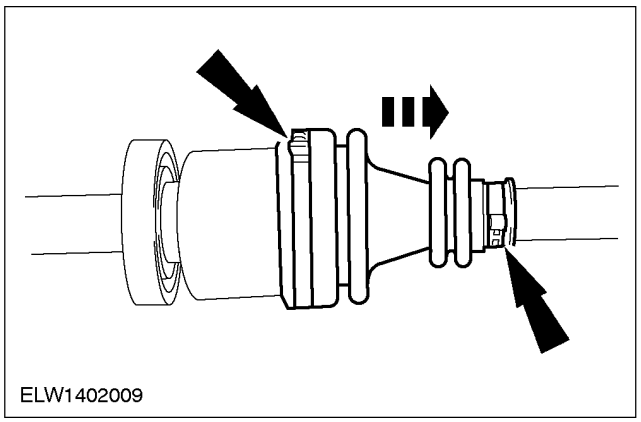
ELW1402009

1. **NOTE:** Use protective covers.
   Loosen the clamping straps from the boot.
   - Detach the front drive halfshaft from the intermediate shaft.
   - Clamp the intermediate shaft in a vice.
   - Separate and discard the clamping straps. Push back the boot.

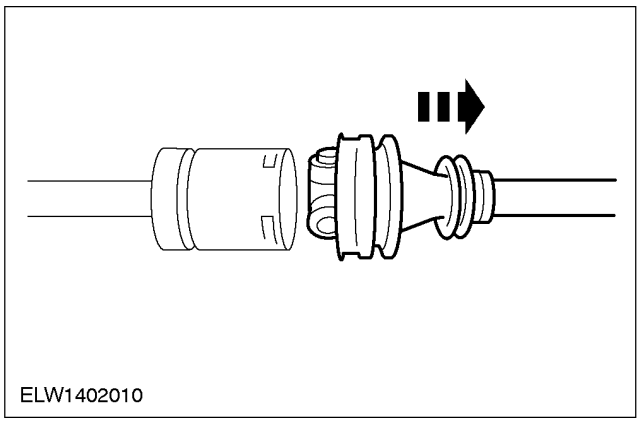
ELW1402010

2. ⚠ **CAUTION: Constant velocity rollers can drop out.**
   Separate the tripod joint.
   - Remove the grease from inside the joint.

DISASSEMBLY AND ASSEMBLY (CONTINUED)

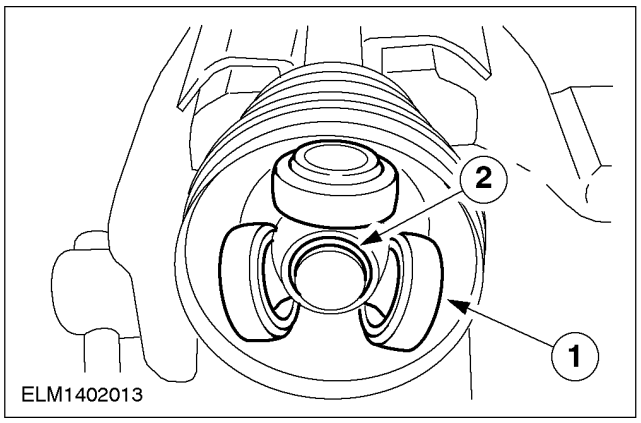

3. Dismantle the tripod assembly
   1. Remove the rollers.
   2. Detach the snap-ring.

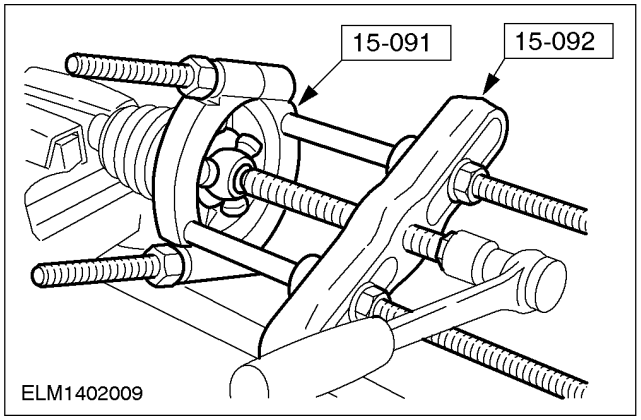

4. Pull off the tripod assembly
   - Remove the boot.

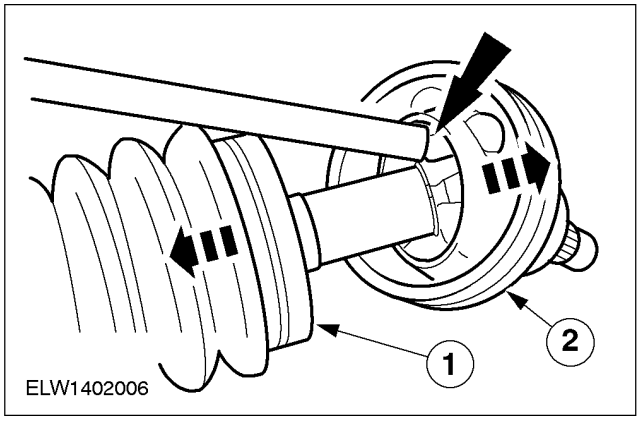

5. **CAUTION: Do not damage the bearing cage.**
   Release the constant velocity joint at the wheel end.
   1. Separate and discard the clamping straps. Push back the boot.
   2. Release the constant velocity joint from the snap-ring seat using a brass drift.

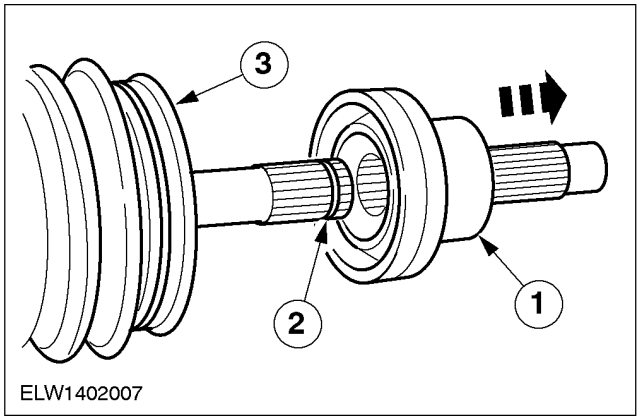

6. Detach the constant velocity joint.
   1. Pull off the constant velocity joint.
   2. Detach the snap-ring.
   3. Pull off the boot.

DISASSEMBLY AND ASSEMBLY (CONTINUED)

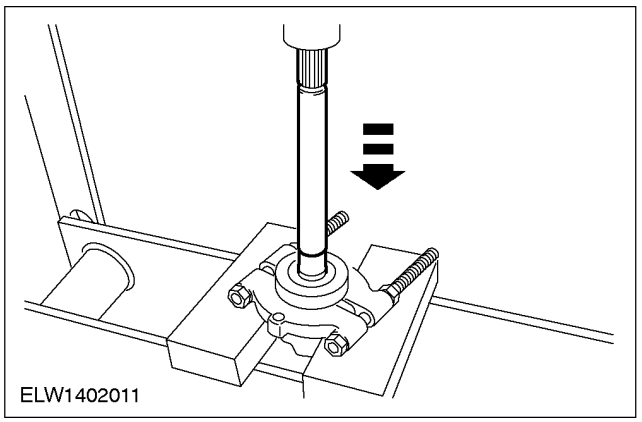

7. Press off the centre bearing.

Assembly

1. General note.
   - Renew all snap-rings and clamping straps.

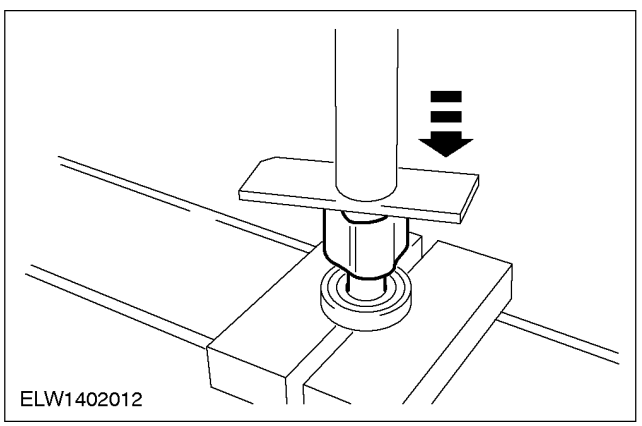

2. Press on the centre bearing.

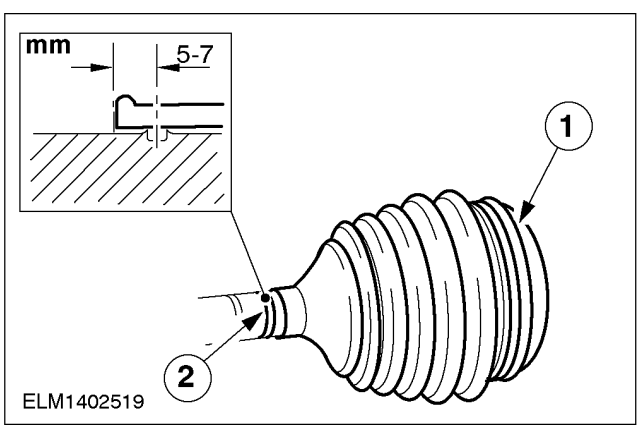

3. Fit the boot at the transmission end.
   1. Slide on the boot with the inner clamping strap.
   2. Locate the boot in position.

DISASSEMBLY AND ASSEMBLY (CONTINUED)

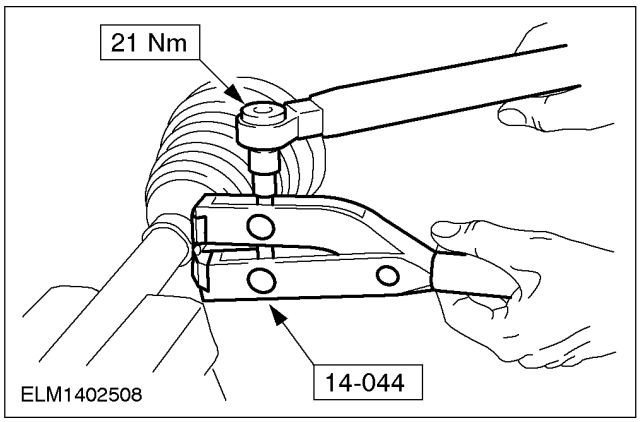

4. Insert the clamping strap in the groove of the boot and tighten with the special tool.

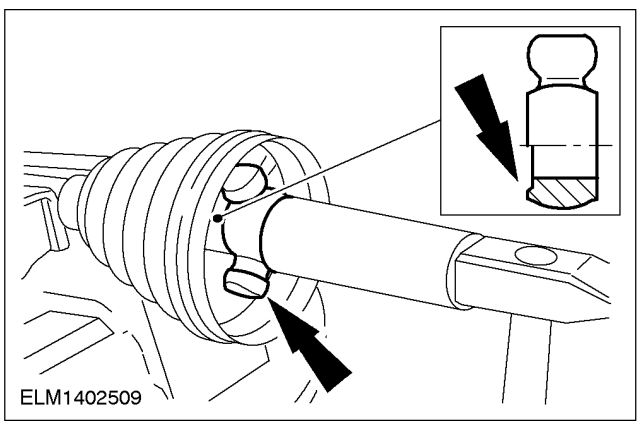

5. ⚠ **CAUTION: Do not damage the bearing seat of the rollers.**
   Fit the tripod star.
   - Drive the tripod star onto the front drive halfshaft as far as it will go, using a suitable tube.

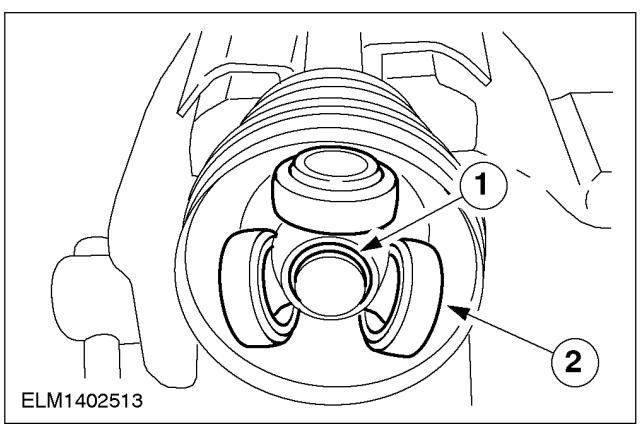

6. **NOTE:** Use a new snap-ring.
   Assemble the tripod joint.
   1. Snap-ring
   2. Fit the constant velocity rollers, applying high-durability grease.

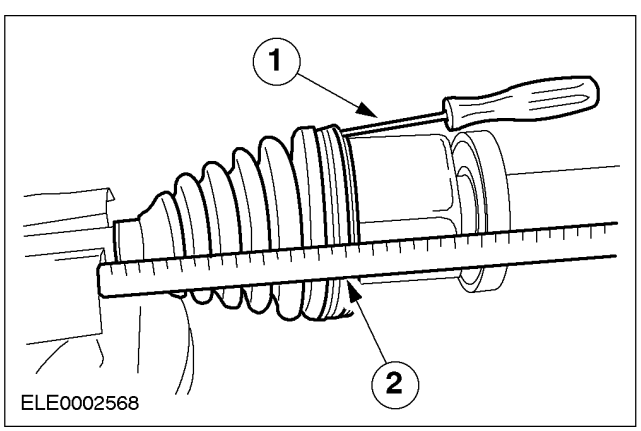

7. Attach the intermediate shaft to the front drive halfshaft.
   - Fill the tripod joint with 100 grams of high-durability grease and fit.
   1. Slide a small screwdriver under the boot seat to allow the air to escape.
   2. Slide the tripod joint inwards as far as the stop, then pull it out 20 mm.
   - Remove the screwdriver.

DISASSEMBLY AND ASSEMBLY (CONTINUED)

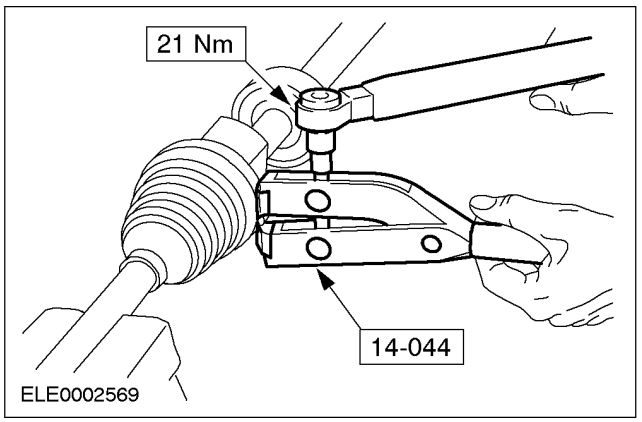

8. Insert the clamping strap in the groove of the sleeve and tighten with the special tool.

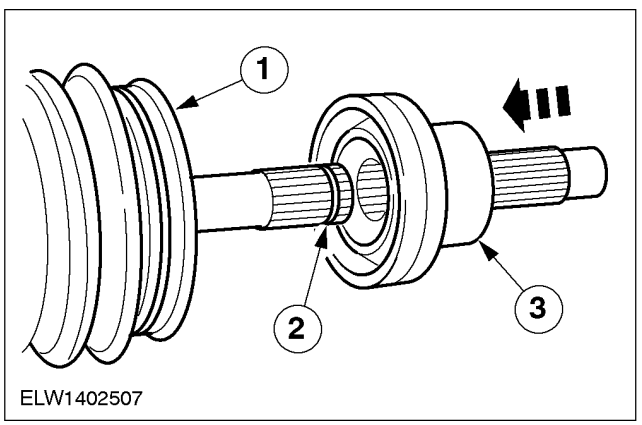

9. **NOTE:** Use a new snap-ring. Make sure the circlip clicks into place.
   Install the constant velocity joint at the wheel end.
   1. Slide on the boot with the inner clamping strap.
   2. Fit the snap-ring.
   3. Fill the constant velocity joint with 80 grams of high-durability grease and push onto the driveshaft.

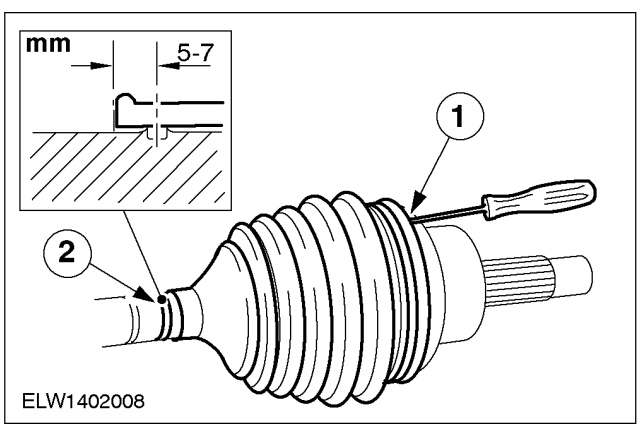

10. Fit the boot.
    - Press the boot into the groove on the driveshaft.
    1. Slide a small screwdriver under the boot seat to allow the air to escape.
    2. Locate the boot in position and remove the screwdriver.
    - Tension the clamping straps (see previous step).

SPECIFICATIONS

Lubricants, Fluids, Sealers and Adhesives

Item	Specification
High-durability grease	WSD-M1C230-A
Transmission fluid (iB5 manual transmission)	SAE 75W90

Capacities

	Litres
Transmission fluid (iB5 manual transmission)	2,8

Fill Capacities

	Grams
High-durability grease, tripod joint	125
High-durability grease, CV joints, Endura - DE engine	40
All other engines	30

Torque Specifications

Description	Nm
Intermediate shaft centre bearing	24
Suspension arm to spindle carrier	52
Driveshaft stub nut	290
Suspension strut top nut	46
Tightening tool, for 0,8 mm boot retaining straps	12
Tightening tool, for 1,1 mm boot retaining straps	20

SECTION 206-00 Brake System — General Information

VEHICLE APPLICATION: 2002 Bantam

SUBJECT **PAGE**

DESCRIPTION AND OPERATION

Brake System 206-00-2

DIAGNOSIS AND TESTING

Brake System 206-00-3
Inspection and Verification 206-00-3
Road Test 206-00-3
Symptom Chart 206-00-4/5
Pinpoint Tests 206-00-6/16
Component Tests 206-00-16
Brake System Check 206-00-17
Brake Booster Functional Test 206-00-17/18

GENERAL PROCEDURES

Brake System Bleeding ..... (12 141 0) 206-00-19/20
Load Active Valve (LAV) ..... (12 141 0) 206-00-21/22
Load Apportioning Valve Adjust 206-00-23/24
Brake Disc Run out Check 206-00-25/26

SPECIFICATIONS

Specifications 206-00-27
Lubricants, Fluids, Sealers and Adhesives 206-00-27
Front Disc Brake Specification 206-00-27
Drum Brake Specification 206-00-27

DESCRIPTION AND OPERATION

Brake System

The braking system is a diagonally split, dual circuit system with front disc and rear drum brakes.

The hydraulic system provides separate circuits for each pair of diagonally opposed wheels (left front, right rear and right front, left rear). The front calipers are mounted on the wheel knuckle and a single sliding piston design, which make sure that equal effort is applied through both brake pads.

The brake drums are of conventional design. They consist of one primary and one secondary shoe with bonded thick/thin asbestos free linings. The thick/thin linings allow the brake shoes to wear at proportional rates. The brakes self adjust during foot brake operation.

The parking brake control is located between the front seats and operates the rear brakes through a cable system. The parking brake is adjusted from inside the passenger compartment with the vehicle on the ground.

The brake master cylinder is of a tandem design and is linked to a brake booster to reduce the brake pedal effort. The tandem design will make sure that in the event of one brake circuit failure the other will remain fully operational. The brake master cylinder and brake booster are located on the left-hand side of the engine compartment.

Vehicles fitted with the standard braking system have a Load Active Valve (LAV) connected to the rear axle. The LAV control the hydraulic pressure applied to the rear brakes reducing the risk of rear wheel lock-up under braking.

DIAGNOSIS AND TESTING

Brake System

The brakes system operates by transferring effort applied to the brake pedal by the driver to the brakes at each wheel.

The braking effort is distributed to each wheel, using a hydraulic system. The system is assisted using a vacuum brake booster that reduces pedal effort and increases hydraulic pressure.

The parking brake operates on the rear wheels and is applied using a hand-operated control.

Inspection and Verification

NOTE: Before carrying out any diagnosis, make sure that the brake system-warning indicator is functional.

1. Verify the customer concern.
2. Visually inspect for obvious signs of mechanical damage.

Visual Inspection Chart

Mechanical
• Tyre pressure • Wheels and tyres • Fluid leak from brake line(s)

3. If an obvious cause for an observed or reported concern is found, correct the case (if possible) before proceeding to the next step.
4. If the cause if not visually evident, verify the symptom and refer to the Symptom Chart.

Road Test

Perform a road test to compare actual vehicle braking performance with the performance standards expected by the driver. The ability of the test driver to make valid comparisons and detect performance deficiencies will depend on experience.

The driver should have a thorough knowledge of the brake system operation and accepted general performance guidelines to make good comparisons and detect performance concerns.

An experienced technician will always establish a route that will be used for all brake diagnosis road tests. The road selected will be reasonably smooth and level. Gravel or bumpy roads are not suitable because the surface does not allow the tyres to grip the road equally. Crowned roads should be avoided because of the large amount of weight shifted to the low set of wheels on this type of road. Once the route is established and consistently used, the road surface variable can be eliminated from the test results.

Before a road test, get a complete description of the customer concerns or suspected condition. From the description, the technician will be able to match possible causes with symptoms. Certain components will be identified, as possible sources while others will be eliminated by the evidence. More importantly, the customer description can reveal unsafe conditions, which should be checked or corrected before a road test. The description will also help form the basic approach to the road test by narrowing the concern to specific components, vehicle speed or conditions.

Begin the road test with a general brake performance check. Using the description of the concern, test the brakes at different vehicle speeds using both light and heavy pedal pressure. Determine if the concern is in the front or rear braking system. First use the foot brake and then the parking brake. If the condition (i.e. pull, vibration, pulsation) occurs only on operation of the parking brake, the concern is in the rear brake system. If the condition occurs when the foot brake is depressed, the concern is in the front brake system.

Avoid locking the brakes and sliding the tyres. This condition will not indicate brake efficiency. A heavily braked but turning wheel will stop the vehicle in a shorter distance than locked wheels.

If the concern becomes evident during this check, make sure it fits the description given before the road test. If the concern is not evident, attempt to duplicate the condition using the information from the description.

If a concern exists, use the Brake System Symptom Chart in order to isolate it to a specific subsystem and condition description. From this description, a list of possible sources can be used to further narrow the cause to a specific component or condition.

DIAGNOSIS AND TESTING

Symptom Chart

Condition	Possible Sources	Action
•Brakes pull or drift	•Worn or damaged brake shoes or brake pads and linings.	•INSTALL new brake shoes or brake pads.
	•Abnormal wear or distortion of front brake disc.	•INSTALL a new front brake disc.
	•Incorrect rear brake adjustment.	•PERFORM a parking brake cable adjustment. REFER to Section 206-05.
	•Incorrect wheel alignment adjustment.	•PERFORM a wheel alignment adjustment. REFER to Section 204-00.
	•Incorrect wheel bearing preload adjustment.	•ADJUST or INSTALL a new wheel bearing. REFER to Section 204-01.
	•Unequal air pressure in the tyres.	•INFLATE the tyres to the correct pressure.
	•Grease or fluid on the brake shoes or brake pads; glazed linings.	•INSTALL new brake shoes or brake pads.
	•Stuck or seized calipers.	•GO to Pinpoint Test A.
•Brake warning indicator always on	•Low brake fluid level.	•FILL the reservoir. CHECK the brake and clutch system for leaks including brake fluid in the brake booster.
	•Leaking brake master cylinder primary piston cup.	•INSTALL a new brake master cylinder.
	•Parking brake control not fully released.	•FREE UP and ADJUST the parking brake cable. REFER to Section 206-05. INSTALL new components as necessary.
	•Shorted indicator circuit.	•GO to Pinpoint Test B.
•Vibration when the brakes are applied	•Grease or fluid on the brake shoes or brake pads; glazed linings.	•INSTALL new brake shoes or brake pads
	•Worn or damaged brake shoes or brake pads.	•INSTALL new brake shoes or brake pads.
	•Loose caliper mounting bolt(s).	•TIGHTEN the caliper mounting bolt(s).
	•Insufficient grease on sliding parts.	•APPLY grease where necessary.
	•Damaged brake drum contact surface.	•INSTALL a new brake drum.

DIAGNOSIS AND TESTING (CONTINUED)

Condition	Possible Sources	Action
	•Loose or missing wheel hub bolts.	•TIGHTEN or INSTALL new wheel hub bolts. •Go to Pinpoint Test C.
•Pedal goes down fast	•Leak in the hydraulic system.	•REPAIR the leak. CHECK the entire hydraulic system. FILL and BLEED the brake system. REFER to Section 206-00.
	•Air in the system.	•CHECK for leaks. BLEED the brake system. REFER to Section 206-00.
	•Worn brake master cylinder piston cups or scored cylinder bore.	•INSTALL a new brake master cylinder.
	•Brake disc brake `knock back' (Brake pads push the brake caliper piston back into brake caliper. Caused by excessive brake disc lateral run out or loose wheel bearings.)	•Install a new brake disc. REFER to Section 206-03 REFER to Section 204-01.
	•Worn brake shoes or brake pads.	•INSTALL new brake shoes or brake pads. •GO to Pinpoint Test D.
•Pedal eases down slowly	•Air in the system.	•BLEED the brake system. REFER to Section 206-00.
	•Malfunctioning brake master cylinder.	•GO to Pinpoint Test E.
•Pedal is low or feels spongy	•Worn brake shoes.	•INSTALL new brake shoes or brake pads.
	•Hydraulic system.	•GO to Pinpoint Test F.
•Brake lockup during light brake pedal force	•Incorrect tyre pressures.	•INFLATE the tyres to the correct pressure.
	•Tyres worn.	•INSTALL new tyres.
	•Glazed or worn brake shoes or brake pads. •Brake booster	•INSTALL new brake shoes or brake pads. •GO to Pinpoint Test G.
•Excessive or erratic pedal travel	•Worn brake shoes or brake pads.	•INSTALL new brake shoes or brake pads.
	•Brake discs.	•GO to Pinpoint Test H.

DIAGNOSIS AND TESTING (CONTINUED)

Condition	Possible Sources	Action
•Brake drag	•Brake booster. •Incorrectly adjusted brake light switch. •Seized brake caliper or wheel cylinder. •Parking brake applied or malfunction •Seized parking brake cables. •Seized brake caliper slide pins.	•GO to Pinpoint Test I. •ADJUST the brake light switch.
•Excessive brake pedal effort	•Brake booster inoperative.	•PERFORM a brake booster functional test Refer to the procedure in this section.
	•Worn or contaminated brake shoes or brake pads.	•INSTALL new brake shoes or brake pads. • GO to Pinpoint Test J.
•Brake noise	•Worn brake shoes or brake pads.	•INSTALL new brake shoes or brake pads.
	•Brake booster.	• GO to Pinpoint Test K.
•Slow or incomplete brake pedal return	•Brake booster. •Brake master cylinder.	• GO to Pinpoint Test L.

Pinpoint Tests

PINPOINT TEST A: BRAKES PULL OR DRIFT

A1: ROAD TEST THE VEHICLE 206-00-6

A2: TYRE INSPECTION 206-00-6

A3: BRAKE SHOE OR BRAKE PADS AND LINING INSPECTION 206-00-6

PINPOINT TEST B: BRAKE WARNING INDICATOR ALWAYS ON

B1: CHECK BRAKE WARNING INDICATOR 206-00-7

B2: CHECK BRAKE SYSTEM FOR LEAKAGE 206-00-7

B3: CHECK BRAKE WARNING SWITCH OR WIRING 206-00-8

PINPOINT TEST C: VIBRATION WHEN BRAKES ARE APPLIED

C1: ROAD TEST THE VEHICLE 206-00-8

C2: CHECK FOR REAR BRAKE VIBRATION 206-00-8

C3: CHECK FOR FRONT BRAKE VIBRATION 206-00-9

PINPOINT TEST D: PEDAL GOES DOWN FAST

D1: ROAD TEST THE VEHICLE 206-00-9

D2: CHECK BRAKE FLUID LEVEL 206-00-9

D3: PRESSURIZE THE SYSTEM 206-00-9

D4: CHECK FOR BRAKE SYSTEM LEAKS 206-00-10

D5: PERFORM A BRAKE MASTER CYLINDER BYPASS CONDITION CHECK . 206-00-10

PINPOINT TEST E: PEDAL EASES DOWN SLOWLY

E1: CHECK BRAKE PEDAL OPERATION 206-00-10

E2: CHECK FOR BRAKE SYSTEM LEAKS 206-00-10

E3: PERFORM A BRAKE MASTER CYLINDER BYPASS TEST 206-00-11

PINPOINT TEST F: PEDAL IS LOW OR FEELS SPONGY

F1: ROAD TEST THE VEHICLE 206-00-11

F2: CHECK BRAKE FLUID LEVEL 206-00-11

F3: CHECK FILLER CAP VENT 206-00-11

F4: BLEED THE BRAKE SYSTEM 206-00-12

F5: CHECK FRONT WHEEL HUB RETAINING NUT 206-00-12

PINPOINT TEST G: BRAKE LOCK UP DURING LIGHT BRAKE PEDAL FORCE

G1: ROAD TEST THE VEHICLE 206-00-12

G2: TYRE INSPECTION 206-00-12

G3: BRAKE SHOES OR BRAKE PADS INSPECTION 206-00-13

PINPOINT TEST H: EXCESSIVE OR ERRATIC BRAKE PEDAL TRAVEL

H1: ROAD TEST THE VEHICLE 206-00-13

H2: CHECK WHEEL BEARING 206-00-13

PINPOINT TEST I: BRAKES DRAG

I1: CHECK BRAKE BOOSTER 206-00-13

I2: ROAD TEST THE VEHICLE 206-00-14

Pinpoint Tests

PINPOINT TEST J: EXCESSIVE BRAKE PEDAL EFFORT

J1: CHECK BRAKE APPLICATION 206-00-14
J2: CHECK BRAKE BOOSTER FOR LEAKS 206-00-14
J3: CHECK BRAKE BOOSTER CHECK VALVE 206-00-14
J4: CHECK BRAKE BOOSTER CHECK VALVE VACUUM 206-00-15
J5: CHECK BRAKE BOOSTER 206-00-15
J6: CHECK BRAKE PEDAL LINKAGE 206-00-15

PINPOINT TEST K: BRAKE NOISE

K1: CHECK FOR PEDAL NOISE 206-00-15
K2: CHECK PUSH ROD ALIGNMENT 206-00-16

PINPOINT TEST L: SLOW OR INCOMPLETE BRAKE PEDAL RETURN

L1: CHECK FOR BRAKE PEDAL RETURN 206-00-16
L2: CHECK FOR BRAKE PEDAL BINDING 206-00-16

DIAGNOSIS AND TESTING (CONTINUED)

PINPOINT TEST A: BRAKES PULL OR DRIFT

CONDITIONS	DETAILS/RESULTS/ACTIONS
A1: ROAD TEST THE VEHICLE	
	1 Road test the vehicle and apply the brake pedal. • Does the vehicle pull or drift? **Yes** GO TO **A2** **No** Vehicle OK.
A2: TYRE INSPECTION	
	1 Check for excessive wear or incorrect tyre pressures. • Are the tyres in good condition? **Yes** GO TO **A3** **No** INFLATE the tyres to the correct pressure. INSTALL new tyres if excessively worn. TEST the system for normal operation.
A3: BRAKE SHOE OR BRAKE PADS AND LINING INSPECTION	
	1 Inspect the brake shoes or brake pads for grease or fluid on the linings and or wear concerns. • Are any concerns present? **Yes** INSTALL new brake shoes or brake pads. TEST the system for normal operation.

PINPOINT TEST B: BRAKE WARNING INDICATOR ALWAYS ON

CONDITIONS	DETAILS/RESULTS/ACTIONS
B1: CHECK BRAKE WARNING INDICATOR	
NOTE: The brake-warning indicator should only illuminate when the ignition switch is in the START or RUN position and the parking brake is applied.	
1	2 Release the parking brake. - Check the fluid level in the reservoir is at the MAX mark. • Does the brake warning indicator illuminate? **Yes** REFER to Section 413-01. **No** GO TO **B2**
B2: CHECK BRAKE SYSTEM FOR LEAKAGE	
	1 Check the brake master cylinder reservoir sealing points and external brake and clutch system for leaks. Refer to the brake master cylinder component tests in this section. • Does the system leak? **Yes** REPAIR as necessary. ADD fluid and BLEED the brake system. REFER to Section 206-00. TEST the system for normal operation. **No** GO TO **B3**

DIAGNOSIS AND TESTING (CONTINUED)

CONDITIONS	DETAILS/RESULTS/ACTIONS
B3: CHECK BRAKE WARNING SWITCH OR WIRING	
1	2 Remove the brake master cylinder reservoir filler cap or switch. Allow the float to rest at its lowest (maximum) point. • Does the brake warning indicator illuminate? **Yes** The switch or wiring is OK. TEST the system for normal operation. **No** REFER to Section 413-01.

PINPOINT TEST C: VIBRATION WHEN BRAKES ARE APPLIED

CONDITIONS	DETAILS/RESULTS/ACTIONS
C1: ROAD TEST THE VEHICLE	
	1 Road test the vehicle without applying the brakes at 40-80 km/h. • Is a vibration present? **Yes** REFER to Section 100-04. After servicing. TEST the system for normal operation. **No** GO TO **C2**
C2: CHECK FOR REAR BRAKE VIBRATION	
NOTE: With a manual release parking brake control, hold the parking brake control release button in the release position during parking brake control application.	
	1 Road test the vehicle at 40-80 km/h with a medium application on the parking brake control. • Is a vibration present? **Yes** CHECK the rear brake drums for excessive wear. INSTALL new components as necessary. TEST the system for normal operation. **No** GO TO **C3**

DIAGNOSIS AND TESTING (CONTINUED)

CONDITIONS	DETAILS/RESULTS/ACTIONS
C3: CHECK FOR FRONT BRAKE VIBRATION	
	1 Road test the vehicle at 40-80 km/h with light and medium application of the foot brake. • Is a vibration present? **Yes** CHECK the front brake discs for excessive wear or cracks. INSTALL new components as necessary. TEST the system for normal operation. **No** Vehicle OK.

PINPOINT TEST D: PEDAL GOES DOWN FAST

CONDITIONS	DETAILS/RESULTS/ACTIONS
D1: ROAD TEST THE VEHICLE	
	1 Road test the vehicle and apply the foot brake. • Was the brake pedal effort normal? **Yes** Vehicle OK. **No** GO TO **D2**
D2: CHECK BRAKE FLUID LEVEL	
	1 Check the brake master cylinder reservoir fluid level. • Is the fluid level acceptable? **Yes** GO TO **D3** **No** CHECK the brake master cylinder reservoir sealing points for leaks. Refer to the brake master cylinder component tests in this section ADD fluid and BLEED the brake system REFER to Section 206-00. TEST the system for normal operation.
D3: PRESSURIZE THE SYSTEM	
	1 Pump the foot brake rapidly five times. • Does the brake pedal height build up and then hold? **Yes** CHECK parking brake adjustment and ADJUST as necessary. REFER to Section 206-05. If the condition still exists. BLEED the brake system. REFER to Section 206-00. TEST the system for normal operation. **No** GO TO **D4**

DIAGNOSIS AND TESTING (CONTINUED)

CONDITIONS	DETAILS/RESULTS/ACTIONS
D4: CHECK FOR BRAKE SYSTEM LEAKS	
	1 Check for external brake and clutch system leaks Refer to brake master cylinder component tests in this section. • Are any leaks found? **Yes** REPAIR as necessary. ADD fluid and BLEED the brake system. REFER to Section 206-00. TEST the system for normal operation. **No** GO TO **D5**
D5: PERFORM A BRAKE MASTER CYLINDER BYPASS CONDITION CHECK	
	1 Test for a brake master cylinder bypass. Refer to the brake master cylinder component tests in this section. • Was a concern found? **Yes** INSTALL a new brake master cylinder. ADD fluid and BLEED the brake system. REFER to Section 206-00. TEST the system for normal operation. **No** System OK.

PINPOINT TEST E: PEDAL EASES DOWN SLOWLY

CONDITIONS	DETAILS/RESULTS/ACTIONS
E1: CHECK BRAKE PEDAL OPERATION	
	1 Check if the condition occurs when applying the brake pedal while the vehicle is moving. • Does the condition occur with the vehicle stationary? **Yes** GO TO **E2** **No** Refer to the brake master cylinder component tests in this section.
E2: CHECK FOR BRAKE SYSTEM LEAKS	
	1 Check for external brake system leaks Refer to the master cylinder component tests in this section. • Are any leaks found? **Yes** REPAIR as necessary. ADD fluid and BLEED the brake system. REFER to Section 206-00. TEST the system for normal operation. **No** GO TO **E3**

DIAGNOSIS AND TESTING (CONTINUED)

CONDITIONS	DETAILS/RESULTS/ACTIONS
E3: PERFORM A BRAKE MASTER CYLINDER BYPASS TEST	
	1 Test for a brake master cylinder bypass. Refer to the brake master cylinder component tests in this section. • Was a concern found? **Yes** INSTALL a new brake master cylinder. ADD fluid and BLEED the bake system. REFER to Section 206-00. TEST the system for normal operation. **No** System OK. TEST the system for normal operation.

PINPOINT TEST F: PEDAL IS LOW OR FEELS SPONGY

CONDITIONS	DETAILS/RESULTS/ACTIONS
F1: ROAD TEST THE VEHICLE	
	1 Road test the vehicle and apply the foot brake. • Did the brake pedal feel spongy? **Yes** GO TO **F2** **No** Vehicle OK.
F2: CHECK BRAKE FLUID LEVEL	
	1 Check the brake master cylinder reservoir fluid level. • Is the fluid level OK? **Yes** GO TO **F3** **No** CHECK the brake master cylinder reservoir sealing points. Refer to the brake master cylinder component tests in this section. ADD fluid and BLEED the brake system. REFER to Section 206-00. TEST the system for normal operation.
F3: CHECK FILLER CAP VENT	
	1 Check if the filler cap vent holes are clogged or dirty. • Was a concern found? **Yes** CLEAN as necessary. TEST the system for normal operation. **No** GO TO **F4**

DIAGNOSIS AND TESTING (CONTINUED)

CONDITIONS	DETAILS/RESULTS/ACTIONS
F4: BLEED THE BRAKE SYSTEM	
	1 Check for air in the brake system. Bleed the brake system. REFER to Section 206-00. • Is the condition still present? **Yes** GO TO **F5** **No** Vehicle OK.
F5: CHECK FRONT WHEEL HUB RETAINING NUT	
	1 Check the front wheel hub-retaining nut for looseness. REFER to Section 204-01. • Is the front wheel hub-retaining nut loose? **Yes** INSTALL a new front wheel hub-retaining nut. Do not reuse the front wheel hub-retaining nut. TEST the system for normal operation. **No** CHECK the parking bake adjustment. REFER to Section 206-05.

PINPOINT TEST G: BRAKE LOCK UP DURING LIGHT BRAKE PEDAL FORCE

CONDITIONS	DETAILS/RESULTS/ACTIONS
G1: ROAD TEST THE VEHICLE	
	1 Road test the vehicle and apply the brake pedal lightly. • Do the rear brakes lock up? **Yes** GO TO **G2** **No** Vehicle OK.
G2: TYRE INSPECTION	
	1 Check for excessive tyre wear or incorrect tyre pressures. • Are the tyres in good order? **Yes** GO TO **G3** **No** SUBSTITUTE known good tyres. INFLATE to the correct pressure. TEST the system for normal operation.

DIAGNOSIS AND TESTING (CONTINUED)

CONDITIONS	DETAILS/RESULTS/ACTIONS
G3: BRAKE SHOES OR BRAKE PADS INSPECTION	
	1 Inspect the brake shoes or brake pads are correctly fitted and for grease or fluid contamination or wear concerns. • Are there any concerns? **Yes** REPAIR or INSTALL new components as necessary. TEST the system for normal operation.

PINPOINT TEST H: EXCESSIVE OR ERRATIC BRAKE PEDAL TRAVEL

CONDITIONS	DETAILS/RESULTS/ACTIONS
H1: ROAD TEST THE VEHICLE	
	1 Road test the vehicle under rough road conditions. Apply the brakes slowly. • Is the pedal travel OK? **Yes** Vehicle OK. **No** GO TO **H2**
H2: CHECK WHEEL BEARING	
	1 Check for loose front wheel bearings. • Are the front wheel bearings loose? **Yes** CHECK the front wheel hub-retaining nut. INSTALL a new front wheel bearing(s) if worn or damaged,REFER to Section 204-01. TEST the system for normal operation. **No** CHECK the front brake disc(s) for thickness variances. INSTALL new components as necessary. TEST the system for normal operation.

PINPOINT TEST I: BRAKES DRAG

CONDITIONS	DETAILS/RESULTS/ACTIONS
I1: CHECK BRAKE BOOSTER	
	1 Check the brake booster push rod alignment and pedal travel. • Is the push rod and pedal travel OK? **Yes** GO TO **I2** **No** INSTALL a new brake booster. TEST the system for normal operation.

DIAGNOSIS AND TESTING (CONTINUED)

CONDITIONS	DETAILS/RESULTS/ACTIONS
I2: ROAD TEST THE VEHICLE	
	1 Road test the vehicle and apply the brakes. • Are the brakes functioning correctly? **Yes** Vehicle OK. **No** INSPECT individual wheel cylinders or calipers for binding or sticking components. INSTALL new components as necessary. BLEED the brake system. REFER to Section 206-00. TEST the system for normal operation.

PINPOINT TEST J: EXCESSIVE BRAKE PEDAL EFFORT

CONDITIONS	DETAILS/RESULTS/ACTIONS
J1: CHECK BRAKE APPLICATION	
	1 With the engine off, apply and release the brake pedal five times to deplete all vacuum from the brake booster. Apply the brake pedal, hold with light pressure. Start the engine. • Does the brake pedal hold? **Yes** GO TO **J2** **No** GO TO **J6**
J2: CHECK BRAKE BOOSTER FOR LEAKS	
	1 Run the engine at medium idle, release the accelerator pedal and turn the engine off. Wait 90 seconds and apply the brakes. Two or more brake applications should be power assisted. • Does the brake booster work? **Yes** Vehicle OK. **No** GO TO **J3**
J3: CHECK BRAKE BOOSTER CHECK VALVE	
	1 Disconnect the vacuum hose, for the brake booster check valve at the manifold. Blow into the hose attached to the brake booster check valve. • Does air pass through the valve? **Yes** INSTALL a new brake booster check valve. TEST the system for normal operation. **No** GO TO **J4**

DIAGNOSIS AND TESTING (CONTINUED)

CONDITIONS	DETAILS/RESULTS/ACTIONS
J4: CHECK BRAKE BOOSTER CHECK VALVE VACUUM	
	1 Disconnect the vacuum hose from the brake booster check valve. Run the engine at idle. Check the supply with a vacuum gauge. • Is the vacuum pressure above 40.5 kPa (12 in-Hg) with the brake booster non-operational? **Yes** GO TO **J5** **No** REPAIR or INSTALL a new vacuum hose and fittings. TEST the system for normal operation.
J5: CHECK BRAKE BOOSTER	
	1 Check the brake booster. GO to the component test procedure in this section. • Is the brake booster OK? **Yes** GO TO **J6** **No** INSTALL a new brake booster. TEST the system for normal operation.
J6: CHECK BRAKE PEDAL LINKAGE	
	1 Disconnect the actuator rod from the pedal pin and apply the brake pedal fully. • Did the pedal move freely? **Yes** **No** REPAIR or INSTALL new brake pedal bushings. TEST the system for normal operation.

PINPOINT TEST K: BRAKE NOISE

CONDITIONS	DETAILS/RESULTS/ACTIONS
K1: CHECK FOR PEDAL NOISE	
	1 Inspect the brake pads and brake shoes for excessive wear. - Run the engine at idle for 10 seconds or longer. Apply the brake pedal and listen for noise. Compare results with a known good system. • Was a noise present? **Yes** GO TO **K2** **No** Vehicle OK.

DIAGNOSIS AND TESTING (CONTINUED)

CONDITIONS	DETAILS/RESULTS/ACTIONS
K2: CHECK PUSH ROD ALIGNMENT	
	1 Check the brake booster push rod alignment and travel. • Is the push rod OK? **Yes** BLEED the brake system. REFER to Section 206-00. TEST the system for normal operation. **No** INSTALL a new brake booster. TEST the system for normal operation.

PINPOINT TEST L: SLOW OR INCOMPLETE BRAKE PEDAL RETURN

CONDITIONS	DETAILS/RESULTS/ACTIONS
L1: CHECK FOR BRAKE PEDAL RETURN	
	1 Run the engine at fast idle while making several brake applications. Pull the brake pedal rearward with approximately 44.5 N force. Release the brake pedal and measure the distance to the floor pan. Make a hard brake application. Release the brake pedal and measure the brake pedal to floor pan distance. The brake pedal should return to its original position. • Did the brake pedal return to its original position? **Yes** Vehicle OK. **No** GO TO **L2**
L2: CHECK FOR BRAKE PEDAL BINDING	
	1 Check the brake pedal for free operation. • Is the brake pedal operating freely? **Yes** INSTALL a new brake booster. TEST the system for normal operation. **No** REPAIR or INSTALL new brake pedal bushings. TEST the system for normal operation.

Component Tests

Hydraulic Leak Check

NOTE: There is a common clutch and brake fluid reservoir; therefore it is possible that a clutch leak can lead to reduction in the reservoir level.

It is possible that all evidence of fluid leakage may have washed off if the vehicle has been operated in rain or snow, as brake fluid is water-soluble. Refill the system, bleed then apply the brakes several times. Examine the system to verify that the reservoir fluid level is actually dropping. Locate and repair the external leak. If the fluid level drops and no external leak can be found, check for a brake master cylinder bore end seal leak.

DIAGNOSIS AND TESTING (CONTINUED)

Brake System Check

Brake Pedal Reserve Check

Where a low brake pedal or the feel of a bottomed-out condition exists, check for brake pedal reserve.

1. Operate the engine at idle with the transaxle in NEUTRAL.
2. Apply the brake pedal lightly three or four times.
3. Allow 15 seconds for vacuum to replenish the brake booster.

NOTE: This increased resistance may feel like something has bottomed out.

4. Apply the brake pedal until it stops moving downward or an increased resistance to the pedal travel occurs.
5. Hold the brake pedal in the applied position and raise the engine speed to approximately 2000 rpm.

NOTE: The additional movement of the brake pedal is the result of the increased engine manifold vacuum, which exerts more force on the brake booster during engine rundown. This means that additional stroke is available in the brake master cylinder and the brake system is not bottoming out.

6. Release the accelerator pedal and observe that the brake pedal moves downward as the engine returns to idle speed.

Brake Booster Functional Test

Inspect all hoses and connections. All unused vacuum connectors should be capped. Hoses and their connections should be correctly secured and in good condition with no holes and no collapsed areas. Inspect the check valve on the brake booster for damage.

Brake Booster Operation Check

1. Check the hydraulic brake system for leaks or low fluid.
2. With the transaxle in NEUTRAL, stop the engine and apply the parking brake. Apply the brake pedal several times to exhaust all vacuum in the system.
3. With the engine turned off and all vacuum in the system exhausted, apply the brake pedal and hold it down. Start the engine. If the vacuum system is operating, the brake pedal will tend to move downward under constant foot pressure. If no motion is felt, the vacuum booster system is not functioning.
4. Remove the vacuum hose from the brake booster. Manifold vacuum should be available at the brake booster end of the hose with the engine at idle speed and the transaxle in NEUTRAL. Make sure that all unused vacuum outlets are correctly capped, hose connectors are correctly secured and vacuum hoses are in good condition. When it is established that manifold vacuum is available to the brake booster, connector the vacuum hose to the brake booster and repeat Step 3. If no downward movement of the brake pedal is felt, install a new brake booster.
5. Operate the engine a minimum of 10 seconds at fast idle. Stop the engine and let the vehicle stand for 10 minutes. Then, apply the brake pedal with approximately 89 N. The pedal feel (brake application) should be the same as that noted with the engine operating. If the brake pedal feels hard (no power assist), install a new vacuum check valve and then repeat the test. If the brake pedal still feels hard, install a new brake booster. If the brake pedal movement feels spongy, bleed the brake system.
REFER to Section 206-06.

Brake Master Cylinder

Usually, the first and strongest indicator of anything wrong with the braking system is a feeling through the brake pedal. In diagnosing the condition of the brake master cylinder, check pedal feel as evidence of a brake concern. Check for the brake warning indicator illumination and the fluid level in the master cylinder reservoir.

Normal Conditions

The following conditions are considered normal and are not indications that the brake master cylinder is in need of service.

- Modern brake systems are not designed to produce as hard a pedal effort as in the past. Complaints of light pedal efforts should be compared to pedal efforts of another vehicle, of the same model and year.
- During normal operation of the brake the fluid level in the reservoir will rise during brake application and fall during release. The net

DIAGNOSIS AND TESTING (CONTINUED)

fluid level (i.e., after brake application and release) will remain unchanged.

- A trace of brake fluid will exists on the brake booster shell below the master cylinder-mounting flange. This results from the normal lubricating action of the master cylinder bore end seal.
- The fluid level will fall with brake shoe and lining wear.

Abnormal Conditions

NOTE: Prior to performing any diagnosis, make sure the brake system-warning indicator is functional.

Changes in brake pedal feel or travel are indicators that something could be wrong with the braking system. The diagnostic procedure and techniques use brake pedal feel, warning indicator illumination and low brake fluid level as indicators in diagnosing braking system concerns. The following conditions are considered abnormal and indicate that the brake master cylinder is in need of service.

- The brake pedal goes down fast. This could be caused by an external or internal leak.
- The brake pedal eases down slowly. This could be caused by an external or internal leak.
- The brake pedal is low and or feels spongy. This condition may be caused by no fluid in the brake master cylinder reservoir, reservoir cap vent holes clogged or air in the hydraulic system.
- The brake pedal effort is excessive. This may be caused by a bind or obstruction in the pedal or linkage, clogged fluid control valve or insufficient booster vacuum.
- The rear brakes lock up during light pedal force. This may be caused by incorrect tyre pressures, grease or fluid on the brake shoes and linings, damaged brake shoes and linings, incorrectly adjusted parking brake, or damaged or incorrectly adjusted Load Active Valve.
- The brake pedal effort is erratic. This condition could be caused by a brake booster malfunction; extreme caliper piston knock back or incorrectly installed brake shoes and linings.
- The brake-warning indicator is ON. This may be caused by low fluid level, ignition wire routing too close to the fluid level indicator assembly, or float assembly damage.

Bypass Condition Test

1. Check the fluid in brake master cylinder. Fill the brake master cylinder reservoir if low or empty.
2. Observe the fluid level in the brake master cylinder reservoir. If after several brake applications, the fluid level remains the same, measure the wheel turning torque required to rotate the wheels with the brakes applied as follows:

Place the transaxle in NEUTRAL and raise and support the vehicle. REFER to Section 100-02.

Apply the brakes with a minimum of 445 N and hold for approximately 15 seconds. With the brakes still applied, exert a torque on the front wheels of 10.1 Nm. If either wheel rotates, install a new brake master cylinder.

Non-Pressure Leaks

Any empty brake master cylinder reservoir condition may be caused by two types of non-pressure external leaks.

Type 1: An external leak may occur at the master cylinder reservoir cap because of incorrect positioning of the gasket and cap. Reposition the cap and gasket.

Type 2: An external leak may occur at the reservoir mounting seals. Service such a leak by installing new seals.

GENERAL PROCEDURES

Brake System Bleeding (12 141 0)

Bleeding

1. Disconnect the battery ground cable.
   For additional information,
   refer to Section 414-01.

All Vehicles

WARNING: Brake fluid contains polyglycol ethers and polyglycols. Avoid contact with the eyes. Wash hands thoroughly after handling. If brake fluid contacts the eyes, flush the eyes for 15 minutes with cold running water. Get medical attention if irritation persists. If taken internally, drink water and induce vomiting. Get medical attention immediately. Failure to follow these instructions may result in personal injury.

CAUTION: If brake fluid is spilt on the paintwork, the affected area must be immediately washed down with cold water.

NOTE: Make sure that the vehicle is standing on a level surface.

NOTE: The system consists of separate circuits for each front and diagonally opposite rear wheel. Each circuit can be bled independently.

1. **CAUTION: The brake fluid reservoir must remain full with new, clean brake fluid at all times during bleeding.**

NOTE: Start bleeding the brake system from the furthest bleed nipple from the brake master cylinder.

Install the bleed tube to the bleed nipple.

2. Immerse the end of the bleed tube in a bleed jar containing a small quantity of approved brake fluid.

3. Position the bleed jar base at least 300 mm above the bleed nipple to maintain fluid pressure and prevent air leaking past the threads of the bleed nipple.

4. Loosen the bleed nipple by one-half turn.

GENERAL PROCEDURES (CONTINUED)

5. Operate the brake pedal fully (pumping brake fluid and air into the bleed jar) and allow the brake pedal to return to the rest position.
6. Fill the brake fluid reservoir.
7. Continue operating the brake pedal until air-free fluid is being pumped into the bleed jar.
8. With the brake pedal fully depressed tighten the bleed nipple.
9. ⚠ **CAUTION: Make sure the bleed nipple cap is installed after bleeding the brake line(s). This will prevent corrosion to the bleed nipple. Failure to follow this instruction may result in the bleed nipple becoming seized.**
   Repeat the procedure for the remaining brake lines.

GENERAL PROCEDURES

Load Active Valve (LAV)

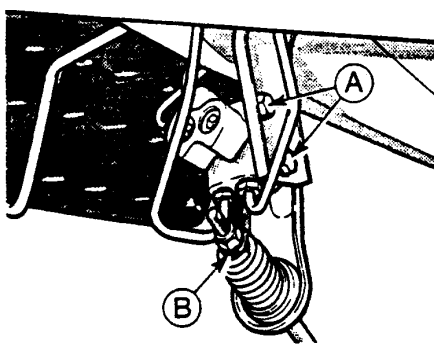

Light laden valve
A - Valve mounting bolts
B - Linkage retaining clip

Removal

WARNING: Brake fluid contains polyglycol ethers and polyglycols. Avoid contact with the eyes. Wash hands thoroughly after handling. If brake fluid contacts the eyes, flush the eyes for 15 minutes with cold running water. Get medical attention if irritation persists. If taken internally, drink water and induce vomiting. Get medical attention immediately. Failure to follow these instructions may result in personal injury.

CAUTION: Make sure that the vehicle is standing on a level surface.

CAUTION: If brake fluid is spilt on the paintwork, the affected areas must be immediately washed down with cold water.

1. Disconnect the brake pipes from the valve and drain the brake fluid.
2. Remove the two bolts securing the valve to the body-mounting bracket.
3. Lower the valve and remove by sliding the spacer tube assembly off the link rod in the axle bracket.
4. Remove the link rod from the axle tube bracket

GENERAL PROCEDURES (CONTINUED)

5. If the bush is worn or damaged remove it from the axle tube bracket and replace it.

Installation

1. If the bush requires replacement (step 5 above), fit a new bush by coiling the bush and pressing it into the aperture in the bracket.

2. Apply a small smear of grease to the axle end of the link rod and a liberal amount of grease to the other end. Slide the link rod into the axle bracket bush.

3. Slide the spacer tube assembly over the link rod and refit the valve to the body bracket, secure with two bolts.

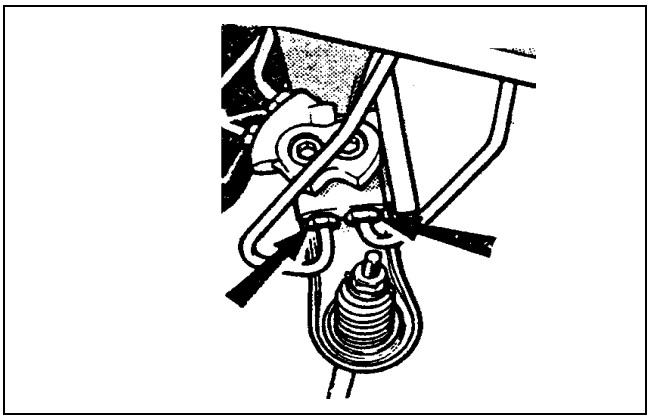

4. Reconnect the brake pipes.

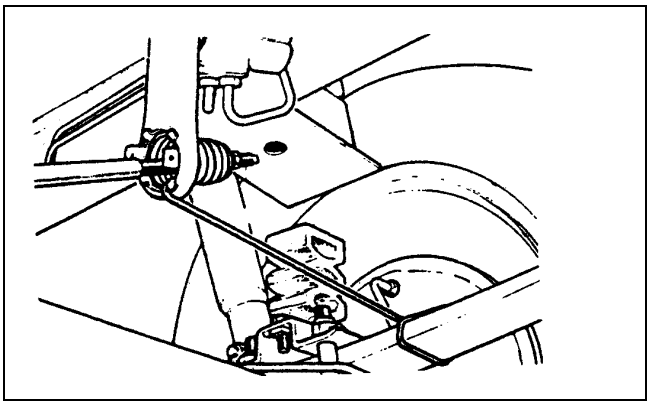

5. Bleed the brakes, refer to Section 206-00-21

Note: Ensure that the valve is kept "open" (valve actuating lever hard against valve body) during operation, by using a suitable clip or wire. Ensure that the vale is not damaged.

6. Adjust the valve linkage.

GENERAL PROCEDURES (CONTINUED)

Load Apportioning Valve Adjust

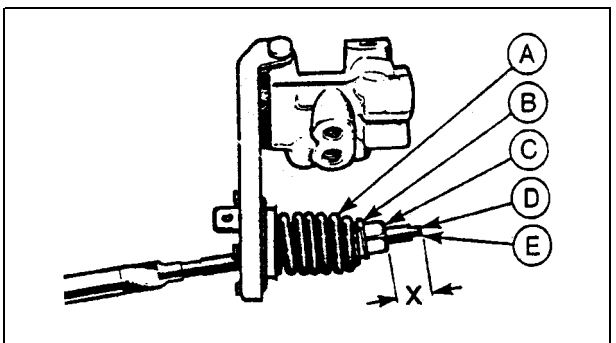

Setting distance of adjusting nut

Note: Vehicle must be in the unladen condition.

Important: Two adjusting procedures are detailed below. Procedure "A" should always be used except when two new rear leaf springs have been fitted, then procedure "B" must be followed.

Procedure " A" To be used except when new rear leaf springs are fitted.

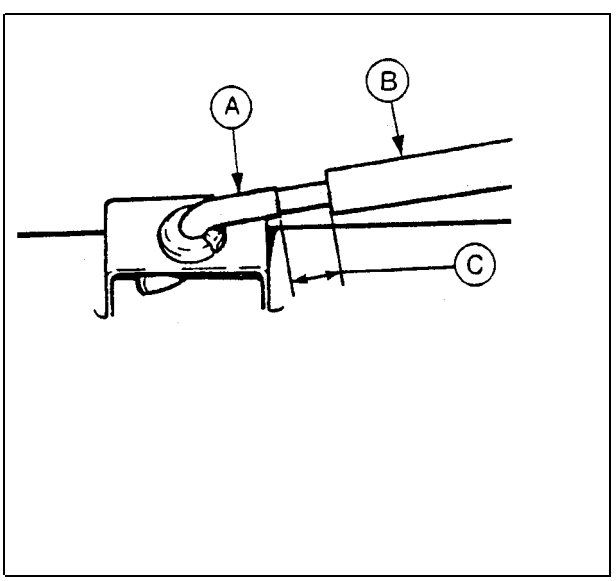

1. If new valve linkage has been fitted.

   Measure the distance from the end of the threaded adjustment rod to the end of the adjusting nut face, the measurement should be 10 to 12 mm, if not adjust accordingly. This measurement is a datum to allow futures measurements.

   Rotate the spacer tube "B" so that the distance between the end of the spacer tube and the stepped shoulder of the link rod "A" is **16.5 to 18.5 mm, dimension " C" .**

   Crimp the end of the spacer tube, adjacent to the knurled section of the tube, against the flats of the threaded adjustment rod using a suitable tool. This is to prevent the tube from turning thus altering the adjustment.

2. For existing valve linkage.

   Measure the distance between the end of the spacer tube and the stepped shoulder of the link rod.

   To adjust, hold the threaded adjustment rod flats at the end of the rod "E" to prevent it turning and rotate the adjusting nut "C" one way or another until the correct measurement is obtained.

GENERAL PROCEDURES (CONTINUED)

Procedures " B" to be used when new rear springs are fitted.

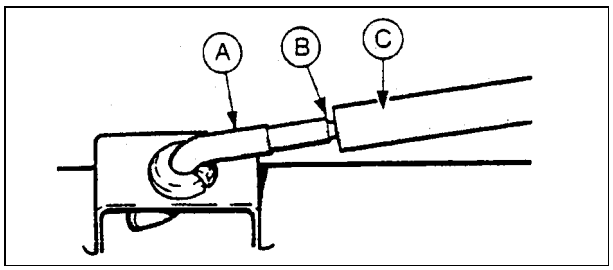

1. Follow sub operation 1 (for new valve linkage) or sub operation 2 (for existing linkage) of "A" above, except that the setting position for the end of the spacer tube is now to align to the groove in the link rod.

GENERAL PROCEDURES

Brake Disc Run out Check

Special Tool(s)	
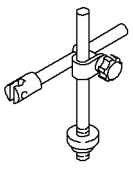 15022A	Holding Fixture, Dial Indicator Gauge 205-070 (15-022A)

General Equipment
Dial indicator gauge
Micrometer

Check

1. Loosen the wheel nuts.
2. Raise and support the vehicle. additional information, refer to Section 100-02.
3. Remove the wheel.
4. Remove the brake pads. For additional information, refer to Section 206-03 refer to Section 206-04.
5. Reverse and install the wheel nuts to hold the brake disc in place.
6. Install a Dial indicator gauge and holding fixture to the suspension strut.

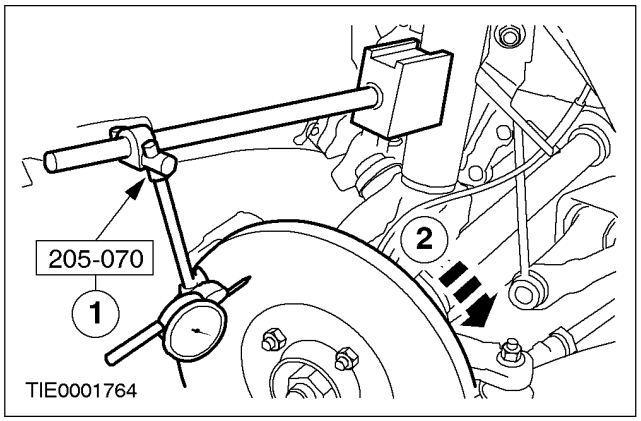

7. **NOTE:** If the run out is outside the specification, check the wheel hub face run out.
   Using a suitable dial indicator gauge measure the inner and outer faces of the disc.

   1. Position the gauge so that it contacts the disc 10 mm from the outer edge.
   2. Slowly rotate the disc. The total dial reading should not exceed the given specification. For additional information, refer to Specification. in this section

GENERAL PROCEDURES (CONTINUED)

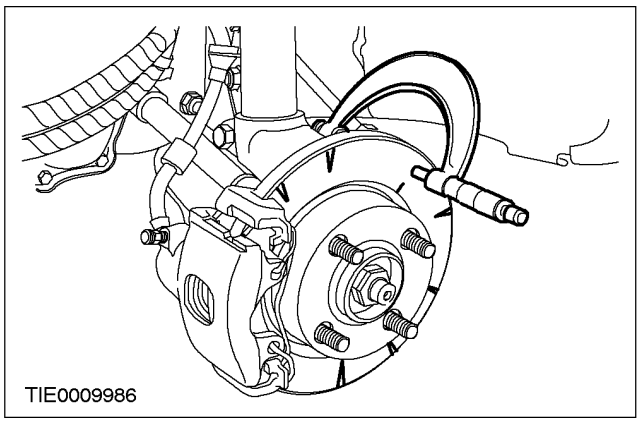

8. Check the brake disc thickness variation.
   - Using a suitable Micrometer measure the disc thickness at eight positions 45° apart and 15 mm in from the outer edge of the brake disc.
   - If any of the readings vary by 0.015 mm or more, or the brake disc thickness is less than the specified minimum, a new brake disc should be installed.

9. Remove the brake disc. For additional information, refer to Section 206-03 refer to Section 206-04.

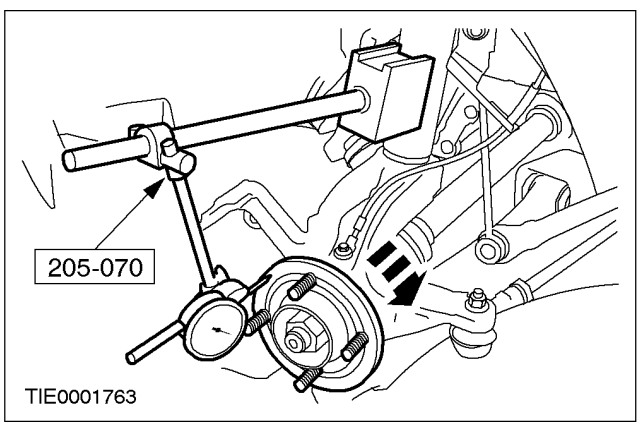

10. **NOTE:** Make sure the wheel hub face is clean and free of rust and foreign material. Using the special tool, check the wheel hub face run out.
    - Slowly rotate the wheel hub and check the run out. If the run out exceeds the given specification. Install a new wheel hub and recheck. For additional information, refer to Section 204-01.

11. If the hub face run out is within specification install a new brake disc and recheck the brake disc run-out. For additional information, refer to Section 206-03 refer to Section 206-04.

SPECIFICATIONS

Lubricants, Fluids, Sealers and Adhesives

Item	Specification
High temperature grease	SAM - 1C9111-A
Super DOT 4 brake fluid	SAM - 6C9103-A

Front Disc Brake Specification

	mm
Brake disc diameter	239.5
New brake disc nominal thickness	20
Worn brake disc discard thickness *	18
Maximum brake disc run out (installed)	0.1
Maximum brake disc thickness variation	0.025
Brake caliper piston diameter	54
Minimum brake pad thickness	1.5
*When the discard thickness has been reached install a new brake disc.	

Drum Brake Specification

	mm
New brake drum nominal diameter	203
Worn brake drum discard diameter *	204
Brake shoe width	30
Wheel cylinder bore diameter	17.78
New primary brake shoe lining thickness	6
New secondary brake shoe lining thickness	3.1
Minimum brake shoe lining thickness	1.0
*When the discard diameter has been reached install a new brake drum.	

SECTION 206-02 Drum Brake

VEHICLE APPLICATION: 2002 Bantam

SUBJECT **PAGE**

DESCRIPTION AND OPERATION

Drum Brake 206-02-2

DIAGNOSIS AND TESTING

Drum Brake 206-02-3

REMOVAL AND INSTALLATION

Brake Drum Replacement ..... (12 275 0) 206-02-4/5
Brake Shoes ..... (12 285 0) 206-02-6/10
Wheel Cylinder ..... (12 305 0) 206-02-11/12
Backing Plate ..... (12 313 0) 206-02-13

SPECIFICATIONS

Specifications 206-02-14
Lubricants, Fluids, Sealers and Adhesives 206-02-14
Drum Brake Specifications 206-02-14
Torque Specifications 206-02-14

DESCRIPTION AND OPERATION

Drum Brake

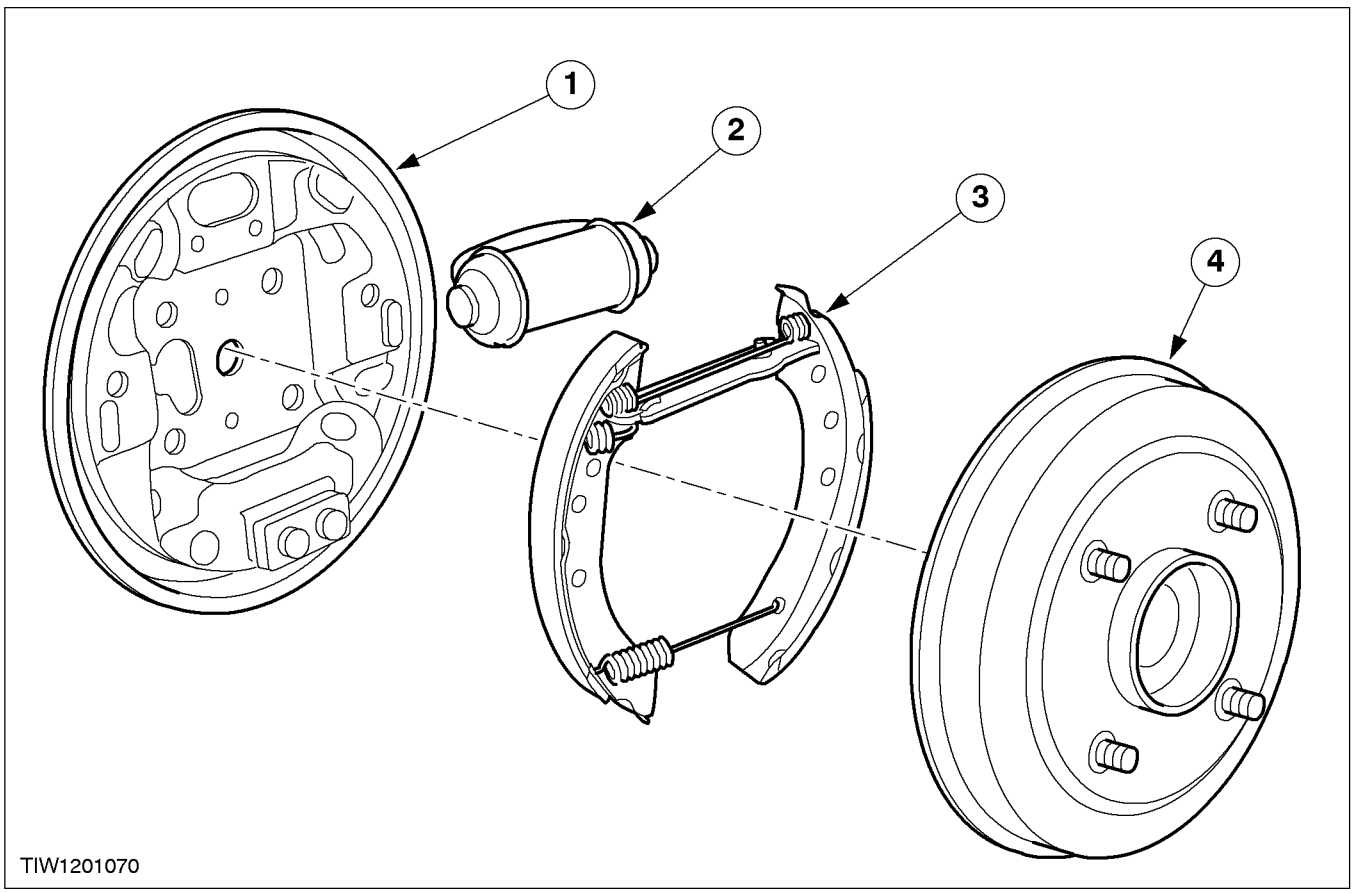

Item	Description
1	Backing plate
2	Wheel cylinder

Item	Description
3	Brake shoes
4	Brake drum

DIAGNOSIS AND TESTING

Drum Brake

REFER to Section 206-00.

REMOVAL AND INSTALLATION

Brake Drum Replacement (12 275 0)

Removal

1. Remove the parking brake control cover trim. For additional information, refer to Section 206-02.

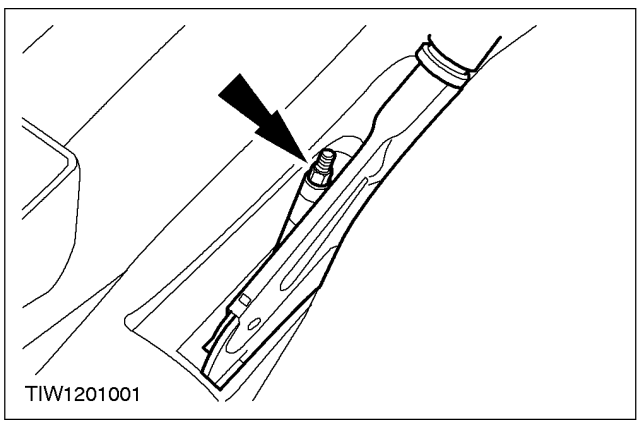

2. Lower the parking brake control lever and loosen the adjustment nut.

3. Loosen the wheel nuts.

4. Raise and support the vehicle. For additional information, refer to Section 100-02.

5. Remove the wheel.

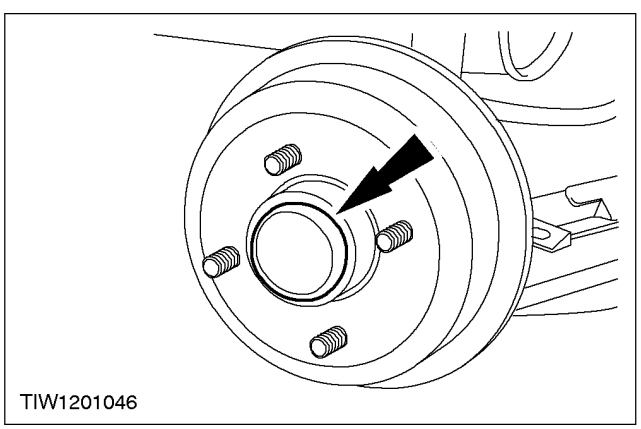

6. **CAUTION: If the grease cap is damaged during removal install a new cap.**
   Remove the grease cap.

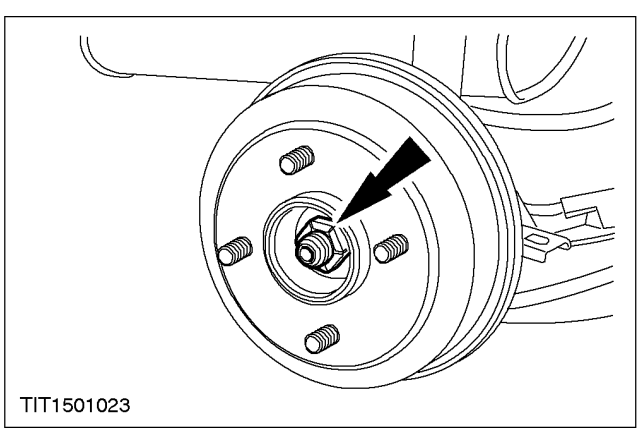

7. Loosen the drum-retaining nut.

REMOVAL AND INSTALLATION (CONTINUED)

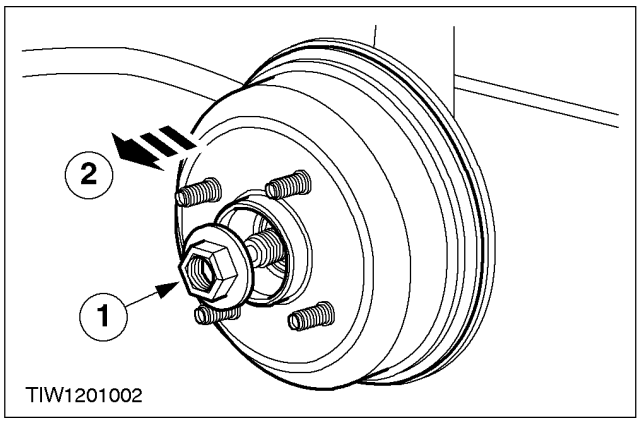

8. **NOTE:** When removing the drum make sure the wheel bearing is not displaced from its housing.
   Remove the drum.
   1. Remove the nut.
   2. Remove the drum.
   - Ensure the wheel bearing is not displaced from its housing.

Installation

CAUTION: Once tightened, the hub-retaining nut must not be disturbed. If the torque setting requires to be checked the nut must be loosened two full turns and re-tightened.

NOTE: Rotate the hub while tightening the hub-retaining nut.

1. To install, reverse the removal procedure.

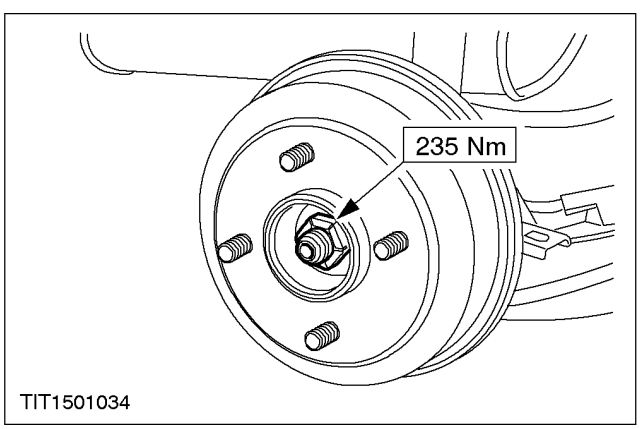

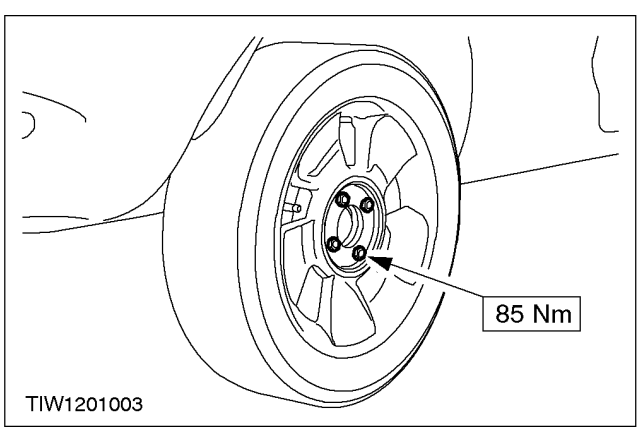

4. Adjust the parking brake cable.
   For additional information,
   refer to Section 206-05.

REMOVAL AND INSTALLATION

Brake Shoes (12 285 0)

Material	Specification
Grease	SAM1C-9107-A

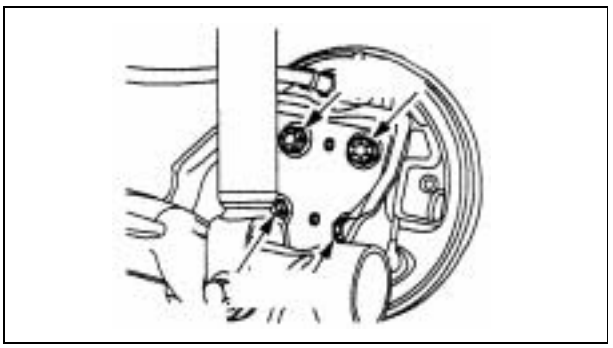

Removal

1. Remove the brake drum, wheel spindle and wheel hub assembly.
   For additional information,
   refer to Brake Drum in this section.

2. Remove the brake shoe hold down springs.

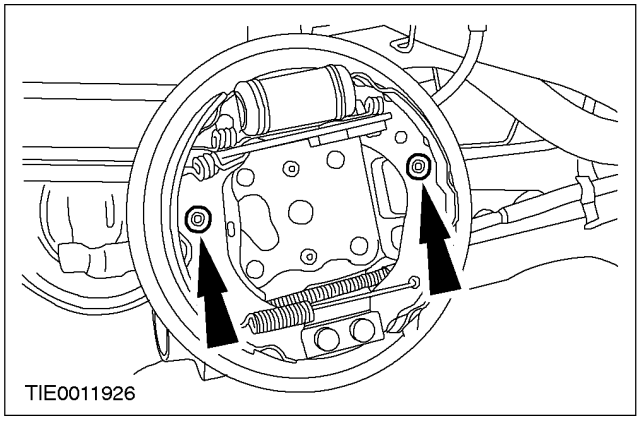

3. Hold the wheel cylinder pistons in place with a rubber band.

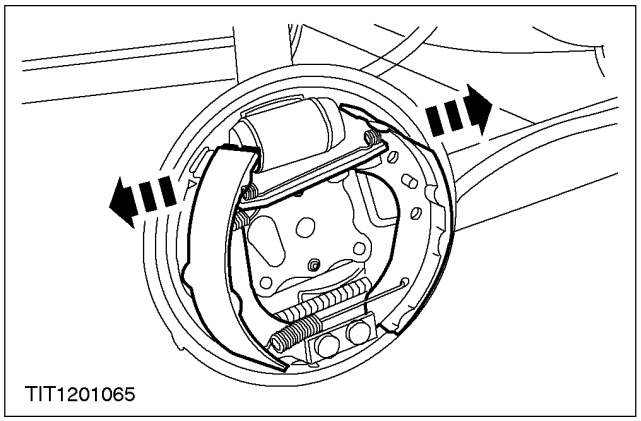

4. ⚠ **CAUTION: Do not damage the wheel cylinder boots when detaching the brake shoes.**
   Detach the brake shoes from the wheel cylinder pistons.

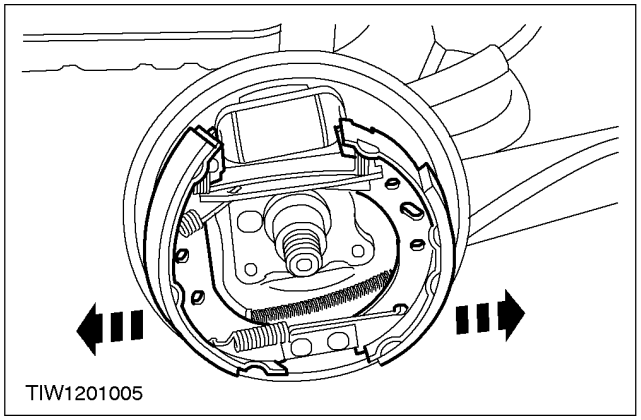

5. Detach the brake shoes from the abutment bracket.

REMOVAL AND INSTALLATION (CONTINUED)

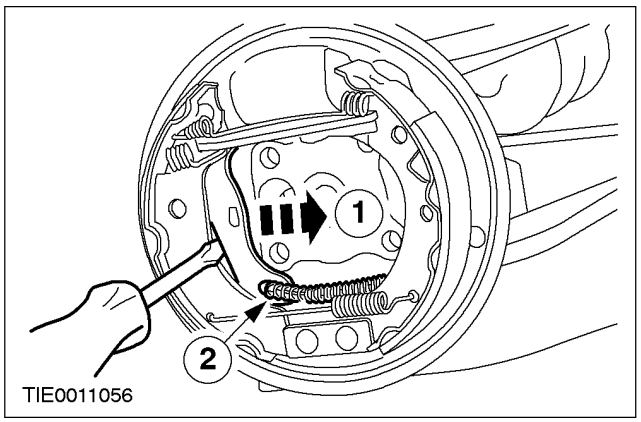

6. Detach the parking brake cable.
   1. Pull the secondary brake shoe lever backwards.
   2. Disconnect the cable from the secondary brake shoe.

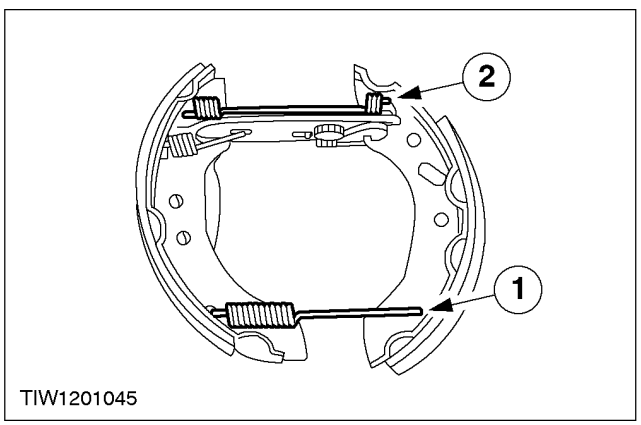

7. Remove the brake shoe return springs.
   1. Remove the lower spring.
   2. Remove the upper spring.

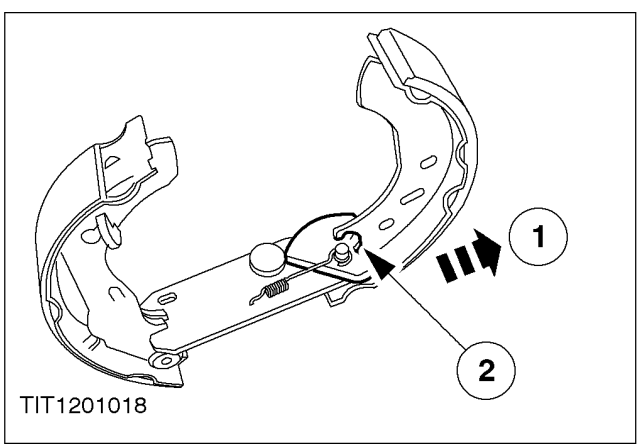

8. Detach the primary brake shoe from the strut support.
   1. Pull the primary brake shoe away from the support.
   2. Detach the primary brake shoe.

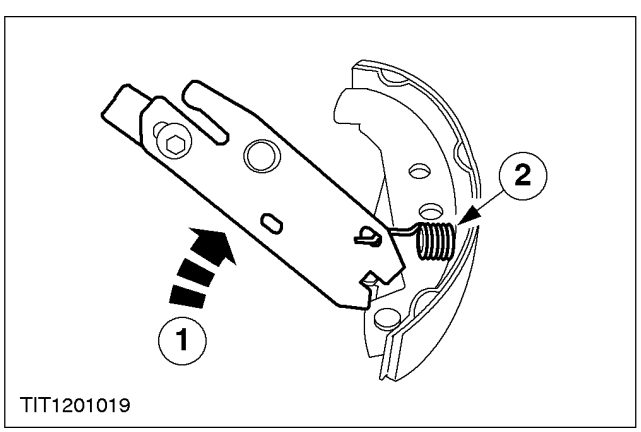

9. Detach the secondary brake shoe from the strut support.
   1. Rotate the brake shoe through 90 degrees.
   2. Detach the spring.

REMOVAL AND INSTALLATION (CONTINUED)

Installation

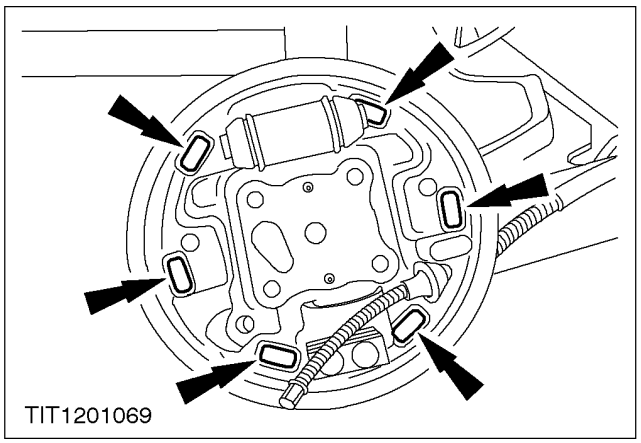

1. Clean, check and apply grease to the backing plate contact points.

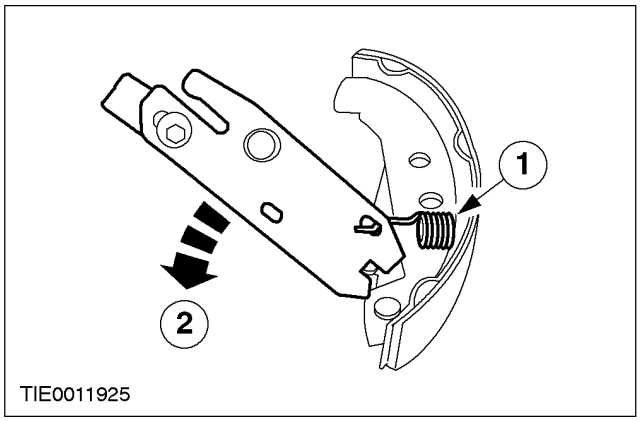

2. Install the strut support to the secondary brake shoe.
   1. Install the spring.
   2. Rotate the brake shoe through 90 degrees into position.

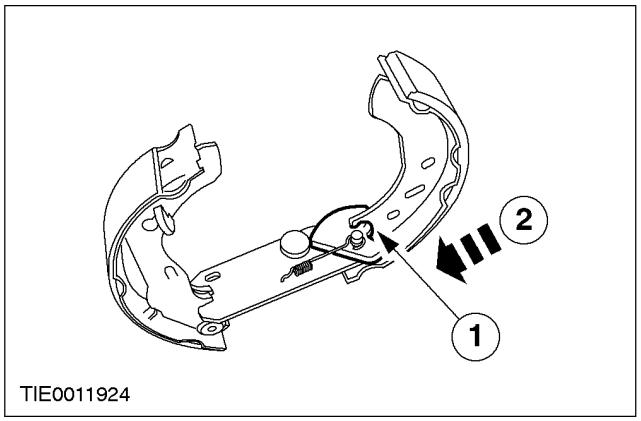

3. Install the primary brake shoe to the strut support.
   1. Position the brake shoe.
   2. Push the primary brake shoe onto the support.

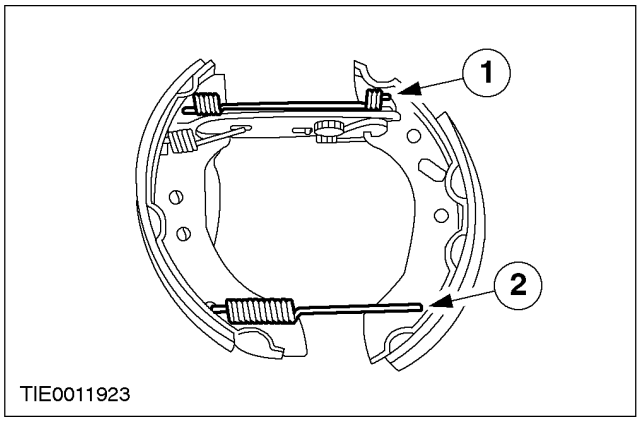

4. Install the brake shoe return springs.
   1. Install the upper return spring.
   2. Install the lower return spring.

REMOVAL AND INSTALLATION (CONTINUED)

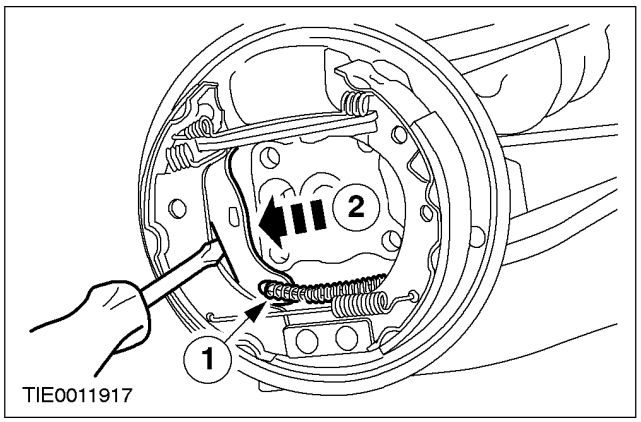

5. Install the parking brake parking brake cable.
   1. Connect the parking brake cable.
   2. Push the secondary brake shoe lever forwards.

6. Remove the rubber band holding the wheel cylinder pistons in place.

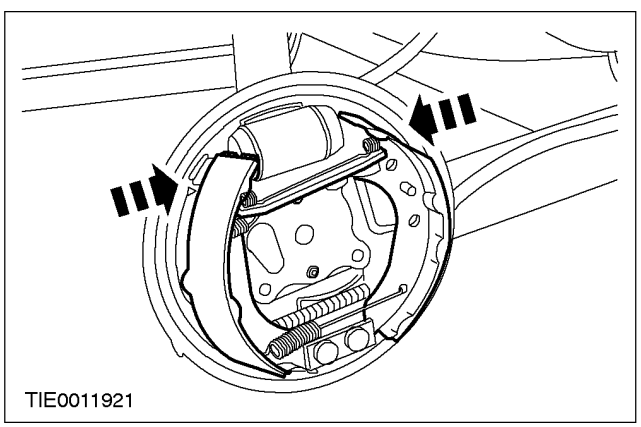

7. ⚠ **CAUTION: Do not damage the wheel cylinder boots.**
   Connect the brake shoes to the wheel cylinder.

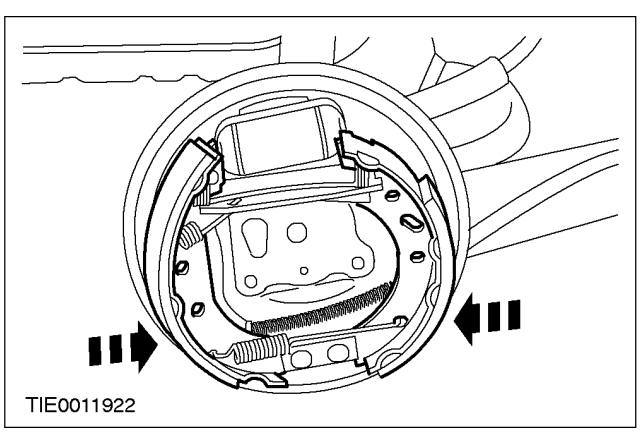

8. Attach the brake shoes to the abutment block.

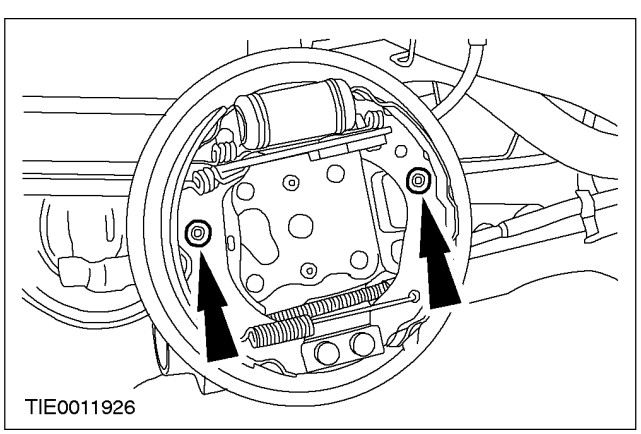

9. Install the hold down springs.

REMOVAL AND INSTALLATION (CONTINUED)

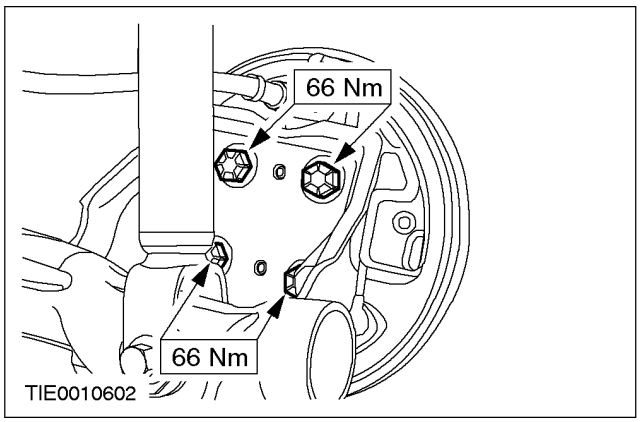

10. Install the brake drum, wheel spindle and wheel hub assembly.

11. Adjust the parking brake cable. For additional information, refer to Section 206-05.

REMOVAL AND INSTALLATION

Wheel Cylinder (12 305 0)

General Equipment
Brake hose clamp

Removal

1. Remove the brake shoes. For additional information,
   refer to Brake Shoes in this section.

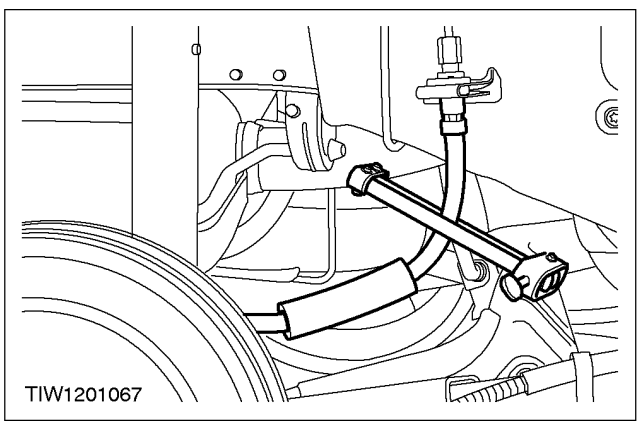

2. Using a suitable brake hose clamp, clamp the brake hose.

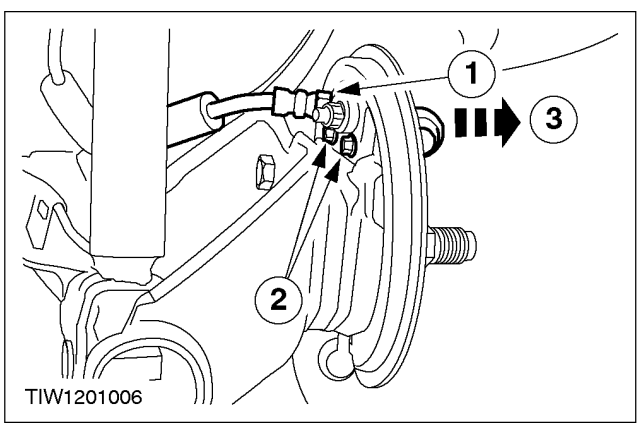

3. Remove the wheel cylinder.
   1. Disconnect the brake hose union.
   2. Remove the bolts.
   3. Remove the wheel cylinder.

Installation

NOTE: Make sure a gasket is installed between the wheel cylinder and back plate.

REMOVAL AND INSTALLATION (CONTINUED)

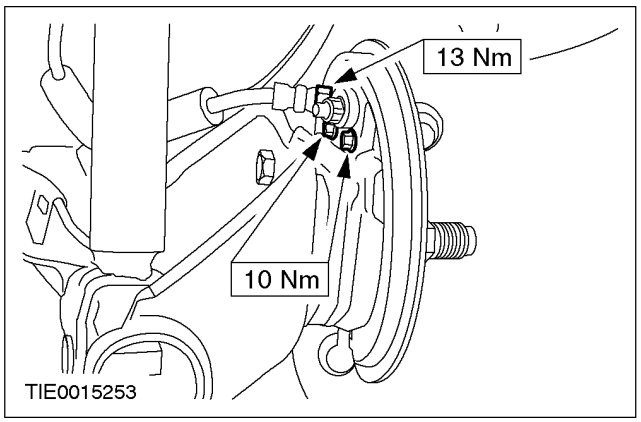

1. Install the wheel cylinder.
   1. Install the wheel cylinder bolts.
   2. Install the brake hose union.
2. Remove the brake hose clamp.
3. Bleed the brake system. For additional information, refer to Section 206-00.

REMOVAL AND INSTALLATION

Backing Plate (12 313 0)

Removal

1. Remove the brake shoes.
   For additional information,
   refer to Brake Shoes in this section.

2. Remove the wheel cylinder.
   For additional information,
   refer to Wheel Cylinder in this section.

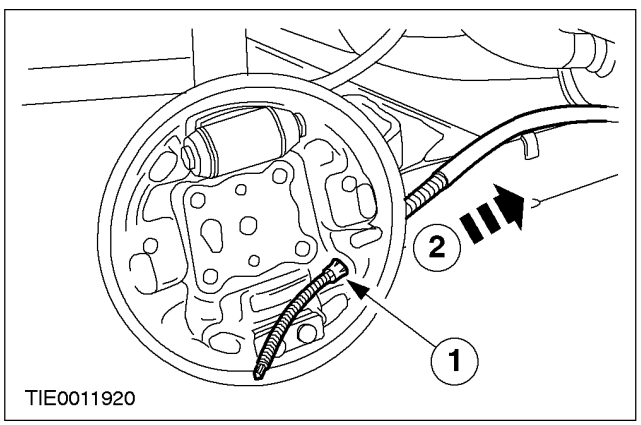

3. Detach the parking brake cable.
   1. Depress the retaining clip.
   2. Remove the cable.

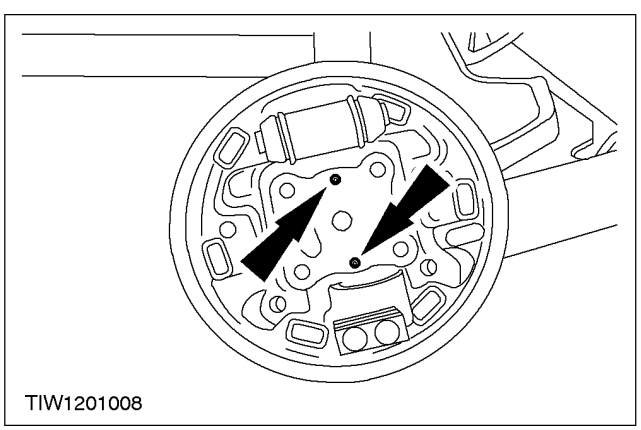

4. Remove the backing plate.
   - Drill out the rivets.

Installation

1. To install, reverse the removal procedure.

SPECIFICATIONS

Lubricants, Fluids, Sealers and Adhesives

Item	Specification
Grease – Brake shoe contact pads on backing plate	SAM-1C9111-A
Super Dot 4 Brake fluid	SAM-6C9103-A

Drum Brake Specifications

	mm
New brake drum nominal diameter	203
Worn brake drum discard diameter *	204
Brake shoe width	30
Wheel cylinder bore diameter	17.78
New primary brake shoe lining thickness	6
New secondary brake shoe lining thickness	3.1
Minimum brake shoe lining thickness	1.0

* When the discard brake drum diameter has been reached a new brake drum must be installed. Particular care must be taken when refinishing brake drums that the discard brake drum diameter dimensions are not exceeded.

Torque Specifications

Description	Nm
Wheel hub retaining nut	235
Wheel nuts	85
Brake drum and wheel hub assembly bolts	66
Wheel cylinder retaining bolts	15
Brake hose union	13

SECTION 206-03 Front Disc Brake

VEHICLE APPLICATION: 2002 Bantam

SUBJECT **PAGE**

DESCRIPTION AND OPERATION

Front Brake Disc 206-03-2

DIAGNOSIS AND TESTING

Front Brake Disc 206-03-3

REMOVAL AND INSTALLATION

Brake Pads 206-03-4/6
Brake Caliper ..... (12 243 0) 206-03-7/8

DISASSEMBLY AND ASSEMBLY

Brake Caliper 206-03-9/10

SPECIFICATIONS

Specifications 206-03-11
Lubricants, Fluids, Sealers and Adhesives 206-03-11
Front Disc Brake Specification 206-03-11
Torque Specifications 206-03-11

DESCRIPTION AND OPERATION

Front Brake Disc

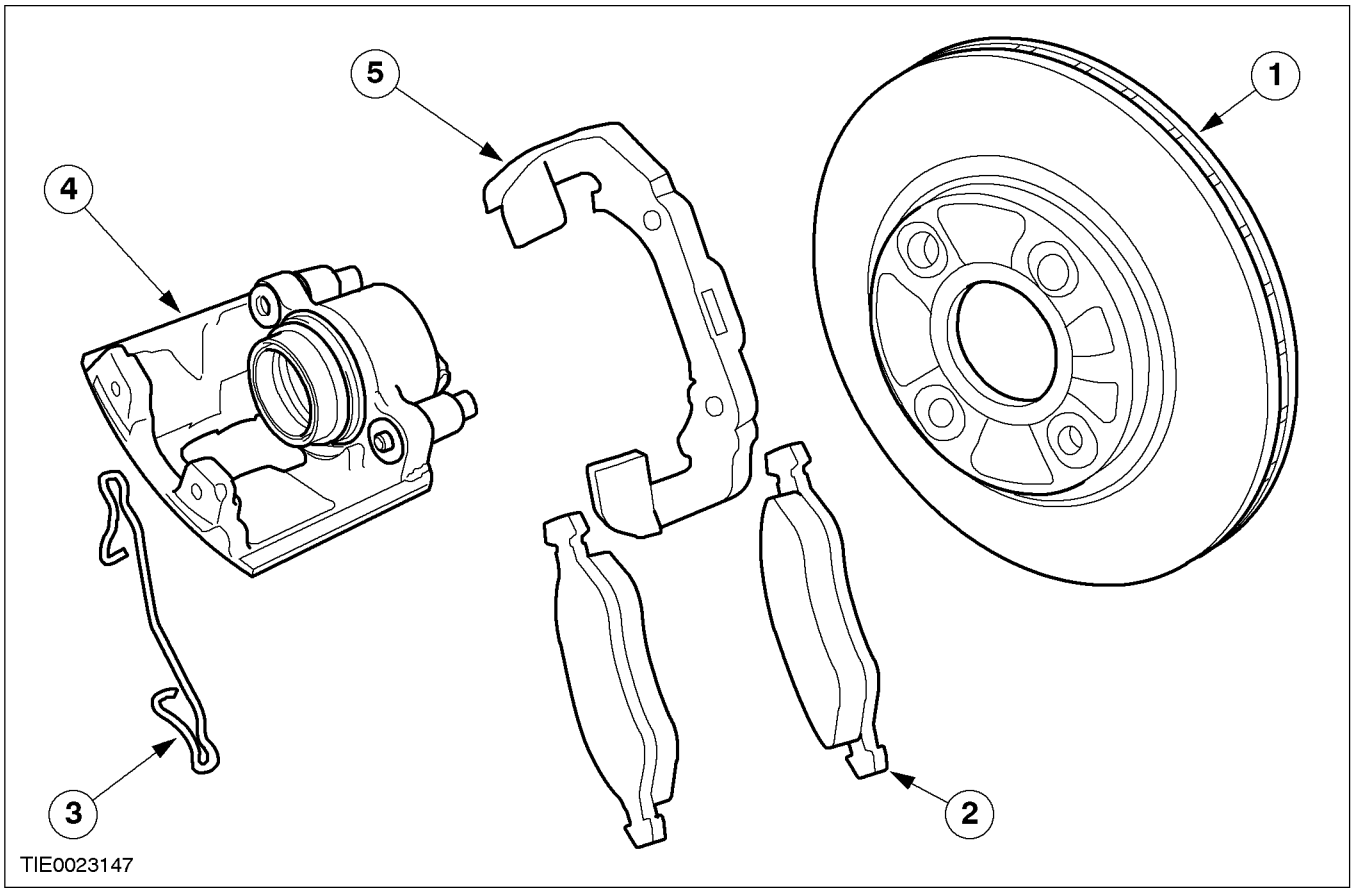

Item	Description
1	Brake disc
2	Brake pad

Item	Description
3	Brake caliper retaining clip
4	Brake caliper
5	Brake caliper anchor plate

DIAGNOSIS AND TESTING

Front Brake Disc

REFER to Section 206-00.

REMOVAL AND INSTALLATION

Brake Pads

Special Tool(s)	
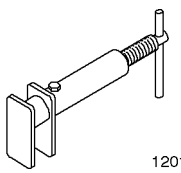 12014	Retractor, Caliper Piston 206-005 (12-014)

Material	Specification
Super DOT 4 brake fluid	ESD-M6C57-A

Removal

CAUTION: If brake fluid is spilt on the paintwork, the affected area must be immediately washed down with cold water.

1. Remove the wheel and tyre. For additional information, refer to Section 204-03.
2. Remove the brake caliper retaining clip.

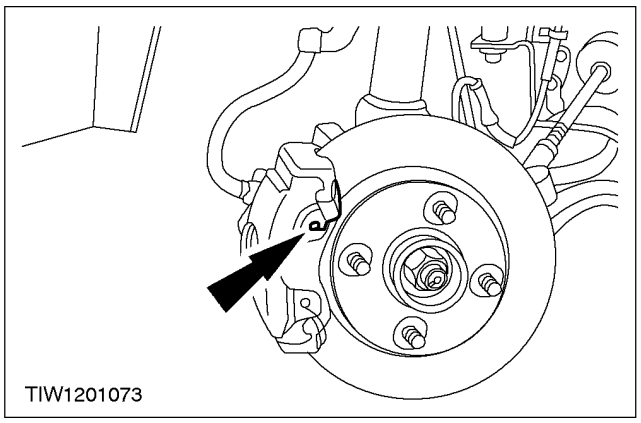

CAUTION: Suspend the brake caliper to prevent load being placed on the brake hose.

3. Detach the brake caliper from the anchor plate.
   1. Remove the covers.
   2. Remove the bolts.

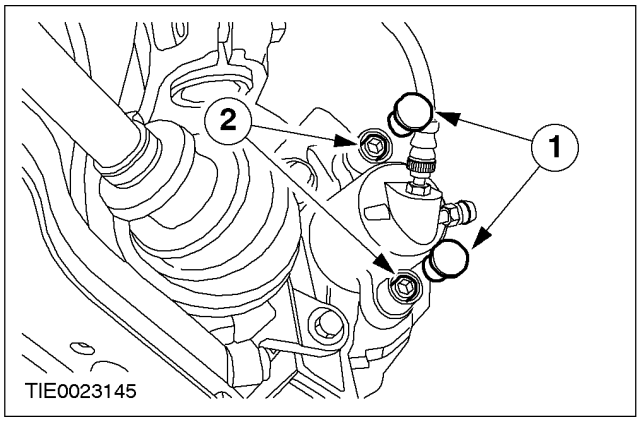

REMOVAL AND INSTALLATION (CONTINUED)

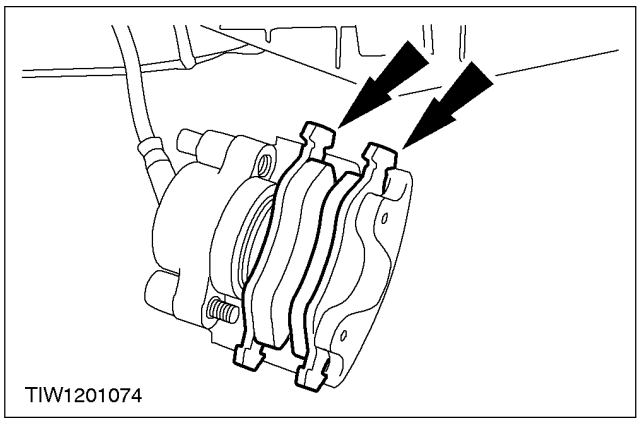

4. Remove the brake pads.

Installation

CAUTION: When the brake caliper pistons are retracted into the piston housing, brake fluid will be displaced into the brake fluid reservoir.

1. Using the special tool, retract the brake caliper pistons.

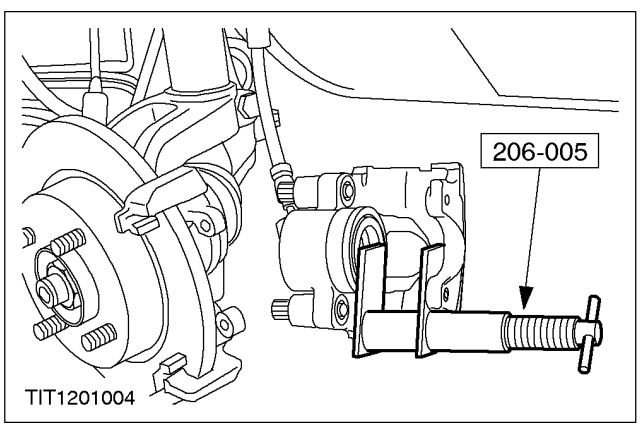

CAUTION: Make sure the disc faces are clean and free from grease, dirt or rust prior to assembly.

2. Install the brake pads.

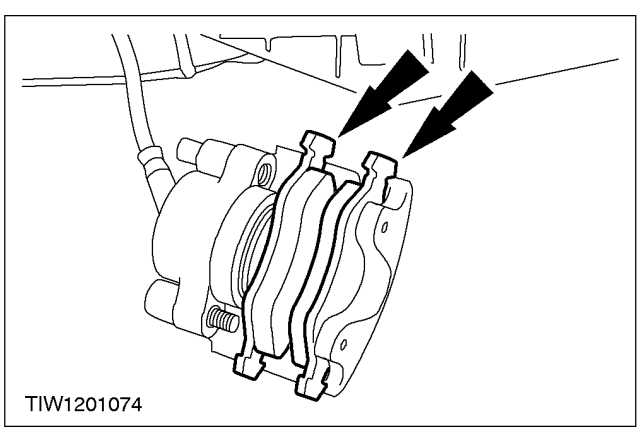

REMOVAL AND INSTALLATION (CONTINUED)

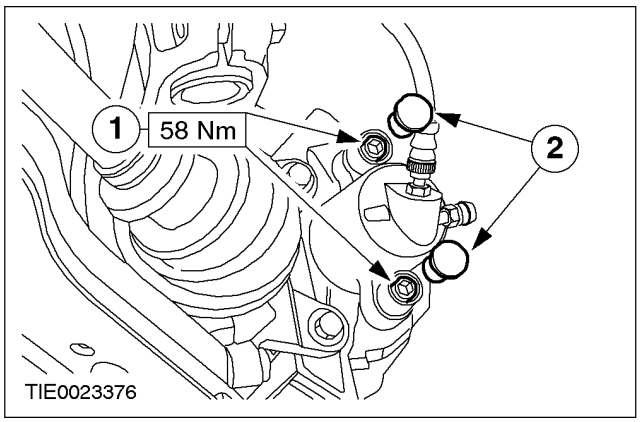

3. Attach the brake caliper to the anchor plate.
   1. Install the bolts.
   2. Install the covers.

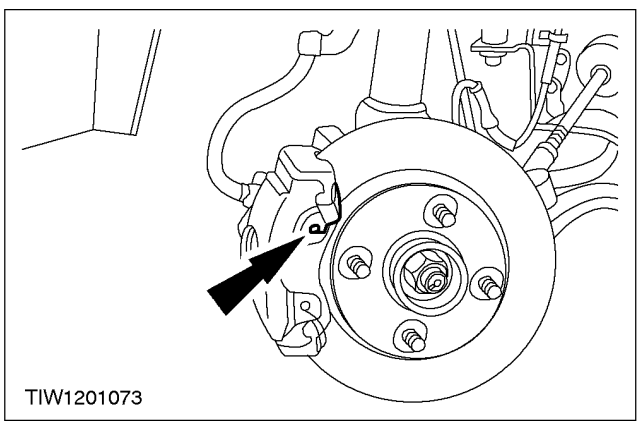

4. Install the brake caliper retaining clip.

5. Install the wheel and tyre. For additional information, refer to Section 204-03.

6. Depress the brake pedal, check the fluid level in the brake fluid reservoir and top up if necessary with brake fluid.

REMOVAL AND INSTALLATION

Brake Caliper (12 243 0)

General Equipment
Brake hose clamp

Removal

CAUTION: If brake fluid is spilt on the paintwork, the affected area must be immediately washed down with cold water.

1. Remove the wheel and tyre. For additional information, refer to Section 204-03.

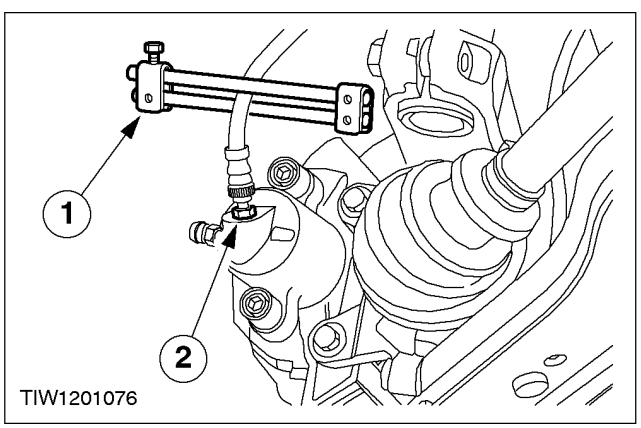

2. Loosen the flexible hose brake union.
   1. Using a suitable brake hose clamp, clamp the brake hose.
   2. Loosen the brake hose union.

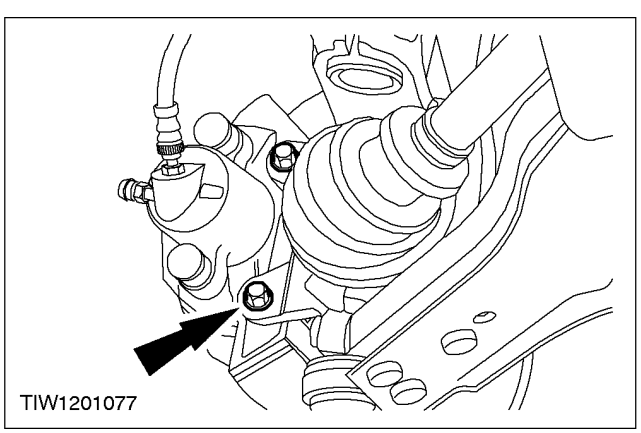

3. Remove the brake caliper and anchor plate assembly.

REMOVAL AND INSTALLATION (CONTINUED)

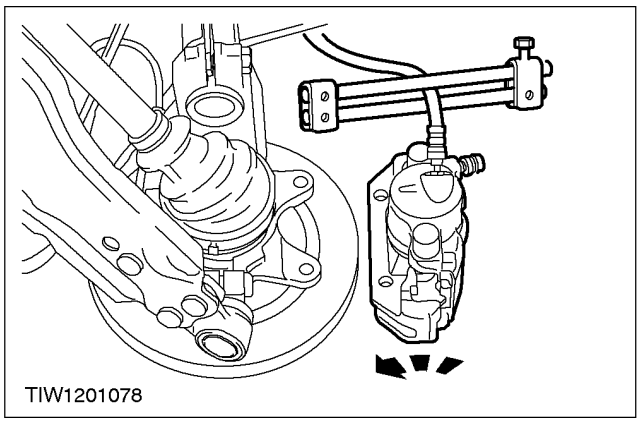

4. ⚠ **CAUTION: Cap the brake hose to prevent fluid loss or dirt ingress.**
   Detach the brake caliper and anchor plate assembly from the flexible brake hose.
   - Turn the caliper and anchor plate assembly counter clockwise to remove.

Installation

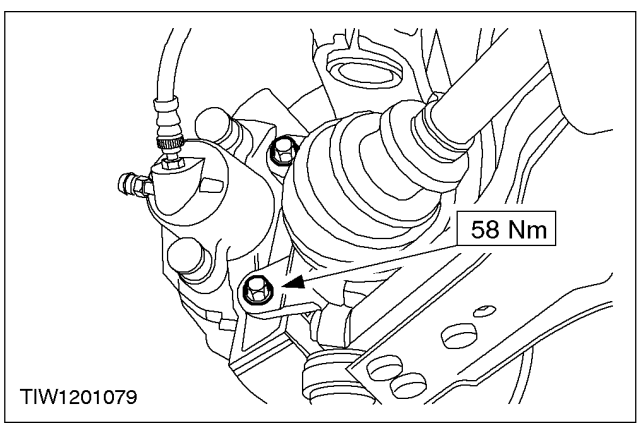

1. To install, reverse the removal procedure.

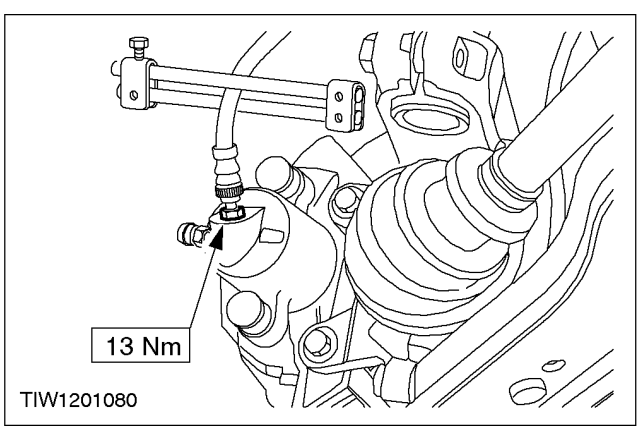

2. Bleed the brake system. For additional information, refer to Section 206-00.

DISASSEMBLY AND ASSEMBLY

Brake Caliper

Material	Specification
Super DOT 4 brake fluid	ESD-M6C57-A

Disassembly

CAUTION: If brake fluid is spilt on the paintwork, the affected area must be immediately washed down with cold water.

1. Remove the brake caliper dust seal.
   - Discard the seal.

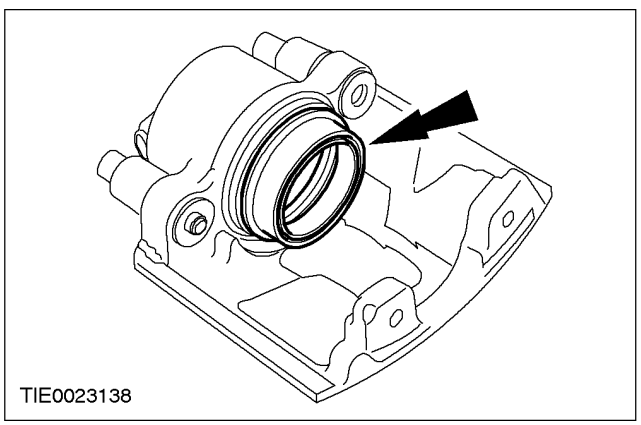
TIE0023138

2. Place a suitable block of wood between the body of the brake caliper and the brake caliper piston.

3. **WARNING: Use only as much compressed air as is necessary to remove the brake caliper piston. Failure to follow these instructions may result in personal injury.**

CAUTION: Do not use a screwdriver or any other similar tool to pry the brake caliper piston out of the brake caliper bore.

Apply compressed air through the brake hose housing to remove the brake caliper piston.

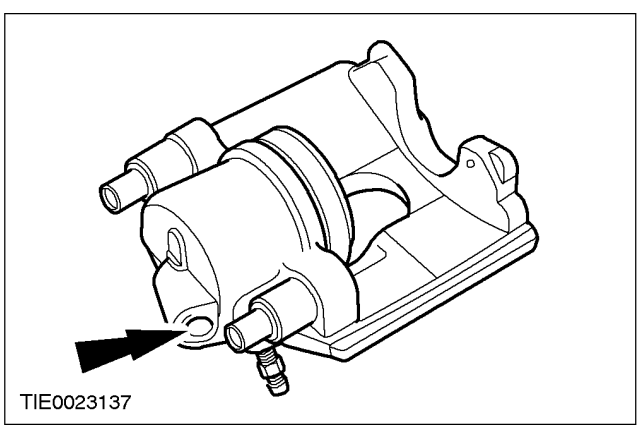
TIE0023137

DISASSEMBLY AND ASSEMBLY (CONTINUED)

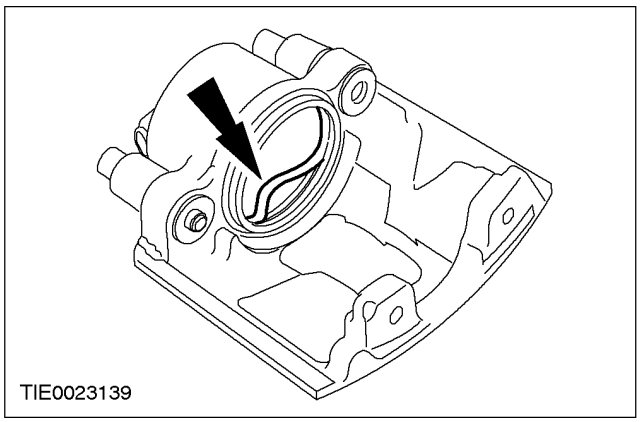

4. **CAUTION: Do not use a screwdriver or any other similar tool to pry the brake caliper piston seal out of the brake caliper bore.**

   Remove the brake caliper piston seal.

   - Discard the seal.

Assembly

WARNING: Install a new brake caliper piston if rust, pitting or scores are evident. Failure to follow these instructions may result in personal injury.

WARNING: Install a new brake caliper if rust, pitting or scores are evident in the brake caliper bore. Failure to follow these instructions may result in personal injury.

NOTE: Install a new brake caliper piston seal and a new brake caliper dust seal.

NOTE: Lubricate the piston, piston bore and piston seal with Super DOT 4 brake fluid prior to installation.

1. To assemble, reverse the disassembly procedure.

SPECIFICATIONS

Lubricants, Fluids, Sealers and Adhesives

Item	Specification
Super DOT 4 brake fluid	SAM 6C9103-A

Front Disc Brake Specification

	mm
Brake disc diameter	239.5
New brake disc nominal thickness	20
Worn brake disc discard thickness *	18
Maximum brake disc run out (installed)	0.1
Maximum brake disc thickness variation	0.025
Brake caliper piston diameter	54
Minimum brake pad thickness	1.5
* When the discard thickness has been reached, install a new brake disc.	

Torque Specifications

Description	Nm
Wheel nuts	85
Brake caliper piston housing retaining bolts	58
Brake caliper anchor bracket retaining bolts	58
Brake hose to brake caliper union	13

SECTION 206-04 Wheels and Tyres

VEHICLE APPLICATION: 2002 Bantam

SUBJECT **PAGE**

REMOVAL AND INSTALLATION

Wheel and Tyre 206-04-2

REMOVAL AND INSTALLATION

Wheel and Tyre

Removal

CAUTION: Do not use heat to loosen a seized wheel nut. Heat may damage the wheel and wheel hub.

1. Loosen the wheel nuts.
2. Raise and support the vehicle.
   For additional information,
   refer to Section 100-02.
3. Remove the wheel and tyre assembly.

Installation

1. **WARNING: Remove the corrosion or dirt from the mounting surfaces of the wheel, wheel hub, brake drum or brake disc, as this may cause the wheel nuts to loosen and the wheel to come off while the vehicle is in motion. Failure to follow this instruction may result in personal injury.**
   Clean the wheel hub and mounting surfaces.
2. Install the wheel and tyre assembly.
3. Lower the vehicle.
4. Tighten the wheel nuts in a diagonally opposed pattern.

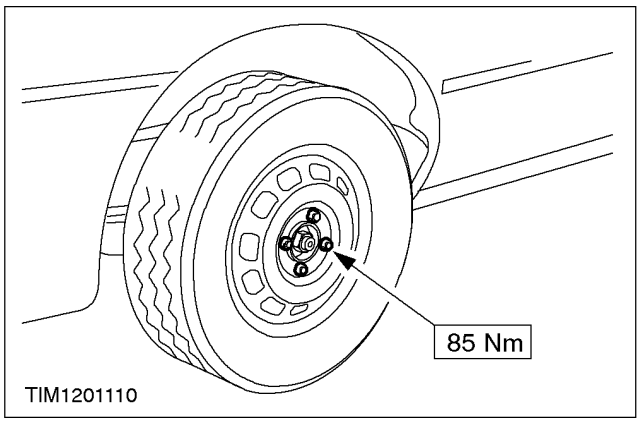

SECTION 206-05 Parking Brake and Actuation

VEHICLE APPLICATION: 2002 Bantam

SUBJECT		PAGE
DESCRIPTION AND OPERATION		
Parking Brake		206-05-2
DIAGNOSIS AND TESTING		
Parking Brake		206-05-3
Inspection and Verification		206-05-3
Symptom Chart		206-05-3/5
REMOVAL AND INSTALLATION		
Parking Brake Control	(12 664 0)	206-05-6/7
Parking Brake Cable and Conduit	(12 675 0)	206-05-8/10
Parking Brake Warning Indicator Switch	(33 546 0)	206-05-11
GENERAL PROCEDURES		
Parking Brake Cable Adjustment	(12 662 0)	206-05-12
SPECIFICATIONS		
Specifications		206-05-13
Torque Specifications		206-05-13

DESCRIPTION AND OPERATION

Parking Brake

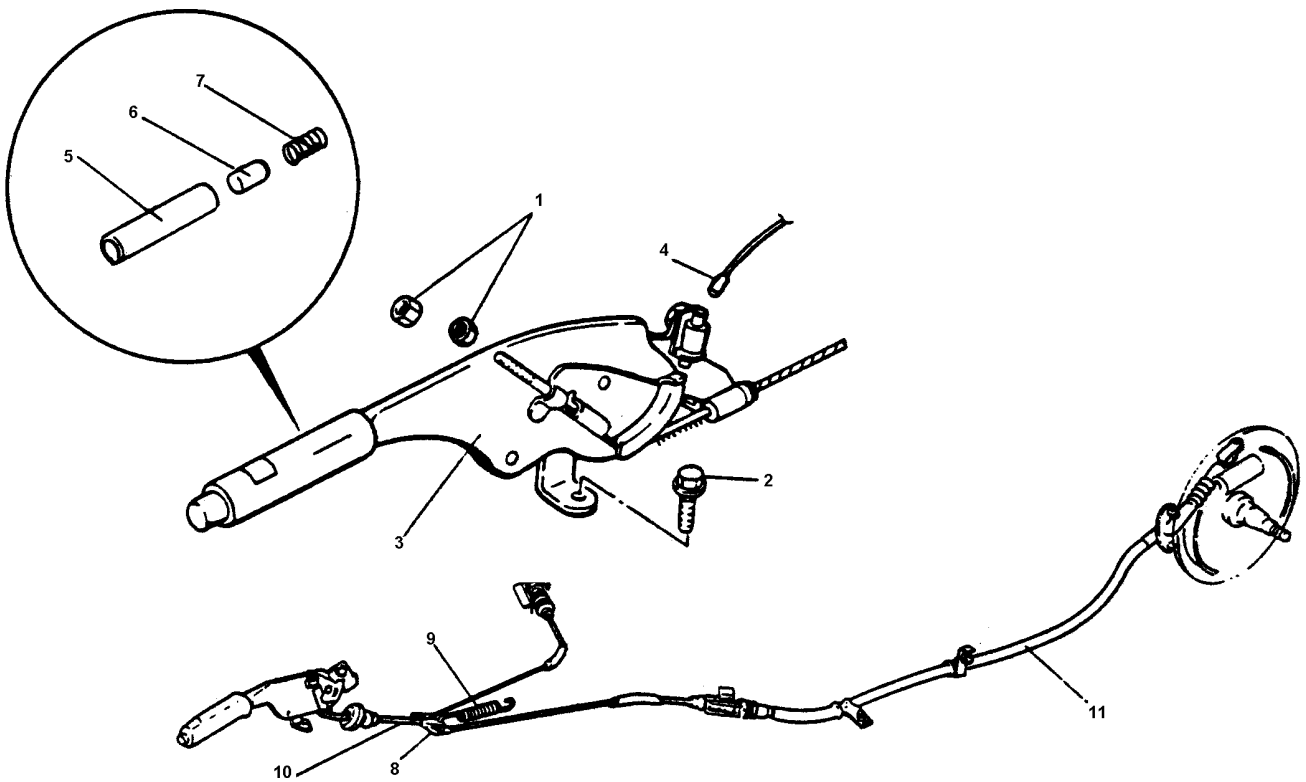

Item	Description
1	Adjusting nut
2	Bolt
3	Parking brake lever
4	Parking brake switch coupler
5	Grip

Item	Description
6	Push button
7	Return spring
8	Equaliser
9	Return spring
10	Front parking brake cable
11	Rear parking brake cable

DIAGNOSIS AND TESTING

Parking Brake

Inspection and Verification

1. Verify the customer concern by operating the parking brake system.
2. Visually inspect for obvious signs of mechanical or electrical damage.
3. If an obvious cause for an observed or reported concern is found, correct the cause (if possible) before proceeding to the next step.
4. If the concern is not visually evident, verify the symptom and refer to the Symptom Chart.

Visual Inspection Chart

Mechanical	Electrical
• Parking brake control • Parking brake cable	• Parking brake warning circuit. REFER to Section 413-01.

Symptom Chart

Symptom Chart

Condition	Possible Sources	Action
•The parking brake will not apply	•Parking brake control. •Parking brake cable.	• GO to Pinpoint Test A.
•The parking brake will not release	•Parking brake control. •Parking brake cable.	• GO to Pinpoint Test B.

PINPOINT TEST A: THE PARKING BRAKE WILL NOT APPLY

CONDITIONS	DETAILS/RESULTS/ACTIONS
A1: CHECK FOR MISADJUSTED REAR PARKING BRAKE CABLE	
	1 Operate the parking brake control several times to adjust the cable. • Does the parking brake now engage correctly? **Yes** Vehicle OK. **No** GO TO **A2**
A2: CHECK FOR WORN BRAKE SHOES	
	1 Inspect the brake shoes for excessive wear. REFER to Section 206-00. • Are the brake shoes and linings OK? **Yes** GO TO **A3** **No** INSTALL new brake shoes. REFER to Section 206-02. TEST the system for normal operation.

DIAGNOSIS AND TESTING (CONTINUED)

CONDITIONS	DETAILS/RESULTS/ACTIONS
A3: CHECK FOR DAMAGED PARKING BRAKE CABLES	
	1 Inspect the parking brake cables for damage, rust or fraying. • Are the parking brake cables OK? **Yes** CHECK for other causes such as loose parking brake control or conventional brake system components. REFER to Section 206-00. **No** REPAIR or INSTALL the parking brake cables as necessary. TEST the system for normal operation.

PINPOINT TEST B: THE PARKING BRAKE WILL NOT RELEASE

CONDITIONS	DETAILS/RESULTS/ACTIONS
B1: CHECK PARKING BRAKE CABLES	
	1 Loosen the parking brake cable tension. - Rotate the rear wheels by hand. • Did the rear wheel turn freely? **Yes** INSTALL a new parking brake control. REFER to Parking Brake Control in this section TEST the system for normal operation. **No** GO TO **B3**
B2: CHECK PARKING BRAKE CONTROL	
	1 Raise and support the vehicle on a lift with the parking brake fully applied. REFER to Section 100-02. - Release the parking brake by pulling upwards on the control level and pushing the release button. • Did the parking brake release? **Yes** CHECK for other causes such as conventional brake system components. REPAIR or INSTALL new components as necessary. REFER to Section 206-00. **No** GO TO **B1**

DIAGNOSIS AND TESTING (CONTINUED)

CONDITIONS	DETAILS/RESULTS/ACTIONS
B3: CHECK FRONT PARKING BRAKE CABLE	
	1 Disconnect the front parking brake cable from the rear parking brake cable at the equalizer. - Rotate the rear wheels by hand. • Did the rear wheel turn freely? **Yes** INSTALL a new front parking brake cable. REFER to Parking Brake Cable in this section TEST the system for normal operation. **No** GO TO **B4**
B4: CHECK REAR PARKING BRAKE CABLES	
	1 Disconnect the rear parking brake cable at the rear brakes, one at a time. - Rotate the wheel affected by the disconnected parking brake cable. • Did the wheel turn freely? **Yes** INSTALL a new rear parking brake cable. REFER to Parking Brake Cable in this section TEST the system for normal operation. **No** CHECK for other causes such as conventional brake system components. REPAIR or INSTALL new components as necessary. REFER to Section 206-00.

REMOVAL AND INSTALLATION

Parking Brake Control (12 664 0)

Removal

1. Remove the parking brake control cover trim.
2. Lower the parking brake control lever.
3. Remove the adjusting nut.

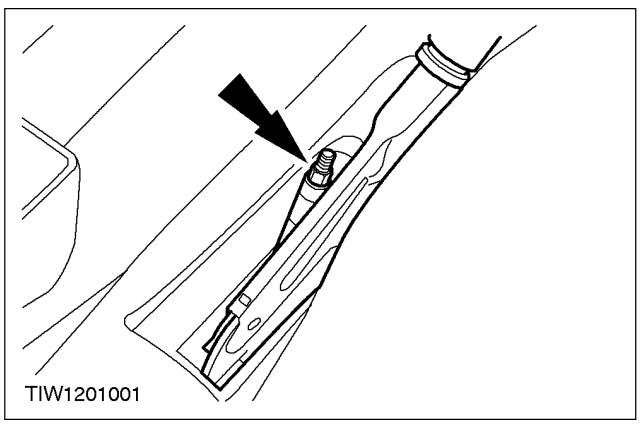

4. Remove the parking brake control nuts.

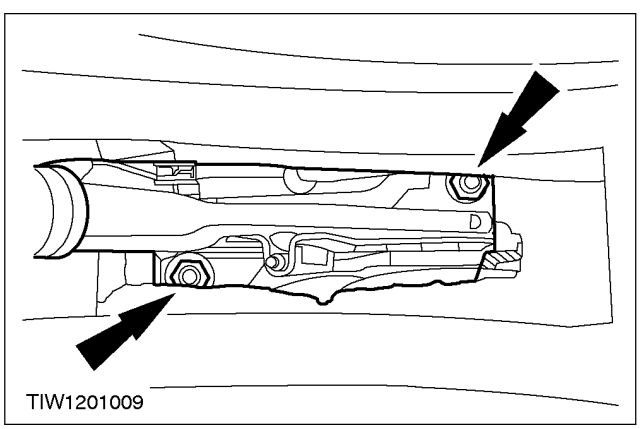

5. Pull the cable out from the parking brake control lever.

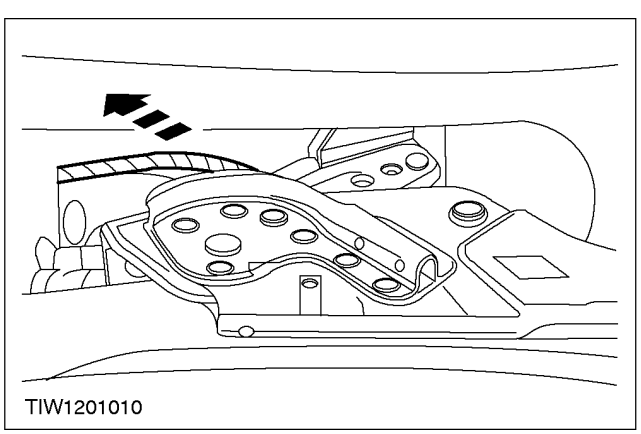

REMOVAL AND INSTALLATION (CONTINUED)

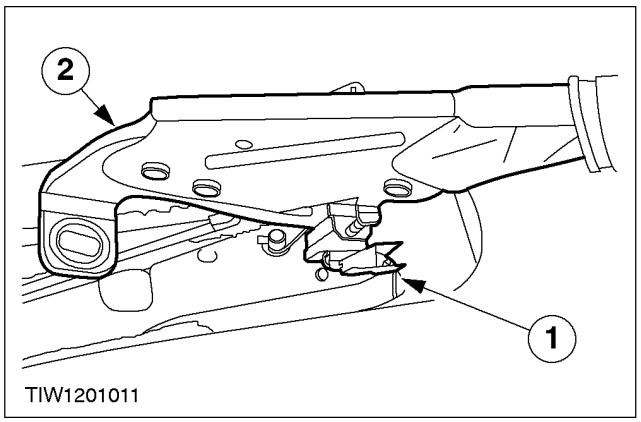

6. Remove the parking brake control.
   1. Disconnect the parking brake warning indicator switch electrical connector.
   2. Remove the parking brake control.

Installation

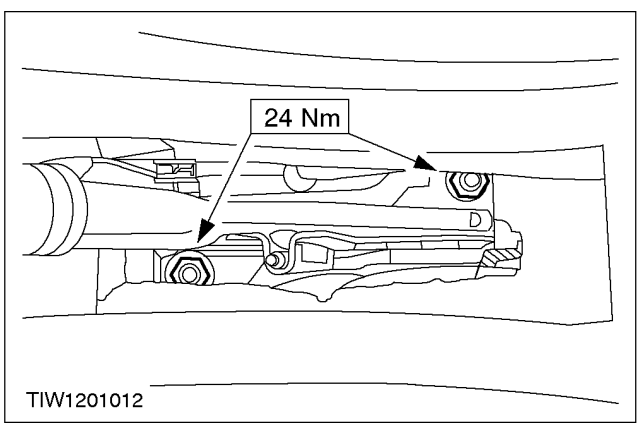

1. To install, reverse the removal procedure.

2. Adjust the parking brake cable.
   For additional information,
   refer to Parking Brake Cable Adjustment in this section

REMOVAL AND INSTALLATION

Parking Brake Cable and Conduit (12 675 0)

Removal

1. Remove the parking brake control cover trim.
2. Lower the parking brake control lever and loosen the adjusting nut.

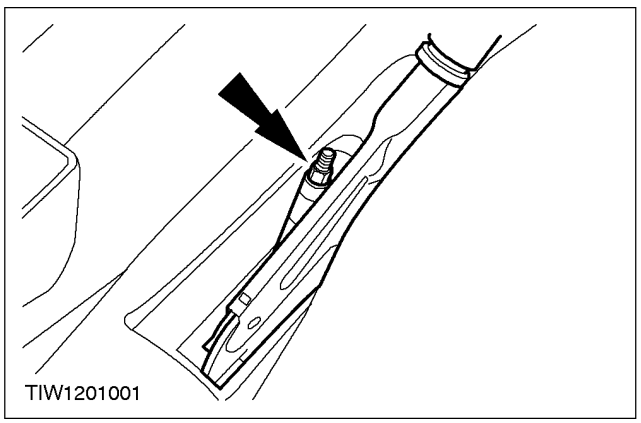

3. Loosen the rear wheel nuts.
4. Raise and support the vehicle.
   For additional information,
   refer to Section 100-02.
5. Remove the wheel.
6. Detach the exhaust system from the rear hanger insulators.

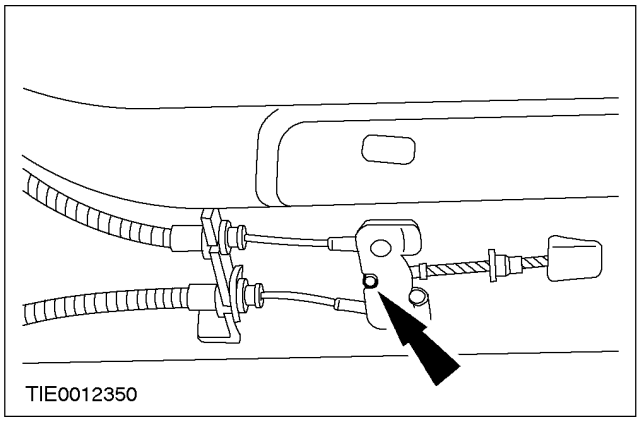

7. Disconnect the equalizer from the front parking brake cable.
   - Turn the front parking brake cable nipple through 90 degrees.

REMOVAL AND INSTALLATION (CONTINUED)

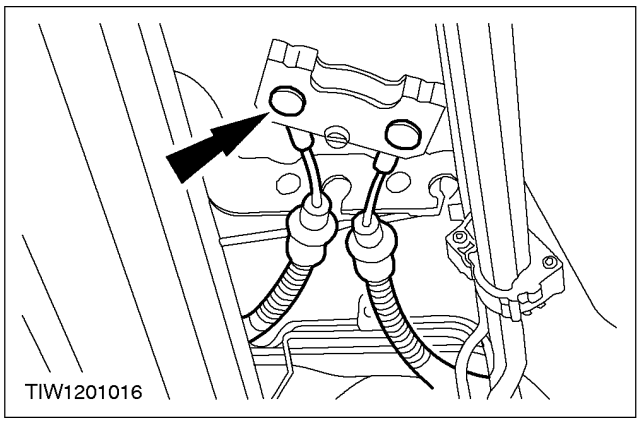

8. Disconnect the rear parking brake cable.

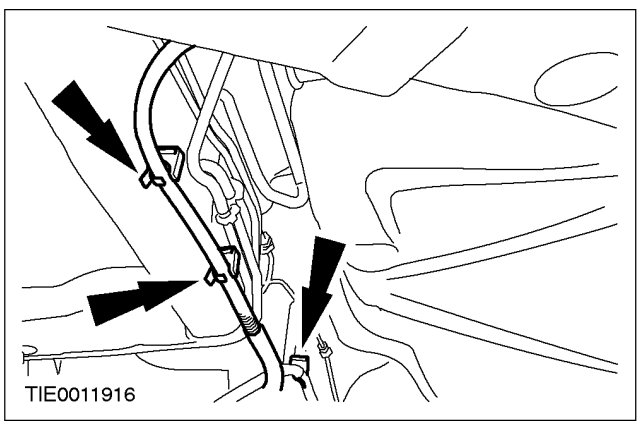

9. Detach the rear parking brake cable.

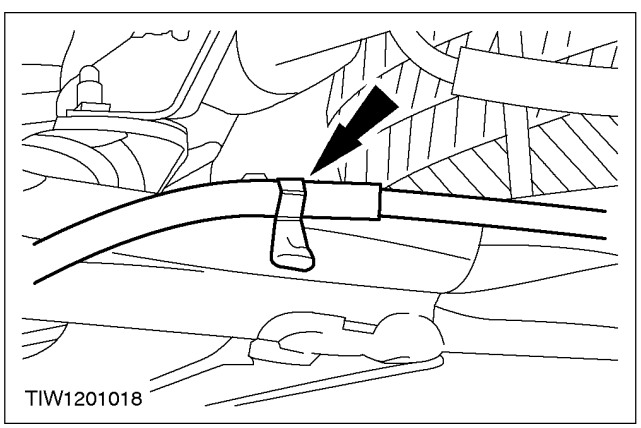

10. Detach the parking brake cable from the rear axle (both sides).

11. Remove the brake drum. For additional information, refer to Section 206-02.

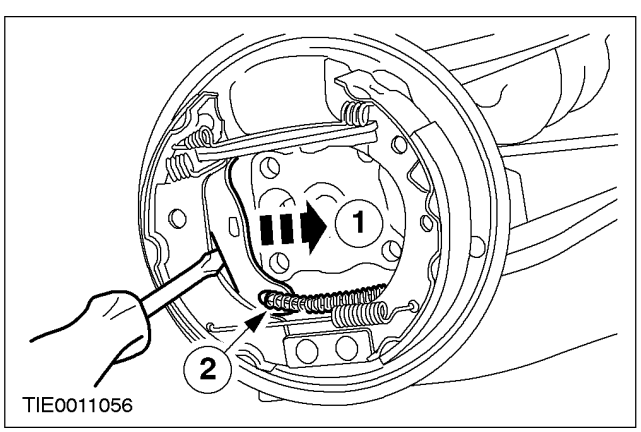

12. Detach the parking brake cable.
    1. Pull the secondary brake shoe lever backwards.
    2. Disconnect the cable from the secondary brake shoe.

REMOVAL AND INSTALLATION (CONTINUED)

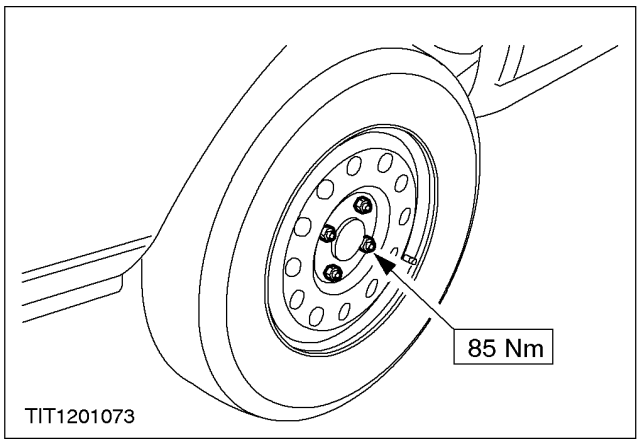

Installation

1. To install, reverse the removal procedure.

2. Adjust the parking brake.
   For additional information,
   refer to Parking Brake Cable Adjustment in this section

REMOVAL AND INSTALLATION

Parking Brake Warning Indicator Switch (33 546 0)

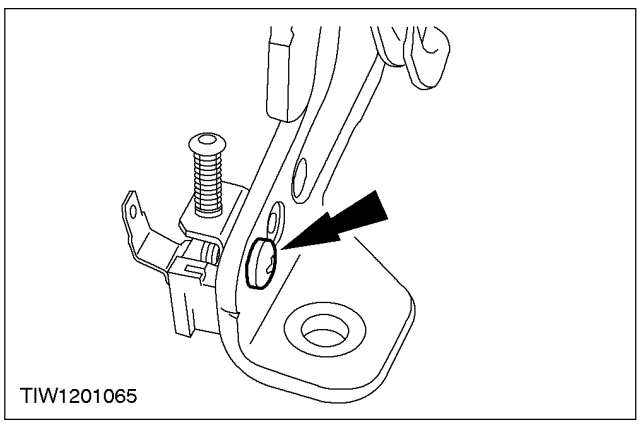

Removal

1. Remove the parking brake control.
   For additional information,
   refer to Parking Brake Control in this section
2. Remove the switch.

Installation

1. To install, reverse the removal procedure.

GENERAL PROCEDURES

Parking Brake Cable Adjustment (12 662 0)

Adjustment

1. Remove the parking brake control cover trim.
2. Lower the parking brake control lever.
3. Loosen the adjusting nut.

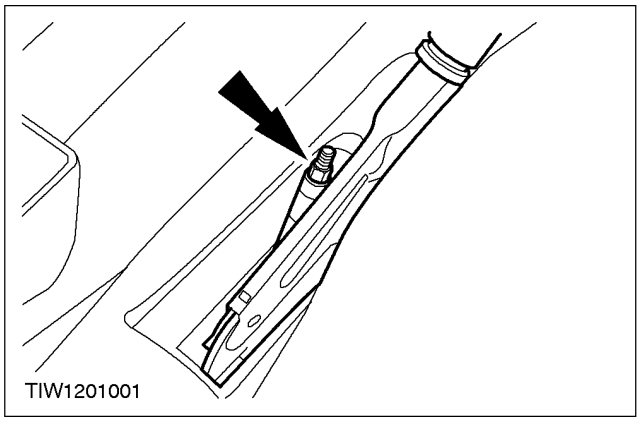

4. Depress the foot brake six times.
5. Adjust the parking brake cable.
   1. Raise the parking brake control lever by six clicks of the ratchet.
   2. Tighten the adjusting nut.

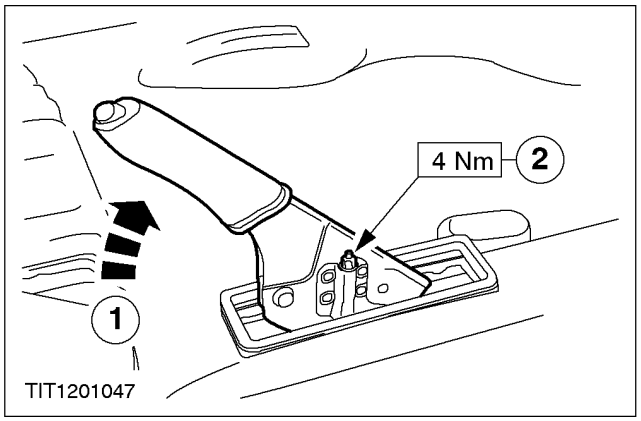

6. Test the parking brake for normal operation.
7. Install the parking brake control cover trim.

SPECIFICATIONS

Torque Specifications

Description	Nm
Parking brake cable adjusting nut	4
Parking brake control nuts	24
Wheel nuts	85

SECTION 206-06 Hydraulic Brake Actuation

VEHICLE APPLICATION: 2002 Bantam

SUBJECT		PAGE
DESCRIPTION AND OPERATION		
Hydraulic Brake Actuation		206-06-2
DIAGNOSIS AND TESTING		
Hydraulic Brake Actuation		206-06-3
REMOVAL AND INSTALLATION		
Brake Master Cylinder	(12 343 0)	206-06-4/5
Brake Pedal	(12 133 0)	206-06-6/7
Brake Fluid Reservoir	(12 341 0)	206-06-8/9
Brake Pedal Cross-Shaft	(12 338 0)	206-06-10/12
Brake Pedal and Bracket		206-06-13/15
SPECIFICATIONS		
Specifications		206-06-16
Lubricants, Fluids, Sealers and Adhesives		206-06-16
Torque Specifications		206-06-16

DESCRIPTION AND OPERATION

Hydraulic Brake Actuation

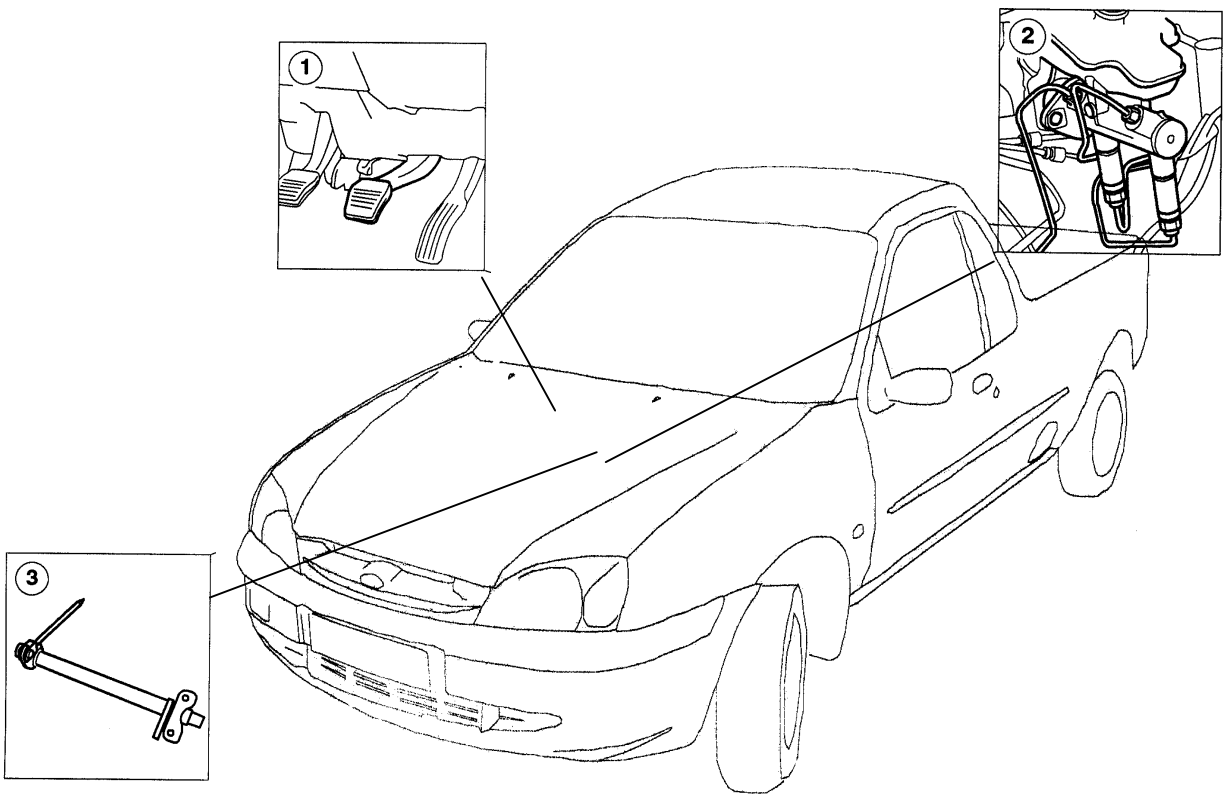

Item	Description
1	Brake pedal
2	Brake master cylinder and fluid reservoir

Item	Description
3	Brake pedal cross-shaft

DIAGNOSIS AND TESTING

Hydraulic Brake Actuation

REFER to Section 206-00.

REMOVAL AND INSTALLATION

Brake Master Cylinder (12 343 0)

Removal

CAUTION: If brake fluid is spilt on the paintwork the affected area must be immediately washed down with cold water.

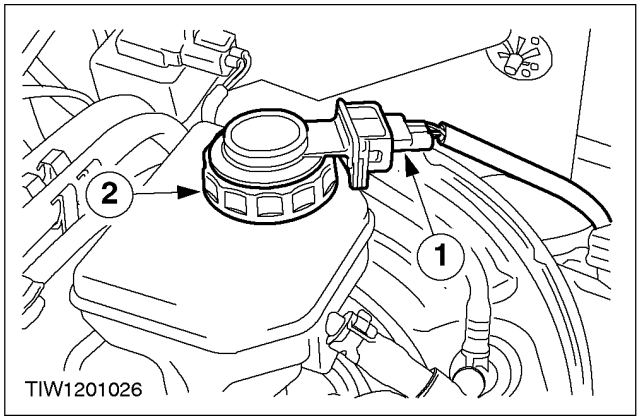

1. **CAUTION: The brake fluid reservoir cap must not become contaminated.**
   Remove the brake fluid reservoir cap.
   1. Disconnect the low brake fluid warning indicator switch electrical connector.
   2. Remove the cap.

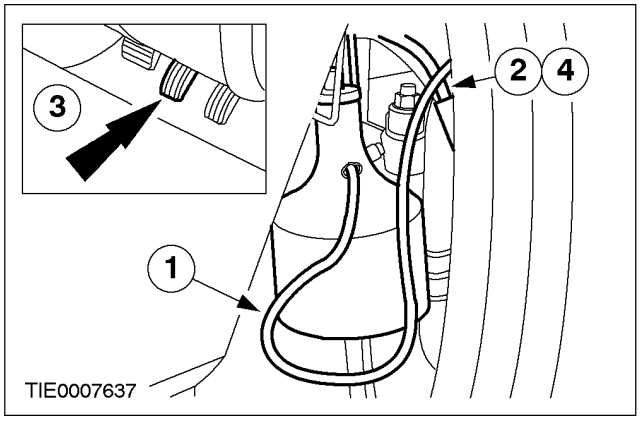

2. **NOTE:** It will be necessary to carry out this step on both sides in order to completely drain the brake fluid reservoir.
   Drain the brake fluid reservoir.
   1. Connect one end of a suitable piece of clear plastic pipe to the bleed nipple and place the other end into a suitable container.
   2. Loosen the bleed nipple.
   3. Depress the brake pedal until all of the brake fluid is drained from the brake fluid reservoir.
   4. Tighten the bleed nipple.

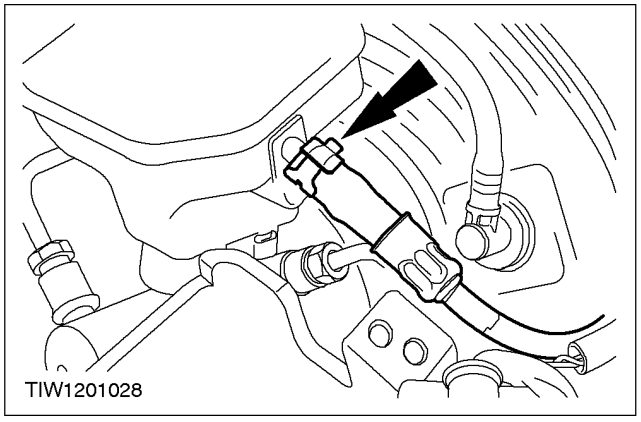

3. **CAUTION: Cap the clutch master cylinder hose to prevent fluid loss or dirt ingress.**
   Disconnect the clutch master cylinder hose from the brake fluid reservoir.

REMOVAL AND INSTALLATION (CONTINUED)

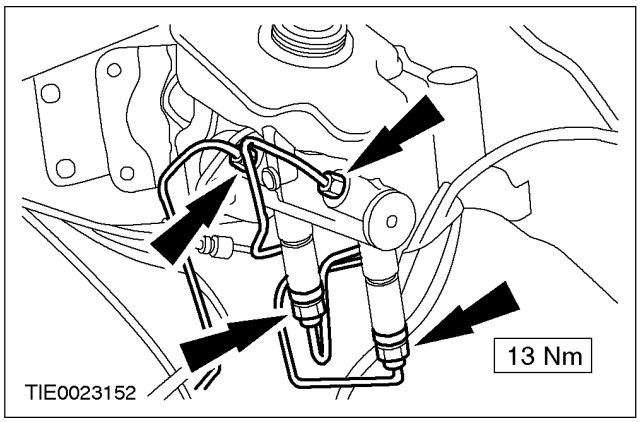

4. Disconnect the brake tubes from the brake master cylinder.

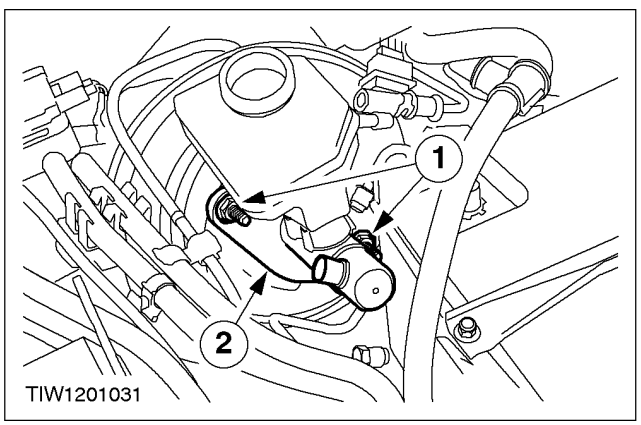

5. Remove the brake master cylinder and brake fluid reservoir assembly.
   1. Remove the nuts.
   2. Remove the brake master cylinder.

Installation

CAUTION: Make sure the brake booster actuator rod is correctly positioned before installation.

CAUTION: Make sure the brake master cylinder vacuum seal is correctly positioned before installation.

1. To install, reverse the removal procedure.

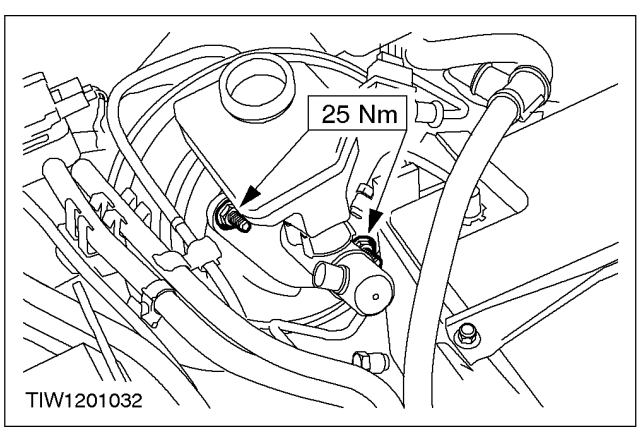

2. Bleed the brake system. For additional information, refer to Section 206-00.

REMOVAL AND INSTALLATION

Brake Pedal (12 133 0)

Removal

1. Disconnect the battery ground cable.
   For additional information,
   refer to Section 414-01.
2. Remove the stop lamp switch.
3. Disengage the clutch pedal return spring.

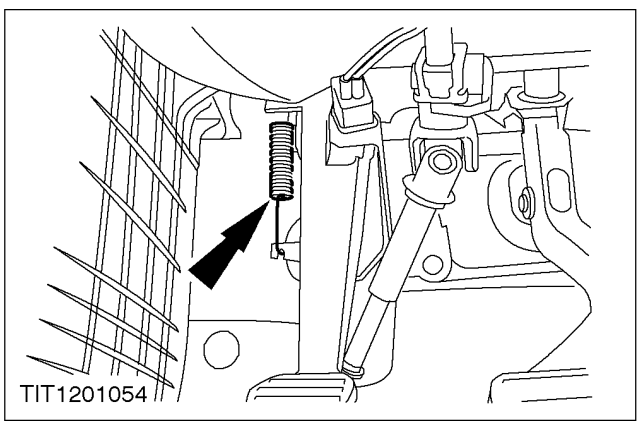

4. Remove the brake pedal.
   1. Remove the brake pedal cross-shaft retaining clip (clutch side).
   2. Push the brake pedal cross-shaft towards the brake pedal.
   3. Remove the brake pedal cross-shaft retaining clip (brake side).
   4. Push the brake pedal cross-shaft towards the clutch and remove the brake pedal.

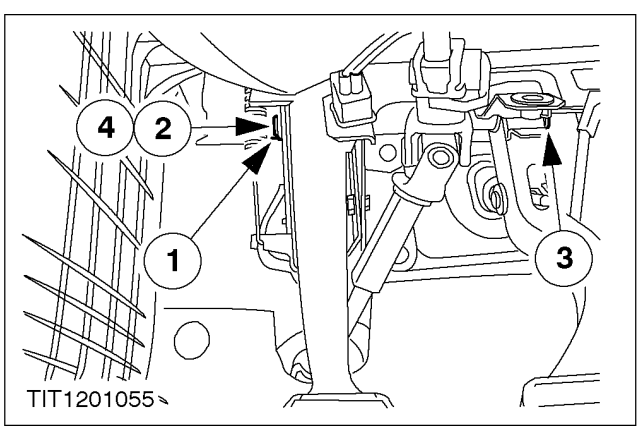

5. Remove the brake pedal bushings.

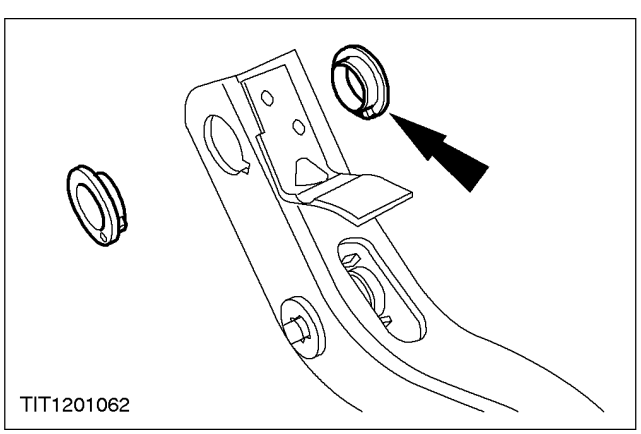

REMOVAL AND INSTALLATION (CONTINUED)

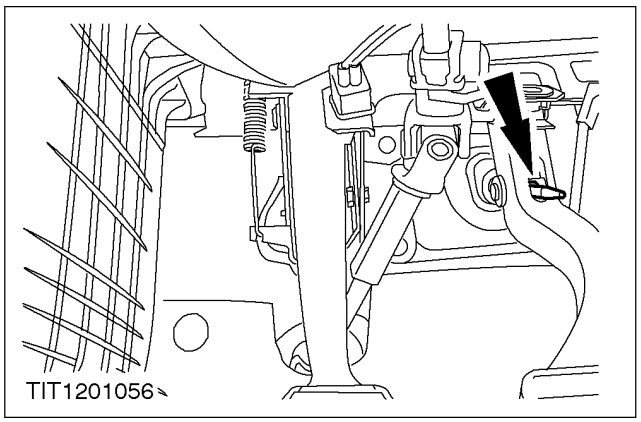

Installation

1. **NOTE:** When Installing the brake pedal make sure the brake booster actuator rod locates correctly into the brake pedal.

NOTE: As the brake pedal cross-shaft has to be disturbed, adjustment of the clutch pedal travel will be required. Clutch pedal travel measurement must be 56.0 mm

To install, reverse the removal procedure.

REMOVAL AND INSTALLATION

Brake Fluid Reservoir (12 341 0)

Removal

CAUTION: If brake fluid is spilt on the paintwork the affected area must be immediately washed down with cold water.

1. Disconnect the low brake fluid warning indicator switch electrical connector.

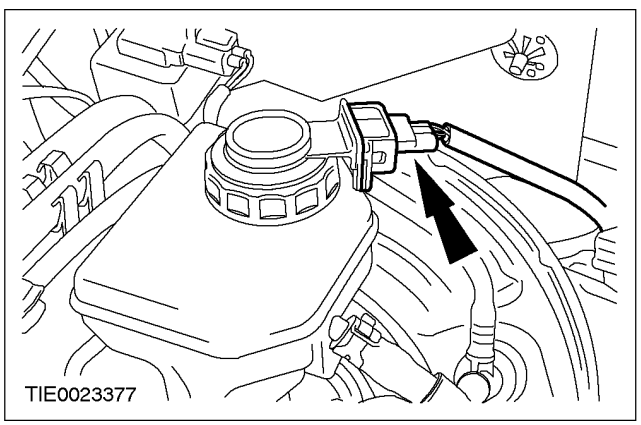

2. **CAUTION: The brake fluid reservoir cap must not become contaminated.**
   Remove the brake fluid reservoir cap.

3. **NOTE:** It will be necessary to carry out this step on both sides in order to completely drain the brake fluid reservoir.
   Drain the brake fluid reservoir.
   1. Connect one end of a suitable piece of clear plastic pipe to the bleed nipple and place the other end into a suitable container.
   2. Loosen the bleed nipple.
   3. Depress the brake pedal until all of the brake fluid is drained from the brake fluid reservoir.
   4. Tighten the bleed nipple.

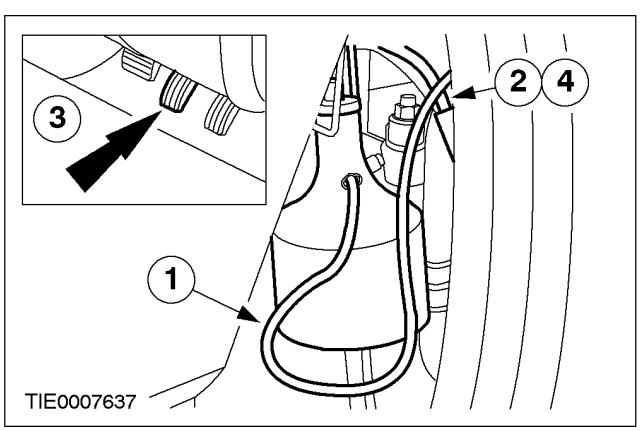

4. **CAUTION: Cap the clutch master cylinder hose to prevent fluid loss or dirt ingress.**
   Disconnect the clutch master cylinder hose from the brake fluid reservoir.

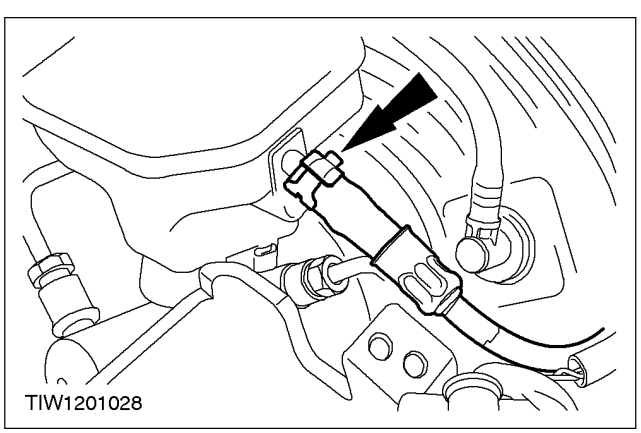

REMOVAL AND INSTALLATION (CONTINUED)

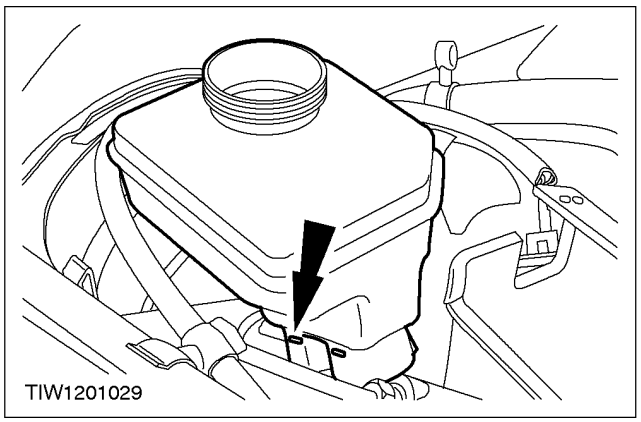

5. Remove the brake fluid reservoir.
   - Detach the securing pin.

Installation

1. To install, reverse the removal procedure.
2. Bleed the brake system. For additional information, refer to Section 206-00.

REMOVAL AND INSTALLATION

Brake Pedal Cross-Shaft (12 338 0)

Removal

1. Remove the brake booster. For additional information, refer to Section 206-07.

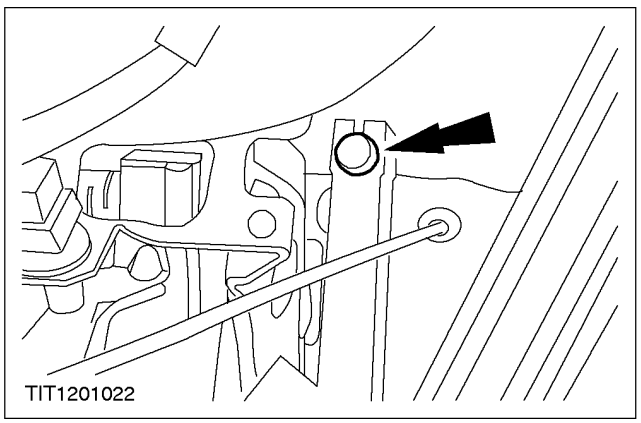

2. Disconnect the accelerator cable from the accelerator pedal.

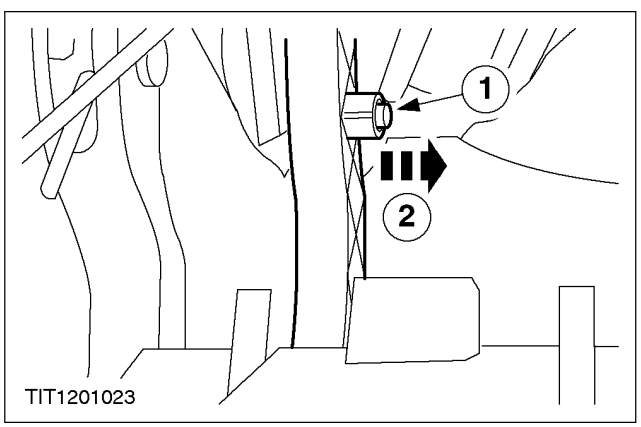

3. Remove the accelerator pedal.
   1. Remove the clip.
   2. Remove the pedal.

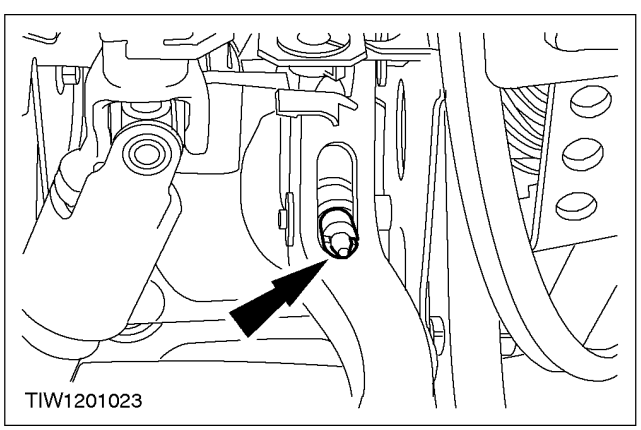

4. Detach the brake pedal cross-shaft actuating rod from the brake pedal.
   - Remove the clip.

REMOVAL AND INSTALLATION (CONTINUED)

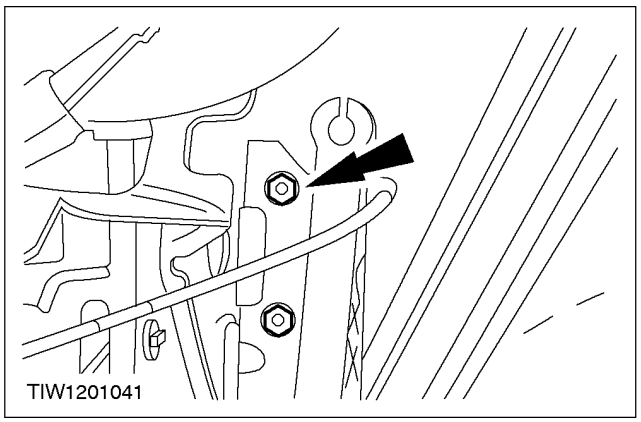

5. Detach the brake pedal cross-shaft mounting bracket from the bulkhead.

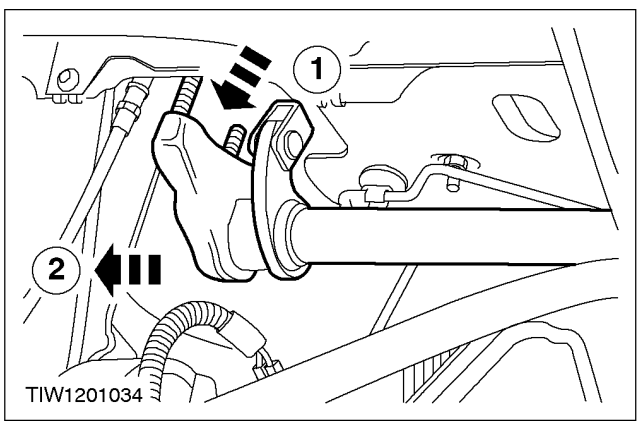

6. Detach the brake pedal cross-shaft mounting bracket from the bulkhead.
   1. Pull the bracket from the bulkhead.
   2. Move the brake pedal cross-shaft to the left.

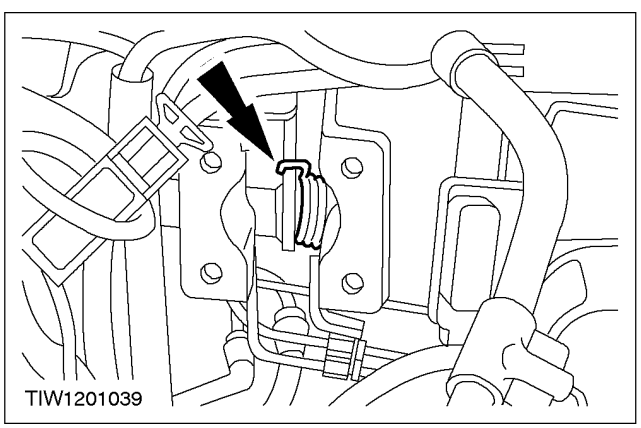

7. Disconnect the connecting link spring from the brake booster support bracket.

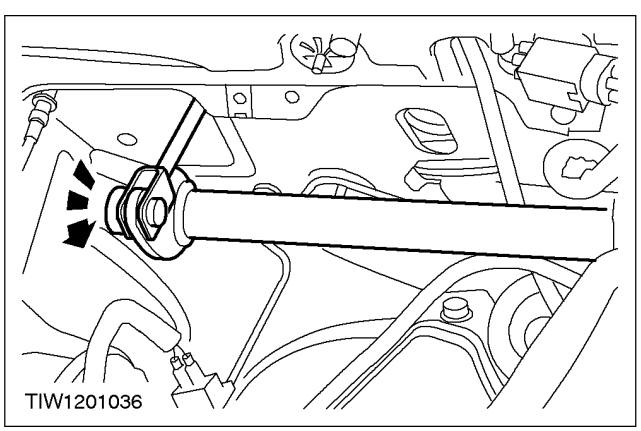

8. Remove the brake pedal cross-shaft.
   - Rotate the connecting link in a counter clockwise direction.

REMOVAL AND INSTALLATION (CONTINUED)

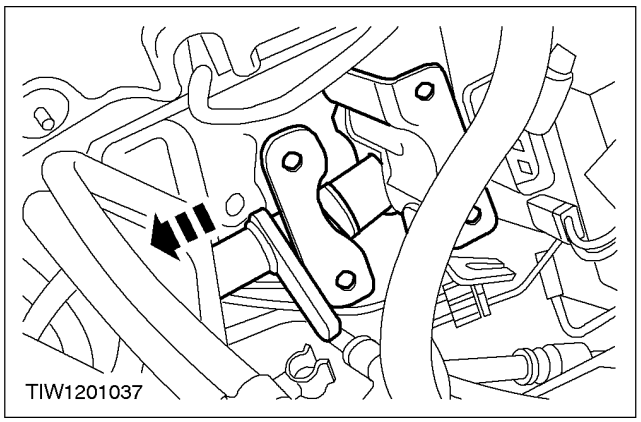

9. Remove the brake pedal cross-shaft from the brake booster support bracket.

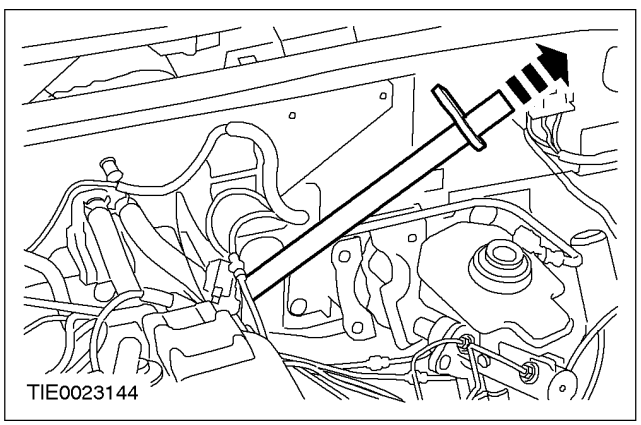

10. Remove the brake pedal cross-shaft

Installation

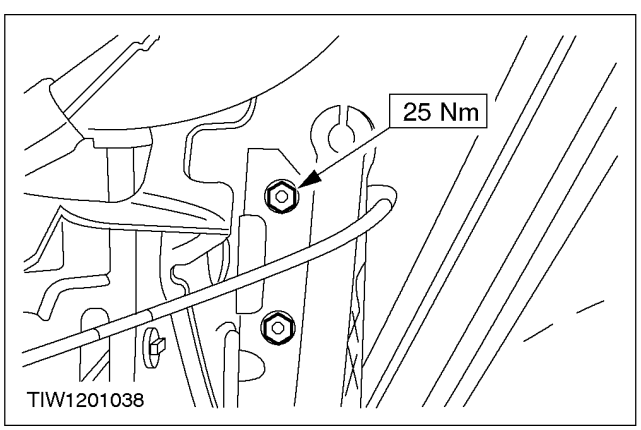

1. To install, reverse the removal procedure.

REMOVAL AND INSTALLATION

Brake Pedal and Bracket

Removal

1. Disconnect the battery ground cable. For additional information, refer to Section 414-01.

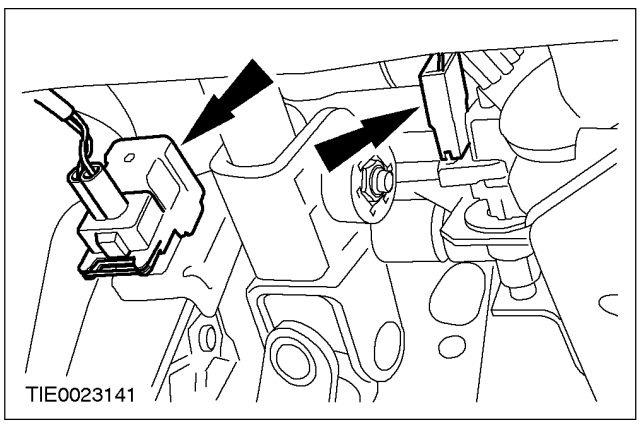

2. Disconnect the brake pedal position (BPP) switch and clutch on/off switch electrical connectors from the brake pedal bracket.

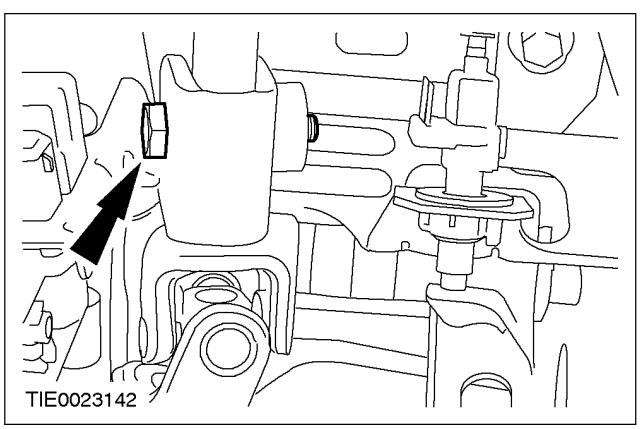

3. Remove the steering linkage bolt.

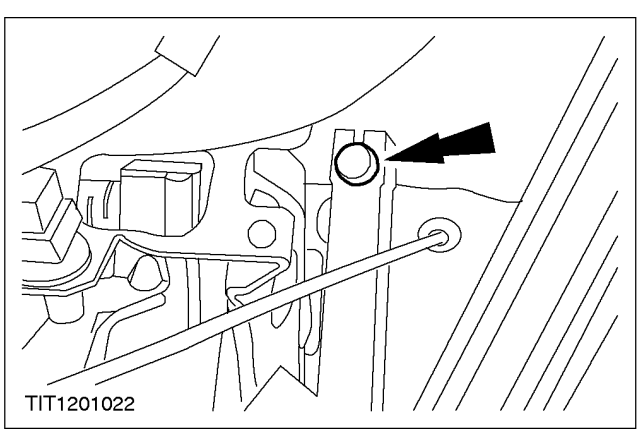

4. Disconnect the accelerator cable from the accelerator pedal.

REMOVAL AND INSTALLATION (CONTINUED)

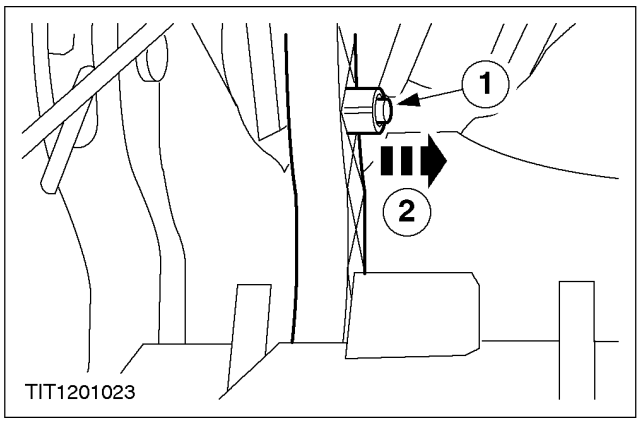

5. Remove the accelerator pedal.
   1. Remove the clip.
   2. Remove the pedal.

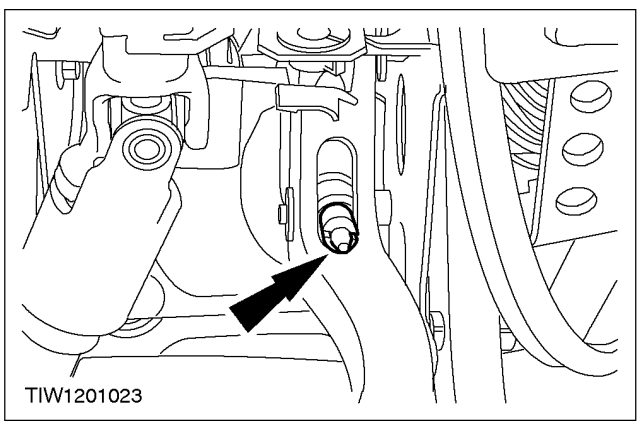

6. Detach the brake pedal cross-shaft actuating rod from the brake pedal.
   - Remove the clip.

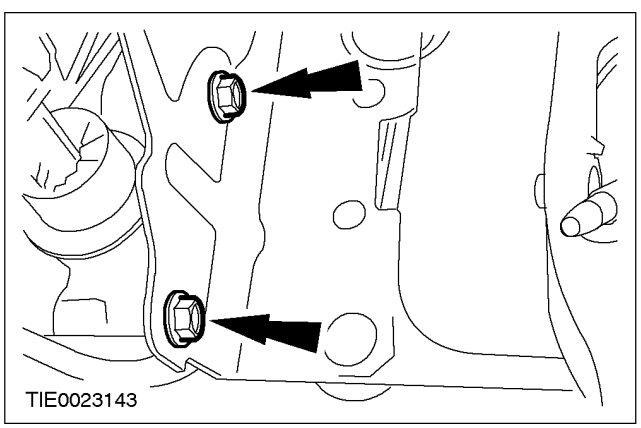

7. Detach the clutch master cylinder from the brake pedal and bracket.

8. Detach the clutch master cylinder actuating rod from the clutch pedal.
   - Remove the clip.

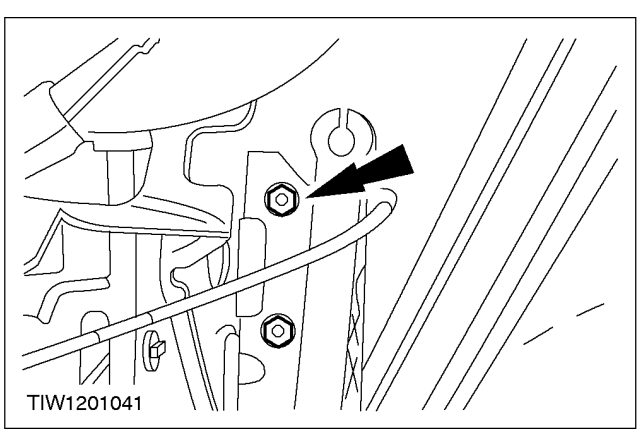

9. Detach the brake pedal cross-shaft mounting bracket from the bulkhead.

REMOVAL AND INSTALLATION (CONTINUED)

10. Remove the brake pedal and bracket

Installation

1. To install, reverse the removal procedure.

SPECIFICATIONS

Lubricants, Fluids, Sealers and Adhesives

Item	Specification
DOT 4 brake fluid	SAM-6C9103-A

Torque Specifications

Description	Nm
Brake master cylinder brake tube unions	13
Brake master cylinder retaining nuts	25
Brake pedal cross-shaft mounting bracket nuts	25

SECTION 206-07 Power Brake Actuation

VEHICLE APPLICATION: 2002 Bantam

SUBJECT **PAGE**

DESCRIPTION AND OPERATION
Brake Booster 206-07-2

DIAGNOSIS AND TESTING
Power Brake System 206-07-3

REMOVAL AND INSTALLATION
Brake Booster ..... (12 451 0) 206-07-4/5

SPECIFICATIONS
Specifications 206-07-6
Torque Specifications 206-07-6

DESCRIPTION AND OPERATION

Brake Booster

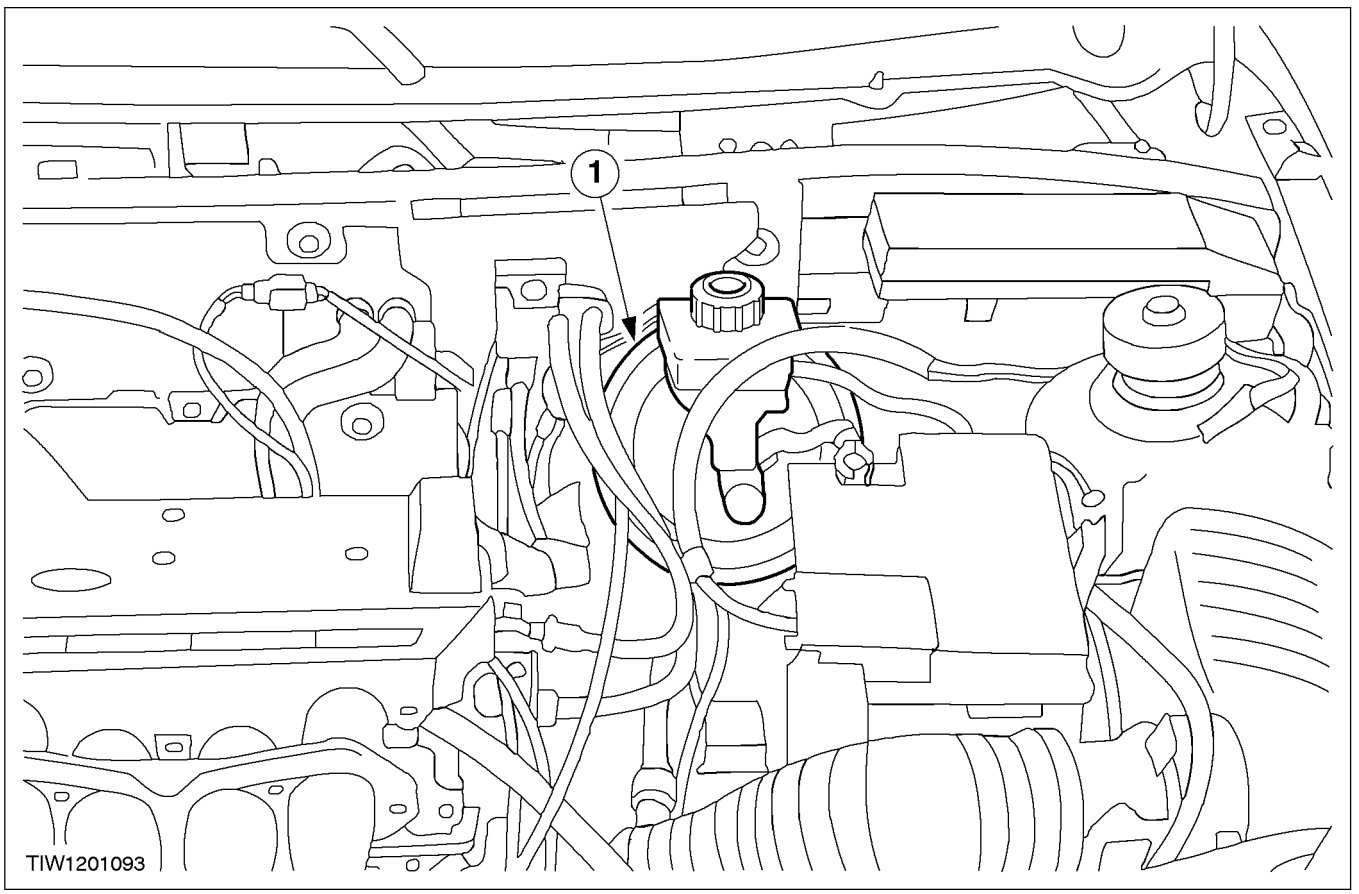

Item	Description
1	Brake booster

DIAGNOSIS AND TESTING

Power Brake System

REFER to Section 206-00.

REMOVAL AND INSTALLATION

Brake Booster (12 451 0)

Removal

1. Remove the battery tray. For additional information, refer to Section 414-01.
2. Remove the brake master cylinder. For additional information, refer to Section 206-06.
3. Disconnect the vacuum hose from the brake booster.

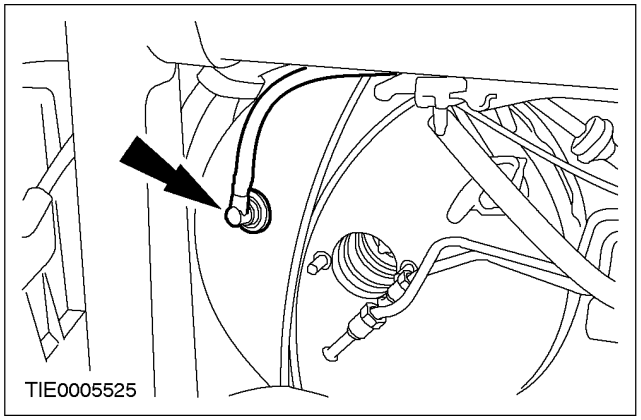

4. Detach the brake booster.

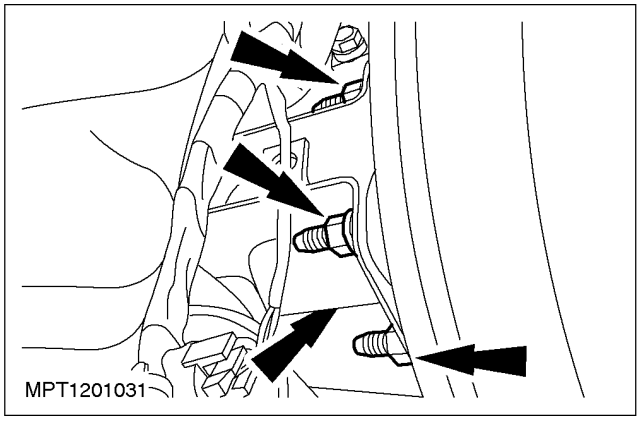

5. Detach the brake booster actuating rod from the brake pedal.
   1. Pull the brake booster forwards.
   2. Remove the actuating rod clip and pin.

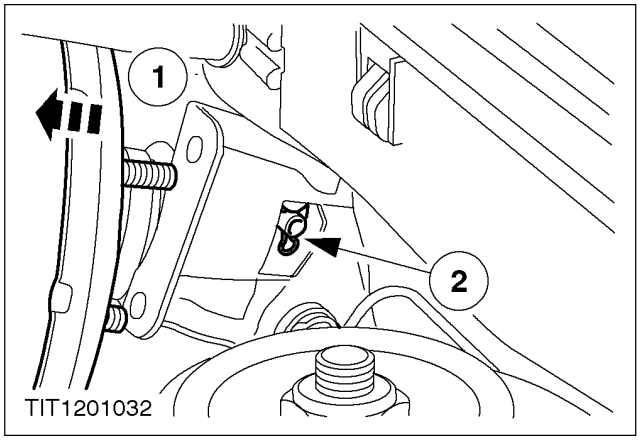

6. Remove the brake booster.

REMOVAL AND INSTALLATION (CONTINUED)

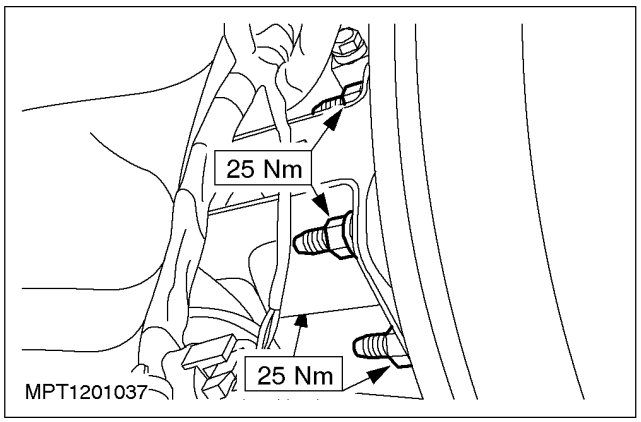

Installation

1. To install, reverse the removal procedure.

SPECIFICATIONS

Torque Specifications

Description	Nm
Brake booster retaining nuts	25
Brake master cylinder retaining nuts	25

SECTION 211-00 Steering System — General Information

VEHICLE APPLICATION: 2002 Bantam

SUBJECT		PAGE
DIAGNOSIS AND TESTING		
Steering System		211-00-2
Principles of Operations		211-00-2
Inspection and Verification		211-00-2
Symptom Chart		211-00-2/4
Component Tests		211-00-4
GENERAL PROCEDURES		
Power Steering System Filling	(13 416 1)	211-00-5
Power Steering System Bleeding	(13 416 1)	211-00-6/7
Power Steering System Flushing	(13 416 1)	211-00-8/10
Power Steering System Purging	(13 416 1)	211-00-11/13
SPECIFICATIONS		
Specifications		211-00-14
Turning Circles		211-00-14
Torque Specifications		211-00-14

DIAGNOSIS AND TESTING

Steering System

Principles of Operations

The steering wheel rotational movement is transferred to the steering gear through the steering column shaft. The steering gear converts this rotational movement, through the action of the rack and pinion gear into lateral movement. This movement in turn is transferred to the wheel knuckle through the tie-rods and tie-rod ends.

Hydraulic fluid under pressure is supplied to the steering gear by the power steering pump. As the steering wheel is rotated, the hydraulic fluid is allowed to pass through the steering gear valve to one side of a double-acting piston, dependent on which direction the steering wheel is rotated. The fluid moves the piston, which forms part of the steering gear, giving power assistance to the effort required to turn the front road wheels.

Inspection and Verification

1. Verify the customer concern.
2. Visually inspect the obvious signs of mechanical or electrical damage.

Visual Inspection Chart

Mechanical	Electrical
• Tyre pressure. • Accessory drive belt. • Wheels and tyres. • Power steering line fluid leaks.	• Power steering pressure (PSP) switch. • Fuse(s). • Electrical connector(s).

3. If an obvious cause for an observed or reported concern is found, correct the cause (if possible) before proceeding to the next step.
4. If the cause is not visually evident, verify the symptom and refer to the Symptom Chart.

Symptom Chart

Symptom Chart

Condition	Possible Sources	Action
•The steering is very difficult/very easy	•Loose or worn accessory drive belt.	•CHECK the accessory drive belt. REFER to Section 303-05.
	•Power steering fluid.	•CHECK the power steering fluid reservoir level. CHECK for aeration and contamination. For additional information, refer to Power Steering Systems Purging in this section.
	•Worn mechanical power steering pump.	•INSTALL a new power steering pump. REFER to Section 211-02.
	•Power steering hose restriction.	•CHECK the power steering hoses for damage, kinks or restrictions. INSTALL new components as necessary. REFER to Section 211-02.
	•Seized suspension ball joints.	•CARRY out a ball joint component test. REFER to Section 204-00.
•Moan type noise	•Routing of power steering hoses.	•CHECK the security and routing of the power steering hoses.

DIAGNOSIS AND TESTING (CONTINUED)

Condition	Possible Sources	Action
	•Air in the power steering system.	•BLEED the power steering system. For additional information, refer to the Power Steering System Bleeding in this section.
	•Power steering pump.	•INSTALL a new power steering pump. REFER to Section 211-02.
•Whine type noise	•Power steering pump.	•INSTALL a new power steering pump. REFER to Section 211-02.
•Hiss type noise	•Steering gear valve.	•INSTALL a new steering gear. REFER to Section 211-02.
•Belt noise	•Accessory drive belt worn.	•INSTALL a new accessory, drive belt. REFER to Section 303-05.
	•Loose generator/power steering pump mounting.	•TIGHTEN the mountings to specification. REFER to Section 211-02 / 414-02
	•Damaged pulley(s).	•INSPECT the water pump, generator, air conditioning and power steering pump pulleys for damage. INSTALL new components as necessary.
•Knock type noise	•Suspension components.	•CHECK the suspension system. REFER to Section 204-00.
	•Steering linkage.	•CHECK the steering linkage components for security and wear. For additional information, refer to Steering Linkage Component Test in this section.
•The steering does not vary with increased steering wheel rotation	•Steering column to steering gear flexible coupling.	•CHECK the flexible coupling for security and damage. INSTALL a new flexible coupling as required. REFER to Section 211-04.
	•Worn tie-rod ends.	•CHECK the tie-rod ends for wear. INSTALL new components as necessary. REFER to Section 211-03.
	•Worn steering column shaft.	•INSTALL a new steering column. REFER to Section 211-04.
•The steering does not vary with increased steering wheel rotation	•Loose steering gear retaining bolts.	•CHECK and INSTALL new bolts as necessary. REFER to Section 211-02.
	•Excessive steering gear backlash.	•INSTALL a new steering gear. REFER to Section 211-02.

DIAGNOSIS AND TESTING (CONTINUED)

Condition	Possible Sources	Action
•Steering assist does not vary with vehicle speed	•Power steering pressure (PSP) switch. •Circuit.	•For additional information, refer to the Wiring Diagrams. Petrol and Diesel. Section 700-06 for schematic and connector information.

Component Tests

Steering Linkage

Inspect the steering gear boots for cuts, deterioration, twisting or distortion. Make sure the boots are secure. Install new boots or clamps as necessary.

1. Park the vehicle on a dry, even surface and apply the parking brake. Place the steering in the straight-ahead position.
2. With the engine running, gently turn the steering wheel to the right and left to check free play. Free play is measured at the steering wheel rim and should be within the limits stated in the specifications. If free play exceeds the limit stated the steering linkage or the steering column is worn, or the backlash of the steering gear is excessive.
3. If the steering linkage is worn, install new components as necessary. REFER to Section 211-03. The steering column cannot be repaired, install a new steering column. REFER to Section 211-04. Steering gear backlash cannot be adjusted. Install a new steering gear. REFER to Section 211-02.
4. With the engine OFF, hold the steering wheel firmly with both hands. Attempt to move the steering wheel up and down and also to the left and right without turning the wheel, to check the steering column bearing wear, steering, column shaft joint play and steering wheel or steering column looseness. If free play is detected, check the correct torque of the steering column, coupling shaft and steering wheel retaining bolts. The steering column cannot be repaired, install a new steering column. REFER to Section 211-04.

GENERAL PROCEDURES

Power Steering System Filling (13 416 1)

Special Tool(s)	
13016	Adaptor, Power Steering Bleeding 211-189 (13-016)

Special Tool(s)	
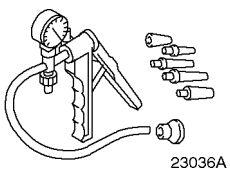 23036A	Hand Vacuum/Pressure Pump 416-D001 (23-036A)

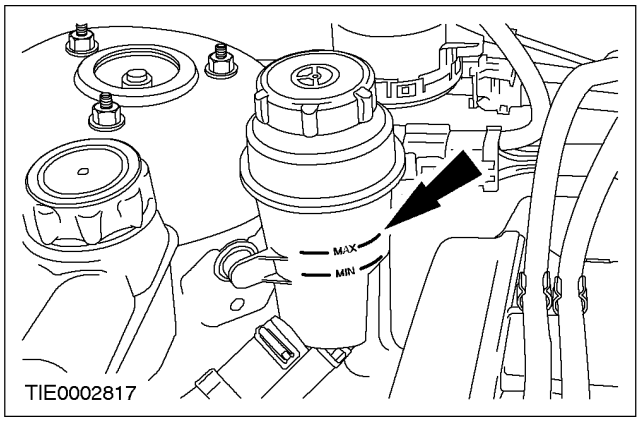

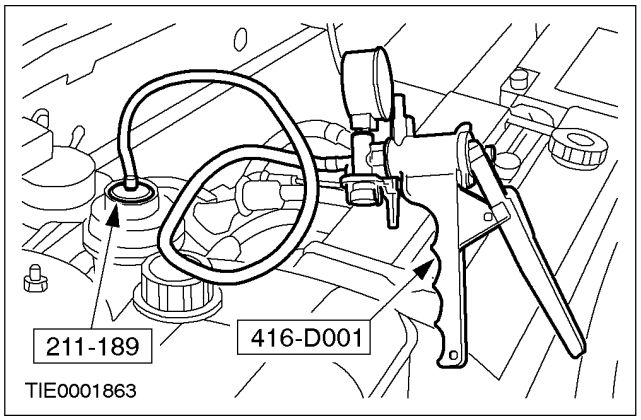

Refill

1. **NOTE:** When filling the reservoir, make sure the power steering fluid is clean and not agitated prior to use. The fluid should be poured slowly into the reservoir to minimize the possibility of aeration. The fluid level should be checked with the fluid cold.
   Fill the reservoir to the MAX mark.

2. Using the special tools, apply a vacuum of 84-101 kPa (25-30 in-Hg) for 30 seconds.

3. Observe the vacuum gauge reading.
   - If the vacuum decreases by more than 7 kPa (2 in-Hg) in 5 minutes, the system should be checked for leaks.

4. Remove the hand vacuum/pressure pump and stopper. Fill the reservoir to the MAX mark is necessary.

GENERAL PROCEDURES

Power Steering System Bleeding (13 416 1)

Special Tool(s)	
13016	Adaptor, Power Steering Bleeding 211-189 (13-016)

Special Tool(s)	
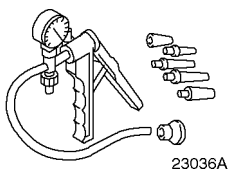 23036A	Hand Vacuum/Pressure Pump 416-D001 (23-036A)

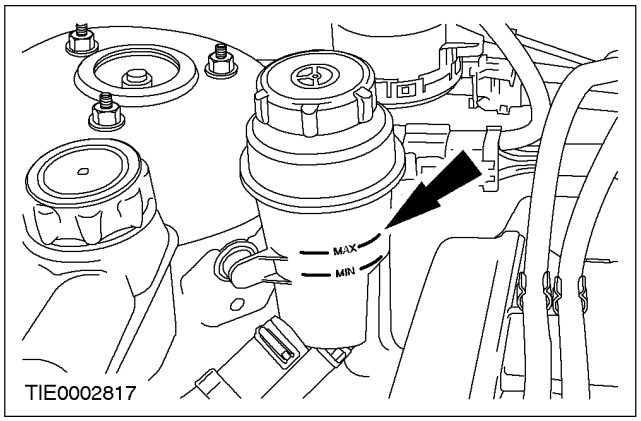

Bleeding

1. **NOTE:** When filling the reservoir, make sure the power steering fluid is clean and not agitated prior to use. The fluid should be poured slowly into the reservoir to minimize the possibility of aeration. The fluid level should be checked with the fluid cold.
   Fill the reservoir to the MAX mark.

2. **NOTE:** Make sure that the fluid in the reservoir does not fall below the MIN mark, as air could enter the system.
   Start the engine and slowly turn the steering wheel from lock to lock.

3. Switch OFF the engine and examine the hose connections, steering gear boots, valve body and pump for external leaks.

4. Check the fluid level. Fill up as necessary.

GENERAL PROCEDURES (CONTINUED)

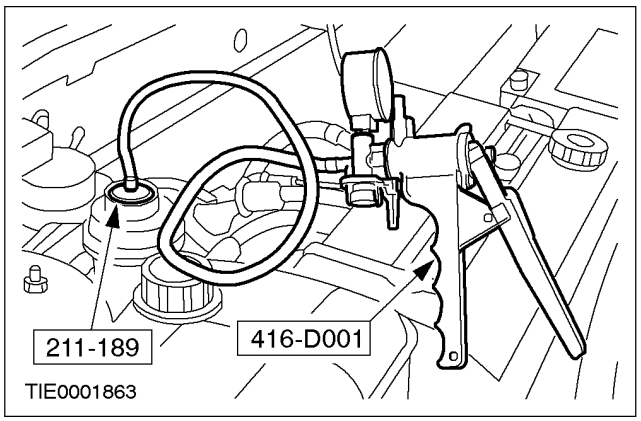

5. **NOTE:** When bleeding the system the vacuum will decrease. Maintain a sufficient vacuum of 51 kPa (15 in-Hg), using the hand vacuum/pressure pump. If the vacuum decreases by more than 7 kPa (2 in-Hg) in 5 minutes, the system should be checked for leaks.

   Using the special tools, bleed the system.

   - Start the engine and slowly turn the steering wheel from lock to lock once; then turn the steering wheel to the right, just off the stop.
   - Switch OFF the engine and using the hand vacuum/pressure pump apply a vacuum of 51 kPa (15 in-Hg). Maintain the vacuum until the air is evacuated from the system (minimum of five minutes).
   - Release the vacuum at the hand vacuum/ pressure pump.
   - Repeat the bleed procedure, turning the steering wheel to the left, just off the stop.

6. Remove the hand vacuum/pressure pump and stopper. Fill the reservoir if necessary.

7. Start the engine; turn the steering wheel from lock to lock. If excessive noise is apparent, repeat the bleed procedure.

8. If the noise level is still unacceptable, leave the vehicle standing overnight then repeat the bleed procedure.

GENERAL PROCEDURES

Power Steering System Flushing (13 416 1)

Special Tool(s)	
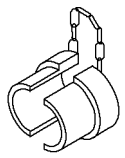 17049	Remover, Oil Cooling Pipe 307-242 (17-049)

All vehicles

1. Raise and support the vehicle. For additional information, refer to Section 100- 02.

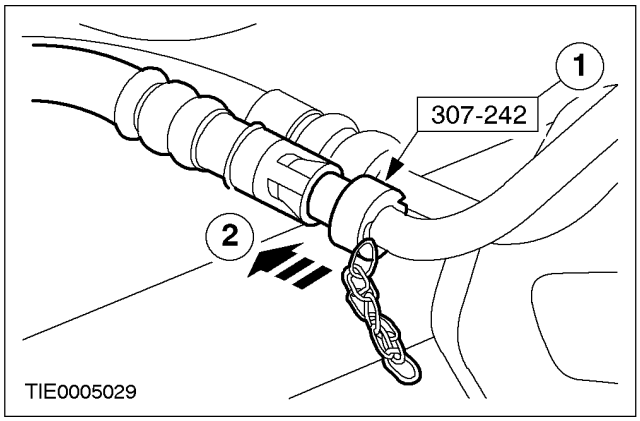

2. Using the special tool, (if required) disconnect the power steering fluid return line.
   1. Insert the special tool into the quick-release coupling.
   2. Slide the special tool along the pipe to release the locking tangs.
   - Allow the fluid to drain into a suitable container.

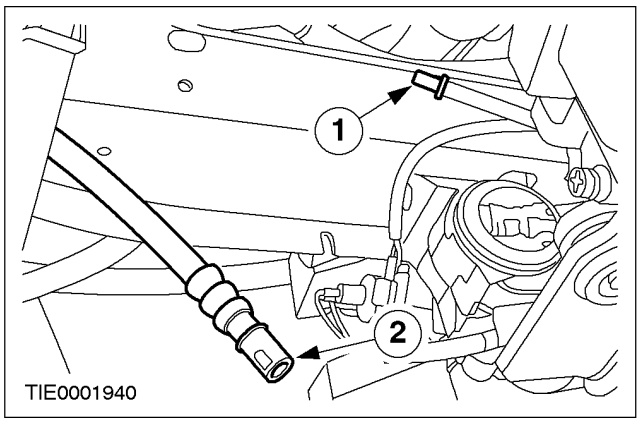

3. Attach a tube of suitable length to the fluid return line.
   1. Using a suitable blanking cap, cap the end of the fluid cooler line.
   2. Attach a tube of suitable length to the fluid cooler to power steering gear line and place the other end into a suitable container.

All except vehicles with diesel engine

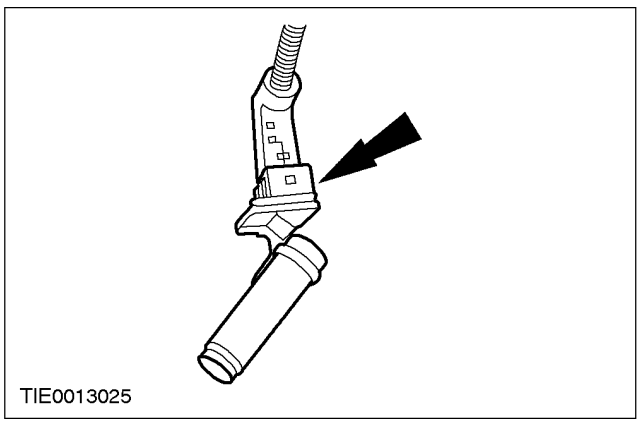

4. Disconnect the crankshaft position sensor (CKP) electrical connector.
   Refer to the Wiring Diagram Section 700-06 for schematic and electrical information.

GENERAL PROCEDURES (CONTINUED)

All vehicles

5. Lower the vehicle.

Vehicles with diesel engine

6. Disconnect the fuel injection pump electrical connector.
   1. Pull out the locking handle.
   2. Disconnect the electrical connector.

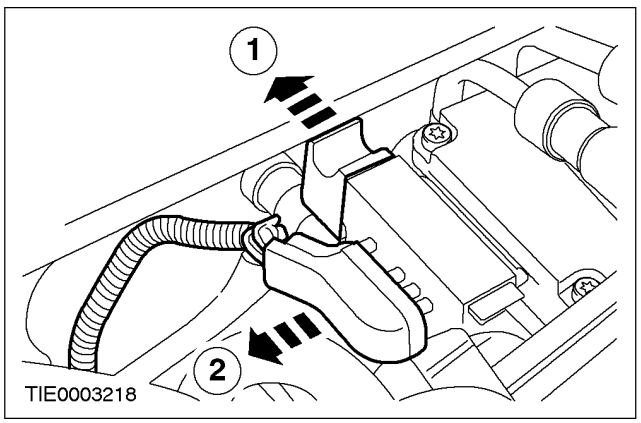

All vehicles

7. **NOTE:** When filling the power steering fluid reservoir, make sure the power steering fluid is clean and not agitated prior to use. The fluid should be poured slowly into the reservoir to minimize the possibility of aeration. The fluid level should be checked with the fluid cold.
   Fill the power steering fluid reservoir to the MAX mark with power steering fluid.

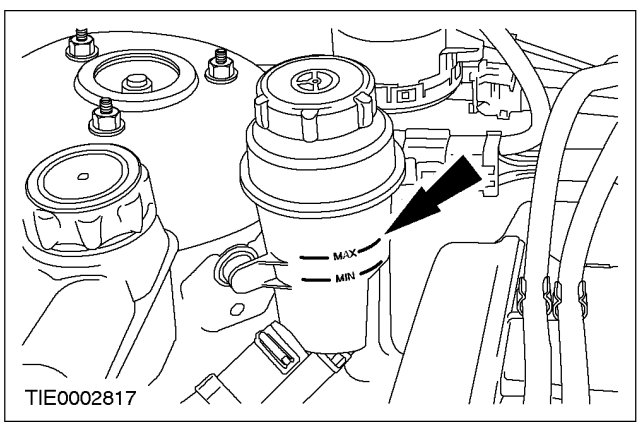

8. ⚠ **CAUTION: Do not continuously crank the engine for more than 30 seconds, as damage to the starter motor may result.**
   Turn the ignition switch to the START position, with the aid of another technician add 2.2 litres of clean power steering fluid.

9. When all the fluid has been used, turn the ignition switch to the OFF position.

10. Raise and support the vehicle.
    For additional information, refer to Section 100-02.

11. Remove the blanking cap from the power steering fluid cooler return line and connect the line from the power steering gear.

GENERAL PROCEDURES (CONTINUED)

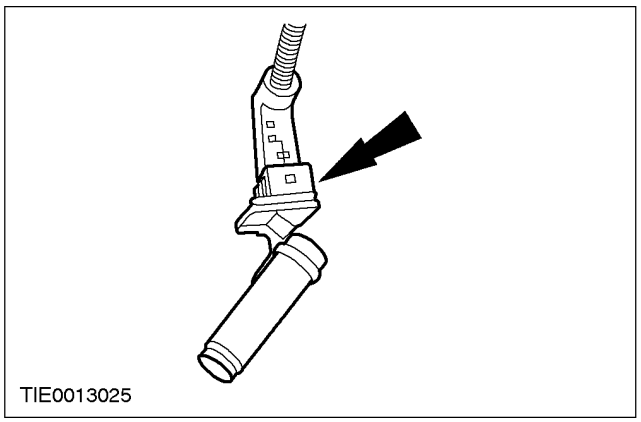

All except vehicles with diesel engine

12. Connect the CKP electrical connector.
    Refer to the Wiring Diagram Section 700-06 for schematic and electrical information.

All vehicles

13. Lower the vehicle.

Vehicles with diesel engine

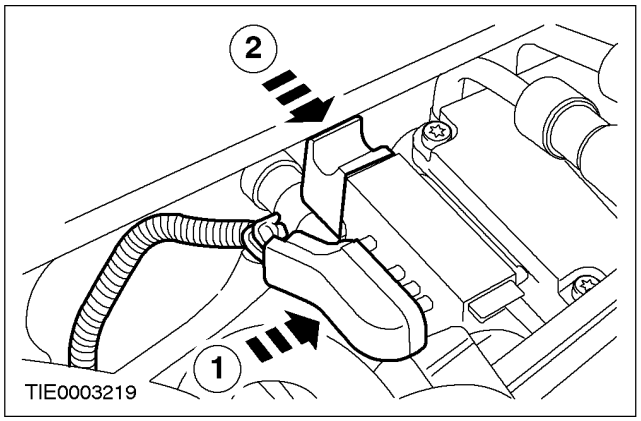

14. Connect the fuel injection pump electrical connector.
    1. Connect the electrical connector.
    2. Push in the locking handle.

All vehicles

15. Fill and bleed the power steering system.
    For additional information,
    refer to Power Steering System Bleeding in this section

GENERAL PROCEDURES

Power Steering System Purging (13 416 1)

Purging

All vehicles

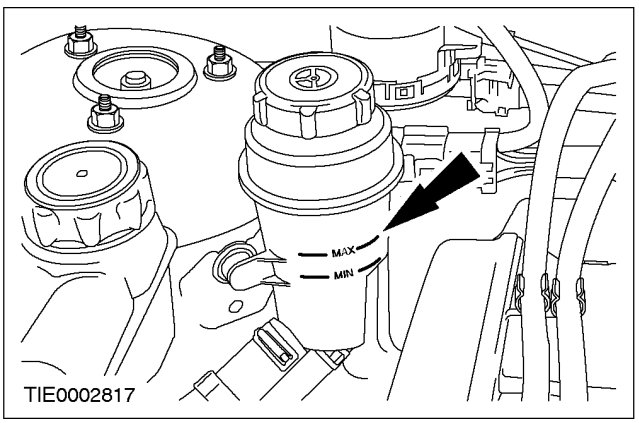

1. **NOTE:** When filling the power steering fluid reservoir, make sure the power steering fluid is clean and not agitated prior to use. The fluid should be poured slowly into the reservoir to minimize the possibility of aeration. The fluid level should be checked with the fluid cold.
   Fill the power steering fluid reservoir to the MAX mark with power steering fluid.

All except vehicles with diesel engine

2. Raise and support the vehicle. For additional information, refer to Section 100- 02.

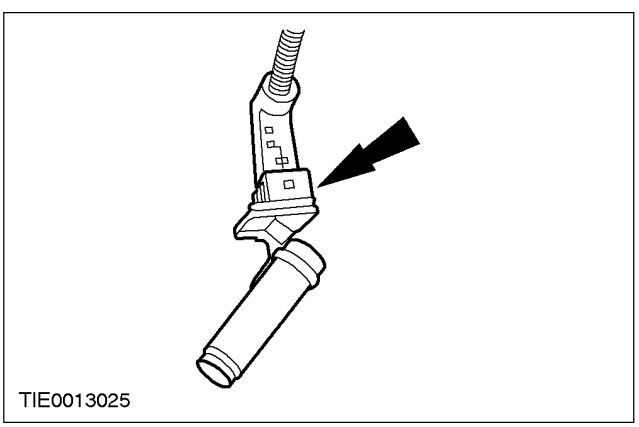

3. Disconnect the crankshaft position sensor (CKP) electrical connector.
   Refer to the Wiring Diagram Section 700-06 for schematic and electrical information.

Vehicles with diesel engine

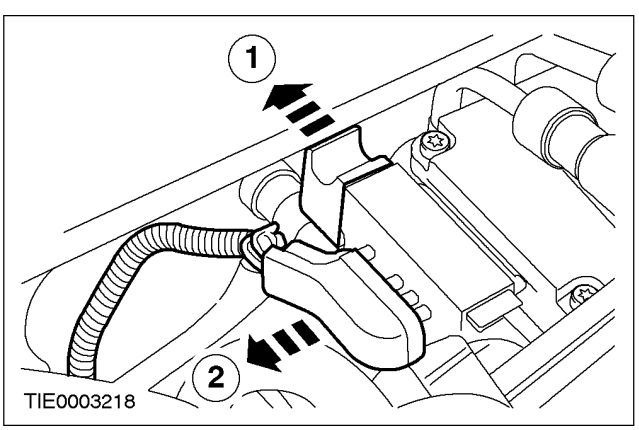

4. Disconnect the fuel injection pump electrical connector.
   1. Pull out the locking handle.
   2. Disconnect the electrical connector.

GENERAL PROCEDURES (CONTINUED)

All vehicles

5. **NOTE:** The vehicle must be raised with the wheels clear of the floor to allow the steering wheel to be rotated from lock to lock.
   Raise and support the vehicle until the wheels are clear of the floor. For additional information, refer to Section 100-02.

6. ⚠ **CAUTION: Do not continuously crank the engine for more than 30 seconds, as damage to the starter motor may result.**

   ⚠ **CAUTION: Do not hold the steering wheel against the full lock stops for more than five seconds, as damage to the steering pump may result.**
   While cranking the engine for no more than 30 seconds, turn the steering wheel from lock to lock.
   - With the aid of another technician, add fluid to the reservoir until the level remains constant.

7. Turn the ignition switch to the OFF position.

8. Fill the power steering fluid reservoir to the MAX mark with power steering fluid.

All except vehicles with diesel engine

9. Connect the CKP electrical connector.
   Refer to the Wiring Diagram Section 700-06 for schematic and electrical information.

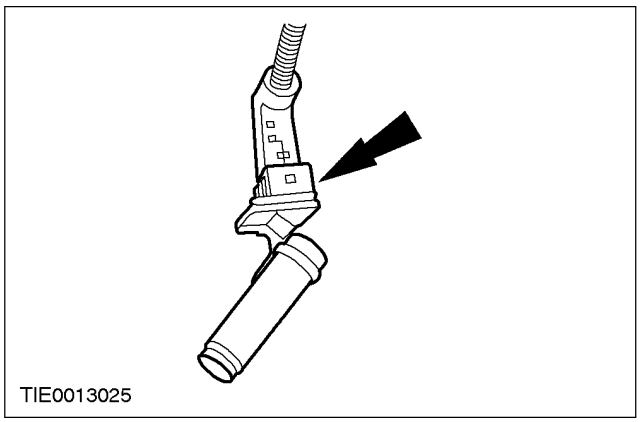

GENERAL PROCEDURES (CONTINUED)

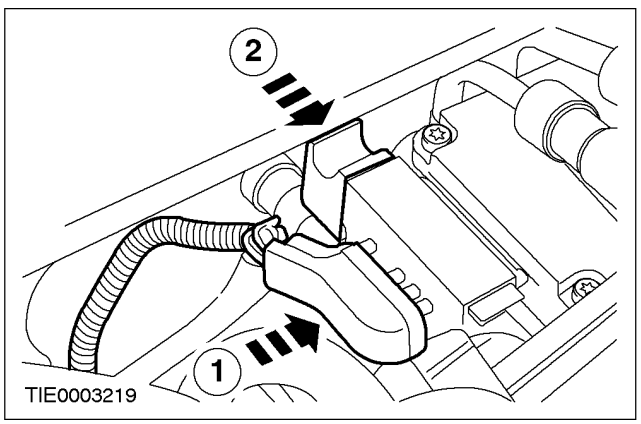

Vehicles with diesel engine

10. Connect the fuel injection pump electrical connector.
    1. Connect the electrical connector.
    2. Push in the locking handle.

All vehicles

11. Start the engine. Turn the steering wheel from lock to lock; if excessive noise is apparent bleed the system.
    For additional information,
    refer to Power Steering System Bleeding in this section
12. Lower the vehicle.

SPECIFICATIONS

Range
Wall to wall
Rack travel

Torque Specifications

Description	Nm
Steering gear retaining nuts and bolts	48
Crossmember retaining bolts	103
Roll restrictor to transmission retaining bolt	50
Track rod end locknuts	37
Wheel nuts	85
Flexible coupling to steering column shaft pinch bolt	22
Flexible coupling to pinion shaft pinch bolt	28
Track rod locknuts	63
Steering wheel retaining bolt	45
Steering column retaining nuts	12

SECTION 211-01 Manual Steering

VEHICLE APPLICATION: 2002 Bantam

SUBJECT **PAGE**

DESCRIPTION AND OPERATION
Manual Steering 211-01-16
DIAGNOSIS AND TESTING
Manual Steering 211-01-17
REMOVAL AND INSTALLATION
Steering Gear ..... (13 116 0) 211-01-18/23
SPECIFICATIONS
Specifications 211-01-24
Torque Specifications 211-01-24

DESCRIPTION AND OPERATION

Manual Steering

The manual steering gear is of the conventional rack and pinion type as used on most previous models. The steering gear is mounted on the crossmember. This type of steering gear may be fitted to either left or right-hand drive variants.

The steering column is attached, at the lower end, to a flexible coupling by means of a pinch bolt, cage and aligner assembly. The flexible coupling, in turn, is attached to the steering gear pinion shaft with a pinch bolt. A floor seal protects the flexible coupling's entry into the engine compartment.

The steering column incorporates a well proven multi-position steering lock with a high security lock barrel. The steering column assembly is fixed at its upper end to a dash panel extension with two nuts.

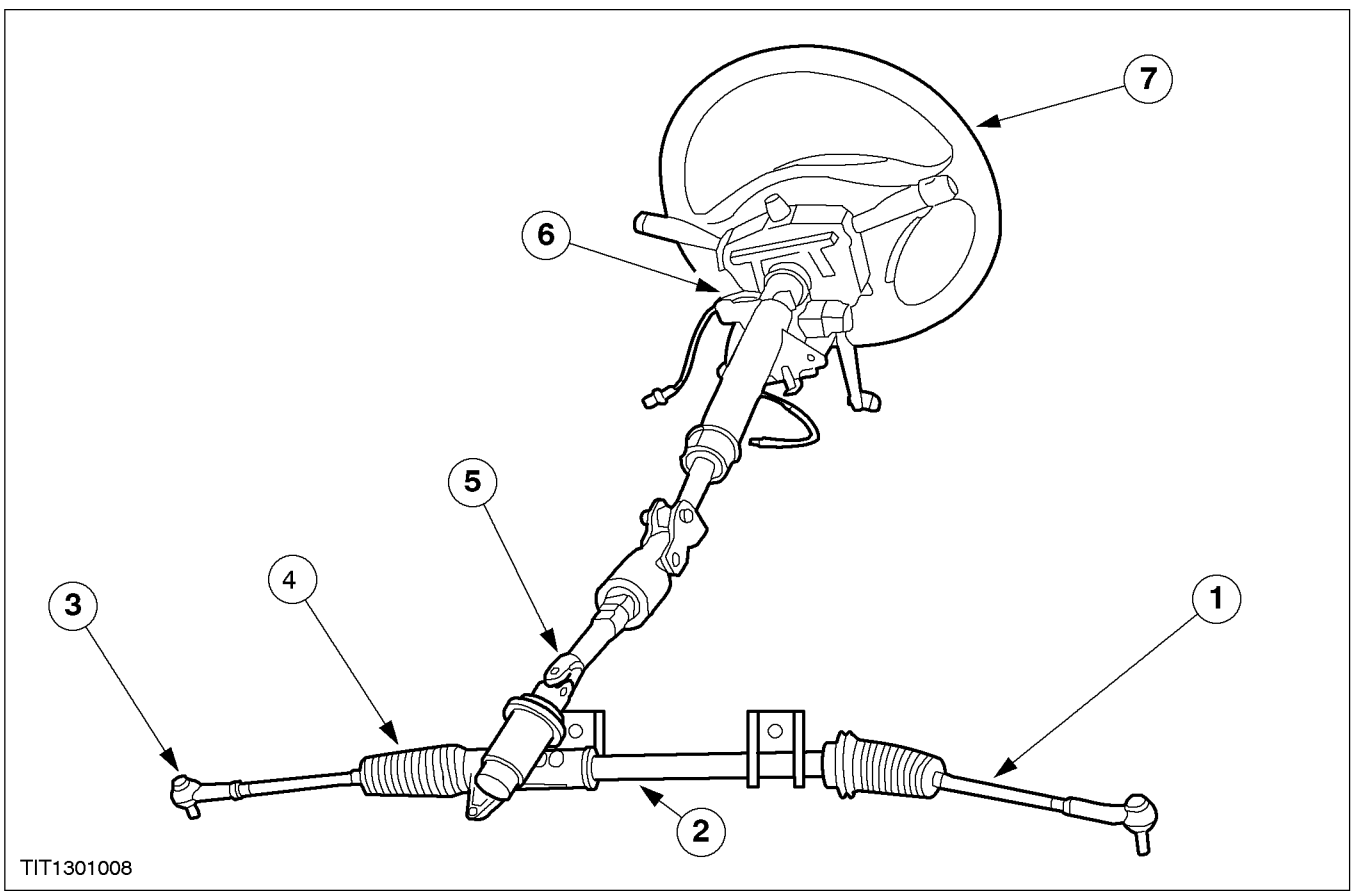

Item	Description
1	Track rod
2	Steering gear
3	Track rod end
4	Steering gear gaiter

Item	Description
5	Flexible coupling
6	Steering column assembly
7	Steering wheel

DIAGNOSIS AND TESTING

Manual Steering

REFER to Section 211-00.

REMOVAL AND INSTALLATION

Steering Gear (13 116 0)

Special Tool(s)	
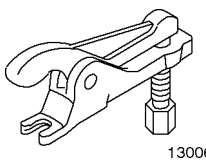 13006	Separator, ball joint 13-006

Removal

1. Disconnect the battery ground cable.
2. From inside the passenger compartment, remove the flexible coupling to pinion shaft pinch bolt.

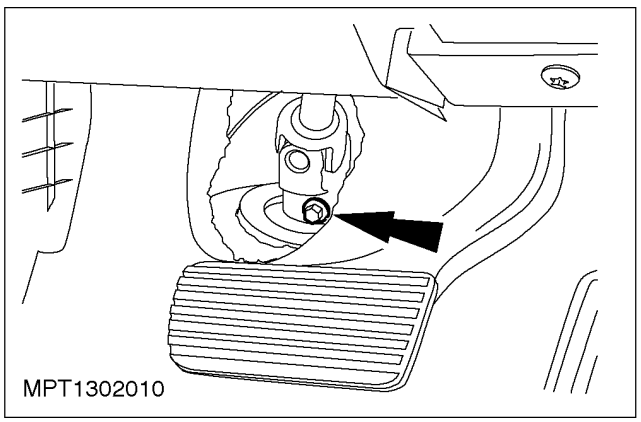
MPT1302010

3. From inside the passenger compartment slacken the flexible coupling to column shaft pinch bolt.

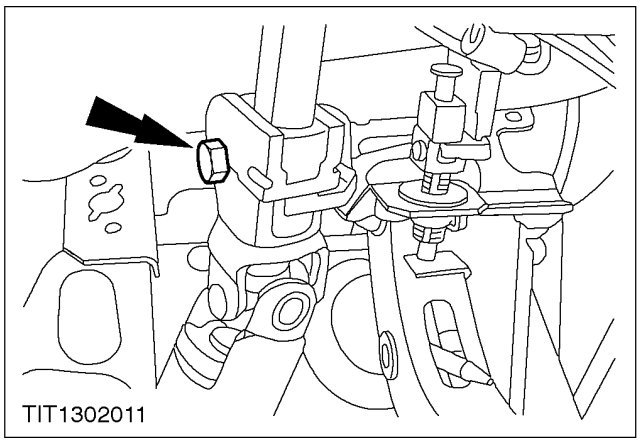
TIT1302011

4. Slacken the wheel nuts, raise the vehicle and remove the front road wheels.

REMOVAL AND INSTALLATION (CONTINUED)

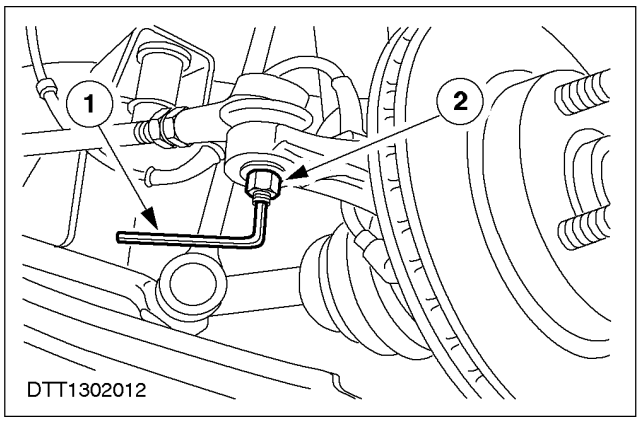

5. Remove the track rod end locknuts.
   1. Hold the ball joint studs with an Allen key.
   2. Remove the locknuts.

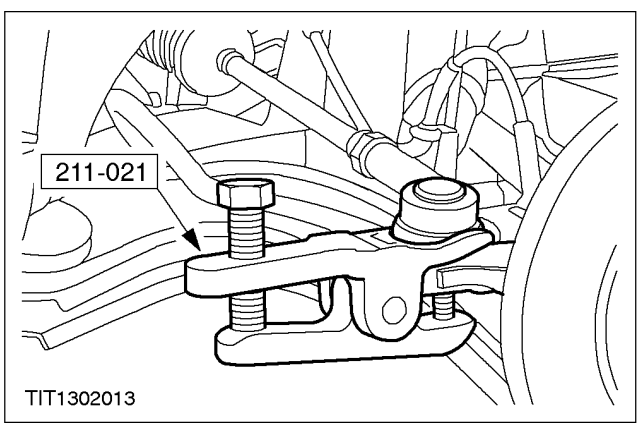

6. **NOTE:** When the track rod ends are separated from the spindle carriers the ball joint seals should be wrapped in a cloth to protect them.
   Disconnect the track rod end ball joints from the spindle carriers.

Vehicles with manual transaxle

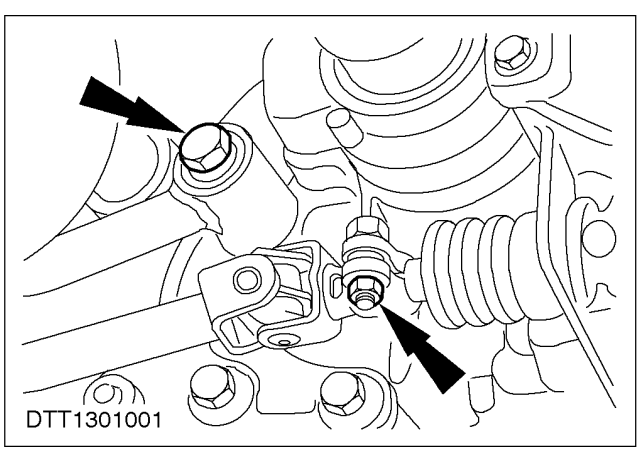

8. Disconnect the gearshift linkage.

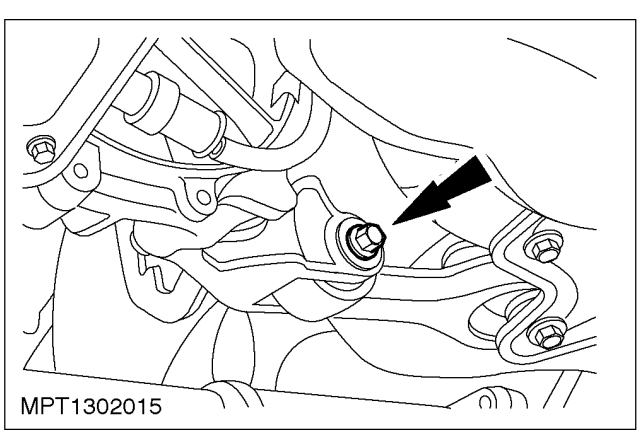

9. Remove the roll restrictor to transmission retaining bolt.

REMOVAL AND INSTALLATION (CONTINUED)

10. Support the crossmember assembly.

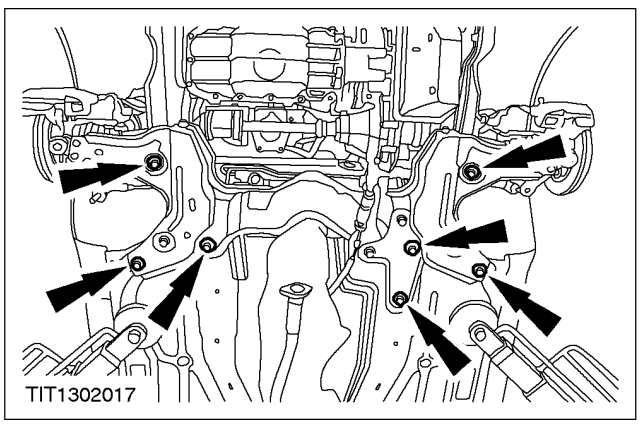

11. Remove the crossmember assembly retaining bolts.

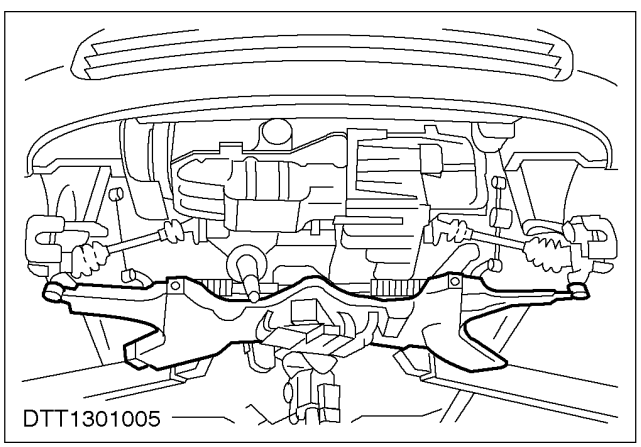

12. Lower the crossmember assembly to gain access to the steering gear retaining nuts and bolts.

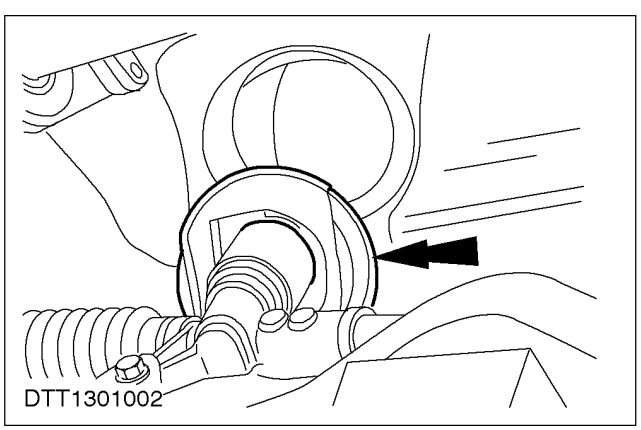

13. Remove the pinion shaft body seal.

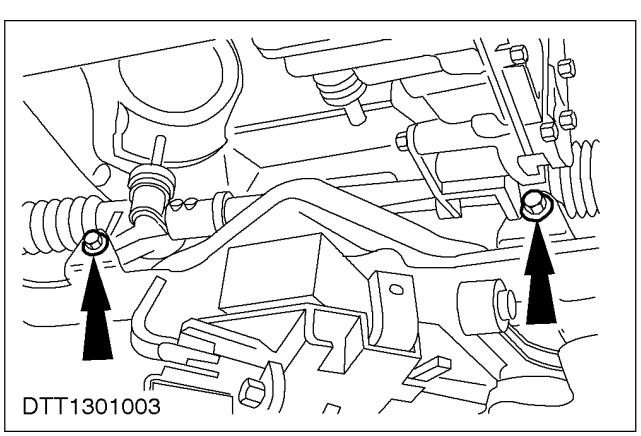

14. Remove the steering gear retaining nuts and bolts.

REMOVAL AND INSTALLATION (CONTINUED)

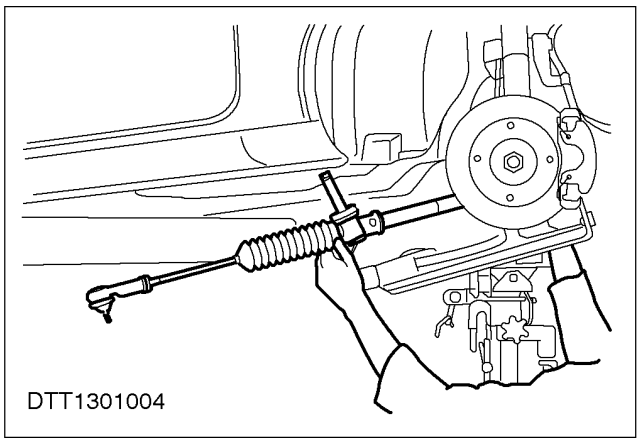

15. Remove the steering gear.

Installation

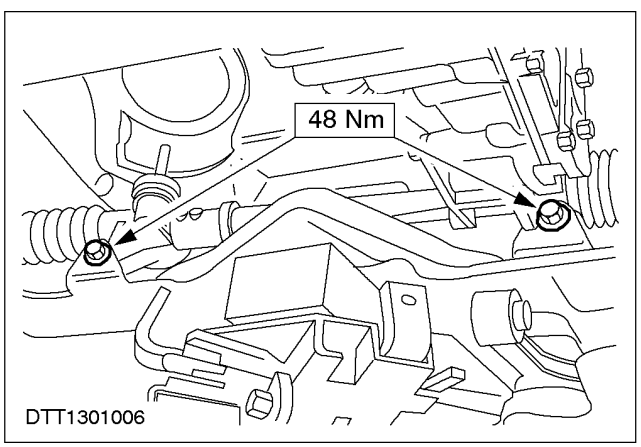

1. Install the steering gear.

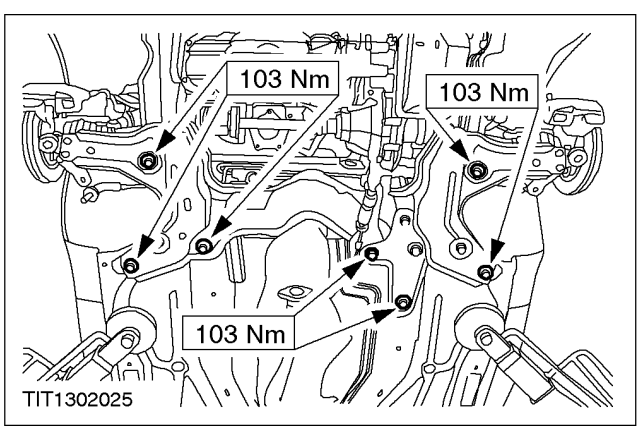

2. Install the crossmember.

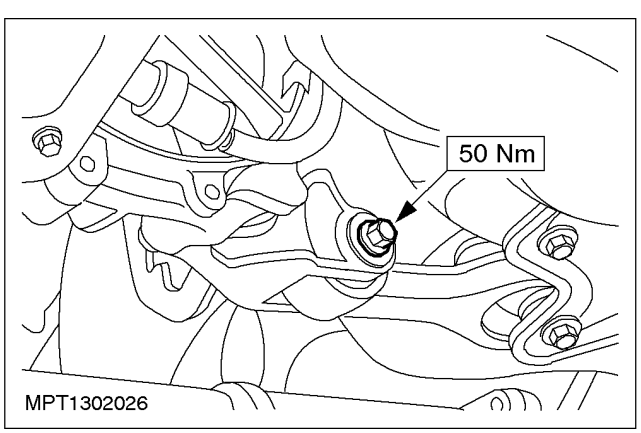

3. Install the roll restrictor.

REMOVAL AND INSTALLATION (CONTINUED)

Vehicles with manual transaxle

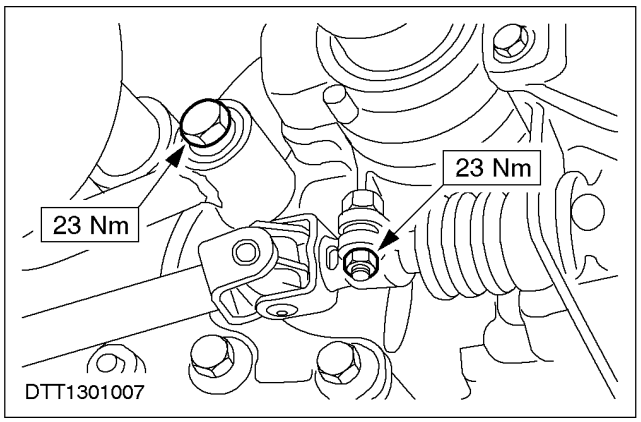

4. Install the gearshift linkage.

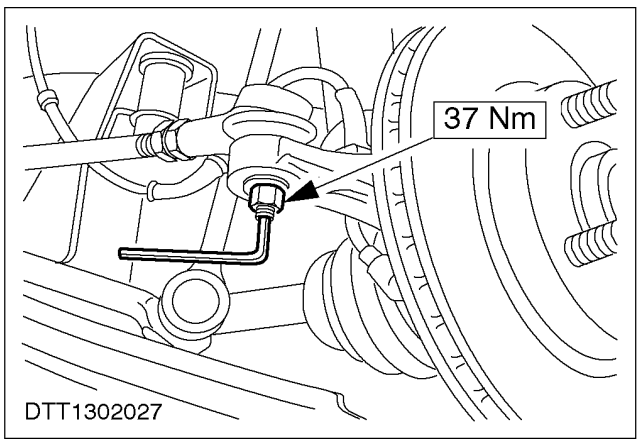

5. Install the tie rods.

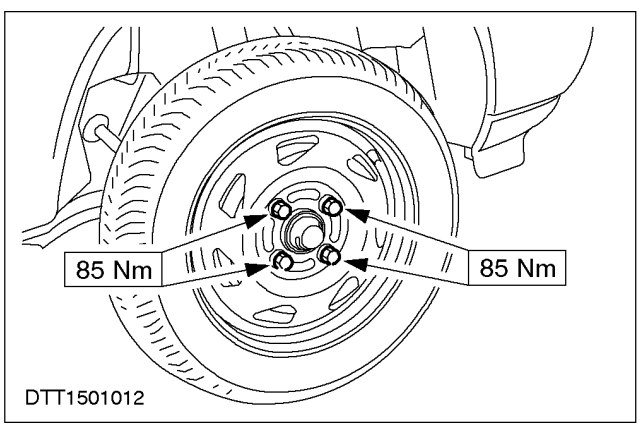

6. Install the wheels.

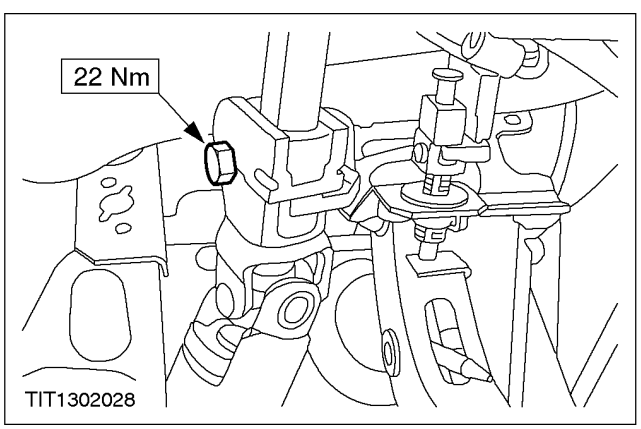

7. **CAUTION: Make sure that the steering is in the straight ahead position.**

   Install the upper steering coupling pinch bolt.

REMOVAL AND INSTALLATION (CONTINUED)

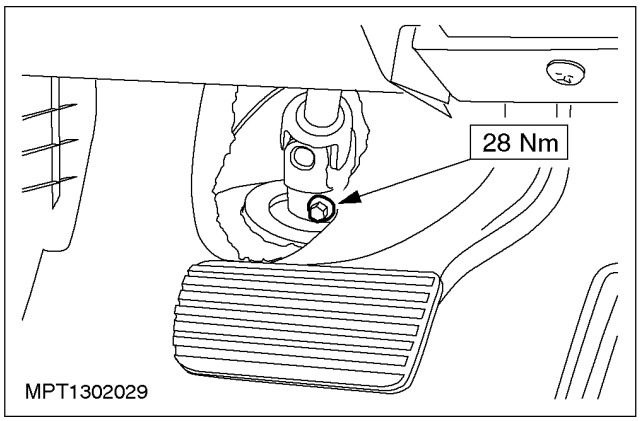

8. Install the lower steering coupling pinch bolt.

SPECIFICATIONS

Torque Specifications

Description	Nm
Steering gear retaining nuts and bolts	48
Crossmember retaining bolts	103
Roll restrictor to transmission retaining bolt	50
Track rod end to spindle carrier locknuts	37
Flexible coupling to steering column shaft pinch bolt	22
Flexible coupling to pinion shaft pinch bolt	28
Track rod end to tie rod locknuts	63
Steering wheel retaining bolt	45
Steering column retaining nuts	12

SECTION 211-02 Power Steering - Petrol

VEHICLE APPLICATION: 2002 Bantam

SUBJECT PAGE

DESCRIPTION AND OPERATION

Power Steering 211-02-26/28

DIAGNOSIS AND TESTING

Power Steering 211-02-29

REMOVAL AND INSTALLATION

Power Steering Pump — Vehicles with 1.8l Endura DE diesel Engine ..... (13 434 0) 211-02-30/33
Power Steering Pump — Vehicles with 1.3l petrol engine..... (13 434 0) 211-02-34/37
Power Steering Pump — Vehicles with 1.6l petrol engine..... (13 434 0) 211-02-38/45
Power Steering Gear ..... (13 116 0) 211-02-46/54
Steering Gear Pinion Oil Seal ..... (13 468 0) 211-02-55/57
Power Steering Fluid Cooler ..... (13 444 0) 211-02-58/59
Power Steering Pump to Steering Gear Pressure line 211-02-60/69
Steering Gear to Fluid Cooler Return Hose 211-02-70/78

SPECIFICATIONS

Specifications..... 211-02-79
Lubricants, Fluids, Sealers and Adhesives 211-02-79
Turning Circles 211-02-79
Torque Specifications..... 211-02-79

DESCRIPTION AND OPERATION

Power Steering

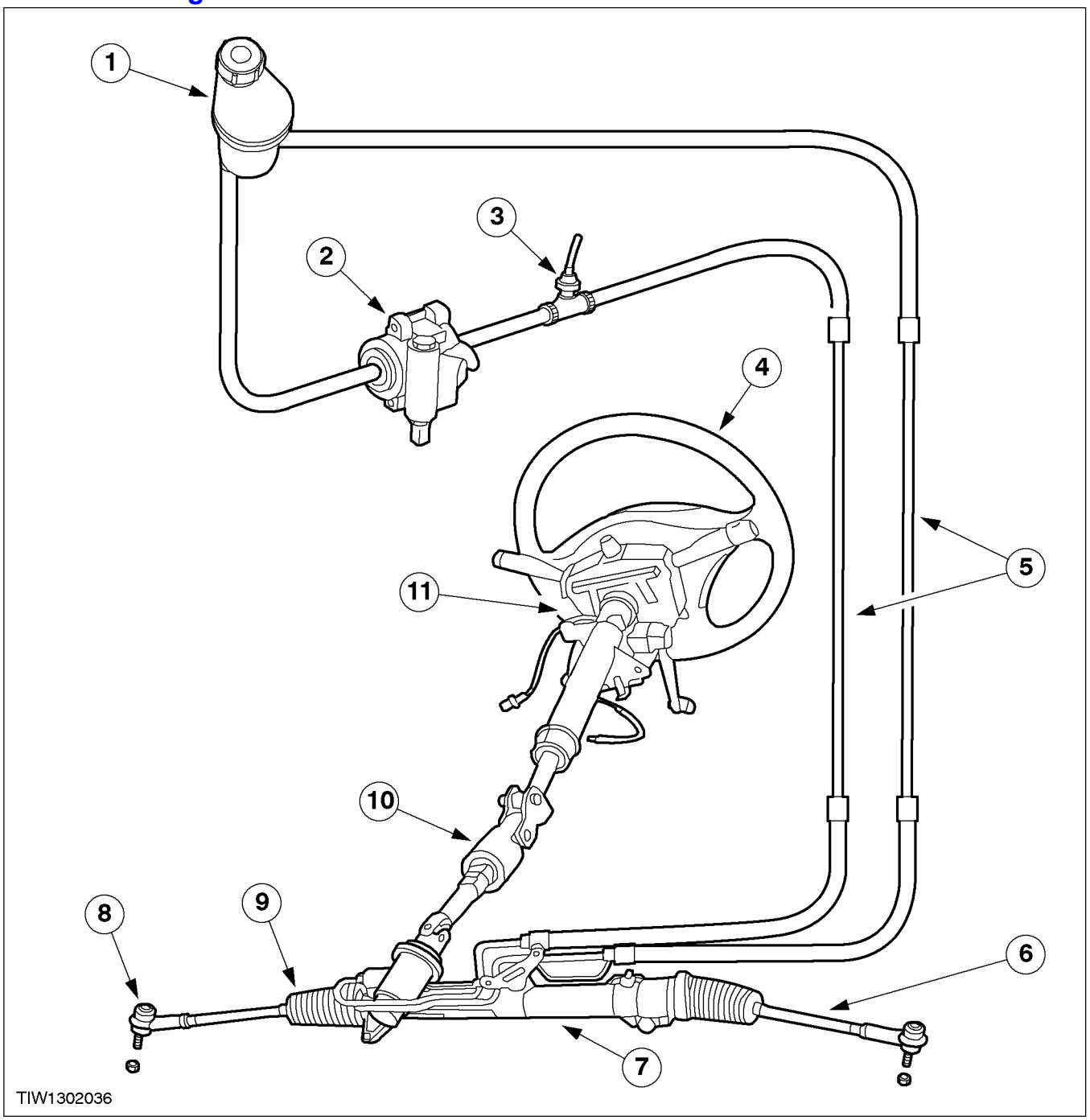

Item	Description
1	Power steering fluid reservoir
2	Power steering pump
3	Power steering pressure switch (PSP)
4	Steering wheel
5	Power steering fluid cooler
6	Tie-rod

Item	Description
7	Steering gear
8	Tie-rod end
9	Steering gear boot
10	Steering column coupling
11	Steering column

The power assisted steering gear is of the conventional rack and pinion type. The steering

DESCRIPTION AND OPERATION (CONTINUED)

gear is mounted on the crossmember. The steering gear cannot be disassembled.

Hydraulic fluid is supplied under pressure to the steering gear by a hydraulic pump. The hydraulic pump is driven by the accessory drive belt and has a remote fluid reservoir located on the right-hand side of the engine compartment. The power steering pump cannot be disassembled. Install a new unit.

A power steering pressure (PSP) switch located in the power steering pressure line is normally closed. When the power steering load is increased, the PSP switch opens, signalling the powertrain control module to increase the engine idle speed.

Vehicles with 1.8L Endura DE engine.

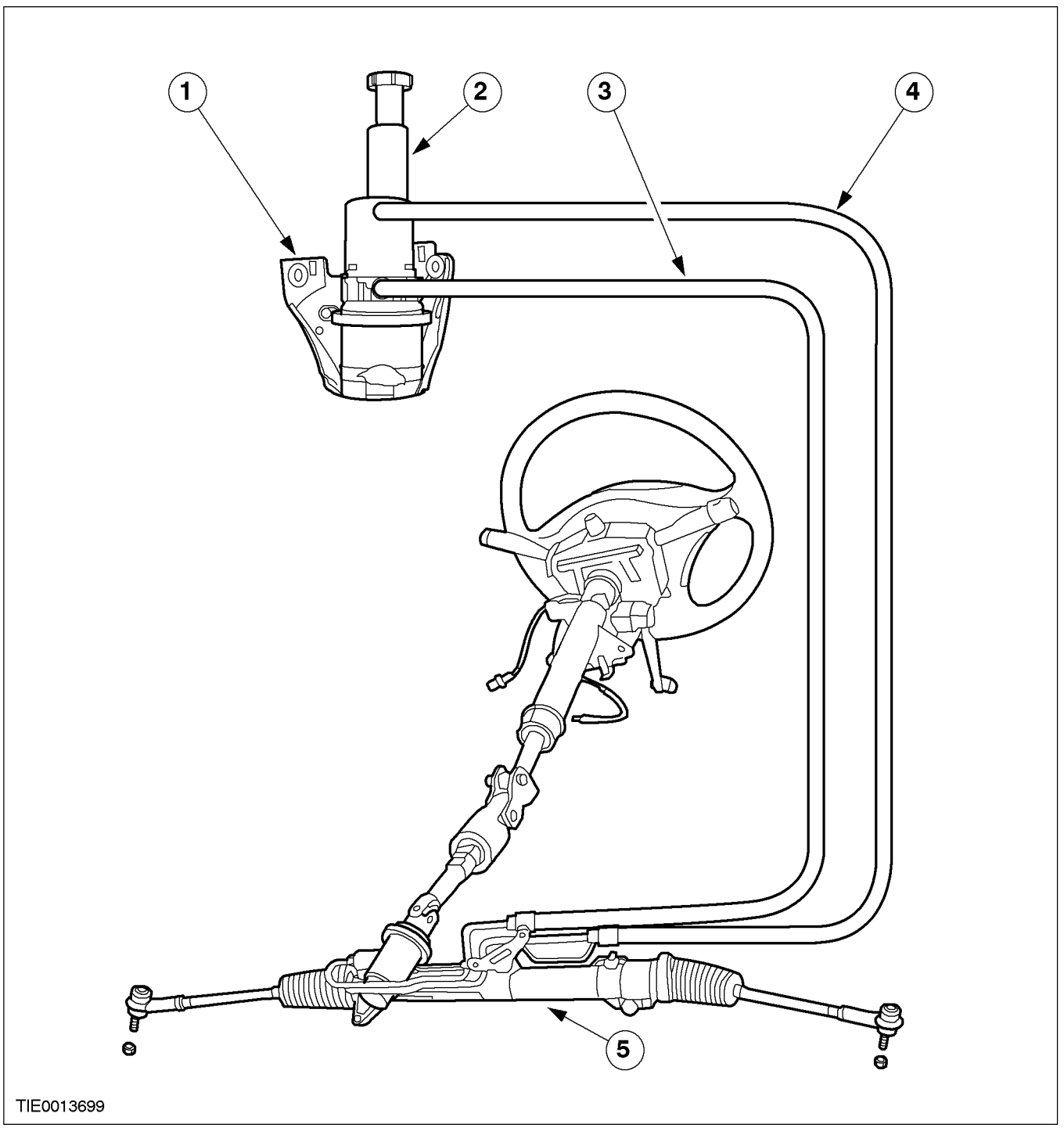

DESCRIPTION AND OPERATION (CONTINUED)

Item	Description
1	Mounting bracket
2	Electro-hydraulic power steering reservoir / pump
3	High-pressure line
4	Low-pressure line
5	Steering gear

Vehicles with the 1.8 Endura DE engine have an electo-hydrulic power steering pump.

The electro-hydraulic power steering pump consists of an electro hydraulic motor and reservoir and is located in the engine compartment on the left hand side. The fuse and relay are located next to one another on the battery mounting tray.

As soon as the engine is running, the control relay of the electric power steering pump receives a signal from the EEC V PCM. The relay then closes and the pump starts to operate.

DIAGNOSIS AND TESTING

Power Steering

REFER to Section 211-00.

REMOVAL AND INSTALLATION

Power Steering Pump — Vehicles with 1.8l Endura DE diesel Engine.

Special Tool(s)	
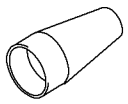 13015	Expander, Teflon seal 13-015
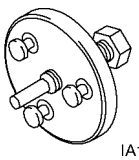 IA13022	Remover, power steering pump pulley 13-022

Special Tool(s)	
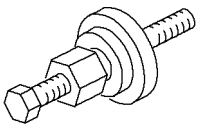 21192	Installer, camshaft pulley 21-192

Removal

1. Disconnect the battery ground cable.
2. Raise the vehicle.

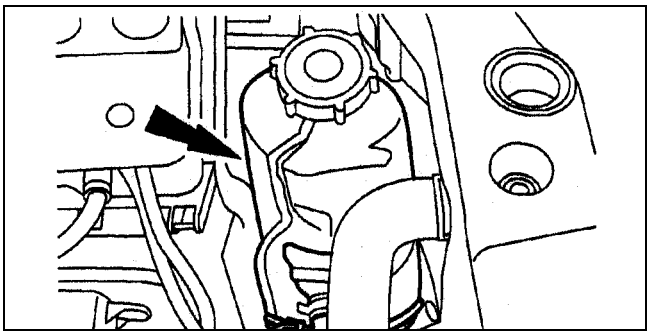

3. Remove the power steering pump cover.
   - Remove the tie strap

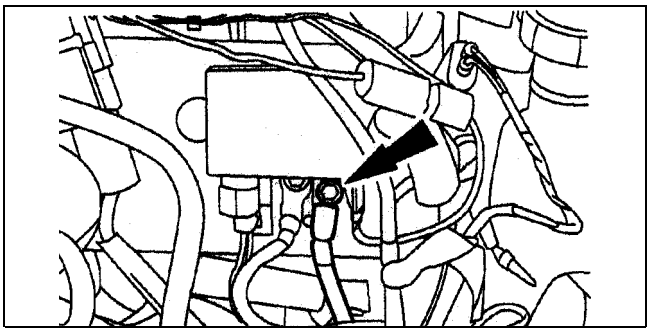

4. Disconnect the power steering pump electrical connector.

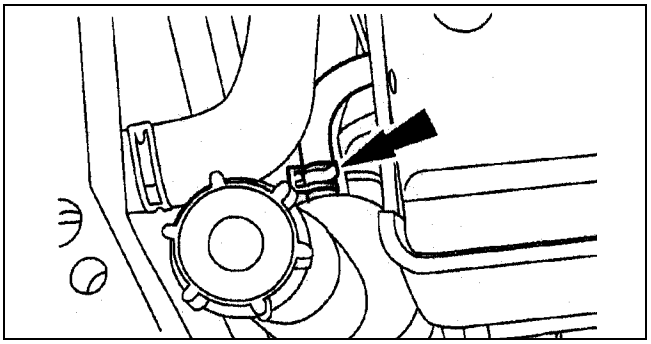

5. Disconnect the low pressure line.
   Allow the fluid to drain into a suitable container.

REMOVAL AND INSTALLATION (CONTINUED)

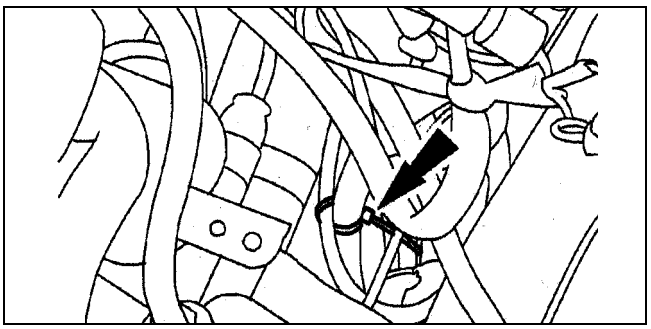

6. Remove the cable tie.

REMOVAL AND INSTALLATION (CONTINUED)

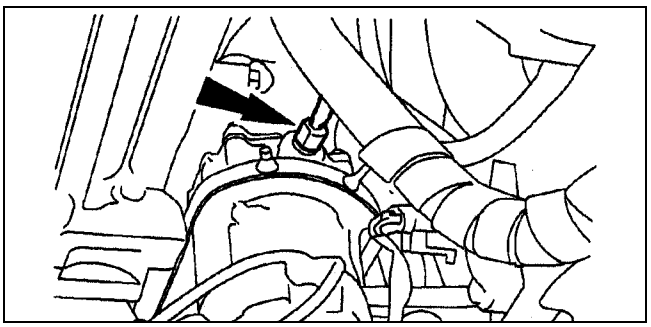

7. Disconnect the high pressure line.
- Allow the fluid to drain into a suitable container.

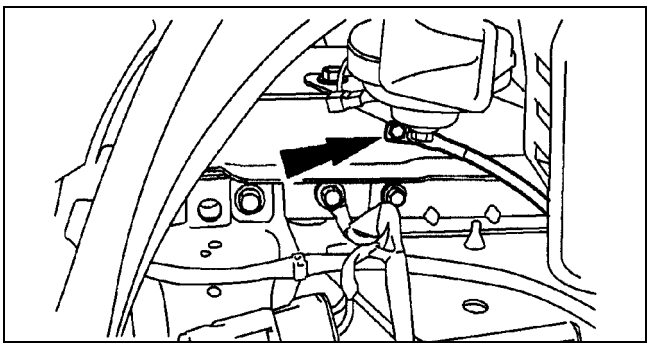

8. Disconnect the power steering pump ground cable.

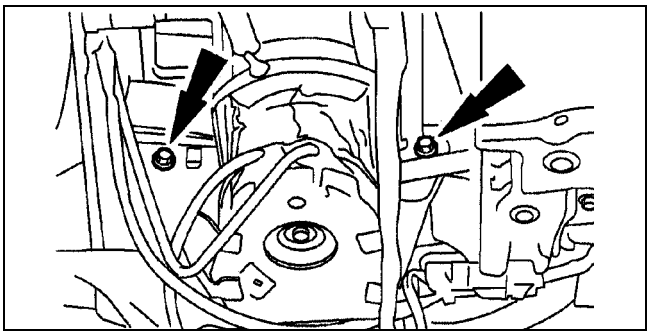

9. Remove the power steering pump mounting bracket upper bolts.

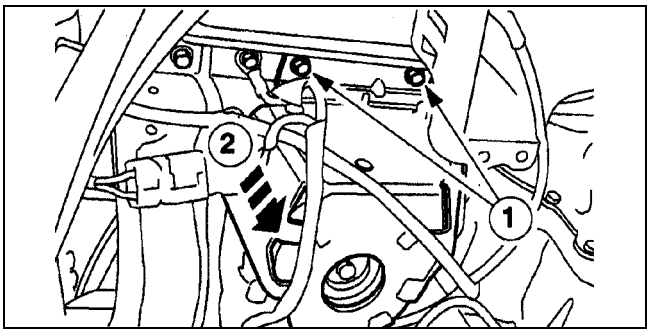

10. Remove the power steering pump, and mounting bracket.

    1 Remove the bolts.
    2 Remove the power steering pump and mounting bracket.

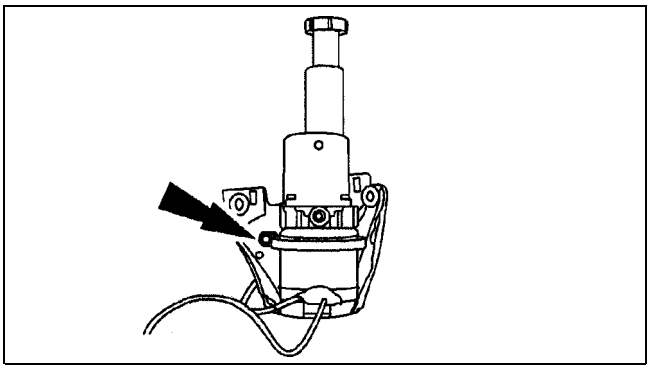

11. Remove the power steering pump from the mounting bracket.

REMOVAL AND INSTALLATION (CONTINUED)

Installation

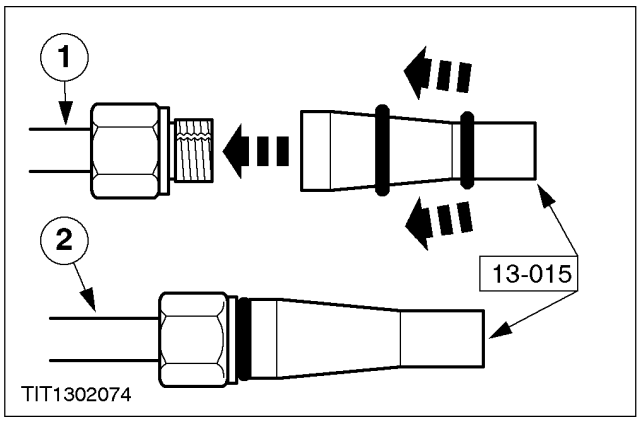

1. **CAUTION: Install a new "O" ring seal on the power steering high pressure line.**

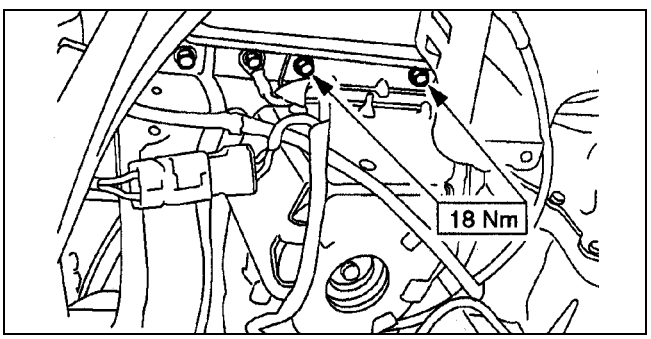

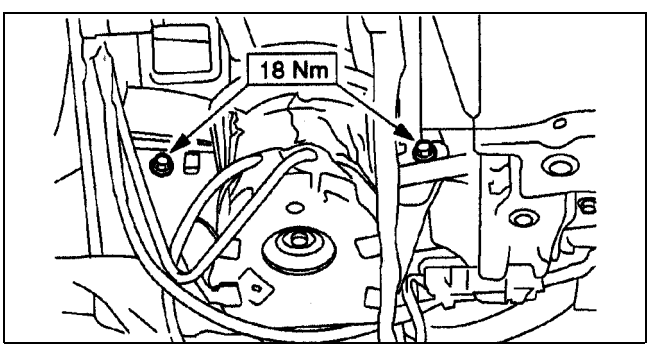

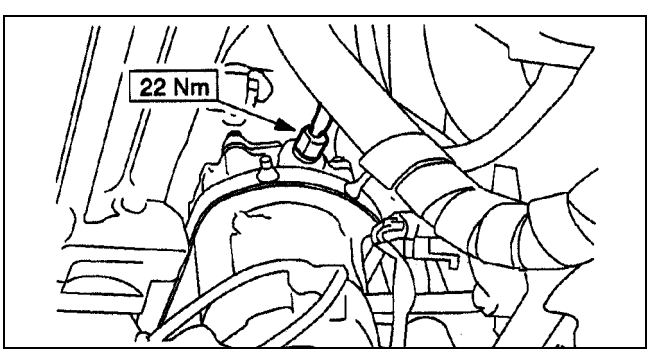

2. Refit the components in the reverse order.
3. Fill and bleed the power steering system. For additional information, refer to Section 211-00.

REMOVAL AND INSTALLATION

Power Steering Pump — Vehicles with 1.3L Engine (13 434 0)

Special Tool(s)	
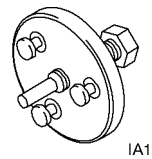 IA13022	Remover, Power Steering Pump Pulley 13-022 (211-199)

Special Tool(s)	
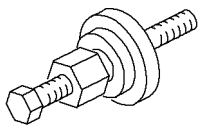 21192	Installer, Pulley, Camshaft 303-458 (21-192)

Removal

1. Raise and support the vehicle. For additional information, refer to Section 100-02.

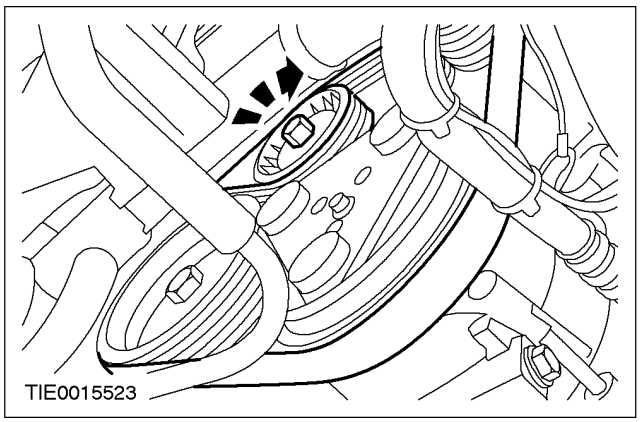
TIE0015523

2. Detach the accessory drive belt from the power steering pump pulley.
   - Rotate the accessory drive belt tensioner clockwise.

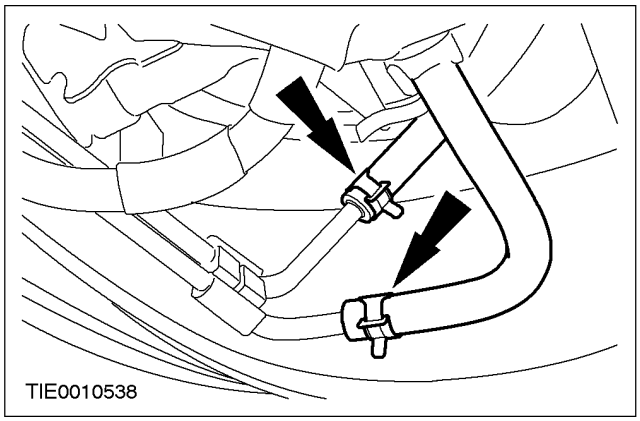
TIE0010538

3. **CAUTION: To prevent ingress of power steering fluid into the generator, the power steering fluid must be drained.**
   Disconnect the power steering fluid cooler lines from the power steering fluid cooler.
   - Allow the fluid to drain into a suitable container.

4. Lower the vehicle.

REMOVAL AND INSTALLATION (CONTINUED)

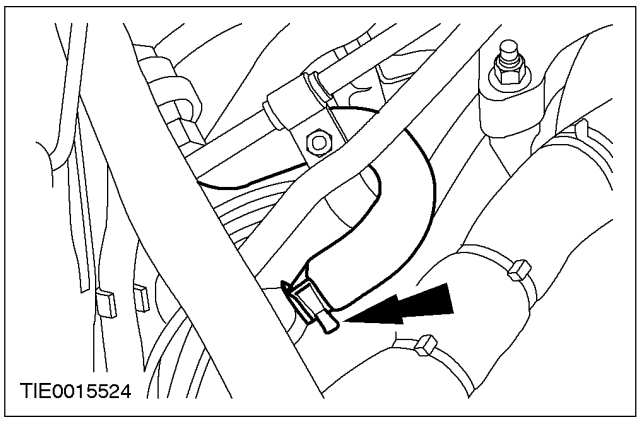

5. ⚠ **CAUTION: Using a suitable cloth, cover the generator to prevent ingress of power steering fluid.**
   Disconnect the power steering low-pressure line from the power steering pump.
   - Allow the fluid to drain into a suitable container.

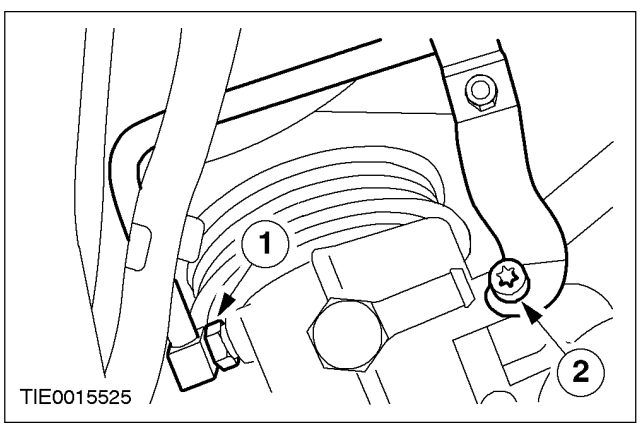

6. Disconnect the power steering high-pressure line.
   1. Disconnect the power steering high-pressure line from the power steering pump.
   2. Remove the power steering pump and power steering high-pressure line support bracket bolt.
   - Allow the fluid to drain into a suitable container.

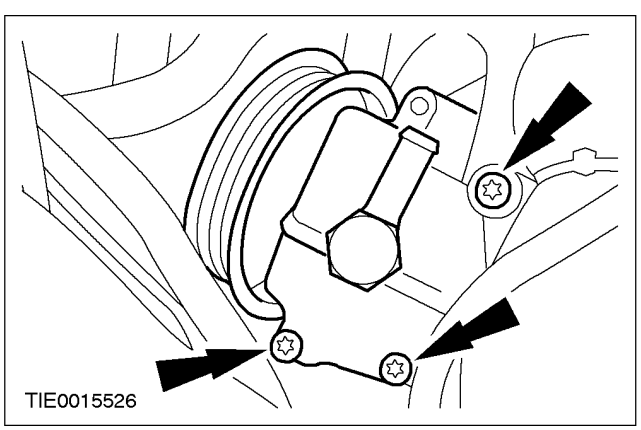

7. Remove the power steering pump.

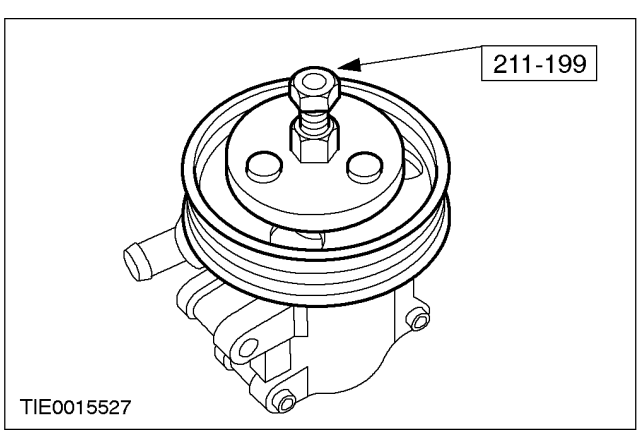

8. **NOTE:** When installing a new power steering pump, the power steering pump pulley should be removed and retained.
   Using the special tool, remove the power steering pump pulley.

REMOVAL AND INSTALLATION (CONTINUED)

Installation

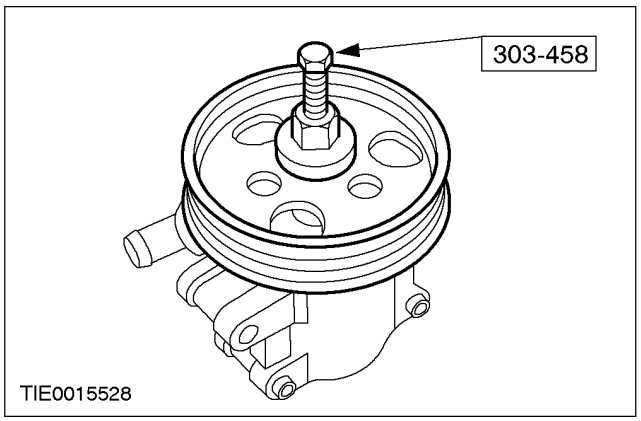

1. **NOTE:** When installing a new power steering pump, install the power steering pump pulley. Using the special tool, install the power steering pump pulley.

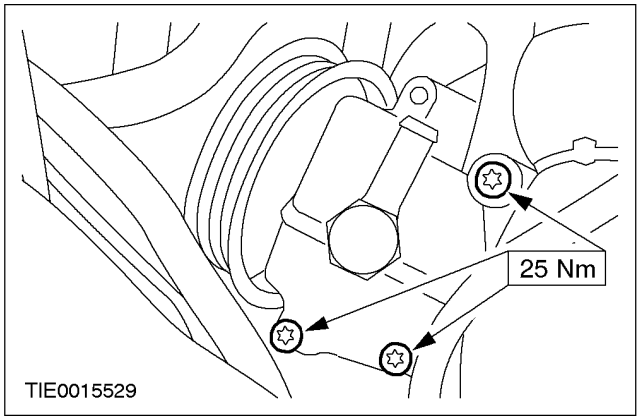

2. Install the power steering pump.

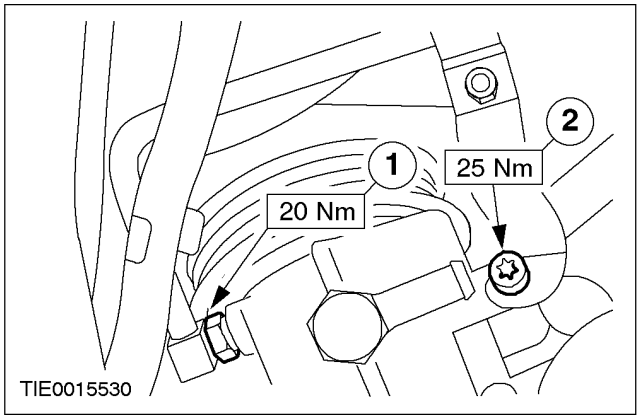

3. Connect the power steering high-pressure line.
   1. Connect the power steering high-pressure line.
   2. Install the power steering pump and power steering high-pressure line support bracket bolt.

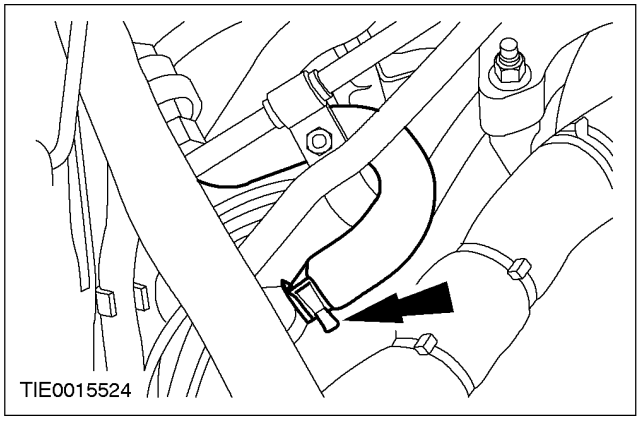

4. Connect the power steering low-pressure line.

REMOVAL AND INSTALLATION (CONTINUED)

5. Raise and support the vehicle. For additional information, refer to Section 100-02.

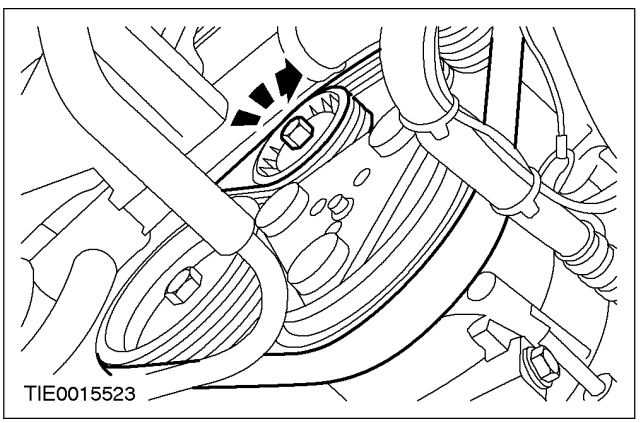

6. Attach the accessory drive belt to the power steering pump pulley.
   - Rotate the accessory drive belt tensioner clockwise.

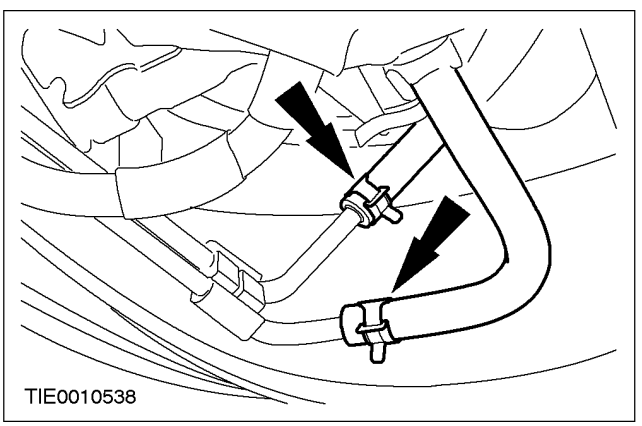

7. Connect the power steering fluid cooler lines to the power steering fluid cooler.

8. Lower the vehicle.

9. Fill and bleed the power steering system. For additional information, refer to Section 211-02.

REMOVAL AND INSTALLATION

Power Steering Pump — Vehicles with 1.6L Engine (13 434 0)

Special Tool(s)	
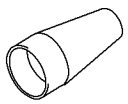 13015	Expander, Teflon Seal 211-188 (13-015)
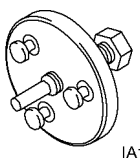 IA13022	Remover, Power Steering Pump, Pulley 211-199 (13-022)

Special Tool(s)	
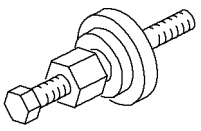 21192	Installer Camshaft Pulley 303-458 (21-192)

Removal

1. Remove the auxiliary drive belt. For additional information, refer to Section 303-05.

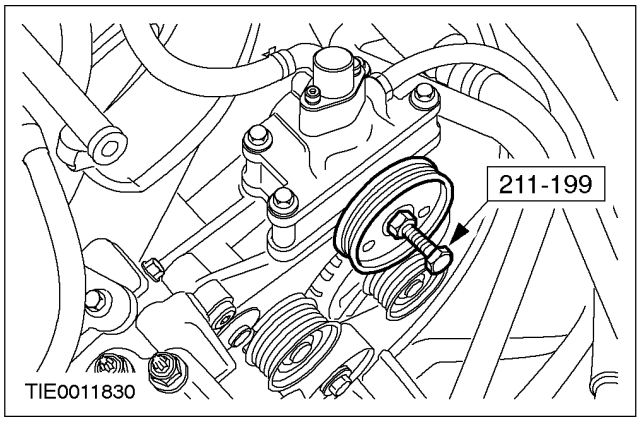

2. **NOTE:** When installing a new power steering pump, remove the power steering pump drive pulley.
   Using the special tool, remove the power steering pump drive pulley.

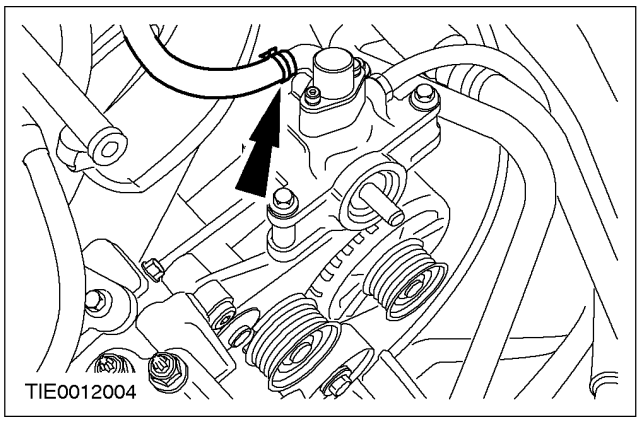

3. Remove the low-pressure line.
   - Allow the fluid to drain into a suitable container.

REMOVAL AND INSTALLATION (CONTINUED)

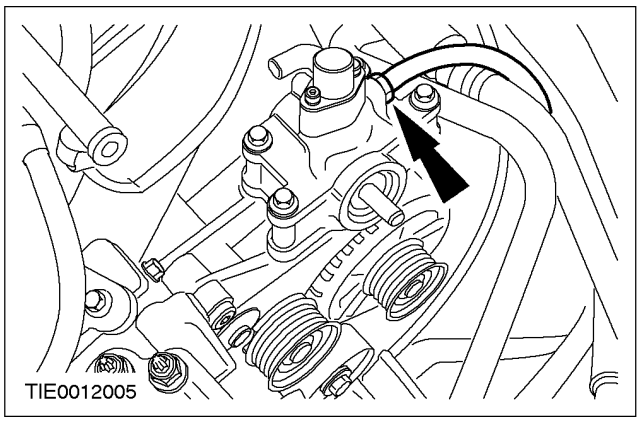

4. Remove the high-pressure line.
   - Allow the fluid to drain into a suitable container.

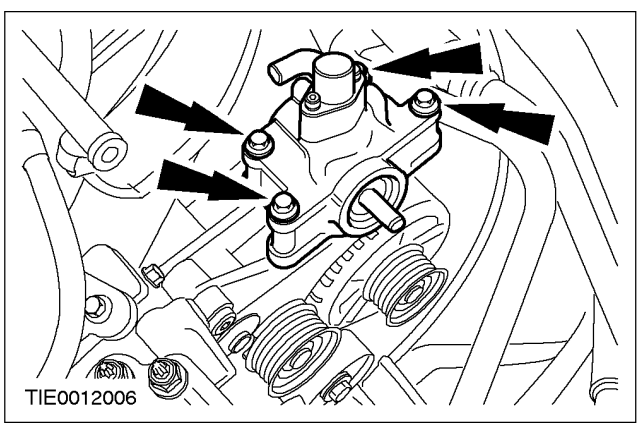

5. Remove the power steering pump.

Installation

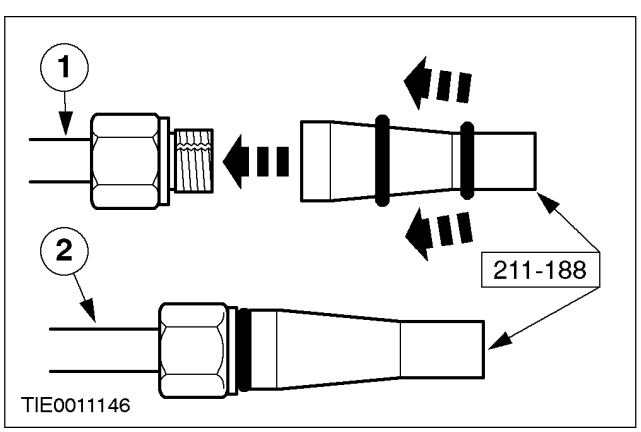

1. **NOTE:** If installing a new power steering pump the unions that are supplied fitted to the pump should be removed and discarded. Install a new union O-ring.
   1. Push the O-ring onto the tool.
   2. Locate the tool on the union and push on the O-ring.

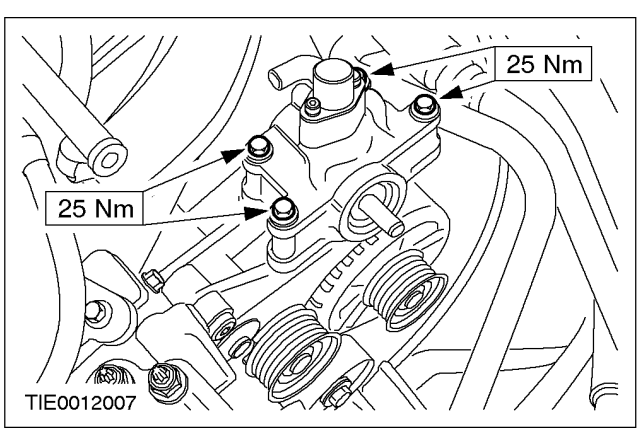

2. Install the power steering pump.

REMOVAL AND INSTALLATION (CONTINUED)

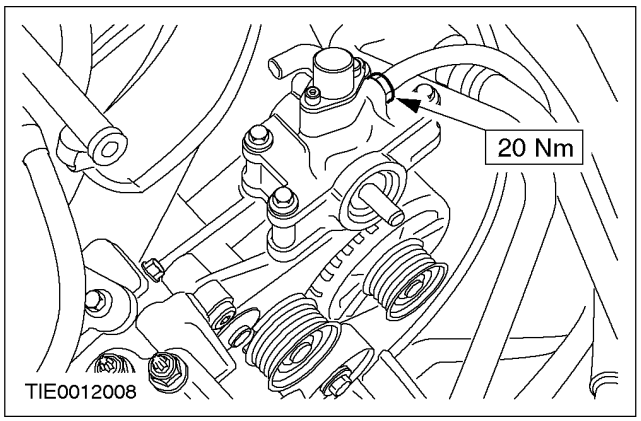

3. Install the high-pressure line.

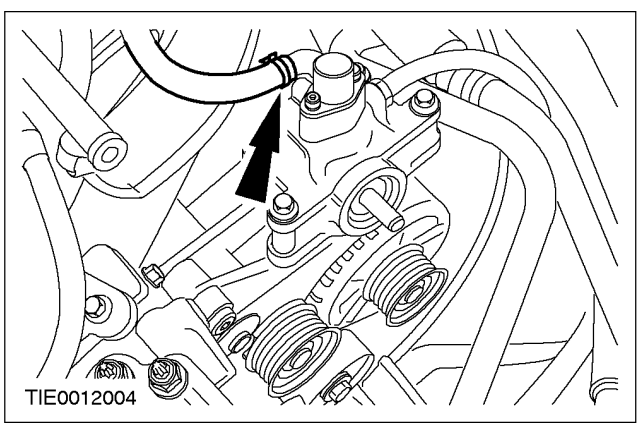

4. Install the low-pressure line.

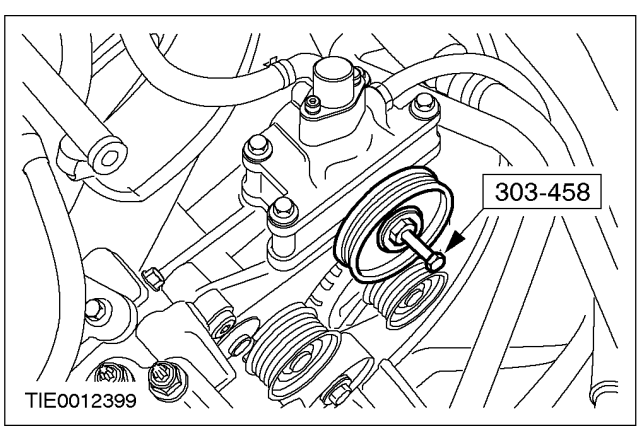

5. **CAUTION: When installing a new power steering pump make sure a new power steering pump drive pulley is installed.**

   CAUTION: Make sure the pulley is flush with the end of the power steering pump shaft.

   Using the special tool, install a new power steering pump drive pulley.

6. Install the auxiliary drive belt. For additional information, refer to Section 303-05.

7. Fill and bleed the power steering system. For additional information, refer to Section 211-00.

REMOVAL AND INSTALLATION

Drive Belt - Power Steering Pump (with Air Conditioning) - Remove

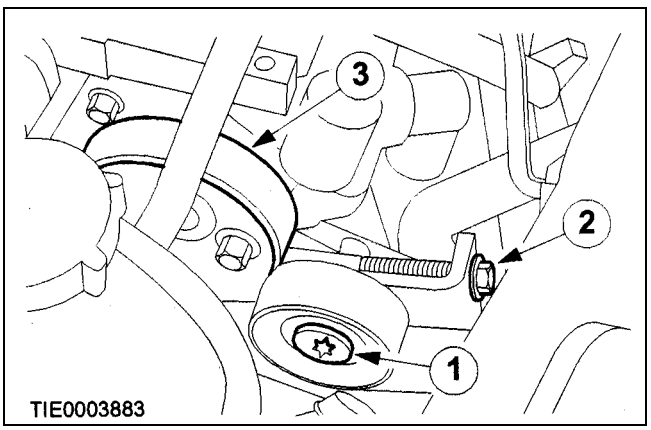

6. Remove the power steering drive belt.
   1 Slacken the drive belt tensioner pulley centre bolt.
   2 Slacken the adjusting bolt.
   3 Remove the drive belt.

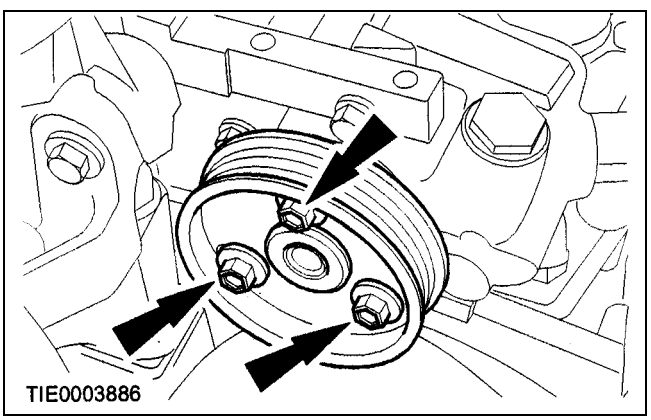

7. Remove the power steering pump pulley
   - Hold the centre of the pump shaft with an Allen key if necessary.

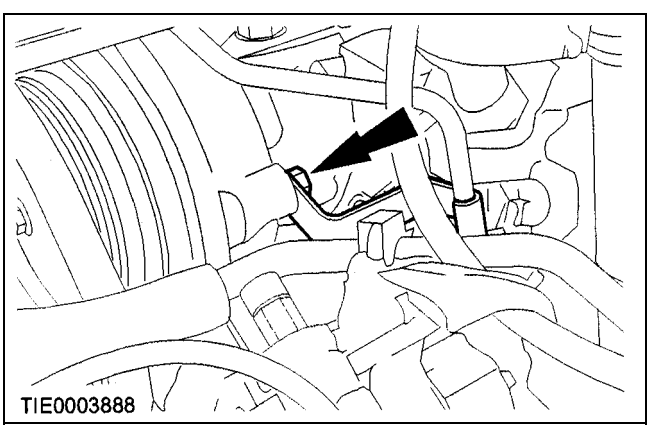

9. Detach the high pressure pipe support bracket.

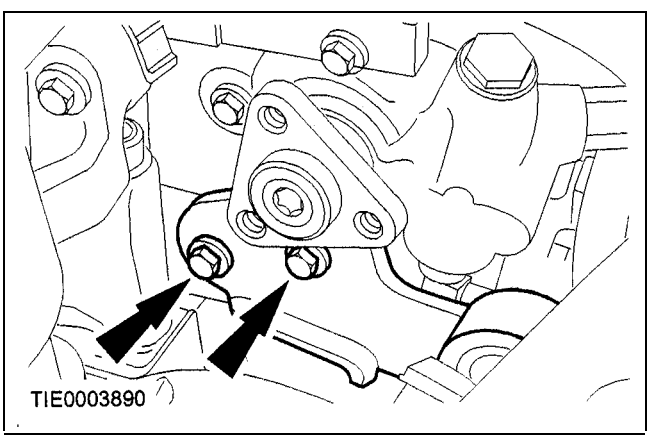

10. Remove the auxiliary drive belt tensioner bracket.

REMOVAL AND INSTALLATION (CONTINUED)

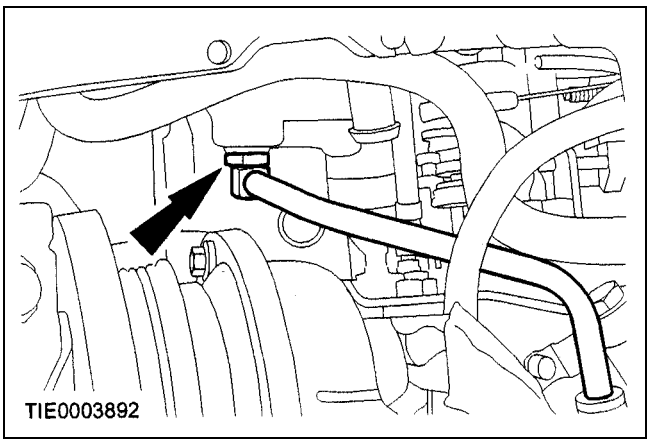

11. Disconnect the high pressure pipe union.
    - Allow the fluid to drain into a suitable container.

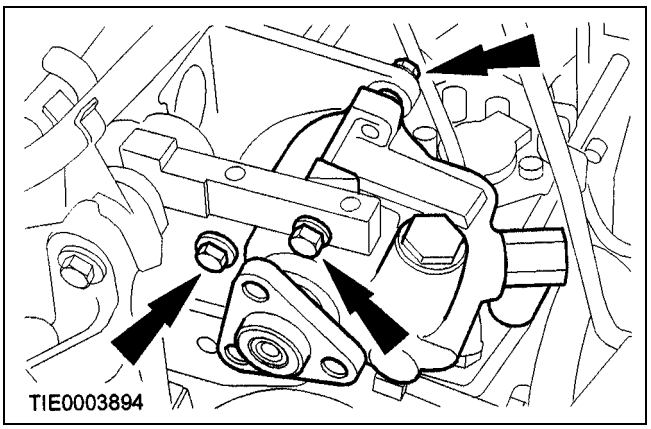

12. Remove the power steering pump.

Installation

1. Note: If the power steering pump is being renewed the unions that are supplied fitted to the pump should be removed and retained for future use.

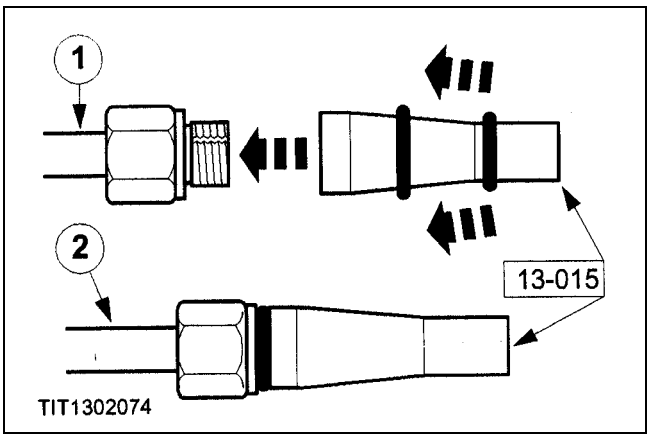

1. Renew the union sealing ring.

   1 Push the sealing ring onto the tool.
   2 Locate the tool on the union and push on the sealing ring.

REMOVAL AND INSTALLATION (CONTINUED)

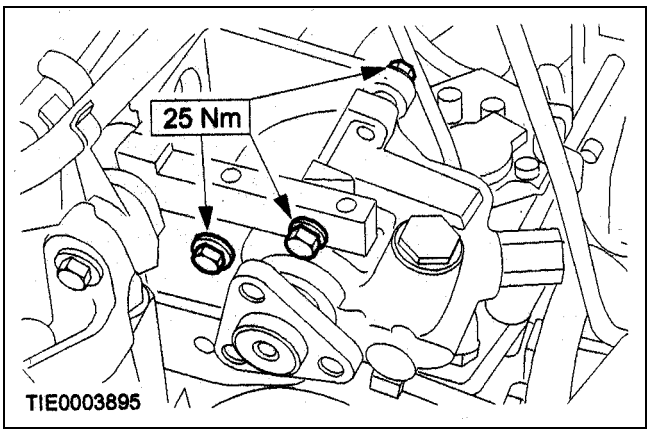

Note: Install the pump front retaining bolts first.

2. Refit the components in reverse order.

REMOVAL AND INSTALLATION (CONTINUED)

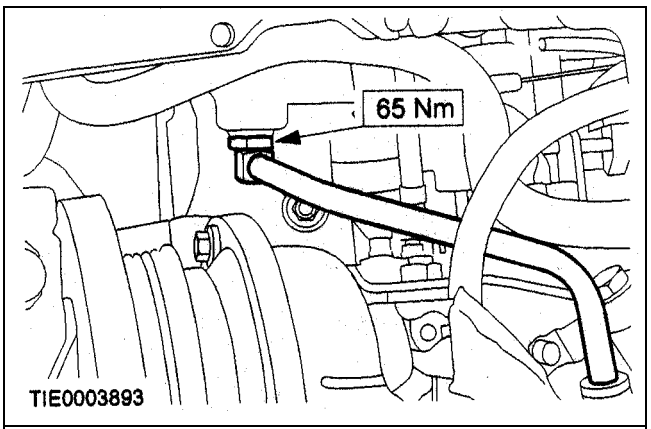

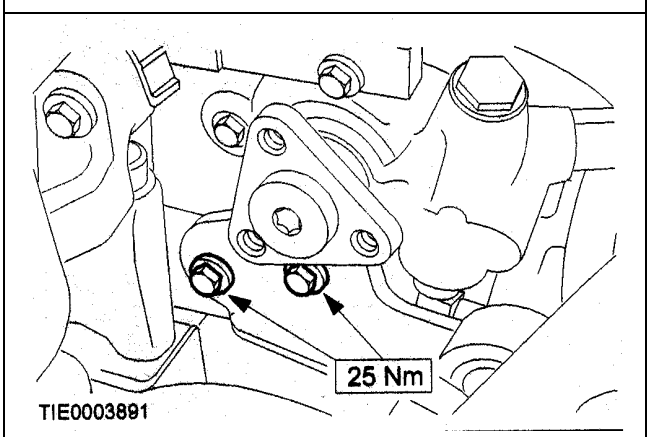

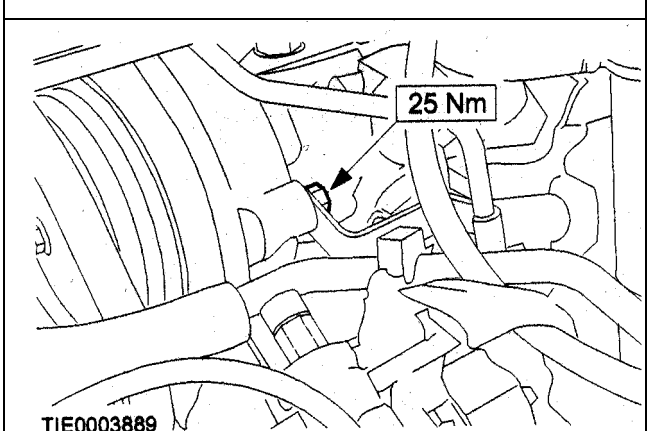

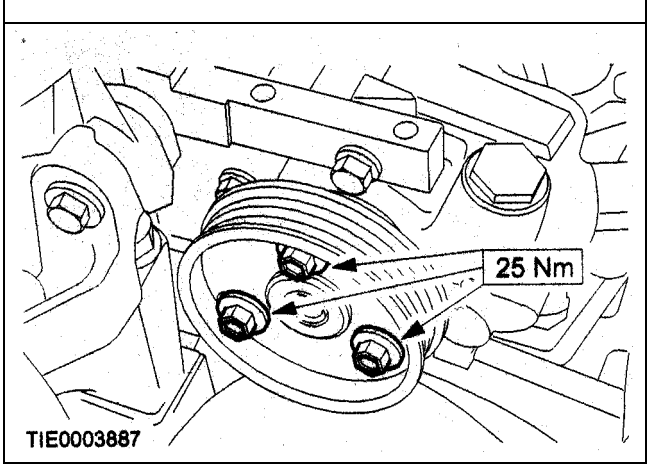

REMOVAL AND INSTALLATION (CONTINUED)

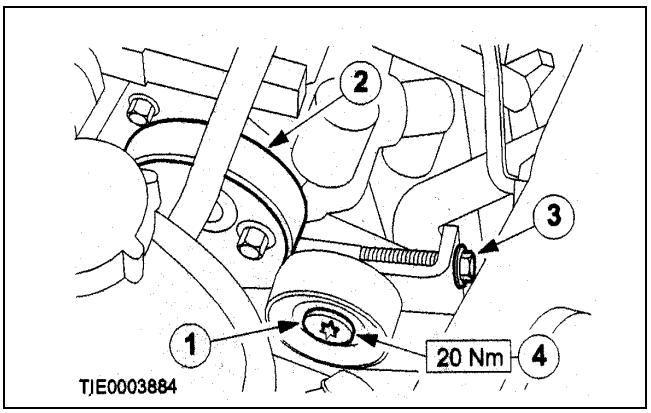

Drive Belt -Power Steering Pump (Endura-DE with Air Conditioning) - Installation

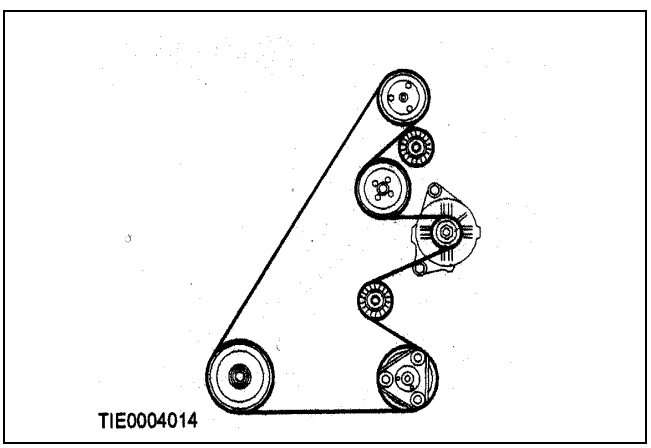

1. Install the power steering pump drive belt.
    1. Slacken the drive belt tensioner pulley centre bolt.
    2. Install the drive belt.
    3. Tension the drive belt with the adjusting bolts. Finger deflection = 1 to 3 mm (used belt) or 1 to 2 mm (new belt).
    4. Tighten the drive belt tensioner pulley centre bolt.

REMOVAL AND INSTALLATION

Power Steering Gear (13 116 0)

Special Tool(s)	
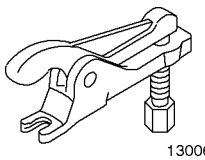 13006	Separator, ball joint 13-006
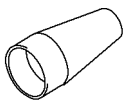 13015	Expander, Teflon seal 13-015

Special Tool(s)	
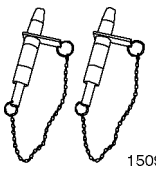 15097A	Guide pins, subframe 15-097A

Removal

1. Disconnect the battery ground cable.
2. From inside the passenger compartment, remove the flexible coupling to pinion shaft pinch bolt.

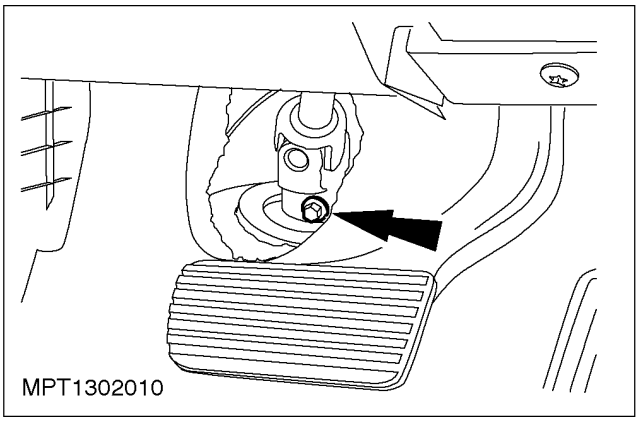
MPT1302010

3. From inside the passenger compartment, slacken the flexible coupling to column shaft pinch bolt.

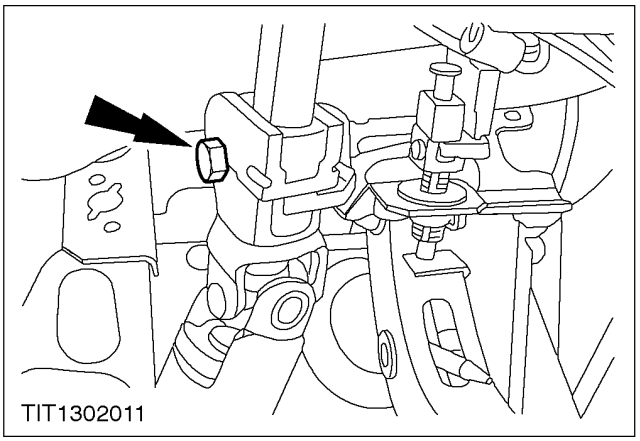
TIT1302011

4. Slacken the wheel nuts, raise the vehicle and remove the front road wheels.

REMOVAL AND INSTALLATION (CONTINUED)

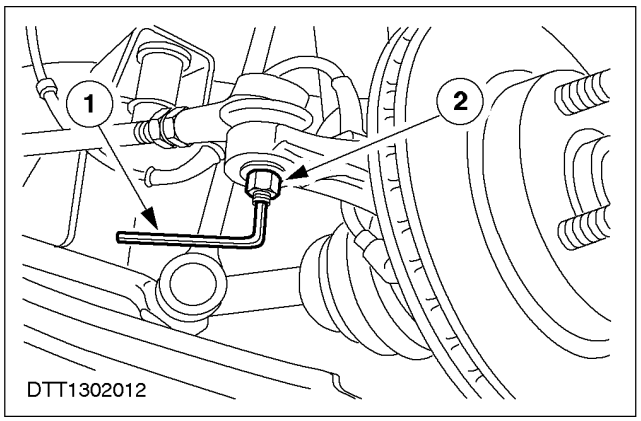

5. Remove the track rod end locknuts.
   1. Hold the ball joint studs with an Allen key.
   2. Remove the locknuts.

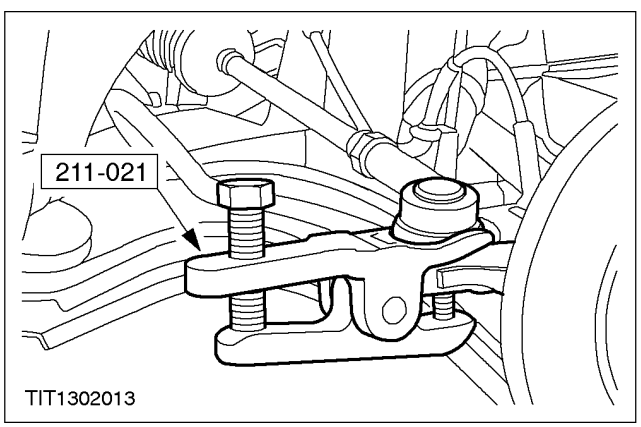

6. **NOTE:** When the track rod ends are separated from the spindle carriers the ball joint seals should be wrapped in cloth to protect them.
   Disconnect the track rod end ball joints from the spindle carriers.

Vehicles with manual transaxle

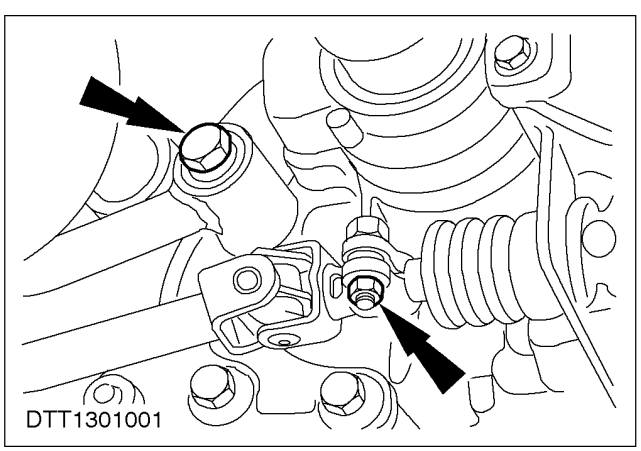

7. Disconnect the gearshift linkage.

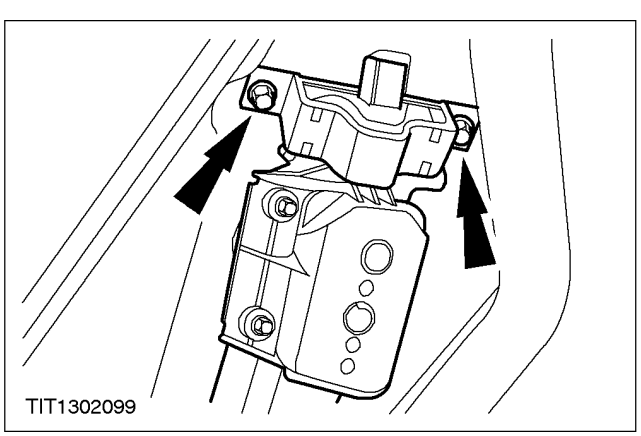

8. Detach the gearshift control assembly and secure to one side.

REMOVAL AND INSTALLATION (CONTINUED)

All vehicles

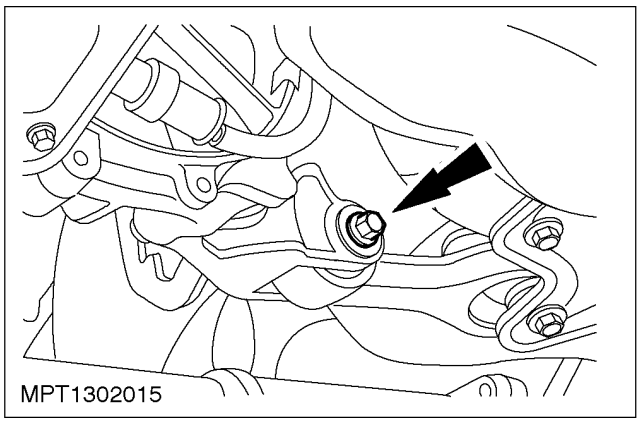

9. Remove the roll restrictor to transmission retaining bolt.

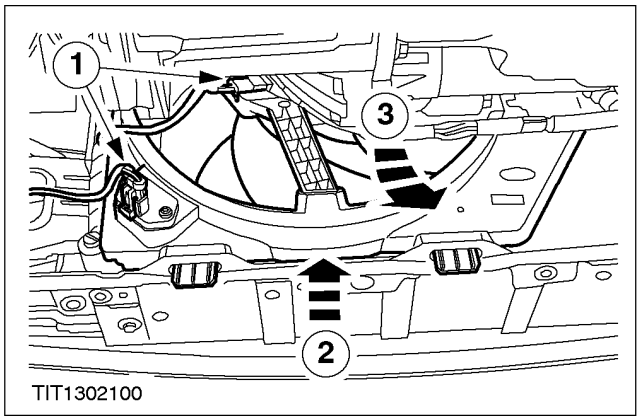

10. ⚠**CAUTION: There is a limited amount of space in which to remove the cooling fan and shroud assembly. Do not damage the radiator matrix.**
Remove the cooling fan and shroud assembly.
   1. Disconnect the cooling fan motor and speed control assembly multiplug.
   2. Ease the fan and shroud assembly upwards to release the retaining clips.
   3. Remove the fan and shroud assembly.

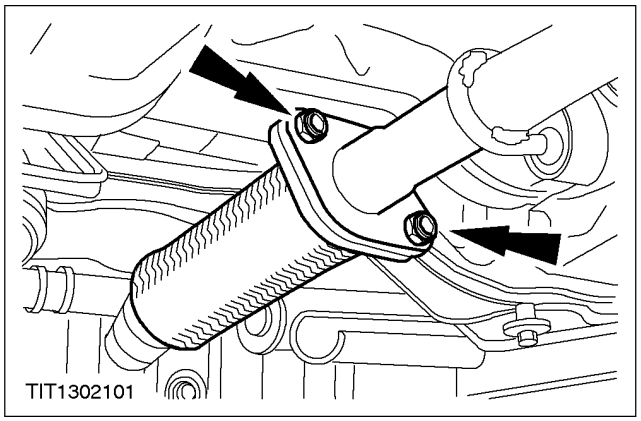

11. Disconnect the exhaust front pipe.

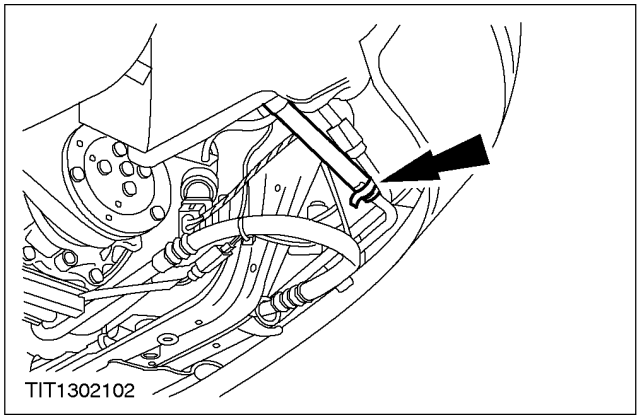

12. Disconnect the power steering fluid hose.
   - Drain the fluid into a suitable container.

REMOVAL AND INSTALLATION (CONTINUED)

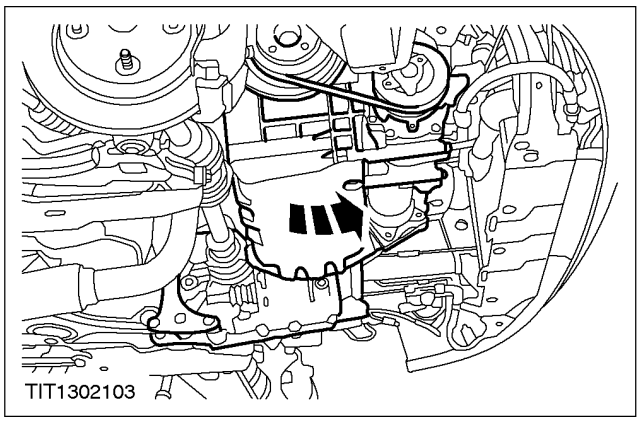

13. ⚠ **CAUTION: There is a limited amount of space available to tilt the engine. Do not overstress or damage any pipes or cables.**
    Tilt the engine forwards.

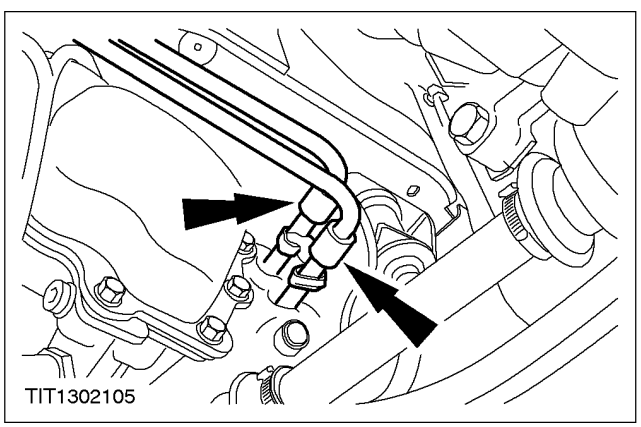

14. Detach the power steering pipes from the retaining bracket.

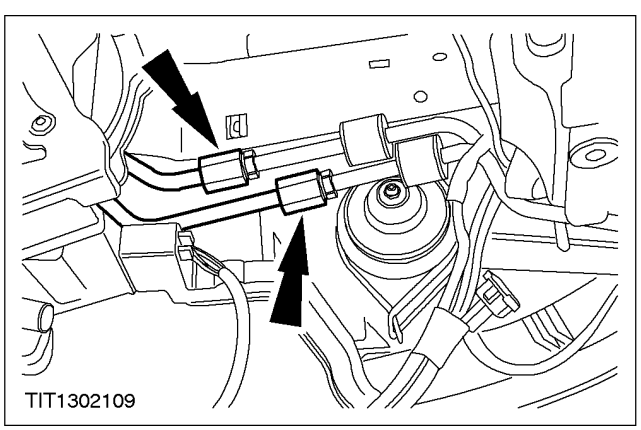

15. Disconnect the fluid cooler to steering gear pipes.

16. Support the crossmember assembly using a suitable jack.

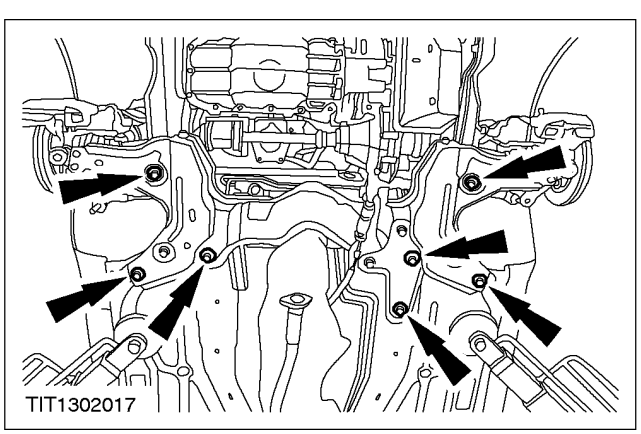

17. Remove the crossmember assembly retaining bolts (jack not shown for clarity).

REMOVAL AND INSTALLATION (CONTINUED)

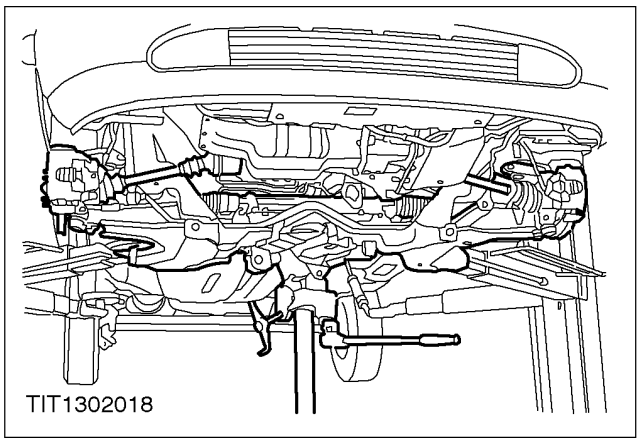

18. Lower the crossmember assembly enough to allow removal of the steering gear.

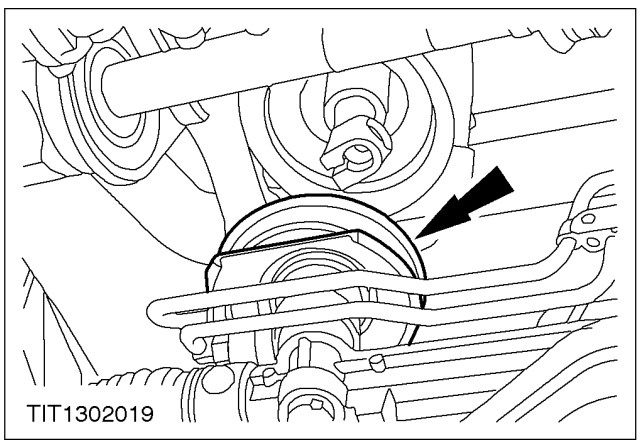

19. Remove the pinion shaft body seal.

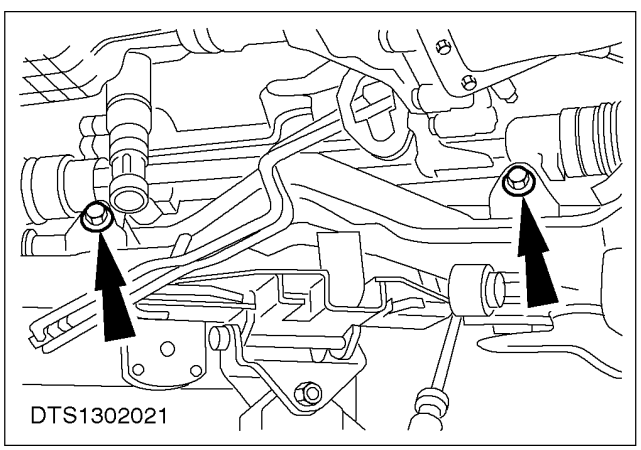

20. Remove the steering gear retaining nuts and bolts.

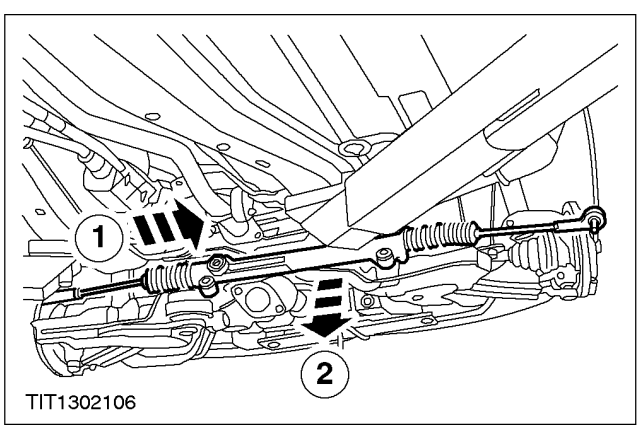

21. ⚠ **CAUTION: There is a very limited amount of space in which to remove the steering gear. Do not overstress or damage the power steering pipes.**
Remove the steering gear.
   1. Ease the steering gear to the right.
   2. Ease the steering gear out towards the rear.

REMOVAL AND INSTALLATION (CONTINUED)

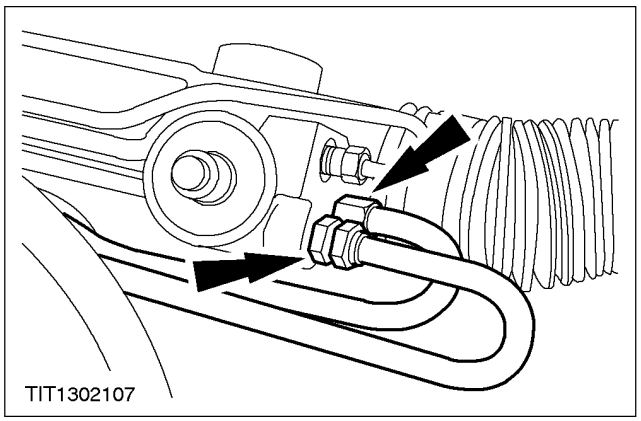

22. Disconnect the power steering pipes.

Installation

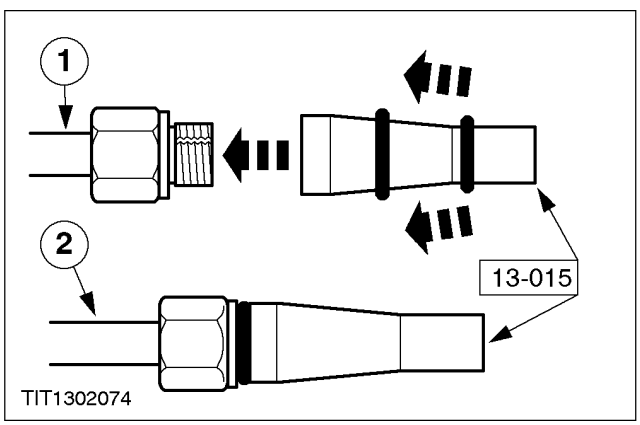

1. **NOTE:** If the steering gear is being renewed the unions that are supplied fitted to the steering gear should be removed and retained for future use.
   Renew the union sealing rings.
   1. Push the sealing ring onto the tool.
   2. Locate the tool on the union and push on the sealing ring.

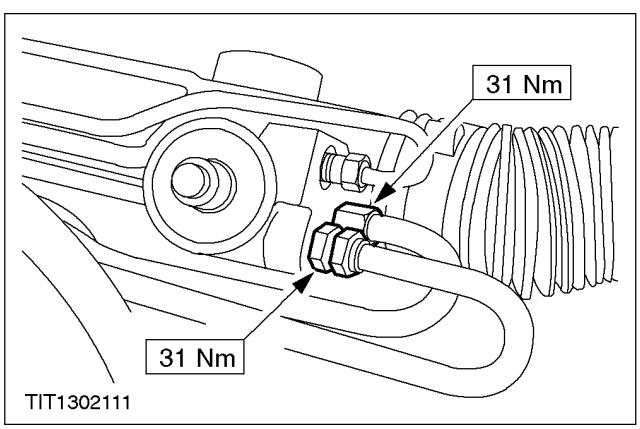

2. Refit the components in the reverse order.

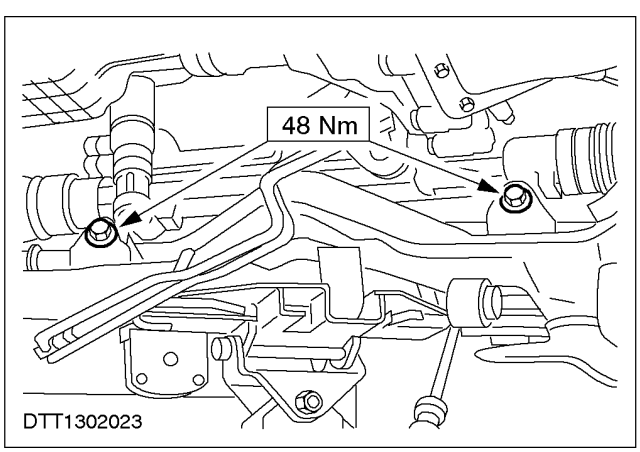

REMOVAL AND INSTALLATION (CONTINUED)

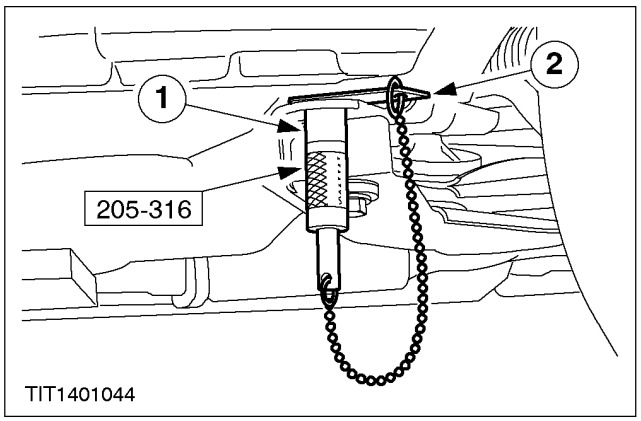

3. Align the crossmember.
   1. Push the guide pins through the crossmember aligning holes.
   2. Slide the locking plates into the locking grooves and tighten the guide pin sleeves.

4. Raise the crossmember engaging the guide pins into the alignment holes.

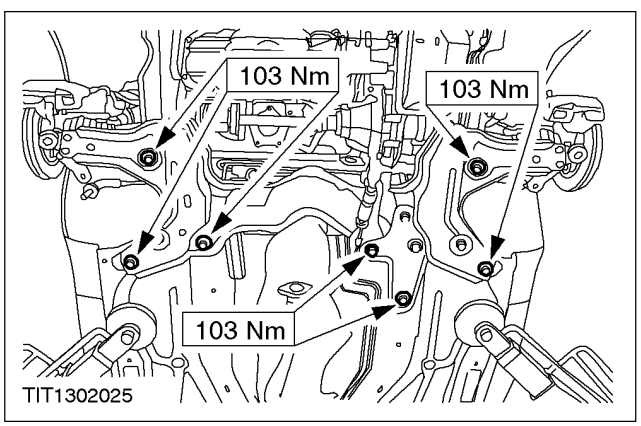

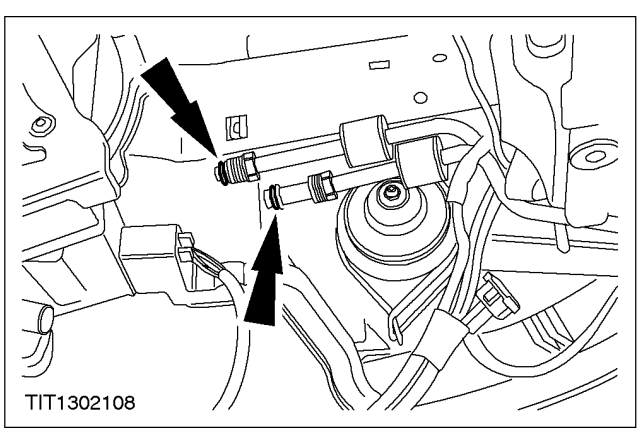

5. Renew the union sealing O-rings.

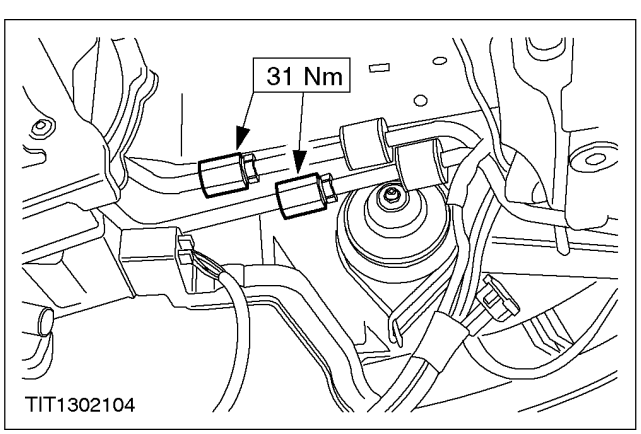

REMOVAL AND INSTALLATION (CONTINUED)

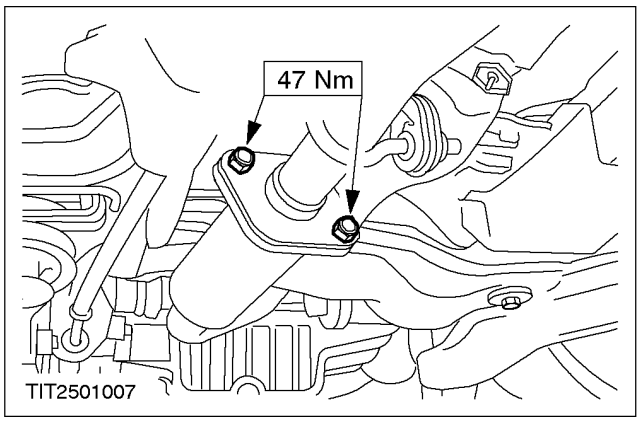

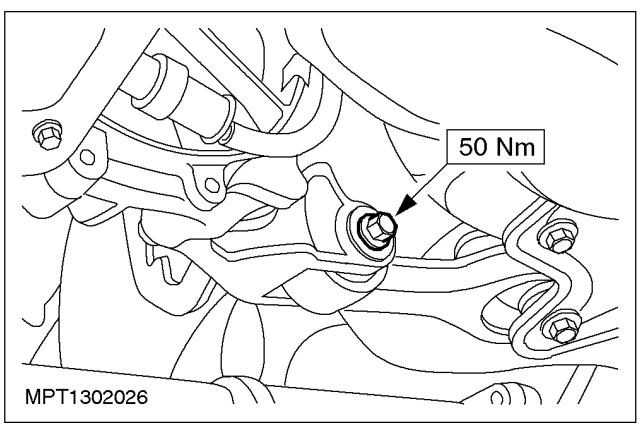

Vehicles with manual transaxle

6. Install the gearshift linkage. For additional information, refer to Section 308-06.

All vehicles

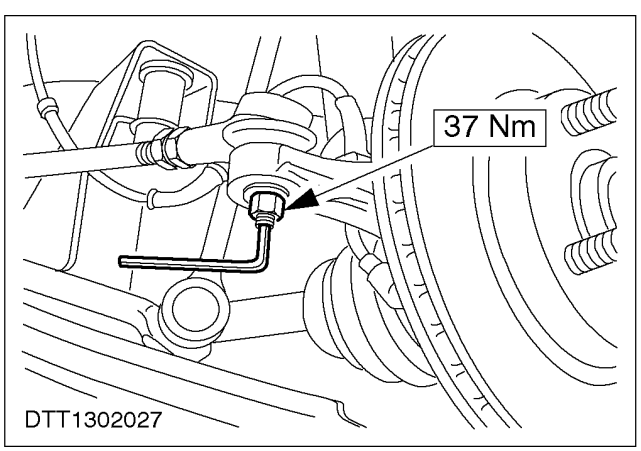

REMOVAL AND INSTALLATION (CONTINUED)

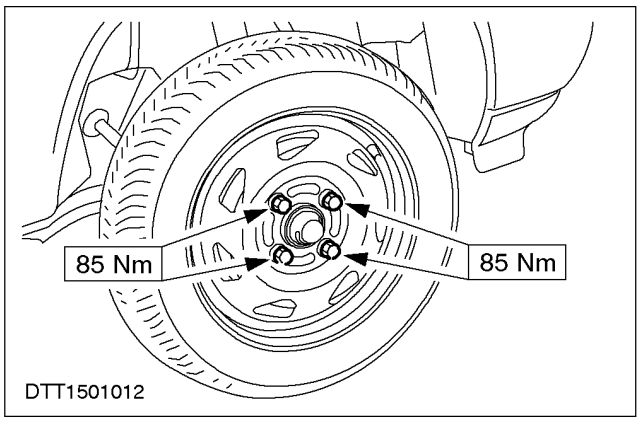

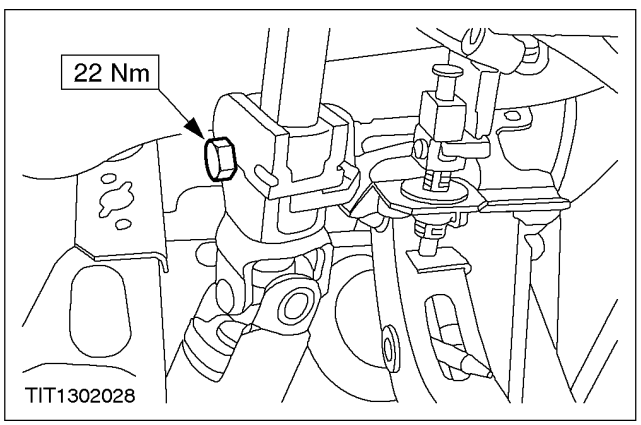

7. ⚠ **CAUTION: Make sure the steering is in the straight ahead position.**

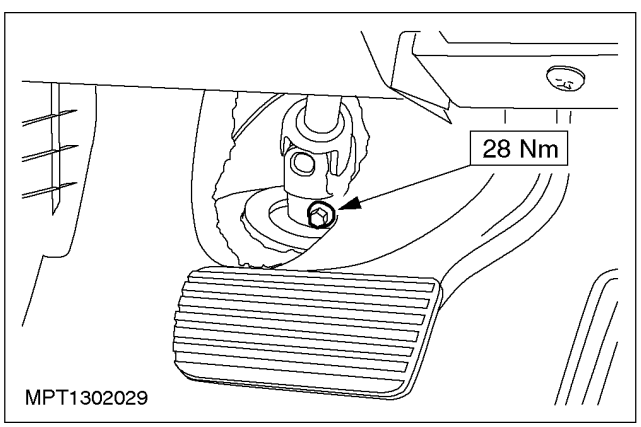

8. Bleed the power steering system (refer to procedure contained in this section).

REMOVAL AND INSTALLATION

Steering Gear Pinion Oil Seal (13 468 0)

Special Tool(s)	
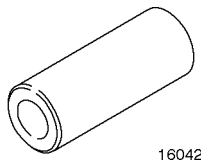 16042A	Adaptor for 16-042A-01 16-042A
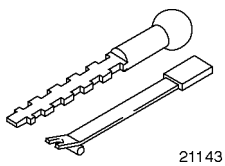 21143	Remover, oil seal 21-143

Special Tool(s)	
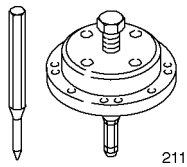 21151	Remover, oil seal 21-151

Material	Specification
Grease power steering gear	ESA-MIC45-A

Removal

1. Remove the steering gear
   (refer to procedure contained in this section).
2. Remove the water splash shield from the pinion shaft.

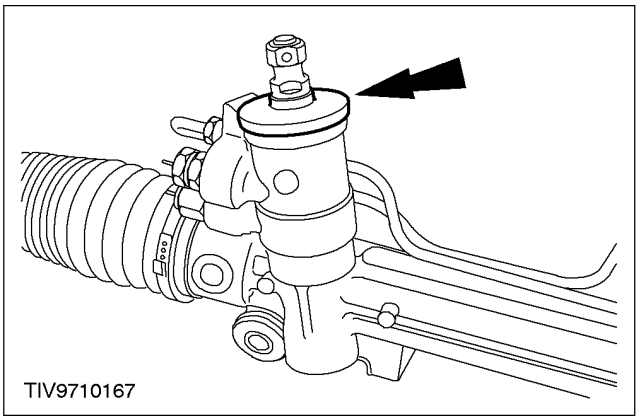

3. **CAUTION: Make sure the pinion shaft or oil seal housing is not damaged.**

CAUTION: Make sure no particles of the seal enter the steering gear.
Drive a hole into the dust cap approximately 3 mm from the outer edge.

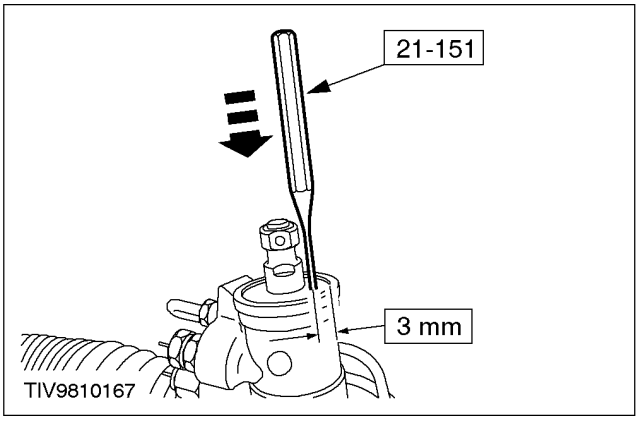

REMOVAL AND INSTALLATION (CONTINUED)

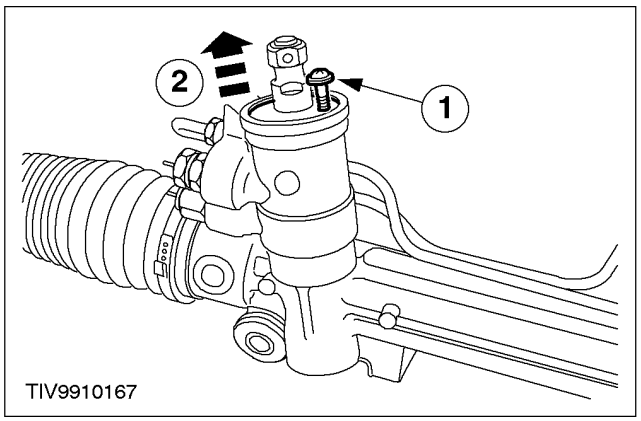

4. ⚠ **CAUTION: Make sure the self tapping screw is not inserted more than 2 mm.**

⚠ **CAUTION: Make sure no particles of the seal enter the steering gear.**

Remove the dust cap.

1. Insert the self tapping screw.
2. Ease the dust cap upwards.

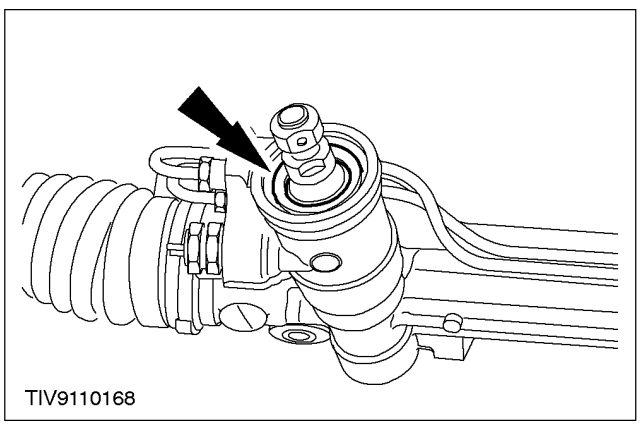

5. **NOTE:** Remove any grease with lint free paper.

Remove the circlip.

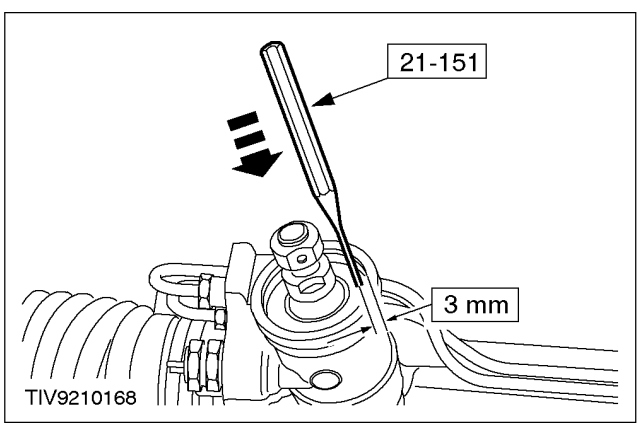

6. ⚠ **CAUTION: Make sure the pinion bearing underneath the seal is not damaged by the punch.**

⚠ **CAUTION: Make sure no particles of the seal enter the steering gear.**

Drive a hole into the oil seal steel cage approximately 3 mm from the outer edge.

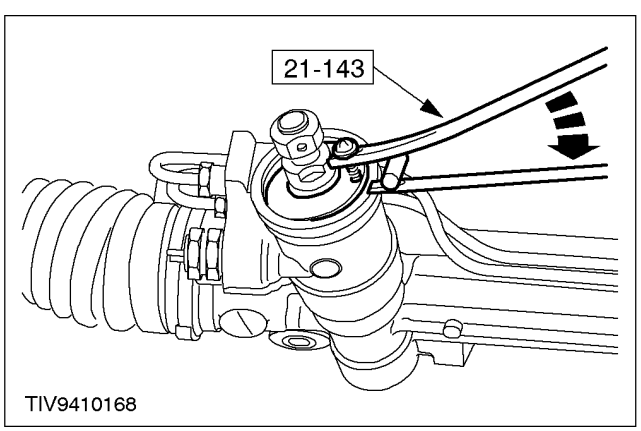

7. ⚠ **CAUTION: Make sure the pinion shaft or oil seal housing is not damaged.**

⚠ **CAUTION: Make sure no particles of the seal or contamination is left inside the steering gear.**

Remove the oil seal.

- Insert the self tapping screw into the seal no more than 3 mm and prise out the seal.

REMOVAL AND INSTALLATION (CONTINUED)

Installation

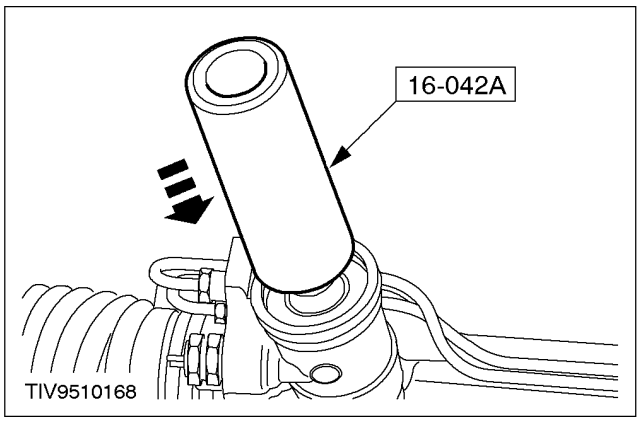

1. ⚠ **CAUTION: Make sure the oil seal is only installed to the minimum depth in the oil seal housing, which allows correct location of the circlip into the retaining groove.**

NOTE: Make sure the oil seal housing and pinion shaft are thoroughly cleaned with lint free paper. Examine the pinion shaft for signs of pitting, scoring, wear or corrosion.

Install a new seal.

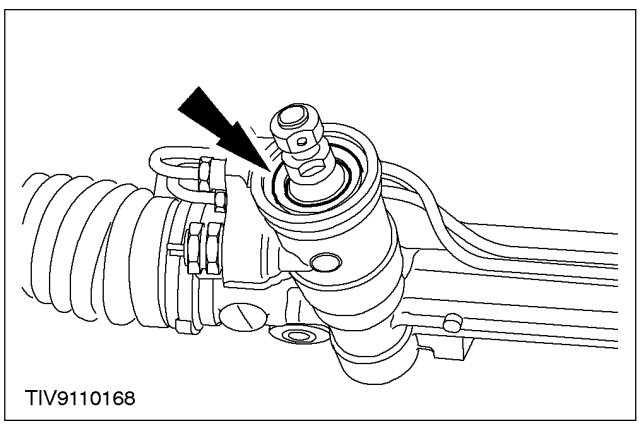

2. **NOTE:** Make sure the circlip is correctly located.

Install the circlip.

- Coat the oil seal and circlip with grease.

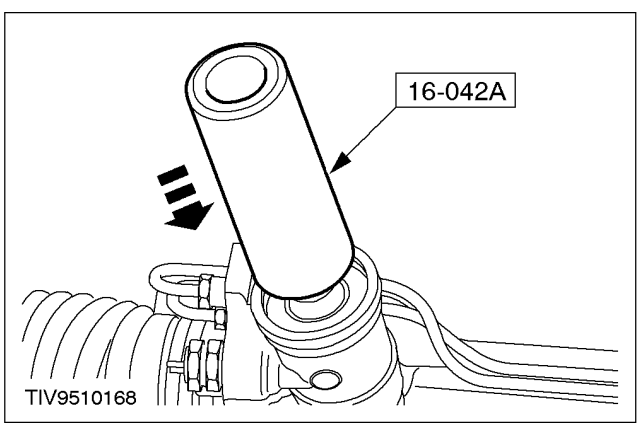

3. Install a new dust cap.

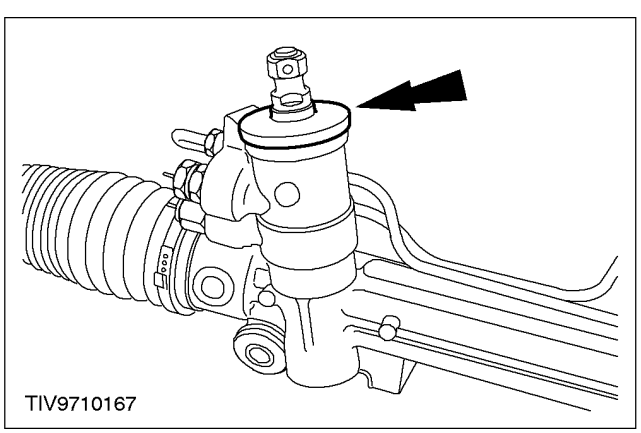

4. Install the water splash shield.
   - Coat the inside of the splash shield with grease.

5. Install the steering gear (refer to procedure contained in this section).

REMOVAL AND INSTALLATION

Power Steering Fluid Cooler (13 444 0)

Removal

1. Raise the vehicle.

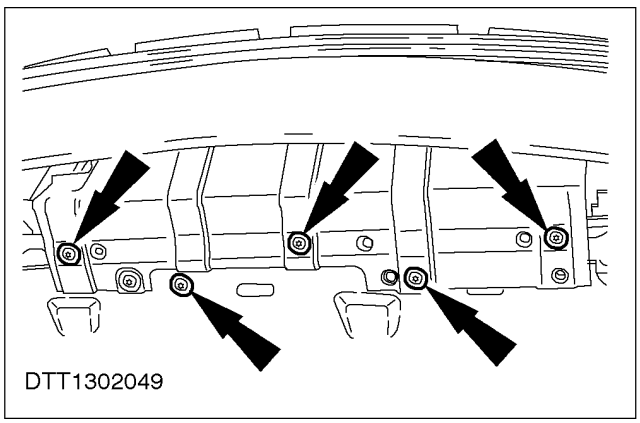

2. Remove the lower radiator shield (five screws).

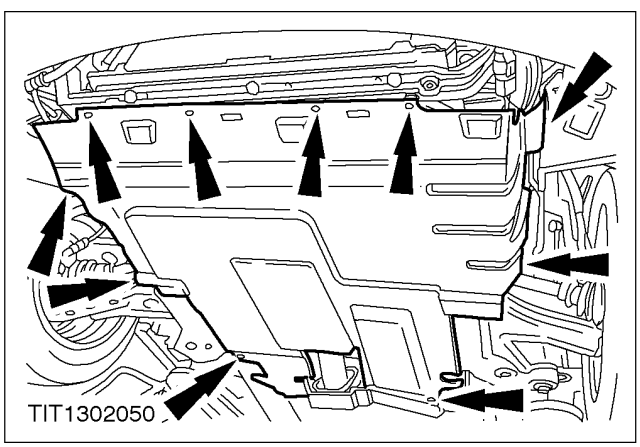

3. Remove the lower engine compartment shield (10 screws).

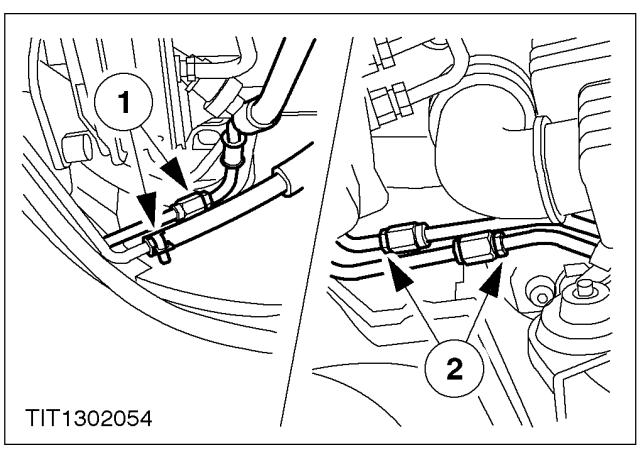

4. Disconnect the fluid cooler pipe and hose connections.
   1. Disconnect the right-hand side pipe union and hose connection.
      - Allow the fluid to drain into a suitable container.
   2. Disconnect the left-hand side pipe unions.

REMOVAL AND INSTALLATION (CONTINUED)

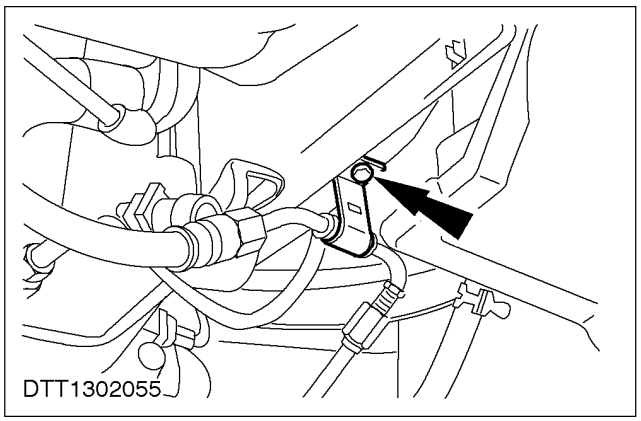

5. Remove the high-pressure pipe bracket (one bolt).

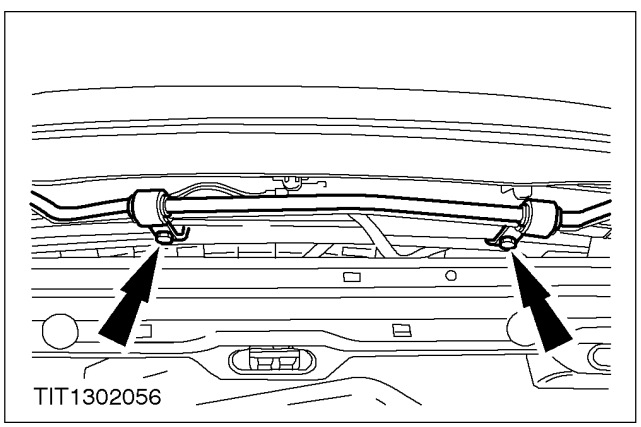

6. Remove the fluid cooler (two bolts).

Installation

1. Refit the components in the reverse order.
2. Bleed the power steering system (refer to procedure contained in this section).

REMOVAL AND INSTALLATION

Power Steering Pump to Steering Gear Pressure line

Special Tool(s)	
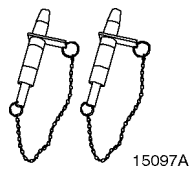 15097A	Alignment Pins, Subframe 205-316 (15-097-A)

Special Tool(s)	
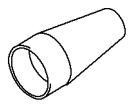 13015	Expander, Teflon Seal 211-188 (13-015)

General Equipment
Transmission jack

Removal

All Vehicles

1. Remove the steering column coupling to steering gear pinion shaft pinch bolt.

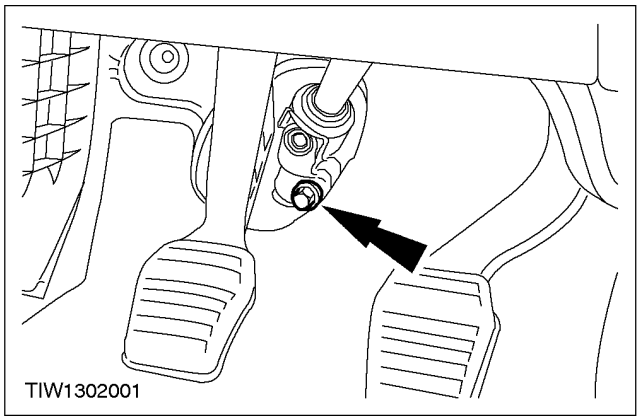

2. Loosen the steering column shaft coupling pinch bolt.

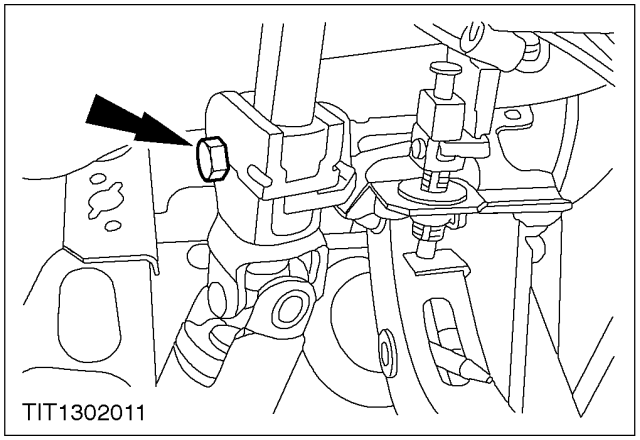

6. Raise and support the vehicle. For additional information, refer to Section 100-02.

REMOVAL AND INSTALLATION (CONTINUED)

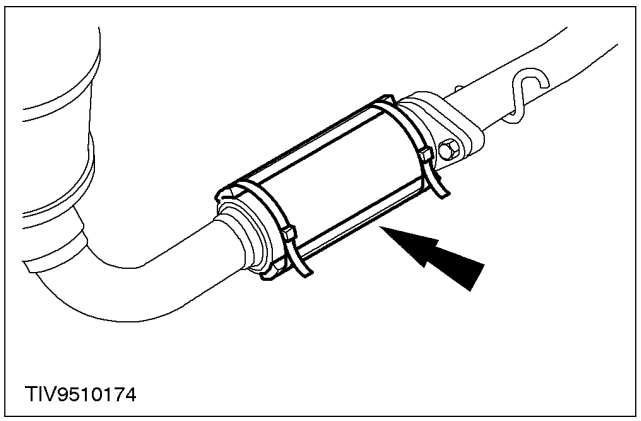

7. ⚠**CAUTION: Over-bending or twisting of the flexible pipe may cause damage resulting in failure.**
   Support the flexible pipe with a support wrap or suitable splint assembly.

Vehicles with manual transaxle 9.

Detach the shift rod and gearshift stabilizer.

1. Shift rod.
2. Gearshift stabilizer.

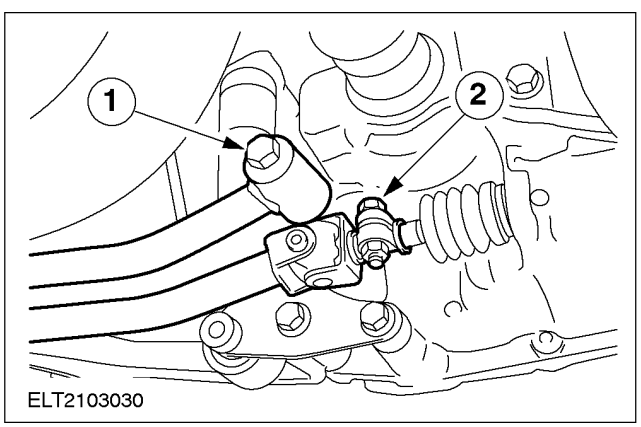

All Vehicles

12. Remove the rear support insulator to transmission bolt.

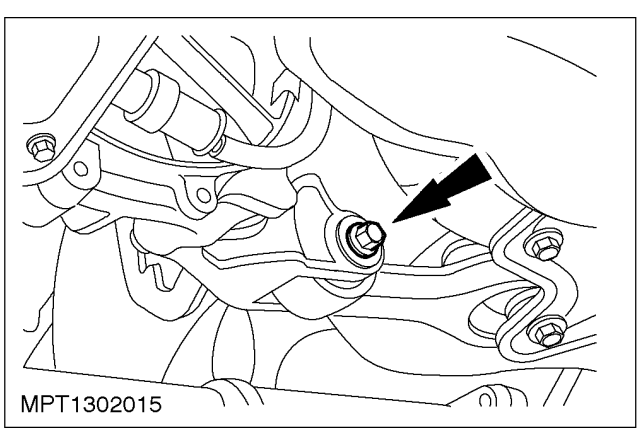

All Vehicles

14. Using a suitable Transmission jack support the crossmember.

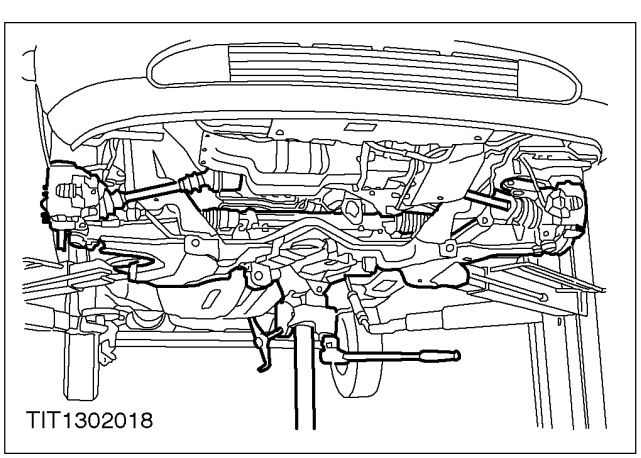

REMOVAL AND INSTALLATION (CONTINUED)

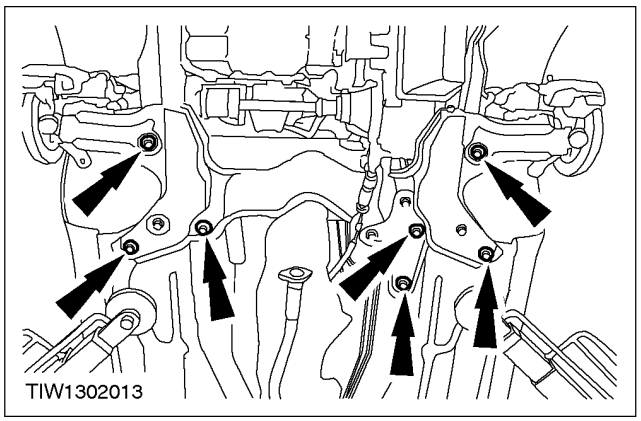

15. NOTE: Lower the crossmember to gain access to the power steering gear.
Remove the bolts.

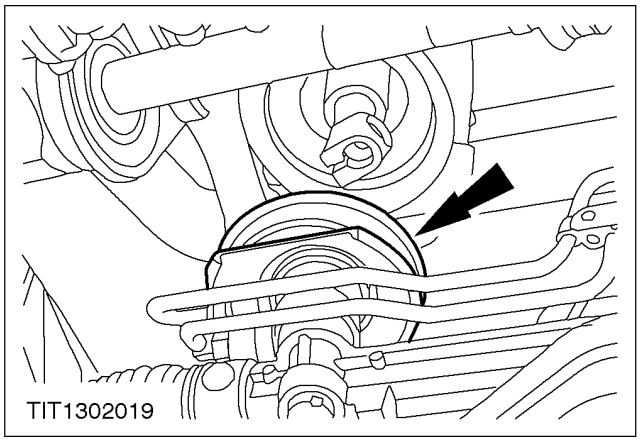

16. Remove the steering gear floor seal.

Vehicles with 1.6L / 1.3L engine

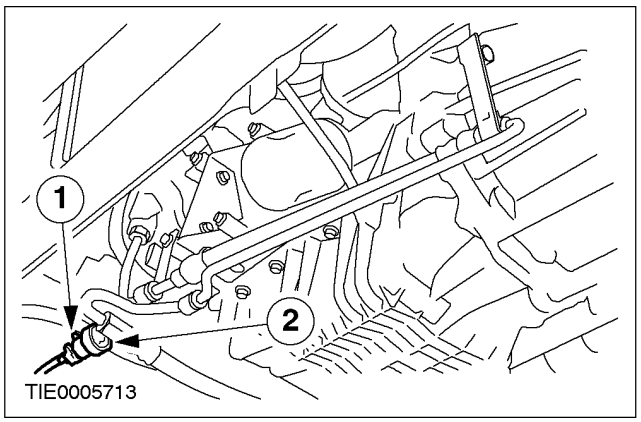

17. Remove the PSP switch.
    1. Disconnect the electrical connector.
    2. Remove the PSP switch.

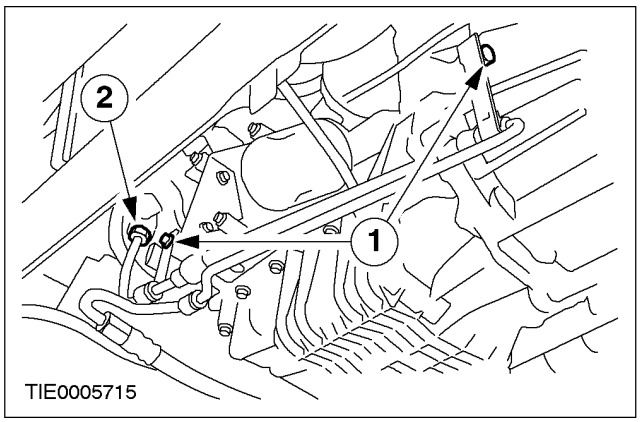

18. Disconnect the power steering pump high-pressure line.
    1. Detach the power steering high-pressure line support brackets.
    2. Disconnect the union.
    - Allow the fluid to drain into a suitable container.

REMOVAL AND INSTALLATION (CONTINUED)

All Vehicles

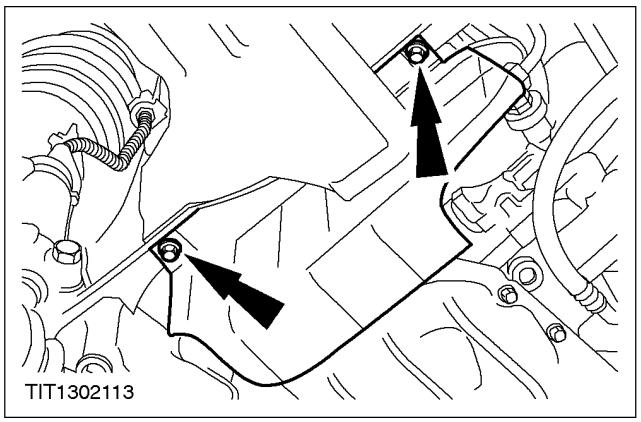

19. Detach the accessory drive belt lower guard.

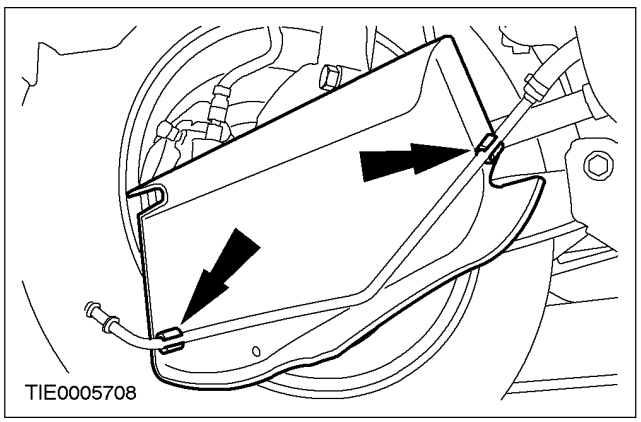

20. Remove the accessory drive belt lower guard.

Vehicles with diesel engine

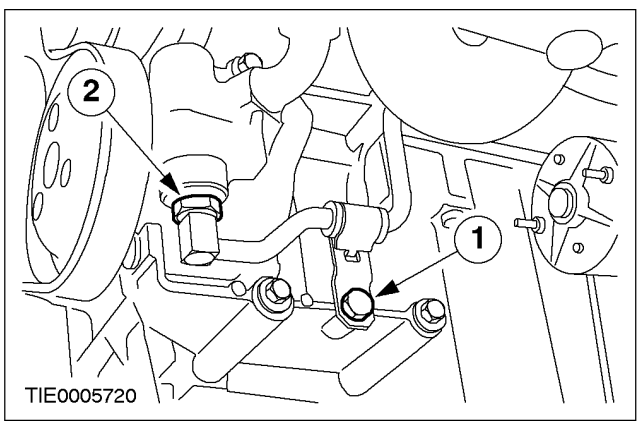

21. Disconnect the power steering pump high-pressure line.
    1. Detach the power steering line high-pressure line support bracket.
    2. Disconnect the power steering high-pressure line union.
    - Allow the fluid to drain into a suitable container.

Left-hand drive vehicles

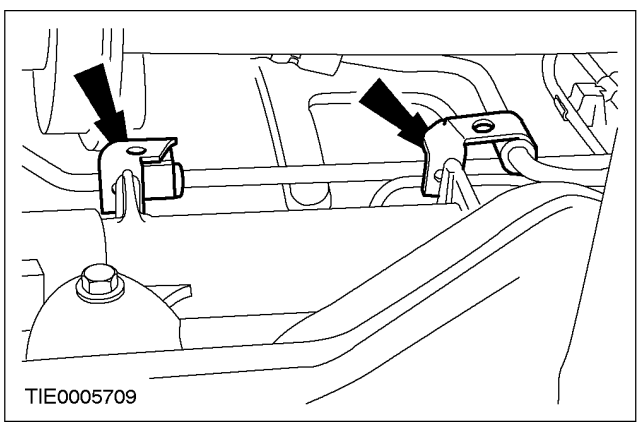

22. Detach the power steering high-pressure line support brackets.

REMOVAL AND INSTALLATION (CONTINUED)

Right-hand drive vehicles

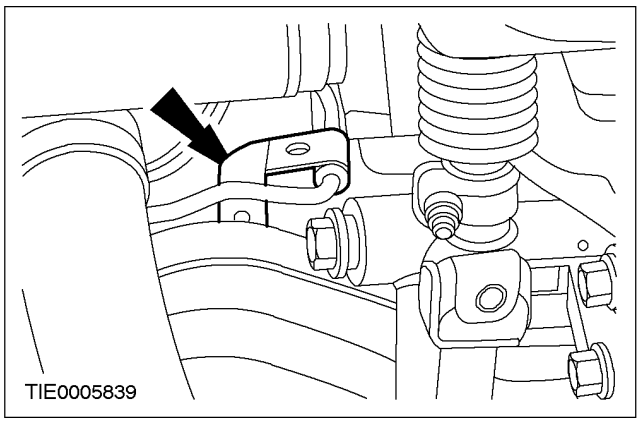

23. Detach the power steering high-pressure line support bracket.

Vehicles with 1.6L / 1.3L engine

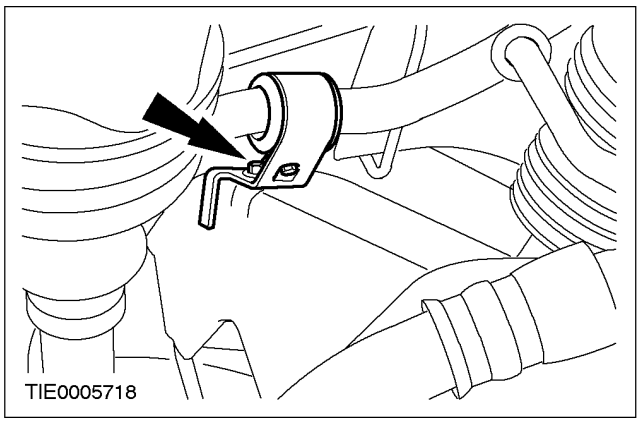

24. Detach the power steering high-pressure line support bracket.

All Vehicles

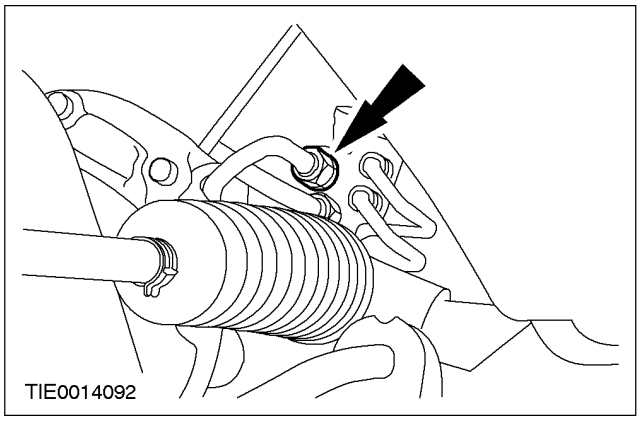

25. Remove the power steering high-pressure line from the steering gear.
    - Allow the fluid to drain into a suitable container.

REMOVAL AND INSTALLATION (CONTINUED)

Installation

All Vehicles

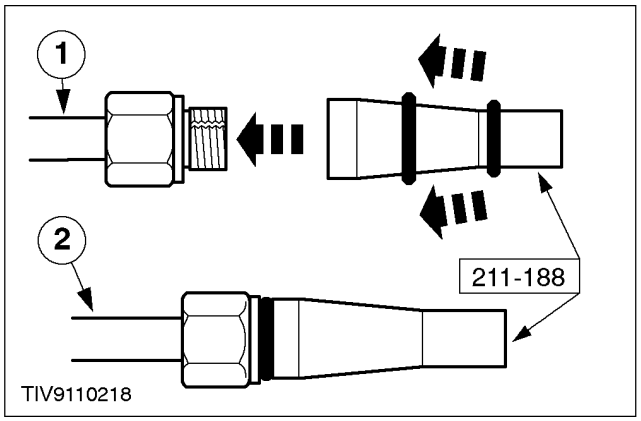

1. Using the special tool, install a new O-ring seal.
   1. Push the new O-ring seal onto the special tool.
   2. Locate the special tool onto the union and push on the O-ring seal.

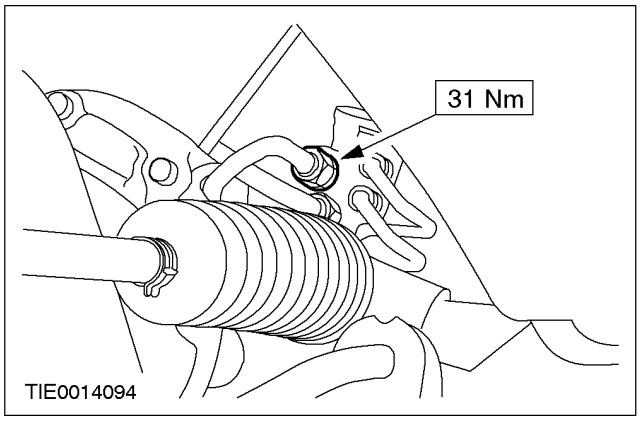

2. Install the power steering high-pressure line.

Vehicles with 1.6L / 1.3L engine

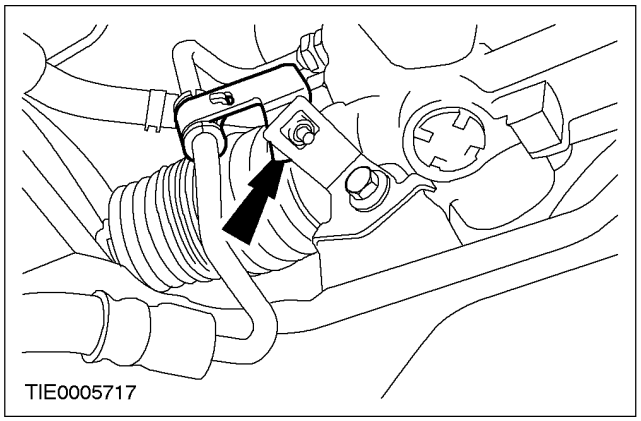

3. Install the power steering high-pressure line support bracket.

REMOVAL AND INSTALLATION (CONTINUED)

Right-hand drive vehicles

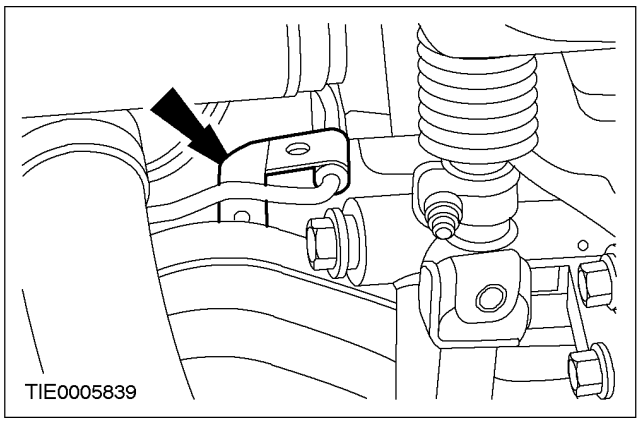

4. Install the power steering high-pressure line support bracket.

Left-hand drive vehicles

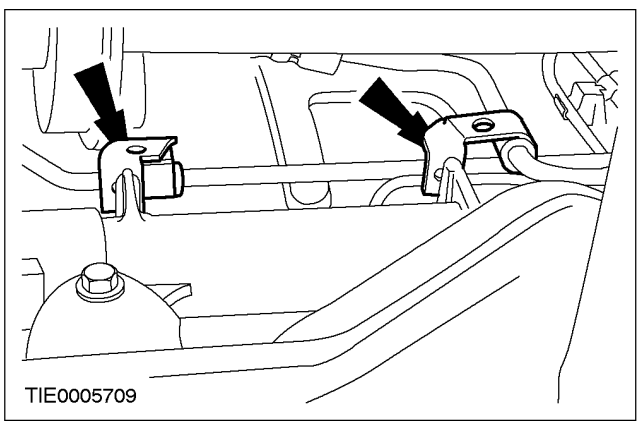

5. Install the power steering high-pressure line support brackets.

Vehicles with diesel engine

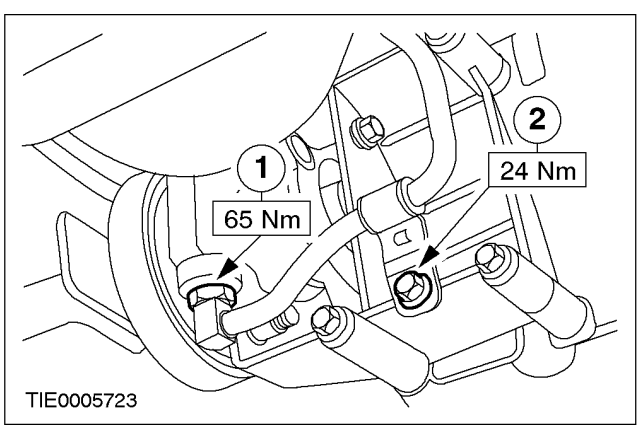

6. Install the power steering pump high-pressure line.
   1. Connect the power steering pump high-pressure line.
   2. Install the power steering pump high-pressure line support bracket.

All Vehicles

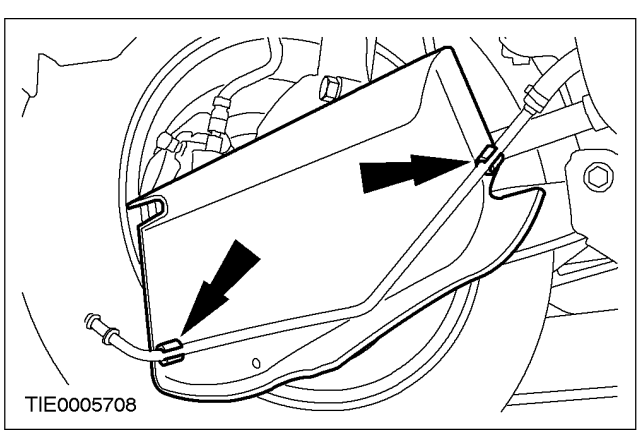

7. Install the power steering pump high-pressure line to the accessory drive belt lower guard.

REMOVAL AND INSTALLATION (CONTINUED)

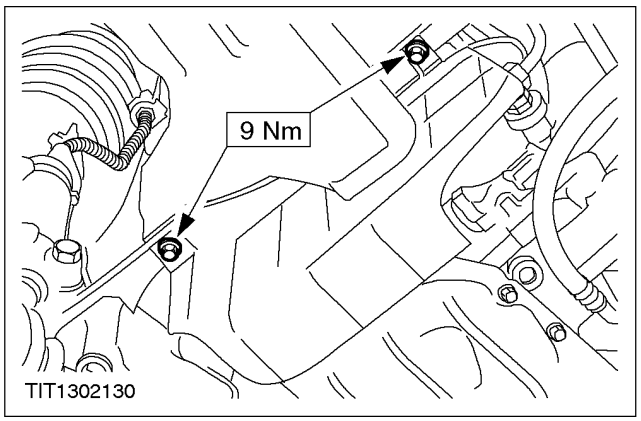

8. Install the accessory drive belt lower guard.

Vehicles with 1.6L / 1.3L engine

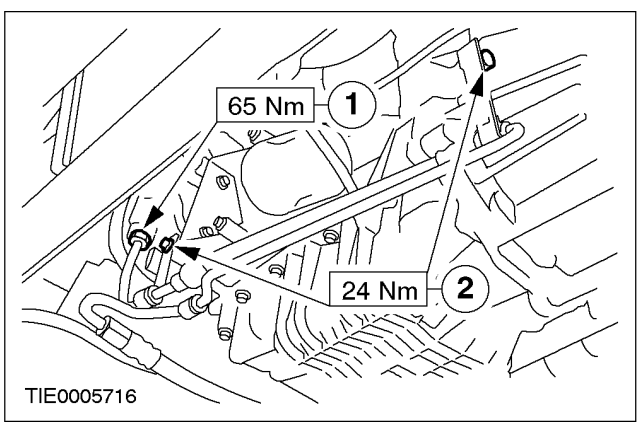

9. Connect the power steering high-pressure line to the power steering pump.
   1. Install the power steering pump high-pressure line.
   2. Install the power steering pump high-pressure line support brackets.

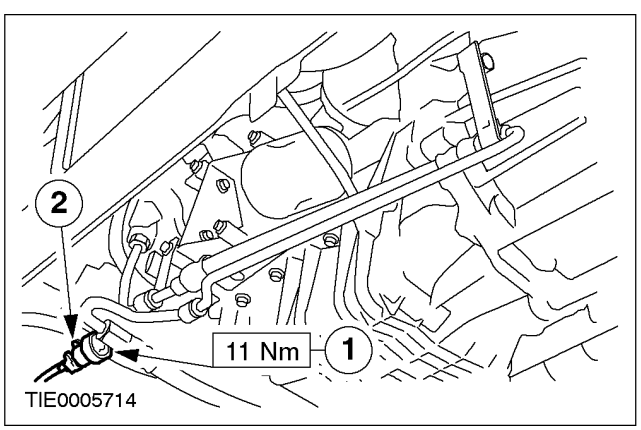

10. Install the PSP switch.
    1. Install the PSP switch.
    2. Connect the electrical connector.

All Vehicles

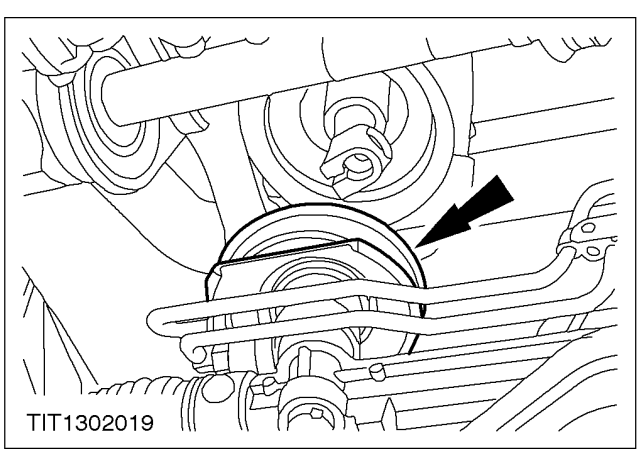

11. Install the power steering gear floor seal.

REMOVAL AND INSTALLATION (CONTINUED)

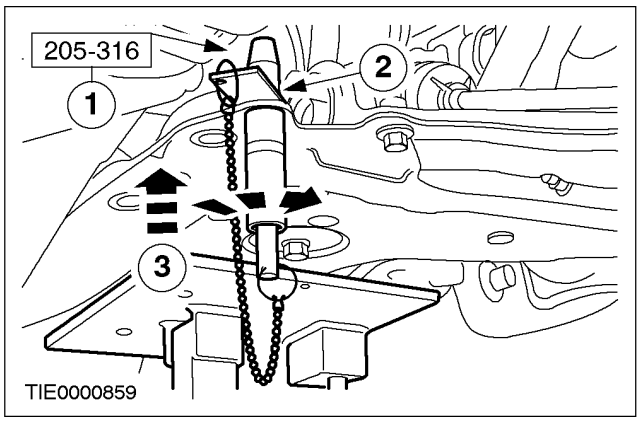

12. Using the special tools, align the crossmember.
    1. Insert the guide pins through the crossmember alignment holes.
    2. Slide the locking plate into the grooves and tighten the alignment pin sleeves.
    3. Raise the crossmember engaging the guide pins into the chassis aligning holes.

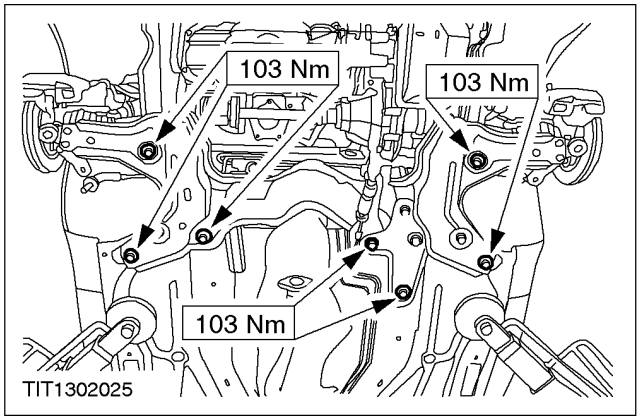

13. Install the crossmember retaining bolts.

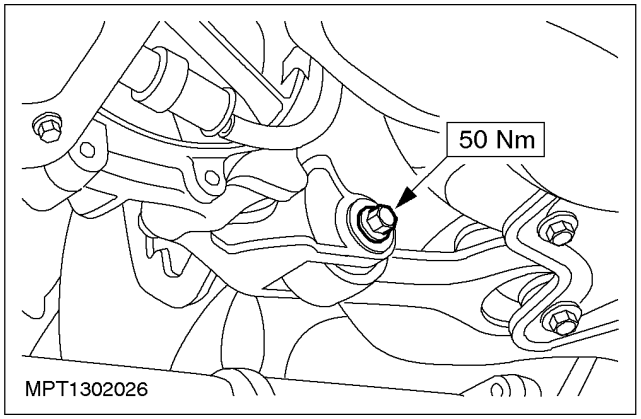

14. Install the rear support insulator to transmission bolt.

15. Remove the transmission jack and alignment pins.

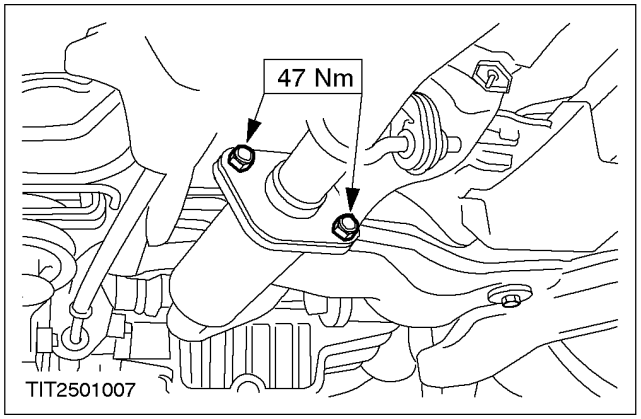

16. **NOTE:** Install a new gasket and nuts.

REMOVAL AND INSTALLATION (CONTINUED)

17. Remove the flexible pipe support.

Vehicles with manual transaxle

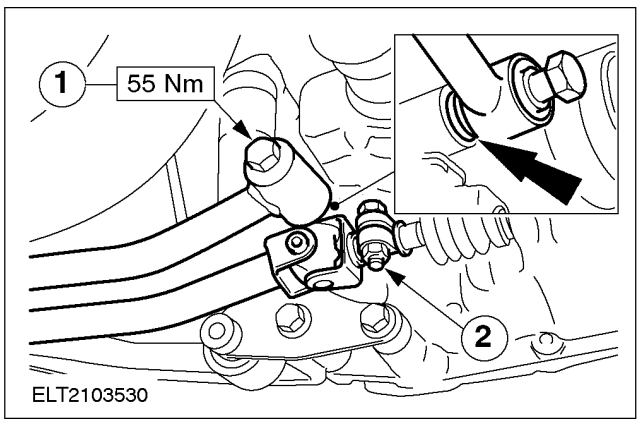

20. **NOTE:** Make sure the washer is fitted between the gearshift stabilizer and transmission.
    Install the shift rod and gearshift stabilizer.
    1. Connect the gearshift stabilizer.
    2. Connect the shift rod.

21. **NOTE:** Before lowering the vehicle make sure the steering is in the straight ahead position.
    Lower the vehicle.

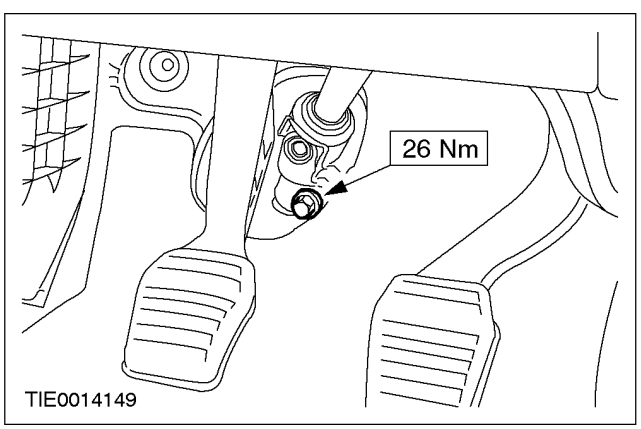

25. Install the steering column coupling to the power steering gear pinion.

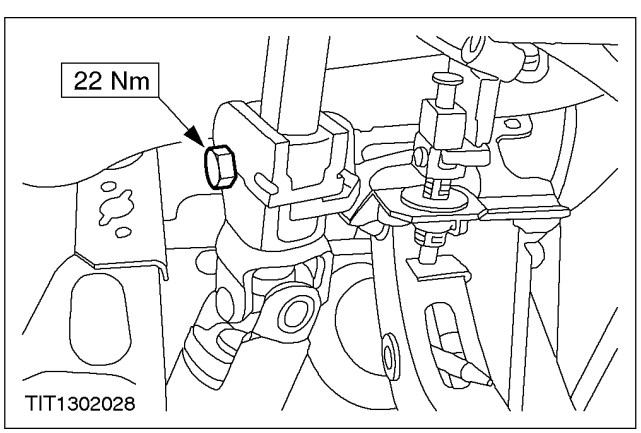

26. Tighten the steering column shaft coupling pinch bolt.

27. Fill and bleed the power steering system.
    For additional information, refer to Section 211-00.

REMOVAL AND INSTALLATION

Steering Gear to Fluid Cooler Return Hose

Special Tool(s)	
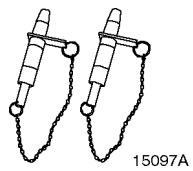 15097A	Alignment Pins, Subframe 205-316 (15-097A)

Special Tool(s)	
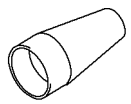 13015	Expander, Teflon Seal 211-188 (13-015)

General Equipment
Transmission jack

Removal

All Vehicles

1. Remove the steering column coupling to steering gear pinion shaft pinch bolt.

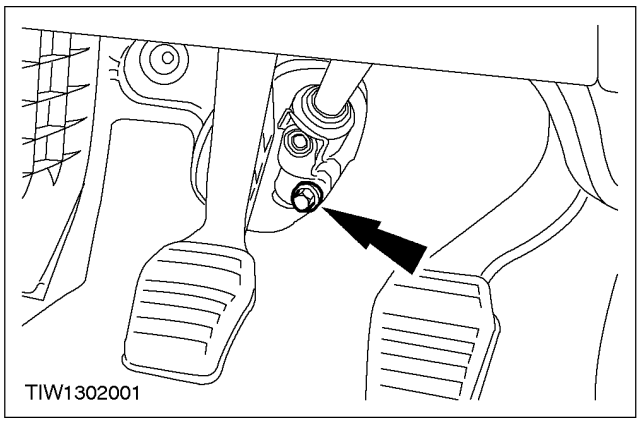

2. Loosen the steering column shaft coupling pinch bolt.

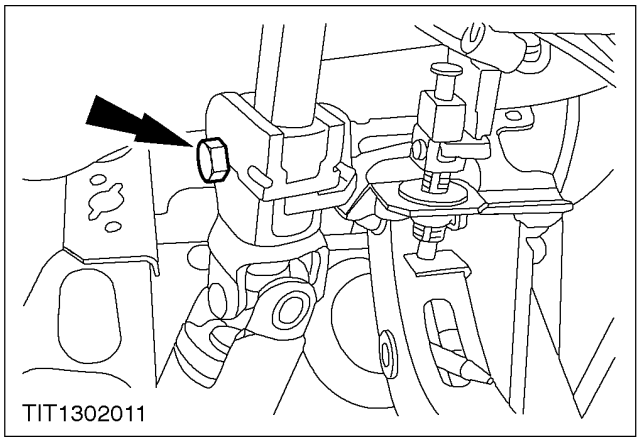

REMOVAL AND INSTALLATION (CONTINUED)

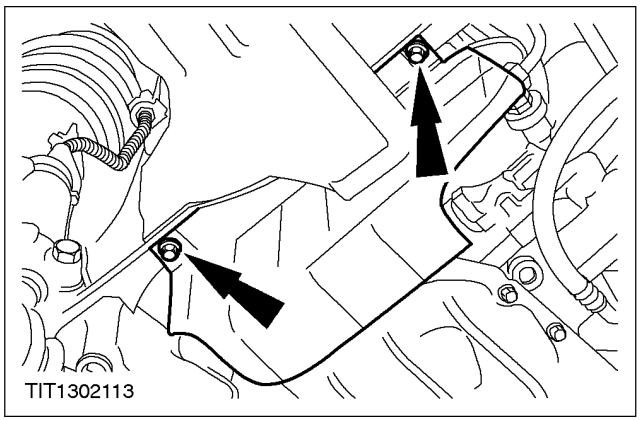

3. Detach the accessory drive belt lower guard.

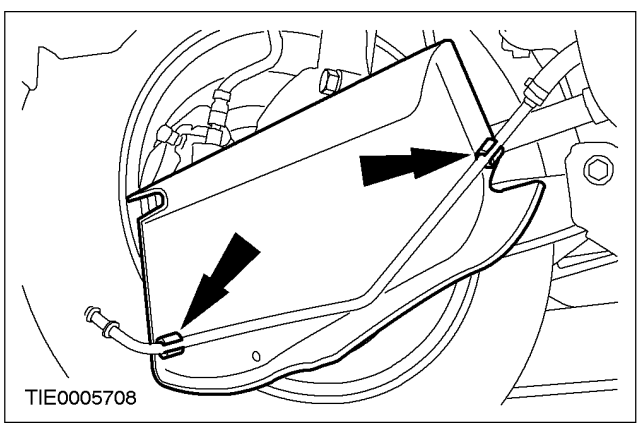

4. Remove the accessory drive belt lower guard.
   - Detach the clips.

Vehicles with 1.6L / 1.3L engine

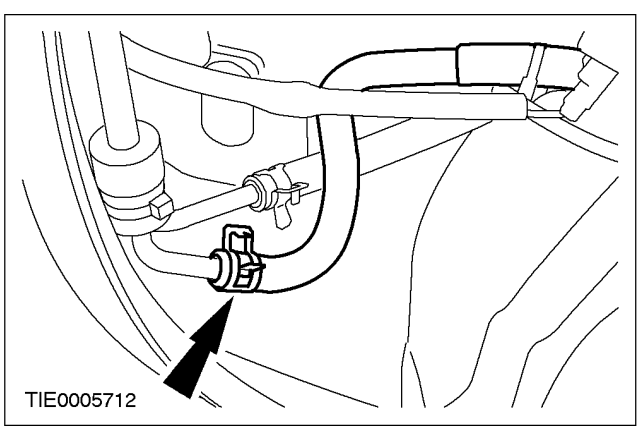

5. Disconnect the power steering fluid cooler line to the power steering gear.
   - Allow the fluid to drain into a suitable container.

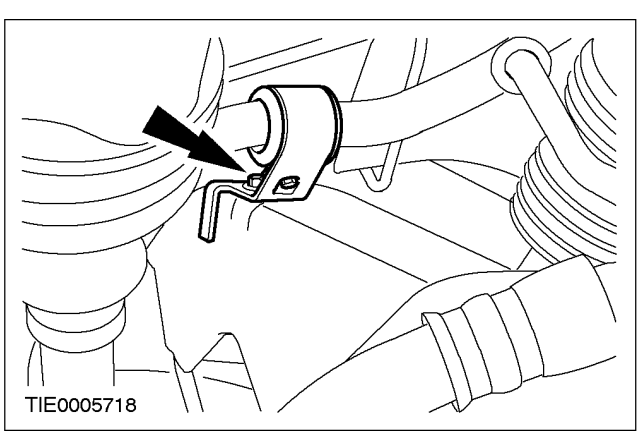

6. Detach the power steering fluid cooler line to the power steering gear support bracket.

REMOVAL AND INSTALLATION (CONTINUED)

All Vehicles

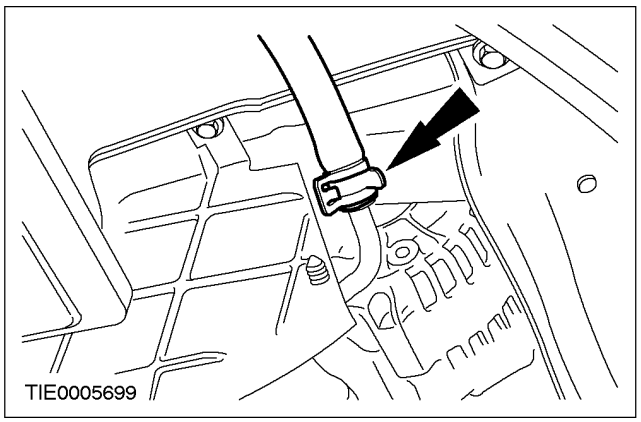

7. Disconnect the power steering fluid cooler to the power steering gear return line.
   - Allow the fluid to drain into a suitable container.

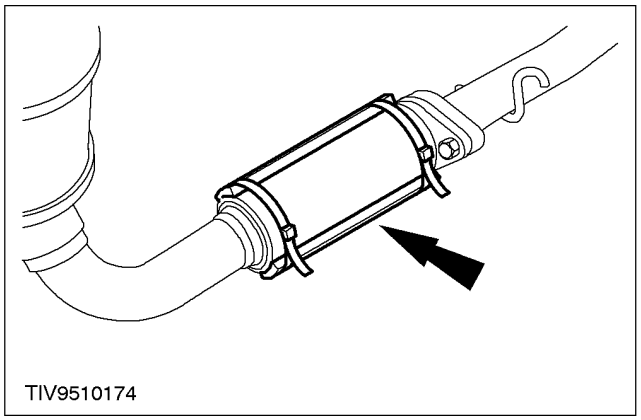

8. **CAUTION: Over-bending or twisting of the flexible pipe may cause damage resulting in failure.**
   Support the flexible pipe with a support wrap or suitable splint assembly.

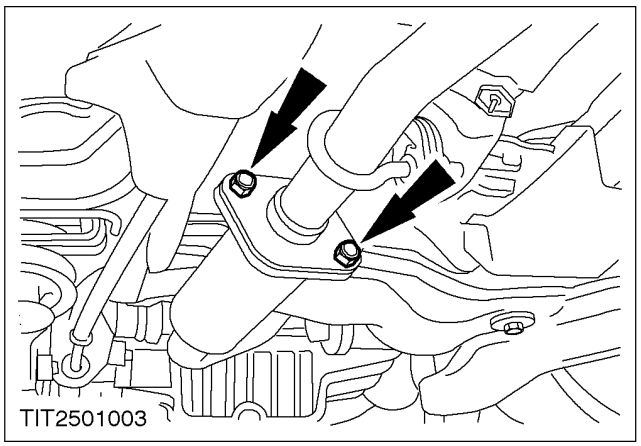

9. Disconnect the exhaust front pipe.
   - Discard the gasket and nuts.

Vehicles with manual transaxle

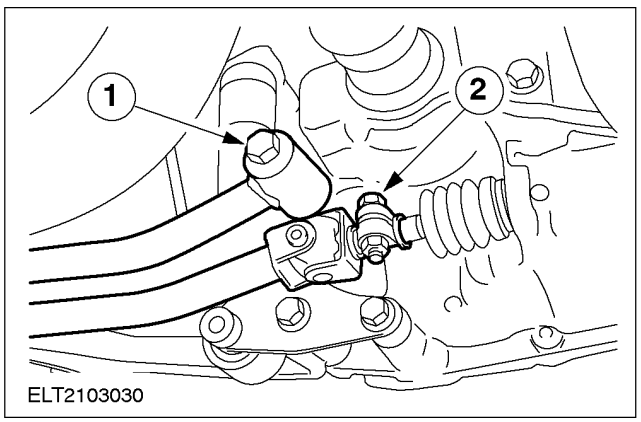

10. Detach the shift rod and gearshift stabilizer.
    1. Shift rod.
    2. Gearshift stabilizer.

REMOVAL AND INSTALLATION (CONTINUED)

All Vehicles

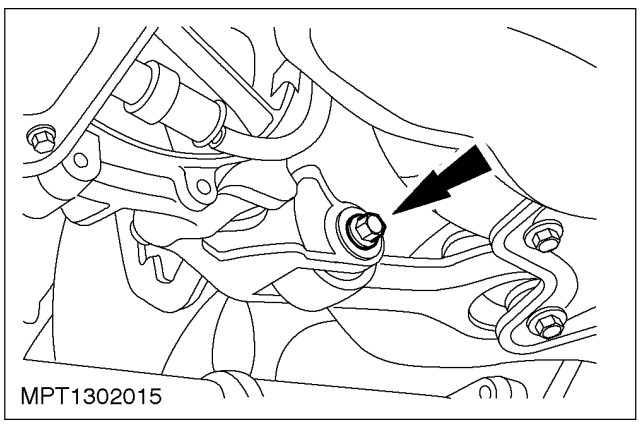

13. Remove the rear support insulator to transmission bolt.

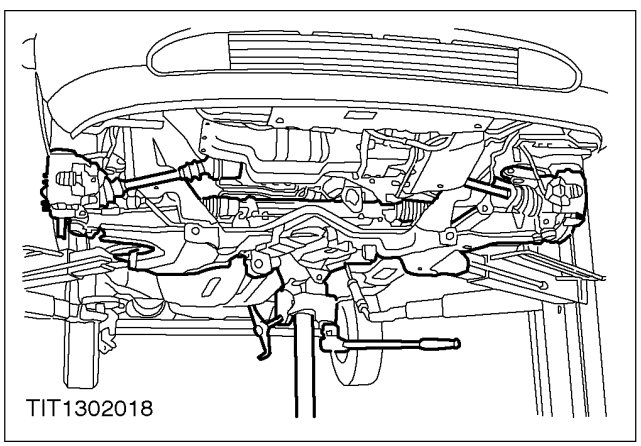

15. Using a suitable Transmission jack support the crossmember.

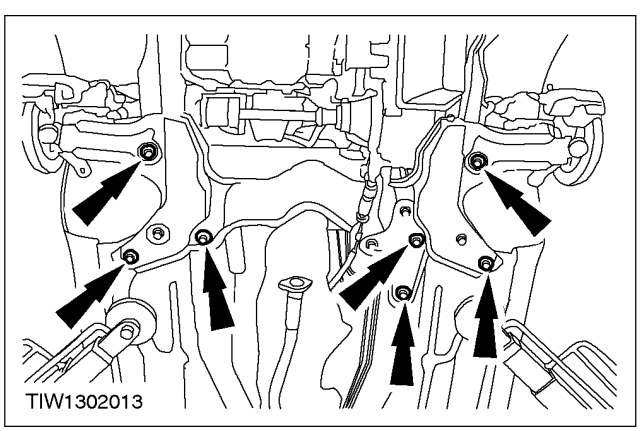

16. **NOTE:** Lower the crossmember to gain access to the power steering gear.
    Remove the bolts.

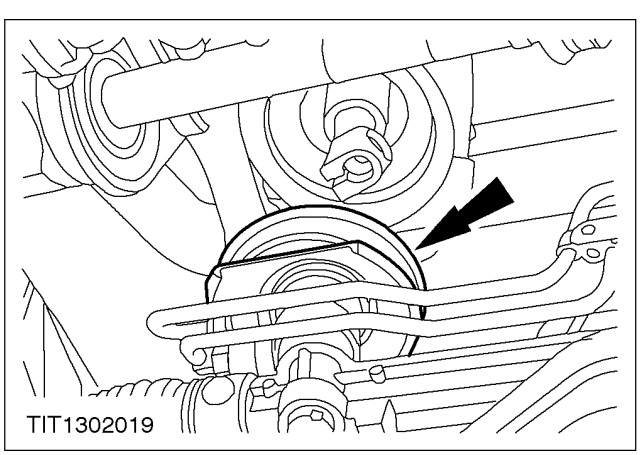

17. Remove the power steering gear to floor seal.

REMOVAL AND INSTALLATION (CONTINUED)

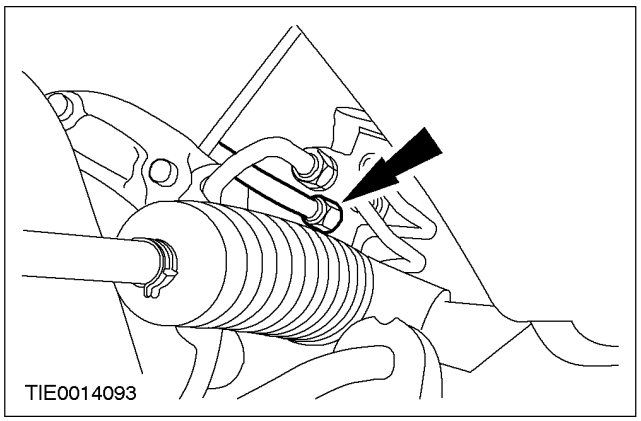

18. Remove the power steering fluid cooler to power steering gear return line.
    - Allow the fluid to drain into a suitable container.

Installation

All Vehicles

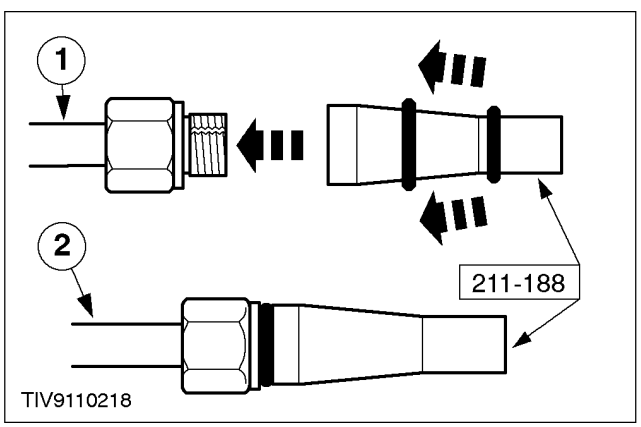

1. Using the special tool, install a new O-ring seal.
    1. Push the new O-ring seal onto the special tool.
    2. Locate the special tool onto the union and push on the O-ring seal.

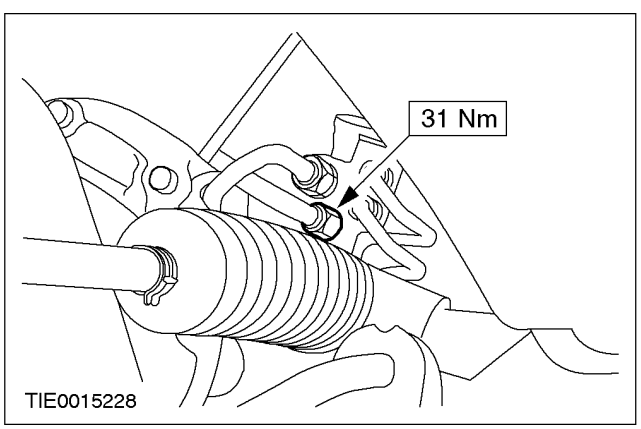

2. Install the power steering fluid cooler to power steering gear return line.

REMOVAL AND INSTALLATION (CONTINUED)

Vehicles with 1.6L / 1.3L engine

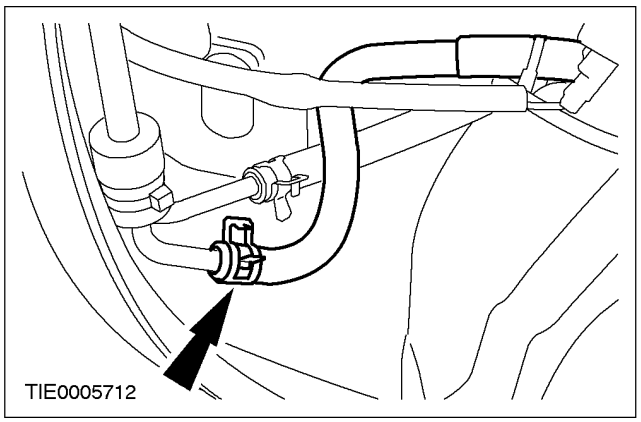

3. Connect the power steering fluid cooler line.

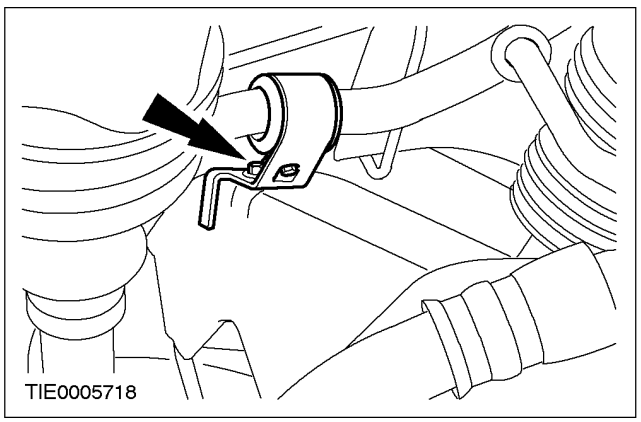

4. Connect the power steering fluid cooler line to the power steering gear support bracket.

All Vehicles

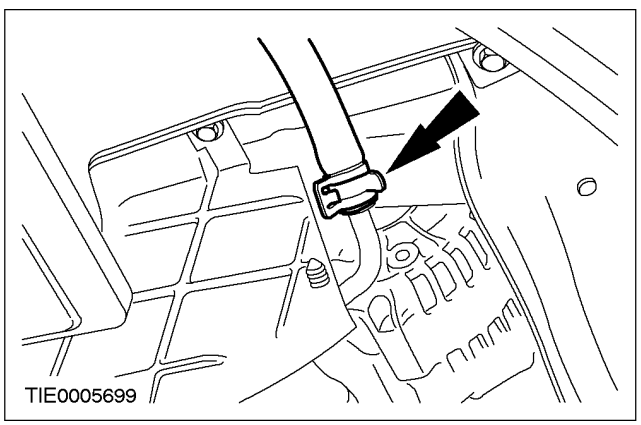

5. Connect the power steering fluid cooler to the power steering gear return line.

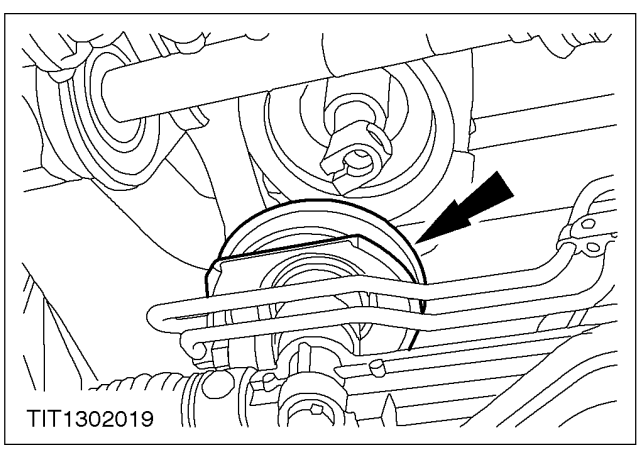

6. Install the power steering gear to floor seal.

REMOVAL AND INSTALLATION (CONTINUED)

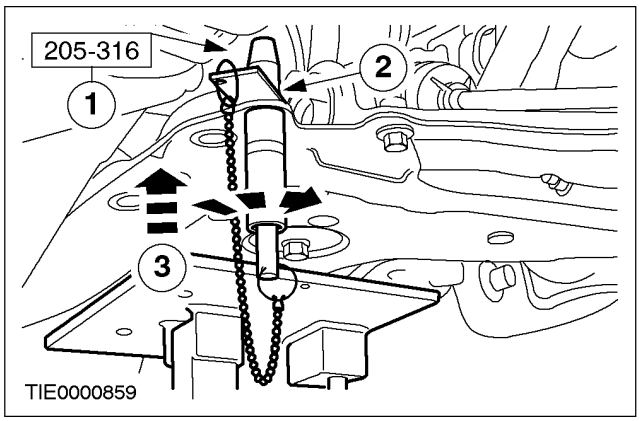

7. Using the special tools, align the crossmember.
   1. Insert the guide pins through the crossmember alignment holes.
   2. Slide the locking plates into the grooves and tighten the alignment pin sleeves.
   3. Raise the crossmember engaging the guide pins into the chassis aligning holes.

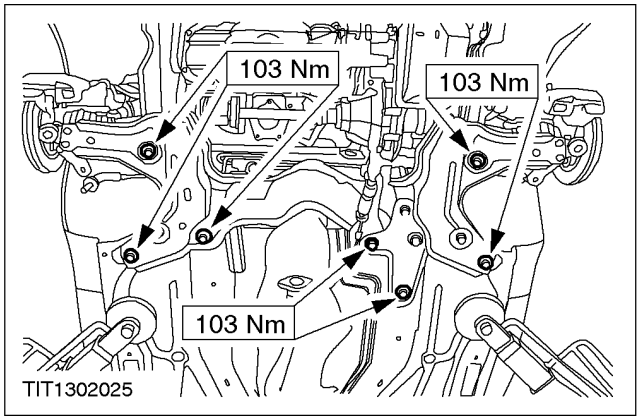

8. Install the crossmember retaining bolts.

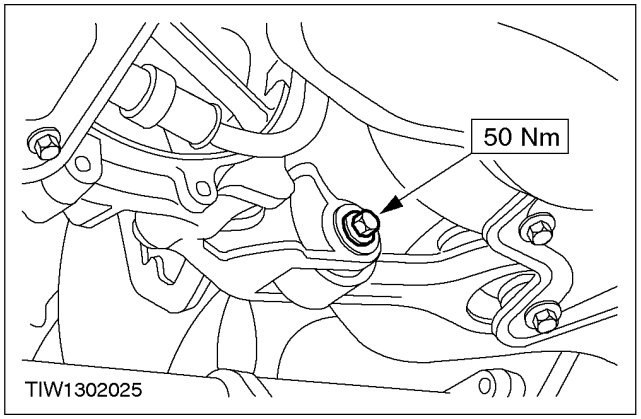

9. Install the rear support insulator to transmission bolt.

10. Remove the transmission jack and alignment pins.

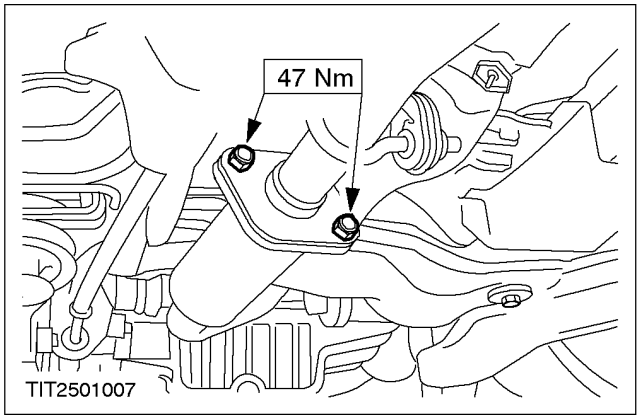

11. **NOTE:** Install the new gasket and nuts. Tighten the exhaust front pipe flange joint nuts.

REMOVAL AND INSTALLATION (CONTINUED)

12. Remove the flexible pipe support.

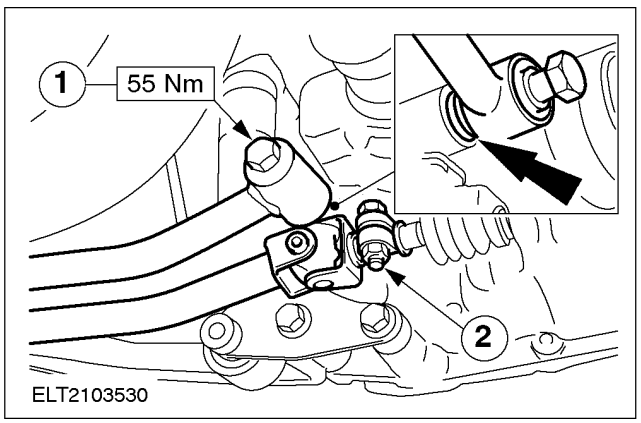

15. NOTE: Make sure the washer is fitted between the gearshift stabilizer and transmission.

Install the shift rod and gearshift stabilizer.

1. Connect the gearshift stabilizer.
2. Connect the shift rod.

All Vehicles

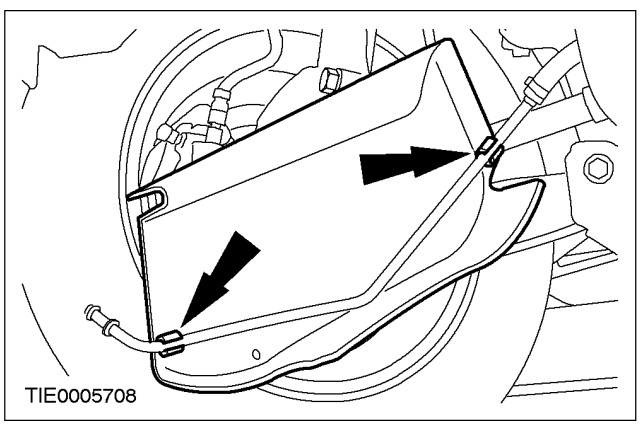

16. Install the power steering fluid cooler to power steering gear return line to the accessory drive belt lower guard.

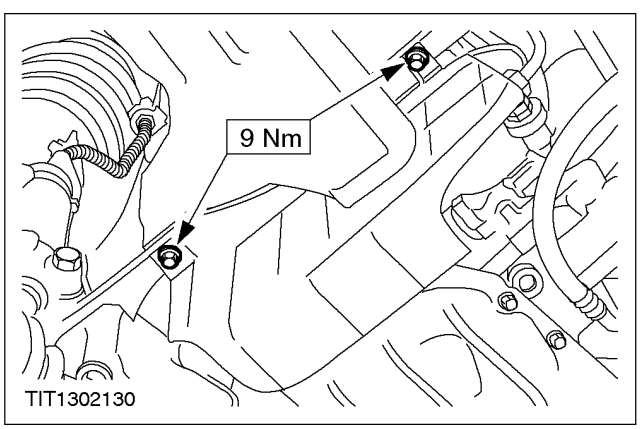

17. Secure the accessory drive belt lower guard.

18. NOTE: Before lowering the vehicle make sure the road wheels are in the straight ahead position.

Lower the vehicle.

REMOVAL AND INSTALLATION (CONTINUED)

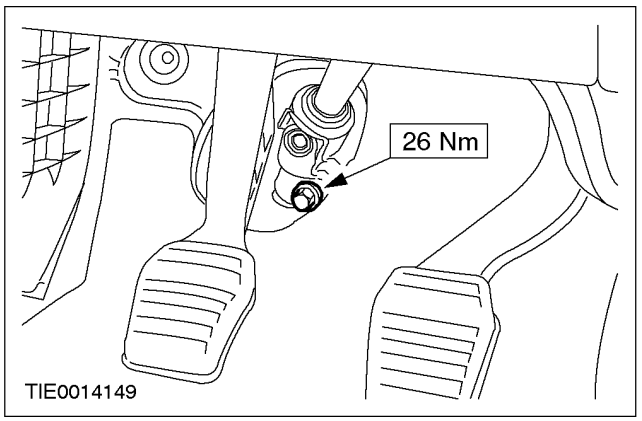

19. Install the steering column coupling to the power steering gear pinion.

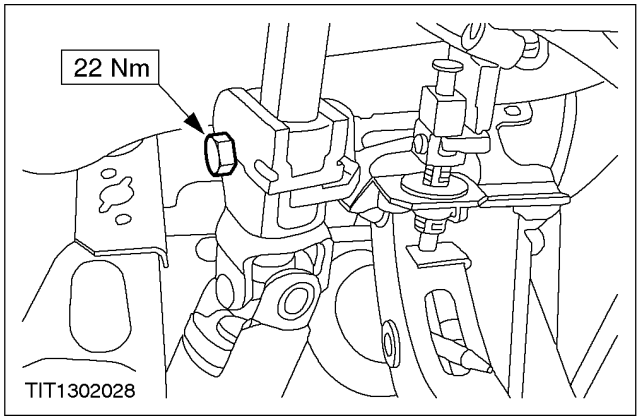

20. Tighten the steering column shaft coupling pinch bolt.

21. Fill and bleed the power steering system. For additional information, refer to Section 211-00.

SPECIFICATIONS

Lubricants, Fluids, Sealers and Adhesives

Item	Specification
Power steering fluid	ESPM-2C166-H
Power steering fluid alternative	WSA-M2C195-A
Power steering lubricant	SL-M1C9110-A
Power steering gear grease	ESA-MIC45-A

Torque Specifications

Description	Nm
Steering gear retaining nuts and bolts	48
Steering gear pipe unions	31
Crossmember retaining bolts	103
Roll restrictor to transmission retaining bolt	50
Tie-rod end locknuts	37
Wheel nuts	85
Flexible coupling to steering column shaft pinch bolt	22
Flexible coupling to pinion shaft pinch bolt	28
Tie-rod rod locknuts	63
Power steering pump retaining bolts	24
Power steering pump pressure pipe union	65
Power steering pump retaining bolts (Endura-DE)	25
Power steering pump pressure pipe union (Endura-DE)	65
Power steering pump pulley retaining bolts (Endura-DE)	25
Accessory drive belt tensioner pulley centre bolt (Endura-DE)	20
Drive belt guard retaining bolts (Endura-DE)	10
Power steering pressure (PSP) switch	11
Steering wheel retaining bolt	45
Steering column retaining nuts	12
Exhaust front pipe flange	47
Gearshift linkage pinch bolt	23

SECTION 211-03 Steering Linkages

VEHICLE APPLICATION: 2002 Bantam

SUBJECT **PAGE**

DESCRIPTION AND OPERATION

Steering Linkage 211-03-81

DIAGNOSIS AND TESTING

Steering Linkage 211-03-82

REMOVAL AND INSTALLATION

Tie-Rod End ..... (13 273 0) 211-03-83/84
Steering Gear Boot ..... (13 134 0) 211-03-85

SPECIFICATIONS

Specifications 211-03-86
Torque Specifications 211-03-86

DESCRIPTION AND OPERATION

Steering Linkage

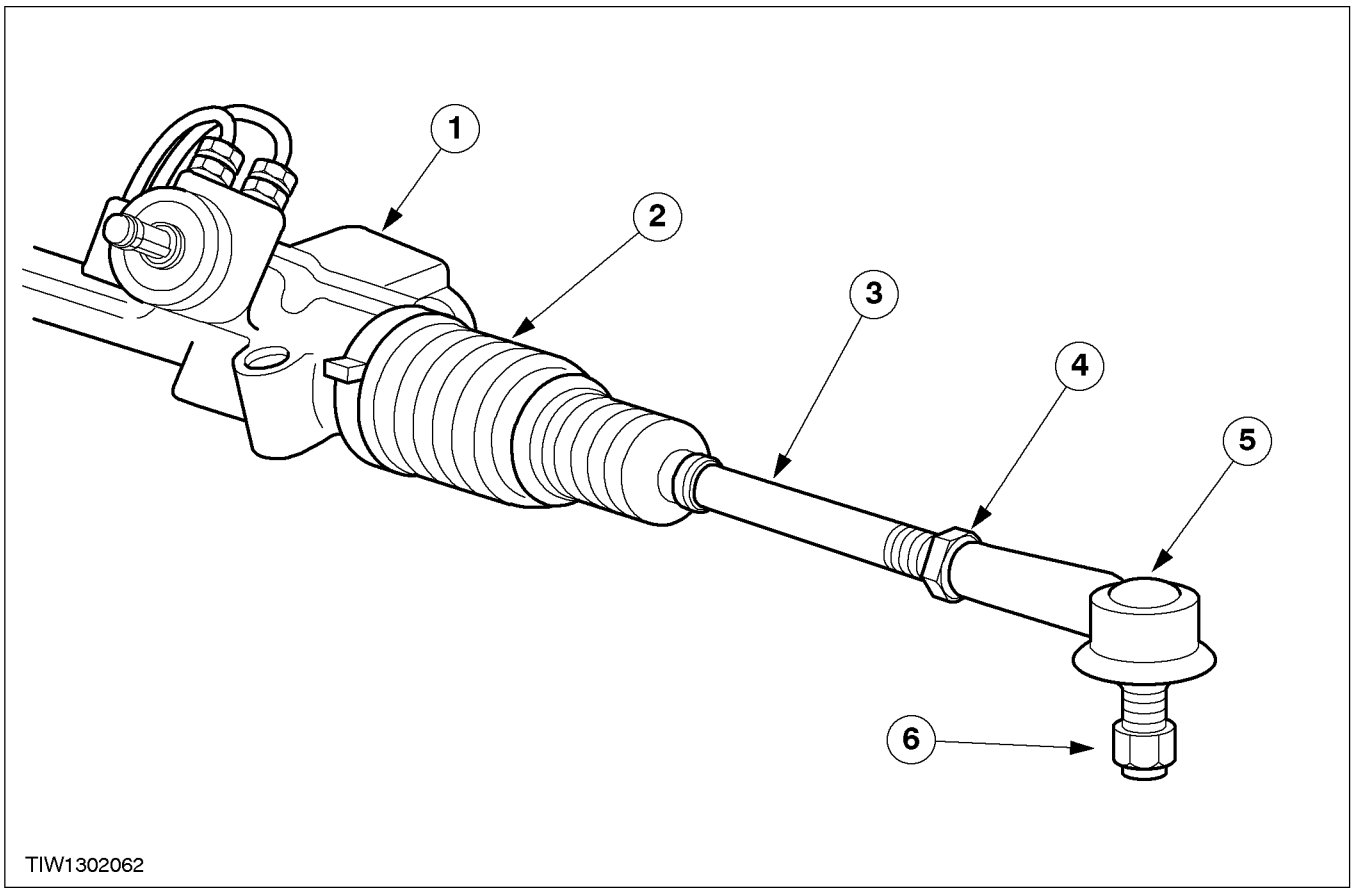

Item	Description
1	Steering gear
2	Steering gear boot
3	Tie rod
4	Tie rod end lock nut
5	Tie rod end
6	Tie rod end retaining nut

The tie rod is an extension of the steering gear. The steering gear movement is transferred to the wheels by means of:

- Tie rods.
- Tie rod ends.
- Wheel knuckles.

The tie rod end is secured to the tie rod with a lock nut.

The tie rod entry into the steering gear is protected by a rubber boot to prevent dirt ingress into the tie rod end inner ball joint.

To allow for the movement of the suspension as the vehicle is driven on an uneven road surface, the tie rod articulates between the inner and outer ball joint.

DIAGNOSIS AND TESTING

Steering Linkage

REFER to Section 211-00.

REMOVAL AND INSTALLATION

Tie-Rod End (13 273 0)

Special Tool(s)	
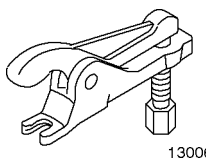 13006	Separator, ball joint 13-006

Removal

1. Loosen the front wheel nuts.
2. Raise and support the vehicle. For additional information, refer to Section 100-02.
3. Remove the front road wheel.
4. Loosen the tie rod end nuts.
   1. Loosen the lock nut.
   2. Loosen the retaining nut.

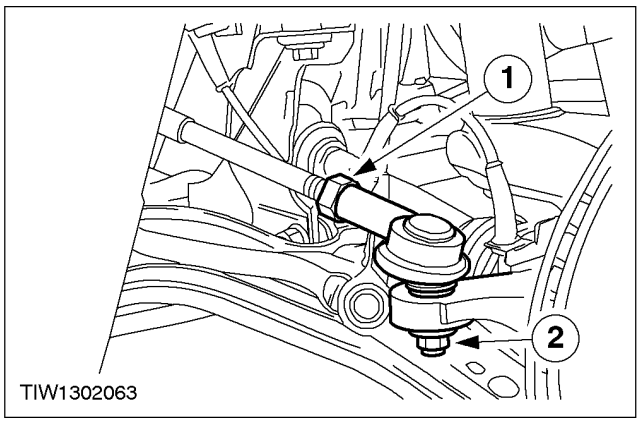

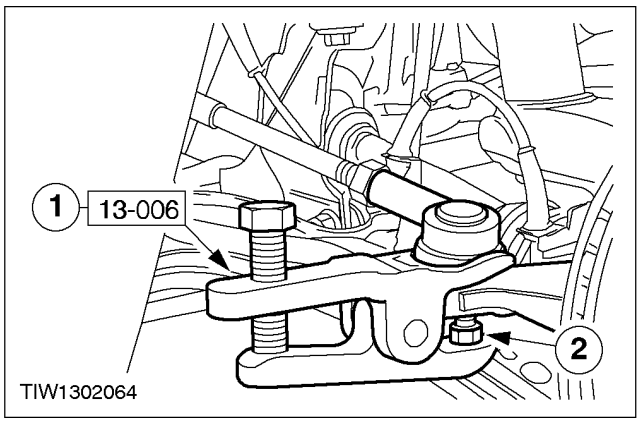

5. ⚠ **CAUTION: When the tie rod end is separated from the knuckle the ball joint seal should be protected.**
   Detach the tie rod end from the wheel knuckle.
   1. Release the tie rod end.
   2. Remove the retaining nut.

REMOVAL AND INSTALLATION (CONTINUED)

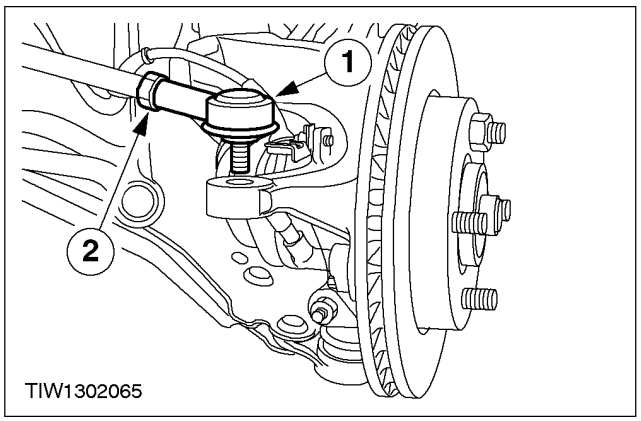

6. **NOTE:** Make a note of the number of turns required to remove the tie rod end.
   Remove the tie rod end and lock nut.

Installation

NOTE: Make sure the tie rod end is screwed on by the same number of turns as was required to remove it. If the number of turns is not known, install the tie rod end so that the visible screw threads on the tie rod are of equal length both sides.

1. To install, reverse the removal procedure.

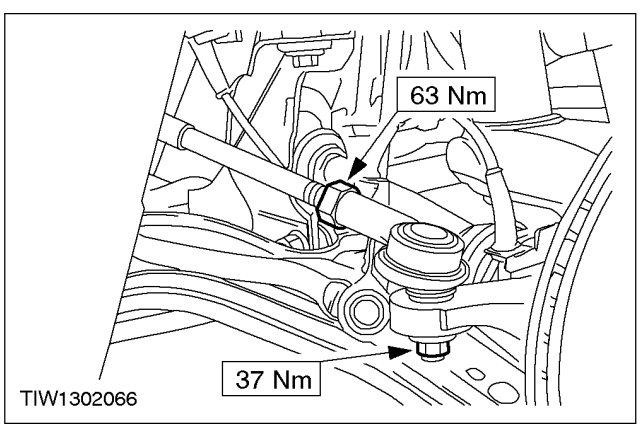

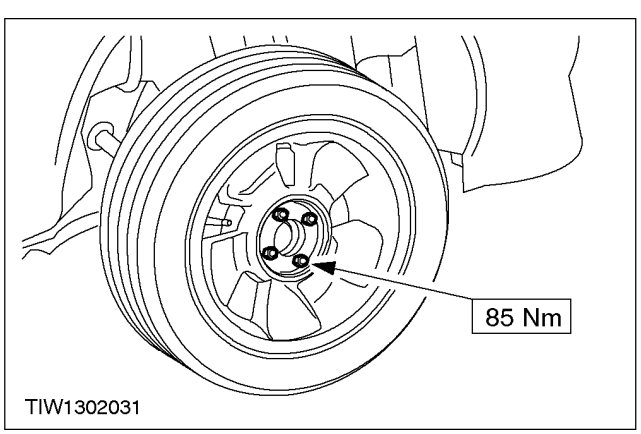

3. Check the toe setting and adjust as necessary. For additional information, refer to Section 204-00.

REMOVAL AND INSTALLATION

Steering Gear Boot (13 134 0)

Removal

1. Remove the tie rod end.
   Refer to the procedure in this section.
2. Remove the steering gear boot retaining clips.

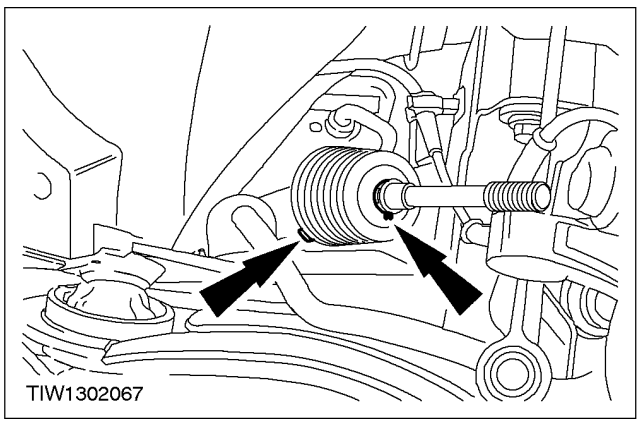

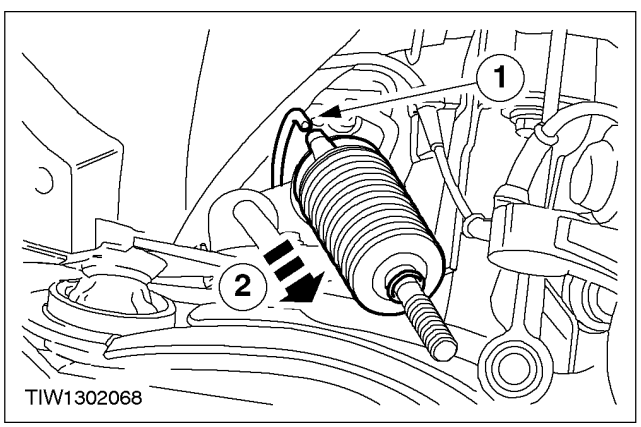

3. ⚠ **CAUTION: Make sure the tie rod is clean before removing the steering gear boot.**
   Remove the steering gear boot.
   1. Disconnect the breather pipe.
   2. Slide the boot off the tie rod.

Installation

1. To install, reverse the removal procedure.

SPECIFICATIONS

Torque Specifications

Description	Nm
Tie rod end retaining nut	37
Tie rod end lock nut	63
Wheels nuts	85

SECTION 211-04 Steering Column

VEHICLE APPLICATION: 2002 Bantam

SUBJECT **PAGE**

DESCRIPTION AND OPERATION

Steering Column 211-04-88

REMOVAL AND INSTALLATION

Steering Wheel ..... (13 524 0) 211-04-89
Air Bag Sliding Contact ..... (33 392 0) 211-04-90
Steering Column ..... (13 542 0) 211-04-91/93

SPECIFICATIONS

Specifications 211-04-94
Torque Specifications 211-04-94

DESCRIPTION AND OPERATION

Steering Column

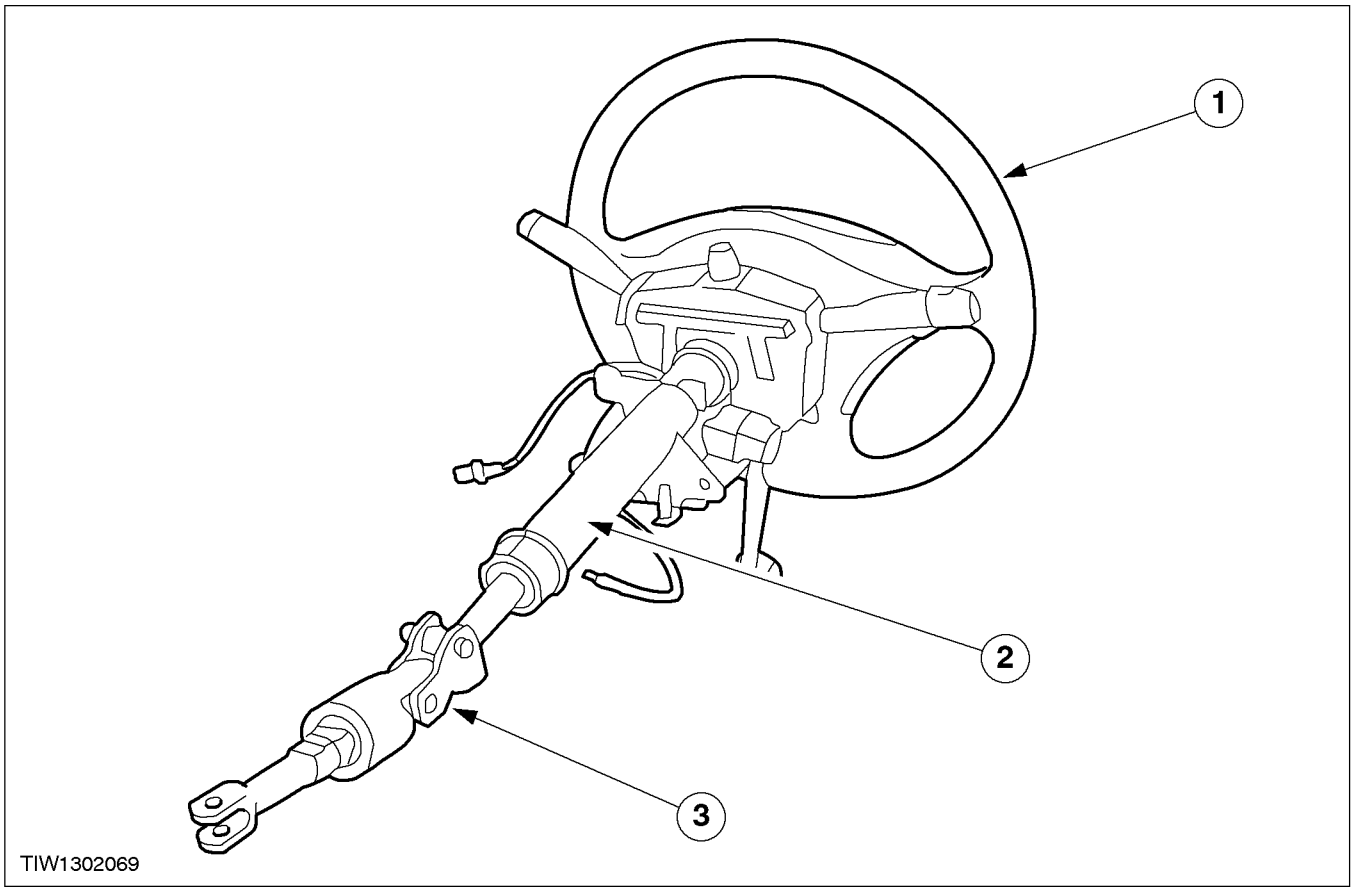

Item	Description
1	Steering wheel
2	Steering column

Item	Description
3	Flexible coupling

REMOVAL AND INSTALLATION

Steering Wheel (13 524 0)

Removal

1. Remove the air bag module. For additional information, refer to Section 501-20B.
2. Centre the steering wheel and lock in position.

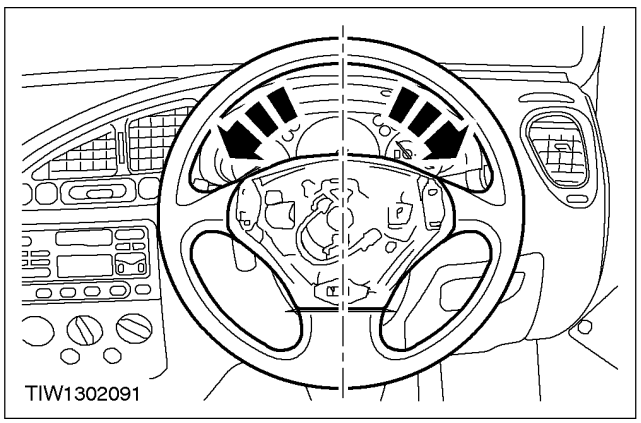

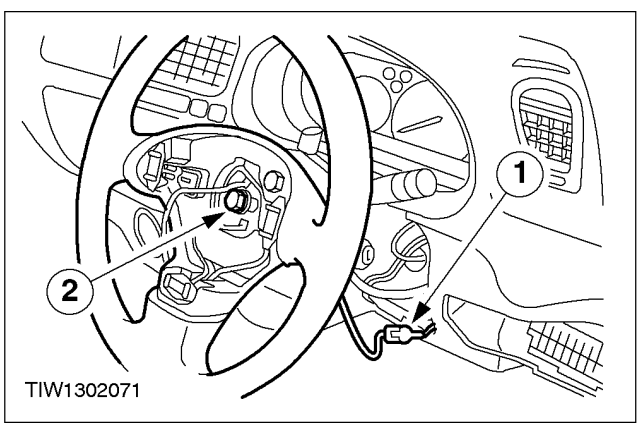

3. **NOTE:** Turn the ignition key to position I to remove the steering wheel and return to position 0 when removed.
   Remove the steering wheel.
   1. Disconnect the air bag sliding contact electrical connector.
   2. Remove the steering wheel retaining bolt.
4. Remove the air bag sliding contact. For additional information, refer to Section 501-20B.

Installation

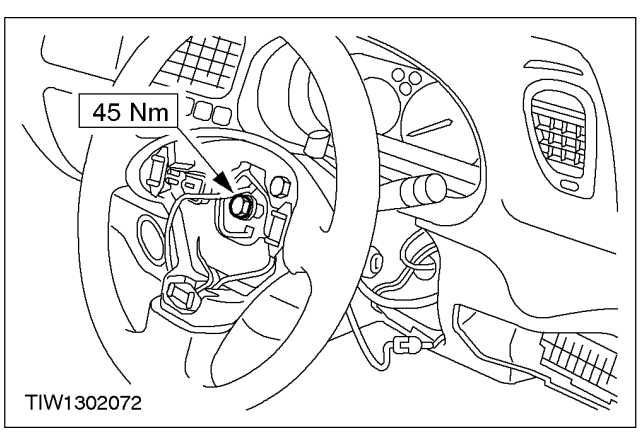

1. **WARNING: When installing the steering wheel make sure that the air bag sliding contact tangs engage correctly over the steering column.**

   CAUTION: Make sure the steering is in the straight ahead position.

   To install, reverse the removal procedure.

REMOVAL AND INSTALLATION

Air Bag Sliding Contact (33 392 0)

For additional information,
refer to Section 501-20B.

REMOVAL AND INSTALLATION

Steering Column (13 542 0)

Removal

⚠CAUTION: Wait at least two minutes after disconnecting the battery before proceeding or there may the possibility of accidentally deploying the air bag(s) and pyrotechnic safety belt pre-tensioner's.

1. Remove the multi-function switch.
   For additional information,
   refer to Section 211-05.

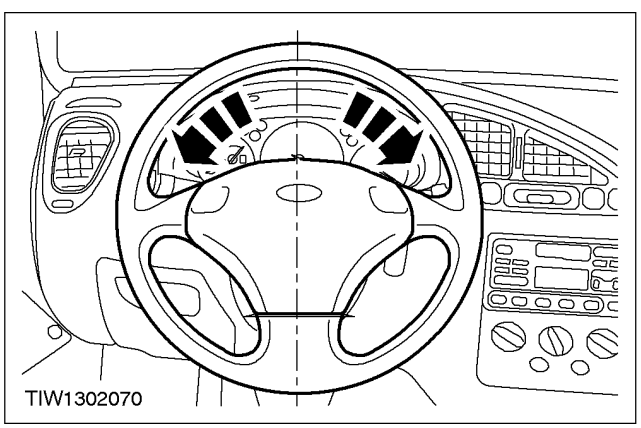

2. Centre the steering wheel and lock in position.

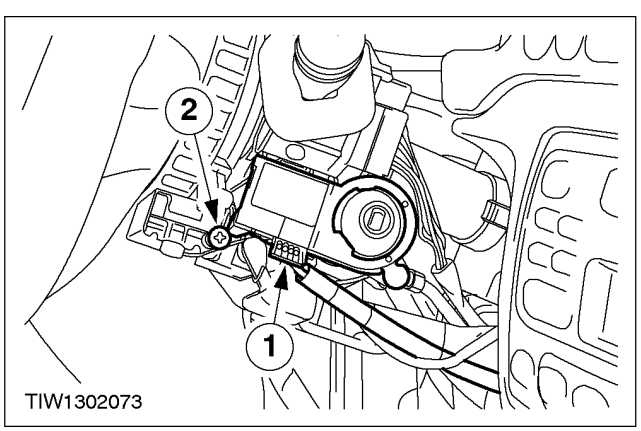

3. Remove the PATS transceiver.
   1. Disconnect the electrical connector.
   2. Remove the retaining screw.

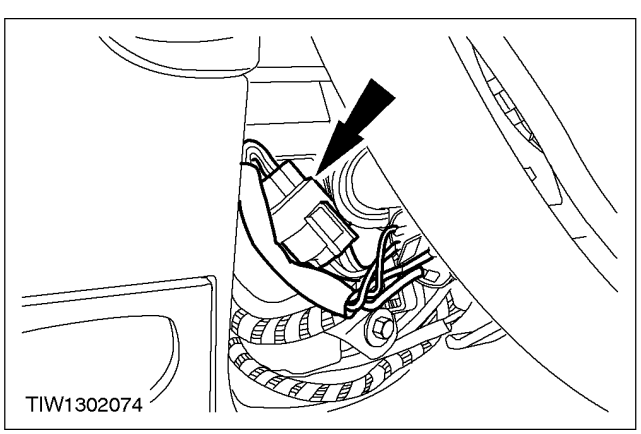

4. Disconnect the ignition switch electrical connector.

REMOVAL AND INSTALLATION (CONTINUED)

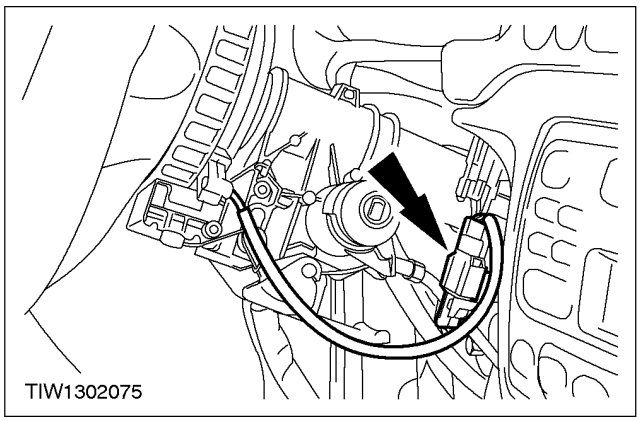

5. Disconnect the air bag sliding contact electrical connector.

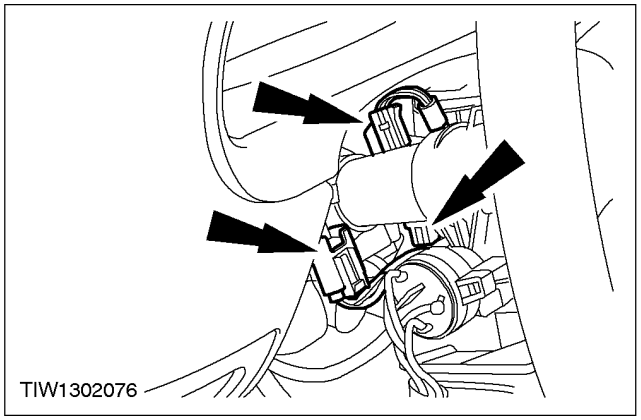

6. Detach the wiring harness electrical connectors from the steering column bracket.

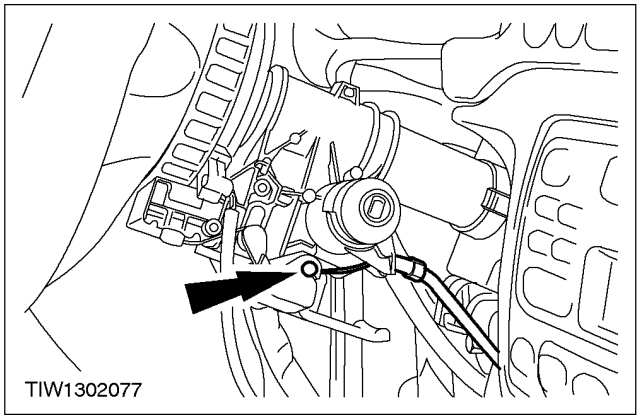

7. Disconnect the hood latch remote control cable.

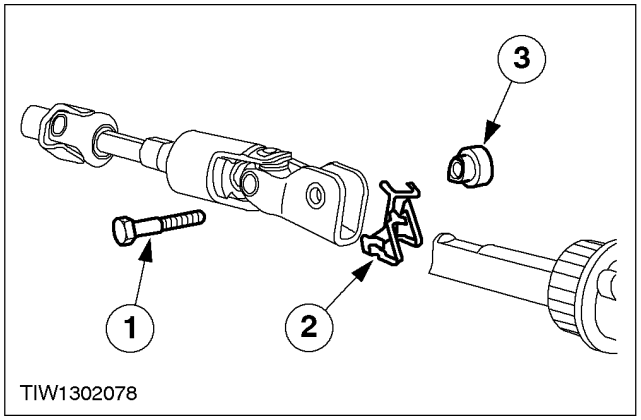

8. From inside the passenger compartment, disconnect the flexible coupling.
   1. Remove the pinch bolt.
   2. Remove the retaining cage.
   3. Remove the shaft aligner.

REMOVAL AND INSTALLATION (CONTINUED)

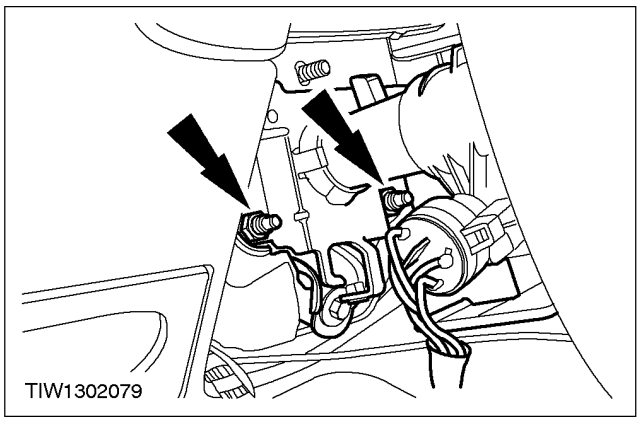

9. Remove the steering column.
   - Remove the two retaining nuts.

Installation

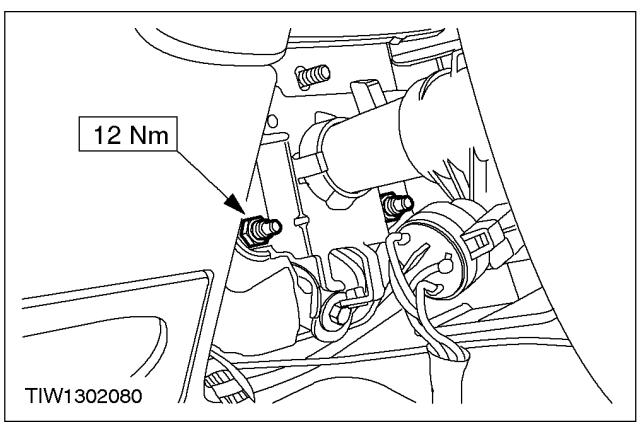

1. ⚠ **CAUTION: Make sure the steering is in the straight ahead position.**
   To install, reverse the removal procedure.

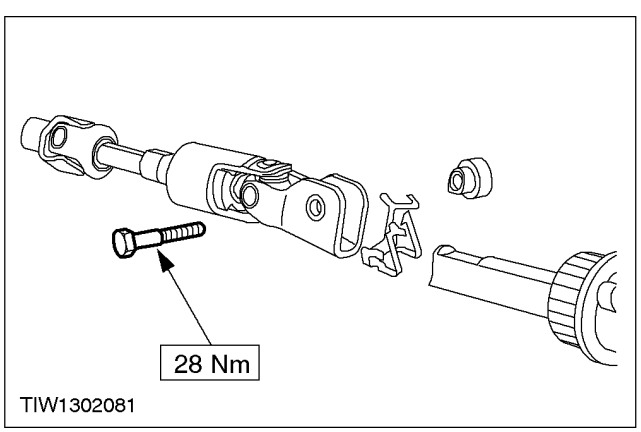

SPECIFICATIONS

Torque Specifications

Description	Nm
Steering wheel retaining bolt	45
Steering column retaining nuts	23
Steering column coupling to steering column pinch bolt	22

SECTION 211-05 Steering Column Switches

VEHICLE APPLICATION: 2002 Bantam

SUBJECT **PAGE**

DESCRIPTION AND OPERATION

Steering Column Switches 211-05-96
Multi-function Switch 211-05-96/97
Ignition Switch 211-05-97

DIAGNOSIS AND TESTING

Steering Column Switches 211-05-98A
Inspection and Verification 211-05-98A
Symptom Chart 211-05-98A
Pinpoint Tests 211-05-98B/106

REMOVAL AND INSTALLATION

Steering Column Multifunction Switch ..... (33 612 0) 211-05-107
Ignition Switch ..... (36 424 0) 211-05-108

DESCRIPTION AND OPERATION

Steering Column Switches

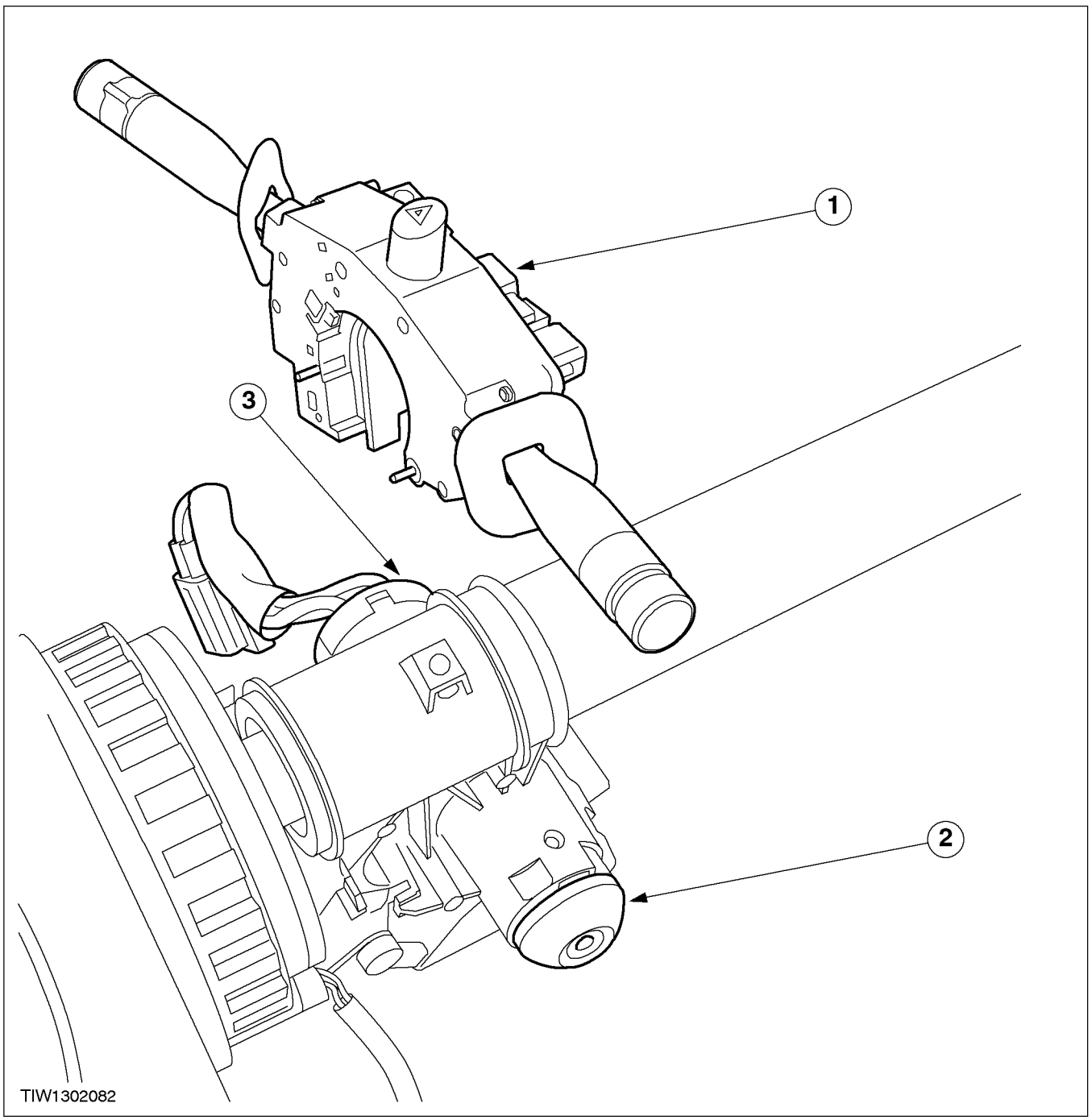

Item	Description
1	Multi-function switch
2	Ignition switch lock cylinder
3	Ignition switch

Multi-function Switch

The multi-function switch located on the left-hand side of the steering column controls the following:

- Exterior lights.
- Direction indicator lamps.
- Headlamp high beam.
- Headlamp flash feature.

The multi-function switch located on the right-hand side of the steering column controls the following:

- Windshield wipers/washers.

DESCRIPTION AND OPERATION (CONTINUED)

The hazard flasher switch, located in the centre of the assembly, is an integral part of the multi-function switch and operates independently from the ignition switch. The direction indicator system is deactivated when the hazard flasher system is in operation.

Ignition Switch

The ignition switch is mounted on the steering column and is activated by the ignition switch lock cylinder. The ignition switch lock cylinder also controls the mechanism, which provides a positive lock for the steering column.

DIAGNOSIS AND TESTING

Steering Column Switches

Inspection and Verification

1. Verify the customer concern.
2. Visually inspect for obvious signs of damage. Refer to the following chart:
3. If inspection reveals an obvious cause, rectify this before continuing. If the concern remains, proceed to the Symptom Chart.
4. Additional information on connectors is available.
   Refer to the relevant wiring diagrams, Petrol and Diesel

Visual Inspection Chart

Mechanical	Electrical
• Ignition switch. • Battery.	• Fuse. • Wiring. • Connector(s).

Symptom Chart

Symptom Chart

Condition	Possible Sources	Action
•The ignition switch is inoperative	•Switch. •Circuit. •Fuse.	•GO to Pinpoint Test A.
•No power in ACC	•Switch. •Circuit.	•GO to Pinpoint Test B.
•No power in RUN	•Switch. •Circuit. •Relay.	•GO to Pinpoint Test C.
•No power in START	•Switch. •Circuit(s). •Relay.	•GO to Pinpoint Test D.
•The multifunction switch hazard warning switch does not operate correctly	•Fuse(s). •Circuit. •Switch.	•GO to Pinpoint Test E.

Pinpoint Tests

PINPOINT TEST A: THE IGNITION SWITCH IS INOPERATIVE

A1: CHECK THE IGNITION SWITCH CONNECTOR 211-05-98B

A2: CHECK FUSE 40 (60A) 211-05-99

A3: CHECK CIRCUIT 30 RD) FOR SHORT TO GROUND 211-05-99

A4: CHECK FOR OPEN ON CIRCUIT 30 (RD) 211-05-99/100

A5: CHECK THE IGNITION SWITCH 211-05-100

PINPOINT TEST B: NO POWER IN ACC

B1: CHECK FOR OPEN /SHORT TO GROUND ON CIRCUIT 75 (YE) 211-05-100

PINPOINT TEST C: NO POWER IN RUN

C1: CHECK FUSE 38 (60A) 211-05-101

C2: CHECK FOR SHORT TO GROUND ON CIRCUIT 30 (RD) 211-05-101

C3: CHECK THE IGNITION SWITCH 211-05-101

C4: CHECK FOR OPEN ON CIRCUITS 15 (GN) AND 15 (GN/BU) 211-05-102

C5: CHECK THE IGNITION RELAY GROUND 211-05-102

C6: CHECK THE IGNITION RELAY POWER FEED 211-05-102/103

C7: CHECK FOR OPEN ON CIRCUIT 15 (GN) 211-05-103

PINPOINT TEST D: NO POWER IN START

D1: CHECK FUSE 36 (60A) 211-05-103/104

D2: CHECK FOR SHORT TO GROUND ON CIRCUIT 30 (RD) 211-05-104

D3: CHECK THE IGNITION SWITCH 211-05-104

D4: CHECK FOR SHORT/OPEN ON CIRCUIT 50 (GY) 211-05-104/105

D5: CHECK THE START INHIBIT RELAY GROUND 211-05-105

D6: CHECK THE START INHIBIT RELAY POWER FEED 211-05-105

D7: CHECK FOR OPEN ON CIRCUIT 50 (GY/BK) 211-05-106

PINPOINT TEST E: THE MULTIFUNCTION SWITCH/HAZ ARD WARNING SWITCH DOES NOT OPERATE CORRECTLY

E1: CHECK THE EXTERIOR LIGHTING 211-05-106

E2: CHECK THE WIPER AND WASHER 211-05-106

Pinpoint Tests

PINPOINT TEST A: THE IGNITION SWITCH IS INOPERATIVE

CONDITIONS	DETAILS/RESULTS/ACTIONS
A1: CHECK THE IGNITION SWITCH CONNECTOR	
	1 Remove the steering column shrouds and check the ignition switch connector. • Is the ignition switch connector clean and secure? ☐ **Yes** GO TO **A2** ☐ **No** CLEAN and SECURE the ignition switch connector as required. TEST the system for normal operation.

DIAGNOSIS AND TESTING (CONTINUED)

CONDITIONS	DETAILS/RESULTS/ACTIONS
A2: CHECK FUSE 40 (60A)	
1 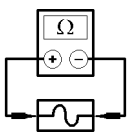 Fuse 40 (60A)	2 Check the fuse 40 (60A). • Is the fuse OK? ☐ **Yes** GO TO **A4** ☐ **No** INSTALL a new fuse 40 (60A). TEST the system for normal operation. If the fuse fails again GO TO **A3**
A3: CHECK CIRCUIT 30 (RD) FOR SHORT TO GROUND	
1 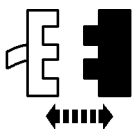 Fuse 40 (60A) 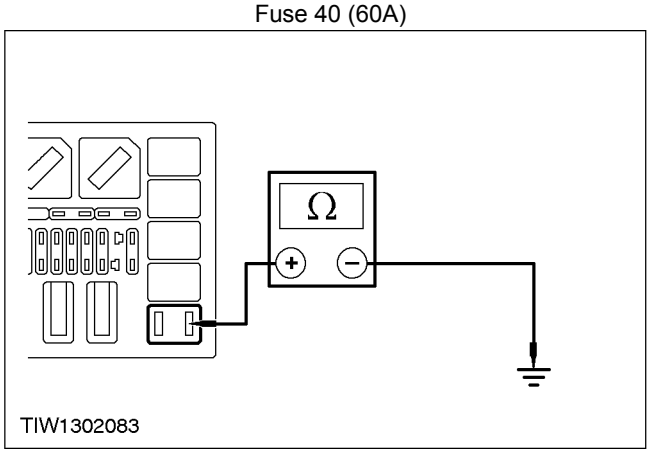 TIW1302083	2 Measure the resistance between the fuse 40 connector pin 1, circuit 30 (RD) and ground. • Is the resistance greater than 10,000 ohms? ☐ **Yes** GO TO **A2** ☐ **No** REPAIR circuit 30 (RD). TEST the system for normal operation.
A4: CHECK FOR OPEN ON CIRCUIT 30 (RD)	
1 2 Fuse 40 (60A) Ignition switch connector C61	

DIAGNOSIS AND TESTING (CONTINUED)

CONDITIONS	DETAILS/RESULTS/ACTIONS
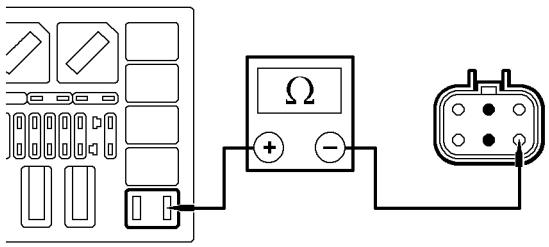 TIW2601013	**3** Measure the resistance between the ignition switch connector C61 pin 4, circuit 30 (RD) and fuse 40 connector pin 1, circuit 30 (RD). • Is the resistance less than 5 ohms? ☐ **Yes** GO TO **A5** ☐ **No** REPAIR circuit 30 (RD). TEST the system for normal operation
A5: CHECK THE IGNITION SWITCH	
	1 Carry out the ignition switch component test as described in this section. • Does the ignition switch test OK? ☐ **Yes** VERIFY the customer concern. ☐ **No** INSTALL a new ignition switch. TEST the system for normal operation.

PINPOINT TEST B: NO POWER IN ACC

CONDITIONS	DETAILS/RESULTS/ACTIONS
B1: CHECK FOR OPEN /SHORT TO GROUND ON CIRCUIT 75 (YE)	
1 2 Ignition switch connector C61 Fuse 19 (10A) 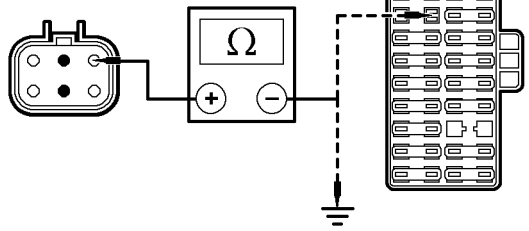 TIW1302085	**3** Measure the resistance between the ignition switch connector C61 pin 1, circuit 75 (YE) and ground, and between the ignition switch connector C61 pin 1, circuit 75 (YE) and the fuse 19 (10A). • Is the resistance between connector C61 pin 1, circuit 75 (YE) and ground greater than 10,000 ohms, and is the resistance between connector C61 pin 1, circuit 75 (YE) and the fuse 19 (10A) less than 5 ohms? ☐ **Yes** INSTALL a new ignition switch. TEST the system for normal operation. ☐ **No** REPAIR circuit 75 (YE). TEST the system for normal operation.

DIAGNOSIS AND TESTING (CONTINUED)

PINPOINT TEST C: NO POWER IN RUN

CONDITIONS	DETAILS/RESULTS/ACTIONS
C1: CHECK FUSE 38 (60A)	
1 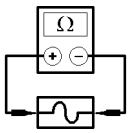	2 Check the fuse 38 (60A). • Is the fuse OK? ☐ **Yes** GO TO **C3** ☐ **No** INSTALL a new fuse 38 (60A). TEST the system for normal operation. If the fuse fails again GO TO **C2**
C2: CHECK FOR SHORT TO GROUND ON CIRCUIT 30 (RD)	
1 2 Fuse 38 (60A) Ignition relay C47 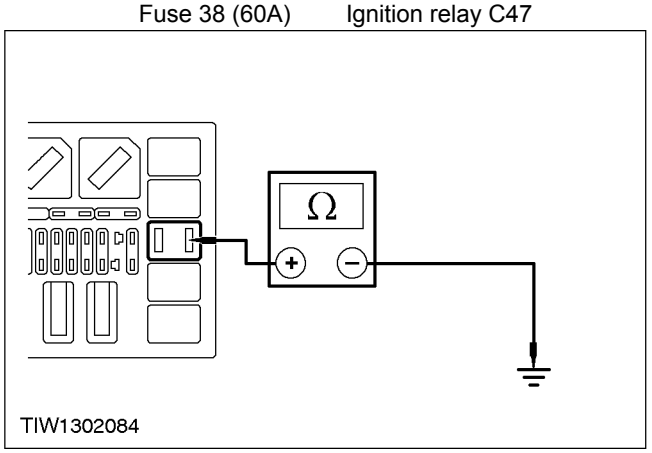 	3 Measure the resistance between the fuse 38 connector pin 1, circuit 30 (RD) and ground. • Is the resistance greater than 10,000 ohms? ☐ **Yes** GO TO **C1** ☐ **No** REPAIR circuit 30 (RD). TEST the system for normal operation.
C3: CHECK THE IGNITION SWITCH	
	1 Carry out the ignition switch component test. Refer to the procedure in this section. • Does the ignition switch test OK? ☐ **Yes** GO TO **C4** ☐ **No** INSTALL a new ignition switch. TEST the system for normal operation.

DIAGNOSIS AND TESTING (CONTINUED)

CONDITIONS	DETAILS/RESULTS/ACTIONS
C4: CHECK FOR OPEN ON CIRCUITS 15 (GN) AND 15 (GN/BU)	
1 Ignition switch 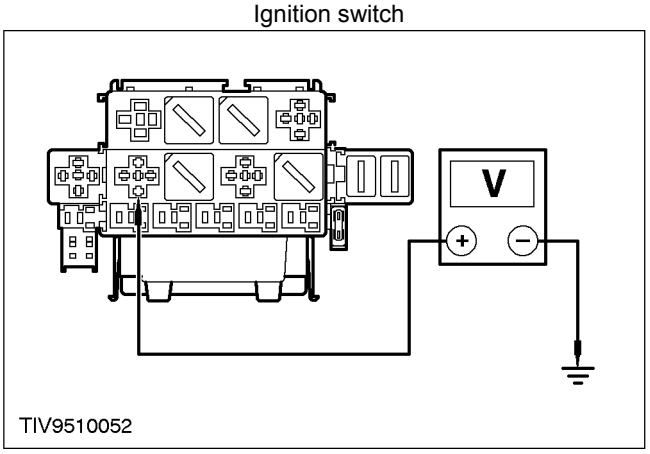	2 Measure the voltage between ignition relay C47 pin 1, circuit 15 (GN) and 15 (GN/BU) and ground • Is the voltage greater than 10 volts? ☐ **Yes** GO TO **C5** ☐ **No** Repair circuit 15 (GN) or 15 (GN/BU). TEST the system for normal operation.
C5: CHECK THE IGNITION RELAY GROUND	
1 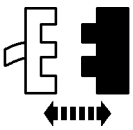 Interior light relay 2 Ignition switch 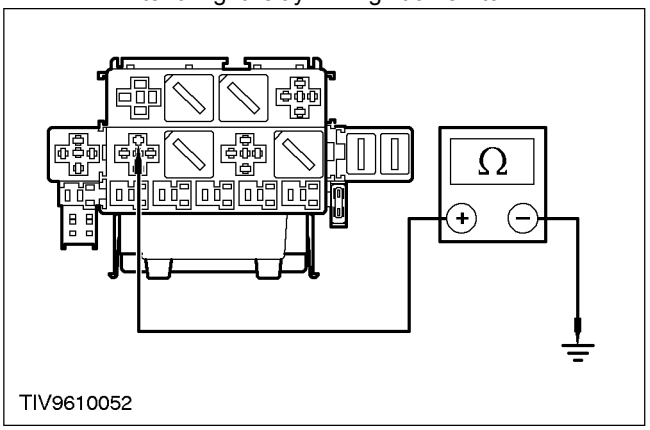	3 Measure the resistance between the ignition relay C47 pin 2, circuit 31 (BK) and ground. • Is the resistance less than 5 ohms? ☐ **Yes** GO TO **C6** ☐ **No** Repair circuit 31 (BK). TEST the system for normal operation.
C6: CHECK THE IGNITION RELAY POWER FEED	
1 Interior light relay	

DIAGNOSIS AND TESTING (CONTINUED)

CONDITIONS	DETAILS/RESULTS/ACTIONS
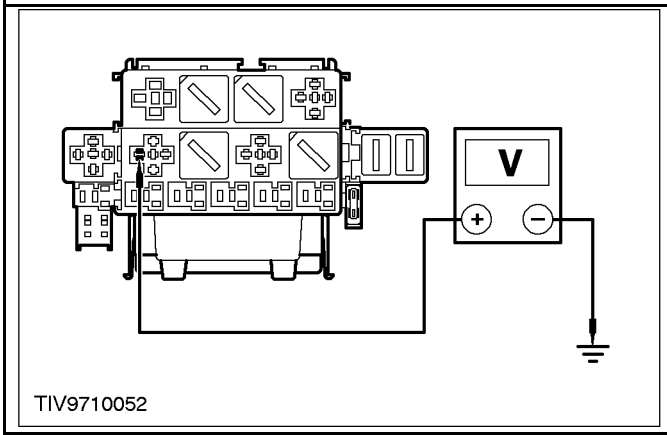	**2** Measure the voltage between the ignition relay C47 pin 3, circuit 30 (RD) and ground. • Is the voltage greater than 10 volts? ☐ **Yes** GO TO **C7** ☐ **No** REPAIR circuit 30 (RD). TEST the system for normal operation.
C7: CHECK FOR OPEN ON CIRCUIT 15 (GN)	
1 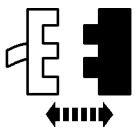 Fuse 17 (15A) 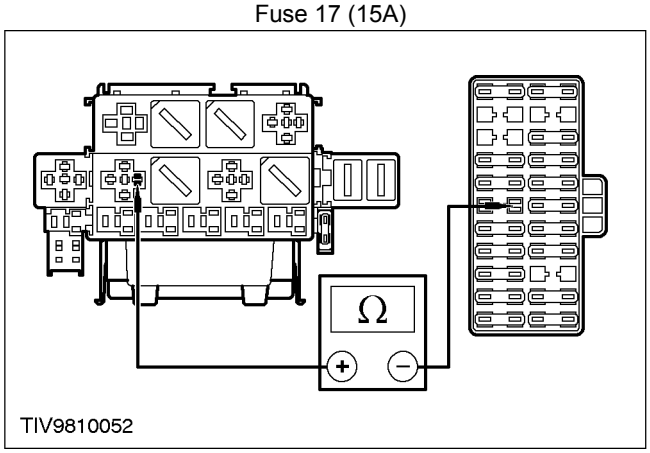	**2** Measure the resistance between ignition relay C47 pin 5, circuit 15 (GN) and supply side of Fuse F17 (15A). • Is the resistance less than 5 ohms? ☐ **Yes** INSTALL a new ignition relay. TEST the system for normal operation. ☐ **No** REPAIR circuit 15 (GN). TEST the system for normal operation.

PINPOINT TEST D: NO POWER IN START

CONDITIONS	DETAILS/RESULTS/ACTIONS
D1: CHECK FUSE 36 (60A)	
1 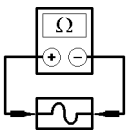 Fuse 36 (60A)	

DIAGNOSIS AND TESTING (CONTINUED)

CONDITIONS	DETAILS/RESULTS/ACTIONS
	2 Check the fuse 36 (60A). • Is the fuse OK? ☐ **Yes** GO TO **D3** ☐ **No** INSTALL a new fuse 36 (60A). TEST the system for normal operation. If the fuse fails again GO TO **D2**
D2: CHECK FOR SHORT TO GROUND ON CIRCUIT 30 (RD)	
1 Fuse 36 (60A) TIW1302087	**2** Measure the resistance between the fuse 36 (60A) connector pin 1, circuit 30 (RD) and ground. • Is the resistance greater than 10,000 ohms? ☐ **Yes** GO TO **D1** ☐ **No** REPAIR circuit 30 (RD). TEST the system for normal operation.
D3: CHECK THE IGNITION SWITCH	
	1 Carry out the ignition switch component test. Refer to the procedure in this section. • Does the ignition switch test OK? ☐ **Yes** GO TO **D4** ☐ **No** INSTALL a new ignition switch. TEST the system for normal operation.
D4: CHECK FOR SHORT/OPEN ON CIRCUIT 50 (GY)	
1 Start inhibit relay C163 **2** Ignition switch C61	

DIAGNOSIS AND TESTING (CONTINUED)

CONDITIONS	DETAILS/RESULTS/ACTIONS
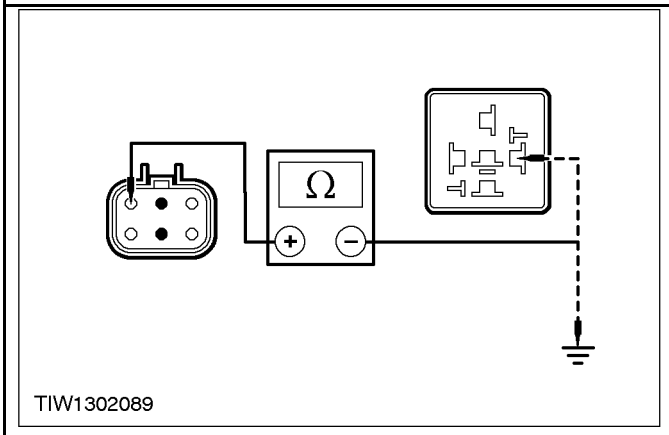	**3** Measure the resistance between the ignition switch connector C61 pin 3, circuit 50 (GY) and ground, and between the ignition switch connector C61 pin 3, circuit 50 (GY) and the start inhibitor relay connector C163 pin 2, circuit 50 (GY). • Is the resistance between connector C61 pin 3, circuit 50 (GY) and ground greater than 10,000 ohms, and is the resistance between connector C61 pin 3, circuit 50 (GY) and pin 2, circuit 50 (GY) less than 5 ohms? ☐ **Yes** GO TO **D5** ☐ **No** REPAIR circuit 50 (GY). TEST the system for normal operation.
D5: CHECK THE START INHIBIT RELAY GROUND	
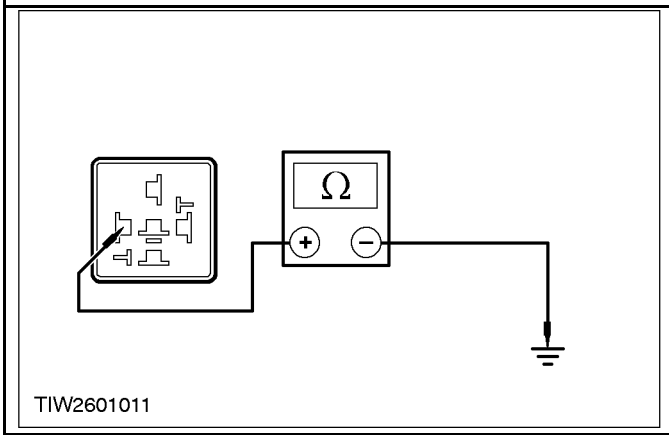	**1** Measure the resistance between the start inhibit relay connector C163 pin 1, circuit 315 (BK/RD) and ground. • Is the resistance between 45 and 50 ohms? ☐ **Yes** GO TO **D6** ☐ **No** REPAIR circuit 315 (BK/RD). TEST the system for normal operation.
D6: CHECK THE START INHIBIT RELAY POWER FEED	
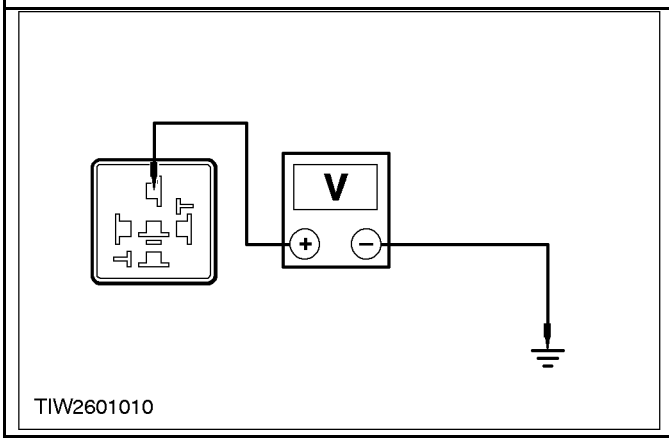	**1** Measure the voltage between the start inhibit relay connector C163 pin 5, circuit 30 (RD) and ground. • Is the voltage greater than 10 volts? ☐ **Yes** GO TO **D7** ☐ **No** REPAIR circuit 30 (RD). TEST the system for normal operation.

DIAGNOSIS AND TESTING (CONTINUED)

CONDITIONS	DETAILS/RESULTS/ACTIONS
D7: CHECK FOR OPEN ON CIRCUIT 50 (GY/BK)	
1 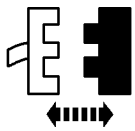 Connector C188 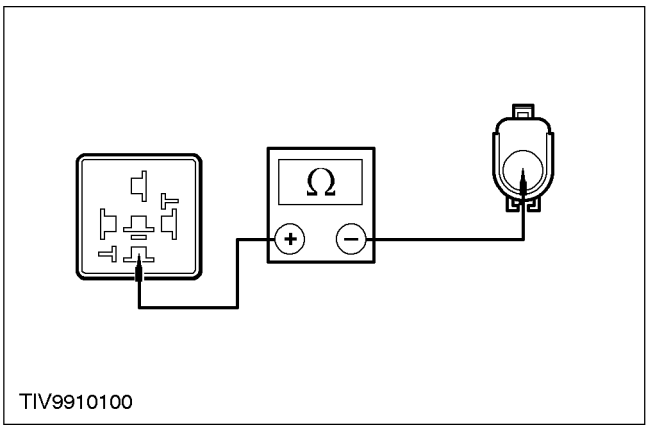 	2 Measure the resistance between start inhibit relay connector C163 pin 5, circuit 50 (GY/BK) and connector C188 pin 1, circuit 50 (GY/BK). • Is the resistance less than 5 ohms? ☐ **Yes** INSTALL a new start inhibit relay. TEST the system for normal operation. ☐ **No** REPAIR circuit 50 (GY/BK) TEST the system for normal operation.

PINPOINT TEST E: THE MULTIFUNCTION SWITCH/HAZARD WARNING SWITCH DOES NOT OPERATE CORRECTLY

CONDITIONS	DETAILS/RESULTS/ACTIONS
E1: CHECK THE EXTERIOR LIGHTING	
	1 Operate the exterior lights. • Do the exterior lights work OK? ☐ **Yes** GO TO **E2** ☐ **No** REFER to Section 417-01 to diagnose the exterior lighting.
E2: CHECK THE WIPER AND WASHER	
	1 Operate the wipers and washers. • Do the wipers and washers work OK? ☐ **Yes** VERIFY the customer concern. ☐ **No** REFER to Section 501-16 to diagnose the wipers and washers.

REMOVAL AND INSTALLATION

Steering Column Multifunction Switch (33 612 0)

Removal

1. Disconnect the battery ground cable. For additional information, refer to Section 414-01.

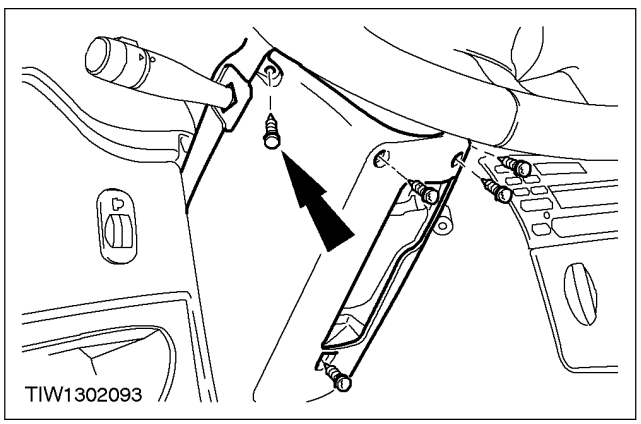

2. Remove the steering column upper and lower shrouds.

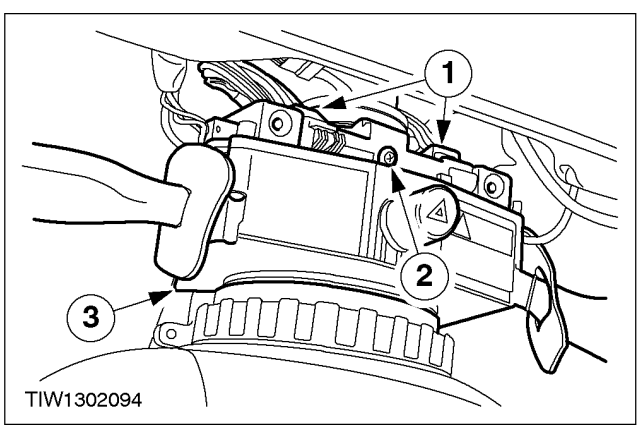

3. Remove the multifunction switch.
   1. Disconnect the multi-function switch electrical connectors.
   2. Remove the retaining screw.
   3. Remove the switch.

Installation

1. To install, reverse the removal procedure.

REMOVAL AND INSTALLATION

Ignition Switch (36 424 0)

Removal

1. Disconnect the battery ground cable.
2. Remove the steering column upper and lower shrouds.

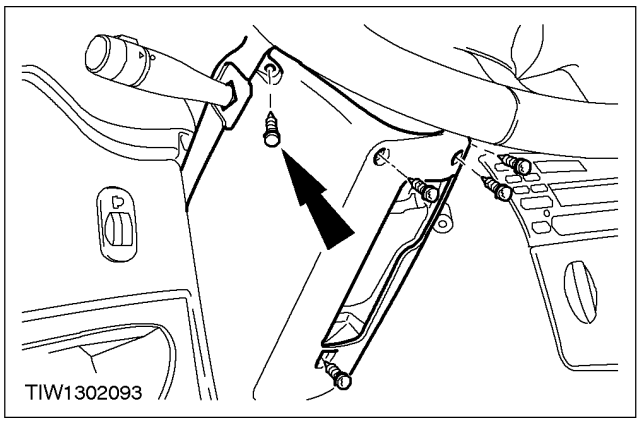

3. Disconnect the ignition switch electrical connector.

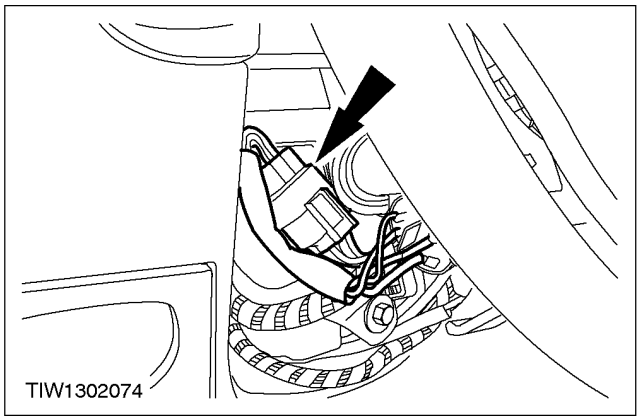

4. Remove the ignition switch.
   - Release the switch retaining clips.

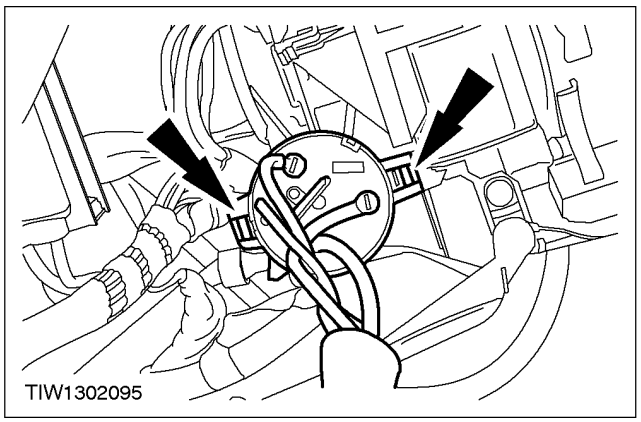

Installation

1. To install, reverse the removal procedure.

Powertrain Group 3

SECTION TITLE	PAGE
Engine	
Engine System - General Information	303-00
Engine - 1.6 / 1.3 RoCam	303-01B
Engine —1.8L Diesel - Endura DE	303-01D
Engine Cooling — 1.8L Diesel - Endura DE	303-03
Starting System —1.8L Diesel - Endura DE	303-06
Engine Emission Control — Diesel Engine	303-08B
Electronic Engine Controls — Diesel Engine	303-14D
Engine Cooling	303-03
Fuel Charging and Controls - 1.6 / 1.3 RoCam	303-04B
Fuel Charging and Controls - 1.8L Diesel Engine	303-04D
Accessory Drive	303-05
Starting System	303-06
Engine Ignition	303-07
Intake Air Distribution and Filtering	303-12
Electronic Engine Control	303-14
Manual Transaxle, Clutch	
Manual Transaxle, Clutch - General Information	308-00
Clutch	308-01
Clutch Controls	308-02
Manual Transaxle	308-03
Manual transaxle External Controls	308-06
Exhaust System	
Exhaust System - General Information	309-00
Fuel System	
Fuel System - General Information	310-00
Fuel Tank and Lines	
Petrol Engines	310-01A
Diesel Engines	310-01B
Acceleration Control	310-02

SECTION 303-00 Engine System — General Information

VEHICLE APPLICATION: 2002 Bantam

SUBJECT **PAGE**

DIAGNOSIS AND TESTING

Engine 303-00-2
Inspection and Verification 303-00-2
Symptom Chart 303-00-2
Pinpoint Tests 303-00-2
Component Tests 303-00-2

GENERAL PROCEDURES

Bearing Inspection 303-00-3
Camshaft Journal Diameter 303-00-4
Camshaft Journal Clearance 303-00-5
Camshaft End Play 303-00-6
Camshaft Lobe Surface 303-00-7
Camshaft Lobe Lift 303-00-8
Crankshaft End Play 303-00-9
Crankshaft Main Bearing Journal Diameter 303-00-10
Crankshaft Main bearing Journal Clearance 303-00-11
Cylinder Bore Taper 303-00-12
Piston Diameter 303-00-13
Piston Ring End Gap 303-00-14
Piston Pin Diameter 303-00-15
Piston Pin to Bore Diameter 303-00-16
Piston Inspection 303-00-17
Piston Ring-to-Groove Clearance 303-00-18
Connecting Rod Large End Bore 303-00-19
Cylinder Head Distortion 303-00-20
Valve Stem Diameter 303-00-21
Valve Seat Inspection 303-00-22
Exhaust Manifold Inspection 303-00-23
Flywheel Inspection 303-00-23

DIAGNOSIS AND TESTING

Engine

Inspection and Verification

Pinpoint Tests

Symptom Chart

Component Tests

GENERAL PROCEDURES

Bearing Inspection

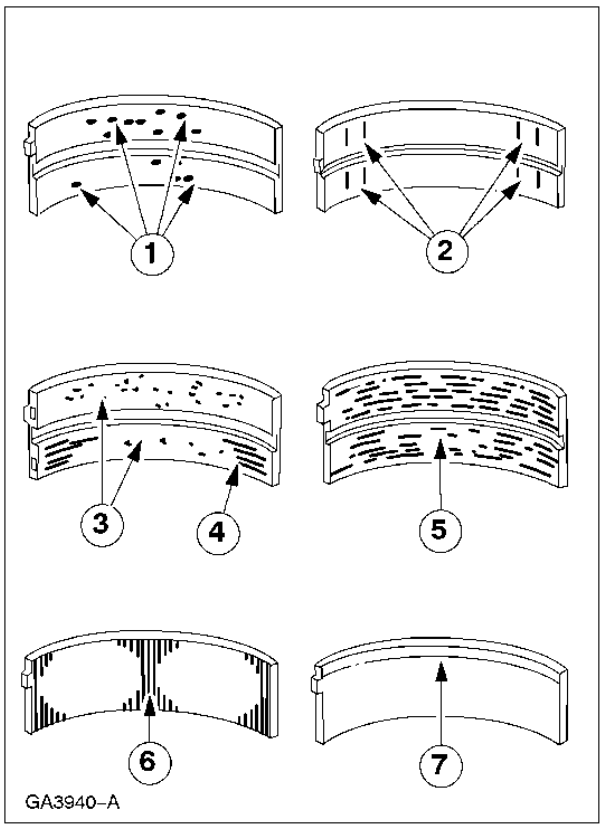

1. Inspect bearings for the following defects.
   1. Cratering - fatigue failure
   2. Spot polishing - incorrect seating.
   3. Imbedded dirt engine oil.
   4. Scratching - dirty engine oil.
   5. Base exposed - poor lubrication.
   6. Both edges worn - journal damaged.
   7. One edge worn - journal tapered or bearing not seated.

GENERAL PROCEDURES

Camshaft Journal Diameter

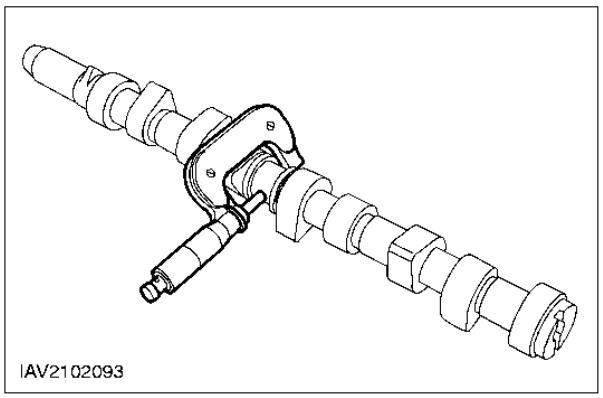

1. Determine the diameter of the camshaft journals.
   - Using a micrometer measure the diameter at 90 degrees intervals to determine if the journals are out-of-round.
   - Measure at two different points on the journal to determine if there is any tapering.
   - If the measurements are out of the specified range, install a new camshaft.

GENERAL PROCEDURES

Camshaft Journal Clearance

NOTE: Make sure that the following stages are followed exactly. The tappets or followers must be removed to carry out this measurement.

NOTE: Make sure that the camshaft is to specification.

NOTE: The bearing caps and journals should be free from engine oil and dirt.

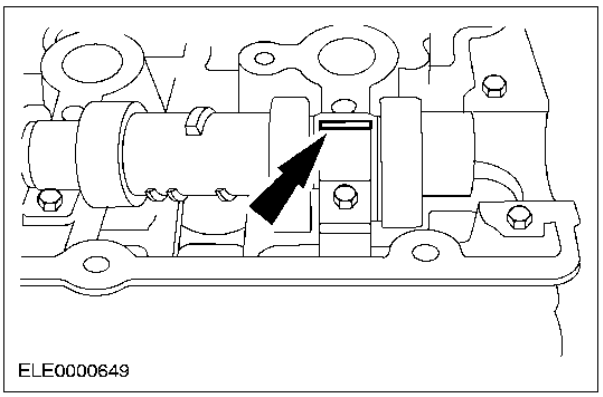

1. Position on a length of plastigage on the bearing cap.
   - Insert the camshaft, without lubrication, into the cylinder head.
   - Position a plastigage strip, which should be equal to the width of the bearing cap, on the bearing journal.
2. Following the tightening specification, install the camshaft bearing caps.
   refer to the corresponding Section 303-01.

3. **NOTE:** Do not strike the bearing caps.
   Remove the camshaft bearing caps;
   refer to the corresponding Section 303-01.

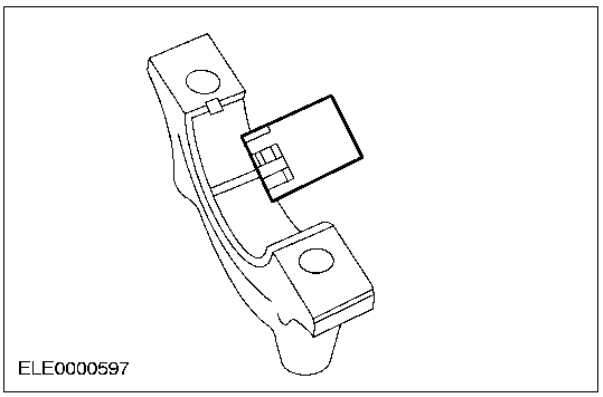

4. Using the Plastigage, read off the measurement.
   - Compare the length of plastigage with the plastigage scale.
   - The value that is read off is the bearing clearance.

GENERAL PROCEDURES

Camshaft End Play

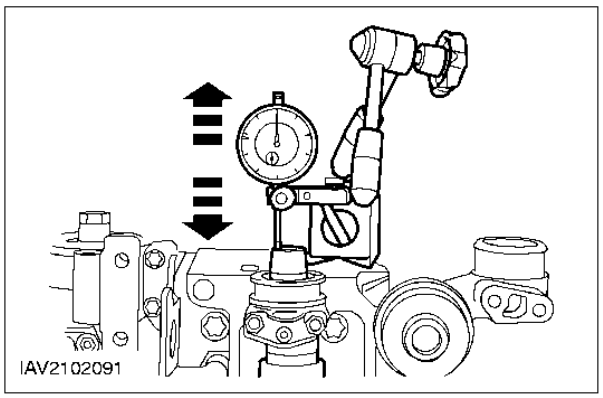

1. **NOTE:** Make sure that the camshaft is to specification.
   Using a Dial Indicator Gauge, measure the endplay.
   - Slide the camshaft in both directions. Read and note the maximum and minimum values on the Dial Indicator Gauge.
- End play = maximum value minus minimum value
  - If the measurement is out of specification, install new components.

GENERAL PROCEDURES

Camshaft Lobe Surface

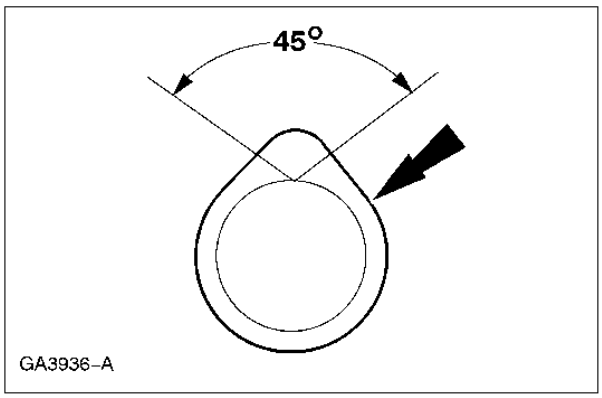

1. Inspect the camshaft lobes for pitting or damage in the active area. Minor pitting is acceptable outside the active area.

GENERAL PROCEDURES

Camshaft Lobe Lift

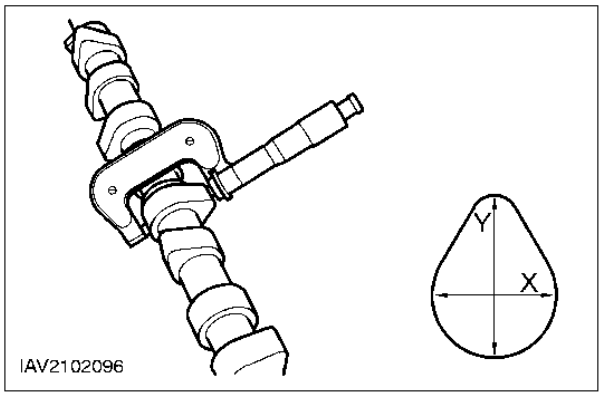

1. Determine the cam lift.
   - Using a micrometer measure the cam in two directions.
   - The difference between the two measurements is the cam lift.

GENERAL PROCEDURES

Crankshaft End Play

General Equipment
Dial indicator
Dial indicator fixture

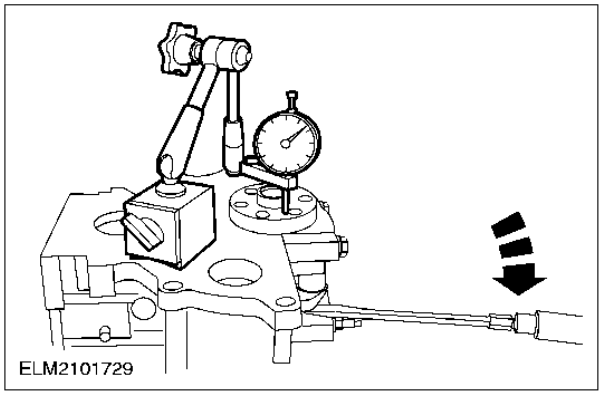

Determine the end float

- Place on the dial indicator and bracket.
- Determine the end float by raising the crankshaft with the aid of a screwdriver.
- If necessary, correct the end float by using new thrust half washers.

GENERAL PROCEDURES

Crankshaft Main Bearing Journal Diameter

General Equipment
Micrometer

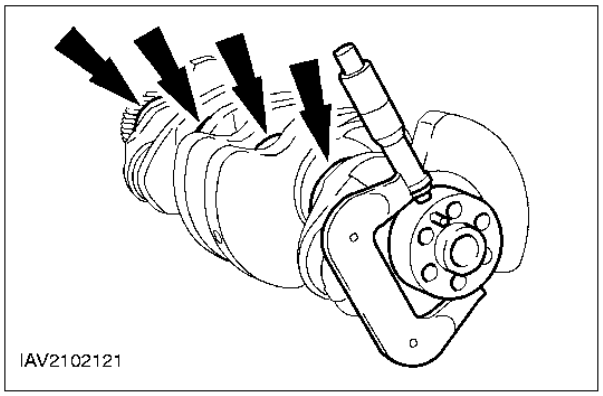

1. Measure the diameter of the main bearing journals and the big-end bearing journals.
   - Repeat the measurement using the micrometer offset by 90° to establish any eccentricity.
   - Measure the bearing journal in two different places to measure any possible tapering.

GENERAL PROCEDURES

Crankshaft Main bearing Journal Clearance

Main bearings - Minimum 0.020 mm
Maximum 0.056 mm

GENERAL PROCEDURES

Cylinder Bore Taper

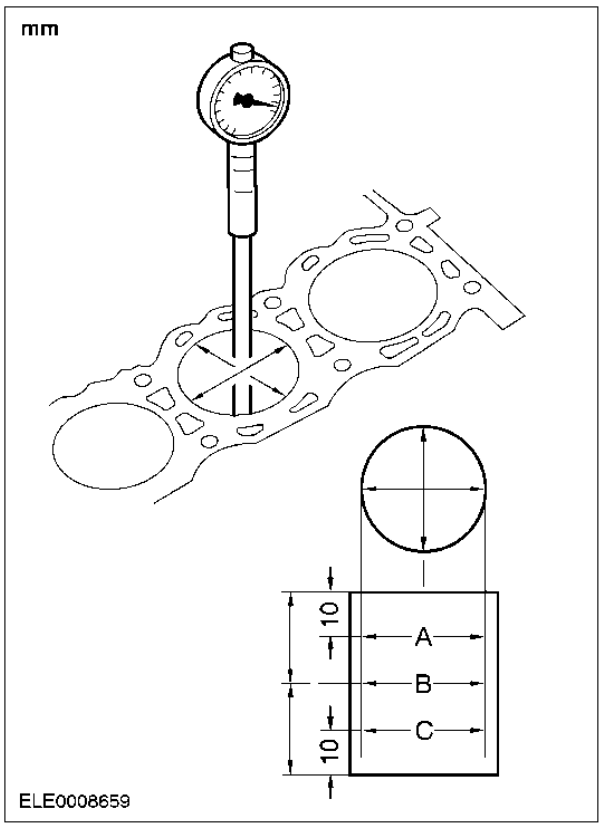

1. **NOTE:** The main bearing caps or lower crankcase must be in place and tightened to the specified torque; however, the bearing shells should not be installed.

   Measure the cylinder bore with an internal micrometer.

   - Carry out the measurements in different directions and at different heights to determine if there is any out-of-roundness or tapering.
   - If the measurement is out of the specified range, install a new block or hone out the cylinder block (if applicable / allowed).

GENERAL PROCEDURES

Piston Diameter

General Equipment
Micrometer

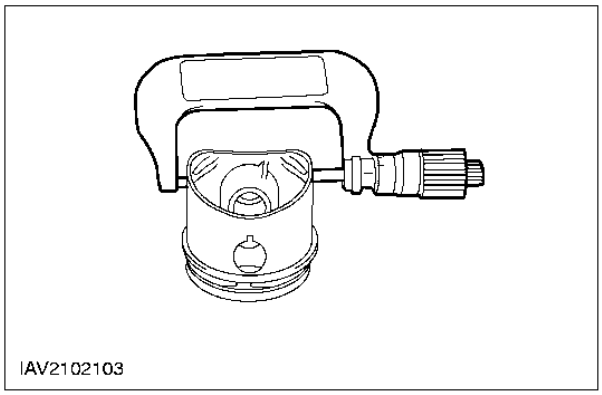

1. **NOTE:** Mark piston in case a piston has to be again installed.
   Using a Micrometer measure the piston in two directions.
   - Measure the piston diameter at the height of the piston pin bore, but offset by 90 degrees.

GENERAL PROCEDURES

Piston Ring End Gap

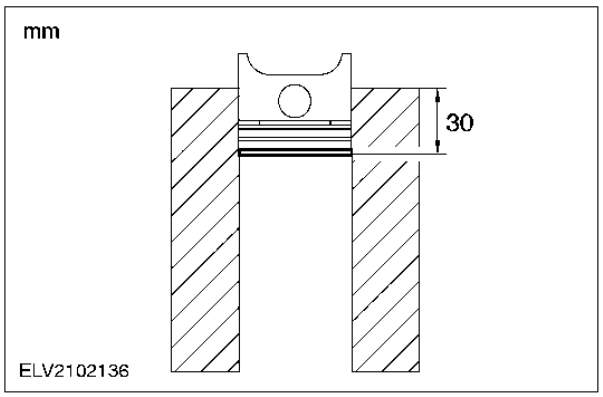

1. ⚠**CAUTION: Do not mix up the piston rings. Install the piston rings in the same position and location.**
   Take the piston ring and use a piston without rings to push the piston ring about 30 mm into the cylinder bore.

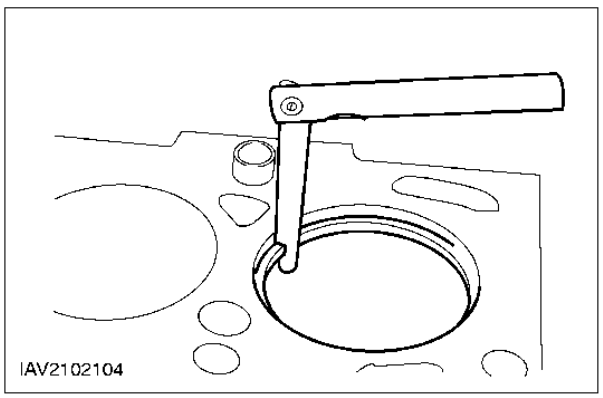

2. Using the Feeler Gauge, measure the piston ring gap.

GENERAL PROCEDURES

Piston Pin Diameter

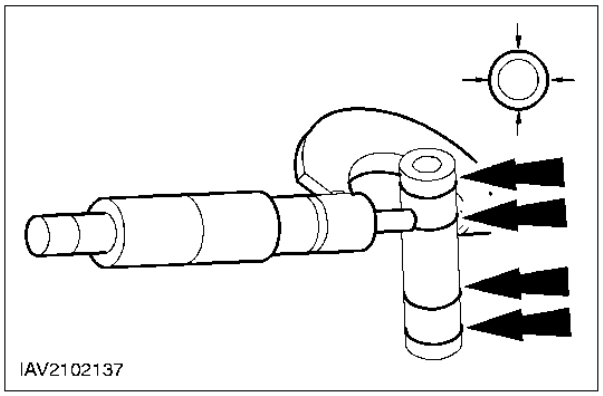

1. **NOTE:** The piston and piston pins are a matched pair. Do not mix up the components. Measure the piston pin diameter.
   - Measure the diameter in two directions.
   - If the values are not to specification, install a new piston and a new piston pin.

GENERAL PROCEDURES

Piston Pin to Bore Diameter

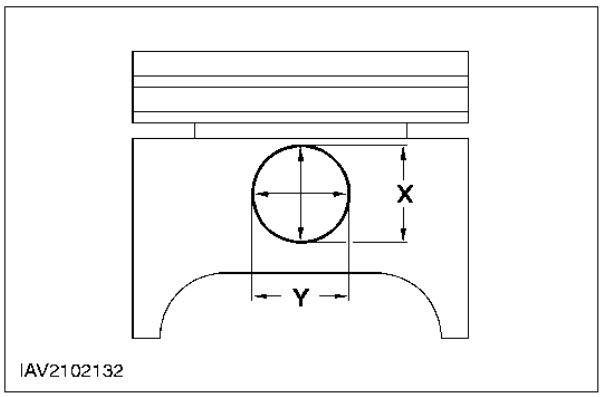

1. **NOTE:** The piston and piston pin form a matched pair. Do not mix up the components.
   Measure the diameter of the piston pin bore.
   - Measure the diameter in two directions.
   - If the values are not to specification, install both a new piston and a new piston pin.

GENERAL PROCEDURES

Piston Inspection

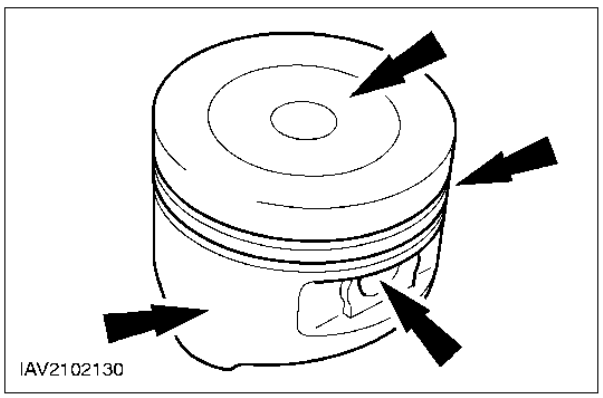

1. ⚠ **CAUTION: Do not use any aggressive cleaning fluid or a wire brush to clean the piston.**

   Carry out a visual inspection.

   - Clean the piston skirt, pin bush, ring grooves and crown and check for wear or cracks.
   - If there are signs of wear on the piston skirt, check whether the connecting rod is twisted or bent.

GENERAL PROCEDURES

Piston Ring-to-Groove Clearance

General Equipment
Feeler Gauge

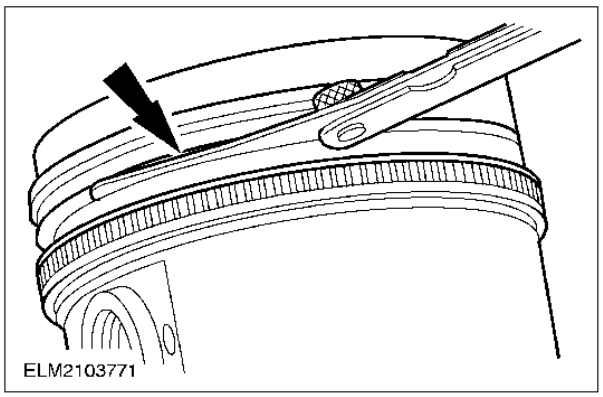

1. **NOTE:** The piston ring must protrude from the piston groove. To determine the piston ring clearance, insert the Feeler Gauge right to the back of the groove, behind the wear ridge.
   Using the Feeler Gauge, measure the piston ring clearance.

GENERAL PROCEDURES

Connecting Rod Large End Bore

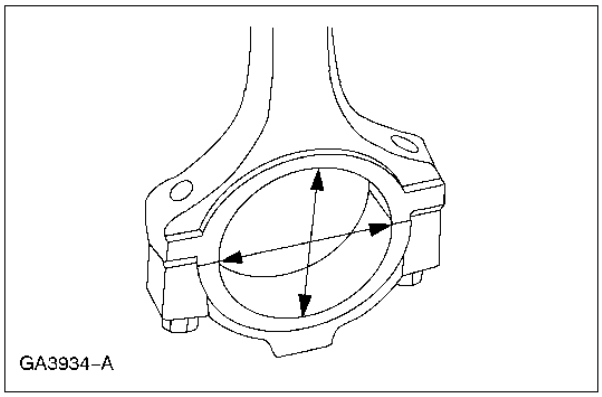

1. Measure the bearing bore in two directions. The difference is the connecting rod bore out-of-round. Verify the out-of-round and the bearing bore is within specification.

GENERAL PROCEDURES

Cylinder Head Distortion

Cylinder Head Flatness - 0.050 mm over any
0.150 mm

Surface Finish "Waveness" -
Specification R326 WT 10 RMAX 20

GENERAL PROCEDURES

Valve Stem Diameter

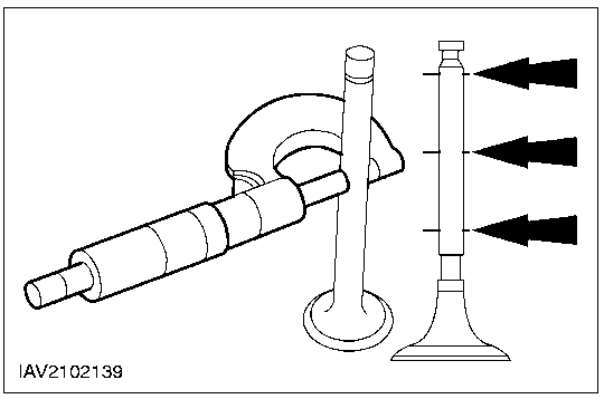

1. Using a micrometer measure the diameter of the valve stems.
   - If the measurements are not to specification, install a new valve.

GENERAL PROCEDURES

Valve Seat Inspection

General Equipment
Valve seat width scale

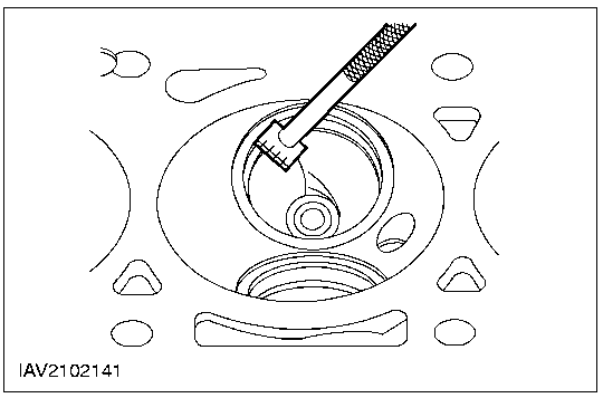

1. Measure the width of the valve seat.
   - Measure the valve seat width using the Valve seat width scale.
   - If the value is not to specification rework the valve seat.

GENERAL PROCEDURES

Exhaust Manifold Inspection

1. Inspect the cylinder head joining flanges of the exhaust manifold for evidence of exhaust gas leaks.
2. Inspect the exhaust manifold for cracks, damaged gasket surfaces, or other damage that would make it unfit for further use.

Flywheel Inspection

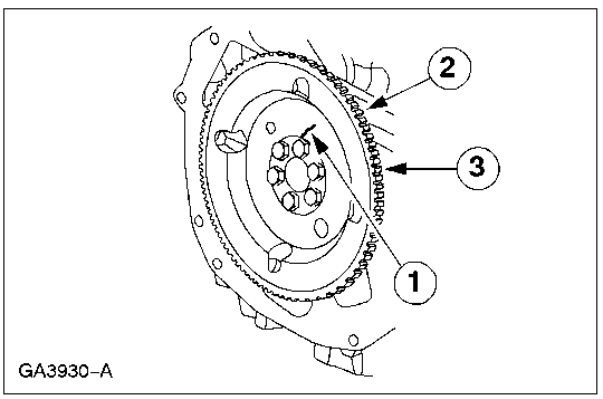

1. Inspect the flywheel for:
   1. Any cracks.
   2. Worn ring gear teeth.
   3. Chipped or cracked ring gear teeth.

Special Tool(s)	
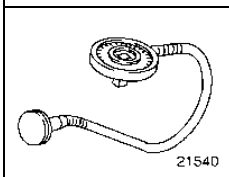	Angle gauge 303-174 (21-540)

General Equipment
Engine lifting eye order no.: 6630411
Assembly stand
Workshop jack

Material	Specification
Lubricant for spark plugs.	Loctite "Never Seize"
Coolant	L405F
Engine oil	SAE 15W 40 SH
Cable ties	
Silicone grease	ESE - M1C171 - AA

SECTION 303-01B Engine — 1.6L / 1.3L RoCam

PAGE 1 OF 2

VEHICLE APPLICATION: 2002 Bantam

SUBJECT **PAGE**

DESCRIPTION AND OPERATION

Engine 303-01B-26
General 303-01B-26/33

DIAGNOSIS AND TESTING

Engine 303-0IB-34

IN-VEHICLE REPAIR

Intake Manifold ..... (21 183 0) 303-01B-35/39
Valve Cover ..... (21 140 0) 303-01B-40/42
Crankshaft Front Oil Seal ..... (21 467 0) 303-01B-43/45
Valve Seals ..... (21 238 0) 303-01B-46/48
Camshaft ..... (21 283 0) 303-01B-49/51
Timing Chain 303-01B-52/55
Crankshaft Rear Oil Seal 303-01B-56/57
Exhaust Manifold ..... (21 186 0) 303-01B-58/60
Cylinder Head ..... (21 163 0) 303-01B-61/70
Oil Pan ..... (21 154 0) 303-01B-71/74
Oil Pump ..... (21 154 0) 303-01B-75/76

REMOVAL

Engine ..... (21 132 0) 303-01B-77/87

DISASSEMBLY

Engine ..... (21 134 8) 303-01B-88/96

DISASSEMBLY AND ASSEMBLY OF SUBASSEMBLIES

Cylinder Head ..... (21 165 6) 303-01B-97/103

ASSEMBLY

Engine ..... (21 134 8) 303-01B-104/115

INSTALLATION

Engine ..... (21 132 0) 303-01B-116/126

SPECIFICATIONS

Specifications 303-01B-127
Engine Data 303-01B-127
Engine Oil 303-01B-127
Lubricants, Fluids, Sealers and Adhesives 303-01B-127
Capacities 303-01B-127
Oil Pressure 303-01B-127/128

SECTION 303-01B Engine — 1.6L / 1.3L RoCam

PAGE 2 OF 2

Crankshaft..... 303-01B-128
Piston..... 303-01B-128
Connecting rod..... 303-01B-129
Valve train..... 303-01B-129
Cylinder block..... 303-01B-129
Camshaft..... 303-01B-129/130
Torque Specifications..... 303-01B-130/132

DESCRIPTION AND OPERATION

Engine

General

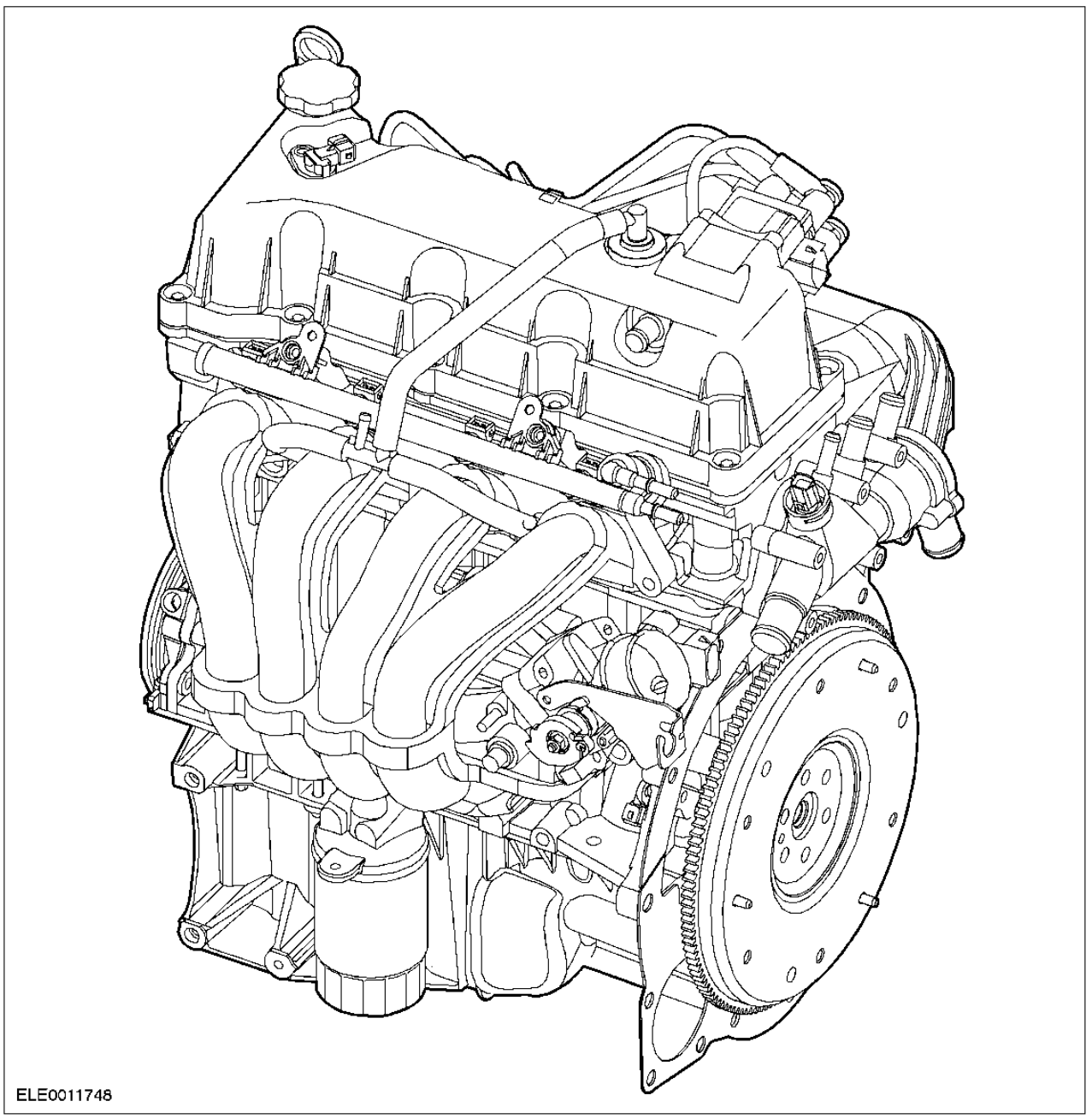

The Rocam SOHC engine is of 1.6 and 1.3 litre capacity and has a power output of 70 kW and 55 kW respectively.

The engine is a 4-cylinder in-line, four stroke unit with single overhead camshaft and cross-flow cylinder head. The engine is a new development and includes the following technical features:

- Cast iron cylinder block with integrated timing chain housing
- Cast iron crankshaft with five main bearings
- Lightweight pistons with three piston rings
- Cast aluminum alloy cylinder head with integrated timing chain housing and camshaft bearings

DESCRIPTION AND OPERATION (CONTINUED)

- Five bearing single overhead camshaft
- Two valves per cylinder
- Roller finger cam followers
- Hydraulic lash adjusters
- Laminated (two layer) steel head gasket
- Structural aluminum oil pan
- Plastic intake manifold with integrated throttle body including throttle position (TP) sensor, idle air control (IAC) valve, manifold absolute pressure sensor with integrated temperature and manifold absolute pressure (T-MAP) sensor and fuel rail with four injectors
- Four-into-one exhaust manifold
- Crankshaft driven oil pump
- Lightweight plastic coolant flow control housing with integrated double acting thermostat, coolant bypass and mounting boss for the engine coolant temperature (ECT) sensor
- Electronic engine control (Bosch) engine management system

Serial Number and Engine Code Location

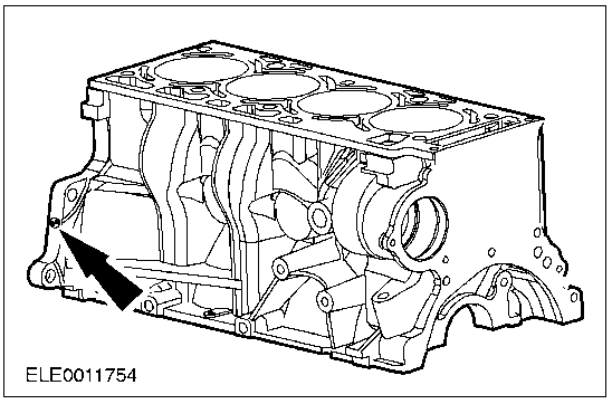

The engine serial number and the engine code are both stamped on the rear face of the cylinder block.

DESCRIPTION AND OPERATION

Valve Train

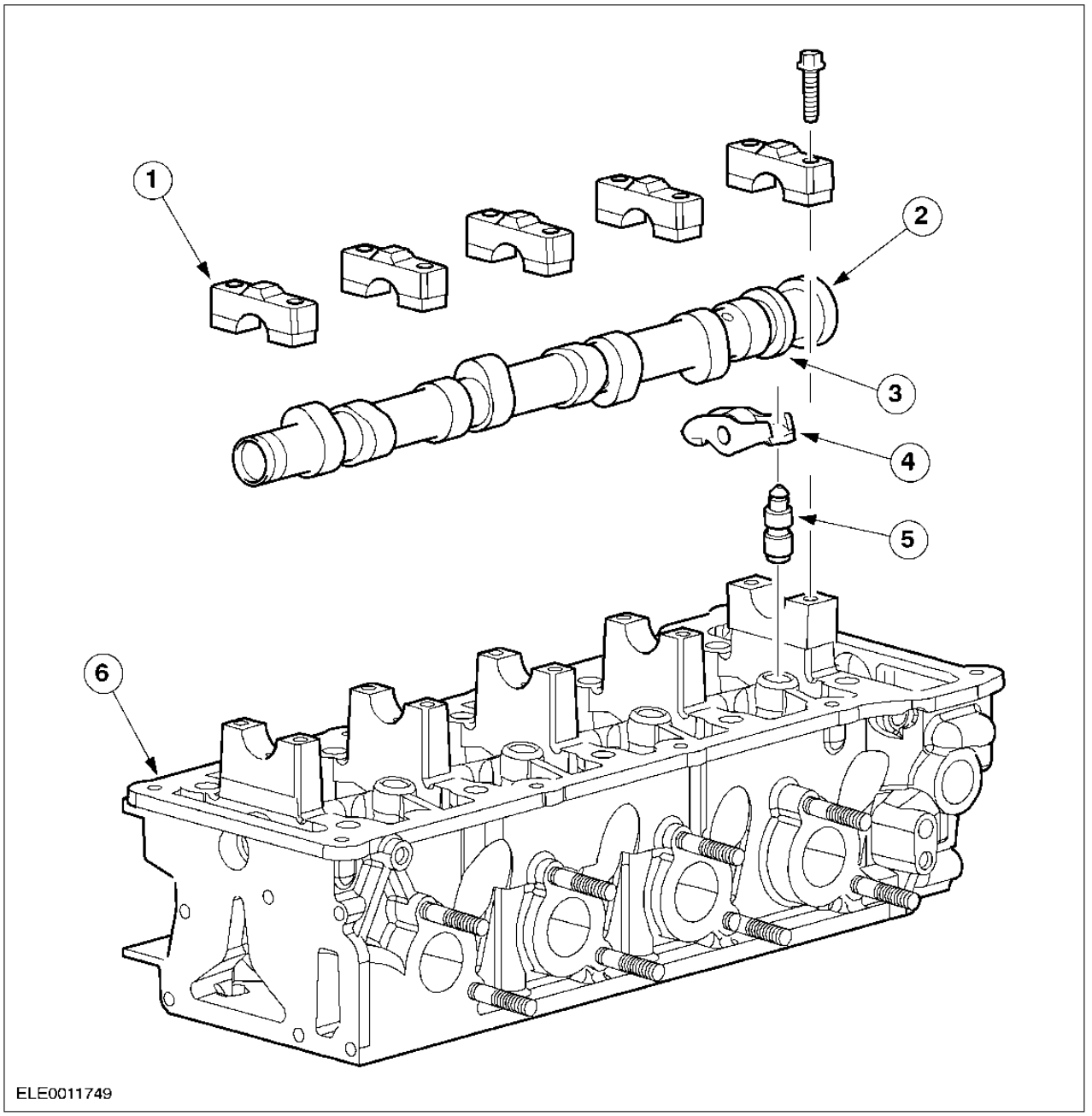

Item	Description
1	Camshaft bearing cap
2	Camshaft
3	Reference cam
4	Roller finger cam follower
5	Hydraulic lash adjuster
6	Cylinder head

The five bearing camshaft runs directly in the aluminum cylinder head.

An additional reference cam is provided for the camshaft position (CMP) sensor.

The cam followers are supported across the hydraulic lash adjusters and valves and the camshaft operates the cam followers through their roller bearings.

This has the advantage of lowering friction and therefore increasing durability.

DESCRIPTION AND OPERATION (CONTINUED)

The use of hydraulic lash adjusters removes the need for valve clearance adjustment.

Rear Oil Seal Retainer

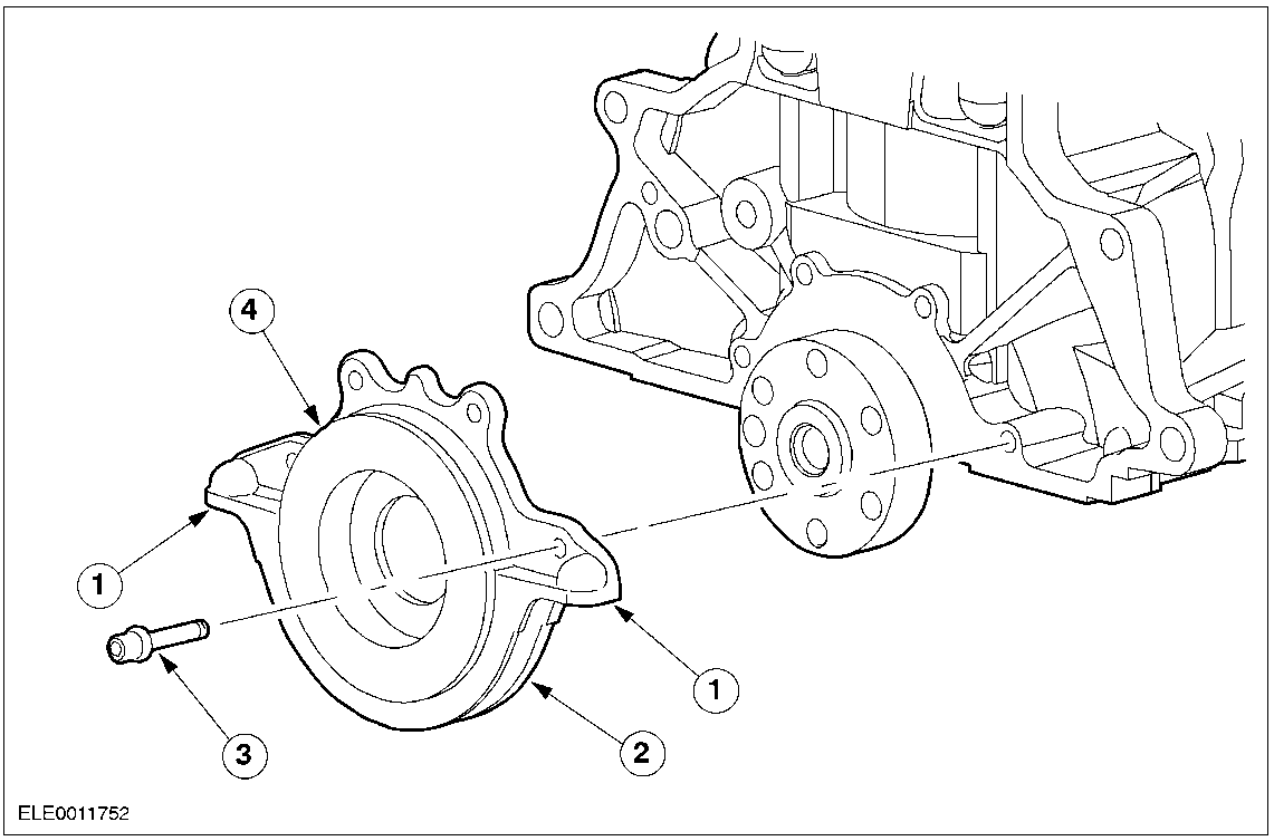

Item	Description
1	Rear oil seal retainer
2	Oil pan mating surface
3	Bolt
4	Assembly guide

The rear oil seal retainer is made of plastic. It incorporates an integral crankshaft oil seal (made of PTFE) and a cylinder block to retainer gasket.

NOTE: A special "Assembly Guide" (for installing the retainer) is provided with each new rear oil seal retainer.

NOTE: The sealing lip must be free of oil.

DESCRIPTION AND OPERATION

Cylinder Head

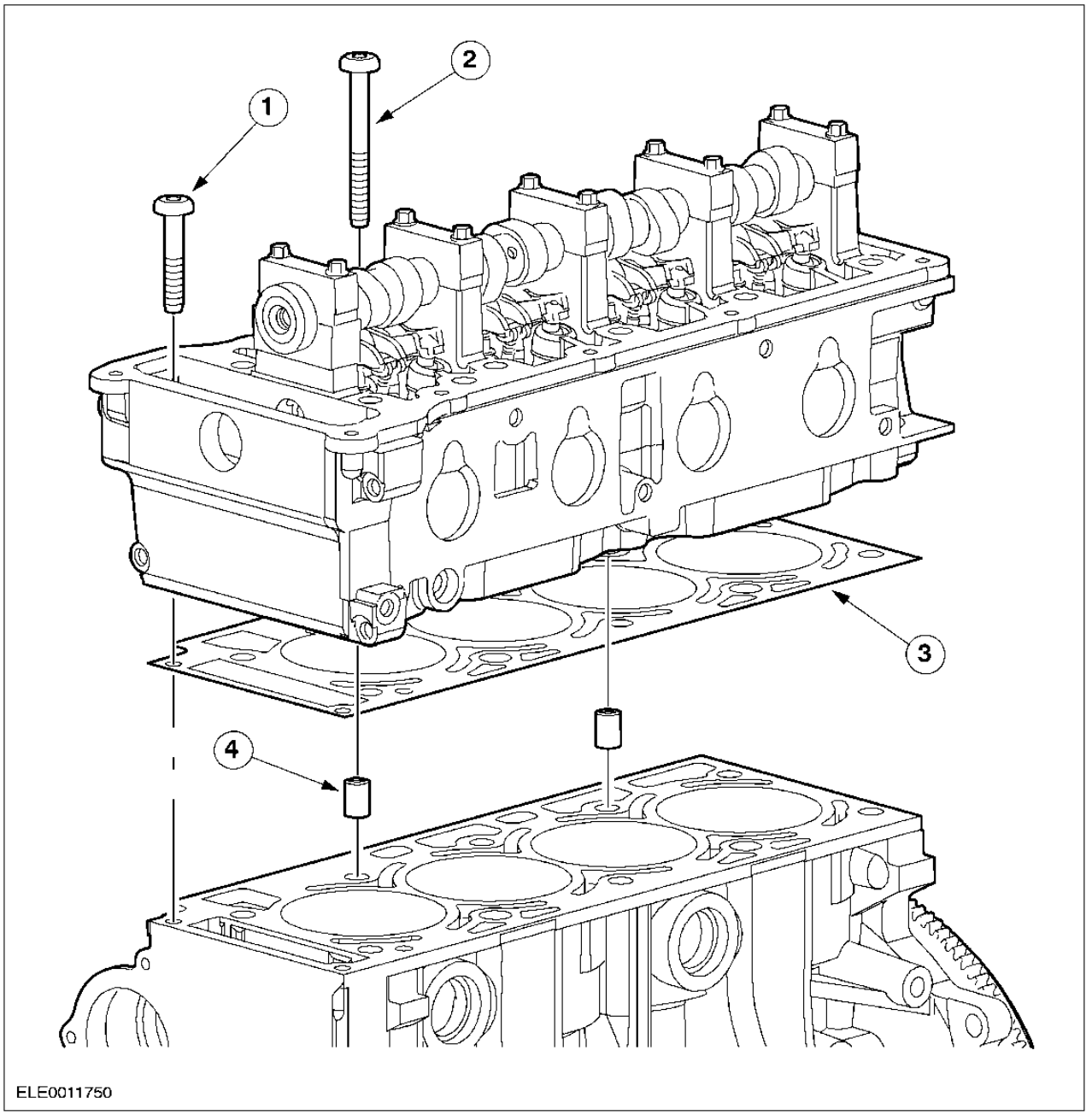

Item	Description
1	M8 bolts
2	M11 bolts
3	Cylinder head gasket
4	Guide dowels

The cylinder head is made of cast aluminum alloy and is accurately positioned on the cylinder block with two guide dowels.

The laminated (two layer) design cylinder head gasket is made of steel.

NOTE: Always use a new gasket when installing the cylinder head.

DESCRIPTION AND OPERATION

Oil Pan

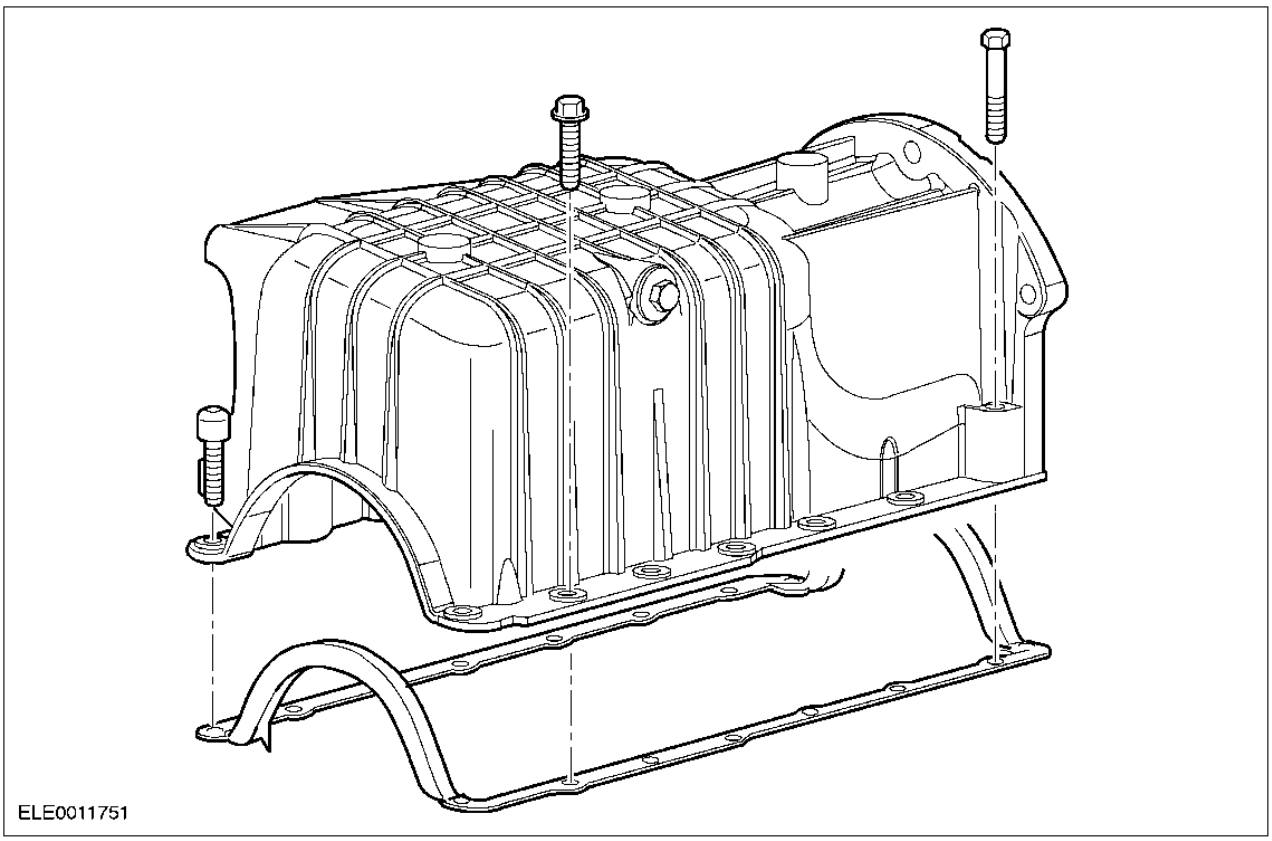

The structural oil pan is made of cast aluminum and provides a mounting bracket for the air conditioner (A/C) compressor.

The single piece oil pan gasket has an aluminum core with an external vulcanized rubber surface.

NOTE: Always use a new gasket when installing the oil pan.

DESCRIPTION AND OPERATION

Camshaft Chain Drive

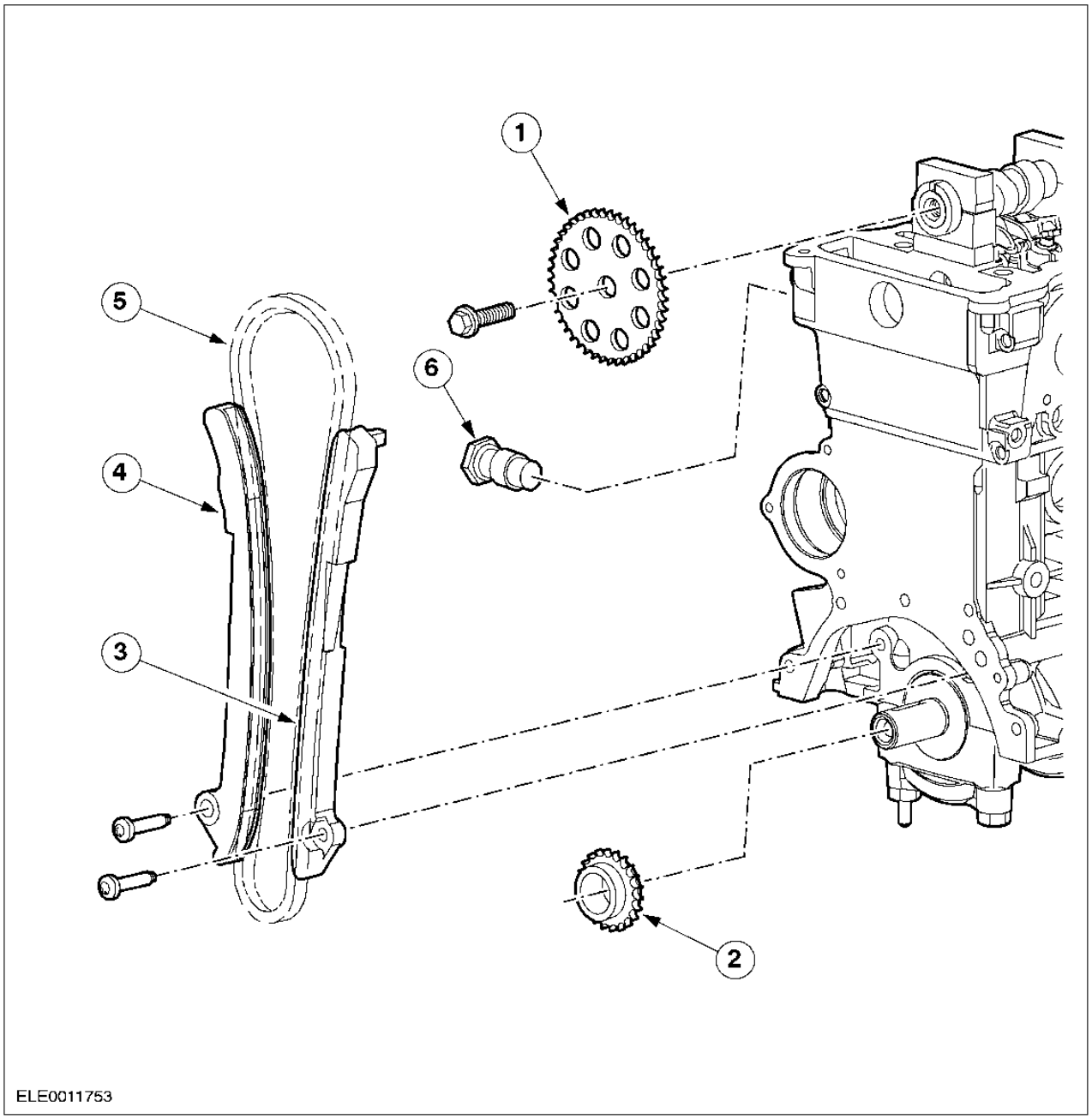

Item	Description
1	Camshaft sprocket
2	Crankshaft sprocket
3	Chain guide (intake side)
4	Tensioner arm (exhaust side)
5	Timing chain
6	Hydraulic chain tensioner

The overhead camshaft is driven from the crankshaft by the timing chain.

The steel camshaft sprocket has 38 teeth and is produced by the "fine blanking" process, which enables the flat design. The camshaft sprocket position is fixed by a guide lug to a slot in the camshaft. The timing mark is stamped into the face of the sprocket.

DESCRIPTION AND OPERATION (CONTINUED)

The sintered steel crankshaft sprocket has 19 teeth and is positioned by a woodruff key. The timing mark is stamped into the sprocket.

The single timing chain has 114 links. Chain and sprocket alignment is indicated by colored chain links.

The plastic chain guide and tensioner arm and are fixed to the cylinder block with one bolt each. The chain guide and tensioner arm reduce chain vibration and noise.

The hydraulic chain tensioner is operated by engine oil pressure.

Coolant Flow Control Housing

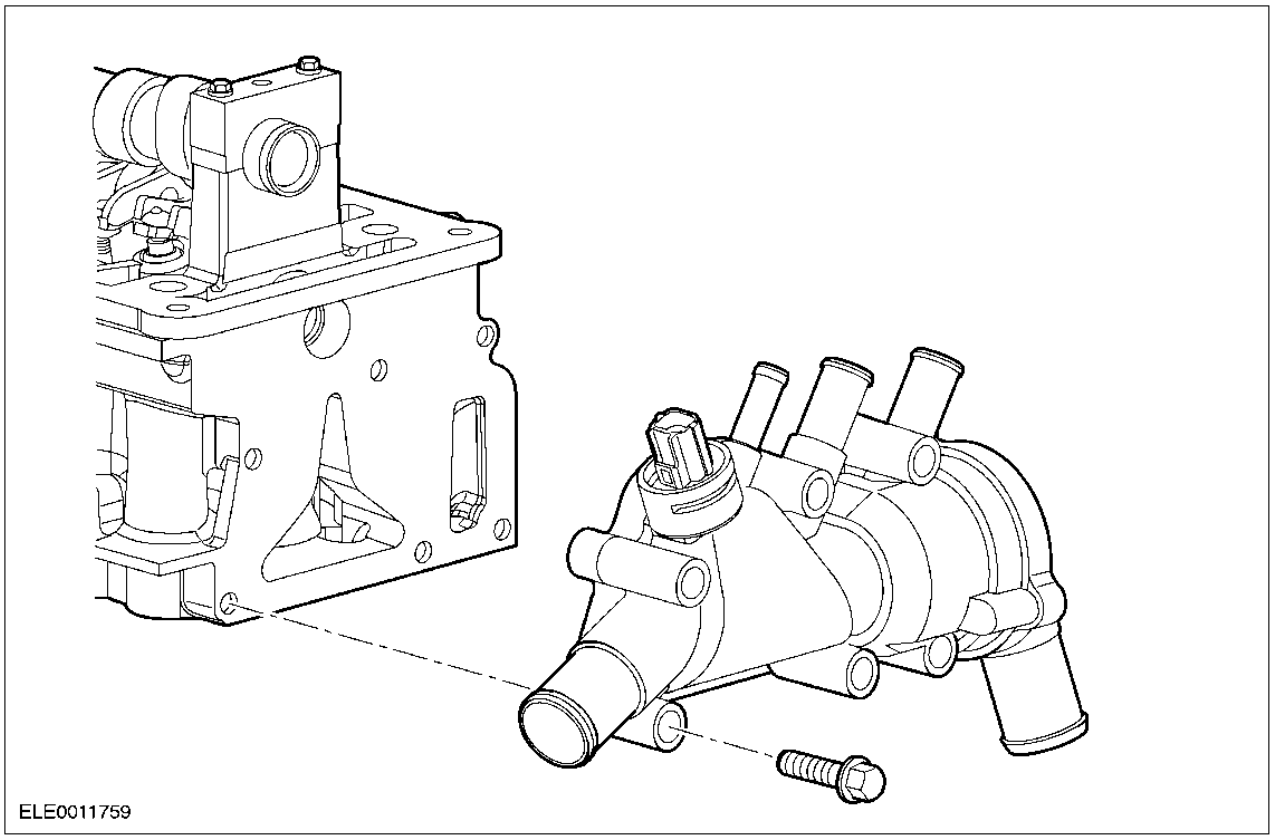

The coolant flow control housing is made of plastic and bolts to the rear of the cylinder head.

The ECT sensor is fixed by a clip to its mounting which is integrated in the coolant flow control housing.

WARNING: The cooling system must be de-pressurized before the retaining clip of the ECT sensor is removed.

NOTE: Install a new gasket if the original is damaged.

The gasket is made of rubber.

DIAGNOSIS AND TESTING

Engine

REFER to Section 303-00.

IN-VEHICLE REPAIR

Intake Manifold (21 183 0)

Material	Specification
Cable ties	

Removal

1. Disconnect the battery ground cable.
2. Remove the air cleaner intake pipe.

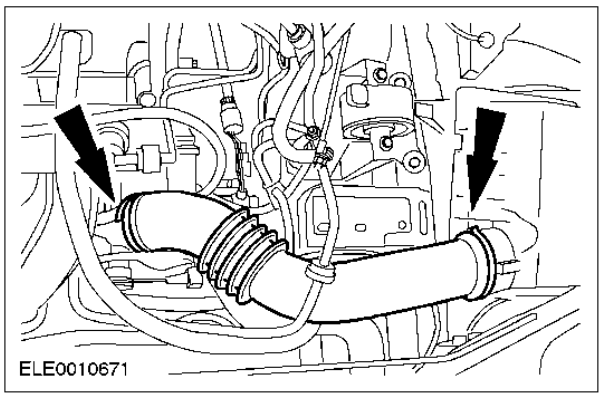

3. ⚠ **WARNING: Watch for and collect escaping fuel. Observe the safety regulations for working with fuel.**
   Disconnect the fuel lines.

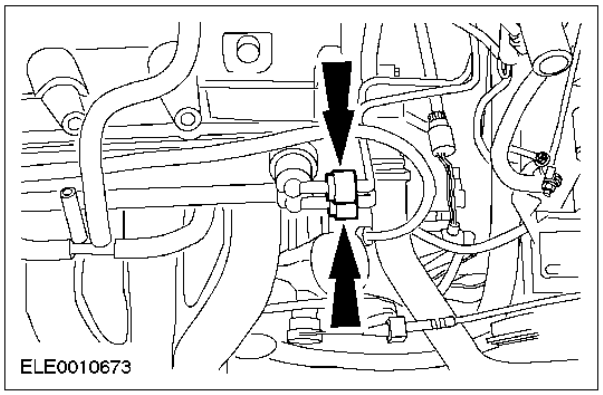

4. Disconnect the accelerator cable.
   1. Remove the clip and pull cable from the retaining bracket.
   2. Disconnect the inner cable.

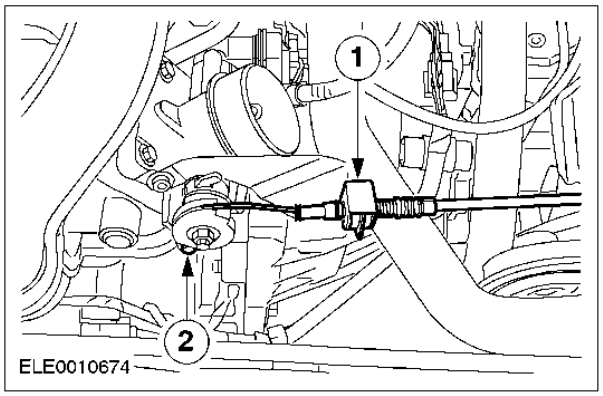

IN-VEHICLE REPAIR (CONTINUED)

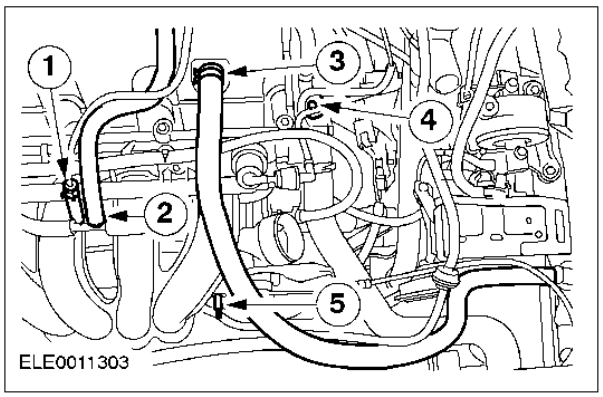

5. Remove the hoses and the electrical connector.
   1. EVAP solenoid valve vacuum hose.
   2. Positive crankcase ventilation (PCV) hose.
   3. Crankcase breather hose.
   4. Engine coolant temperature (ECT) sensor electrical connector.
   5. Brake booster vacuum hose.

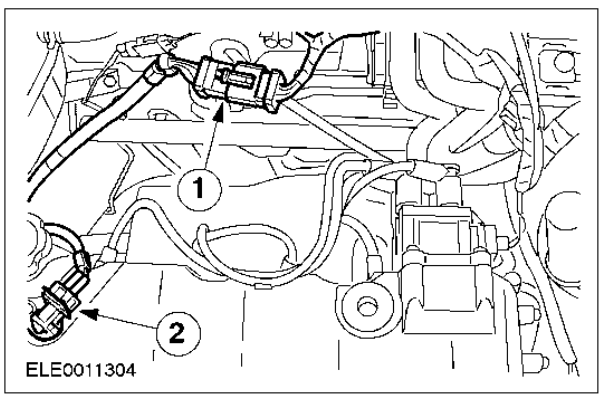

6. Disconnect the electrical connectors.
   1. Powertrain control module (PCM).
   2. Camshaft position (CMP) sensor.

7. Raise and support the vehicle. For additional information, refer to Section 100-02.

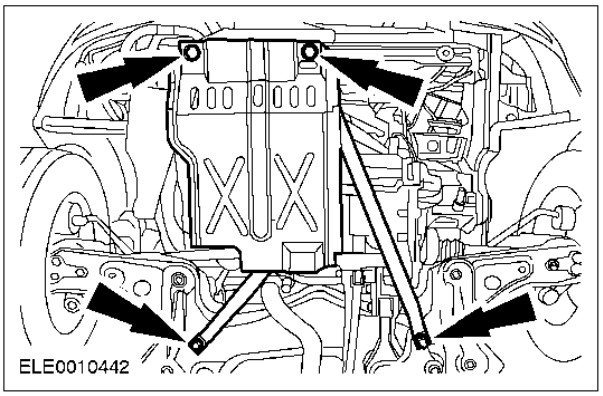

8. Remove the engine undershield.

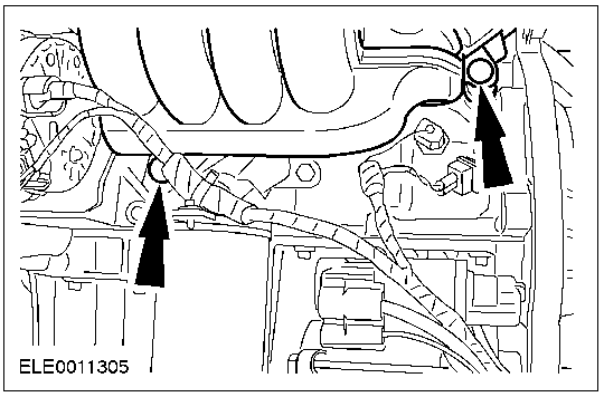

9. Remove the intake manifold lower retaining bolts (shown with the engine removed).

IN-VEHICLE REPAIR (CONTINUED)

10. Lower the vehicle.

11. Remove the intake manifold.

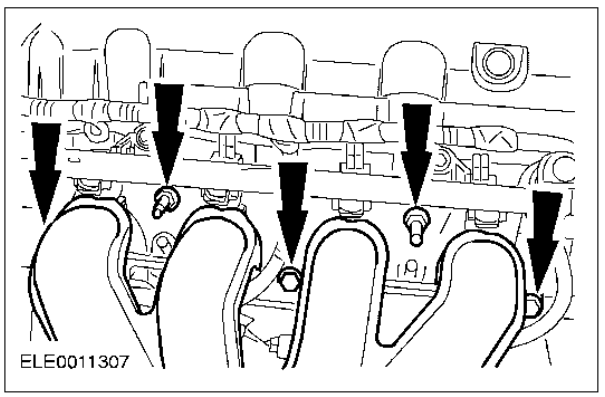

Installation

1. NOTE: Install a new gasket if the original is damaged.
Install the intake manifold.

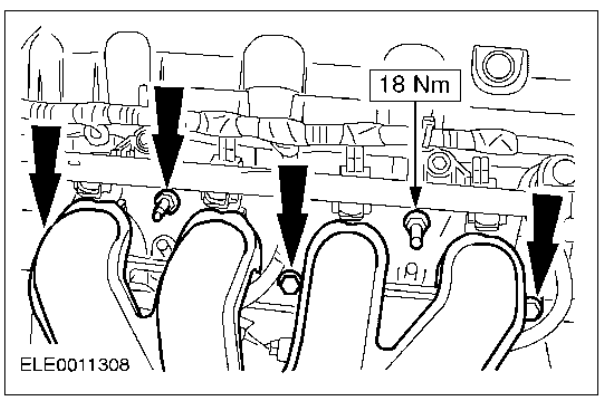

2. Raise and support the vehicle. For additional information, refer to Section 100-02.

3. Install the intake manifold lower retaining bolts (shown with engine removed).

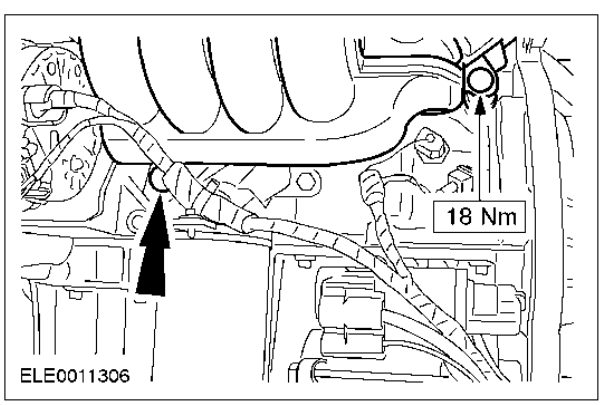

IN-VEHICLE REPAIR (CONTINUED)

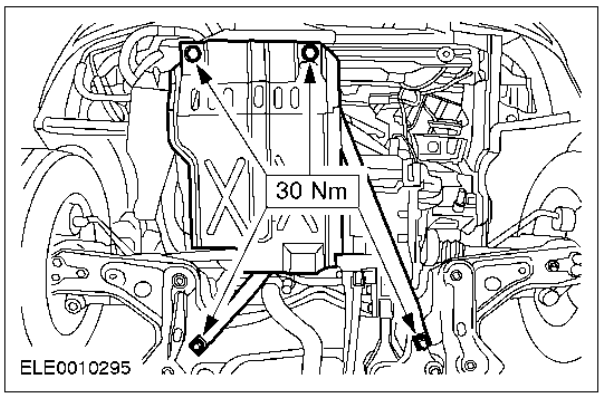

4. Install the engine undershield.

5. Lower the vehicle.

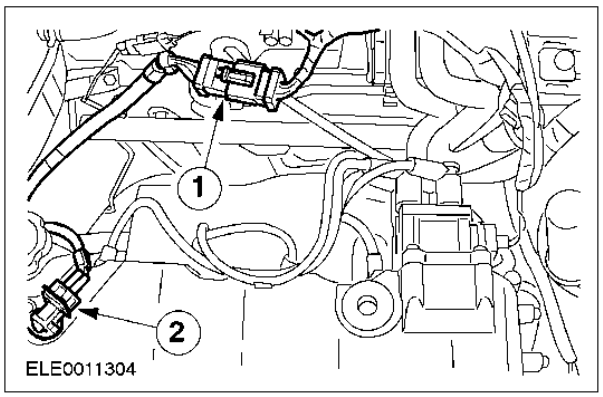

6. Connect the PCM and CMP electrical connectors.

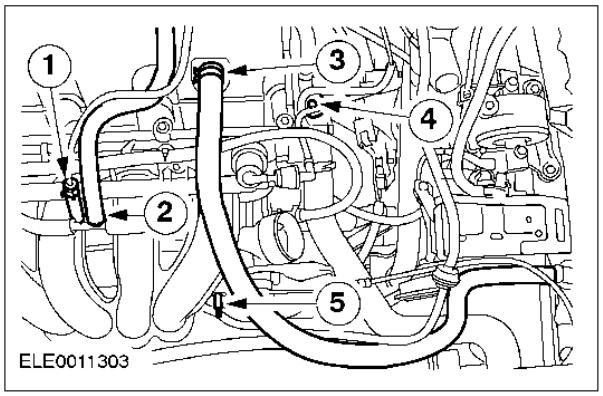

7. Install the hoses and connect the electrical connector.
   1. EVAP solenoid valve vacuum hose.
   2. PCV hose.
   3. Crankcase breather hose.
   4. ECT sensor electrical connector.
   5. Brake booster vacuum hose.

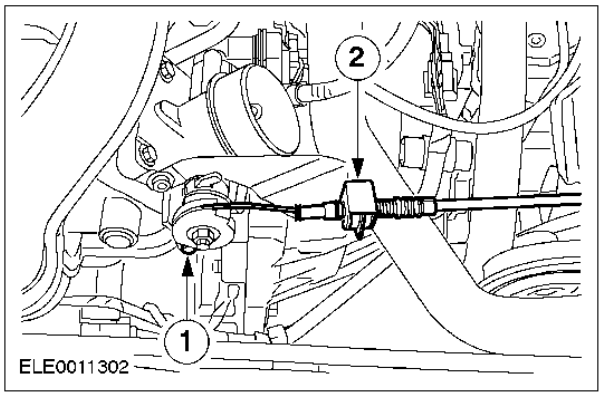

8. Install the accelerator cable.
   1. Connect the inner cable.
   2. Install the cable into the retaining bracket, check the cable setting and secure using the clip.

IN-VEHICLE REPAIR (CONTINUED)

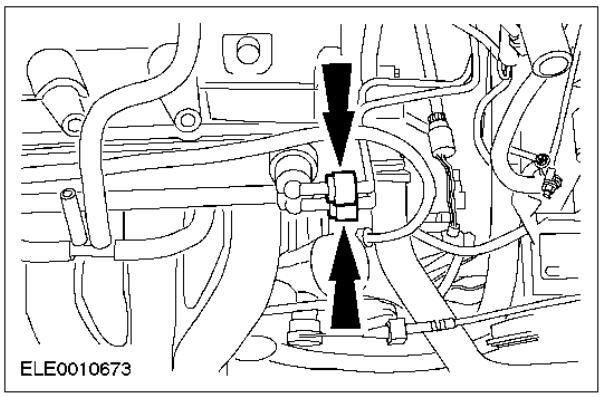

9. Connect the fuel lines.

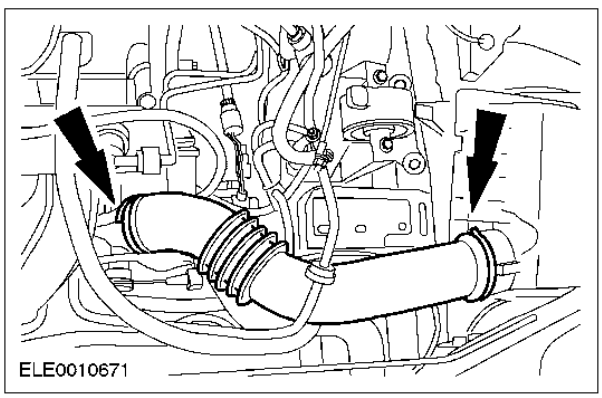

10. Install the air cleaner intake pipe.

11. Connect the battery ground cable.

IN-VEHICLE REPAIR

Valve Cover (21 140 0)

Removal

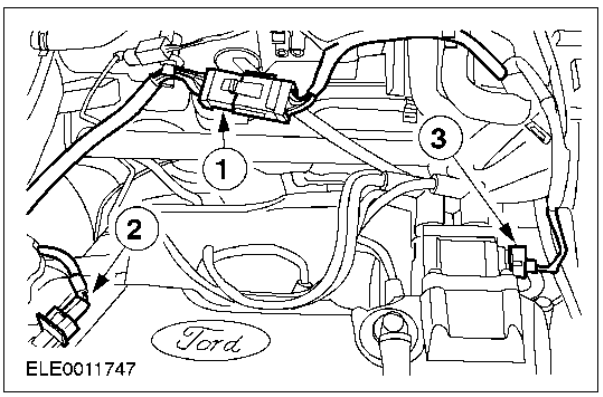

1. Disconnect the battery ground cable.
2. Disconnect the electrical connectors.
   1. Disconnect the power control module (PCM).
   2. Disconnect the camshaft position (CMP) sensor.
   3. Disconnect the electronic ignition (EI) coil.

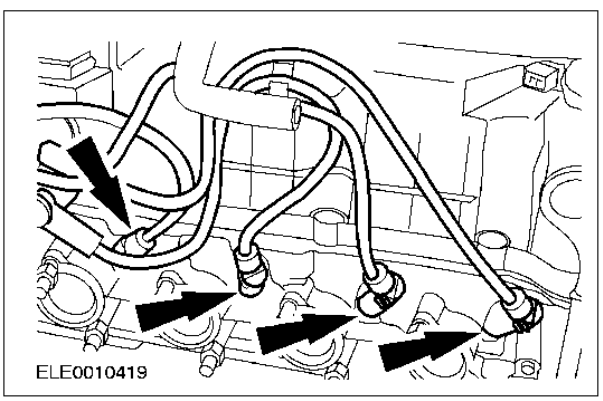

3. **CAUTION: Do not pull the cable when removing spark plug connector. If necessary, remove the ignition cables from the ignition coil to avoid kinking the cables. Turn the spark plug connector slightly before removing to loosen the seal.**

   CAUTION: Pull off the spark plug connectors in line with the spark plugs (for bent spark plug connectors use Special Tool 303-622).

   Disconnect the spark plug wires from the spark plugs.

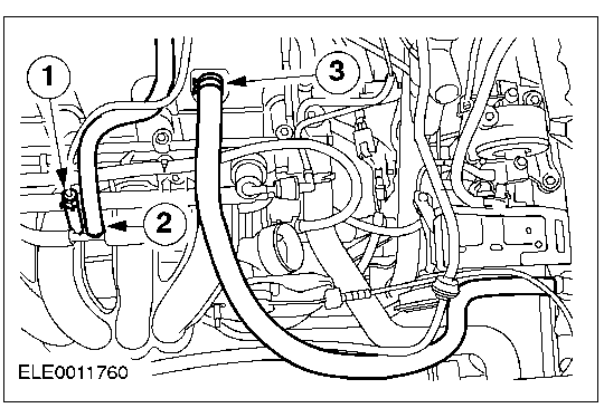

4. Disconnect the hoses.
   1. EVAP solenoid valve vacuum hose
   2. Positive crankcase ventilation hose
   3. Crankcase breather hose

IN-VEHICLE REPAIR (CONTINUED)

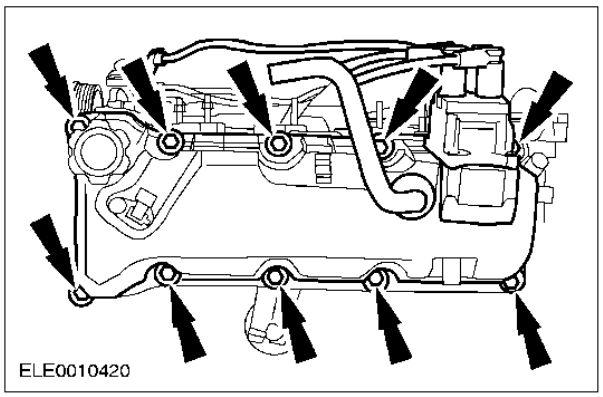

5. Remove the valve cover.

Installation

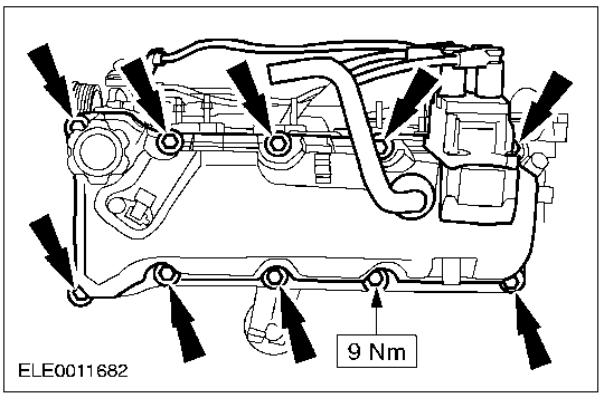

1. **NOTE:** Install a new gasket if the original is damaged.
   Install the valve cover.

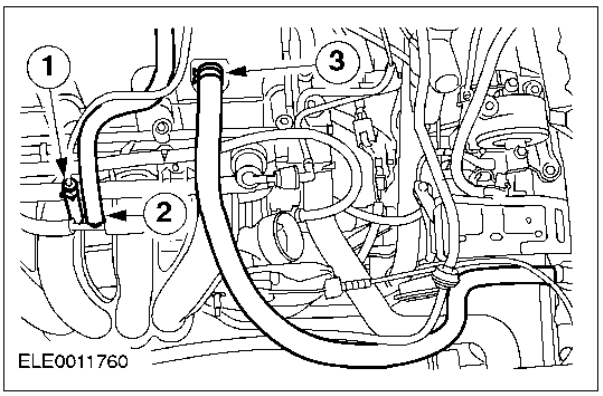

2. Connect the hoses.
   1. Connect the EVAP solenoid valve vacuum hose.
   2. Connect the PCV hose.
   3. Connect the crankcase breather hose.

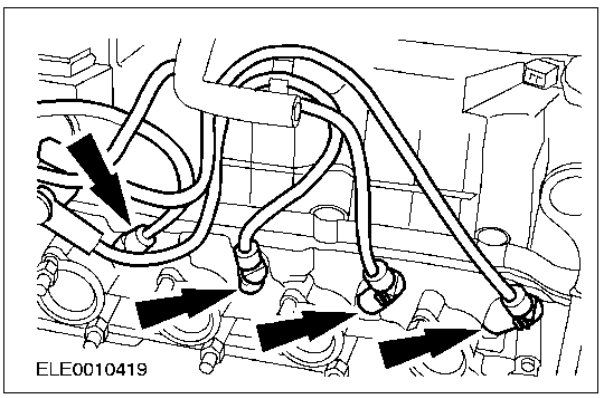

3. Connect the spark plug wires to the spark plugs.

IN-VEHICLE REPAIR (CONTINUED)

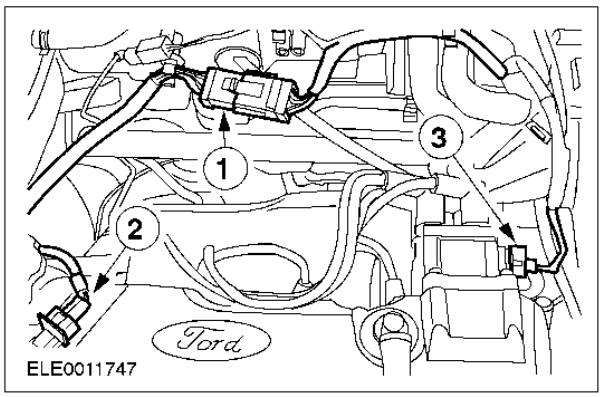

4. Connect the PCM, CMP sensor and EI coil electrical connectors.

5. Connect the battery ground cable.

IN-VEHICLE REPAIR

Crankshaft Front Oil Seal (21 467 0)

Special Tool(s)	
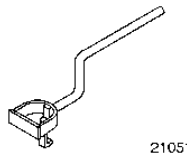	Remover, Oil Seal 303-112 (21-051)

Special Tool(s)	
	Installer, Oil Seal 303-656 (21-233)

Removal

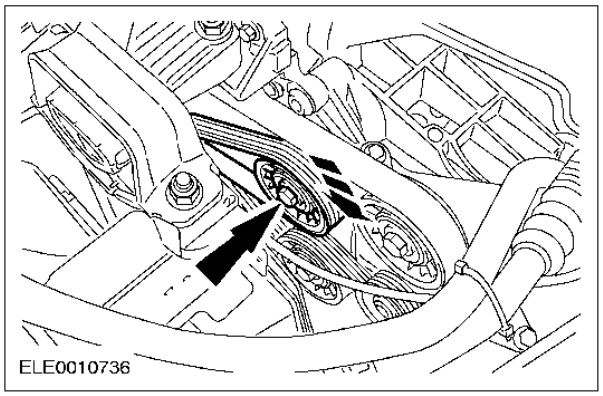

1. Remove the accessory drive belt.
   - Turn the belt tensioner clockwise and slip the belt off the pulleys.

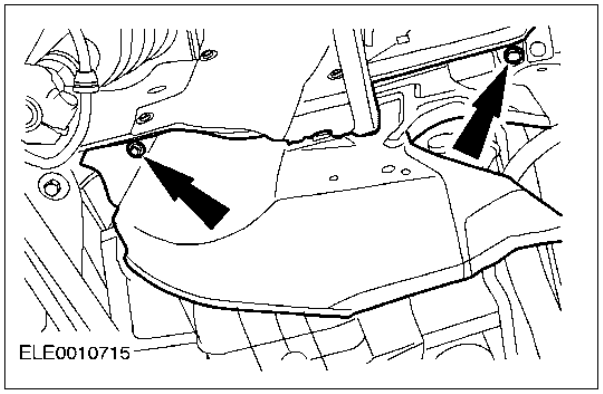

2. Raise and support vehicle. For additional information, refer to Section 100-02.
3. Remove the accessory drive belt cover.

IN-VEHICLE REPAIR (CONTINUED)

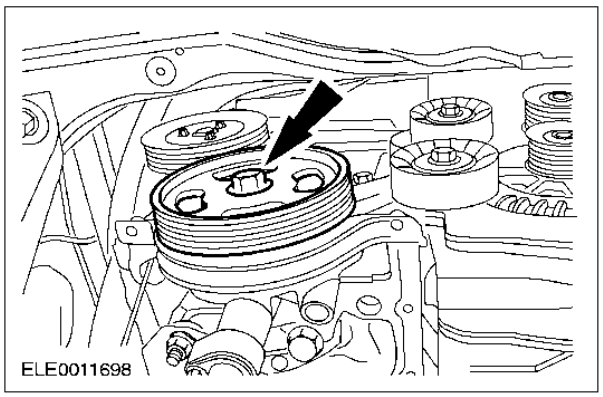

4. Remove the crankshaft pulley.

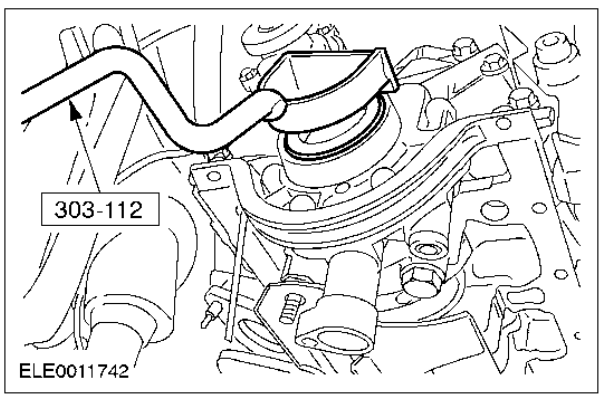

5. Using the special tool, remove the oil seal. (Shown with the oil pan removed).

Installation

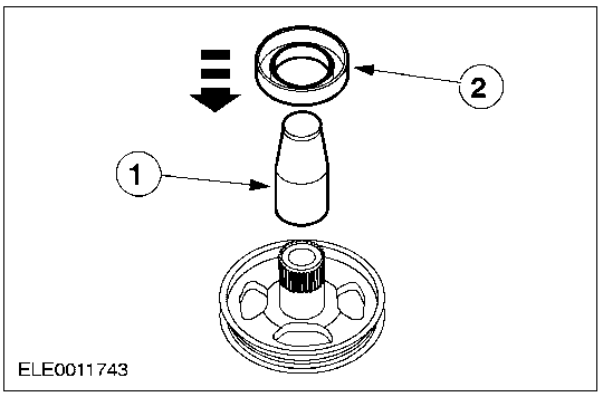

1. NOTE: The pulley, installation sleeve, housing and sealing lip must be free of oil.

NOTE: The new oil seal is supplied with a plastic installation sleeve.

Install the oil seal to the crankshaft pulley.

1. Place the installation sleeve on the crankshaft pulley.
2. Carefully install the oil seal on the crankshaft pulley.

- Remove the installation sleeve.

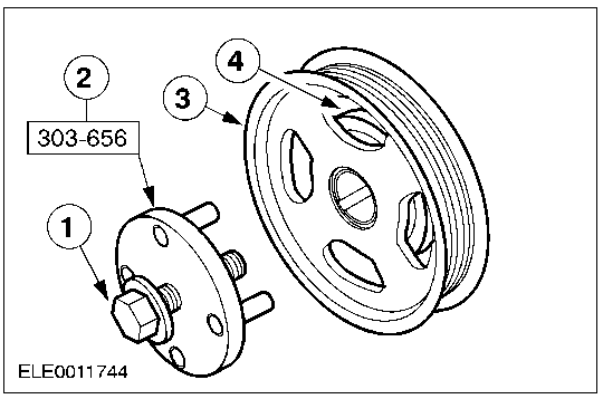

2. Using the special tool, install the crankshaft pulley.
   1. Crankshaft pulley bolt.
   2. Special tool.
   3. Crankshaft pulley.
   4. New oil seal.

IN-VEHICLE REPAIR (CONTINUED)

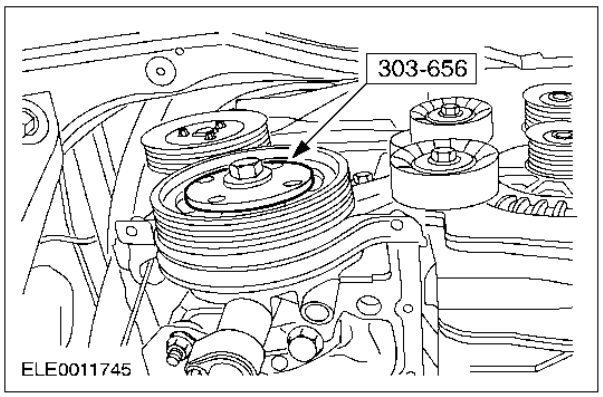

3. **NOTE:** To prevent damage to the oil seal, do not pull the crankshaft pulley out more than 3 mm during seal installation.
   Tighten the crankshaft pulley bolt until the oil seal is fully installed.

4. Remove the crankshaft pulley bolt.

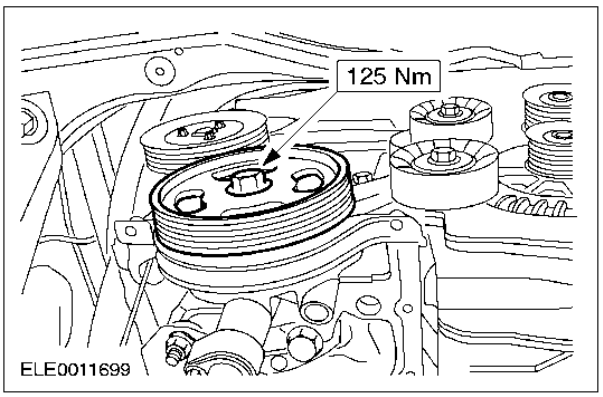

5. Install the crankshaft pulley bolt.

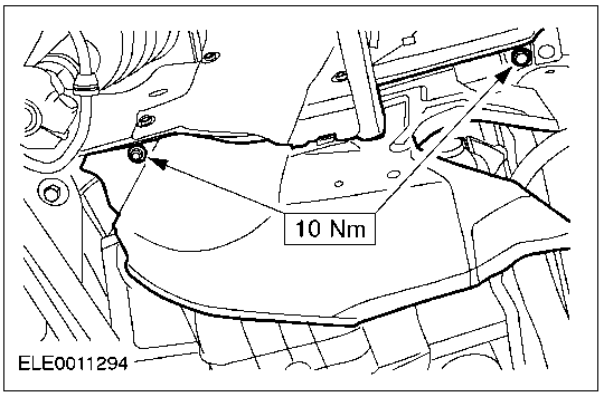

6. Install the accessory drive belt cover.

7. Lower the vehicle.

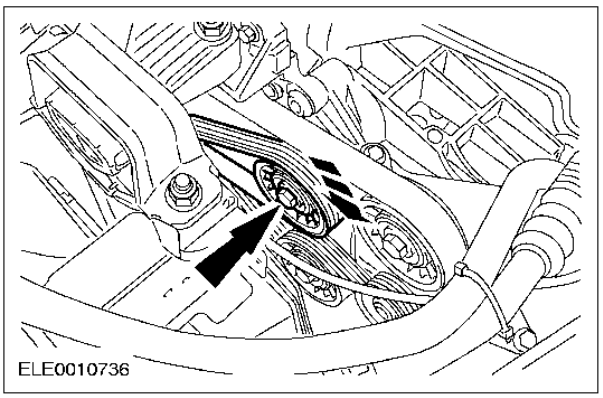

8. Install the accessory drive belt.
   - Turn the drive belt tensioner clockwise and install the belt onto the pulleys.

IN-VEHICLE REPAIR

Valve Seals (21 238 0)

Special Tool(s)	
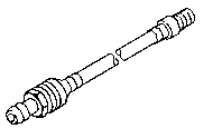 21157	Adapter, Air Supply (Cylinder Head) 303-363 (21-157)
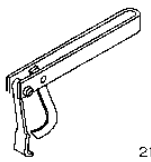 21194	Compressor Valve Spring 303-461 (21-194)

Special Tool(s)	
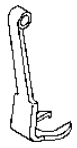 2119401	Adapter for 303-461 303-461-01 (21-194-01)
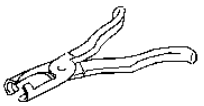 PZ21211	Pliers, Valve Stem Oil Seal 303-508 (21-211)

Removal

1. Remove the valve cover. For additional information, refer to Valve Cover in this section.
2. Remove the camshaft. For additional information, refer to Camshaft in this section.
3. Remove the spark plugs.
4. Remove the camshaft roller followers (Cylinder head shown removed).

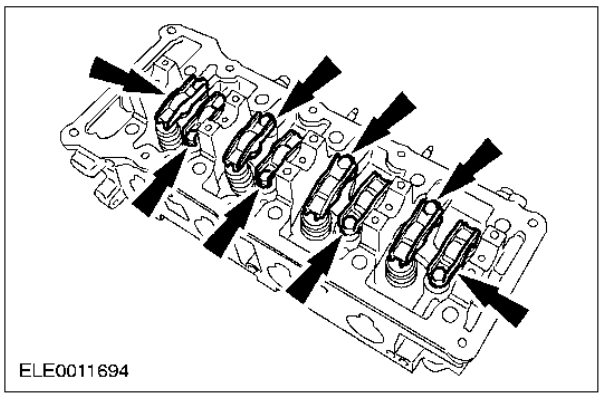

5. Install the camshaft without the cam followers. For additional information, refer to Camshaft in this section

IN-VEHICLE REPAIR (CONTINUED)

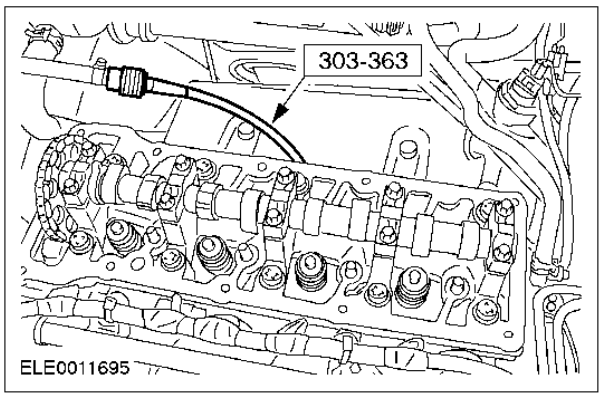

6. Install the special tool and high-pressure airline.
   - Connect an air supply, pressurized to 7-10 bar.

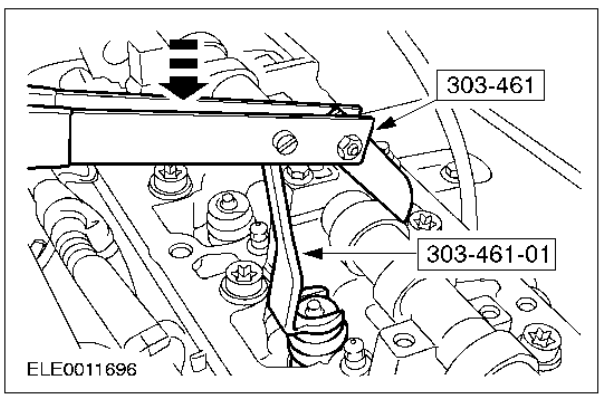

7. **NOTE:** To aid correct reassembly, keep all parts in the order removed.
   Using special tools, remove the valve spring.
   1. Compress the valve spring.
   2. Remove the valve collets, the valve spring retainer and the valve spring.

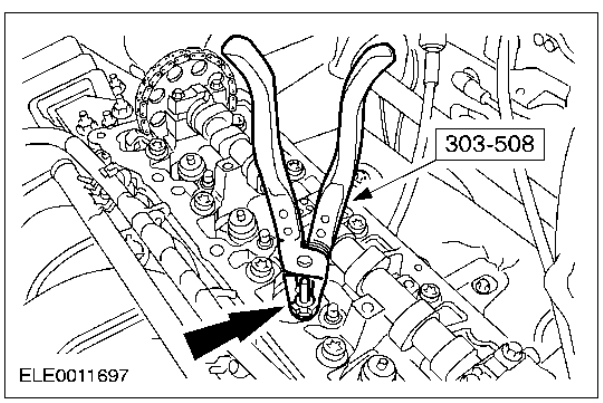

8. Using the special tool, remove the valve seals.

Installation

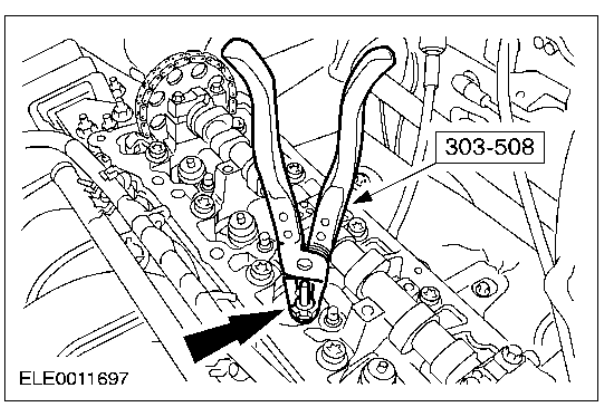

1. **NOTE:** The valve seals are fully installed by the pressure of the valve springs.
   Using the special tool, install the valve seals.

IN-VEHICLE REPAIR (CONTINUED)

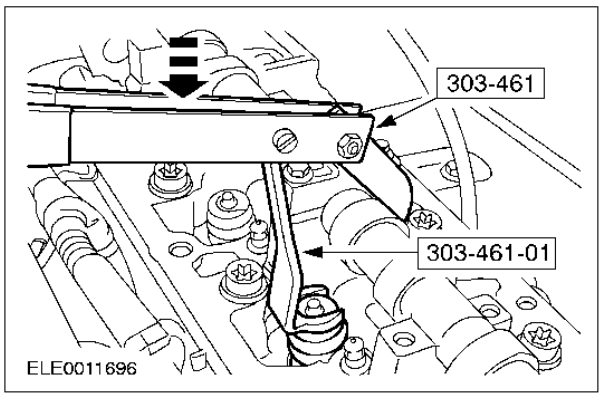

2. Using the special tools, install the valve springs.
   1. Compress the valve spring and valve spring retainer.
   2. Insert the valve collets.

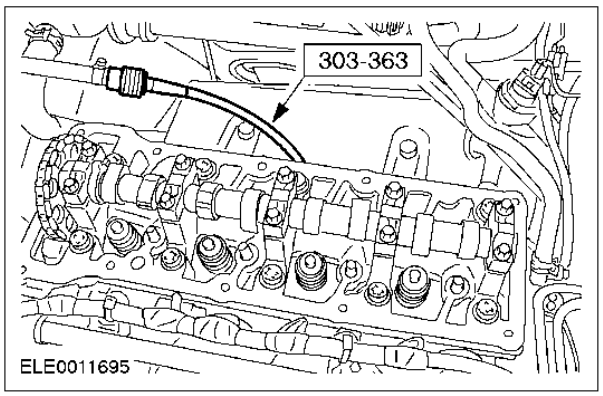

3. Remove the high-pressure airline and special tool.

4. Remove the camshaft. For additional information, refer to Camshaft in this section.

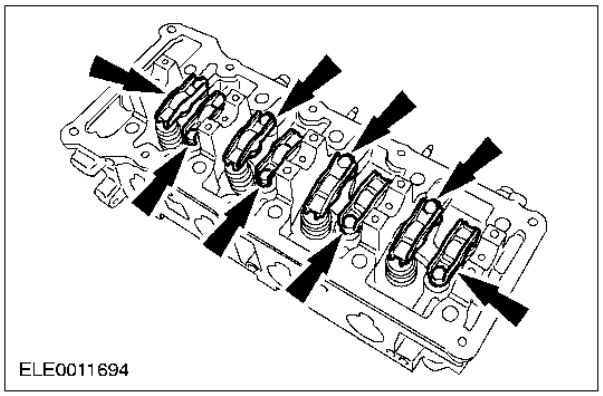

5. Install the roller finger cam followers. (Cylinder head shown removed).

6. Install the camshaft. For additional information, refer to Camshaft in this section.

7. Install the spark plugs.

8. Install the valve cover. For additional information, refer to Valve Cover in this section.

IN-VEHICLE REPAIR

Camshaft (21 283 0)

Special Tool(s)	
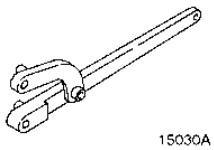 15030A	Universal Flange Holding Wrench 205-072 (15-030 A)

Material	Specification
Hypoid oil	SAE 90

Removal

1. Remove the valve cover. For additional information, refer to Valve Cover in this section.

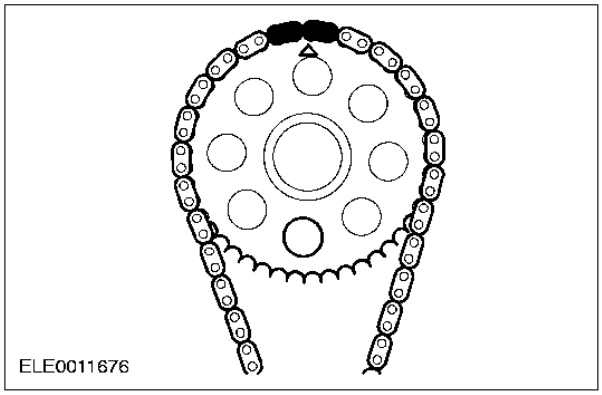

2. **NOTE:** The camshaft sprocket timing mark and both colored links on the timing chain must line up.
   Set the engine to TDC on cylinder No. 1. and wire together the chain and sprocket.

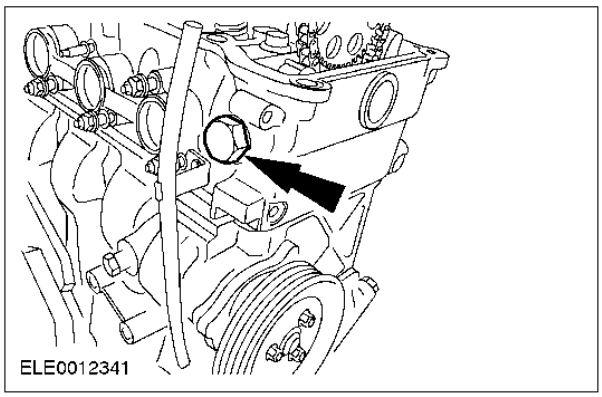

3. Remove the timing chain hydraulic tensioner.

IN-VEHICLE REPAIR (CONTINUED)

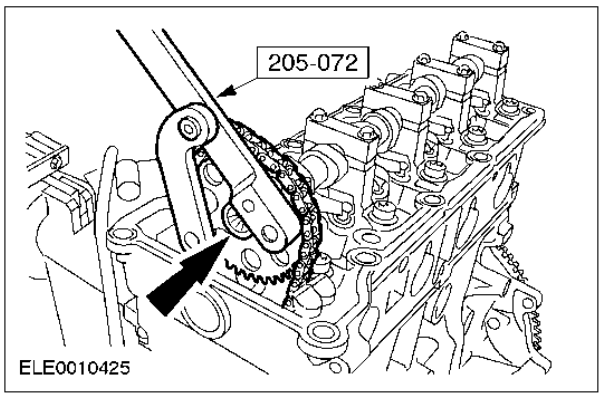

4. Using the special tool, remove the camshaft sprocket.

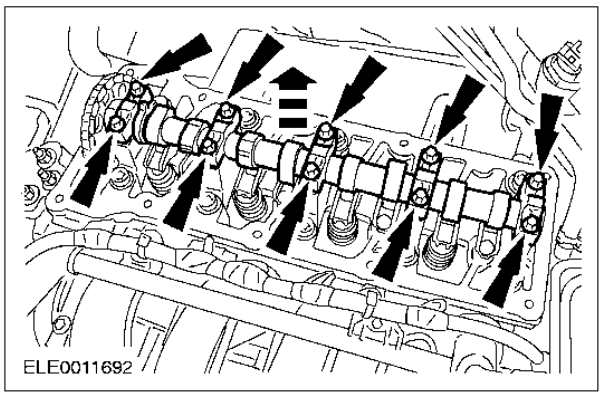

5. NOTE: Slackening sequence.

NOTE: Keep the camshaft bearing caps in order for installation.

Slacken each bolt of the camshaft bearing caps by one turn until the camshaft is released.

6. Remove the camshaft bearing caps and the camshaft.

Installation

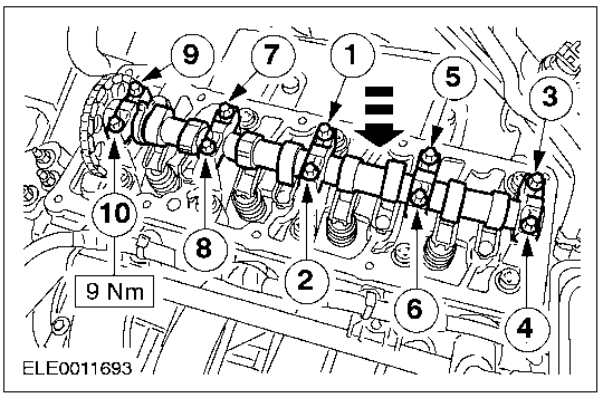

1. NOTE: Make sure the sprocket alignment slot in the camshaft is uppermost (12 o'clock) when installing the camshaft.

NOTE: Apply a drop of hypoid oil (WSQ-2C9002-AA) to each cam bearing (upper and lower) half.

Install the camshaft and tighten the bolts in two stages.

1. Tighten each of the camshaft bearing cap bolts by 90° degrees in the indicated sequence.
2. Tighten the bolts to the specified torque in the indicated sequence.

IN-VEHICLE REPAIR (CONTINUED)

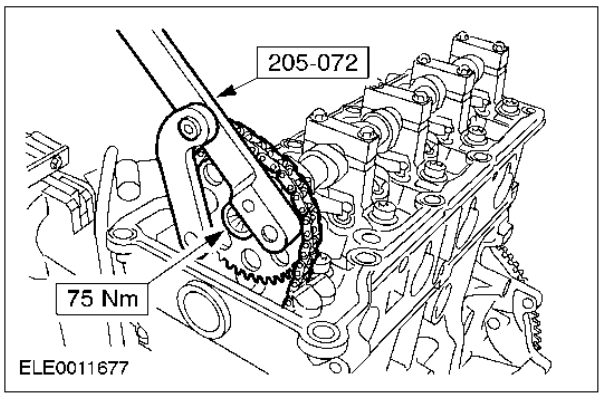

2. NOTE: The mark on the camshaft sprocket and both colored links on the timing chain must line up.

Remove the wire tie and using the special tool, install the camshaft sprocket with the timing chain.

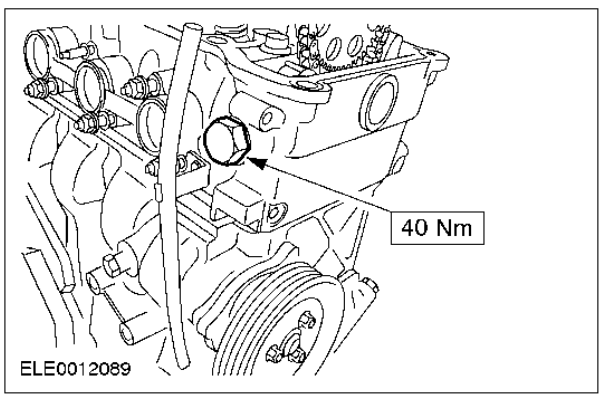

3. Install the timing chain hydraulic tensioner.

4. Install the valve cover. For additional information, refer to Valve cover in this section.

IN-VEHICLE REPAIR

Timing Chain

Special Tool(s)	
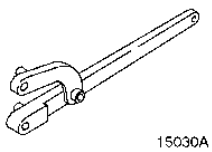 15030A	Universal Flange Holding Wrench 205-072 (15-030 A)

Removal

1. Remove the oil pump. For additional information, refer to Oil Pump in this section.
2. Lower the vehicle.
3. Remove the valve cover. For additional information, refer to Valve Cover in this section.

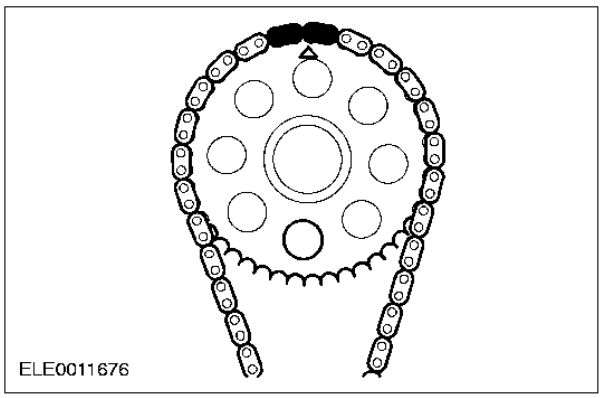

4. **NOTE:** The camshaft sprocket timing mark and both colored links of the timing chain must line up.
   Set the engine to TDC on cylinder No. 1.

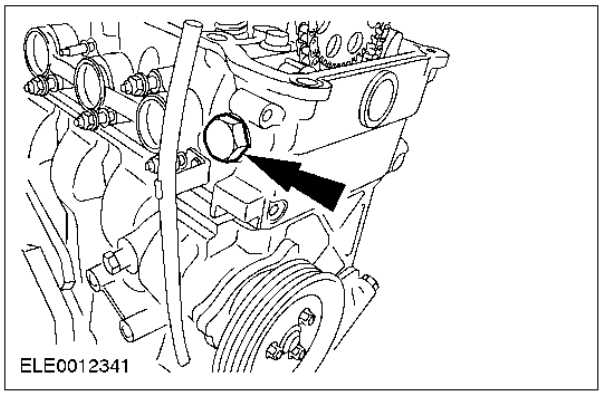

5. Remove the timing chain hydraulic tensioner.

IN-VEHICLE REPAIR (CONTINUED)

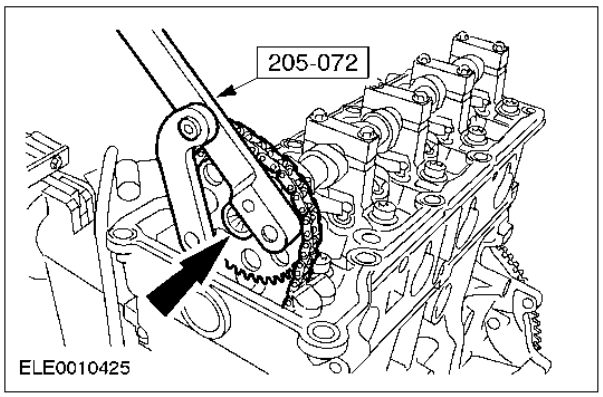

6. Using the special tool, remove the camshaft sprocket.

7. Raise and support the vehicle. For additional information, refer to Section 100-02.

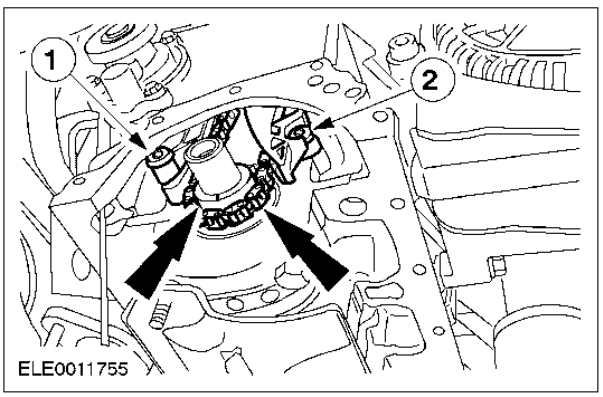

8. Remove the timing chain.
   1. Remove the chain tensioner arm.
   2. Remove the chain guide.
   - Remove the timing chain and the crankshaft sprocket.

Installation

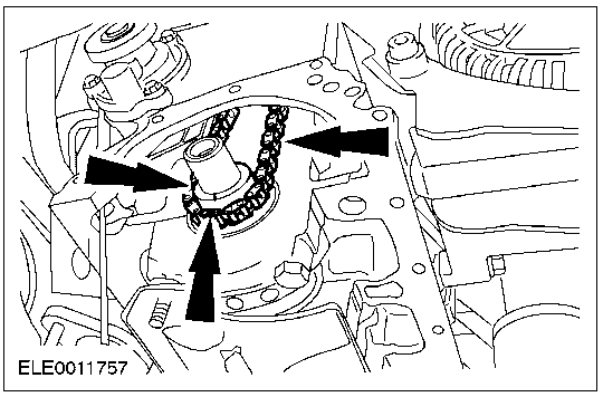

1. **NOTE:** The crankshaft sprocket timing mark and the single colored link on the timing chain must line up.

NOTE: The crankshaft sprocket timing mark must be in the 6 o'clock position.

Install the crankshaft sprocket and the timing chain.

IN-VEHICLE REPAIR (CONTINUED)

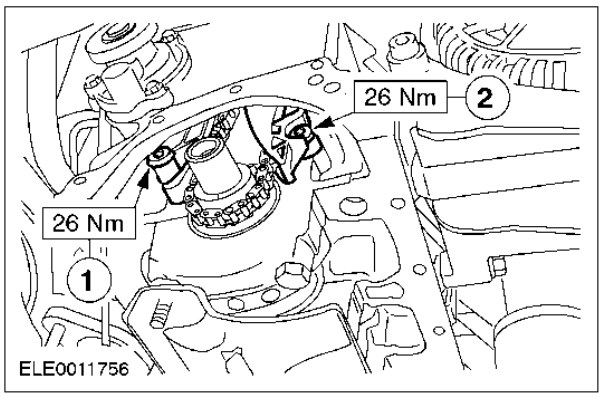

2. Install the timing chain tensioner arm and the chain guide.
   1. Install the chain tensioner arm.
   2. Install the chain guide.

3. Lower the vehicle.

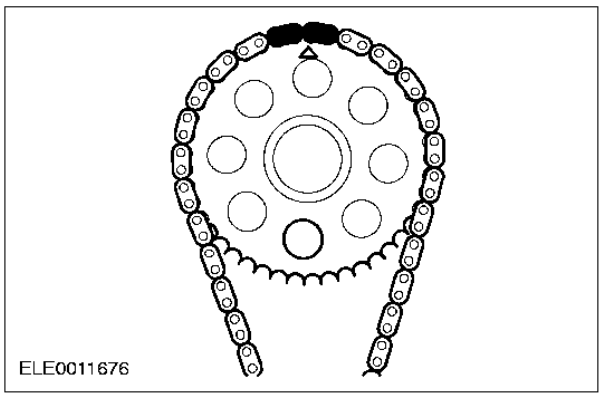

4. **NOTE:** The camshaft sprocket timing mark and both colored links on the timing chain must line up.

   NOTE: The mark on the camshaft sprocket must be in 12 o'clock position.

   Install the timing chain onto the camshaft sprocket.

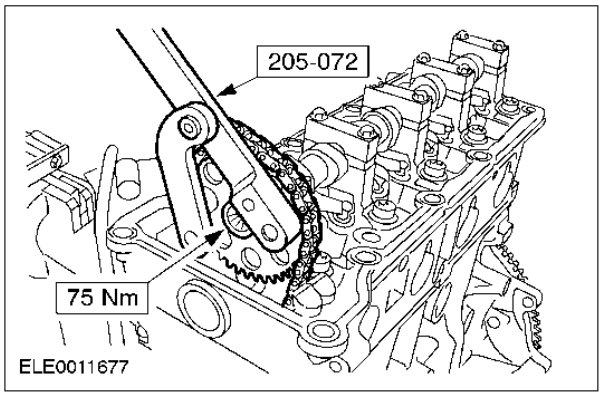

5. Using the special tool, tighten the camshaft sprocket retaining bolt.

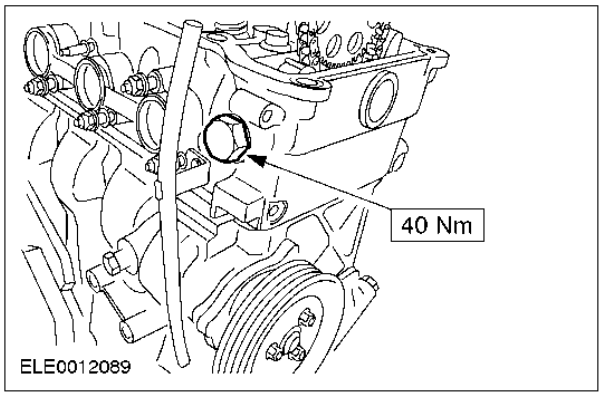

6. Install the timing chain hydraulic tensioner.

IN-VEHICLE REPAIR (CONTINUED)

7. Install the valve cover. For additional information, refer to Valve Cover in this section.

8. Install the oil pump. For additional information, refer to Oil Pump in this section.

IN-VEHICLE REPAIR

Crankshaft Rear Oil Seal

Removal

1. Remove the transaxle. For additional information, refer to Section 308-03.
2. Remove the clutch. For additional information, refer to Section 308-01.
3. Remove the flywheel.

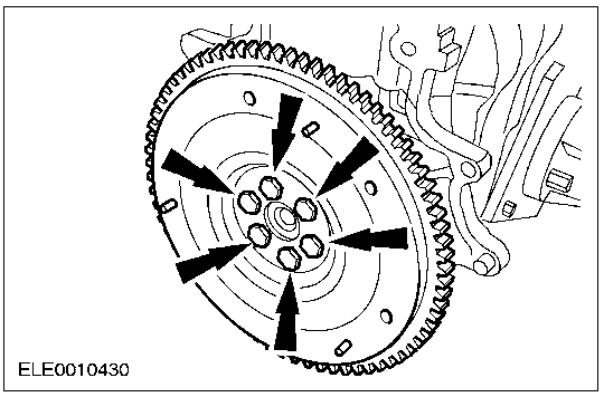

4. Remove the oil pan. For additional information, refer to Oil Pan in this section.
5. Remove and discard the rear oil seal retainer and the gasket.

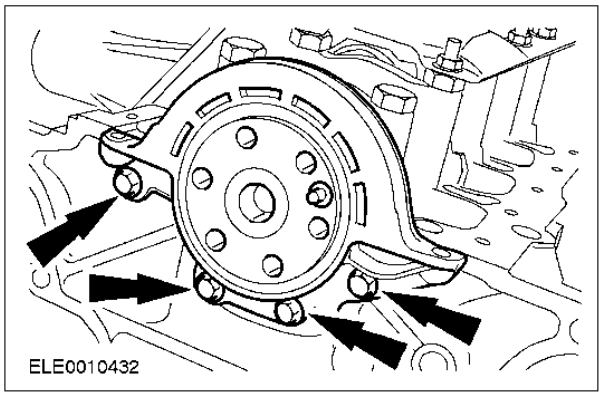

Installation

1. **NOTE:** An aligning guide is supplied with each new rear oil seal retainer.

   NOTE: The sealing lip must be free of oil.

   NOTE: Make sure the aligning dowels are located.

   Install a new rear oil seal retainer.

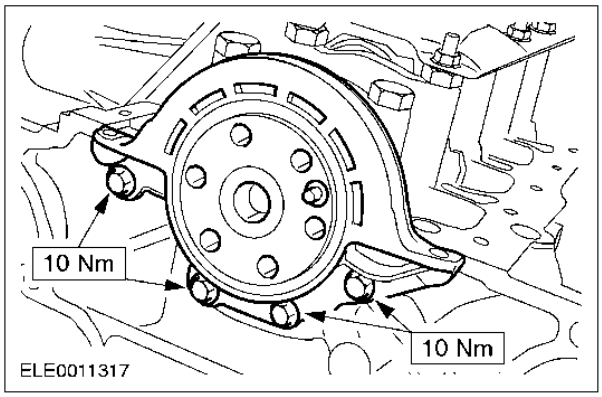

IN-VEHICLE REPAIR (CONTINUED)

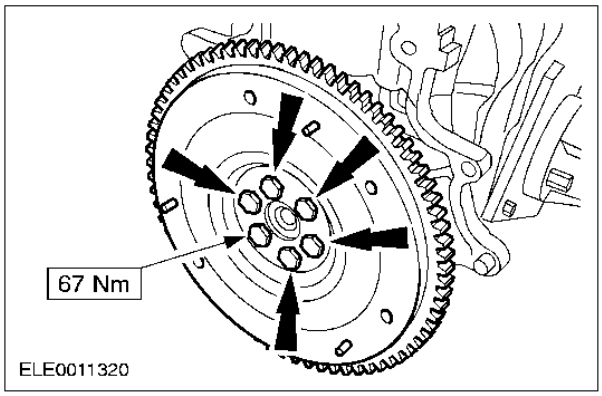

2. Install the oil pan. For additional information, refer to Oil Pan in this section.
3. Install the flywheel.
4. Install the clutch. For additional information, refer to Section 308-01.
5. Install the transaxle. For additional information, refer to Section 308-03.

IN-VEHICLE REPAIR

Exhaust Manifold (21 186 0)

Removal

1. Disconnect the battery ground cable.
2. Raise and support the vehicle. For additional information, refer to Section 100-02.

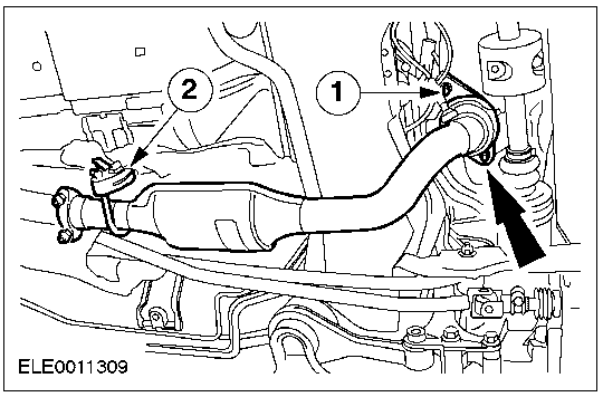

3. Disconnect the exhaust down pipe from the exhaust manifold and position it to one side.
   1. Remove the nuts.
   2. Detach the exhaust hanger insulator.
   - Remove and discard the gasket.

4. Lower the vehicle.

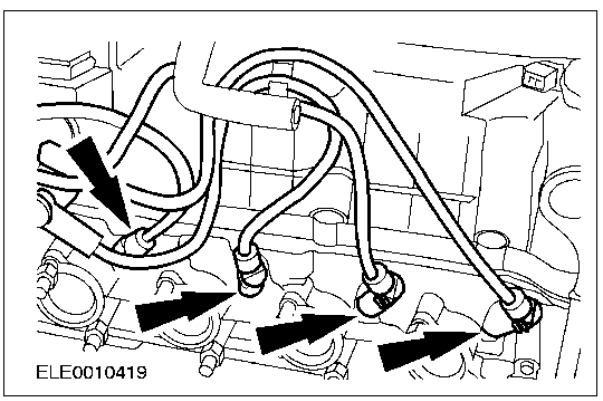

5. **CAUTION: Do not pull the cable when removing the spark plug connector. If necessary remove the ignition cables from the ignition coil to prevent kinking the cables. Turn the spark plug connector slightly before removing to loosen the seal.**

   CAUTION: Pull off the spark plug connectors in line with the spark plug (for bent spark plug connectors use Special Tool 303-662).

   Pull off the spark plug connector.

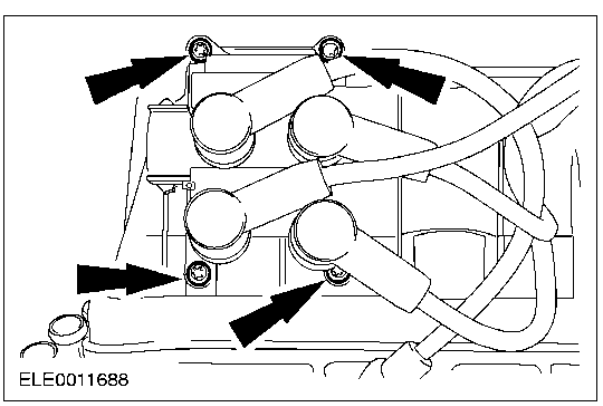

6. Remove the electronic ignition (EI) coil and position it to one side.

IN-VEHICLE REPAIR (CONTINUED)

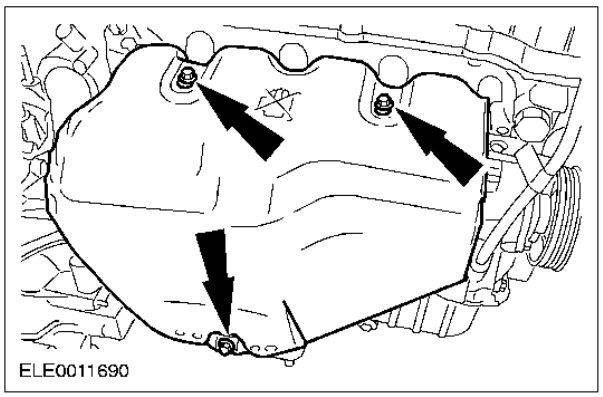

7. Remove the upper heat shield (shown on removed engine).

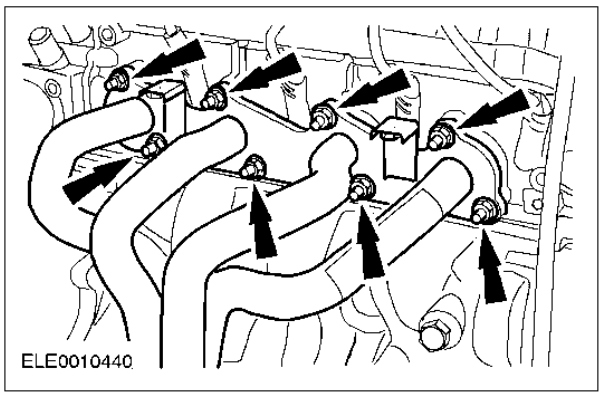

8. Remove the exhaust manifold (shown on removed engine).
   - Remove and discard the gasket.

Installation

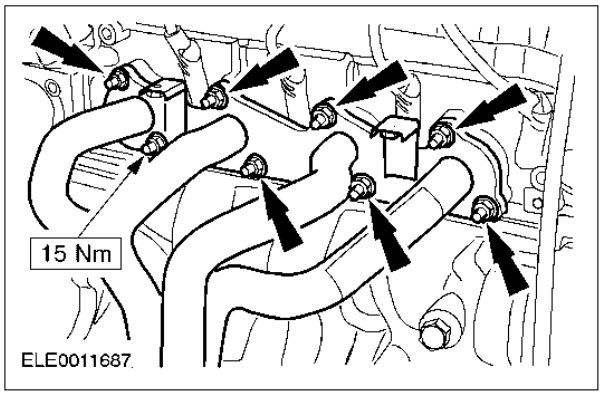

1. **NOTE:** Use a new gasket.
   Install the exhaust manifold.

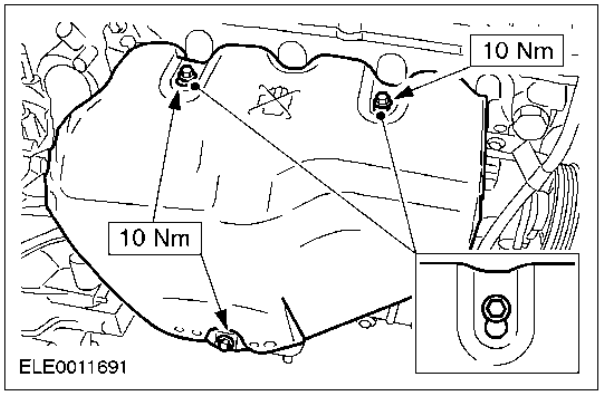

2. Install the upper heat shield.

IN-VEHICLE REPAIR (CONTINUED)

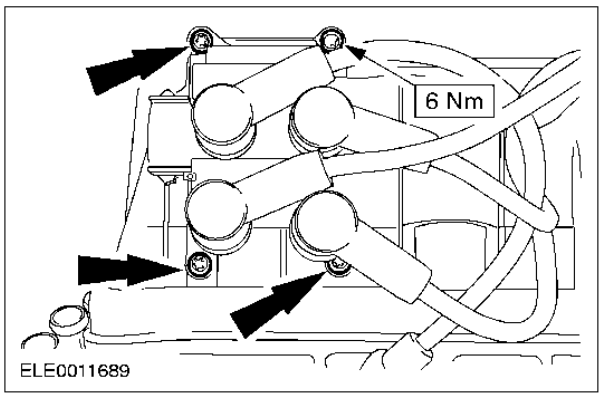

3. Install the EI coil.

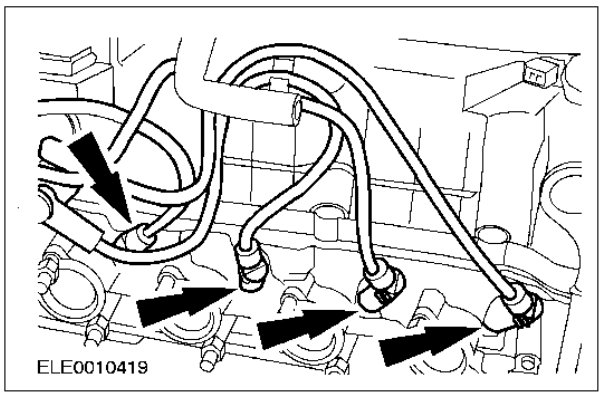

4. Install the spark plug electrical connectors.

5. Raise and support the vehicle. For additional information, refer to Section 100-02.

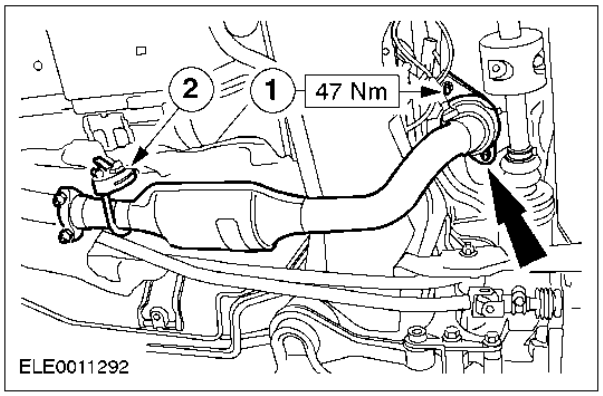

6. Connect the exhaust down pipe to the exhaust manifold.
   1. Install the nuts.
   2. Attach the exhaust hanger insulator.

7. Lower the vehicle.

8. Connect the battery ground cable.

IN-VEHICLE REPAIR

Cylinder Head (21 163 0)

Special Tool(s)	
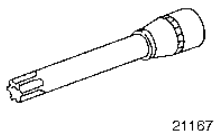 21167	Socket, Cylinder Head Bolt 303-392 (21-167)
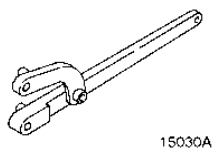 15030A	Universal Flange Holding Tool 205-072 (15-030 A)
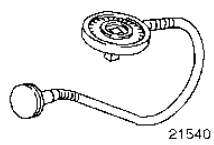 21540	Angle Gauge, Bolt Tightening 303-174 (21-540)

General Equipment
Trolley jack

Material	Specification
Sealer	Green Loctite 648 retaining compound
Engine oil	SAE 15W 40 SH

Removal

1. Disconnect the battery ground cable.
2. Remove the air cleaner intake pipe.

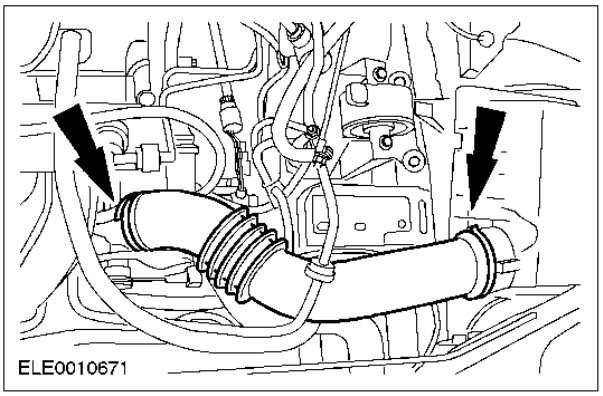

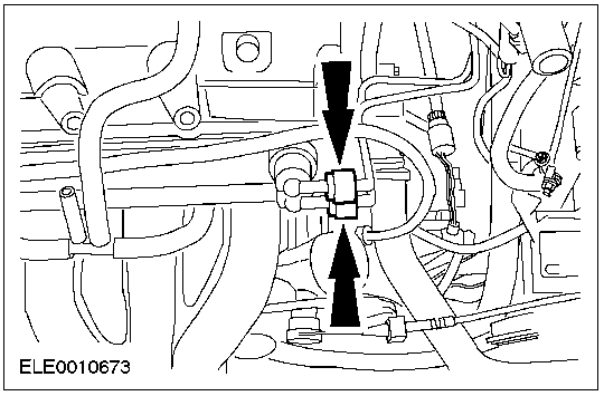

3. ⚠ **WARNING: Escaping fuel. Observe the safety regulations for working with fuel.**
   Disconnect the fuel lines.

IN-VEHICLE REPAIR (CONTINUED)

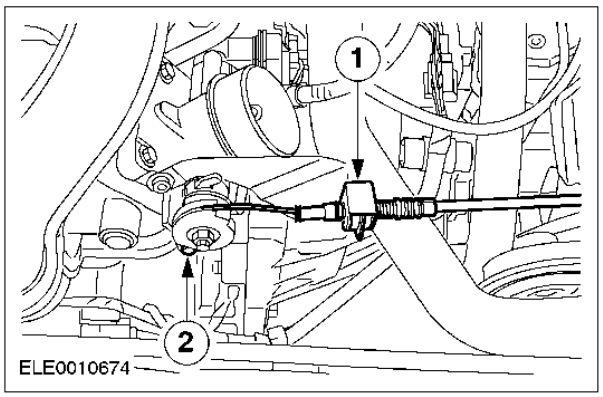

4. Disconnect the accelerator cable.
   1. Remove the clip and pull the cable from the retaining bracket.
   2. Disconnect the inner cable.

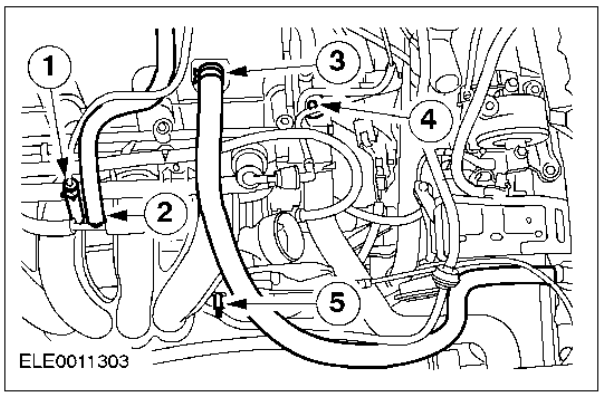

5. Remove hoses and the electrical connector.
   1. EVAP solenoid valve vacuum hose.
   2. Positive crankcase ventilation (PCV) hose.
   3. Crankcase breather hose.
   4. Engine coolant temperature (ECT) sensor electrical connector.
   5. Brake booster vacuum hose.

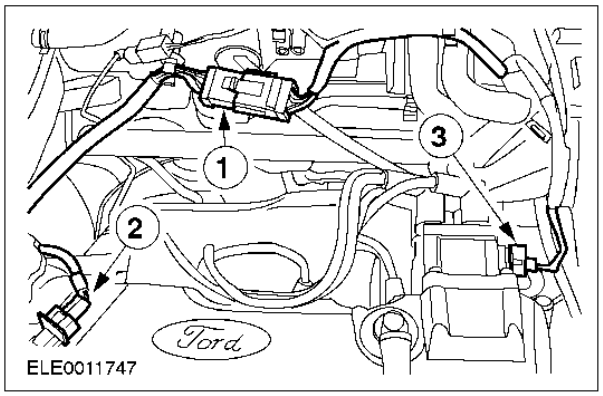

6. Disconnect the electrical connectors.
   1. Powertrain control module (PCM).
   2. Camshaft position (CMP) sensor.
   3. Electronic ignition (EI) coil.

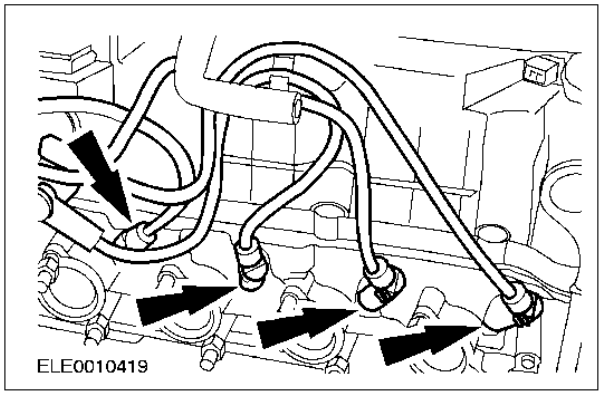

7. **CAUTION: Do not pull the cable when removing the spark plug connector. If necessary, remove the ignition cables from the ignition coil to avoid kinking the cables. Turn the spark plug connector slightly before removing to loosen the seal.**

   CAUTION: Pull off the spark plug connectors in line with the spark plugs (For bent spark plug connectors, use Special Tool 303-622).

   Remove the spark plugs.
   - Disconnect the electrical connectors.

IN-VEHICLE REPAIR (CONTINUED)

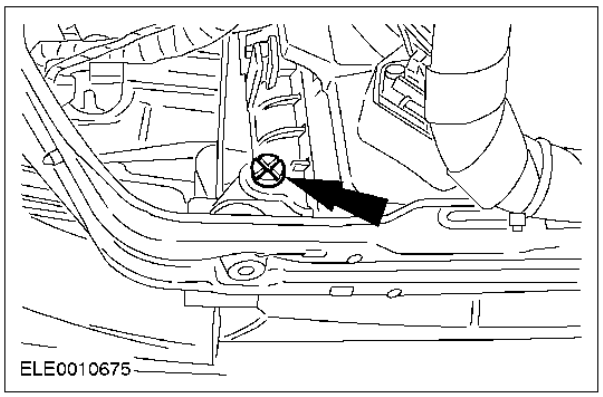

8. ⚠ **WARNING: Danger of scalding if the engine is warm.**
   Drain the coolant (shown from below).
   - Install the drain plug after draining.

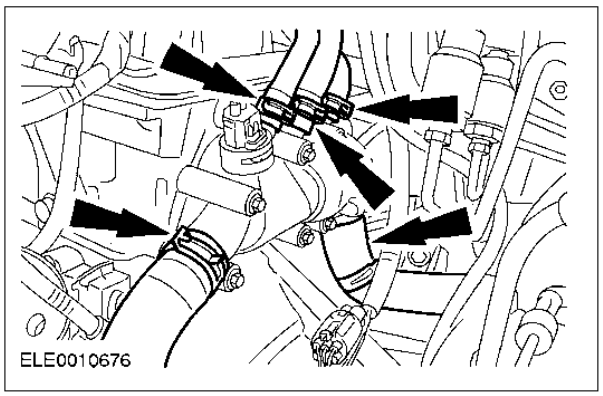

9. Disconnect the coolant hoses.

10. Raise and support vehicle. For additional information, refer to Section 100-02.

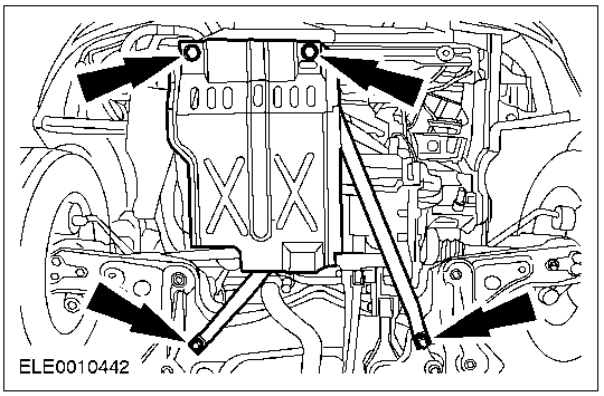

11. Remove the engine undershield.

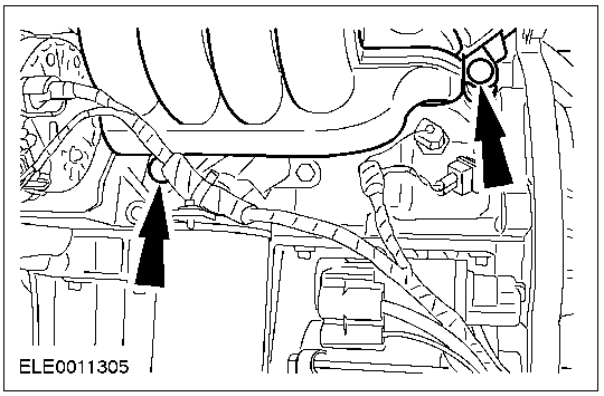

12. Remove the lower intake manifold bolts (engine shown removed for clarity).

IN-VEHICLE REPAIR (CONTINUED)

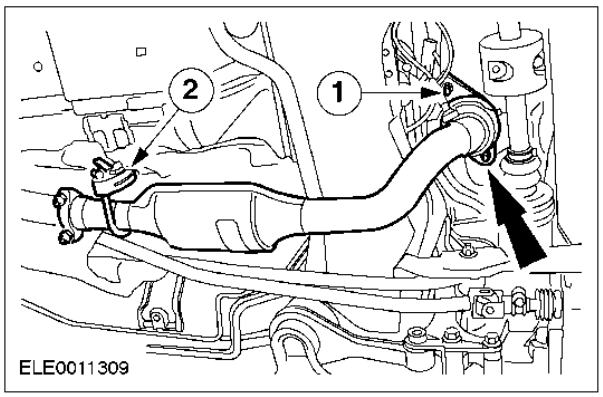

13. Separate the exhaust down pipe from the exhaust manifold and position it to one side.
    1. Remove the nuts.
    2. Disconnect the hanger insulator.
    - Remove and discard the gasket.

14. Lower the vehicle.

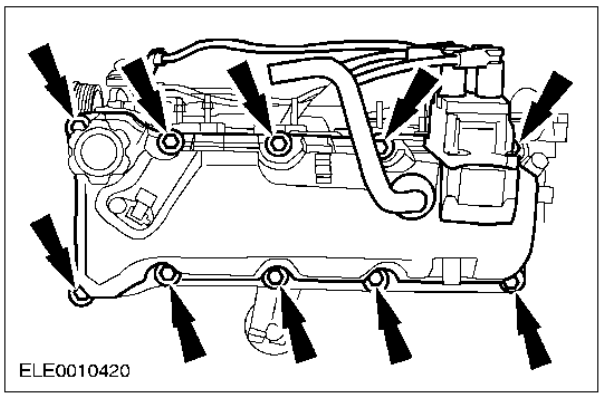

15. Remove the valve cover.

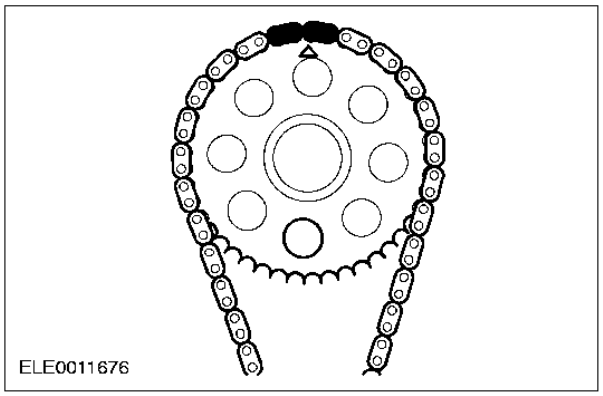

16. **NOTE:** The camshaft sprocket mark and both colored links on the timing chain must line up.

    NOTE: The camshaft sprocket timing mark must be at the 12 o'clock position.
    Set the engine to TDC on cylinder No. 1.

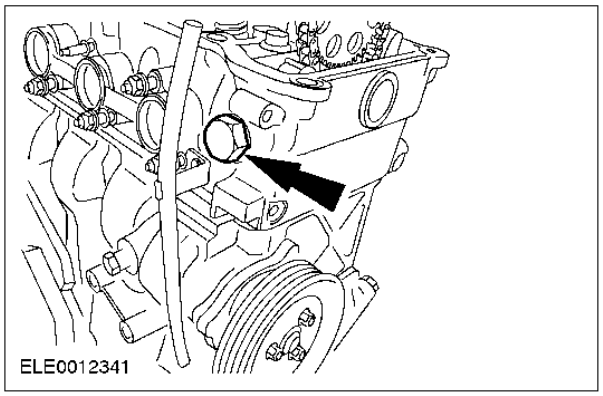

17. Remove the timing chain hydraulic tensioner.

IN-VEHICLE REPAIR (CONTINUED)

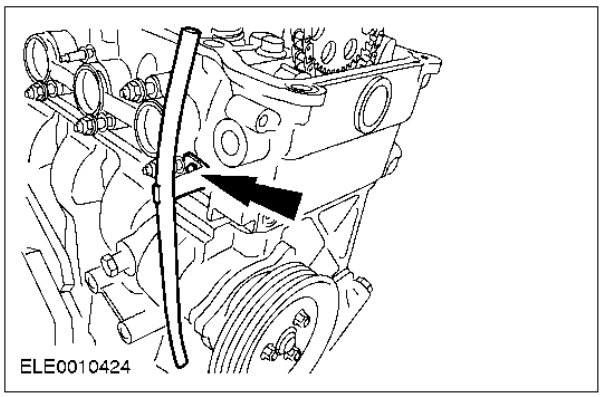

18. Remove the oil level indicator tube retaining bolt.

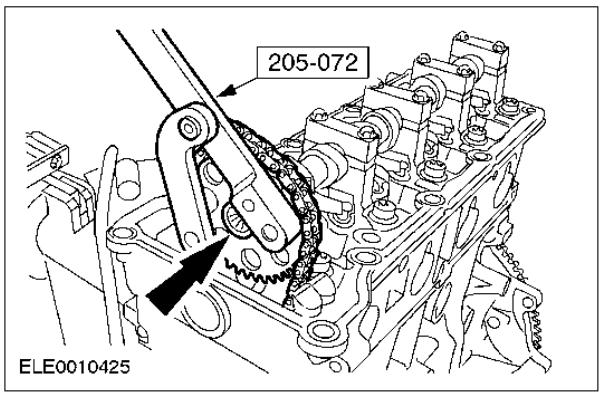

19. **NOTE:** Secure the timing chain to a wire hook to prevent it from falling down into the cylinder block.
    Using the special tool, remove the camshaft sprocket.

20. Place a trolley jack with a wooden block under the oil pan and raise slowly until the engine front mounting is free from strain.

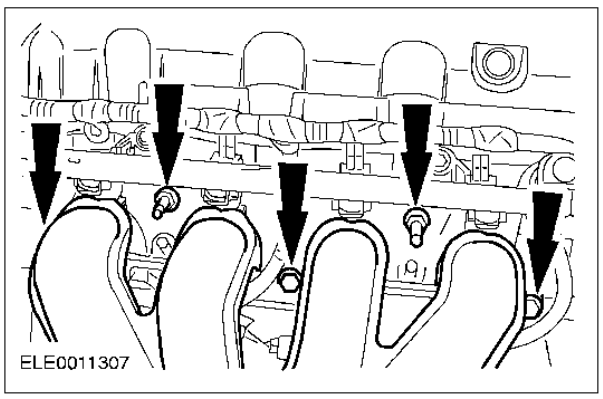

21. Remove the intake manifold.

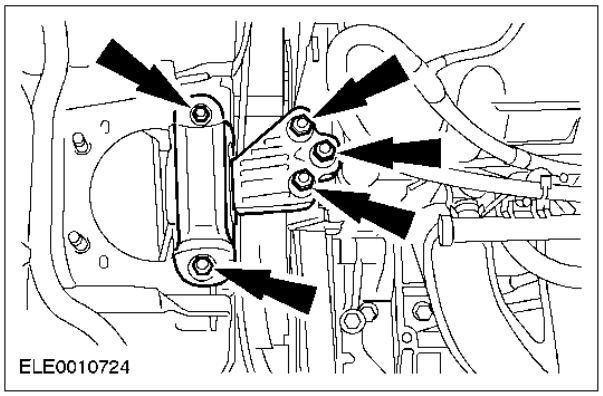

22. Remove the engine front mounting bracket.

IN-VEHICLE REPAIR (CONTINUED)

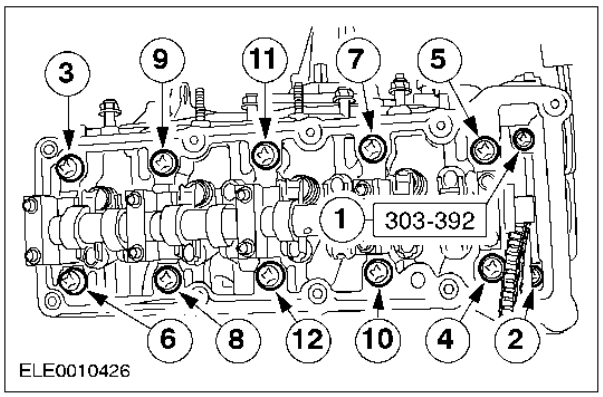

23. NOTE: Loosen the bolts in the indicated sequence.

Using the special tool, remove the cylinder head.

- Remove and discard the gasket.

Installation

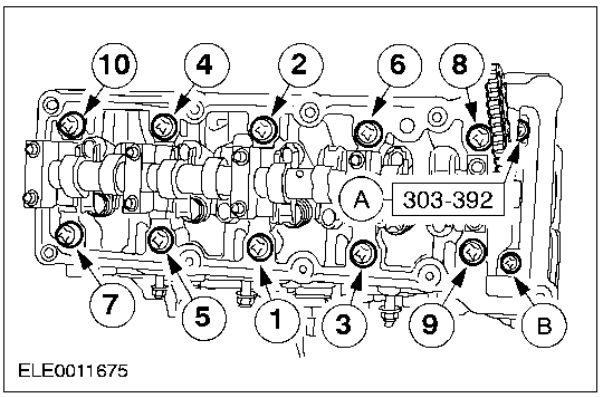

1. ⚠CAUTION: Use new cylinder head bolts.

NOTE: Use a new gasket.

Using the special tool, tighten the bolts in four stages.

- Stage 1: Tighten all M11 bolts in the indicated numerical sequence to 40 Nm.
- Stage 2: Tighten all M8 bolts in the indicated alphabetical order to 15 Nm.
- Stage 3: Tighten all M8 bolts in the indicated alphabetical order to 45 degrees.
- Stage 4: Tighten all M11 bolts in the indicated numerical sequence to 120 degrees.

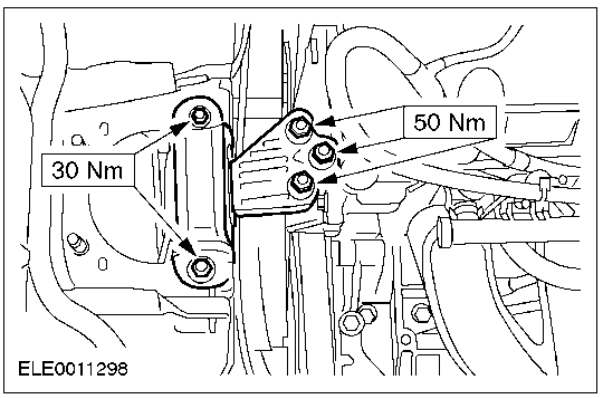

2. Install the engine front mounting bracket.

3. Remove the trolley jack.

IN-VEHICLE REPAIR (CONTINUED)

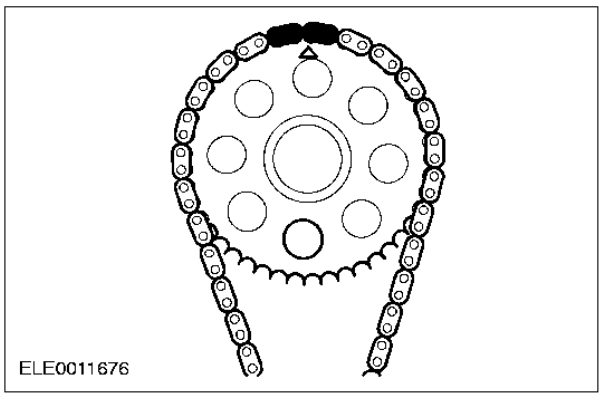

4. **NOTE:** The camshaft sprocket timing mark and both colored links of the timing chain must line up.
   Install the timing chain on the camshaft sprocket.
   - The camshaft sprocket timing mark must be at the 12 o'clock position.

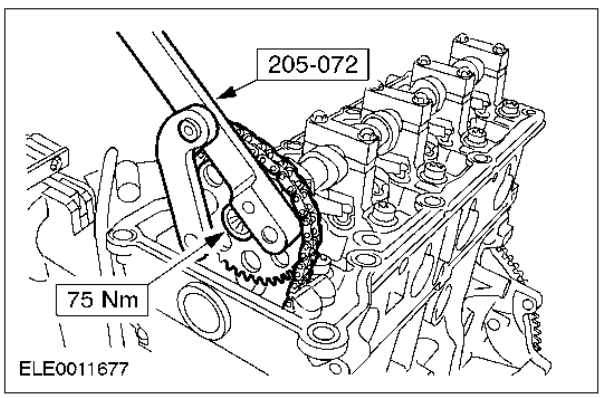

5. Using the special tool, install the camshaft sprocket.

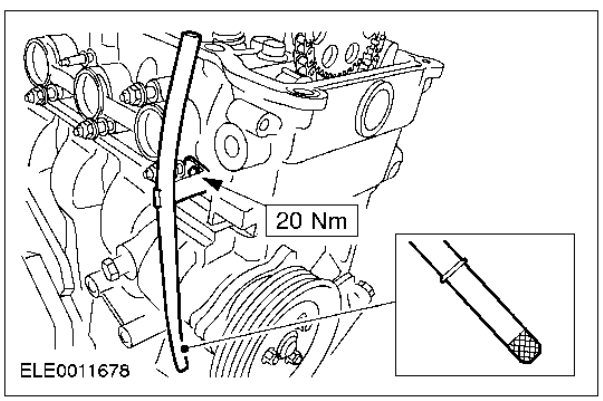

6. **NOTE:** If the oil level indicator tube was removed apply sealer (WSK-M2G349-A4) to the lower end.
   Tighten the oil level indicator tube bolt.

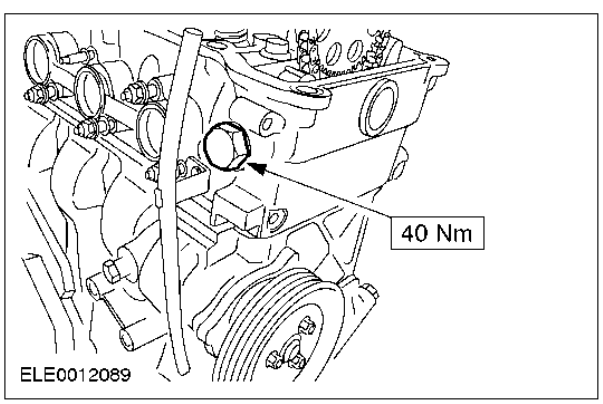

7. Install the timing chain hydraulic tensioner.

IN-VEHICLE REPAIR (CONTINUED)

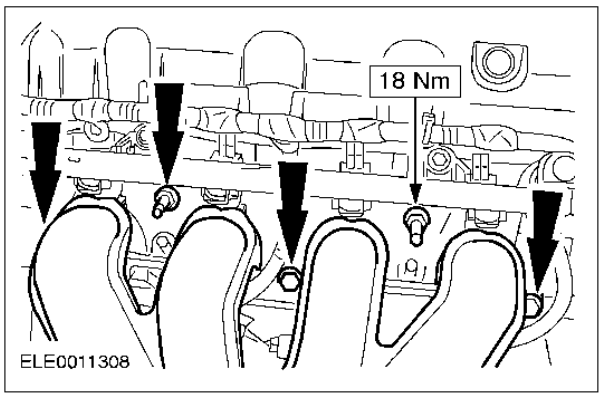

8. **NOTE:** Install a new gasket if the original is damaged.
   Install the intake manifold.

9. Raise and support the vehicle. For additional information, refer to Section 100-02.

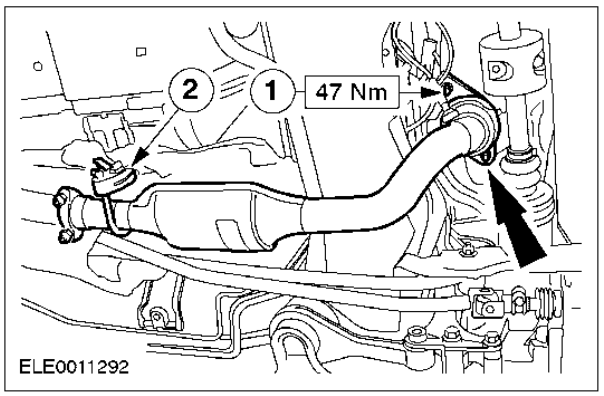

10. Connect the exhaust down pipe.
    1. Install the nuts.
    2. Connect the retaining hanger insulator.

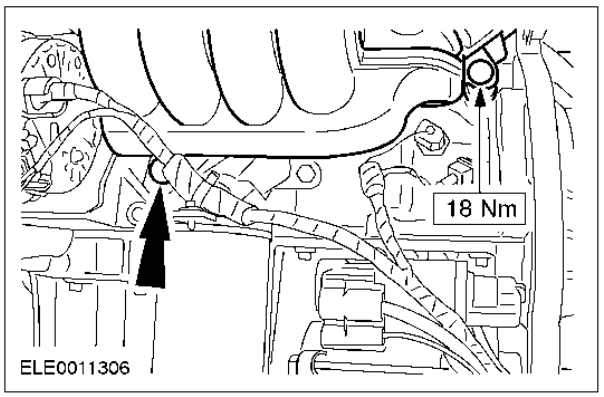

11. Install the intake manifold lower retaining bolts (engine shown removed for clarity).

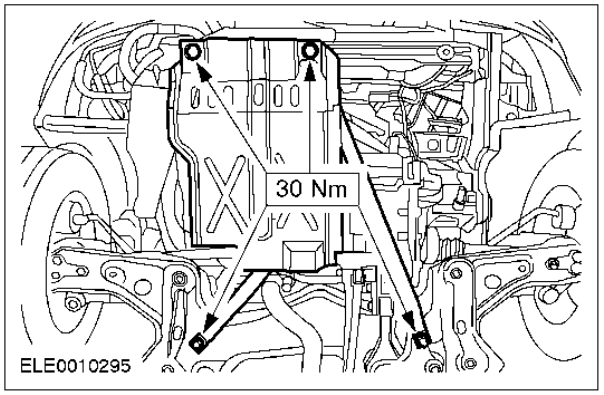

12. Install the engine undershield.

IN-VEHICLE REPAIR (CONTINUED)

13. Lower the vehicle.

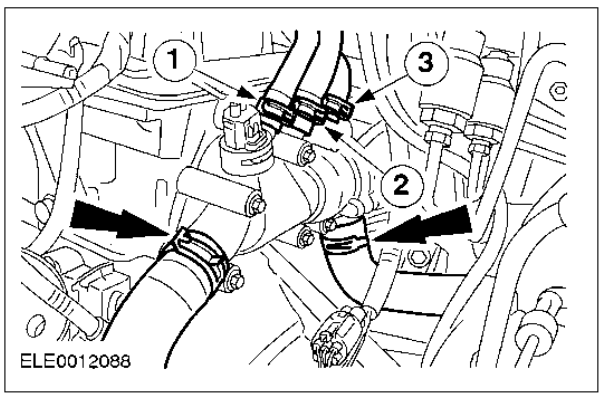

14. Connect the coolant hoses.
    1. To coolant expansion tank
    2. To cabin heater
    3. From cabin heater

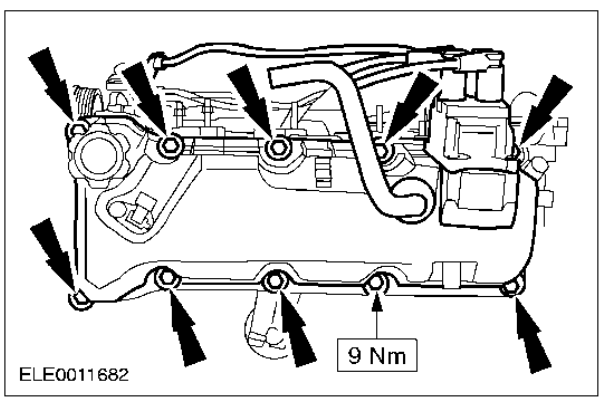

15. NOTE: Install a new gasket if the original is damaged.
Install the valve cover.

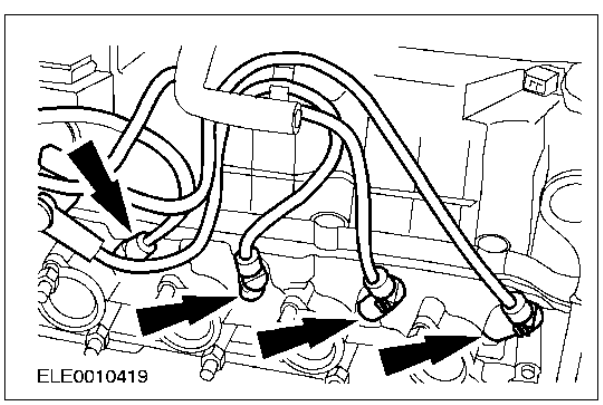

16. Install the spark plugs and connect the spark plug wires.

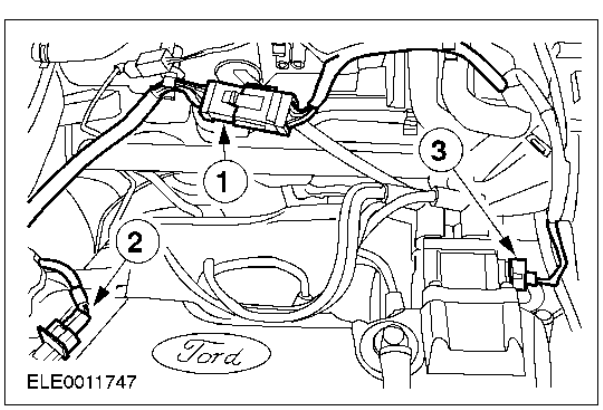

17. Connect the PCM, CMP sensor and EI coil electrical connectors.
    1. PCM connector
    2. CMP connector
    3. EI coil connector

IN-VEHICLE REPAIR (CONTINUED)

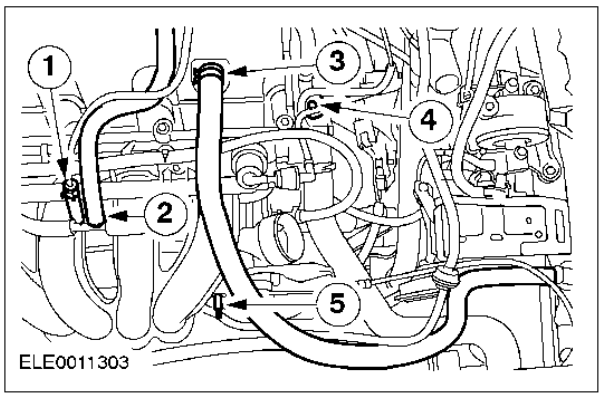

18. Install the hoses and the electrical connector.
    1. EVAP solenoid valve vacuum hose
    2. PCV
    3. Crankcase breather hose
    4. ECT sensor electrical connector
    5. Brake booster vacuum hose

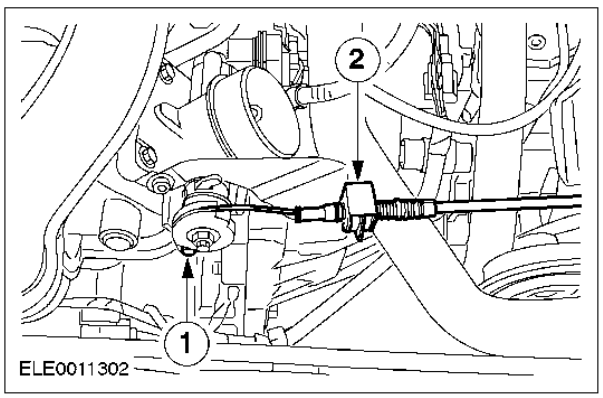

19. Install the accelerator cable.
    1. Hook in the inner cable.
    2. Install the cable in the bracket, adjust cable and secure with the clip.

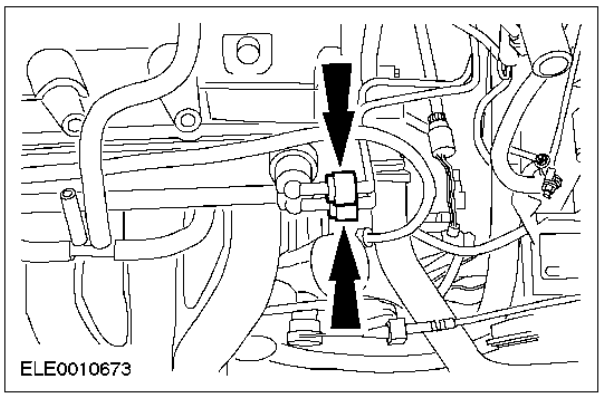

20. Connect the fuel lines.

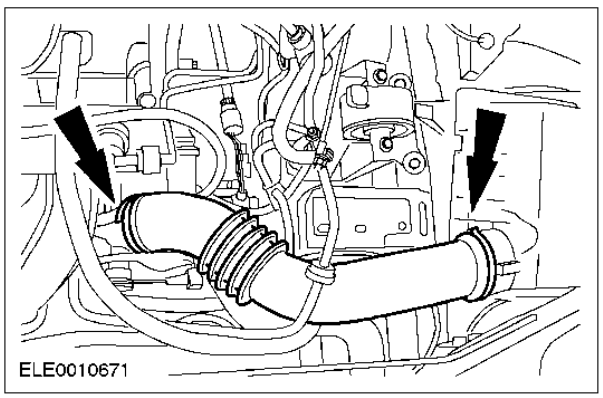

21. Install the air cleaner intake pipe.

22. Fill the cooling system. For additional information, refer to Section 303-03.

23. Connect the battery ground cable.

IN-VEHICLE REPAIR

Oil Pan (21 154 0)

Material	Specification
Sealer	Loctite 5910 Flange Sealant
Engine oil	SAE 15W 40 SH

Removal

All vehicles

1. Remove the transaxle. For additional information, refer to Section 308-03.
2. Remove the clutch. For additional information, refer to Section 308-01.
3. Remove the flywheel.

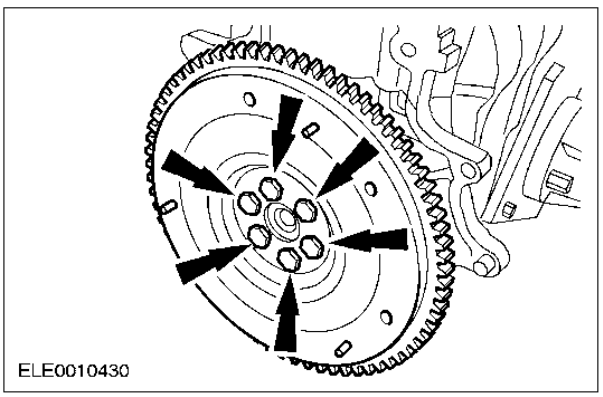

4. Lower the vehicle.
5. Turn the belt tensioner clockwise and remove the belt.

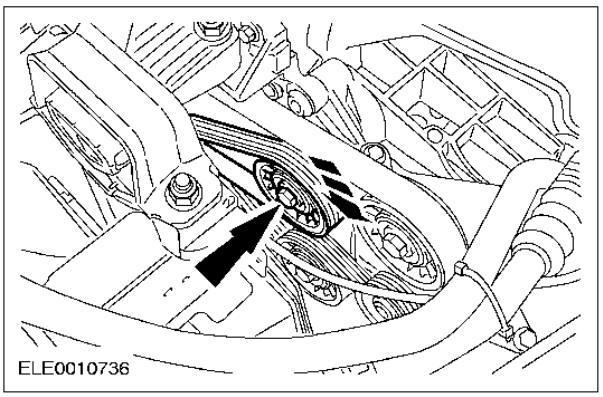

6. Raise and support the vehicle. For additional information, refer to Section 100-02.

IN-VEHICLE REPAIR (CONTINUED)

Vehicles with air conditioning

7. Remove the air conditioning compressor and secure it to the radiator crossmember.

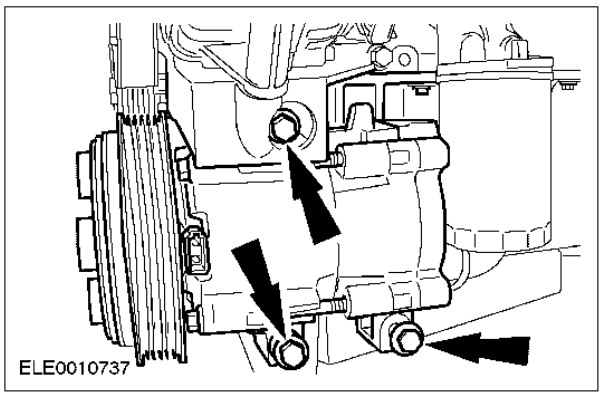

All Vehicles

8. Drain the engine oil.
9. Install the drain plug.

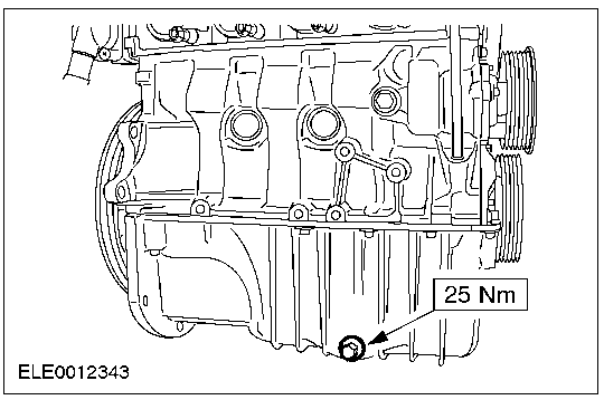

10. Remove the oil pan.
    - Remove and discard the gasket.

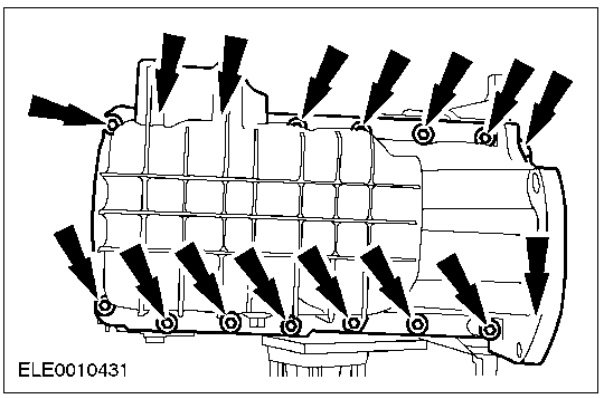

IN-VEHICLE REPAIR (CONTINUED)

Installation

All vehicles

1. Preparatory operations

NOTE: Do not damage the mating faces.

- Using a spatula or scraper remove any traces of sealer or gasket residue from the mating faces.

NOTE: The mating faces must be free of oil and gasket residue.

- Clean the oil pan to remove any oil residue or sludge.

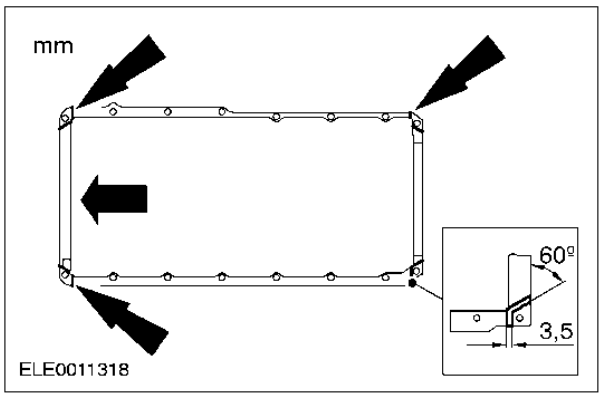

2. **NOTE:** Apply a 3 to 5 mm bead of sealer (LOCTITE 5910) to the marked areas.

NOTE: Install the oil pan within 5 minutes of applying the sealer beads.

Using a straightedge, align the oil pan flush to the rear cylinder block surface.

- Wait no longer than 5 minutes to install the oil pan gasket.

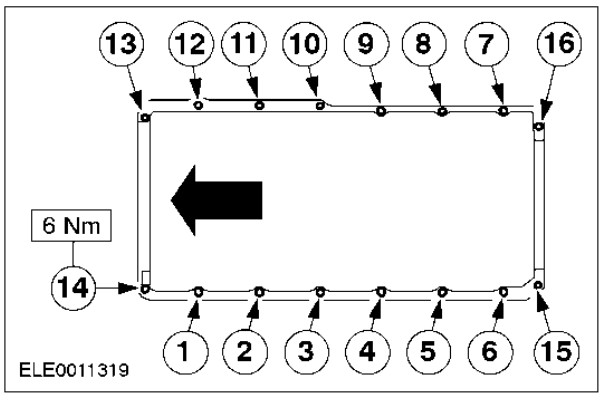

3. Install and tighten the oil pan retaining bolts (stage 1).

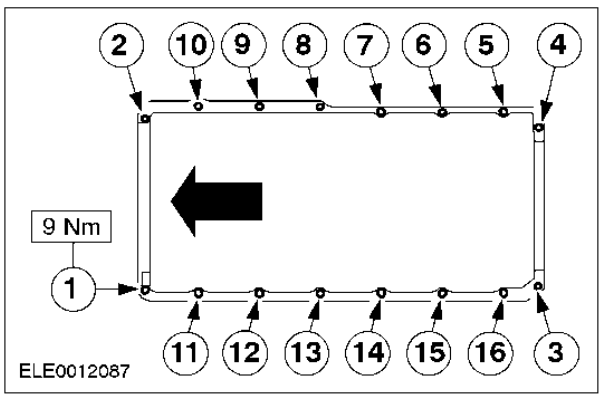

4. Tighten the oil pan retaining bolts (stage 2).

IN-VEHICLE REPAIR (CONTINUED)

Vehicles with air conditioning

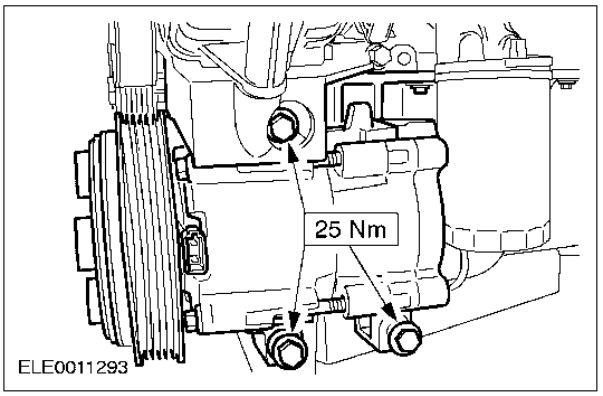

5. Install the A/C compressor.

All Vehicles

6. Lower the vehicle.

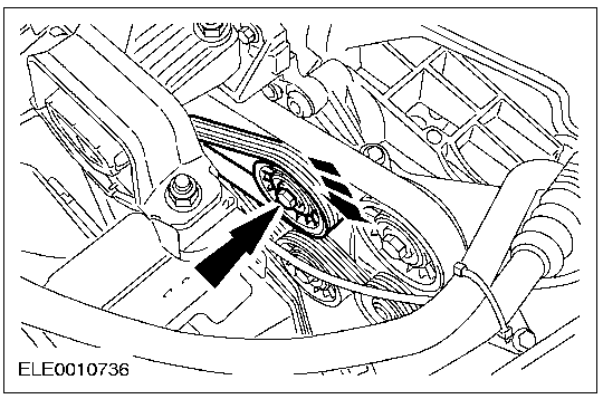

7. Install the accessory drive belt.
   - Turn the belt tensioner clockwise and install the belt.

8. Raise and support the vehicle. For additional information, refer to Section 100-02.

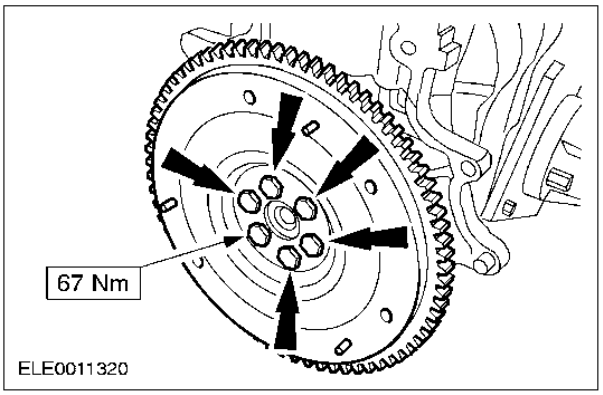

9. Install the flywheel.

10. Install the clutch and pressure plate. For additional information, refer to Section 308-01.

11. Install the transaxle. For additional information, refer to Section 308-03.

12. Fill the engine with low friction oil meeting SAE 15W40 SH specification.

IN-VEHICLE REPAIR

Oil Pump (21 154 0)

Special Tool(s)	
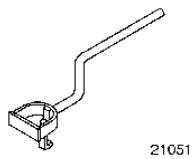 21051	Remover, Oil Seal 303-112 (21-051)

Removal

1. Remove the oil pan. For additional information, refer to Oil Pan in this section.
2. Remove the crankshaft pulley.

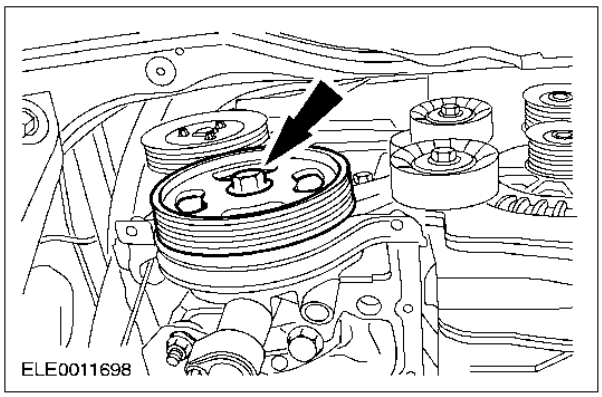

3. Using the special tool, remove the front oil seal.

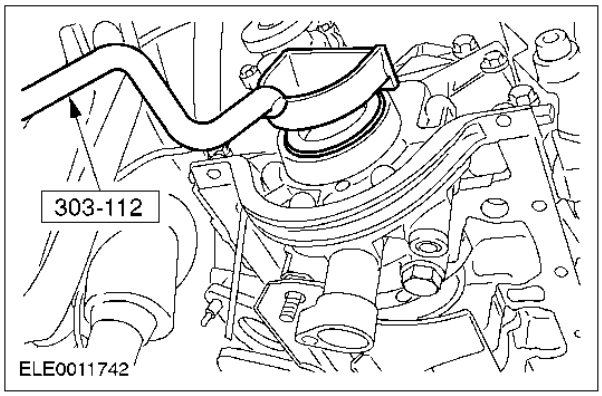

4. Remove the oil pump.
   - Remove and discard the oil pump and gasket.

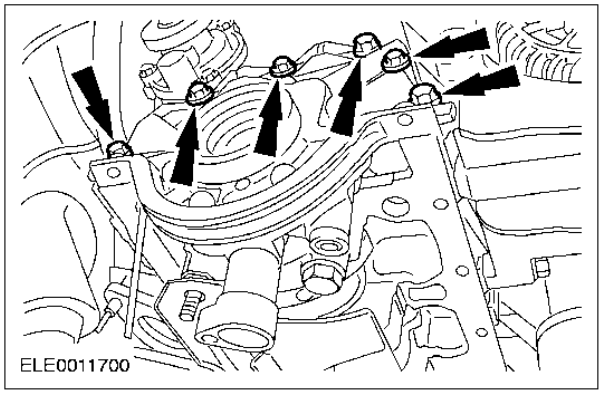

IN-VEHICLE REPAIR (CONTINUED)

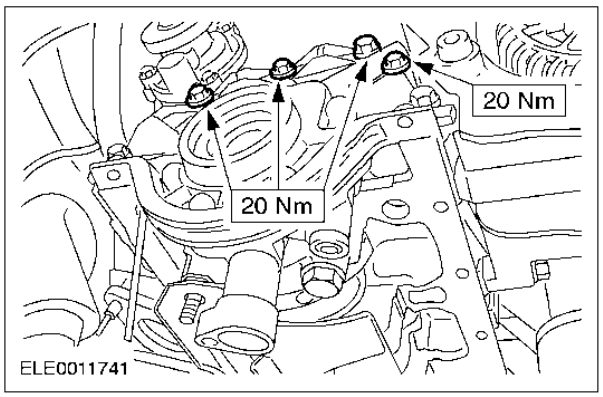

Installation

1. **NOTE:** Ensure gasket mating surfaces are clean.

   NOTE: Use a new oil pump and gasket.

   NOTE: The oil pump sealing flange must be within ±20mm of cylinder block bottom sealing flanges.

   Install oil pump bolts.

2. Install a new front oil seal. For additional information, refer to Front Oil Seal in this section

3. Install the oil pan. For additional information, refer to Oil Pan in this section.

REMOVAL

Engine (21 132 0)

General Equipment
Retaining strap
Assembly stand

Removal

All vehicles

1. General notes.
   - The locations of the engine mountings and the engine support insulators are described looking from the transaxle to the engine.
   - Steps, which apply only to particular variants, are indicated with a note.
   - If necessary, cut the cable ties and install new during installation.
2. Remove the battery. For additional information, refer to Section 414-01.
3. Remove the battery tray.
   1. Cut the cable ties.
   2. Remove the bolts.

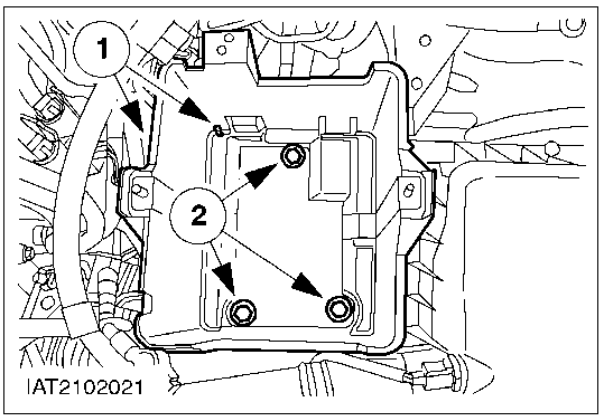

4. Remove the air cleaner intake pipe.

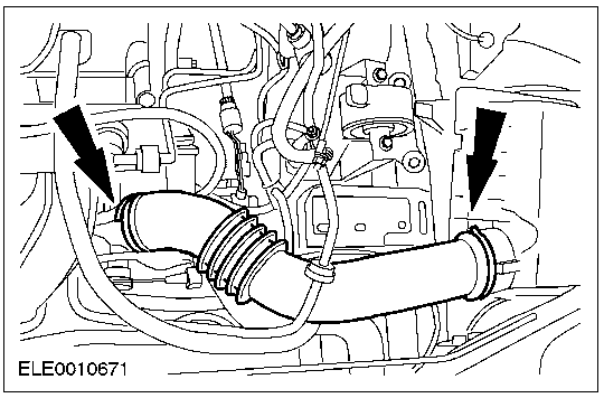

REMOVAL (CONTINUED)

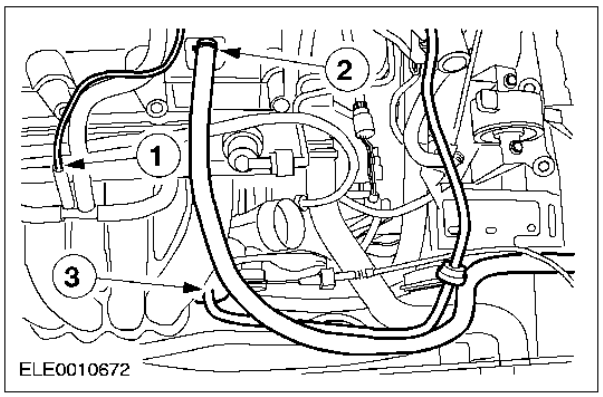

5. Remove the hoses.
   1. EVAP solenoid valve vacuum hose
   2. Positive crankcase ventilation hose
   3. Brake booster vacuum hose

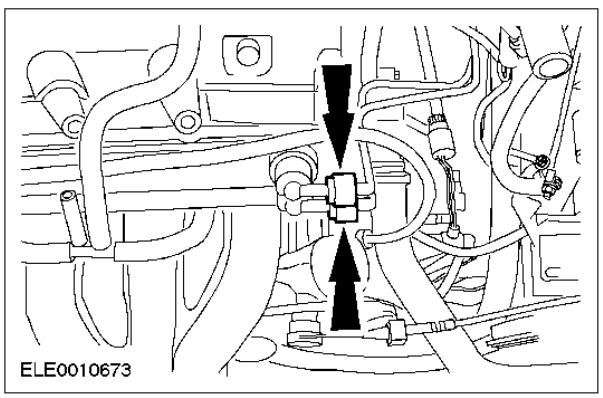

6. **WARNING: Escaping fuel. Observe the safety regulations for working with fuel.**
   Disconnect the fuel lines.

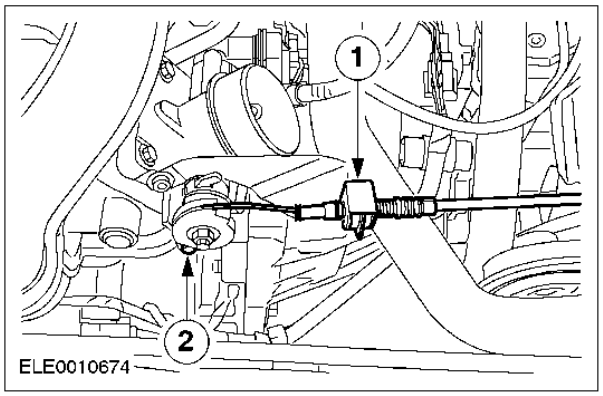

7. Remove the accelerator cable.
   1. Remove the clip and pull the cable from the bracket.
   2. Unhook the inner cable.

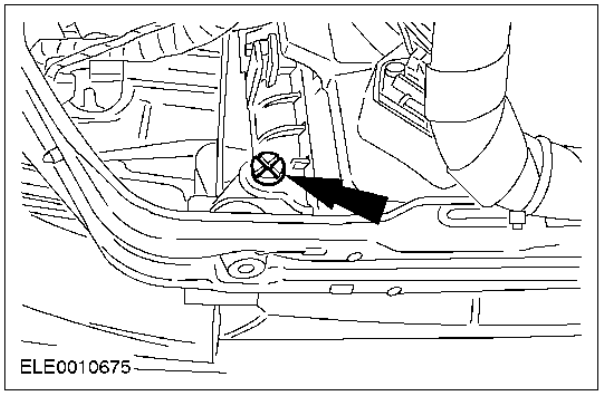

8. **WARNING: Danger of scalding if the engine is warm.**
   Drain the coolant (shown from below).
   - Screw in the drain plug after draining.

REMOVAL (CONTINUED)

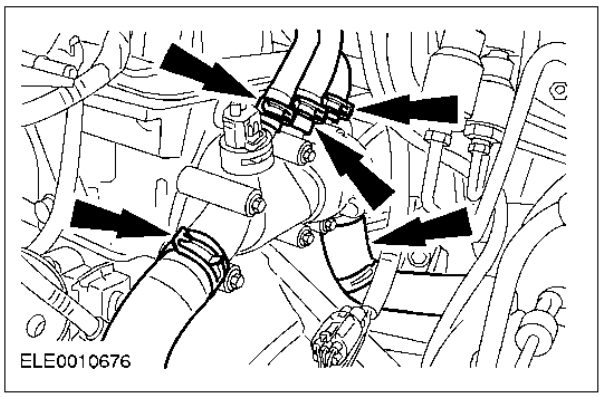

9. Remove the coolant hoses.

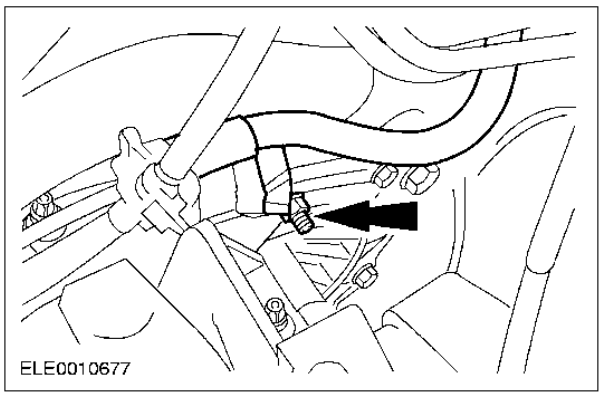

10. Remove the right-hand coolant hose bracket.

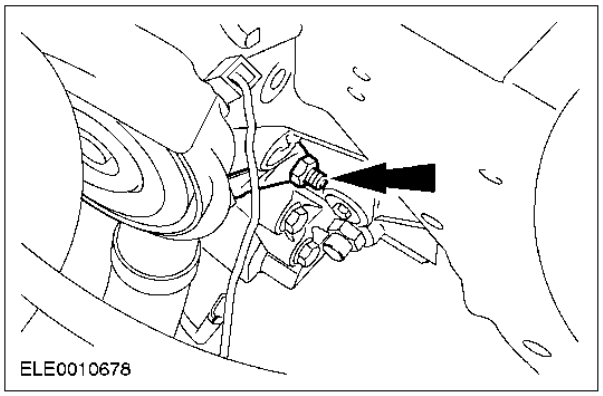

11. Remove the left-hand coolant hose bracket.

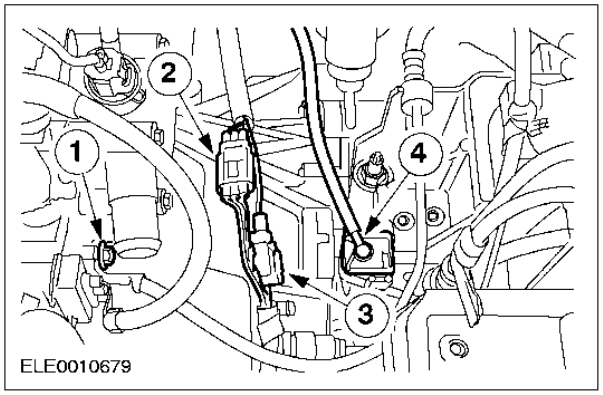

12. Disconnect the ground cable, the electrical connectors and the transmission breather.
    1. Disconnect the ground cable.
    2. Disconnect the generator electrical connector.
    3. Disconnect the starter motor electrical connector.
    4. Disconnect the transmission breather.

REMOVAL (CONTINUED)

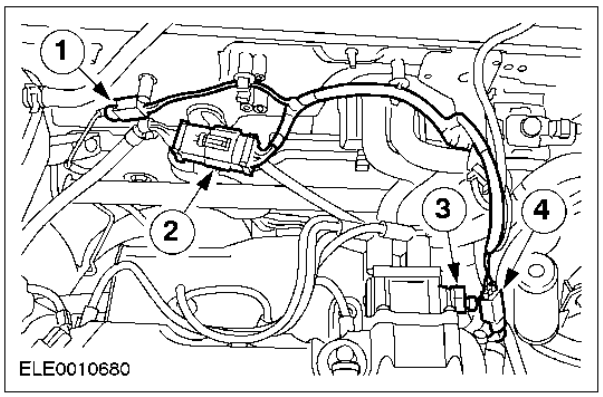

13. Disconnect the electrical connectors.
    1. Disconnect the heated oxygen sensor (HO2S).
    2. Disconnect the powertrain control module (PCM).
    3. Disconnect the electronic ignition (EI) coil.
    4. Disconnect the vehicle speed (VSS) sensor.

Vehicles with 1.3L engine.

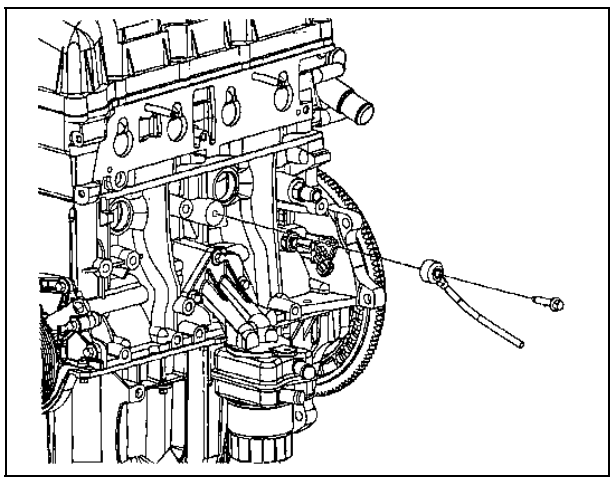

14. Remove the knock sensor.

Note: Inlet manifold removed for clarity.

All vehicles.

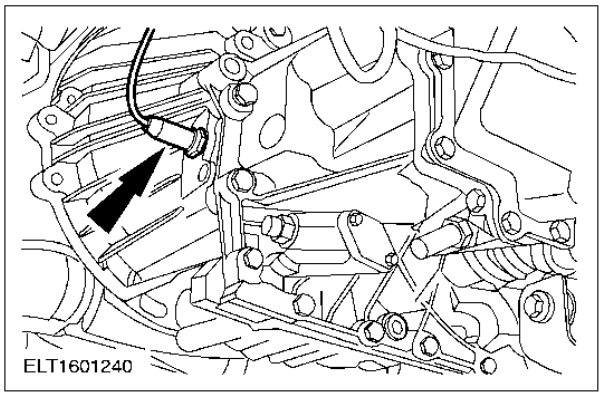

15. Disconnect the reversing lamp switch electrical connector.

REMOVAL (CONTINUED)

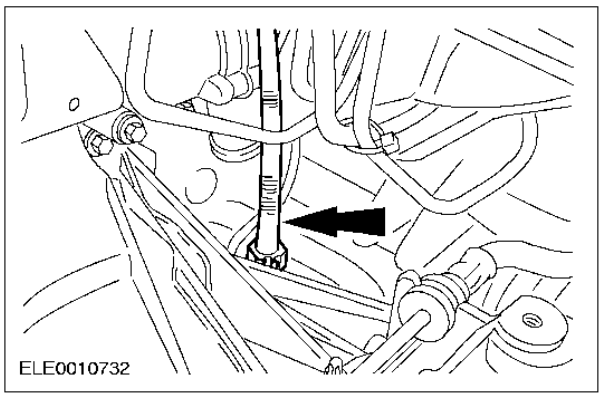

16. Disconnect the speedometer drive cable from the transaxle.

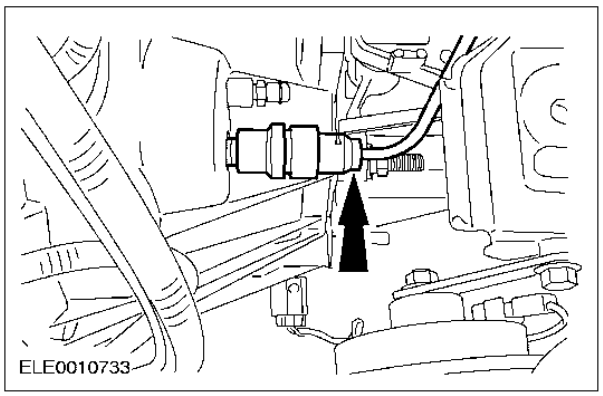

17. Disconnect the clutch slave cylinder hydraulic line.

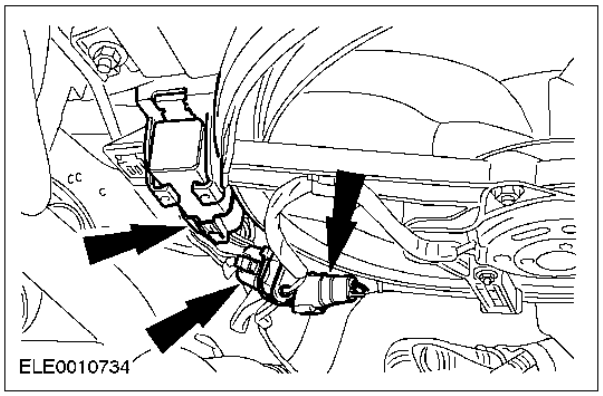

18. Disconnect the cooling fan electrical connectors.

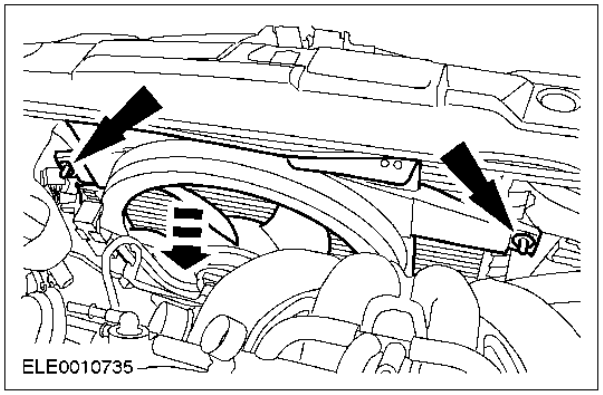

19. Remove the cooling fan.
    - First slide the fan upwards and then remove it from underneath the vehicle.

REMOVAL (CONTINUED)

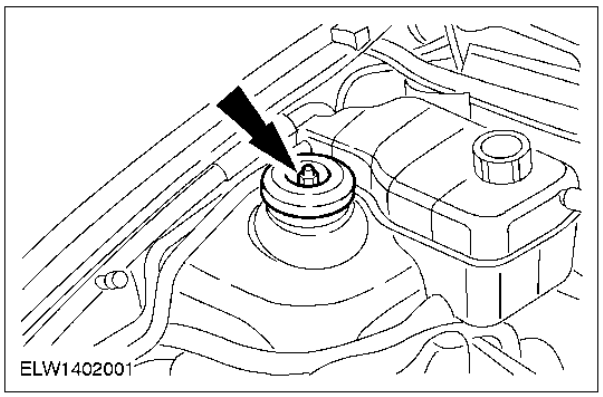

20. NOTE: Use an Allen key to stop the piston rod from turning.
Loosen the suspension strut retaining nut five turns on both sides (right-hand side shown).

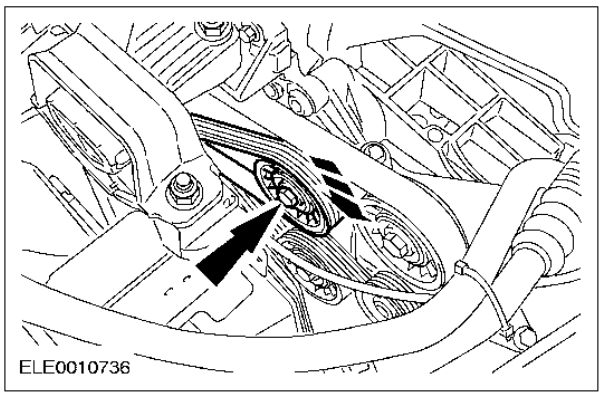

21. Remove the accessory drive belt.
    - Turn the belt tensioner clockwise and slip the belt off the pulleys.

22. Raise and support the vehicle. For additional information, refer to Section 100-02.

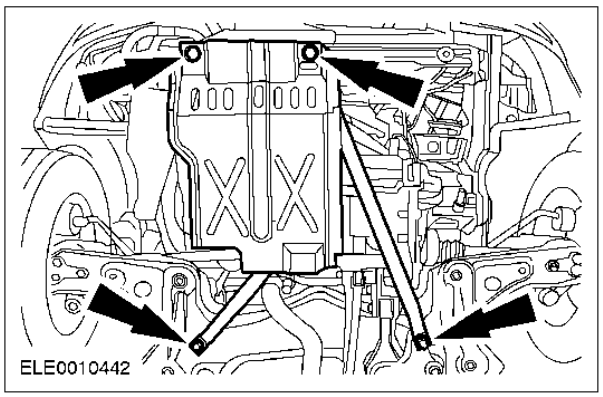

23. Remove the engine undershield.

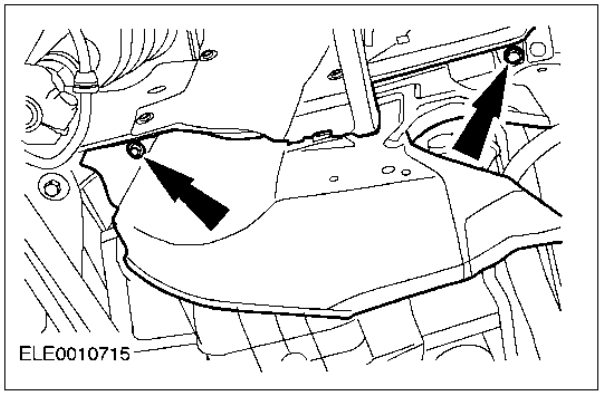

24. Remove the accessory drive belt cover.

REMOVAL (CONTINUED)

Vehicles with air conditioning

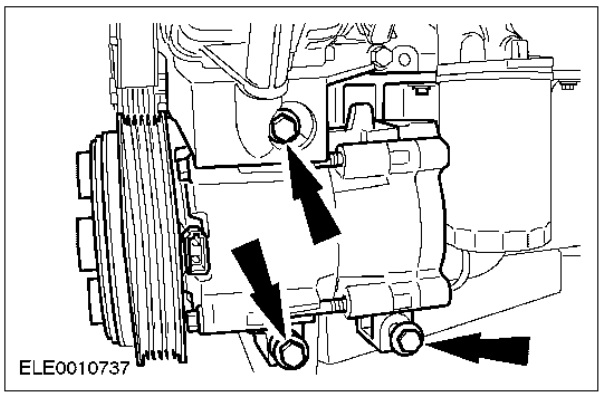

25. Remove the A/C compressor and secure it to the radiator crossmember.

All Vehicles

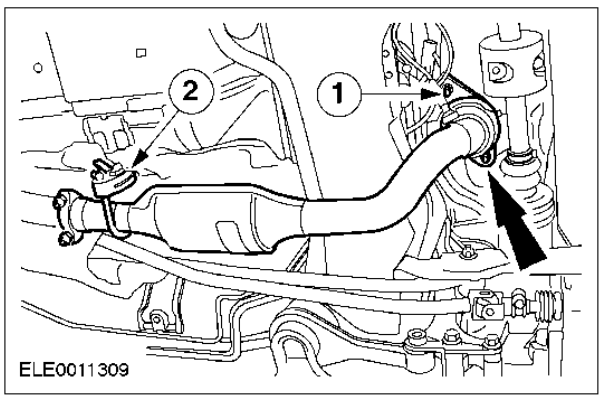

26. Disconnect the exhaust down pipe from the exhaust manifold and position it to one side.
    1. Remove the nuts.
    2. Detach the exhaust hanger insulator.
    - Remove and discard the gasket.

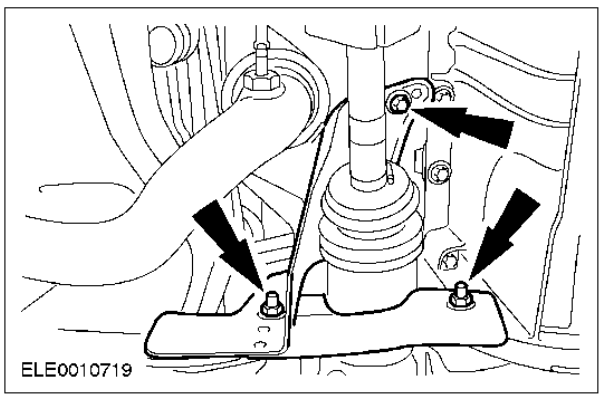

27. Remove the exhaust lower heat shield.

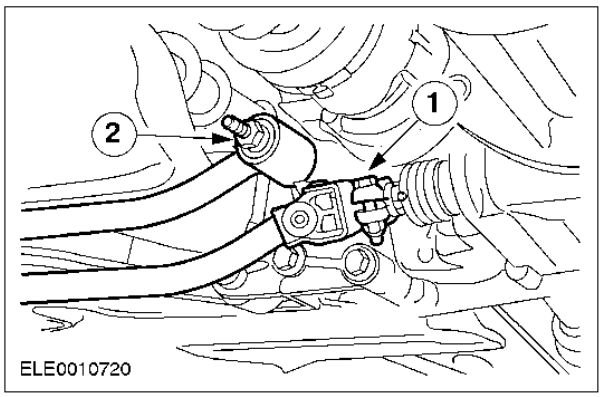

28. Disconnect the shift rod and gearshift stabiliser.
    1. Remove the shift rod.
    2. Remove the gearshift stabiliser.

REMOVAL (CONTINUED)

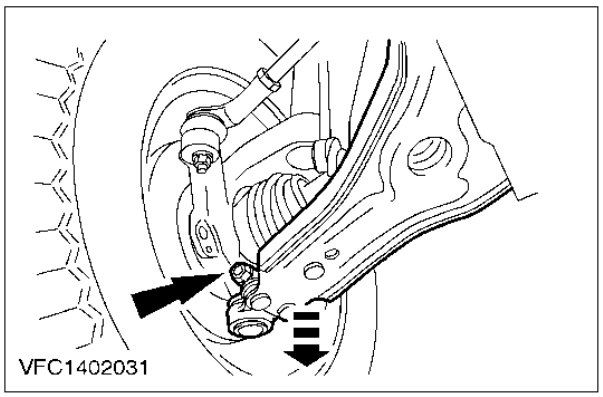

29. Disconnect the lower arm from the wheel knuckle on both sides (left-hand side shown).

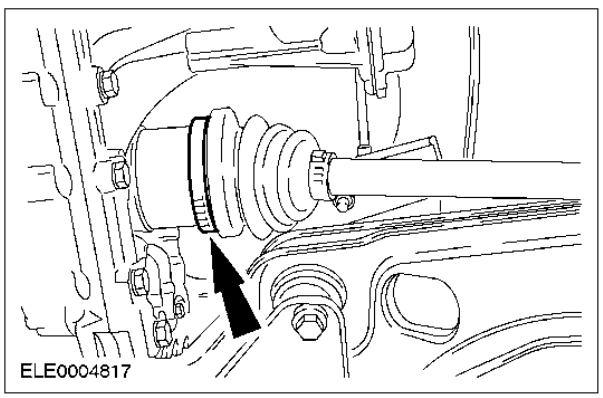

30. Remove the inner constant velocity (CV) joint boot clamp on both sides (right-hand side shown).

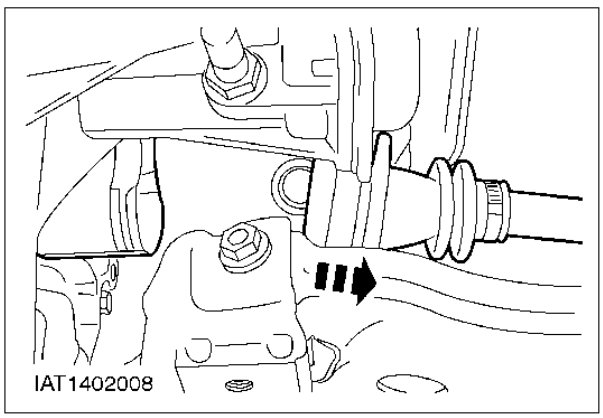

31. ⚠**CAUTION: To prevent damage to the halfshaft joints and boots, do not bend the inner halfshaft joints by more than 18 degrees, the outer one by not more than 45 degrees.**

NOTE: Remove the grease from out of the housing.

Remove the halfshafts on both sides (left-hand side shown).

- Secure the halfshafts to one side.

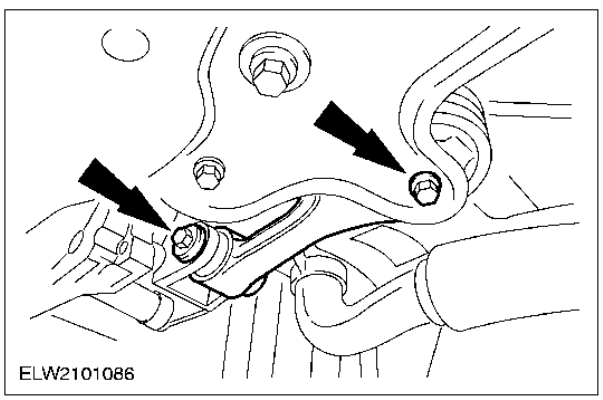

32. **NOTE:** The engine roll restrictor is under tension.

Remove the engine roll restrictor.

REMOVAL (CONTINUED)

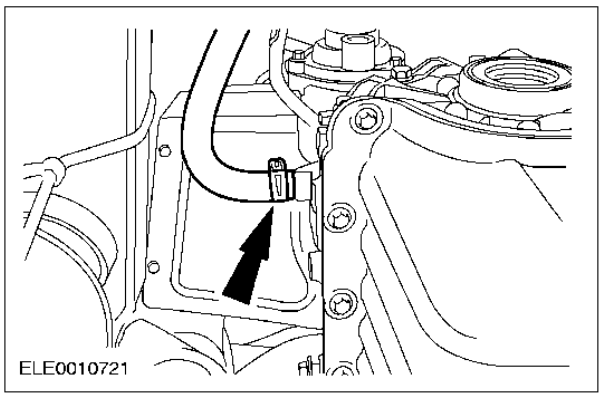

33. Remove the coolant return hose.

34. Position the assembly stand with wooden blocks on it under the vehicle.

35. Carefully lower the vehicle until the engine and transaxle assembly is on the assembly stand.

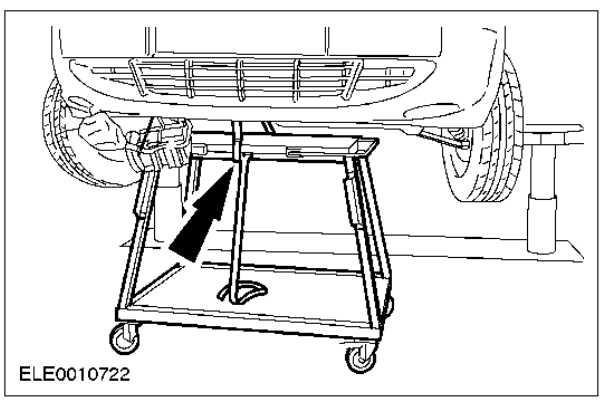

36. Secure the engine and transaxle assembly on the assembly stand with a retaining strap.

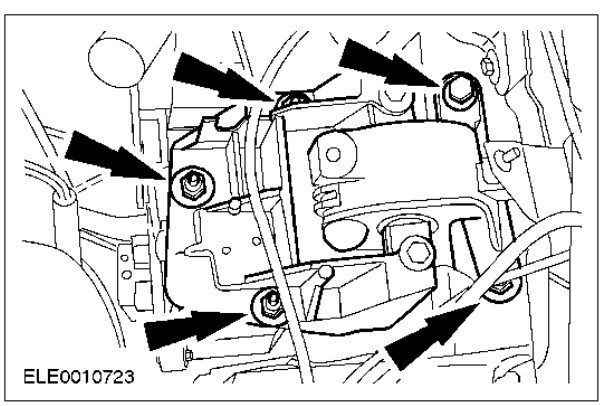

37. Remove the engine rear mounting bracket.

REMOVAL (CONTINUED)

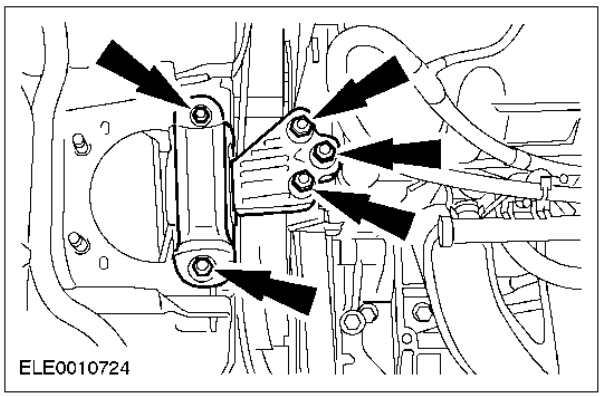

38. Remove the engine front mounting bracket.

39. Move the assembly stand forward with the engine and transaxle assembly.

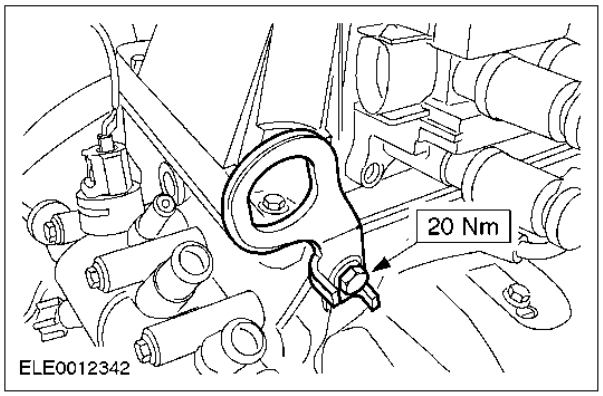

40. Install an engine lifting eye.

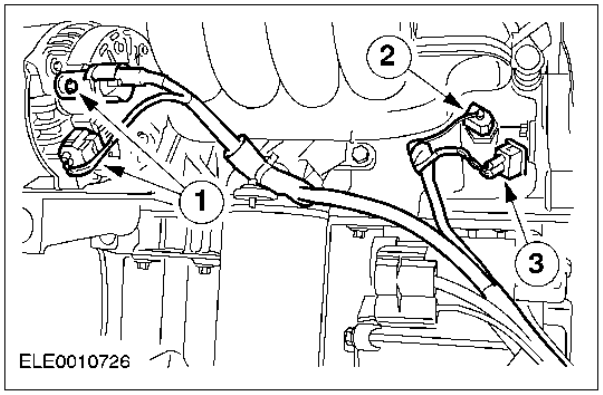

41. Disconnect the engine wiring harness electrical connectors.
    1. Remove the generator electrical connectors.
    2. Remove the oil pressure switch
    3. Remove the (CKP)- sensor

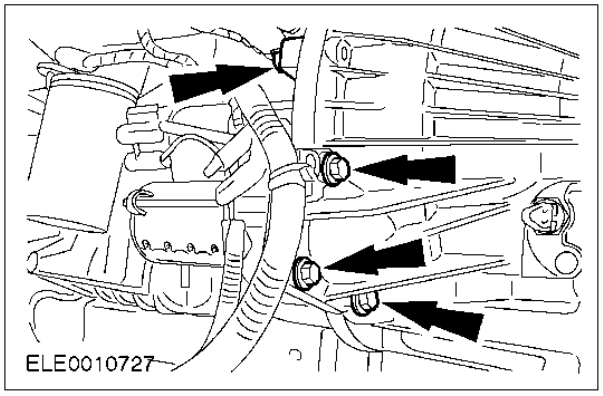

42. Remove the starter motor and the transaxle left-hand flange bolt.

REMOVAL (CONTINUED)

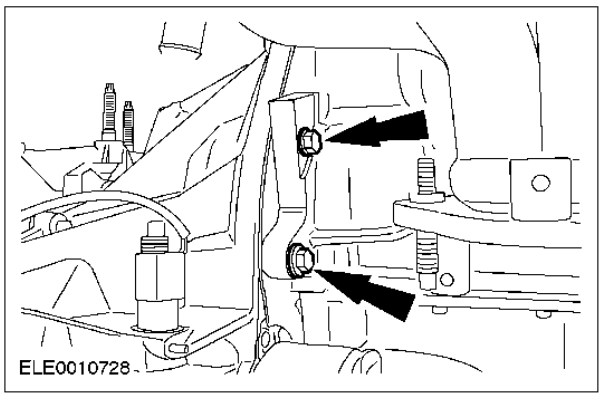

43. Remove the transaxle right-hand flange bolts.

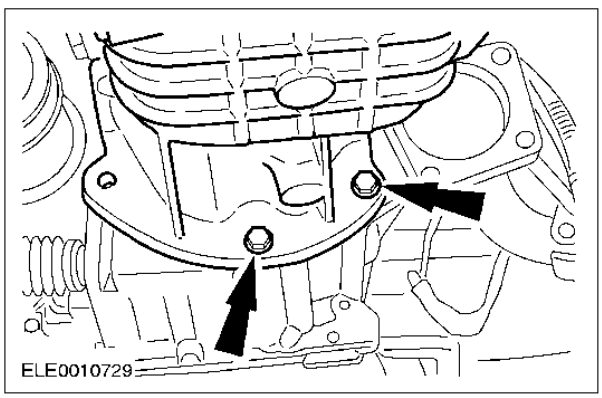

44. Remove the transaxle lower flange bolts.

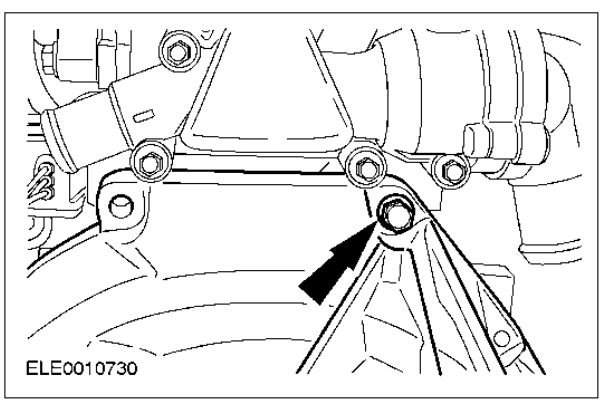

45. Remove the transaxle upper flange bolt.

46. Separate the transaxle from the engine.

DISASSEMBLY

Engine (21 134 8)

Special Tool(s)	
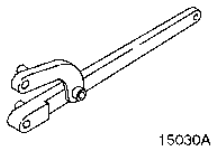 15030A	Universal Flange Holding Tool 205-072 (15-030 A)
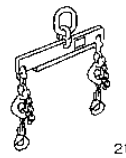 21068A	Lifting Bracket, Engine 303-122 (21-068 A)
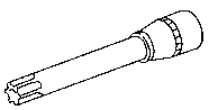 21167	Socket, Cylinder Head Bolt 303-392 (21-167)
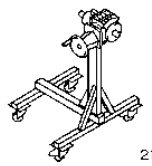 21187	Mounting Stand 303–435 (21–187)

Special Tool(s)	
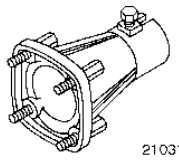 21031B	Mounting Bracket for 21–187 303-435-06 (21-031 B)
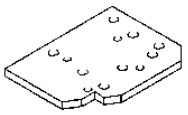 PZ21146C	Mounting Plate for 21–031 303-435-11 (21-146 C)

Material	Specification
Wire	
Cable ties	

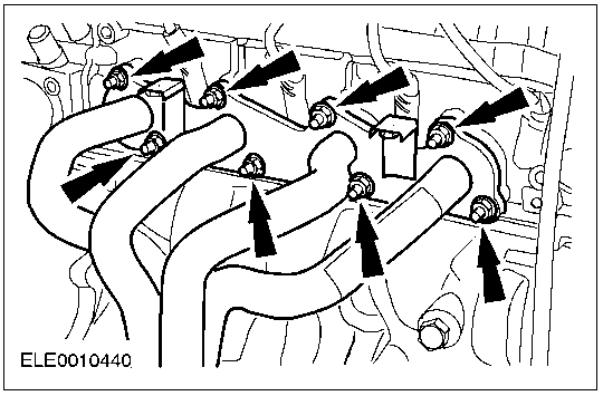

Disassembly

1. General remarks.
   - Cut cable ties as necessary and install new during installation.
2. Remove the exhaust manifold
   - Remove and discard the gasket.

DISASSEMBLY (CONTINUED)

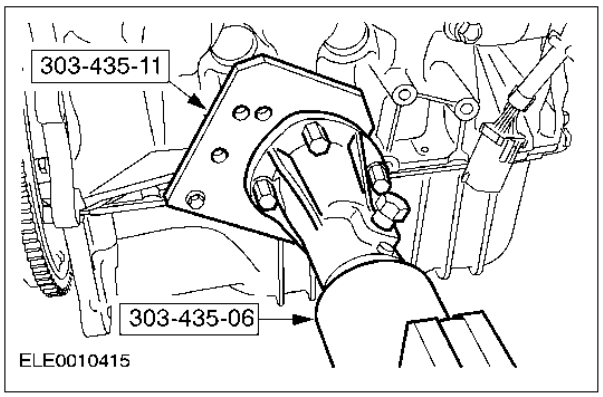

3. Using the special tools, secure the engine to the mounting stand.

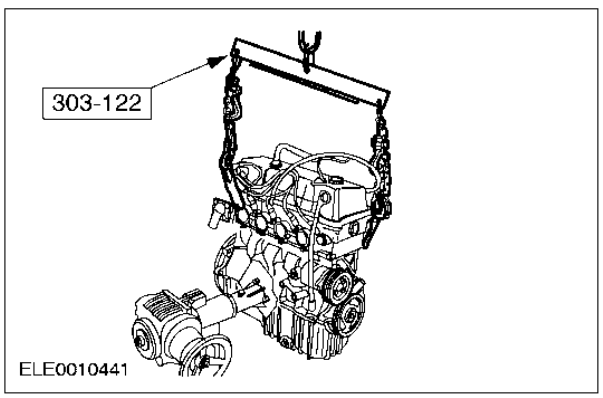

4. Remove the special tool.

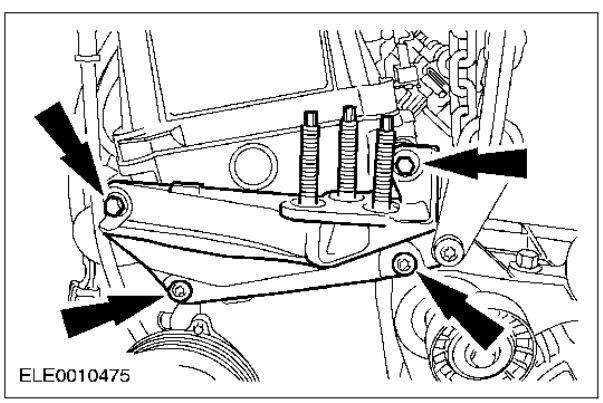

5. Remove the engine mounting bracket.

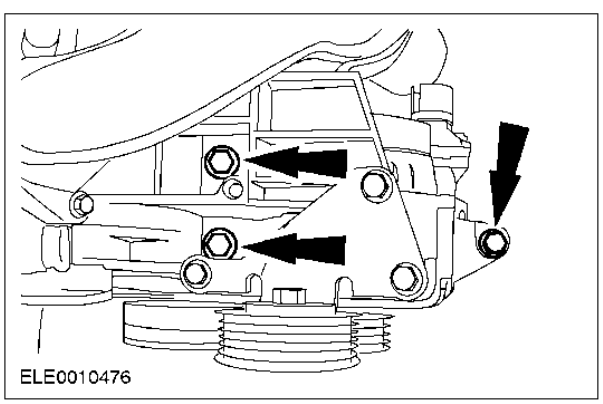

6. Remove the generator.

DISASSEMBLY (CONTINUED)

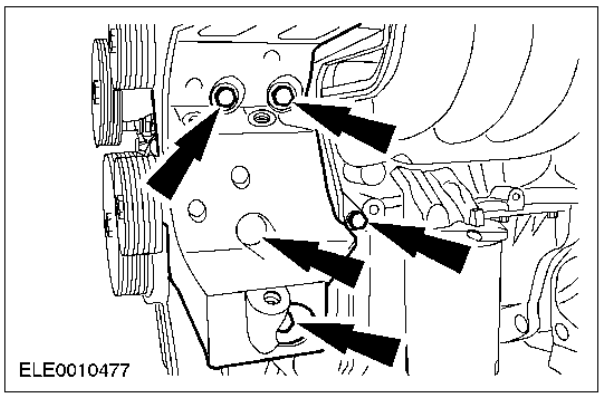

7. Remove the generator bracket.

8. Drain the engine oil.

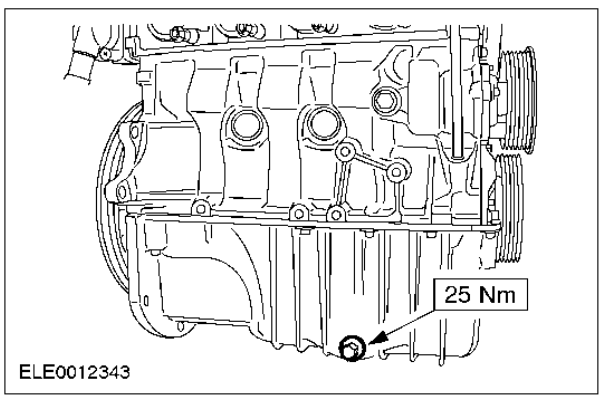

9. Install the drain plug.

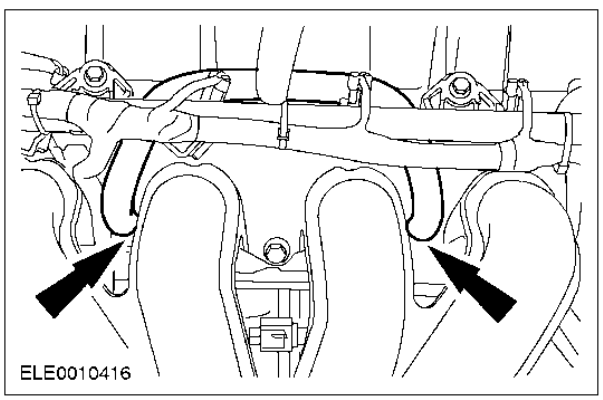

10. Disconnect the vacuum hoses.

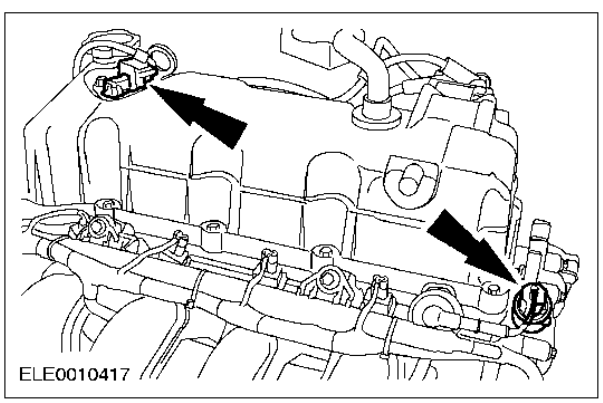

11. Disconnect the camshaft position (CMP) sensor and the engine coolant temperature (ECT) sensor electrical connectors.

DISASSEMBLY (CONTINUED)

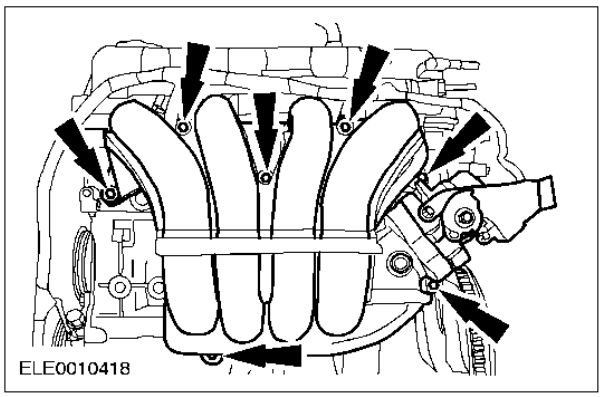

12. Remove the intake manifold.

Vehicles with 1.3L engine.

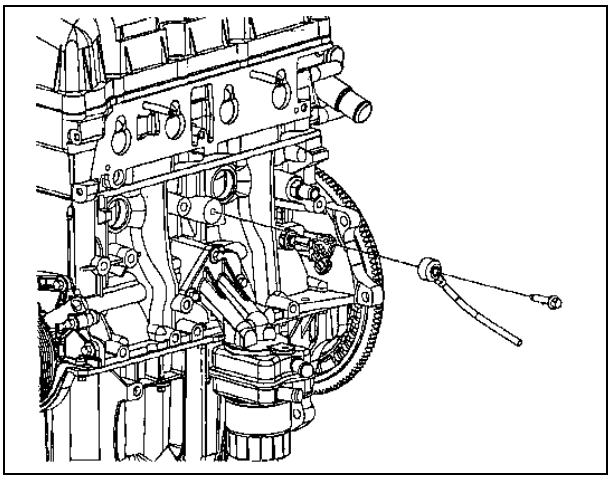

13. Remove the knock sensor.

Note: Inlet manifold removed for clarity.

All vehicles

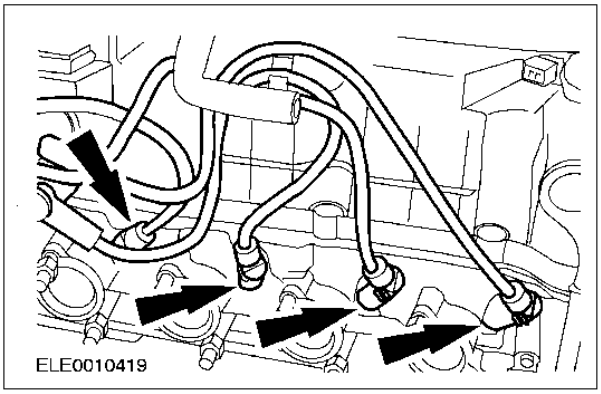

14. **CAUTION: Do not pull the cable when removing the spark plug connector. If necessary remove the ignition cables from the ignition coil to prevent kinking the cables. Turn the spark plug connectors before removing to loosen the seal.**

CAUTION: Pull off the spark plug connectors in line with the spark plugs (for bent spark plug connectors use Special Tool 303-622).

Remove the spark plugs.

DISASSEMBLY (CONTINUED)

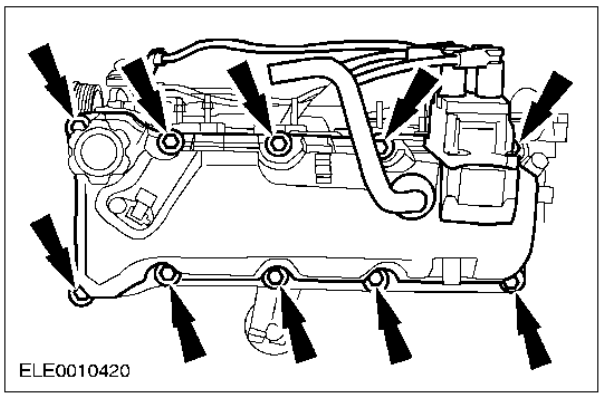

15. Remove the valve cover.

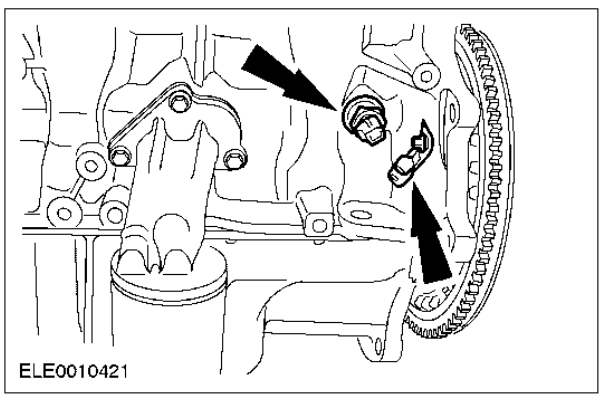

16. Remove the crankshaft position (CKP) sensor and the oil pressure switch.

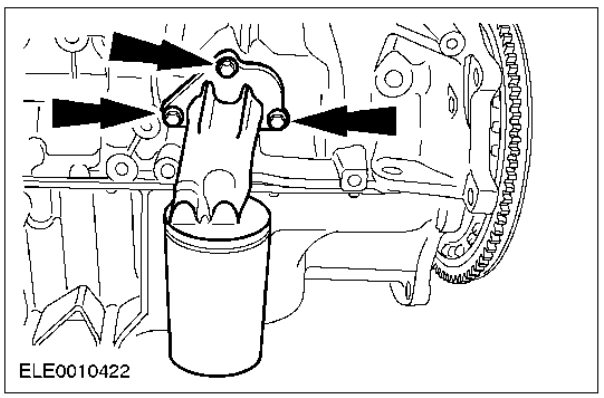

17. Remove the oil filter.

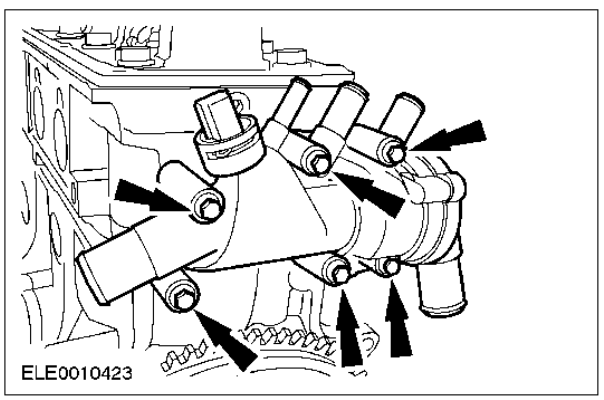

18. Remove the coolant flow control housing.

DISASSEMBLY (CONTINUED)

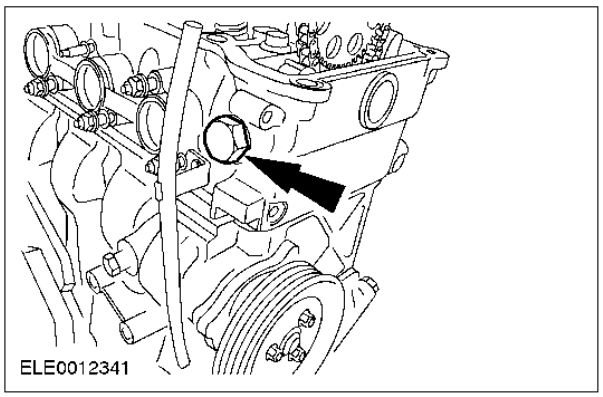

19. Remove the timing chain hydraulic tensioner.

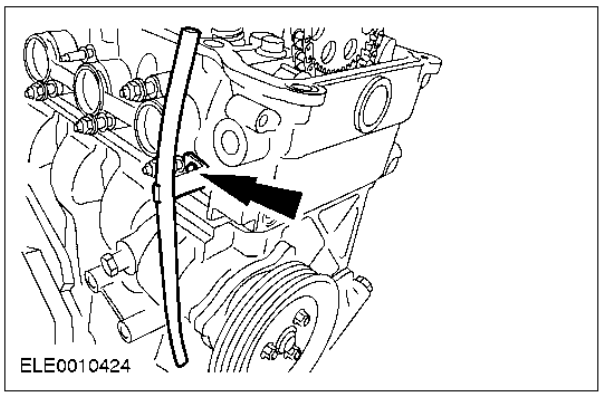

20. Remove the oil level indicator tube retaining bolt.

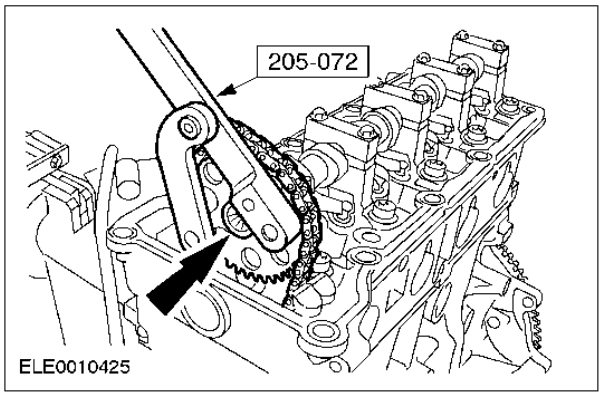

21. ⚠**CAUTION: Secure the timing chain with a wire hook to prevent it from falling down into the cylinder block.**

Using the special tool, remove the camshaft sprocket.

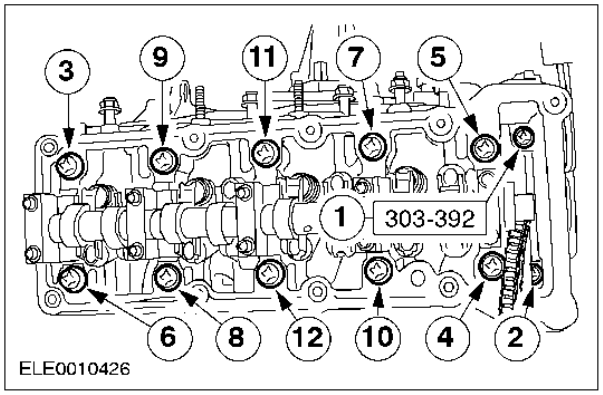

22. **NOTE:** Loosen the bolts in the indicated sequence.

Using the special tool, remove the cylinder head.

1. Remove the cylinder head bolts.
2. Remove and discard the gasket.

DISASSEMBLY (CONTINUED)

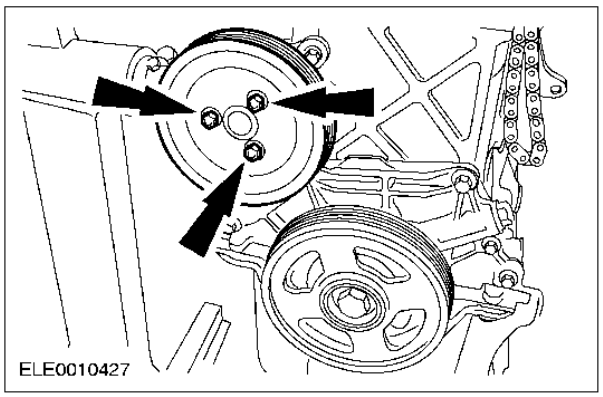

23. Remove the water pump pulley.

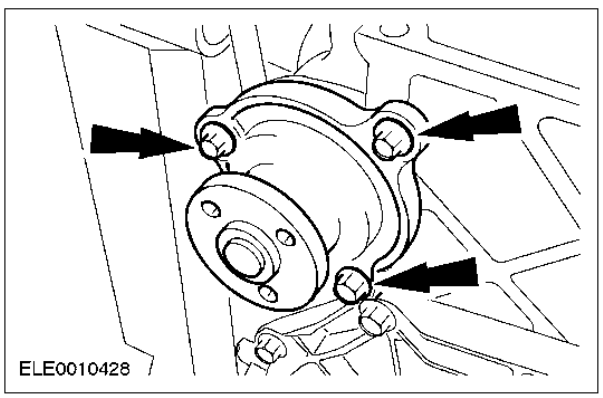

24. Remove the water pump.

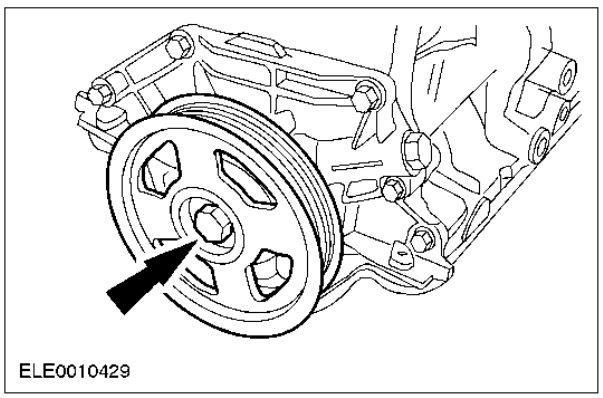

25. Remove the crankshaft pulley.

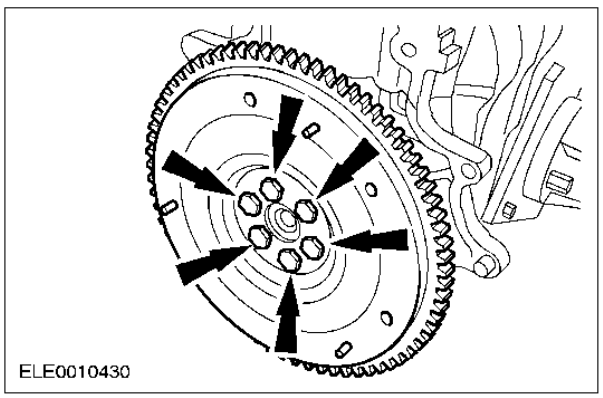

26. Remove the flywheel.

DISASSEMBLY (CONTINUED)

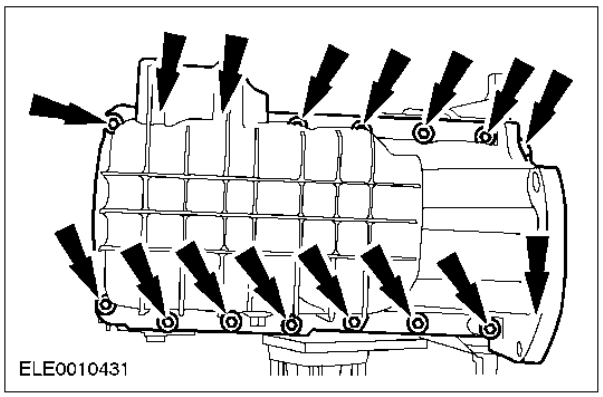

27. **CAUTION: Remove the oil pan by pulling it downwards to prevent oil deposits or abraded particles from entering the engine.**

    Remove the oil pan.
    - Remove and discard the gasket.

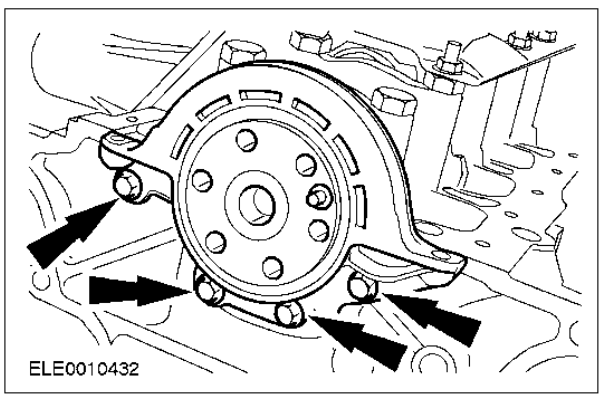

28. Remove and discard the rear oil seal retainer.

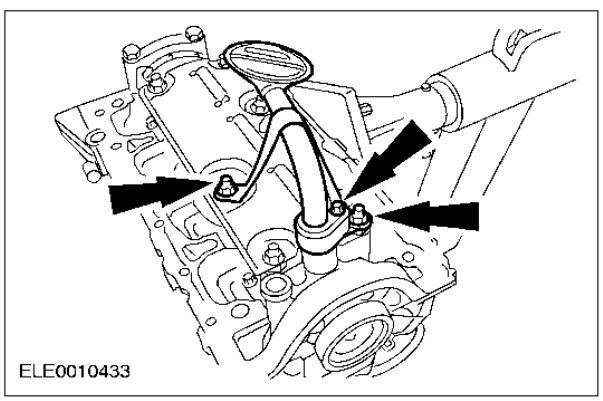

29. Remove the oil pump screen and pick up tube.

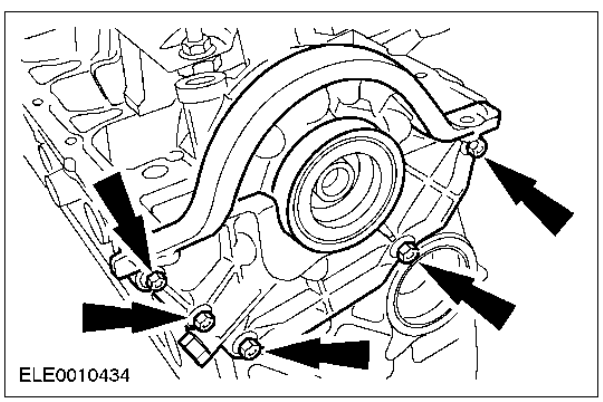

30. Remove the oil pump.
    - Remove and discard the gasket and the crankshaft front oil seal.
    - Remove the timing chain.

DISASSEMBLY (CONTINUED)

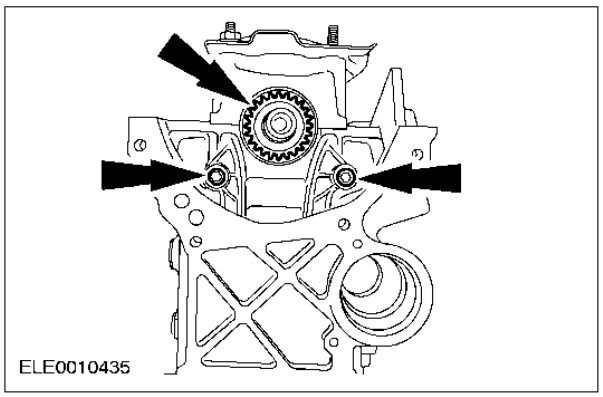

31. Remove the chain guide, the chain tensioner arm and the crankshaft sprocket.

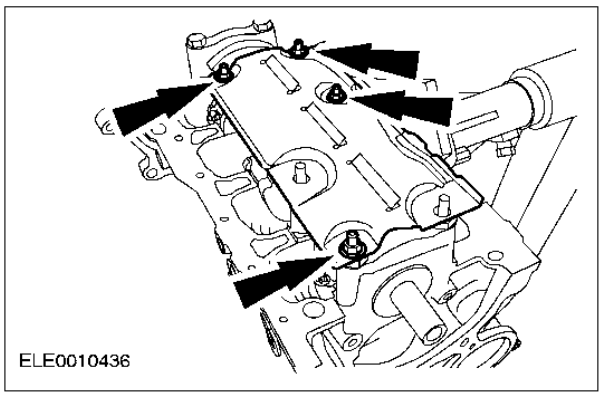

32. Remove the oil pan baffle.

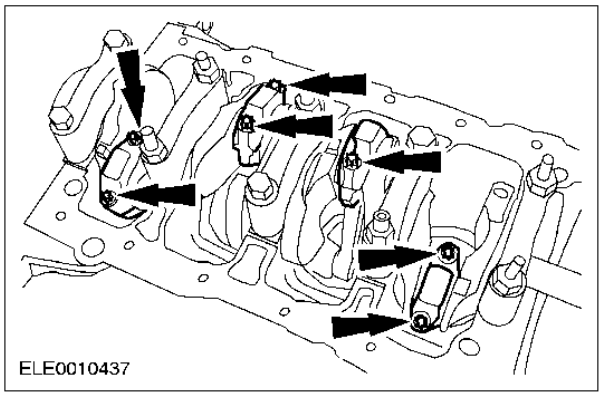

33. **NOTE:** Do not damage the cylinder liner surfaces. Keep the connecting rods, bearing shells and bearing caps in order for reassembly.
    Remove the pistons.
    1. Remove the connecting rod bearing cap.
    2. Push out the pistons with connecting rods and bearing shells.

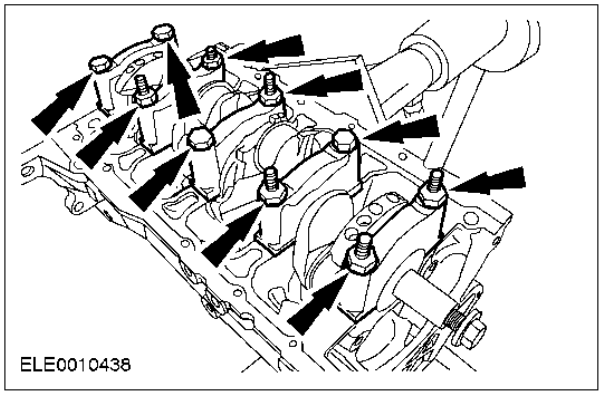

34. **NOTE:** Keep the bearing shells and thrust half-washers in order.
    Remove the crankshaft.
    1. Remove the main bearing caps.
    2. Remove the crankshaft.
    3. Remove the bearing shells and thrust washers. Keep all parts in order for reassembly.

DISASSEMBLY AND ASSEMBLY OF SUBASSEMBLIES

Cylinder Head (21 165 6)

Special Tool(s)	
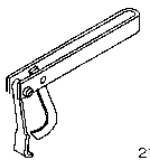 21194	Compressor, Valve Spring 303-461 (21-194)
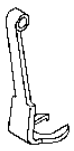 2119401	Adapter for 303-461 303-461-01 (21-194-01)

Special Tool(s)	
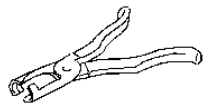 PZ21211	Pliers, Valve Stem Oil Seal 303-508 (21-211)

Disassembly

1. Remove the exhaust heat shield.

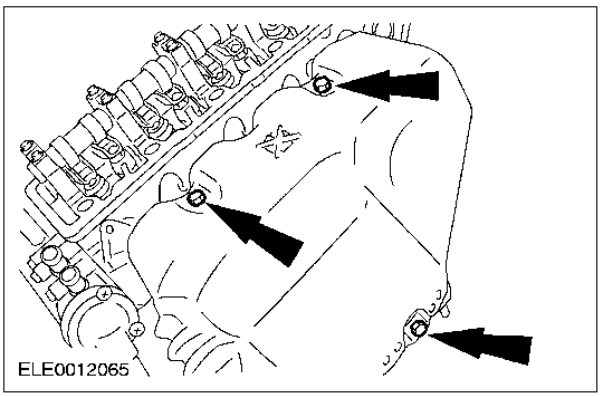

2. Remove the exhaust manifold.
   - Remove and discard the gasket.

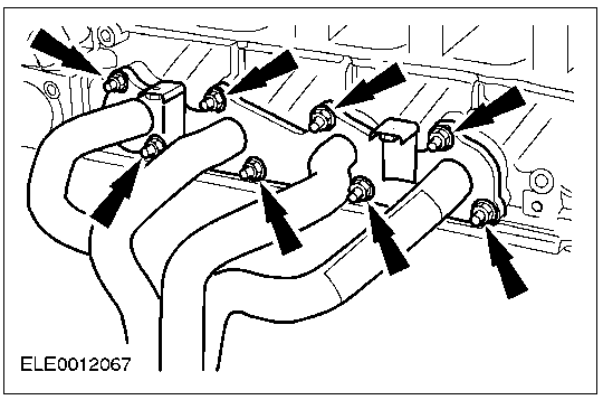

DISASSEMBLY AND ASSEMBLY OF SUBASSEMBLIES (CONTINUED)

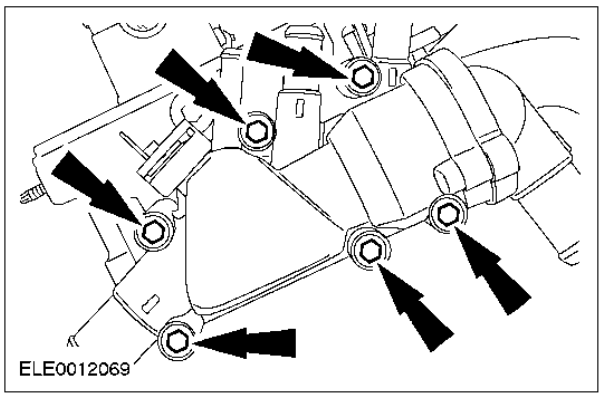

3. Remove the coolant flow control housing.

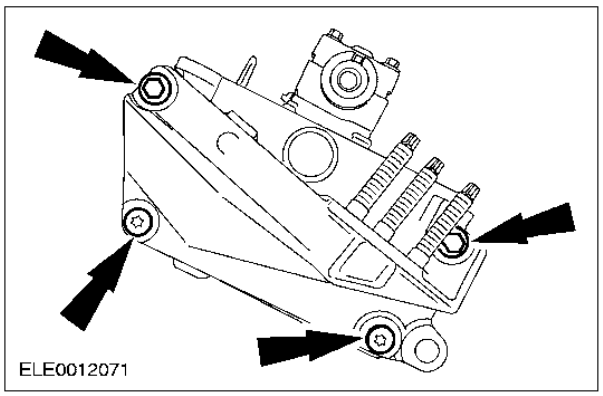

4. Remove the engine mounting bracket.

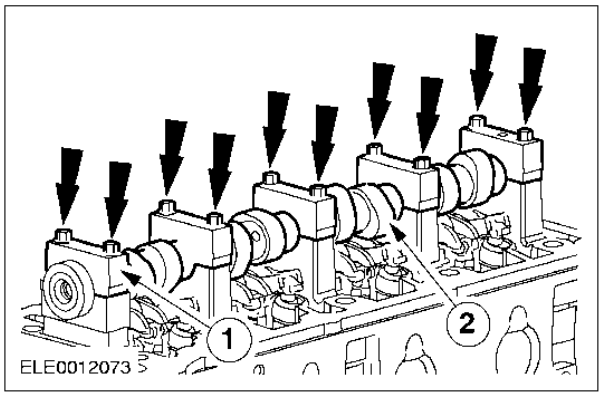

5. Remove the camshaft bearing caps and the camshaft.
   - Slacken each bolt of the camshaft bearing caps by one turn until the camshaft is released.
   1. Remove the camshaft bearings caps.
   2. Remove the camshaft.

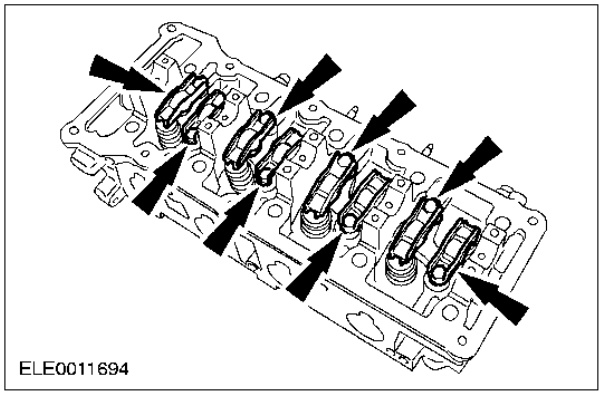

6. **NOTE:** Keep all parts in order for reassembly. Remove the roller finger cam followers.

DISASSEMBLY AND ASSEMBLY OF SUBASSEMBLIES (CONTINUED)

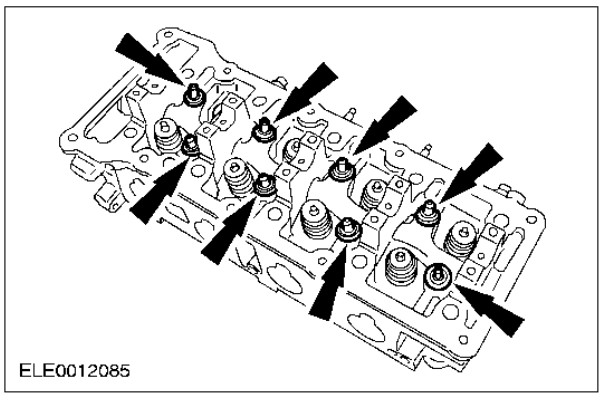

7. NOTE: Keep all parts in order for reassembly. Remove the hydraulic lash adjusters.

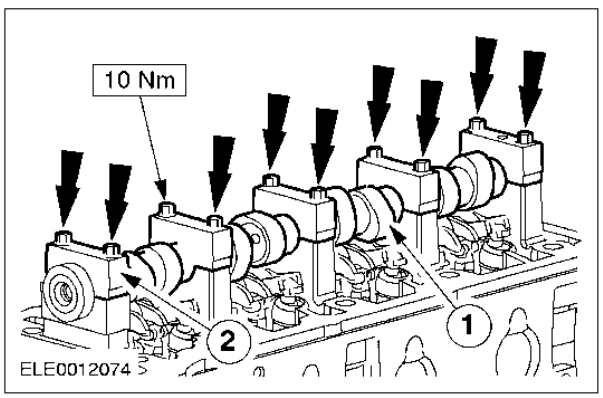

8. Install the camshaft and the camshaft bearing caps.
   1. Install the camshaft.
   2. Install the camshaft bearing caps.

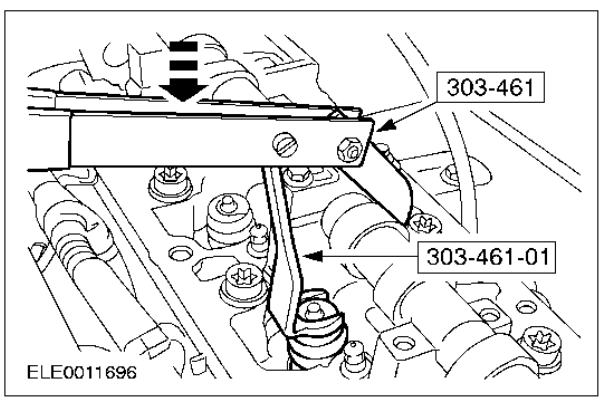

9. NOTE: Keep all parts in order for reassembly. Using the special tool, remove the valve springs.
   1. Compress the valve springs.
   2. Remove the valve collets, the valve spring retainers and the valve springs.

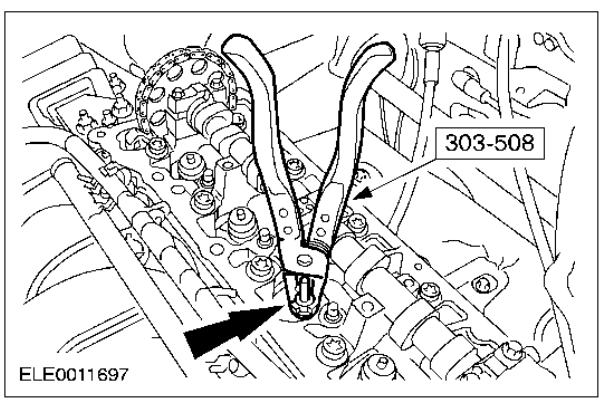

10. Using the special tool, remove the valve seals.

DISASSEMBLY AND ASSEMBLY OF SUBASSEMBLIES (CONTINUED)

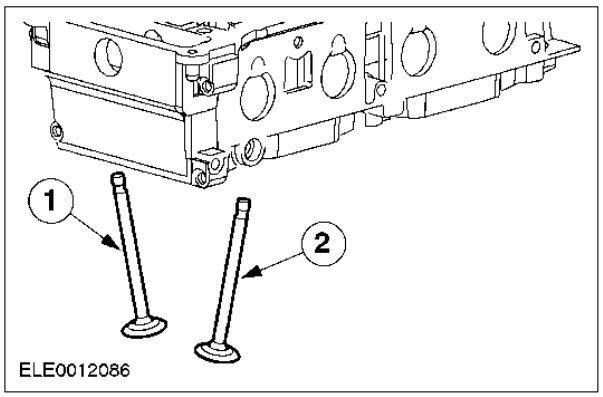

11. NOTE: Keep all parts in order for reassembly.

Remove the valves.

1. Exhaust valve.
2. Intake valve.

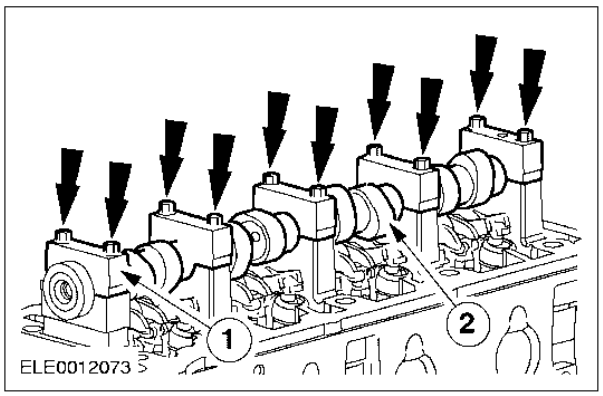

12. NOTE: Keep all parts in order for reassembly.

Remove the camshaft bearing caps and the camshaft.

1. Remove the camshaft bearings caps.
2. Remove the camshaft.

Assembly

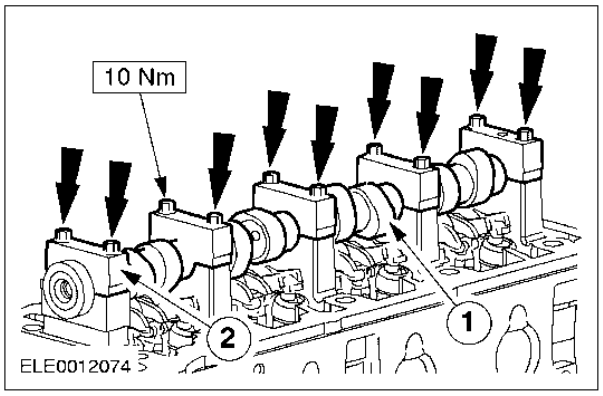

1. Install the camshaft and the camshaft bearing caps.
   1. Install the camshaft.
   2. Install the camshaft bearing caps.

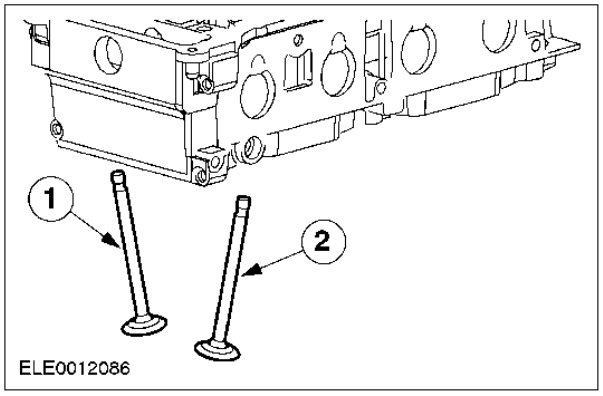

2. Install the valves.
   1. Exhaust valve.
   2. Intake valve.

DISASSEMBLY AND ASSEMBLY OF SUBASSEMBLIES (CONTINUED)

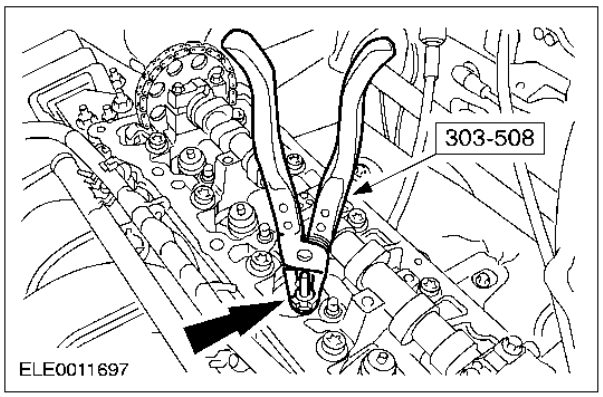

3. NOTE: The valve seals are fully pressed in by valve spring pressure.
Using the special tool, install the valve seals.

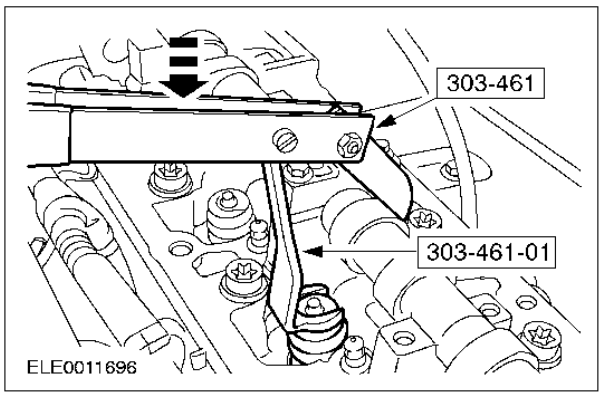

4. Using the special tools, install the valve spring.
   1. Compress the valve spring and the valve spring retainer.
   2. Insert the valve collets.

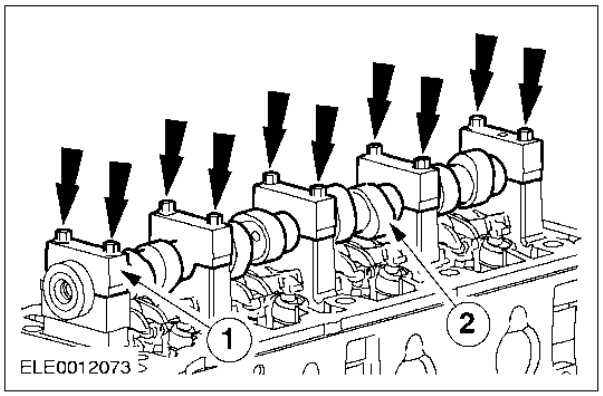

5. Remove the camshaft bearing caps and the camshaft.
   1. Remove the camshaft bearing caps.
   2. Remove the camshaft.

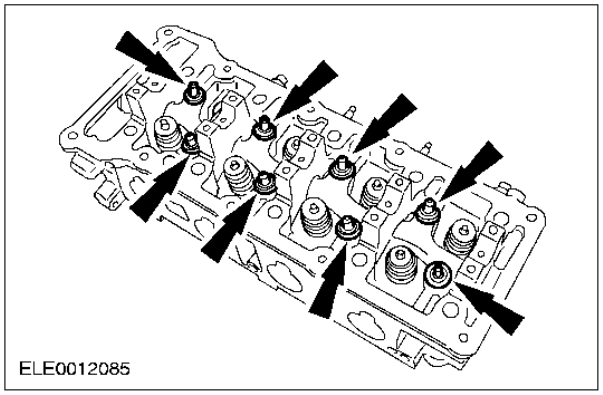

6. Install the hydraulic lash adjusters.

DISASSEMBLY AND ASSEMBLY OF SUBASSEMBLIES (CONTINUED)

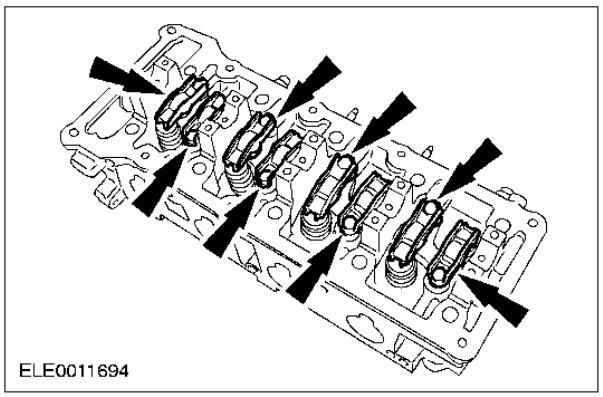

7. Install the roller finger cam followers.

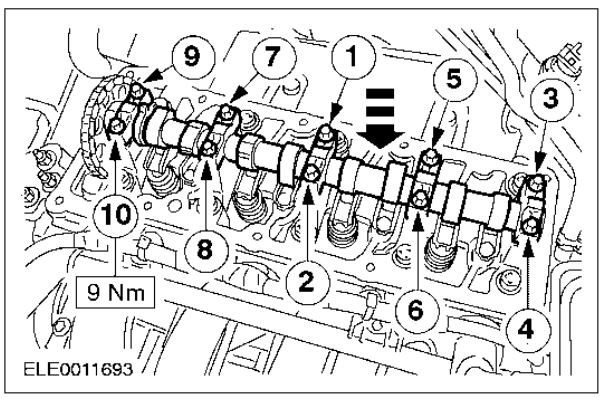

8. **NOTE:** Make sure that the camshaft sprocket alignment slot in the camshaft slot is uppermost (12 o'clock) when installing the camshaft.

   NOTE: Apply a drop of hypoid oil (WSQ-2C9002-AA) to each cam bearing (upper and lower) half.

   Install the camshaft and the camshaft bearing caps.

   1. Install the camshaft and tighten the bearing caps in two stages.
   2. Tighten each of the camshaft bearing cap bolts by 90° degrees in the indicated sequence.
   3. Tighten the bolts to the specified torque in the indicated sequence.

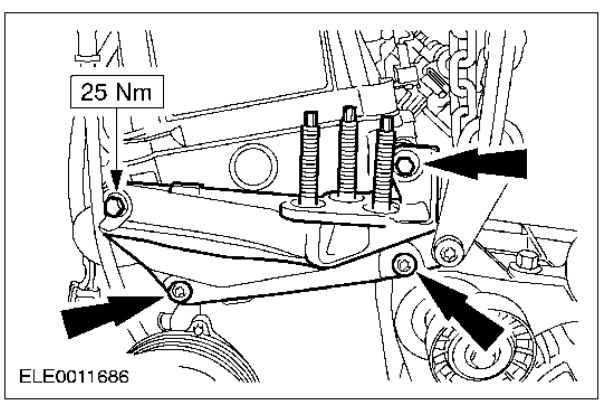

9. Install the engine mounting bracket.

DISASSEMBLY AND ASSEMBLY OF SUBASSEMBLIES (CONTINUED)

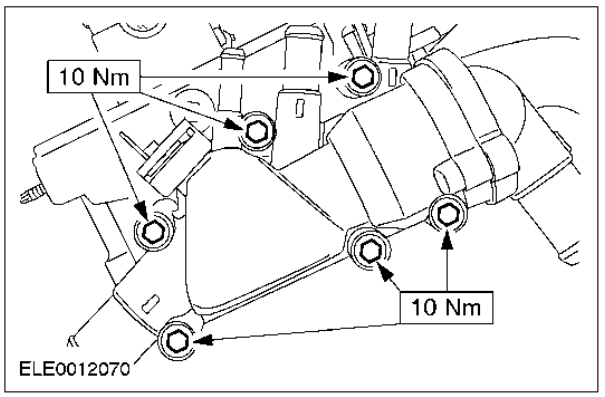

10. NOTE: Install a new gasket if the original is damaged.
Install the coolant flow control housing.

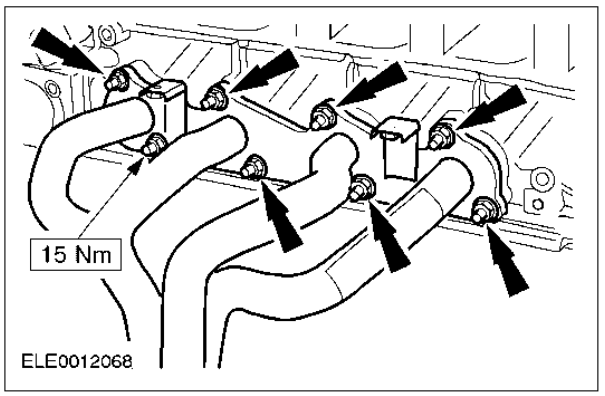

11. Install the exhaust manifold with a new gasket.

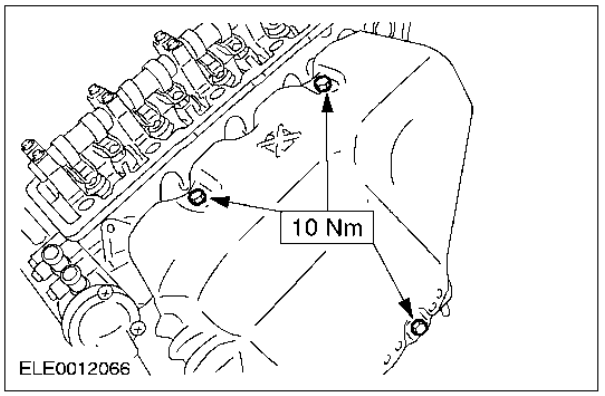

12. Install the exhaust heat shield.

ASSEMBLY

Engine (21 134 8)

Special Tool(s)	
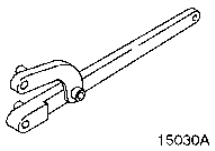 15030A	Universal Flange Holding Tool 205-072 (15-030 A)
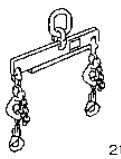 21068A	Lifting Bracket, Engine 303-122 (21-068 A)
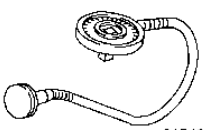 21540	Angle gauge 303-174 (21-540)
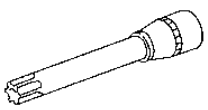 21167	Socket, Cylinder Head Bolt 303-392 (21-167)
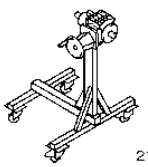 21187	Mounting Stand 303-435 (21-187)
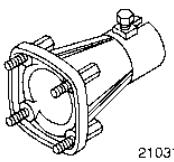 21031B	Mounting Bracket 303-435-06 (21-031 B)

Special Tool(s)	
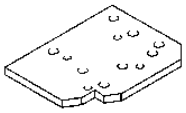 PZ21146C	Mounting Plate 303-435-11 (21-146 C)
	Installer, Oil Seal 303-656 (21-233)

General Equipment
Assembly stand
Cable ties
Wire
Piston ring compressor

Material	Specification
Engine oil	SAE 15W 40 SH
Sealer	Loctite 5910
Sealer	Loctite 648

Assembly

1. Measure the crankshaft. For additional information, refer to Section 303-00.
2. Measure the camshaft. For additional information, refer to Section 303-00.
3. Measure the cylinder bore. For additional information, refer to Section 303-00.
4. Measure the pistons. For additional information, refer to Section 303-00.

ASSEMBLY (CONTINUED)

5. Measure the piston ring end gaps. For additional information, refer to Section 303- 00.

6. Check the cylinder head for distortion. For additional information, refer to Section 303- 00.

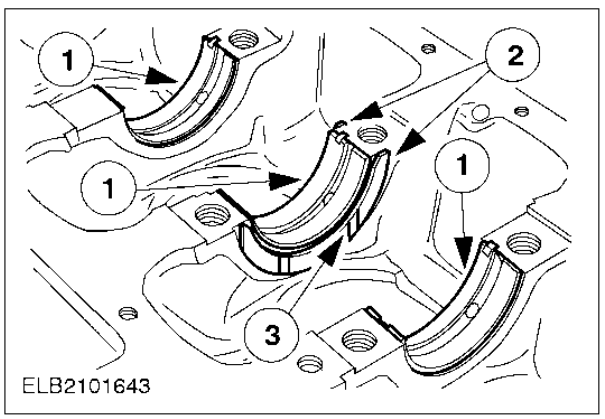

7. **NOTE:** The oil grooves on the thrust half washers must be visible.
   Install the main bearing shells.
   1. Insert the main bearing shells.
   2. Insert the thrust half washers into the center main bearing.

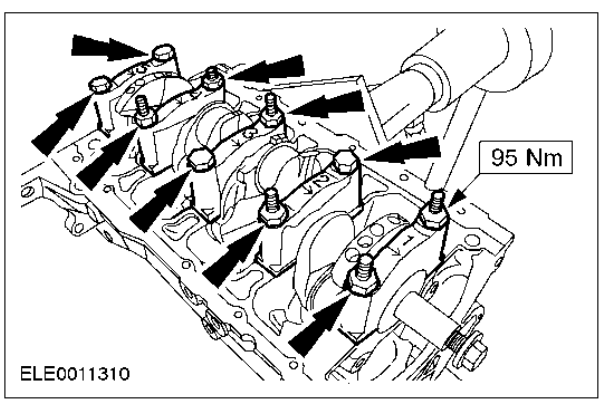

8. **NOTE:** The bearing cap numbering starts at the timing chain end, to which the arrows also point.
   Install the crankshaft.
   1. Lubricate the main bearing journals and bearing shells with engine oil.
   2. Install the crankshaft main bearing caps with their associated bearing shells.
   3. Tighten the bolts.
   4. Make sure that the crankshaft is in TDC cylinder No. 1 position.

ASSEMBLY (CONTINUED)

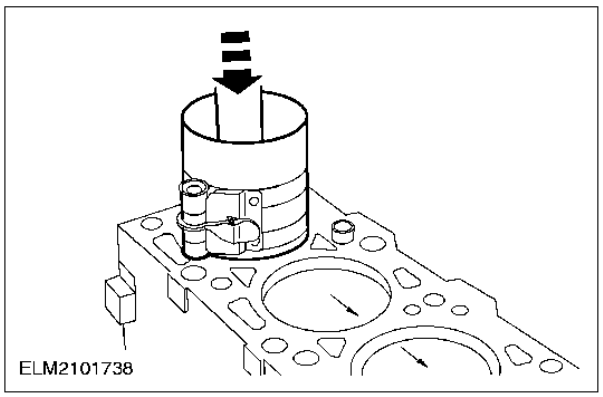

9. **NOTE:** The connecting rod numbering starts at the timing chain end. The arrow on the piston crown points towards the timing chain end.

   Install the pistons.
   - Lubricate the pistons and cylinder liners with engine oil.
   - Distribute the piston ring end gaps uniformly around the circumference. This also applies to the elements of the oil scraper ring.
   - Compress the piston rings using a piston ring compressor.
   - Using the handle of a hammer, press pistons 1 and 4 into the cylinders. The connecting rod bearing journal must be at BDC.
   - Check the bearing shells are clean and dry and install them in the associated connecting rods and bearing caps.
   - Install the bearing caps.
   - Turn the crankshaft through 180 degrees and install pistons Numbers 2 and 3.

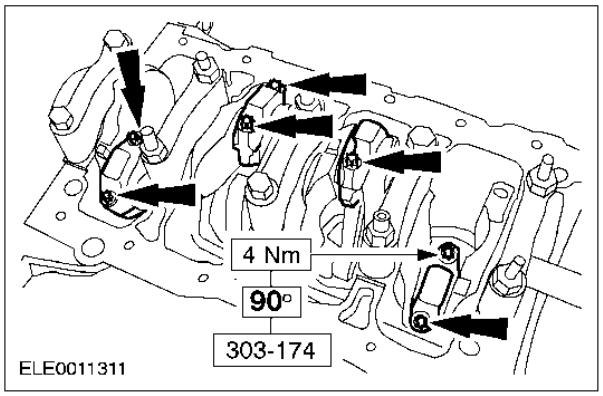

10. ⚠**CAUTION: Use new bolts.**

   NOTE: The connecting rods and connecting rod bearing caps have the same numbering.

   Fit the bearing caps.
   - Lubricate the bearing shells and journals with engine oil.
   - Install the appropriate connecting rod bearing caps and bearing shells and tighten them in two stages.
   - Stage I : 4 Nm
   - Stage II : 90° degrees

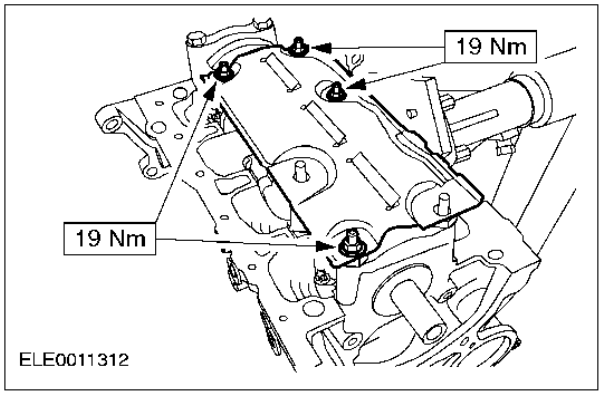

11. Install the oil pan baffle.

ASSEMBLY (CONTINUED)

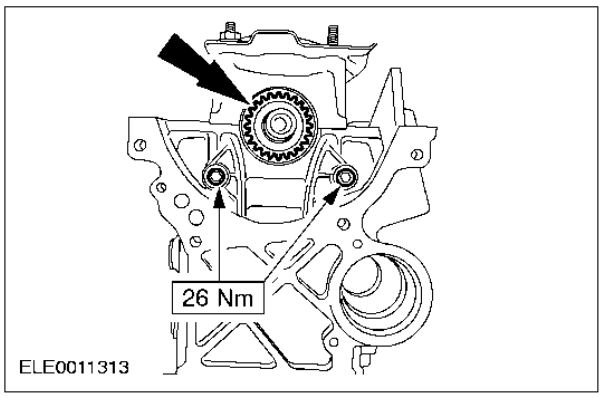

12. Install the chain guide, the chain tensioner arm, and the crankshaft timing sprocket.

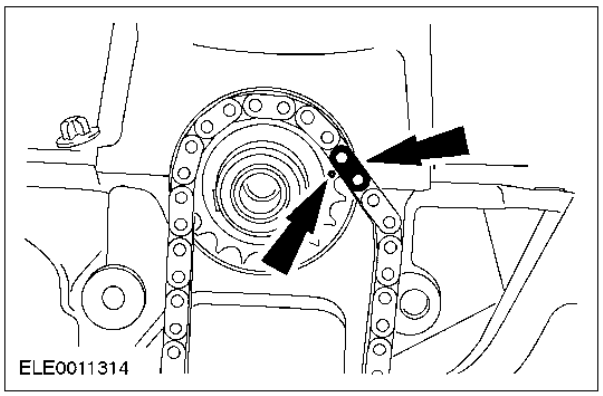

13. **NOTE:** The mark on the crankshaft timing sprocket and the single colored link of the timing chain must line up.
    Install the timing chain.

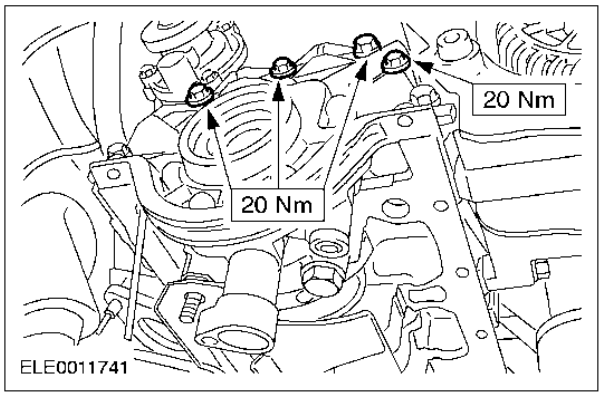

14. **NOTE:** Use a new oil pump.
    NOTE: Use a new gasket.
    NOTE: The oil pump sealing flange must be within ±0.20 mm of cylinder block bottom sealing flanges.

    Install the oil pump.

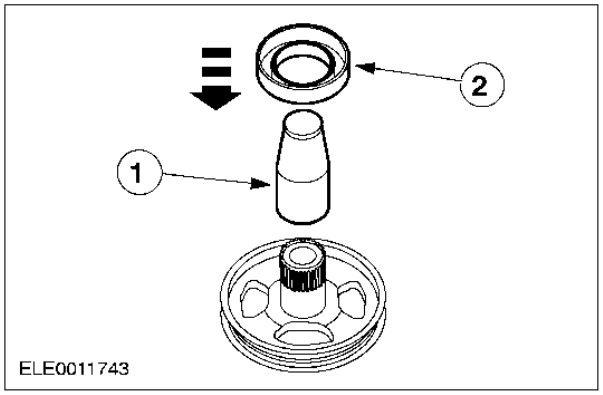

15. **NOTE:** The pulley, sleeve, housing and sealing lip must be free of oil.
    NOTE: Each new oil seal is supplied with a plastic assembly sleeve.
    Install the oil seal to the crankshaft pulley.
    1. Install the plastic sleeve to the crankshaft pulley.
    2. Install the oil seal to the crankshaft pulley.
    - Remove the plastic sleeve.

ASSEMBLY (CONTINUED)

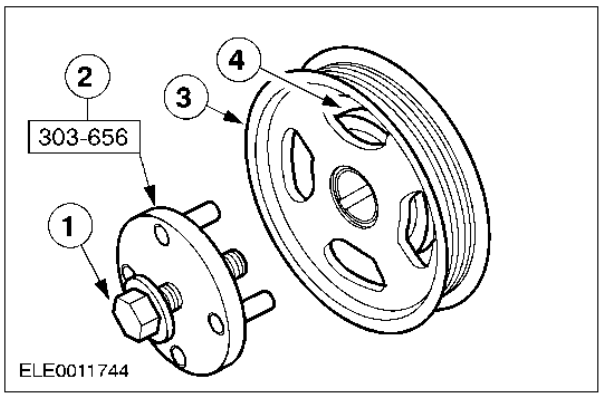

16. Using the special tool, install the crankshaft pulley.
    1. Crankshaft pulley bolt
    2. Special tool
    3. Crankshaft pulley
    4. New oil seal

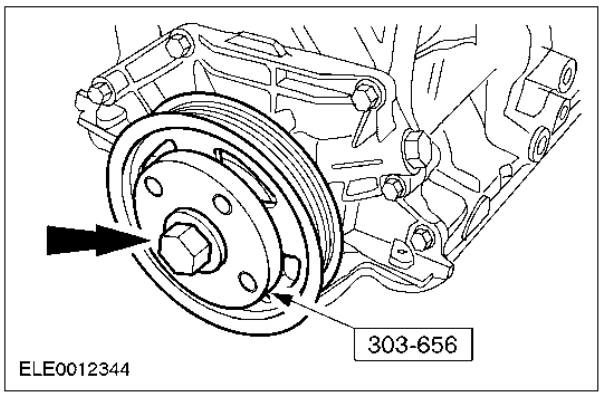

17. **CAUTION: To prevent damage to the oil seal, do not pull the crankshaft pulley out more than 3 mm during seal installation.**
    Tighten the crankshaft pulley bolt until the oil seal is fully installed.

18. Remove the crankshaft pulley bolt.

19. Install the crankshaft pulley bolt.

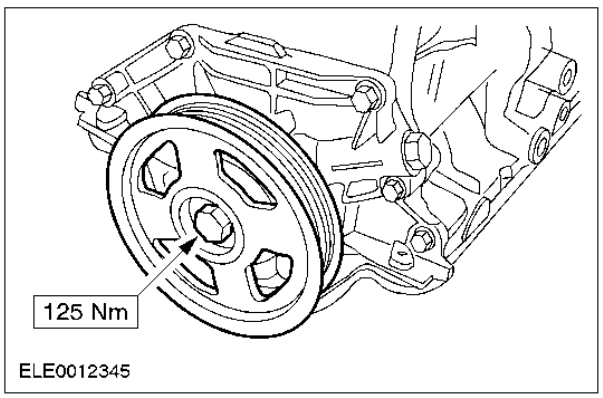

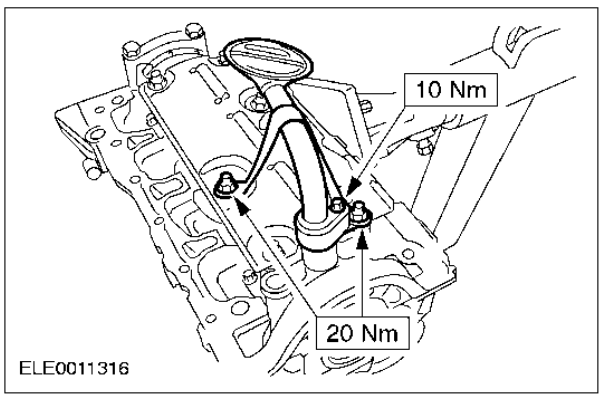

20. **NOTE:** Make sure that the O-ring seal is correctly located.
    Install the oil pump screen and pick up tube.

ASSEMBLY (CONTINUED)

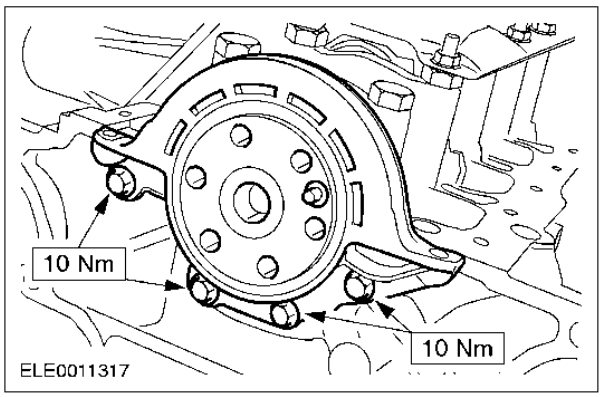

21. NOTE: A special guide for assembly is supplied with the new rear oil seal retainer.

NOTE: The sealing lip must be free of oil.

NOTE: Make sure that the dowel pins are correctly located

Install a new rear oil seal retainer.

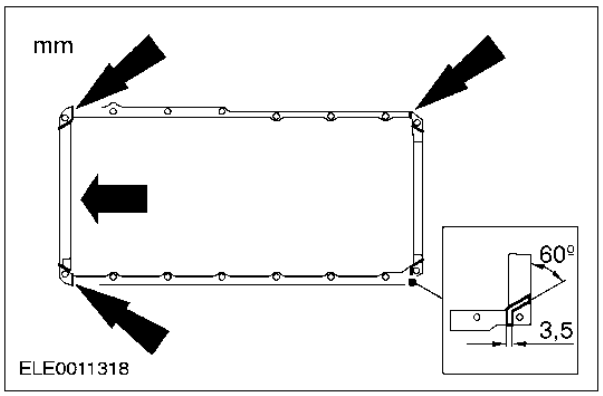

22. NOTE: Apply a bead of sealer (LOCTITE 5910) 3 to 5 mm wide to the marked areas. Apply sealer to the cylinder block joints.

- Wait no longer than 5 minutes to install the oil pan gasket.

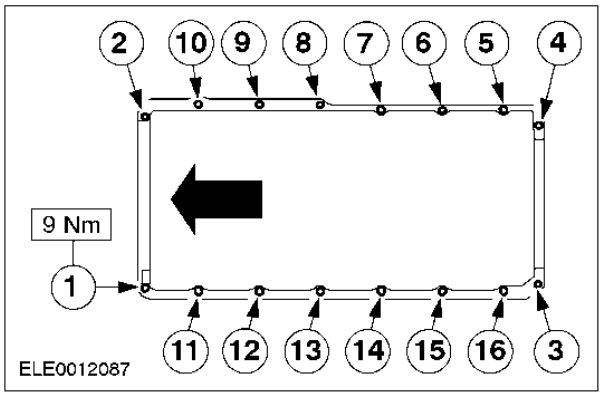

23. Stage II - Install the oil pan.
    - Tighten the oil pan bolts in the indicated sequence.

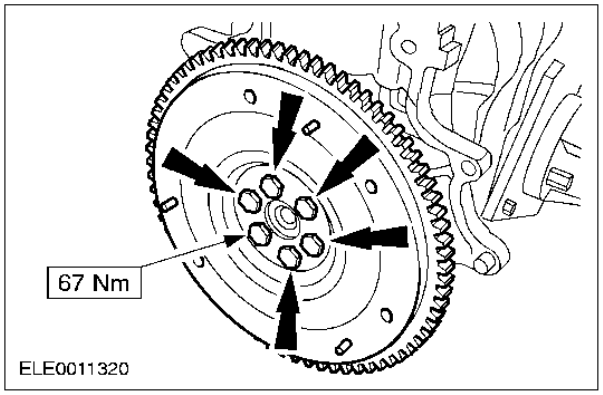

24. Install the flywheel.

ASSEMBLY (CONTINUED)

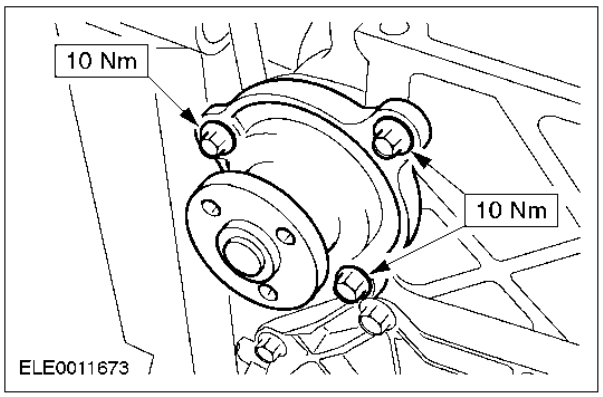

25. Install the water pump with a new gasket.

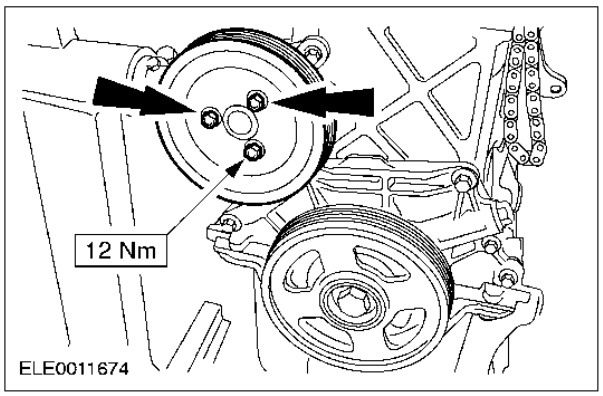

26. Install the water pump pulley.

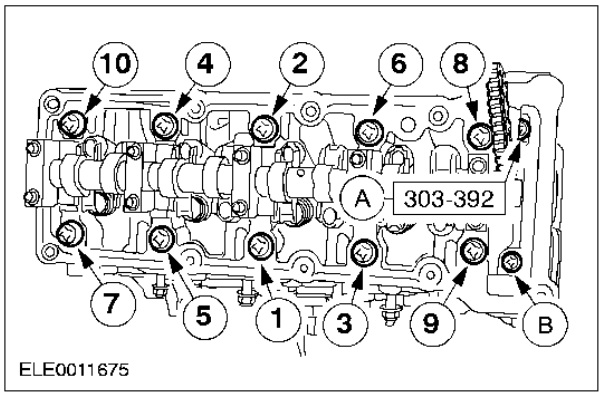

27. ⚠**CAUTION: Use new cylinder head bolts.**
Install a new gasket and tighten the cylinder head bolts in four stages.
- Stage 1: Tighten all M11 bolts in the indicated numerical sequence to 40 Nm.
- Stage 2: Tighten all M8 bolts in the indicated alphabetical order to 15 Nm.
- Stage 3: Tighten all M8 bolts in the indicated alphabetical order to 45 degrees.
- Stage 4: Tighten all M11 bolts in the indicated numerical sequence to 120 degrees.

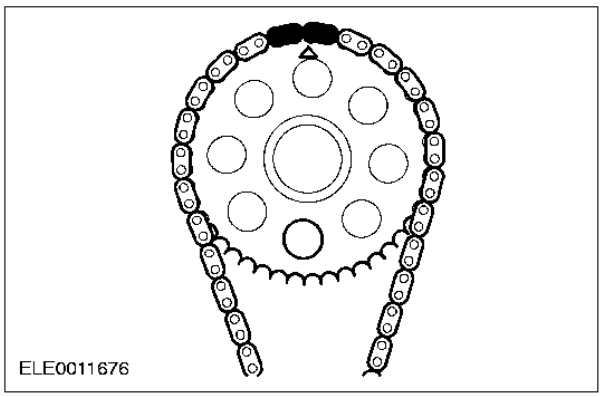

28. **NOTE:** The camshaft sprocket timing mark and both colored links of the timing chain must line up.
Install the timing chain on the camshaft sprocket.
- The camshaft sprocket timing mark must be at the 12 o'clock position with cylinder No.1 at TDC.

ASSEMBLY (CONTINUED)

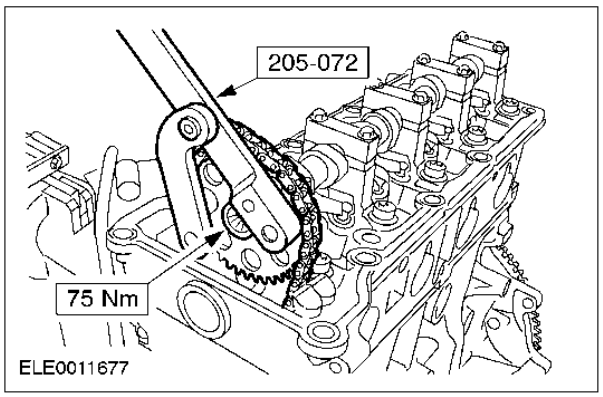

29. Using the special tool, install the camshaft sprocket.

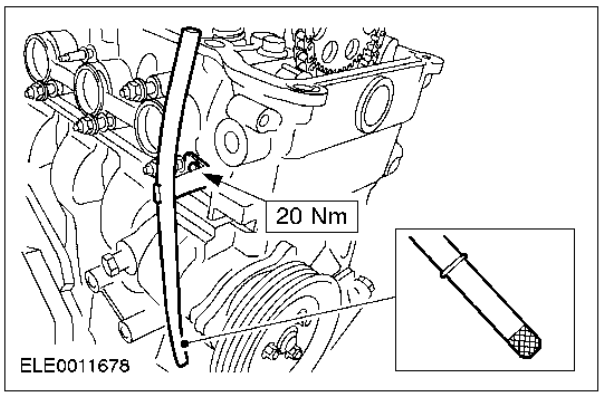

30. NOTE: Apply sealer (Loctite 648) to the lower end of the oil level indicator tube.
Tighten the oil level indicator tube retaining bolt.

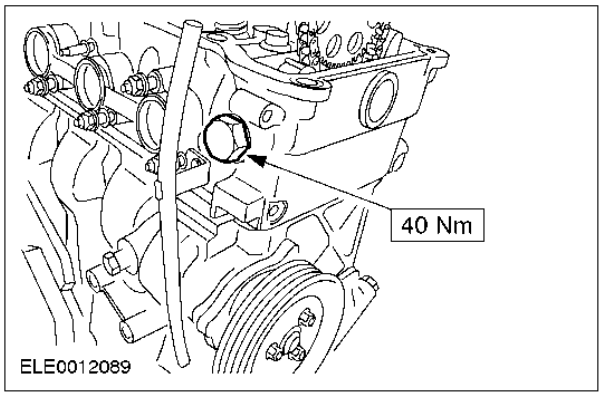

31. Install the timing chain hydraulic tensioner.

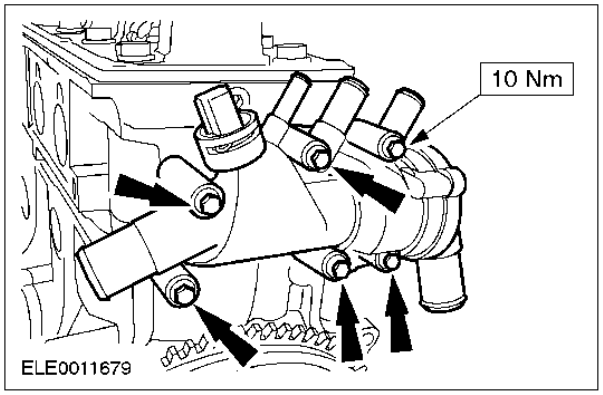

32. NOTE: Install a new gasket if the original is damaged.
Install the coolant flow control housing.

ASSEMBLY (CONTINUED)

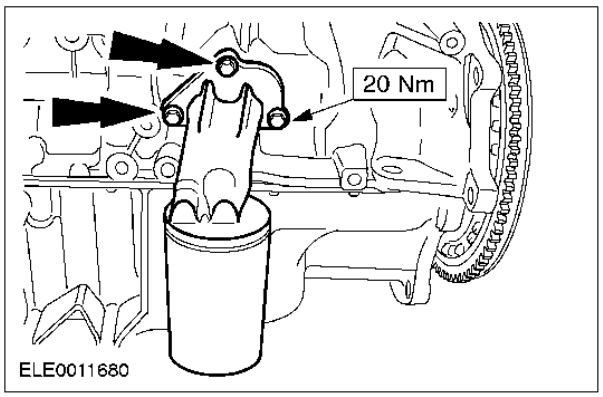

33. Install the oil filter with a new gasket.

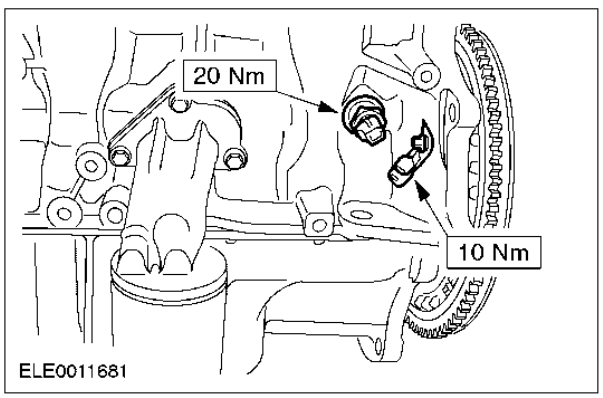

34. Install the crankshaft position (CKP) sensor and the oil pressure switch.

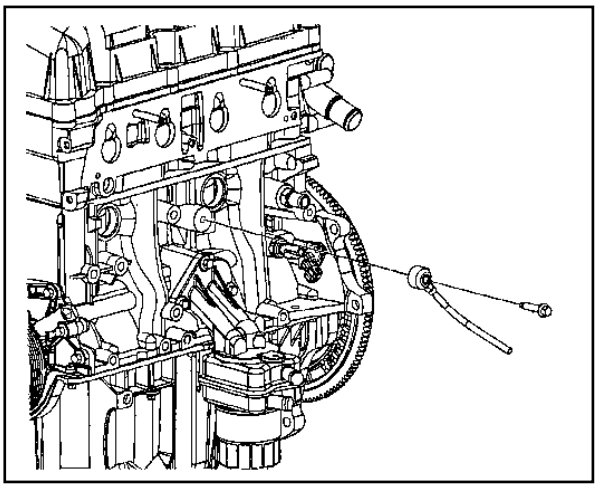

Vehicles with 1.3L engine.

35. Install the knock sensor.

Note: intake manifold removed for clarity.

ASSEMBLY (CONTINUED)

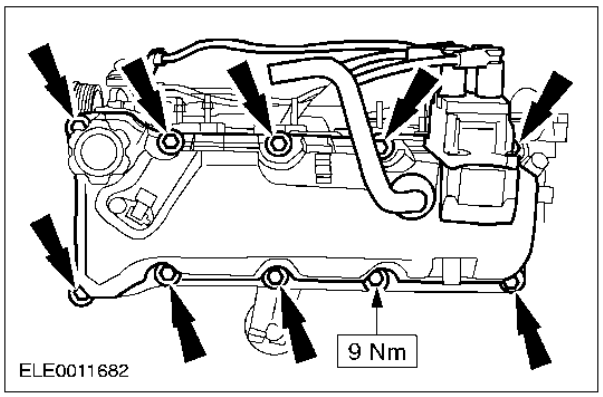

36. NOTE: Install a new gasket if the original is damaged.
Install the valve cover.

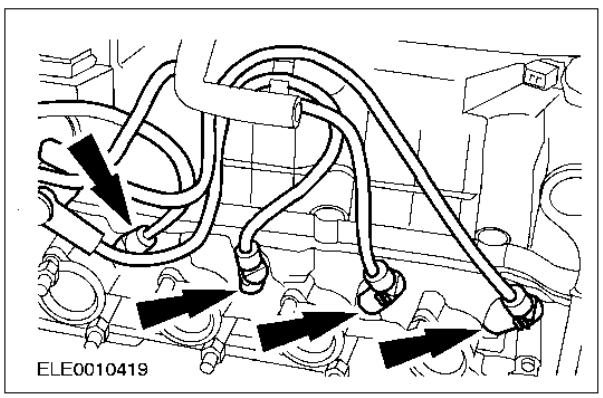

37. Install the spark plugs and connect the spark plug wires.

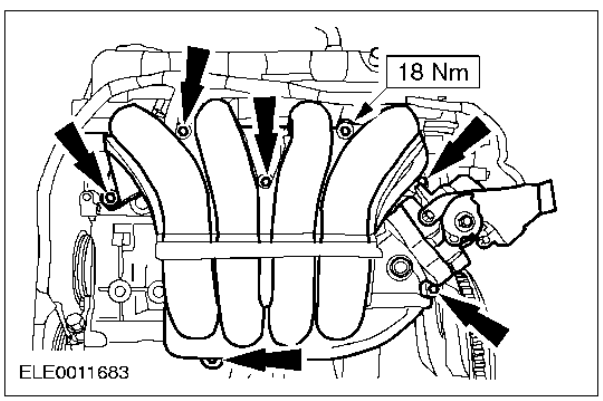

38. NOTE: Install a new gasket if the original is damaged.
Install the intake manifold.

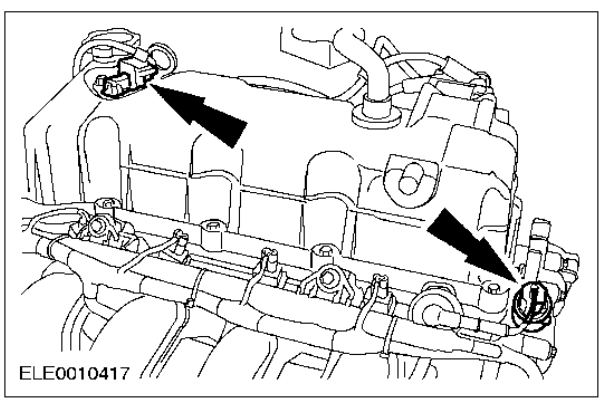

39. Connect the camshaft position (CMP) sensor and engine coolant temperature (ECT) sensor electrical connectors.

ASSEMBLY (CONTINUED)

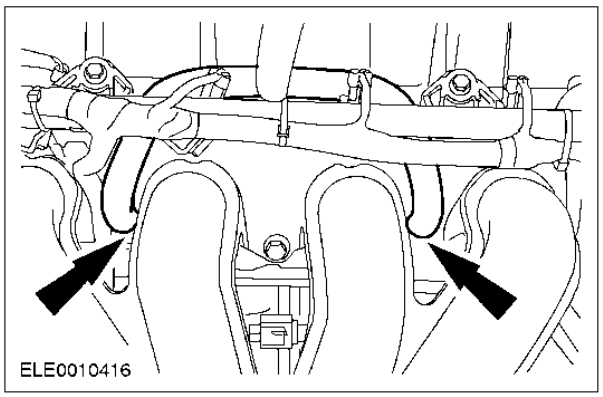

40. Install the vacuum hoses.

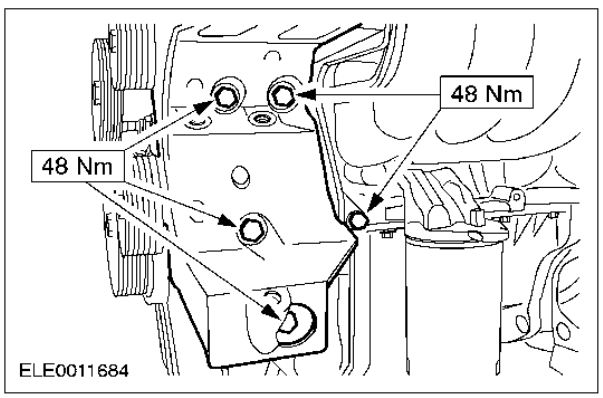

41. Install the generator bracket.

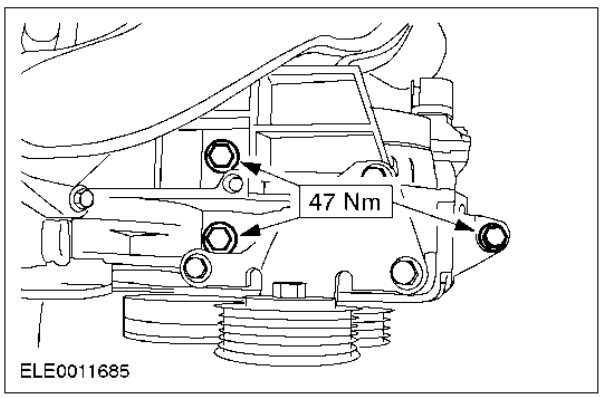

42. Install the generator.

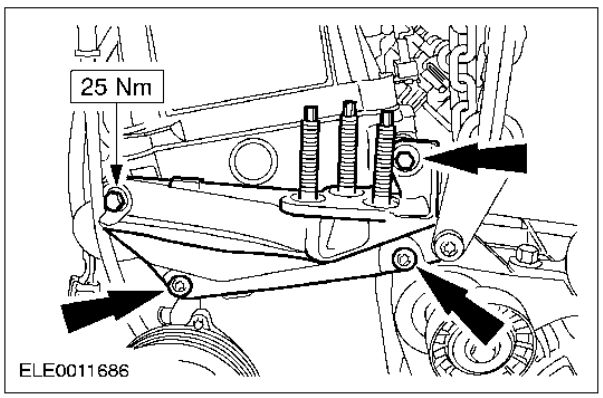

43. Install the engine mounting bracket.

ASSEMBLY (CONTINUED)

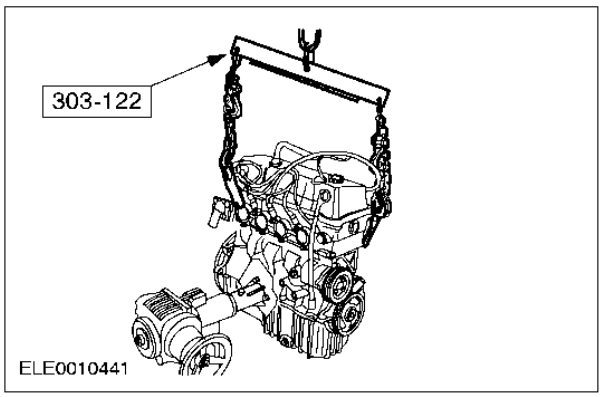

44. Install the special tool.

45. Secure the engine to the assembly table with retaining straps.

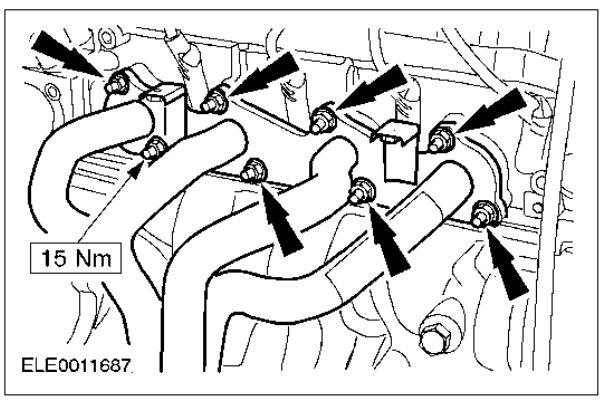

46. Install the exhaust manifold with a new gasket.

INSTALLATION

Engine (21 132 0)

Special Tool(s)	
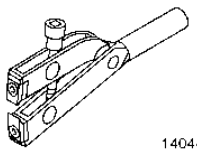	Clamping Tool, Boot Retaining Strap 204-169 (14-044)

Material	Specification
Engine oil	SAE 15W 40 SH
High temperature grease	WSD-M1C230-A

General Equipment
Retaining straps
Assembly stand

Installation

All vehicles

1. Install the transaxle to the engine.
2. Install the transaxle upper flange bolt.

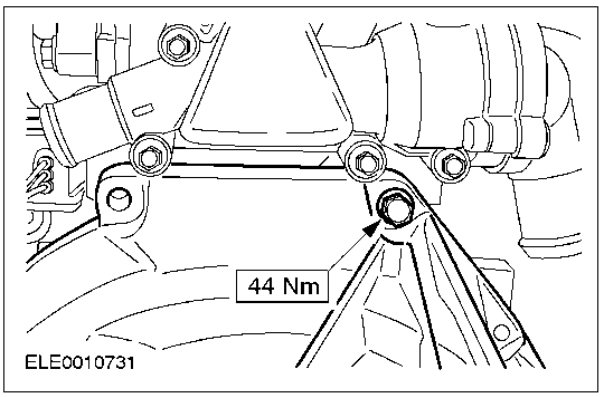

3. Install the transaxle lower flange bolts.

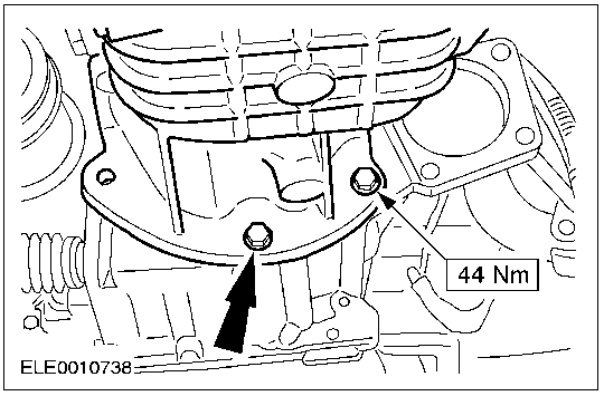

INSTALLATION (CONTINUED)

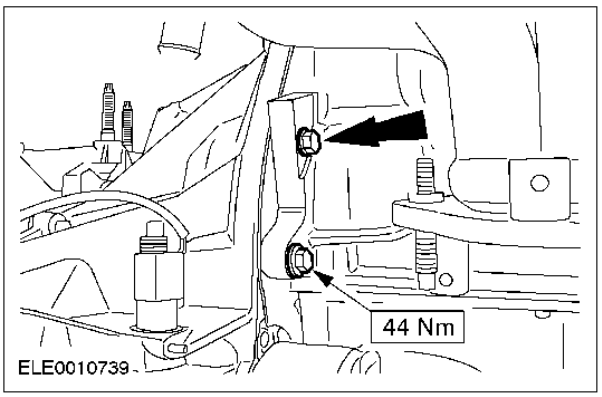

4. Install the transaxle right-hand flange bolts.

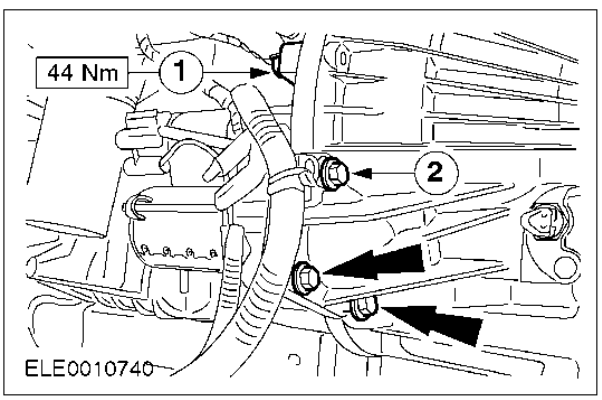

5. Install the bolts.
   1. Transmission left-hand flange bolt
   2. Starter motor bolts

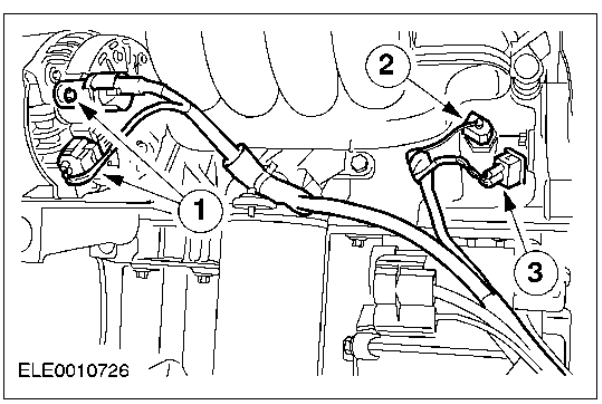

6. Connect the engine wiring harness electrical connectors.
   1. Connect the generator electrical connectors.
   2. Connect the oil pressure switch electrical connectors.
   3. Connect the CKP- sensor electrical connector.

7. Raise and support the vehicle. For additional information, refer to Section 100-02.

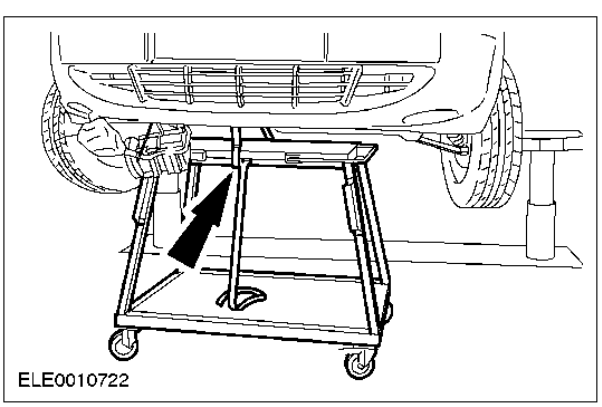

8. Secure the engine and transmission assembly with a retaining strap to the assembly stand and position for installation underneath the vehicle.

INSTALLATION (CONTINUED)

9. Lower the vehicle.

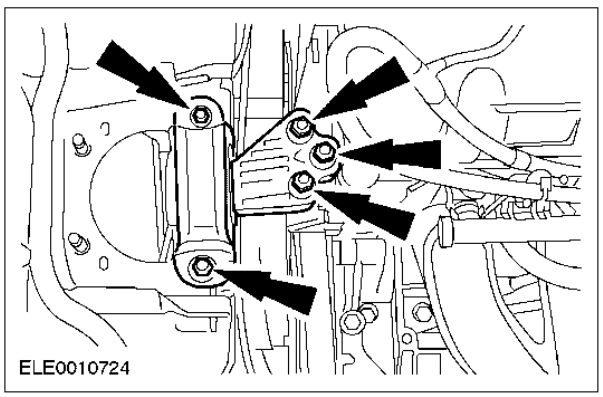

10. **NOTE:** Install the nuts finger tight.
Install the engine front mounting bracket.

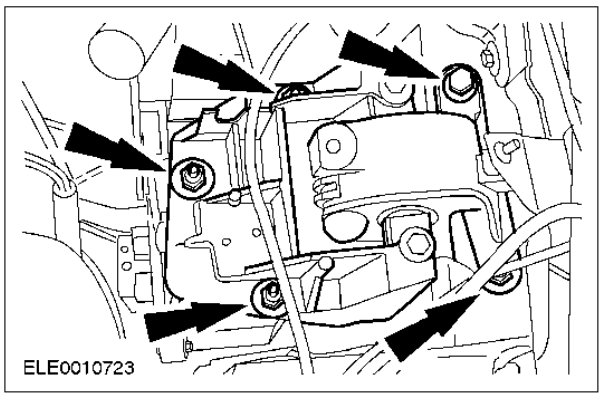

11. **NOTE:** Install the bolts and nuts finger tight.
Install the engine rear mounting bracket.

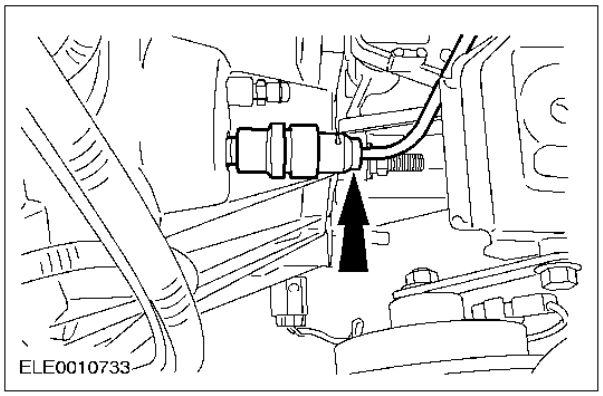

12. **CAUTION: Brake fluid will escape. Observe the safety regulations for the use of brake fluid. For additional information, refer to Section 206-00.**

Connect the clutch slave cylinder hydraulic line.

13. Remove the retaining straps from the engine.

14. Raise and support the vehicle. For additional information, refer to Section 100-02.

INSTALLATION (CONTINUED)

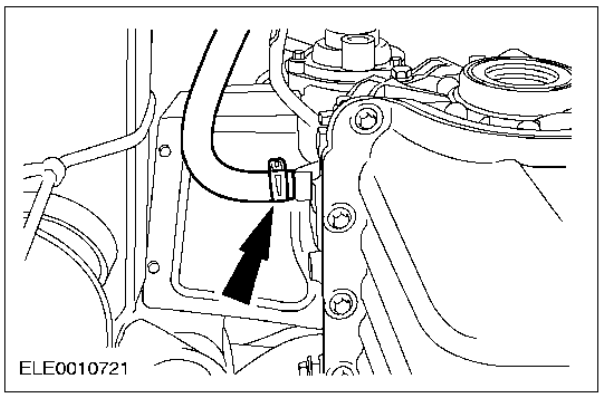

15. Install the coolant return hose.

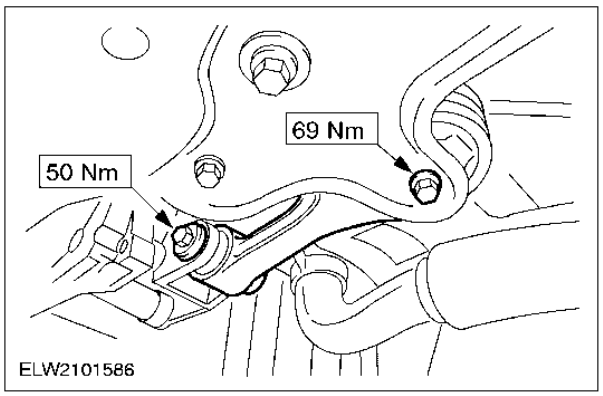

16. Install the engine roll restrictor.

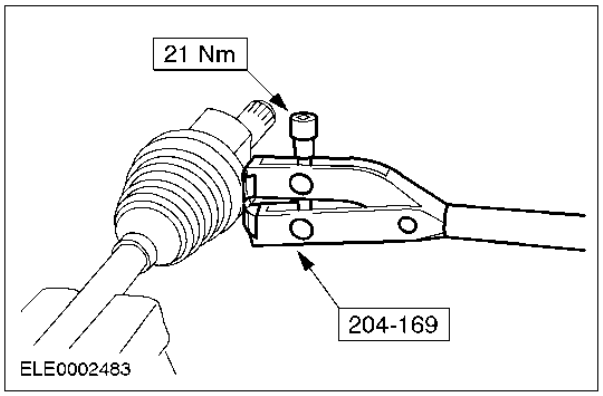

17. **CAUTION: The inner part of the constant velocity joint must not be bent at more than 18 degrees, the outer part no more than 45 degrees.**

NOTE: Fill the joint housing with 60 grams of high temperature grease (WSD-M1C230-A).

NOTE: Using the special tool, secure a new boot clamp.

Install both front drive halfshafts.

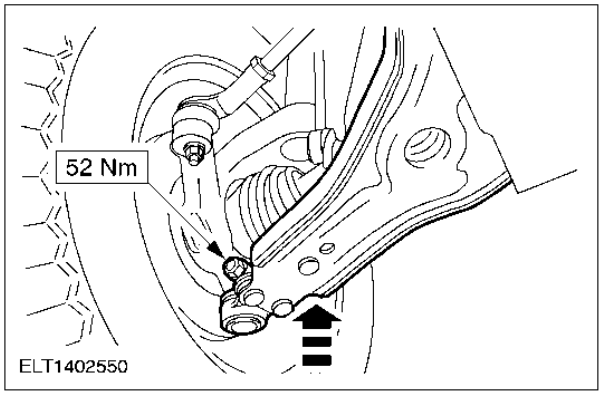

18. Connect the lower arms to the wheel knuckles on both sides (left-hand side shown).

INSTALLATION (CONTINUED)

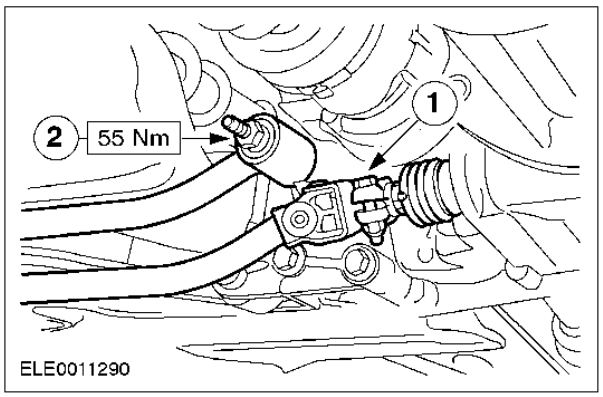

19. Install the shift rod and gearshift stabilizer.
    1. Install the shift rod.
    2. Install the gearshift stabilizer.

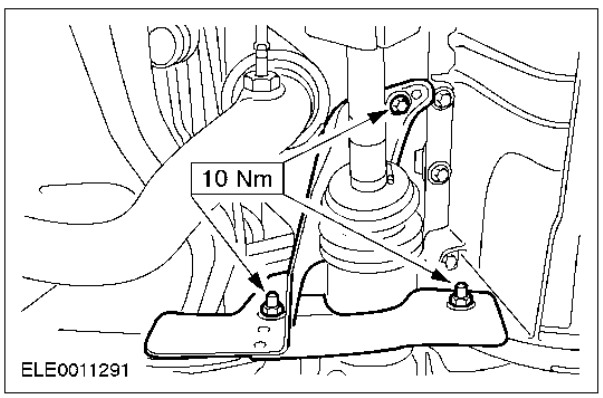

20. Install the exhaust lower heat shield.

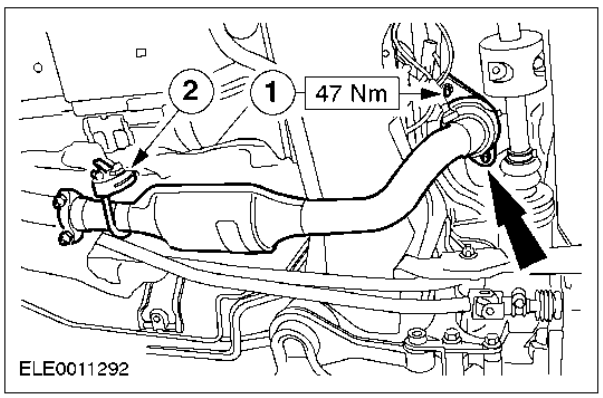

21. Connect the exhaust down pipe to the exhaust manifold with a new gasket.
    1. Install the nuts.
    2. Attach the exhaust hanger insulator.

Vehicles with air conditioning

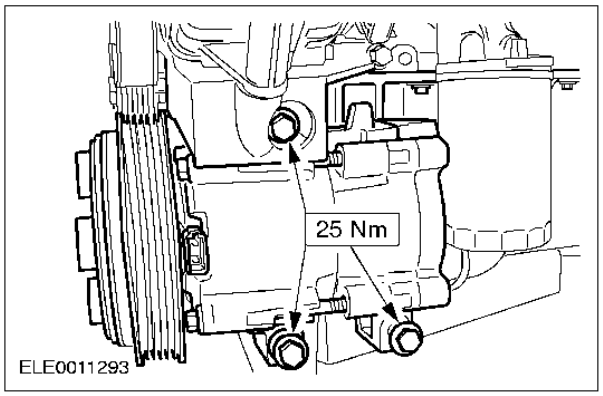

22. Install the air conditioning (A/C) compressor.

INSTALLATION (CONTINUED)

All Vehicles

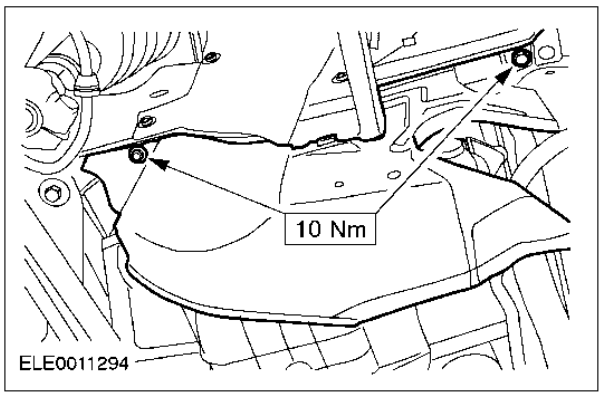

23. Install the accessory drive belt cover.

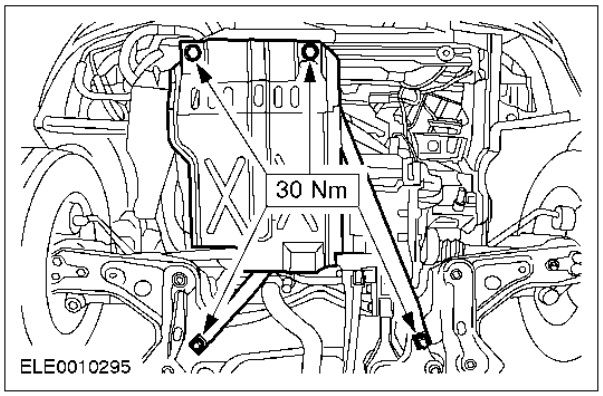

24. Install the engine undershield.

25. Lower the vehicle.

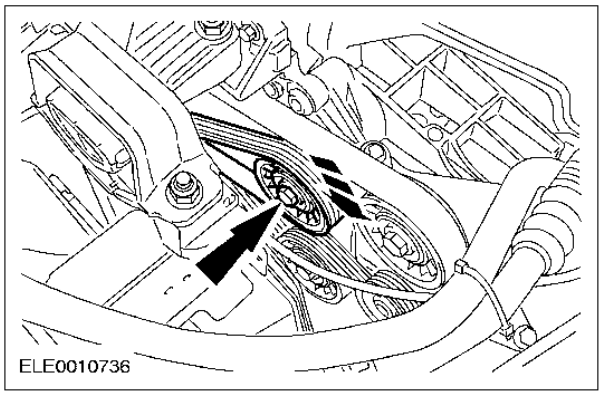

26. Install the accessory drive belt.
    - Turn the belt tensioner clockwise and slip the belt onto all the pulleys.

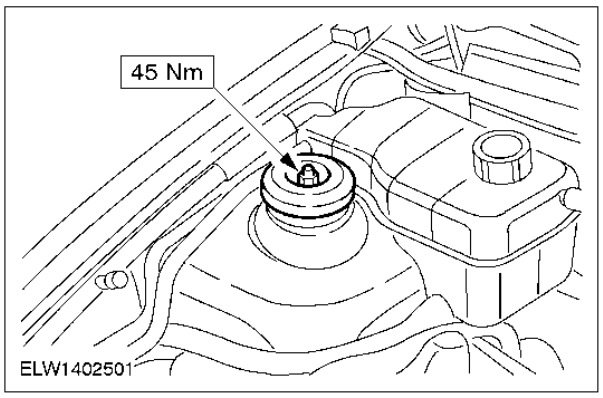

27. **NOTE:** Use an Allen key to stop the piston rod turning.
    Tighten the suspension strut retaining nut on both sides (right-hand side shown).

INSTALLATION (CONTINUED)

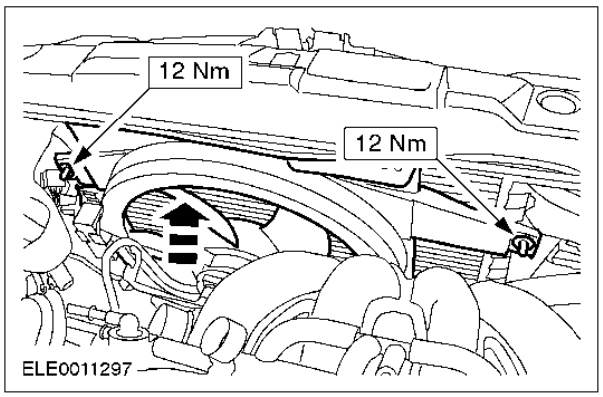

28. Install the cooling fan.

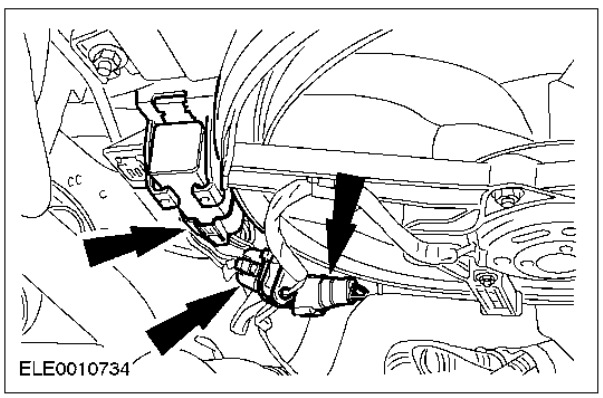

29. Connect the cooling fan electrical connectors.

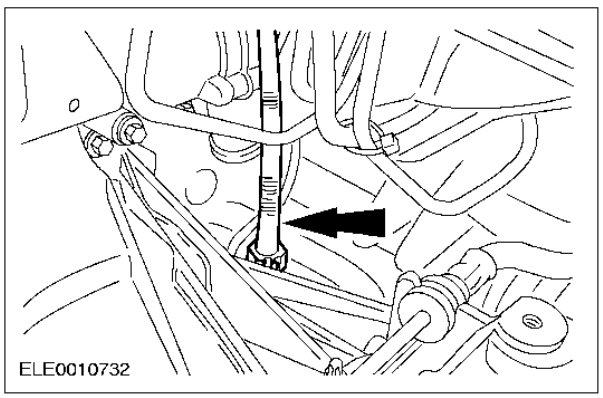

30. Connect the speedometer drive cable to the transaxle.

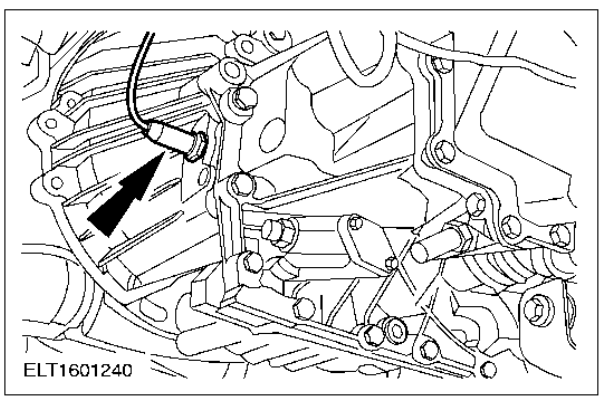

31. Connect the reversing lamp switch electrical connector.

INSTALLATION (CONTINUED)

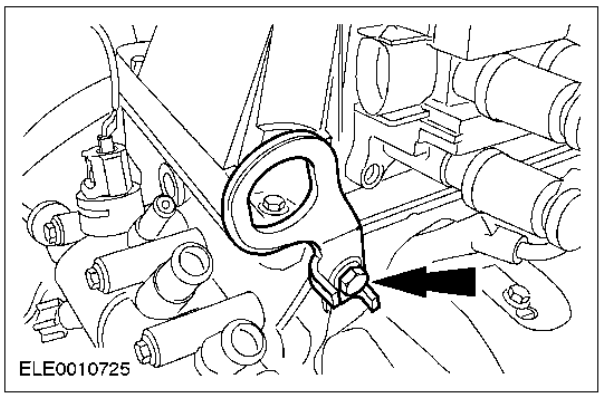

32. Remove the engine lifting eye.

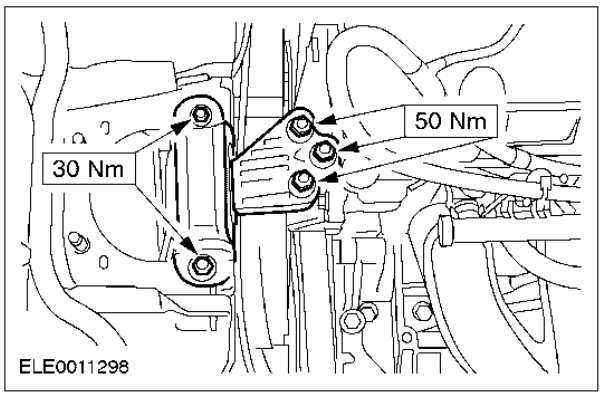

33. Tighten the engine front mounting bracket.

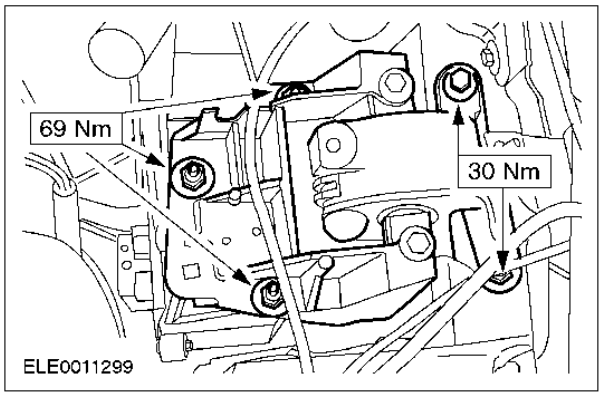

34. Tighten the engine rear mounting bracket.

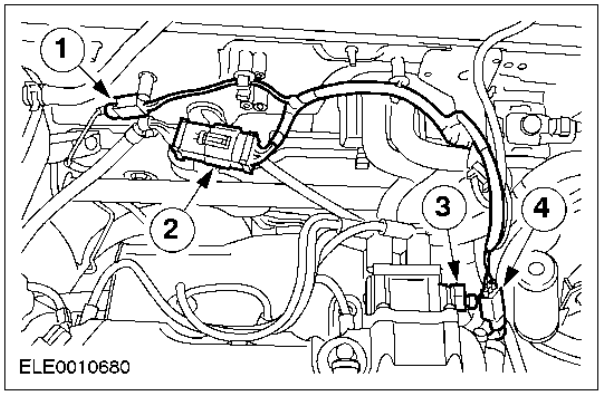

35. Connect the heated oxygen (HO2S) sensor, powertrain control module (PCM), electronic ignition (EI) coil, and vehicle speed sensor (VSS) electrical connectors.
    1. HO2S sensor
    2. PCM
    3. EI coil
    4. VSS sensor

INSTALLATION (CONTINUED)

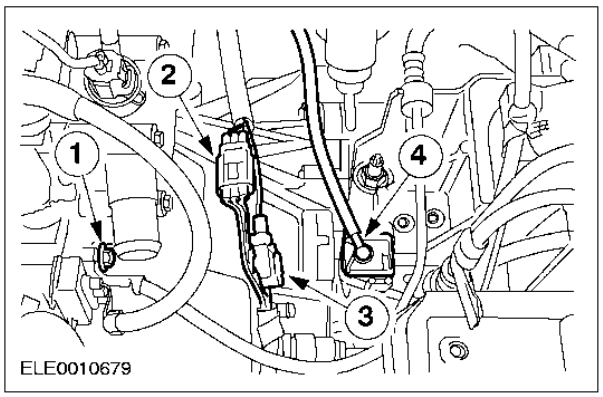

36. Install the ground cable, the electrical connectors and the transmission breather.
    1. Ground cable
    2. Generator electrical connector
    3. Starter motor electrical connector
    4. Transmission breather

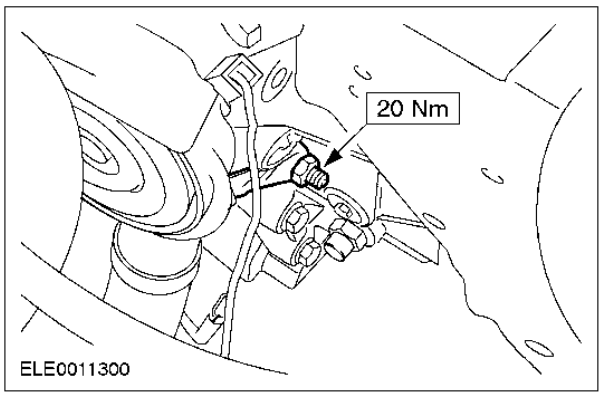

37. Install the left-hand coolant hose bracket.

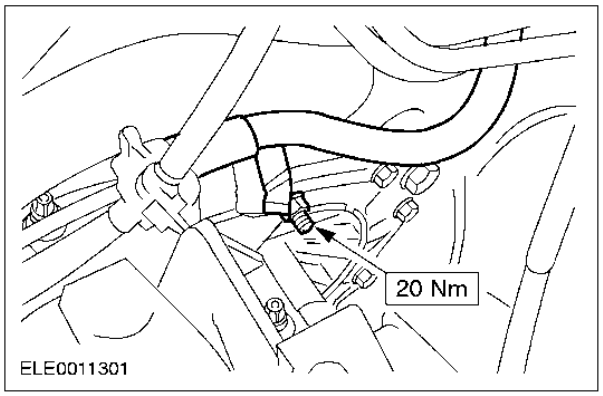

38. Install the right-hand coolant hose bracket.

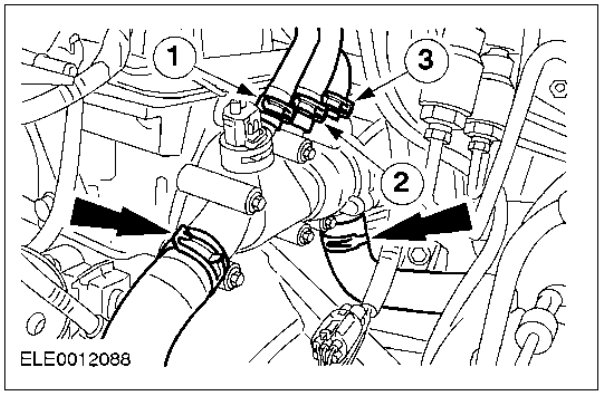

39. Install the coolant hoses.
    1. To coolant expansion tank
    2. To cabin heater
    3. From cabin heater

INSTALLATION (CONTINUED)

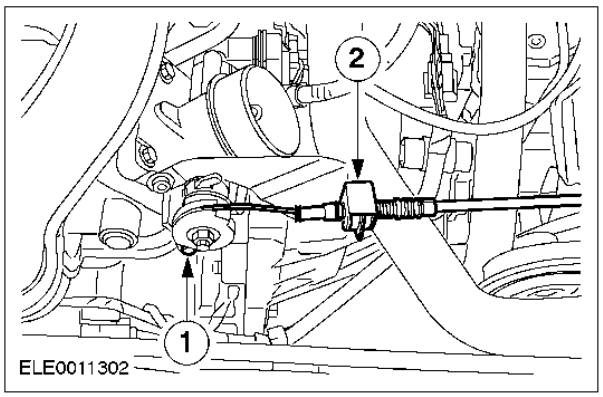

40. Install the accelerator cable.
    1. Hook in the inner cable.
    2. Install the cable into the bracket, adjust and secure using the clip.

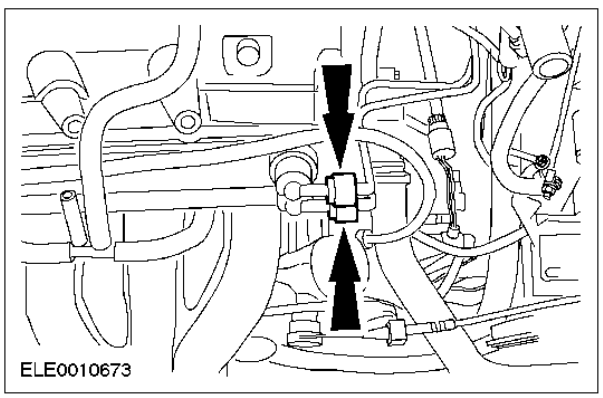

41. Connect the fuel lines.

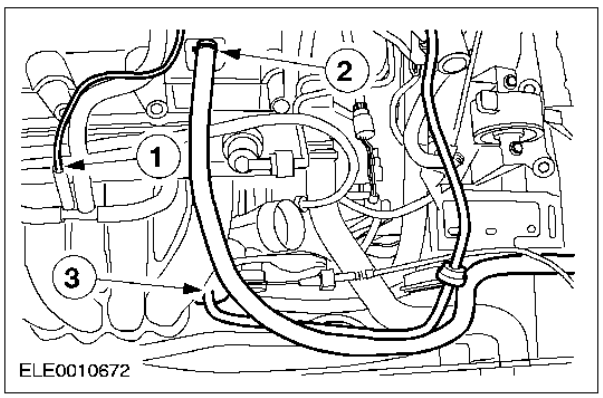

42. Install the hoses and the vacuum lines.
    1. EVAP solenoid valve vacuum hose
    2. Positive crankcase ventilation hose
    3. Brake booster vacuum hose

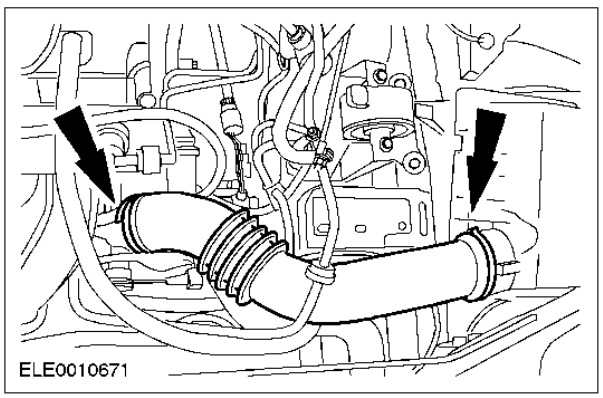

43. Install the air cleaner intake pipe.

INSTALLATION (CONTINUED)

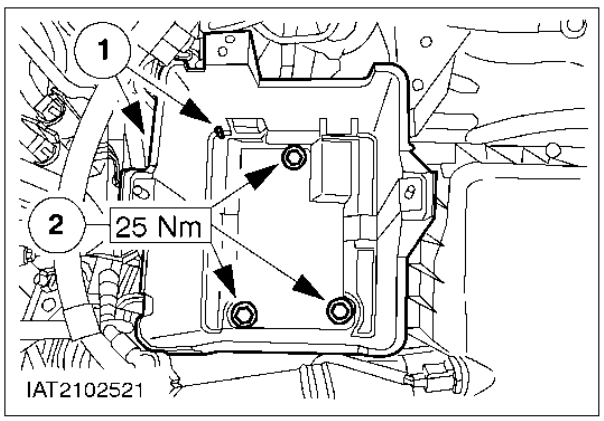

44. Install the battery tray.
    1. Install new cable ties.
    2. Install the bolts.
45. Check the engine oil level. If necessary, fill the engine with low friction oil meeting specification SAE 15W 40 or SAE 10W 30
46. Install the battery. For additional information, refer to Section 414-01.
47. Fill the cooling system. For additional information, refer to Section 303-03.
48. Adjust the gearshift linkage. For additional information, refer to Section 308-06.
49. Bleed the clutch system. For additional information, refer to Section 308-00.

SPECIFICATIONS

Engine Data

Description		1.6L	1.3L
Bore	mm	82.070	73.96
Stroke	mm	75.480	75.480
Cubic capacity	cm^3	1597	1297
Compression ratio		9.5 : 1	10.2 : 1
Power output	kW	70	55
at rpm	1/min	5500	5500
Torque	Nm	135	110
at rpm	1/min	2500	2500
Max. Engine speed (intermittent)	1/min	6175	6175
Max. Engine speed (continuous)	1/min	5950	5950
Idle speed (electric cooling fan on)	1/min	850-910	850-910

Engine Oil

Recommended engine oil	Viscosity/Temperature	Specification
	SAE 15W 40 SH	WSD-M2C 904-B

Lubricants, Fluids, Sealers and Adhesives

Item	Specification
Sealer	WSK-M2G349-A4
Sealer	LOCTITE 59104
High-temperature grease	WSD-M1C230-A
Coolant	ESD-M97B49-A
Transmission fluid iB5	WSD-M2C200-C
Ford-Hypoid oil	SQM-2C9002-AA

Capacities

	Liters
Engine oil, initial fill including filter	3.5
Engine oil, including filter change	3.25
Engine oil, excluding filter change	2.75
Coolant	6.4
Transmission fluid (iB5)	2.8

Oil Pressure

Oil pressure (min. oil temperature 80°C) at 880 l/min	bar	1.0-3.5
Oil pressure (min. oil temperature 80°C) at 2,000 l/min	bar	2.5-5.5

SPECIFICATIONS (CONTINUED)

Pressure relief valve opening pressure	bar	4.0-5.0

Crankshaft

Description		Specification
Crankshaft main bearing journal diameter (standard)	mm	56.98-57.0
Crankshaft main bearing journal diameter (undersize)	mm	56.726-56.746
Crankshaft main bearing journal shell width	mm	18.29-18.69
Crankshaft connecting rod journal diameter (standard)	mm	40.99-41.01
Crankshaft connecting rod journal diameter (undersize)	mm	40.74-40.76
Crankshaft connecting rod journal diameter (service 0.508)	mm	40.49-40.51
Crankshaft connecting rod journal diameter (service 0.762)	mm	40.24-40.26
Crankshaft end play	mm	0.075-0.285
Crankshaft thrust washer thickness (standard)	mm	2.80-2.85
Crankshaft thrust washer thickness (oversize)	mm	2.99-3.04
Crankshaft must not be re-machined.		

Piston

Piston diameter (standard)	mm	82.015-82.030
Piston diameter (oversize No. 1)	mm	82.165-82.180
Piston diameter (oversize No. 2)	mm	82.515-82.53
Piston to cylinder bore clearance (production)	mm	0.04-0.07
Piston to cylinder bore clearance (service)	mm	0.04-0.07
Piston ring end gap (installed) (top)	mm	0.20-0.40
Piston ring end gap (installed) second	mm	0.25-0.50
Piston ring-to-groove clearance (top)	mm	0.051-0.088
Piston ring-to-groove clearance (second)	mm	0.03-0.07
Piston ring end gap position, top		180 degrees offset from oil scraper ring end gap
Piston ring end gap position, second		90 degrees offset from oil scraper ring end gap
Piston pin length	mm	60.2-59.9
Piston pin diameter	mm	18.03-18.034
Piston pin to bore diameter interference	mm	0.012-0.036
Piston pin slide clearance (21°C)	mm	0.014-0.020

SPECIFICATIONS (CONTINUED)

Connecting rod

Connecting rod large end bore diameter	mm	43.99-44.01
Connecting rod small end bore diameter	mm	17.998-18.018
Connecting rod bearing shell, vertical internal diameter, standard	mm	41.016-41.05
Connecting rod bearing clearance (radial)	mm	0.006-0.060
Connecting rod bearing clearance (axial)	mm	0.100-0.250

Valve train

		1.6L	1.3L
Valve spring free length	mm	43.2	43.2
Valve spring inner diameter (intake)	mm	18.8 - 19.9	18.8 - 19.9
Valve spring inner diameter (exhaust)	mm	18.8-19.2	18.8-19.2
Valve spring material diameter	mm	3.7	3.7
Number of valve spring coils	mm	6.7	6.7
Valve (intake) overall length	mm	109.37-109.83	109.37-109.83
Valve (exhaust) overall length	mm	109.95-110.05	109.95-110.05
Valve head (intake) diameter	mm	39.87-40.13	34.97 - 35.23
Valve head (exhaust) diameter	mm	33.87-34.13	29.57 - 29.83
Valve stem diameter (intake)	mm	5.957 - 5.975	5.957 - 5.975
Valve stem diameter (exhaust)	mm	5.957-5.975	5.957 - 5.975
Valve stem to valve guide clearance (intake)	mm	0.025-0.063	0.025 - 0.063
Valve stem to valve guide clearance (exhaust)	mm	0.028-0.068	0.028-0.068
Valve lift (intake)	mm	9.8	9.8
Valve lift (exhaust)	mm	9.8	9.8

Cylinder block

Number of main bearings		5
Cylinder bore diameter (standard)	mm	82.7-82.085
Cylinder bore diameter (oversize No.1)	mm	82.22-82.235
Cylinder bore diameter (oversize No.2)	mm	82.57-82.585

Camshaft

Drive system		Chain
Number of chain links		114

SPECIFICATIONS (CONTINUED)

Pitch of chain	mm	8.0
Valve timing, intake opens (1 mm lift) after TDC	degree	12
Valve timing, intake closes (1 mm lift) after BDC	degree	24
Valve timing, exhaust opens (1 mm lift) before BDC	degree	24
Valve timing, exhaust closes (1 mm lift) before TDC	degree	12
Valve lift cam intake	mm	5.25
Valve lift cam exhaust	mm	5.25
Camshaft bearing journal diameter	mm	23.96-23.98
Camshaft bearing journal bore diameter	mm	24.0-24.03
Camshaft end float	mm	0.075-0.185

Torque Specifications

Description	Nm
Oil gallery plug	22
Main bearing bolts	95
Rear oil seal retainer	10
Connecting rod bolts-Stage 1	4
Connecting rod bolts-Stage 2	90 degrees
Hydraulic timing chain tensioner	40
Chain tensioner arm bolt	26
Chain guide bolt	26
Oil pump	20
Crankshaft pulley bolt	125
Oil pump screen and pickup tube retaining bolt	10
Oil pan baffle bolt	19
Oil pan retaining bolts -Stage 1	6
Oil pan retaining bolts -Stage 2	9
Oil filter adaptor	20
Crankshaft position sensor retaining bolts	10
Water pump retaining bolts	10
Water pump pulley retaining bolts	12
Flywheel retaining bolts	67
Clutch bolts	29
A/C compressor retaining bolts	25
Starter motor retaining bolts	35
Oil pressure switch	20
Oil drain plug	25

SPECIFICATIONS (CONTINUED)

Description	Nm
Engine lifting eye	20
Camshaft cap bolts	9
Cylinder head bolts-Stage 1 (M11 bolts)	40
Cylinder head bolts-Stage 2 (M8 bolts)	15
Cylinder head bolts-Stage 3 (M8 bolts)	45 degrees
Cylinder head bolts-Stage 4 (M11 bolts)	120 degrees
Camshaft sprocket bolt	75
Valve cover bolts	9
Camshaft position sensor retaining bolt	5
Ignition coil retaining bolts	6
Oil level indicator tube retaining bolts	20
Coolant flow control housing retaining bolts	10
Spark plugs	15
Intake manifold retaining nuts	18
Intake manifold retaining bolts	18
Exhaust manifold retaining nuts	15
Exhaust manifold heat shield upper retaining bolts	10
Exhaust manifold heat shield upper retaining nut	10
Lower heat shield retaining nuts	10
Exhaust down pipe retaining nuts	47
Engine mounting front bracket to body nuts	30
Engine mounting front bracket to cylinder head nuts	50
Engine mounting front bracket to cylinder head bolts	25
Engine mounting rear bracket to retaining body bolts	30
Engine mounting rear bracket to transaxle bolts	69
Gearshift stabilizer	55
Transaxle upper flange bolt	44
Transaxle lower flange bolts	44
Transaxle left-hand flange bolt	44
Transaxle right-hand flange bolts	44
Engine roll restrictor to body retaining bolts	50
Engine roll restrictor to transaxle retaining bolts	69
Lower arm	52

SPECIFICATIONS (CONTINUED)

Description	Nm
Suspension strut retaining nuts	45
Cooling fan retaining bolts	12
Left-hand coolant hose bracket nut	20
Right-hand coolant hose bracket nut	20
Accessory drive belt cover	10
Engine undershield	30
Battery tray	25
Knock sensor retaining bolt	20

SECTION 303-01D Engine — 1.8L Diesel - Endura DE

PAGE 1 OF 2

VEHICLE APPLICATION: 2002 Bantam

SUBJECT **PAGE**

DESCRIPTION AND OPERATION

Engine 303-01D-3
Crankshaft 303-01D-3
Timing belt pulley - crankshaft 303-01D-3
Crankshaft central bolt 303-01D-3
Camshaft timing belt 303-01D-3
Valve tappets & adjusting shims 303-01D-4
Cylinder head 303-01D-4
Crankshaft oil seals 303-01D-4
Crankcase ventilation 303-01D-4

DIAGNOSIS AND TESTING

Engine 303-01D-5

IN-VEHICLE REPAIR

Crankshaft Front Oil Seal ..... (21 467 0) 303-01D-6/20
Auxiliary Shaft Oil Seal ..... (21 556 0) 303-01D-21/23
Valve Seals ..... (21 238 0) 303-01D-24/33
Timing Belt — Engines with Automatic Timing Belt Tensioner ..... (21 304 0) 303-01D-34/48
Timing Belt — Engines with Manual Timing Belt Tensioner ..... (21 304 0) 303-01D-49/58
Camshaft ..... (21 283 0) 303-01D-59/65
Camshaft Oil Seal ..... (21 288 0) 303-01D-66/69
Cylinder Head ..... (21 163 0) 303-01D-70/82

REMOVAL

Engine ..... (21 132 0) 303-01D-83/96

DISASSEMBLY

Engine ..... (21 134 8) 303-01D-97/109

DISASSEMBLY AND ASSEMBLY OF SUBASSEMBLIES

Cylinder Head ..... (21 165 6) 303-01D-110/120

ASSEMBLY

Engine ..... (21 134 8) 303-01D-121/148

INSTALLATION

Engine 303-01D-149/164

GENERAL PROCEDURES

Valve Clearance ..... (21 213 0) 303-01D-165/167

SECTION 303-01D Engine — 1.8L Diesel - Endura DE

PAGE 2 OF 2

SPECIFICATIONS

Specifications 303-01D-168
Engine Data 303-01D-168
Dimensions 303-01D-168/171
Engine Oil 303-01D-171
Engine Lubrication 303-01D-171
Lubricants, Fluids and Sealers 303-01D-171
Filling Capacities 303-01D-171/172
Torque Specifications 303-01D-172
Torque Specifications 303-01D-172/173
Torque Specifications 303-01D-173
Torque Specifications 303-01D-173
Torque Specifications 303-01D-173/174
Torque Specifications 303-01D-174/175
Torque Specifications 303-01D-175

DESCRIPTION AND OPERATION

Engine

The 44kW (60PS) indirect injection Diesel engine is based on the familiar swirl chamber Diesel engine, which has been revised in line with the latest technology.

The engine not only conforms to European Emission Regulations, but also meets all other expectations in relation to fuel consumption, quiet running, flexibility and power delivery.

Crankshaft

The crankshaft runs in five main bearings. Thrust half bearings are fitted at the third bearing to control the crankshaft end float.

Timing belt pulley - crankshaft

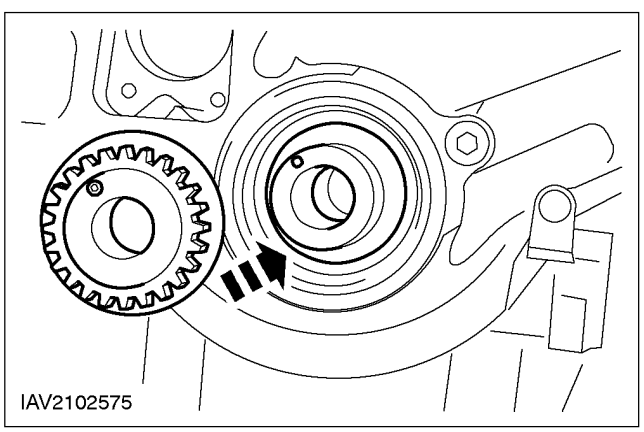

The timing belt pulleys used to drive the valve train and fuel injection pump are a sliding fit on the crankshaft and are retained by the crankshaft central bolt.

The fuel injection pump drive pulley is positively located by pins that locate into the crankshaft on one surface and the camshaft timing belt pulley on the other. On the front pulley there is an O-ring seal, which must be renewed during every installation. It is important not to assemble the O-ring seal dry; always lubricate it with clean engine oil prior to installation.

Crankshaft central bolt

The crankshaft central bolt is a "Torque to Yield bolt" which must be renewed each time it is undone.

Camshaft timing belt

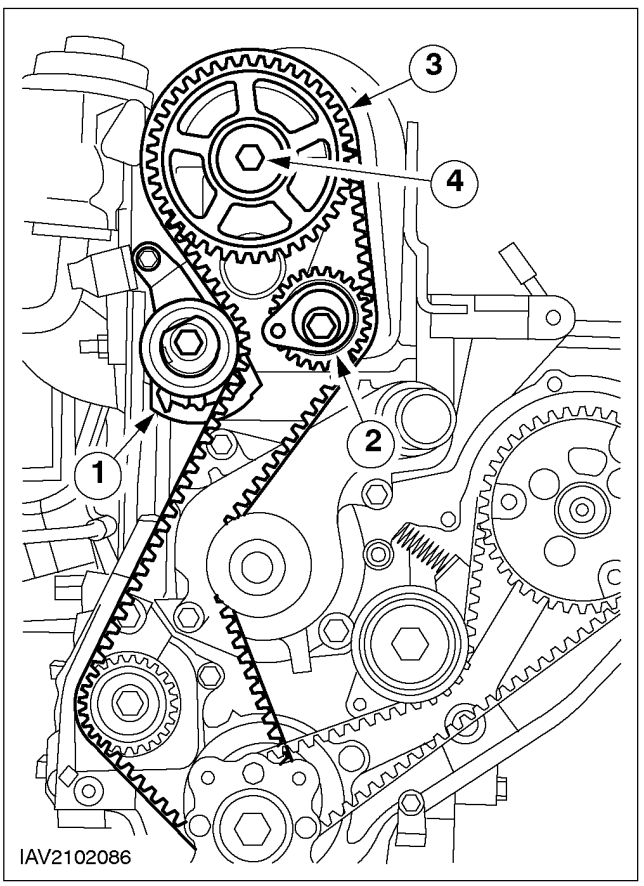

Item	Description
1	Timing belt tensioner
2	Adjusting cam
3	Timing belt
4	Camshaft timing gear

The toothed timing belt drives the camshaft and maintains the correct relationship between camshaft and crankshaft.

CAUTION: Because a new timing belt is very stiff when first installed, the adjustment procedure must be adhered to exactly.

The timing belt tension is maintained by the automatic tensioner. However, the first time the belt is tensioned, the adjusting cam is used.

The camshaft timing pulley is a taper fit on the camshaft and is retained by friction applied by a clamping bolt.

DESCRIPTION AND OPERATION (CONTINUED)

Valve tappets & adjusting shims

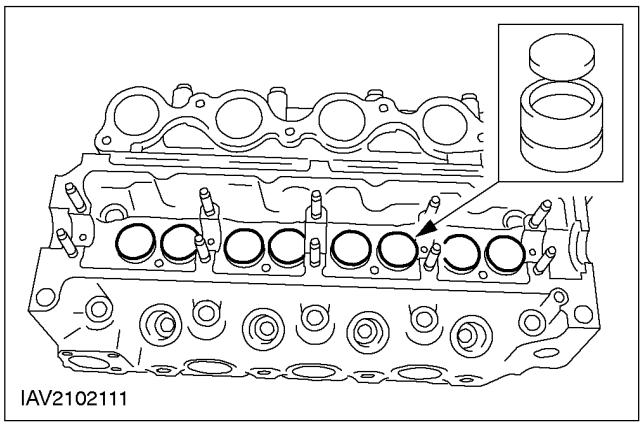

The camshaft operates the valves directly via the valve tappets.

CAUTION: When installing adjustment shims, the writing must face the tappet.

Adjustment shims are available for setting the valve clearances. The thickness of each shim is marked on one face.

Cylinder head

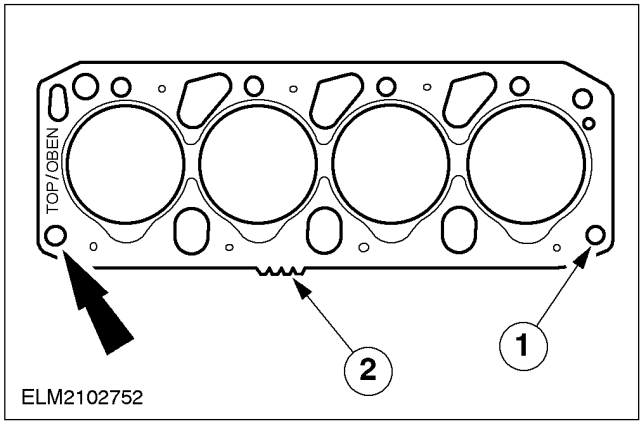

Item	Description
1	Guide dowel holes
2	Gasket thickness indicator

The cylinder head gasket is available in three thicknesses. A particular piston protrusion requires a certain thickness of gasket and this is determined by the number of notches on the gasket thickness indicator.

Crankshaft oil seals

NOTE: The crankshaft rear oil seal is supplied complete with the oil seal carrier. It must be fitted using the tool shown.

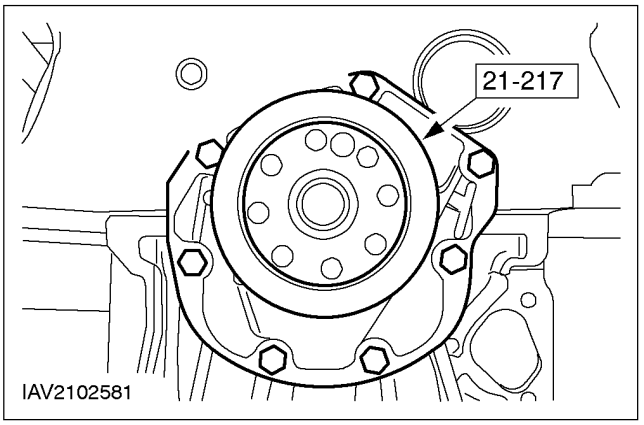

CAUTION: Removing the support ring too early will cause the oil seal to shrink thereby making it unusable.

Both the front and rear oil seals are made from PTFE and therefore must be fitted dry.

When supplied as a service parts, both oil seals have a support ring, which should only be removed after fitting. Some support rings may drop out of their own accord after an oil seal has been fitted.

Crankcase ventilation

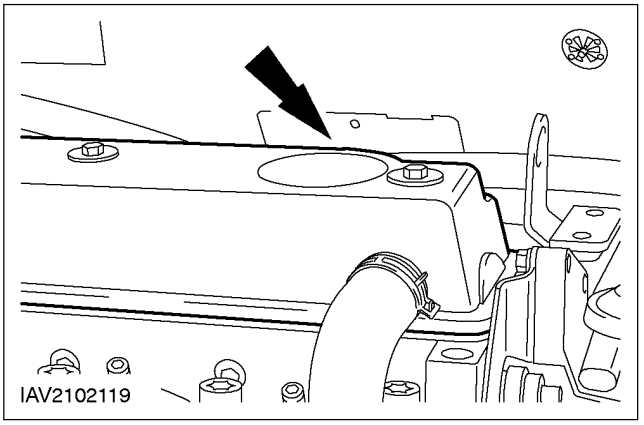

The crankcase ventilation valve is on the upper surface of the valve cover. Like all crankcase ventilation components, the valve must always be kept clean to ensure optimal engine operation.

DIAGNOSIS AND TESTING

Engine

REFER to Section 303-00.

IN-VEHICLE REPAIR

Crankshaft Front Oil Seal (21 467 0)

Special Tool(s)	
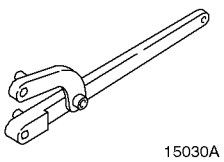 15030A	Universal flange holding wrench 15-030 A
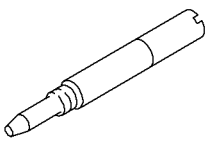 21104	Timing peg, crankshaft TDC position 21-104
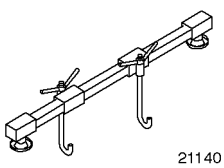 21140	Engine support bar 21-140
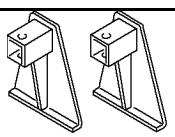 2114001	Adapter for 21-140 21-140-01
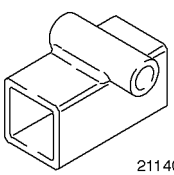 2114002	Adapter for 21-140 21-140-02
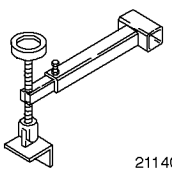 2114003	Adapter for 21-140 21-140-03

Special Tool(s)	
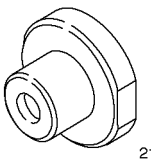 21148	Centering tool, remover and installer, oil seal 21-148 A
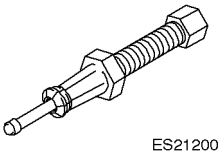 ES21200	Remover, crankshaft timing pulley 21-200
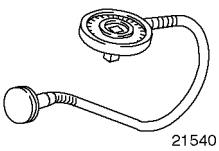 21540	Angle gauge, bolt tightening 21-540
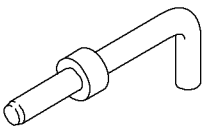 23019	Timing pin, injection pump timing 23-019
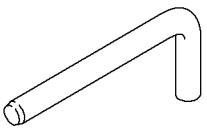 23029	Timing pin, injection pump timing 23-029

Removal

1. Standard preparatory operations.
   - Make a note of the radio keycode.
   - Make a note of the preset radio stations.
2. Disconnect the battery ground cable.

IN-VEHICLE REPAIR (CONTINUED)

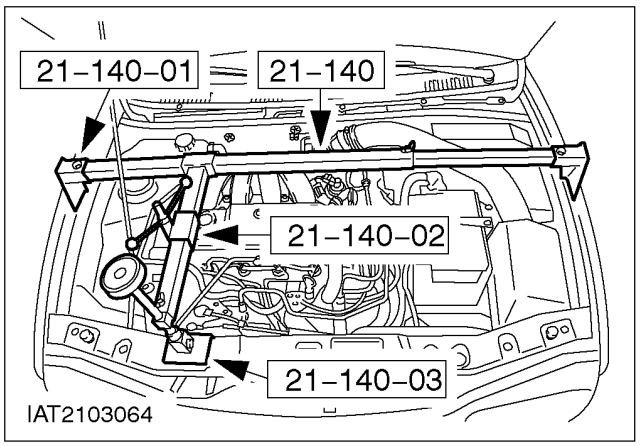

3. Attach the engine support bar.

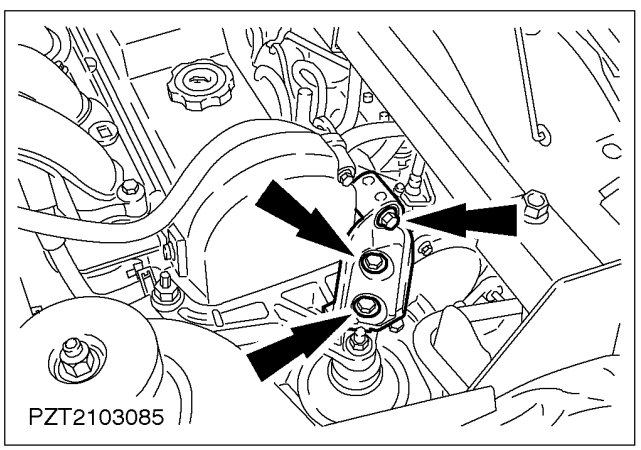

4. Remove the front engine mounting auxiliary bracket.

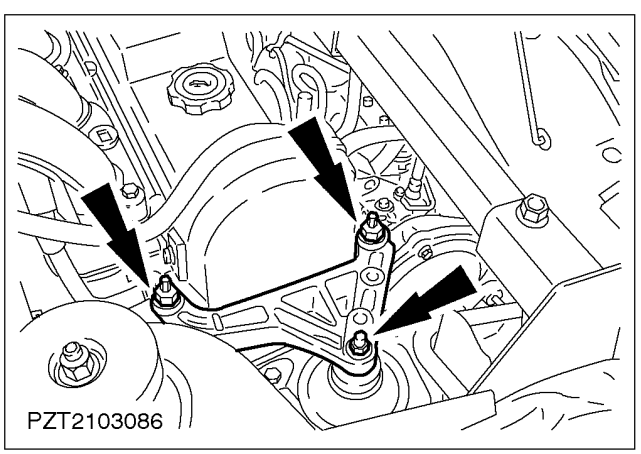

5. Remove the front engine mounting bracket.

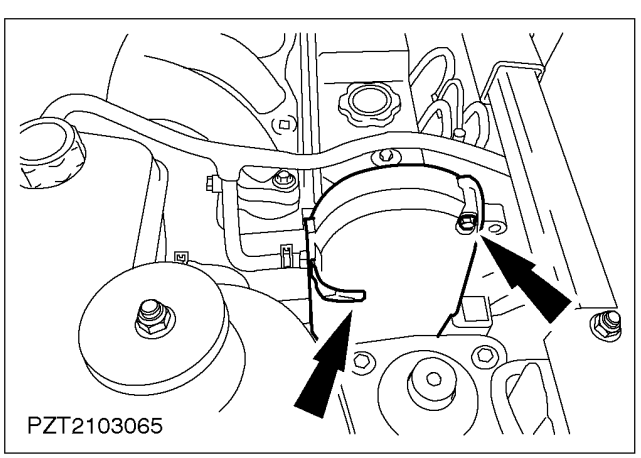

6. Remove the upper timing belt cover.

IN-VEHICLE REPAIR (CONTINUED)

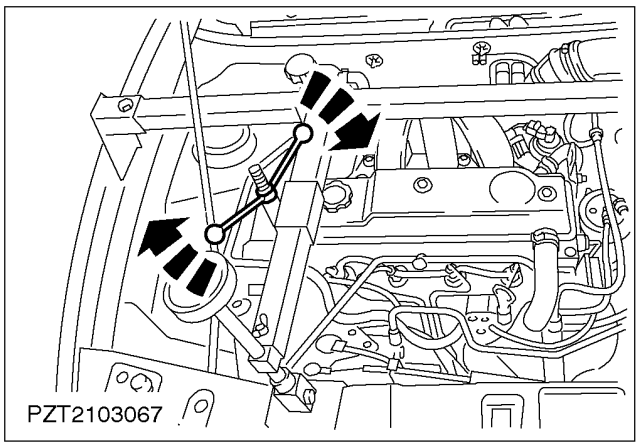

7. Raise the engine with the engine support bar.

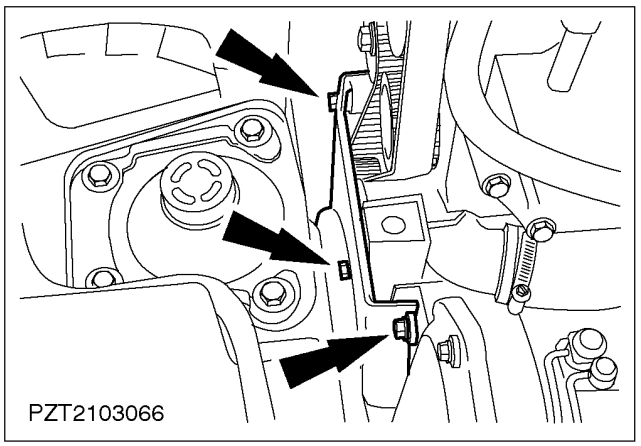

8. Remove the top bolts of the lower timing belt cover.

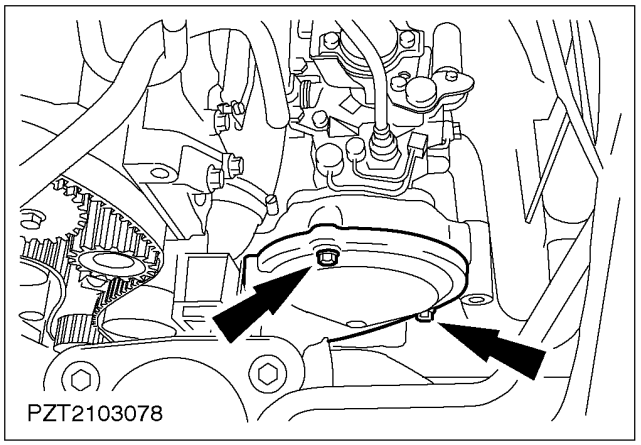

9. Remove the injection pump timing belt cover.

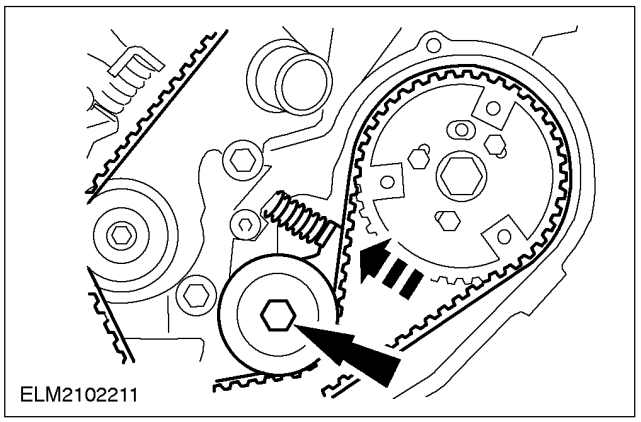

10. Remove the injection pump timing belt.
    - Slacken the bolts of the timing pulley.
    - Loosen the clamp bolt of the timing belt tensioner and slacken the timing belt.
    - Tighten the clamp bolt of the timing belt tensioner.
    - Remove the timing belt.

IN-VEHICLE REPAIR (CONTINUED)

11. Lower the engine with the engine support bar.

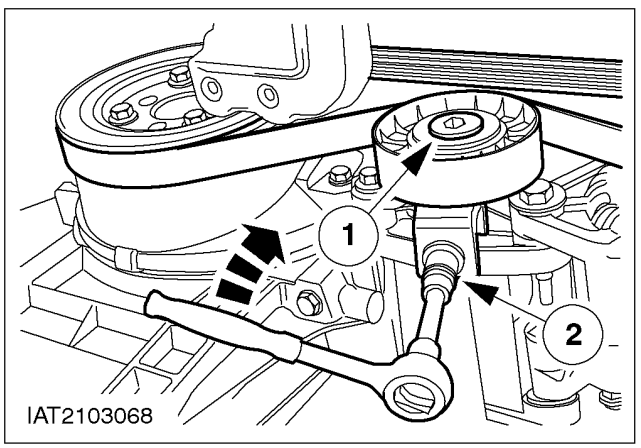

12. Raise the vehicle.
    1. Undo the bolt.

CAUTION: To slacken, turn the bolt clockwise.

    2. Slacken and remove the drive belt.

13. Remove the drive belt.

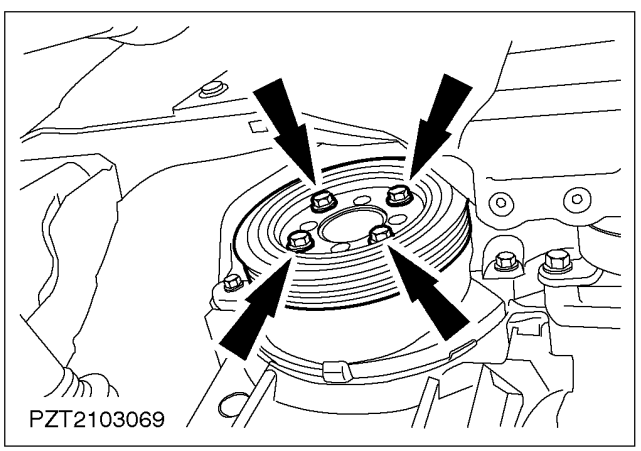

14. Remove the crankshaft pulley/vibration damper.

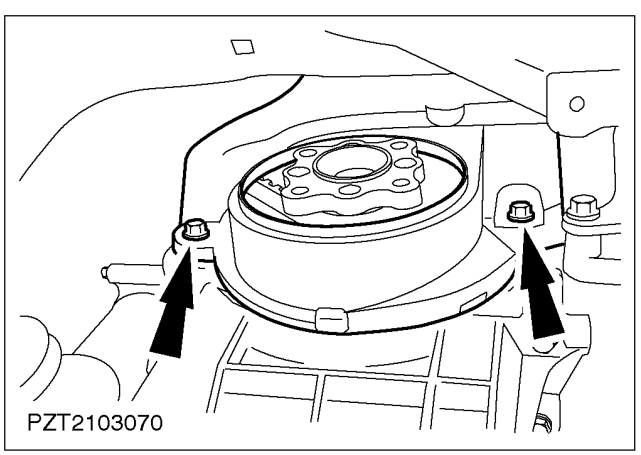

15. Remove the lower timing belt cover.

IN-VEHICLE REPAIR (CONTINUED)

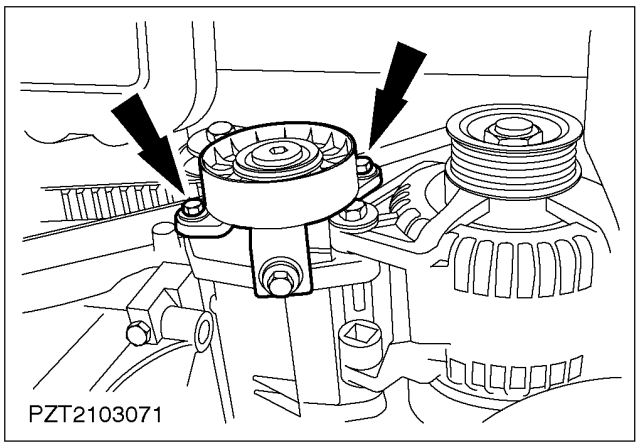

16. Remove the drive belt tensioner.

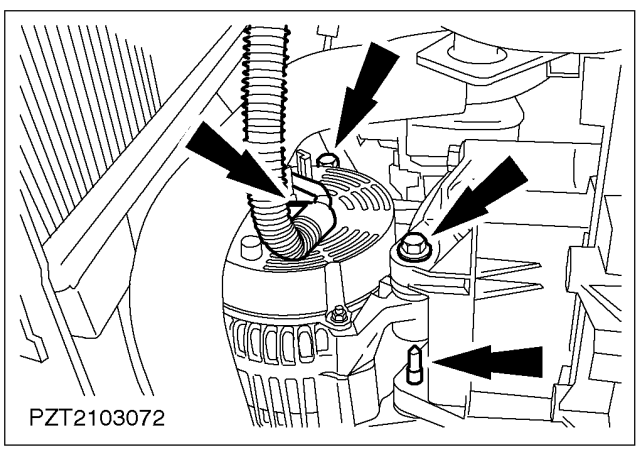

17. Disconnect the alternator and remove it.

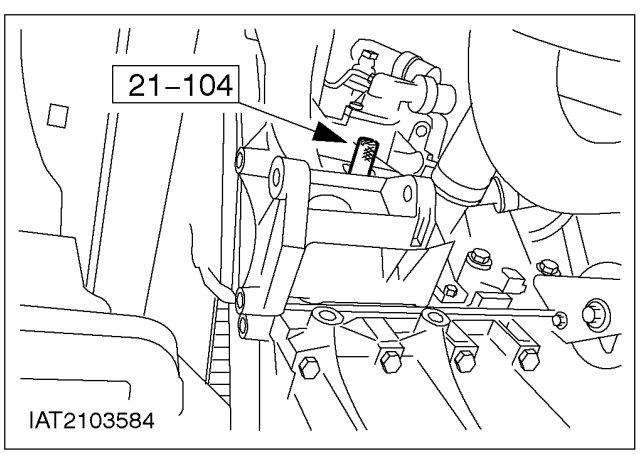

18. Turn the crankshaft to the TDC position.
    - Unscrew the blanking plug from the cylinder block.

NOTE: The timing pin must be screwed in as far as it will go.

- Screw in the timing pin.
- Carefully turn the crankshaft in the normal direction of rotation of the engine until it comes up against the timing pin.

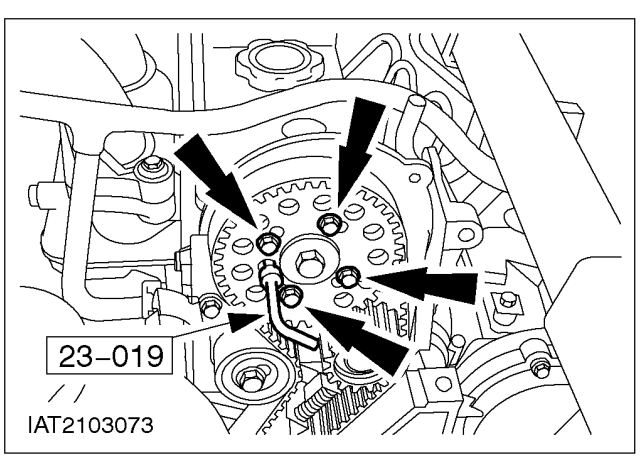

19. Lower the vehicle.

IN-VEHICLE REPAIR (CONTINUED)

20. Slacken the bolts of the camshaft timing pulley.

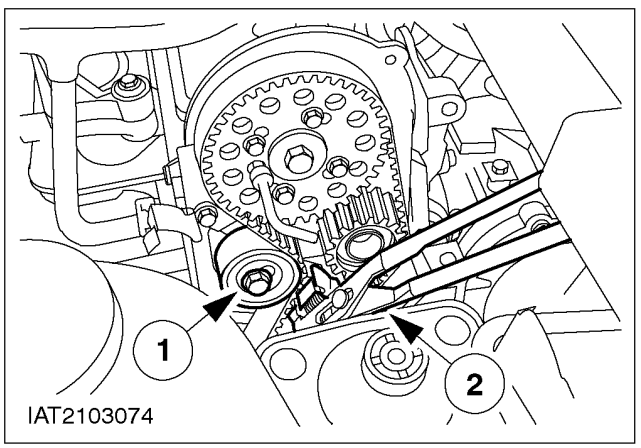

21. Remove the camshaft timing belt.
    1. Slacken the clamp bolt of the timing belt tensioner.
    2. Slacken the timing belt by compressing the spring using water pump pliers.

22. Tighten the clamp bolt of the timing belt tensioner. Remove the timing belt.

23. Raise the vehicle.

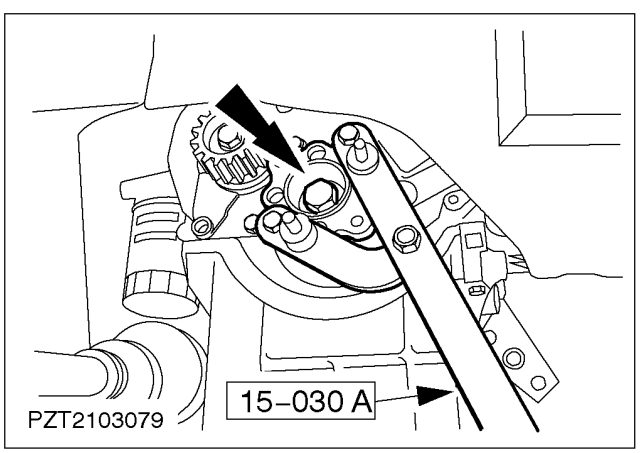

24. Remove the flange of the crankshaft front timing pulley.

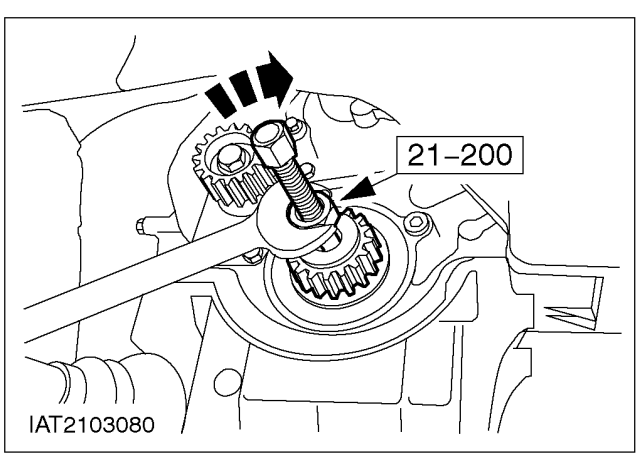

25. Remove the crankshaft rear timing pulley.

IN-VEHICLE REPAIR (CONTINUED)

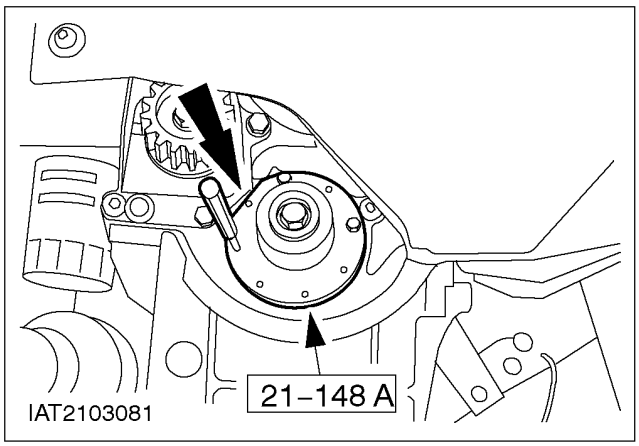

26. Mount the special tool.
    - Screw in the flange bolt of the crankshaft front timing pulley.

NOTE: Position of the flattened area on the special tool.

- Locate the special tool.
- Pre-punch four holes with a punch and screw in the self-tapping screws.

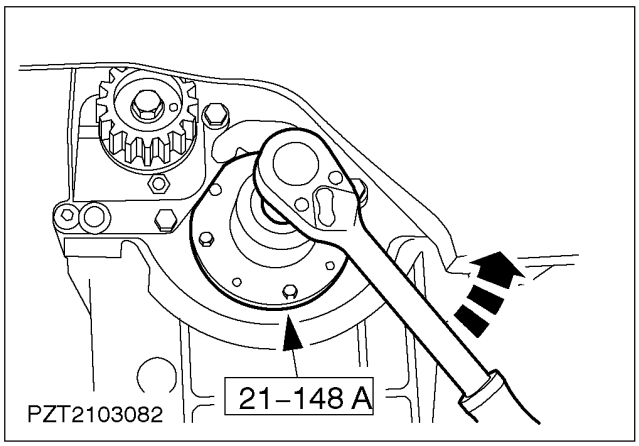

27. Pull out the oil seal, together with the flange bolt, from the crankshaft front timing pulley.

Installation

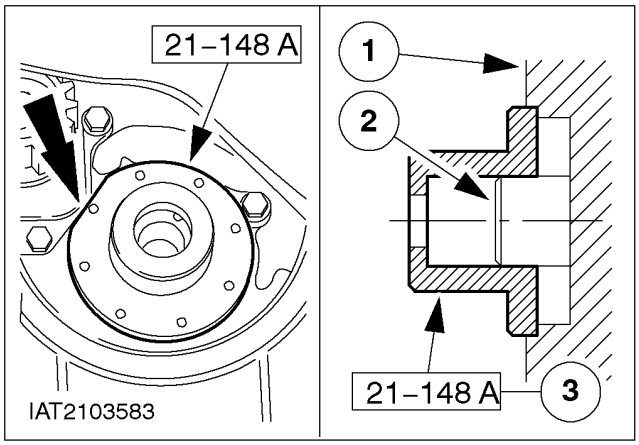

1. ⚠ **CAUTION: Only install the timing belt when the engine has cooled down. The engine must have been switched off for at least four hours.**

NOTE: Position of the flattened area on the special tool.

Check the alignment of the front plate. If necessary, center the front plate.

1. Front plate
2. Crankshaft
3. Special Tool

IN-VEHICLE REPAIR (CONTINUED)

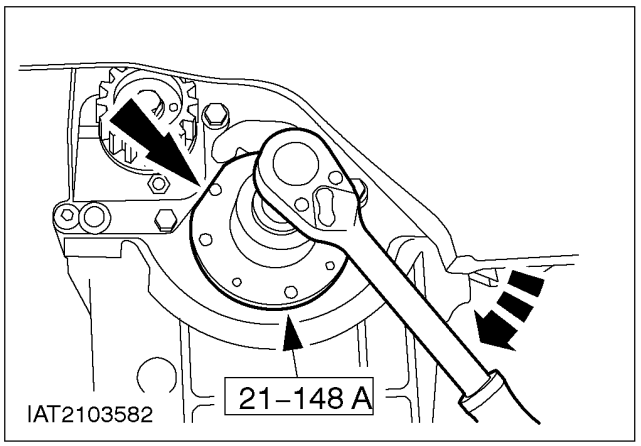

2. CAUTION: Carry out Step 3 immediately after Step 2 to prevent the oil seal from contracting. Only remove the support ring immediately prior to installation of the oil seal.

NOTE: Position of the flattened area on the special tool.

NOTE: The support ring must not yet be removed from the oil seal.

NOTE: Fit the oil seal dry.

Fit the oil seal, together with the bolt of the crankshaft front timing pulley flange.

- Remove the special tool and the support ring.

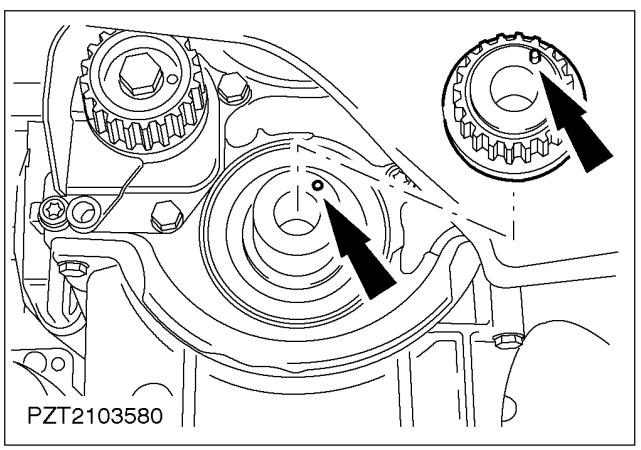

3. Fit the crankshaft rear timing pulley.

   Coat the O-ring and the end of the crankshaft with engine oil.

NOTE: The guide pin in the end of the crankshaft and the hole in the timing pulley must line up.

- Carefully slide the timing pulley on as far as the stop.

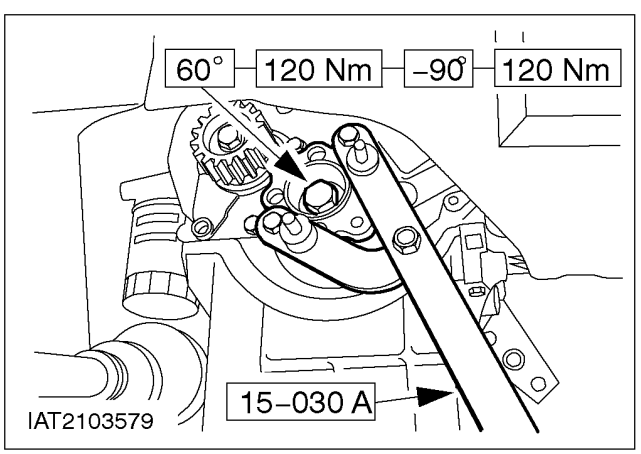

4. NOTE: Use a new bolt.

NOTE: Coat the contact face of the bolt head with engine oil.

Fit the flange of the crankshaft front timing pulley.

5. Lower the vehicle.

IN-VEHICLE REPAIR (CONTINUED)

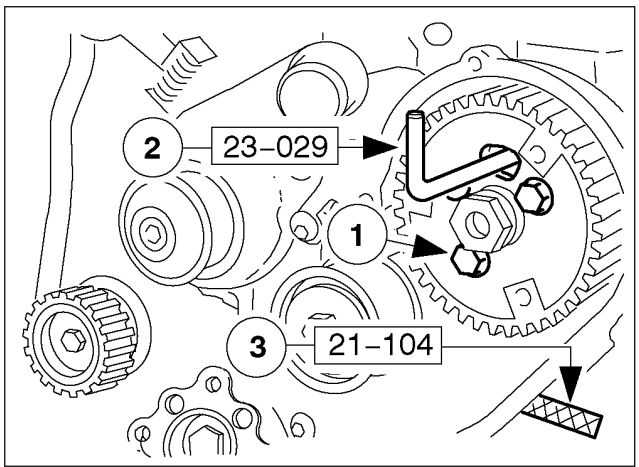

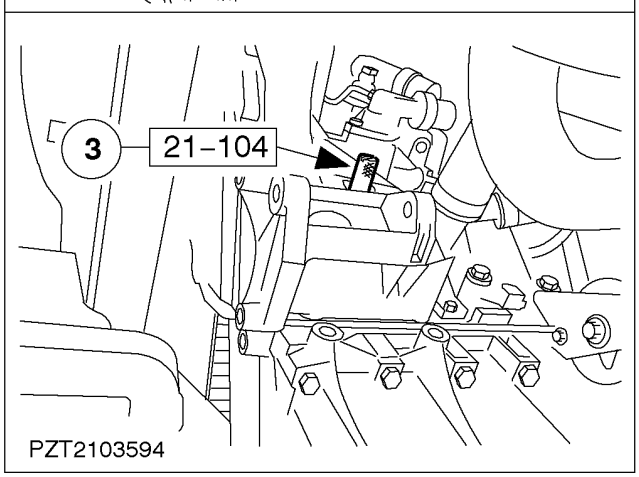

6. Align the injection pump timing pulley and turn the crankshaft to the TDC position.
   1. Slacken the bolts of the timing pulley.
   2. Align the injection pump timing pulley by inserting the timing pin through the cutout in the timing pulley and the hole in the injection pump housing. Unscrew the blanking plug from the cylinder block.

NOTE: The timing pin must be screwed in as far as it will go; the crankshaft must be resting against the timing pin.

   3. Screw the timing pin into the cylinder block. Carefully turn the crankshaft in the normal direction of rotation of the engine until it comes up against the timing pin.

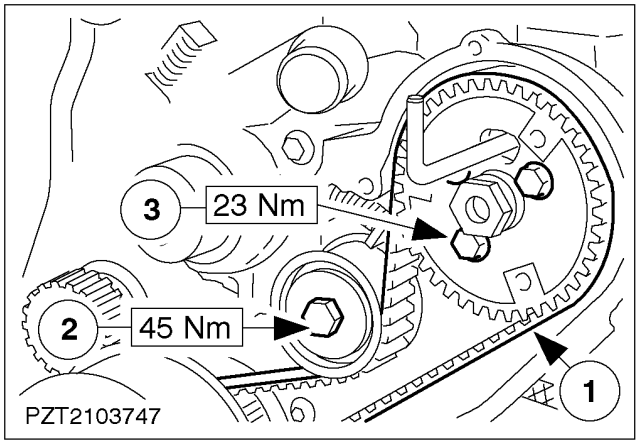

7. ⚠ **CAUTION: Renew the timing belt.**

⚠ **CAUTION: Only install the timing belt when the engine has cooled down. The engine must have been switched off for at least four hours.**

NOTE: Make sure the belt is seated correctly.

NOTE: The running direction of the timing belt is marked.

NOTE: The bolts must not be at the ends of their slots.

Fit the injection pump timing belt.

1. Fit the timing belt with the slack side nearest the timing belt tensioner. Slacken the bolt of the timing belt tensioner and let the timing belt tensioner snap against the timing belt.
2. Tighten the timing belt tensioner bolt.
3. Tighten the bolts of the timing pulley.

IN-VEHICLE REPAIR (CONTINUED)

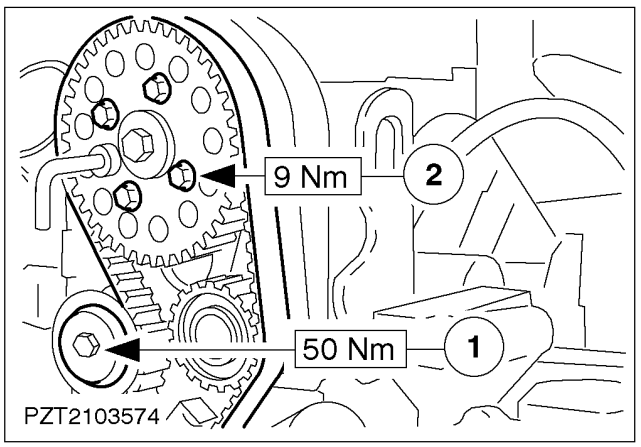

8. ⚠CAUTION: Renew the timing belt.

NOTE: The direction of rotation is marked.

NOTE: Make sure the belt is seated correctly.

NOTE: The bolts must not be at the ends of their slots.

Fit the timing belt with the slack side nearest the timing belt tensioner. Slacken the clamp bolt of the timing belt tensioner and let the timing belt tensioner snap against the belt.

1. Tighten the clamp bolt of the timing belt tensioner.
2. Tighten the bolts of the timing pulley.

9. Remove timing pins 21-104, 23-019 and 23-029.

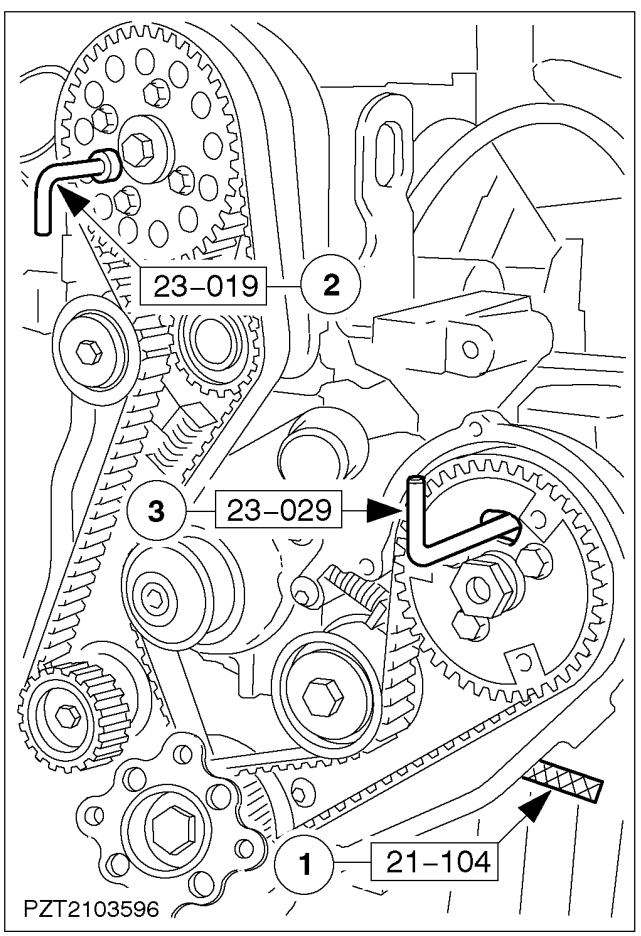

10. Preparations for tensioning the timing belts.

NOTE: Turn the crankshaft two turns in the normal direction of rotation of the engine until the slot in the injection pump timing pulley is at 12 o'clock.

NOTE: Turn the slot back counter to the normal direction of rotation to 11 o'clock.

1. Screw in the timing pin.

NOTE: Carefully turn the crankshaft in the normal direction of rotation of the engine until it comes up against the timing pin.

2. The timing pin must be able to be inserted in the camshaft timing pulley.
3. Timing pin 23-029 must be able to be inserted in the injection pump timing pulley.

IN-VEHICLE REPAIR (CONTINUED)

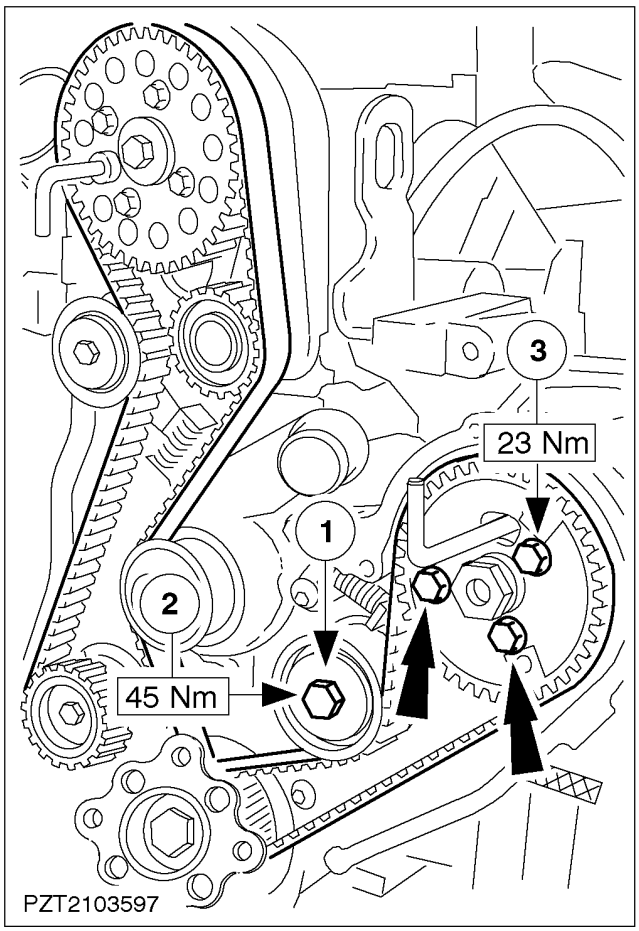

11. ⚠ CAUTION: Used timing belts must not be re-tensioned.

NOTE: Slacken the bolts of the timing pulleys just half a turn each.

NOTE: The crankshaft must remain in the TDC position.

Tension the injection pump timing belt. Slacken the bolts of the camshaft timing pulley. Slacken the bolts of the injection pump timing pulley.

1. Slacken the bolt of the injection pump timing belt tensioner a quarter turn so that the timing belt tensioner presses against the timing belt.
2. Tighten the bolt of the injection pump timing belt tensioner.
3. Tighten the bolts of the injection pump timing pulley.

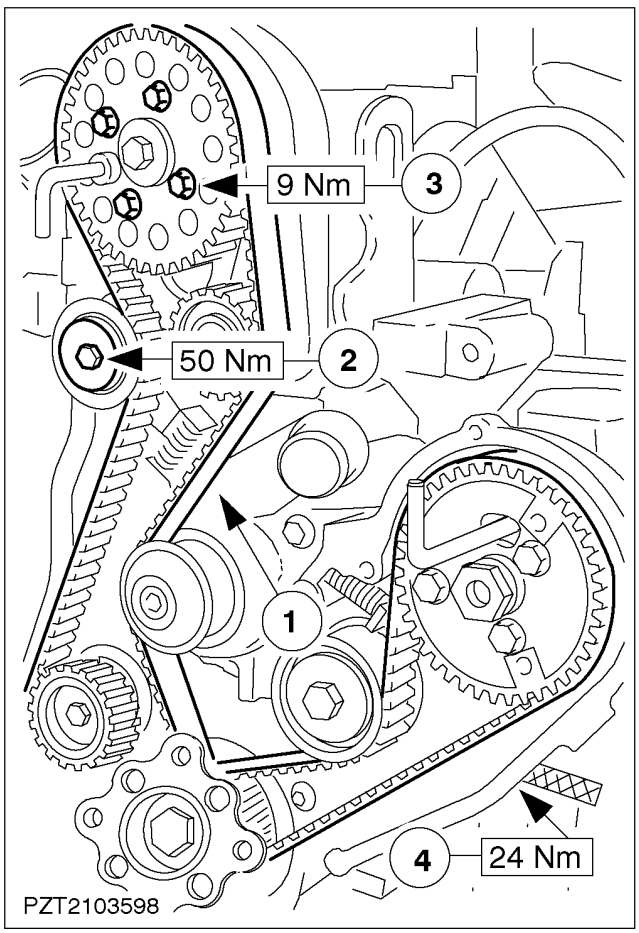

12. ⚠ CAUTION: Used timing belts must not be re-tensioned.

Tension the camshaft timing belt.

NOTE: Leave timing pin 23-029 inserted.

1. Slacken the bolt of the camshaft timing belt tensioner a quarter turn so that the timing belt tensioner presses against the timing belt.

NOTE: All the timing pins must be properly inserted; the crankshaft must be resting against the timing pin.

2. Tighten the bolt of the camshaft timing belt tensioner.
3. Tighten the bolts of the camshaft timing pulley. Take out the timing pins.
4. Fit the blanking plug.

IN-VEHICLE REPAIR (CONTINUED)

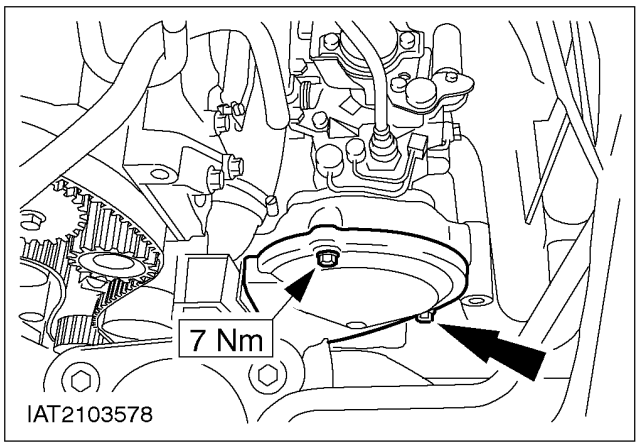

13. Fit the injection pump timing belt cover.

14. Raise the vehicle.

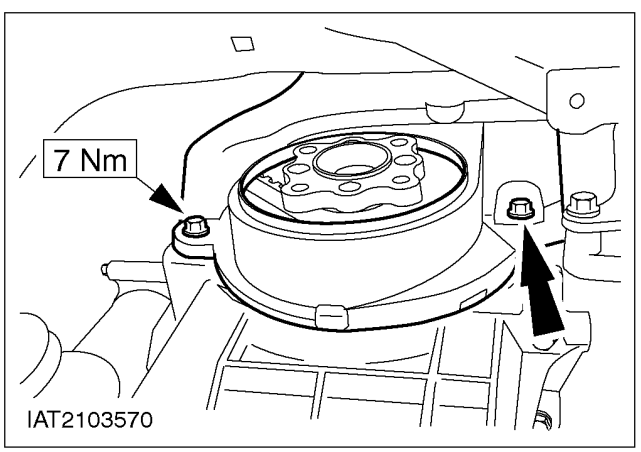

15. Screw in the lower bolts of the lower timing belt cover.

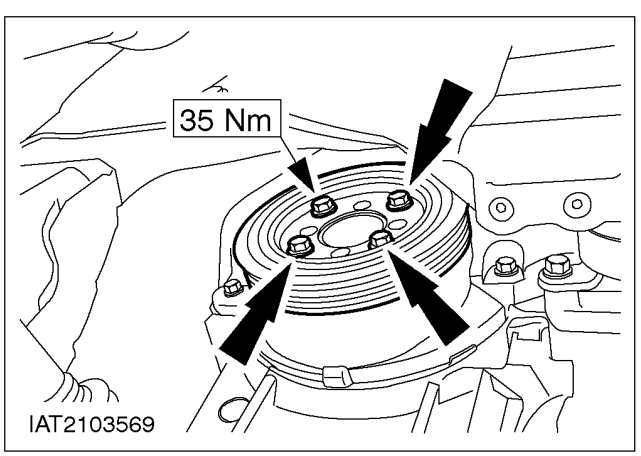

16. Fit the crankshaft pulley/vibration damper.

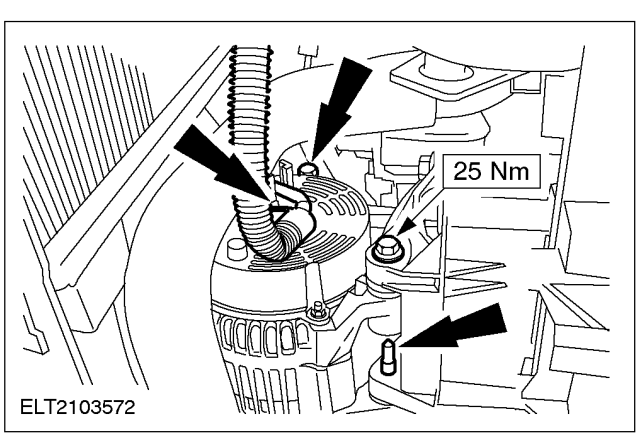

17. ⚠ **CAUTION: Position the generator and screw in the bolts finger tight. First tighten the bolt on the pulley side, then the rear upper long bolt and finally the rear lower short bolt.**

Install the alternator and connect it.

IN-VEHICLE REPAIR (CONTINUED)

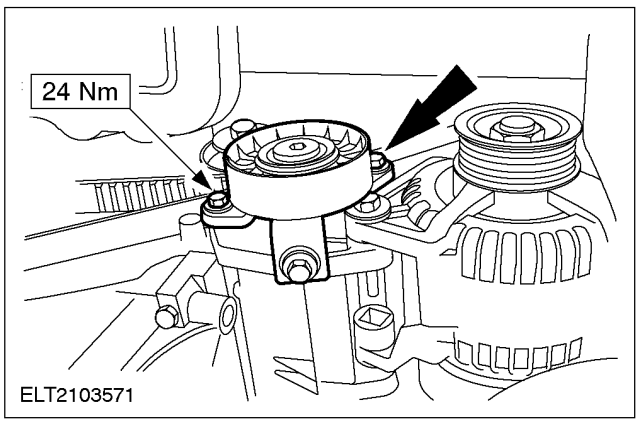

18. Fit the drive belt tensioner.

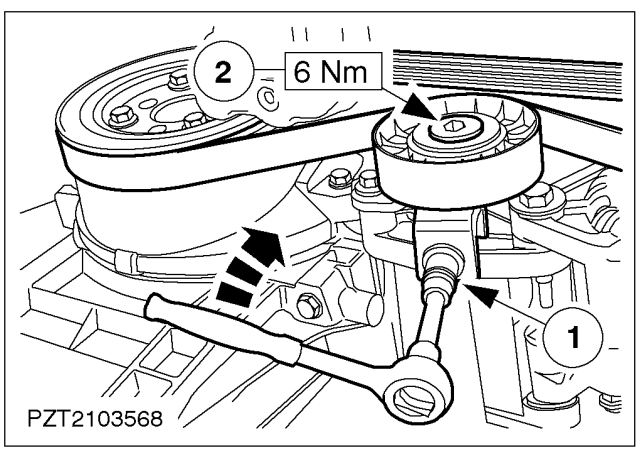

19. Fit the drive belt.
    1. Fit the drive belt and tension it as described in Operation No. 31 413 0.
    2. Tighten the bolt.

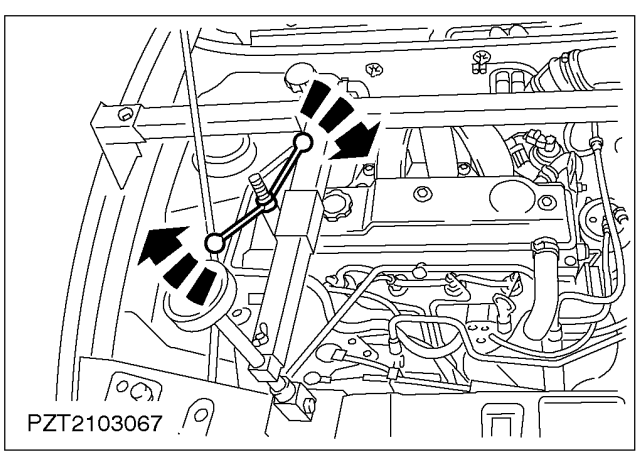

20. Lower the vehicle.

21. Raise the engine with the engine support bar.

IN-VEHICLE REPAIR (CONTINUED)

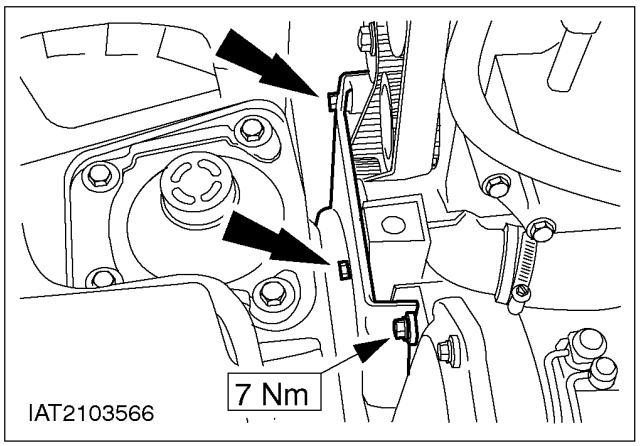

22. Screw in the remaining bolts of the lower

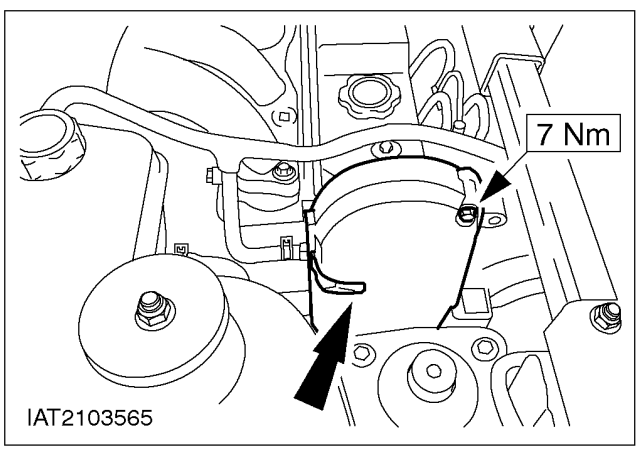

23. Lower the engine with the engine support bar.

24. Fit the upper timing belt cover.

25. Fit the front engine mounting bracket.

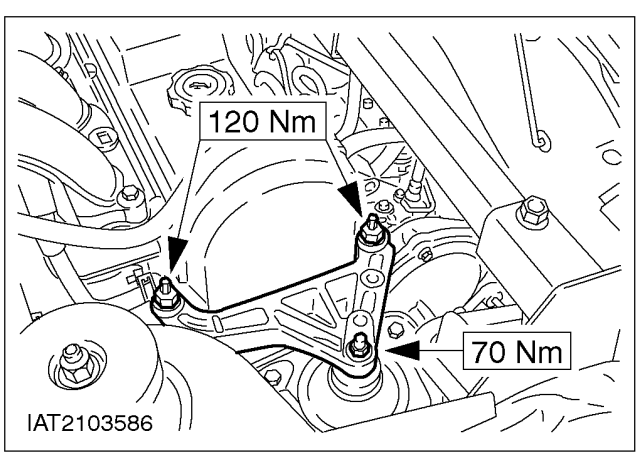

IN-VEHICLE REPAIR (CONTINUED)

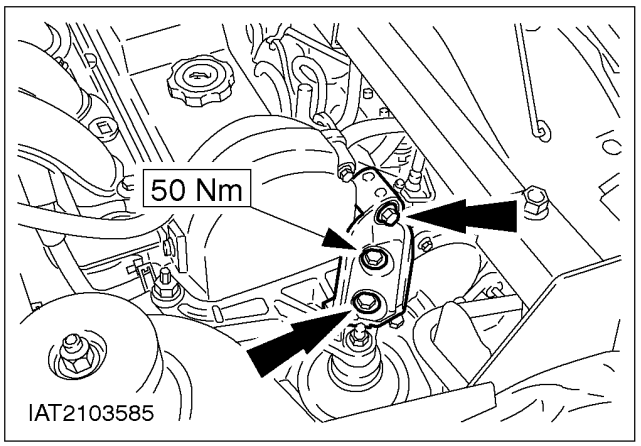

26. Attach the front engine mounting auxiliary bracket.

27. Detach the engine support bar.

28. Connect the battery ground cable.

29. Standard finishing operations.
    - Enter the radio keycode.
    - Reprogram the preset radio stations.
    - Reset the clock.
    - Carry out a road test to enable the PCM (EEC V) to collect data.

IN-VEHICLE REPAIR

Auxiliary Shaft Oil Seal (21 556 0)

Material	Specification
Engine Oil	ACEA A3/B3

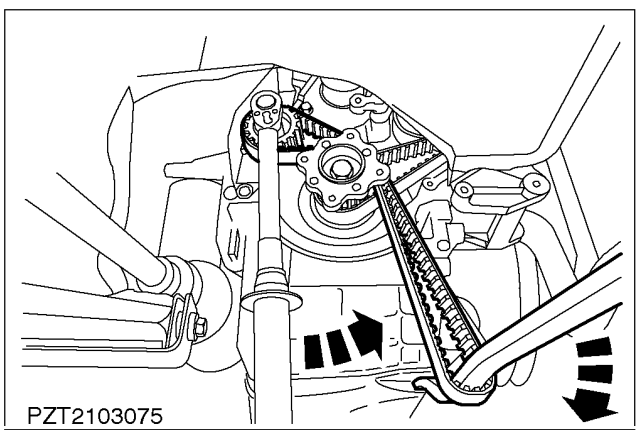

1. **NOTE:** Immobilise the timing belt pulley with the old timing belt.
   Remove the camshaft timing belt as described in Operation No. 21 304 0.
   Slacken the bolt of the auxiliary shaft timing belt pulley.

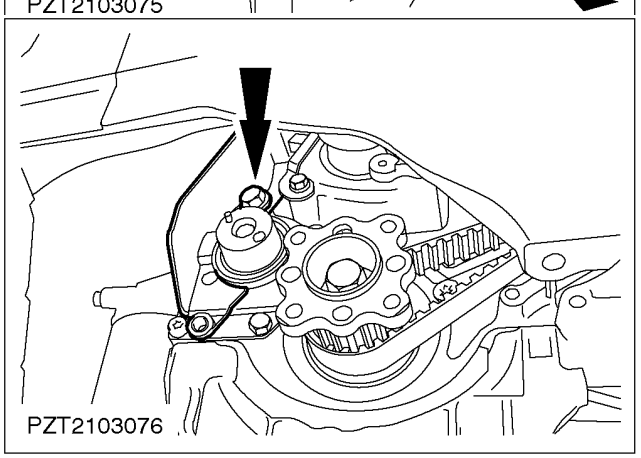

2. Remove the timing belt side cover.

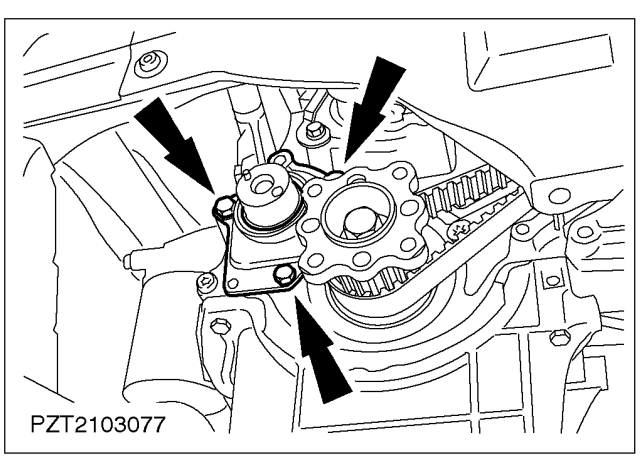

3. Remove the auxiliary shaft oil seal housing.

IN-VEHICLE REPAIR (CONTINUED)

Installation

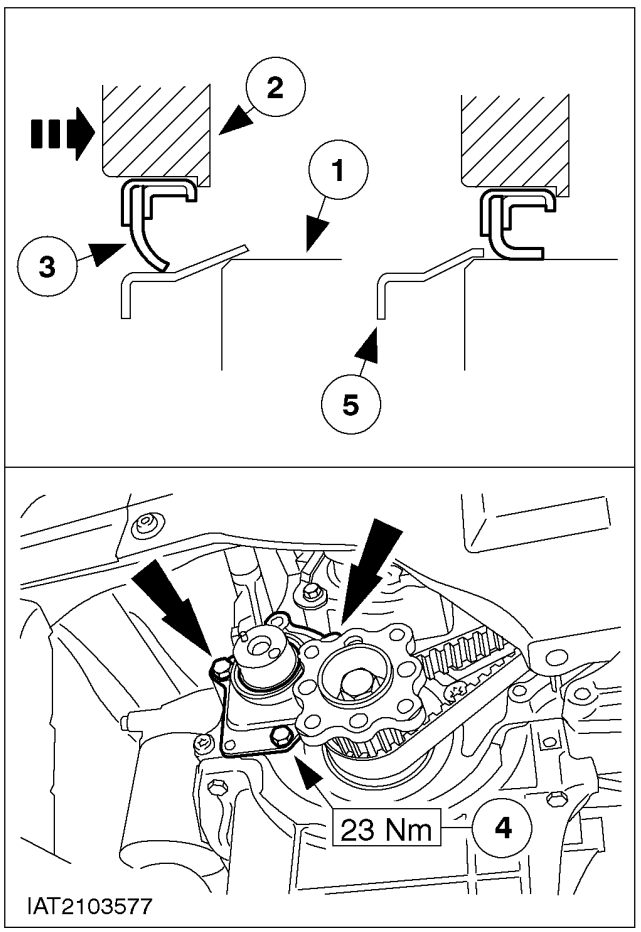

1. Install the auxiliary shaft oil seal housing.
   1. Coat the auxiliary shaft bearing journal with engine oil.
   2. Slide the new oil seal housing with the integrated oil seal and the plastic fitting bush onto the auxiliary shaft bearing journal.
   3. Oil seal
   4. Tighten the oil seal housing bolts.
   5. Remove the support ring after installation and check that the seal is sitting correctly.

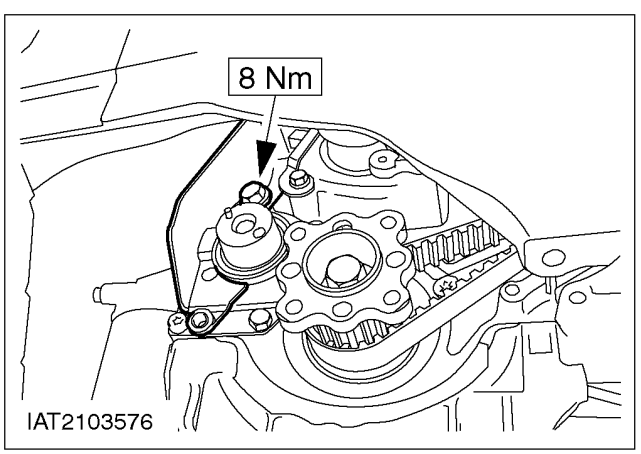

2. Fit the timing belt side cover.

IN-VEHICLE REPAIR (CONTINUED)

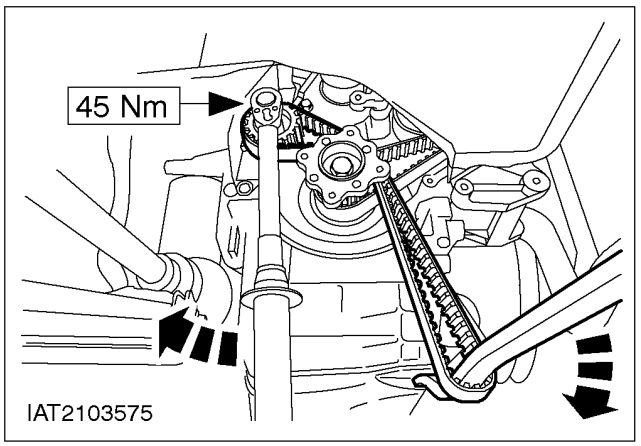

3. NOTE: The auxiliary shaft guide pin and the hole in the timing belt pulley must line up.

NOTE: Immobilise the timing belt pulley with the old timing belt.

Fit the auxiliary shaft timing belt pulley.

4. Fit a new camshaft timing belt as described in Operation No. 21 304 0.

IN-VEHICLE REPAIR

Valve Seals (21 238 0)

Special Tool(s)	
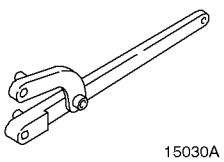 15030A	Universal flange holding wrench 15-030 A
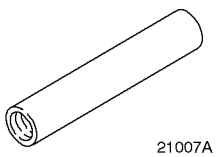 21007A	Installer, valve stem seals 21-007 A
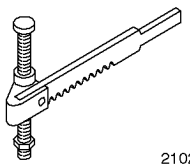 21024	Valve spring compressor 21-024
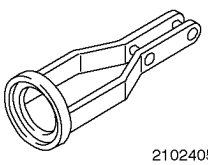 2102405	Adapter for 21-024 21-024-05
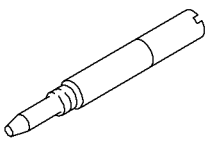 21104	Timing peg, crankshaft TDC position 21-104
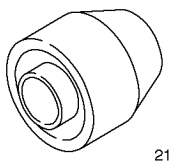 21110	Installer, oil seal 21-110

Special Tool(s)	
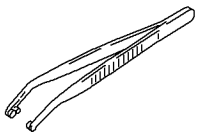 21156	Installer, valve stem collets 21-156
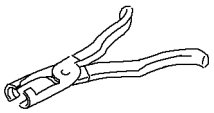 21165	Pliers, valve stem oil seals 21-165
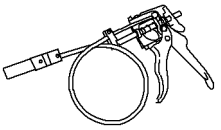 24003	Remover/installer, cooling hose clamp 24-003

General Equipment
Two-legged puller

Material	Specification
Sealer	SPM-4G-9112-F/G
Valve stem installation sleeves	
Engine Oil	ACEA B3 / E3

Removal

1. General note.
   - This operation was carried out on an engine with a mechanical timing belt tensioner.
   - When removing and installing coolant and ventilation hoses, if necessary. For additional information, refer to Section 303-03.

IN-VEHICLE REPAIR (CONTINUED)

2. Remove the camshaft timing belt as described in Operation No. 21 304 0.

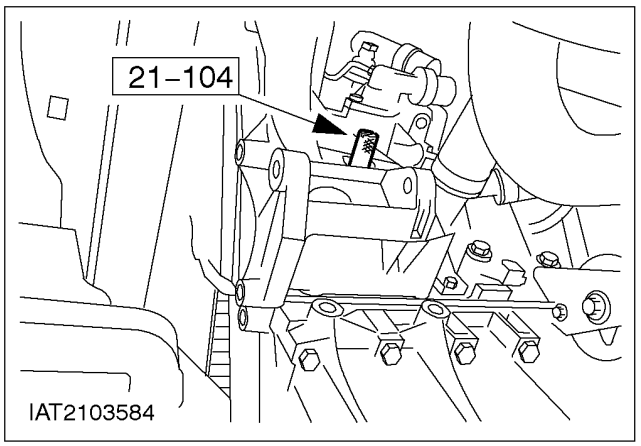

3. Raise the vehicle.

4. Lower the vehicle.

5. **CAUTION: Support the engine with a trolley jack.**
   Detach the engine support bar.

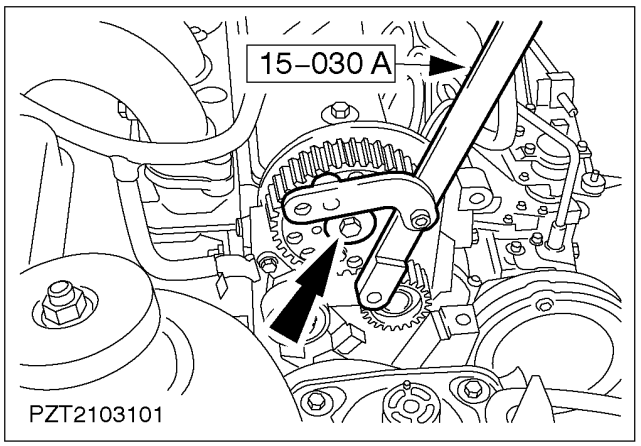

6. Slacken the flange bolt of the camshaft timing pulley.

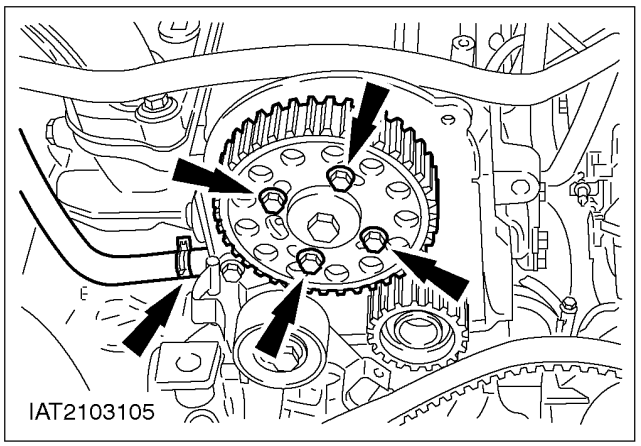

7. Remove the camshaft timing pulley.

8. Detach the crankcase ventilation hose.

IN-VEHICLE REPAIR (CONTINUED)

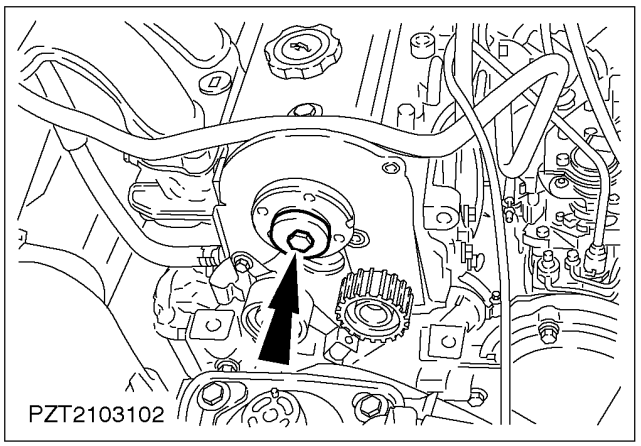

9. Remove the flange bolt of the camshaft timing pulley.

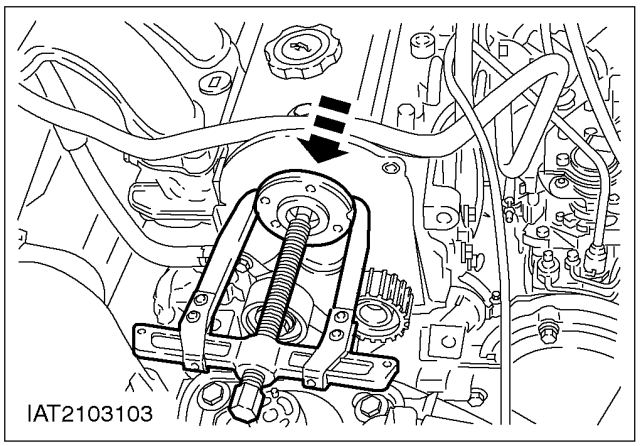

10. Pull off the flange of the camshaft timing pulley using a proprietary two-legged puller.
    - Remove the Woodruff key.

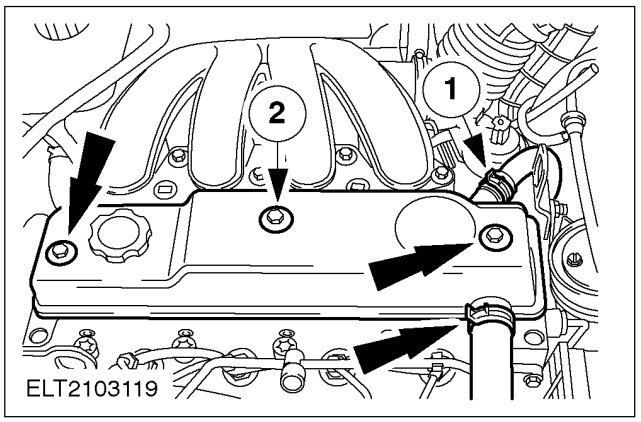

11. Remove the cylinder head cover.
    1. Detach the crankcase ventilation hoses.
    2. Remove the bolts.

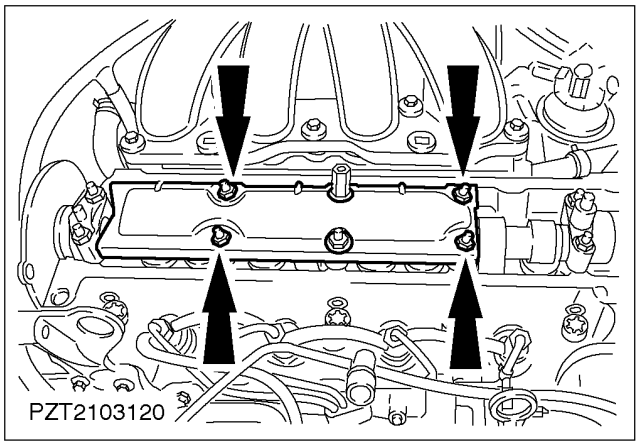

12. Remove the oil baffle.

IN-VEHICLE REPAIR (CONTINUED)

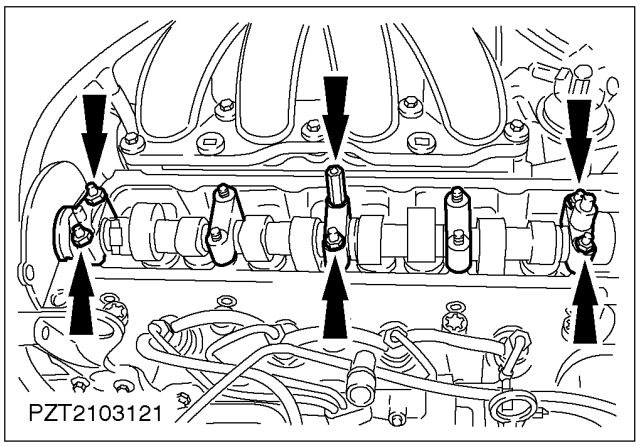

13. ⚠ **CAUTION: Slacken the nuts of the camshaft bearing caps evenly, a turn at a time.**
Remove the camshaft.
- Take out the bearing caps, bearing shells and camshaft and put them down in order.
- Remove the camshaft seal.

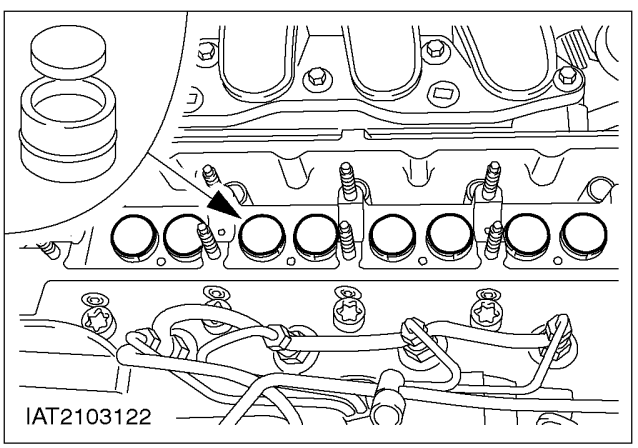

14. **NOTE:** Put down the valve tappets in order. Remove the valve tappets and the valve shims and check them for wear.

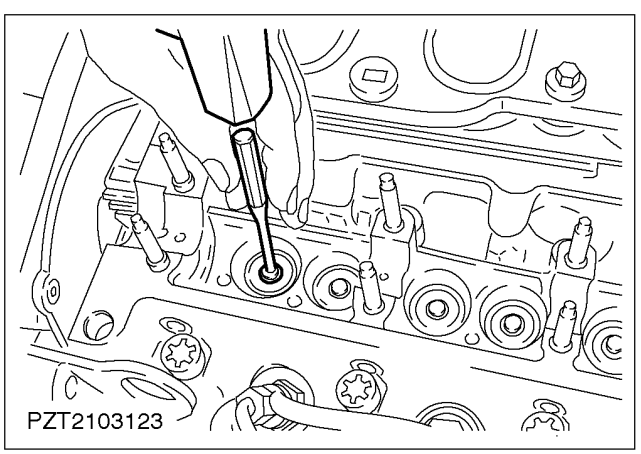

15. Release the valve spring retainers by tapping lightly on the ends of the valve stems.

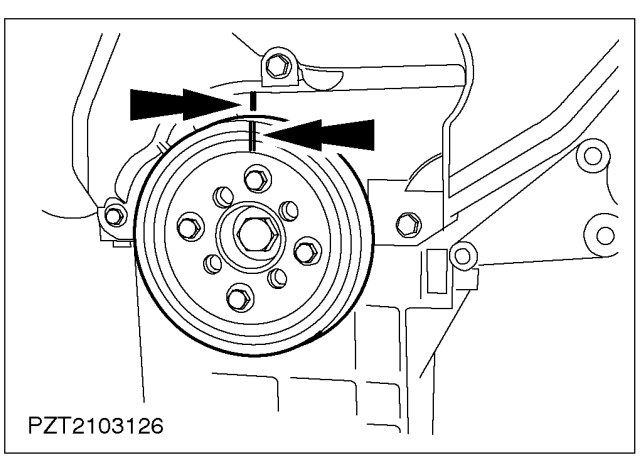

16. Turn the crankshaft to bring the pistons of cylinders nos. 1 and 4 to TDC.
- Mark the position.

IN-VEHICLE REPAIR (CONTINUED)

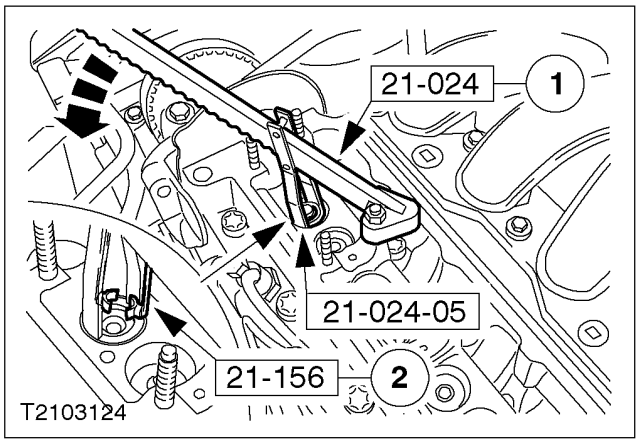

17. NOTE: Only carry out the following operations for cylinders nos. 1 and 4.
Remove the valve springs.

1. Compress the valve springs.
2. Remove the valve collets. Remove the valve spring retainers and valve springs and put them down in order.

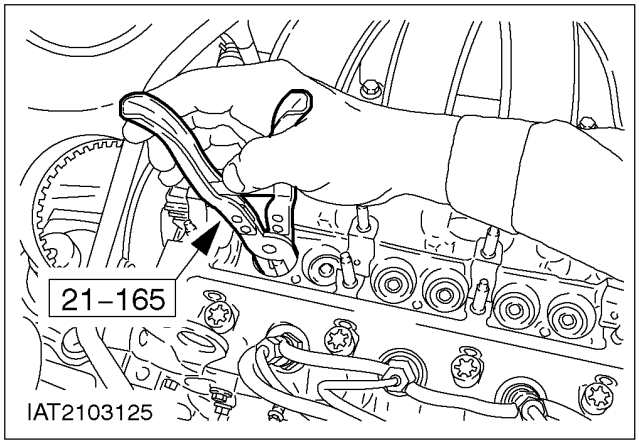

18. Remove the valve stem seals.

Installation

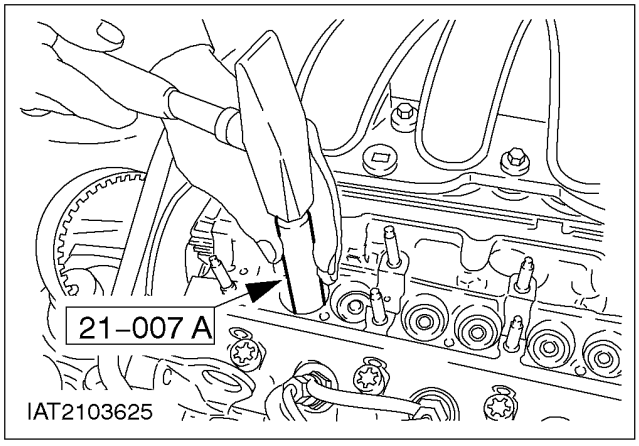

1. ⚠ CAUTION: Cover the grooves in the valve stems with installation sleeves.

NOTE: Remove the installation sleeves after installation.

Lubricate the new valve stem seals with engine oil and fit them.

IN-VEHICLE REPAIR (CONTINUED)

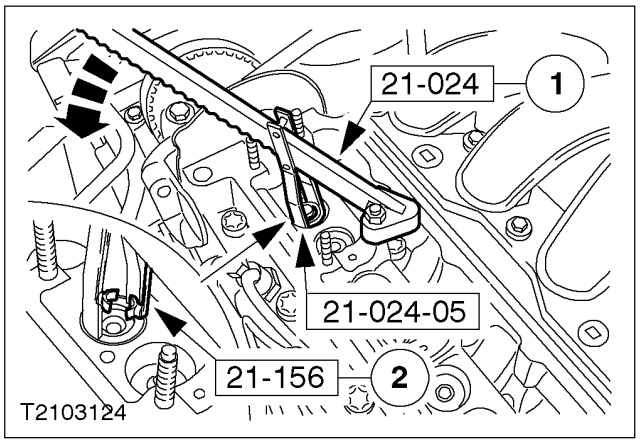

2. Fit the valve springs. Locate the valve springs and valve spring retainers in position.
   1. Compress the valve springs.
   2. Fit the valve collets.

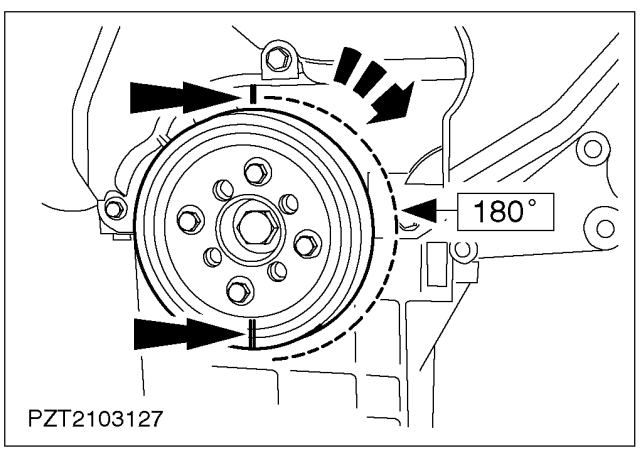

3. Turn the crankshaft to bring the pistons of cylinders nos. 2 and 3 to TDC.
   - Turn the crankshaft on through 180°.

4. Carry out steps xx to xx on cylinders nos. 2 and 3.

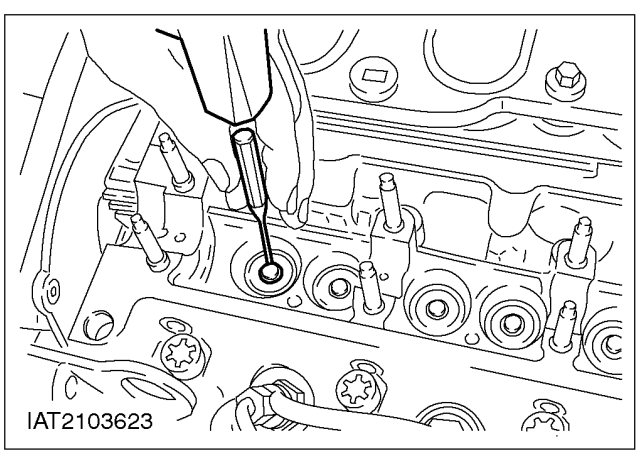

5. Adjust the positions of the valve collets.

IN-VEHICLE REPAIR (CONTINUED)

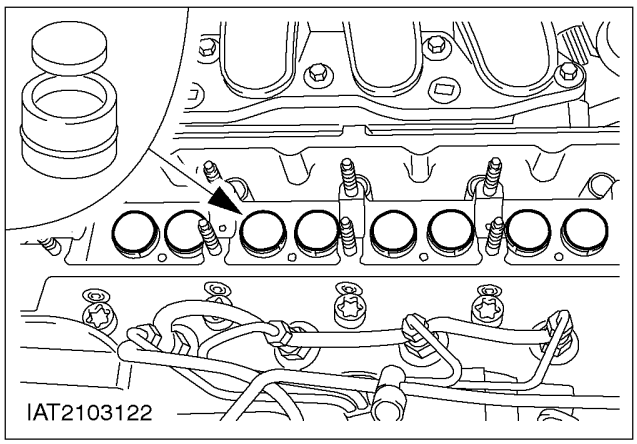

6. **NOTE:** The lettering on the valve shims faces downwards.

NOTE: Installation order.
Lubricate the valve tappets and valve shims with engine oil and fit them.

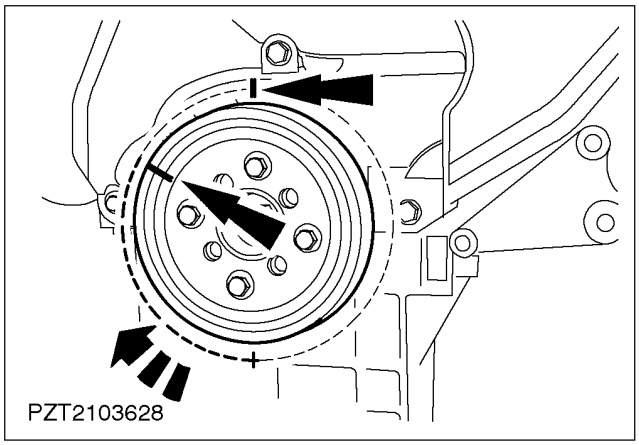

7. Turn the crankshaft a further 1 1/3 turns until it is just before TDC.

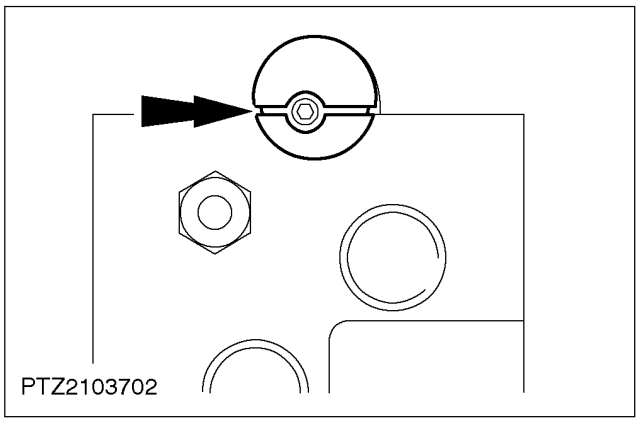

8. Put the camshaft bearing shell lower halves in place and coat them with engine oil.
   - Fit the camshaft and turn it until the slot in the eccentric on the camshaft is parallel with the upper edge of the cylinder head (with the larger semi-circle at the top).

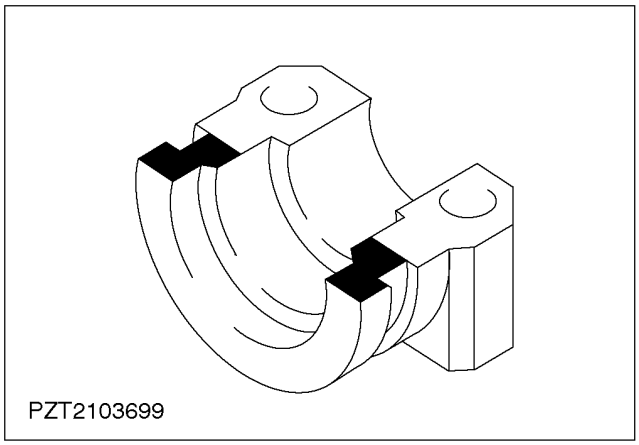

9. Align the camshaft.

10. Put the camshaft bearing shells upper halves in place and coat them with engine oil.

IN-VEHICLE REPAIR (CONTINUED)

11. Apply sealer (SPM-4G-9112-F/G) to bearing cap no. 1 in the areas indicated.

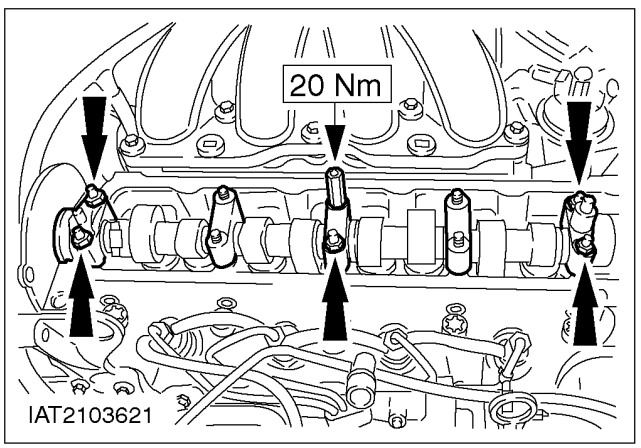

12. Install the camshaft.

NOTE: The bearing caps must lie flat.
- Fit camshaft bearing caps nos. 1, 3 and 5.

NOTE: Tightening sequence.
- Screw on the nuts and tighten them.

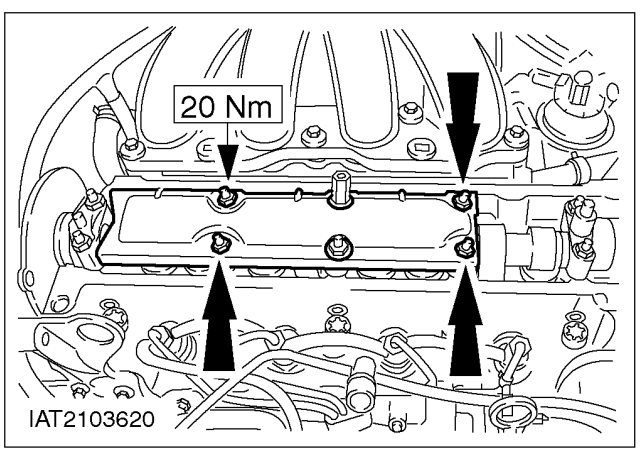

13. Fit the oil baffle.

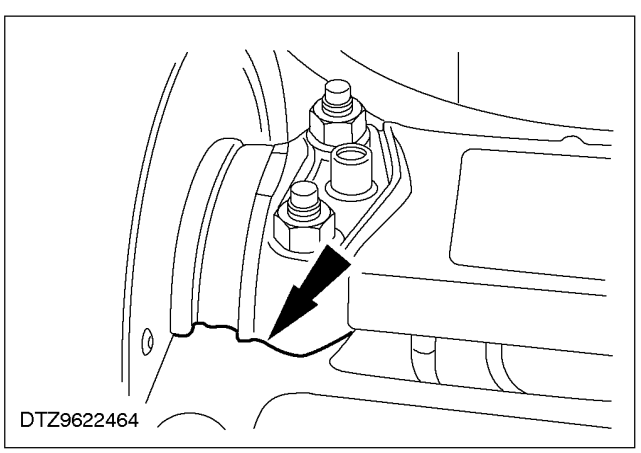

14. Seal the parting line between the bearing cap and the cylinder head on both sides with a thin bead of sealer (SPM-4G9112-F/G).

IN-VEHICLE REPAIR (CONTINUED)

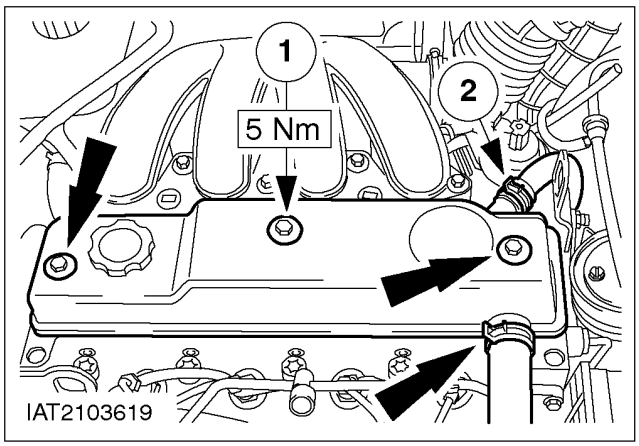

15. NOTE: Clean the cylinder head cover gasket and check it for damage. Only renew it if it is damaged. The gasket can be reused several times if it is in good condition.

NOTE: Before fitting the gasket, coat it lightly with engine oil.

Fit the cylinder head cover.

1. Screw in the bolts.
2. Attach the crankcase ventilation hoses.

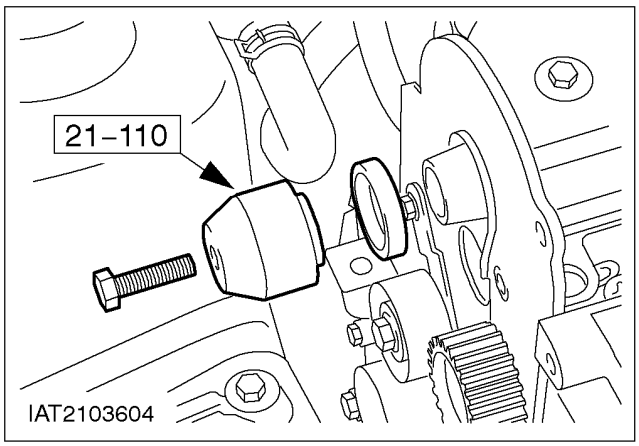

16. NOTE: Coat the running surface and the sealing lip of the oil seal with engine oil. The text on the oil seal faces outwards during installation.

Fit the camshaft oil seal using the special tool and an M8 bolt.

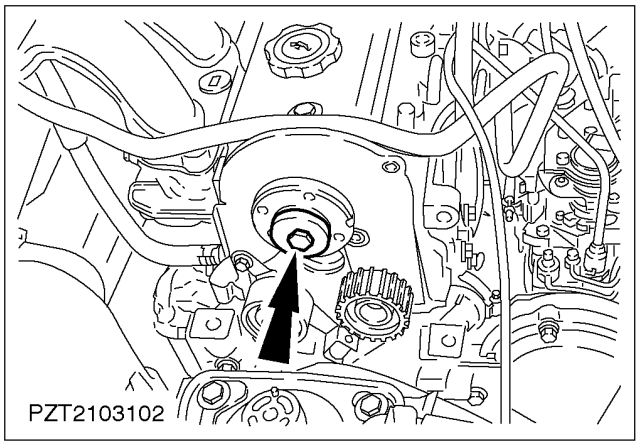

17. Fit the flange of the camshaft timing pulley.
    - Insert the Woodruff key.
    - Draw on the flange with the bolt.

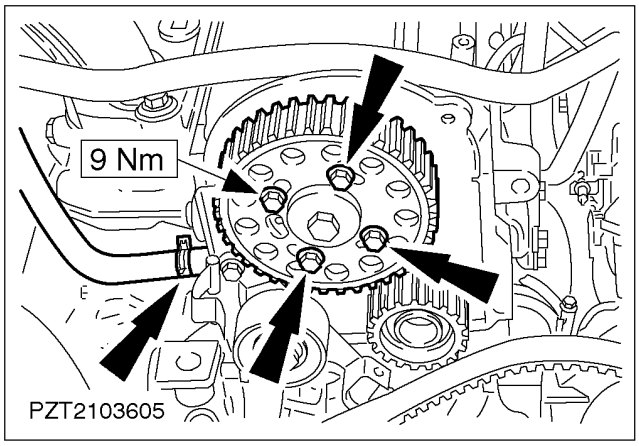

18. Fit the camshaft timing pulley.

IN-VEHICLE REPAIR (CONTINUED)

19. Connect the PCV hose.

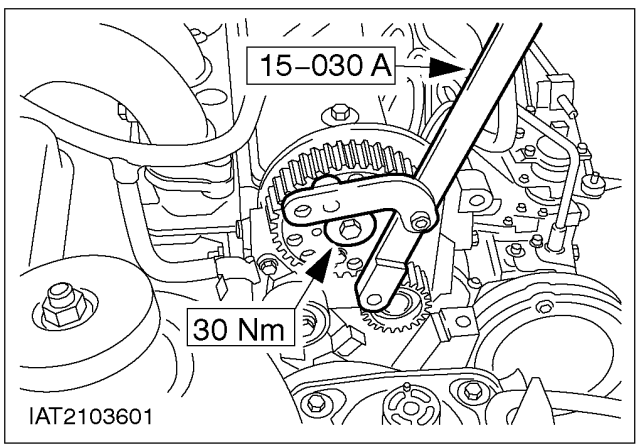

20. Tighten the flange bolt of the camshaft timing pulley.

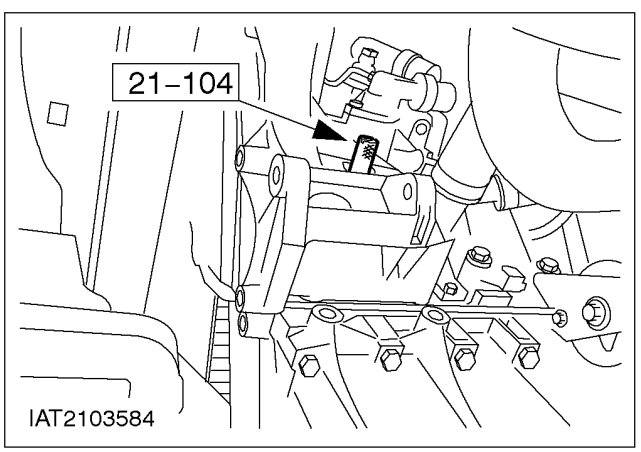

21. Raise the vehicle.

NOTE: The timing pin must be screwed in as far as it will go.

- Fit the timing pin.
- Carefully turn the crankshaft in the normal direction of rotation of the engine until it comes up against the timing pin.

22. Turn the crankshaft to the TDC position.
23. Lower the vehicle.
24. Attach the engine support bar.
25. Fit a new camshaft timing belt as described in Operation No. 21 304 0.

IN-VEHICLE REPAIR

Timing Belt — Engines with Automatic Timing Belt Tensioner (21 304 0)

Special Tool(s)	
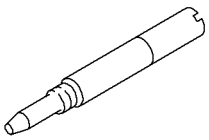 21104	Timing pin, crankshaft TDC 303-193 (21104)
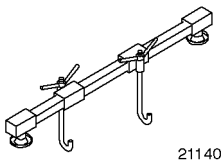 21140	Engine support bar 303-290 (21140)
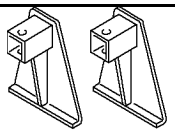 2114001	Adapter for 303-290 (21140) 303-290-01 (2114001)
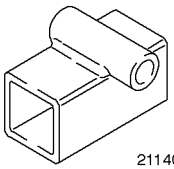 2114002	Adapter for 303-290 (21140) 303-290-02 (2114002)

Special Tool(s)	
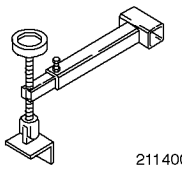 2114003	Adapter for 303-290 (21140) 303-290-03 (2114003)
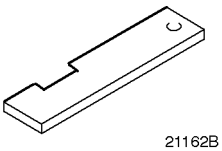 21162B	Timing tool, camshaft 303-376 (21162B)
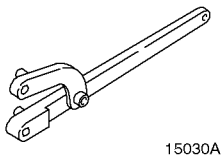 15030A	Universal flange holding wrench 205-072 (15030A)

Material	Specification
Sealer	SPM-4G-9112-F/G

Removal

1. Preparatory measures.
   - Make a note of the radio keycode.
   - Make a note of the pre-set radio stations.
2. Disconnect the battery ground lead.
3. Attach the engine support bar.

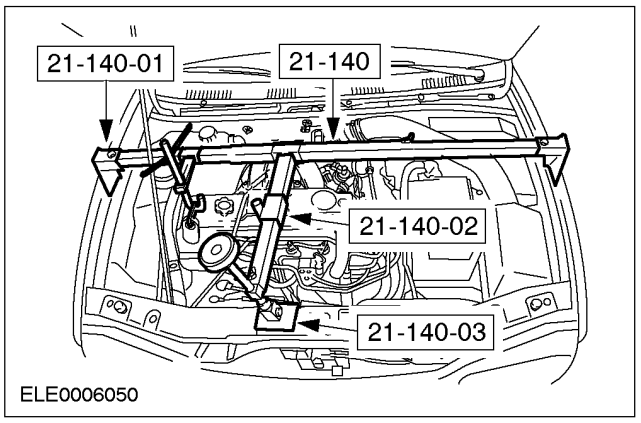

IN-VEHICLE REPAIR (CONTINUED)

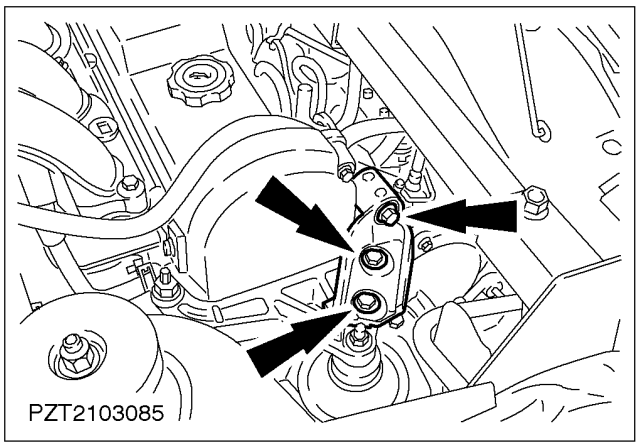

4. Remove the front engine mounting auxiliary bracket.

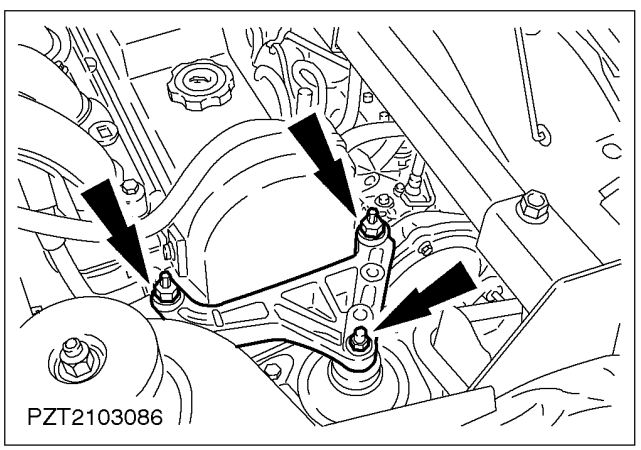

5. Remove the front engine mounting bracket.

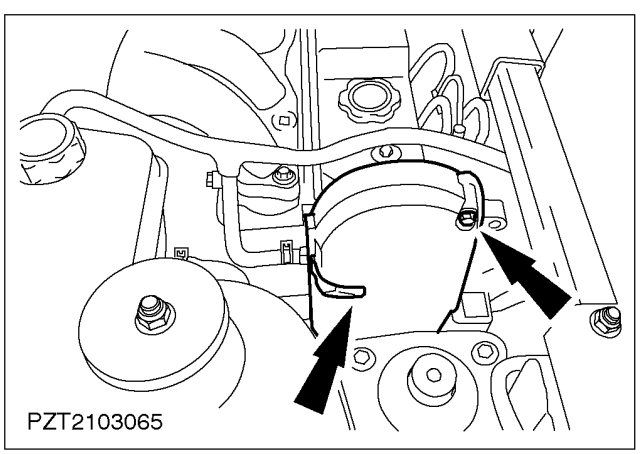

6. Remove the upper timing belt cover.

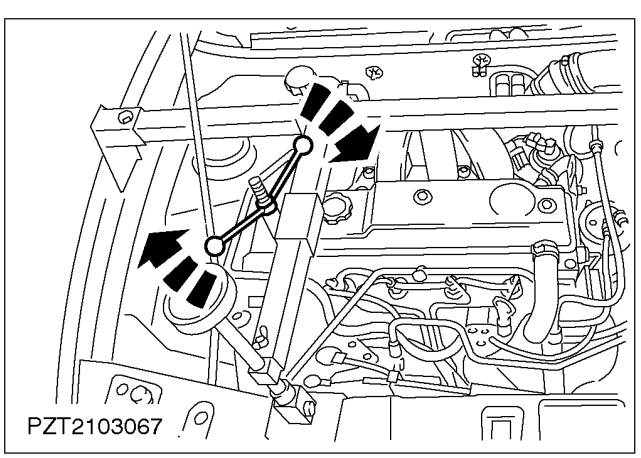

7. Raise the engine with the engine support bar.

IN-VEHICLE REPAIR (CONTINUED)

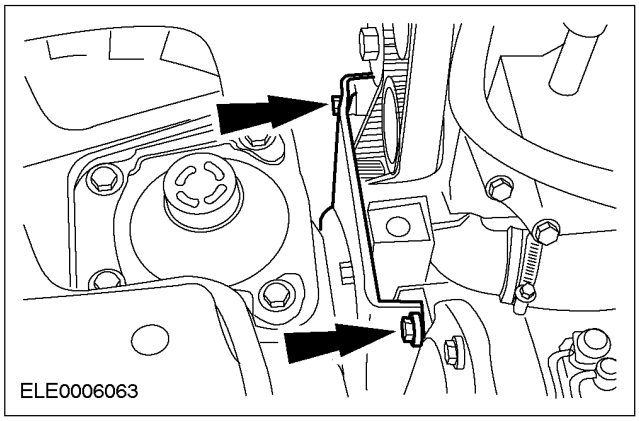

8. Unscrew the top bolts of the lower timing belt cover.

9. Lower the engine with the engine support bar.

10. Raise the vehicle.

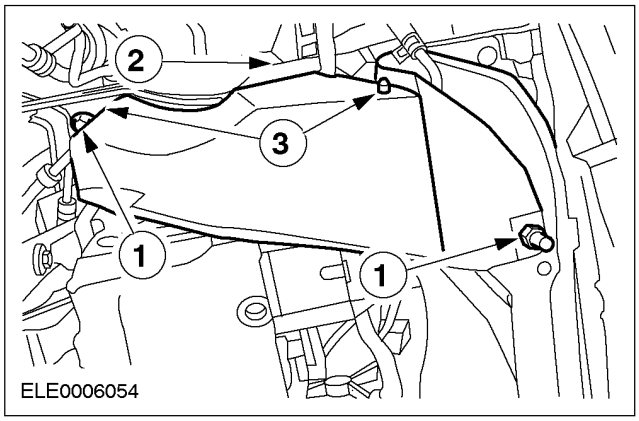

11. Remove the lower drive belt cover.
    1. Remove the bolts from the drive belt cover.
    2. Unclip the drive belt cover.
    3. Unclip the power steering high-pressure pipe.

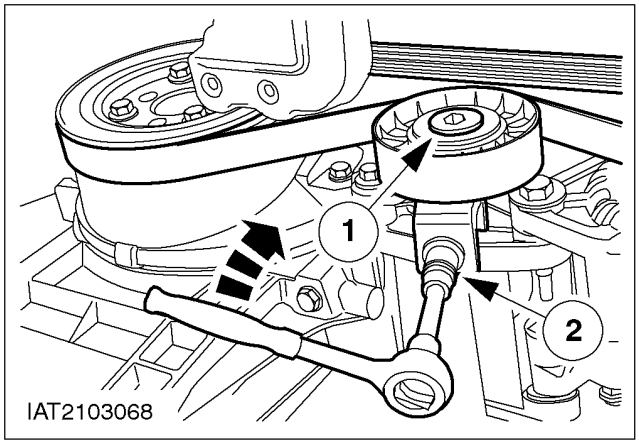

12. Remove the drive belt.
    1. Release the bolt.

CAUTION: To slacken, turn the bolt clockwise.

    2. Slacken the drive belt and remove it.

IN-VEHICLE REPAIR (CONTINUED)

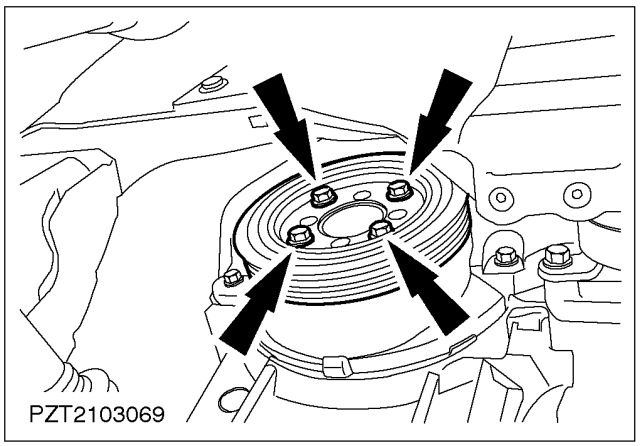

13. Remove the crankshaft belt pulley/vibration damper.

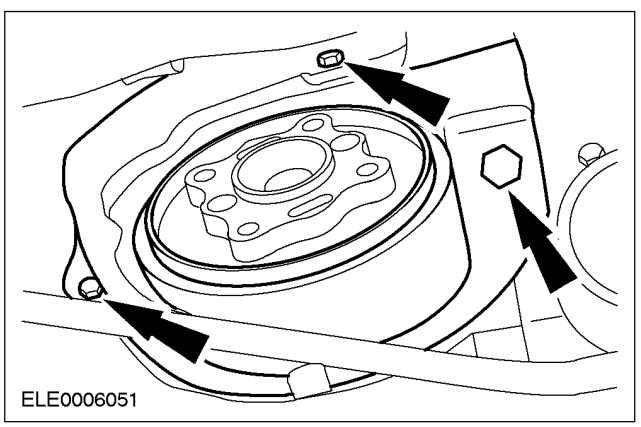

14. Remove the lower timing belt cover.

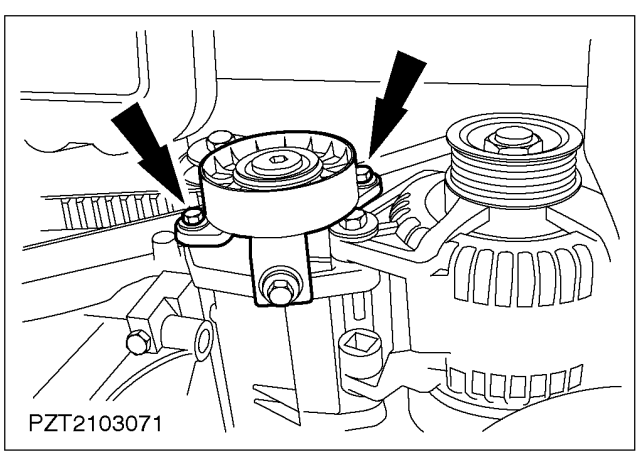

15. Remove the belt tensioner.

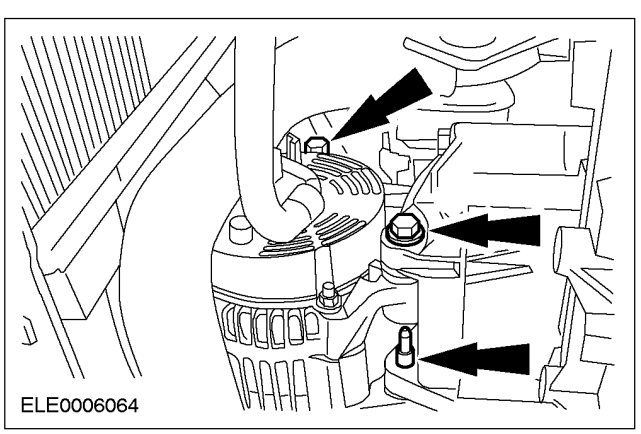

16. Remove the generator and lay it to one side.

IN-VEHICLE REPAIR (CONTINUED)

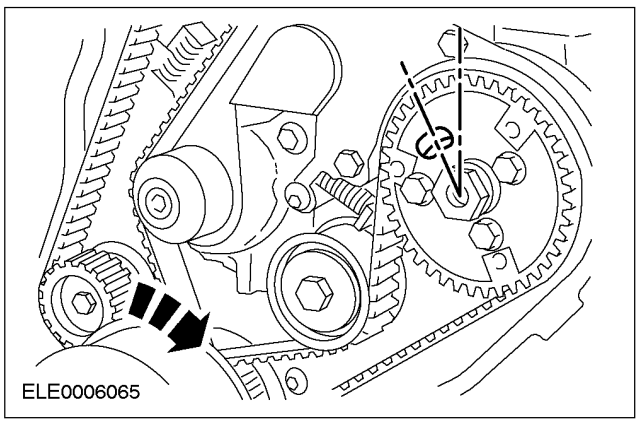

17. Preparing to remove the timing belt.
    - Turn the crankshaft further in the normal direction of rotation of the engine until the slot in the injection pump timing pulley is at 11 o'clock.

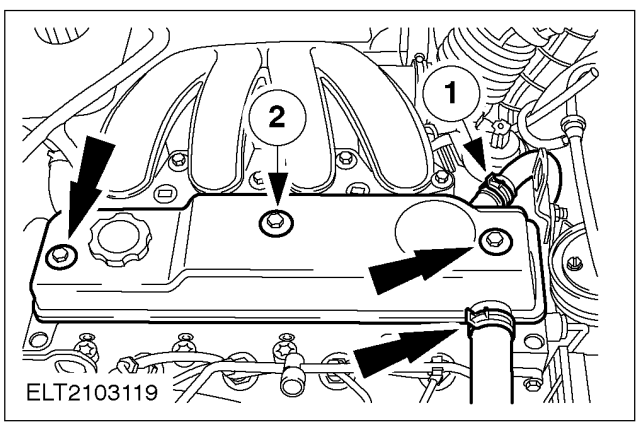

18. Remove the cylinder head cover. Remove the gasket.
    1. Detach the PCV hoses.
    2. Unscrew the bolts.

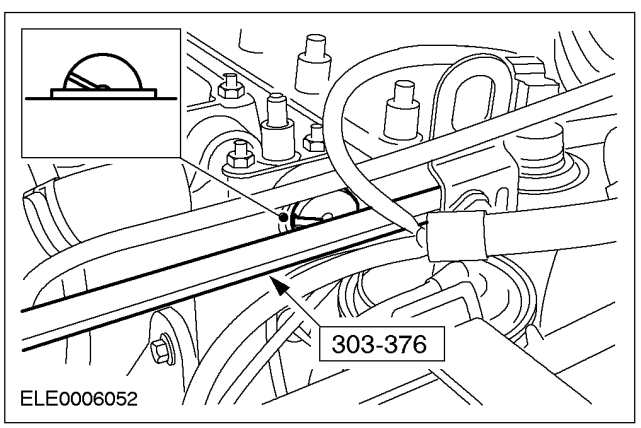

19. Turn the crankshaft approximately to TDC.

20. Raise the vehicle.

21. Turn the crankshaft to TDC.
    - Unscrew the blanking plug from the cylinder block.

NOTE: The timing pin must be screwed in as far as its stop.

- Screw in the timing pin.
- Carefully turn the crankshaft in the normal direction of rotation until it rests against the timing pin.

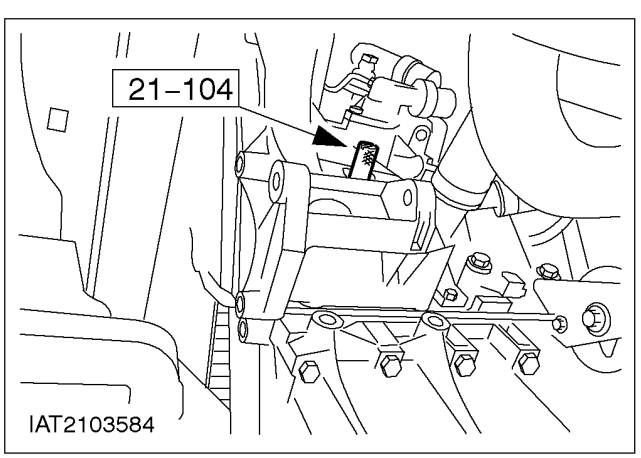

22. Lower the vehicle.

IN-VEHICLE REPAIR (CONTINUED)

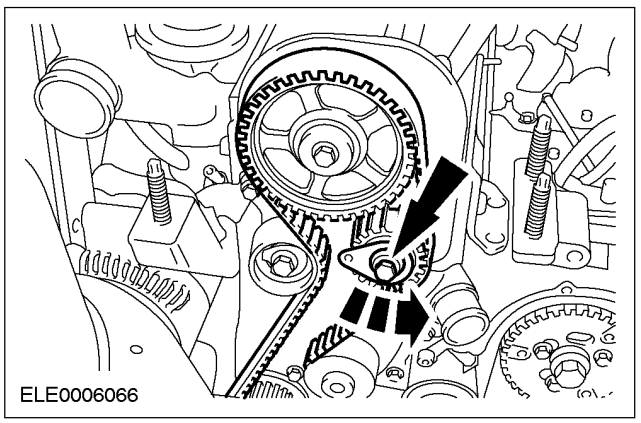

23. Slacken the bolt of the adjusting cam.
    - Turn the adjusting cam to 6 o'clock.

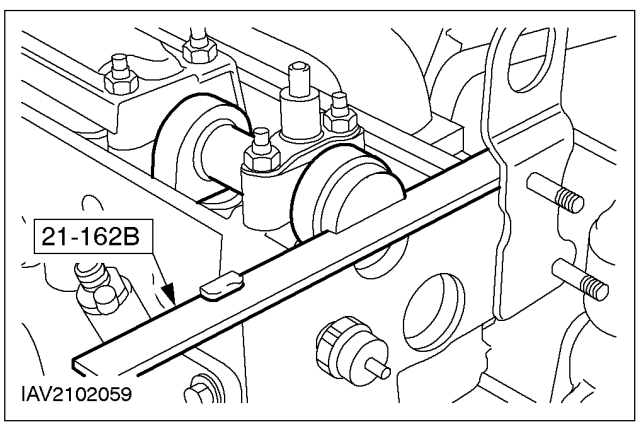

24. Insert the timing tool in the camshaft groove.

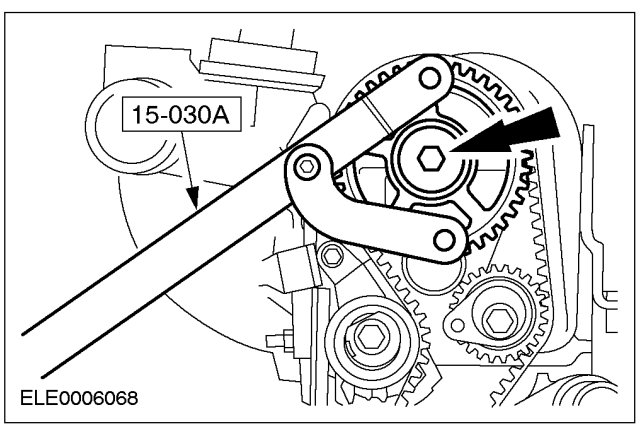

25. Loosen the camshaft timing pulley.

NOTE: Hold the camshaft timing pulley with the special tool.

- Undo the camshaft timing pulley bolt three turns.

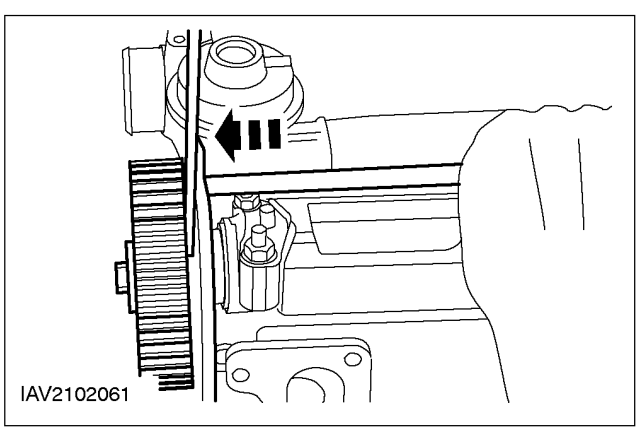

26. **NOTE:** Position a screwdriver between the camshaft timing pulley and the rear timing belt cover.

    Release the camshaft timing belt pulley from its conical seat by tapping lightly with a light metal drift.

IN-VEHICLE REPAIR (CONTINUED)

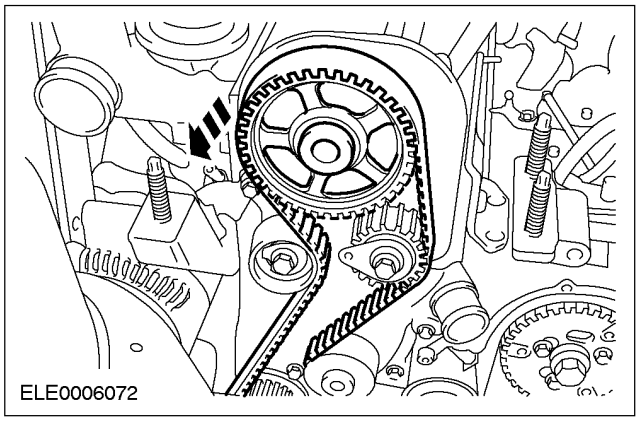

27. Remove the camshaft timing belt.
    - Detach the camshaft timing pulley and take it off with the camshaft timing belt.
    - Discard the timing belt.

Installation

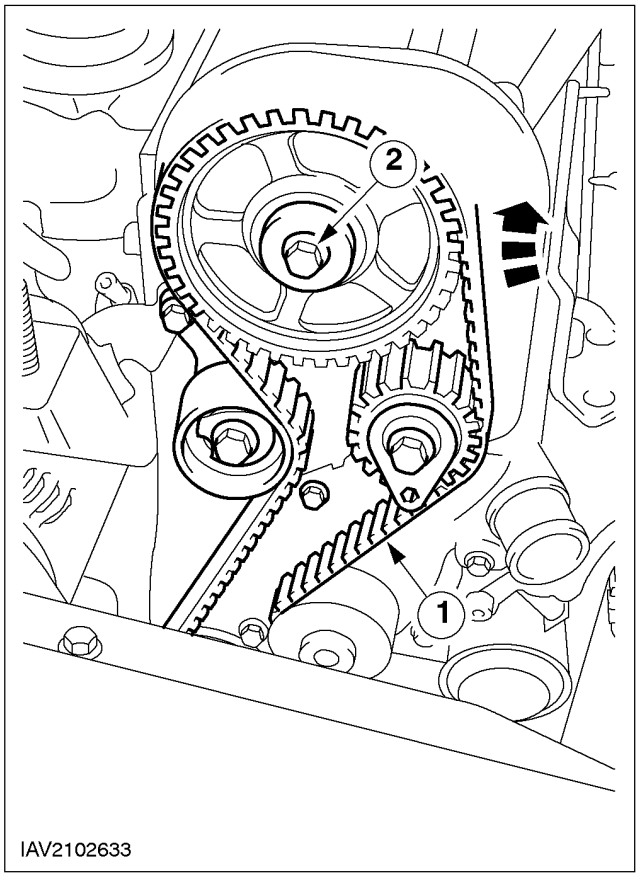

1. **CAUTION: Always renew the camshaft timing belt and the fuel pump timing belt.**

CAUTION: Only carry out work on the timing belt at workshop temperature. The engine must have been switched off for at least four hours.

CAUTION: The crankshaft must be resting against the timing pin and the timing tool must be inserted in the camshaft.

NOTE: Running direction of the timing belt (arrows). Make sure that the timing belt is sitting centrally on all the timing pulleys.

NOTE: Lubricate the bolt contact face with engine oil.

NOTE: Make sure that the camshaft timing pulley can still turn freely on the camshaft.

Lay a new camshaft timing belt in place.

1. Fit the camshaft timing belt.
2. Locate the camshaft timing pulley and the camshaft timing belt in installation position. Tighten the camshaft pulley bolt finger tight and then undo it a quarter turn.

IN-VEHICLE REPAIR (CONTINUED)

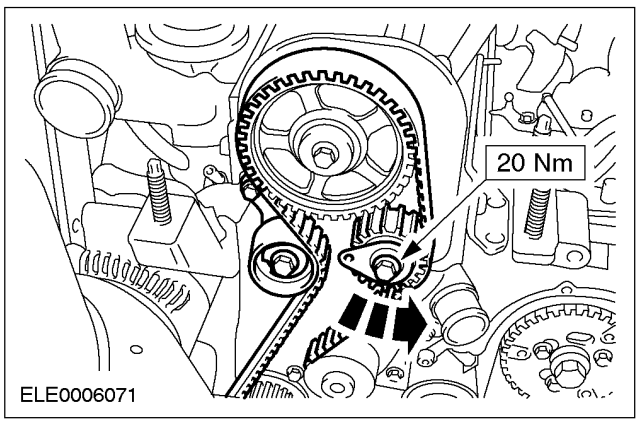

2. Pretension the camshaft timing belt.

NOTE: Coat the bolt contact surface of the adjusting cam with engine oil.

- Turn the adjusting cam clockwise to 9 o'clock and tighten the center bolt of the adjusting cam.

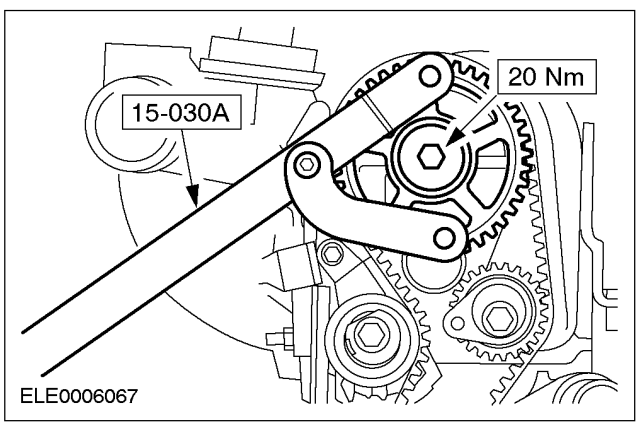

3. ⚠ **CAUTION: Remove the special tools.**

NOTE: Use special tool 15-030A to prevent movement of the camshaft timing belt pulley.

Tighten the bolt of the camshaft timing pulley.

4. Turn the crankshaft six turns in the normal direction of rotation to settle the timing belt.

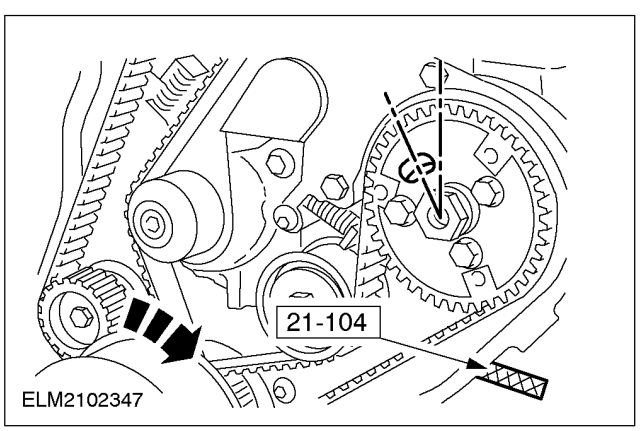

5. Preparations for tensioning the timing belt.
   - Turn the crankshaft further in the normal direction of rotation of the engine until the slot in the injection pump timing pulley is at 11 o'clock.
   - Screw in the timing pin.
   - Carefully turn the crankshaft in the normal direction of rotation until it rests against the timing pin.

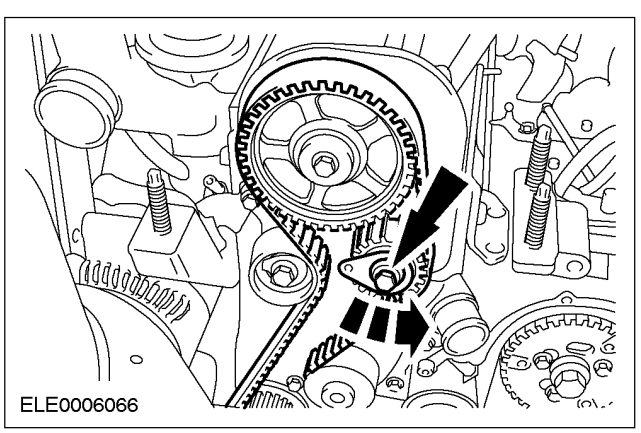

6. Undo the bolt on the adjusting cam half a turn.

IN-VEHICLE REPAIR (CONTINUED)

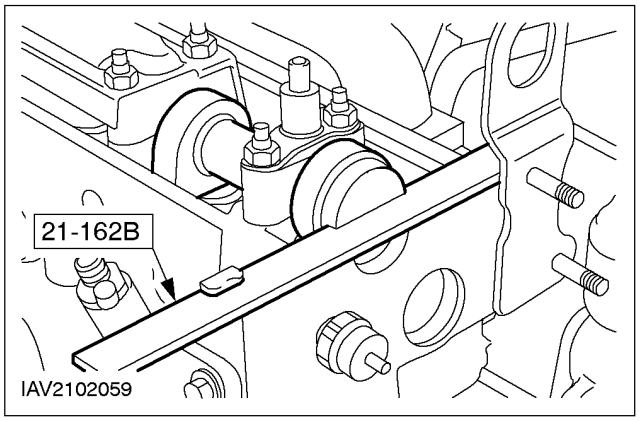

7. NOTE: If necessary, turn the camshaft using water pump pliers until the timing tool can be inserted.

Insert the timing tool in the camshaft groove.

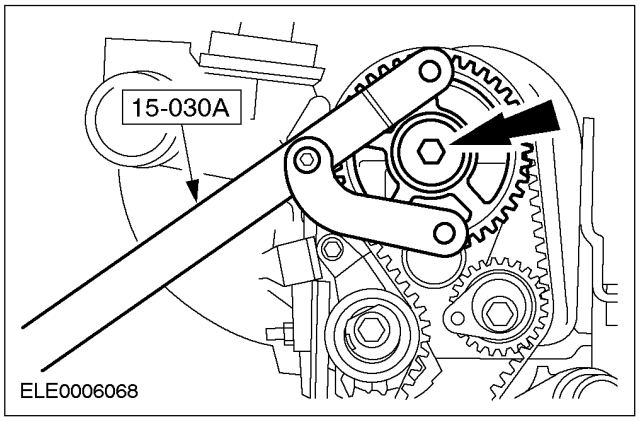

8. NOTE: Hold the camshaft timing pulley with the special tool.

Undo the camshaft timing pulley bolt three turns.

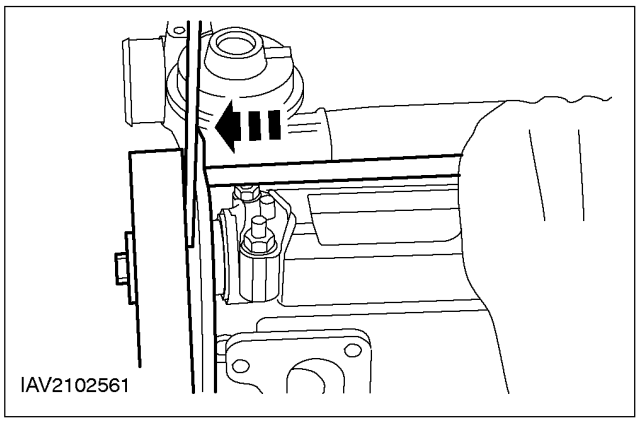

9. NOTE: Position a screwdriver between the camshaft timing pulley and the rear timing belt cover.

Release the camshaft timing pulley from the conical seat by tapping it lightly with a light metal drift.

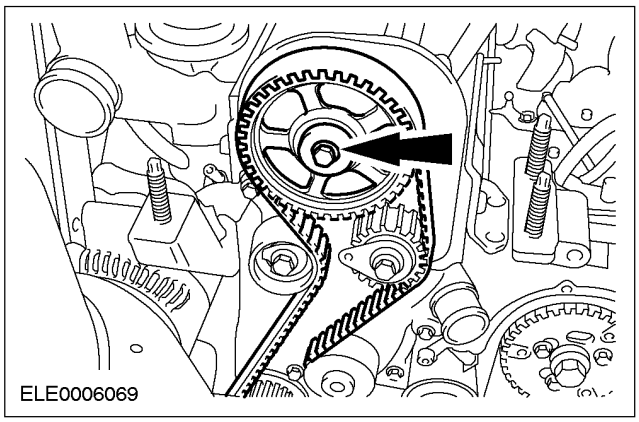

10. NOTE: Make sure that the camshaft timing pulley can still be turned freely on the conical seat.

Tighten the camshaft timing pulley bolt finger tight.

- Tighten the camshaft pulley bolt finger tight and then undo it one half turn.

IN-VEHICLE REPAIR (CONTINUED)

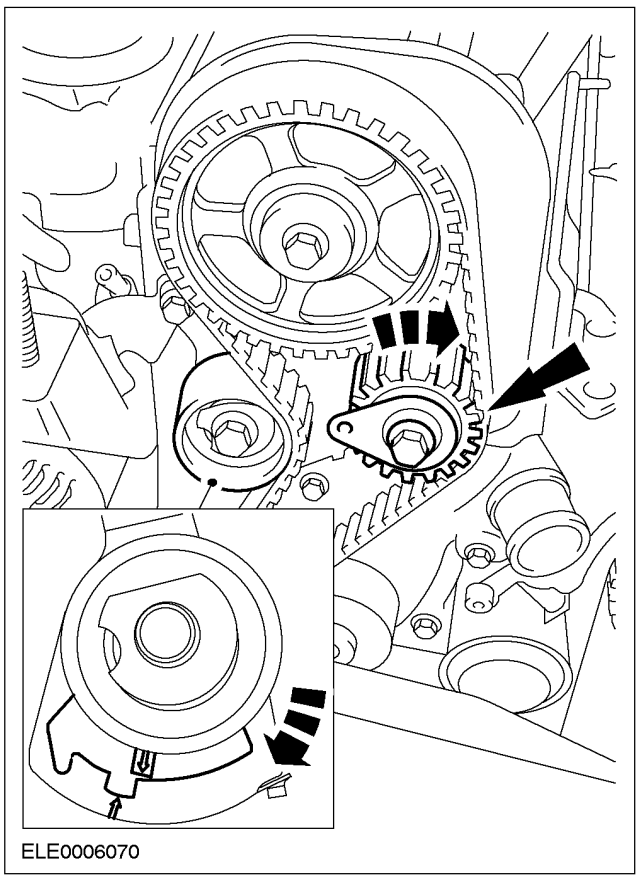
ELE0006070

11. NOTE: Use a mirror to get a better view.
Tension the camshaft timing belt.

NOTE: The adjustment range of the adjusting cam is between 6 o'clock (MIN) and 12 o'clock (MAX).

- Tension the camshaft timing belt using the Allen key socket on the adjustment cam in a clockwise direction, so that the arrow on the camshaft timing belt tensioner points to the right-hand corner of the adjustment range.

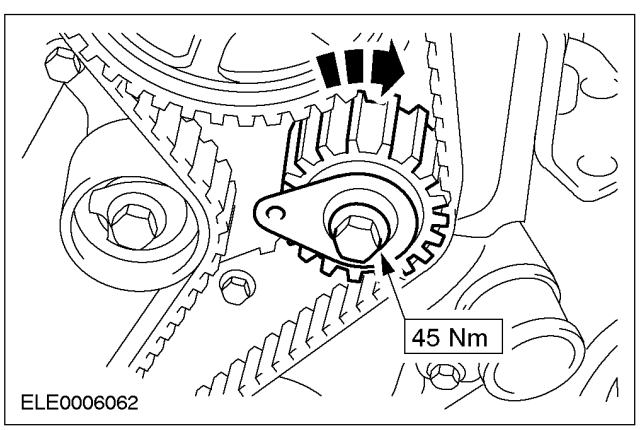

ELE0006062

12. NOTE: Use the Allen key socket on the adjustment cam to stop the adjustment cam turning.
Evenly tighten the bolt on the adjusting cam.

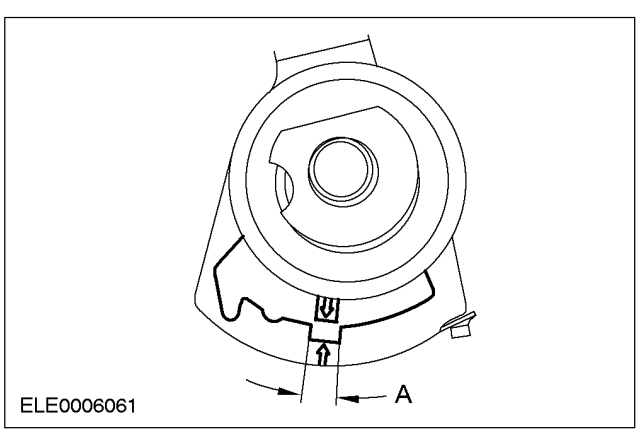

ELE0006061

13. ⚠ CAUTION: To avoid engine damage make sure that the pointer is within range A.
Check the position on the automatic camshaft timing belt tensioner.

- If the pointer is in range A: continue with the next step.
- If the pointer is not in area A: repeat steps 10 and 11.

IN-VEHICLE REPAIR (CONTINUED)

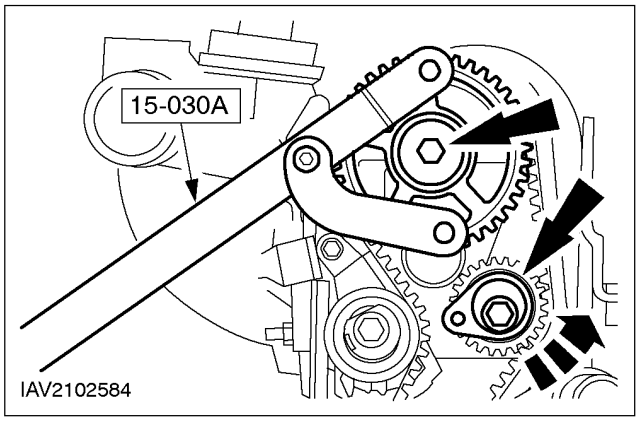

14. NOTE: Hold the camshaft timing pulley. Tighten the bolt of the camshaft timing pulley.

- Tightening torque for M8 bolt: 35 Nm.
- Tightening torque for M10 bolt: 48 Nm.

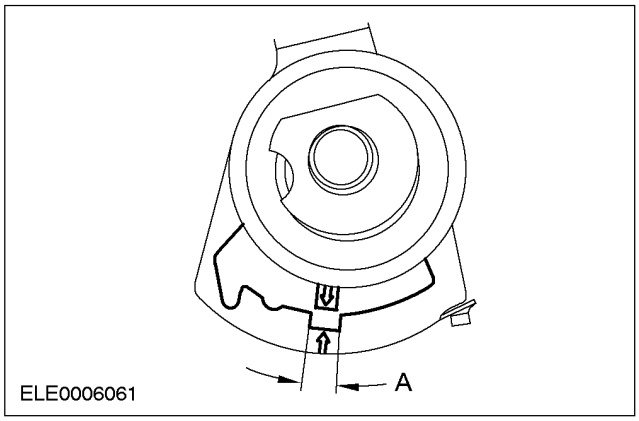

15. ⚠CAUTION: To avoid engine damage make sure that the pointer is within range A.

Checking the position of the automatic timing belt tensioner.

- If the pointer is in range A: continue with the next step.
- If the pointer is not in range A: repeat the adjustment procedure from step 10.

16. Raise the vehicle.

17. Remove the special tools.

18. Turn the crankshaft six turns in the normal direction of rotation.

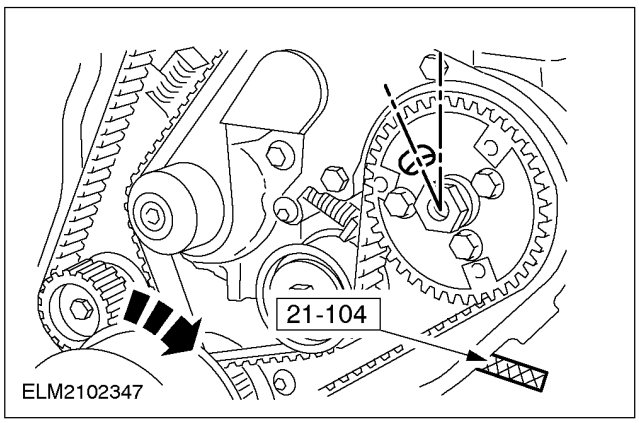

19. Checking the valve timing
    - Turn the crankshaft further in the normal direction of rotation of the engine until the slot in the injection pump timing pulley is at 11 o'clock.

NOTE: The timing pin must be screwed in as far as its stop.

- Screw in the timing pin.
- Carefully turn the crankshaft in the normal direction of rotation until it rests against the timing pin.

IN-VEHICLE REPAIR (CONTINUED)

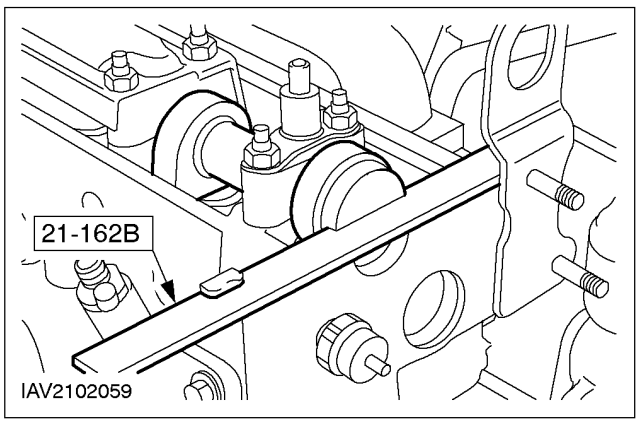

20. Insert the timing tool in the camshaft groove. If it is not possible to insert the timing tool into the slot on the camshaft, repeat the adjustment from step 10.

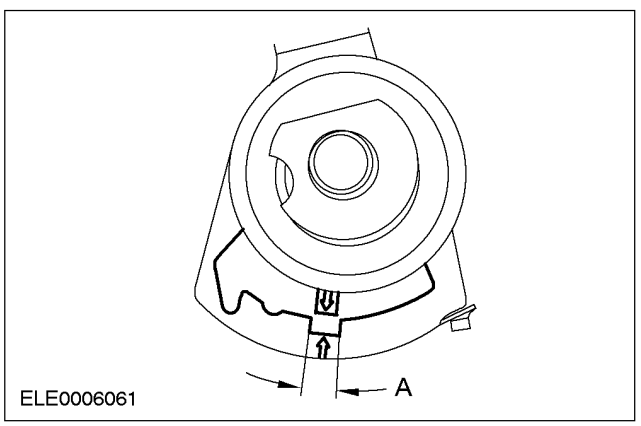

21. ⚠ **CAUTION: To avoid engine damage make sure that the pointer is within range 'A'.**
Check the position on the automatic timing belt tensioner.
- If the pointer is in range A: continue with the next step.
- If the pointer is not in range A: repeat the adjustment procedure from step 10

22. Remove the special tools and tighten the blanking plug to 24 Nm.

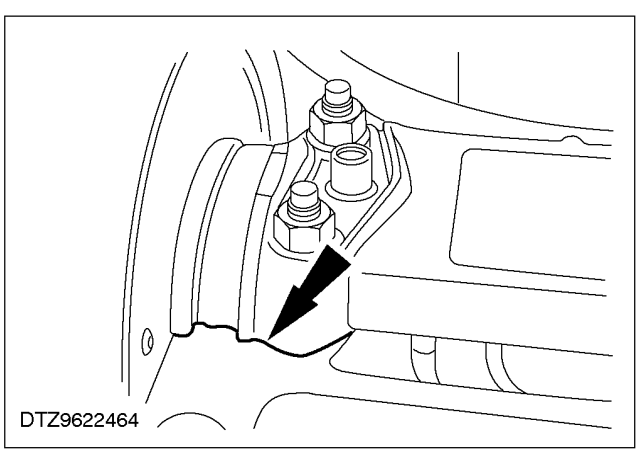

23. Seal the parting line between the bearing cap and the cylinder head on both sides with a thin bead of sealer (SPM-4G9112-F/G).

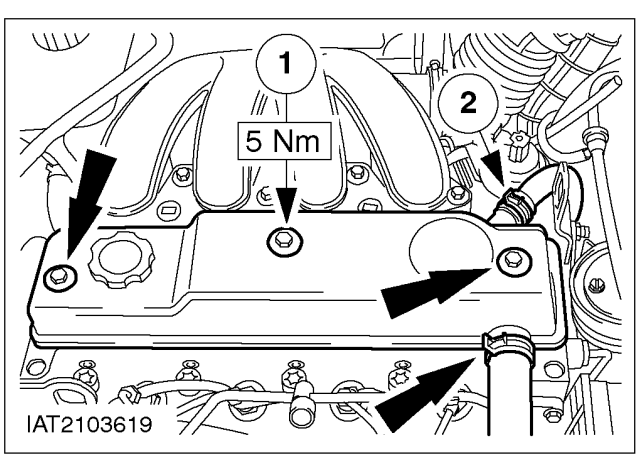

24. **NOTE:** Clean the cylinder head gasket and check it for damage. Only renew if damaged. If it is in good condition, it can be used several times.

NOTE: Before fitting the gasket, coat it lightly with engine oil.

Fit the cylinder head cover.
1. Screw in the bolts.
2. Attach the PCV hoses.

IN-VEHICLE REPAIR (CONTINUED)

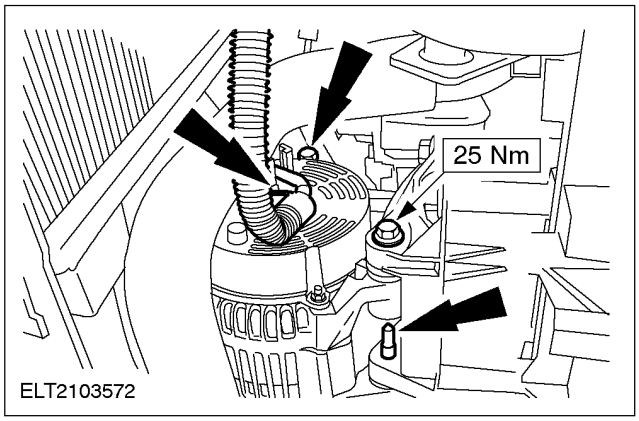

25. **CAUTION: Position the generator and screw in the bolts finger tight. First tighten the bolt on the pulley side, then the rear upper long bolt and finally the rear lower short bolt.**
    Install the generator.

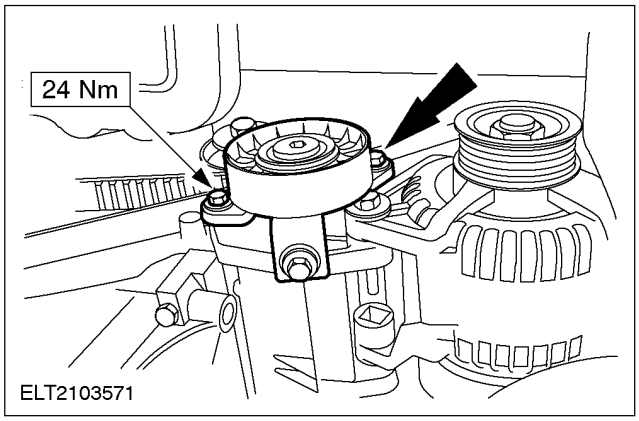

26. Fit the belt tensioner.

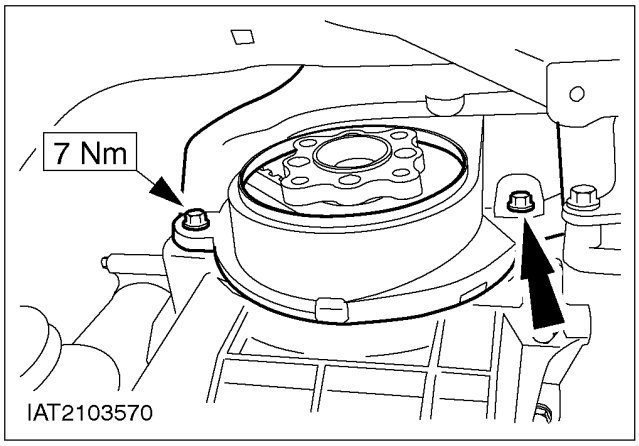

27. Fit the lower timing belt cover (two bolts at the bottom).

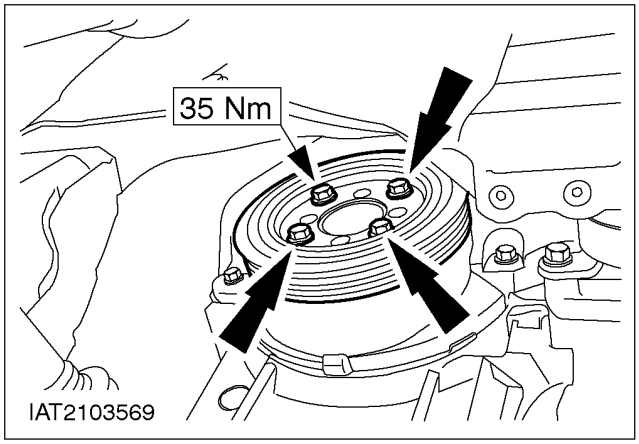

28. Fit the crankshaft belt pulley / vibration damper.

IN-VEHICLE REPAIR (CONTINUED)

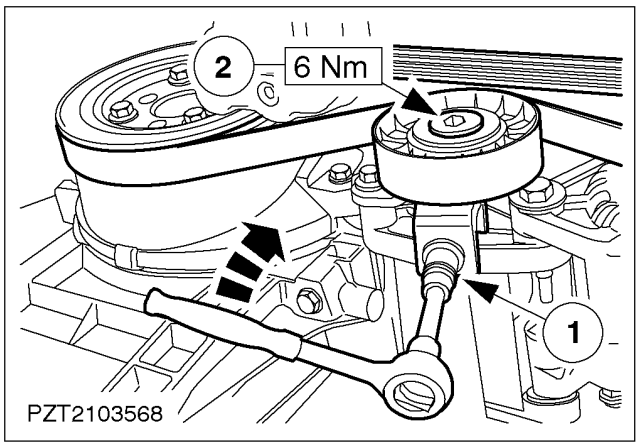

29. Fit the drive belt.
    1. Fit the drive belt and tension as described in Operation No. 31 413 0.
    2. Tighten the bolt.

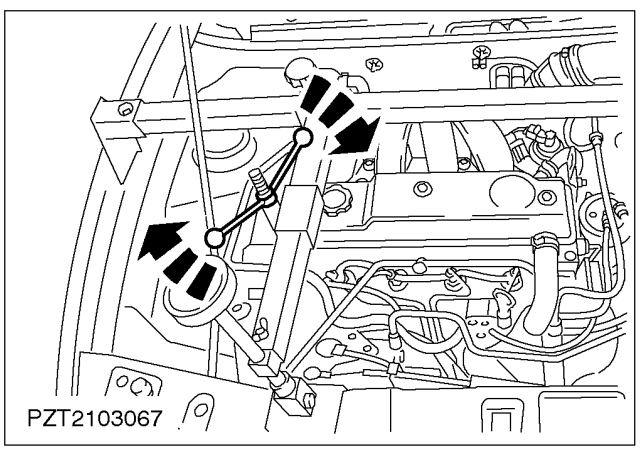

30. Lower the vehicle.

31. Raise the engine with the engine support bar.

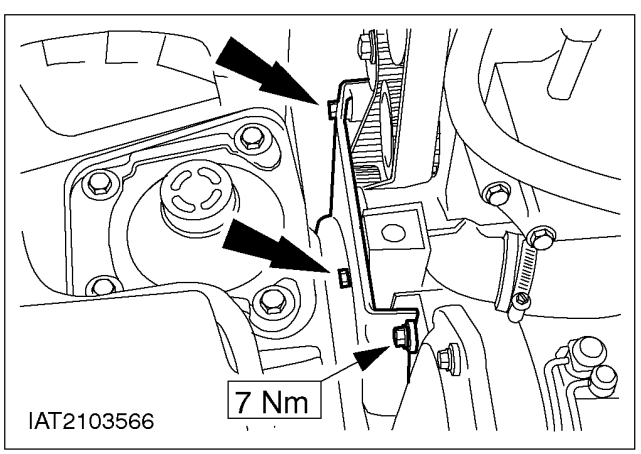

32. Attach the lower timing belt cover.

33. Lower the engine with the engine support bar.

IN-VEHICLE REPAIR (CONTINUED)

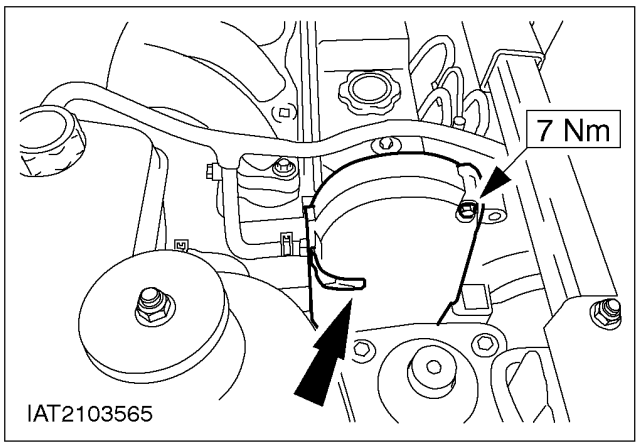

34. Fit the upper timing belt cover.

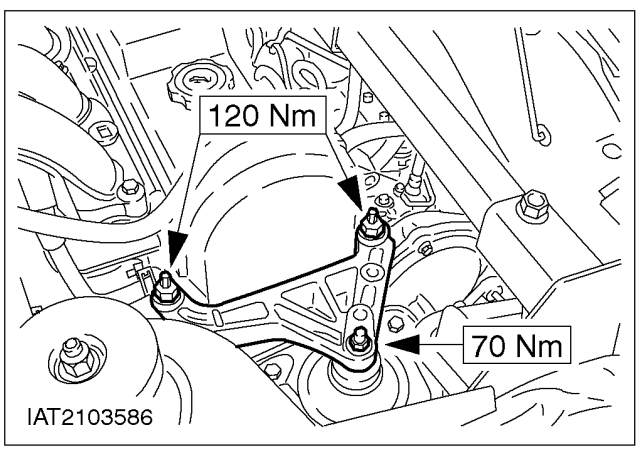

35. Fit the front engine mounting bracket.

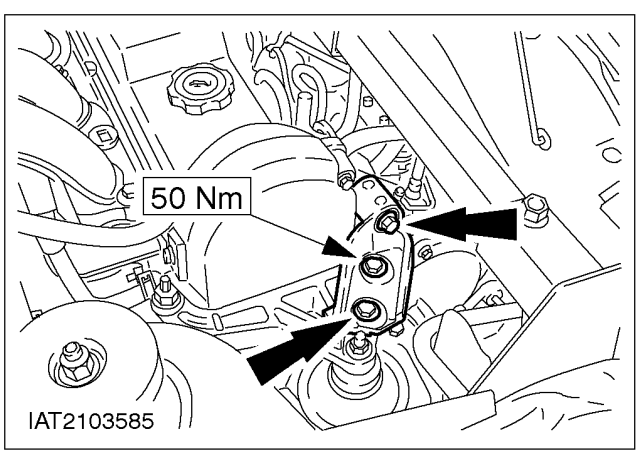

36. Install the front engine mounting auxiliary bracket.

37. Detach the engine support bar.

38. Connect the battery ground lead.

39. Standard finishing operations.
    - Enter the radio keycode.
    - Re-program the preset radio stations.
    - Reset the clock.
    - Carry out a road test to enable the PCM (EEC V) to collect data.

IN-VEHICLE REPAIR

Timing Belt — Engines with Manual Timing Belt Tensioner (21 304 0)

Special Tool(s)	
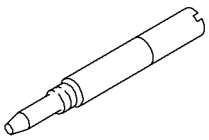 21104	Timing pin, crankshaft TDC position 303-193 (21104)
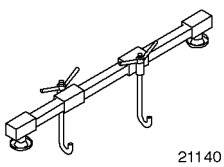 21140	Engine support bar 303-290 (21140)
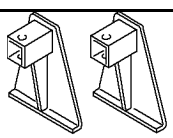 2114001	Adapter for 303-290 (21140) 303-290-01 (2114001)
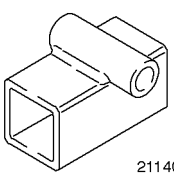 2114002	Adapter for 303-290 (21140) 303-290-02 (2114002)

Special Tool(s)	
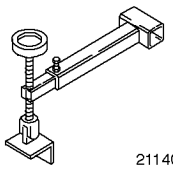 2114003	Adapter for 303-290 (21140) 303-290-03 (2114003)
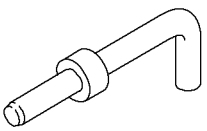 23019	Timing pin, injection pump 310-018 (23019)

Material	Specification
Sealer	SPM-4G-9112-F/G

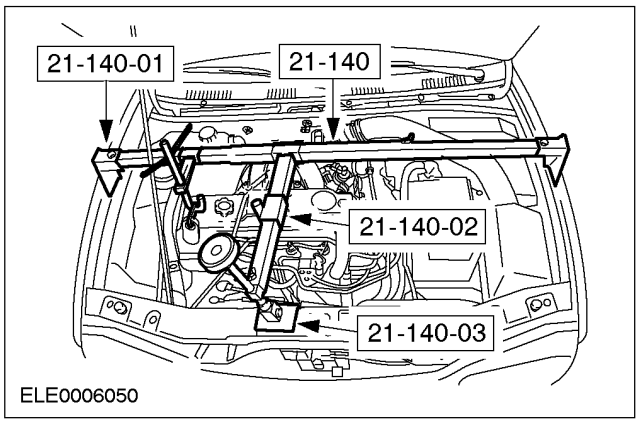

Removal

1. Preparatory operations
   - Make a note of the radio keycode.
   - Make a note of the preset radio stations.
2. Disconnect the battery negative lead.
3. Attach the engine support bar.

IN-VEHICLE REPAIR (CONTINUED)

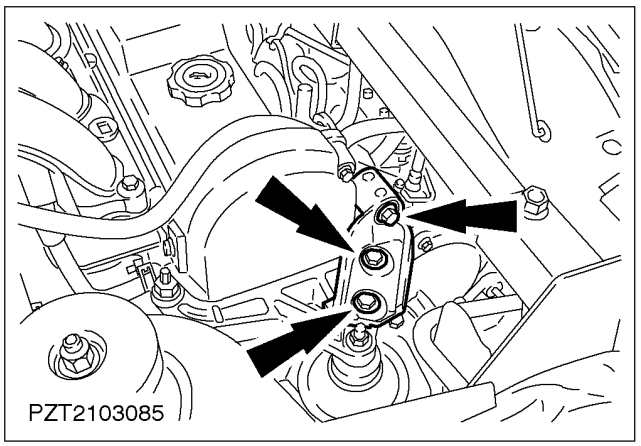

4. Remove the front engine mounting auxiliary bracket.

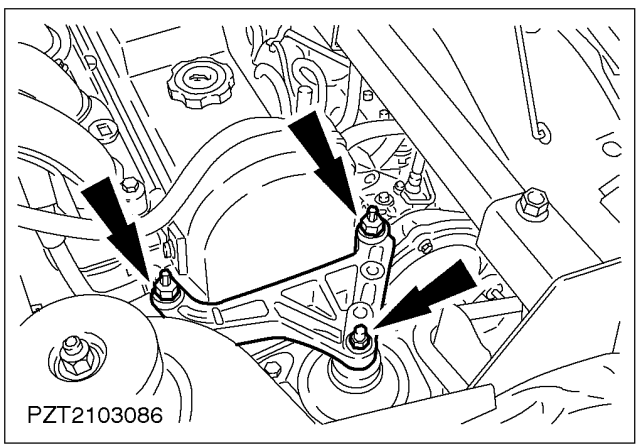

5. Remove the front engine mounting bracket.

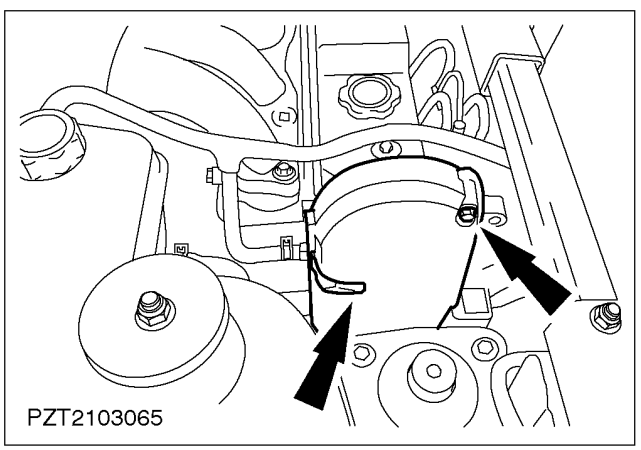

6. Remove the upper timing belt cover.

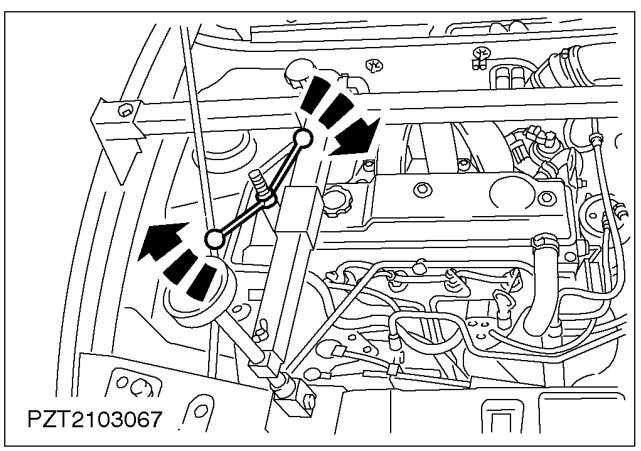

7. Raise the engine with the engine support bar.

IN-VEHICLE REPAIR (CONTINUED)

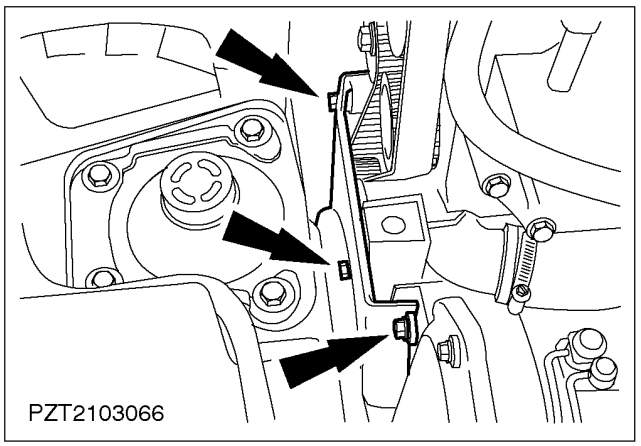

8. Unscrew the top bolts of the lower timing belt cover.

9. Lower the engine with the engine support bar.

10. Raise the vehicle.

11. Remove the drive belt.
    1. Undo the bolt.

CAUTION: To slacken, turn the bolt clockwise.

    2. Slacken and remove the drive belt.

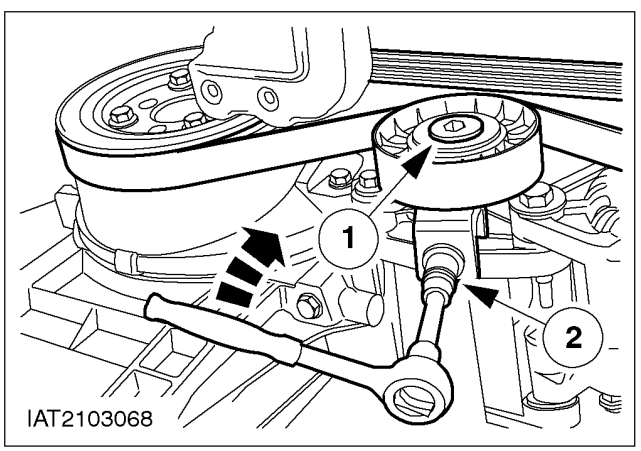

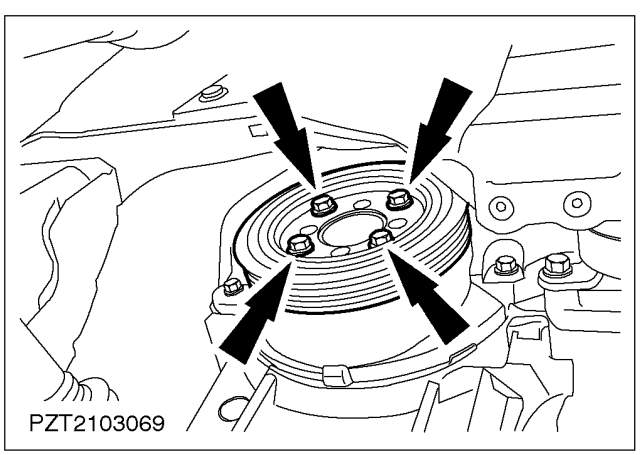

12. Remove the crankshaft pulley/vibration damper.

IN-VEHICLE REPAIR (CONTINUED)

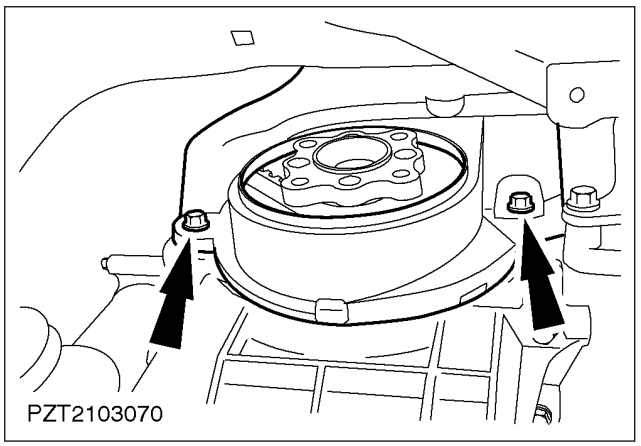

13. Remove the lower timing belt cover.

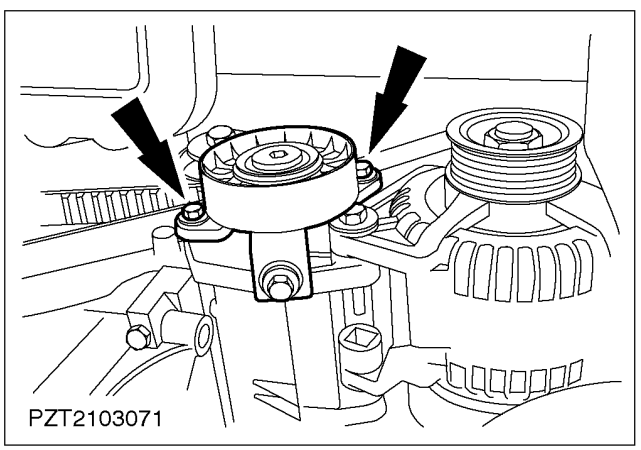

14. Remove the belt tensioner.

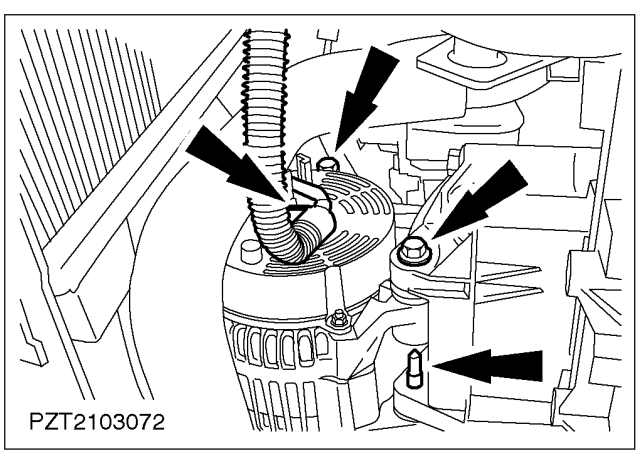

15. Disconnect the alternator and remove it.

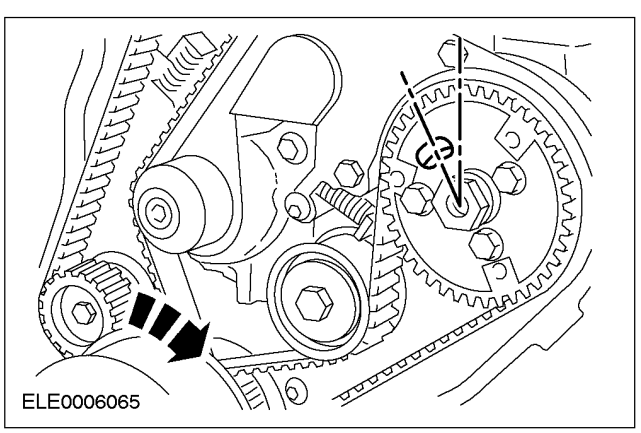

16. **NOTE:** Turn the engine in the direction of engine rotation.
    Turn the crankshaft approximately to TDC.
    - Turn the crankshaft in the direction of engine rotation until the slot in the injection pump timing belt pulley is at the 11 o'clock position.

IN-VEHICLE REPAIR (CONTINUED)

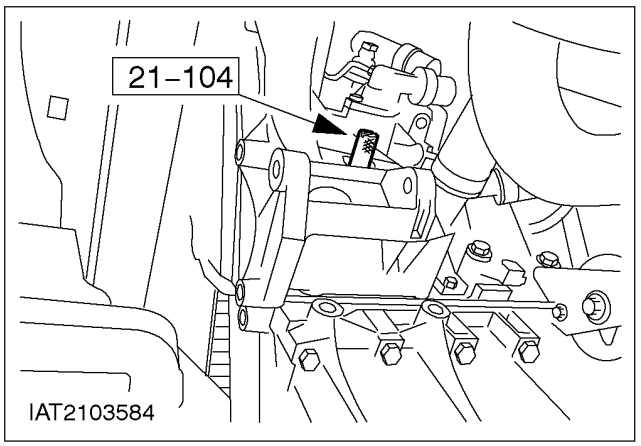

17. Turn the crankshaft to the TDC position.
    - Remove the blanking plug from the cylinder block.

NOTE: The alignment pin must be screwed in as far as it will go.

- Screw in the timing pin.
- Carefully turn the crankshaft in the normal direction of rotation of the engine until it comes up against the timing pin.

18. Lower the vehicle.

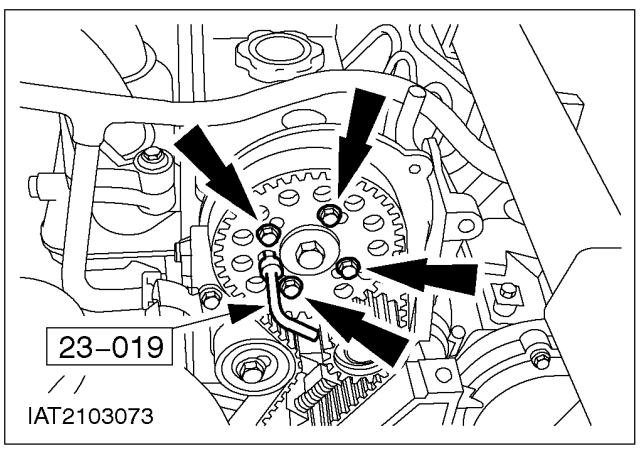

19. Insert the alignment pin into the camshaft timing belt pulley.

20. Slacken the bolts of the camshaft timing belt pulley.

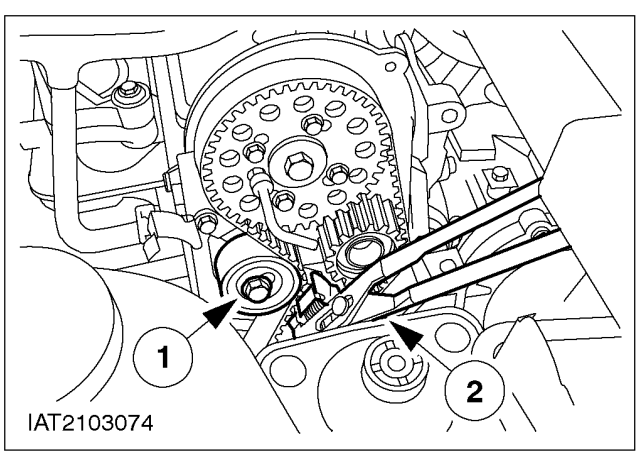

21. Remove the camshaft timing belt.
    1. Slacken the clamp bolt of the timing belt tensioner.
    2. Slacken the timing belt by compressing the spring using water pump pliers.
    - Tighten the clamp bolt of the timing belt tensioner.
    - Remove the timing belt.

IN-VEHICLE REPAIR (CONTINUED)

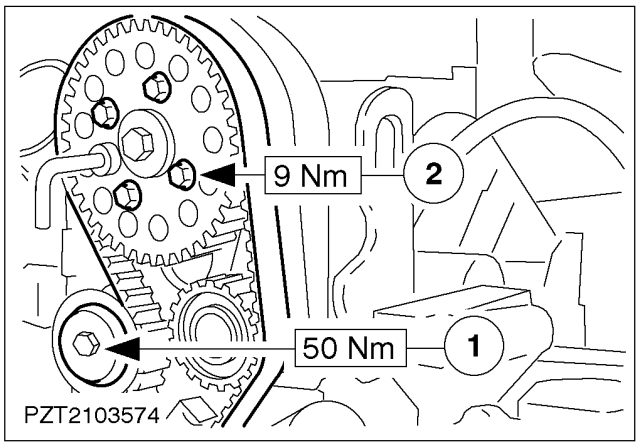

Installation

1. **CAUTION: Always renew the camshaft timing belt and the injection pump timing belt.**

CAUTION: The crankshaft must touch the alignment pin and the alignment tool must be fitted into the camshaft timing belt pulley.

NOTE: Slots. The camshaft timing belt bolts must be centered.

NOTE: Fit the timing belt with the slack side nearest the timing belt tensioner.

NOTE: Slacken the clamp bolt of the timing belt tensioner and let the timing belt tensioner snap against the belt.

Fit the new camshaft timing belt.

1. Tighten the clamp bolt of the timing belt tensioner.
2. Tighten the bolts of the camshaft timing belt pulley.

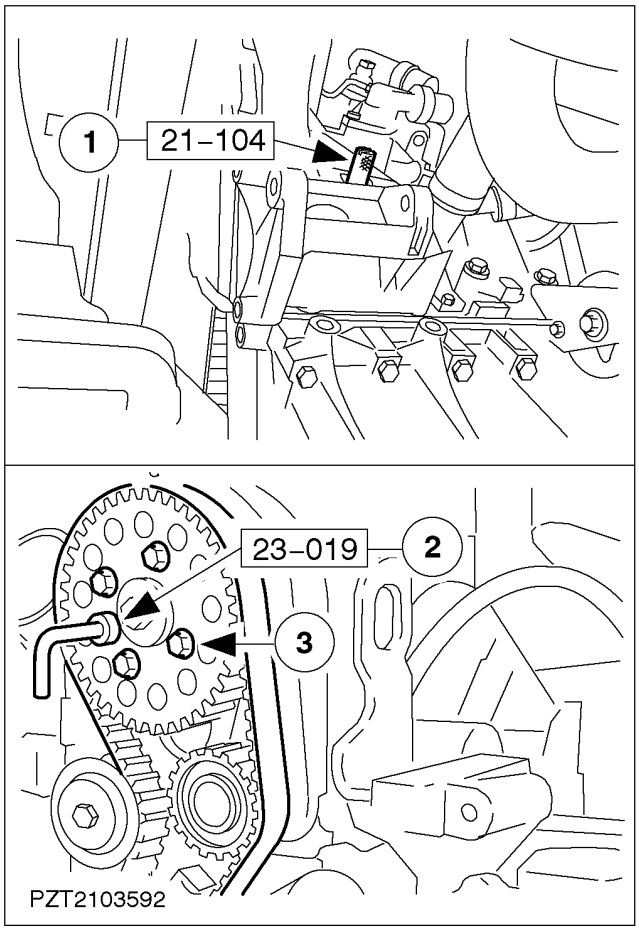

2. **CAUTION: Remove Special Tools 303-193 (21-104) and 310-018 (23-019).**

Preparations for tensioning the timing belt.

- Turn the crankshaft six turns in the normal direction of rotation of the engine.

1. Screw in the timing pin. Carefully turn the crankshaft in the normal direction of rotation of the engine until it comes up against the timing pin.
2. The timing pin must be able to be inserted in the camshaft timing belt pulley.
3. Slacken the bolts of the camshaft timing belt pulley.

IN-VEHICLE REPAIR (CONTINUED)

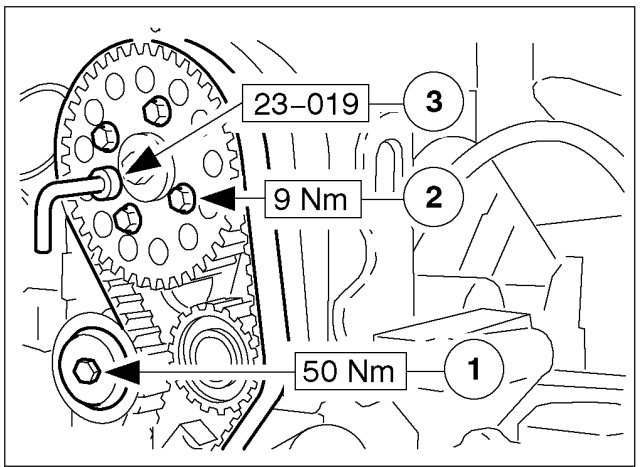

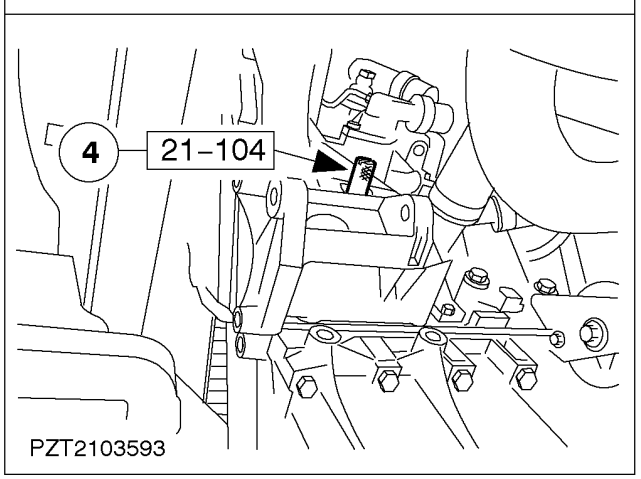

3. CAUTION: Used timing belts must not be re-tensioned.

NOTE: All timing pins must be inserted correctly. The crankshaft must touch the timing pin.

NOTE: Slacken the camshaft timing belt tensioner bolt by one quarter turn, so that the timing belt tensioner presses against the timing belt.

Tension the timing belt.

1. Tighten the camshaft timing belt tensioner bolt.
2. Tighten the camshaft timing belt pulley bolts.
3. Remove the timing pin.
4. Remove the alignment pin and tighten the blanking bolt to 24 Nm.

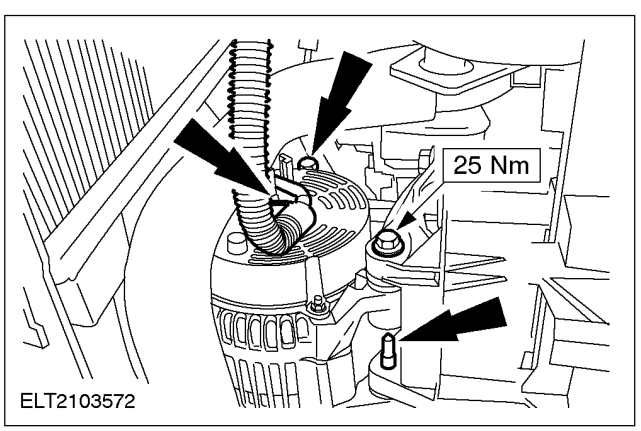

4. CAUTION: Position the alternator and screw in the bolts finger tight. First tighten the bolt on the pulley side, then the rear upper long bolt and finally the rear lower short bolt.

Install the alternator and connect it.

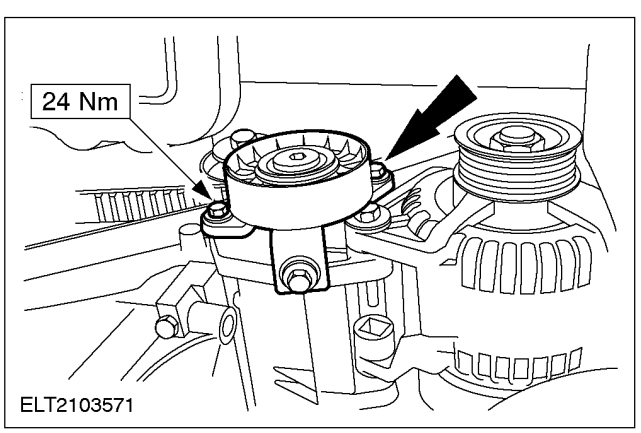

5. Fit the belt tensioner.

IN-VEHICLE REPAIR (CONTINUED)

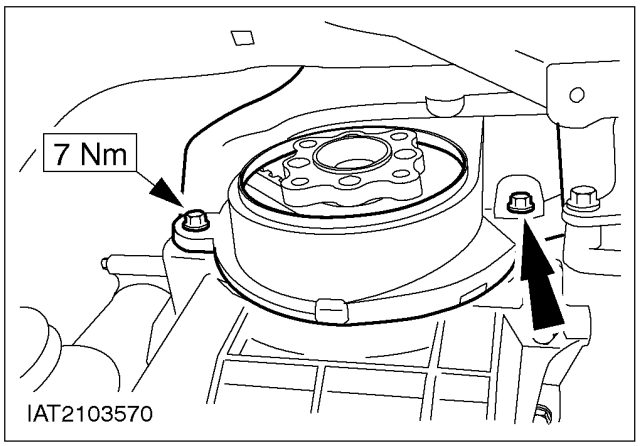

6. Fit the lower timing belt cover (two bolts at the bottom).

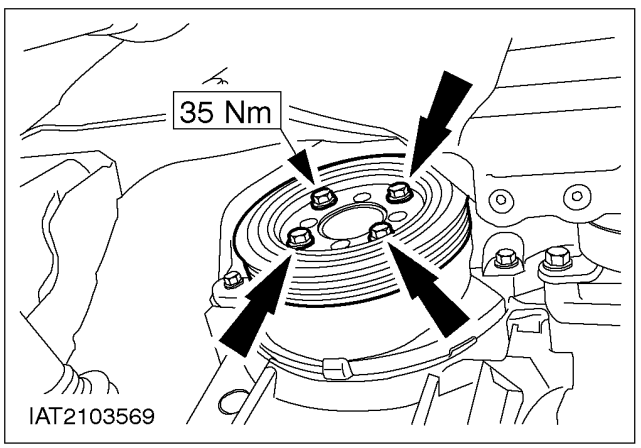

7. Fit the crankshaft pulley/vibration damper.

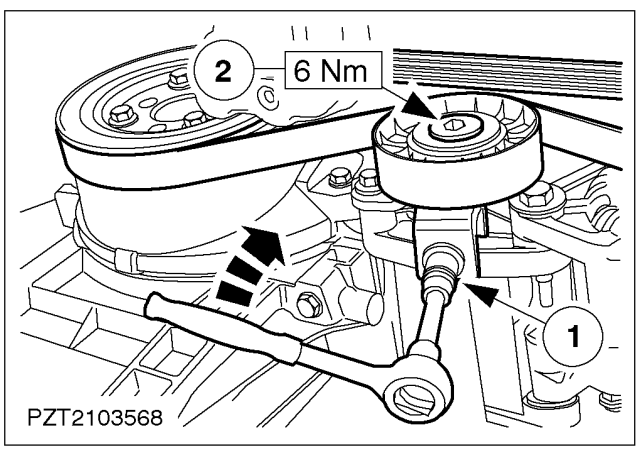

8. Fit the drive belt.
   1. Fit the drive belt and tension as described in Operation No. 31 413 0.
   2. Tighten the bolt.

9. Lower the vehicle.

IN-VEHICLE REPAIR (CONTINUED)

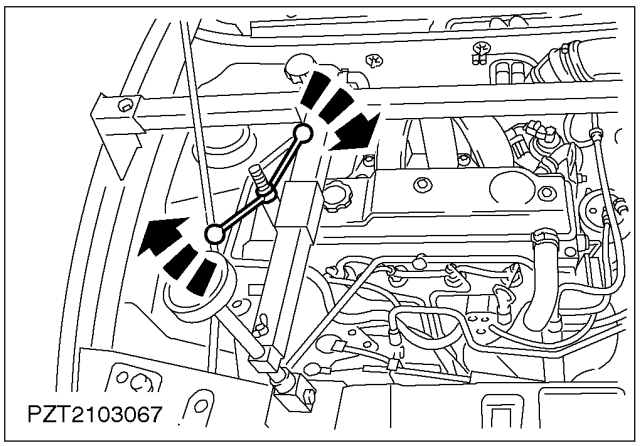

10. Raise the engine with the engine support bar.

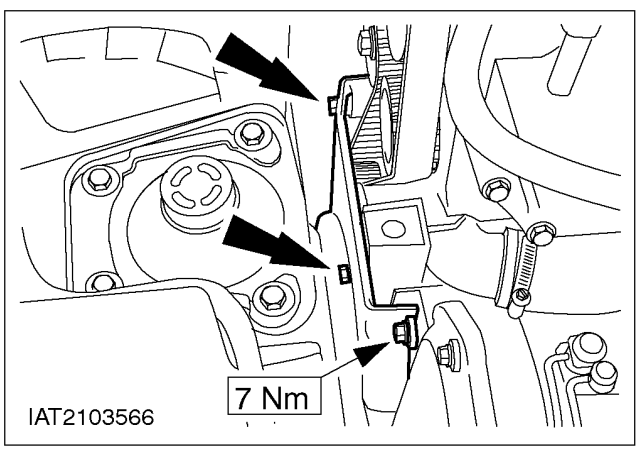

11. Attach the lower timing belt cover.

12. Lower the engine with the engine support bar.

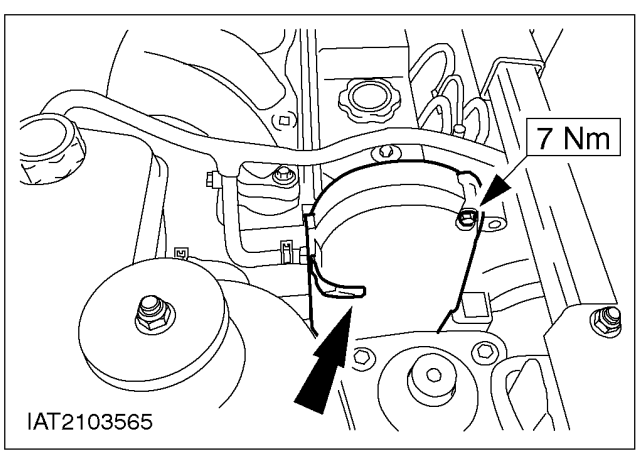

13. Fit the upper timing belt cover.

IN-VEHICLE REPAIR (CONTINUED)

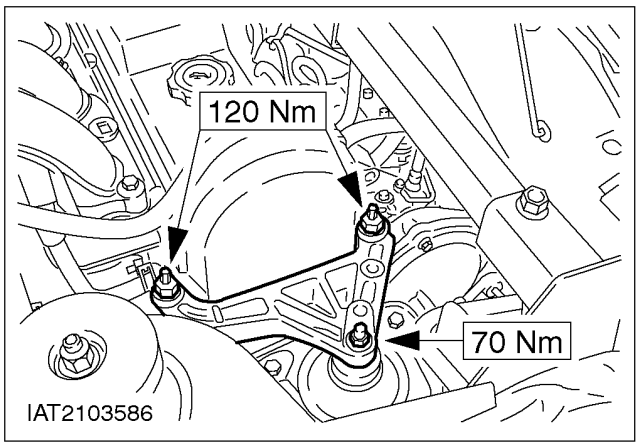

14. Fit the front engine mounting bracket.

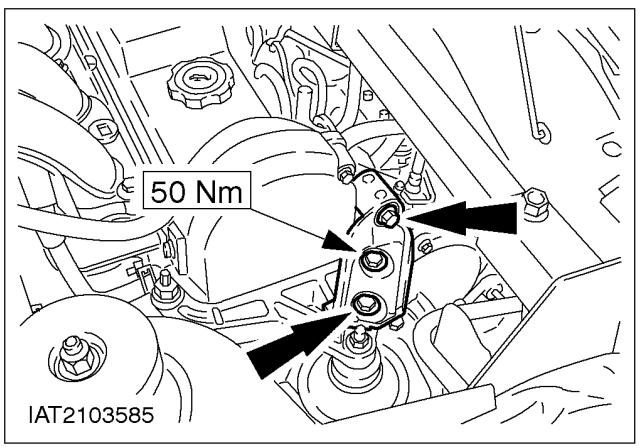

15. Install the front engine mounting auxiliary bracket.

16. Detach the engine support bar.

17. Connect the battery negative lead.

18. Standard finishing operations.
    - Enter the radio keycode.
    - Re-program the preset radio stations.
    - Reset the clock.
    - Carry out a road test to enable the PCM (EEC V) to collect data.

IN-VEHICLE REPAIR

Camshaft (21 283 0)

Special Tool(s)	
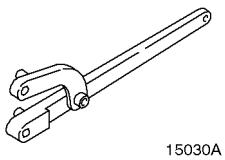 15030A	15-030 A Universal flange holding wrench 15-030 A Universal flange holding wrench
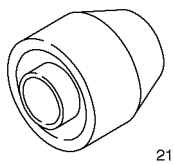 21110	Installer, camshaft oil seal 21-110
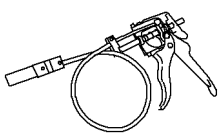 24003	Remover/installer, cooling hose clamp 24-003

General Equipment
Two-legged puller

Material	Specification
Sealer	SPM-4G-9112-F
Valve stem installation sleeves	
Engine Oil	ACEA B3 / E3

Removal

1. General note.
   - This operation was carried out on an engine with a mechanical timing belt tensioner.
   - When removing and installing coolant and ventilation hoses, if necessary. For additional information, refer to Section 303-03.
2. Remove camshaft timing belt as described in Operation No. 21 304 0.
3. **CAUTION: Support the engine with a trolley jack.**
   Detach the engine support bar.

IN-VEHICLE REPAIR (CONTINUED)

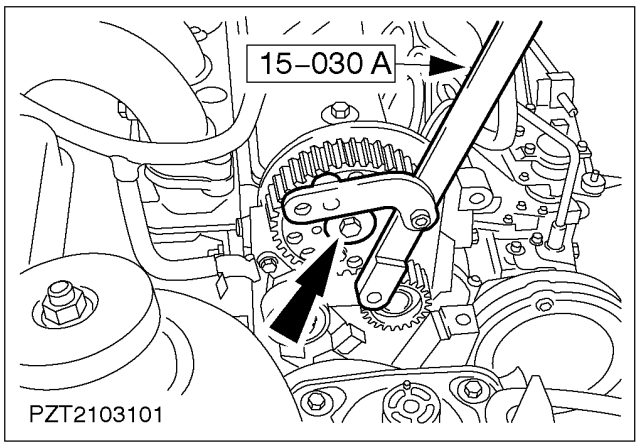

4. Slacken the flange bolt of the camshaft timing pulley.

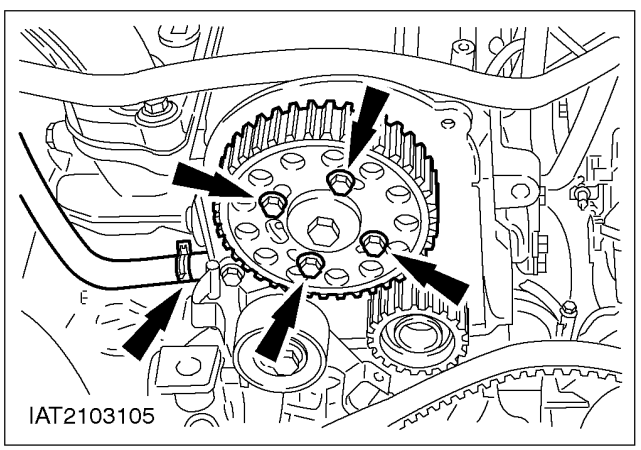

5. Remove the camshaft timing pulley.

6. Detach the crankcase ventilation hose.

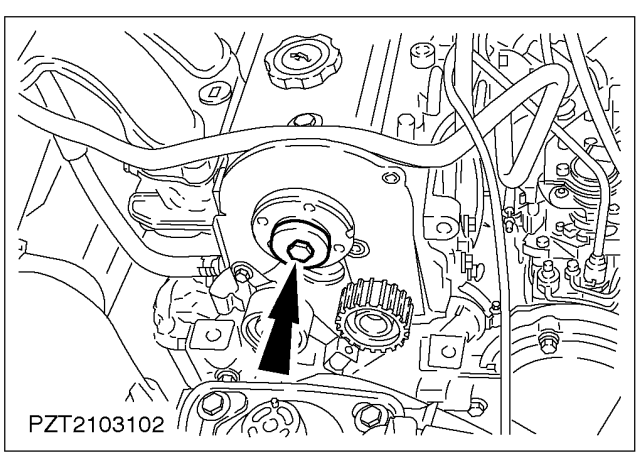

7. Remove the flange bolt of the camshaft timing pulley.

IN-VEHICLE REPAIR (CONTINUED)

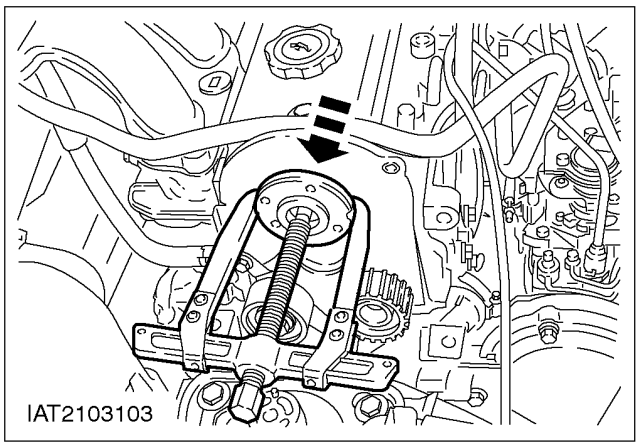

8. Pull off the flange of the camshaft timing pulley using a proprietary two-legged puller.
   - Remove the Woodruff key.

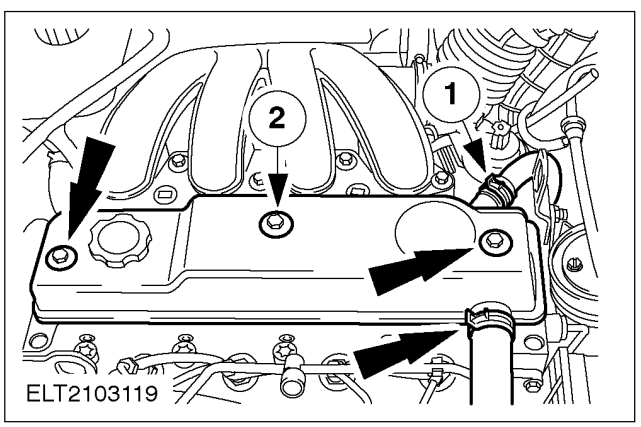

9. Remove the cylinder head cover.
   1. Detach the crankcase ventilation hoses.
   2. Remove the screws.

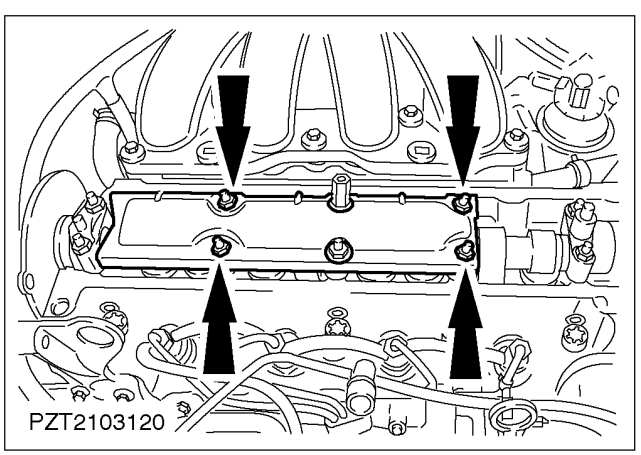

10. Remove the oil baffle.

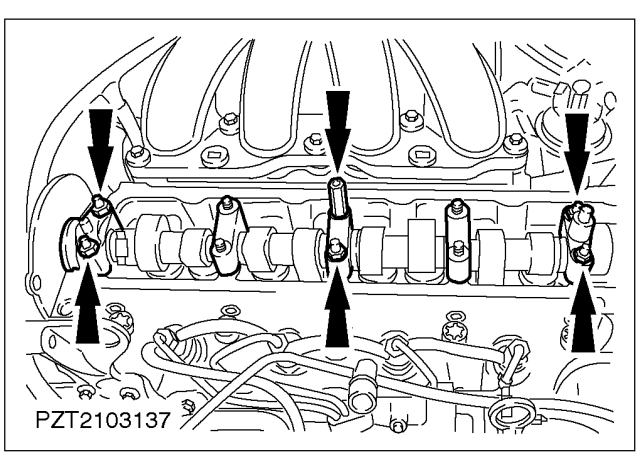

11. ⚠ **CAUTION: Slacken the nuts of the camshaft bearing caps uniformly a turn at a time.**
    Remove the camshaft.
    - Take out the bearing caps, bearing shells and camshaft and put them down in order.
    - Remove the camshaft seal.

IN-VEHICLE REPAIR (CONTINUED)

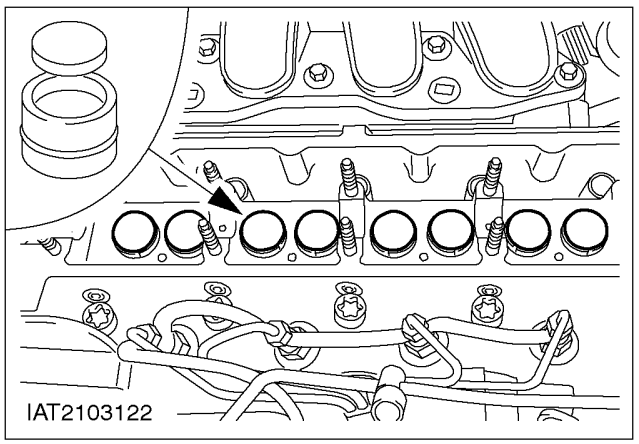

12. NOTE: Put down the valve tappets in order. Remove the valve tappets and the valve shims and check them for wear.

Installation

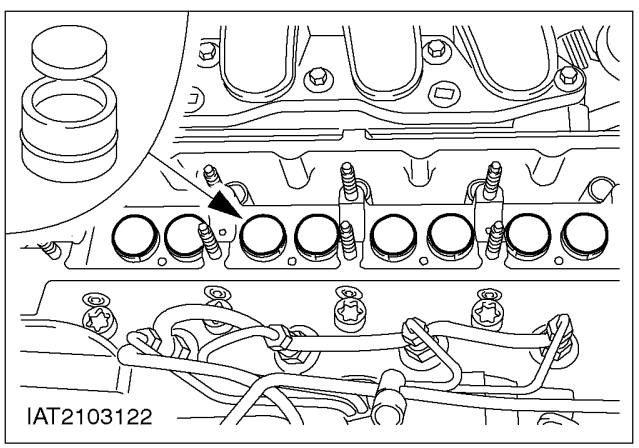

1. NOTE: The lettering on the valve shims faces downwards.

NOTE: Installation order.
Coat the valve tappets and valve shims with engine oil and fit them.

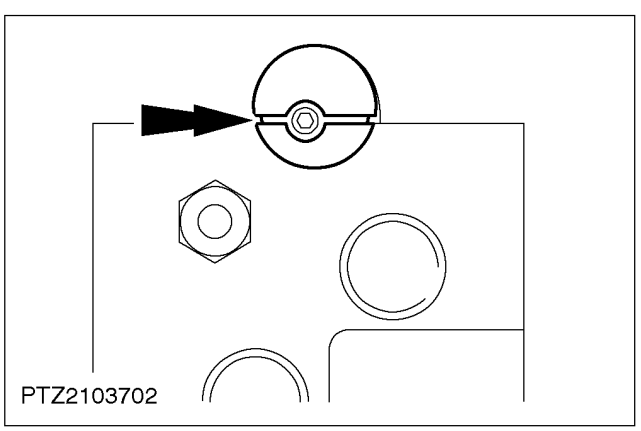

2. Lay the camshaft bearing shell lower halves in place and coat them with engine oil.
   - Fit the camshaft and turn it until the slot in the eccentric on the camshaft is parallel with the upper edge of the cylinder head (with the larger semi-circle at the top).

3. Align the camshaft.

IN-VEHICLE REPAIR (CONTINUED)

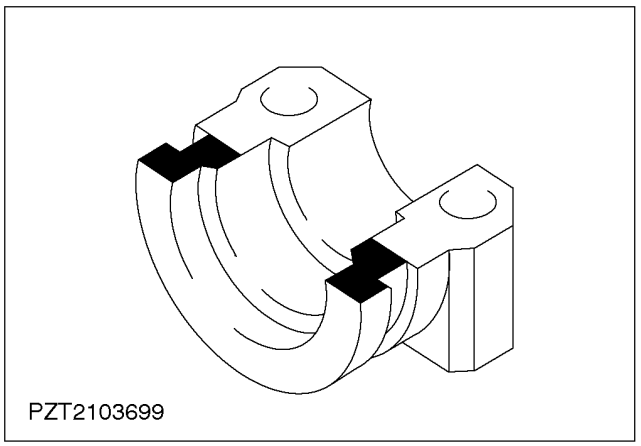

4. Put the camshaft bearing shell upper halves in place and coat them with engine oil.

5. Apply sealer (SPM-4G-9112-F/G) to bearing cap no. 1 in the areas indicated.

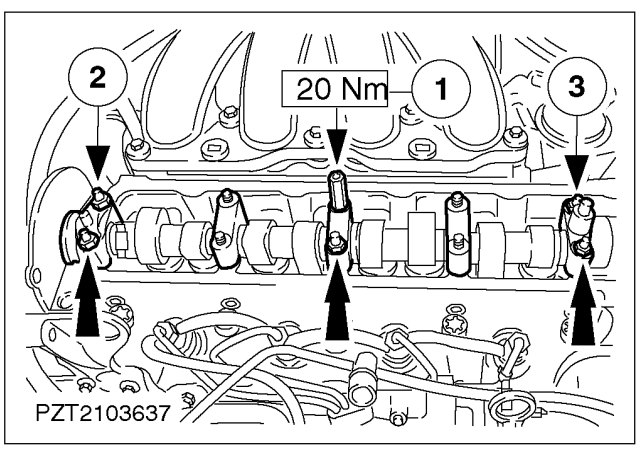

6. Install the camshaft.

NOTE: The bearing caps must lie flat.
- Locate camshaft bearing caps nos. 1, 3 and 5 in position.

NOTE: Tightening sequence.
- Screw on the nuts and tighten them.

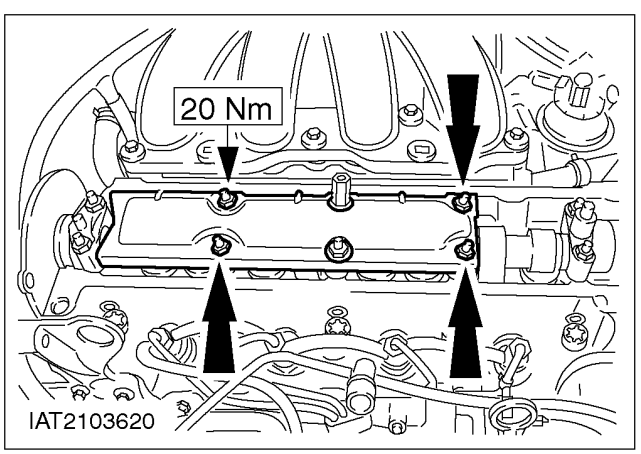

7. Fit the oil baffle.

IN-VEHICLE REPAIR (CONTINUED)

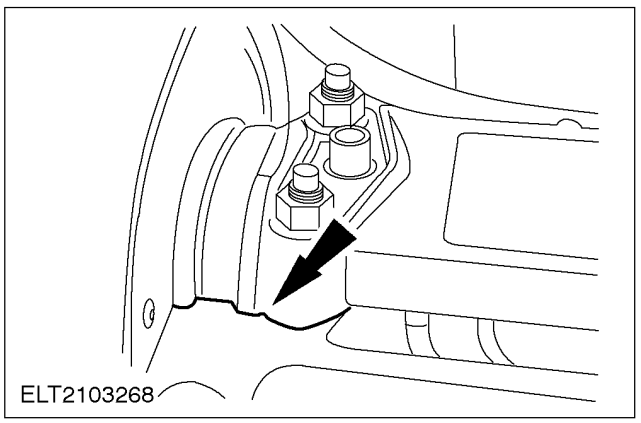

8. Seal the parting line between the bearing cap and the cylinder head on both sides with a thin bead of sealer (SPM-4G9112-F/G).

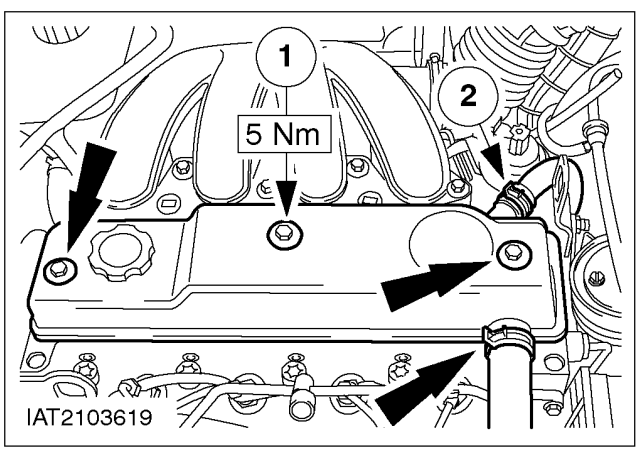

9. NOTE: Clean the cylinder head cover gasket and check it for damage. Only renew it if it is damaged. The gasket can be reused several times if it is in good condition.

NOTE: Before fitting the gasket, coat it lightly with engine oil.

Fit the cylinder head cover.

1. Tighten the bolts.
2. Attach the crankcase ventilation hoses.

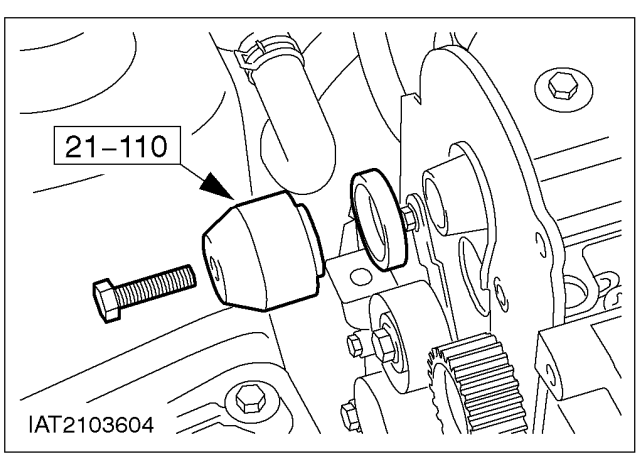

10. NOTE: Coat the running surface and the sealing lip of the oil seal with engine oil. The text on the oil seal faces outwards during installation.

Fit the camshaft oil seal using the special tool and an M8 bolt.

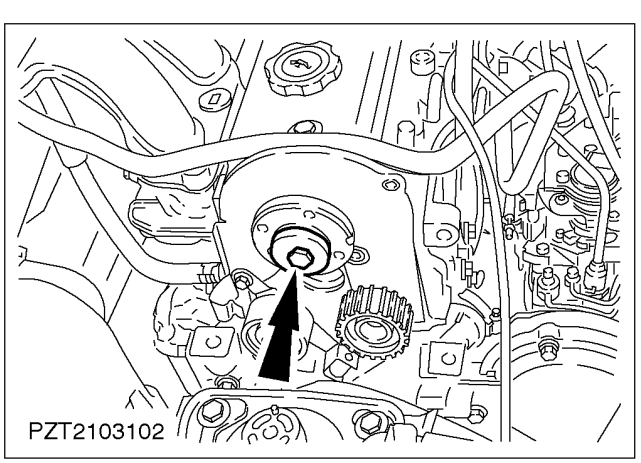

11. Fit the flange of the camshaft timing pulley.
    - Insert the Woodruff key.
    - Draw on the flange with the bolt.

IN-VEHICLE REPAIR (CONTINUED)

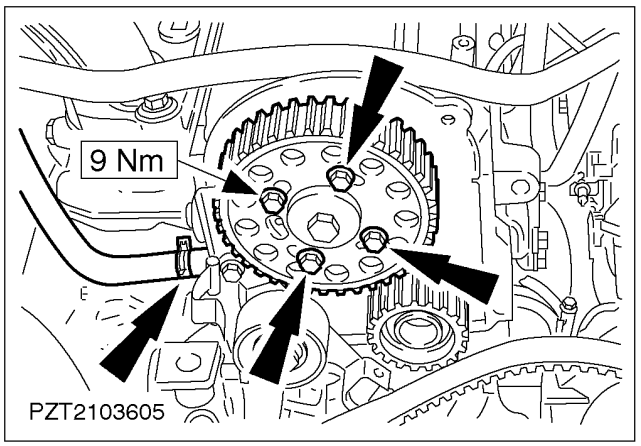

12. Fit the camshaft timing pulley.

13. Attach the crankcase ventilation hose.

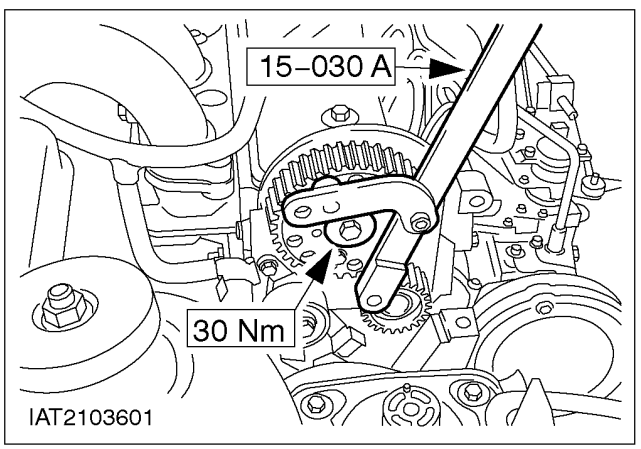

14. Tighten the flange bolt of the camshaft timing pulley.

15. Attach the engine support bar.

16. Fit a new camshaft timing belt as described in Operation No. 21 304 0.

IN-VEHICLE REPAIR

Camshaft Oil Seal (21 288 0)

Special Tool(s)	
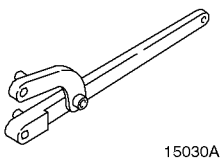 15030A	15-030 A Universal flange holding wrench 15-030 A Universal flange holding wrench
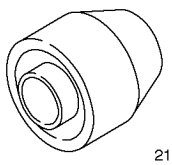 21110	Installer, camshaft oil seal 21-110

Special Tool(s)	
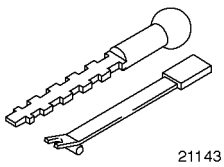 21143	Remover, camshaft oil seal 21-143

General Equipment
Two-legged puller

Material	Specification
Engine Oil	ACEA B3 / E3

Removal

1. General note.
   - This operation was carried out on an engine with a mechanical timing belt tensioner.
2. Remove camshaft timing belt as described in Operation No. 21 304 0.
3. ⚠ **CAUTION: Support the engine with a trolley jack.**
   Detach the engine support bar.
4. Slacken the flange bolt of the camshaft timing pulley.

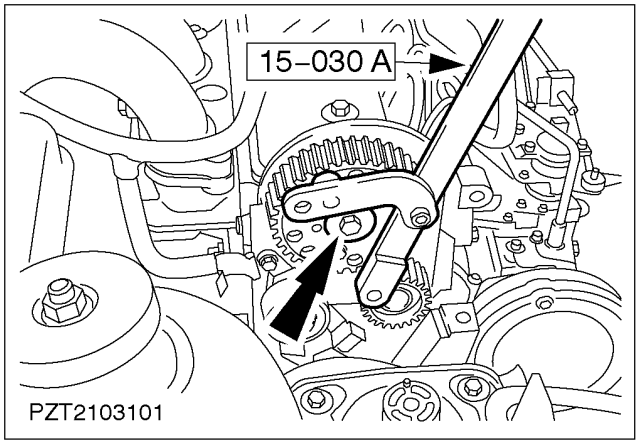

IN-VEHICLE REPAIR (CONTINUED)

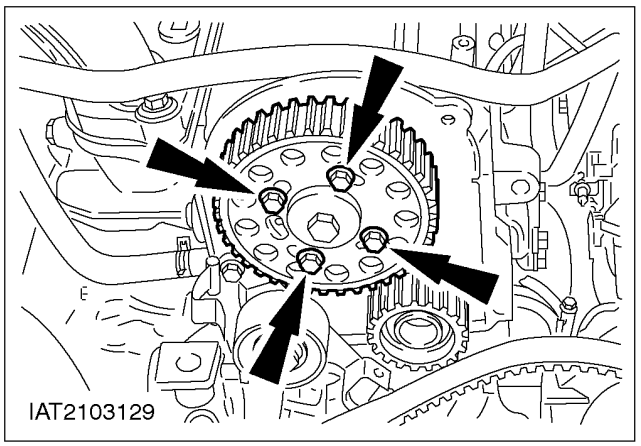

5. Remove the camshaft timing pulley.

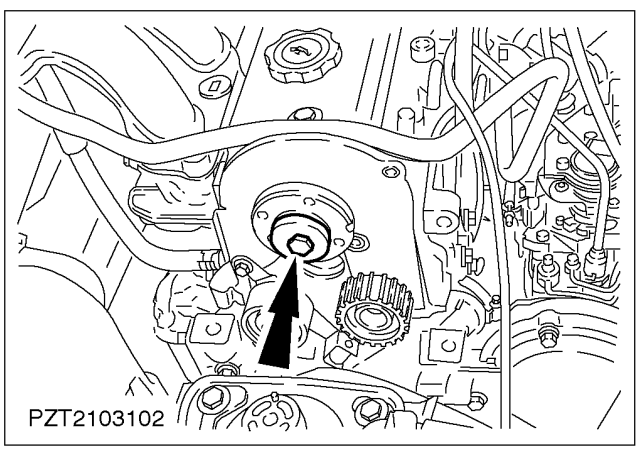

6. Remove the flange bolt of the camshaft timing pulley.

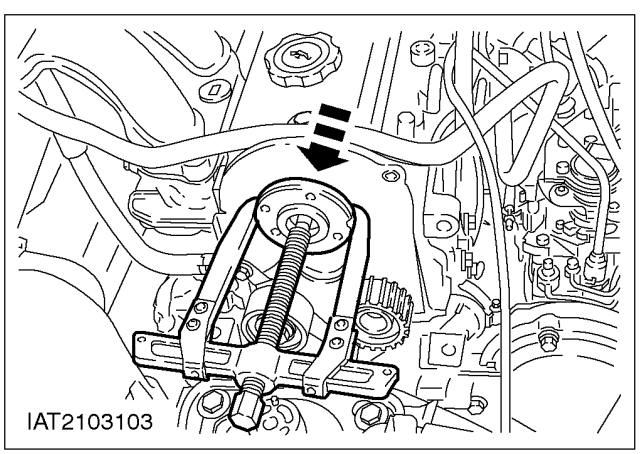

7. Pull off the flange of the camshaft timing pulley.
   - Take out the Woodruff key.

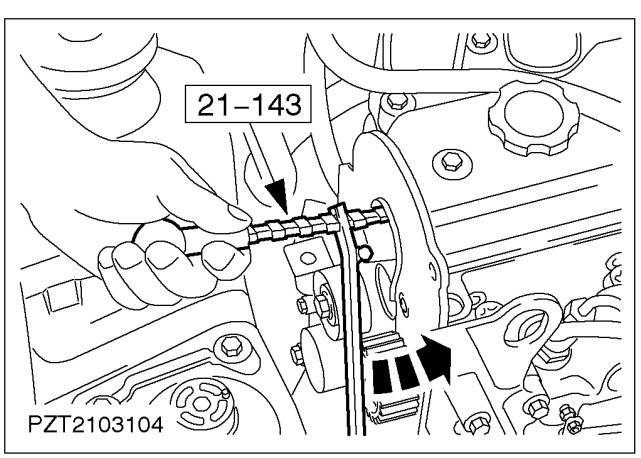

8. Remove the camshaft oil seal.

IN-VEHICLE REPAIR (CONTINUED)

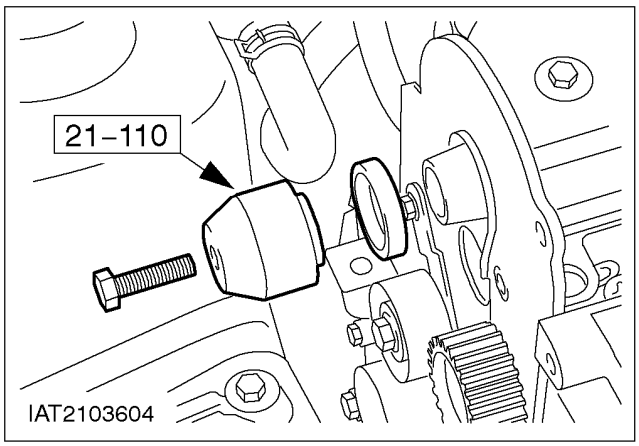

9. NOTE: Coat the running surface and the sealing lip of the oil seal with engine oil. The text on the oil seal faces outwards during installation.

Draw in the camshaft seal using the installer and an M8 bolt.

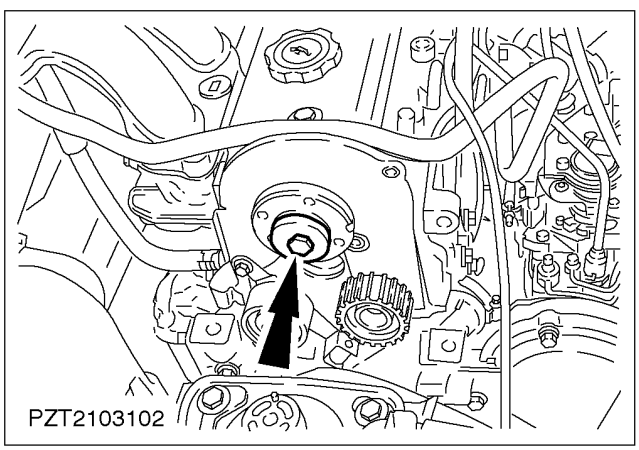

10. Fit the flange of the camshaft timing pulley.
    - Insert the Woodruff key.
    - Draw on the flange with the bolt.

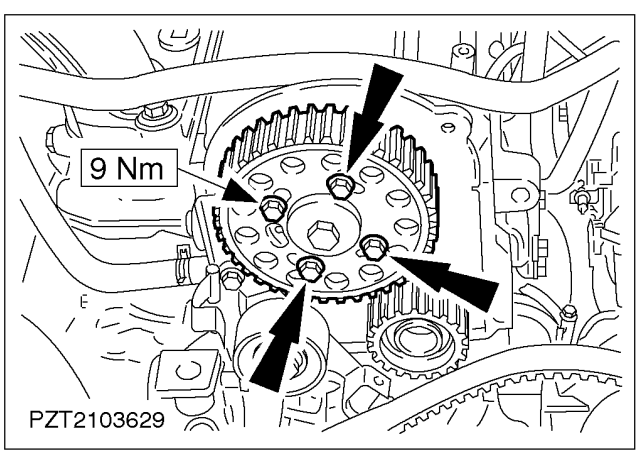

11. Fit the camshaft timing pulley.

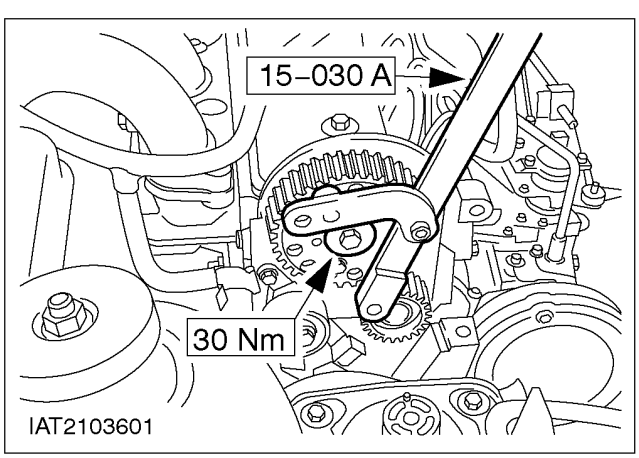

12. Tighten the flange bolt of the camshaft timing pulley.

IN-VEHICLE REPAIR (CONTINUED)

13. Attach the engine support bar.
14. Fit a new camshaft timing belt, as described in Operation No. 21 304 0.

IN-VEHICLE REPAIR

Cylinder Head (21 163 0)

Special Tool(s)	
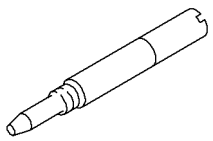 21104	Timing pin, crankshaft TDC position 21-104
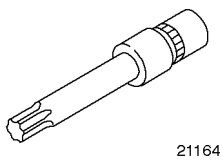 21164	Socket, cylinder head bolts 21-164
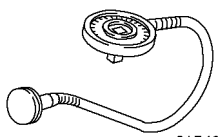 21540	Angle gauge, bolt tightening 21-540

Special Tool(s)	
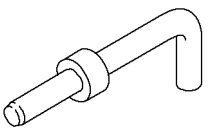 23019	Timing pin, camshaft pulley 23-019
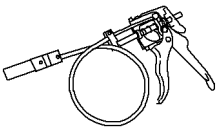 24003	Remover/installer, cooling hose clamp 24-003

Material	Specification
Coolant	L405F
Sealer	SPM-4G-9112-F/G
Valve stem installation sleeves	

Removal

1. General Remarks.
   - This operation was carried out on an engine with a mechanical timing belt tensioner.
   - If necessary, use remover 303-03 when removing coolant hoses and vent hoses. For additional information, refer to Section 303-03.
2. Standard preparatory measures
   - Make a note of the radio keycode.
   - Make a note of the preset radio stations.

WARNING: Risk of scalding when the engine is at operating temperature.
- Open the coolant recovery tank.

IN-VEHICLE REPAIR (CONTINUED)

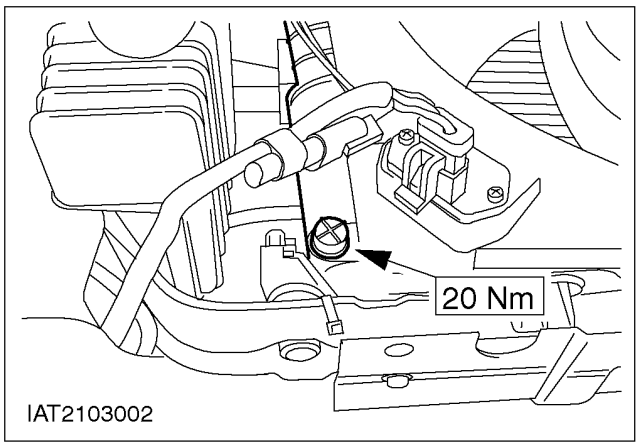

3. Raise the vehicle.
   Drain off the coolant.

WARNING: Risk of scalding when the engine is at operating temperature.

- Tighten the plug again after draining.

4. **CAUTION: Support the engine with a trolley jack.**
   Remove camshaft timing belt as described in Operation No. 21 304 0.

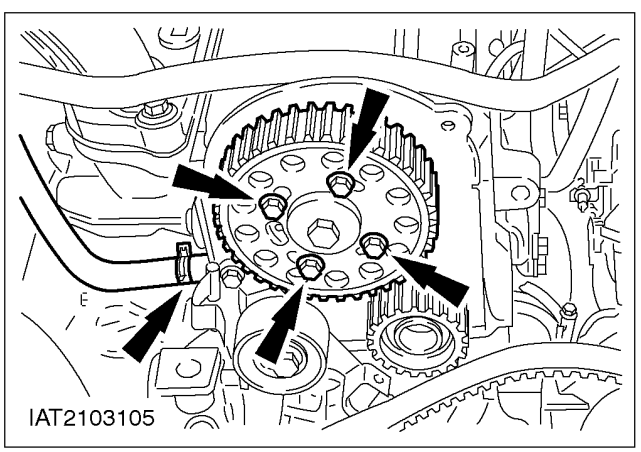

5. Remove the camshaft timing belt pulley.
   - Take out the special tool.

6. Detach the coolant hose.

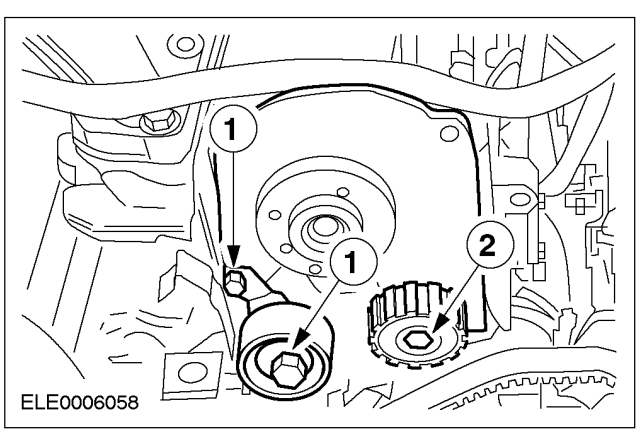

7. **WARNING: The timing belt tensioner is spring-loaded.**
   Detach the timing belt rear cover.
   1. Remove the camshaft timing belt tensioner.
   2. Detach the timing belt pulley.
   - Detach the cover plate.

IN-VEHICLE REPAIR (CONTINUED)

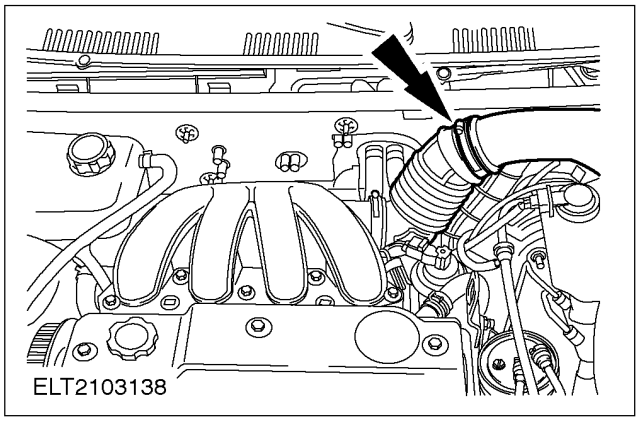

8. NOTE: Seal the opening with adhesive tape. Detach the air intake hose.

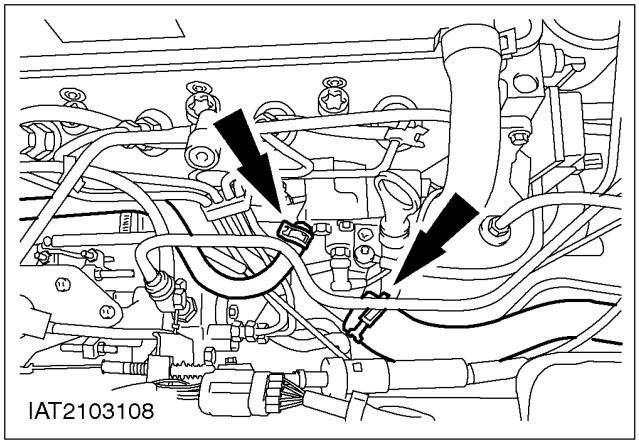

9. Detach the coolant hoses from the thermostat housing.

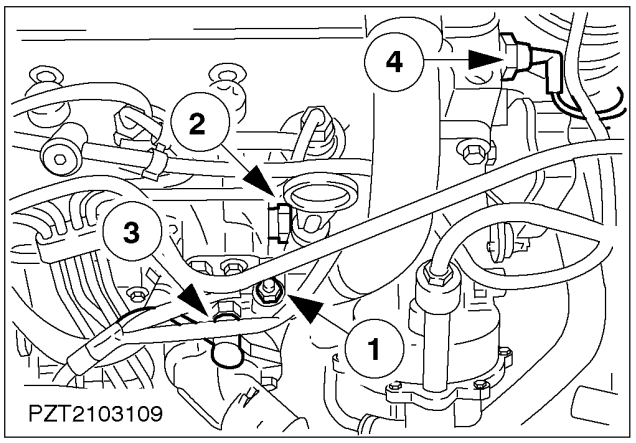

10. Disconnect the following plugs and wiring.
    1. Glow plug wiring
    2. Plug - engine coolant temperature sensor (ECT sensor)
    3. Plug - coolant temperature gauge sender unit.
    4. Plug - oil pressure switch

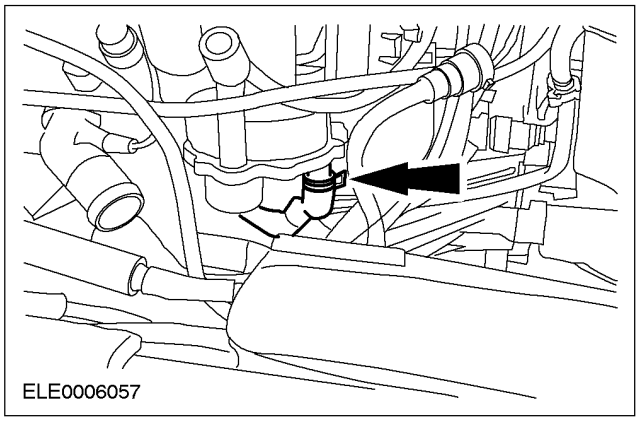

11. Detach the vacuum pump oil return hose.

IN-VEHICLE REPAIR (CONTINUED)

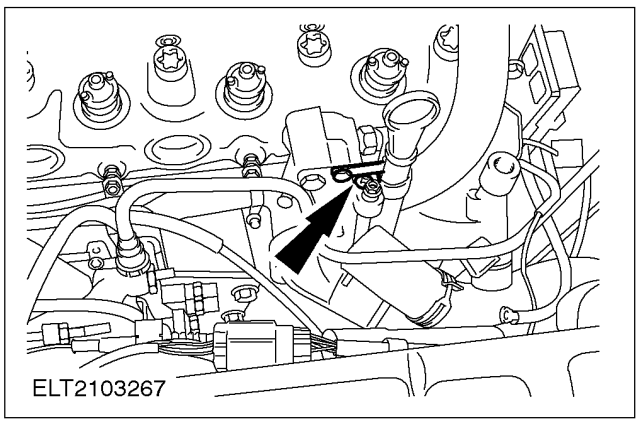

12. Detach bracket of the glow plug wiring.

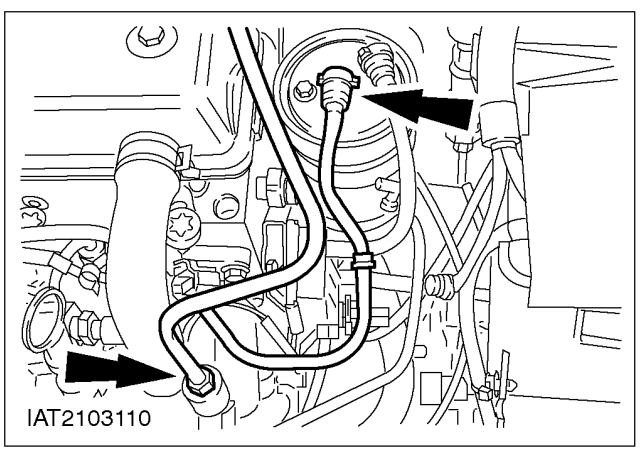

13. Detach the brake servo vacuum line.

14. Detach the fuel feed line.

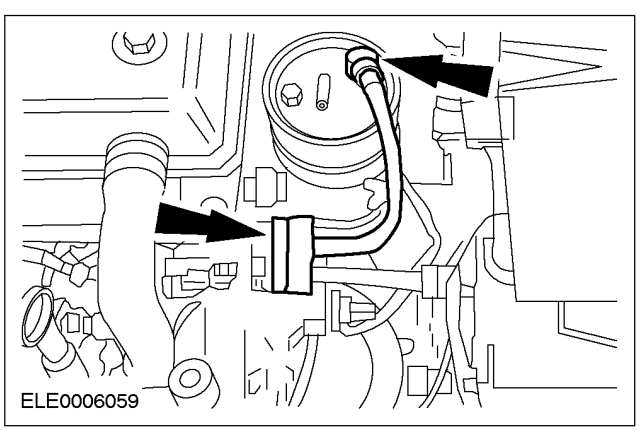

15. Detach the fuel line to the fuel heater.
    - Unclip the fuel heater.

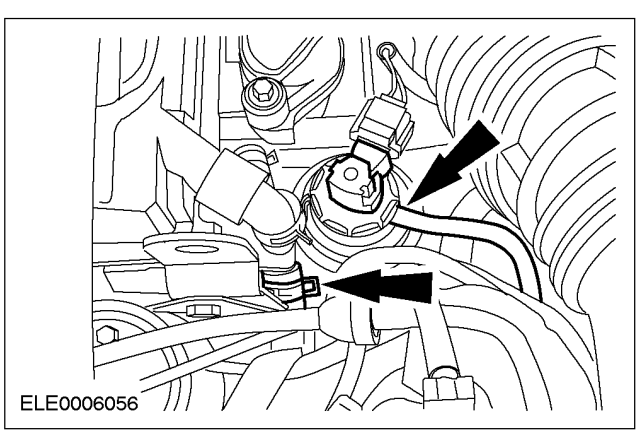

16. Disconnect vacuum hose and plug of the exhaust gas re-circulation valve (EGR valve).

17. Detach the heater coolant hose.

IN-VEHICLE REPAIR (CONTINUED)

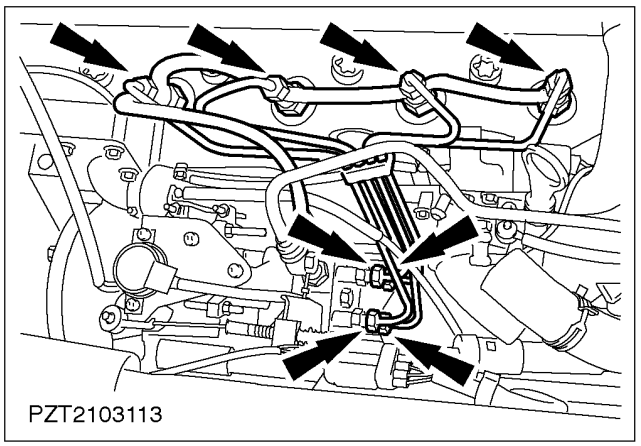

18. Remove the injection pipes and disconnect the leak-off hoses.

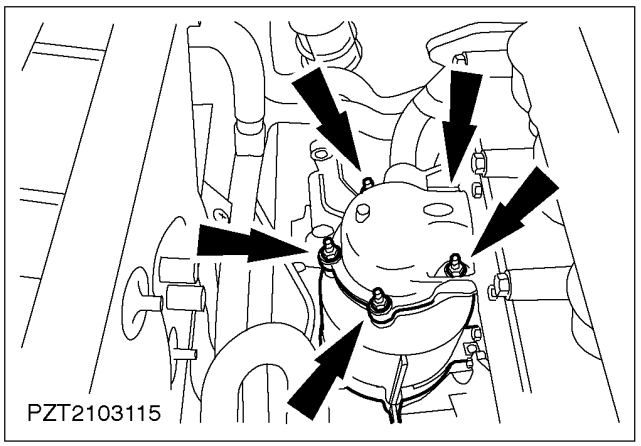

19. Detach the catalytic converter from the exhaust manifold.

20. Support the engine with a trolley jack, so that the front engine mounting is free of load.

21. Detach the engine support bar.

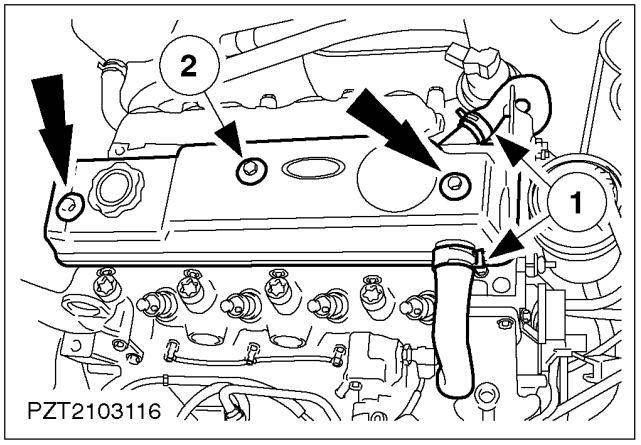

22. Remove the cylinder head cover.
    1. Detach the crankcase ventilation hoses.
    2. Remove the bolts.

IN-VEHICLE REPAIR (CONTINUED)

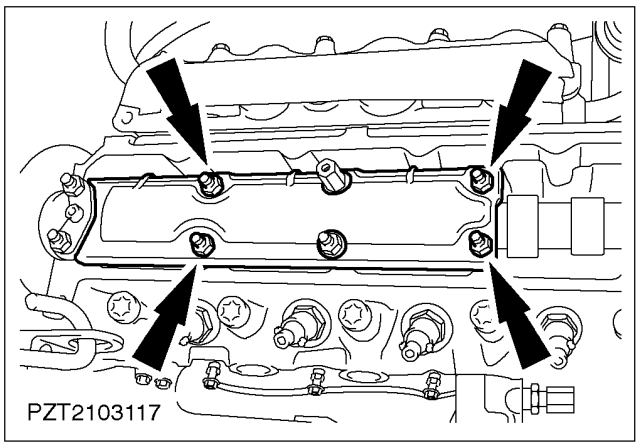

23. Remove the oil baffle.

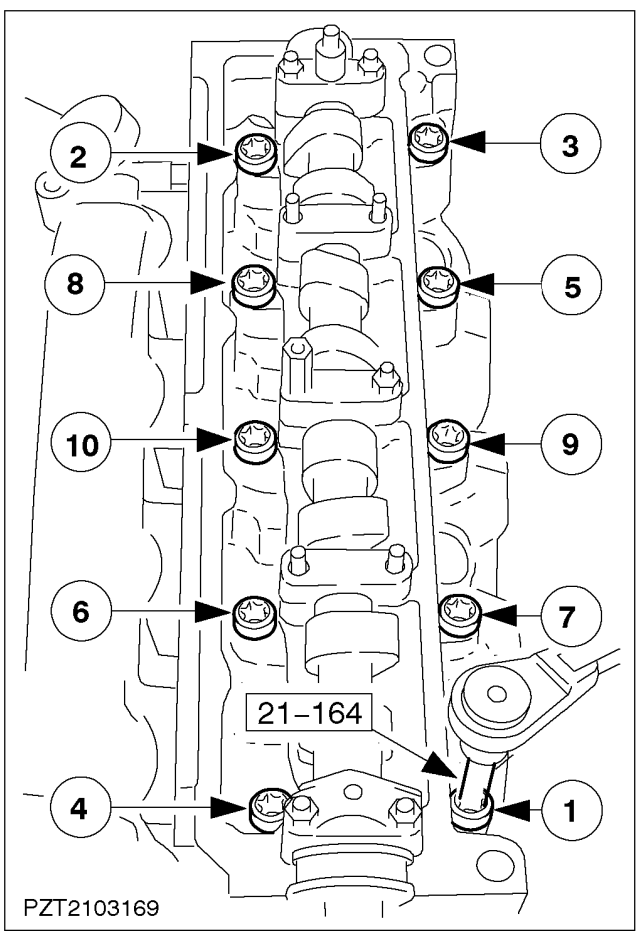

24. NOTE: Loosening sequence
Remove the cylinder head.

- Take off the cylinder head and put it down on wooden blocks.
- Remove the seal.

IN-VEHICLE REPAIR (CONTINUED)

Installation

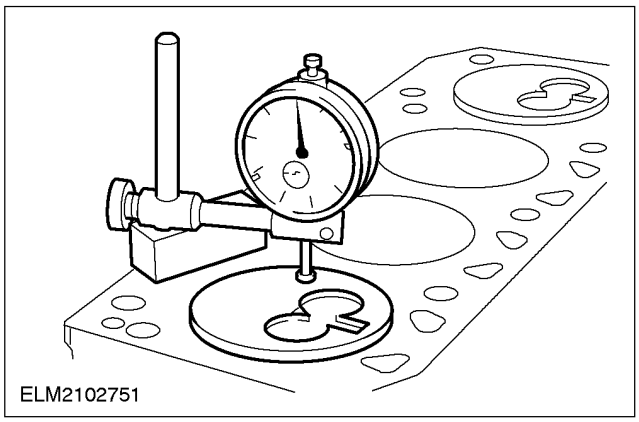

1. Measure the piston protrusion.

NOTE: Carry out two measurements per cylinder a distance of 5 mm from the edge of the piston.

- Measure the protrusion of the piston of each cylinder at TDC.
- Measure the difference in height between the piston crown and the cylinder block.
- The largest measurement determines the choice of cylinder head gasket (see General Specifications).

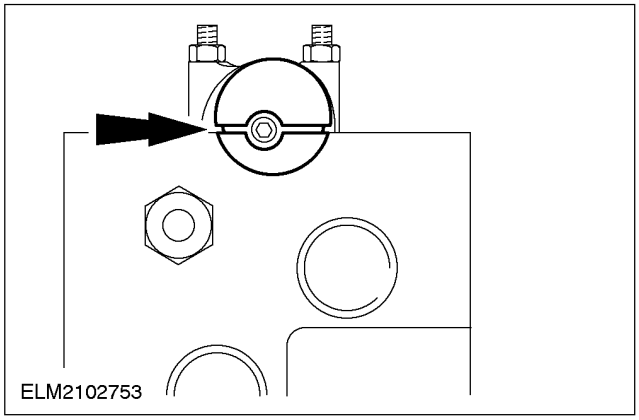

2. Line up the crankshaft and camshaft.
   - Turn the crankshaft until the piston of cylinder no. 1 is at TDC.
   - Turn the camshaft until the groove in the eccentric on the camshaft is parallel with the upper edge of the cylinder head (with the larger semi-circle at the top).
   - The crankshaft and camshaft must not be turned any more.

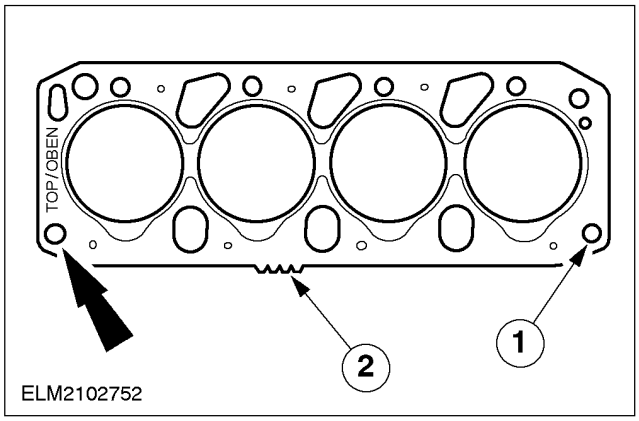

3. NOTE: The cylinder head gasket is marked "TOP / OBEN".

Fit a new cylinder head gasket.

1. Check that the locating sleeves are seated correctly.
2. Thickness marking as measured in step

IN-VEHICLE REPAIR (CONTINUED)

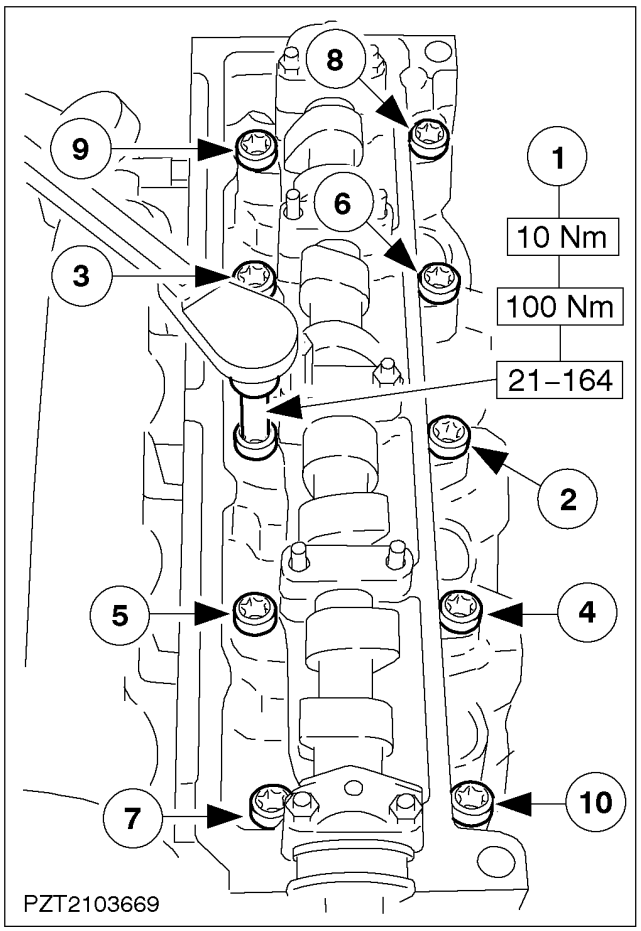

4. NOTE: Do not oil the cylinder head bolts.

NOTE: Tightening sequence.
Fit the cylinder head and tighten the new cylinder head bolts in two stages.

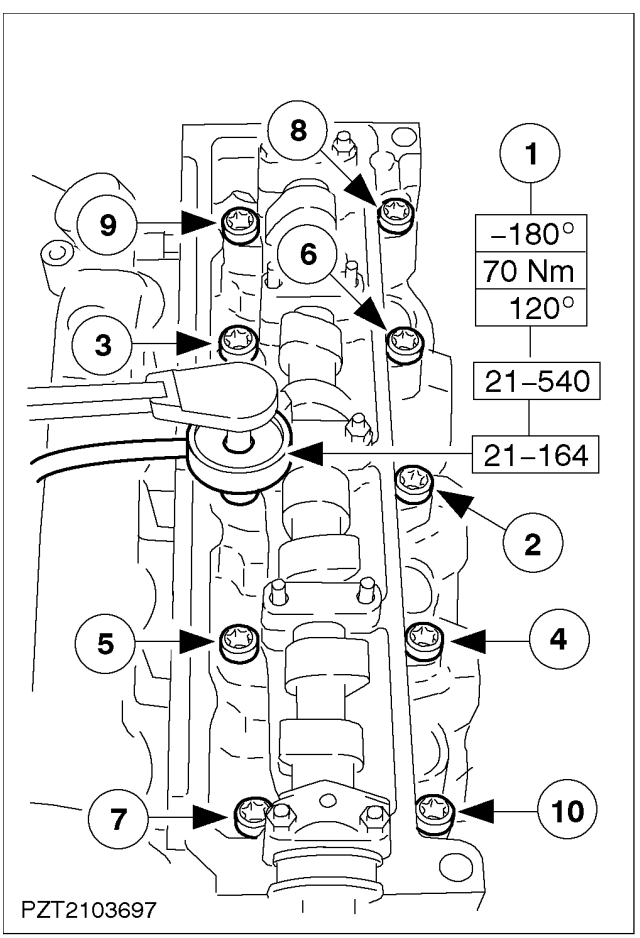

5. Fit the cylinder head (continued).

NOTE: For stage 3, slacken one cylinder head bolt by itself, and then tighten it to the specified torque and angle. Only then move on to the next cylinder head bolt.

- Wait three minutes and then tighten the cylinder head bolts according to tightening sequence in stage 3.

IN-VEHICLE REPAIR (CONTINUED)

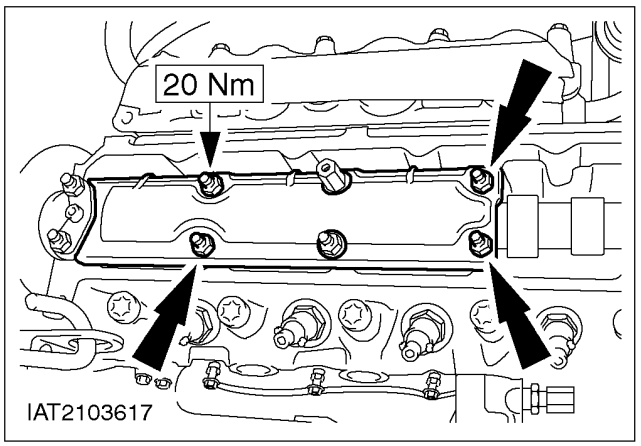

6. Fit the oil baffle.

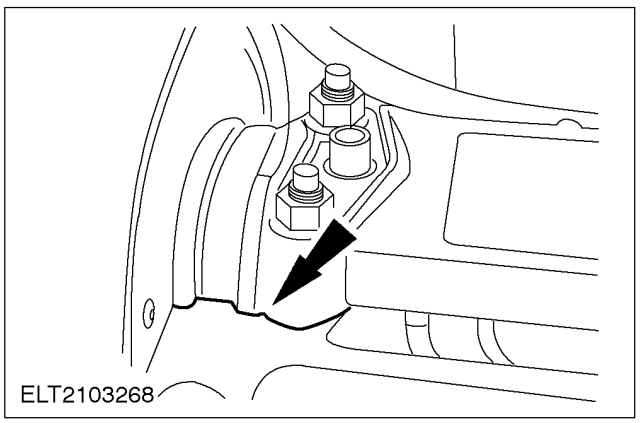

7. Seal the parting line between the bearing cap and the cylinder head on both sides with a thin bead of sealer (SPM-4G9112-F/G).

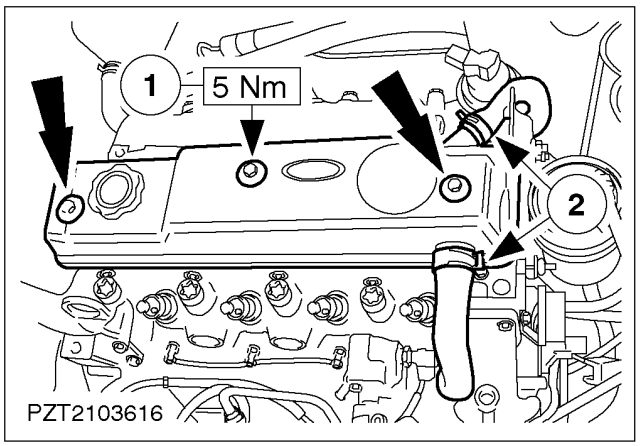

8. **NOTE:** Clean the cylinder head cover gasket and check it for damage. Only renew if damaged. If it is in good condition, re-use it several times.

NOTE: Before fitting the gasket, lightly coat it in engine oil.

Fit the cylinder head cover.

1. Tighten the bolts.
2. Attach the crankcase ventilation hoses.

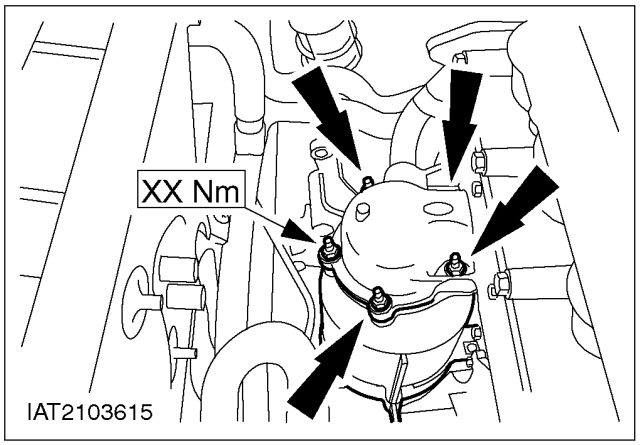

9. Attach the catalytic converter to the exhaust manifold.

IN-VEHICLE REPAIR (CONTINUED)

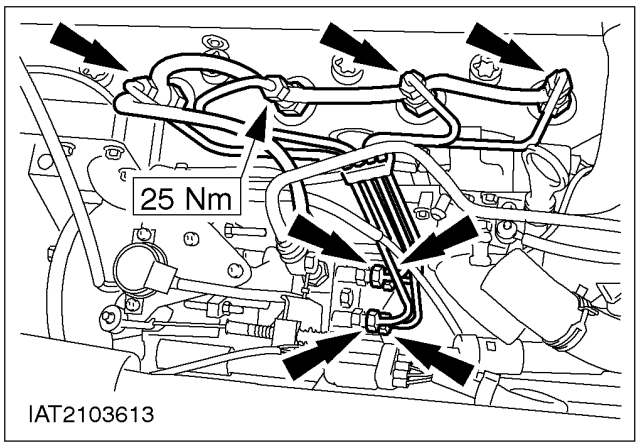

10. Fit the injection pipes and connect the leak-off hoses.

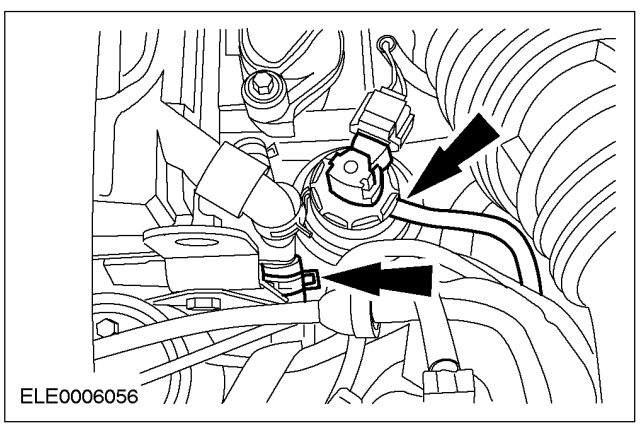

11. Connect the vacuum hose and plug to the EGR valve.

12. Attach the heater coolant hose.

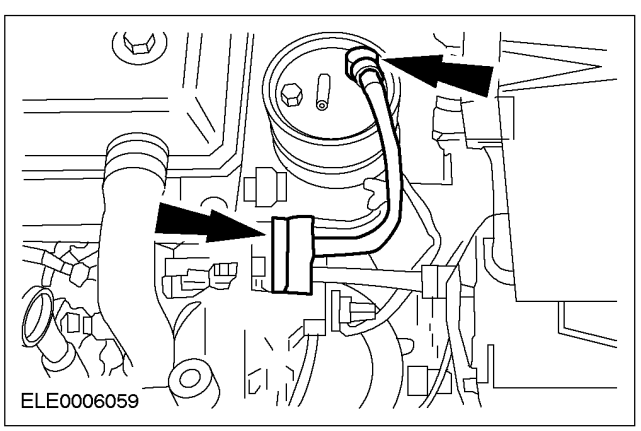

13. Attach the fuel line to the fuel heater.
    - Clip on the fuel heater.

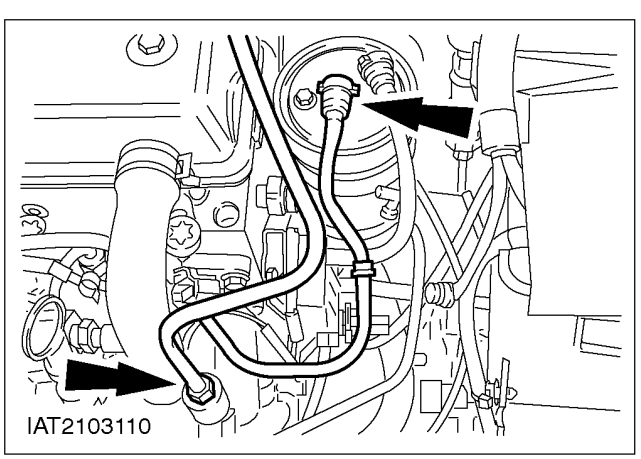

14. Attach the brake servo vacuum line.

IN-VEHICLE REPAIR (CONTINUED)

15. Attach the fuel feed line.

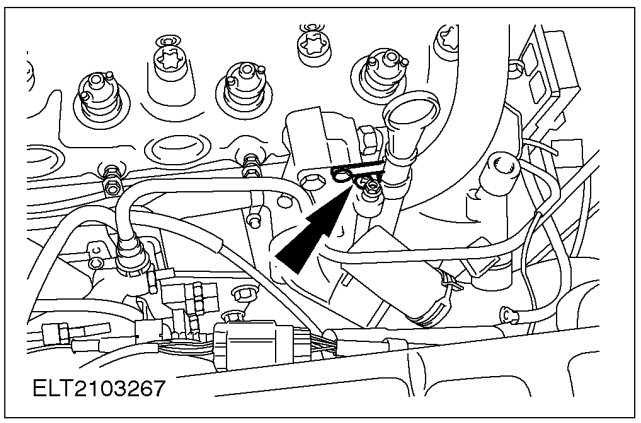

16. Attach the bracket of the glow plug wiring.

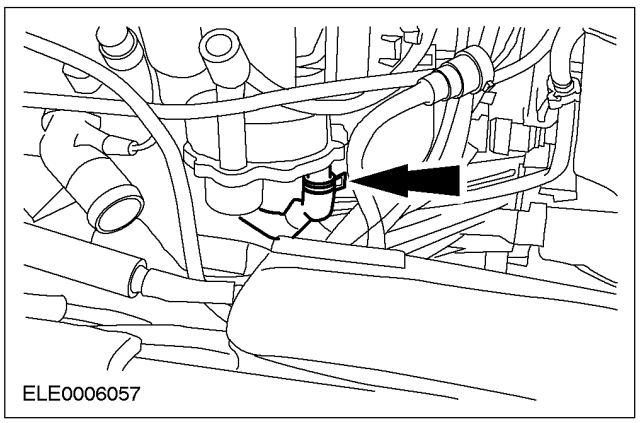

17. Attach the vacuum pump oil return hose.

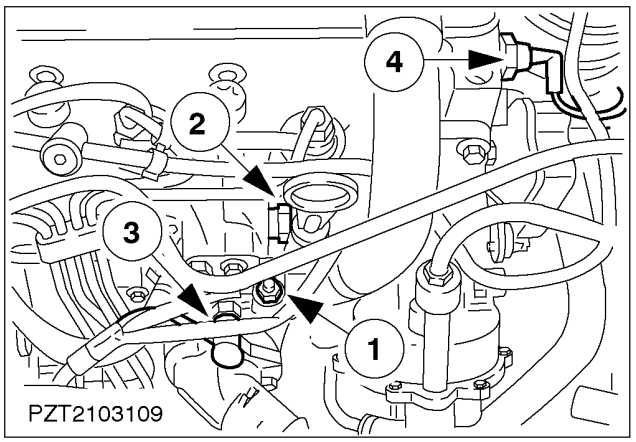

18. Connect the following plugs and wiring.
    1. Glow plug wiring
    2. Plug - ECT sensor
    3. Plug - temperature gauge sender unit
    4. Plug - oil pressure switch

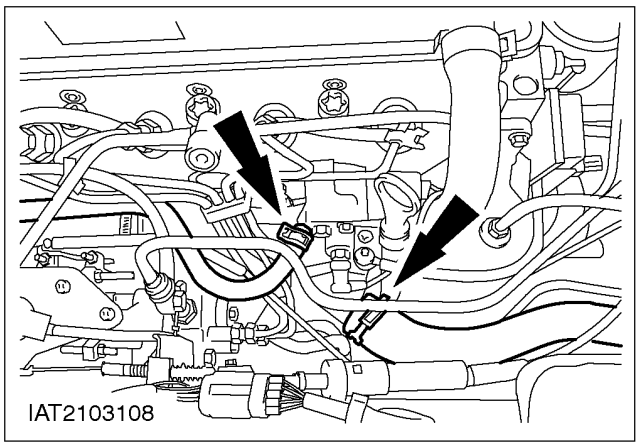

19. Attach the coolant hoses to the thermostat housing.

IN-VEHICLE REPAIR (CONTINUED)

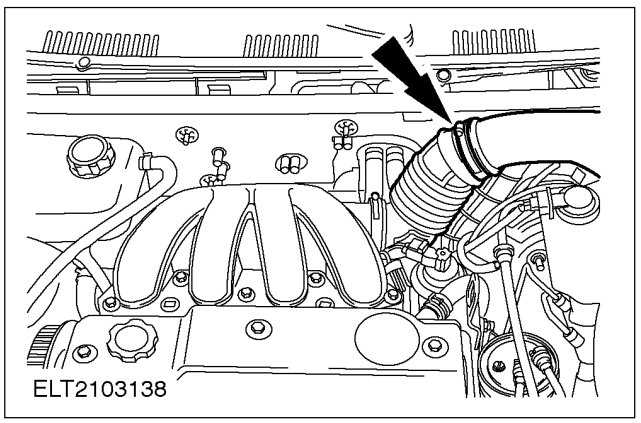

20. NOTE: Remove the adhesive tape.
Fit the air intake hose.

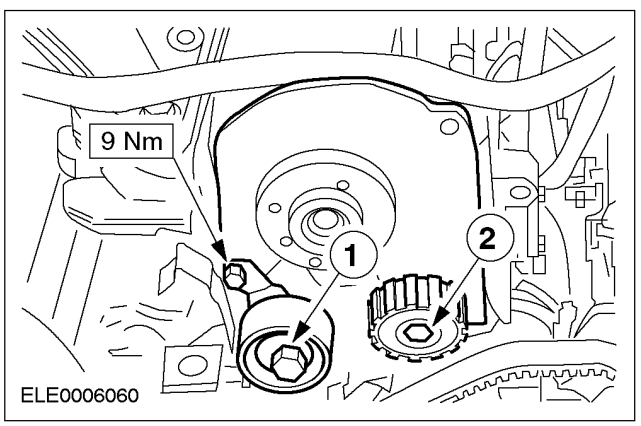

21. Fit the camshaft timing belt tensioner.
    1. Timing belt tensioner
    2. Compress the spring of the timing belt tensioner and secure it with the clamp bolt.

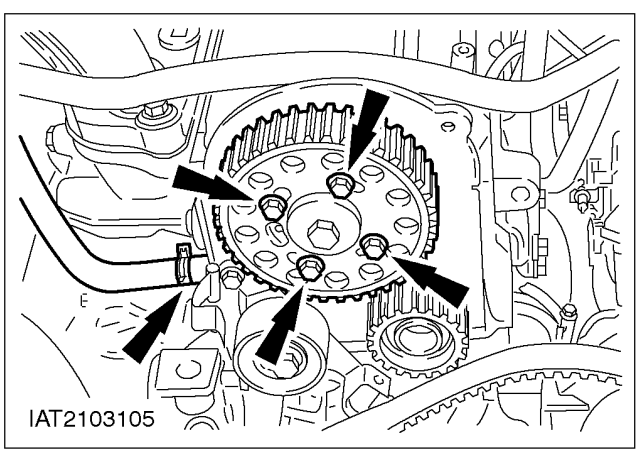

22. NOTE: Do not tighten the bolts.
Fit the camshaft timing belt pulley.

23. Attach the coolant hose.

24. Connect the battery negative lead.

IN-VEHICLE REPAIR (CONTINUED)

25. Attach the engine support bar.
    - Fill up with coolant.
    - Carry out an oil change.
    - Check the routing of the vacuum hoses and wiring and secure them with cable ties where necessary.
    - Enter the radio keycode.
    - Re-program the preset radio stations.
    - Reset the clock.
    - Carry out a road test to enable the PCM (EEC V) to collect data.
    - Check the fluid levels and correct as necessary.
    - Check the engine and cooling system for leaks (visual inspection).
26. Standard finishing operations.

REMOVAL

Engine (21 132 0)

Special Tool(s)	
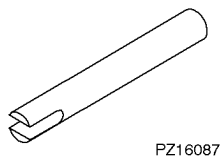 PZ16087	Remover, driveshaft 16-087
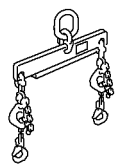 21068A	21-068 A Engine lifting bracket 21-068 A Engine lifting bracket

Special Tool(s)	
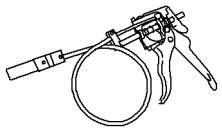 24003	Remover/installer, radiator hose clamps 24-003

General Equipment
Puller

Removal

1. General note.
2. When removing coolant and ventilation hoses, if necessary. For additional information, refer to Section 303-03.

3. **WARNING: Risk of scalding if the engine is hot.**
   Preparatory operations
   - Make a note of the radio keycode.
   - Make a note of the preset radio stations.
   - Open the coolant recovery tank.
4. Disconnect the battery ground cable.

5. **NOTE:** When slackening the nuts, hold with an Allen key to prevent from turning.
   Slacken the nuts on the two suspension struts five turns each.

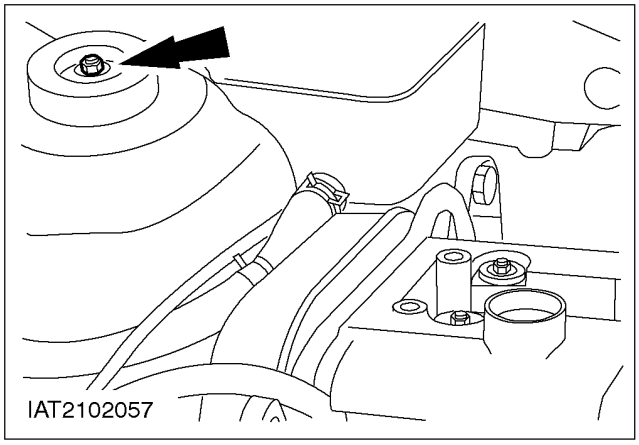

REMOVAL (CONTINUED)

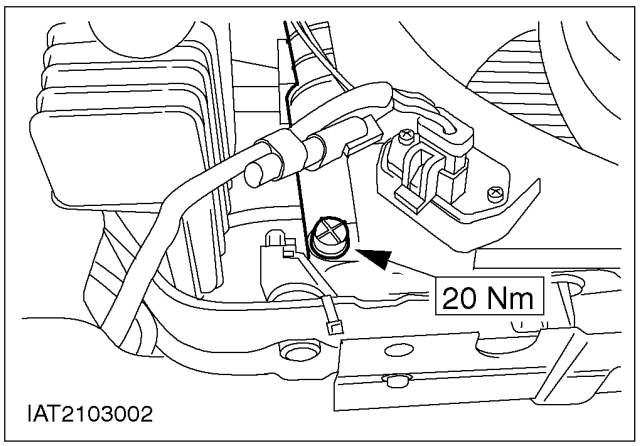

6. ⚠ **WARNING: Danger of scalding if the engine is warm.**

NOTE: After draining, tighten the drain plug to 22 Nm.

Drain off the coolant.

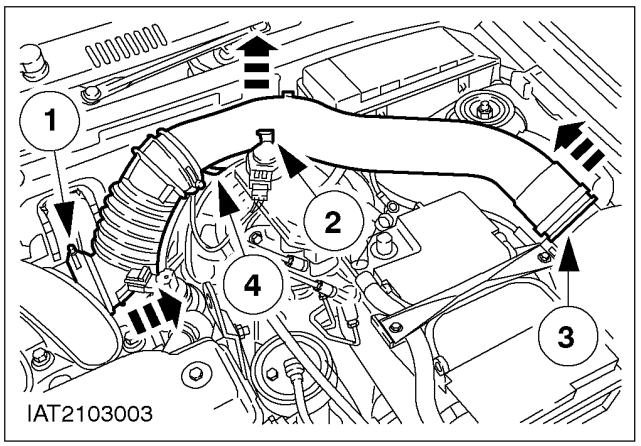

7. Remove the air intake pipe.
   1. From the intake manifold (clamp).
   2. Unclip
   3. Pull it out of the air cleaner housing (push fit).
   4. Detach the resonator hose (clamp).

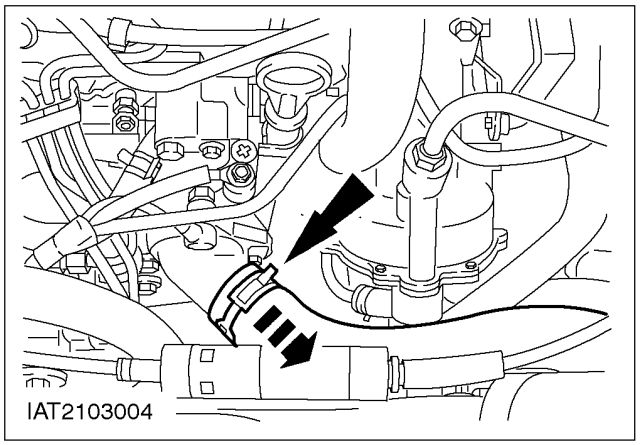

8. Detach the upper coolant hose.

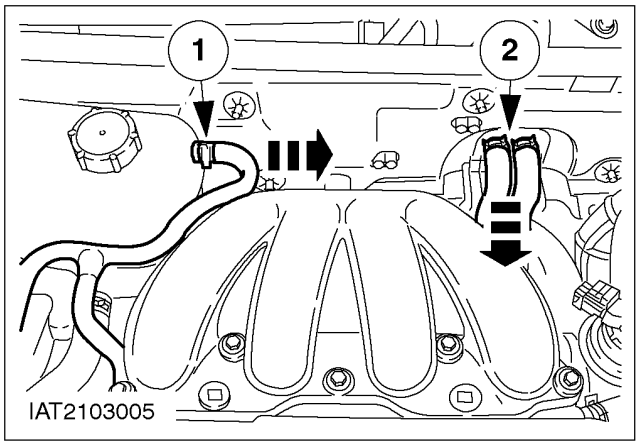

9. Detach the hoses.
   1. Vent hose.
   2. Heater coolant hoses.

REMOVAL (CONTINUED)

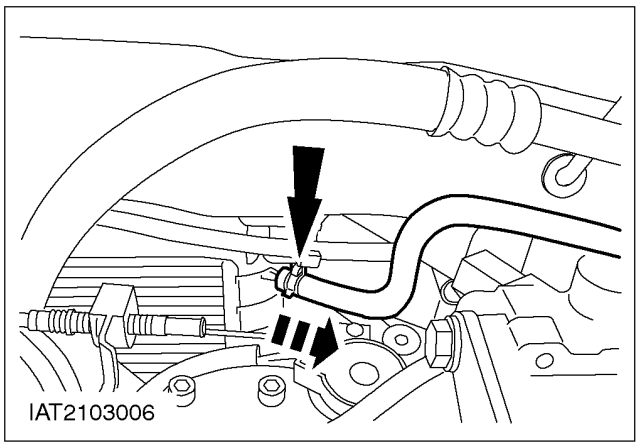

10. Detach the radiator vent hose.

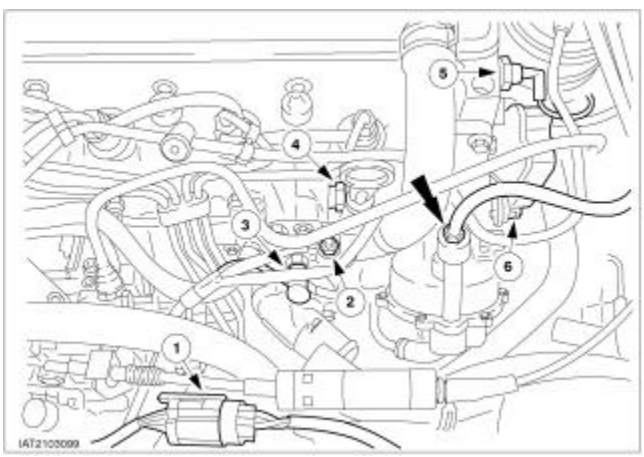

12. Disconnect the plugs and wiring:
    1. Plug of injection pump wiring loom
    2. Glow plug wiring
    3. Plug of the temperature gauge sender unit.
    4. Plug of the engine coolant temperature sensor (ECT sensor)
    5. Plug of oil pressure switch
    6. Plug of diesel fuel heater
13. Detach the brake servo vacuum line.
14. Disconnect the plug of the exhaust gas re-circulation valve (EGR valve).

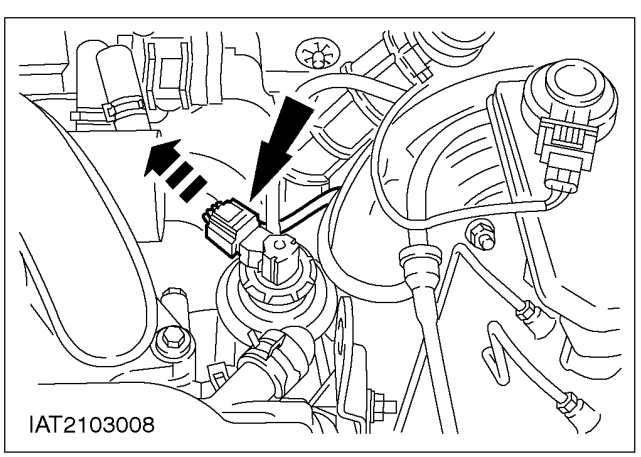

REMOVAL (CONTINUED)

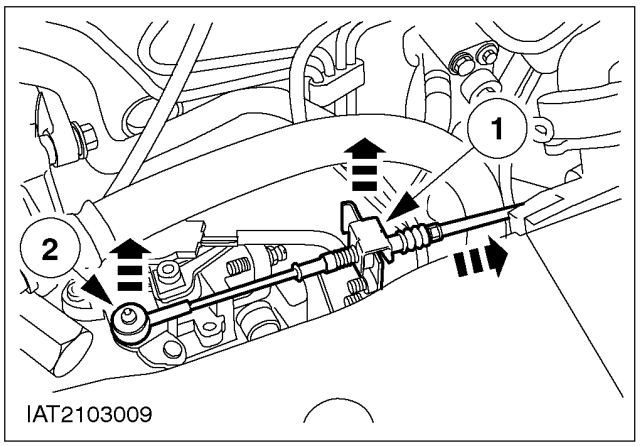

15. Detach the accelerator cable.
    1. Detach the accelerator cable with the rubber bush and retainer from the bracket.
    2. Unhook the accelerator cable.

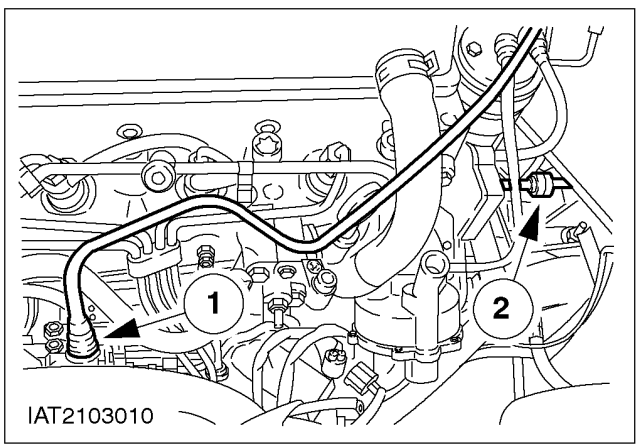

16. Disconnect the fuel lines.
    1. Fuel return line
    2. Fuel feed line

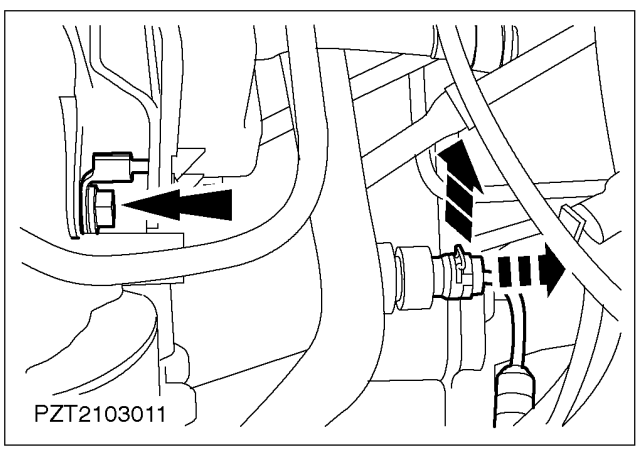

17. Detach the transmission ground lead.
    - Lift the clip and pull off the hydraulic pipe.
    - Plug the openings.

18. Detach the hydraulic pipe of the clutch operating system.

REMOVAL (CONTINUED)

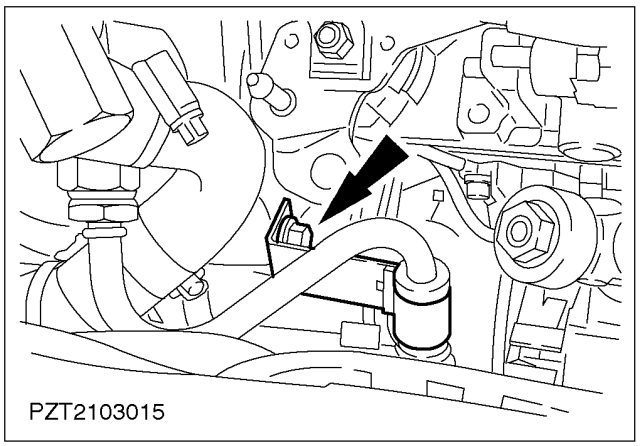

19. Detach the bracket of the power steering pressure pipe.

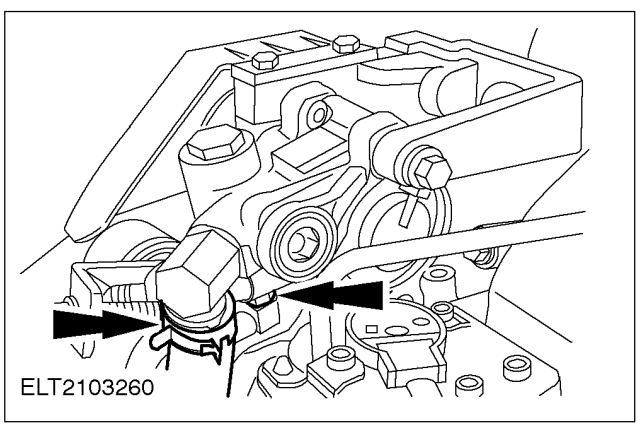

20. **NOTE:** Collect the power steering fluid. Detach the power steering hose and pressure pipe.

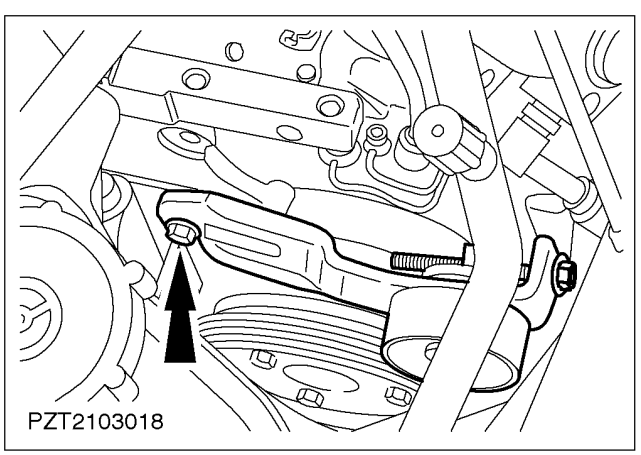

21. Remove the belt tensioner.

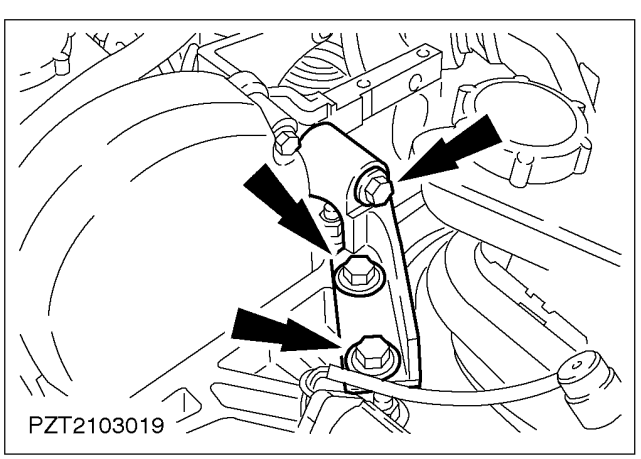

22. Remove the front engine mounting auxiliary bracket.

REMOVAL (CONTINUED)

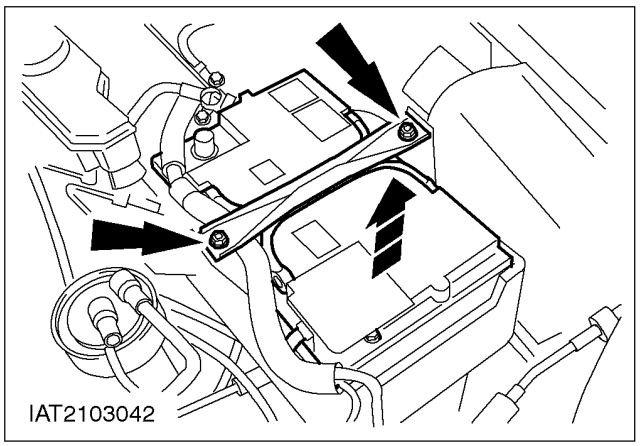

23. Remove the battery.
    - Detach the retaining strap.
    - Lift out the battery.

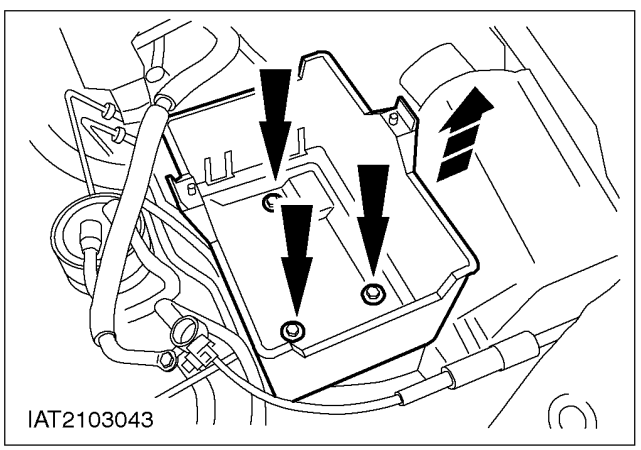

24. Remove the battery box.

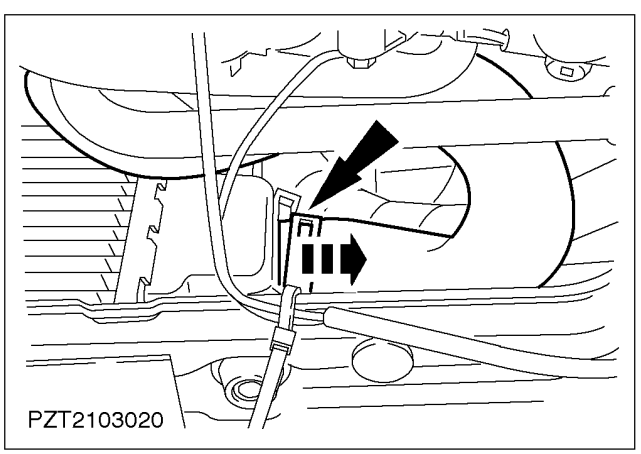

25. Raise the vehicle.

26. Detach the lower coolant hose.

REMOVAL (CONTINUED)

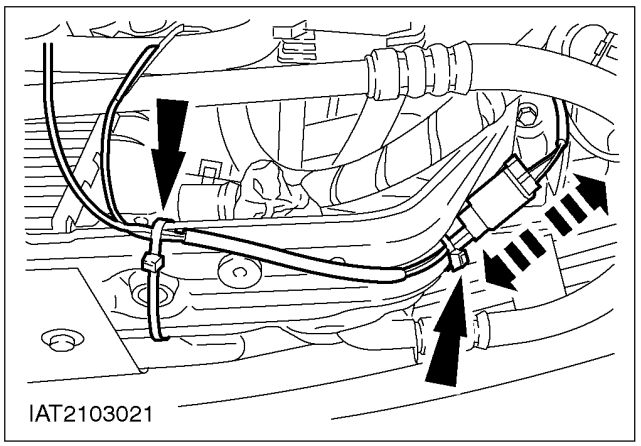

27. Disconnect the air conditioning plug.
    - Cut the two cable ties.

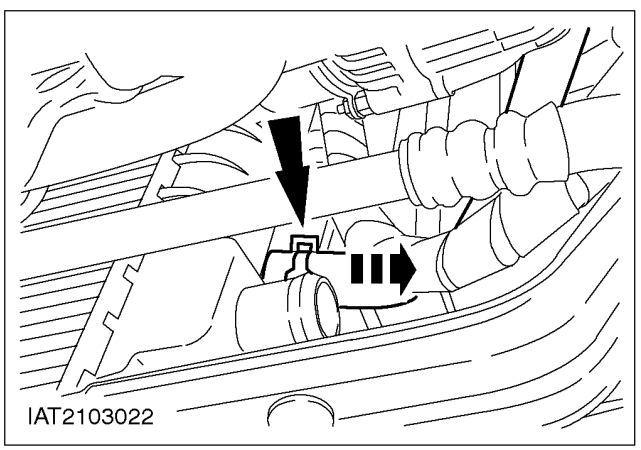

28. Detach the lower right-hand coolant hose.

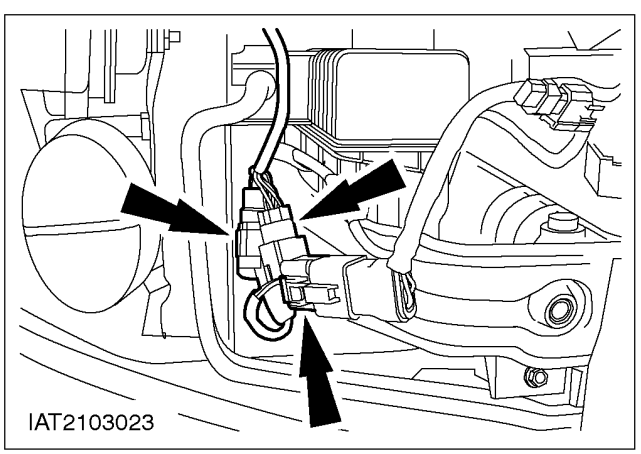

29. Disconnect the three plugs at the bottom of the radiator on the left-hand side.

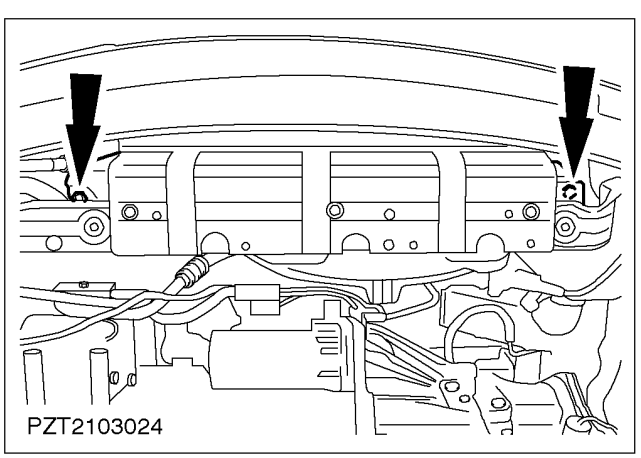

30. **NOTE:** Do not remove the air conditioning condenser.
    Detach the air conditioning condenser at the bottom and tie up.

REMOVAL (CONTINUED)

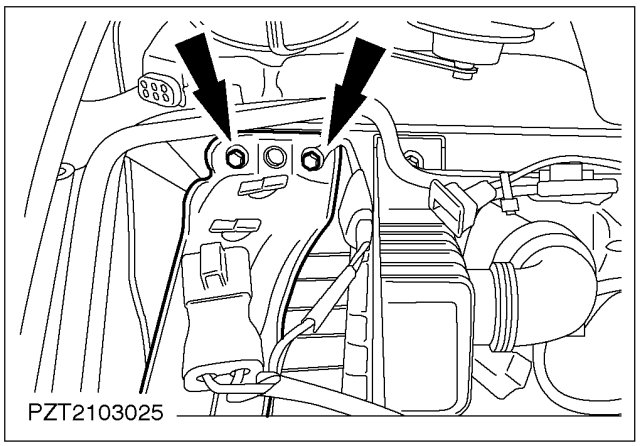

31. Remove the radiator (two bolts on each side; right-hand side shown).
    - Carefully withdraw the radiator, radiator crossmember and fan plate with the fan from below.

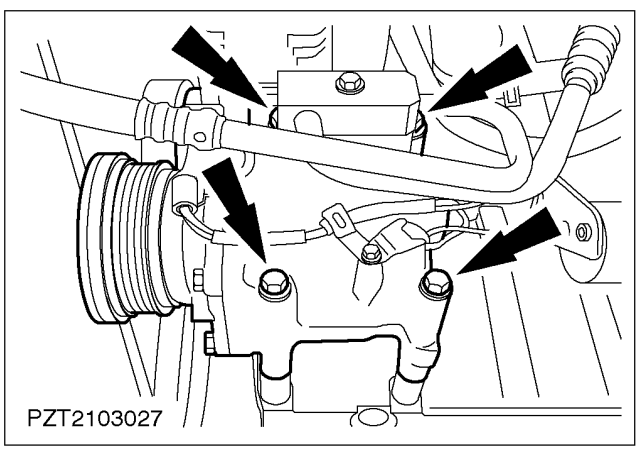

32. Detach the air conditioning compressor.
    - Let the compressor hang down and tie it securely.

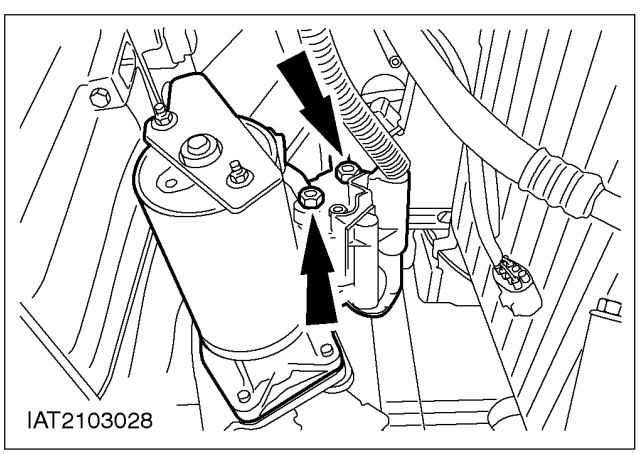

33. Disconnect the starter motor.

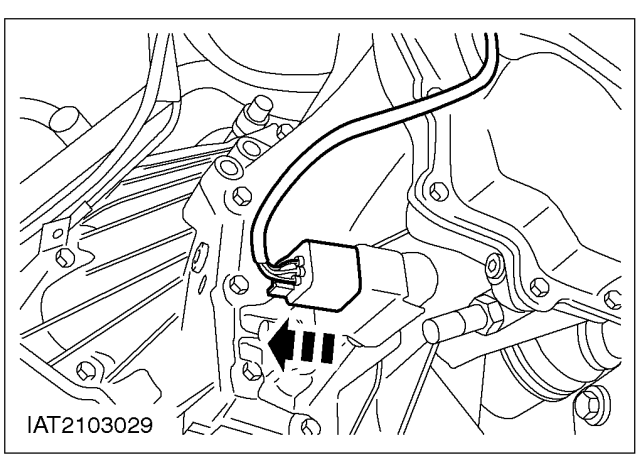

34. Disconnect the plug of the multi-function switch (where fitted).

REMOVAL (CONTINUED)

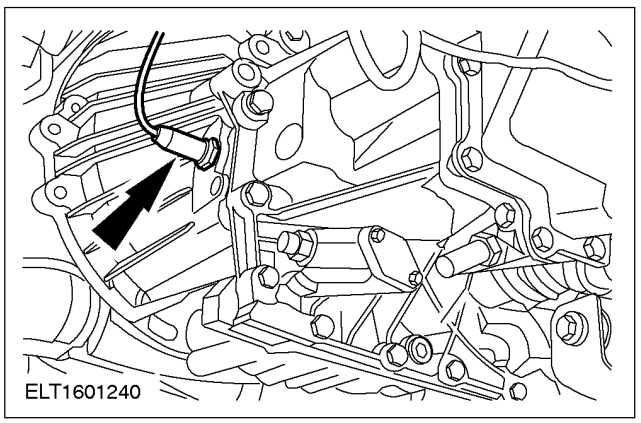

35. Disconnect the plug of the reversing lamp switch (where fitted).

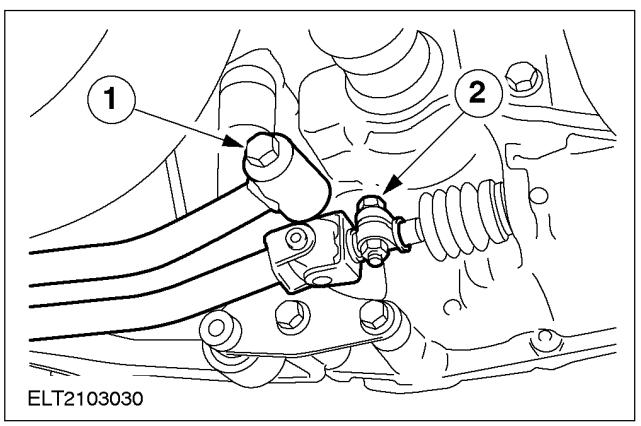

36. Detach the shift rod and gearshift stabilizer and tie up.
    1. Shift rod
    2. Shift rod stabilizer

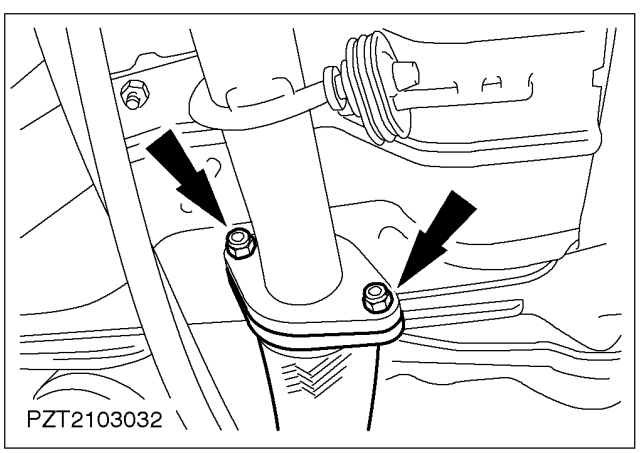

37. Detach the rear exhaust pipe from the flexible intermediate pipe.
    - Remove the seal.

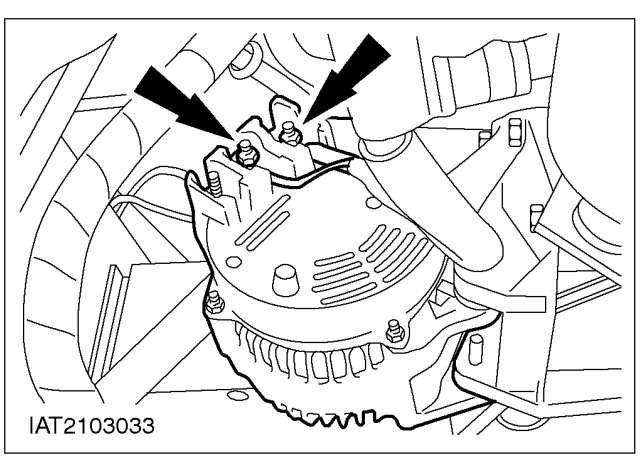

38. Disconnect the generator.

REMOVAL (CONTINUED)

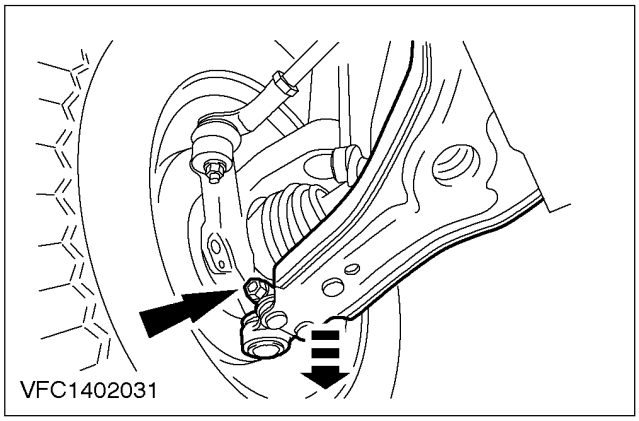

39. Detach the left and right-hand lower suspension arms (left-hand side shown).

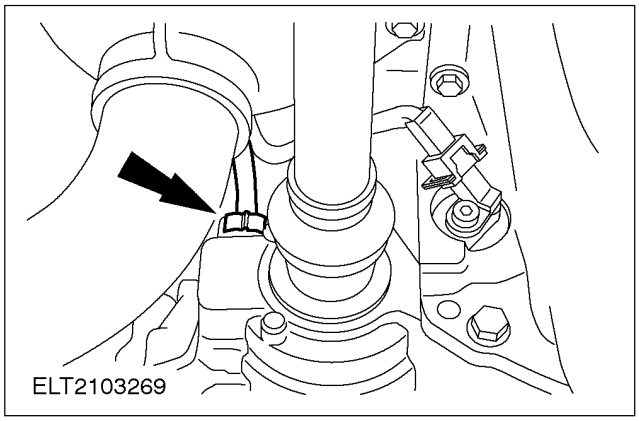

40. Disconnect the speedometer drive cable.

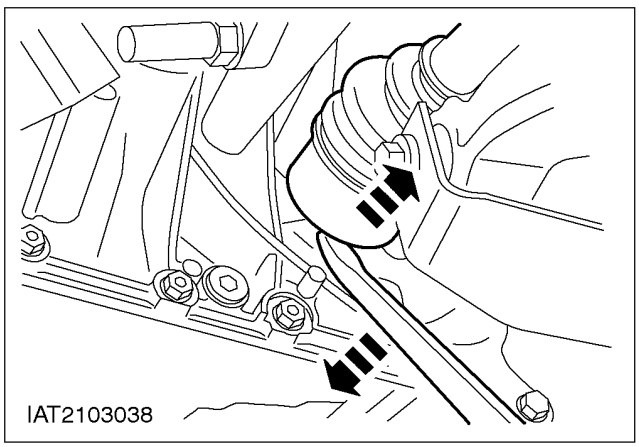

41. ⚠ **CAUTION: The inner joint must not be bent at more than 18 degrees and the outer joint must not be bent at more than 45 degrees.**

NOTE: Escaping oil. Close off the opening with an auxiliary plug.

Press the left-hand front driveshaft out of the transmission.

- Swing the driveshaft forward and tie it up.

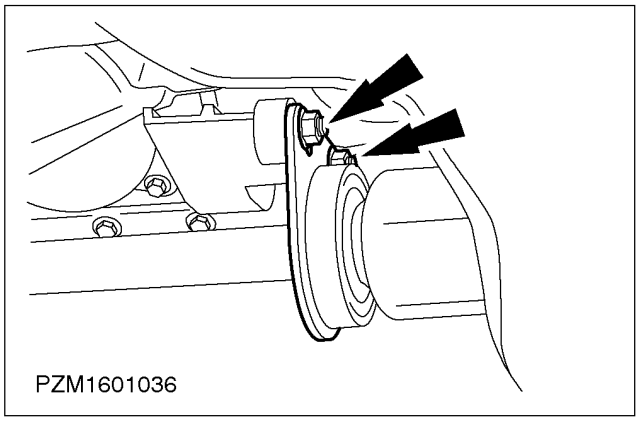

42. Remove the front driveshaft center bearing.

REMOVAL (CONTINUED)

44. **CAUTION: The inner joint must not be bent at more than 18 degrees and the outer joint must not be bent at more than 45 degrees.**

CAUTION: After loosening the driveshaft, immediately secure the differential, using suitable plugs, to prevent it from turning.

Extract the right-hand front driveshaft from the transmission.

All vehicles

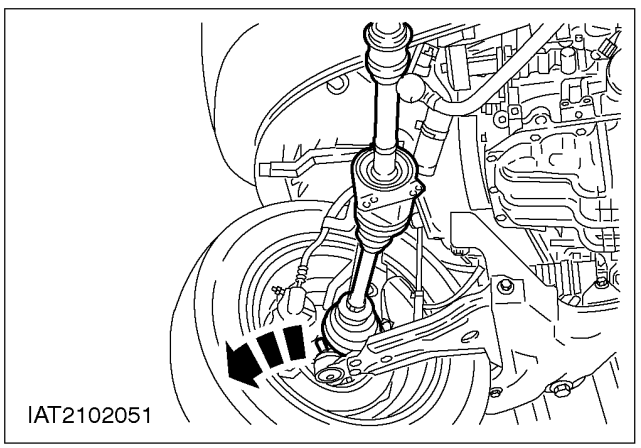

45. **CAUTION: The inner joint must not be bent at more than 18 degrees and the outer joint must not be bent at more than 45 degrees.**

NOTE: Do not damage the boots of the drive shaft.

Tie up the right-hand front driveshaft at the front.

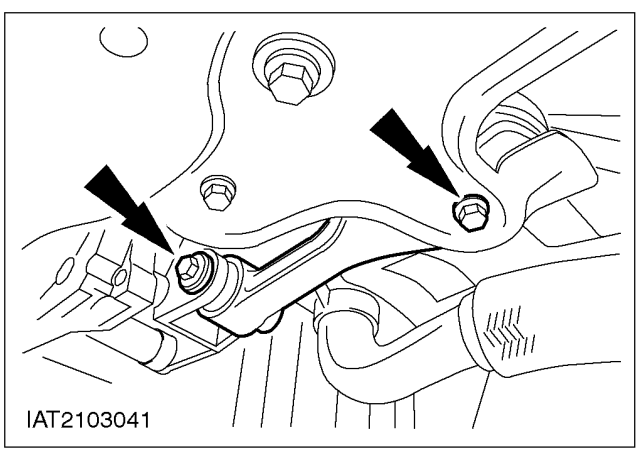

46. Remove the engine roll restrictor.

47. Preparatory measures for removing the engine and transmission assembly.
    - Position an assembly table with wooden blocks under the engine and transmission assembly.
    - Lower the vehicle until the engine and transmission assembly rests on the wooden blocks.

NOTE: Make sure that the assemblies are secure.

- Secure the engine on the assembly table with the tensioning straps.

REMOVAL (CONTINUED)

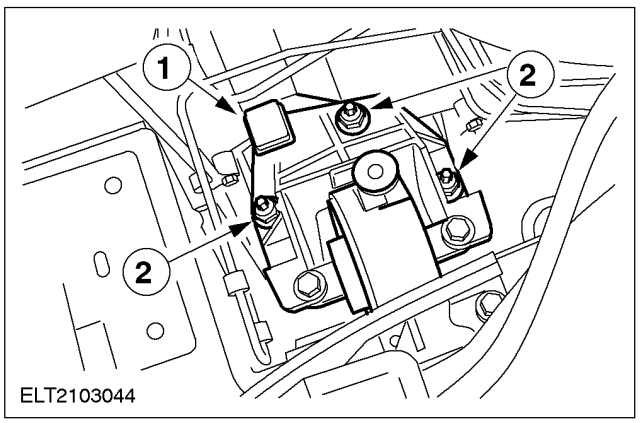

48. Remove the rear engine mounting.
    1. Screws
    2. Nuts
    3. Remove the transmission breather.

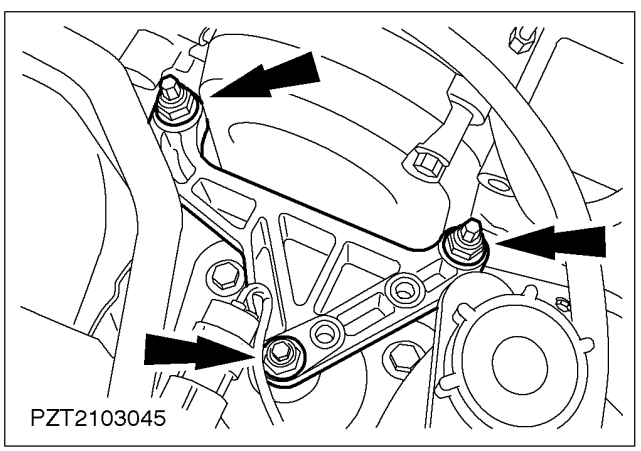

49. Remove the front engine mounting.

50. Raise the vehicle slowly until the engine and transmission are clear.

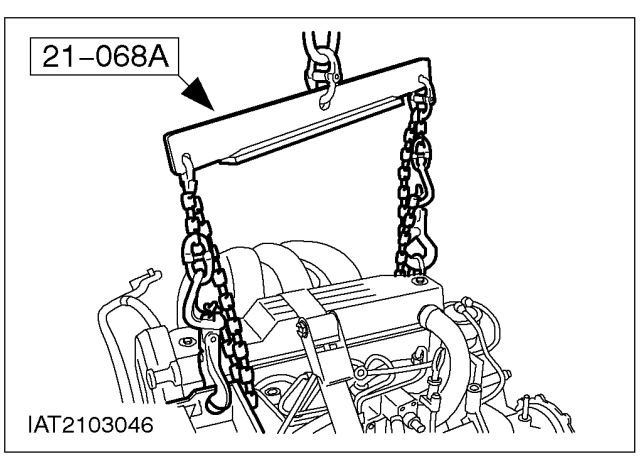

51. Attach the engine lifting bracket.

52. Lift the engine, together with the transmission, using the workshop hoist.

REMOVAL (CONTINUED)

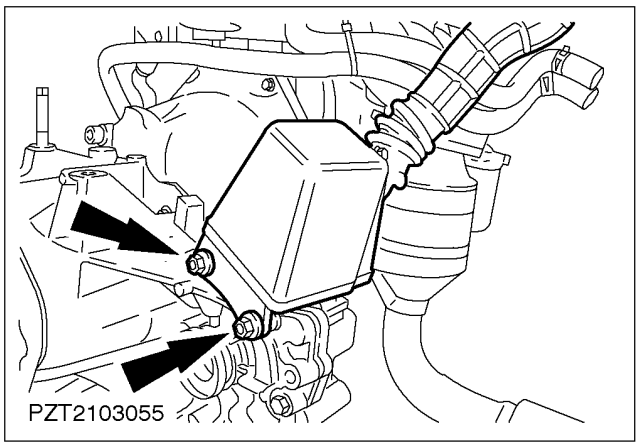

53. Remove the resonator.

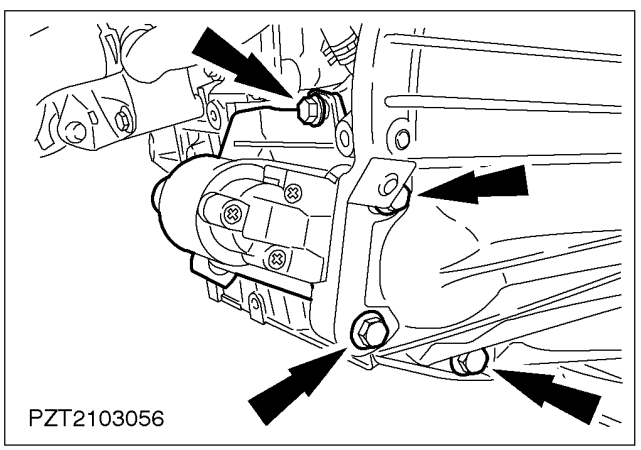

54. Remove the starter motor.

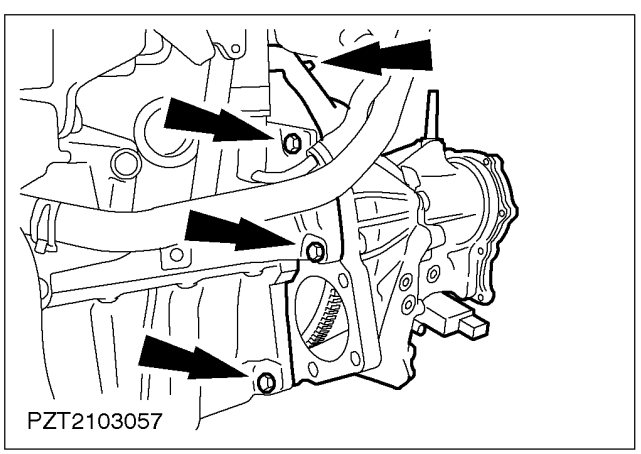

55. Unscrew the front flange bolts.

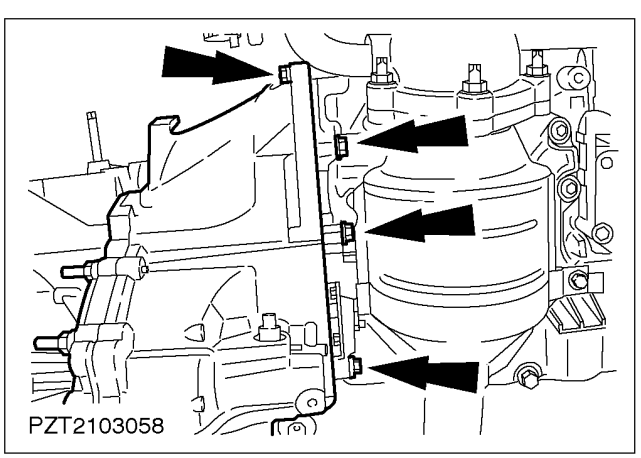

56. Unscrew the rear flange bolts.

REMOVAL (CONTINUED)

57. Press the transmission off the engine and remove it.
    - Remove the adapter plate.

DISASSEMBLY

Engine (21 134 8)

Special Tool(s)	
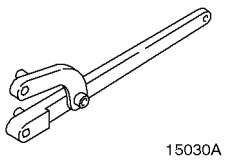 15030A	Universal flange holding wrench 15-030A
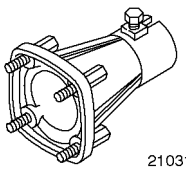 21031B	Mounting bracket, engine 21-031B
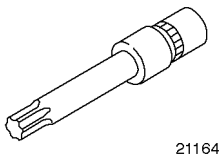 21164	Socket, cylinder head bolts 21-164

Special Tool(s)	
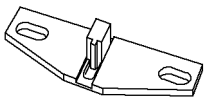 21168	Crankshaft locking tool 21-168
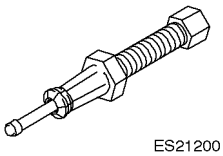 ES21200	Puller, crankshaft timing belt pulley 21-200
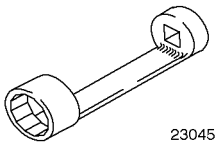 23045	Socket, injectors 23-045

Disassembly

1. General Remarks.
   - It is not possible to renew any of the gears or the belt itself with replacement parts from previous build years.
   - If necessary, when removing coolant and ventilation hoses, For additional information, refer to Section 303-03.
2. Secure the engine to the assembly stand.
   - Attach the mounting bracket.
   - Secure the engine to the assembly stand.

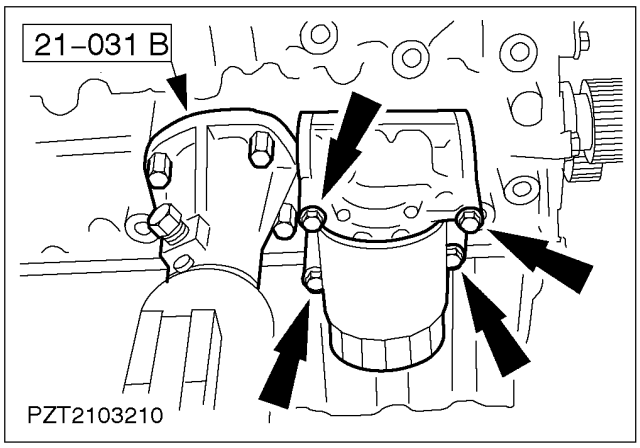

3. NOTE: Escaping oil.
Drain off the engine oil.
Detach the oil pump with the oil filter.

DISASSEMBLY (CONTINUED)

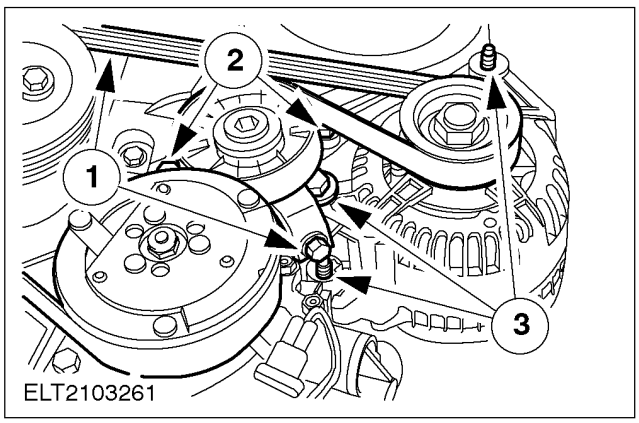

4. Remove the alternator (shown with the air conditioning compressor).
   1. Slacken and remove the drive belt.
   2. Detach the belt tensioner.
   3. Remove the alternator bolts.

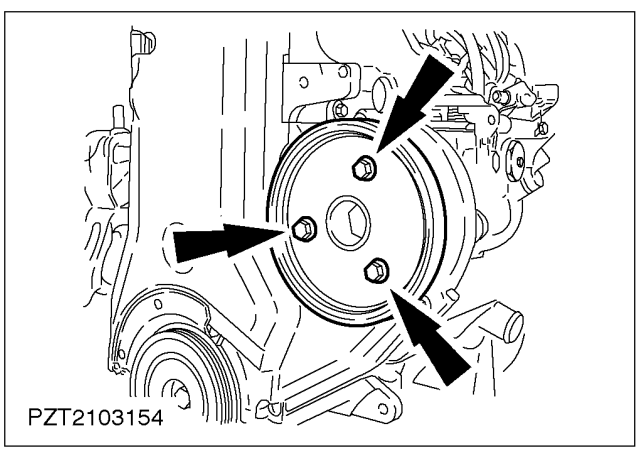

5. Remove the injection pump belt pulley.

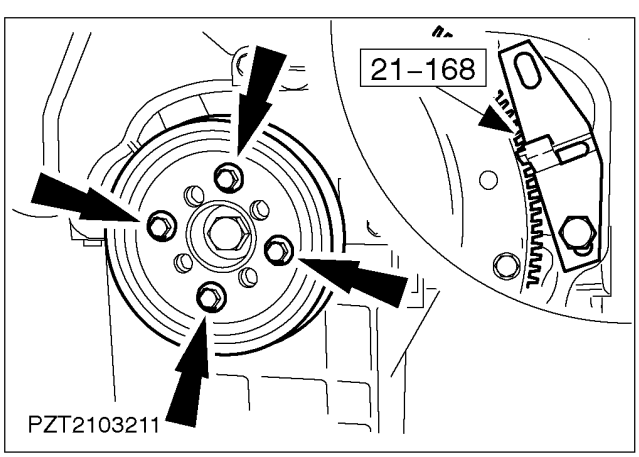

6. Remove the crankshaft pulley/vibration damper.
   - Immobilise the crankshaft using the ring gear.
   - Remove the bolts.

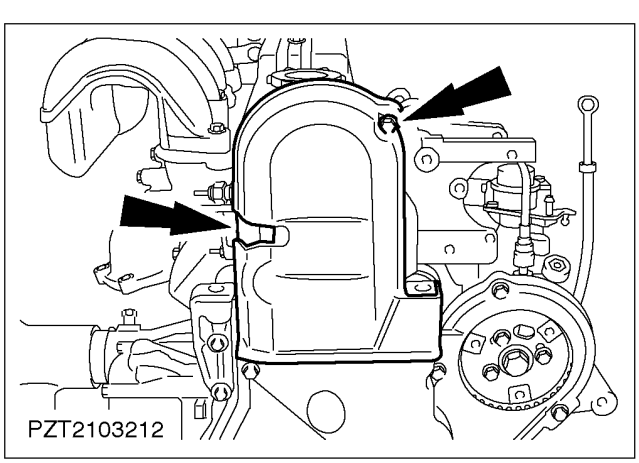

7. Remove the timing belt upper cover.

DISASSEMBLY (CONTINUED)

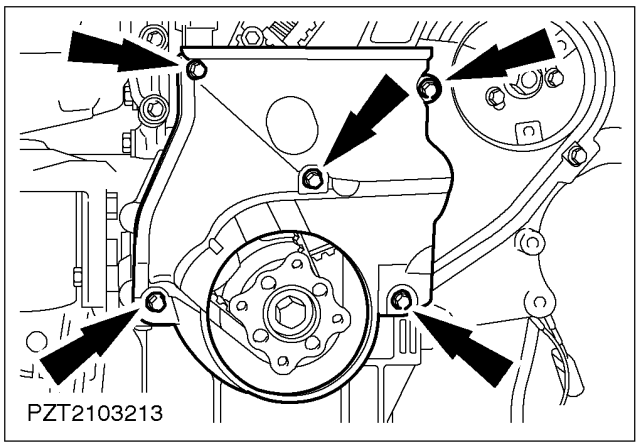

8. Remove the timing belt lower cover.

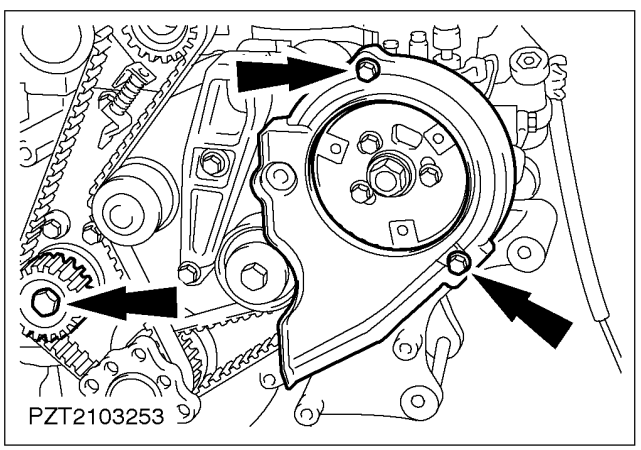

9. Remove the injection pump timing belt cover.

10. Slacken the bolt of the auxiliary shaft timing belt pulley.

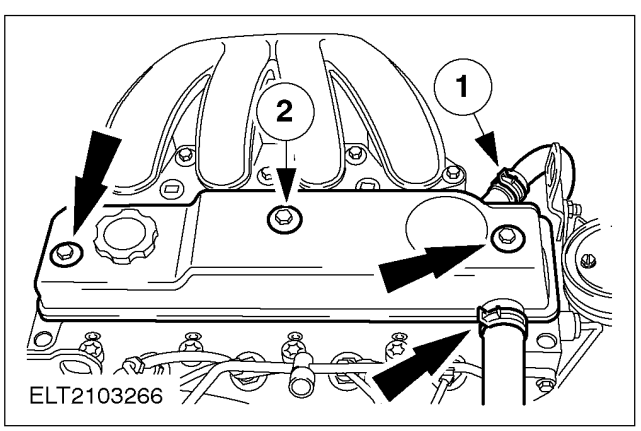

11. Remove the cylinder head cover.
    1. Detach the crankcase ventilation hoses.
    2. Remove the bolts.

DISASSEMBLY (CONTINUED)

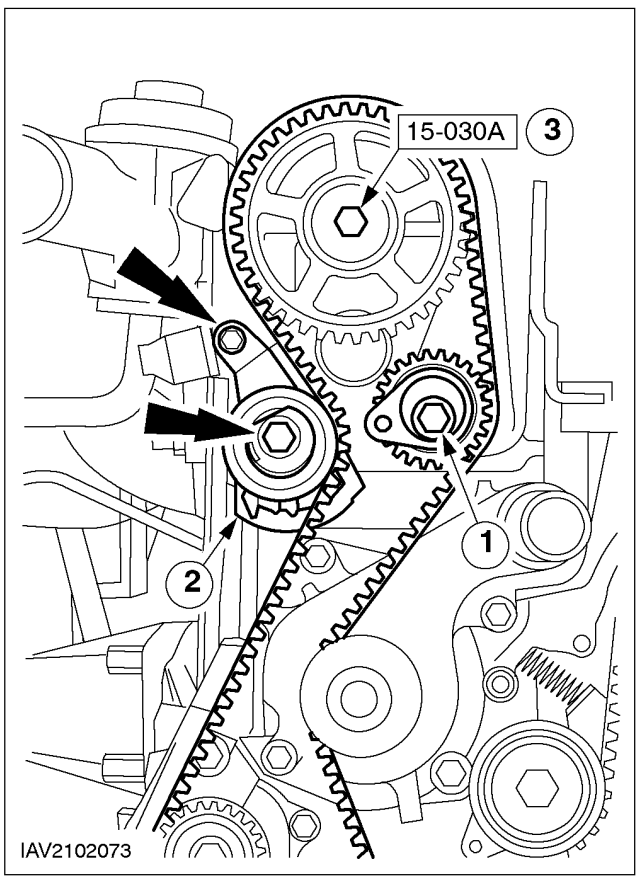

Engines with automatic timing belt tensioner

12. Remove the camshaft timing belt.
    1. Unscrew the bolt of the adjusting cam and remove the adjusting cam and the timing belt.
    2. Detach the camshaft timing belt tensioner.
    3. Undo the bolt of the camshaft timing belt pulley.

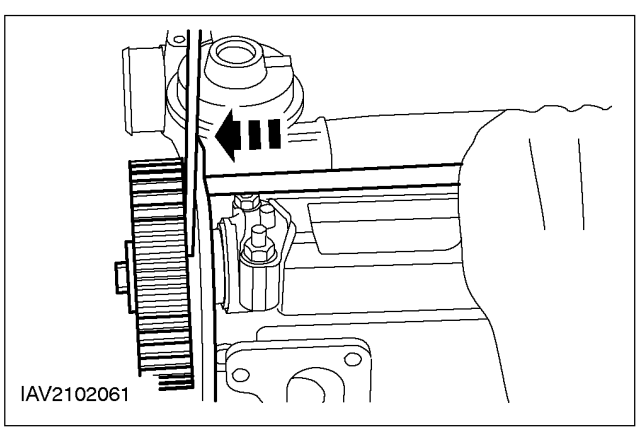

Engines with automatic timing belt tensioner

13. **NOTE:** Position a screwdriver between the camshaft timing belt pulley and the timing belt rear cover.
    Detach the camshaft timing belt pulley (continued).
    - Release the camshaft timing belt pulley from its conical seat by tapping it lightly with a light metal drift.

DISASSEMBLY (CONTINUED)

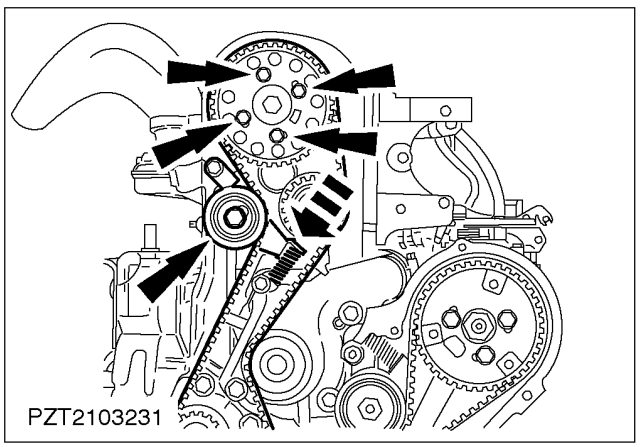

Engines with mechanical timing belt tensioner

14. Remove the camshaft timing belt pulley.
    - Undo the bolts of the timing belt pulley.
    - Release the timing belt tensioner clamp bolt and slacken the timing belt.
    - Tighten the timing belt tensioner clamp bolt.
    - Remove timing belt and discard.

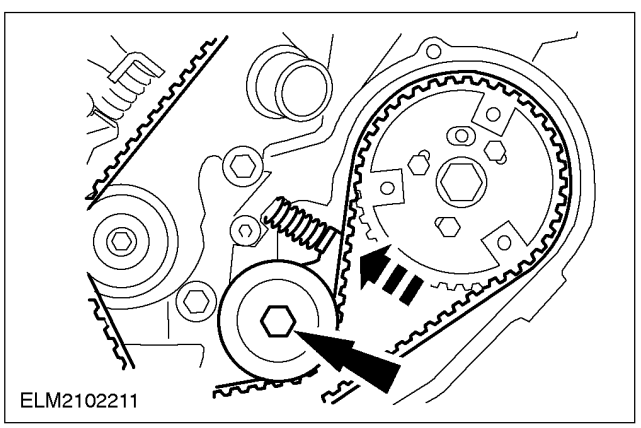

All vehicles

15. Remove the injection pump timing belt.
    - Undo the bolts of the timing belt pulley.
    - Release the timing belt tensioner clamp bolt and slacken the timing belt.
    - Tighten the timing belt tensioner clamp bolt.
    - Remove timing belt and discard.

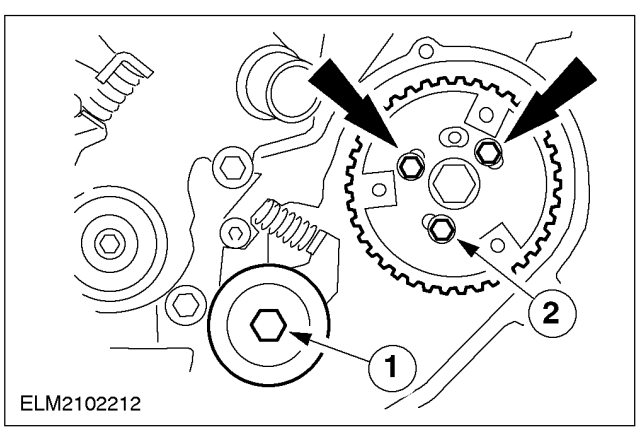

16. **WARNING: The timing belt tensioner is spring-loaded.**
    Remove the timing belt tensioner and the injection pump timing belt pulley.
    1. Timing belt tensioner
    2. Timing belt pulley

DISASSEMBLY (CONTINUED)

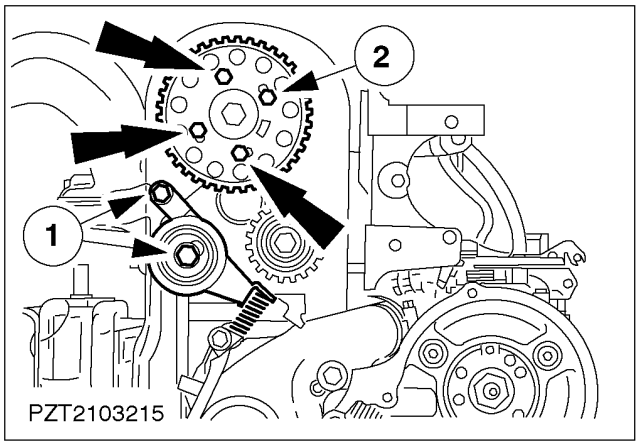

Engines with mechanical timing belt tensioner

17. ⚠ **WARNING: The timing belt tensioner is spring-loaded.**
Remove the timing belt tensioner and the camshaft timing belt pulley.
1. Timing belt tensioner bolts
2. Camshaft timing belt pulley bolts

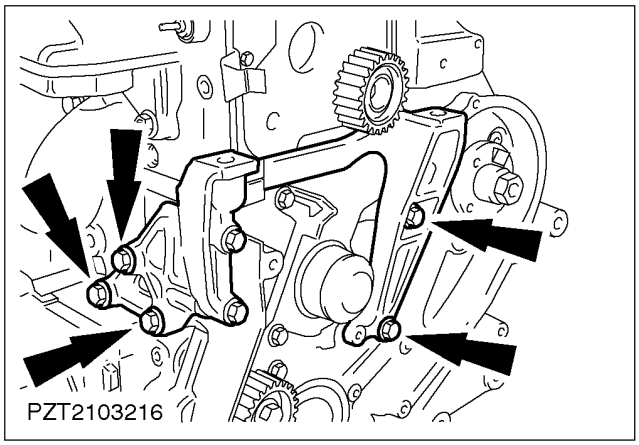

All vehicles

18. Remove the engine mounting bracket.

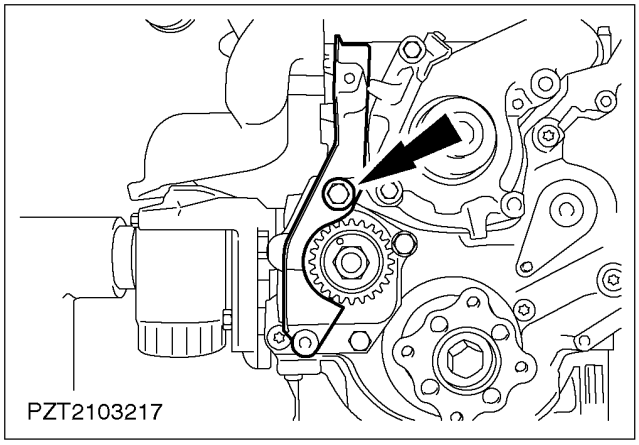

19. Remove the timing belt side cover.

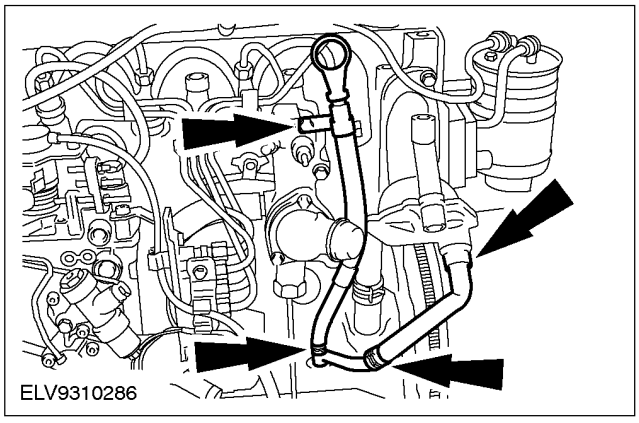

20. Remove the oil dipstick tube.

DISASSEMBLY (CONTINUED)

21. Detach the hose.

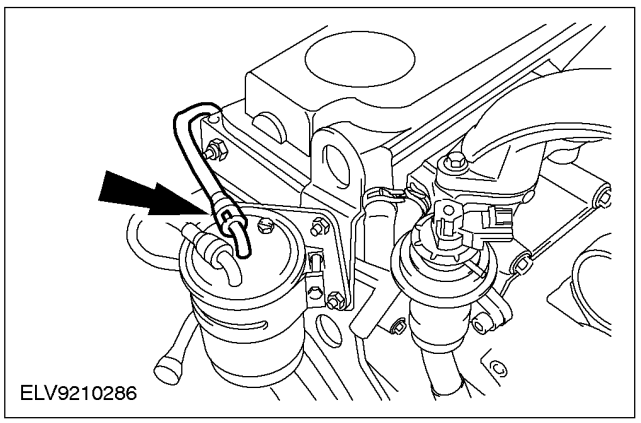

22. Remove the fuel feed line.

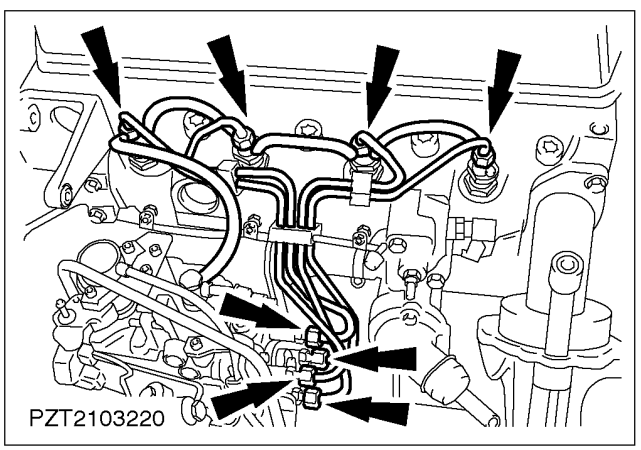

23. Disconnect the injection pipes and leak-off hoses.

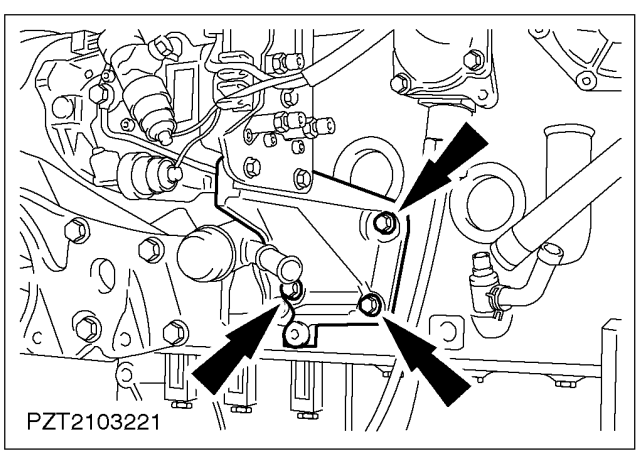

24. Remove the injection pump bracket.

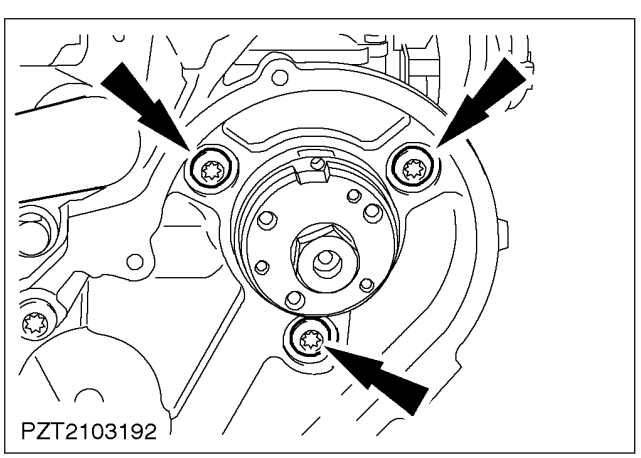

25. Remove the injection pump.

DISASSEMBLY (CONTINUED)

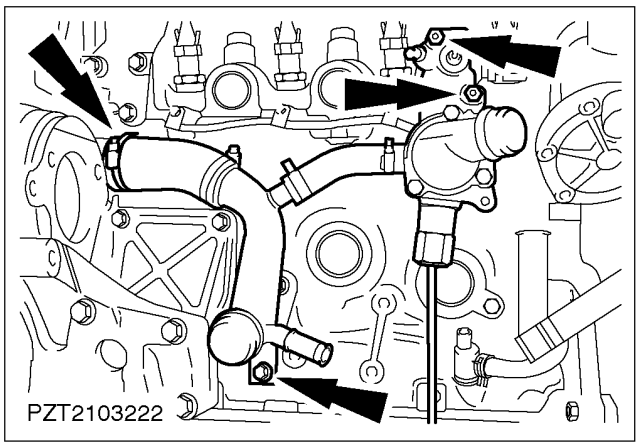

26. Remove the thermostat housing, coolant hose and coolant pipe.

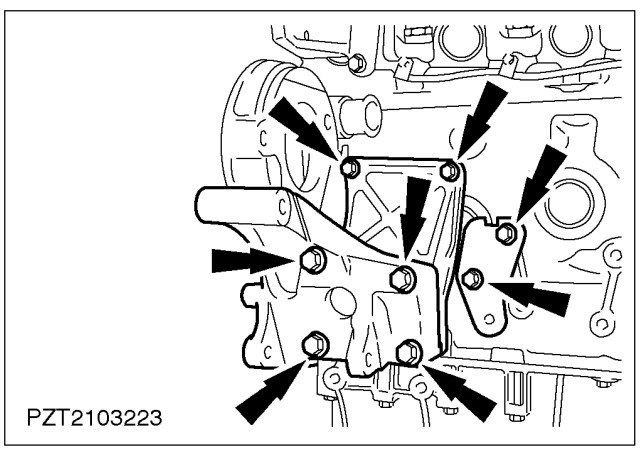

27. Remove the alternator bracket.

28. Remove the coolant pipe bracket.

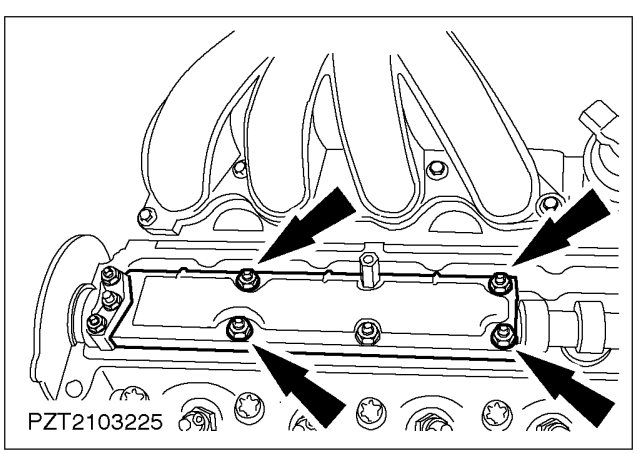

29. Remove the oil baffle.

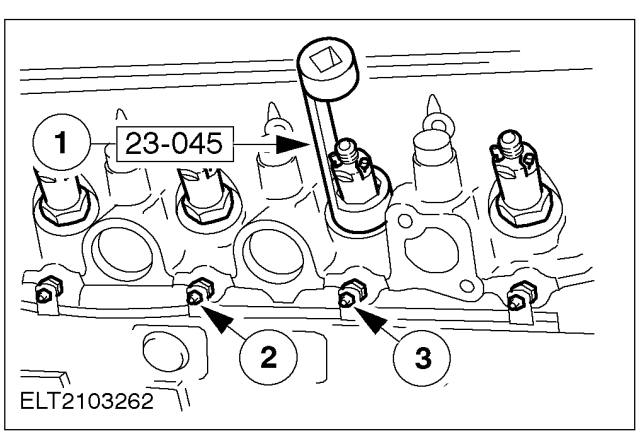

30. Remove injectors and heat shields. Remove the glow plugs.
    1. Injectors
    2. Glow plug wiring
    3. Glow plugs

DISASSEMBLY (CONTINUED)

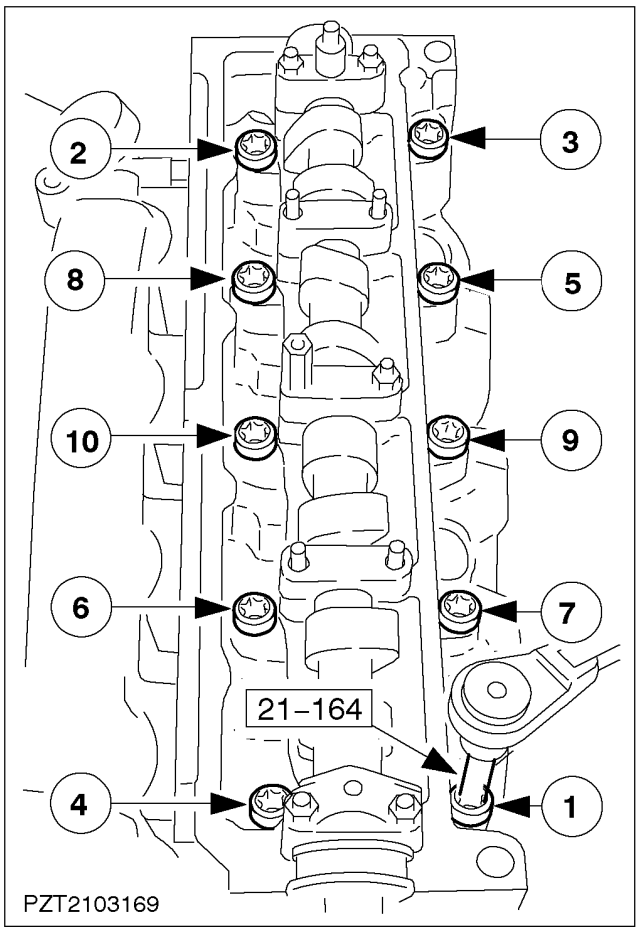

31. NOTE: Loosening sequence
Remove the cylinder head.

- Take off the cylinder head and put it down on wooden blocks.
- Remove the seal.

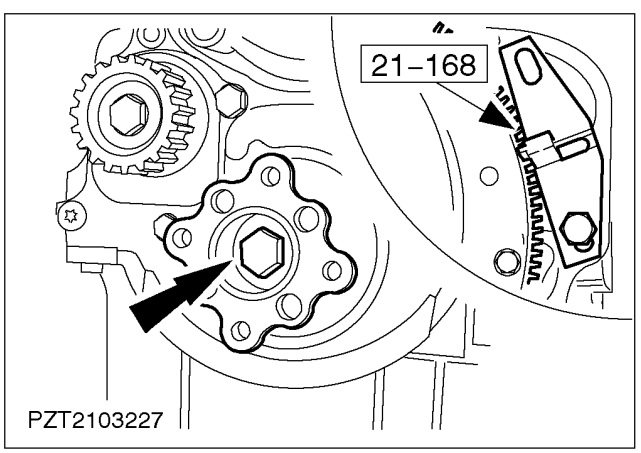

32. Remove the flange of the crankshaft front timing belt pulley.

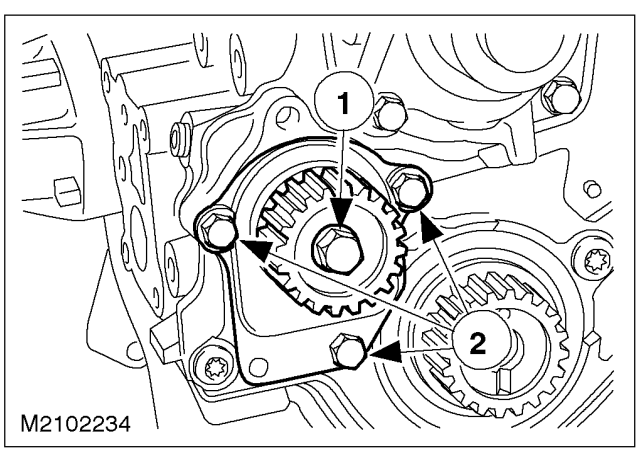

33. Remove the auxiliary shaft timing belt pulley and oil seal housing.

NOTE: Immobilise the timing belt pulley with the old timing belt.

1. Bolt of the auxiliary shaft timing belt pulley
2. Bolts of the auxiliary shaft oil seal housing

DISASSEMBLY (CONTINUED)

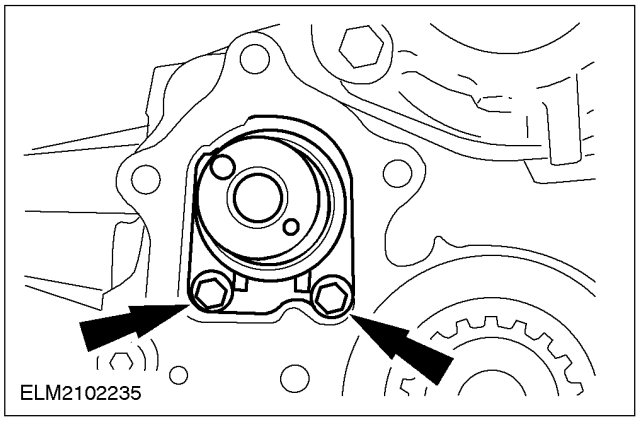

34. Remove the auxiliary shaft with the thrust plate.

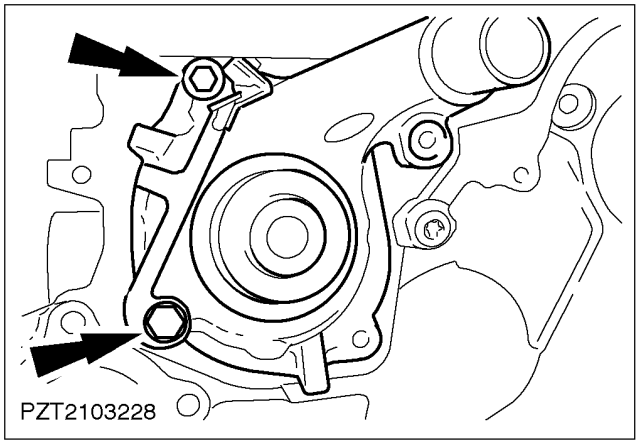

35. Remove the coolant pump.

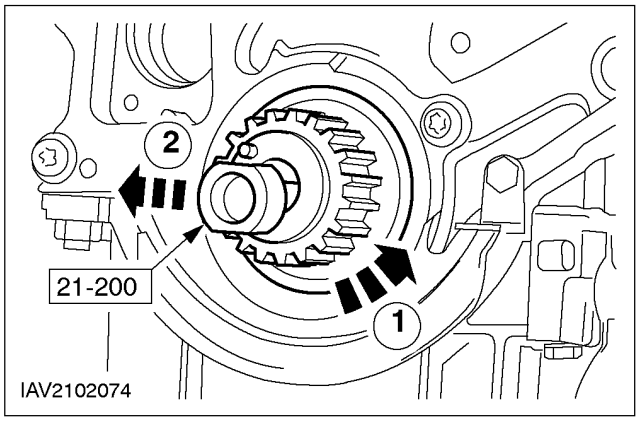

36. ⚠ **CAUTION: Only use a collet.**
Remove the crankshaft rear timing belt pulley.
1. Fit the collet.
2. Pull the collet back as far as the stop.

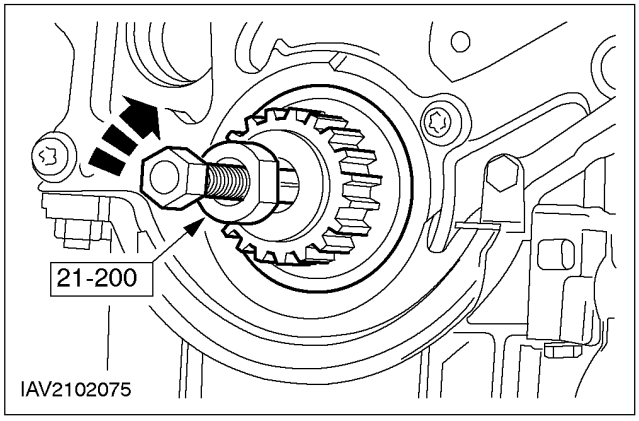

37. Pull off the crankshaft rear timing belt pulley (continued)
- Screw in the spindle and pull off.

DISASSEMBLY (CONTINUED)

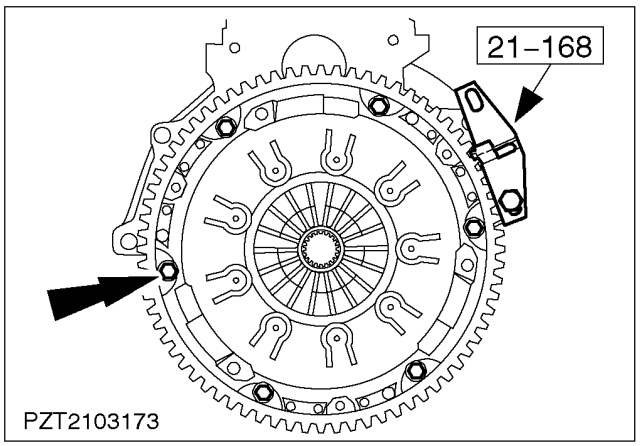

38. Remove the clutch.

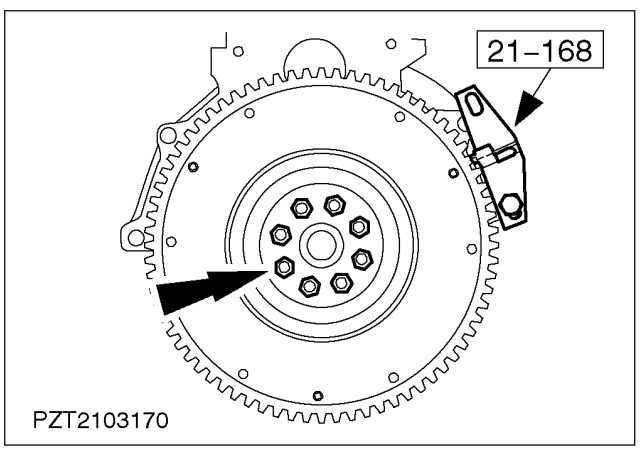

39. Remove the flywheel.

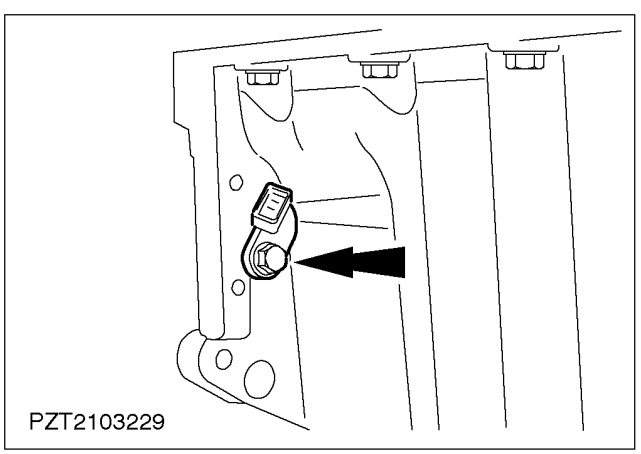

40. Remove the crankshaft position sensor (CKP).

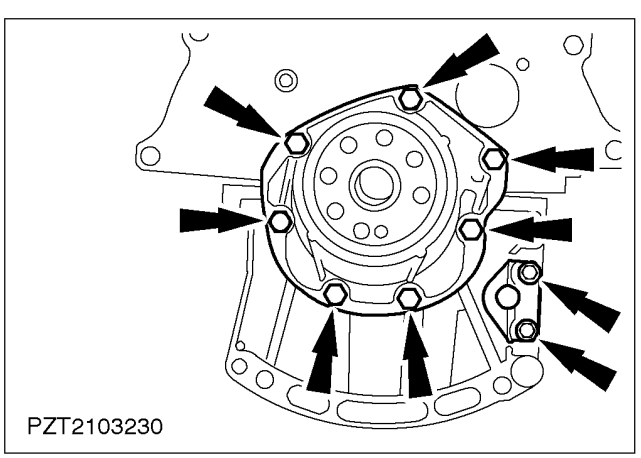

41. **NOTE:** The oil seal is integrated in the housing.
    Remove crankshaft rear oil seal housing.

DISASSEMBLY (CONTINUED)

42. Remove the CKP sensor bracket.

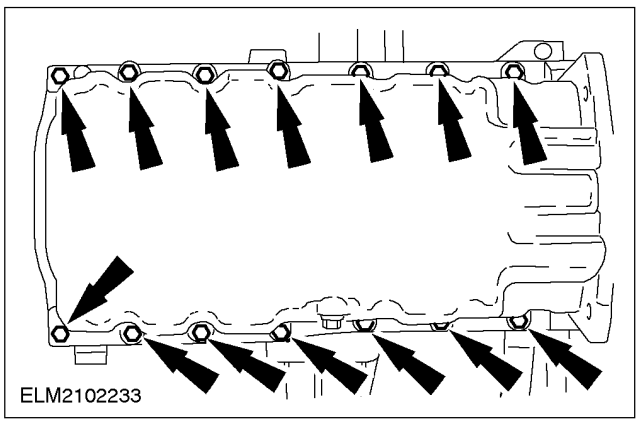
ELM2102233

43. **CAUTION: Remove the sump downwards so that no oil sludge or abraded particles get into the engine.**
Remove the sump.

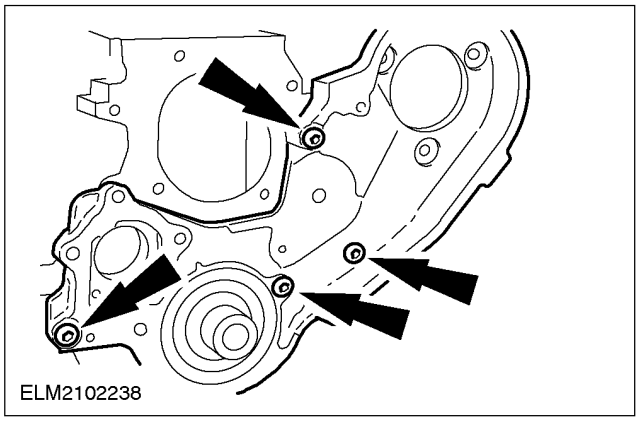
ELM2102238

44. Remove the front plate.
    - Press out the crankshaft front oil seal.

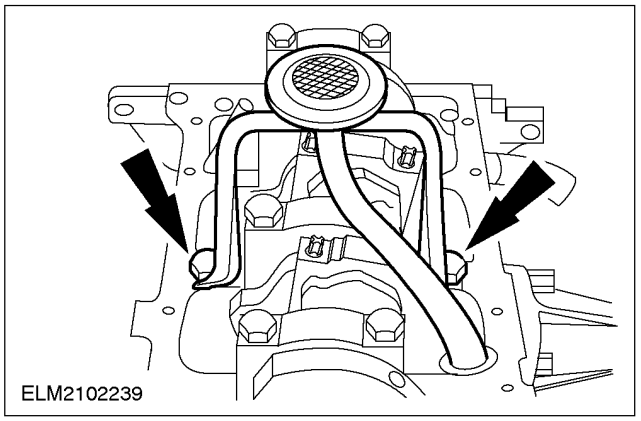
ELM2102239

45. Remove the oil intake pipe with the bracket.

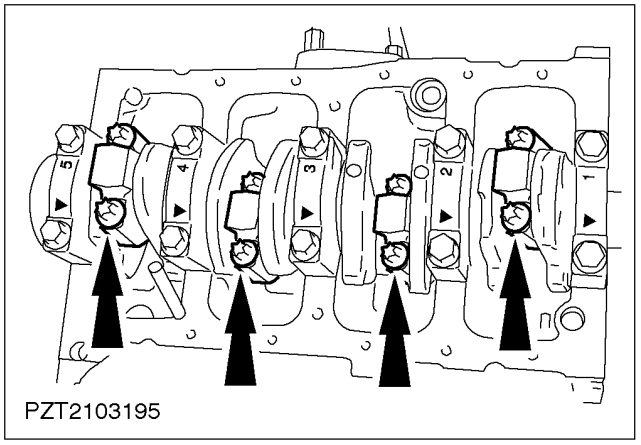
PZT2103195

46. **CAUTION: Do not damage the piston ring zone.**
Remove the pistons.

NOTE: Put the big-end bearing caps and big-end bearing shells down in order.
- Detach the big-end bearing caps.
- Remove the ring of carbon around the upper edge of the cylinders using a proprietary scraper.
- Press out the pistons with the connecting rods and big-end bearing shells.

DISASSEMBLY (CONTINUED)

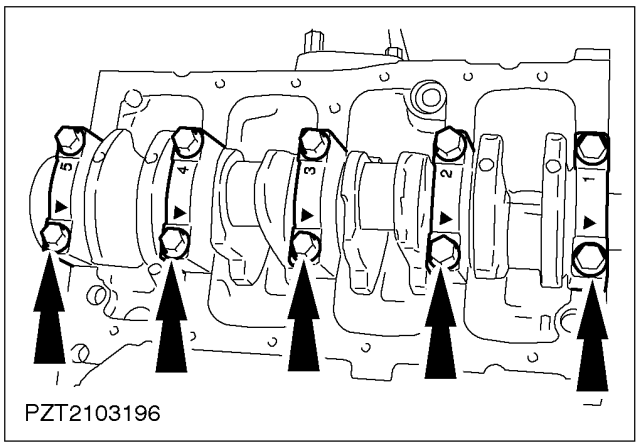

47. Remove the crankshaft.
    - Remove the main bearing caps.
    - Take out the crankshaft.
    - Take out the bearing shells and thrust half washers and put them down in order for re-use.

DISASSEMBLY AND ASSEMBLY OF SUBASSEMBLIES

Cylinder Head (21 165 6)

Special Tool(s)	
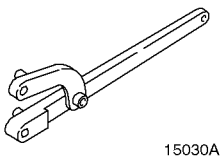 15030A	Universal flange holding wrench 15-030A
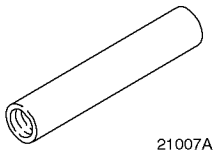 21007A	21-007 A Installer, valve stem seals 21-007 A Installer, valve stem seals
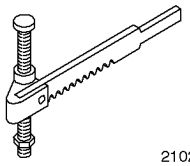 21024	Valve spring compressor 21-024
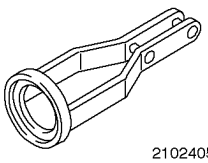 2102405	Adaptor for 21-024 21-024-05
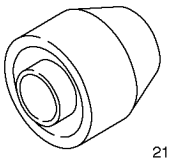 21110	Installer, oil seal 21-110

Special Tool(s)	
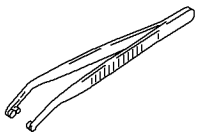 21156	Installer, valve stem collets 21-156
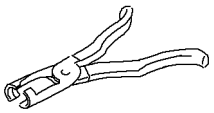 21165	Pliers, valve stem oil seals 21-165
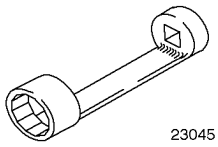 23045	Socket, injectors 23-045

General Equipment
Two-legged puller

Material	Specification
Sealer	SPM-4G-9112-F/G
Hypoid oil	SQM-2C-9002-AA
Engine Oil	ACEA B3 / E3
Valve stem installation sleeves	

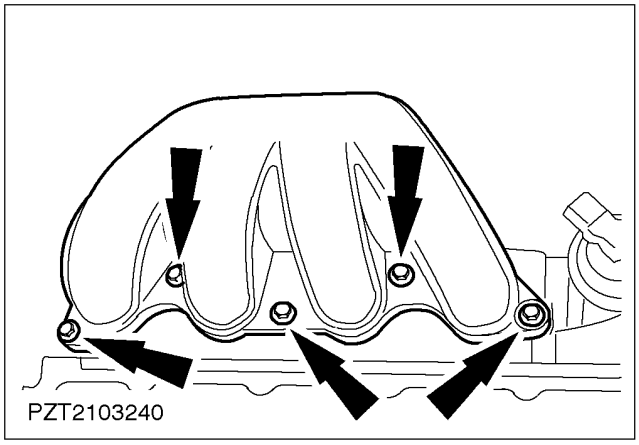

Disassembly

1. Remove the upper inlet manifold.

DISASSEMBLY AND ASSEMBLY OF SUBASSEMBLIES (CONTINUED)

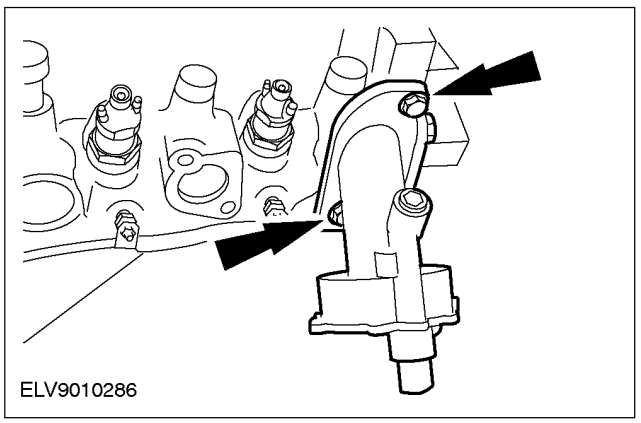

2. Remove the vacuum pump.

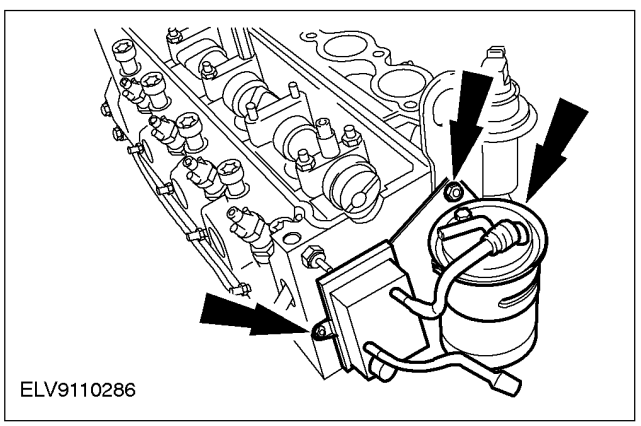

3. Remove the retaining plate with the fuel heater and remove the fuel filter.

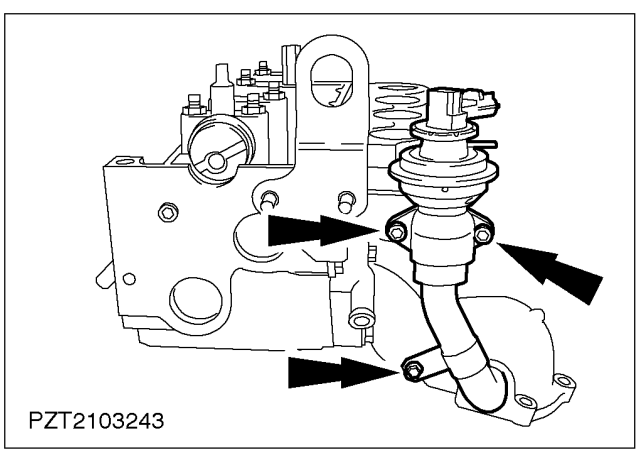

4. Remove the exhaust gas re-circulation valve (EGR valve).

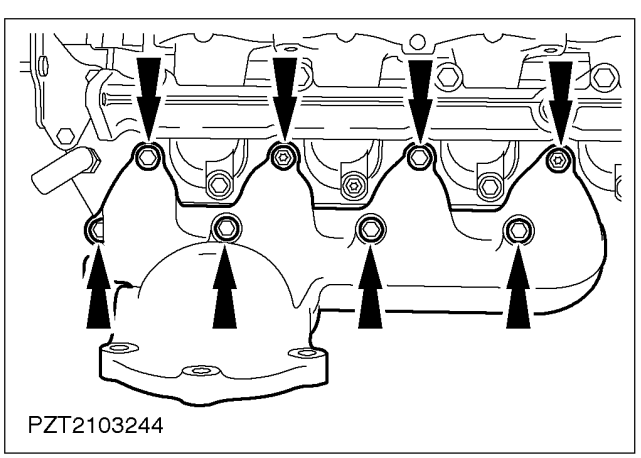

5. Remove the exhaust manifold.
   - Remove the seal.

DISASSEMBLY AND ASSEMBLY OF SUBASSEMBLIES (CONTINUED)

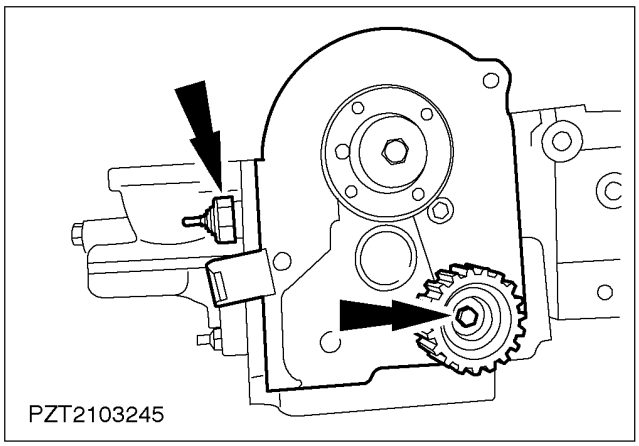

6. NOTE: Immobilise the timing belt pulley with the old timing belt.
Remove the timing belt pulley.

7. Remove the oil pressure switch.

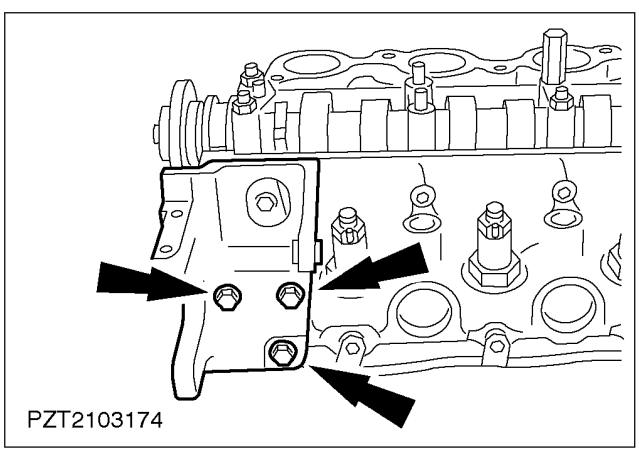

8. Remove the bracket of the power steering pump.

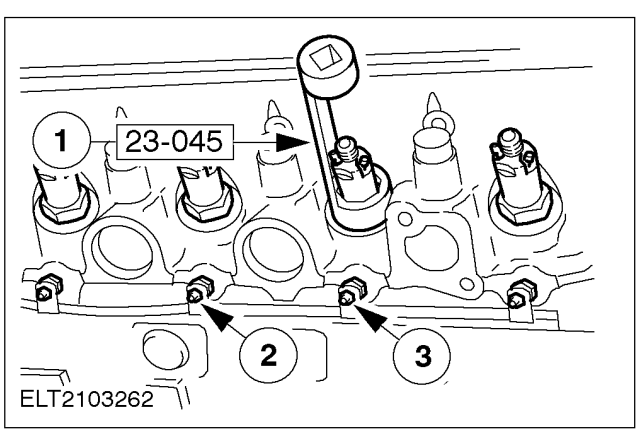

9. Remove the injectors and glow plugs.
   1. Injectors Remove the heat shields.
   2. Glow plug wiring
   3. Glow plugs

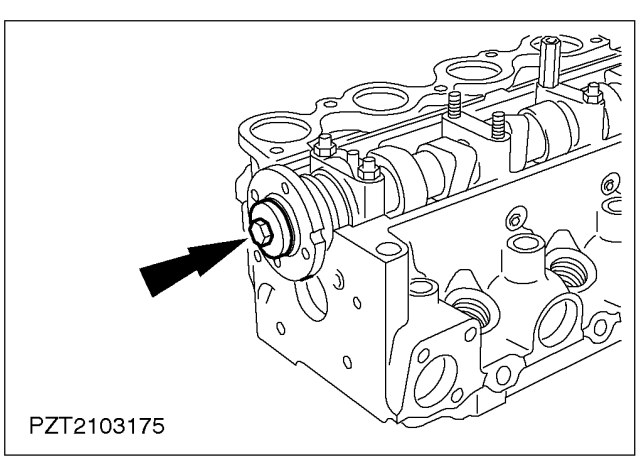

10. NOTE: Hold steady with Special Tool 15-030A.
Remove the flange bolt of the camshaft timing belt pulley.

DISASSEMBLY AND ASSEMBLY OF SUBASSEMBLIES (CONTINUED)

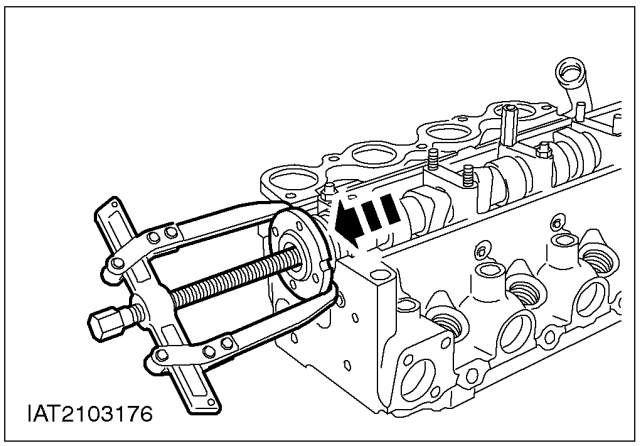

11. Pull off the flange of the camshaft timing belt pulley using a proprietary two-legged puller.
    - Take out the Woodruff key.

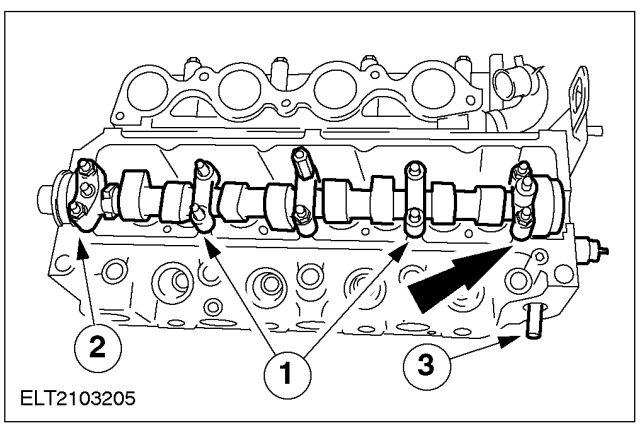

12. ⚠ **CAUTION: Slacken the nuts of the remaining bearing caps evenly a turn at a time.**
    Remove the camshaft.
    1. Remove camshaft bearing caps nos. 2 and 4.
    2. Slacken the nuts of the remaining camshaft bearing caps evenly a turn at a time. Remove the bearing caps, bearing shells and camshaft with the oil seal and put them down in order.
    3. Remove the vacuum pump plunger.

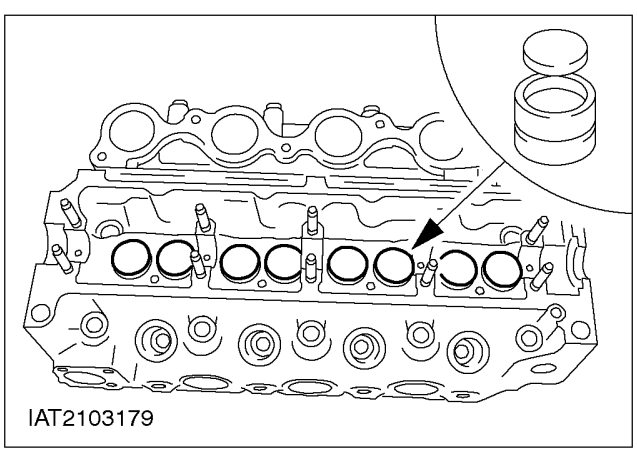

13. **NOTE:** Put the valve tappets down in order. Remove the valve tappets with the adjusting shims.

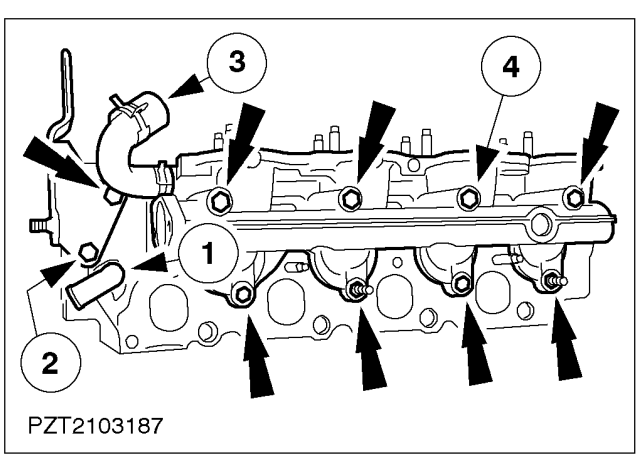

14. Detach the parts on the right-hand side of the cylinder head.
    1. Coolant connector
    2. Engine lifting eye
    3. Coolant hose
    4. Lower inlet manifold

DISASSEMBLY AND ASSEMBLY OF SUBASSEMBLIES (CONTINUED)

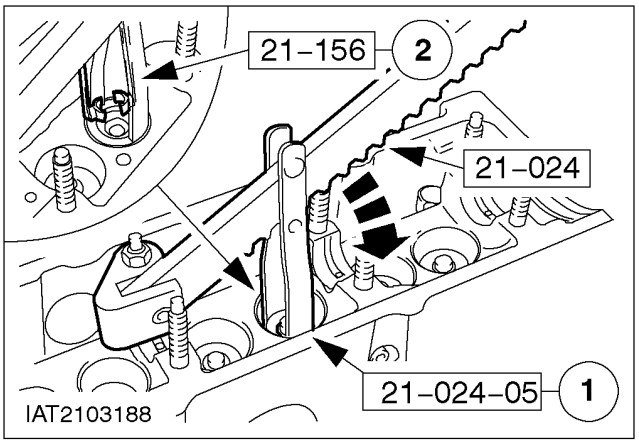

15. Remove the valve springs.
    - Lay the cylinder head on wooden blocks.
    - Release the valves by tapping lightly with a brass drift on the ends of the valve stems.
    1. (1). Compress the valve springs.
    2. (2). Remove the valve collets.
    - Remove the valves, valve spring retainers and valve springs and put them down in order.

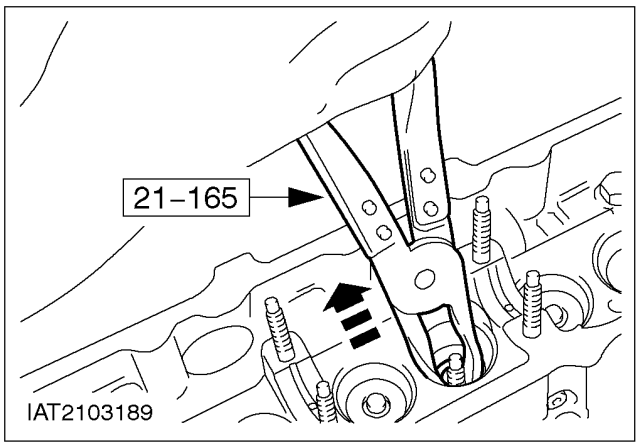

16. Remove the valve stem seals.

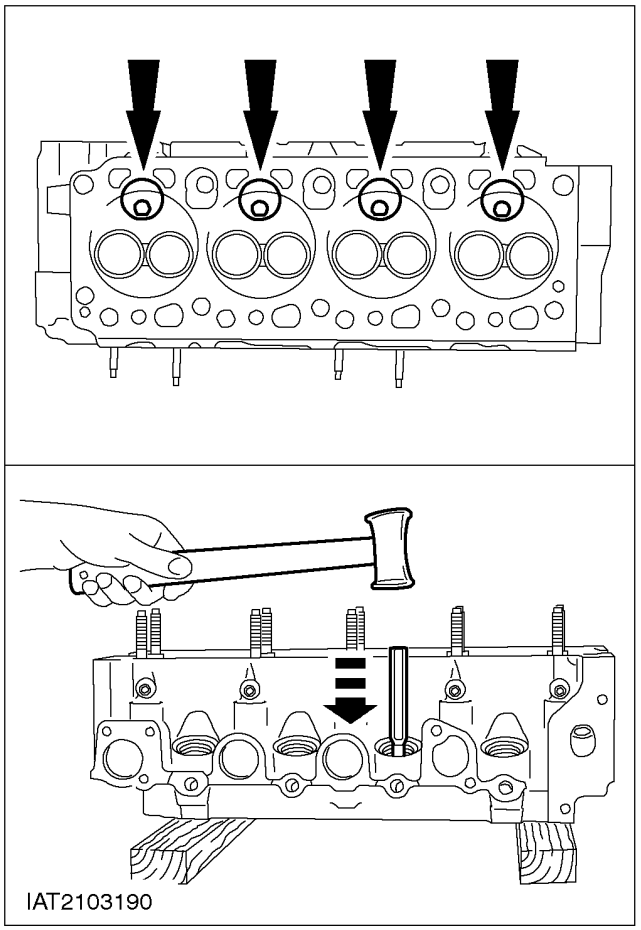

17. Remove the swirl chambers.

DISASSEMBLY AND ASSEMBLY OF SUBASSEMBLIES (CONTINUED)

Assembly

1. Preparatory measures.
   - Check all parts for wear.
   - Thoroughly clean all reusable parts.
2. Renew the studs for the inlet and exhaust manifold.
3. Grind in the valves.
   1. Valve collets
   2. Valve spring retainer
   3. Valve spring
   4. Valve stem seal
   5. Cylinder Head
   6. Valve

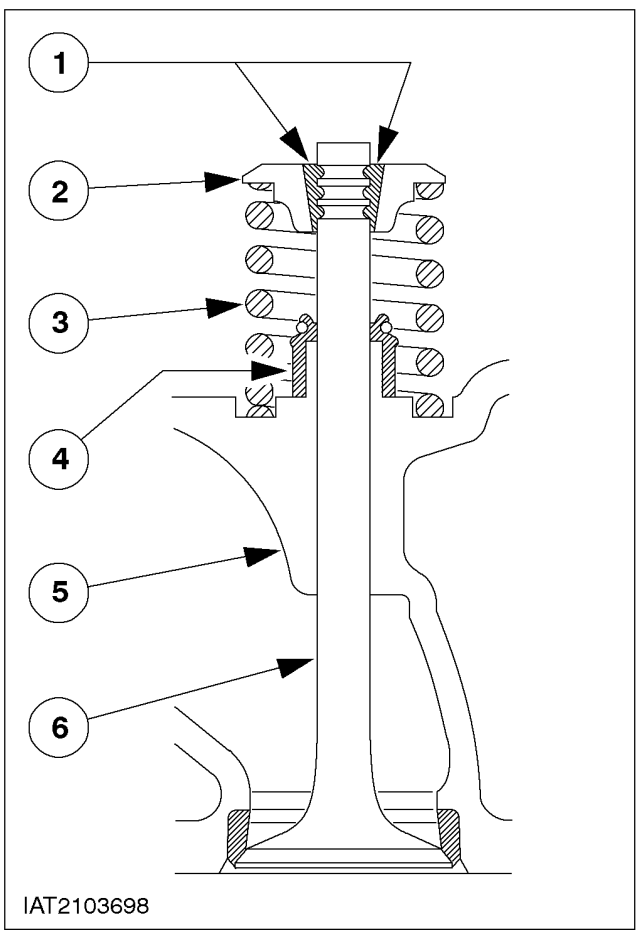

4. Sectional view of valve.
5. Press the swirl chambers home.

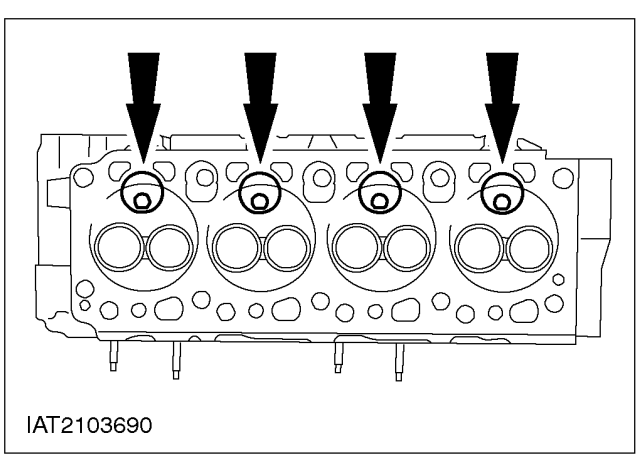

DISASSEMBLY AND ASSEMBLY OF SUBASSEMBLIES (CONTINUED)

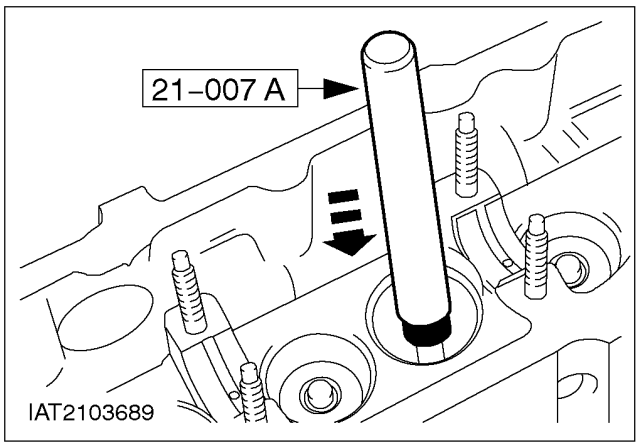

6. **CAUTION: Cover the grooves on the valve stems with the installation sleeves.**

NOTE: Remove the installation sleeves after fitting the valve stem seals.

Lubricate the new valve stem seals with engine oil and fit them.

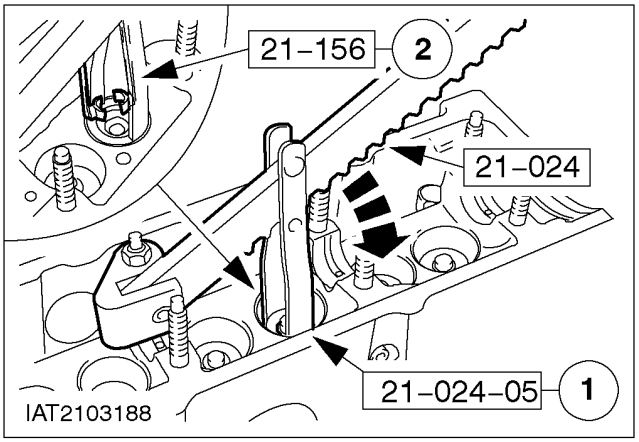

7. Fit the valve springs with the valve spring retainers.
   1. Compress the valve springs using the installer.
   2. Insert the valve collets in the grooves in the valve stem.

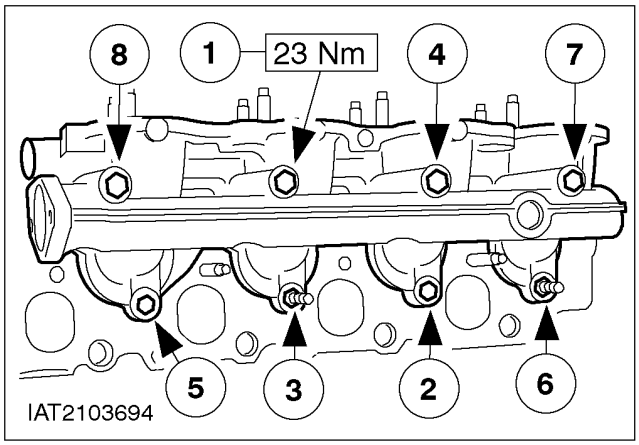

8. **NOTE:** Tightening sequence.

Fit the inlet manifold with a new gasket.

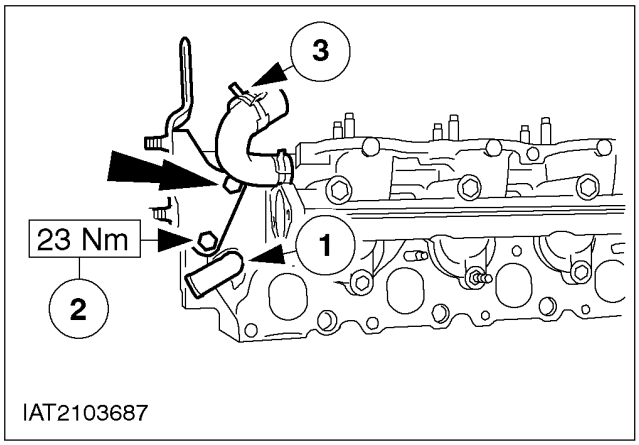

9. Fit the parts on the right-hand side of the cylinder head.
   1. Coolant connector
   2. Engine lifting eye
   3. Coolant hose

DISASSEMBLY AND ASSEMBLY OF SUBASSEMBLIES (CONTINUED)

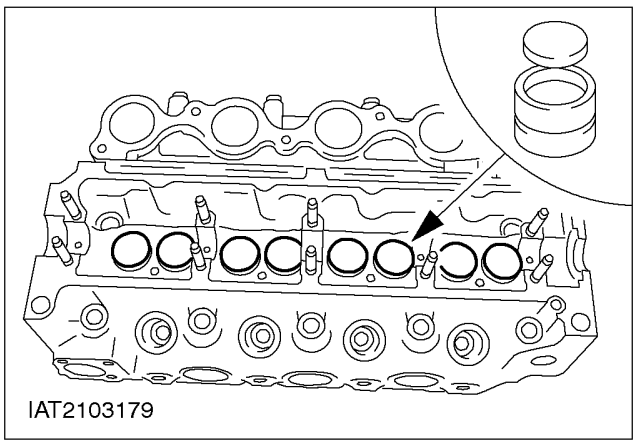
IAT2103179

10. NOTE: The lettering on the adjusting shims faces downwards.

NOTE: Installation order.
Install the valve tappets.

- Coat the valve tappets and adjusting shims with engine oil and fit them.

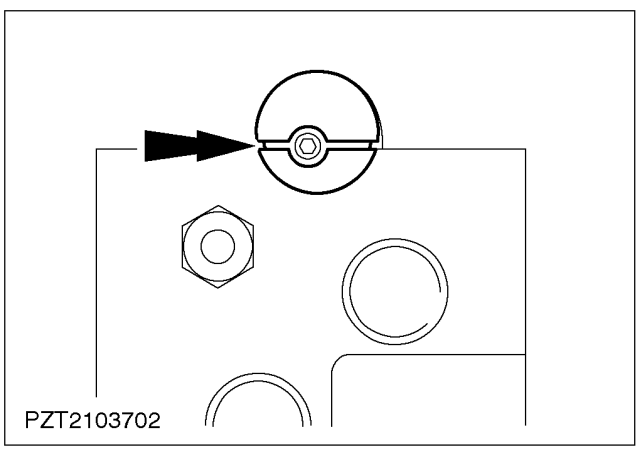
PZT2103702

11. Lay the camshaft bearing shell lower halves in place and coat them with engine oil.
    - Fit the camshaft and turn it until the groove in the eccentric on the camshaft is parallel with the upper edge of the cylinder head (with the larger semi-circle at the top).

12. Align the camshaft.

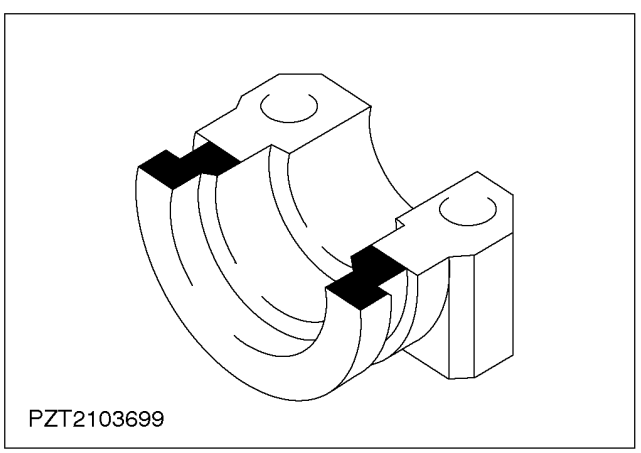
PZT2103699

13. Put the camshaft bearing upper shell halves in place and coat them with engine oil.

14. Apply sealer (SPM-4G-9112-F/G) to bearing cap no. 1 in the areas indicated.

DISASSEMBLY AND ASSEMBLY OF SUBASSEMBLIES (CONTINUED)

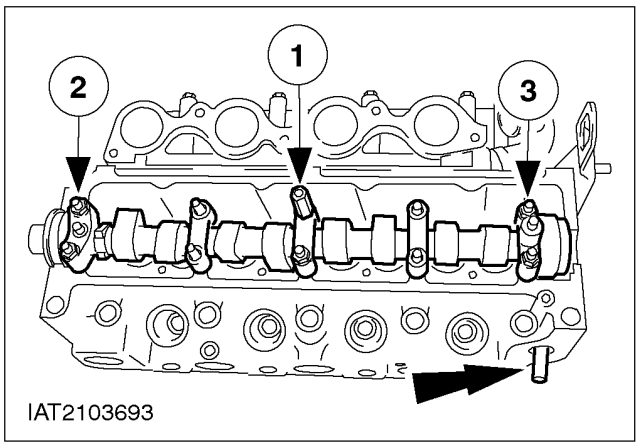

15. NOTE: The arrows on the camshaft bearing caps point towards the front.

NOTE: The camshaft bearing caps must lie flat. Install the camshaft.

- Place camshaft bearing caps nos. 1, 3 and 5 in installation position and screw on the nuts.

NOTE: Tightening sequence.

- Tighten the nuts.

16. Fit the vacuum pump plunger.

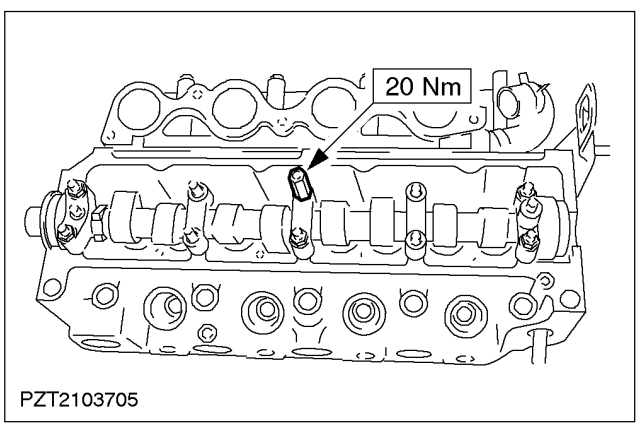

17. NOTE: Tightening sequence.
Tighten the nuts of the camshaft bearing caps.

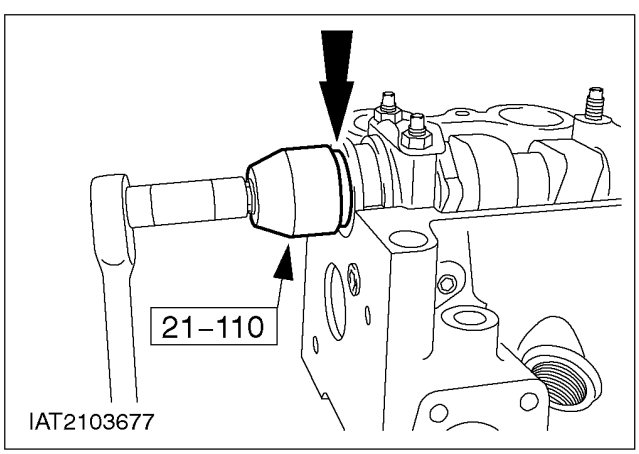

18. NOTE: Coat the camshaft taper and the sealing lip of the new oil seal with engine oil.
Fit the camshaft oil seal.

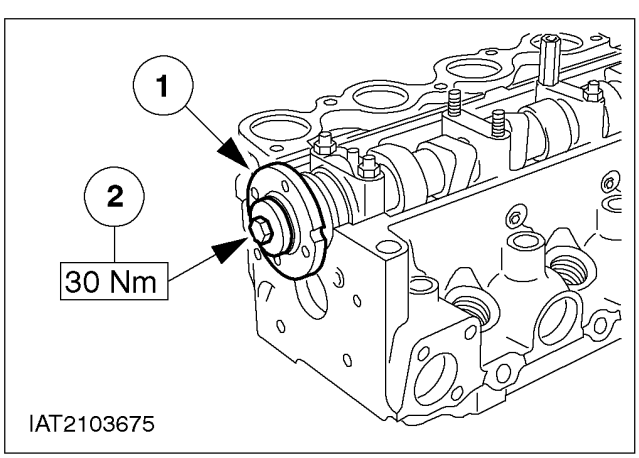

19. NOTE: Hold steady with Special Tool 15-030A.
Fit the flange of the camshaft timing belt pulley. Insert the Woodruff key.

1. Fit the flange.
2. Draw the flange on with the bolt and tighten the bolt.

DISASSEMBLY AND ASSEMBLY OF SUBASSEMBLIES (CONTINUED)

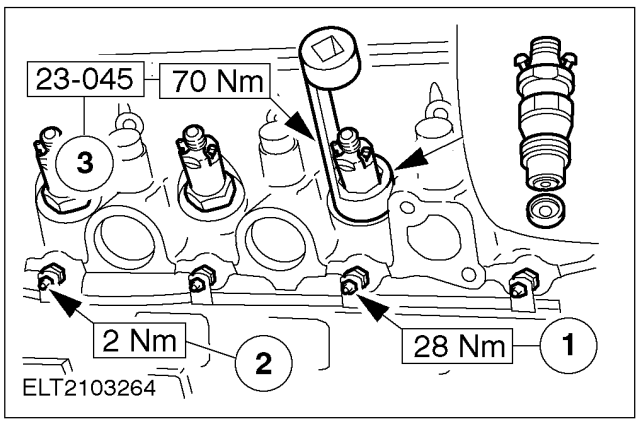

20. NOTE: Fit the new injector heat shields.
Fit the glow plugs and injectors.

1. Glow plugs
2. Glow plug wiring
3. Injectors

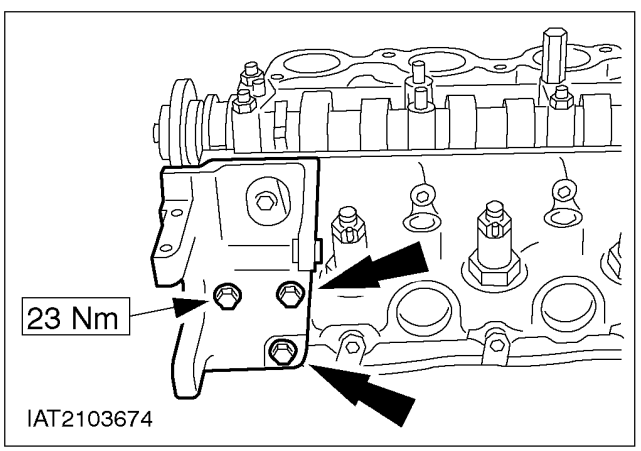

21. Fit the power steering pump bracket.

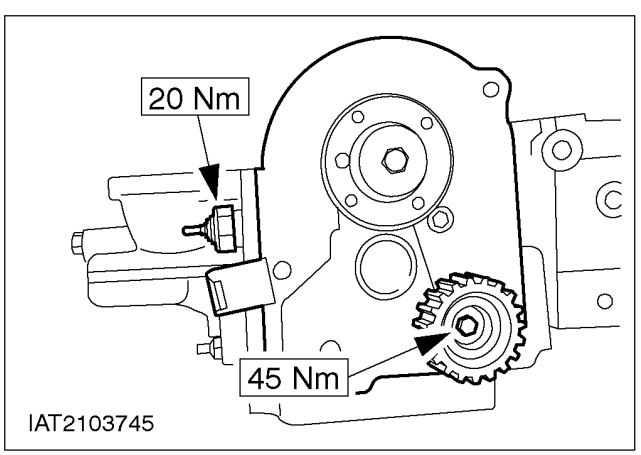

22. NOTE: Immobilise the timing belt pulley using the old timing belt.
Fit the timing belt rear cover.
Fit the timing belt pulley.

23. Fit the oil pressure switch.

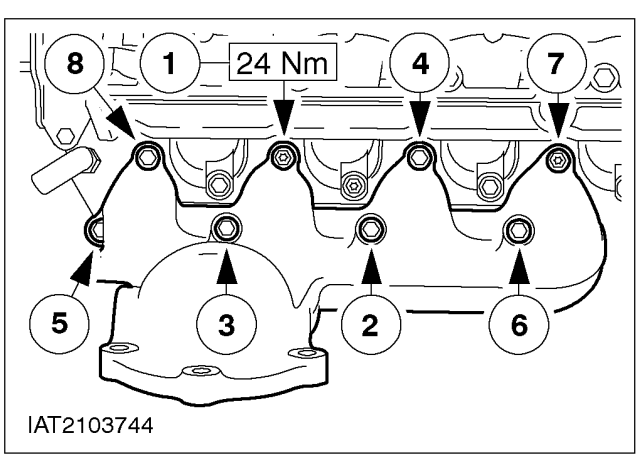

24. NOTE: Tightening sequence.
NOTE: Plastic sleeve on the right-hand upper stud (no. 7).
Fit the exhaust manifold with a new gasket.

DISASSEMBLY AND ASSEMBLY OF SUBASSEMBLIES (CONTINUED)

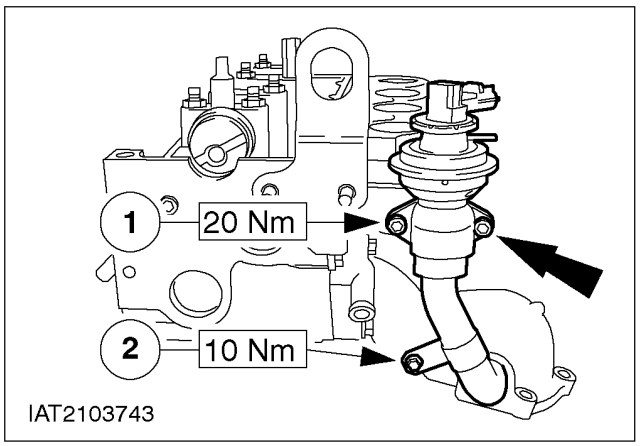

25. Fit the EGR valve.
    1. Tighten the bolts.
    2. Tighten the retaining clip bolt.

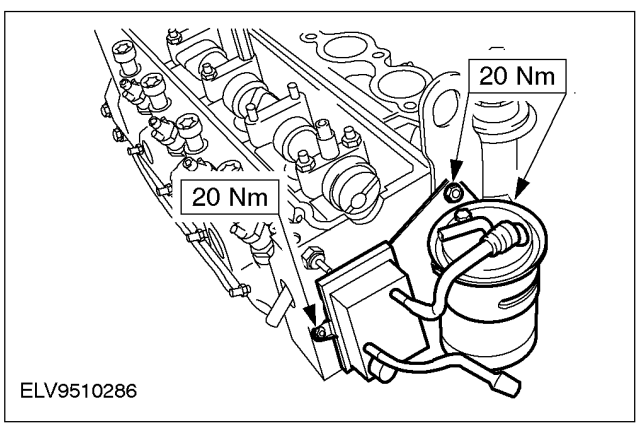

26. Install the retaining plate with the fuel heater and the fuel filter.

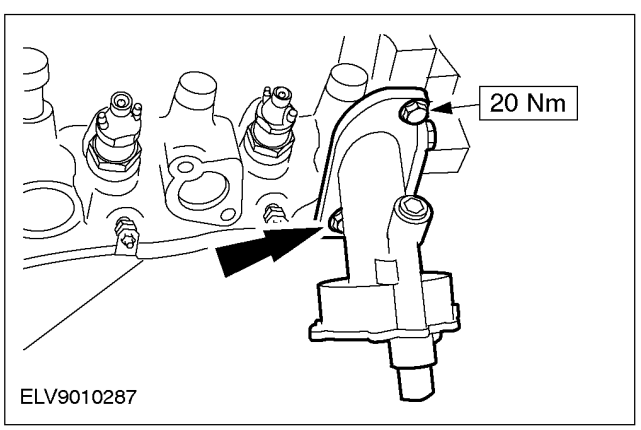

27. Fit the vacuum pump.

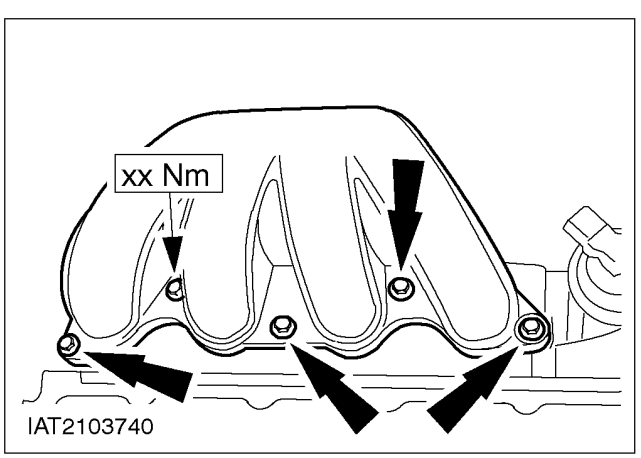

28. Fit the upper inlet manifold.

ASSEMBLY

Engine (21 134 8)

Special Tool(s)	
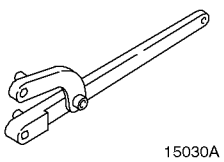 15030A	Universal flange holding wrench 15-030A
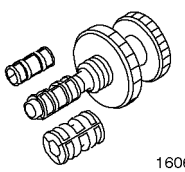 16067	Aligner, clutch disk 16-067
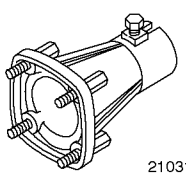 21031B	Mounting bracket, engine 21-031B
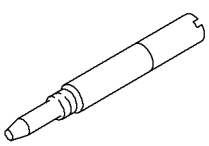 21104	Timing pin, crankshaft TDC position 21-104
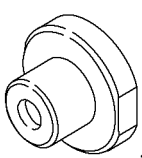 21148	Centering tool, remover and installer, oil seal 21-148A
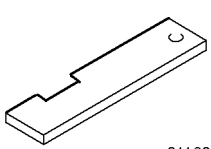 21162B	Adjustment tool, camshaft TDC 21-162B
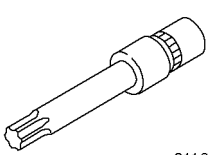 21164	Socket, cylinder head bolts 21-164
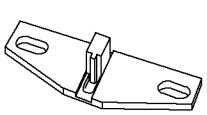 21168	Locking tool, crankshaft 21-168

Special Tool(s)	
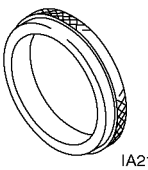 IA21217	Aligner, crankshaft rear oil seal 21-217
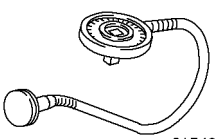 21540	Angle gauge, bolt tightening 21-540
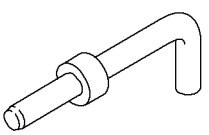 23019	Timing pin, injection pump 23-019
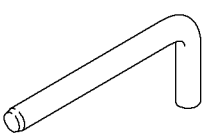 23029	Timing pin, injection pump 23-029
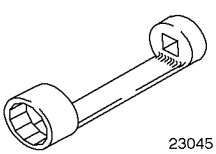 23045	Socket, injectors 23-045
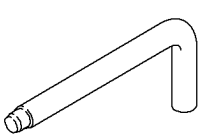 PZ23049	Timing pin, crankshaft position sensor (CKP sensor) 23-049
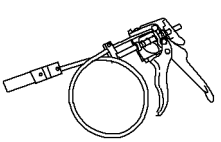 24003	Remover/installer, cooling hose clamp 24-003

ASSEMBLY (CONTINUED)

General Equipment
Dial gauge with magnetic fixture
Piston ring compressor
Micrometer screw
Internal gauge
Feeler gauge
Steel straightedge

Material	Specification
Sealer	SPM-4G9112-F/G
Engine Oil	ACEA B3 / E3
Hypoid oil	SQM-2C9002-AA
Plastigage	

Assembly

1. Preparatory operations
   - Thoroughly clean all mating faces and reusable parts and check for damage.
2. Clean the piston cooling oil splash nozzles and oil ways.

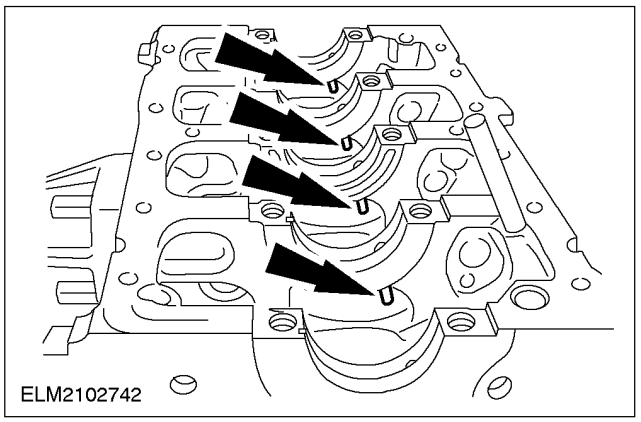

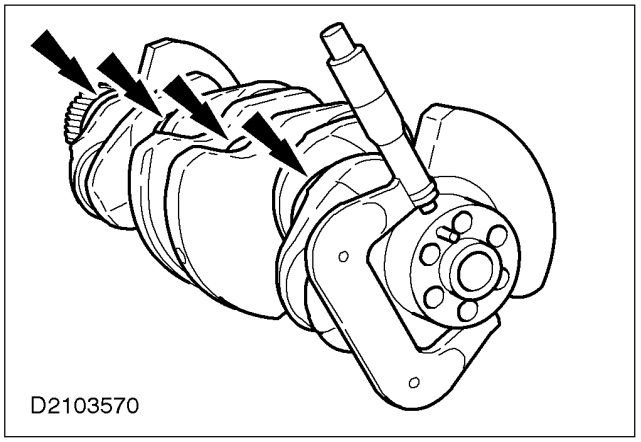

3. Measure the diameter of the main and big-end bearing journals using a proprietary micrometer screw.
   - Repeat the measuring operation at intervals of 90°.
   - Different crankshaft sizes are used in production. The different crankshafts are not marked.
   - If the measurements do not tally with the values indicated in the General Specifications, the crankshaft should be overhauled or renewed.

ASSEMBLY (CONTINUED)

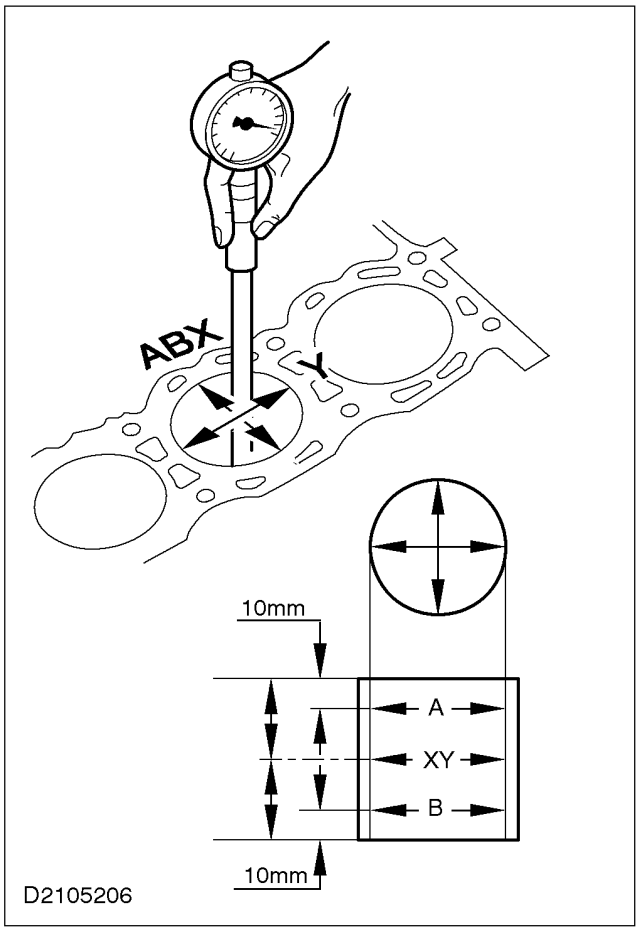

4. NOTE: Fit the main bearing caps without the bearing shells and tighten them to the specified torque.

Measure the cylinder bores with a proprietary internal gauge.

- If the measured diameter of the cylinder bore is too large in relation to the piston classification, overhaul or renew the cylinder block.

5. Preparations for measuring the bearing clearance.

NOTE: Carry out the following steps to the letter.

- Measure each bearing individually using a length of Plastigage thread.
- The bearing shells and journals must be free of oil and dirt.
- Fit the bearing cap of the bearing being measured and tighten to the specified torque.
- The measurement should be carried out near the respective dead center position.

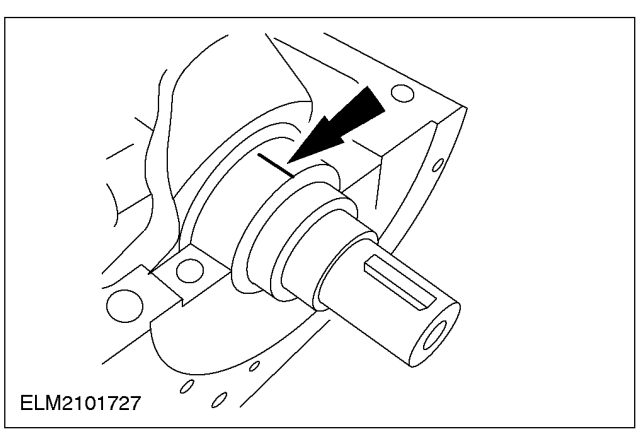

6. Measure the crankshaft main bearing clearance.
   - Place the appropriate bearing shells dry in the cylinder block.
   - Place the crankshaft dry in the cylinder block.
   - Lay a length of Plastigage thread across the bearing on the bearing journal.

ASSEMBLY (CONTINUED)

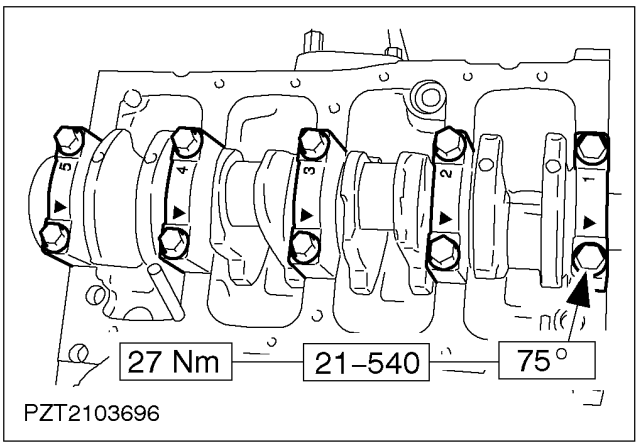

7. Measure the crankshaft main bearing clearance (continued).

NOTE: The main bearing cap numbering starts at the timing belt end, to which the arrows also point.

- Fit the main bearing cap with the associated main bearing shell as described in step and tighten the bolts.
- Remove the main bearing cap.

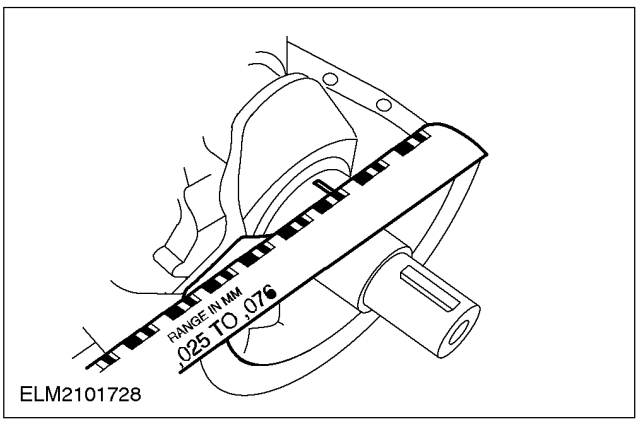

8. ⚠ **CAUTION: Do not turn the crankshaft during the measuring procedure.**

Compare the Plastigage thread with the Plastigage scale.

- The reading corresponds to the main bearing clearance.
- The main bearing shells should be renewed as necessary according to the bearing clearance measurement.

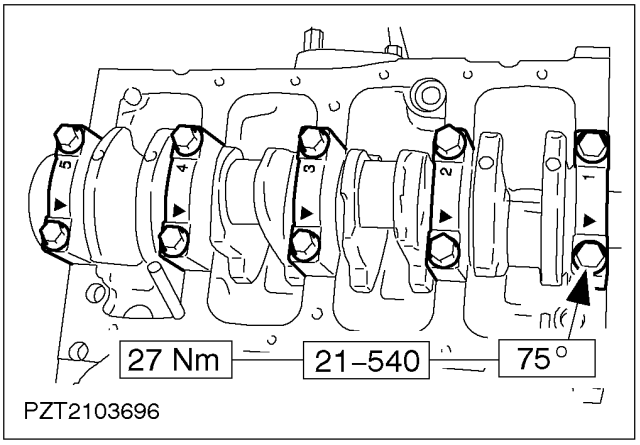

9. Install the crankshaft.

NOTE: The main bearing cap numbering starts at the timing belt end, to which the arrows also point.

- Lubricate the main bearing journals, main bearing shells and thrust half washers with engine oil.
- Fit the thrust half washers in main bearing no. 3 with the lubricating groove facing outwards.
- Fit the main bearing caps with the associated bearing shells.
- Tighten the bolts.

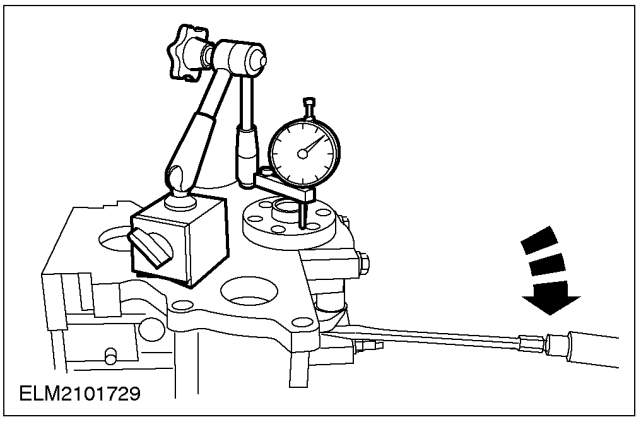

10. Measure the end float of the crankshaft.
    - Set up the dial gauge.
    - Measure the end float by lifting the crankshaft as shown.
    - Rectify the end float as necessary by fitting new thrust half washers to main bearing no. 3.

ASSEMBLY (CONTINUED)

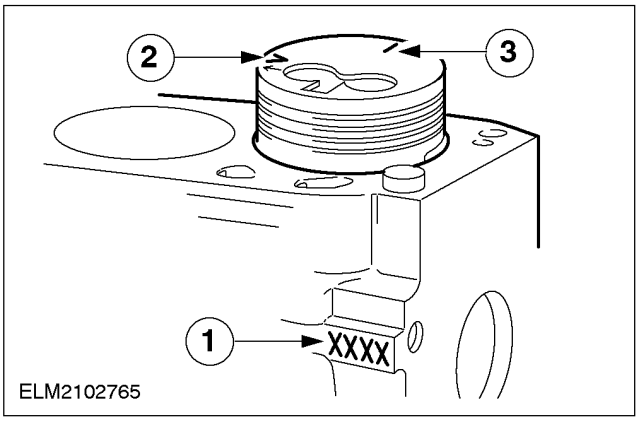

11. Classifications.
    1. Cylinder bore classification
    2. Piston diameter classification
    3. The piston weight classes are marked with '+' and '-'.

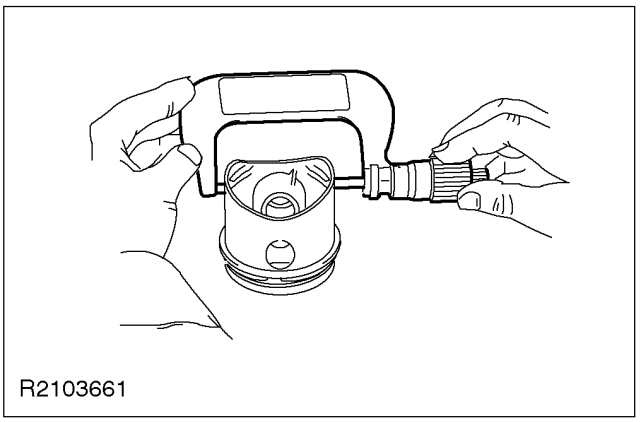

12. NOTE: Piston classification, if a piston has to be renewed.
Measure the piston diameter.

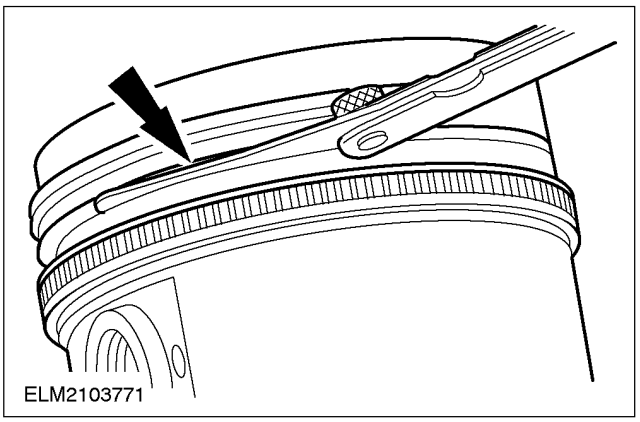

13. NOTE: Measure the piston ring clearance with the piston ring protruding.
Measure the piston ring clearances.
- The maximum clearance of the upper compression ring is 0,09 - 0,12 mm.
- The maximum clearance of the 2nd compression ring is 0,05 - 0,08 mm.

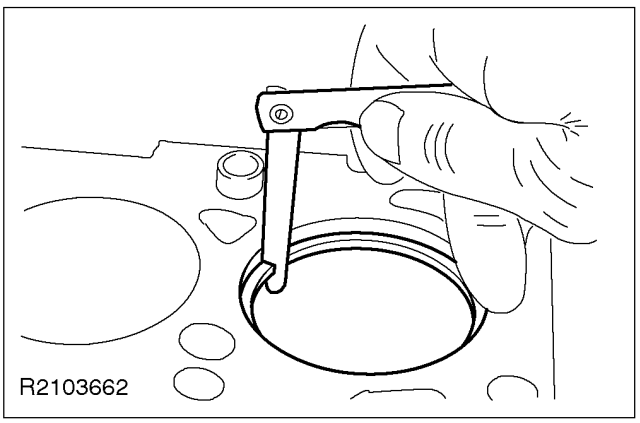

14. ⚠ CAUTION: Do not mix up the piston rings. Re-fit the piston rings in the same position and location.
Measure the piston ring gaps.
- The values given in the General Specifications refer to a reference gauge ring used in production. When measured in the cylinder, the values can be exceeded by 0,15 mm.

ASSEMBLY (CONTINUED)

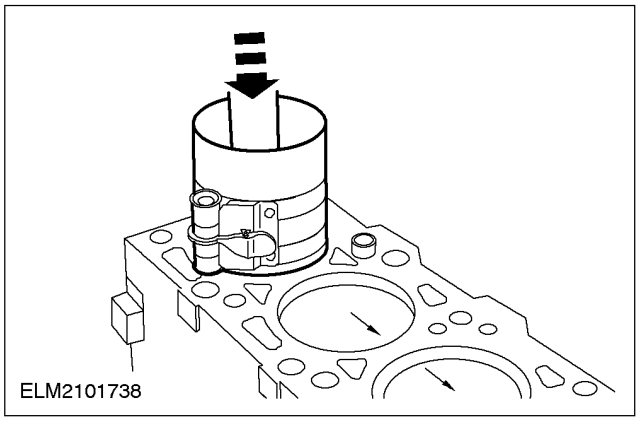

15. Fit the pistons.
    - Lubricate the pistons and cylinder liners with engine oil.
    - Distribute the piston ring gaps evenly on the circumference at intervals of 120°. This also applies to the elements of the oil scraper ring.

NOTE: The numbering on the connecting-rod begins from the timing belt end. The arrow on the piston crown points towards the timing belt end.

- Compress the piston rings using a proprietary piston ring compressor.
- Press the pistons into the cylinders with the handle of a hammer, guiding the connecting rods onto the big-end bearing journals.
- Place the appropriate bearing shells, clean and dry, in the connecting rods.

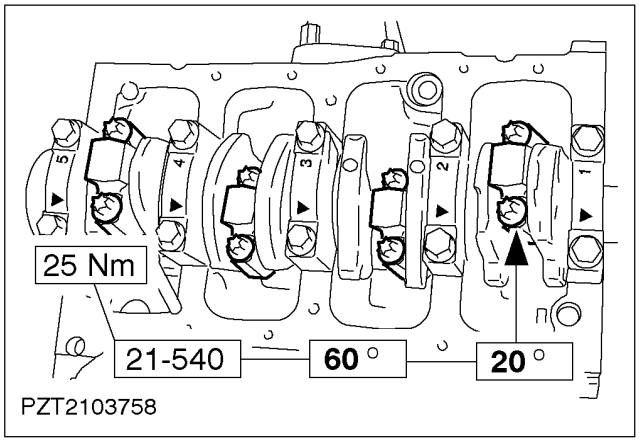

16. Measure the big end bearing clearances and fit the big-bearing caps.
    - Measure the big-end bearing clearance as described in steps to
    - Lubricate the big-end bearing shells and journals with engine oil.

NOTE: The numbering of the connecting rods and big-end bearing caps must tally.

- Fit the appropriate big-end bearing caps and bearing shells and tighten the bolts.

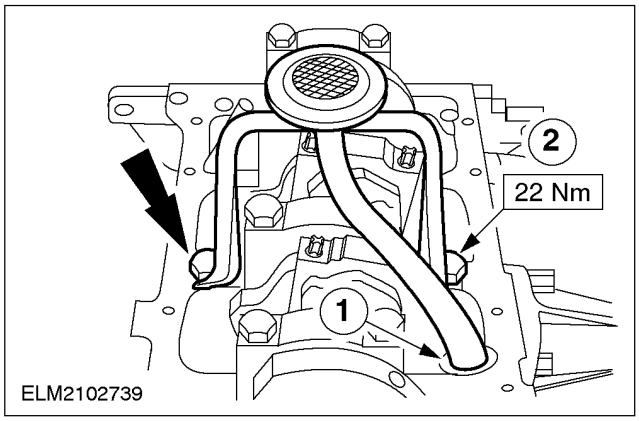

17. Fit the oil intake pipe with the bracket.

NOTE: Make sure that the O-ring is seated correctly.

1. Locate the oil intake pipe in position with a new O-ring.
2. Fit the bracket.

ASSEMBLY (CONTINUED)

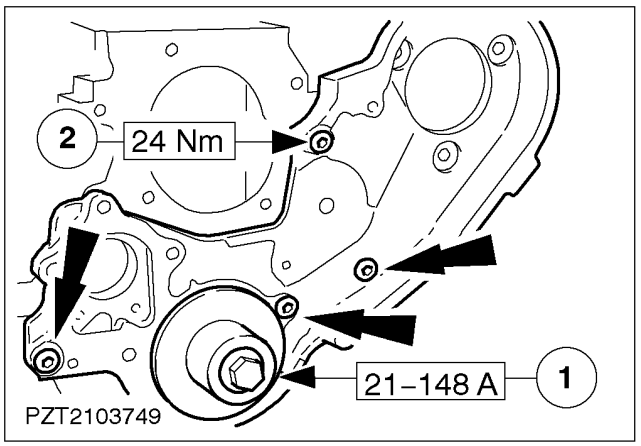

18. NOTE: The front plate mating face must be flush with the lower edge of the cylinder block (tolerance ± 0,1mm).

Fit the front plate with a new gasket and new oil way seals.

1. Center the front plate using the aligner.
2. Fit the front plate.

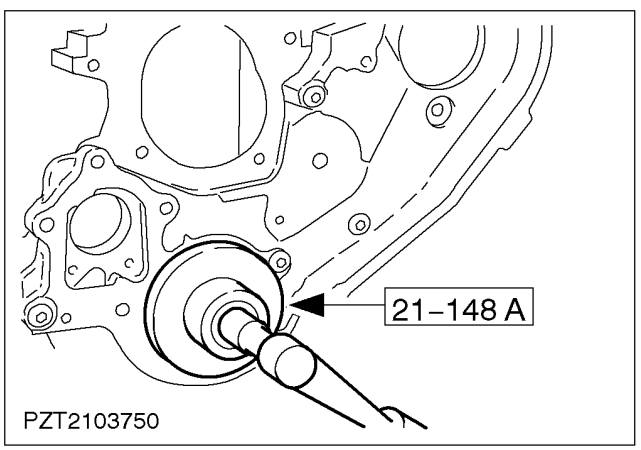

19. CAUTION: The steps must be carried out immediately after each other to prevent the oil seal from contracting. Do not remove the support ring from the oil seal until immediately before installation.

NOTE: Install the oil seal dry.

Draw in the crankshaft front oil seal.

- Draw in the oil seal with the installer and the bolt of the crankshaft timing belt pulley.

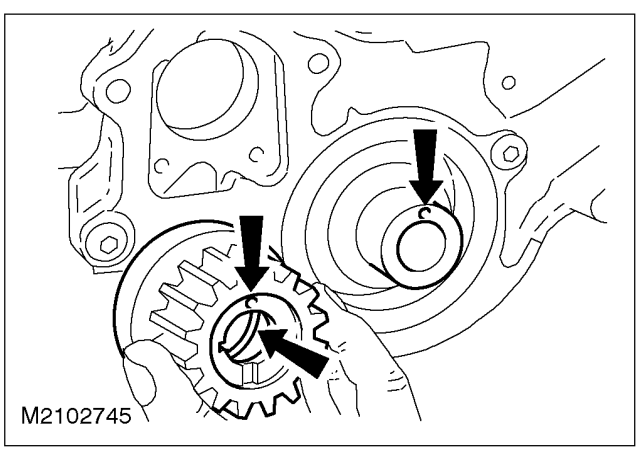

20. Install the crankshaft timing belt pulley.

NOTE: Make sure the O-ring in the timing belt pulley is in perfect condition.

- Lubricate the O-ring and the end of the crankshaft with engine oil.

NOTE: The guide pin in the end of the crankshaft and the hole in the timing belt pulley must line up.

- Carefully slide on the timing belt pulley as far as the stop.

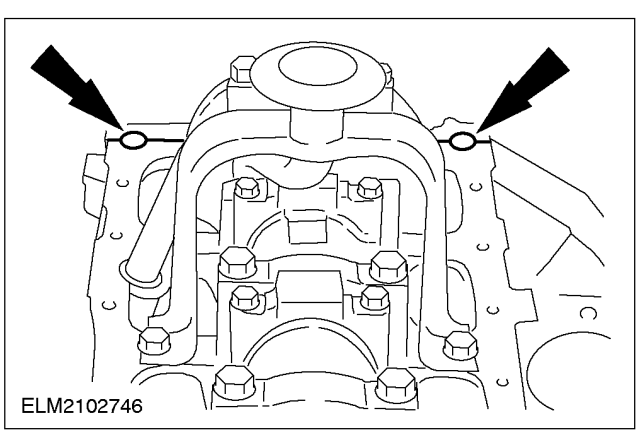

21. NOTE: The sump bolts must be tightened within 20 minutes of applying the sealer.

Apply sealer (SPM-4G-9112-F/G) to the cylinder block mating face intersections.

ASSEMBLY (CONTINUED)

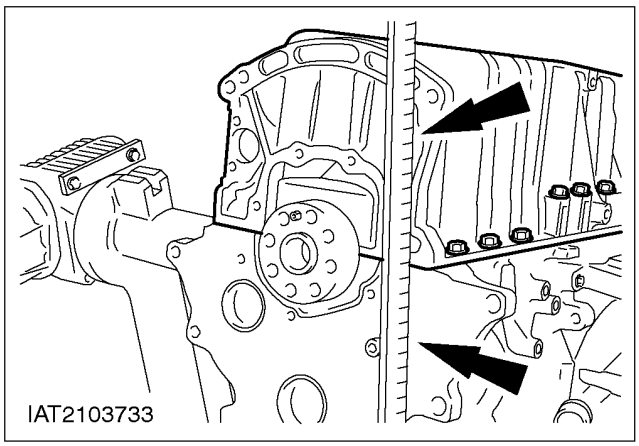

22. Fit the sump.
    - Locate the sump in position with a new gasket and screw in the bolts (x 14) finger tight.
    - Using a steel straightedge, align the sump so that it is flush with the mating face of the oil seal housing.

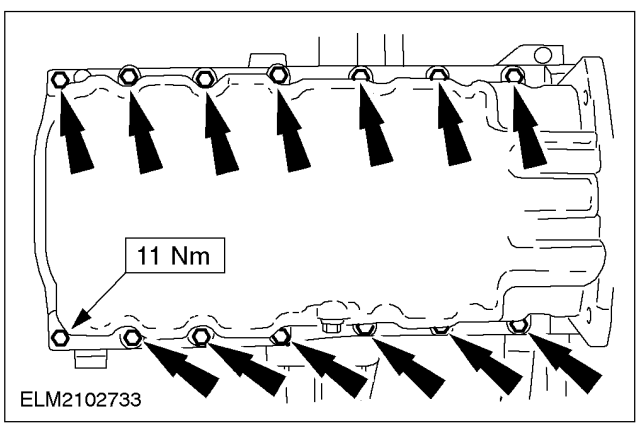

23. Tighten the oil pan bolts.

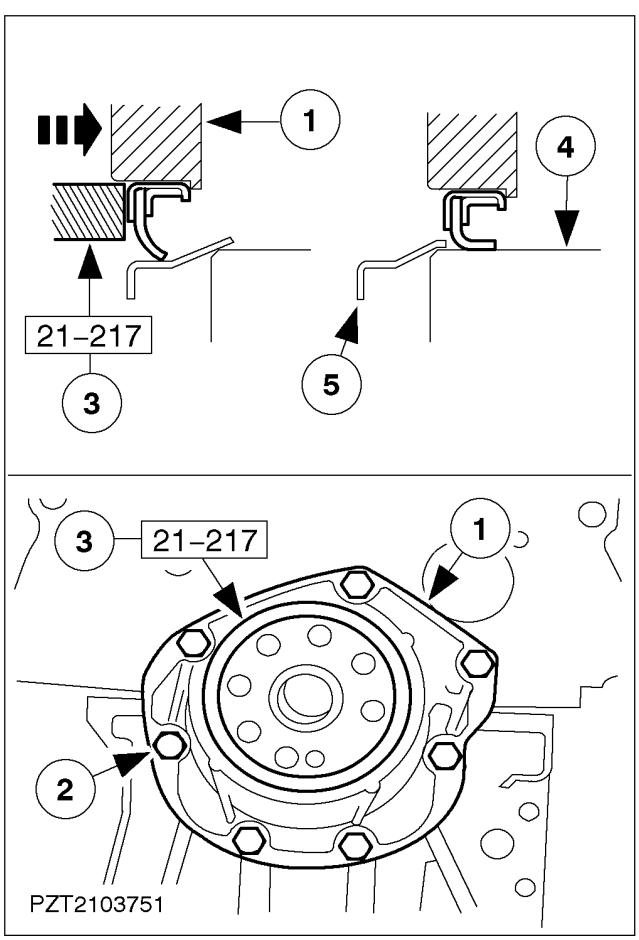

24. ⚠ **CAUTION: The sealing lip of the oil seal and the crankshaft sealing surface must be free of oil.**

NOTE: The support ring must sit in the oil seal. Install the crankshaft rear oil seal housing.

1. Place the new crankshaft oil seal housing, together with the integrated oil seal, in the installation position.
2. Screw in the bolts finger tight.
3. Fit the aligner and center the oil seal housing on the crankshaft.
4. Crankshaft
5. Remove the support ring.

ASSEMBLY (CONTINUED)

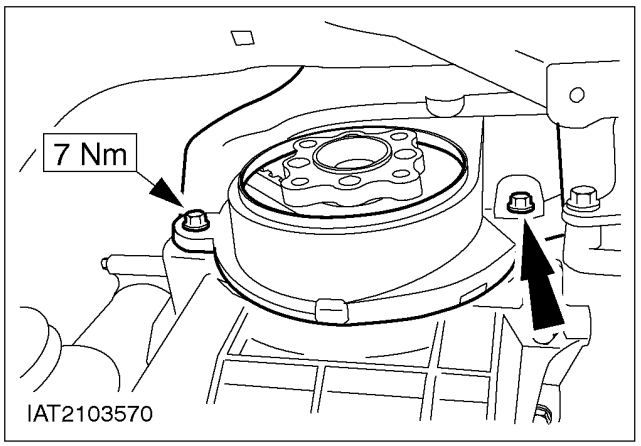

25. ⚠ CAUTION: If the special tool cannot be removed, realign the sump.
Tighten the bolts of the crankshaft oil seal housing, working diagonally.

- Remove the locator.

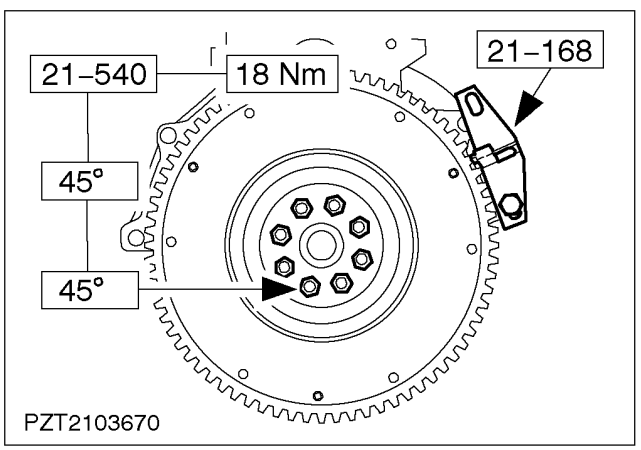

26. NOTE: Use new bolts.
Fit the flywheel.

- Immobilise the crankshaft with the ring gear.

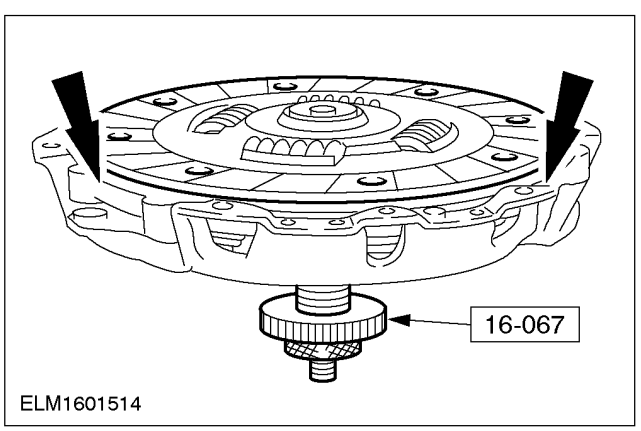

27. Center the clutch disc on the pressure plate.

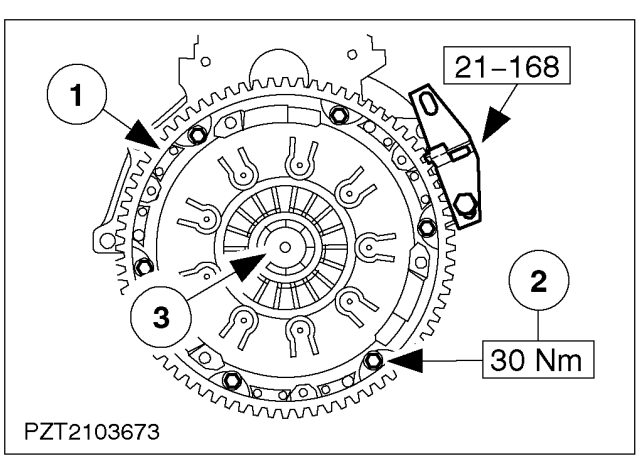

28. Fit the clutch.
    1. Place the clutch pressure plate, together with the centered clutch disc, in the installation position.
    2. Tighten the bolts uniformly, working diagonally.
    3. Remove the special tool.

ASSEMBLY (CONTINUED)

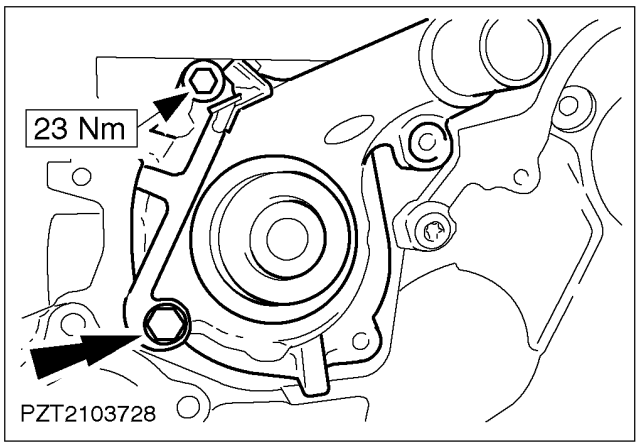

29. Install the coolant pump.
    - Place the coolant pump, together with a new gasket, and the bracket for the spring of the timing belt tensioning pulley, in the installation position.
    - Tighten the bolts.

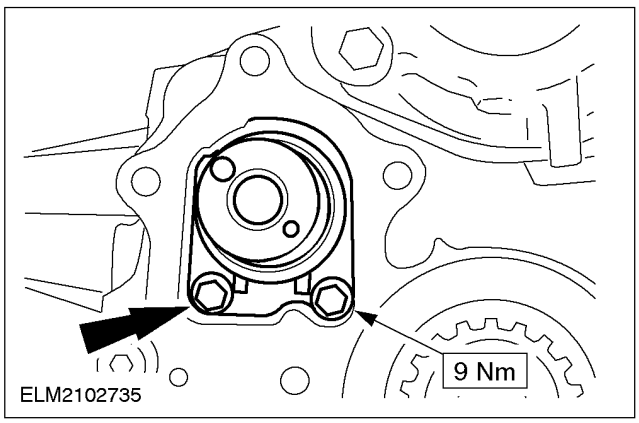

30. Install the auxiliary shaft with the thrust plate.
    - Lubricate the auxiliary shaft, the bearing bush in the cylinder block and the thrust plate with engine oil.

NOTE: The lubricating grooves on the thrust plate must face outwards.

- Fit the auxiliary shaft together with the thrust plate.
- Tighten the thrust plate bolts.

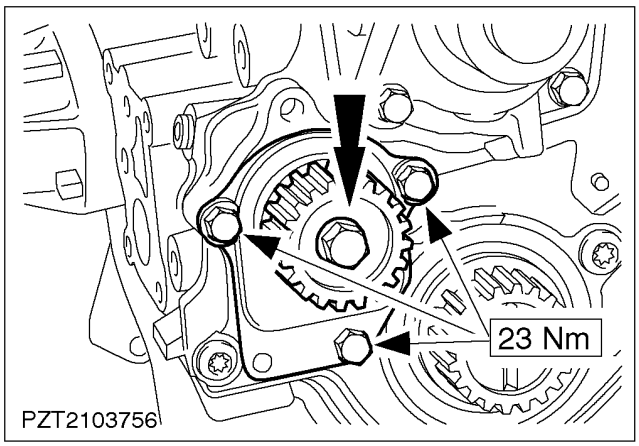

31. **NOTE:** Do not tighten the bolt of the auxiliary shaft timing belt pulley.

NOTE: The auxiliary shaft guide pin and the corresponding hole in the timing belt pulley must line up.

Install the auxiliary shaft oil seal housing.

- Lubricate the end of the auxiliary shaft with engine oil.
- Slide the new oil seal housing with the integrated oil seal and the support ring onto the end of the auxiliary shaft.
- Tighten the bolts of the oil seal housing.
- After securing the oil seal housing, detach the support ring and check that the seal is seated correctly.

32. Install the auxiliary shaft timing belt pulley.

ASSEMBLY (CONTINUED)

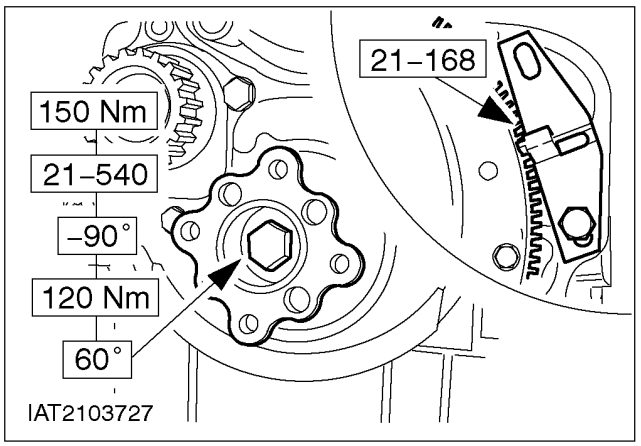

33. NOTE: Use a new bolt.

NOTE: Lubricate the bolt head contact face with oil.

Fit the flange of the crankshaft front timing belt pulley.

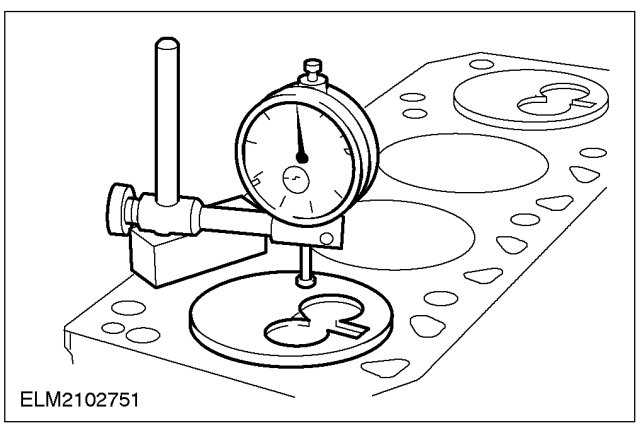

34. Measure the piston protrusion.

NOTE: Carry out two measurements per cylinder a distance of 5 mm from the edge of the piston.

- Measure the protrusion of the piston of each cylinder at TDC.
- Measure the difference in height between the piston crown and the cylinder block mating face.
- The largest measurement determines the choice of cylinder head gasket (see General Specifications).

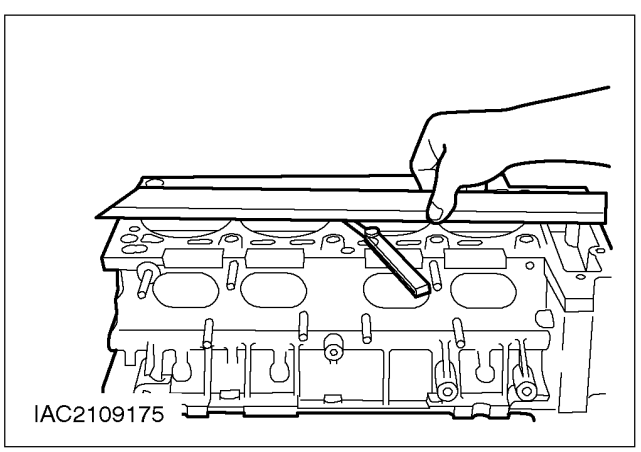

35. NOTE: The straightedge must be at least 500 mm long.

Check the cylinder head mating face for distortion.

- Permitted distortion at the steps between the combustion chambers: 0,80 mm.
- Lay the straightedge transversely across all the steps between the combustion chambers and check the distortion at three points in each case.
- Lay the straightedge lengthways over the cylinder head in three places in the area of the combustion chambers and check the distortion at all the steps between the combustion chambers.
- Lay the straightedge diagonally across the cylinder head and check the distortion at all the steps between the combustion chambers.

ASSEMBLY (CONTINUED)

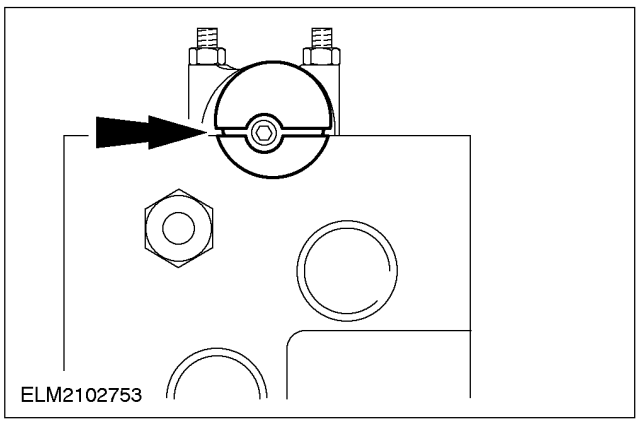

36. Line up the crankshaft and camshaft.
    - Turn the crankshaft until the piston of cylinder no. 1 is at TDC.
    - Turn the camshaft until the slot in the eccentric on the camshaft is parallel with the upper edge of the cylinder head (with the larger semi-circle at the top).
    - The crankshaft and camshaft must not be turned any more.

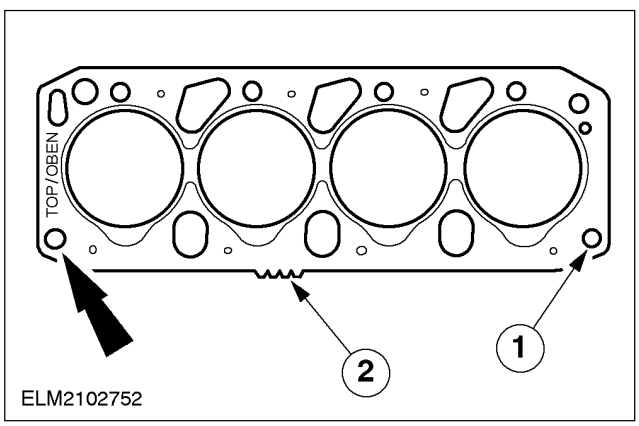

37. NOTE: The cylinder head gasket is marked "TOP / OBEN".
Fit a new cylinder head gasket.
1. Check that the locating sleeves are seated correctly.
2. Thickness marking as measured in step

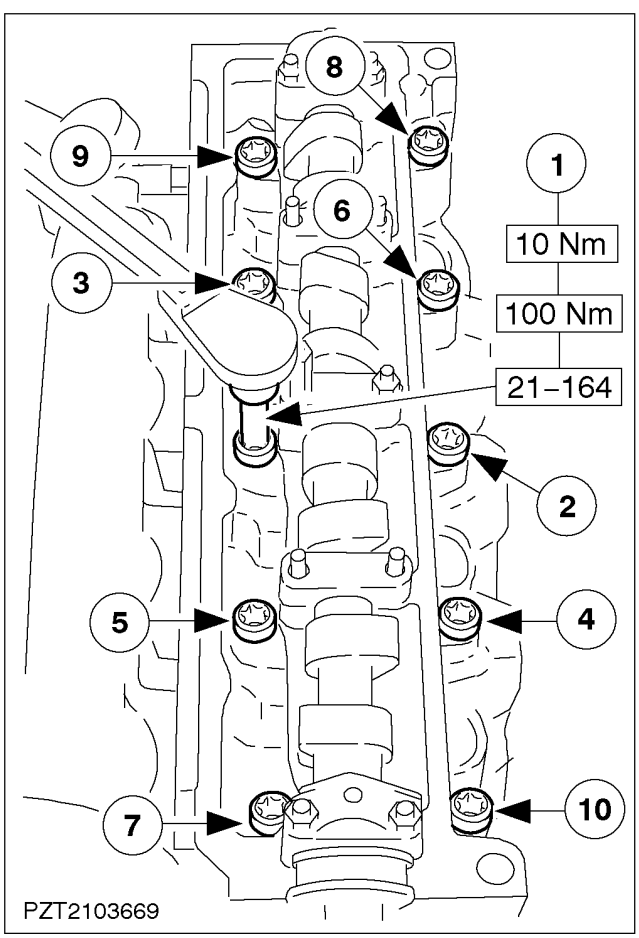

38. NOTE: Do not oil the cylinder head bolts.
Fit the cylinder head and tighten the new cylinder head bolts in two stages.

ASSEMBLY (CONTINUED)

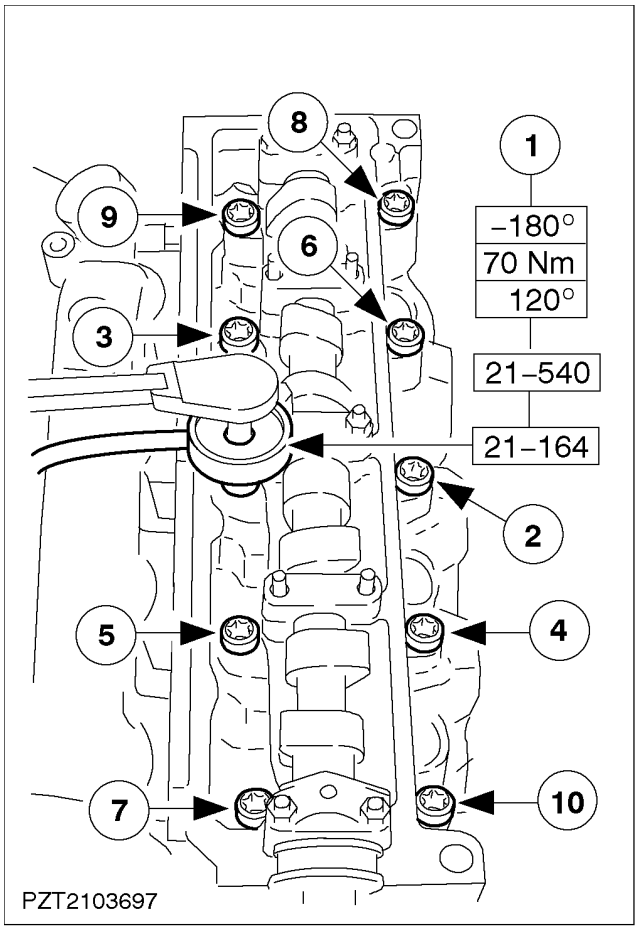

39. Fit the cylinder head (continued).

CAUTION: For stage 3, slacken one cylinder head bolt by itself, and then tighten it to the specified torque and angle. Only then move on to the next bolt.

- Wait three minutes and then tighten the cylinder head bolts according to tightening sequence in stage 3.

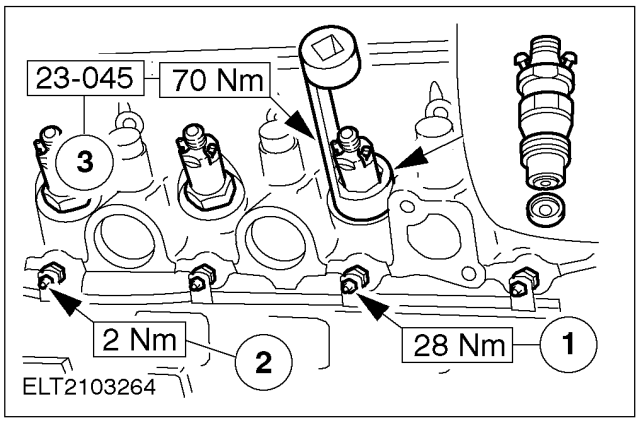

40. Fit the injectors and glow plugs.
    1. Glow plugs
    2. Glow plug wiring

NOTE: Fit new injector heat shields.

    3. Injectors

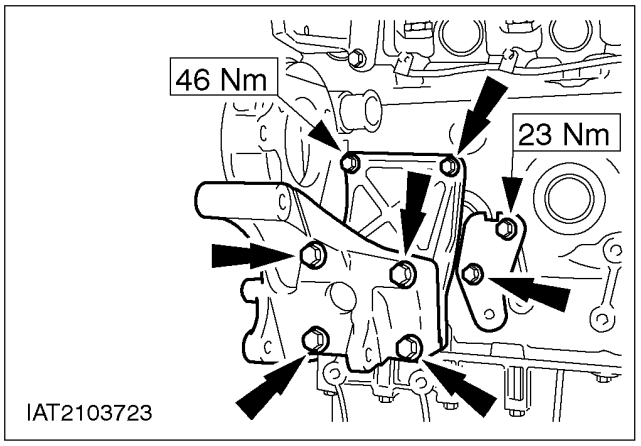

41. Fit the alternator bracket.

ASSEMBLY (CONTINUED)

42. Fit the coolant pipe bracket.

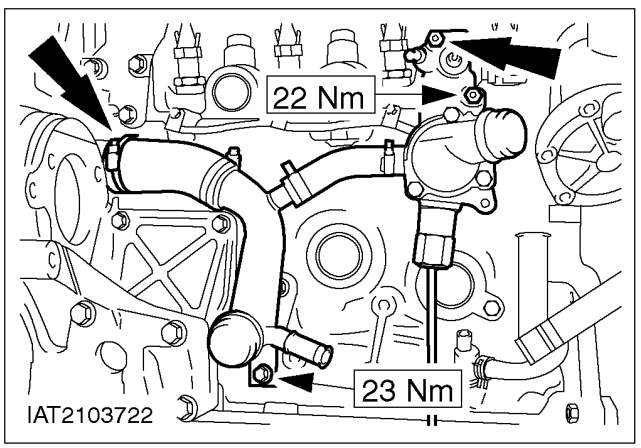

43. Fit the thermostat housing, coolant hose and coolant pipe.

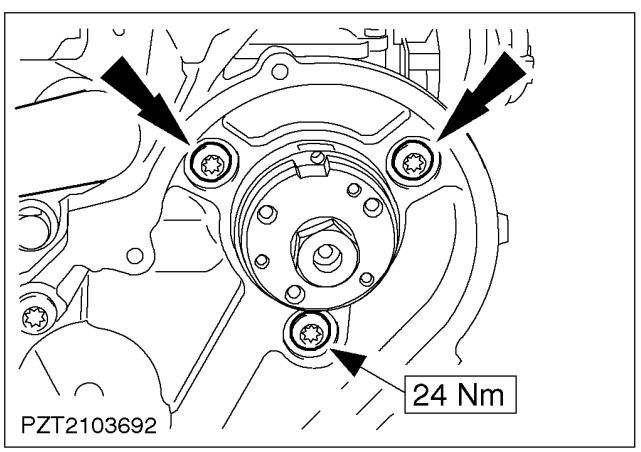

44. Fit the injection pump.

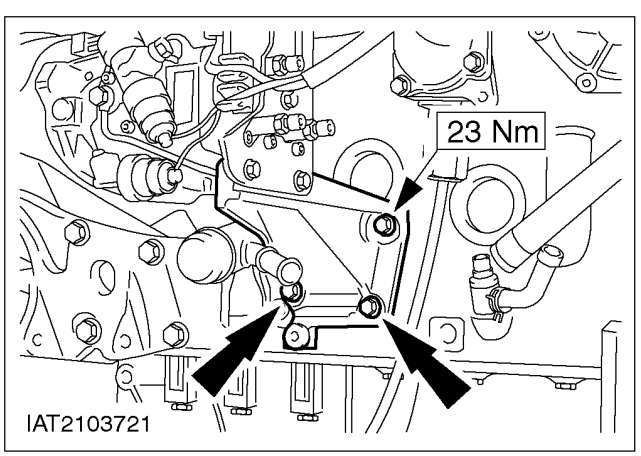

45. Fit the injection pump bracket.
    - Connect the fast idle cable.

ASSEMBLY (CONTINUED)

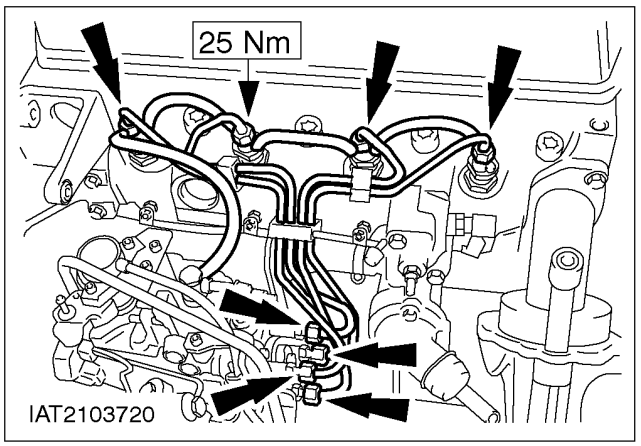

46. Connect the injection pipes and the leak-off hoses.

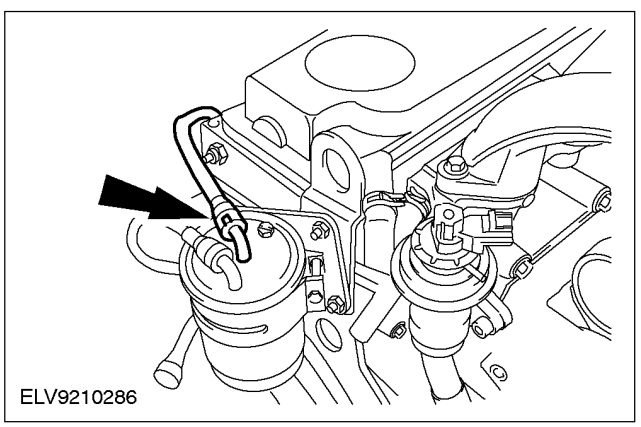

47. Connect the fuel feed line.

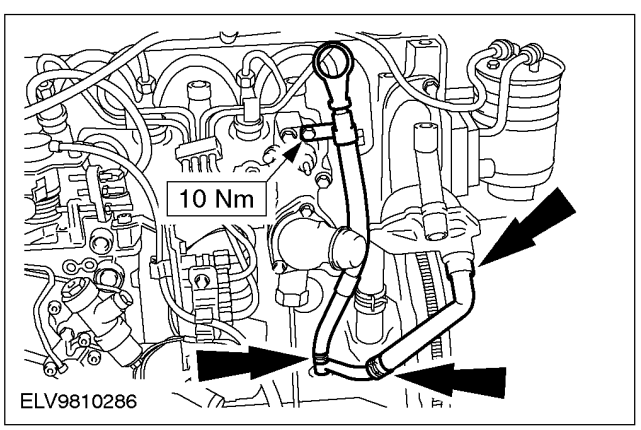

48. Install the oil dipstick tube.

49. Attach the hose.

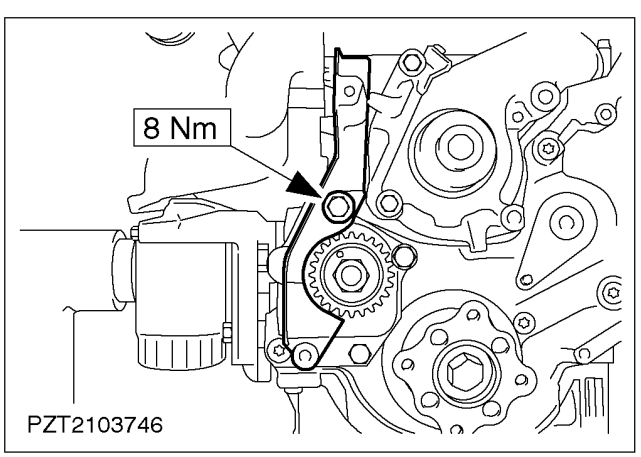

50. Fit the timing belt side cover.

ASSEMBLY (CONTINUED)

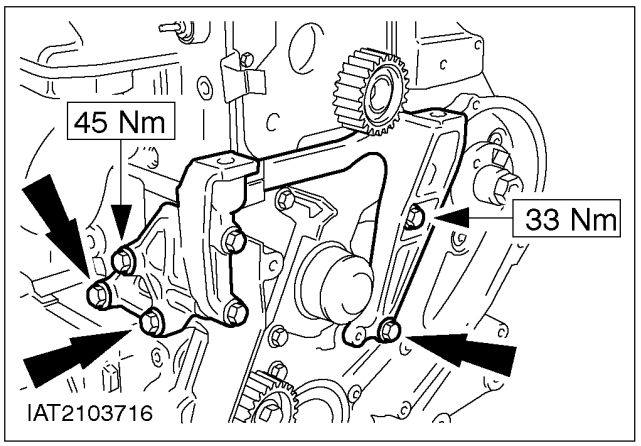

51. Fit the engine mounting bracket.

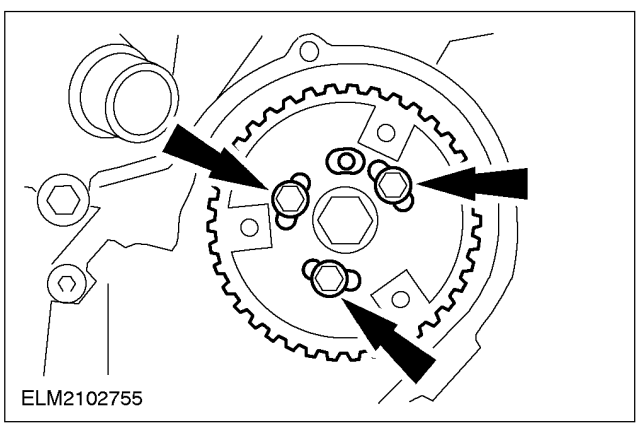

52. NOTE: Do not tighten the bolts.

NOTE: Center the slots on the injection pump timing belt pulley.

Fit the injection pump timing belt pulley.

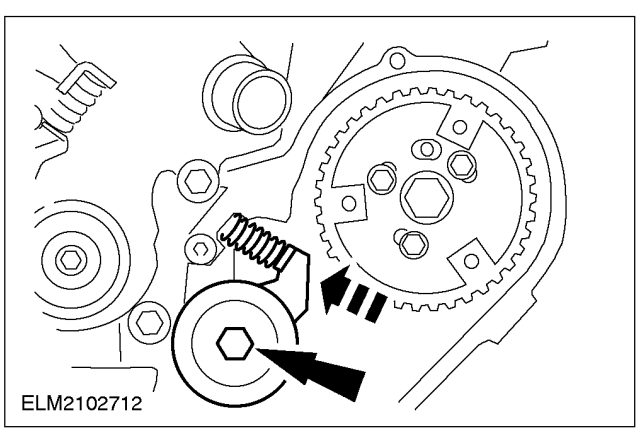

53. Fit the injection pump timing belt tensioner.
    - Compress the spring of the timing belt tensioner and lock it with the clamp bolt.

Engines with automatic timing belt tensioner.

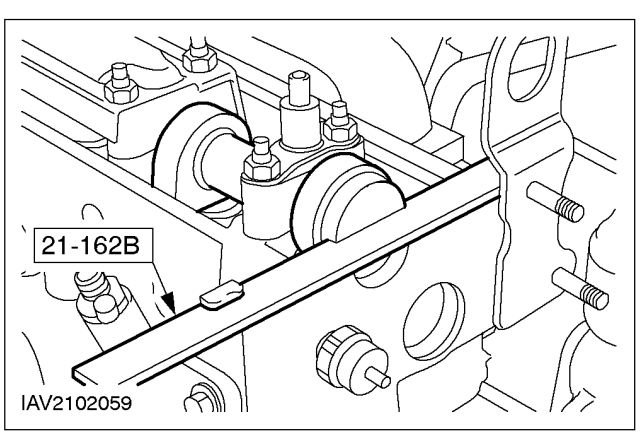

54. Align the camshaft.
    - Fit the timing tool into the groove in the camshaft eccentric.

ASSEMBLY (CONTINUED)

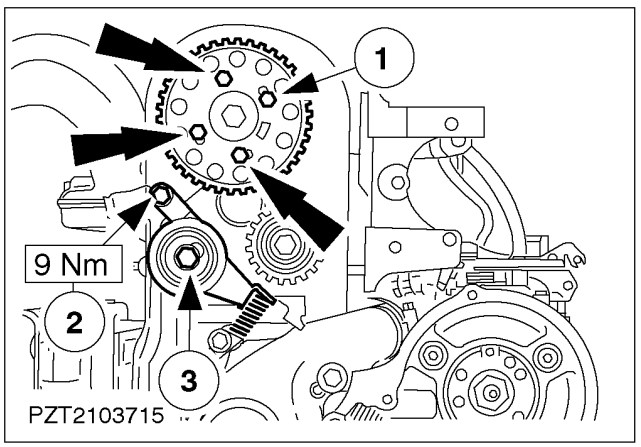

Engines with mechanical timing belt tensioner

55. Fit the camshaft timing belt pulley and timing belt tensioner.

NOTE: Do not tighten the bolts of the camshaft timing belt pulley.

1. Fit the camshaft timing belt pulley.
2. Fit the timing belt tensioner (two bolts).
3. Squeeze the springs of the timing belt tensioner together and fix in place with the clamping bolt.

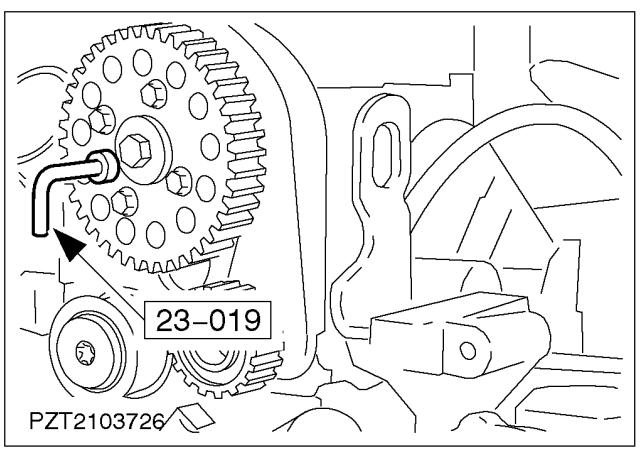

Engines with mechanical timing belt tensioner.

56. Align the camshaft timing belt pulley.
    - Align the camshaft timing belt pulley by inserting the timing pin through the cutout in the pulley and the hole in the cylinder head.

ASSEMBLY (CONTINUED)

All vehicles

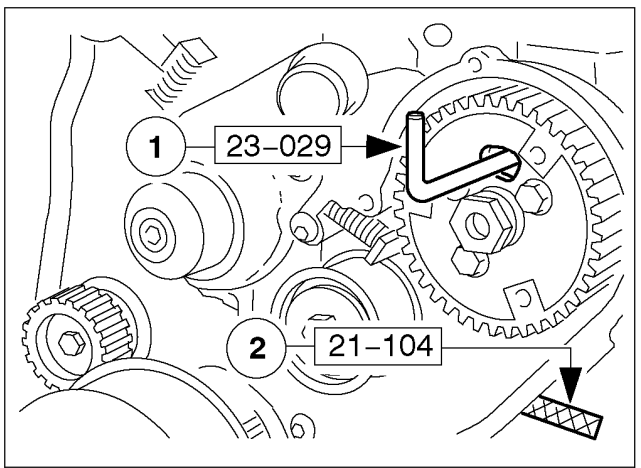

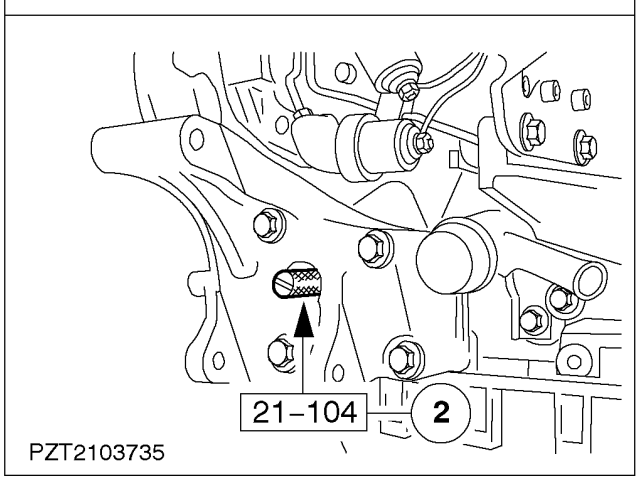

57. Align the injection pump timing belt pulley and turn the crankshaft to the TDC position.
    1. Align the injection pump pulley by inserting the timing pin through the cutout in the pulley and the hole in the injection pump housing.

NOTE: Screw in the timing pin as far as it will go; the crankshaft must rest against the timing pin.

    2. Remove the bolt and screw the timing pin into the cylinder block.
    - Turn the crankshaft to the TDC position.

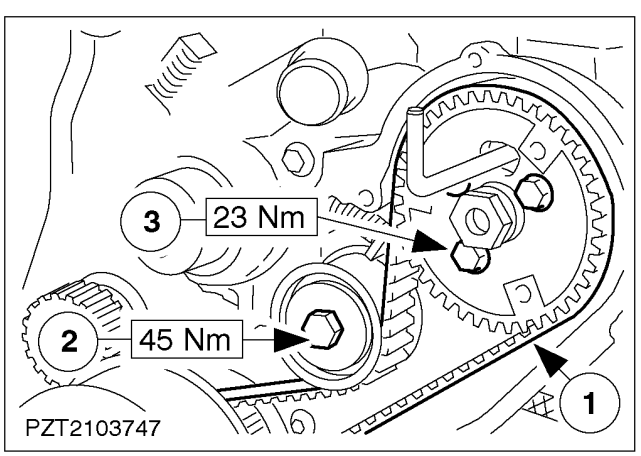

58. ⚠ **CAUTION: Renew the toothed belt.**

NOTE: The direction of rotation is marked.

NOTE: Make sure the belt is seated correctly.

Fit the injection pump timing belt.

1. Fit the timing belt with the slack side nearest the timing belt tensioner.
2. Slacken the bolt of the timing belt tensioner and allow the tensioner to snap against the timing belt. Tighten the timing belt tensioner bolt.

NOTE: The bolts must not be at the ends of their slots.

3. Tighten the bolts of the timing belt pulley.

ASSEMBLY (CONTINUED)

Engines with automatic timing belt tensioner.

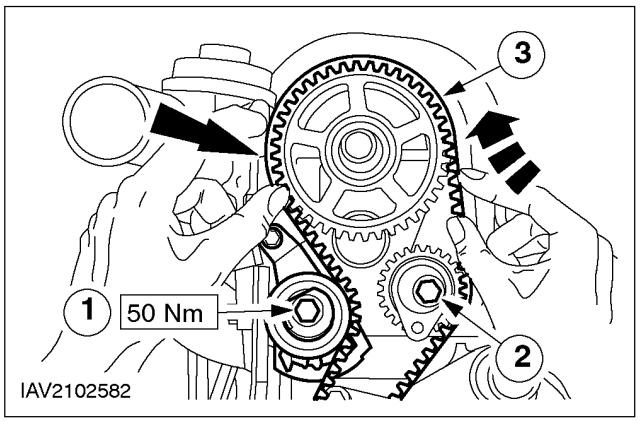

59. ⚠CAUTION: Renew the toothed belt.

NOTE: Make sure the belt is seated correctly.
Install the camshaft timing belt.

1. Fit the camshaft timing belt tensioner.
2. Fit the adjusting cam.

NOTE: The direction of rotation is marked.

3. Fit the timing belt and lay it over the camshaft timing belt pulley.
   - Slide the camshaft timing belt pulley onto its conical seat and screw in the bolt until the camshaft timing belt pulley can still just be turned on the camshaft.

Engines with mechanical timing belt tensioner

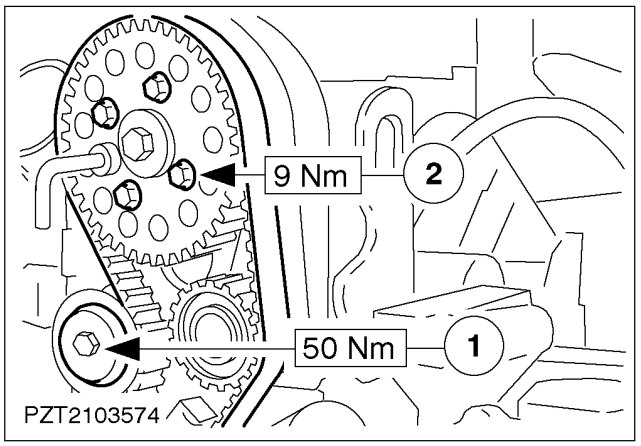

60. ⚠CAUTION: Renew the toothed belt.

NOTE: The direction of rotation is marked.

NOTE: Make sure the belt is seated correctly.
Install the camshaft timing belt. Fit the timing belt with the slack side nearest the timing belt tensioner.

1. Release the timing belt tensioner clamp bolt and allow the tensioner to snap against the timing belt. Tighten the timing belt tensioner clamp bolt.

NOTE: The bolts must not be at the ends of their slots.

2. Tighten the timing belt pulley bolts.

61. Remove timing pins 21-104, 23-019 and 23-029.

Engines with automatic timing belt tensioner

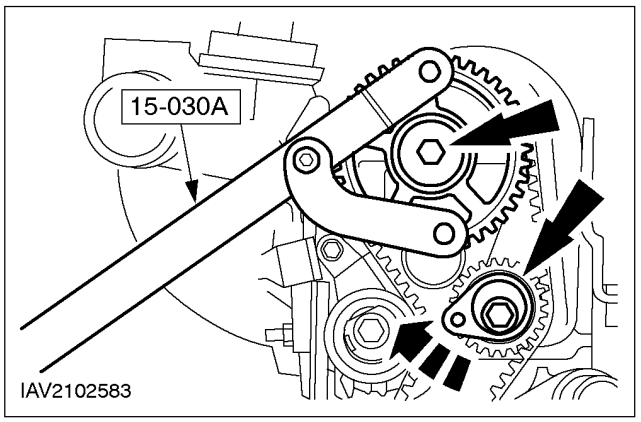

62. NOTE: Hold the camshaft timing belt pulley steady.
Pretension the camshaft timing belt.

- Turn the adjusting cam clockwise to 9 o'clock and tighten the center bolt of the adjusting cam.
- Tighten the bolt of the camshaft timing belt pulley.

63. ⚠CAUTION: Remove the special tools.
Turn the crankshaft six turns in the normal direction of rotation of the engine.

ASSEMBLY (CONTINUED)

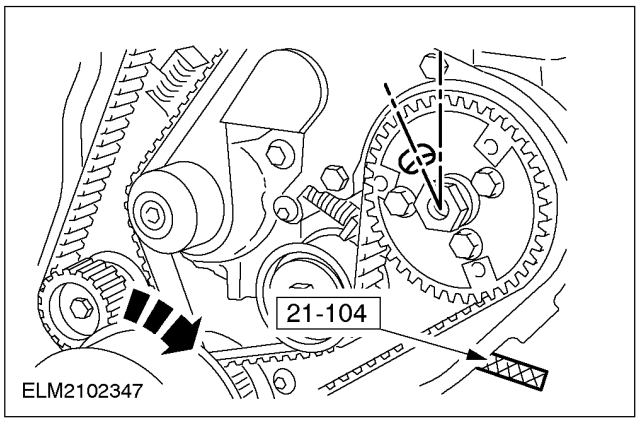

Engines with automatic timing belt tensioner

64. Preparations for tensioning the timing belts.
    - Turn the crankshaft further in the normal direction of rotation of the engine until the slot in the injection pump timing belt pulley is at 11 o'clock.
    - Screw in the timing pin.
    - Carefully turn the crankshaft in the normal direction of rotation of the engine until it comes up against the timing pin.
    - Insert Special Tool 23-029.

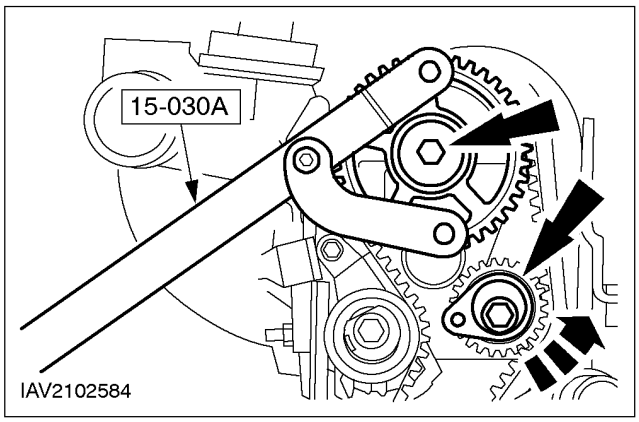

Engines with automatic timing belt tensioner

65. NOTE: Hold the camshaft timing belt pulley steady.

Loosen the bolt of the camshaft timing belt pulley and slacken the camshaft timing belt.

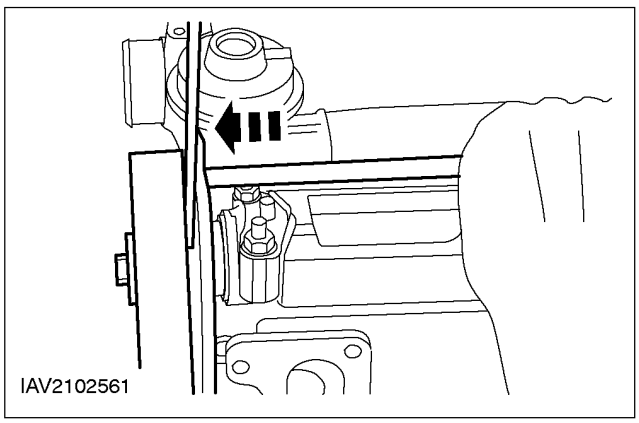

Engines with automatic timing belt tensioner

66. NOTE: Position a screwdriver between the camshaft timing belt pulley and the timing belt rear cover.

Release the camshaft timing belt pulley.

- Release the camshaft timing belt pulley from its conical seat by tapping on it lightly with a light metal drift.
- Slacken the bolt of the adjusting cam.

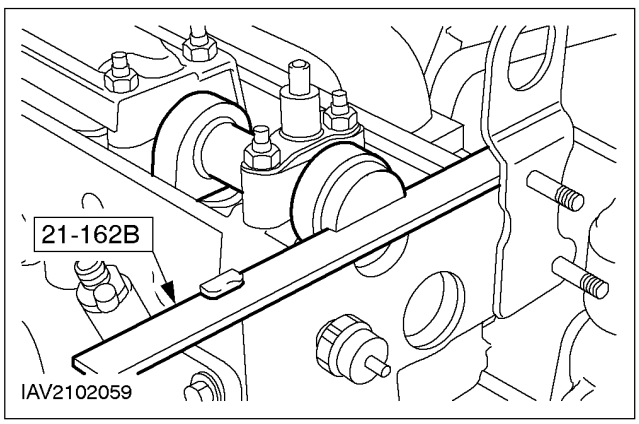

Engines with automatic timing belt tensioner

67. NOTE: If necessary, turn the camshaft using water pump pliers until the timing tool can be inserted.

Insert the special tool in the camshaft.

ASSEMBLY (CONTINUED)

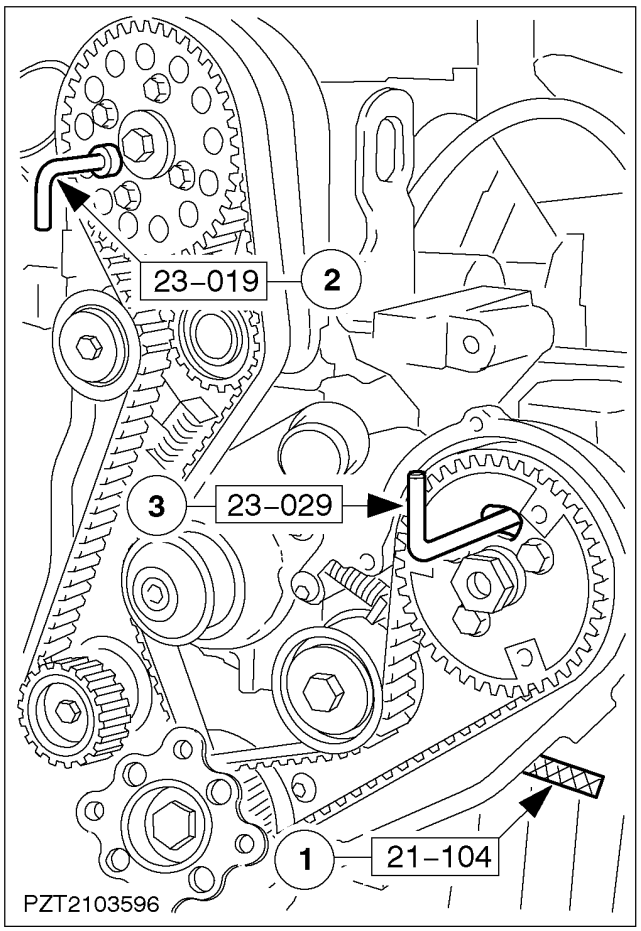

68. Preparations for tensioning the timing belt (mechanical timing belt tensioner shown).
    - Remove Special Tool 21-162B.
    - Turn the crankshaft two revolutions in the direction of rotation of the engine until the slot in the injection pump timing belt pulley is at 12 o'clock.
    - Turn the slot back counter to the normal direction of rotation of the engine to 11 o'clock.
    1. Screw in the timing pin.
    - Carefully turn the crankshaft in the normal direction of rotation of the engine until it comes up against the timing pin.
    2. The timing pin must be able to be inserted into the camshaft timing belt pulley.
    3. The timing pin must be able to be inserted into the injection pump timing belt pulley.

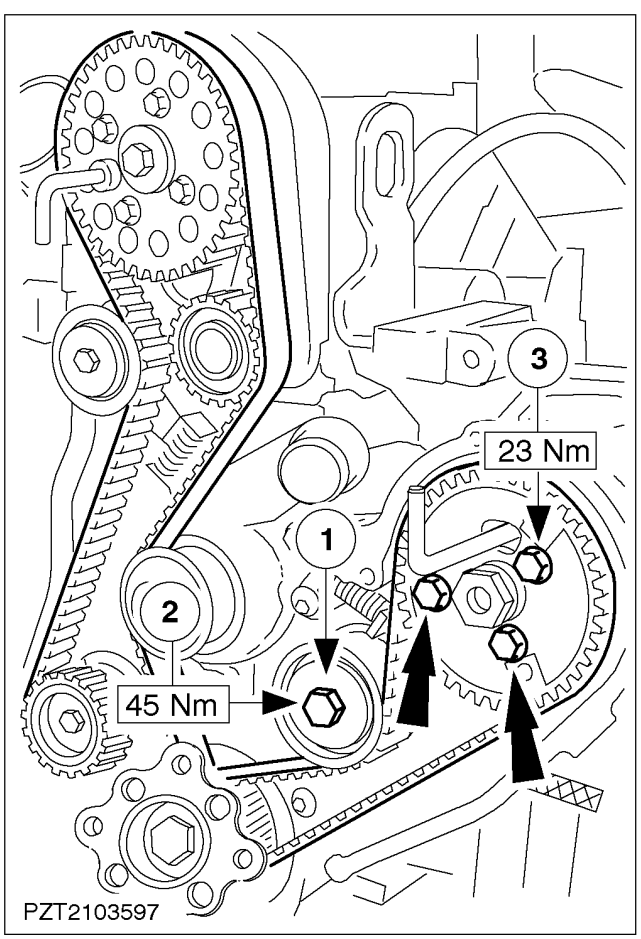

69. Tension the injection pump timing belt (mechanical timing belt tensioner shown)

NOTE: Slacken the bolts of the timing belt pulleys just half a turn each.

- Slacken the bolts of the camshaft timing belt pulley.
- Slacken the bolts of the injection pump timing belt pulley.

1. Slacken the clamp bolt of the injection pump timing belt tensioner a quarter turn so that the timing belt tensioner presses against the timing belt.
2. Tighten the bolt of the injection pump timing belt tensioner.
3. Tighten the bolts of the injection pump timing belt pulley.

ASSEMBLY (CONTINUED)

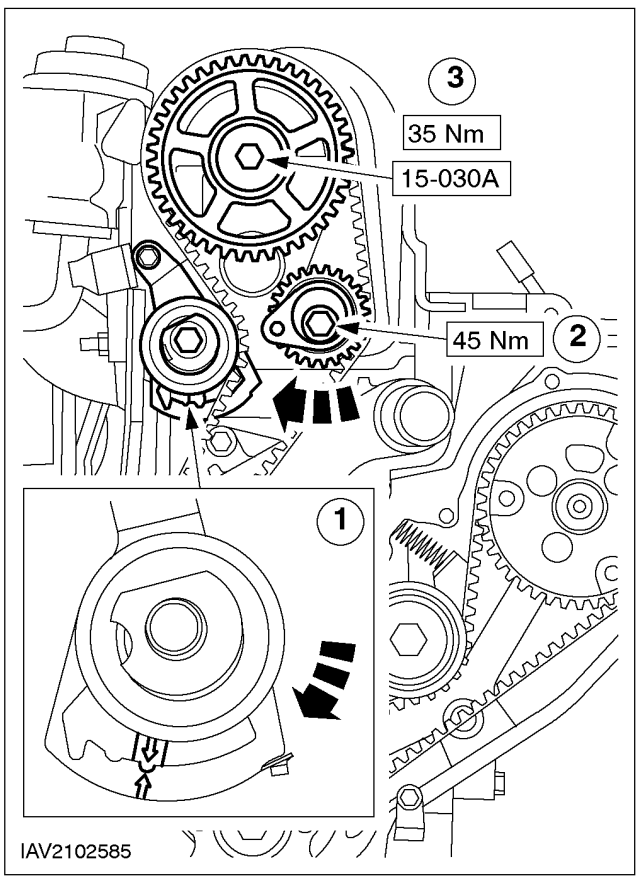

Engines with automatic timing belt tensioner

70. NOTE: Hold the bolt of the adjusting cam steady. Adjusting cam must be between the 6 o'clock and the 9 o'clock position or between the 9 o'clock position and the 12 o'clock position.

NOTE: Tighten the bolt smoothly.

NOTE: Hold the camshaft timing belt pulley steady. Tighten the bolt smoothly.

Tension the camshaft timing belt.

1. Tension the camshaft timing belt clockwise via the hexagon socket of the adjusting cam until the arrows of the camshaft timing belt tensioner meet.
2. Tighten the bolt of the adjusting cam.
3. Tighten the bolt of the camshaft timing belt pulley.

- Torque for M8 bolt: 35 Nm.
- Torque for M10 bolt: 48 Nm.

71. ⚠CAUTION: Remove the special tools.

Turn the crankshaft four turns in the normal direction of rotation of the engine.

ASSEMBLY (CONTINUED)

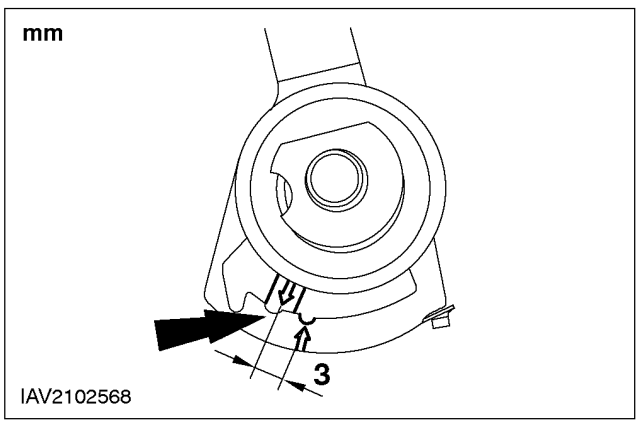

Engines with automatic timing belt tensioner

72. NOTE: If the special tools cannot be inserted, then the adjustment must be repeated from step

Check the valve timings.

- Turn the crankshaft further in the normal direction of rotation of the engine until the slot in the injection pump timing belt pulley is at 11 o'clock.
- Screw in the timing pin.
- Carefully turn the crankshaft in the normal direction of rotation of the engine until it comes up against the timing pin.
- Special Tool 23-029 must be able to be inserted.
- The timing tool must be able to be inserted in the camshaft.
- The arrows on the camshaft timing belt tensioner must not be offset by more than 3 mm.
- Remove the special tools and fit the blanking plug in the place of the timing pin.

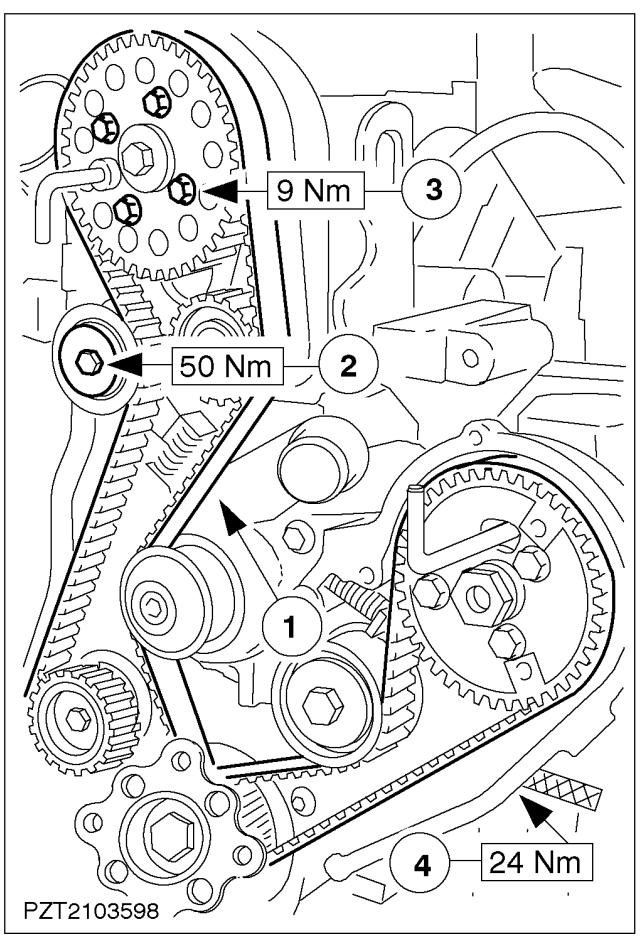

73. Tension the camshaft timing belt.

NOTE: Leave timing pin 23-029 inserted.

1. Slacken the clamp bolt of the camshaft timing belt tensioner a quarter turn so that the timing belt tensioner presses against the timing belt.

NOTE: All timing pins must be correctly inserted; the crankshaft must be resting against the timing pin.

2. Tighten the clamp bolt of the camshaft timing belt tensioner.
3. Tighten the bolts of the camshaft timing belt pulley.
4. Take out the timing pins. Unscrew the timing pin and tighten the blanking plug for the TDC setting bore.

ASSEMBLY (CONTINUED)

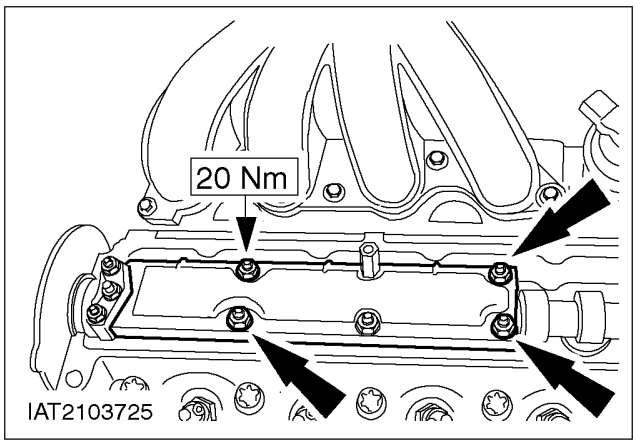

74. Fit the oil baffle.

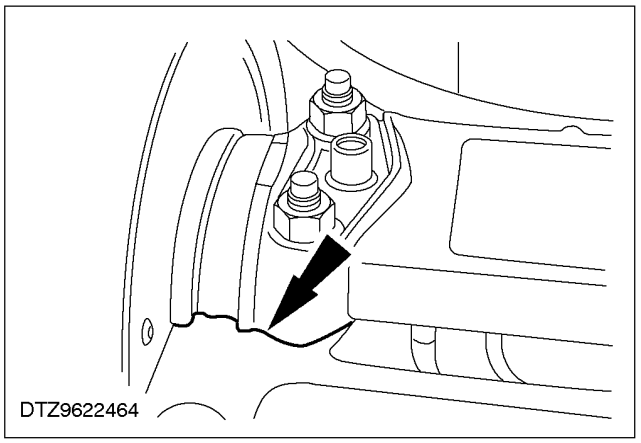

75. Seal the parting line between the bearing cap and the cylinder head on both sides with a thin bead of sealer (SPM-4G9112-F/G).

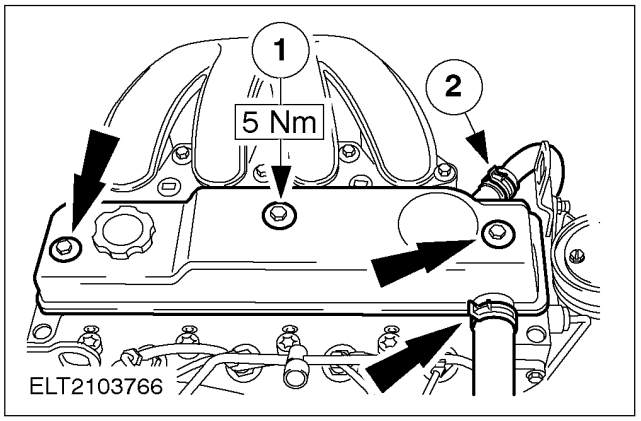

76. NOTE: Clean the cylinder head cover gasket and check it for damage. Only renew if damaged. If it is in good condition, re-use it several times.

NOTE: Before fitting, lightly coat the gasket with engine oil.

Fit the cylinder head cover.

1. Screw in the bolts.
2. Attach the crankcase ventilation hoses.

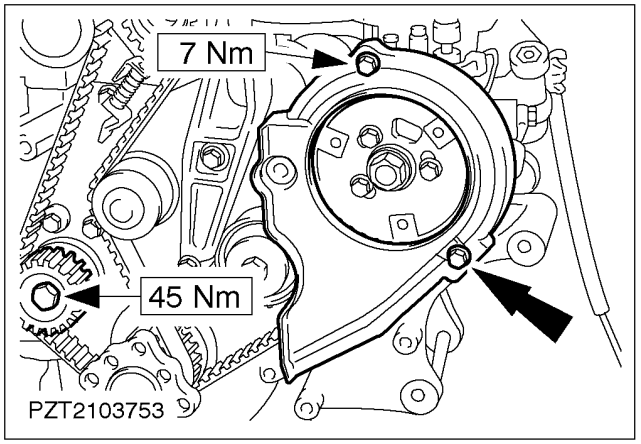

77. Fit the injection pump timing belt cover.

ASSEMBLY (CONTINUED)

78. Tighten the bolt of the auxiliary shaft timing belt pulley.

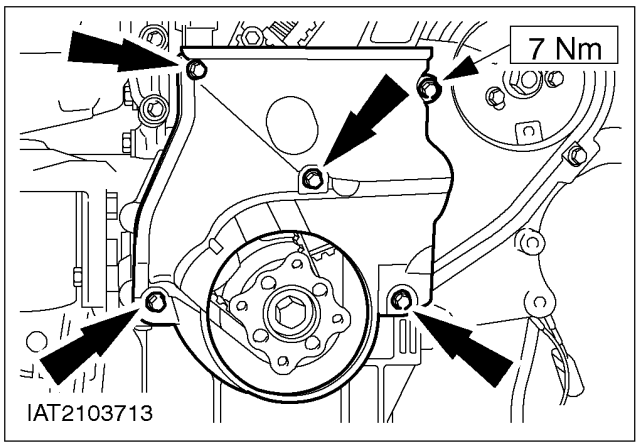

79. Fit the lower timing belt cover.

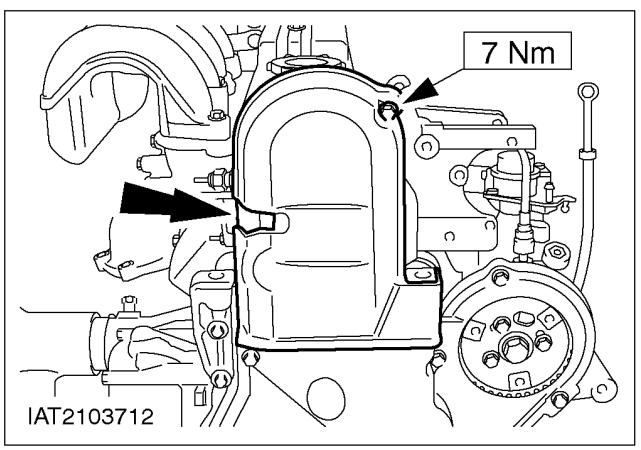

80. Fit the upper timing belt cover.

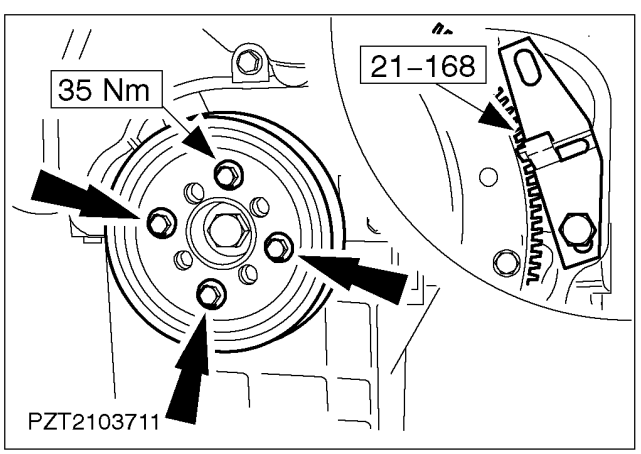

81. Fit the crankshaft pulley/vibration damper.
    - Then remove Special Tool 21-168.

ASSEMBLY (CONTINUED)

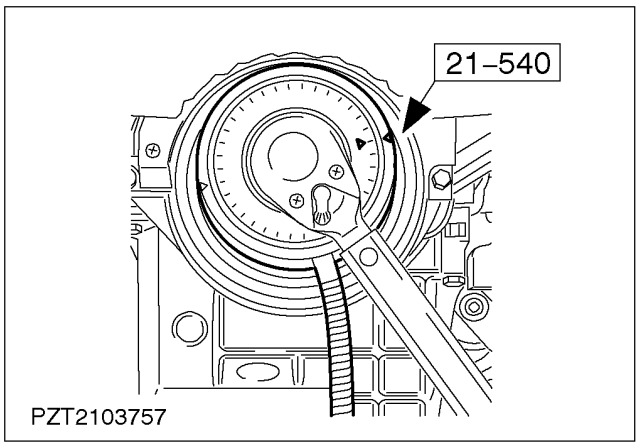

82. ⚠ **CAUTION: The setting value of 10° for the injection pump timing must be strictly observed.**
Position the crankshaft to 10° after the TDC position of the first cylinder.
- Locate the CKP sensor bracket in position without the sensor and attach it loosely.

NOTE: When using the angle gauge 21-540 make sure that the disc is not moved out of position by the movement of the special tool. The special tool must be kept under tension. If the 10° mark is not quite reached, unscrew the gauge disc so that it is no longer within the measuring range and readjust it again.
- Place the angle gauge on the pulley/vibration damper and position the disc to 10°.
- Turn the pulley/vibration damper until the arrows on the angle gauge are exactly lined up together.

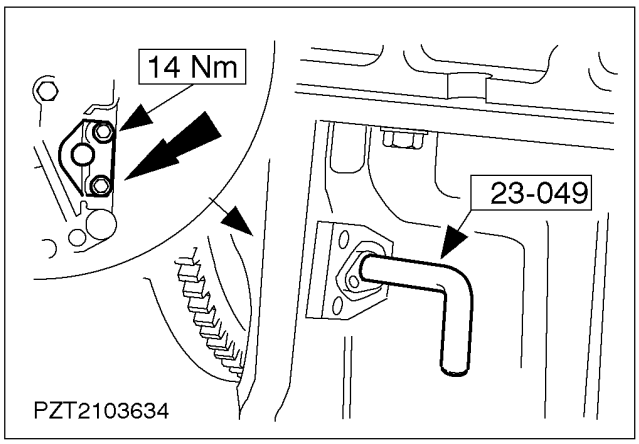

83. Align the CKP sensor bracket (shown on an engine that has been removed).
- Insert the special tool into the CKP sensor bracket and the flywheel bore hole.
- Tighten the CKP sensor bracket bolts and remove the special tool.

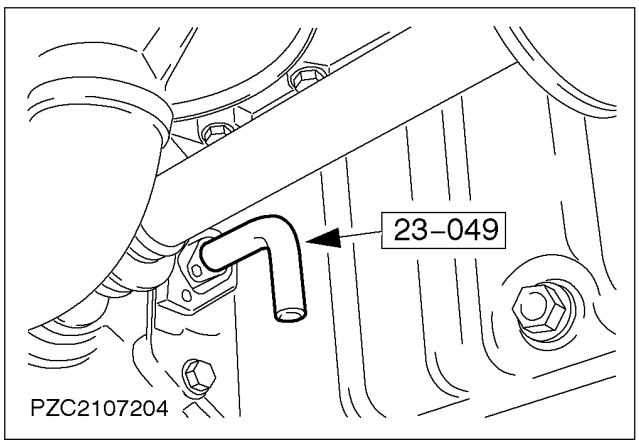

84. Check the alignment of the CKP sensor.
- Position the crankshaft to 10° after TDC of the first cylinder, as described in steps.

NOTE: If it is not possible to insert the special tool into the flywheel bore hole, repeat the adjustment procedure as described in steps and. Check the alignment again.
- The special tool must be able to be inserted in the flywheel.

ASSEMBLY (CONTINUED)

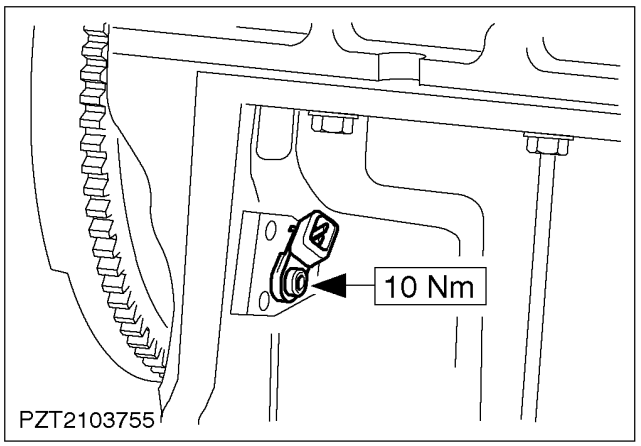

85. Install the CKP sensor.

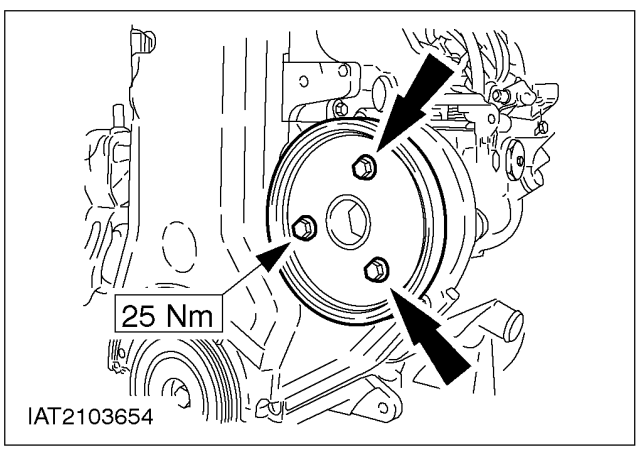

86. Fit the injection pump belt pulley.

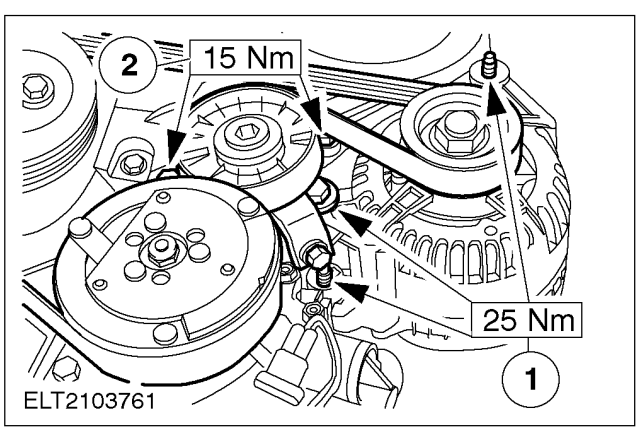

87. ⚠ **CAUTION: Position the alternator and screw in the bolts finger tight. First tighten the bolt on the pulley side, then the rear upper long bolt and finally the rear lower short bolt.**

Install the alternator (shown with the air conditioning compressor).

1. Tighten the alternator bolts in accordance with the tightening sequence.
2. Fit the belt tensioner.

- Tension the drive belt. For additional information, refer to Section 303-05.

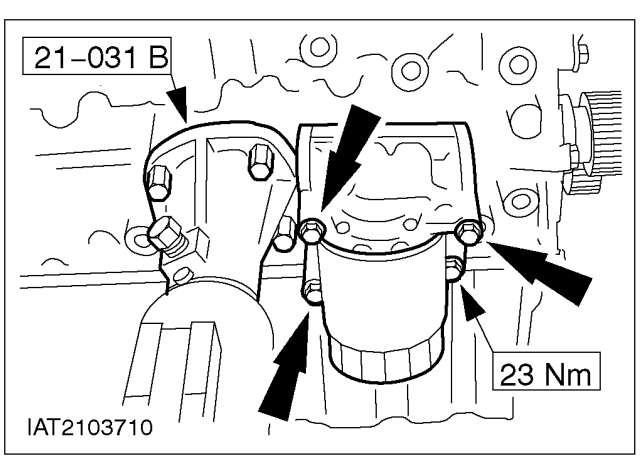

88. **NOTE:** Before installing the oil pump, add approx. 10 cc of engine oil to the rotor chamber and lubricate the oil pump drive gear and driven gear with engine oil.

Install the oil pump with the oil filter.

ASSEMBLY (CONTINUED)

89. Detach the engine from the assembly stand.

INSTALLATION

Engine

Special Tool(s)	
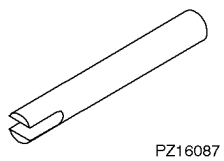 PZ16087	Remover, driveshaft 16-087
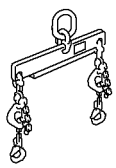 21068A	21-068 A Engine lifting bracket 21-068 A Engine lifting bracket
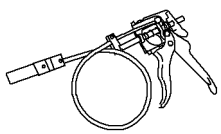 24003	Remover/installer, radiator hose clamps 24-003

General Equipment
Puller
New 9 mm twist drill bit

Material	Specification
Coolant	L405F
High-pressure transmission fluid	SQM-2C9008-A
Power steering hydraulic fluid	ESPM-2C-166-H
Ford DOT 4 brake fluid for hydraulic clutch system	SAM-6C9103-A
High temperature grease for transmission input shaft, guide sleeve - clutch release bearing, pilot bearing - crankshaft and clutch splines	ESD-M1C220-A

Installation

1. Preparatory operations
   - Clean the internal splines of the clutch disc, the splines on the transmission input shaft and the clutch release bearing guide sleeve.
   - Apply a thin coating of high-temperature grease (ESD-M1C220-A) to the transmission input shaft, the clutch release bearing guide sleeve, the crankshaft pilot bearing and the clutch splines.

INSTALLATION (CONTINUED)

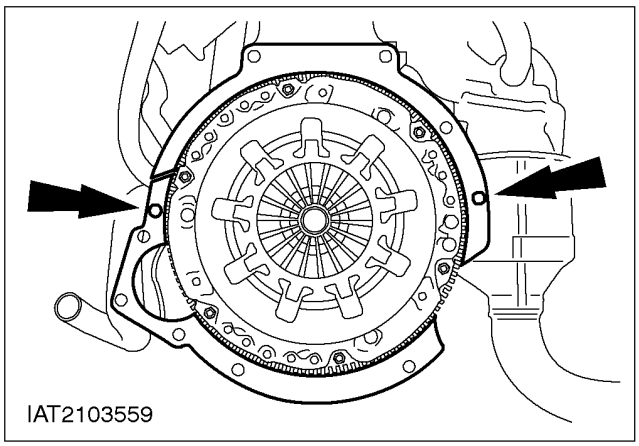

2. NOTE: Make sure the guide sleeves are correctly seated.
Align the adapter plate on the two guide sleeves on the cylinder block.

- Fix the adapter plate with a small amount of high-temperature grease (ESD-M1C220-A).

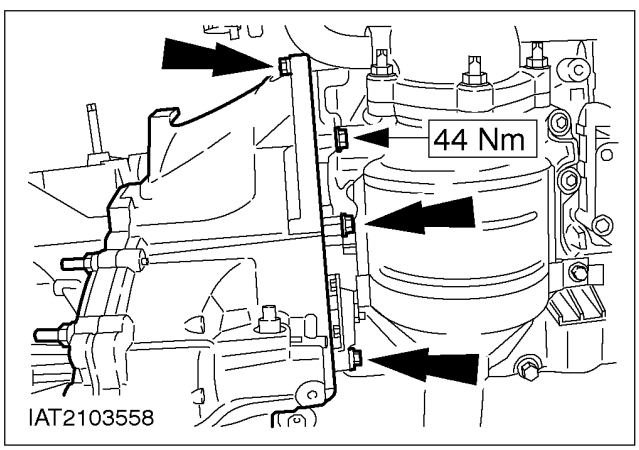

3. NOTE: The transmission is centered with two guide sleeves on the engine.
Locate the transmission in position and tighten the rear flange bolts.

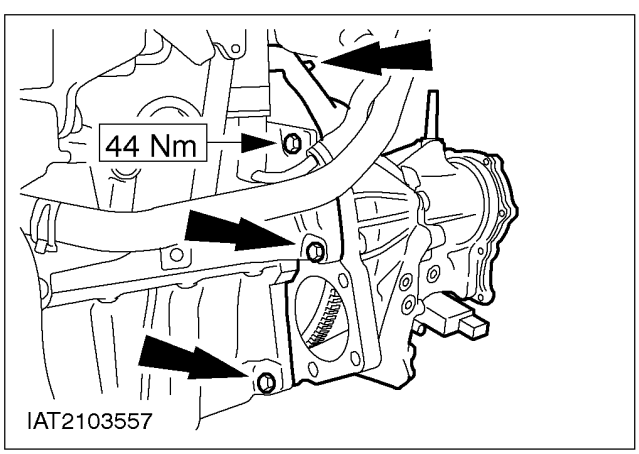

4. Tighten the front flange bolts.

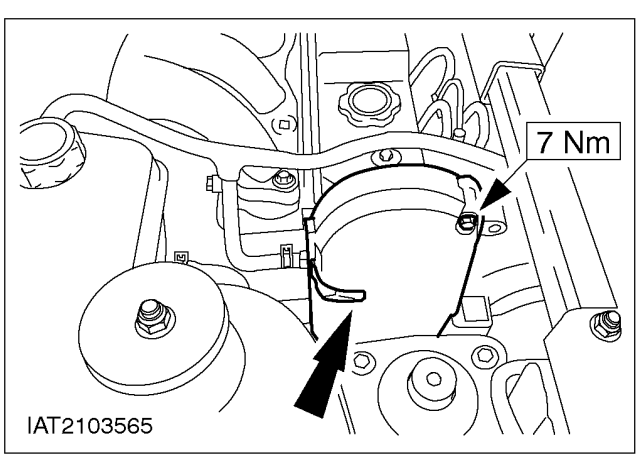

5. NOTE: Fit the bracket for the cable tie for the starter motor wiring.
Install the starter motor.

INSTALLATION (CONTINUED)

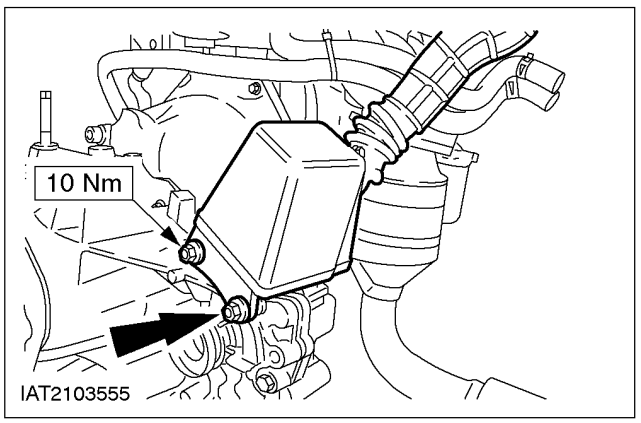

6. Install the resonator.

7. Lower the engine and transmission assembly onto the assembly table and secure it with tensioning straps.

8. Unhook the workshop hoist and detach the engine lifting bracket.

9. General Remarks.
   - Renew circlips and self-locking nuts.
   - When installing coolant and ventilation hoses, if necessary. For additional information, refer to Section 303-03.

10. Locate the engine and transmission assembly in position under the vehicle.

11. Slowly lower the vehicle and guide the engine and transmission assembly into the engine compartment.

12. Attach the rear engine mounting.

NOTE: Do not tighten the nuts and bolts.

1. Bolts
2. Nuts
3. Fit the transmission breather.

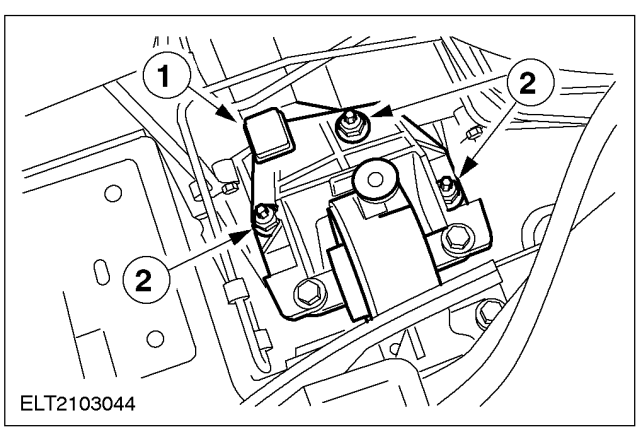

INSTALLATION (CONTINUED)

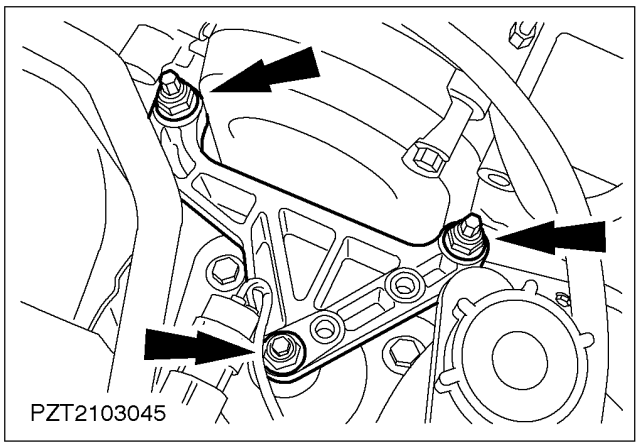

13. NOTE: Do not tighten the nuts.
Attach the front engine mounting.
- Remove the tensioning straps.

14. Raise the vehicle.

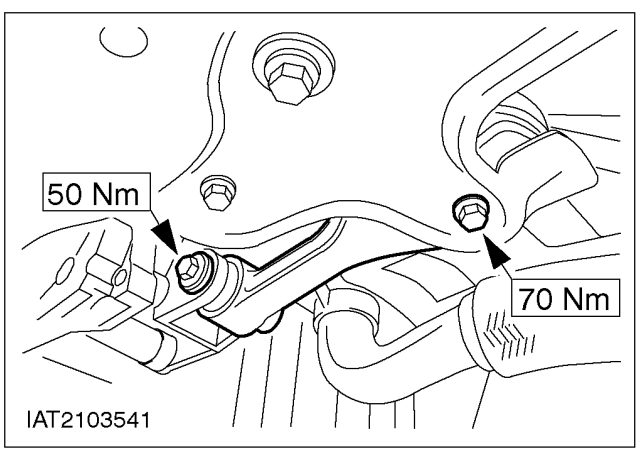

15. Fit the engine roll restrictor.

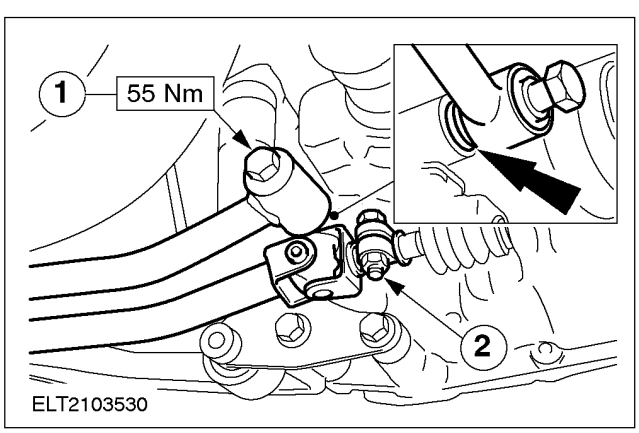

16. NOTE: Do not tighten the bolt on the shift rod.

NOTE: Washer
Fit the gearshift stabilizer.
1. Gearshift stabilizer
2. Shift rod

17. Lower the vehicle.

INSTALLATION (CONTINUED)

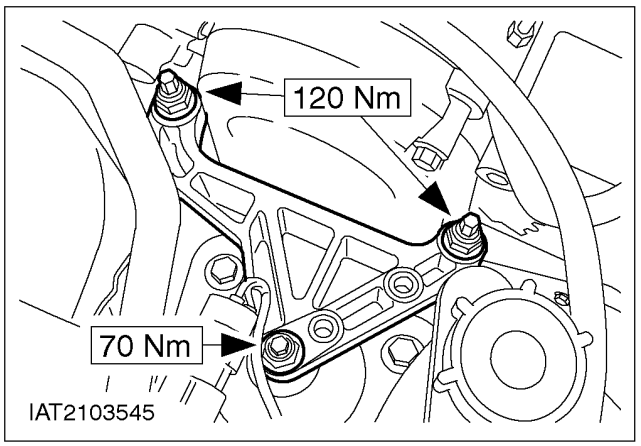

18. **CAUTION: Always tighten the front engine mounting bracket before the rear engine mounting bracket so that the studs can be seated in the elongated holes of the rear engine mounting bracket.**
    Tighten the nuts of the front engine mounting bracket.

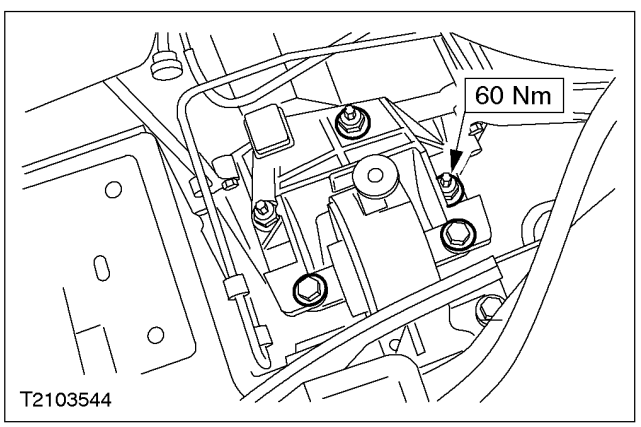

19. Tighten the bolts and nuts of the rear engine mounting bracket.

20. Put the transmission into 4th gear.

21. Raise the vehicle.

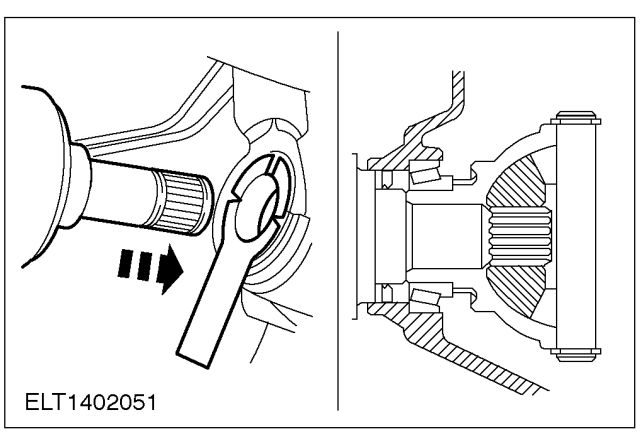

22. **CAUTION: The inner joint must not be bent at more than 18 degrees and the outer joint must not be bent at more than 45 degrees.**

    CAUTION: When inserting the intermediate shaft, use the locating sleeve (supplied with every new oil seal), to protect the oil seal.
    Install the right-hand driveshaft, together with the intermediate shaft, in the transmission.

INSTALLATION (CONTINUED)

All vehicles

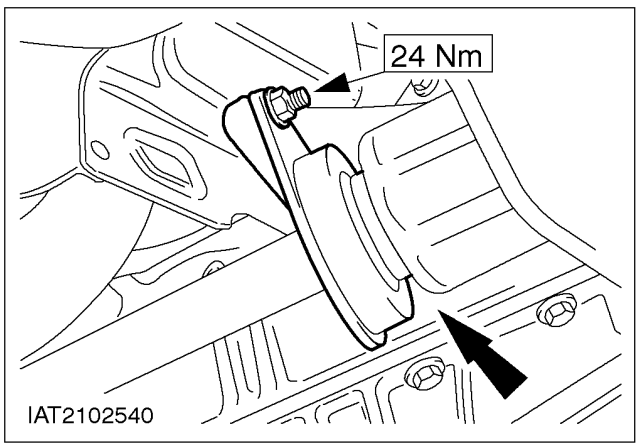

24. **CAUTION: The inner joint must not be bent at more than 18 degrees and the outer joint must not be bent at more than 45 degrees.**
    Tighten the driveshaft center bearing.

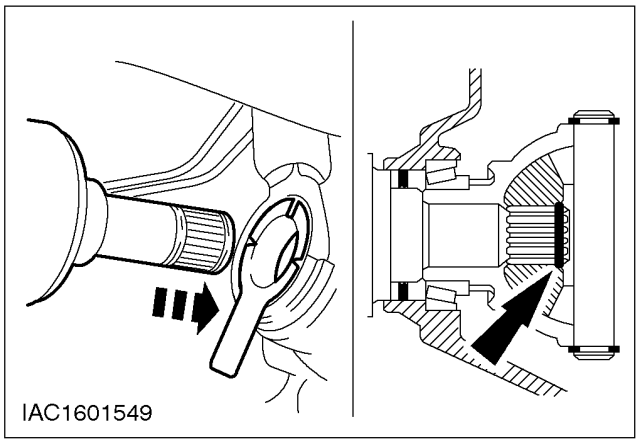

25. **CAUTION: The inner joint must not be bent at more than 18 degrees and the outer joint must not be bent at more than 45 degrees.**

CAUTION: When inserting the front axle driveshafts always use the installation sleeve (supplied with every new oil seal) to protect the oil seal.

NOTE: Make sure the circlip engages correctly. Install the left-hand driveshaft, together with new retaining ring, in the transmission.

26. Top up the transmission fluid to 10 - 15 mm below the lower edge of the filler/check bore.

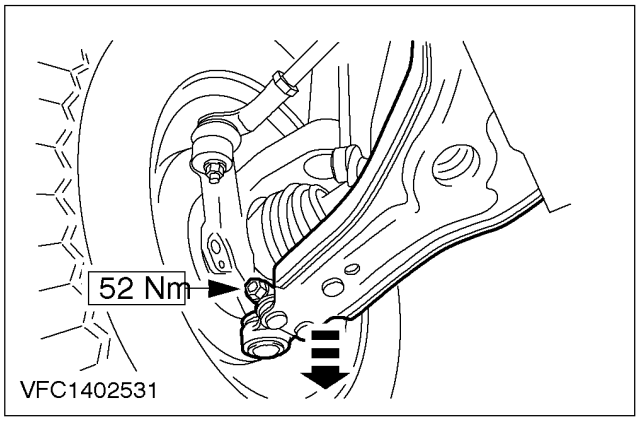

27. Attach the left and right-hand lower suspension arm (left-hand side shown).

INSTALLATION (CONTINUED)

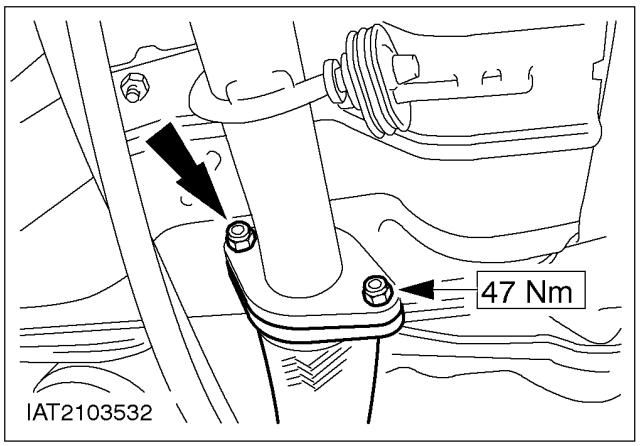

28. Attach the rear exhaust pipe to the flexible intermediate pipe.

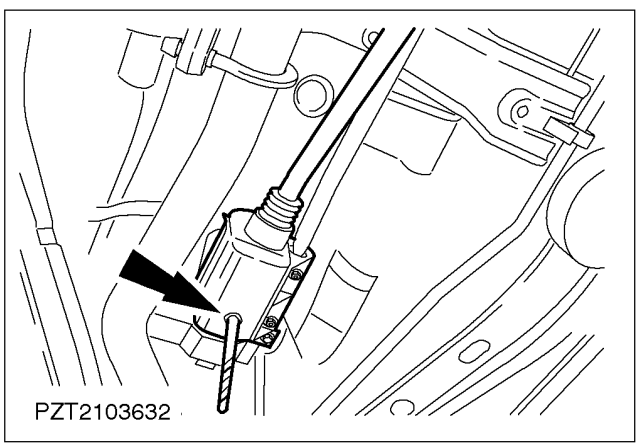

29. Adjust the gearshift mechanism.
    - Lock the gearshift mechanism in the 4th gear position using the shank of a new 9 mm twist drill bit.

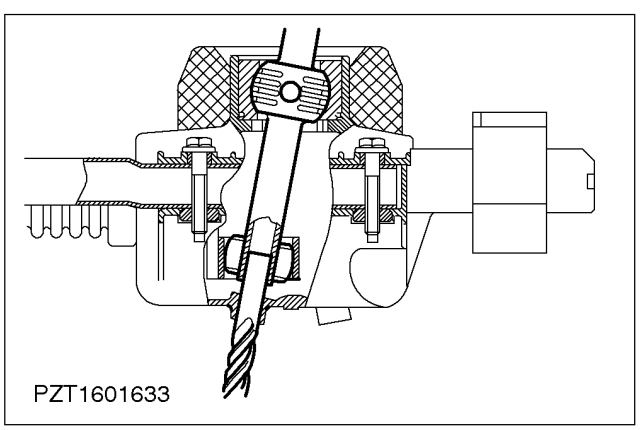

30. Adjust the gearshift mechanism (continued).
    - The detailed illustration shows the shank of the drill bit inserted.

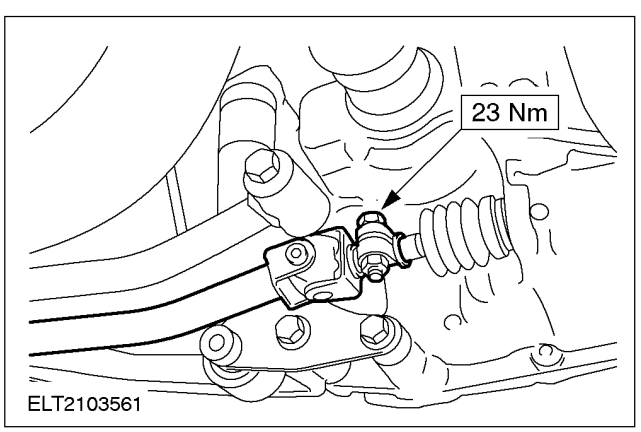

31. Adjust the gearshift mechanism (continued).
    - Tighten the shift rod clamp
    - Withdraw the drill bit from the gearshift mechanism housing.

INSTALLATION (CONTINUED)

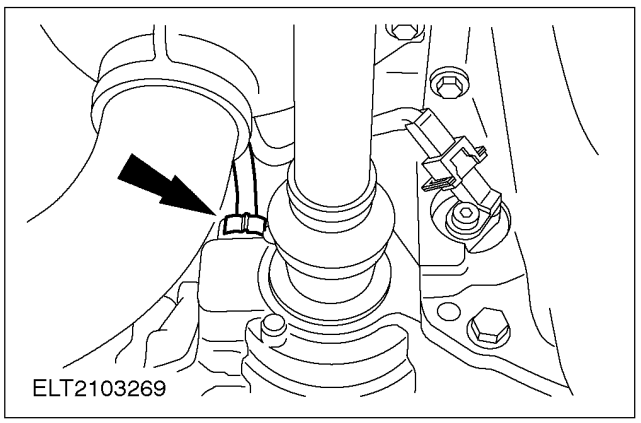

32. Attach the speedometer drive cable.

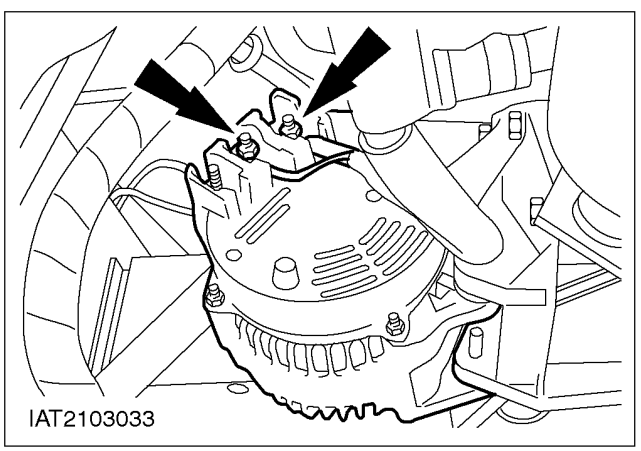

33. Connect the generator.

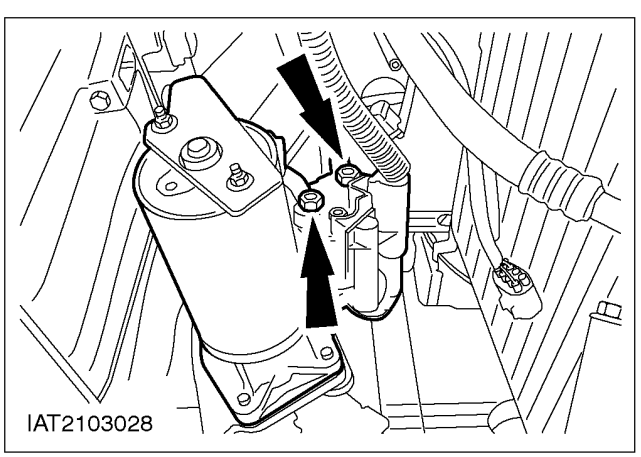

34. Connect the starter motor.

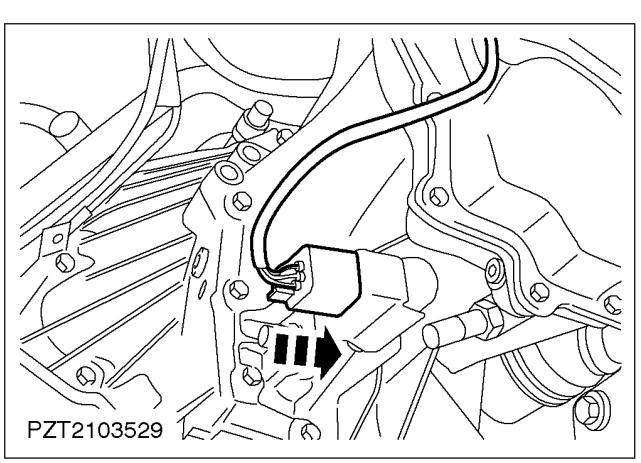

35. Connect the plug of the multi-function switch (where fitted).

INSTALLATION (CONTINUED)

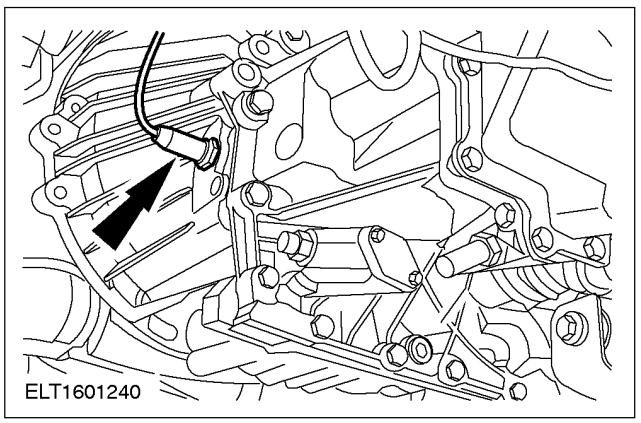

36. Connect the plug of the reversing light switch (where fitted).

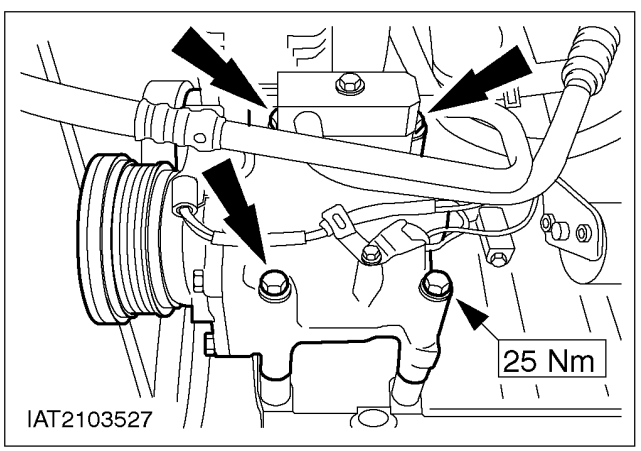

37. Fit the A/C compressor.

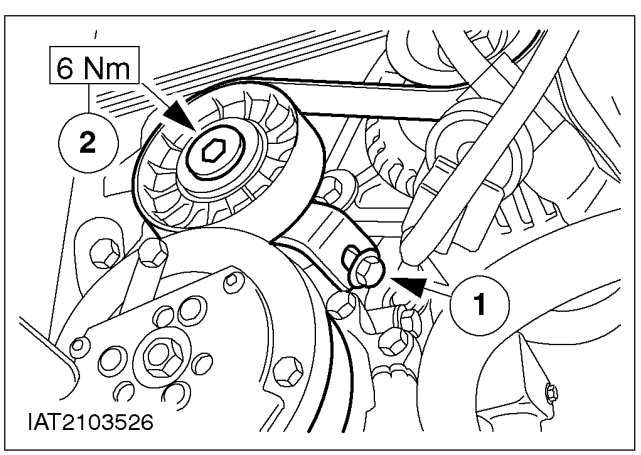

38. Fit the drive belt.
    1. Lay the drive belt in place and tension it via the bolt of the belt tensioner. For additional information, refer to Section 303-05.
    2. Tighten the hexagon socket head bolt of the tensioning pulley.

39. Locate the radiator and the fan plate with the fan in position on the radiator crossmember.

INSTALLATION (CONTINUED)

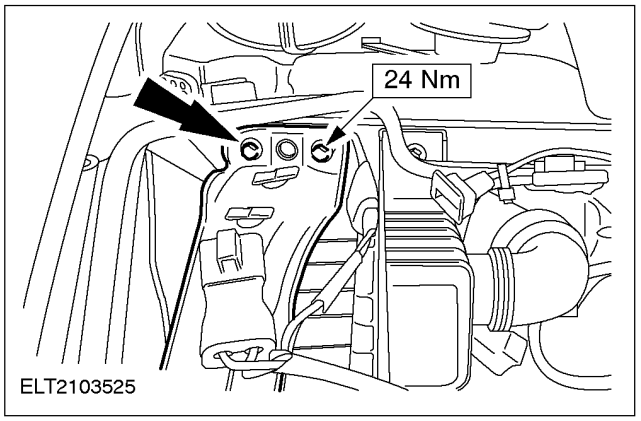

40. NOTE: The radiator is a push fit at the top.

NOTE: Secure the ground lead on the left-hand side using the radiator bolt.

Install the radiator (two bolts on each side; right-hand side shown).

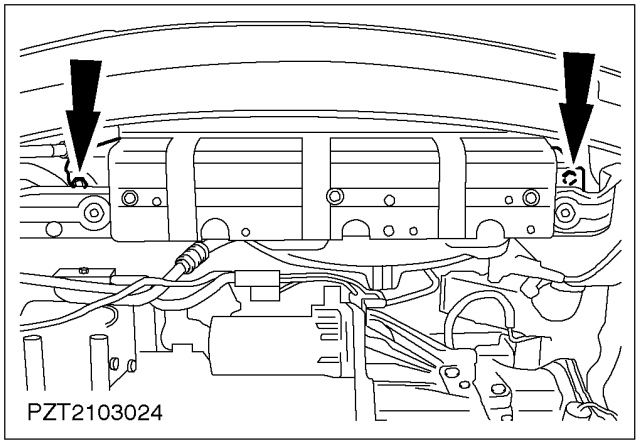

41. NOTE: The air conditioning condenser is a push fit at the top.

Align the air conditioning condenser and screw it in place at the bottom.

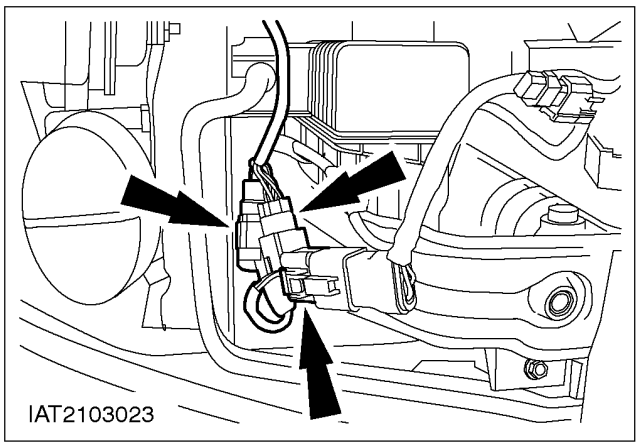

42. Connect the three plugs at the bottom of the radiator on the left-hand side.

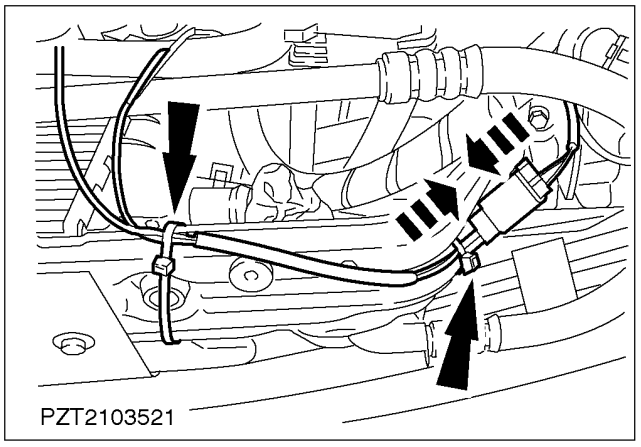

43. Connect the plug of the air conditioning wiring.
    - Secure the wiring to the radiator crossmember with cable ties.

INSTALLATION (CONTINUED)

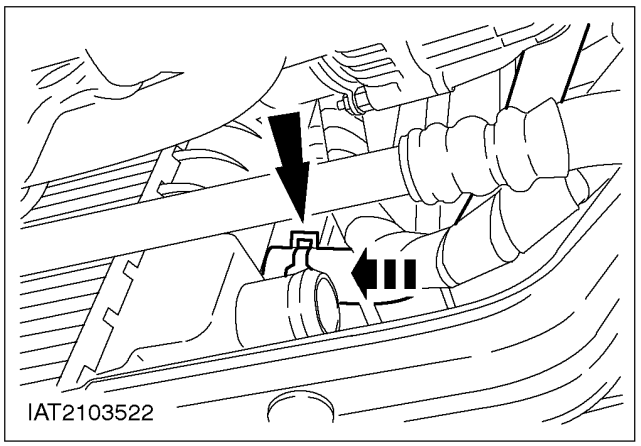

44. Connect the bottom right-hand coolant hose to the radiator.

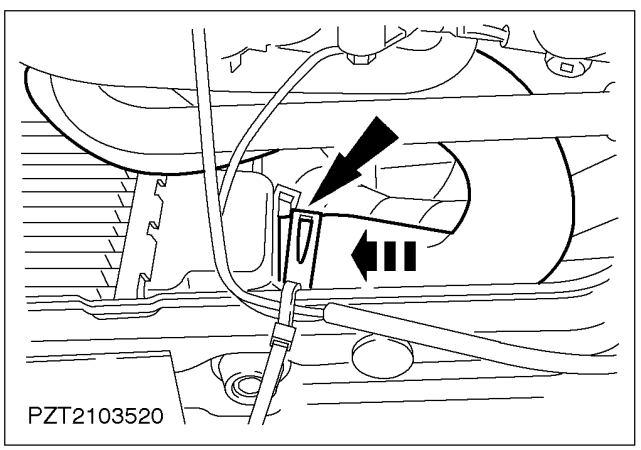

45. Connect the bottom coolant hose.

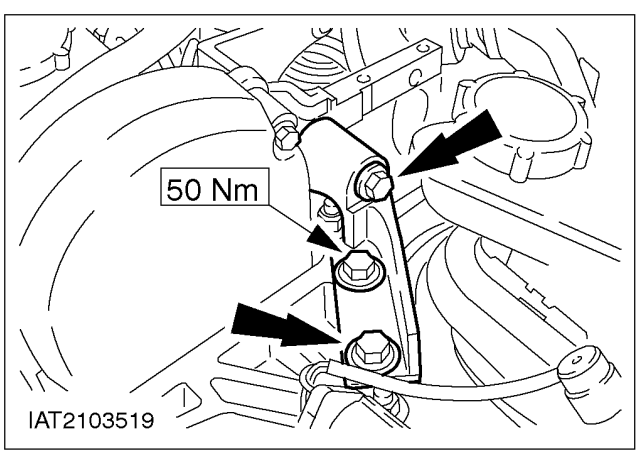

46. Lower the vehicle.

47. Attach the front engine mounting auxiliary bracket.

INSTALLATION (CONTINUED)

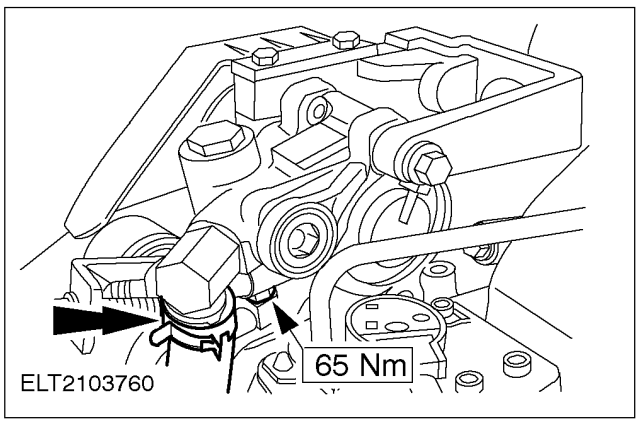

48. Connect the power steering hose and pressure pipe.

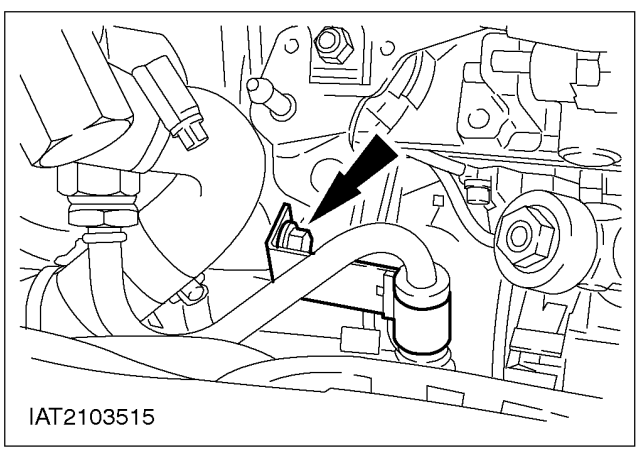

49. Connect the bracket of the power steering pressure pipe to the cylinder block.

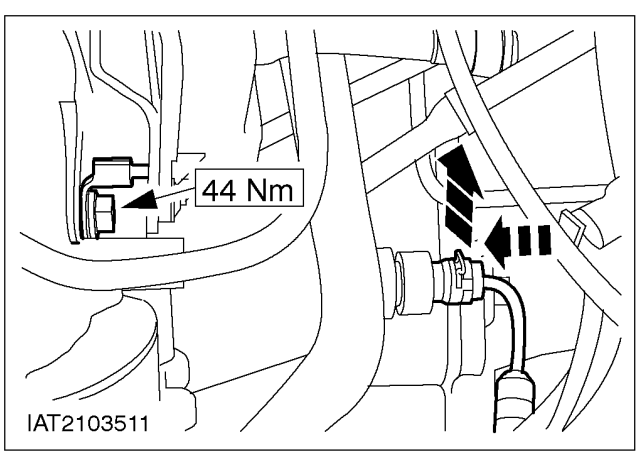

50. **NOTE:** Insert new O-rings.
Attach the hydraulic pipe of the clutch operating mechanism.

51. Attach the transmission ground lead.

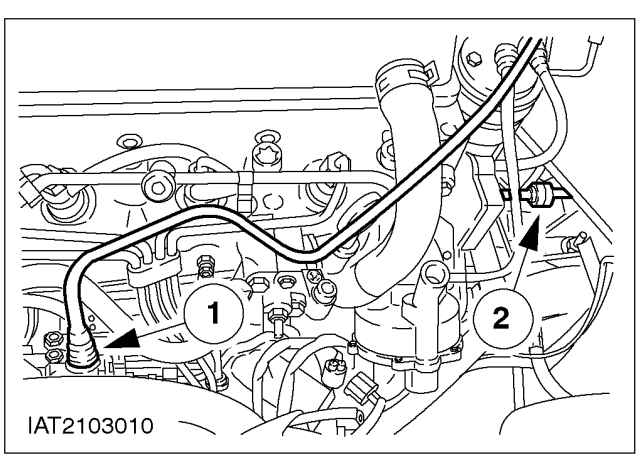

52. Connect the fuel lines.
    1. Fuel return line
    2. Fuel feed line to diesel fuel heater

INSTALLATION (CONTINUED)

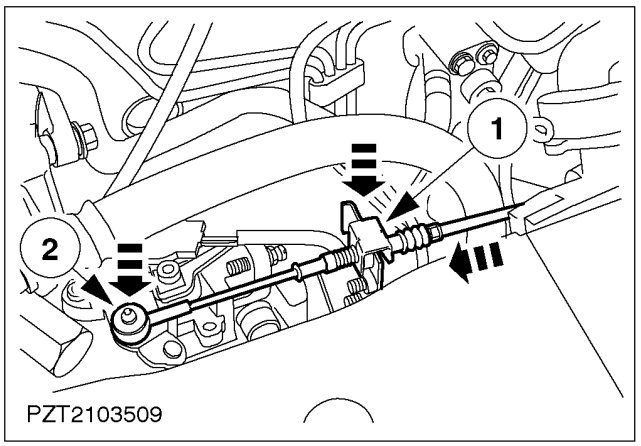

53. Attach the throttle cable.
    1. Slide the rubber bush and clip onto the bracket.
    2. Hook the accelerator cable in place.

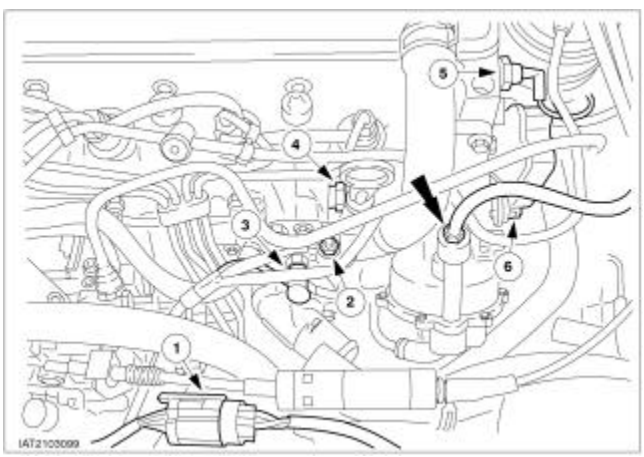

55. Connect the plugs and wiring:
    1. Plug of the injection pump wiring loom.
    2. Glow plug wiring
    3. Plug of the coolant temperature gauge sender unit.
    4. Plug of ECT sensor
    5. Plug of oil pressure switch
    6. Plug of diesel fuel heater
56. Attach the brake servo vacuum line.
57. Connect the plug of the EGR valve.

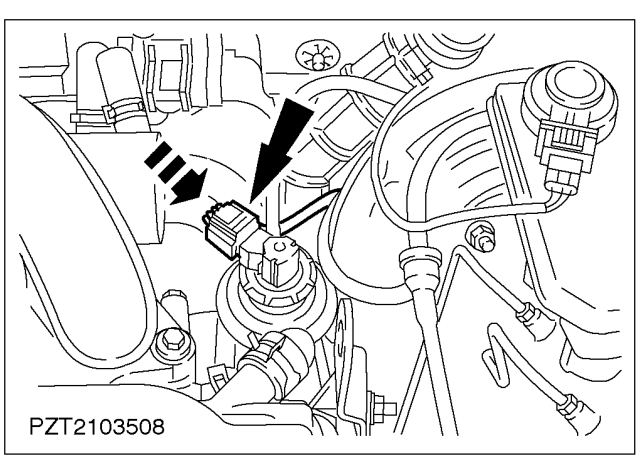

INSTALLATION (CONTINUED)

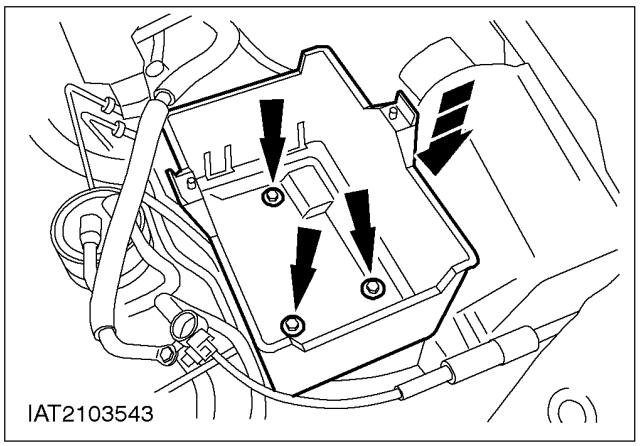

58. Fit the battery box.

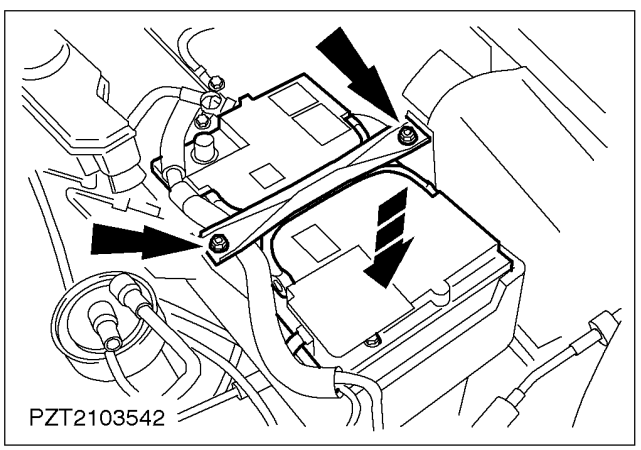

59. Install the battery.

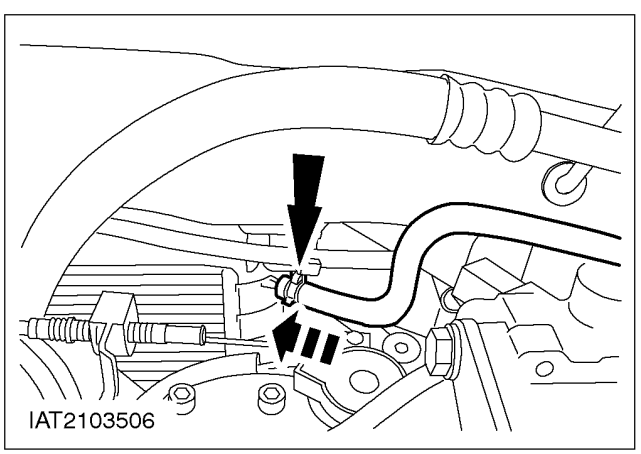

60. Attach the radiator vent hose.

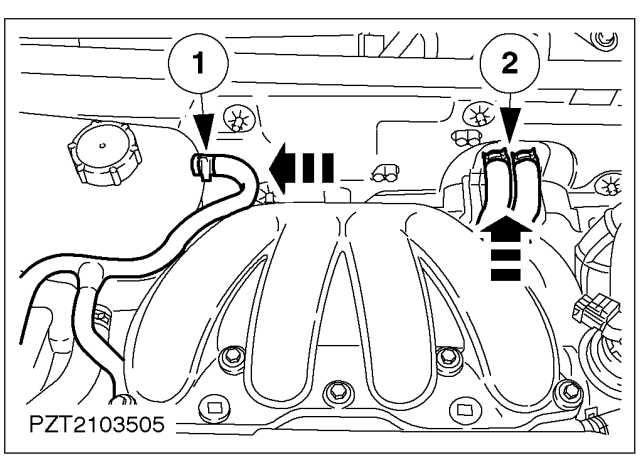

61. Attach the hoses.
    1. Vent hose
    2. Heater coolant hoses

INSTALLATION (CONTINUED)

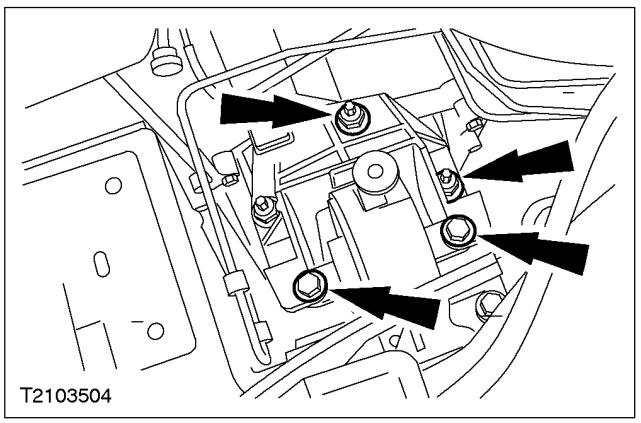

62. Attach the upper coolant hose.

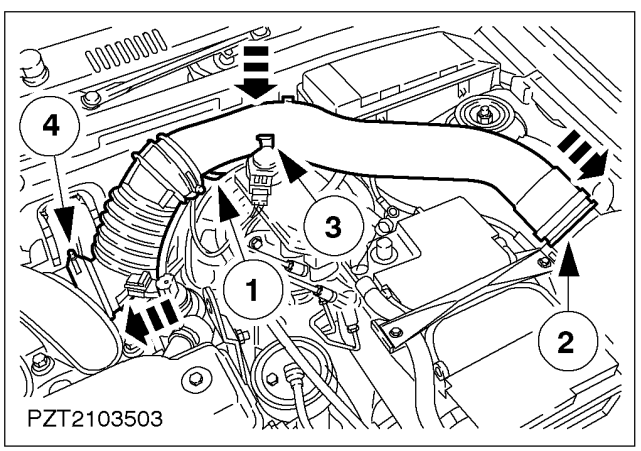

63. Install the air intake pipe.
    1. Attach the resonator hose (clamp).
    2. Insert it in the air cleaner housing (push fit).
    3. Clip it in place.
    4. Attach it to the intake manifold (clamp).

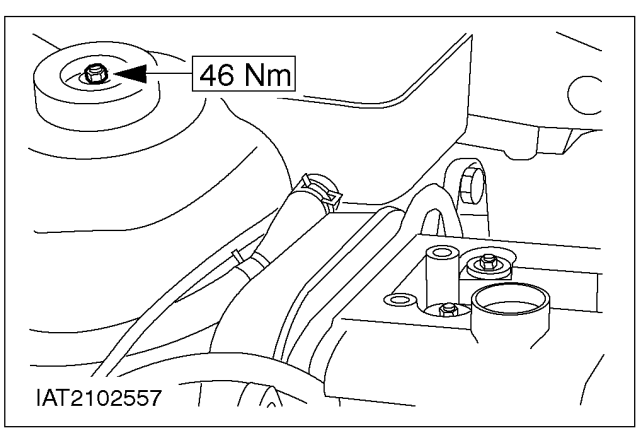

64. NOTE: When tightening the nuts, hold with an Allen key to prevent from turning.
Tighten the nut on both suspension struts.

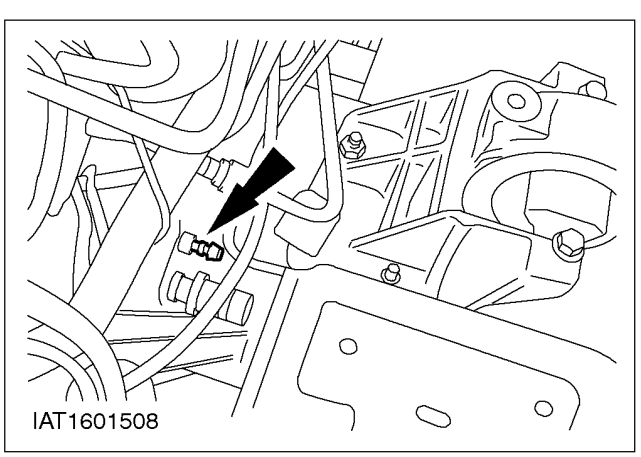

65. Bleed the hydraulic clutch system. For additional information, refer to Section 308-01.
    - If necessary, fill up the brake fluid reservoir with Ford brake fluid (SAM-6C9103-A).

INSTALLATION (CONTINUED)

66. Fill up the power steering reservoir and bleed the power steering. For additional information, refer to Section 211-00.

67. Standard finishing operations.
    - Fill up with coolant.
    - Check the transmission fluid level and correct as necessary.
    - Check the routing of vacuum hoses and wiring and secure with cable ties.
    - Connect the battery.
    - Enter the radio keycode.
    - Reprogram the preset radio stations.
    - Set the clock.
    - Carry out a road test to enable the PCM (EEC V) to collect data.
    - Check the engine and cooling system for leaks (visual inspection).
    - Check the fluid levels and correct as necessary.

GENERAL PROCEDURES

Valve Clearance (21 213 0)

Special Tool(s)	
21106	Compressor, bucket tappets 21-106
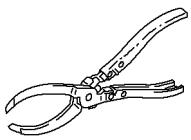 21107	Pliers, valve adjustment shims 21-107
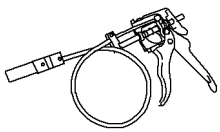 24003	Remover/installer, cooling hose clamp 24-003

General Equipment
Feeler gauge

Material	Specification
Valve shims	
Sealer	SPM-4G-9112-F/G

1. General note.
   - When removing and installing coolant and ventilation hoses, if necessary. For additional information, refer to Section 303-03.

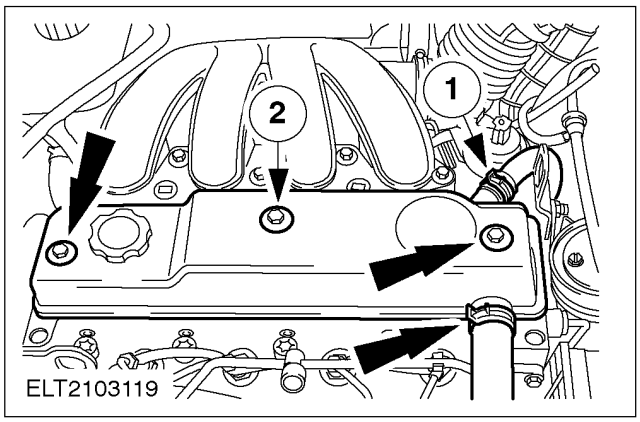

2. Remove the cylinder head cover.
   1. Detach the crankcase ventilation hoses.
   2. Remove the screws.

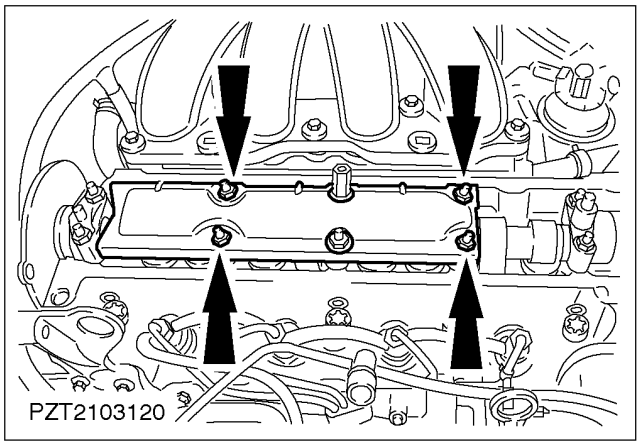

3. Remove the oil baffle.

GENERAL PROCEDURES (CONTINUED)

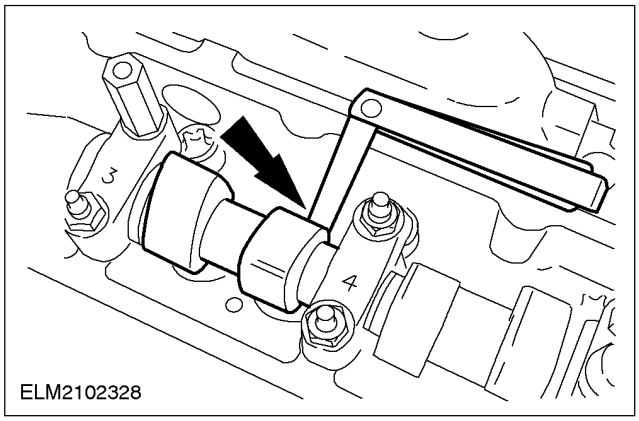

4. Check the valve clearances.
   - Turn the crankshaft until the two cams of the cylinder to be checked face evenly upwards.
   - Check the valve clearances with a feeler gauge and rectify as necessary by changing the shims as described in step

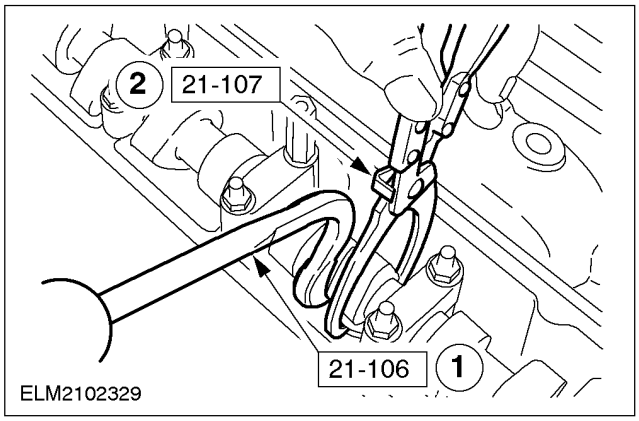

5. NOTE: Turn the crankshaft further through approx. 90 degrees. The piston of the cylinder that is to be adjusted must not be at TDC.

NOTE: The lettering on the valve shims faces downwards.

Change the valve shims.

1. Press down the two valve tappets simultaneously.
2. Change the valve shims.

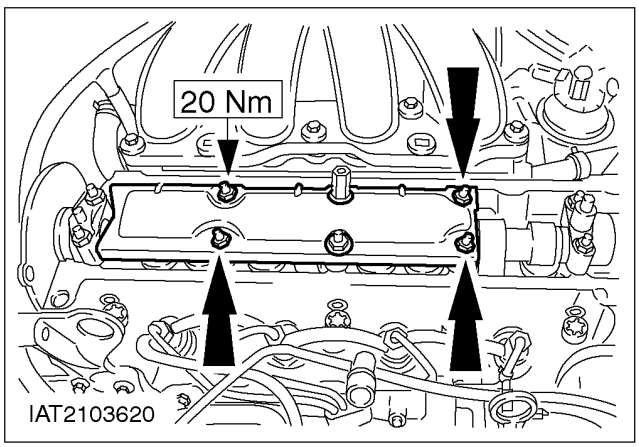

6. Fit the oil baffle.

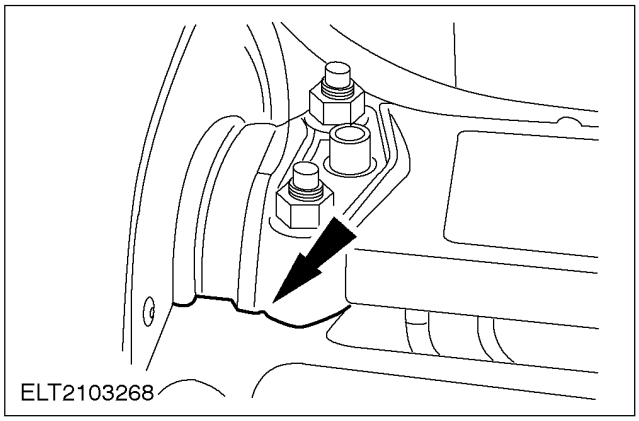

7. Seal the parting line between the bearing cap and the cylinder head on both sides with a thin bead of sealer (SPM-4G9112-F/G).

GENERAL PROCEDURES (CONTINUED)

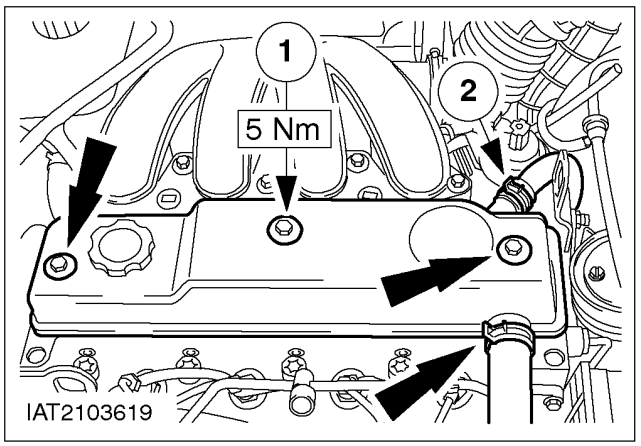

8. NOTE: Clean the cylinder head cover gasket and check it for damage. Only renew it if it is damaged. The gasket can be reused several times if it is in good condition.

NOTE: Before fitting the gasket, coat it lightly with engine oil.

Fit the cylinder head cover.

1. Screw in the bolts.
2. Attach the crankcase ventilation hoses.

SPECIFICATIONS

Engine Data

Engine management	Endura - DE	
Fuel	Diesel	
Engine code	RTK	RTJ
Injection sequence	1-3-4-2	
Bore mm	82,5 mm	
Stroke	82,0 mm	
Cubic capacity, effective	1753 cm^3	
Compression ratio	21,5 : 1	
Compression pressure at starter motor speed	28 - 34 bar	
Power output (EEC)	44 kW	
at	4800 rev/min	
Torque (EEC)	105 Nm	
at	2500 rev/min	
Idle speed	920 rev/min - 950 rev/min	
Idle speed (with air conditioning)	950 rev/min	
Max. engine speed, continuous	5350 rev/min ± 50 rev/min	
Max. intermittent engine speed	5200 rev/min ± 50 rev/min	

Dimensions

	Endura - DE
Cylinder Block	
Number of main bearings	5
	Dimensions in mm
Cylinder bore-Ø - Class A	82,500 - 82,515
Cylinder bore-Ø - Class B	82,515 - 82,530
Cylinder bore-Ø - Class C	82,660 - 82,675
Cylinder bore-Ø - Class D	82,675 - 82,690
Cylinder bore-Ø - Class E	83,000 - 83,015
Cylinder bore-Ø - Class F	83,500 - 83,515
Main bearing clearances (radial)	0,025 - 0,085
Main bearing parent bore	54,005 - 54,042
Crankshaft	
Main bearing journal-Ø - standard	53,970 - 53,990
1st undersize 0,25	53,720 - 53,740
2nd undersize 0,50	53,470 - 53,490
Big-end bearing journal-Ø - standard	48,970 - 48,990

	Endura - DE
1st undersize 0,25	48,720 - 48,740
2nd undersize 0,50	48,470 - 48,490
Big-end bearing clearances	0,025 - 0,085
Crankshaft end float	0,1436 - 0,3688
Connecting rod end float relative to crank web	0,125 - 0,325
Max. turning torque without connecting rods and pistons	10
Connecting rods	
Bore Ø - big-end	52,000 - 52,020
Bore Ø - small-end	26,012 - 26,020
Distance between connecting rod bores - Class A	129,872 - 129,948
Distance between connecting rod bores - Class B	129,932 - 130,008
Distance between connecting rod bores - Class C	129,992 - 130,068
Distance between connecting rod bores - Class D	130,052 - 130,128
Big-end bearing radial clearance	0,016 - 0,074
Pistons	
Piston Ø - Class A	82,460 - 82,475
Piston Ø - Class B	82,475 - 82,490
C	82,621 - 82,639
Piston Ø - Class D	82,636 - 82,654
Piston Ø - Class E	82,961 - 82,979
Piston Ø - Class F	83,461 - 83,479
Measured at right-angles to piston pin bore	
Piston clearance (initial fit) - Class A-F	0,025 - 0,055
Piston protrusion at TDC	0,500 - 0,840
Piston ring gaps (fitted)	Dimensions in mm
Upper compression ring	0,30 - 0,32
Lower compression ring	0,30 - 0,32
Oil scraper ring	0,250 - 0,580
Piston ring clearance in piston groove, upper ring	0,090 - 0,122
Lower ring	0,050 - 0,082
Oil scraper ring	0,030 - 0,062

	Endura - DE
Ring gap position	The piston-ring gaps must be evenly distributed on the circumference of the piston. This also applies to the elements of the oil scraper ring. In each case, offset the ring gaps by 120°_with respect to each other.
Piston pins	Dimensions in mm
Piston pins	25,96 - 26,00
Piston pin type	"Floating" in piston and connecting rod
Piston pin retention	Snap-ring
Cylinder head	Dimensions in mm
Camshaft bearing Ø - standard	30,500 - 30,525
Camshaft bearing-Ø - oversize	30,575 - 30,600
Bore Ø - valve tappet - standard	35,000 - 35,030
Bore Ø - valve tappet - oversize	35,500 - 35,530
Bore Ø - valve stem guide - standard	8,000 - 8,025
Bore Ø - valve stem guide - 1st oversize	8,263 - 8,288
Bore Ø - valve stem guide - 2nd oversize	8,463 - 8,488
Thickness of cylinder head gasket	Number of tooth marks
with piston protrusion of 0,500 - 0,680 mm	1,36 (2)
with piston protrusion of 0,681 - 0,740 mm	1,42 (3)
with piston protrusion of 0,741 - 0,840 mm	1,52 (4)
Max. permissible unevenness over entire cylinder head area	0,08 mm
Do not overhaul cylinder head mating face.	
Camshaft Valve timings, inlet valve opens BTDC	6°
Valve timings, inlet valve closes ABDC	32°
Valve timings, exhaust valve opens BBDC	57°
Valve timings, exhaust valve closes ATDC	7°
Cam lift (camshaft) - Inlet	9,0 mm
Cam lift - Exhaust	10,0 mm
End float	0,100 mm - 0,240 mm
	Dimensions in mm
Bearing journal Ø	27,960 - 27,980

	Endura - DE
Bearing clearances	0,020 - 0,079
Valve clearances (cold) - Inlet	0.35 ± 0,05
Valve clearances (cold) - Exhaust	0.50 ± 0.05
Adjustment shim thickness	3,000 - 4,750
in steps of	0,050

Engine Oil

Viscosity	Description	Specification
Recommended engine oil		
15W40		API CG4 / ACEA B3 / E3

Engine Lubrication

Oil Pressure	bar
Oil pressure (minimum) - at idle speed	0,75
(oil temperature approx. 80 °C) - at 2000 rev/min	1,50
Pressure relief valve opening pressure	2 - 4
Oil pump, max. inner/outer rotor clearance	0,174 mm

Lubricants, Fluids and Sealers

	Ford Specification
Transmission fluid	WSD-M2C200-C
Hypoid oil	SQM-2C9002-AA
Power steering hydraulic fluid	ESPM-2C-166-H
Ford DOT 4 brake fluid for hydraulic clutch system	SAM 6C9103A
Motorcraft Super-Plus 4 coolant concentrate	ESD M97B-49A
Sealer for camshaft bearing cap no. 1; sump/cylinder block	SPM-4G-9112-F/G
High temperature grease for transmission input shaft, guide sleeve - clutch release bearing, pilot bearing - crankshaft and clutch splines	ESD-M1C220-A

Filling Capacities

	Liters
Engine oil, initial fill with filter	5,0
with filter change	5,0
without filter change	4,5
Coolant - vehicles with manual transmission	9,3
Transmission fluid	2,8

	Liters
Transmission fluid	10 - 15 mm below filler/check bore

Torque Specifications

Description	Nm
Rear engine mounting bracket (nuts)	70
Rear engine mounting bracket (bolts)	50
Front engine mounting bracket (outer nut)	120
Front engine mounting bracket (inner nut)	70
Front engine mounting reinforcing bracket	50
Bracket, front engine mounting	33
Bracket, right-hand engine mounting	45
Engine roll restrictor to cylinder block	50
Engine roll restrictor to front axle	70
Right-hand front driveshaft center bearing	24
Lower suspension arm to spindle carrier	52
Track rod to spindle carrier	36
Stabiliser link rod to suspension strut	47
Rear exhaust pipe to flexible intermediate pipe	47
Stabiliser bar to transmission	55
Shift linkage to transmission	23
Compressor - Air Conditioning	25
Hexagon socket head bolt - tensioning pulley	6
Front engine mounting reinforcing bracket	50
Drive belt tensioner	6
Driveshaft stub nut	270
Wheel nuts	85
Resonator	11
Starter motor	44
Flange bolts - transmission to engine	44
Ground lead to transmission	44
Suspension strut nut	45

Torque Specifications

Description	Nm
Injection pump	24

Description	Nm
Injection pump cover	7
Injection pump bracket to cylinder block	23
Injection pump to bracket	20
Injection pump to bracket	20
Injection pipes	25
Injectors	70
Injection pump timing belt pulley	23
Timing belt tensioner for injection pump timing belt	45

Torque Specifications

Description	Nm
Coolant pump	23
Coolant pipe bracket to cylinder block	23
Radiator	24
Coolant drain plug to radiator	22

Torque Specifications

Description	Nm
Power steering pump bracket	23
Tensioning pulley for power steering drive belt	6
Power steering pump	23
Bracket for power steering fluid feed pipe	24
Belt pulley of power steering pump	23
Cover of power steering pump	10

Torque Specifications

Description	Nm
Flywheel - stage 1	18
Flywheel - stage 2	45°
Flywheel - stage 3	45°
Clutch	30
Crankshaft main bearing caps - stage 1	27
Crankshaft main bearing caps - stage 2	75°
Big-end bearing caps, stage 1	25
Big-end bearing caps, stage 2	60°
Big-end bearing caps - stage 3	20°
Front plate	24
Crankshaft rear oil seal housing	20

Description	Nm
Auxiliary shaft thrust plate	9
Auxiliary shaft oil seal housing	23
Bracket of engine mounting to cylinder block	33
Blanking plug for TDC adjustment hole	24
Auxiliary shaft timing belt pulley	45
Bolt of rear cover	24
Flange of crankshaft front timing belt pulley - stage 1	150
Flange of crankshaft front timing belt pulley - stage 2	-90° (undo)
Flange of crankshaft front timing belt pulley - stage 3	120
Flange of crankshaft front timing belt pulley - stage 4	60°
Crankshaft pulley/vibration damper	35
Alternator bracket	46
Alternator to bracket	25
Clamp bolt for alternator belt tensioner	6
Crankshaft position sensor (CKP sensor) to cylinder block	10
CKP sensor bracket	14

Torque Specifications

Description	Nm
Cylinder head bolts, stage 1.	10
Cylinder head bolts, stage 2.	100
Cylinder head bolts, stage 3.	-180°(undo)
Cylinder head bolts - stage 4.	70
Cylinder head bolts - stage 5.	120°
Cylinder Head Cover	5
Fuel filter bracket	23
Vacuum pump	20
Thermostat housing	22
Exhaust Manifold	24
Exhaust gas re-circulation valve (EGR valve)	20
EGR pipe clip	10
Upper inlet manifold	23
Intake manifold to cylinder head	23

Description	Nm
Exhaust manifold studs	13
Catalytic converter to exhaust manifold	24
Retaining plate for oil separator, fuel filter, fuel heater	20
Vacuum pump	20
Engine lifting eye	23
Camshaft bearing caps	20
Oil pressure switch	20
Flange for camshaft timing belt pulley	30
Injectors	70
Glow plugs	28
EGR valve	20
EGR pipe clip	10
Clamp bolt of camshaft timing belt tensioner	50
Camshaft timing belt pulley	9
Camshaft timing belt pulley (with automatic timing belt tensioner) with M8 bolt	35
Camshaft timing belt pulley (with automatic timing belt tensioner) with M10 bolt	48
Adjusting cam	45
Upper and lower timing belt cover	7
Side timing belt cover	8

Torque Specifications

Description	Nm
Oil intake pipe bracket	22
Oil pan	11
Oil drain plug on sump	24
Oil pump	23
Oil baffle	20
Oil dipstick tube bracket	10
Oil Pressure Switch	20

SECTION 303-03 Engine Cooling - 1.8L Diesel - Endura DE

VEHICLE APPLICATION: 2002 Bantam

SUBJECT **PAGE**

DESCRIPTION AND OPERATION

Engine Cooling....303-03-178
Antifreeze....303-03-178
Changing coolant....303-03-178

DIAGNOSIS AND TESTING

Engine Cooling....303-03-179
Inspection and Verification....303-03-179
Symptom Chart....303-03-179
Pinpoint Tests....303-03-179
Component Tests....303-03-179

REMOVAL AND INSTALLATION

Thermostat — Vehicles with 1.8L Endura DE Diesel Engine.... (24 454 0) 303-03-180/181
Cooling Fan Motor.... (24 222 0) 303-03-182/185
Radiator — Vehicles with 1.8L Endura DE Diesel Engine.... (24 254 0) 303-03-186/188
Water Pump — Vehicles with 1.8L Endura DE Diesel Engine.... (24 404 0) 303-03-189/192
Coolant Expansion Tank.... (24 284 0) 303-03-193

GENERAL PROCEDURES

Cooling System Draining, Filling and Bleeding — Vehicles with 1.8L Endura (24 122 0) 303-03-194/195
Cooling System Flushing....303-03-196
Cooling System Back flushing....303-03-197
Heater Core Back flushing....303-03-198

SPECIFICATIONS

Specifications....303-03-199
Fluids....303-03-199
Torque Specifications....303-03-199

DESCRIPTION AND OPERATION

Engine Cooling

WARNING: For reasons of safety, care should be taken to ensure that the ignition is switched off when working in the vicinity of the fan as an increase in coolant temperature may cause the fan to operate without warning.

The major cooling system components comprise an aluminum radiator core with plastic end tanks, water circulation pump, thermostat expansion tank and electrically driven cooling fan.

The wax type thermostat ensures rapid engine warm up by restricting coolant flow at lower operating temperatures, it also assists in maintaining engine operating temperatures between pre-determined limits.

The cooling fan is mounted within a shroud behind the radiator.

Antifreeze

WARNING: Antifreeze contains monoethylene glycol and other constituents which are toxic if taken internally and can be absorbed into the skin after prolonged contact.

Antifreeze content should be checked through the neck of the expansion tank with a hydrometer. The specific gravity (sg) of correctly balanced fluid is 1,061 (sg) at 15°C, which indicates an antifreeze concentration of 50%. If the concentration falls below 50% there is insufficient low temperature protection and the corrosion resistance will be inadequate. In such cases the concentration must be brought back to specification.

Changing coolant

WARNING: When draining the engine coolant or changing any cooling system components. It is imperative that no coolant comes into contact with the camshaft or auxiliary drive belts. If necessary the drive belts should be removed. Contamination of the drive belt can result in drive belt failure.

Engine coolant is formulated to last for the lifetime of the vehicle and does not require replacement at regular intervals. If however the coolant is lost or topping up is required the system should be refilled using L405F antifreeze to the correct proportion (50% antifreeze).

DIAGNOSIS AND TESTING

Engine Cooling

Inspection and Verification

1. Verify the customer concern by operating the system.
2. Visually inspect for obvious signs of mechanical or electrical damage.
3. If an obvious cause for an observed or reported concern is found, correct the cause (if possible) before proceeding to the next step.
4. If the concern is not visually evident, verify the symptom and refer to WDS.

Symptom Chart

Pinpoint Tests

Component Tests

REMOVAL AND INSTALLATION

Thermostat — Vehicles with 1.8L Endura DE Diesel Engine (24 454 0)

Special Tool(s)	
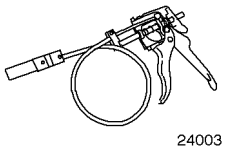 24003	Remover/Installer, cooling hose clamp 24-003

Removal

1. Drain the cooling system.
   Refer to the procedure in this section.
2. Disconnect the coolant hose.

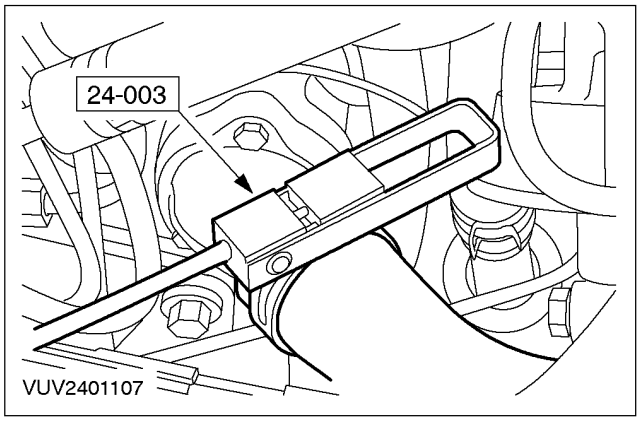

3. Remove the thermostat housing.

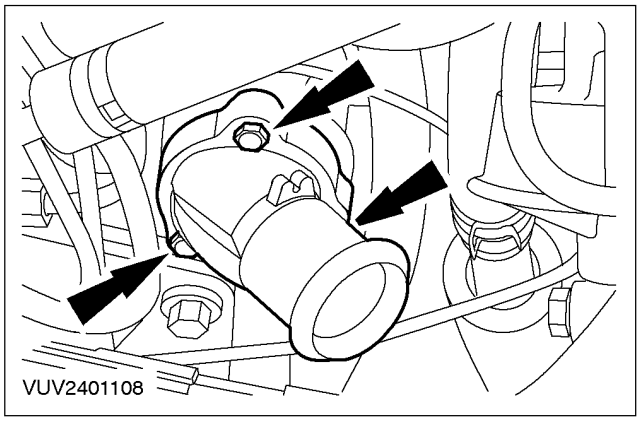

4. Remove the thermostat.

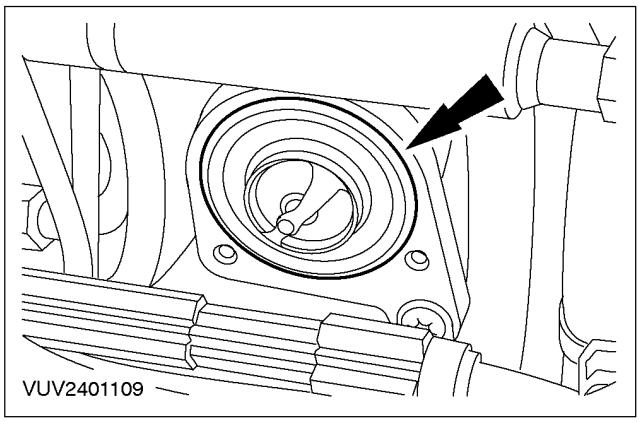

REMOVAL AND INSTALLATION (CONTINUED)

Installation

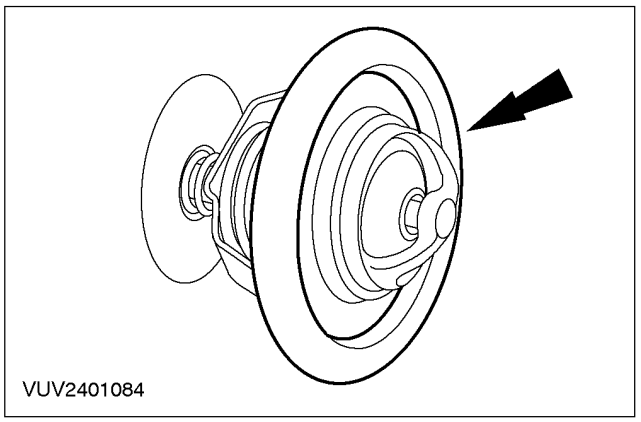

1. Install a new O-ring seal.

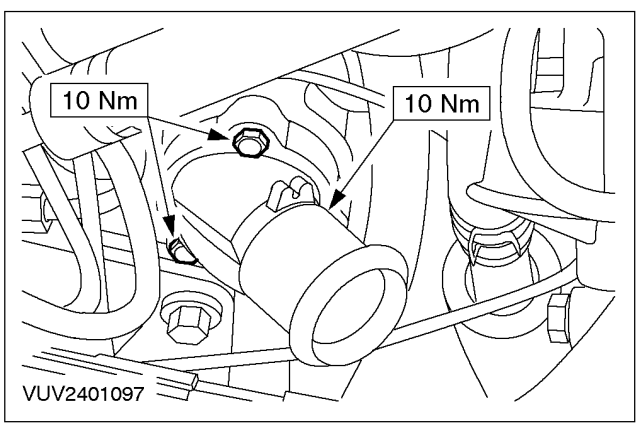

2. Install the thermostat and thermostat housing.

3. Install the remaining components in the reverse order.

4. Refill the cooling system.
   Refer to the procedure in this section.

REMOVAL AND INSTALLATION

Cooling Fan Motor (24 222 0)

Removal

1. Disconnect the battery ground cable.
2. Support the radiator.
   - Use suitable wire to support the radiator to the front panel.
3. Raise the vehicle.
4. Remove the lower air deflector (four screws).

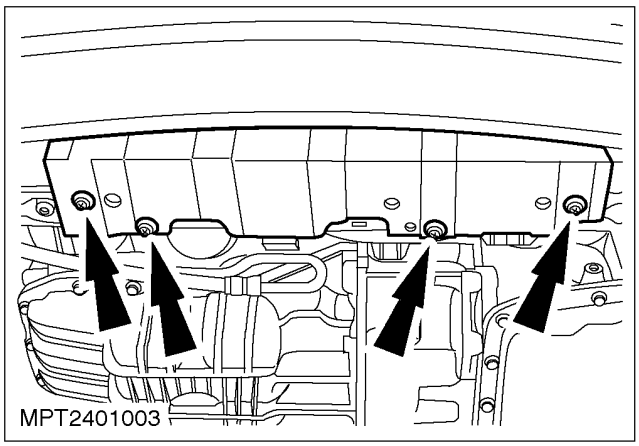

5. Disconnect the fan multiplug and unclip the wiring loom.

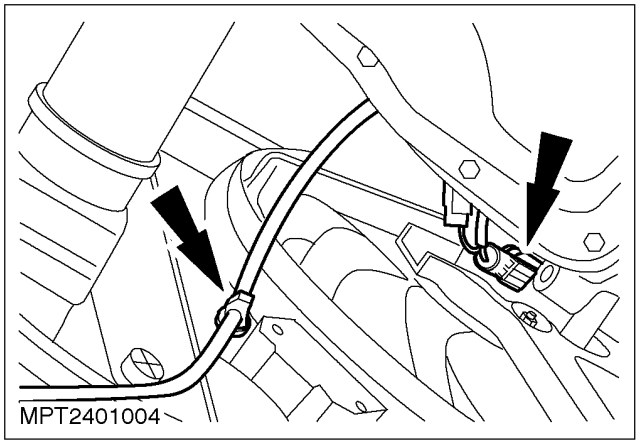

6. Disconnect the multiplug if fitted.

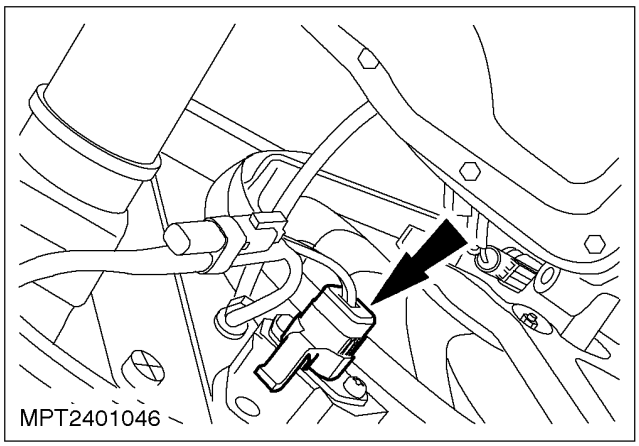

REMOVAL AND INSTALLATION (CONTINUED)

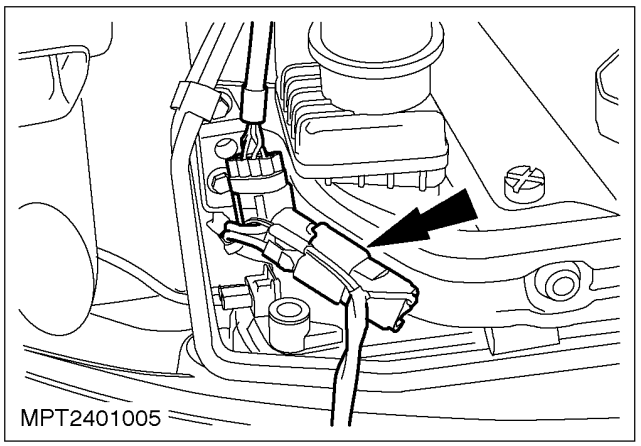

7. Detach the multiplug from the radiator support.

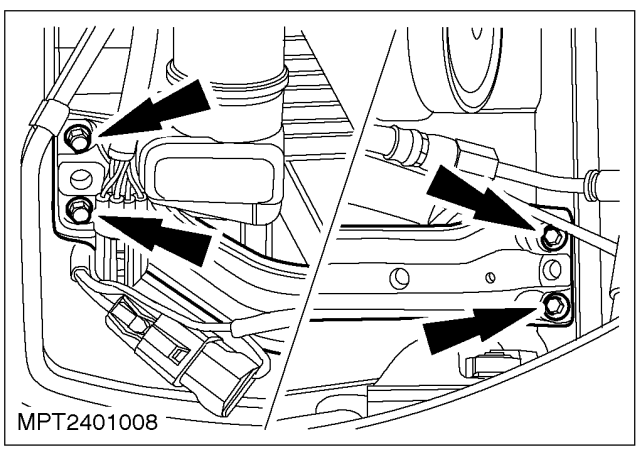

8. Remove the radiator support (four bolts).

Vehicles with automatic transmission

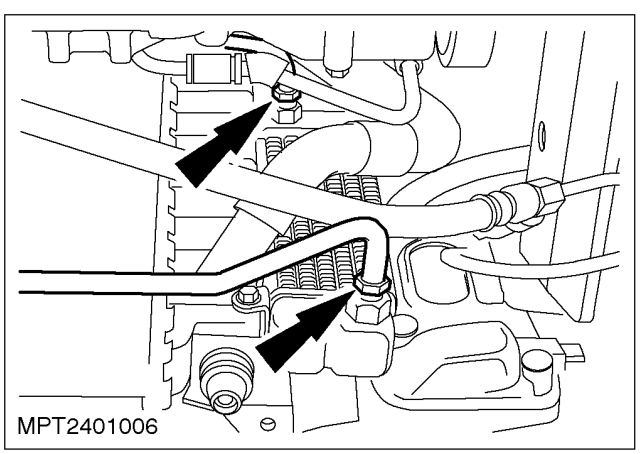

9. Loosen the transmission fluid cooler pipes.

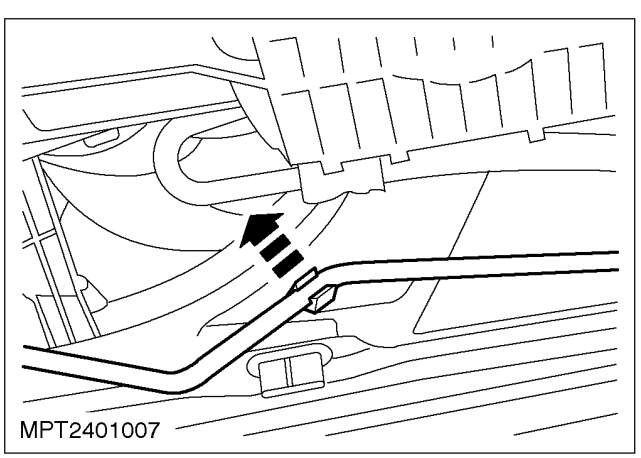

10. Unclip the transmission fluid pipe from the fan shroud.

REMOVAL AND INSTALLATION (CONTINUED)

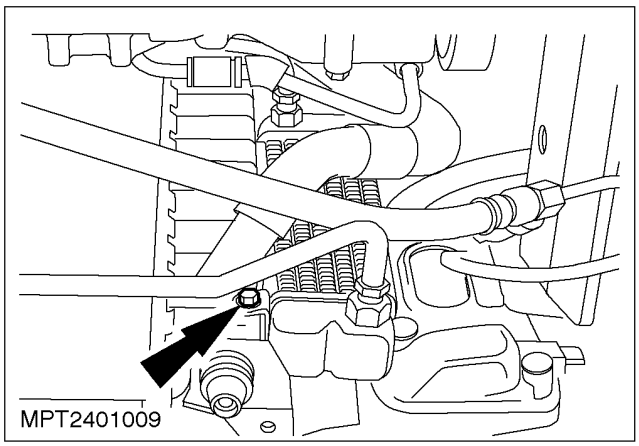

11. Remove the transmission fluid cooler retaining bolt.

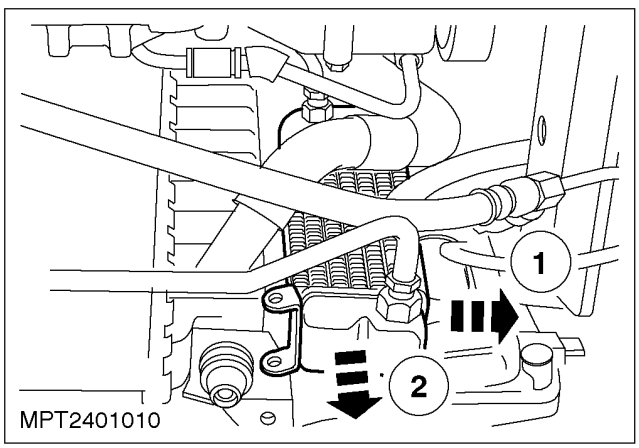

12. Detach the transmission fluid cooler from the radiator.
    1. Move the bottom of the cooler away from the radiator.
    2. Move the cooler downwards.
    - Take care not to stress the pipes whilst moving the cooler.

All vehicles

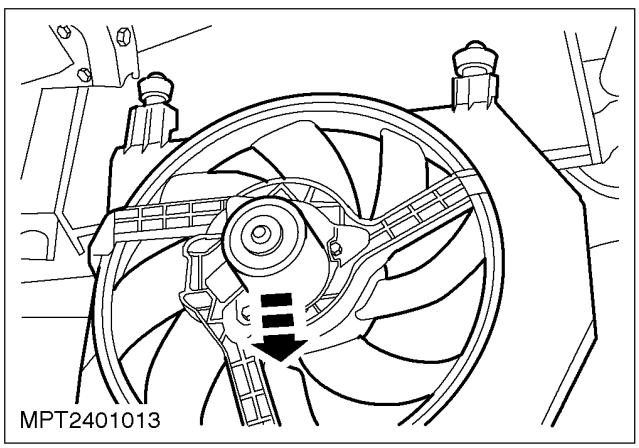

13. Remove the fan/shroud assembly.

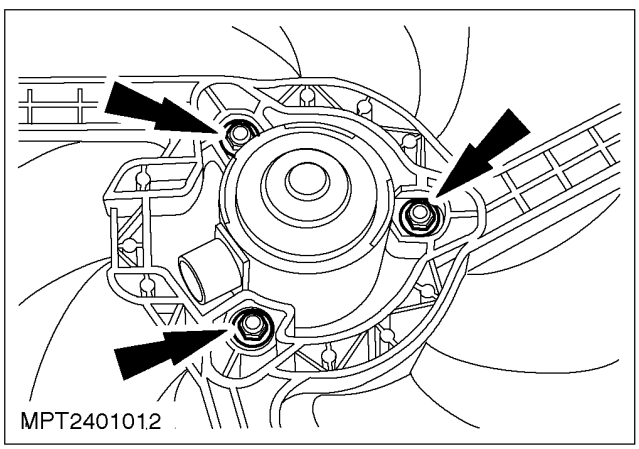

14. Remove the fan and motor assembly from the shroud (three nuts).

REMOVAL AND INSTALLATION (CONTINUED)

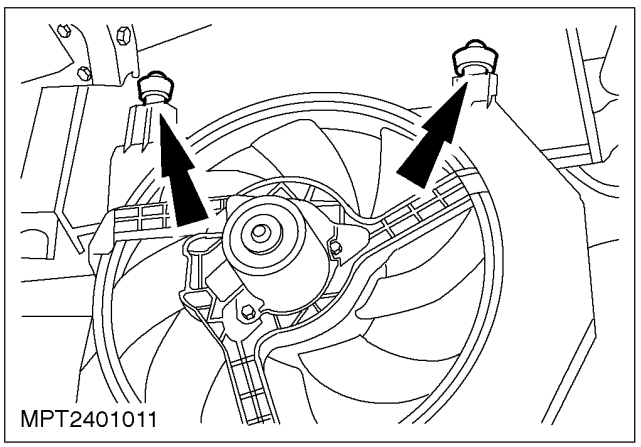

Installation

1. Refit the components in reverse order.
   - Make sure the lugs on the fan/shroud assembly are located correctly.

REMOVAL AND INSTALLATION

Radiator — Vehicles with 1.8L Endura DE Diesel Engine (24 254 0)

Removal

All vehicles

1. Disconnect the battery ground cable. For additional information, refer to Section 414-01.
2. Drain the cooling system. For additional information, refer to Cooling System Draining, Filling and Bleeding in this section
3. Disconnect the radiator hoses.

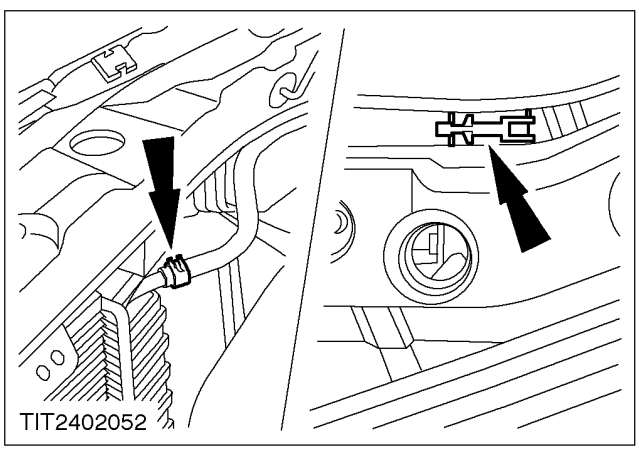

4. Raise and support the vehicle. For additional information, refer to Section 100-02.
5. Remove the lower air deflector (if equipped).

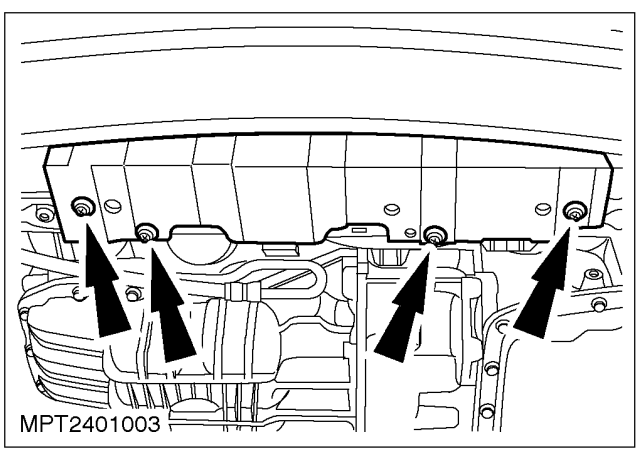

REMOVAL AND INSTALLATION (CONTINUED)

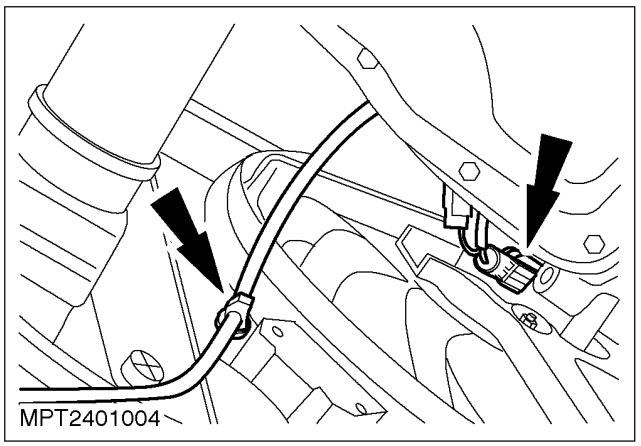

6. Disconnect the fan multiplug and unclip the wiring loom.

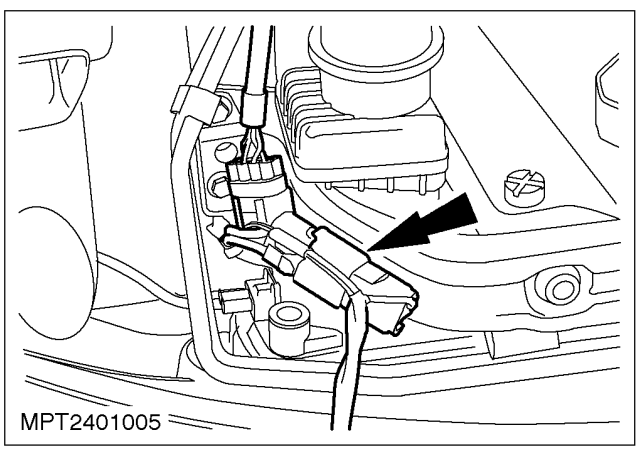

7. Detach the multiplug from the radiator support.

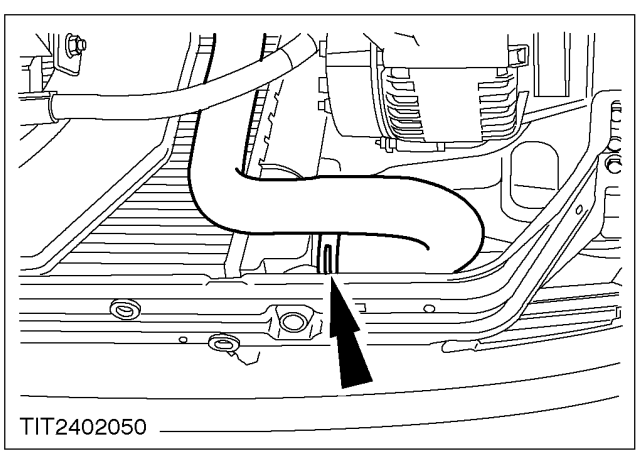

8. Disconnect the lower radiator hose.

Vehicles with air conditioning

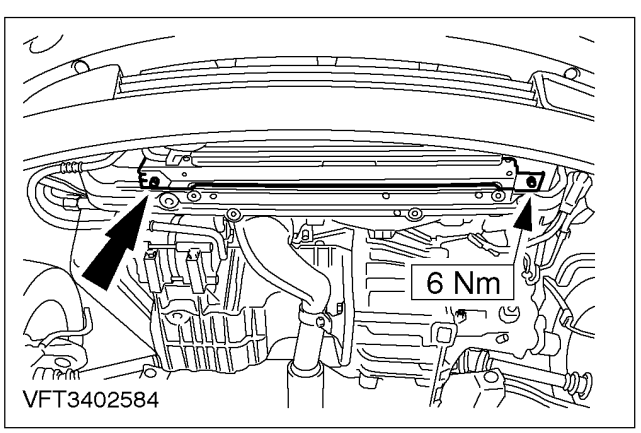

9. Detach and secure the air conditioning condenser from the radiator.

REMOVAL AND INSTALLATION (CONTINUED)

All vehicles

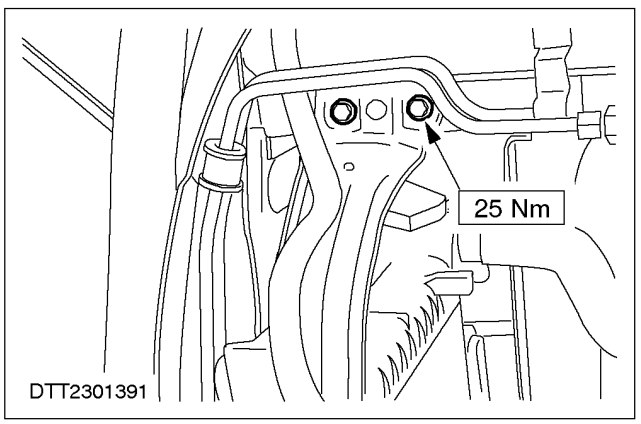

10. Support the radiator assembly and remove the four support retaining bolts (left-hand side shown).

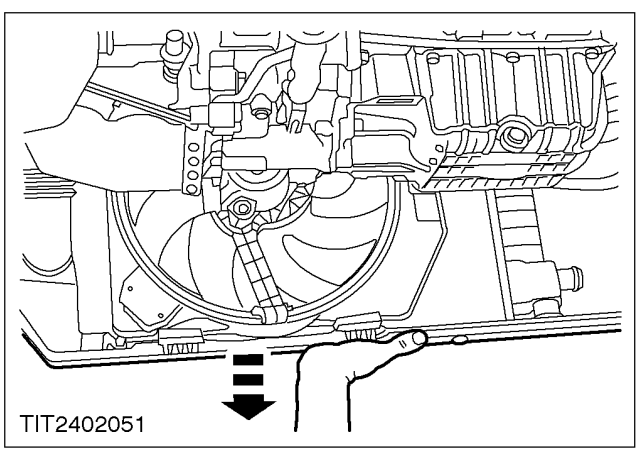

11. Remove the fan and radiator assembly complete.

12. If the radiator is to be renewed, remove the fan assembly.

Installation

1. To install, reverse the removal procedure.
2. Refill the cooling system and check for leaks. For additional information, refer to Cooling System Draining, Filling and Bleeding in this section

REMOVAL AND INSTALLATION

Water Pump — Vehicles with 1.8L Endura DE Diesel Engine (24 404 0)

Removal

1. Disconnect the battery ground cable. For additional information, refer to Section 414-01.
2. Drain the cooling system. For additional information, refer to Cooling System Draining, Filling and Bleeding in this section
3. Remove the timing belt. For additional information, refer to Section 303-01C. For Ikon

   For additional information, refer to Section 303-01D.
4. Remove the timing belt tensioner.
   - Collect the tensioner spring.

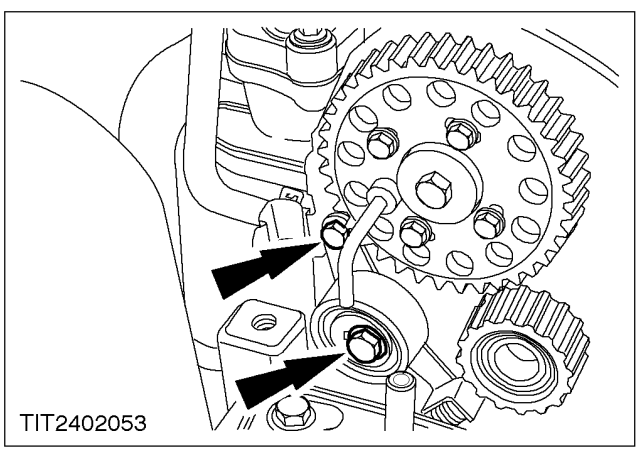

5. Accurately mark the position of the engine support insulator and remove the insulator.

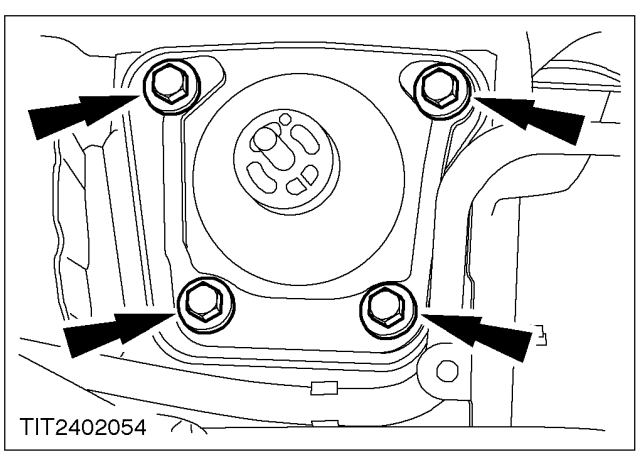

REMOVAL AND INSTALLATION (CONTINUED)

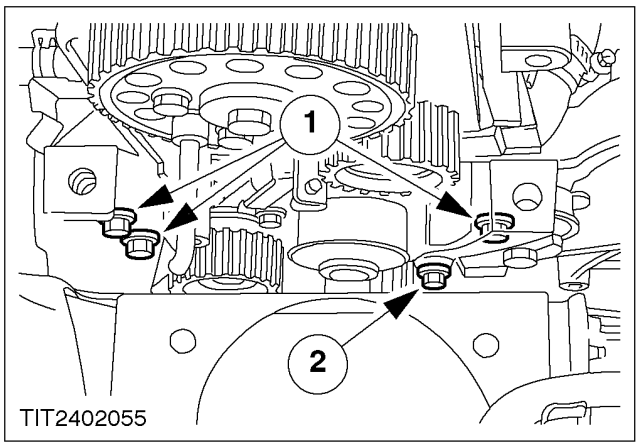

6. Detach the engine front mounting bracket.
   1. Completely remove the three bolts.
   2. Fully loosen the remaining bolt.

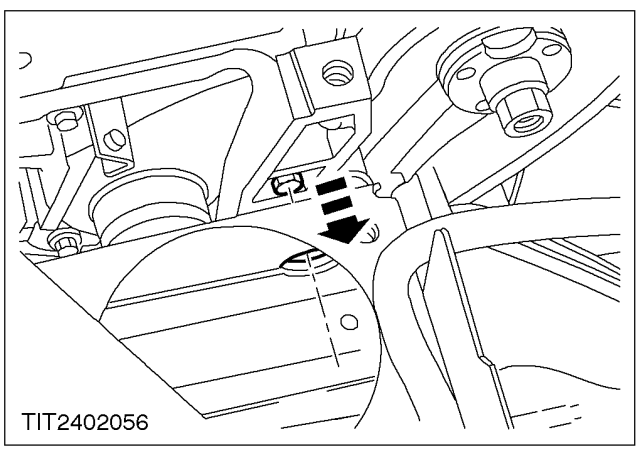

7. Raise the engine using a suitable jack and packing material, to allow the bolt to be withdrawn through the body bracket.

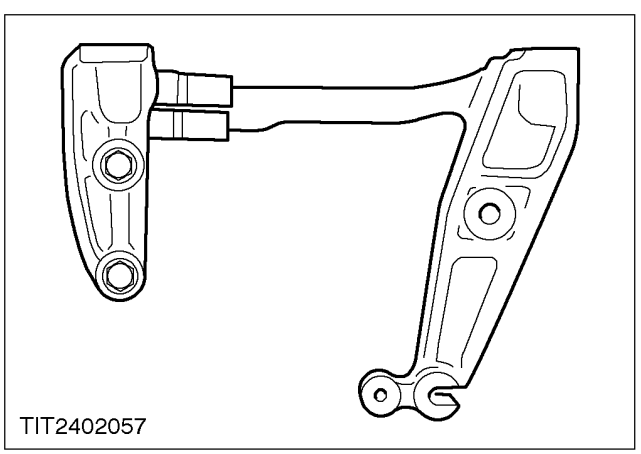

8. Remove the engine front mounting bracket and bolts (bracket shown removed for clarity).
   - The lower bolt hole is slotted to allow the bracket to be removed.

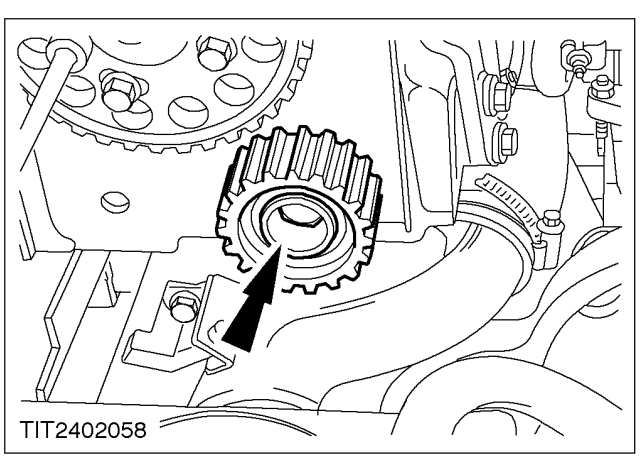

9. Remove the idler pulley.

REMOVAL AND INSTALLATION (CONTINUED)

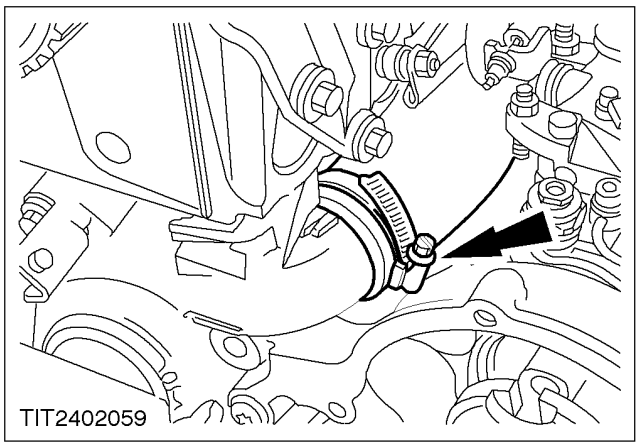

10. Disconnect the coolant hose from the water pump.

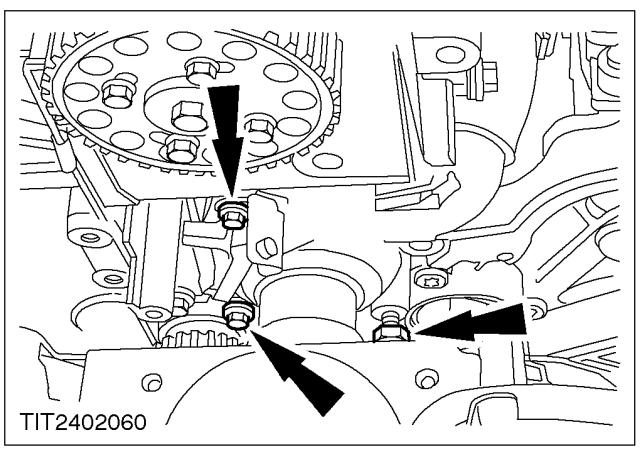

11. Remove the remaining water pump bolts.
    - Take care not to put undue stress on any pipes or wiring.

12. Raise the engine using a suitable jack and packing material, until the water pump can be removed.

Installation

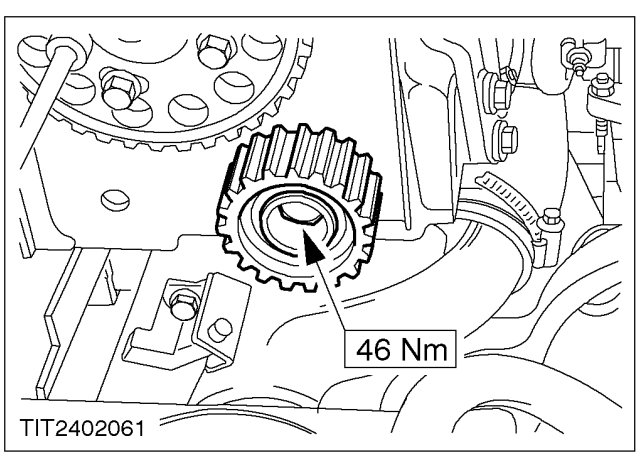

1. To install, reverse the removal procedure.

REMOVAL AND INSTALLATION (CONTINUED)

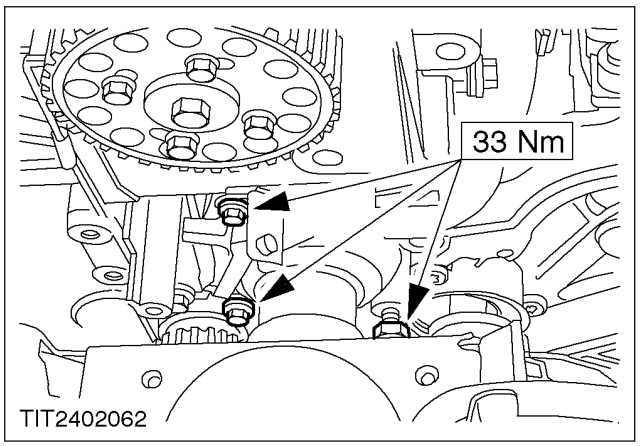

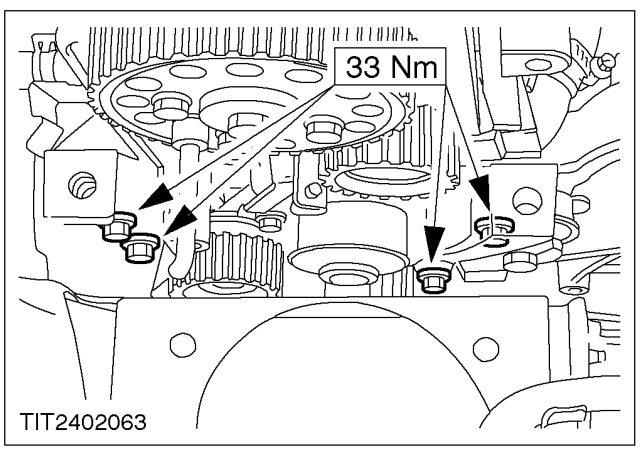

REMOVAL AND INSTALLATION

Coolant Expansion Tank (24 284 0)

Removal

1. Drain the cooling system. For additional information,
   refer to Cooling System Draining, Filling and Bleeding. In this section

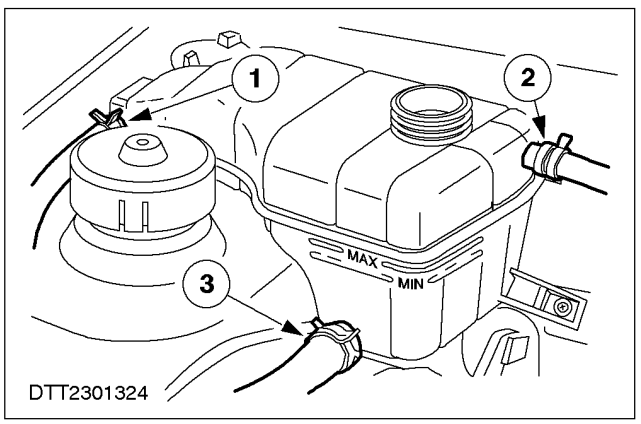

2. Disconnect the expansion tank hoses.
   1. Disconnect the radiator to expansion tank hose.
   2. Disconnect the engine to expansion tank hose.
   3. Disconnect the engine supply hose.

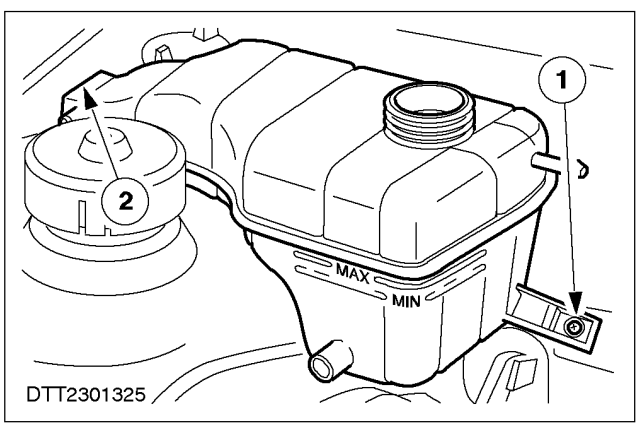

3. Remove the expansion tank.
   1. Remove the expansion tank retaining screw.
   2. Remove the expansion tank from the supporting bracket.

Installation

1. To install, reverse the removal procedure.
2. Refill the cooling system. For additional information,
   refer to Cooling System Draining, Filling and Bleeding. In this section

GENERAL PROCEDURES

Cooling System Draining, Filling and Bleeding

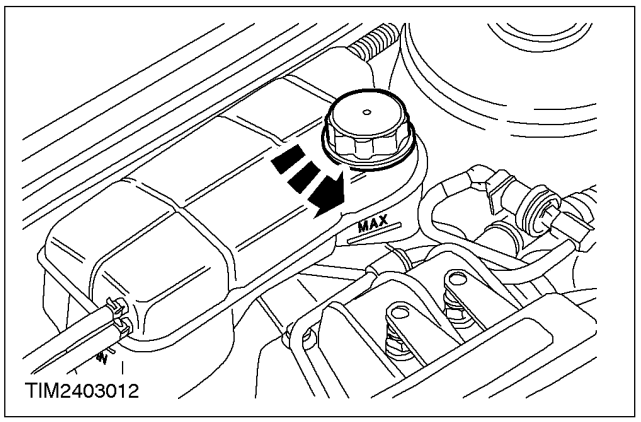

Drain

1. ⚠ **WARNING: When releasing the system pressure, cover the expansion tank cap with a thick cloth to prevent the possibility of coolant scalding.**
   Relieve the cooling system pressure.
   - Unscrew the cap slowly.

2. Remove the cap.

3. Raise and support the vehicle. For additional information, refer to Section 100-02.

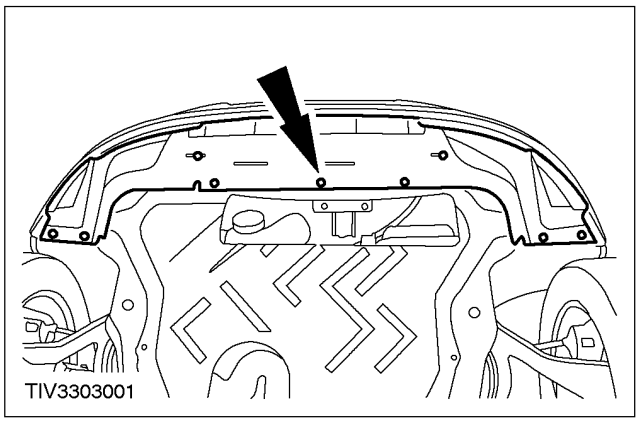

4. Remove the radiator undershield.

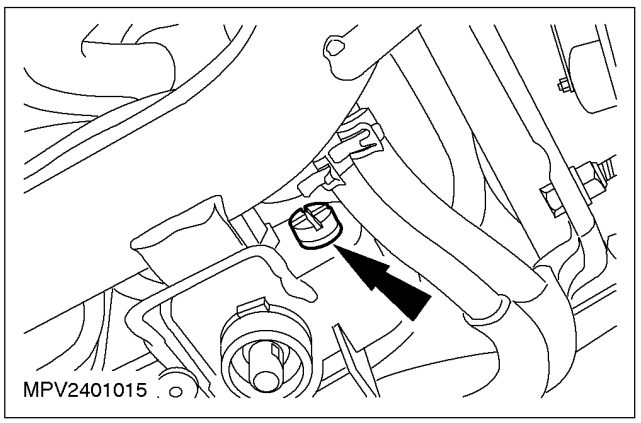

5. Remove the drain plug.
   - Drain the coolant into a suitable container.

6. Refit the drain plug when all coolant has drained.

7. Refit the radiator undershield.

8. Lower the vehicle.

GENERAL PROCEDURES (CONTINUED)

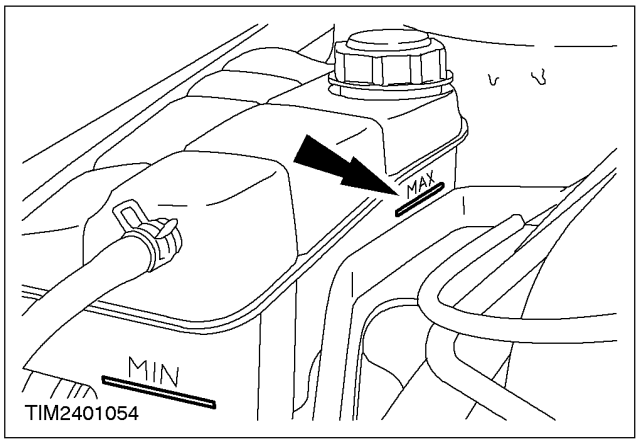

Refill

1. **NOTE:** For vehicles with a diesel engine, it is necessary to add a further one litre of coolant above the MAX mark to make sure that the correct level is achieved after the system degasses.
   Refill the expansion tank to the MAX mark.

2. Start the engine and run until normal operating temperature is achieved. Check for leaks and add coolant if necessary.

GENERAL PROCEDURES

Cooling System Flushing

1. To remove rust, sludge and other foreign material from the cooling system, use Premium Cooling System Flush that is safe for use with aluminum radiators, For additional information,
   refer to Specifications in this section.
   Remove the thermostat prior to pressure flushing. This cleaning restores cooling system efficiency and helps prevent overheating. A pulsating or reversed direction of flushing water will loosen sediment more quickly than a steady flow in the normal coolant flow direction. In severe cases where cleaning solvents will not properly clean the cooling system for efficient operation, it will be necessary to use the pressure flushing method using Cooling System Flusher. Dispose of old coolant and flushing water contaminated with antifreeze and cleaning chemicals in accordance with local, state or federal laws.

2. Remove the radiator.

3. ⚠ **CAUTION: Radiator internal pressure must not exceed 138 kPa. Damage may result.**
   Back flush the radiator with the radiator in an upside down position with a high-pressure water hose in the lower hose location and back flush.

4. Remove thermostat.
   Refer to Thermostat in this Section.

5. Back flush the engine. Position the high-pressure water hose into the engine through the engine return and back flush the engine.

GENERAL PROCEDURES

Cooling System Back flushing

CAUTION: The heater core must be back flushed separately from the engine cooling system to make sure correct back flush water flow direction through the heater core. All engine cooling system flushing and back flushing procedures must include a separate back flushing of the heater core or A/C system heater core after the flushing or back flushing of the engine cooling system to prevent the engine cooling system particles from clogging the heater core tubes and reducing (or preventing) coolant flow through the heater core.

1. Disconnect the heater outlet hose from the engine intake connector and install a garden hose (from a tap), with a male adapter into the end of the heater outlet hose. Secure with a hose clamp.
2. Connect a garden hose to the engine intake connector and secure with a hose clamp. Allow the open end to drain into a suitable container or drain.
3. Turn the water supply tap ON and OFF several times, so that the surge action will help to dislodge larger, stubborn particles from the heater core tubes. Allow water pressure to flow for approximately five minutes.
4. Remove the garden hose with the male adapter from the heater outlet hose. Remove the garden hose from the engine intake connector and reconnect the heater outlet hose onto the engine intake connector.
5. Fill the cooling system as described, using a 50/50 mixture of L405F cooling system fluid and water. For additional information, refer to Specifications in this section.
6. Test the system for correct heater operation within the engine cooling system conditions.

GENERAL PROCEDURES

Heater Core Back flushing

CAUTION: The heater core must be back flushed separately from the engine cooling system for proper back flush water flow direction through the heater core. All engine cooling system flushing and back flushing procedures must include a separate back flushing of the heater or A/C system heater core after the flushing or back flushing of the engine cooling system to prevent the engine cooling system particles from clogging the heater core tubes and reducing (or eliminating) coolant flow through the heater core.

1. Disconnect the outlet heater water hose from the engine and install a female garden hose and fitting adapter in the end of the heater outlet water hose. Secure with a hose clamp.
2. Connect the female hose end of the heater outlet water hose to the male end of a water supply garden hose.
3. Disconnect the heater inlet water hose from the engine and allow it to drain into a suitable container.
4. Turn the water supply valve ON and OFF several times so that the surge action will help to dislodge larger, stubborn particles from the heater core tubes. Allow water pressure to flow for approximately five minutes.
5. Remove the hose clamp and female garden hose end adapter from the heater outlet water hose and reconnect the heater outlet water hose onto the engine.
6. Connect the heater inlet water hose onto the engine.
7. Fill the cooling system as described, using a 50/50 mixture of L405F Cooling System Fluid and water.
8. Test the system for proper heater performance with the specified engine cooling system conditions.

SPECIFICATIONS

Fluids

	Ford Specification
L405F antifreeze	L405F

Torque Specifications

Description	Nm
Endura DE Diesel Engine Water pump retaining bolts	33
Endura DE Diesel Engine Thermostat housing retaining bolts	18
Endura DE Diesel Engine Water pump pulley retaining bolts	11
Radiator support bracket retaining bolts	25
Air conditioning condenser retaining bolts	6

SECTION 303-06 Starting System - 1.8L Diesel - Endura DE

VEHICLE APPLICATION: 2002 Bantam

SUBJECT **PAGE**

DESCRIPTION AND OPERATION

Starting System 303-06-201

DIAGNOSIS AND TESTING

Starting System 303-06-202
Inspection and Verification 303-06-202
Symptom Chart 303-06-202
Pinpoint Tests 303-06-202/210

REMOVAL AND INSTALLATION

Starter Motor — Vehicles with 1.8L Endura DE Diesel Engine ..... (26 204 0) 303-06-211/212

SPECIFICATIONS

Specifications 303-06-213
Torque Specifications 303-06-213

DESCRIPTION AND OPERATION

Starting System

Pre-engaged starter motors of Bosch or Magnetti Morelli manufacture are used.

Irrespective of model, all starter motors have an integral solenoid and all types have pinions, which engage with a ring gear during starting.

The ring gear is located on the outside of the flywheel.

Some starter motors are interchangeable in certain circumstances; refer to the Parts Microfiche for detailed information. Starter motors should be serviced as an assembly and should not, therefore, be dismantled.

DIAGNOSIS AND TESTING

Starting System

Inspection and Verification

WARNING: When performing engine compartment work near the starter, be aware that the heavy gauge battery input lead to the starter is electrically hot at all times.

1. Verify the customer concern.
2. Check for concerns with the following.

Visual Inspection Chart

Mechanical	Electrical
• Starter motor • Battery	• Fuse • Wiring • Connectors

3. If inspection reveals an obvious cause rectify this before continuing. If the concern remains, proceed to the symptom chart.

Symptom Chart

Symptom Chart

Condition	Possible Sources	Action
•The engine does not crank relay clicks	•Battery •Circuits •Starter motor	•GO to Pinpoint Test A
•The engine cranks slowly	•Battery •Circuits •Starter motor	•GO to Pinpoint Test B
•Unusual starter noise	•Starter motor •Ring gear	•GO to Pinpoint Test C
•Starter motor spins but engine does not crank	•Solenoid	•GO to Pinpoint Test D

Pinpoint Tests

PINPOINT TEST A: THE ENGINE DOES NOT CRANK OR THE RELAY CLICKS

A1: CHECK THE BATTERY CONNECTIONS 303-06-203
A2: CHECK THE BATTERY VOLTAGE 303-06-203
A3: CHECK SWITCHED POWER SUPPLY TO THE SOLENOID 303-06-203
A4: CHECK B+ TO THE STARTER 303-06-203/204
A5: CHECK THE STARTER GROUND CIRCUIT 303-06-204
A6: CHECK B+ TO STARTER RELAY 303-06-204
A7: CHECK RELAY GROUND CIRCUIT 303-06-205
A8: CHECK RELAY SWITCHING CIRCUIT 303-06-205
A9: CHECK FUSE 40 (60A) 303-06-205
A10: CHECK CIRCUIT 30 (RD) CONTINUITY 303-06-206
A11: CHECK THE IGNITION SWITCH 303-06-206
A12: CHECK CIRCUIT 50 (GY) CONTINUITY 303-06-206/207
A13: CHECK THE CONTINUITY OF CIRCUIT 50 (GY/BK) 303-06-207
A14: CHECK CIRCUIT 50 (GY/BK) FOR SHORT TO GROUND 303-06-207
A15: CHECK CIRCUIT 30 (RD) FOR SHORT TO GROUND 303-06-208
A16: CHECK CIRCUIT 50 FOR SHORT TO GROUND 303-06-208

PINPOINT TEST B: THE ENGINE CRANKS SLOWLY

B1: CHECK THE BATTERY VOLTAGE 303-06-208
B2: CHECK THE SUPPLY TO STARTER 303-06-209
B3: CHECK THE STARTER GROUND CIRCUIT 303-06-209

PINPOINT TEST C: UNUSUAL STARTER MOTOR NOISE

C1: CHECK THE STARTER MOUNTING 303-06-209
C2: CHECK THE STARTER DRIVE 303-06-210

DIAGNOSIS AND TESTING (CONTINUED)

Pinpoint Tests

PINPOINT TEST A: THE ENGINE DOES NOT CRANK OR THE RELAY CLICKS

CONDITIONS	DETAILS/RESULTS/ACTIONS
A1: CHECK THE BATTERY CONNECTIONS	
	1 Inspect the battery connections for loose/corroded connections. • Are the battery terminals clean and tight? **Yes** GO TO **A2** **No** CLEAN and TIGHTEN connections as required. TEST the system for normal operation.
A2: CHECK THE BATTERY VOLTAGE	
	1 Check the battery. Refer to Section 414-00. • Is the battery OK? **Yes** GO TO **A3** **No** CHARGE or INSTALL a new battery as required. Refer to Section 414-00. TEST the system for normal operation.
A3: CHECK SWITCHED POWER SUPPLY TO THE SOLENOID	
1 2 Solenoid single pin 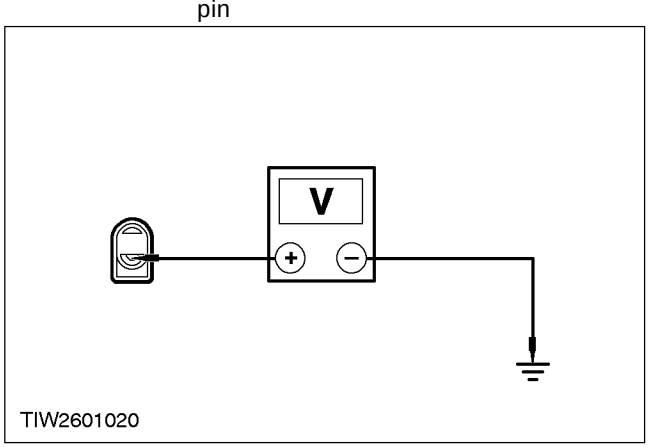 	3 Measure the voltage between the starter motor solenoid connector single pin, circuit 50 (GY/BK) and ground when the starter is operated. • Is the voltage greater than 10 volts? **Yes** GO TO **A4** **No** GO TO **A6**
A4: CHECK B+ TO THE STARTER	
1 	

DIAGNOSIS AND TESTING (CONTINUED)

CONDITIONS	DETAILS/RESULTS/ACTIONS
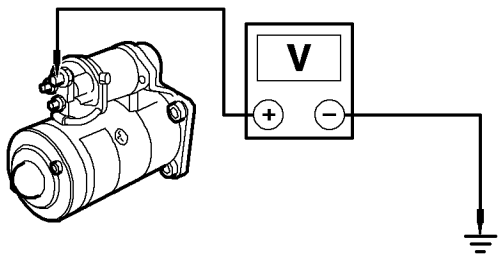 TIV2601013	**2** Measure the voltage between the starter motor terminal B, circuit 30 (RD) and ground. • Is the voltage greater than 10 volts? **Yes** GO TO **A5** **No** REPAIR circuit 30 (RD). TEST the system for normal operation.
A5: CHECK THE STARTER GROUND CIRCUIT	
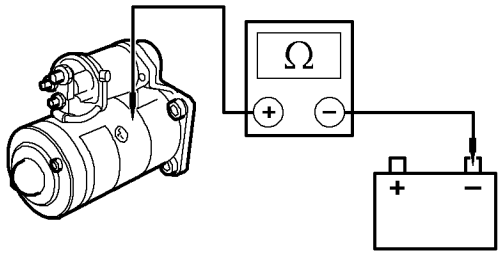 TIV2601016	**1** Measure the resistance between the starter motor casing and negative (-) battery terminal. • Is the resistance less than 5 ohms? **Yes** INSTALL a new starter motor. TEST the system for normal operation. **No** CLEAN and REPAIR grounds as required. TEST the system for normal operation.
A6: CHECK B+ TO STARTER RELAY	
1 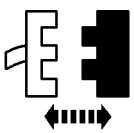 Starter relay 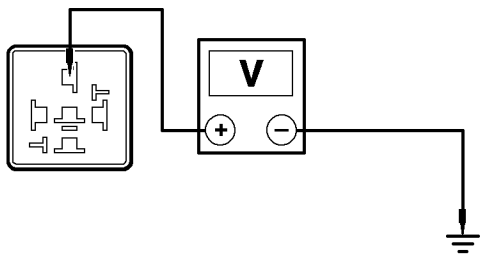 TIW2601010	**2** Measure the voltage between the starter relay connector pin 5, circuit 30 (RD) and ground. • Is the voltage greater than 10 volts? **Yes** GO TO **A7** **No** REPAIR circuit 30 (RD). TEST the system for normal operation.

DIAGNOSIS AND TESTING (CONTINUED)

CONDITIONS	DETAILS/RESULTS/ACTIONS
A7: CHECK RELAY GROUND CIRCUIT	
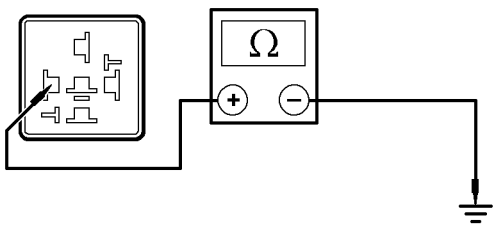 TIW2601011	**1** Measure the resistance between the starter relay connector pin 1, circuit 31 (BK) and ground. • Is the resistance less than 5 ohms? **Yes** GO TO **A8** **No** REPAIR circuit 31 (BK). TEST the system for normal operation.
A8: CHECK RELAY SWITCHING CIRCUIT	
1 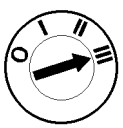 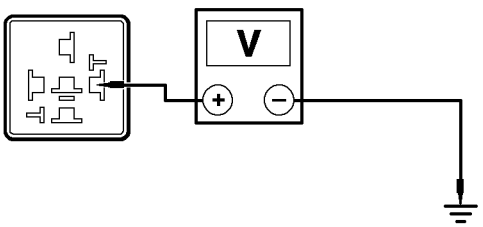 TIW2601012	**2** Measure the voltage between the starter relay connector pin 2, circuit 50 (GY) and ground. • Is the voltage greater than 10 volts? **Yes** GO TO **A13** **No** GO TO **A9**
A9: CHECK FUSE 40 (60A)	
1 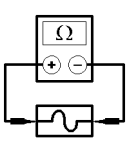 Fuse 40 (60A)	• Is the fuse OK? **Yes** GO TO **A10** **No** INSTALL a new fuse 40 (60A). TEST the system for normal operation. If fuse fails again GO TO **A15**

DIAGNOSIS AND TESTING (CONTINUED)

CONDITIONS	DETAILS/RESULTS/ACTIONS
A10: CHECK CIRCUIT 30 (RD) CONTINUITY	
1 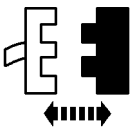 Ignition switch 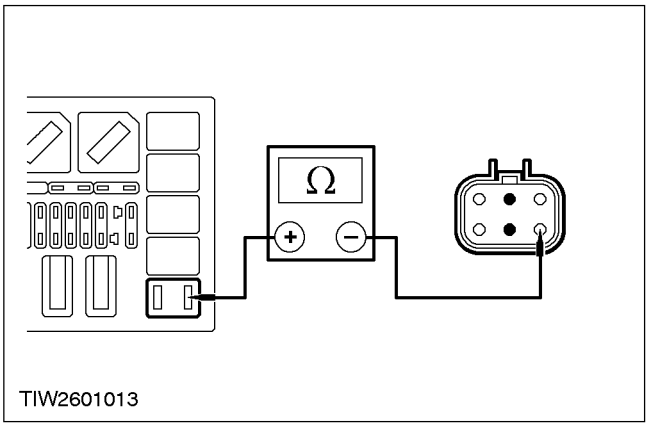	2 Remove the fuse 40 (60A). 3 Measure the resistance between the fuse 40 connector pin 1, circuit 30 (RD) and ignition switch connector pin 4, circuit 30 (RD). • Is the resistance less than 5 ohms? **Yes** GO TO **A11** **No** REPAIR circuit 30 (RD). TEST the system for normal operation.
A11: CHECK THE IGNITION SWITCH	
1 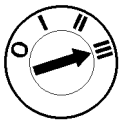 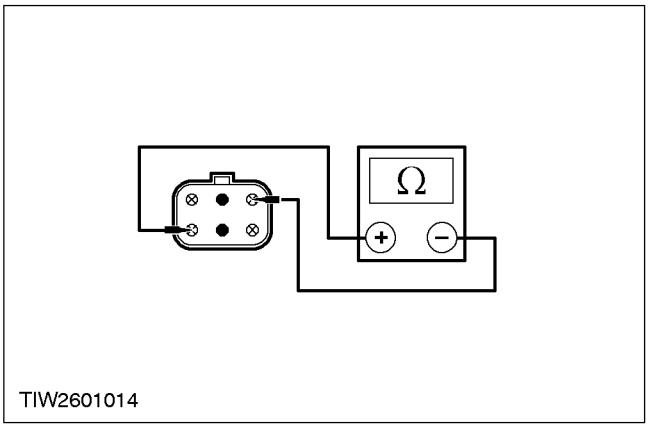	2 Measure the resistance between pin 4 and pin 3 of the ignition switch connector. • Is the resistance less than 5 ohms? **Yes** GO TO **A12** **No** INSTALL a new ignition switch. TEST the system for normal operation.
A12: CHECK CIRCUIT 50 (GY) CONTINUITY	
1 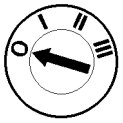	

DIAGNOSIS AND TESTING (CONTINUED)

CONDITIONS	DETAILS/RESULTS/ACTIONS
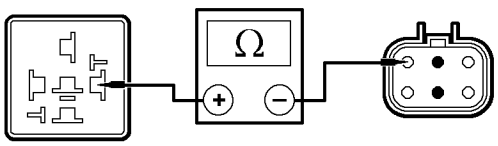 TIW2601015	**2** Measure the resistance between the ignition switch connector pin 3, circuit 50 (GY) and the starter relay connector pin 2, circuit 50 (GY). • Is the resistance less than 5 ohms? **Yes** RECONNECT the ignition switch. **GO TO A8** **No** REPAIR circuit 50 (GY). TEST the system for normal operation.
A13: CHECK THE CONTINUITY OF CIRCUIT 50 (GY/BK)	
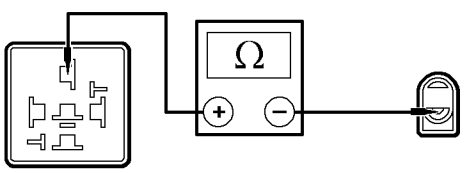 TIW2601016	**1** Measure the resistance between the starter motor solenoid connector, circuit 50 (GY/BK) and starter relay connector pin 3, circuit 50 (GY/BK). • Is the resistance less than 5 ohms? **Yes** GO TO **A14** **No** REPAIR circuit 50 (GY/BK). TEST the system for normal operation.
A14: CHECK CIRCUIT 50 (GY/BK) FOR SHORT TO GROUND	
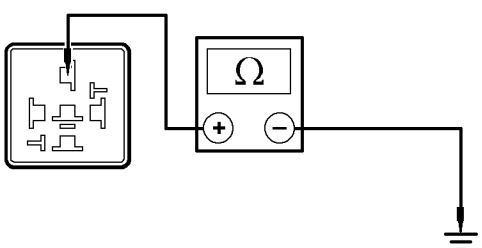 TIW2601017	**1** Measure the resistance between the starter relay connector pin 3, circuit 50 (GY/BK) and ground. • Is the resistance less than 5 ohms? **Yes** INSTALL a new starter relay. TEST the system for normal operation. **No** REPAIR circuit 50 (GY/BK). TEST the system for normal operation.

DIAGNOSIS AND TESTING (CONTINUED)

A15: CHECK CIRCUIT 30 (RD) FOR SHORT TO GROUND

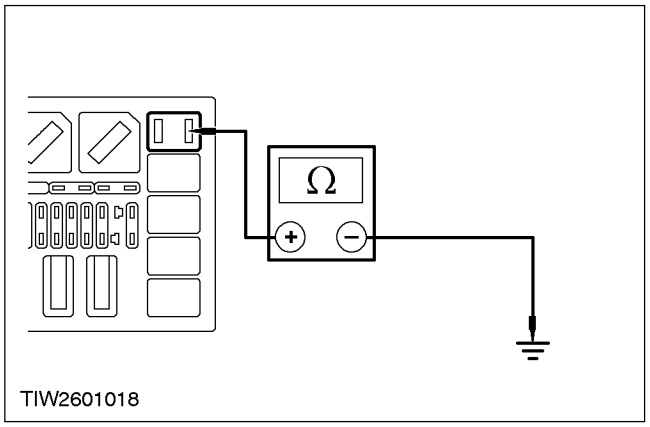

1 Remove fuse 36 (60A).

2 Measure the resistance between fuse 36 connector pin 1, circuit 30 (RD) and ground.

- Is the resistance greater than 10,000 ohms?
  Yes
  GO TO **A16**
  No
  REPAIR circuit 30 (RD). TEST the system for normal operation.

A16: CHECK CIRCUIT 50 FOR SHORT TO GROUND

1

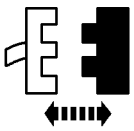

Ignition switch

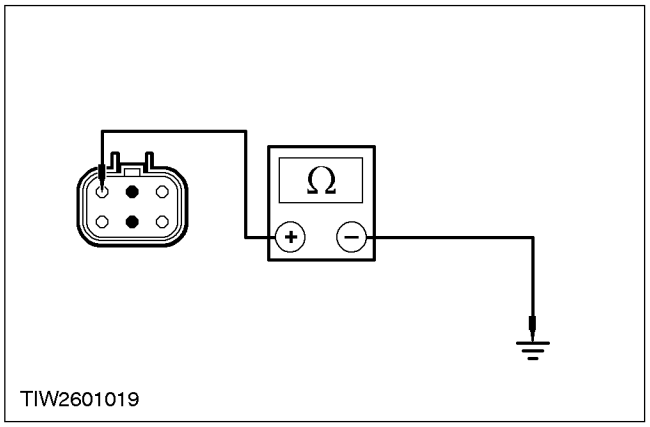

2 Measure the resistance between the ignition switch connector pin 3, citcuit 50 (GY) and ground.

- Is the resistance greater than 10,000 ohms?
  Yes
  CONNECT the ignition switch. GO TO **A8**
  No
  REPAIR circuit 50 (GY). TEST the system for normal operation.

PINPOINT TEST B: THE ENGINE CRANKS SLOWLY

CONDITIONS	DETAILS/RESULTS/ACTIONS

B1: CHECK THE BATTERY VOLTAGE

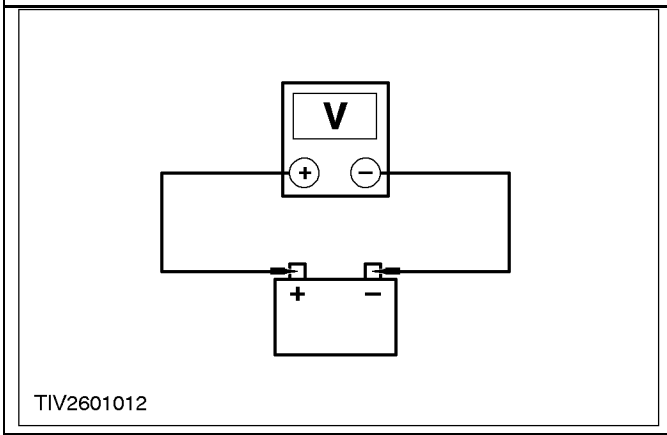

1 Measure the voltage between the battery terminals.

- Is the voltage greater than 12.5 volts?
  Yes
  GO TO **B2**
  No
  CHARGE or INSTALL a new battery as required. REFER to Section 414-00.
  TEST the system for normal operation.

DIAGNOSIS AND TESTING (CONTINUED)

CONDITIONS	DETAILS/RESULTS/ACTIONS
B2: CHECK THE SUPPLY TO STARTER	
1 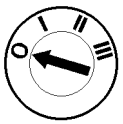 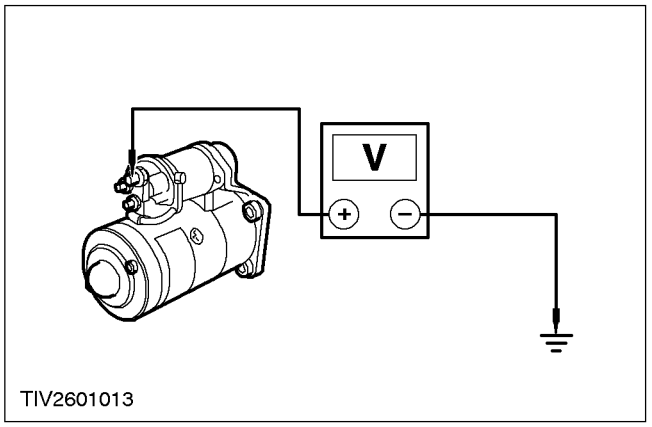	2 Measure the voltage between the starter terminal B, circuit 30 (RD) and ground. • Is the voltage greater than 12.5 volts? **Yes** GO TO **B3** **No** REPAIR circuit 30 (RD). TEST the system for normal operation.
B3: CHECK THE STARTER GROUND CIRCUIT	
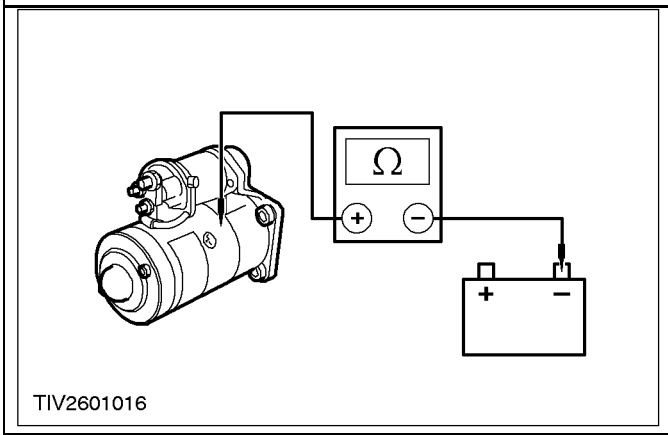	1 Measure the resistance between the starter motor casing and negative (-) battery terminal. • Is the resistance less than 5 ohms? **Yes** INSTALL a new starter motor. TEST the system for normal operation. **No** CLEAN and REPAIR grounds as required. TEST the system for normal operation.

PINPOINT TEST C: UNUSUAL STARTER MOTOR NOISE

CONDITIONS	DETAILS/RESULTS/ACTIONS
C1: CHECK THE STARTER MOUNTING	
	1 Check the starter and mounting brackets for correct alignment. • Is the starter mounted correctly? **Yes** GO TO **C2** **No** INSTALL the starter motor. Refer to the procedure in this section. TEST the system for normal operation.

DIAGNOSIS AND TESTING (CONTINUED)

C2: CHECK THE STARTER DRIVE	
	1 Remove the starter motor. Refer to the procedure in this section. 2 Inspect the ring gear for damage and wear. • Is the ring gear damaged? **Yes** REPAIR ring gear as required. TEST the system for normal operation. **No** INSTALL a new starter motor. TEST the system for normal operation.

REMOVAL AND INSTALLATION

Starter Motor — Vehicles with 1.8L Endura DE Diesel Engine (26 204 0)

Removal

1. Disconnect the battery ground cable.
2. Raise the vehicle.
3. Disconnect the starter motor wiring.

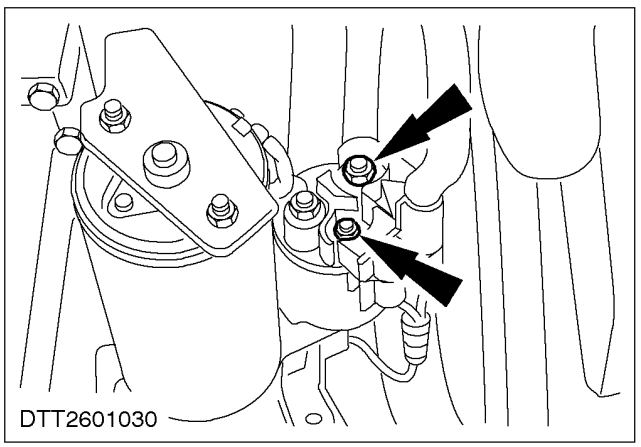

4. Remove the starter motor support bracket (two nuts, one bolt).

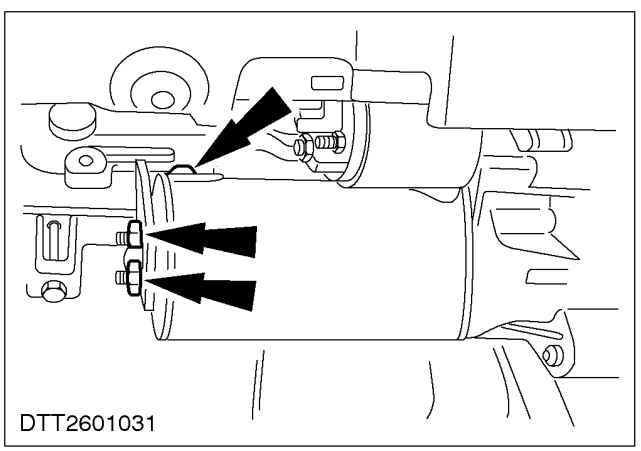

5. Remove the starter motor (three bolts).

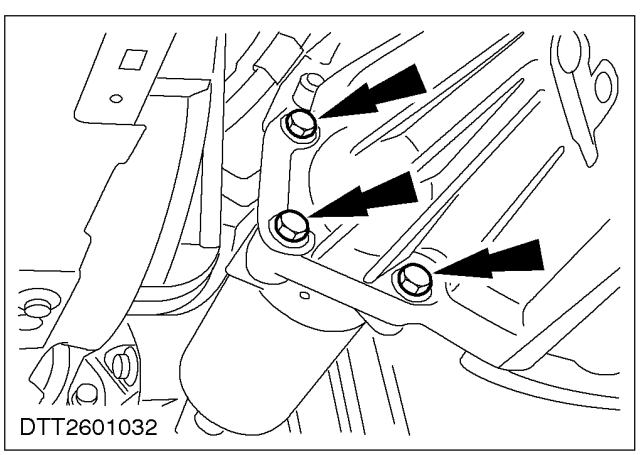

REMOVAL AND INSTALLATION (CONTINUED)

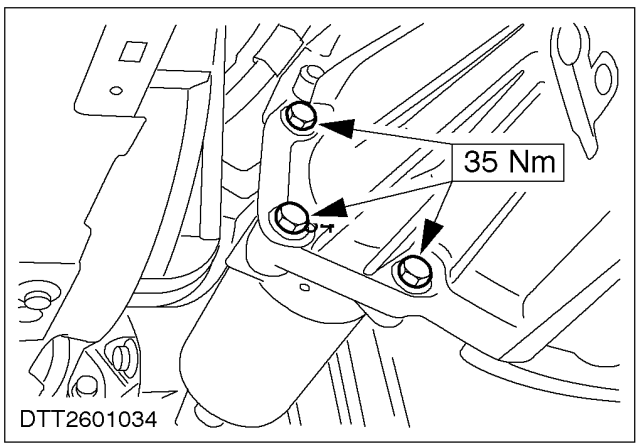

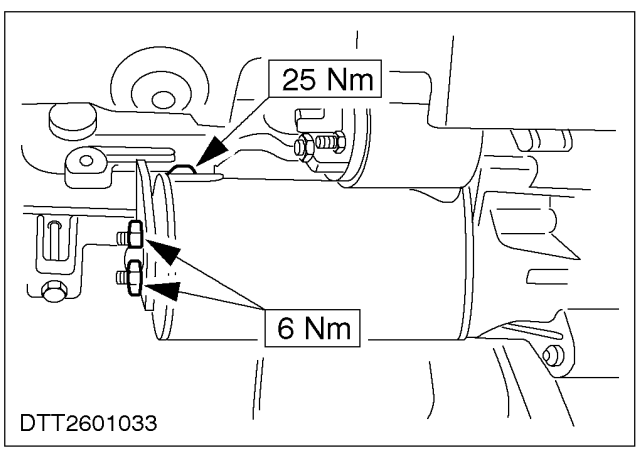

Installation

1. Refit the components in reverse order.

SPECIFICATIONS

Torque Specifications

Description	Nm
Starter motor retaining bolts	35
Support bracket retaining bolt	25
Support bracket retaining nuts	6
Starter motor solenoid power cable retaining nut M10	12
Starter motor solenoid power cable retaining nut M8	6

SECTION 303-08B Engine Emission Control — Diesel Engine

VEHICLE APPLICATION: 2002 Bantam

SUBJECT **PAGE**

DESCRIPTION AND OPERATION

Engine Emission Control 303-08B-215

DIAGNOSIS AND TESTING

Engine Emission Control 303-08B-216
Inspection and Verification 303-08B-216

REMOVAL AND INSTALLATION

Exhaust Manifold to Exhaust Gas Re-circulation (EGR) Valve Tube ..... (23 301 0) 303-08B-217
Exhaust Gas Re-circulation (EGR) Valve ..... (23 312 0) 303-08B-218/219
Exhaust Gas Re-circulation (EGR) Valve — Vehicles with 1.8L Endura DE Diesel Engine ..... (23 312 0) 303-08B-220/222

SPECIFICATIONS

Specifications 303-08B-223
Torque Specifications 303-08B-223

DESCRIPTION AND OPERATION

Engine Emission Control

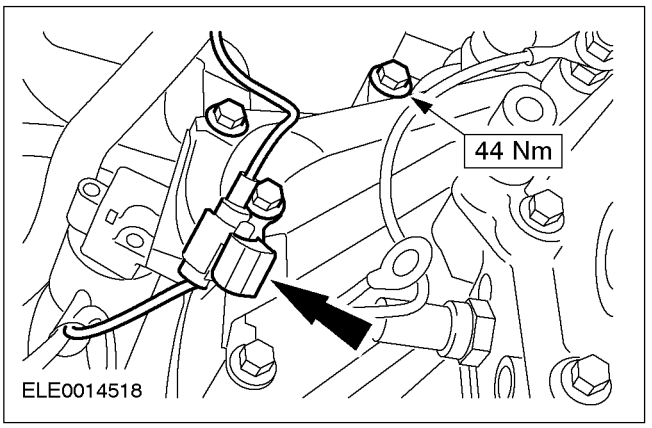

Item	Description
1	Exhaust manifold to exhaust gas Recirculation (EGR) valve tube
2	EGR vacuum regulator solenoid
3	EGR valve

Positive Crankcase Ventilation

The positive crankcase ventilation system recycles crankcase gases back through the engine where they mix with the incoming air charge. All the combustion gases, which enter the crankcase, flow through hoses out of the valve cover into the intake air system. It is a completely sealed system, which helps to reduce hydrocarbon emissions from the engine.

Exhaust Gas Re-circulation

The exhaust gas re-circulation system reduces the formation of NOx (oxides of nitrogen) by recycling measured quantities of exhaust gas back through the engine where they mix with the incoming air charge.

The exhaust gas re-circulation vacuum regulator solenoid is controlled by the powertrain control module with ground pulses. This regulates the amount and duration of the signal supplied to the exhaust gas re-circulation valve and therefore the valve lift and opening times are controlled.

DIAGNOSIS AND TESTING

Engine Emission Control

Inspection and Verification

1. Verify the customer concern by operating the system.
2. Visually inspect for obvious signs of mechanical or electrical damage.
3. If an obvious cause for an observed or reported concern is found, correct the cause (if possible) before proceeding to the next step.
4. If the concern is not visually evident, verify the symptom and refer to WDS.

Visual Inspection Chart

Mechanical	Electrical
• Sensors and controls • Exhaust gas recirculation clamps • Exhaust gas Recirculation tube for cracks • Vacuum pipes for leaks • Coolant pipes for leaks • Exhaust gas recirculation gaskets	• Loose or corroded connection to the exhaust gas recirculation vacuum regulator • Loose or corroded powertrain control module electrical connectors. • Wiring harness

REMOVAL AND INSTALLATION

Exhaust Manifold to Exhaust Gas Re-circulation (EGR) Valve Tube (23 301 0)

Removal

1. Remove the exhaust gas re-circulation valve.
   Refer to procedure contained in this section.

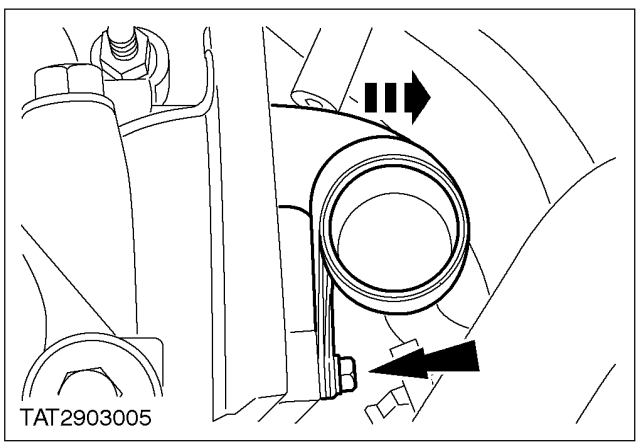

2. **CAUTION: When removing the exhaust manifold to exhaust gas re-circulation pipe from the exhaust manifold, make sure that the sealing ring comes away with the pipe and does not fall into the exhaust manifold.**
   Remove the exhaust manifold to exhaust gas re-circulation valve pipe (one bolt).

Installation

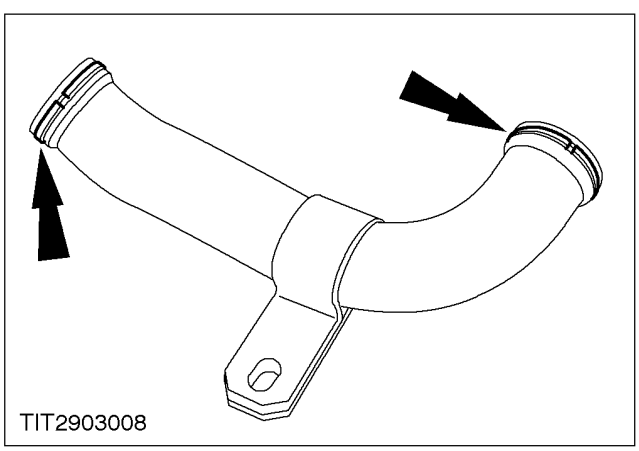

1. Remove and discard the two exhaust manifold to exhaust gas re-circulation valve pipe sealing rings.

2. Examine the exhaust manifold to exhaust gas re-circulation pipe for corrosion and carbon deposits. Clean as required.

3. Renew the two exhaust manifold to exhaust gas Re-circulation valve pipe sealing rings.

4. **NOTE:** When cleaning is required, take care not to allow debris to fall into the exhaust manifold or exhaust gas re-circulation valve.
   Examine the exhaust manifold and exhaust gas re-circulation valve orifices for signs of corrosion and carbon deposits. Clean as required.

5. Refit the components in reverse order.

REMOVAL AND INSTALLATION

Exhaust Gas Re-circulation (EGR) Valve (23 312 0)

Removal

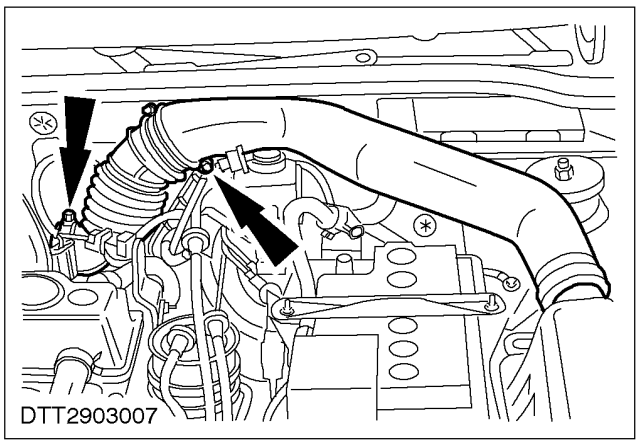

1. Remove the air intake pipe (two clips).

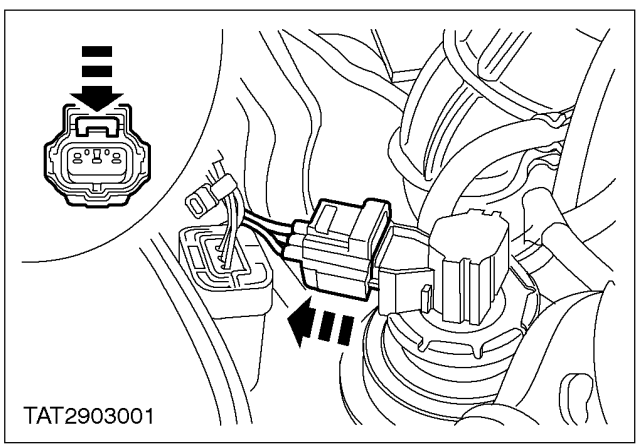

2. Disconnect the exhaust gas re-circulation valve lift sensor multiplug.

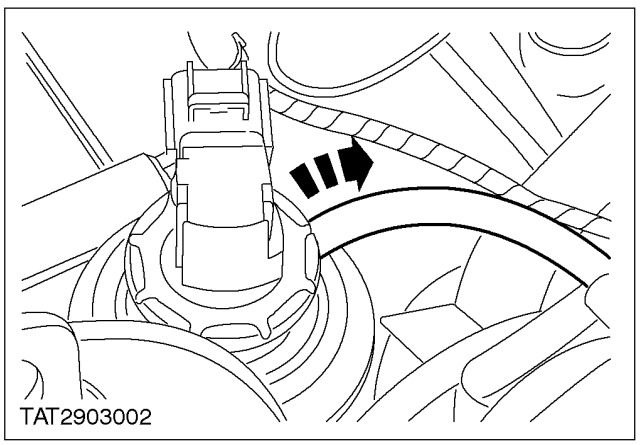

3. Disconnect the vacuum pipe from the exhaust gas re-circulation valve.

REMOVAL AND INSTALLATION (CONTINUED)

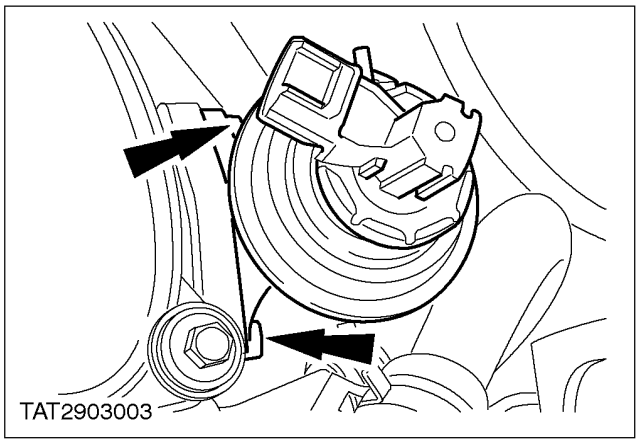

4. Remove the exhaust gas re-circulation valve (two bolts).

Installation

1. **CAUTION: When cleaning is required, take care not to allow debris to fall into the inlet manifold, exhaust manifold or exhaust gas Recirculation valve.**
   Clean the gasket surfaces of the exhaust gas re-circulation valve and inlet manifold.
2. Refit the components in reverse order.

REMOVAL AND INSTALLATION

Exhaust Gas Re-circulation (EGR) Valve — Vehicles with 1.8L Endura DE Diesel Engine (23 312 0)

Removal

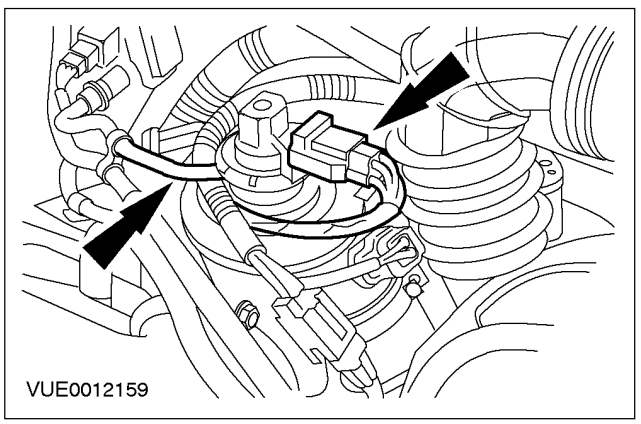

1. Disconnect the exhaust gas re-circulation (EGR) valve electrical connector and vacuum line.

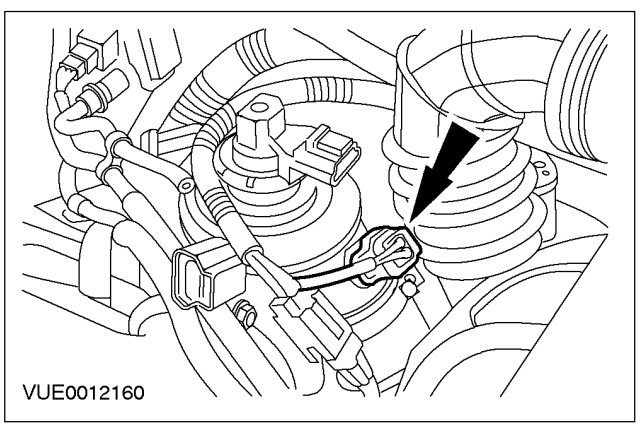

2. Disconnect the intake air temperature (IAT) sensor electrical connector.

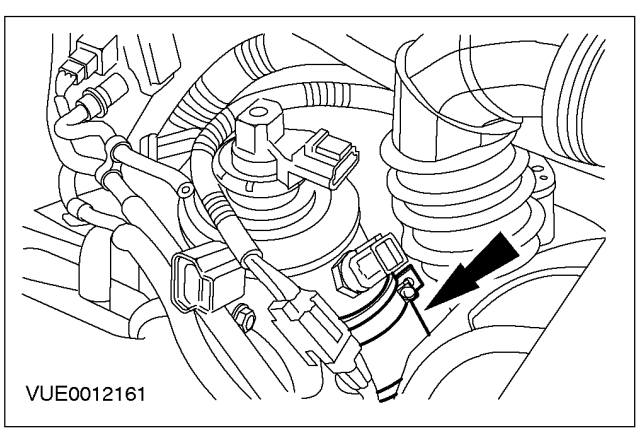

3. Disconnect the air cleaner outlet pipe.

REMOVAL AND INSTALLATION (CONTINUED)

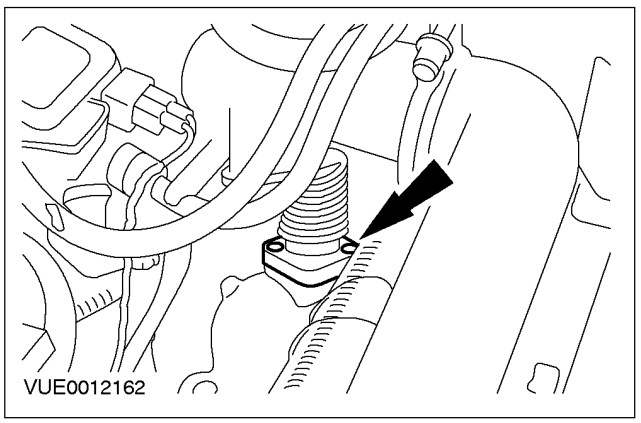

4. Detach the exhaust manifold to EGR valve tube.

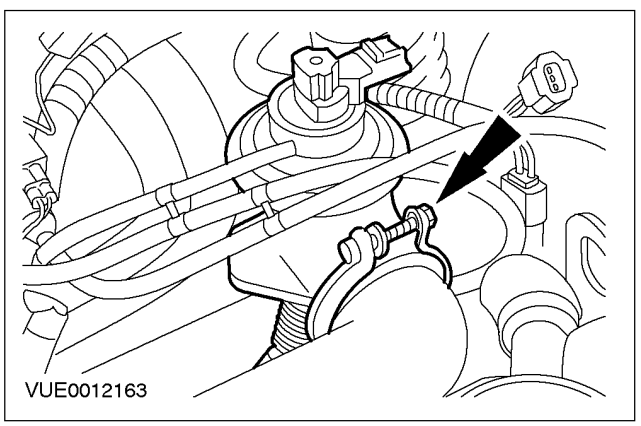

5. Discard the EGR valve clamp.

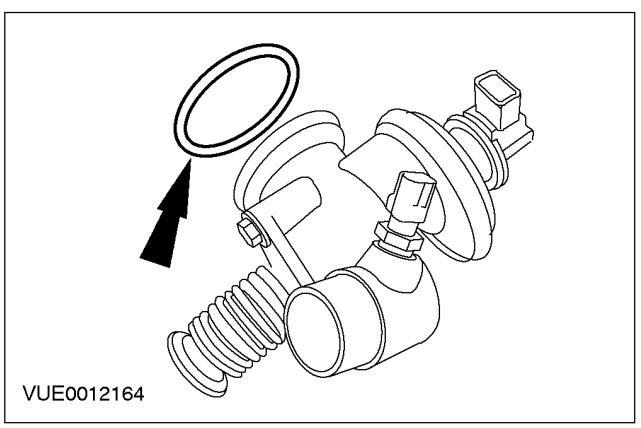

6. Remove and discard the EGR valve gasket.

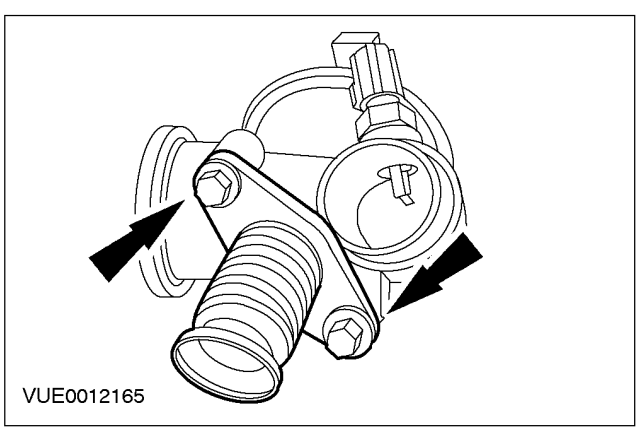

7. Remove the EGR valve.

8. Remove and discard the gasket.

REMOVAL AND INSTALLATION (CONTINUED)

Installation

NOTE: Install a new exhaust manifold to EGR valve tube gasket.

NOTE: Install a new EGR valve gasket.

NOTE: Install a new exhaust manifold to EGR valve tube clamp.

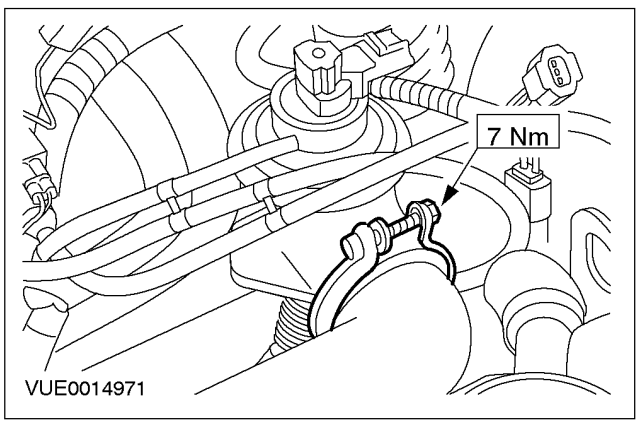

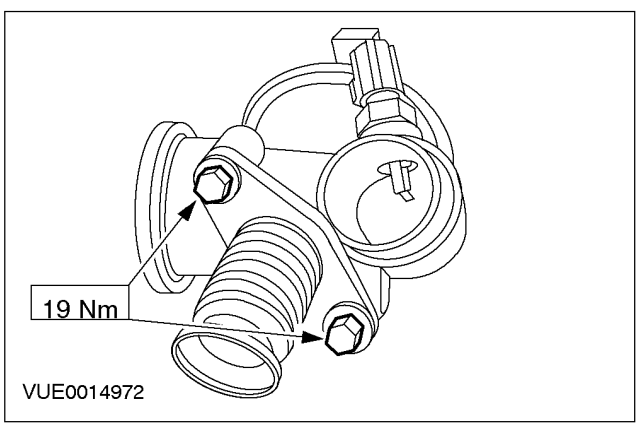

2. To install, reverse the removal procedure.

SPECIFICATIONS

Torque Specifications

Description	Nm
Endura DE Diesel Engine Exhaust gas Recirculation valve retaining bolts	20
Endura DI Diesel Engine Exhaust gas Recirculation valve/tube retaining bolts	19
Endura DI Diesel Engine Exhaust gas Recirculation valve retaining clamp bolt	19

SECTION 303-14D Electronic Engine Controls — Diesel Engine

VEHICLE APPLICATION: 2002 Bantam

SUBJECT **PAGE**

DESCRIPTION AND OPERATION

Engine Emission Controls 303-14D-225

DIAGNOSIS AND TESTING

Electronic Engine Controls 303-14D-226
Inspection and Verification 303-14D-226

REMOVAL AND INSTALLATION

Crankshaft Position (CKP) Sensor — Vehicles with 1.8L Endura DE Diesel Engine ..... (29 230 0) 303-14D-227
Engine Coolant Temperature (ECT) Sensor ..... (21 190 0) 303-14D-228

SPECIFICATIONS

Specifications 303-14D-229
Torque Specifications 303-14D-229

DESCRIPTION AND OPERATION

Engine Emission Controls

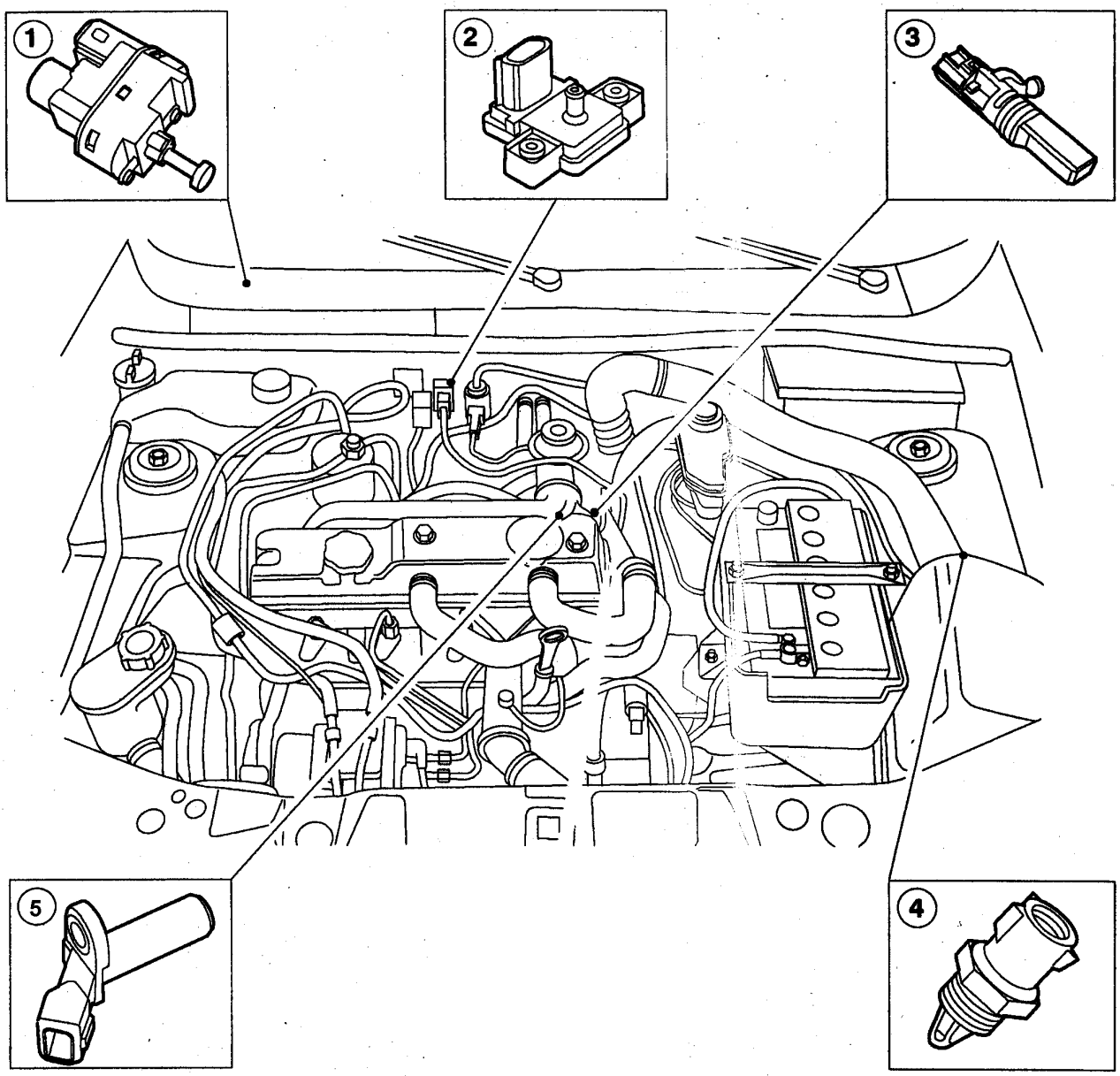

Item	Description
1	Clutch pedal position (CPP) switch
2	Manifold absolute pressure (MAP) sensor
3	Vehicle speed sensor (VSS)
4	Intake air temperature (IAT) sensor
5	Crankshaft position (CKP) sensor

The engine management system consists of a powertrain control module (PCM), a number of sensors and a clutch pedal position switch. The PCM is located inside the vehicle, behind the left-hand cowl side trim panel and provides precise control of basic engine calibration parameters. The sensors and the clutch pedal position switch supply the PCM with input signals, which relate to engine operating conditions.

DIAGNOSIS AND TESTING

Electronic Engine Controls

Inspection and Verification

1. Verify the customer concern by operating the system.
2. Visually inspect for obvious signs of mechanical or electrical damage.
3. If an obvious cause for an observed or reported concern is found, correct the cause (if possible) before proceeding to the next step.
4. If the concern is not visually evident, verify the symptom and refer to WDS to diagnose the system.

Visual Inspection Chart

Mechanical	Electrical
• Fuel leak(s) • Vacuum line(s) • Sensor(s) • Clutch pedal position switch	• Wiring harness • Loose or corroded electrical connector(s) • Powertrain control module • Sensor(s) • Clutch pedal position switch

REMOVAL AND INSTALLATION

Crankshaft Position (CKP) Sensor — Vehicles with 1.8L Endura DE Diesel Engine (29 230 0)

Removal

1. Raise and support the vehicle. For additional information, refer to Section 100-02.

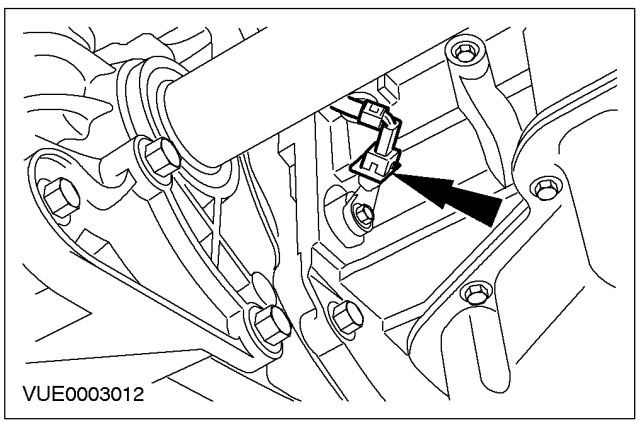

2. Disconnect the crankshaft position (CKP) sensor electrical connector.

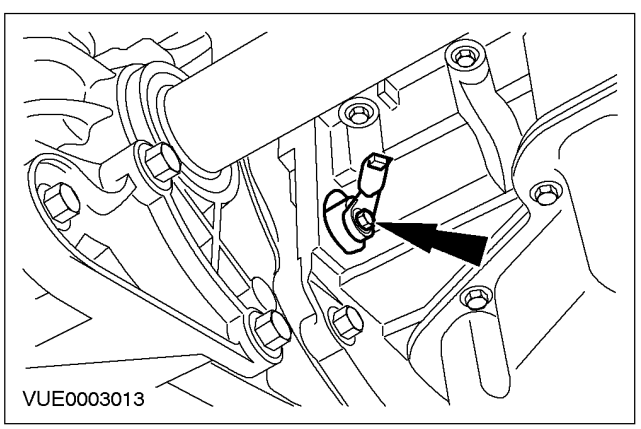

3. Remove the CKP sensor.

Installation

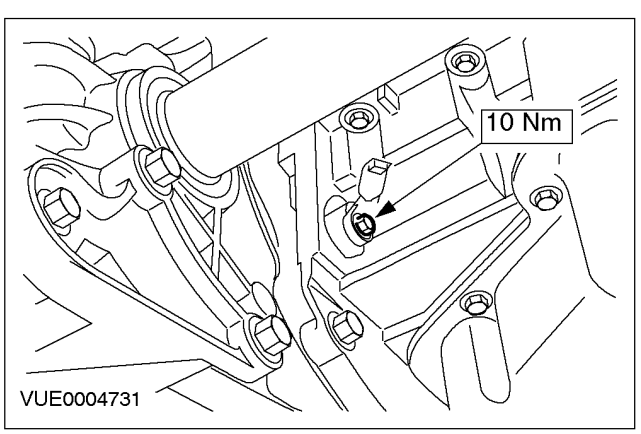

1. To install, reverse the removal procedure.

REMOVAL AND INSTALLATION

Engine Coolant Temperature (ECT) Sensor (21 190 0)

Removal

1. Drain the cooling system. For additional information, refer to Section 303-03.

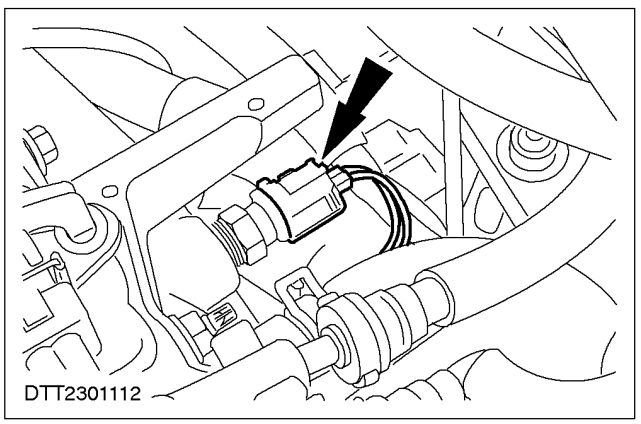

2. Disconnect the engine coolant temperature sensor electrical connector.

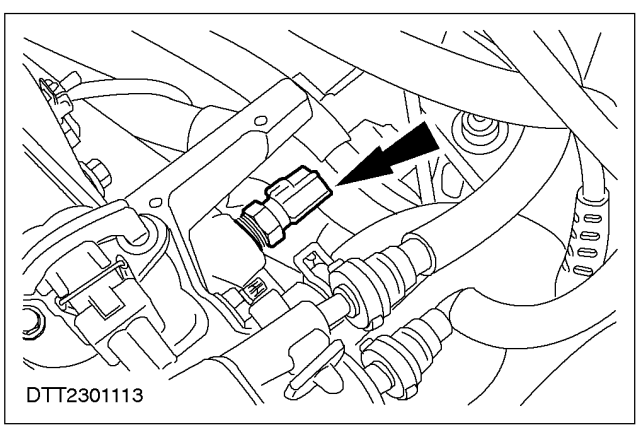

3. Remove the sensor.

Installation

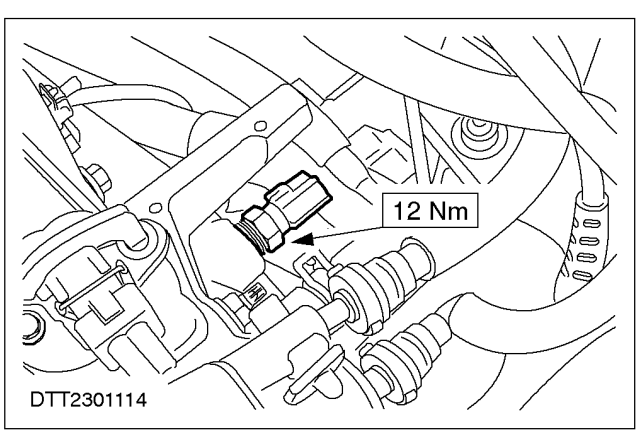

1. To install, reverse the removal procedure.

SPECIFICATIONS

Torque Specifications

Description	Nm
Exhaust gas Re-circulation valve retaining bolts	20
Engine coolant temperature sensor	12

SECTION 303-03 Engine Cooling

VEHICLE APPLICATION: 2002 Bantam

SUBJECT **PAGE**

DESCRIPTION AND OPERATION

Engine Cooling 303-03-134
Vehicles with Petrol engines..... 303-03-135/136
Vehicles with Diesel engine..... 303-03-137

DIAGNOSIS AND TESTING

Engine Cooling 303-03-138
Inspection and Verification 303-03-138
Symptom Chart 303-03-138/139
Component Tests..... 303-03-140

REMOVAL AND INSTALLATION

Thermostat — Vehicles with 1.6L / 1.3L Engine..... (24 454 0) 303-03-141/142
Thermostat — Vehicles with 1.8L Endura DE Diesel Engine..... 303-03-143/144
Thermostat Housing — Vehicles with 1.6L / 1.3L Engine..... (24 001 0) 303-03-145/147
Water Pump — Vehicles with 1.6L / 1.3L Engine ..... (24 404 0) 303-03-148/150
Water Pump — Vehicles with Diesel Engine..... (24 404 0) 303-03-151/154
Radiator..... (24 254 0) 303-03-155/163
Cooling Fan Motor ..... (24 222 0) 303-03-164/166
Coolant Expansion Tank..... (24 284 0) 303-03-167

GENERAL PROCEDURES

Cooling System Draining, Filling and Bleeding..... (24 122 0) 303-03-168/169
Cooling System Flushing 303-03-170
Cooling System Back flushing..... 303-03-171
Heater Core Back flushing 303-03-172

SPECIFICATIONS

Specifications..... 303-03-173
Lubricants, Fluids, Sealers and Adhesives..... 303-03-173
Capacities 303-03-173
Coolant 303-03-173
Pressures..... 303-03-173
Torque Specifications..... 303-03-173

DESCRIPTION AND OPERATION

Engine Cooling

Vehicles with 1.6L / 1.3L engine

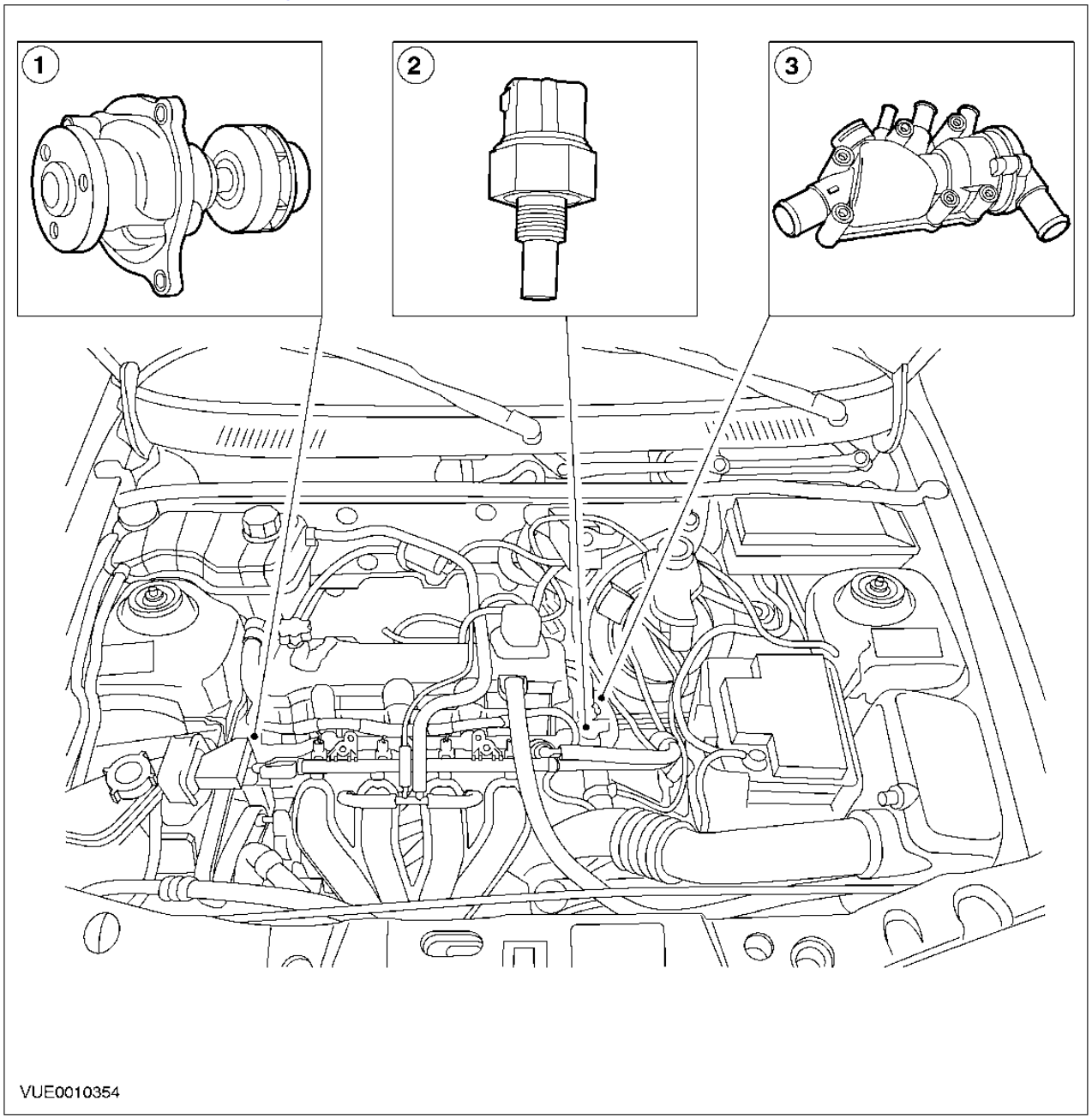

Item	Description
1	Water pump
2	Engine coolant temperature (ECT) sender unit

Item	Description
3	Thermostat housing

DESCRIPTION AND OPERATION

Vehicles with diesel engine

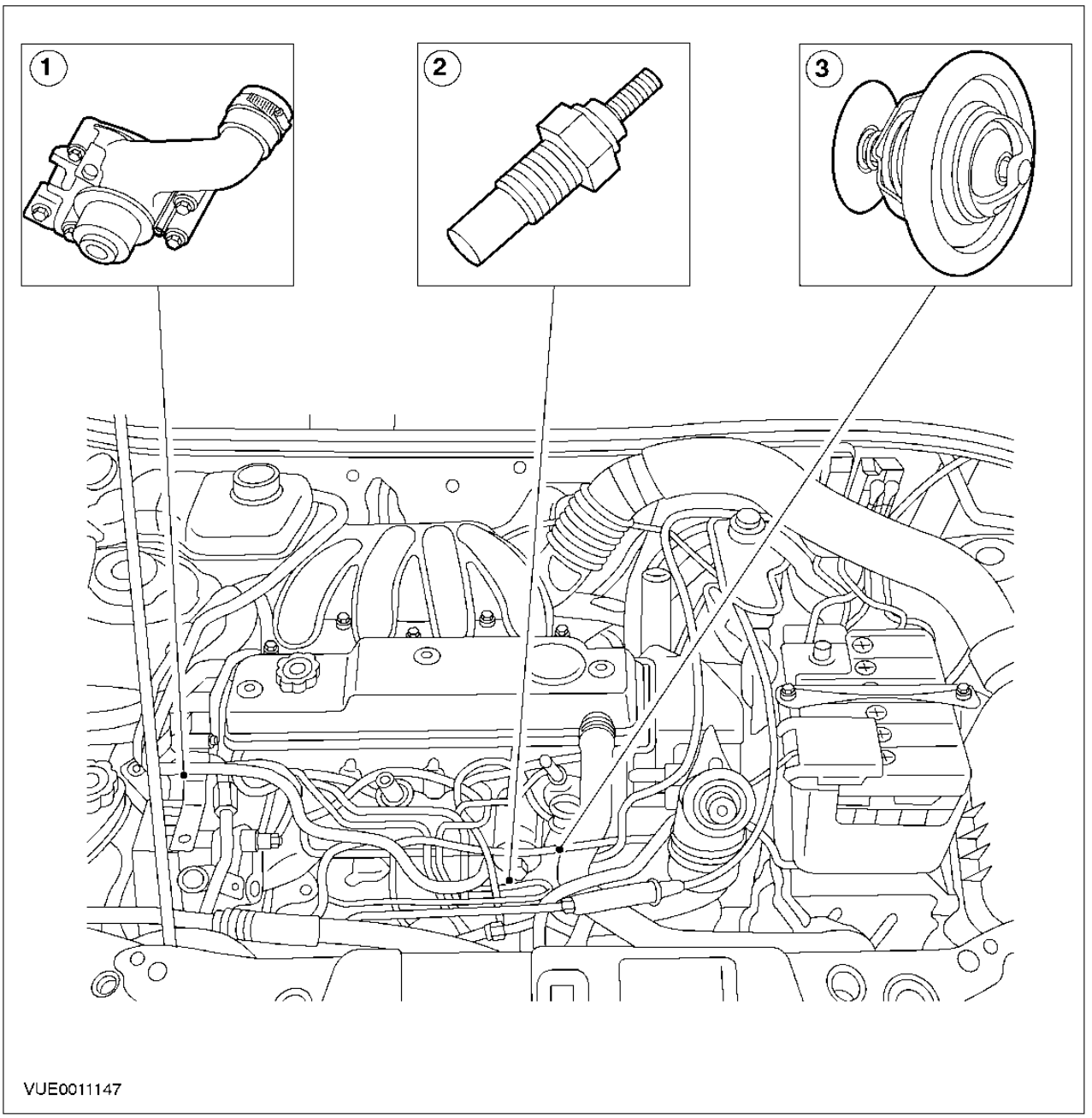

Item	Description
1	Water pump
2	Engine coolant temperature (ECT) sender unit
3	Thermostat

All Vehicles

WARNING: Never remove the coolant expansion tank cap under any circumstances while the engine is operating. Failure to follow this instruction may result in personal injury, damage to the cooling system or damage to the engine.

DESCRIPTION AND OPERATION (CONTINUED)

⚠WARNING: To avoid having scalding hot water or steam blow out of the cooling system, use extreme care when removing the coolant expansion tank cap from a hot cooling system. Wait until the engine has cooled and then wrap a thick cloth around the coolant expansion tank cap and turn it slowly until the pressure begins to release. Step back while the pressure is fully released from the cooling system. Failure to follow this instruction may result in personal injury.

⚠WARNING: Disconnect the battery when working in the vicinity of the cooling fan. The cooling fan is controlled by the engine management system and an increase in engine coolant temperature may cause it to operate even with the ignition in the OFF position. Failure to follow this instruction may result in personal injury.

⚠WARNING: Do not operate the engine with the hood open until the cooling fan has been examined for damage. Failure to follow this instruction may result in personal injury.

⚠CAUTION: When draining the coolant or changing any cooling system components, it is imperative that no engine coolant comes into contact with the timing belt or accessory drive belt. If necessary, the drive belt(s) should be removed as contamination may result in their failure.

NOTE: The cooling system must be maintained with the correct concentration and specification of engine coolant to prevent corrosion damage.

NOTE: Providing that the engine coolant has not been contaminated with other fluids or foreign matter, its robust corrosion resistance properties allow it to be reused after changing any cooling system components, although the concentration should always be checked and maintained within specification.

Engine coolant concentration should be checked through the neck of the coolant expansion tank with a hydrometer. The acceptable range of specific gravity (sg) of correctly balanced fluids is between 1.06 and 1.07 kg/l, which represents an engine coolant concentration of between 28% and 32%. If the concentration falls below 28% there is insufficient low temperature protection and the corrosion resistance will be inadequate. In such cases the concentration must be brought back to specification.

An orange colored engine antifreeze conforming to Ford specification L405F is used. This is monoethylene glycol and Organic Additive Technologies corrosion inhibitors and should not be mixed with other antifreeze types. For cooling system top up, only use antifreeze, which meets Ford specification L405F.

Engine coolant should be changed after a period of 10 years or 240,000 km, whichever occurs sooner.

Radiator

The radiator is of the tube and louvered fin core-type with the tubes arranged horizontally for crossflow of the coolant. Two tanks, one on each side of the radiator, provide uniform distribution of the coolant to the crossflow tubes.

Water Pump

The water pump is belt driven from the crankshaft.

Thermostat

The thermostat is of the wax type. It allows rapid engine warm up by restricting engine coolant flow to the cylinder block, cylinder head and heater system at lower operating temperatures. It also assists in maintaining engine operating temperatures between pre-determined limits.

Coolant Expansion Tank

The coolant expansion tank is fitted with a pressure cap. It helps to maintain the correct level of coolant in the cooling system, separating trapped air and replenishing the cooling system with coolant through a hose. It also serves as a location for service filling, cooling system pressurization, coolant expansion during warm-up and air separation during operation. It is designed to have approximately 0.5 to 1 liter of air when cold to allow for coolant expansion.

Cooling Fan

The cooling fan is electrically operated and consists of a fan and motor mounted within a shroud, behind the radiator.

DESCRIPTION AND OPERATION (CONTINUED)

Vehicles with Petrol or Diesel engine

Engine Coolant Temperature (ECT) Sender Unit

The ECT sender unit measures engine coolant temperature and controls the position of the temperature gauge pointer.

DIAGNOSIS AND TESTING

Engine Cooling

Special Tool(s)	
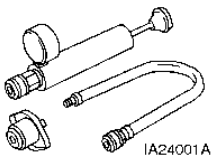 IA24001A	Pressure Tester, Cooling System 303-396 (24-001 A)
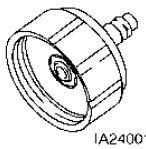 IA2400101A	Adapter for 303-396 303-396-01 (24-001-01 A)

Visual Inspection Chart

Mechanical	Electrical
• Coolant leak(s) • Radiator • Water pump • Thermostat • Coolant expansion tank • Cooling fan • Accessory drive belt	• Fuse(s) • Relay(s) • Wiring harness • Electrical connector(s) • Cooling fan motor • Engine coolant temperature (ECT) sender unit • ECT sensor • Cooling fan motor switch • Powertrain control module (PCM)

Inspection and Verification

1. Verify the customer concern.
2. Visually inspect for obvious signs of mechanical or electrical damage.
3. If an obvious cause for an observed or reported concern is found, correct the cause (if possible) before proceeding to the next step.
4. If the concern is not visually evident, verify the symptom and refer to the Symptom Chart.

Symptom Chart

Condition	Possible Sources	Action
•Loss of coolant	•Radiator.	•CHECK the radiator. INSTALL a new radiator if necessary.
	•Water pump.	•CHECK the water pump. INSTALL a new water pump if necessary.
	•Coolant expansion tank.	•CHECK the coolant expansion tank. INSTALL a new coolant expansion tank if necessary.
	•Engine.	•CHECK the engine. REFER to Section 303-00.
	•Coolant hose(s).	•CHECK the coolant hose(s). INSTALL a new coolant hose(s) if necessary.
	•Heater core.	•CHECK the heater core. INSTALL a new heater core if necessary.
•The engine overheats	•Coolant level.	•CHECK the coolant level. FILL as necessary.
	•System restriction.	•INSPECT the system for restrictions. REPAIR as necessary.

DIAGNOSIS AND TESTING (CONTINUED)

Condition	Possible Sources	Action
	•Radiator grille.	•INSPECT the radiator grille for restrictions. REPAIR as necessary.
	•Water pump.	•CHECK the water pump. INSTALL a new water pump if necessary.
	•Thermostat.	•CHECK the thermostat for correct specification and operation. INSTALL a new thermostat if necessary.
	•Cooling fan.	•CHECK the cooling fan. INSTALL a new cooling fan if necessary.
	•Cooling fan motor.	•CHECK the cooling fan motor for correct operation. REFER to WDS to diagnose the system.
	•Accessory drive belt.	•CHECK the accessory drive belt. INSTALL a new accessory drive belt if necessary.
	•ECT sensor.	•CHECK the ECT sensor for correct operation. REFER to WDS to diagnose the system.
	•Cooling fan motor switch.	•CHECK the cooling fan motor switch for correct operation. REFER to WDS to diagnose the system.
	•Powertrain control module (PCM).	•CHECK the PCM for correct operation. REFER to WDS to diagnose the system.
	•Circuit(s).	•CHECK the circuit(s). REFER to WDS to diagnose the system.
	•Relay(s).	•CARRY OUT the Relay Component Test. REFER to the Wiring Diagrams.
	•Engine.	•CHECK the engine for correct operation. REFER to Section 303-00.
•The engine does not reach normal operating temperature	•Coolant level.	•CHECK the coolant level. FILL as necessary.
	•System restriction.	•INSPECT the system for restrictions. REPAIR as necessary.
	•Thermostat.	•CHECK the thermostat for correct specification and operation. INSTALL a new thermostat if necessary.

DIAGNOSIS AND TESTING (CONTINUED)

Condition	Possible Sources	Action
	•ECT sender unit.	•CHECK the ECT sender unit for correct operation. REFER to WDS to diagnose the system.
	•ECT sensor.	•CHECK the ECT sensor for correct operation. REFER to WDS to diagnose the system.
	•Cooling fan motor switch.	•CHECK the cooling fan motor switch for correct operation. REFER to WDS to diagnose the system.
	•PCM.	•CHECK the PCM for correct operation. REFER to WDS to diagnose the system.
	•Circuit(s).	•CHECK the circuit(s). REFER to WDS to diagnose the system.
	•Relay(s).	•CARRY OUT the Relay Component Test. REFER to the Wiring Diagrams.

Component Tests

Pressure Test

1. Remove the coolant expansion tank cap.
2. Install the special tools.
3. Pressurize the system to the coolant expansion tank cap release pressure.
4. Observe the cooling system pressure tester gauge reading for approximately two minutes. The pressure should not drop during this time. If the system holds pressure, proceed to Step 5. If the system does not hold pressure, check it thoroughly for coolant leaks. If a coolant leak cannot be found, check the engine for cylinder leakage. REFER to Section 303-00. Repair any coolant leaks and refill the system as necessary.
5. Recheck the system by repeating Steps 3 and 4 at least twice.

Thermostat Test

Remove and inspect the thermostat, note its opening temperature and immerse it in water. Heat the water until that temperature is reached. The thermostat should begin to open. If it does not begin to open, install a new thermostat. Continue to heat the water until the thermostat fully opens, 5.8 mm or more off the valve seat. If it does not fully open, install a new thermostat.

Radiator Leak Test, Removed From Vehicle

Clean the radiator thoroughly before leak testing it to prevent contamination of the water in the test tank. Leak test the radiator in clean water with 1.38 bar air pressure. Check it thoroughly for air leaks. Install a new radiator if necessary.

REMOVAL AND INSTALLATION

Thermostat — Vehicles with 1.6L / 1.3L Engine (24 454 0)

Removal

1. Drain the cooling system. For additional information, refer to Cooling System Draining, Filling and Bleeding in this section.

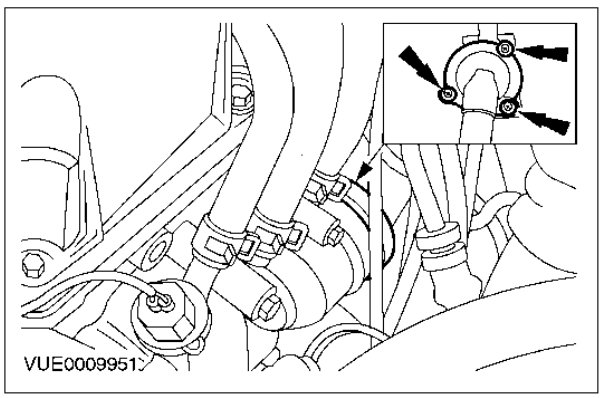

2. Detach the thermostat cover.

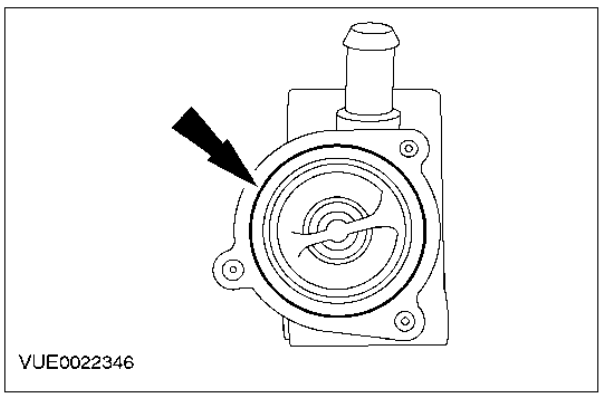

3. Remove the thermostat.

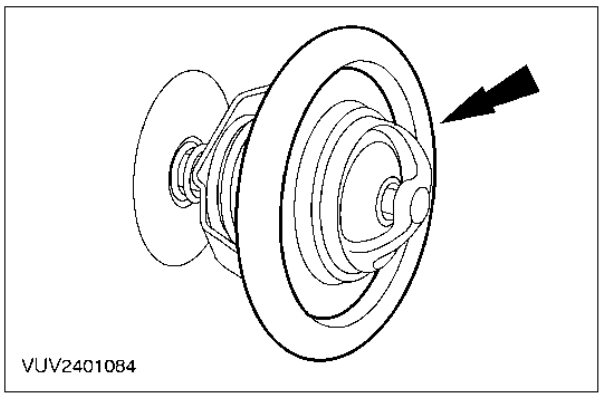

4. Remove and discard the O-ring seal.

REMOVAL AND INSTALLATION (CONTINUED)

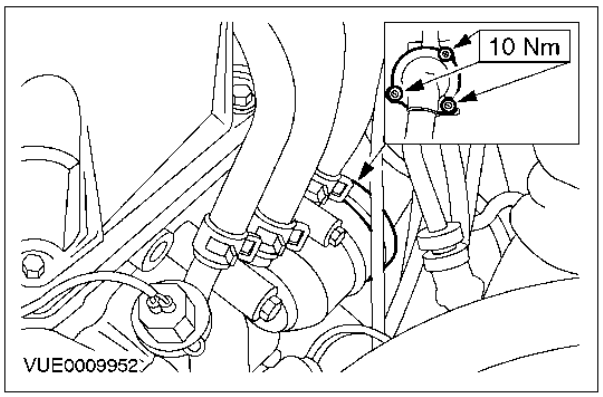

Installation

1. **NOTE:** Install a new thermostat O-ring seal.
   To install, reverse the removal procedure.

REMOVAL AND INSTALLATION (CONTINUED)

Thermostat — Vehicles with 1.8L Endura DE Diesel Engine (24 454 0)

Special Tool(s)	
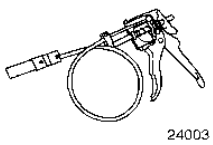 24003	Remover/Installer, cooling hose clamp 24-003

Removal

1. Drain the cooling system.
   Refer to the procedure in this section.
2. Disconnect the coolant hose.

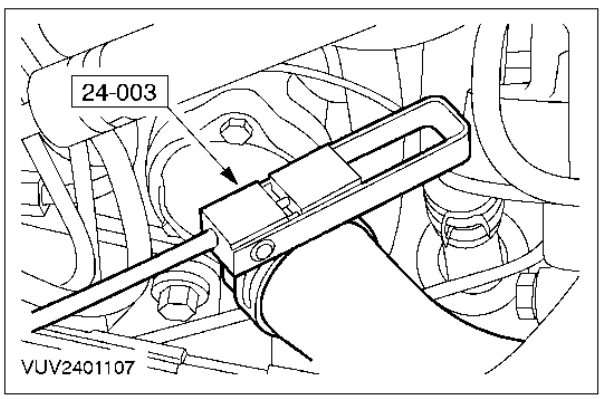

3. Remove the thermostat housing.

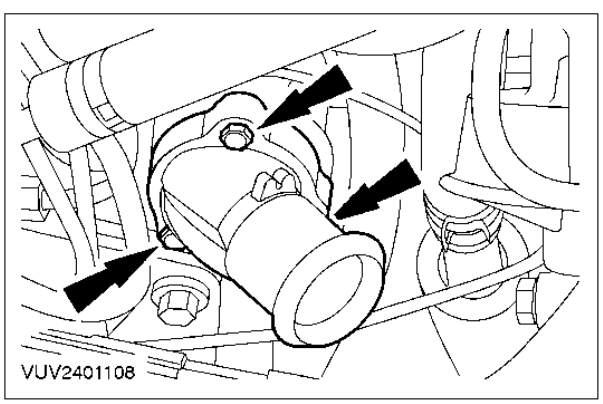

4. Remove the thermostat.

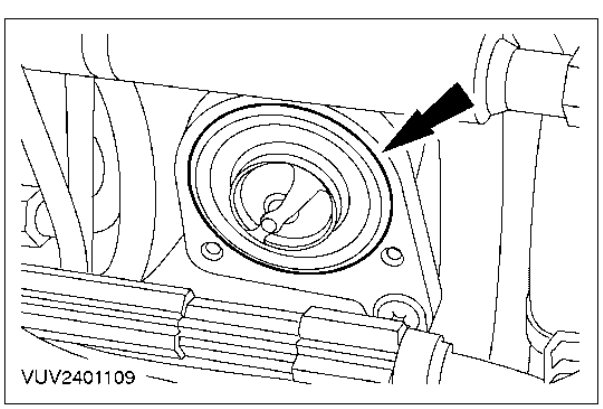

REMOVAL AND INSTALLATION (CONTINUED)

Installation

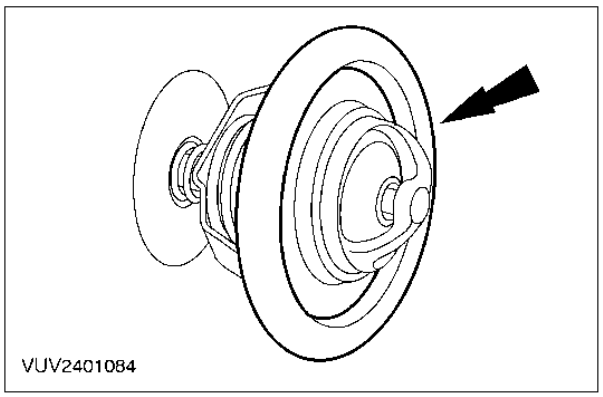

1. Install a new O-ring seal.

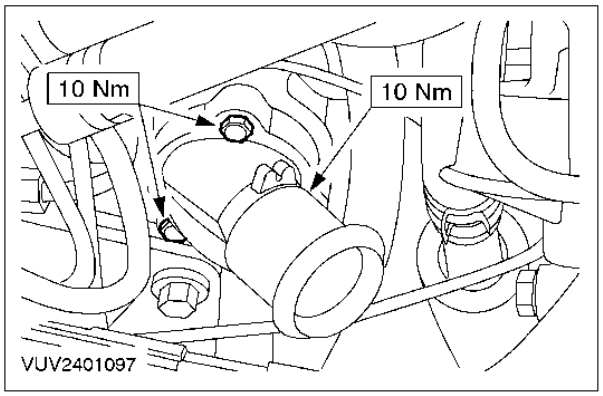

2. Install the thermostat and thermostat housing.

3. Install the remaining components in the reverse order.

4. Refill the cooling system.
   Refer to the procedure in this section.

REMOVAL AND INSTALLATION

Thermostat Housing — Vehicles with 1.6L / 1.3L Engine (24 001 0)

Special Tool(s)	
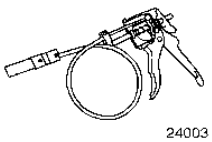 24003	Remover/Installer, Hose Clamp 303-397 (24-003)

Removal

1. Drain the cooling system. For additional information, refer to Cooling System Draining, Filling and Bleeding in this section.
2. Lower the vehicle.
3. Using the special tool, disconnect the coolant hoses from the thermostat housing.

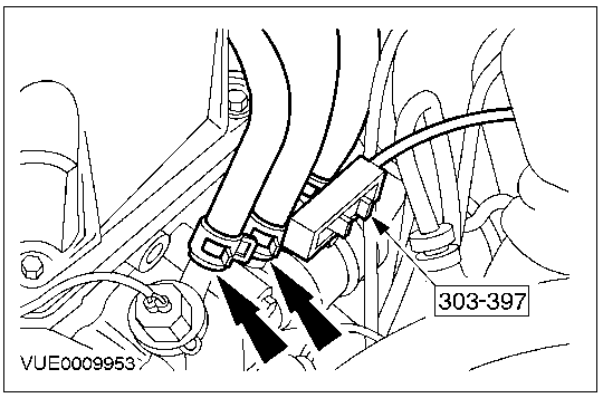

4. Detach the engine coolant temperature (ECT) sensor.
   1. Remove the clip.
   2. Detach the ECT sensor.

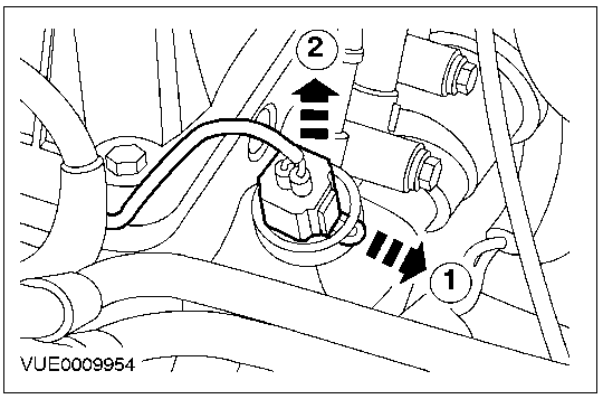

REMOVAL AND INSTALLATION (CONTINUED)

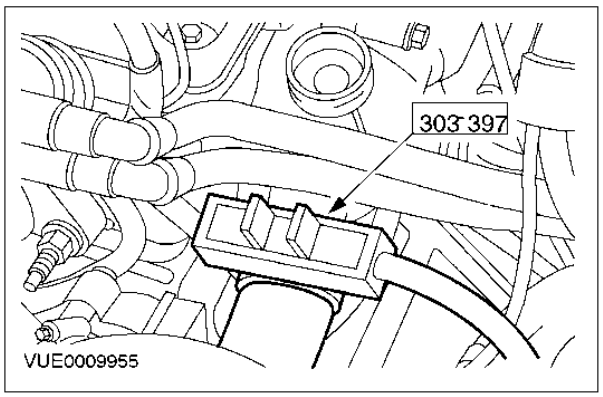

5. Using the special tool, disconnect the coolant hose from the thermostat housing.

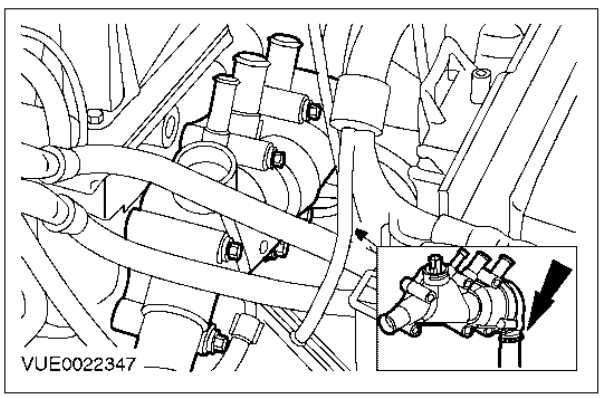

6. Disconnect the coolant hose from the thermostat housing.

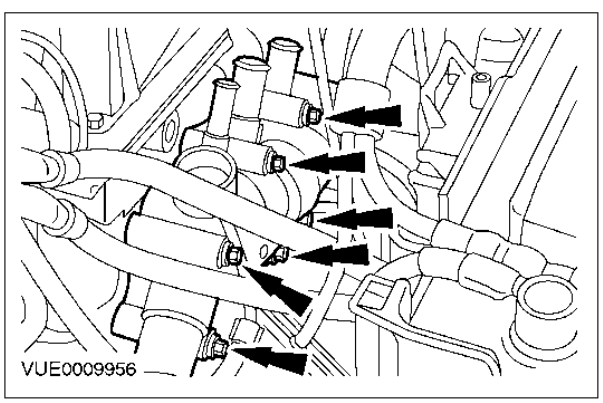

7. Remove the thermostat housing.

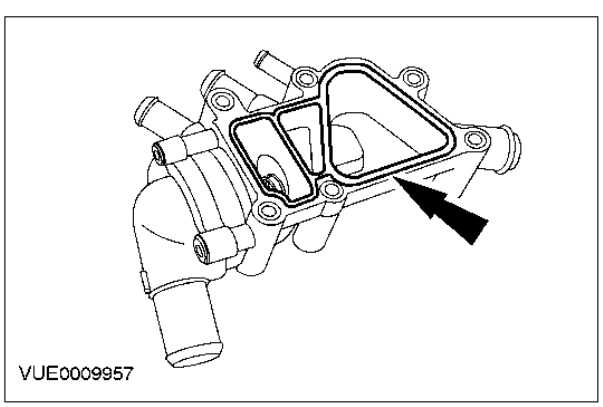

8. Remove and discard the gasket.

REMOVAL AND INSTALLATION (CONTINUED)

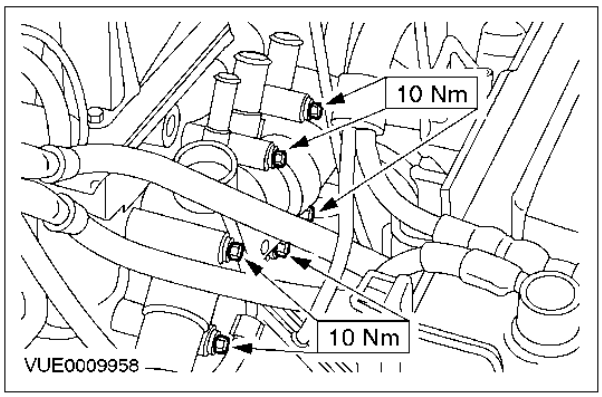

Installation

1. **NOTE:** Install a new thermostat housing gasket.
   To install, reverse the removal procedure.

REMOVAL AND INSTALLATION

Water Pump — Vehicles with 1.6L / 1.3L Engine (24 404 0)

Removal

1. Drain the cooling system. For additional information, refer to Cooling System Draining, Filling and Bleeding in this section.

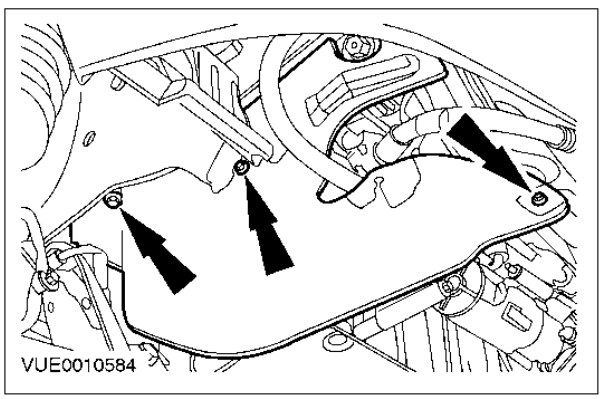

2. Remove the splash shield.

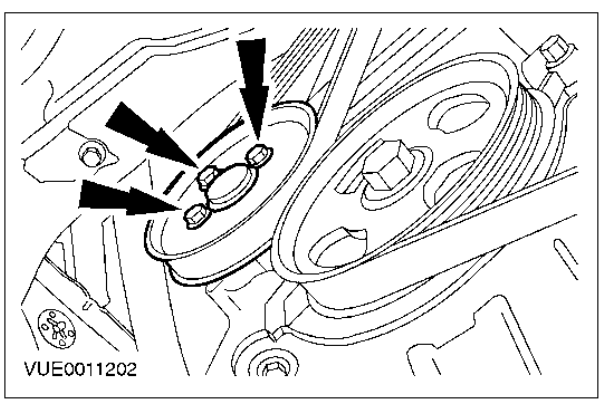

3. Loosen the water pump pulley bolts.

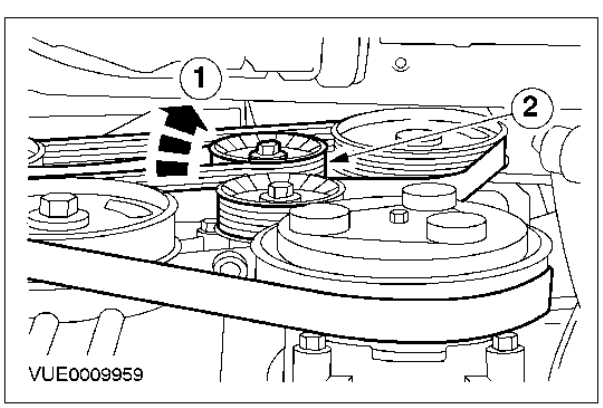

4. Remove the accessory drive belt.
   1. Rotate the tensioner clockwise.
   2. Remove the accessory drive belt.

REMOVAL AND INSTALLATION (CONTINUED)

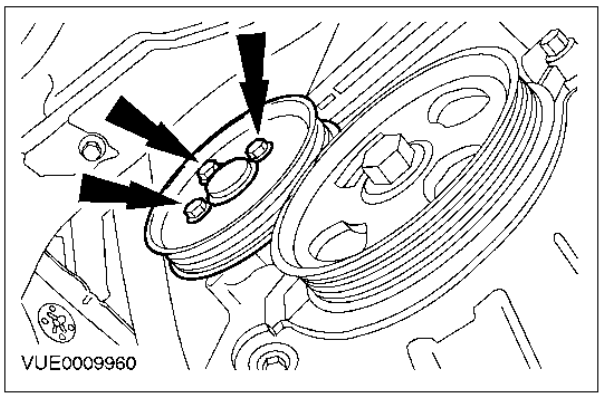

5. Remove the water pump pulley.

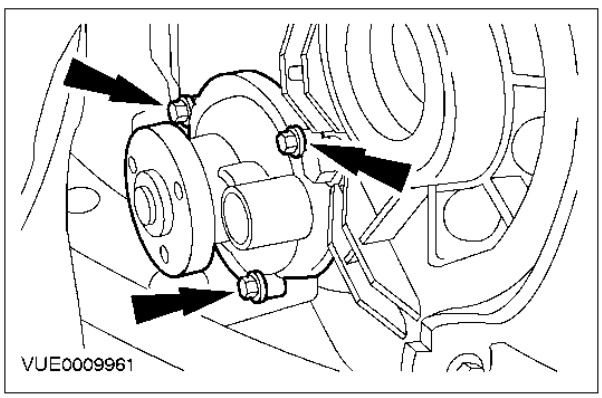

6. Remove the water pump (crankshaft pulley shown removed for clarity).

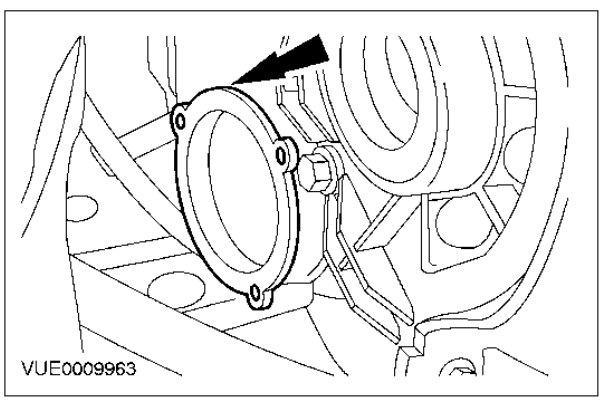

7. Remove and discard the water pump gasket (crankshaft pulley shown removed for clarity).

Installation

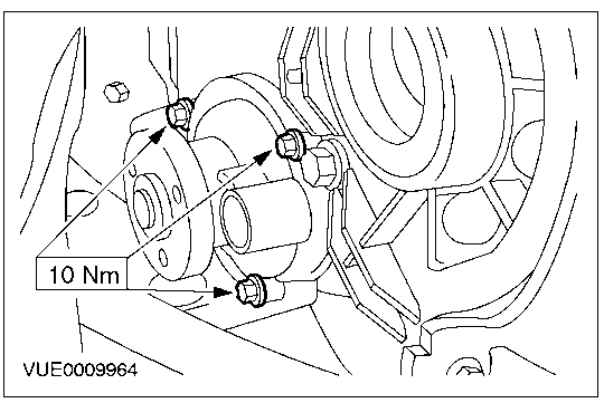

1. **NOTE:** Install a new water pump gasket.
   To install, reverse the removal procedure.

REMOVAL AND INSTALLATION (CONTINUED)

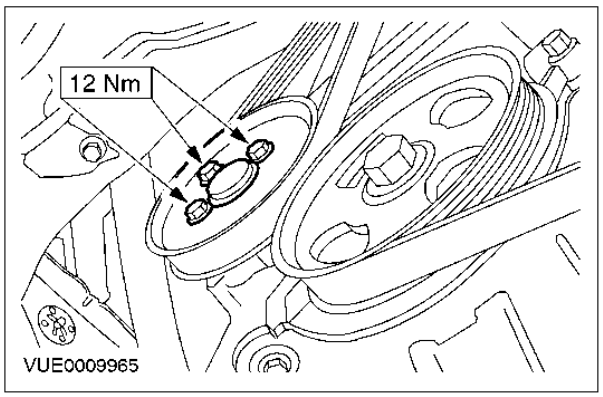

REMOVAL AND INSTALLATION

Water Pump — Vehicles with Diesel Engine (24 404 0)

Removal

1. Disconnect the battery ground cable. For additional information, refer to Section 414-01.

2. Drain the cooling system. For additional information, refer to Cooling System Draining, Filling and Bleeding in this section

3. Remove the timing belt. For additional information, refer to Section 303-01A. For additional information, refer to Section 303-01B.

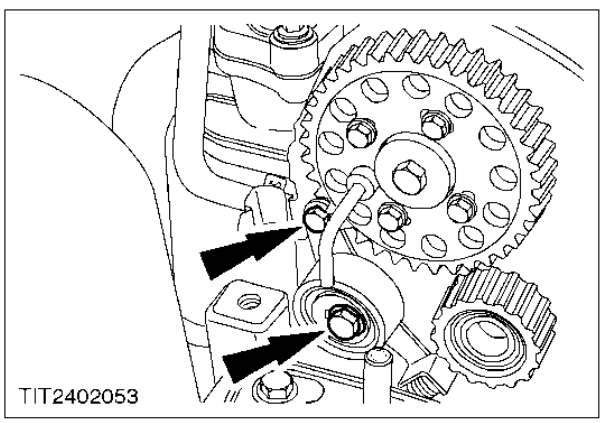

4. Remove the timing belt tensioner.
   - Collect the tensioner spring.

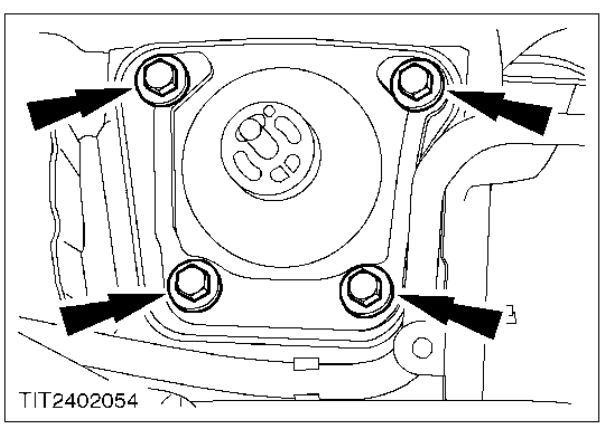

5. Accurately mark the position of the engine support insulator and remove the insulator.

REMOVAL AND INSTALLATION (CONTINUED)

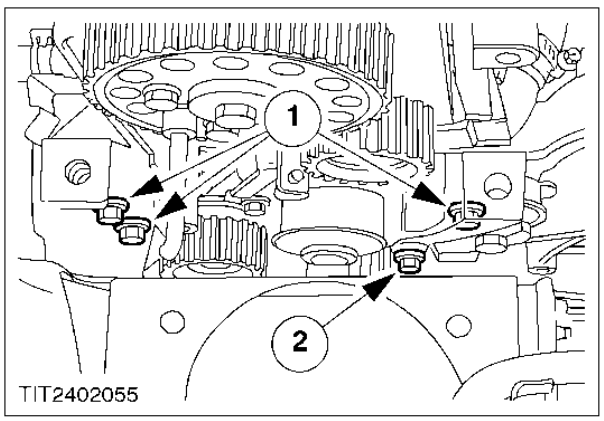

6. Detach the engine front mounting bracket.
   1. Completely remove the three bolts.
   2. Fully loosen the remaining bolt.

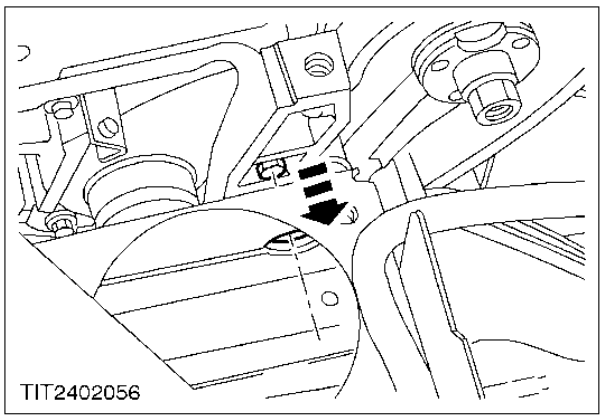

7. Raise the engine using a suitable jack and packing material, to allow the bolt to be withdrawn through the body bracket.

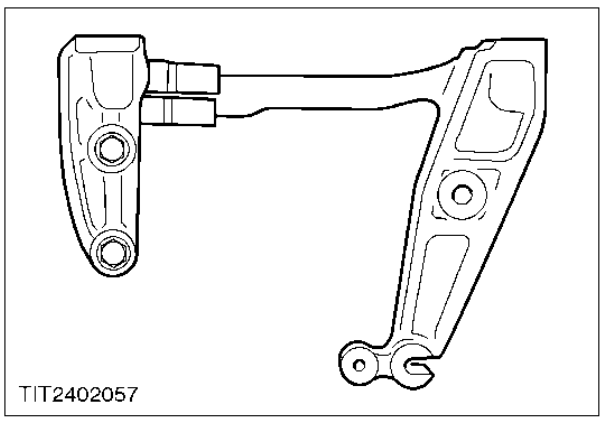

8. Remove the engine front mounting bracket and bolts (bracket shown removed for clarity).
   - The lower bolt hole is slotted to allow the bracket to be removed.

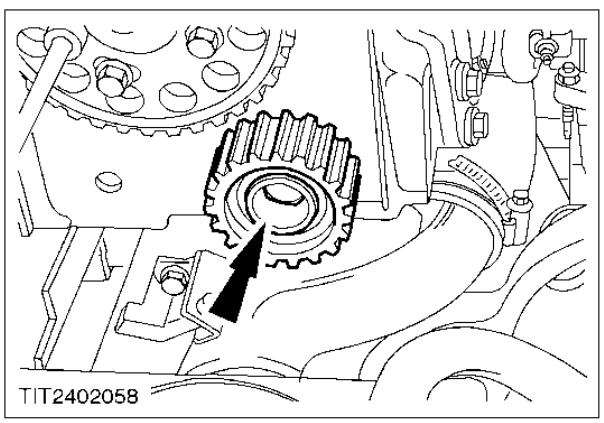

9. Remove the idler pulley.

REMOVAL AND INSTALLATION (CONTINUED)

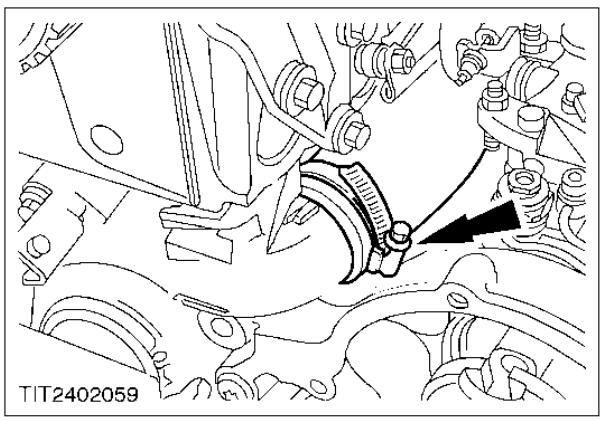

10. Disconnect the coolant hose from the water pump.

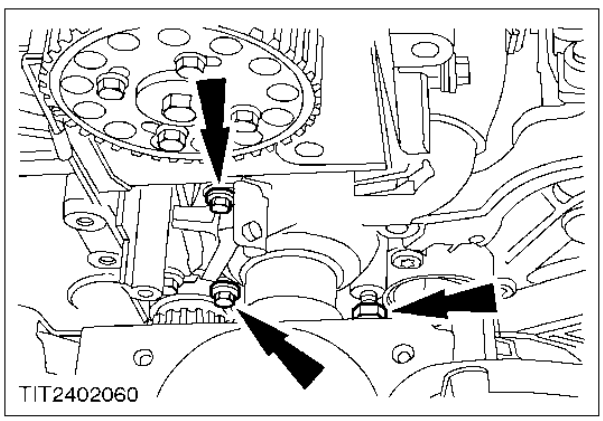

11. Remove the remaining water pump bolts.
    - Take care not to put undue stress on any pipes or wiring.

12. Raise the engine using a suitable jack and packing material, until the water pump can be removed.

Installation

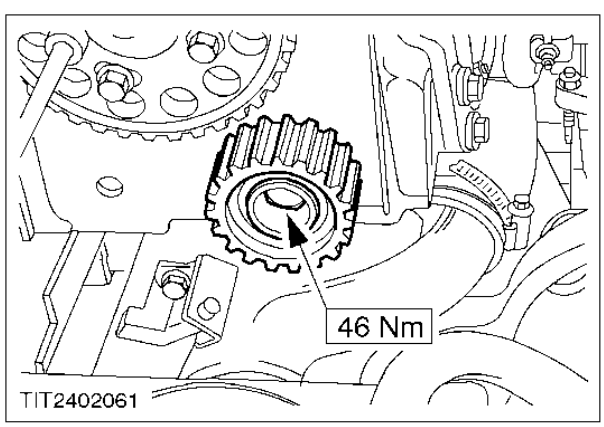

1. To install, reverse the removal procedure.

REMOVAL AND INSTALLATION (CONTINUED)

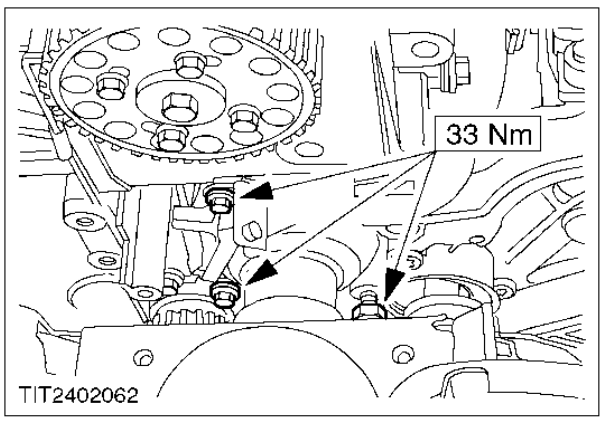

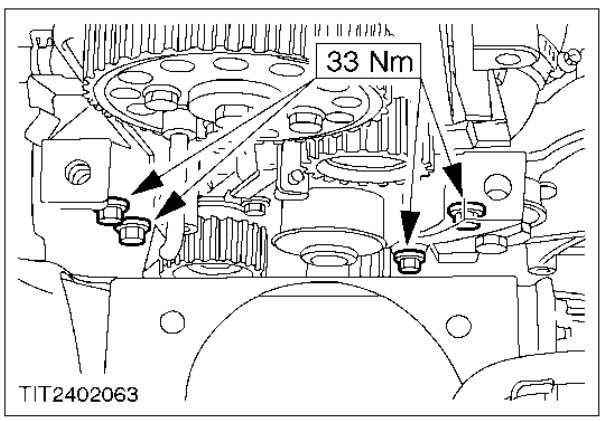

REMOVAL AND INSTALLATION

Radiator (24 254 0)

Special Tool(s)	
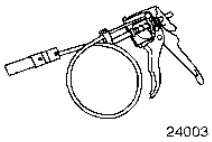 24003	Remover/Installer, Hose Clamp 303-397 (24-003)

Removal

All vehicles

1. Disconnect the battery ground cable. For additional information, refer to Section 414-01.

Vehicles with air conditioning

2. Remove the radiator grille.
   1. Detach the clips.
   2. Remove the radiator grille.

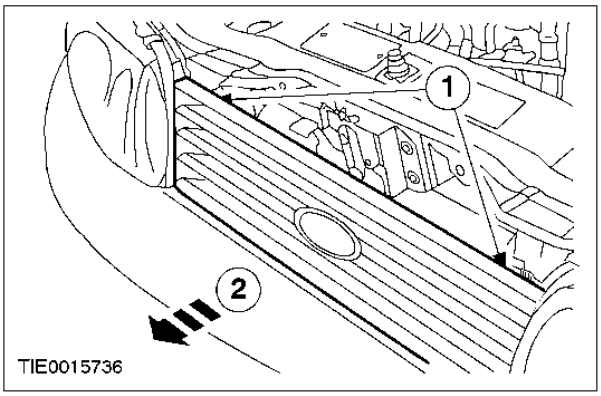

3. Secure the air conditioning (A/C) condenser to the hood latch panel.

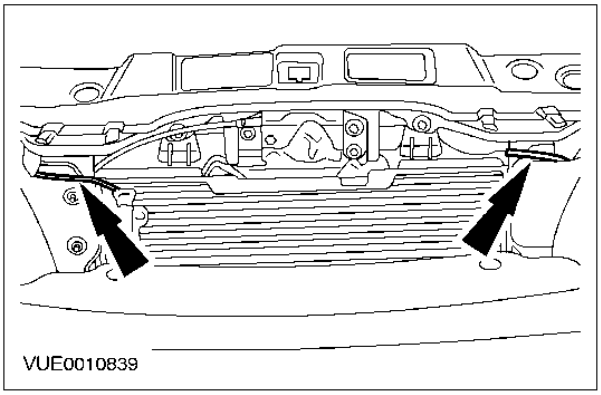

All vehicles

4. Drain the cooling system. For additional information, refer to Cooling System Draining, Filling and Bleeding in this section.
5. Lower the vehicle.

REMOVAL AND INSTALLATION (CONTINUED)

Vehicles with diesel engine

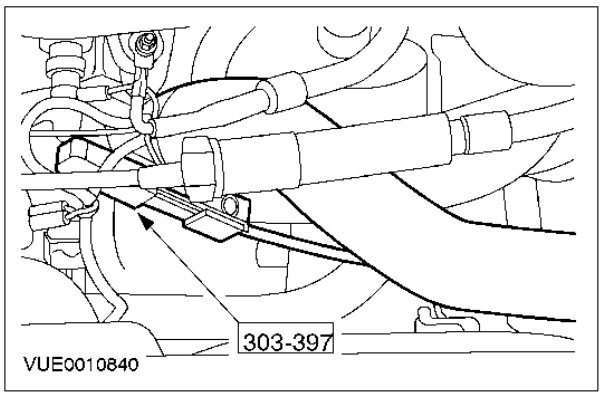

6. Using the special tool, disconnect the coolant hose from the thermostat housing.

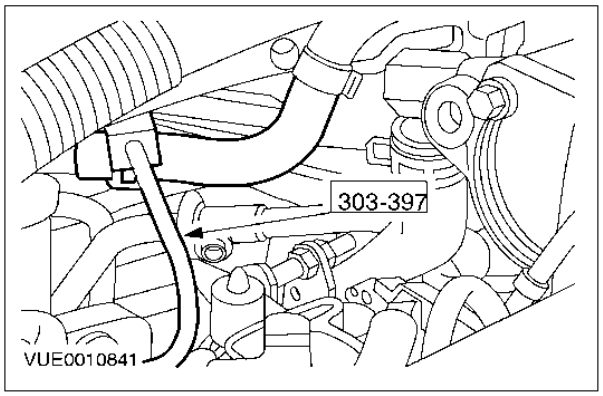

7. Using the special tool, disconnect the coolant hose from the radiator.

All except vehicles with diesel engine

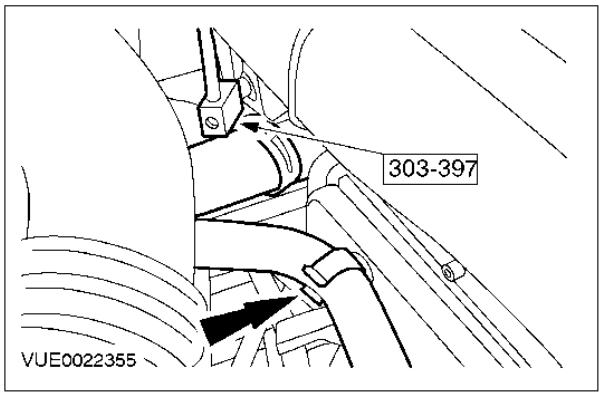

8. Using the special tool, disconnect the coolant hose from the radiator and detach the ventilation hose.

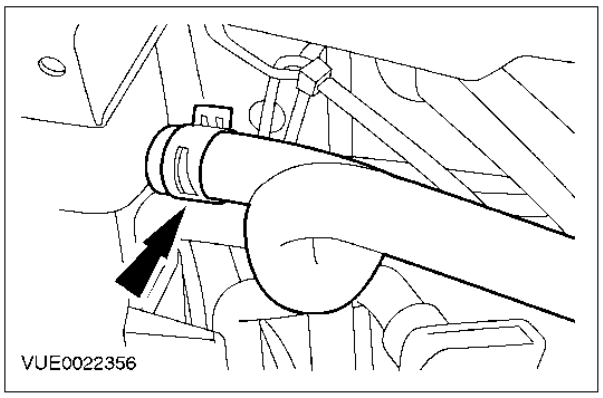

9. Disconnect the coolant hose from the radiator.

REMOVAL AND INSTALLATION (CONTINUED)

All vehicles

10. Remove the engine undershield. For additional information, refer to Section 502-00.

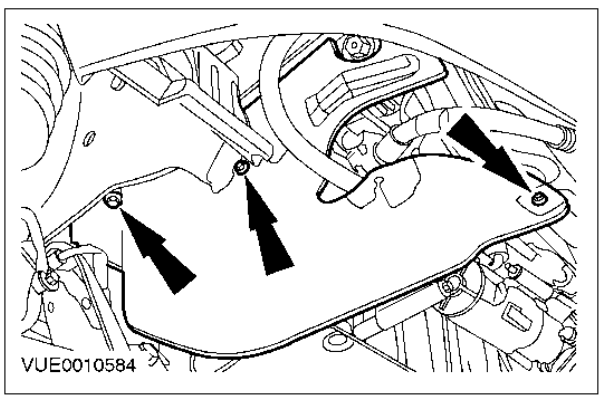

11. Remove the splash shield.

Vehicles with diesel engine

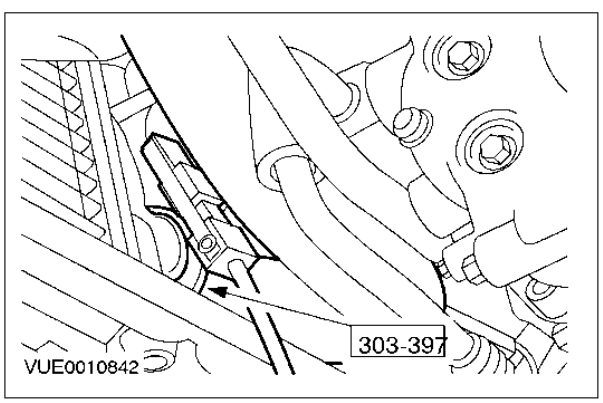

12. Using the special tool, disconnect the coolant hose from the radiator.

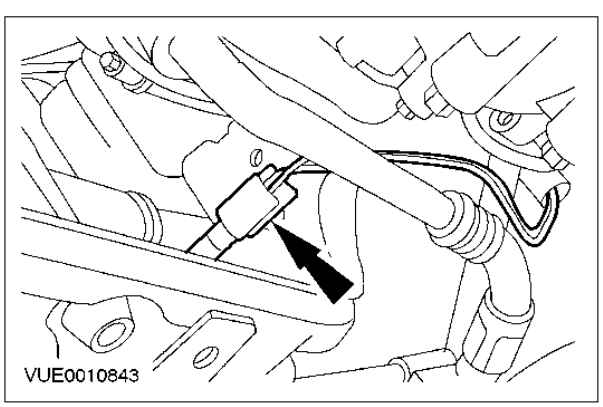

13. Detach the diode from the radiator support bracket.

REMOVAL AND INSTALLATION (CONTINUED)

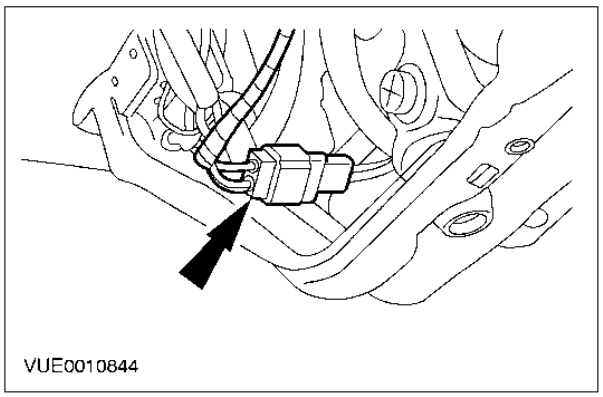

14. Disconnect and detach the cooling fan motor resistor electrical connector.

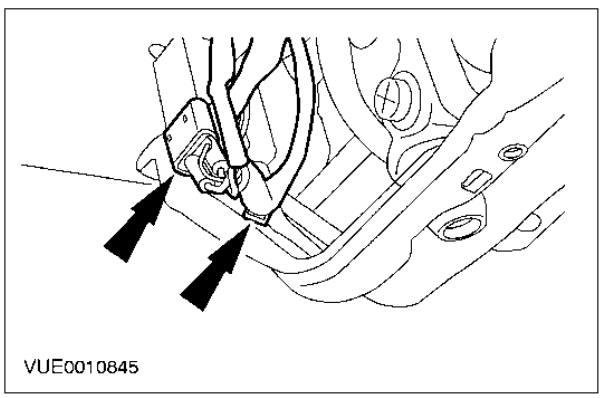

15. Disconnect and detach the cooling fan motor relay electrical connector.

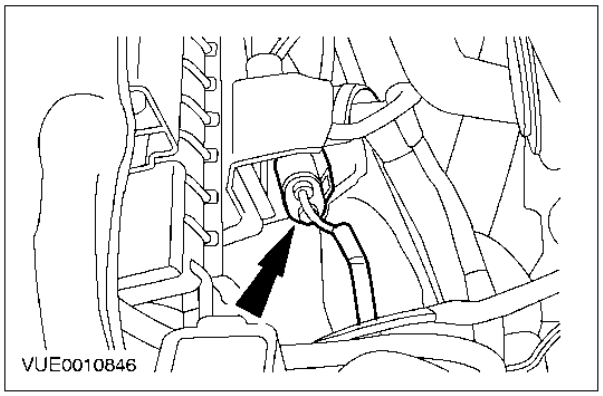

16. Disconnect the cooling fan motor electrical connector.

All except vehicles with diesel engine

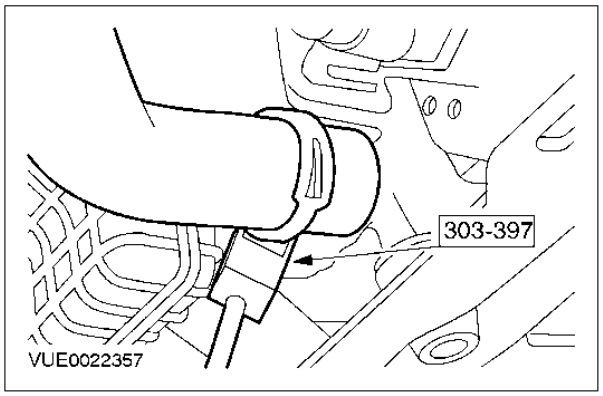

17. Using the special tool, disconnect the coolant hose from the radiator.

REMOVAL AND INSTALLATION (CONTINUED)

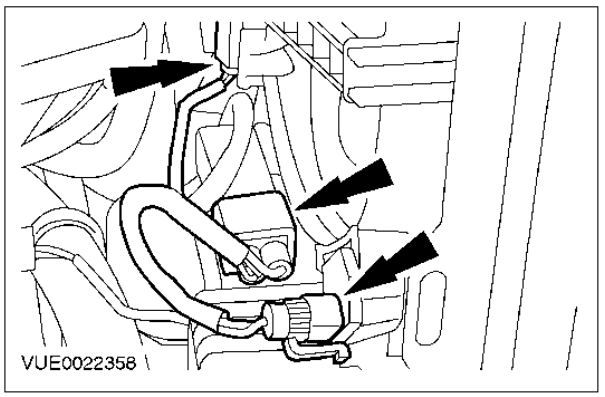

18. Disconnect the cooling fan motor resistor, cooling fan motor and cooling fan motor relay electrical connectors.

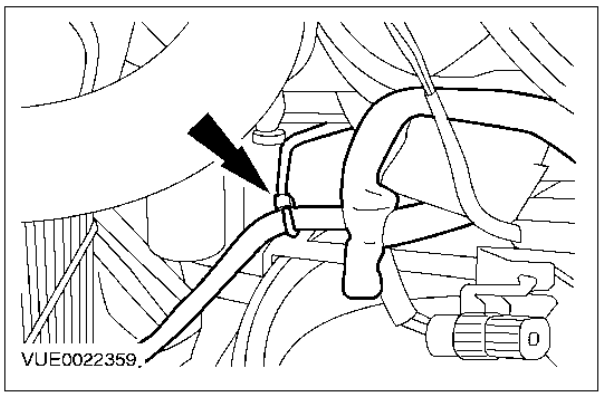

19. Detach the cooling fan motor wiring.

Vehicles with air conditioning

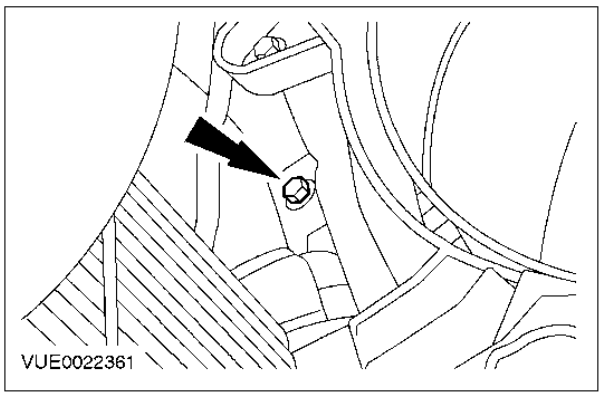

20. Remove the A/C condenser upper retaining bolts. (Left-hand upper bolt shown, right-hand similar).

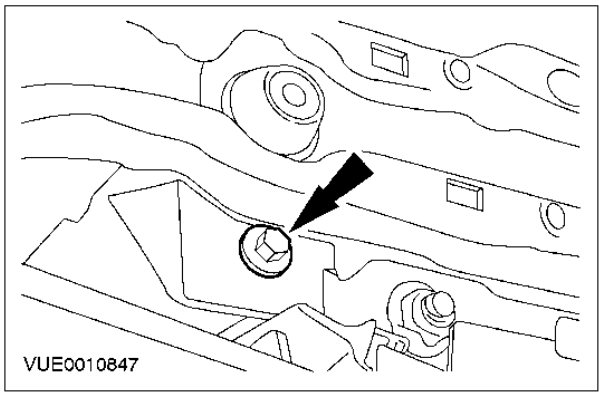

21. Remove the A/C condenser left-hand lower retaining bolt.

REMOVAL AND INSTALLATION (CONTINUED)

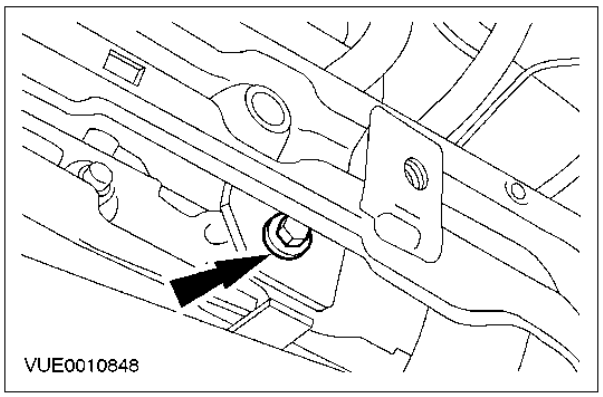

22. Remove the A/C condenser right-hand retaining bolt.

All vehicles

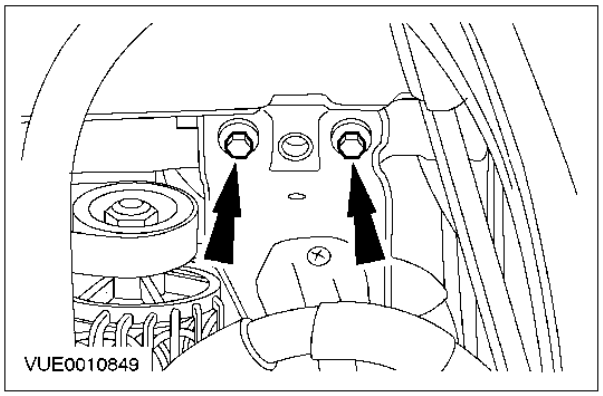

23. Remove the radiator support bracket right-hand retaining bolts.

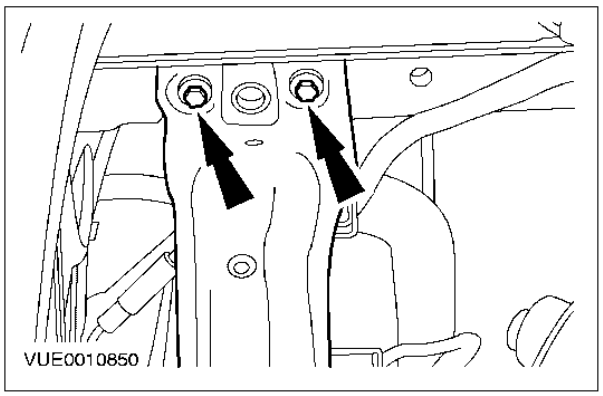

24. Remove the radiator support bracket.

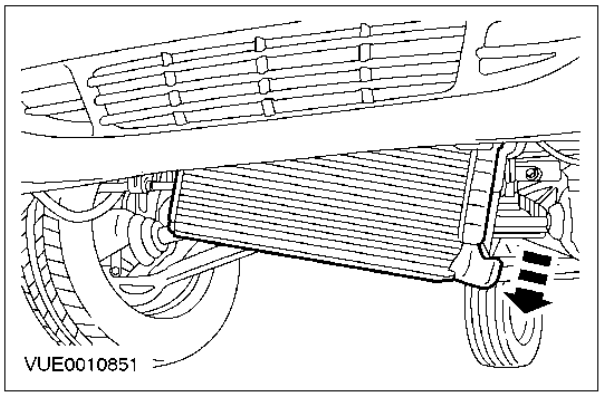

25. Remove the radiator, cooling fan motor and shroud.

REMOVAL AND INSTALLATION (CONTINUED)

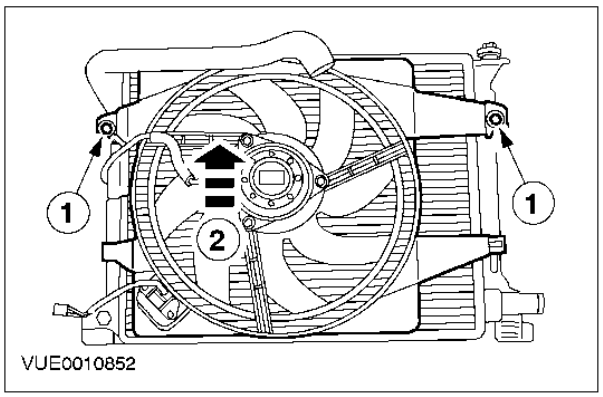

26. Remove the cooling fan motor and shroud.
    1. Loosen the cooling fan shroud nuts.
    2. Remove the cooling fan motor and shroud.

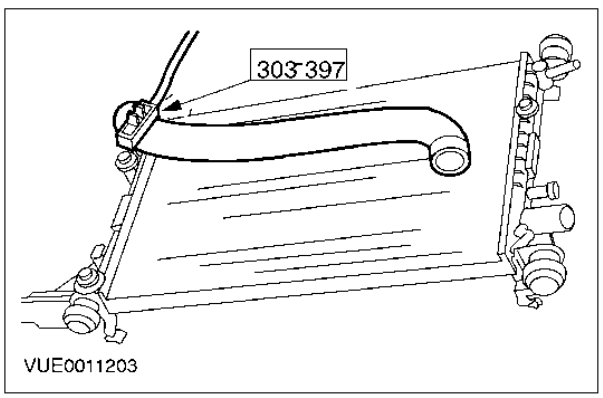

27. Using the special tool, remove the coolant hose from the radiator.

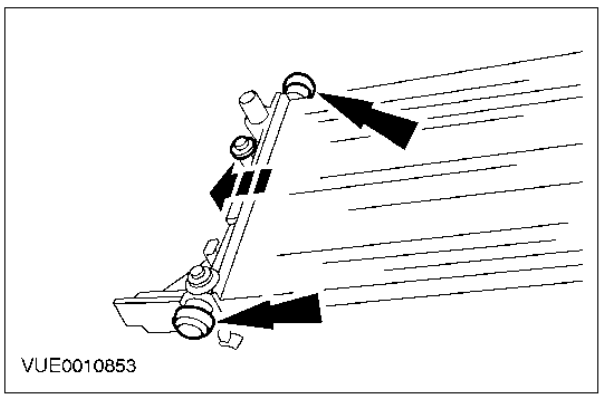

28. Remove the radiator left-hand insulators and the cooling fan shroud nut and bolt.

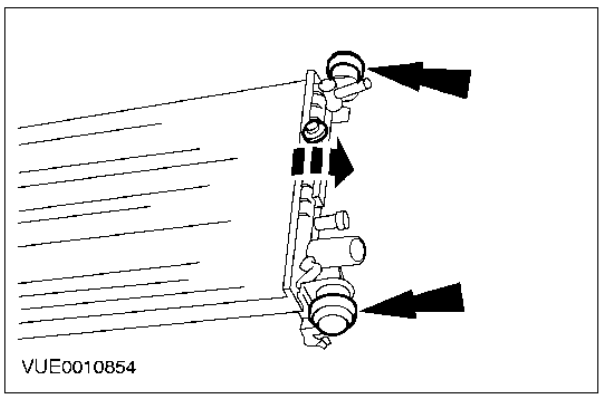

29. Remove the radiator right-hand insulators and the cooling fan shroud nut and bolt.

REMOVAL AND INSTALLATION (CONTINUED)

Installation

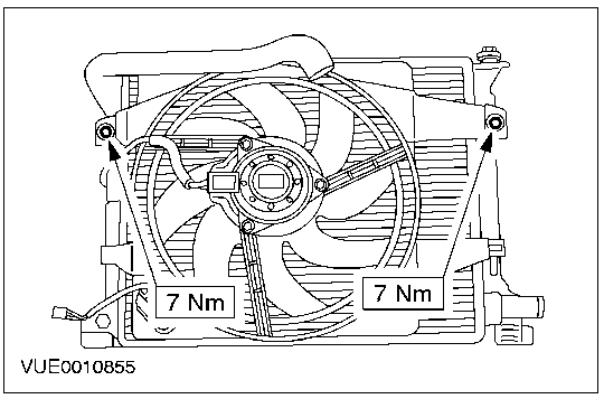

All vehicles

1. **NOTE:** Make sure the A/C condenser upper locating tangs are correctly installed into the radiator upper locating brackets.
   To install, reverse the removal procedure.

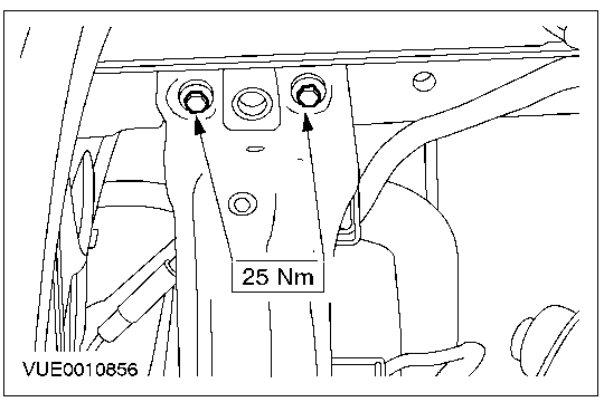

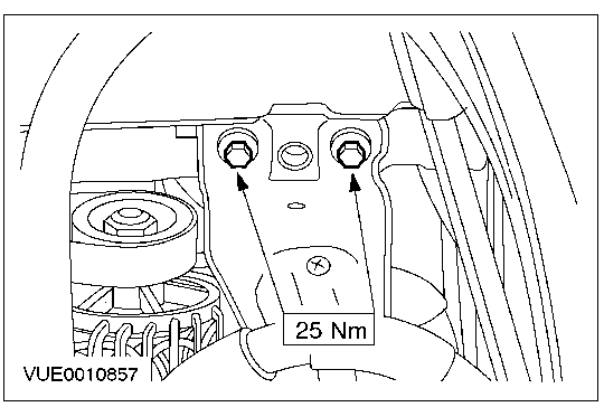

Vehicles with air conditioning

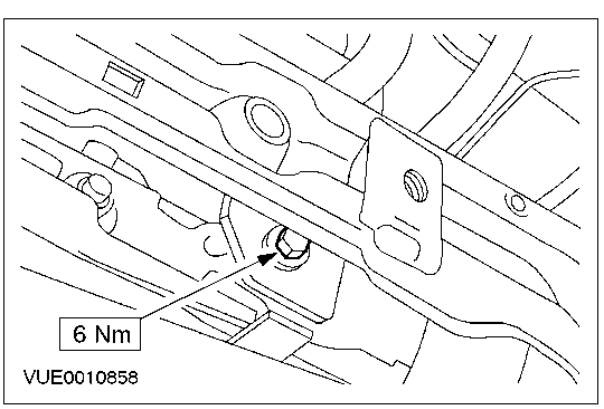

REMOVAL AND INSTALLATION (CONTINUED)

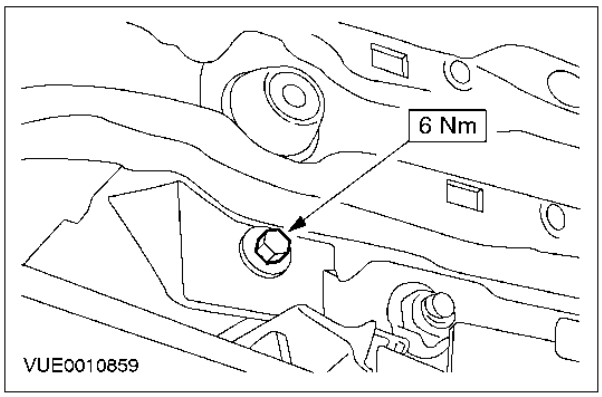

REMOVAL AND INSTALLATION

Cooling Fan Motor (24 222 0)

Removal

1. Disconnect the battery ground cable. For additional information, refer to Section 414-01.

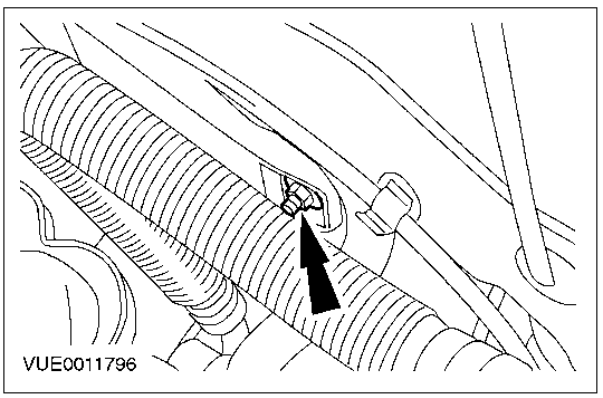

2. Remove the cooling fan shroud right-hand retaining nut.

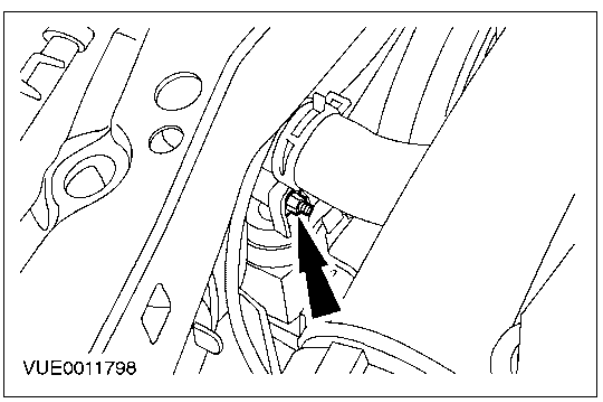

3. Remove the cooling fan shroud left-hand retaining nut.

4. Remove the engine undershield. For additional information, refer to Section 502-00.

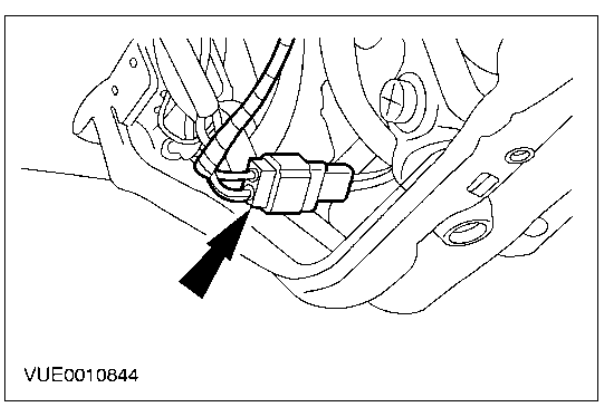

5. Disconnect and detach the cooling fan motor resistor electrical connector.

REMOVAL AND INSTALLATION (CONTINUED)

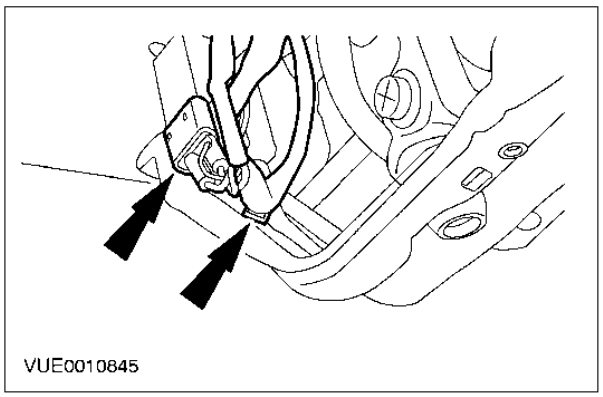

6. Disconnect and detach the cooling fan motor relay electrical connector.

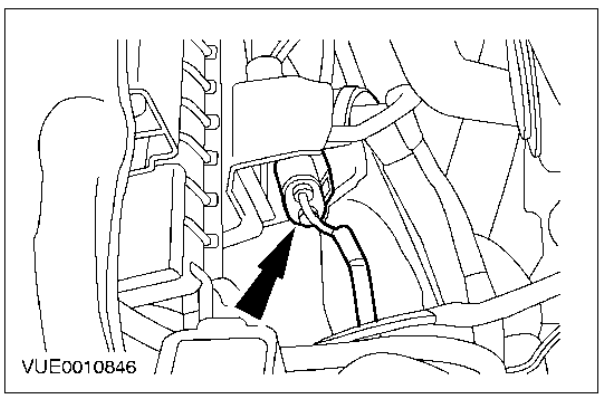

7. Disconnect the cooling fan motor electrical connector.

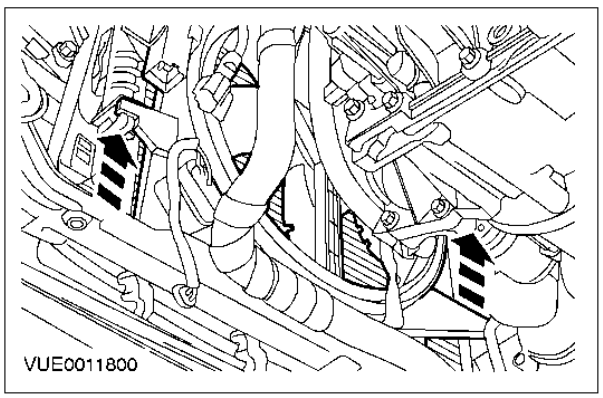

8. Remove the cooling fan motor and shroud.
   - Raise the cooling fan motor and shroud upwards out of the radiator lower locating brackets.

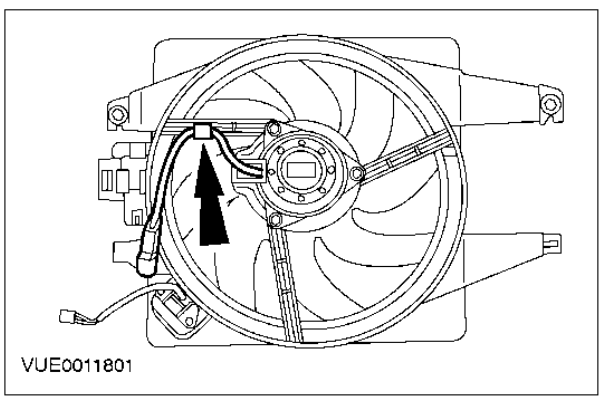

9. Detach the cooling fan motor wiring harness.

REMOVAL AND INSTALLATION (CONTINUED)

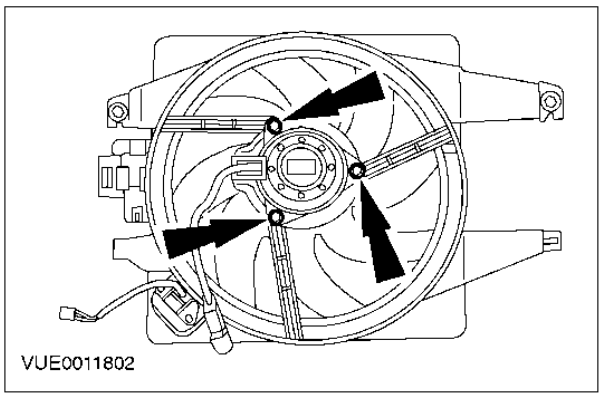

10. Remove the cooling fan motor.

Installation

1. To install, reverse the removal procedure.

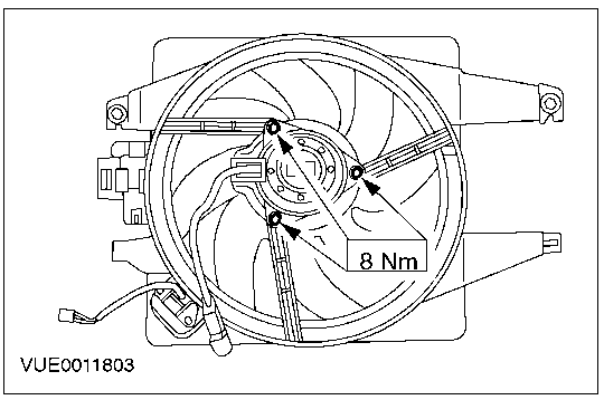

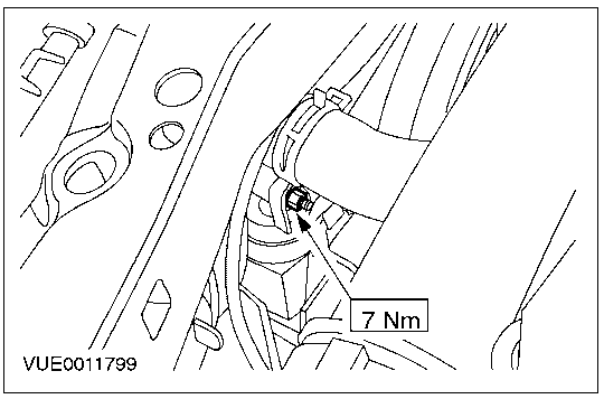

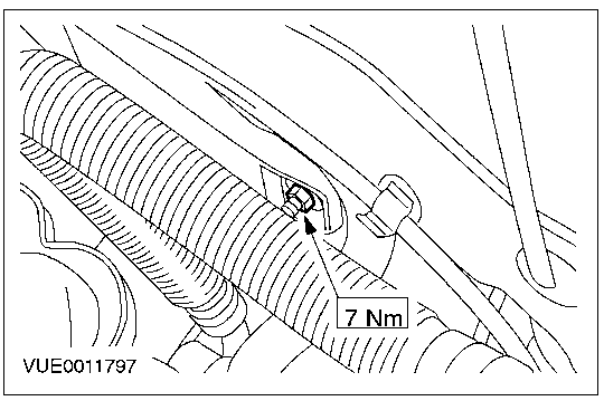

REMOVAL AND INSTALLATION

Coolant Expansion Tank (24 284 0)

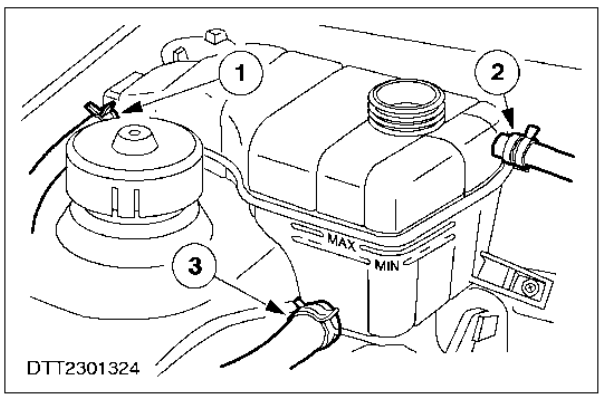

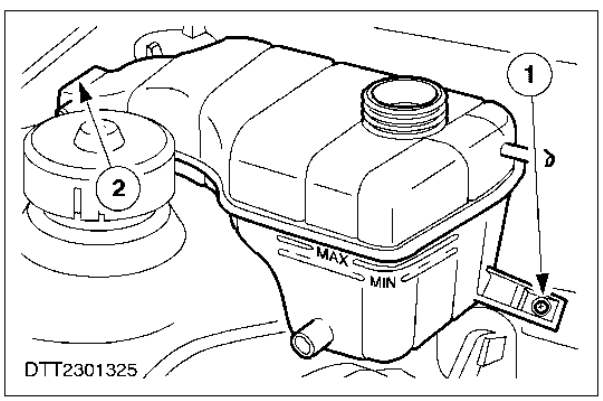

Removal

1. Drain the cooling system. For additional information, refer to Cooling System Draining, Filling and Bleeding. In this section

2. Disconnect the expansion tank hoses.
   1. Disconnect the radiator to expansion tank hose.
   2. Disconnect the engine to expansion tank hose.
   3. Disconnect the engine supply hose.

3. Remove the expansion tank.
   1. Remove the expansion tank retaining screw.
   2. Remove the expansion tank from the supporting bracket.

Installation

1. To install, reverse the removal procedure.

2. Refill the cooling system. For additional information, refer to Cooling System Draining, Filling and Bleeding. In this section

GENERAL PROCEDURES

Cooling System Draining, Filling and Bleeding (24 122 0)

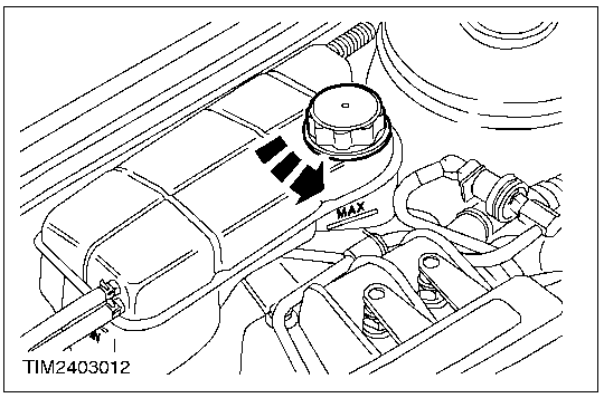

Drain

1. ⚠ **WARNING: When releasing the system pressure, cover the expansion tank cap with a thick cloth to prevent the possibility of coolant scalding.**
   Relieve the cooling system pressure.
   - Unscrew the cap slowly.
2. Remove the cap.
3. Raise and support the vehicle. For additional information, refer to Section 100-02.

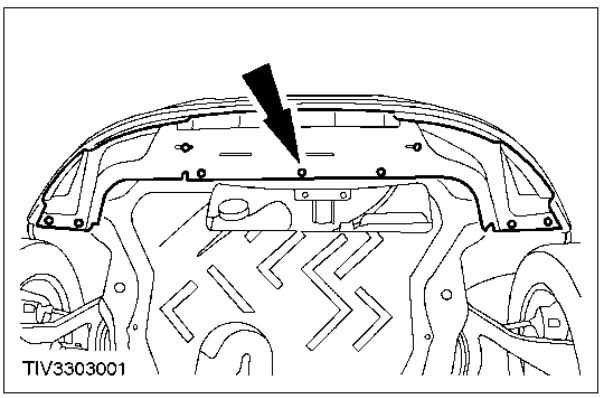

4. Remove the radiator undershield.

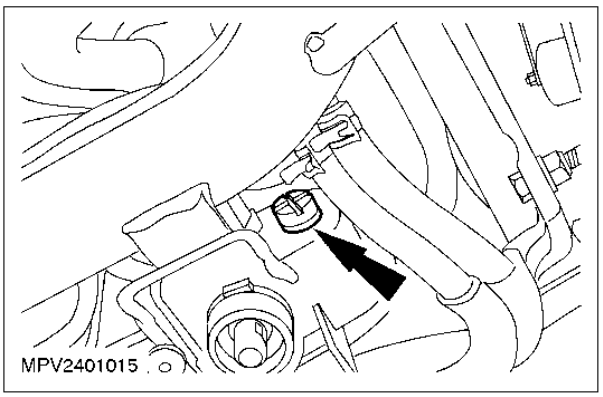

5. Remove the drain plug.
   - Drain the coolant into a suitable container.
6. Refit the drain plug when all coolant has drained.
7. Refit the radiator undershield.
8. Lower the vehicle.

GENERAL PROCEDURES (CONTINUED)

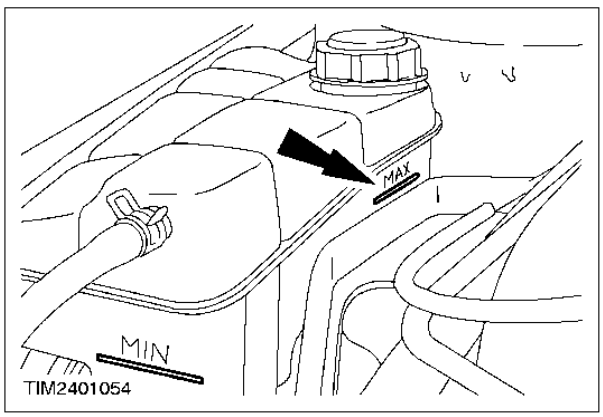

Refill

1. **NOTE:** For vehicles with a diesel engine, it is necessary to add a further one liter of coolant above the MAX mark to make sure that the correct level is achieved after the system degasses.
   Refill the expansion tank to the MAX mark.

2. Start the engine and run until normal operating temperature is achieved. Check for leaks and add coolant if necessary.

GENERAL PROCEDURES

Cooling System Flushing

1. To remove rust, sludge and other foreign material from the cooling system, use Premium Cooling System Flush that is safe for use with aluminum radiators, for additional information, refer to Specifications in this section. Remove the thermostat prior to pressure flushing. This cleaning restores cooling system efficiency and helps prevent overheating. A pulsating or reversed direction of flushing water will loosen sediment more quickly than a steady flow in the normal coolant flow direction. In severe cases where cleaning solvents will not properly clean the cooling system for efficient operation, it will be necessary to use the pressure flushing method using Cooling System Flusher. Dispose of old coolant and flushing water contaminated with antifreeze and cleaning chemicals in accordance with local, state or federal laws.
2. Remove the radiator.
3. ⚠ **CAUTION: Radiator internal pressure must not exceed 138 kPa. Damage may result.**
   Back flush the radiator with the radiator in an upside down position with a high-pressure water hose in the lower hose location and back flush.
4. Remove thermostat.
   Refer to Thermostat in this Section.
5. Back flush the engine. Position the high-pressure water hose into the engine through the engine return and back flush the engine.

GENERAL PROCEDURES

Cooling System Back flushing

CAUTION: The heater core must be back flushed separately from the engine cooling system to make sure correct back flush water flow direction through the heater core. All engine cooling system flushing and back flushing procedures must include a separate back flushing of the heater core or A/C system heater core after the flushing or back flushing of the engine cooling system to prevent the engine cooling system particles from clogging the heater core tubes and reducing (or preventing) coolant flow through the heater core.

1. Disconnect the heater outlet hose from the engine intake connector and install a garden hose (from a tap), with a male adapter into the end of the heater outlet hose. Secure with a hose clamp.
2. Connect a garden hose to the engine intake connector and secure with a hose clamp. Allow the open end to drain into a suitable container or drain.
3. Turn the water supply tap ON and OFF several times, so that the surge action will help to dislodge larger, stubborn particles from the heater core tubes. Allow water pressure to flow for approximately five minutes.
4. Remove the garden hose with the male adapter from the heater outlet hose. Remove the garden hose from the engine intake connector and reconnect the heater outlet hose onto the engine intake connector.
5. Fill the cooling system as described, using a 50/50 mixture of Ford cooling system fluid and water. For additional information, refer to Specifications in this section.
6. Test the system for correct heater operation within the engine cooling system conditions.

GENERAL PROCEDURES

Heater Core Back flushing

⚠CAUTION: The heater core must be back flushed separately from the engine cooling system for proper back flush water flow direction through the heater core. All engine cooling system flushing and back flushing procedures must include a separate back flushing of the heater or A/C system heater core after the flushing or back flushing of the engine cooling system to prevent the engine cooling system particles from clogging the heater core tubes and reducing (or eliminating) coolant flow through the heater core.

1. Disconnect the outlet heater water hose from the engine and install a female garden hose and fitting adapter in the end of the heater outlet water hose. Secure with a hose clamp.
2. Connect the female hose end of the heater outlet water hose to the male end of a water supply garden hose.
3. Disconnect the heater inlet water hose from the engine and allow it to drain into a suitable container.
4. Turn the water supply valve ON and OFF several times so that the surge action will help to dislodge larger, stubborn particles from the heater core tubes. Allow water pressure to flow for approximately five minutes.
5. Remove the hose clamp and female garden hose end adapter from the heater outlet water hose and reconnect the heater outlet water hose onto the engine.
6. Connect the heater inlet water hose onto the engine.
7. Fill the cooling system as described, using a 50/50 mixture of L405F antifreeze and water.
8. Test the system for proper heater performance with the specified engine cooling system conditions.

SPECIFICATIONS

Lubricants, Fluids, Sealers and Adhesives

Item	Specification
Antifreeze	L405F
Premium Cooling System Flush	EGR-M14P7-A

Capacities

Description	Liters
Cooling system, including heater system and coolant expansion tank (1.3L)	5.6
Cooling system, including heater system and coolant expansion tank (1.6L)	6.3
Cooling system, including heater system and coolant expansion tank (diesel)	9.3

Coolant

Specific gravity (providing no other additive is in the coolant)	Approximate percentage of antifreeze (by volume)	Remains fluid to	Solidifies at
1.061 at +15°C	30%	-25°C (-13°F)	-30°C (-22°F)

Pressures

Description	Pressure bar
Radiator pressure test	1.38
Coolant expansion tank cap release pressure	0.89-1.28

Torque Specifications

Description	Nm
Thermostat housing screws (1.6L)	10
Thermostat housing retaining bolts (1.6L)	10
Thermostat housing retaining bolts (diesel)	10
Water pump retaining bolts (1.3L and 1.6L)	10
Water pump retaining bolts (diesel)	33
Water pump pulley retaining bolts (1.3L)	11
Water pump pulley retaining bolts (1.6L)	12
Idler pulley retaining bolt (diesel)	46
Engine mounting bracket retaining bolts (diesel)	33
Cooling fan shroud retaining nuts	7
Radiator support bracket retaining bolts	25
Air conditioning (A/C) condenser retaining bolts	6
Cooling fan motor retaining bolts	8

SECTION 303-04B Fuel Charging and Controls — 1.6L / 1.3L Engine

VEHICLE APPLICATION: 2002 Bantam

SUBJECT **PAGE**

DESCRIPTION AND OPERATION
Fuel Charging and Controls 303-04B-175/176

DIAGNOSIS AND TESTING
Fuel Charging and Controls 303-04B-177
Inspection and Verification 303-04B-177

REMOVAL AND INSTALLATION
Throttle Body ..... (23 198 0) 303-04B-178/180
Fuel Injectors ..... (23 455 0) 303-04B-181/184
Fuel Charging Wiring Harness ..... (36 437 0) 303-04B-185/187

SPECIFICATIONS
Specifications 303-04B-188
Torque Specifications 303-04B-188

DESCRIPTION AND OPERATION

Fuel Charging and Controls

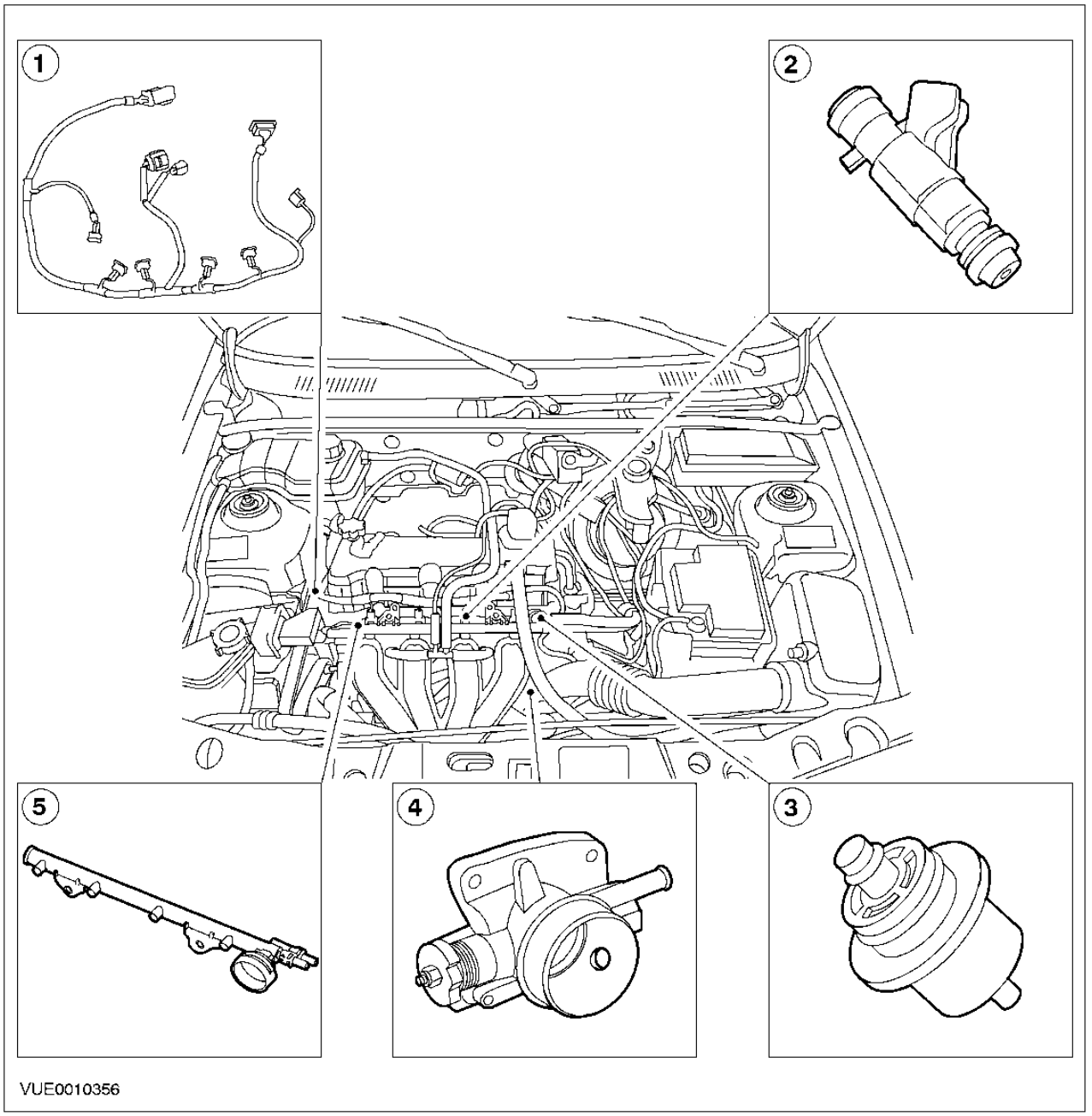

Item	Description
1	Fuel charging wiring harness
2	Fuel injector
3	Fuel pressure regulator
4	Throttle body
5	Fuel injection supply manifold

Fuel Charging Wiring Harness

The fuel charging wiring harness links the fuel injectors to the engine management system.

Fuel Pressure Regulator

The fuel pressure regulator is vacuum operated with a spring loaded diaphragm. It is designed to maintain a constant fuel pressure in the fuel injection supply manifold with excess fuel being returned to the fuel tank. Sealing is achieved by means of two O-ring seals.

DESCRIPTION AND OPERATION (CONTINUED)

Fuel Injection Supply Manifold

The fuel injection supply manifold is a one piece plastic molding with holes for the fuel pressure regulator and the fuel injectors. Sealing is achieved by means of six O-ring seals.

Throttle Body

The throttle body is of aluminum construction with a hole for the throttle position sensor. Sealing is achieved by means of a gasket and an O-ring seal.

Fuel Injectors

The fuel injectors are of the top feed type. They are activated sequentially by the powertrain control module (PCM), which modifies fuelling by adjusting the fuel injector opening times according to engine operating conditions. Sealing is achieved by means of upper and lower O-ring seals.

DIAGNOSIS AND TESTING

Fuel Charging and Controls

Inspection and Verification

1. Verify the customer concern by operating the system.
2. Visually inspect for obvious signs of mechanical or electrical damage.

Visual Inspection Chart

Mechanical	Electrical
• Fuel leak(s) • Fuel pressure regulator vacuum line • Fuel injector(s) • Fuel pressure regulator • Throttle body • Fuel injection supply manifold	• Wiring harness • Loose or corroded electrical connector(s) • Fuel injector(s)

3. If an obvious cause for an observed or reported concern is found, correct the cause (if possible) before proceeding to the next step.
4. If the concern is not visually evident, verify the symptom and refer to WDS to diagnose the system.

REMOVAL AND INSTALLATION

Throttle Body (23 198 0)

Removal

CAUTION: Do not attempt to clean the throttle body. The bore and throttle plate have a special coating applied during manufacture which should not be removed.

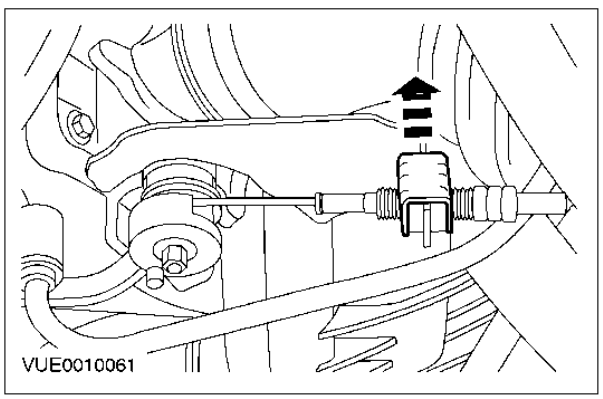

1. Remove the accelerator cable clip.

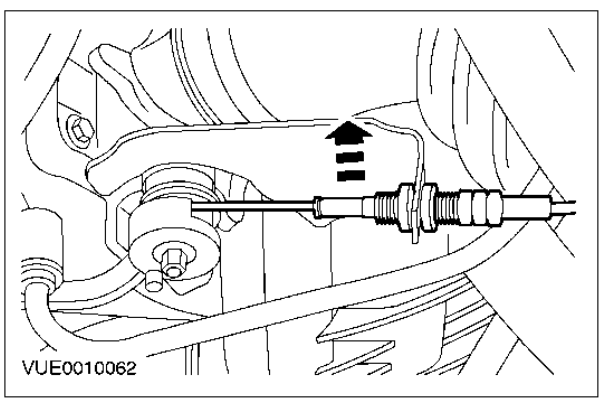

2. Detach the accelerator outer cable.

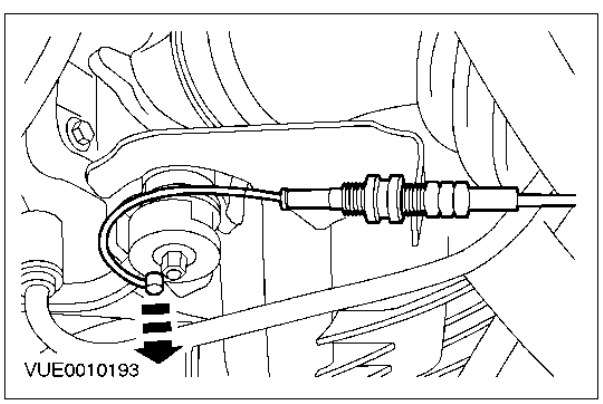

3. Disconnect the accelerator inner cable.

REMOVAL AND INSTALLATION (CONTINUED)

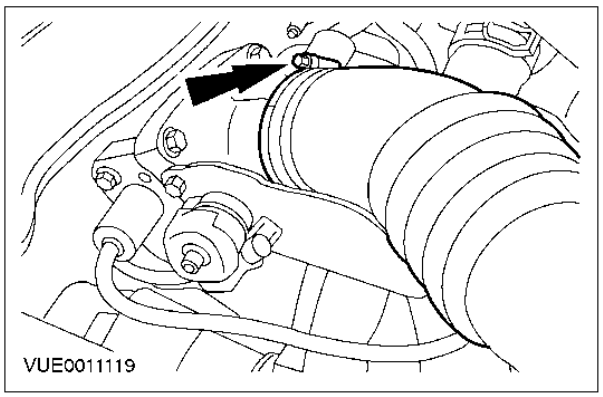

4. Disconnect the air cleaner outlet pipe.

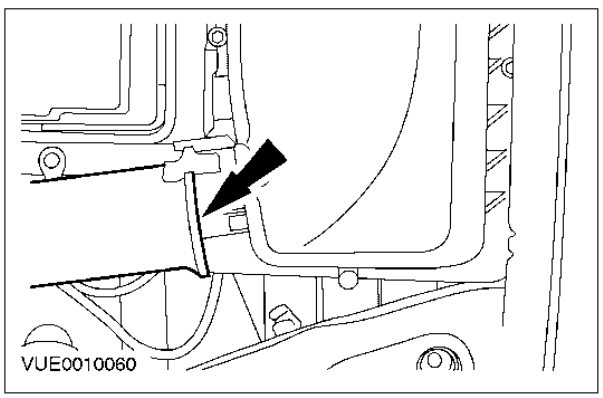

5. Remove the air cleaner outlet pipe.

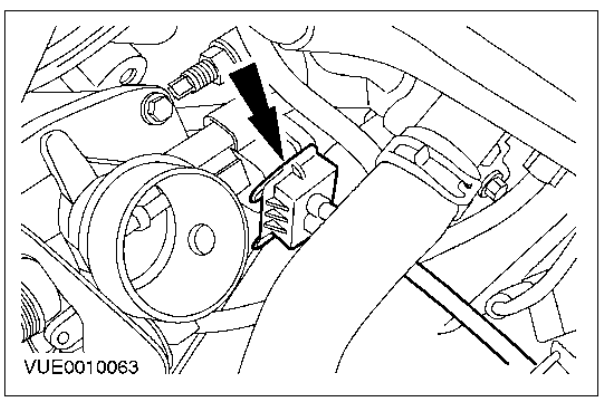

6. Disconnect the throttle position (TP) sensor electrical connector.

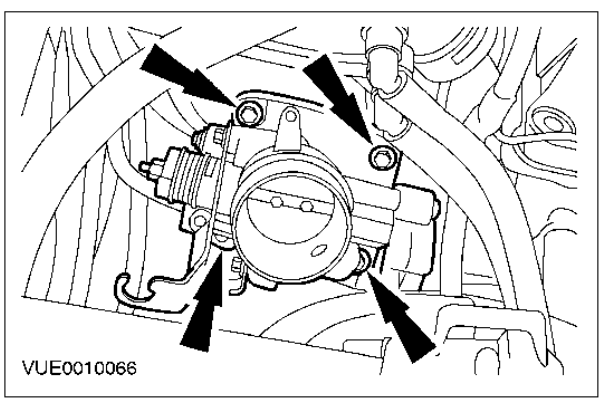

7. Remove the throttle body.
   - Discard the gasket.

REMOVAL AND INSTALLATION (CONTINUED)

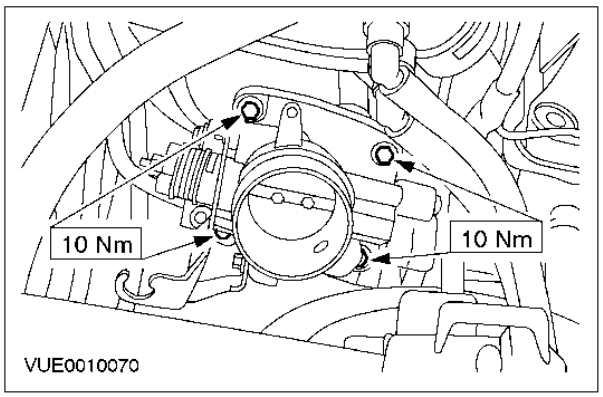

Installation

CAUTION: Do not attempt to clean the throttle body. The bore and throttle plate have a special coating applied during manufacture which should not be removed.

1. **NOTE:** Install a new gasket.
   To install, reverse the removal procedure.

REMOVAL AND INSTALLATION

Fuel Injectors (23 455 0)

Removal

WARNING: This procedure involves fuel handling. Be prepared for fuel spillage at all times and always observe fuel handling precautions. Failure to follow these instructions may result in personal injury.

WARNING: Do not smoke or carry lighted tobacco or open flame of any type when working on or near any fuel related components. Highly flammable mixtures are always present and can ignite. Failure to follow these instructions may result in personal injury.

1. Release the fuel system pressure. For additional information, refer to Section 310-00.
2. Disconnect the battery ground cable. For additional information, refer to Section 414-01.
3. Disconnect the engine ventilation hose.

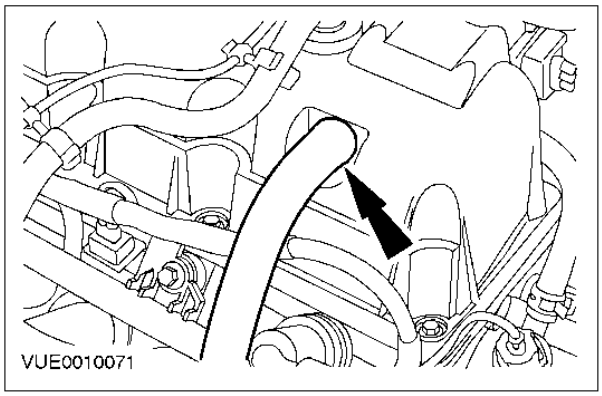

4. Disconnect the engine ventilation hoses and secure to one side.

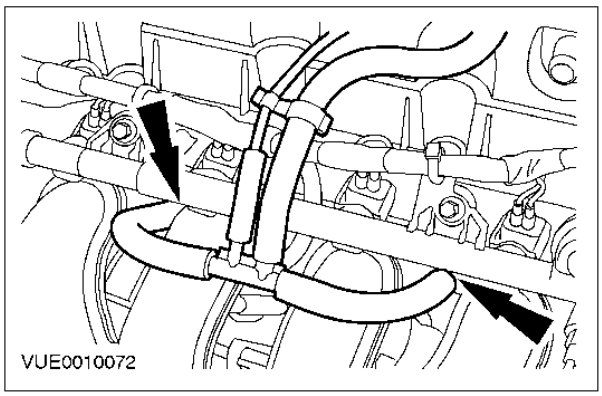

REMOVAL AND INSTALLATION (CONTINUED)

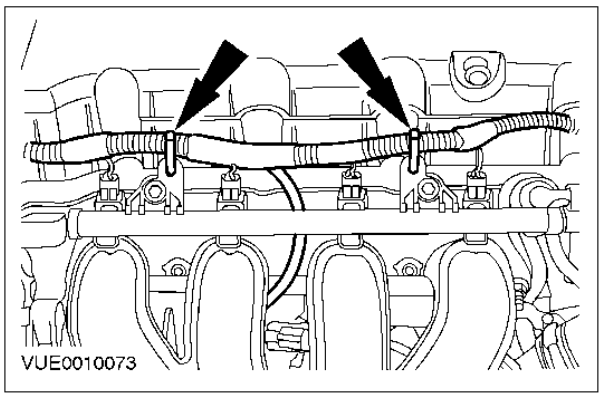

5. Detach the fuel charging wiring harness.
   - Remove the cable ties.

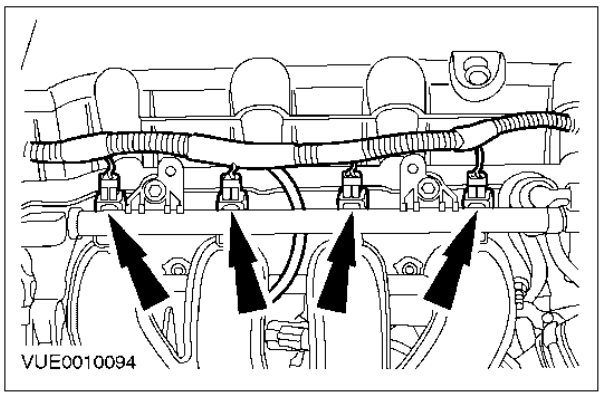

6. Disconnect the fuel injector electrical connectors.

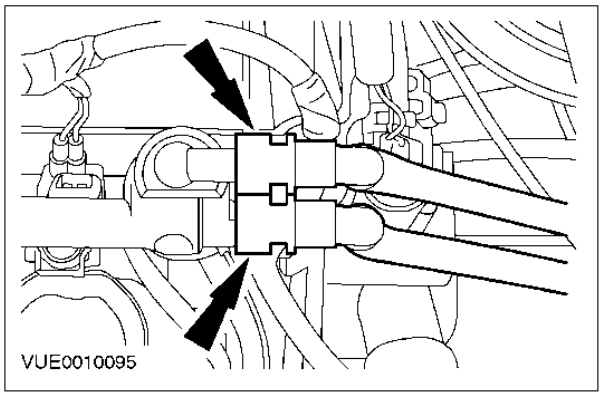

7. Disconnect the fuel lines. For additional information, refer to Section 310-00.

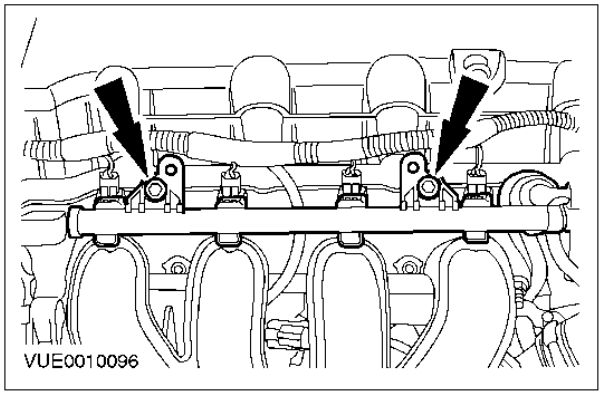

8. Detach the fuel injection supply manifold.

REMOVAL AND INSTALLATION (CONTINUED)

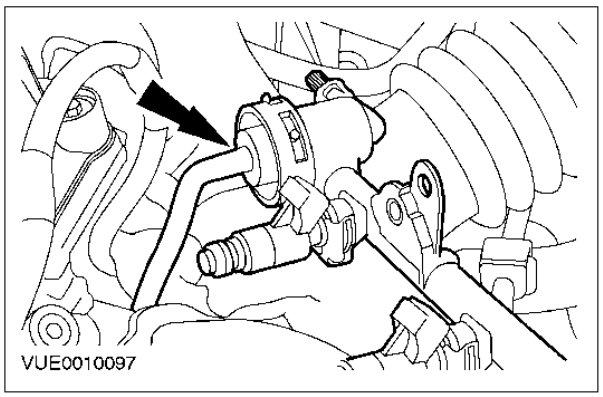

9. Remove the fuel injection supply manifold.
   - Disconnect the fuel pressure regulator vacuum line.

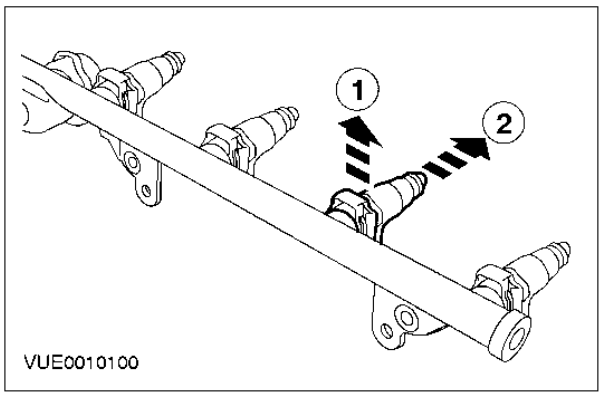

10. Remove the fuel injectors.
    1. Remove the clip.
    2. Remove the fuel injectors.

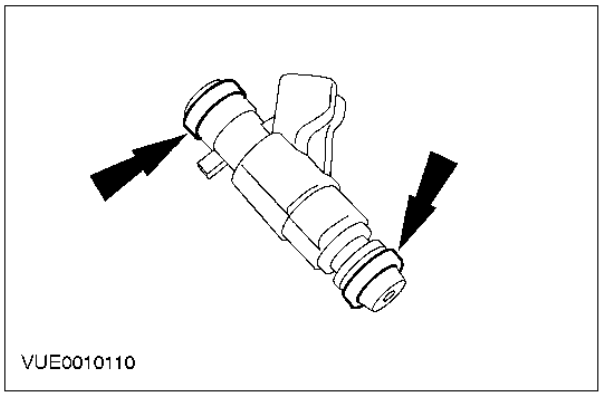

11. Remove and discard the O-ring seals.

Installation

⚠WARNING: This procedure involves fuel handling. Be prepared for fuel spillage at all times and always observe fuel handling precautions. Failure to follow these instructions may result in personal injury.

REMOVAL AND INSTALLATION (CONTINUED)

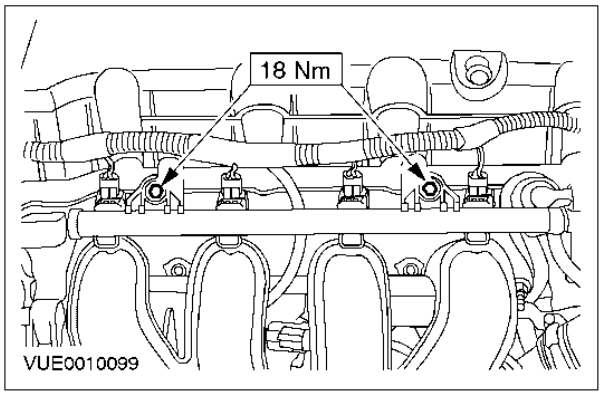

WARNING: Do not smoke or carry lighted tobacco or open flame of any type when working on or near any fuel related components. Highly flammable mixtures are always present and can ignite. Failure to follow these instructions may result in personal injury.

1. **CAUTION: Do not use silicone grease to lubricate the O-ring seals, as it will block the fuel injectors.**

NOTE: Install new O-ring seals.

NOTE: Lubricate the O-ring seals with clean engine oil to aid installation.

NOTE: Install new cable ties.

To install, reverse the removal procedure.

REMOVAL AND INSTALLATION

Fuel Charging Wiring Harness (36 437 0)

Removal

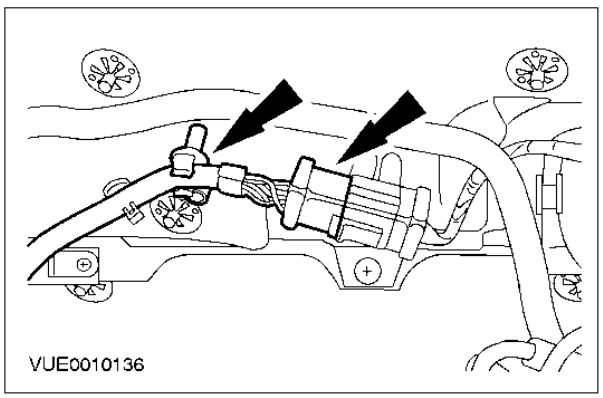

1. Detach the fuel charging wiring harness and disconnect the electrical connector.

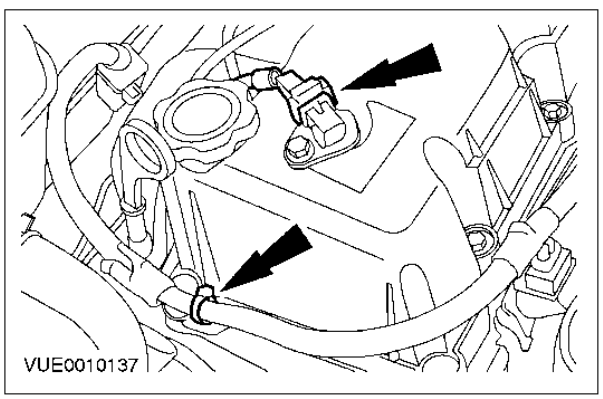

2. Disconnect the camshaft position (CMP) sensor electrical connector and detach the fuel charging wiring harness.
   - Remove the cable tie.

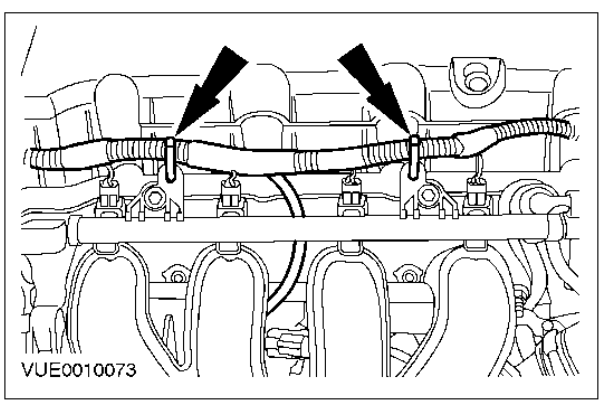

3. Detach the fuel charging wiring harness.
   - Remove the cable ties.

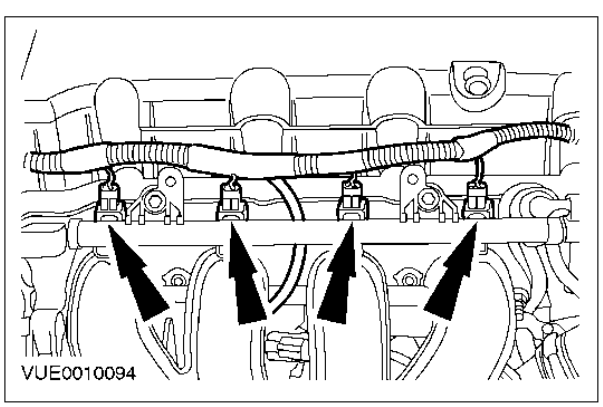

4. Disconnect the fuel injector electrical connectors.

REMOVAL AND INSTALLATION (CONTINUED)

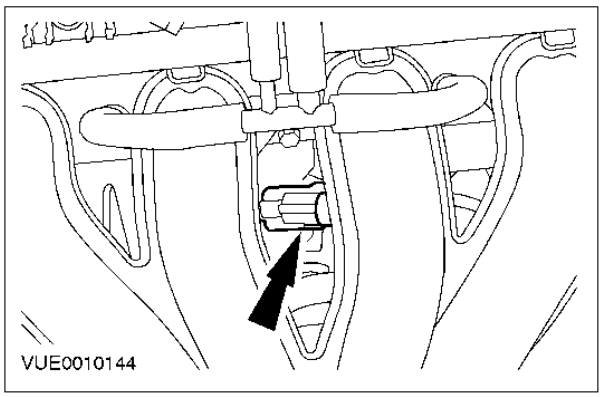

5. Disconnect the temperature and manifold absolute pressure T-MAP) sensor electrical connector.

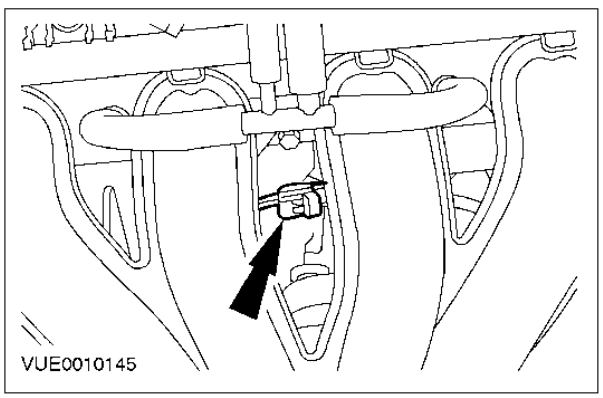

6. Disconnect the idle air control (IAC) valve electrical connector.

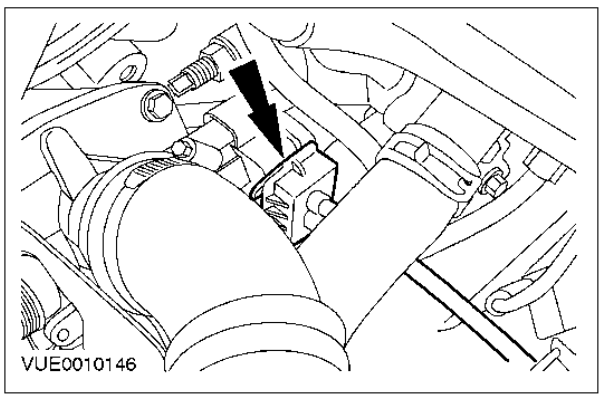

7. Disconnect the throttle position (TP) sensor electrical connector.

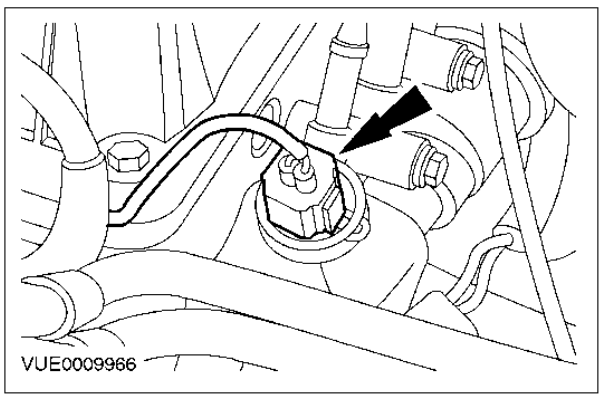

8. Disconnect the engine coolant temperature (ECT) sensor electrical connector and remove the fuel charging wiring harness.

REMOVAL AND INSTALLATION (CONTINUED)

Installation

1. To install, reverse the removal procedure.

SPECIFICATIONS

Torque Specifications

Description	Nm
Throttle body retaining bolts	10
Fuel injection supply manifold retaining bolts	18

SECTION 303-04D Fuel Charging and Controls — 1.8L Diesel Engine

VEHICLE APPLICATION: 2002 Bantam

SUBJECT **PAGE**

DESCRIPTION AND OPERATION

Fuel Charging and Controls 303-04D-2
Fuel Injection Pump 303-04D-2
Light Load Retard Device 303-04D-2
Cold Start Advance Solenoid 303-04D-2
Fuel Injectors 303-04D-2
Glow Plugs 303-04D-2
Waxstat 303-04D-2
Idle Speed Control Motor 303-04D-2/3

DESCRIPTION AND OPERATION

Fuel Charging and Controls

The diesel injection equipment fitted to the 1,8 litre naturally aspirated Endura -DE diesel engine comprises a fuel injection pump, four fuel injectors and four glow plugs. The glow plugs and certain fuel injection pump components are controlled by the powertrain control module (EEC V).

Fuel Injection Pump

The engine is equipped with a Bosch VE distributor type fuel injection pump, which is driven by the crankshaft via a toothed rubber drive belt. The fuel injection pump is retained to the engine by three bolts at the front and a support bracket at the rear (two bolts). Setting the injection timing is achieved using the familiar peg timing method.

The fuel injection pump is fitted with a light load retard device and a cold start advance solenoid, both of which change the natural injection timing characteristics dependent on engine operating conditions.

Light Load Retard Device

The light load retard device is a mechanical/hydraulic device incorporating a solenoid, which is controlled by the powertrain control module. Under normal operating conditions, and for engine loads up to approximately 80% full load, the device retards the injection timing by approximately 3 °. Where engine load is above 80% of full load, engine coolant temperature is below 50 ° C or engine speed is above 3500 rev/min, the powertrain control module energizes the solenoid which inhibits the operation of the light load retard device, thus advancing the injection timing.

Cold Start Advance Solenoid

The cold start advance solenoid is controlled by the powertrain control module. When engine coolant temperature is below 50 ° C, the powertrain control module energizes the solenoid, which advances the injection timing throughout the engine speed/load range. The amount of time, which the solenoid is, energized decreases as engine coolant temperature increases. The solenoid is also energized when engine coolant temperature is below 0 ° C and engine speed is just above idle to improve drivability take off.

Fuel Injectors

The engine is equipped with four Bosch fuel injectors, which have throttling pintle nozzles. The fuel injectors are screwed into the cylinder head and sealed by means of copper sealing washers.

Glow Plugs

The engine is equipped with four glow plugs, which are screwed into the cylinder head below the fuel injectors. The glow plugs improve starting, especially from cold.

The glow plugs and the glow plug indicator lamp are controlled by the powertrain control module. When the ignition is switched on, the glow plugs are switched on and the glow plug indicator lamp is illuminated for between 1 and 10 seconds dependent on engine coolant temperature. (1 second at 80 ° C and 10 seconds at -30 ° C).

The glow plugs remain on for a period of 3 seconds after the glow plug indicator lamp has been extinguished. However, if the engine is started during this 3-second period, the glow plugs will remain on for a further 0 to 40 seconds dependent on engine coolant temperature. (0 seconds at 80 ° C and 40 seconds at -40 ° C.

Waxstat

A waxstat system is fitted to all vehicles, except those with air conditioning. The waxstat system comprises a wax element, which is located inside the thermostat housing and a control cable, which extends from the wax element and connects to the idle lever on the fuel injection pump.

When the engine is cold, the cable pulls the idle lever to the high idle position. When the engine is warm, the cable is released allowing the idle lever to return to the normal idle position.

Idle Speed Control Motor

An idle speed control motor is fitted to all vehicles with air conditioning. The idle speed control motor system comprises an idle speed control

DESCRIPTION AND OPERATION (CONTINUED)

motor, which is located under the battery tray and a control cable, which extends from the idle speed control motor and connects to the idle lever on the fuel injection pump.

Engine idle speed is controlled by the powertrain control module, which alters the position of the motor, and therefore, the position of the idle lever. To prevent excess slack in the control cable, the idle speed control motor is fitted with an idle tracking switch, which prevents further movement of the motor once the tension on the control cable is released.

In addition to giving an increased engine idle speed when the engine is cold, the idle speed control motor system provides accurate idle speed control when the engine is warm, increased idle speed when air conditioning is on and/or a low battery voltage condition exists and dashpot engine speed deceleration control.

SECTION 303-04D Fuel Charging and Controls — 1.8L Diesel Engine

VEHICLE APPLICATION: 2002 Bantam

SUBJECT **PAGE**

GENERAL PROCEDURES

Idle Speed Adjustment (Vehicles Without Air Conditioning) ..... (23 413 0) 303-04D-5
Idle Speed Adjustment (Vehicles With Air Conditioning) ..... (23 413 0) 303-04D-6/7

GENERAL PROCEDURES

Idle Speed Adjustment (23 413 0) (Vehicles Without Air Conditioning)

NOTE: This adjustment must be carried out with the engine at normal operating temperature.

1. Connect a tachometer to the engine in accordance with the manufacturer's instructions.
2. Start the engine and allow it to idle.
3. Loosen the idle speed adjustment screw lock nut.

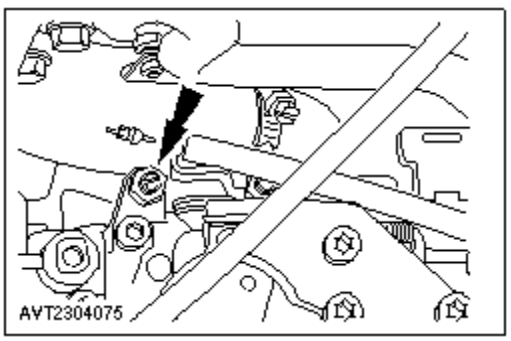

4. Adjust the idle speed screw as necessary (refer to Specifications contained in this section).

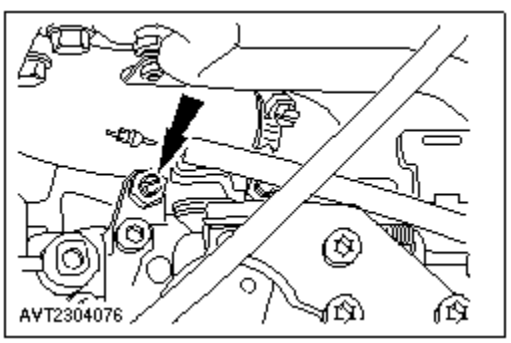

5. Tighten the idle speed adjustment screw lock nut.
6. Check to ensure the idle speed is still within specification.
7. Momenentarily move the idle lever away from the stop.
8. Check to ensure the idle speed is still within specification.
9. Switch the engine off.
10. Disconnect the tachometer from the engine.

GENERAL PROCEDURES

Idle Speed Adjustment — (Vehicles with Air Conditioning) (23 413 0)

NOTE: This adjustment must be carried out with the engine at normal operating temperature.

1. Connect a tachometer to the engine in accordance with the manufacturer's instructions.
2. Remove the idle speed control cable retaining clip.

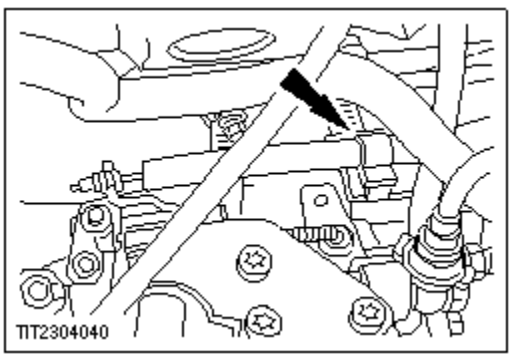

3. Start the engine and allow it to idle.
4. Loosen the idle speed adjustment screw lock nut.

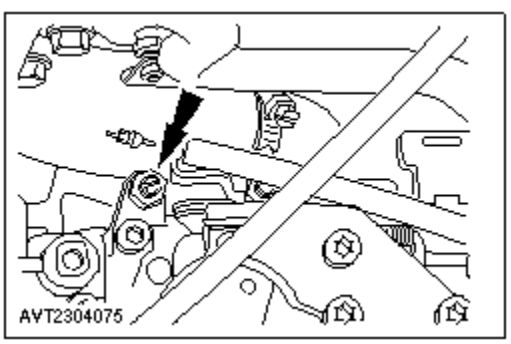

5. Adjust the minimum engine speed as necessary (refer to Specifications contained in this section).

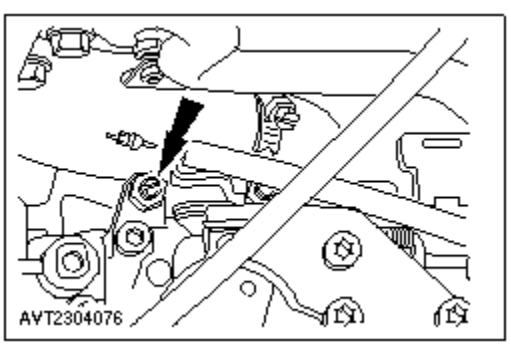

6. Tighten the idle speed adjustment screw lock nut.
7. Check to ensure the minimum engine speed is still within specification.
8. Momenentarily move the idle lever away from the stop.
9. Check to ensure the idle speed is still within specification.
10. Adjust the idle speed control cable (refer to operation in this section).

GENERAL PROCEDURES (CONTINUED)

11. Refit the idle speed control cable retaining clip.

12. Disconnect the tachometer from the engine.

SECTION 303-04D Fuel Charging and Controls — 1.8L Diesel Engine

VEHICLE APPLICATION: 2002 Bantam

SUBJECT **PAGE**

REMOVAL AND INSTALLATION

Fuel Injection Pump (Removal) ..... (23 414 0) 303-04D-9/17
Fuel Injection Pump (Install) ..... (23 414 0) 303-04D-18/22

REMOVAL AND INSTALLATION

Fuel Injection Pump (23 414 0)

Special Tool(s)	
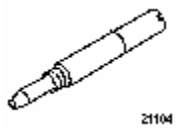	Timing Peg, Crankshaft TDC 303-193 (21-104)
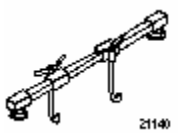	Support Bar, Engine 303-290 (21-140)
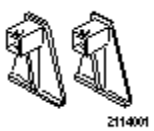	Adapter for 303-290 303-290-01 (21-140-01)
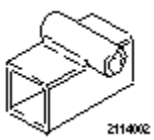	Adapter for 303-290 303-290-02 (21-140-02)

Special Tool(s)	
	Adapter for 303-290 303-290-03 (21-140-03)
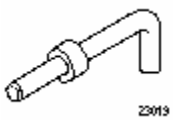	Timing Peg, Fuel Injection Pump Timing 310-018 (23-019)
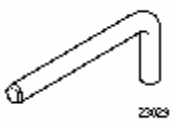	Timing Peg, Fuel Injection Pump Timing 310-033 (23-029)

Removal

All vehicles

WARNING: This procedure involves fuel handling. Be prepared for fuel spillage at all times and always observe fuel handling precautions.

CAUTION: Diesel fuel injection equipment is manufactured to very precise tolerances and fine clearances. It is therefore essential that absolute cleanliness be observed when working with these components. Always fit blanking plugs to any open orifices or pipes.

1. Disconnect the battery ground cable.
   For additional information,
   refer to Section 414-01.

REMOVAL AND INSTALLATION (CONTINUED)

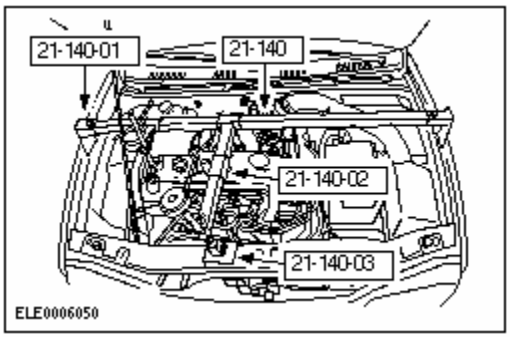

2. Install the special tools.

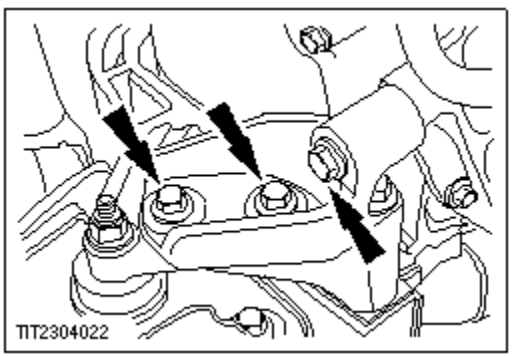

3. Remove the engine front mounting auxiliary bracket.

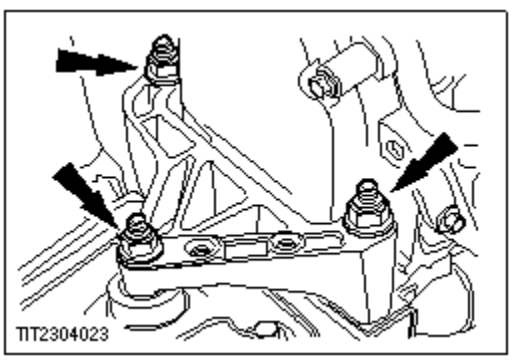

4. Remove the engine front mounting bracket.

5. Raise and support the vehicle. For additional information, refer to Section 100-02.

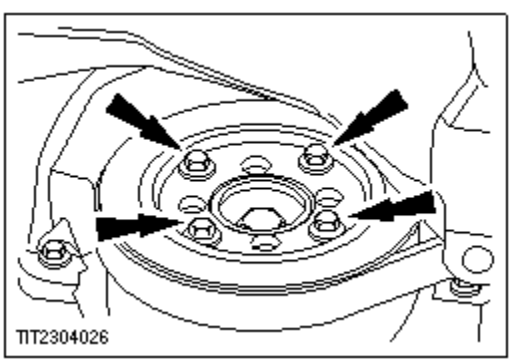

6. Loosen the crankshaft pulley/vibration damper retaining bolts.

7. Remove the generator. For additional information, refer to Section 414-02.

REMOVAL AND INSTALLATION (CONTINUED)

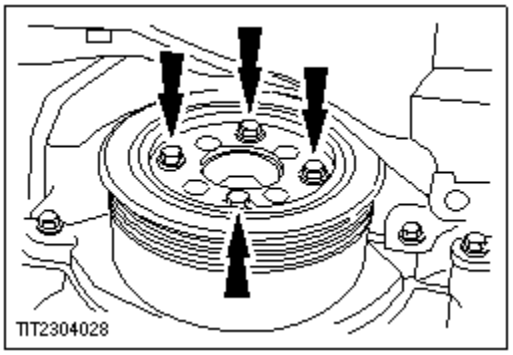

8. Remove the crankshaft pulley/vibration damper.

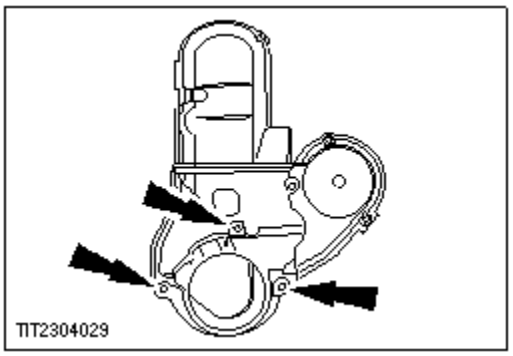

9. Remove the timing belt lower cover retaining bolts.

10. Lower the vehicle.

Vehicles with power steering

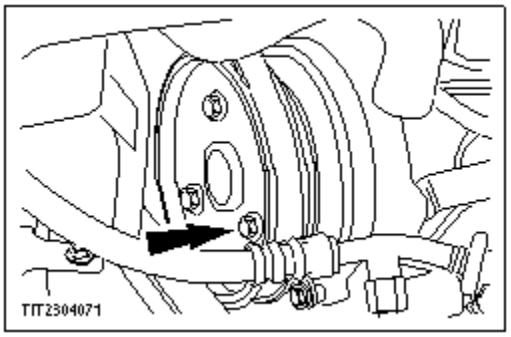

11. Loosen the power steering pump pulley retaining bolts.

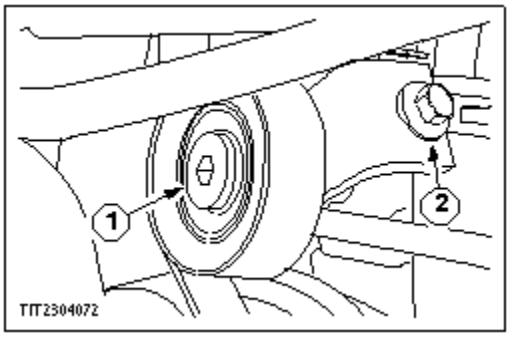

12. De-tension the accessory drive belt.
    1. Loosen the Allen bolt.
    2. De-tension the belt.

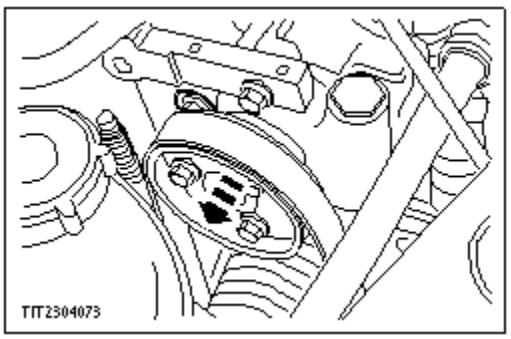

13. Remove the accessory drive belt.

REMOVAL AND INSTALLATION (CONTINUED)

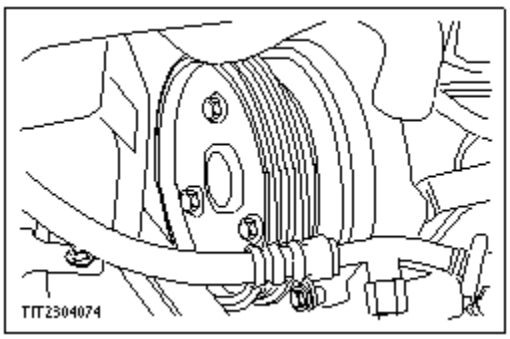

14. Remove the power steering pump pulley.

All vehicles

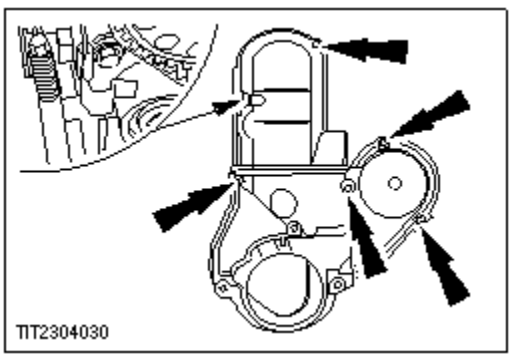

15. Remove the timing belt cover.

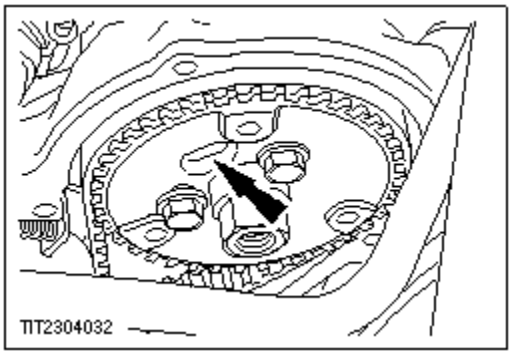

16. Turn the engine clockwise until the slot in the fuel injection pump pulley reaches the 11 o'clock position.

17. Raise and support the vehicle. For additional information, refer to Section 100-02.

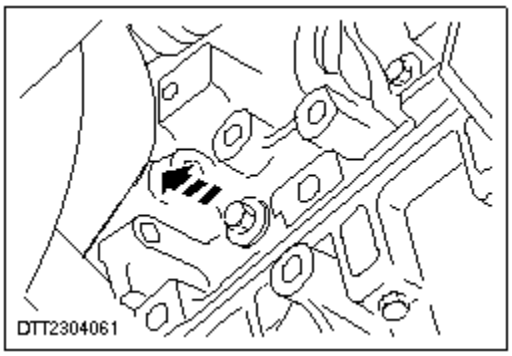

18. Remove the blanking plug from the cylinder block. (Generator bracket shown removed for clarity).

REMOVAL AND INSTALLATION (CONTINUED)

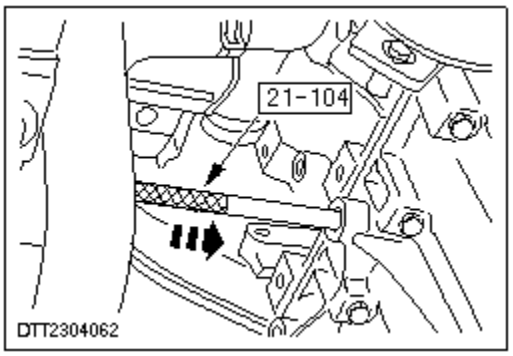

19. Install the special tool to the cylinder block.

    CAUTION: When turning the engine to lock the crankshaft, do so slowly to avoid bending the special tool.
    Turn the engine clockwise until the crankshaft locks against the special tool.

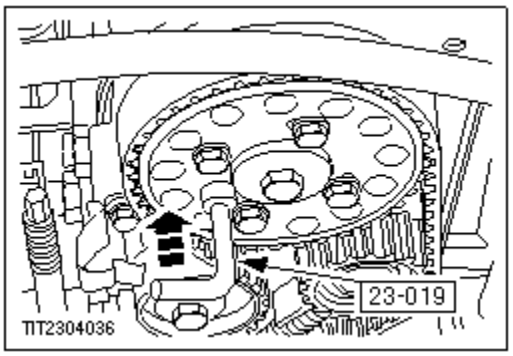

20. Install the special tool, to lock the camshaft.

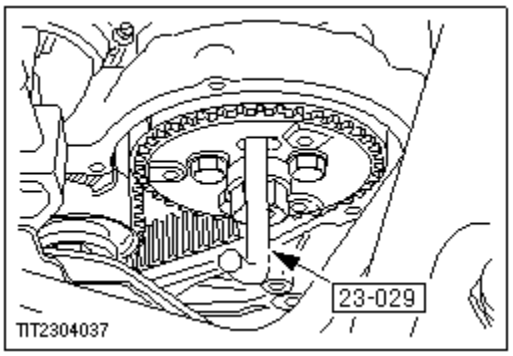

21. Install the special tool, to lock the fuel injection pump.

22. Remove and discard the timing belt. For additional information, refer to Section 303-01C.

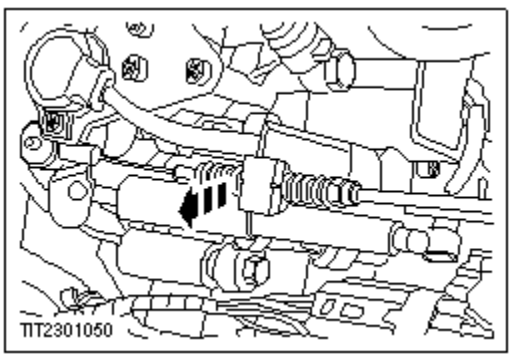

23. Remove the accelerator cable adjuster clip.

REMOVAL AND INSTALLATION (CONTINUED)

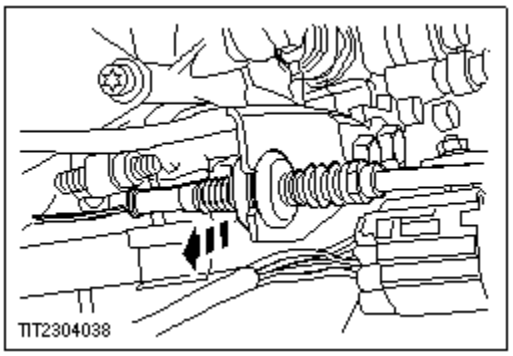

24. Detach the accelerator cable from the retaining bracket.

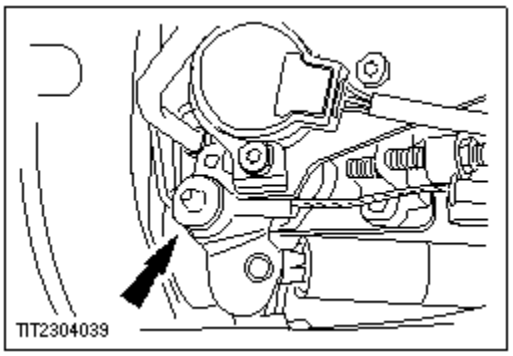

25. Disconnect the accelerator cable from the fuel injection pump fuel lever.

Vehicles without air conditioning

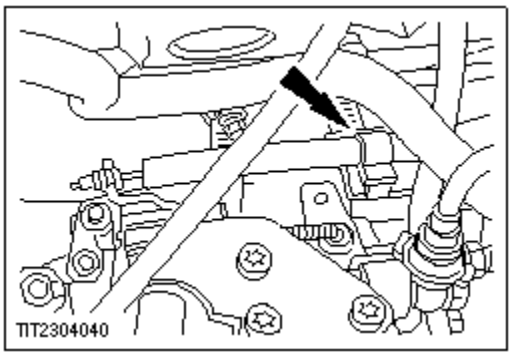

26. Remove the waxstat cable retaining clip.

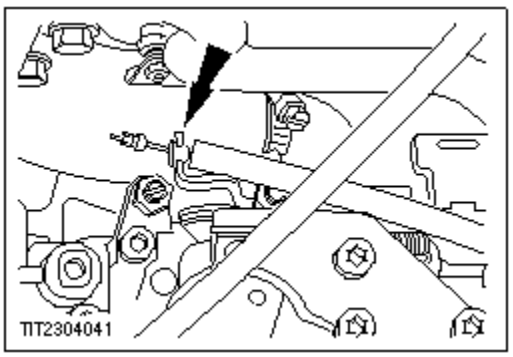

27. Disconnect the waxstat cable from the fuel injection pump idle lever.

Vehicles with air conditioning

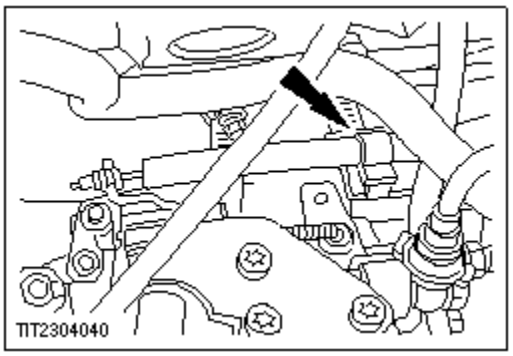

28. Remove the idle speed compensation cable retaining clip.

REMOVAL AND INSTALLATION (CONTINUED)

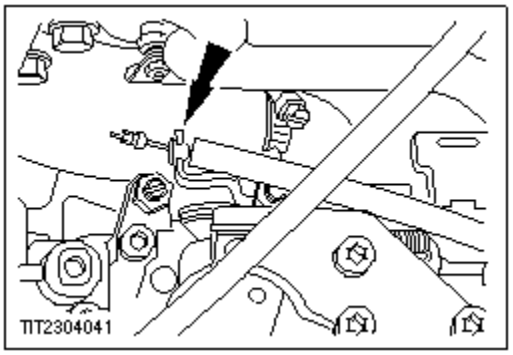

29. Disconnect the idle speed compensation cable from the fuel injection pump idle lever.

All vehicles

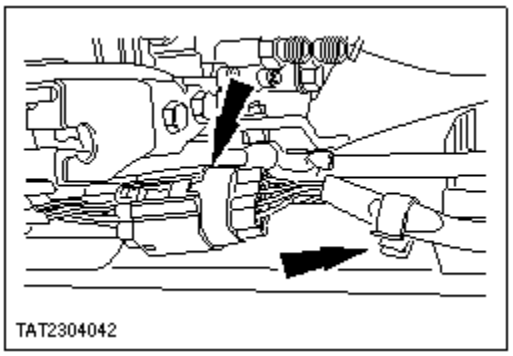

30. Detach the fuel injection pump wiring from the retaining clip and disconnect the electrical connector.

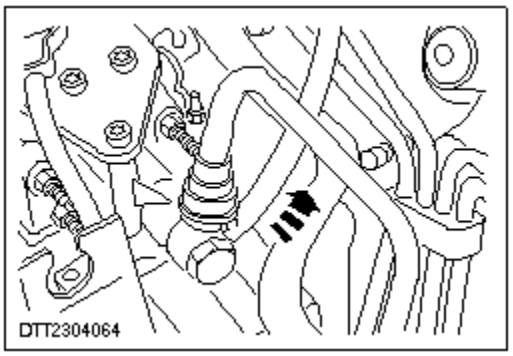

31. Disconnect the fuel return line from the fuel injection pump.

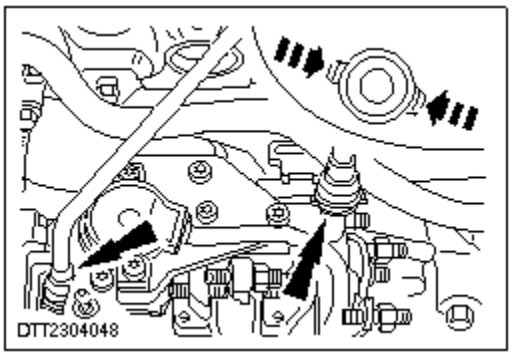

32. Disconnect the fuel supply and return lines from the fuel injection pump.

33. Remove the fuel injector delivery pipes. For additional information, refer to Fuel Injector Delivery Pipes in this section

REMOVAL AND INSTALLATION (CONTINUED)

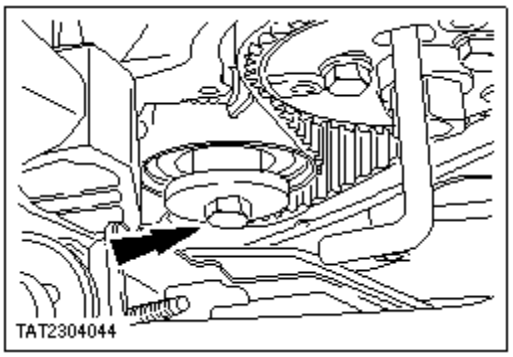

34. Loosen the fuel injection pump drive belt tensioner bolt.

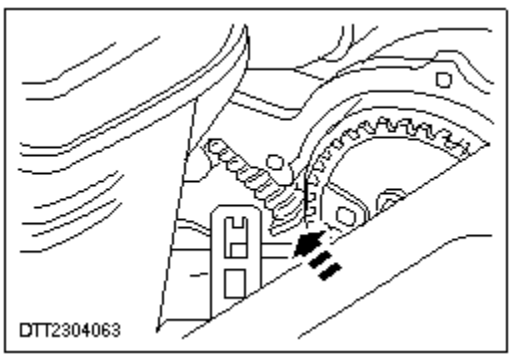

35. De-tension the fuel injection pump drive belt.

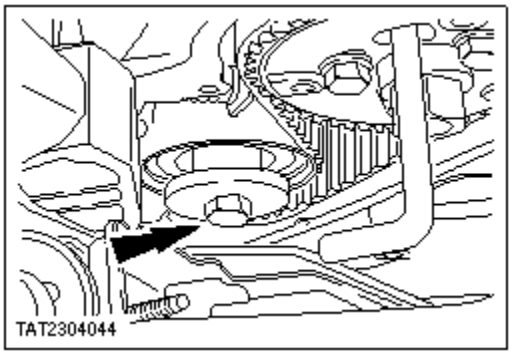

36. Tighten the fuel injection pump drive belt tensioner bolt.

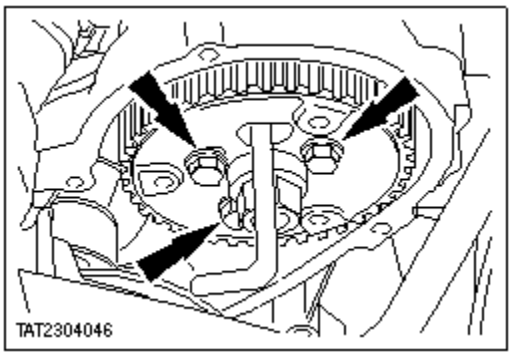

37. Loosen the fuel injection pump pulley retaining bolts.

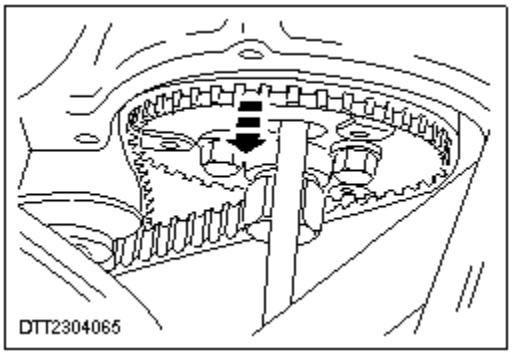

38. Remove the fuel injection pump drive belt.
    - Discard the fuel injection pump drive belt.

REMOVAL AND INSTALLATION (CONTINUED)

39. Remove the special tool from the fuel injection pump.

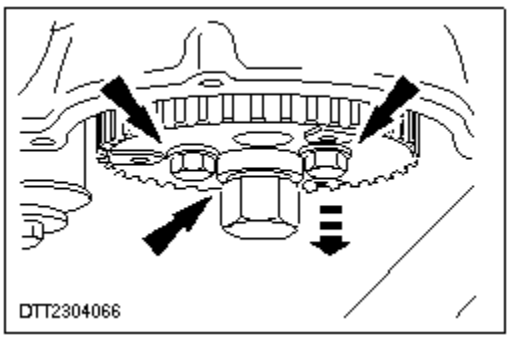

40. Remove the fuel injection pump pulley.

41. Raise and support the vehicle. For additional information, refer to Section 100-02.

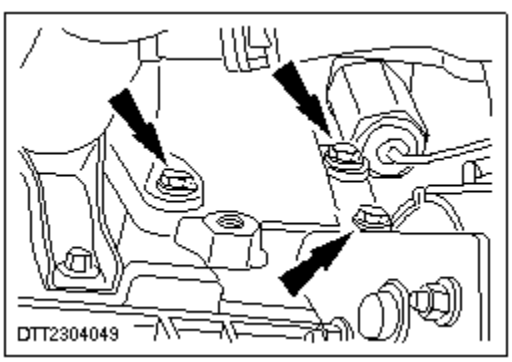

42. Remove the three bolts which retain the fuel injection pump rear support bracket to the cylinder block.

43. Lower the vehicle.

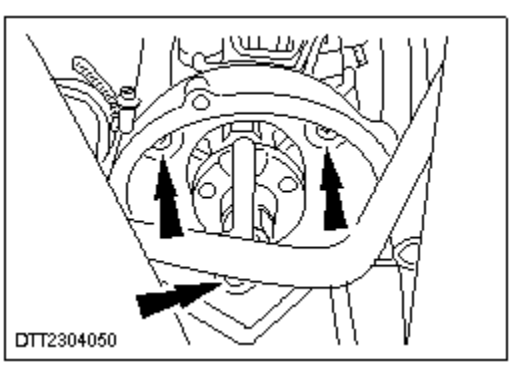

44. CAUTION: Before removing the three bolts which retain the fuel injection pump to the front cover, make sure that the fuel injection pump is adequately supported.
Remove the fuel injection pump.

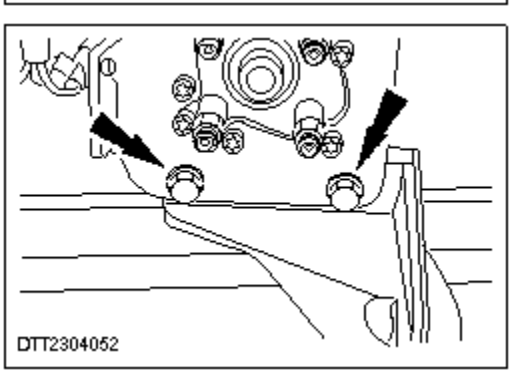

45. Remove the fuel injection pump from the rear support bracket.

REMOVAL AND INSTALLATION (CONTINUED)

Installation

All vehicles

WARNING: This procedure involves fuel handling. Be prepared for fuel spillage at all times and always observe fuel handling precautions.

CAUTION: Diesel fuel injection equipment is manufactured to very precise tolerances and fine clearances. It is therefore essential that absolute cleanliness be observed when working with these components. Always fit blanking plugs to any open orifices or pipes.

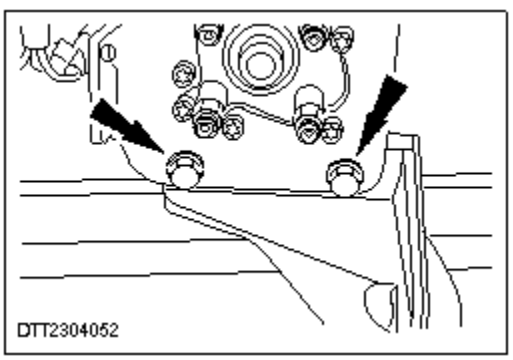

1. Install the fuel injection pump rear support bracket.
   - Do not tighten the bolts at this stage.

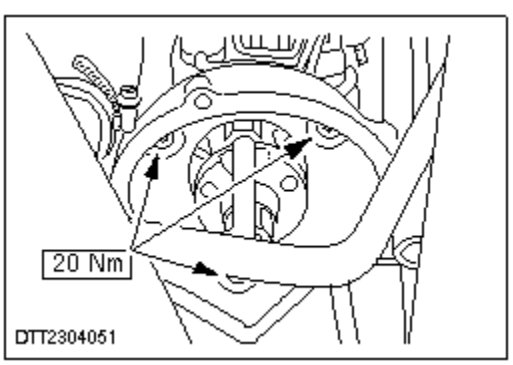

2. Install the fuel injection pump.

3. Raise and support the vehicle. For additional information, refer to Section 100-02.

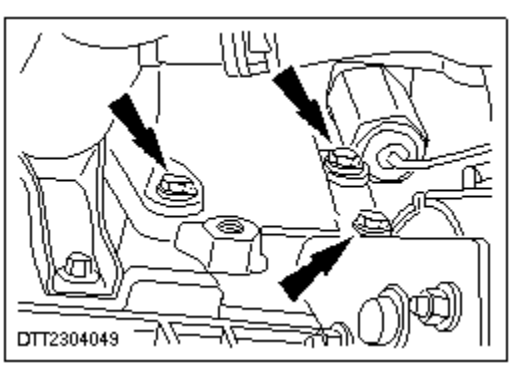

4. Install the three bolts which retain the fuel injection pump rear support bracket to the cylinder block.

5. Lower the vehicle.

REMOVAL AND INSTALLATION (CONTINUED)

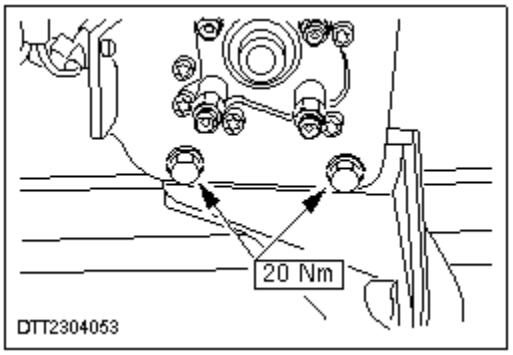

6. Tighten the rear support bracket bolts.

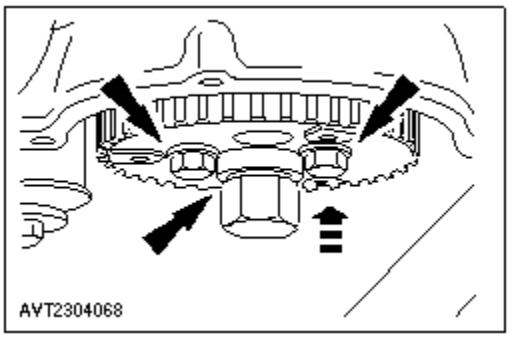

7. Install the fuel injection pump pulley.
   - Do not tighten the bolts at this stage.

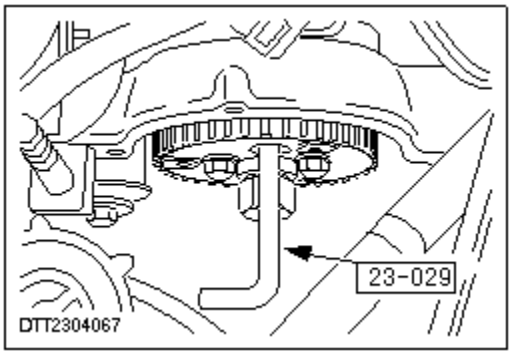

8. Install the special tool to lock the fuel injection pump.

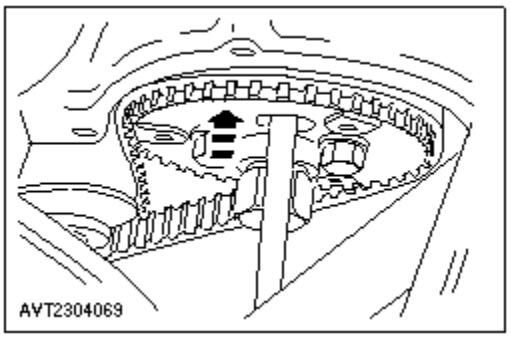

9. Install a new fuel injection pump drive belt.

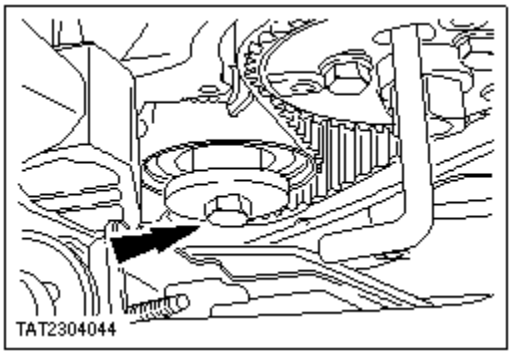

10. Loosen the bolt and allow the tensioner to tension the fuel injection pump drive belt.

REMOVAL AND INSTALLATION (CONTINUED)

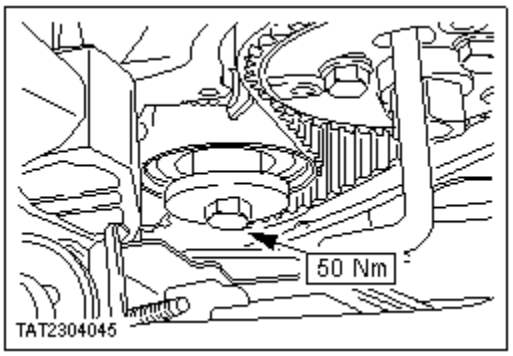

11. Tighten the fuel injection pump drive belt tensioner bolt.

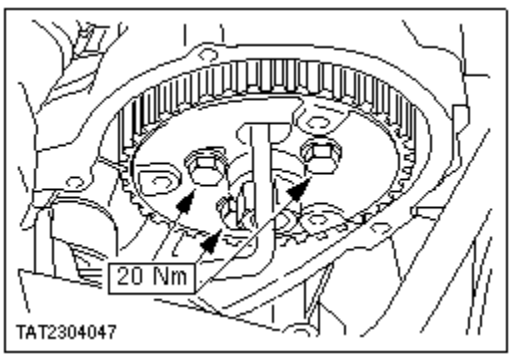

12. Tighten the fuel injection pump pulley retaining bolts.
    - Make sure that the elongated holes in the fuel injection pump pulley are centralized with the retaining bolts.

13. Install a new timing belt. For additional information, refer to Section 301-01C.

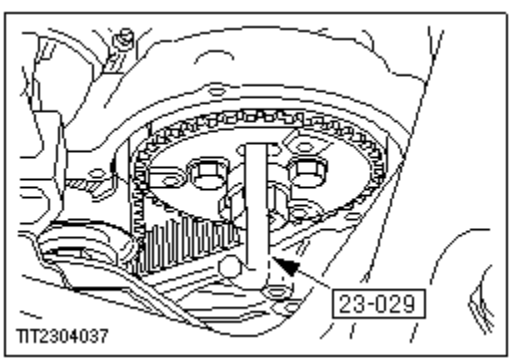

14. Remove the special tool from the fuel injection pump.

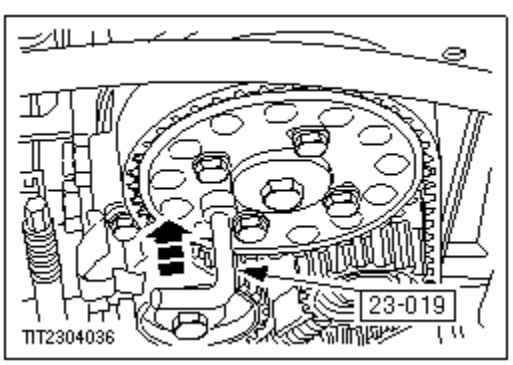

15. Remove the special tool from the camshaft.

16. Raise and support the vehicle. For additional information, refer to Section 100-02.

REMOVAL AND INSTALLATION (CONTINUED)

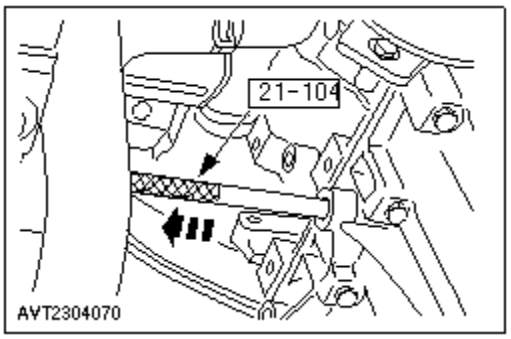

17. Remove the special tool from the cylinder block.

18. Lower the vehicle.

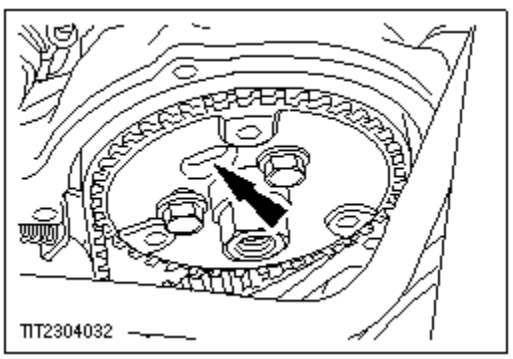

19. Turn the engine clockwise two full turns until the slot in the fuel injection pump pulley reaches the 11 o'clock position.

20. Raise and support the vehicle. For additional information, refer to Section 100-02.

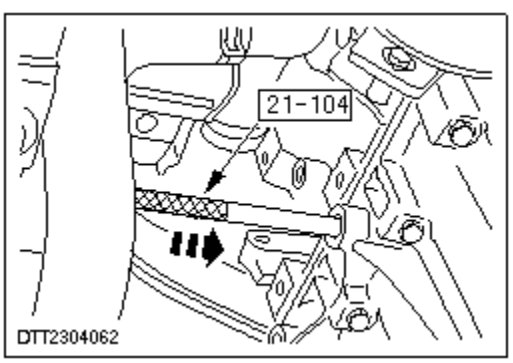

21. Install the special tool to the cylinder block.

CAUTION: When turning the engine to lock the crankshaft, do so slowly to avoid bending the special tool.

Turn the engine clockwise until the crankshaft locks against the special tool.

22. Remove the special tool from the cylinder block.

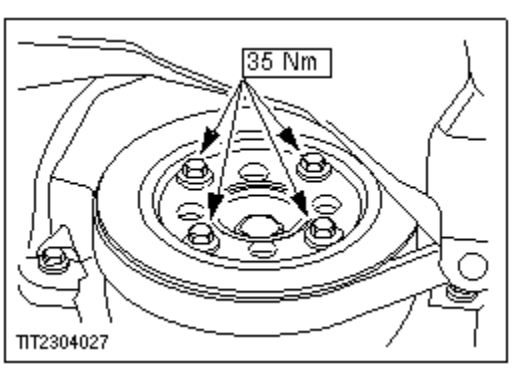

23. Install the remainder of the components in reverse order.

REMOVAL AND INSTALLATION (CONTINUED)

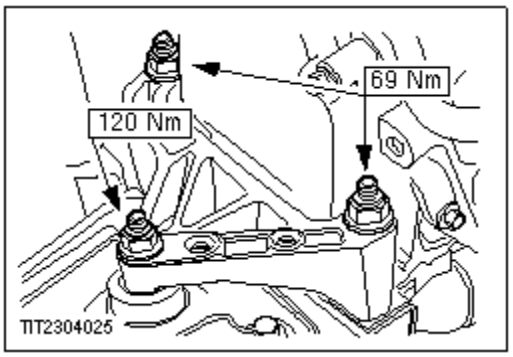

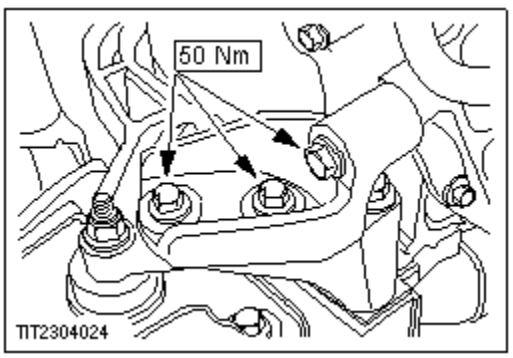

26. Adjust the accelerator cable. For additional information, refer to Section 310-02.

27. Check the engine idle speed and adjust as necessary. For additional information, refer to Idle Speed Adjustment in this section

Vehicles without air conditioning

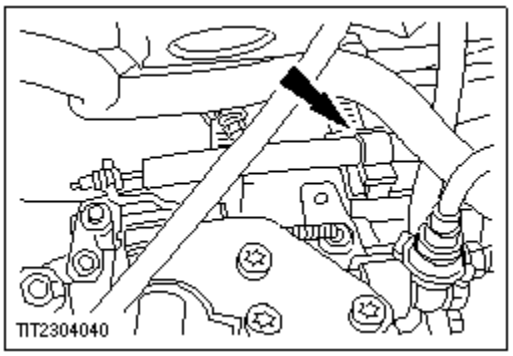

28. Remove the waxstat cable retaining clip.

29. NOTE: This adjustment must be carried out with the engine cold.
    Hold the fuel injection pump idle lever against its stop and install the retaining clip, so that there is between 1 mm and 2 mm of slack in the waxstat cable.

Vehicles with air conditioning

30. Adjust the idle speed compensation cable (refer to WDS).

REMOVAL AND INSTALLATION

SECTION 303-04D Fuel Charging and Controls — 1.8L Diesel Engine

VEHICLE APPLICATION: 2002 Bantam

SUBJECT **PAGE**

REMOVAL AND INSTALLATION

Fuel Injectors ..... (23 455 0) 303-04D-24/25

REMOVAL AND INSTALLATION (CONTINUED)

Fuel Injectors

Special Tool(s)	
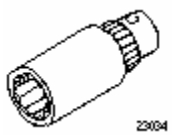	Socket SW 27, injectors 23 - 034

WARNING: This procedure involves fuel handling. Be prepared for fuel spillage at all times and always observe fuel handling precautions.

CAUTION: Diesel fuel injection equipment is manufactured to very precise tolerances and fine clearances. It is therefore essential that absolute cleanliness be observed when working with these components. Always fit blanking plugs to any open orifices or pipes.

Removal

1. Disconnect the battery ground cable.
2. Remove the fuel injector delivery pipes (refer to procedure contained in this section).

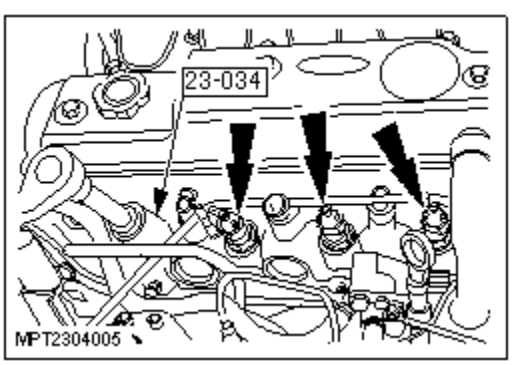

3. **NOTE**: It is normal for the fuel injectors to be very stiff in the threads and considerable effort may be required to remove them.
   Remove the fuel injectors.

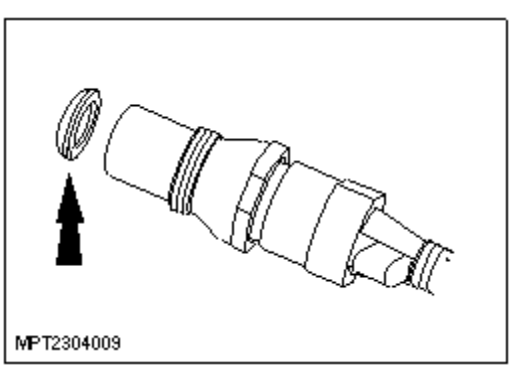

Installation

1. Refit the components in reverse order.
   - Install new fuel injector copper sealing washers.

REMOVAL AND INSTALLATION (CONTINUED)

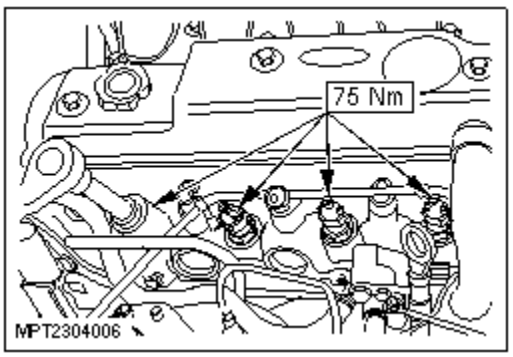

REMOVAL AND INSTALLATION

SECTION 303-04D Fuel Charging and Controls — 1.8L Diesel Engine

VEHICLE APPLICATION: 2002 Bantam

SUBJECT **PAGE**

REMOVAL AND INSTALLATION

Fuel Injector Delivery Pipes (Removal) 303-04D-27/28
Fuel Injector Delivery Pipes (Install) 303-04D-28/29

REMOVAL AND INSTALLATION (CONTINUED)

Fuel Injection Delivery Pipes

WARNING: This procedure involves fuel handling. Be prepared for fuel spillage at all times and always observe fuel handling precautions.

CAUTION: Diesel fuel injection equipment is manufactured to very precise tolerances and fine clearances. It is therefore essential that absolute cleanliness be observed when working with these components. Always fit blanking plugs to any open orifices or pipes.

Removal

1. Disconnect the battery ground cable.
2. Remove the four fuel injector leak-off pipes.

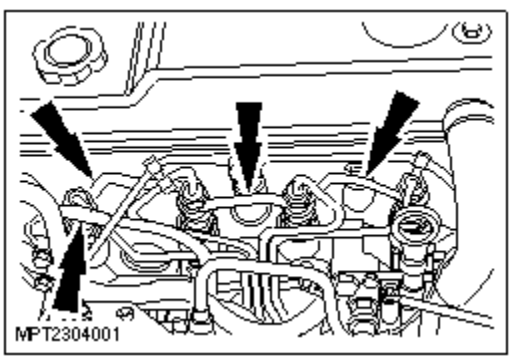

3. Detach the fuel supply pipe from the two retaining clips.

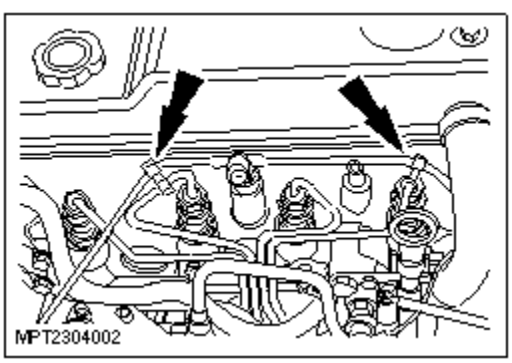

4. Unscrew the four fuel injector delivery pipe unions from the fuel injection pump.

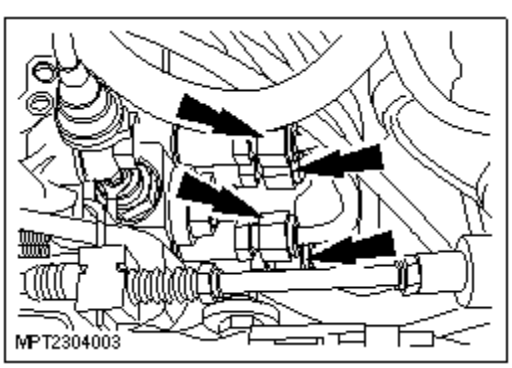

REMOVAL AND INSTALLATION (CONTINUED)

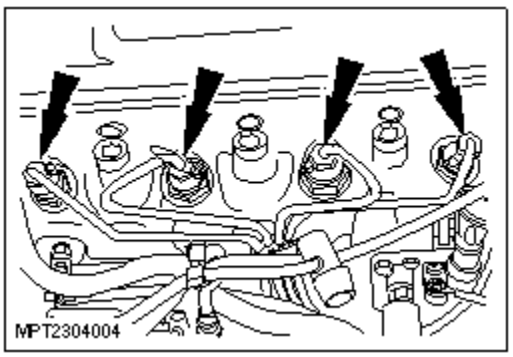

5. Unscrew the four unions from the fuel injectors and remove the fuel injector delivery pipes.

Installation

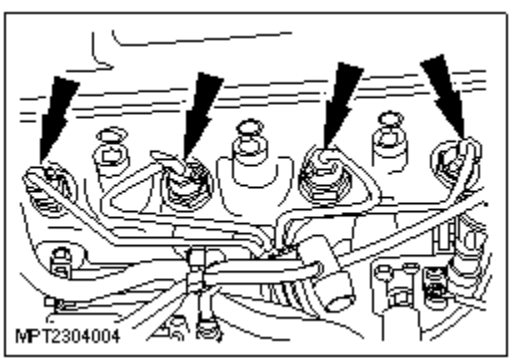

1. Refit the fuel injector delivery pipes and loosely assemble the four unions to the fuel injectors.

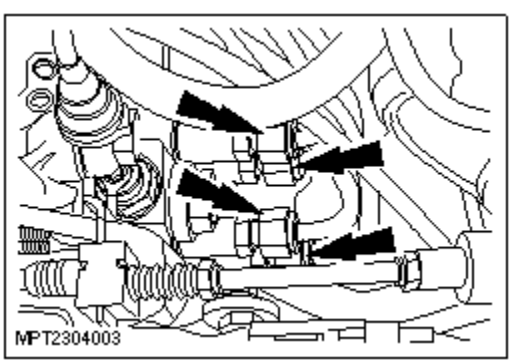

2. Loosely assemble the four unions to the fuel injection pump.

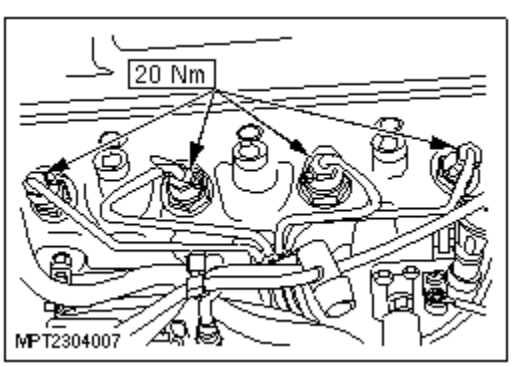

3. Tighten the four fuel injector delivery pipe unions to the fuel injectors.

REMOVAL AND INSTALLATION (CONTINUED)

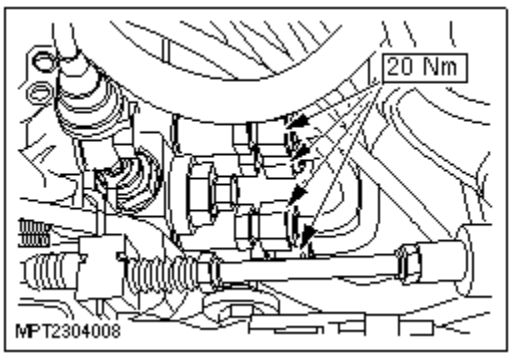

4. Tighten the four fuel injector delivery pipe unions to the fuel injection pump.

5. Refit the remaining components in reverse order.

SECTION 303-04D Fuel Charging and Controls — 1.8L Diesel Engine

VEHICLE APPLICATION: 2002 Bantam

SUBJECT **PAGE**

GENERAL PROCEDURES

Waxstat Cable (Adjustment) 303-04D-31
Cable Idle Speed Control (Adjustment) 303-04D-32

GENERAL PROCEDURES

Waxstat Cable Adjustment

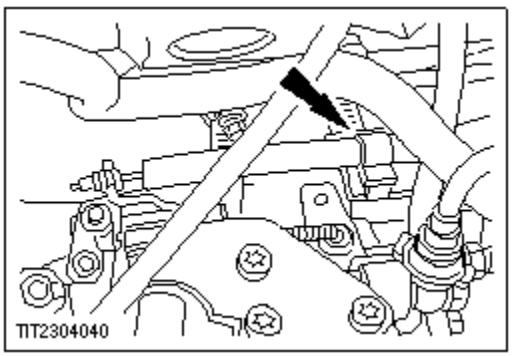

NOTE: This adjustment must be carried out with the engine cold.

1. Remove the waxstat cable adjuster clip.

2. Hold the idle lever against its stop and refit the adjuster clip so that there is between 1 and 2 mm of slack in the waxstat cable.

GENERAL PROCEDURES (CONTINUED)

Cable - Idle Speed Control - (Adjust)

Equipment

WDS

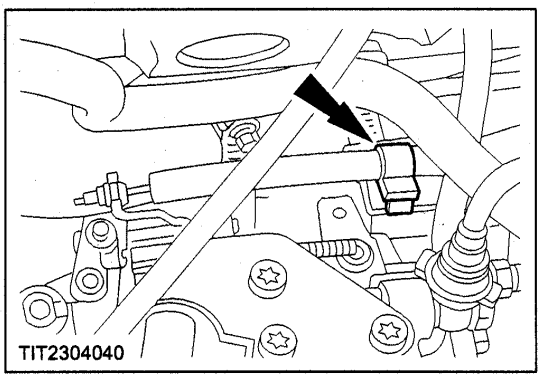

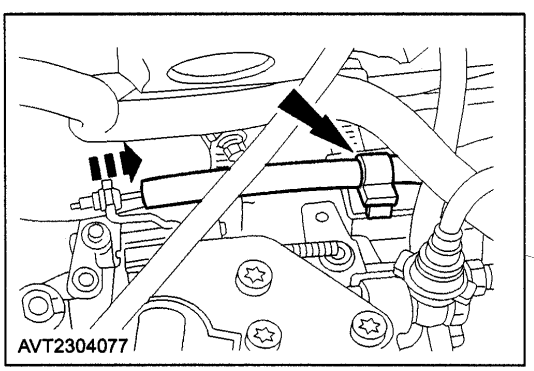

NOTE: The idle speed control cable can only be adjusted with the aid of the WDS.

Adjust

1. Connect the WDS to the vehicle data link connector and select Idle Cable Adjust option from the Toolbox menu.
2. Remove the idle speed control cable retaining clip.
3. Using WDS, extend the idle speed control motor plunger, by using the plus (+) icon.

Note: When adjusting the idle speed control cable, the practice of pushing rather than pulling must be used to prevent stretching of the outer cable.

4. Push the outer section of the idle speed control cable away from the idle lever until the idle lever is pulled against the high idle screw and refit the retaining clip.
5. Exit the Idle Cable Adjust screen and disconnect the WDS from the vehicle data link connector.
6. Connect a tachometer to the engine in accordance with the manufactures instructions.
7. Start the engine and allow it to idle.
8. Move the main fuel lever so that the engine speed rises above 1400 rev/min and ensure that the idle speed control cable pulls the idle lever against the high idle screw and then backs off slightly. If this does not occur, carry out the idle speed control adjustment again.
9. Switch the engine off.
10. Disconnect the tachometer from the engine.

SPECIFICATIONS

SECTION 303-04D Fuel Charging and Controls — 1.8L Diesel Engine

VEHICLE APPLICATION: 2002 Bantam

SUBJECT **PAGE**

SPECIFICATIONS

Specifications 303-04D-34
Fuel Injection Pump 303-04D-34
Fuel Injectors 303-04D-34
Glow Plugs 303-04D-34
Torque Specifications 303-04D-34/35

SPECIFICATIONS (CONTINUED)

Fuel Injection Pump

	Specification
Manufacturer	Bosch
Type	Distributor
Governor type	Two speed
Maximum no load speed (rev/min)	5350 ± 50
Idle speed (vehicles without air conditioning) (rev/min)	920 ± 50
Idle speed (vehicles with air conditioning) (rev/min)	950 ± 10
Minimum engine speed (vehicles with air conditioning) (rev/min)	905 ± 35
Deceleration time (seconds)	5 (max)

Fuel Injectors

	Specification
Manufacturer	Bosch
Type	Pintle
Nozzle opening pressure (bar)	158 - 165
Back leakage (bar) (maximum of 5 seconds allowed for the pressure to fall from the upper to the lower value quoted)	125 - 100
Needle seat leakage (bar) (hold for 10 seconds)	125

Glow Plugs

	Specification
Type	EZD 8

Torque Specifications

Description	Nm
Endura DE Diesel Engine Crankshaft pulley/vibration damper retaining bolts	35
Endura DE Diesel Engine mounting bracket retaining bolts	50
Endura DE Diesel Engine mounting bracket retaining nut (center)	69
Endura DE Diesel Engine mounting bracket retaining nuts (outer)	120
Endura DE Diesel Engine Fuel injection pump drive belt tensioner retaining bolt	45
Endura DE Diesel Engine Fuel injection pump drive gear retaining bolts	20
Endura DE Diesel Engine Fuel injection pump rear support bracket retaining bolts	20

SPECIFICATIONS (CONTINUED)

Description	Nm
Endura DE Diesel Engine Fuel injection pump retaining bolts	20
Endura DE Diesel Engine Fuel injector delivery pipe unions	20
Endura DE Diesel Engine Fuel injectors	75
Endura DE Diesel Engine Glow plugs	28
TDC timing peg blanking plug	24
Air conditioning compressor retaining bolts	25

SECTION 303-05 Accessory Drive

VEHICLE APPLICATION: 2002 Bantam

SUBJECT **PAGE**

DESCRIPTION AND OPERATION

Accessory Drive - Vehicles with 1.6L / 1.3L engine 303-05-190/191
Accessory Drive - Vehicles with Diesel engine 303-05-191

DIAGNOSIS AND TESTING

Accessory Drive 303-05-192
Inspection and Verification 303-05-192/193
Symptom Chart 303-05-193/194
Component Tests 303-05-194/195

REMOVAL AND INSTALLATION

Accessory Drive Belt Tensioner — Vehicles with 1.6L / 1.3L Engine 303-05-196/198
Accessory Drive Belt Tensioner — Vehicles with Diesel Engine 303-05-199
Accessory Drive Belt - Vehicles with Diesel engine and Air Conditioning..... 303-05-200

SPECIFICATIONS

Specifications 303-05-201
Torque Specifications 303-05-201

DESCRIPTION AND OPERATION

Accessory Drive

Vehicles with 1.6L / 1.3L Engine

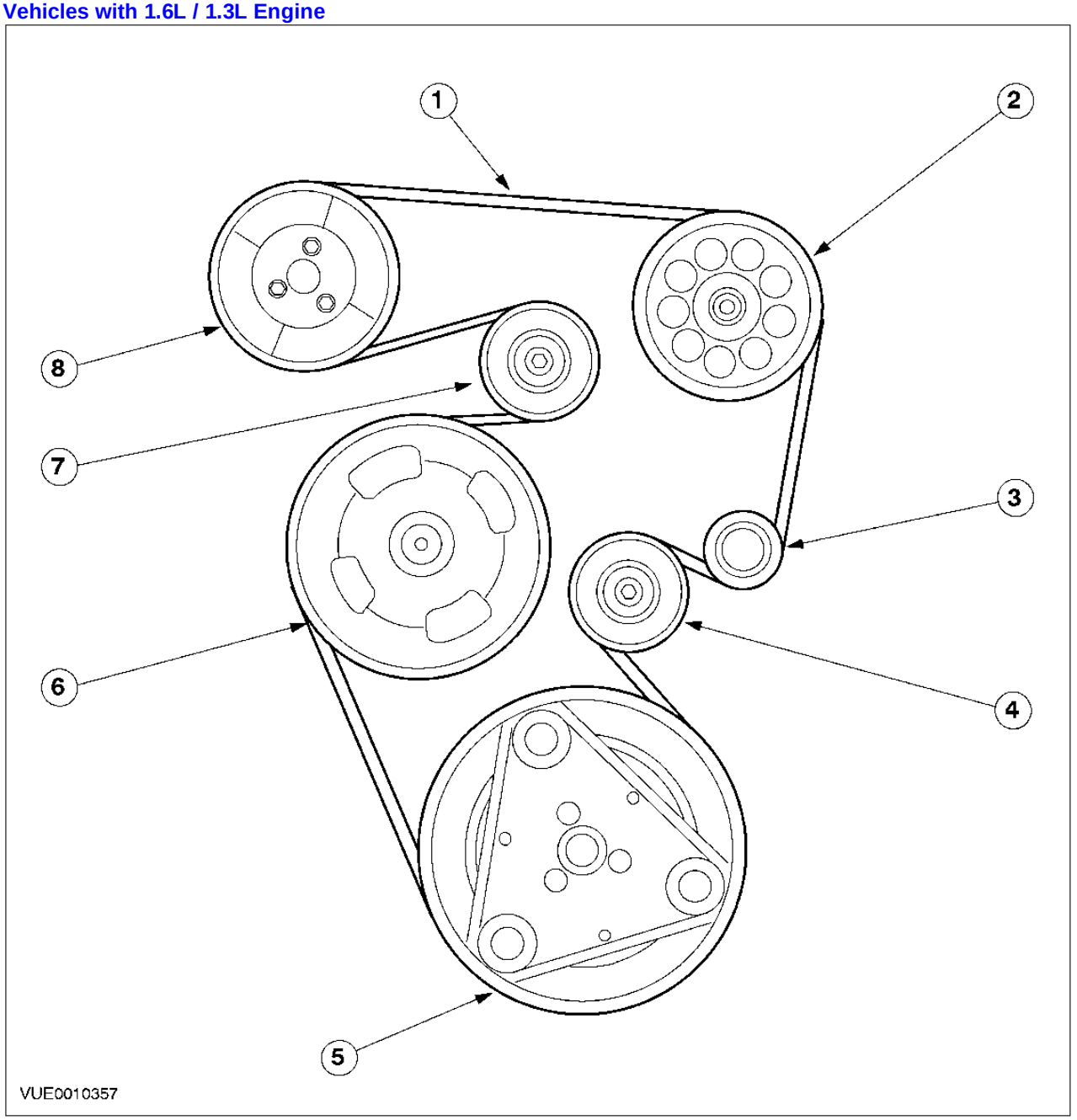

Item	Description
1	Accessory drive belt
2	Power steering pump pulley or idler pulley (vehicles without power steering)
3	Generator pulley
4	Idler pulley

Item	Description
5	Air conditioning (A/C) compressor pulley
6	Crankshaft pulley
7	Belt tensioner pulley
8	Water pump pulley

DESCRIPTION AND OPERATION (CONTINUED)

Accessory Drive Belt

The accessory drive belt is a multigroove belt.

Idler Pulley(s)

The idler pulley(s) is of the roller bearing type.

Belt Tensioner

The belt tensioner is of the automatic type and is supplied, as an assembly together with an aluminum die cast bracket. This bracket also serves as a mounting for the generator and power steering pump. The belt tensioner is calibrated to provide the correct amount of tension to the drive belt for a given accessory drive system.

Vehicles with Diesel Engine

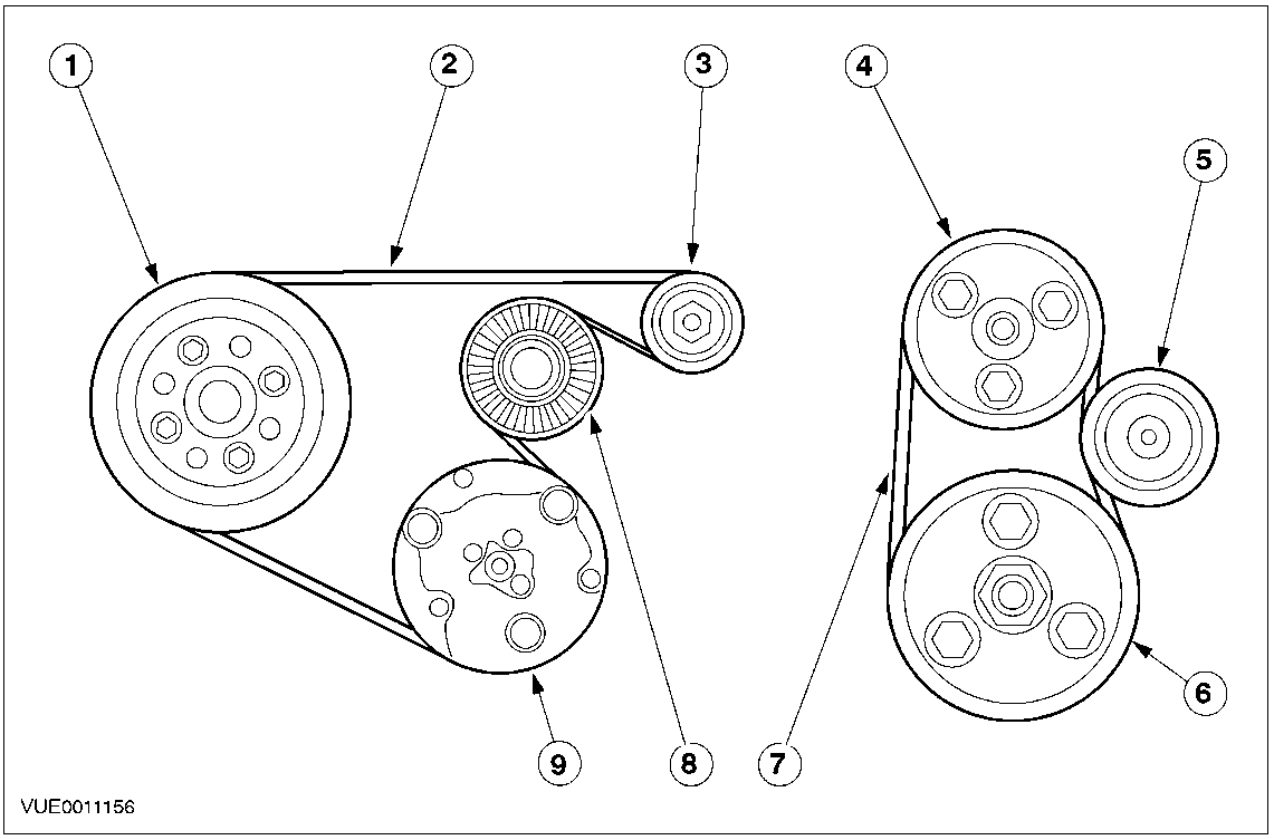

Item	Description
1	Crankshaft pulley
2	Accessory drive belt
3	Generator pulley
4	Power steering pump pulley
5	Belt tensioner pulley
6	Fuel injection pump pulley
7	Power steering pump belt
8	Belt tensioner pulley

Item	Description
9	Air conditioning (A/C) compressor pulley

Accessory Drive Belts

The accessory drive belts are mutligroove belts.

Belt Tensioner's

The belt tensioner's are of the manual type. To increase the belt tension, rotate the adjustment bolt counterclockwise and to decrease the belt tension, rotate the adjustment bolt clockwise.

DIAGNOSIS AND TESTING

Accessory Drive

Inspection and Verification

1. Verify the customer concern.
2. Visually inspect for obvious signs of mechanical damage.

Visual Inspection Chart

Mechanical
• Cracked, damaged or contaminated accessory drive belt • Belt tension • Belt tensioner • Idler pulley(s) • Pulley(s) • Loose hardware

3. If an obvious cause for an observed or reported concern is found, correct the cause (if possible) before proceeding to the next step.

CAUTION: Do not lubricate the belt, belt tensioner or idler pulley(s) as potential damage to the belt material construction; belt tensioner damping mechanism, belt tensioner pulley bearing and idler pulley(s) bearing may occur.

NOTE: Up to 15 cracks in a belt rib over a distance of 100 mm may be considered acceptable. If the cracks exceed the acceptable limit or any chunks are found to be missing, install a new belt.

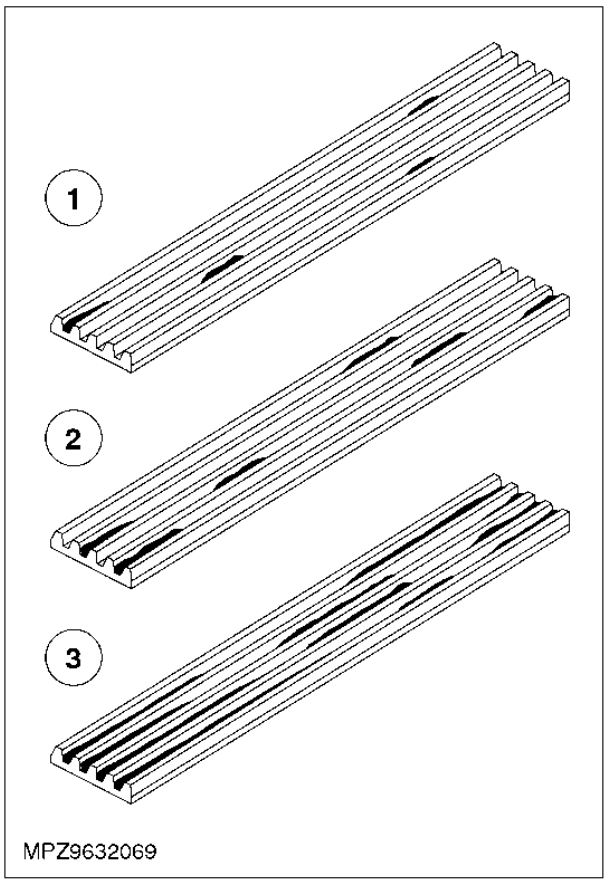

4. The condition of the belt should be compared against the illustration and appropriate action taken.

Small scattered deposits of rubber debris is not a concern and therefore a new belt should not be installed.

Longer deposits of rubber debris building up to 50% of the belt rib height is not a concern but may result in excessive noise. If excessive noise is apparent, install a new belt.

Heavy deposits of rubber debris building up along the grooves is a concern and may result in excessive noise and a belt stability concern. If heavy deposits or excessive belt noise are apparent, install a new accessory drive belt.

DIAGNOSIS AND TESTING (CONTINUED)

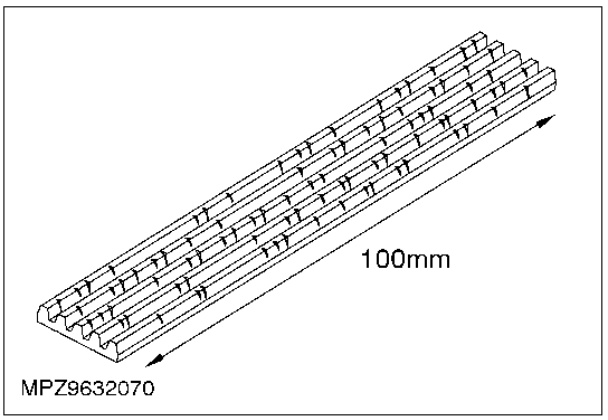

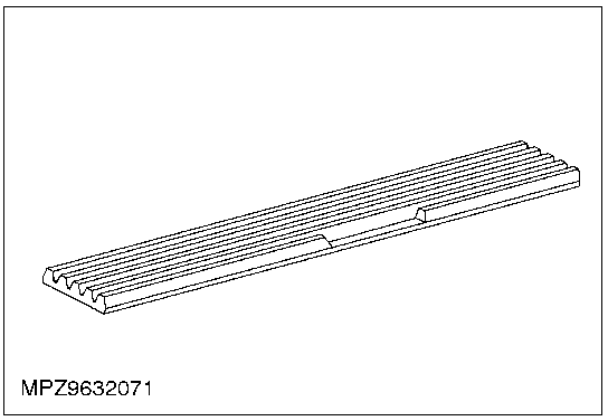

5. Check the belt for cracks. If the damage exceeds the acceptable limit, install a new accessory drive belt.
6. Check the belt for damage. If any chunks are found to be missing, install a new accessory drive belt.
7. If the cause is not visually evident, verify the symptom and refer to the Symptom Chart.

Symptom Chart

Condition	Possible Sources	Action
•Belt noise or squeal	•Accessory drive components worn or damaged.	•CHECK the system with the engine running and the belt removed (only run the engine for a very short period). If a noise is apparent, the cause is not the accessory drive system. If a noise is not apparent, the cause is the accessory drive system so determine where the noise is coming from and REPAIR or INSTALL new components as necessary.
	•Accessory drive components incorrectly installed.	•CHECK the accessory drive components are correctly installed. REPAIR as necessary.
	•Belt incorrectly installed.	•CHECK the belt is correctly installed in the pulley grooves. REPAIR or INSTALL a new accessory drive belt as necessary.
	•Pulley(s).	•DETERMINE where the noise is coming from. CHECK the pulley(s) for damage, freedom of rotation or alignment. REPAIR or INSTALL new components as necessary.

DIAGNOSIS AND TESTING (CONTINUED)

Condition	Possible Sources	Action
	•Lubricant or other contamination.	•CHECK the drive belt for contamination or damage. REMOVE the drive belt and wash with detergent and water. If the drive belt will not clean or is damaged, INSTALL a new drive belt.
	•Belt.	•CHECK the drive belt for correct application.
	•Idler pulley(s).	•CHECK the pulley(s) for damage, freedom of rotation or alignment. REPAIR or INSTALL new components as necessary.
•Belt cracking	•Belt.	•INSPECT the belt for cracks or damage. If the cracks are within the acceptable limit, the belt is OK. If the cracks exceed the acceptable limit, INSTALL a new accessory drive belt.
•Belt chunking	•Belt.	•INSTALL a new accessory drive belt.
•Belt does not hold tension	•Belt cracked or damaged.	•INSPECT the belt for cracks or damage. If the cracks are within the acceptable limit, the belt is OK. If the cracks exceed the acceptable limit, INSTALL a new accessory drive belt.
	•Belt tensioner worn or damaged.	•CHECK the belt tensioner for correct operation or damage. INSTALL a new belt tensioner as necessary.

Component Tests

Manual Belt Tensioner and Idler Pulley(s)

The manual belt tensioner and idler pulley(s) may be checked as follows:

1. Detach the accessory drive belt in the area of the belt tensioner or idler pulley(s).
2. Rotate the belt tensioner pulley or idler pulley(s) and check for damage, freedom of rotation or alignment. Install a new belt tensioner or idler pulley(s) as necessary.
3. Inspect the area surrounding the belt tensioner or idler pulley(s) for lubricant or other contamination. Rectify any leaks before installing a new belt tensioner or idler pulley(s). If the belt tensioner pulley or idler pulley(s) is contaminated, do not attempt to clean it as the bearing inside may be damaged. Install a new belt tensioner or idler pulley(s) as necessary.

Automatic Tensioner - Static Check

The automatic tensioner may be checked statically as follows:

1. Detach the drive belt in the area of the tensioner.
2. Using the correct tool, move the tensioner from its relaxed position through its full stroke and back to the relaxed position to make sure there is no stick, grab or bind, and to make sure there is tension on the tensioner spring.

DIAGNOSIS AND TESTING (CONTINUED)

3. Rotate the tensioner pulley and check for damage, freedom of rotation or alignment. Install a new tensioner as necessary.
4. Inspect the area surrounding the tensioner for lubricant or other contamination. Rectify any leaks before installing a new tensioner. If the tensioner is contaminated, do not attempt to clean it as the damping mechanism inside may be damaged. Install a new tensioner as necessary.
5. If the tensioner meets the above criteria proceed to test the tensioner dynamically. If the tensioner does not meet the above criteria install a new tensioner.

Automatic Tensioner - Dynamic Check

The automatic tensioner may be checked dynamically as follows:

1. With the engine running, observe the tensioner movement. The tensioner should move (respond) when the engine is accelerated rapidly or when the air conditioning (A/C) clutch cycles. If the tensioner movement is not constant without engine acceleration or A/C clutch cycling, a pulley or shaft is possibly bent, out of round, or the damping mechanism inside the tensioner may be damaged. Excessive drive belt ride out (uneven depth of grooves in the drive belt) may cause excessive tensioner movement. Check the condition by installing a new accessory drive belt.

REMOVAL AND INSTALLATION

Accessory Drive Belt Tensioner — Vehicles with 1.6L / 1.3L Engine

Removal

All vehicles

1. Remove the generator. For additional information, refer to Section 414-02.
2. Lower the vehicle.
3. Remove the accessory drive belt tensioner pulley.

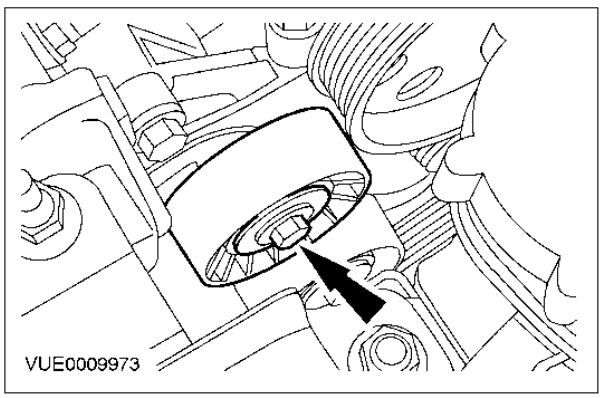

Vehicles with power steering

4. Detach the power steering pump and secure it to one side.

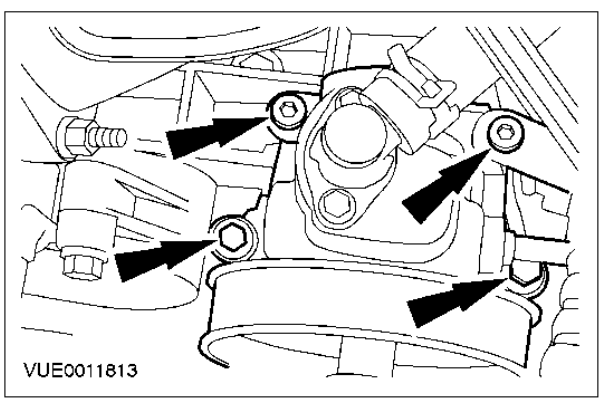

Vehicles without power steering

5. Remove the accessory drive belt upper idler pulley.

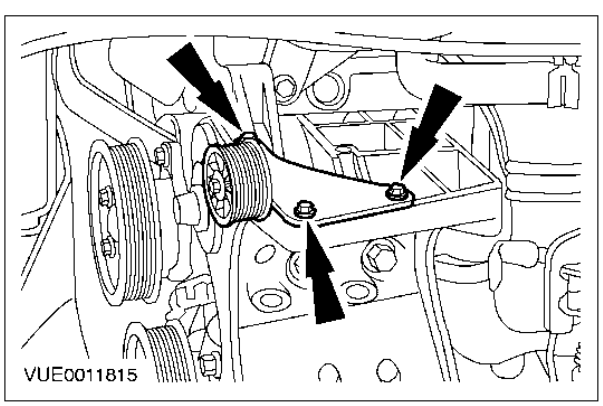

REMOVAL AND INSTALLATION (CONTINUED)

All vehicles

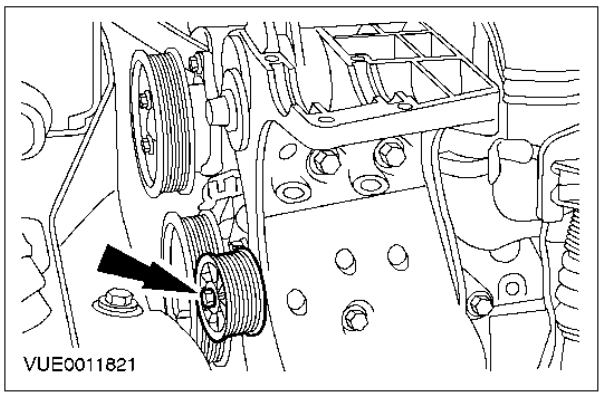

6. Remove the accessory drive belt lower idler pulley.

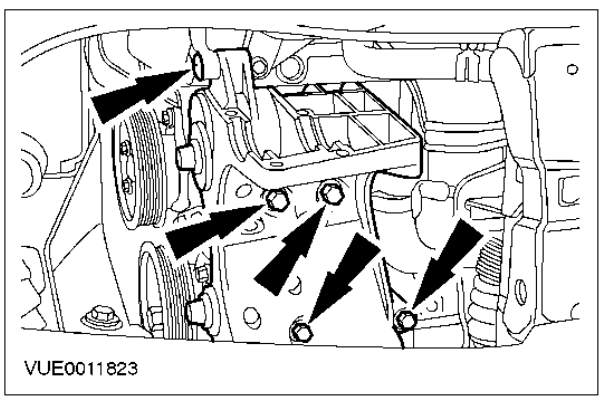

7. Remove the accessory drive belt tensioner and bracket assembly.

Installation

All vehicles

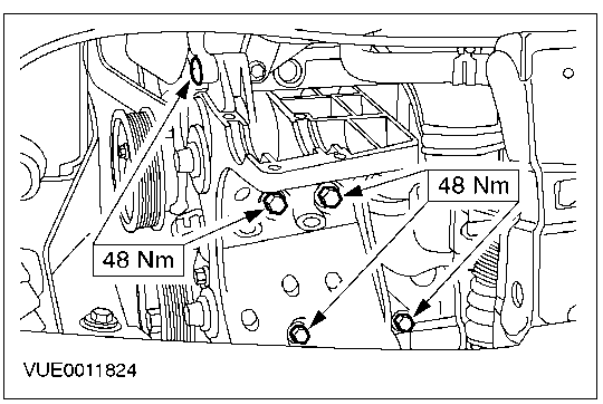

1. To install, reverse the removal procedure.

REMOVAL AND INSTALLATION (CONTINUED)

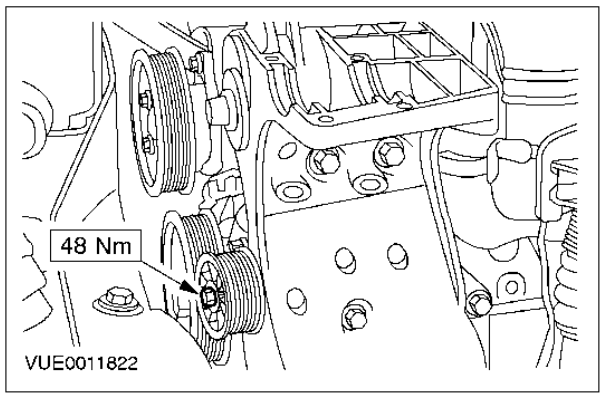

Vehicles without power steering

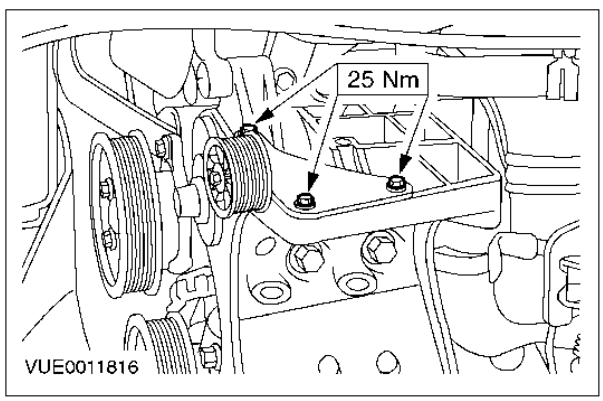

Vehicles with power steering

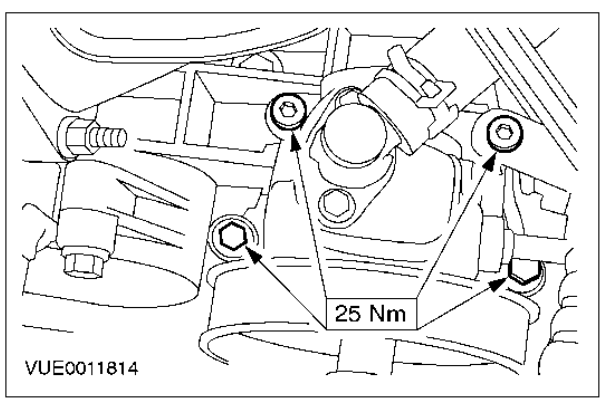

All vehicles

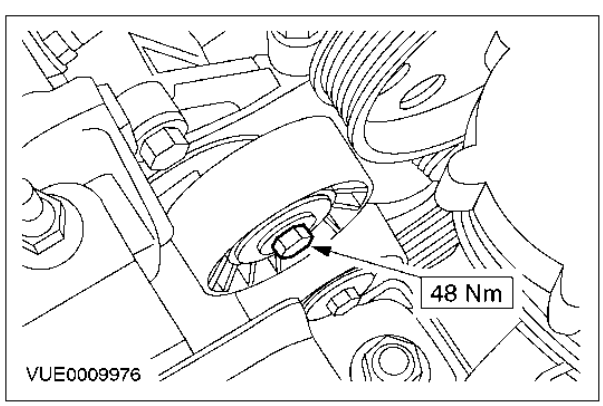

REMOVAL AND INSTALLATION (CONTINUED)

Accessory Drive Belt — Vehicles with 1.8L Endura DE Diesel Engine (31 413 0)

Removal

1. Disconnect the battery ground cable.
2. Raise the vehicle.
3. Remove the drive belt.
   1. Loosen the adjuster clamping bolt.
   2. De-tension the belt by turning the adjuster bolt anticlockwise.

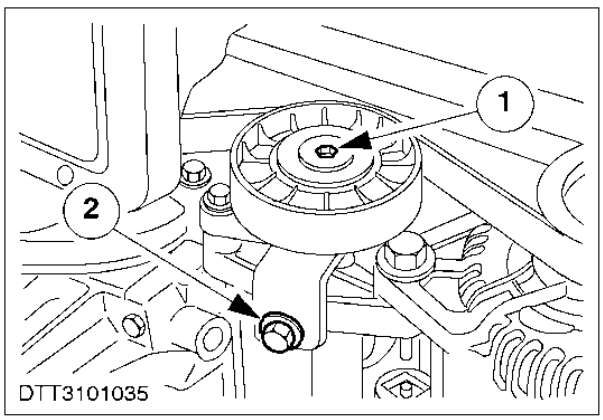

Installation

1. Refit the drive belt.
   - Make sure the drive belt is correctly located on all pulleys.

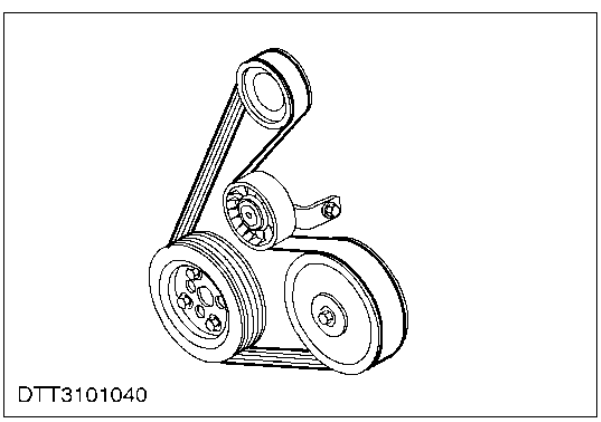

2. Tension the drive belt.
   1. Turn the adjuster bolt clockwise to achieve the correct tension.
   2. Tighten the clamping bolt.

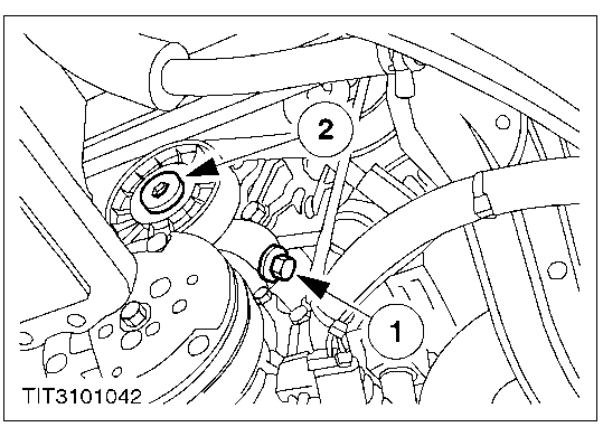

3. Reconnect the battery ground cable.

REMOVAL AND INSTALLATION

Accessory Drive Belt — Vehicles with 1.8L Endura DE Diesel Engine and Air Conditioning (31 413 0)

Removal

1. Disconnect the battery ground cable.
2. Raise the vehicle.
3. Remove the drive belt.
   1. Loosen the adjuster clamping bolt.
   2. De-tension the belt by turning the adjuster bolt anticlockwise.

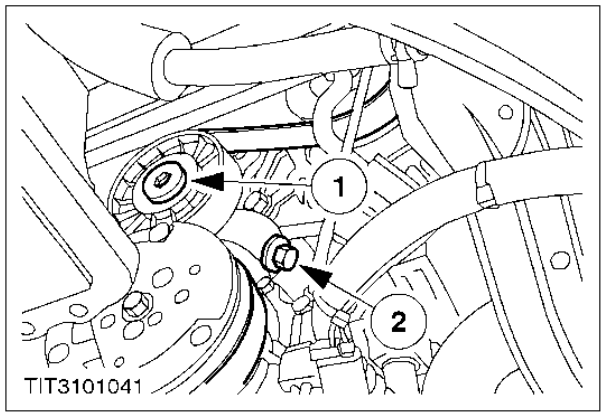

Installation

1. Refit the drive belt.
   - Make sure the drive belt is correctly located on all pulleys.

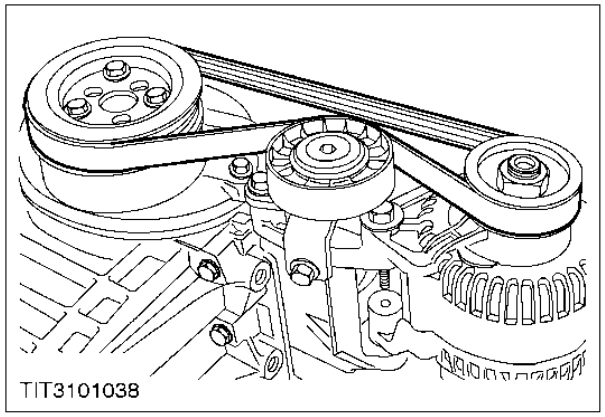

2. Tension the drive belt.
   1. Turn the adjuster bolt clockwise to achieve the correct tension.
   2. Tighten the clamping bolt.

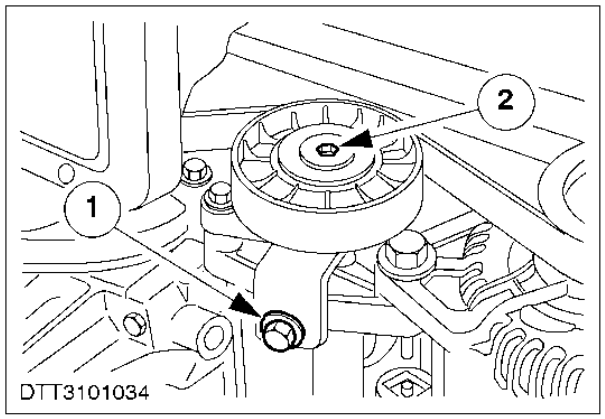

3. Reconnect the battery ground cable.

SPECIFICATIONS

Torque Specifications

Description	Nm
Accessory drive belt tensioner and bracket assembly retaining bolts (1.6L / 1.3L)	48
Accessory drive belt tensioner and bracket assembly screw (1.6L / 1.3L)	48
Accessory drive belt lower idler pulley retaining bolt (1.6L / 1.3L)	48
Accessory drive belt upper idler pulley retaining bolts (1.6L / 1.3L)	25
Power steering pump retaining bolts (1.6L / 1.3L)	25
Accessory drive belt tensioner pulley retaining bolt (1.6L / 1.3L)	48
Accessory drive belt tensioner retaining bolts (diesel)	25
Accessory drive belt tensioner pulley retaining nut (diesel)	35
Power steering pump belt tensioner pulley retaining nut (diesel)	35
Power steering pump belt cover retaining bolts (diesel)	25

SECTION 303-06 Starting System

VEHICLE APPLICATION: 2002 Bantam

SUBJECT **PAGE**

DESCRIPTION AND OPERATION

Starting System 303-06-203

DIAGNOSIS AND TESTING

Starting System 303-06-204A
Inspection and Verification 303-06-204A
Symptom Chart 303-06-204A
Pinpoint Tests 303-06-204B/212

REMOVAL AND INSTALLATION

Starter Motor — Vehicles with 1.6L / 1.3L Engine ..... (26 204 0) 303-06-213/214
Starter Motor — Vehicles with Diesel Engine 303-06-215/216

SPECIFICATIONS

Specifications 303-06-217
Torque Specifications 303-06-217

DESCRIPTION AND OPERATION

Starting System

Pre-engaged starter motors of Bosch or Magnetti Morelli manufacture are used.

Irrespective of model, all starter motors have an integral solenoid and all types have pinions, which engage with a ring gear during starting.

The ring gear is located on the outside of the flywheel.

Some starter motors are interchangeable in certain circumstances;
refer to the Parts Microfiche for detailed information.
Starter motors should be serviced as an assembly and should not, therefore, be dismantled.

DIAGNOSIS AND TESTING

Starting System

Inspection and Verification

WARNING: When performing engine compartment work near the starter, be aware that the heavy gauge battery input lead to the starter is electrically hot at all times.

1. Verify the customer concern.
2. Check for concerns with the following.

Visual Inspection Chart

Mechanical	Electrical
• Starter motor • Battery	• Fuse • Wiring • Connectors

3. If inspection reveals an obvious cause rectify this before continuing. If the concern remains, proceed to the symptom chart.

Symptom Chart

Condition	Possible Sources	Action
• The engine does not crank relay clicks	• Battery • Circuits • Starter motor	• GO to Pinpoint Test A
• The engine cranks slowly	• Battery • Circuits • Starter motor	• GO to Pinpoint Test B
• Unusual starter noise	• Starter motor • Ring gear	• GO to Pinpoint Test C
• Starter motor spins but engine does not crank	• Solenoid	• GO to Pinpoint Test D

Pinpoint Tests

PINPOINT TEST A: THE ENGINE DOES NOT CRANK OR THE RELAY CLICKS

A1: CHECK THE BATTERY CONNECTIONS 303-06-204B
A2: CHECK THE BATTERY VOLTAGE 303-06-205
A3: CHECK SWITCHED POWER SUPPLY TO THE SOLENOID 303-06-205
A4: CHECK B+ TO THE STARTER 303-06-205/206
A5: CHECK THE STARTER GROUND CIRCUIT 303-06-206
A6: CHECK B+ TO STARTER RELAY 303-06-206
A7: CHECK RELAY GROUND CIRCUIT 303-06-207
A8: CHECK RELAY SWITCHING CIRCUIT 303-06-207
A9: CHECK FUSE 40 (60A) 303-06-207
A10: CHECK CIRCUIT 30 (RD) CONTINUITY 303-06-208
A11: CHECK THE IGNITION SWITCH 303-06-208
A12: CHECK CIRCUIT 50 (GY) CONTINUITY 303-06-208/209
A13: CHECK THE CONTINUITY OF CIRCUIT 50 (GY/BK) 303-06-209
A14: CHECK CIRCUIT 50 (GY/BK) FOR SHORT TO GROUND 303-06-209
A15: CHECK CIRCUIT 30 (RD) FOR SHORT TO GROUND 303-06-210
A16: CHECK CIRCUIT 50 FOR SHORT TO GROUND 303-06-210

PINPOINT TEST B: THE ENGINE CRANKS SLOWLY

B1: CHECK THE BATTERY VOLTAGE 303-06-211
B2: CHECK THE SUPPLY TO STARTER 303-06-211
B3: CHECK THE STARTER GROUND CIRCUIT 303-06-211

PINPOINT TEST C: UNUSUAL STARTER MOTOR NOISE

C1: CHECK THE STARTER MOUNTING 303-06-212
C2: CHECK THE STARTER DRIVE 303-06-212

Pinpoint Tests

PINPOINT TEST A: THE ENGINE DOES NOT CRANK OR THE RELAY CLICKS

CONDITIONS	DETAILS/RESULTS/ACTIONS
A1: CHECK THE BATTERY CONNECTIONS	
	1 Inspect the battery connections for loose/corroded connections. • Are the battery terminals clean and tight? **Yes** GO TO **A2** **No** CLEAN and TIGHTEN connections as required. TEST the system for normal operation.

DIAGNOSIS AND TESTING (CONTINUED)

CONDITIONS	DETAILS/RESULTS/ACTIONS
A2: CHECK THE BATTERY VOLTAGE	
	1 Check the battery. Refer to Section 414-00. • Is the battery OK? **Yes** GO TO **A3** **No** CHARGE or INSTALL a new battery as required. Refer to Section 414-00. TEST the system for normal operation.
A3: CHECK SWITCHED POWER SUPPLY TO THE SOLENOID	
1 2 Solenoid single pin 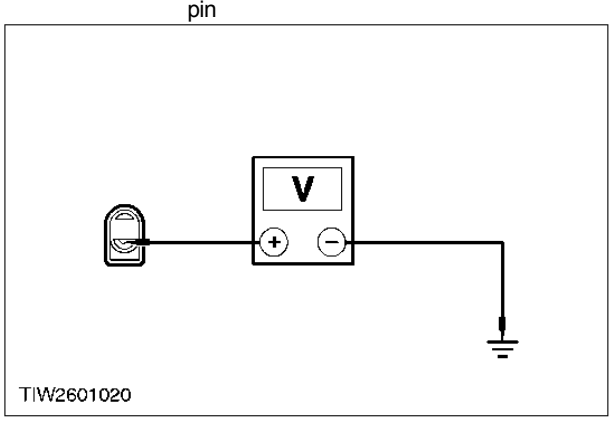 	3 Measure the voltage between the starter motor solenoid connector single pin, circuit 50 (GY/BK) and ground when the starter is operated. • Is the voltage greater than 10 volts? **Yes** GO TO **A4** **No** GO TO **A6**
A4: CHECK B+ TO THE STARTER	
1 	

DIAGNOSIS AND TESTING (CONTINUED)

CONDITIONS	DETAILS/RESULTS/ACTIONS
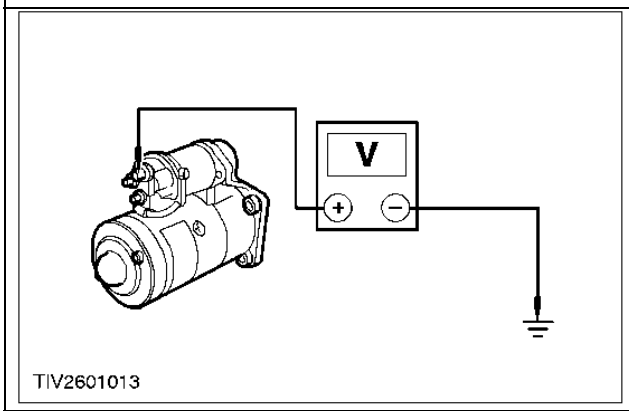	**2** Measure the voltage between the starter motor terminal B, circuit 30 (RD) and ground. • Is the voltage greater than 10 volts? **Yes** GO TO **A5** **No** REPAIR circuit 30 (RD). TEST the system for normal operation.
A5: CHECK THE STARTER GROUND CIRCUIT	
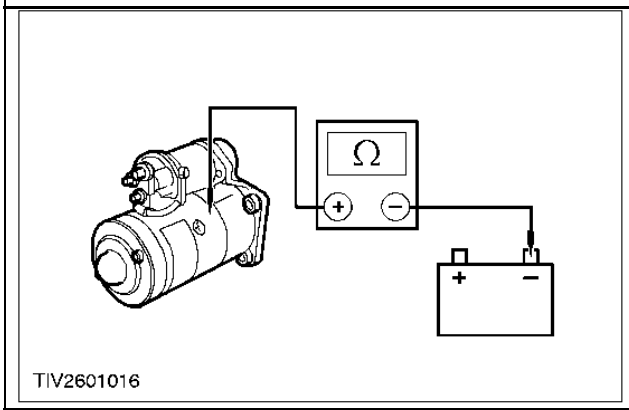	**1** Measure the resistance between the starter motor casing and negative (-) battery terminal. • Is the resistance less than 5 ohms? **Yes** INSTALL a new starter motor. TEST the system for normal operation. **No** CLEAN and REPAIR grounds as required. TEST the system for normal operation.
A6: CHECK B+ TO STARTER RELAY	
1 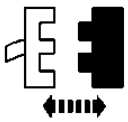 Starter relay 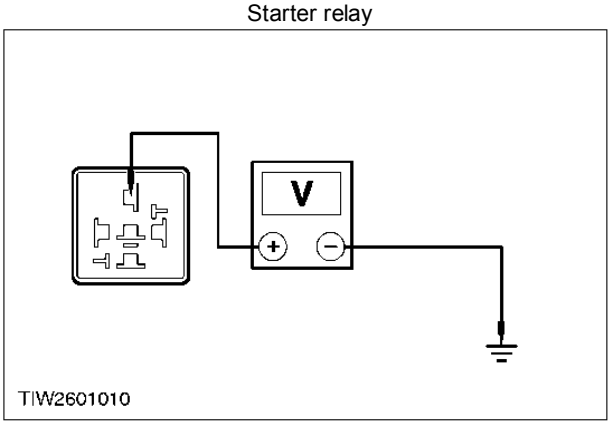	**2** Measure the voltage between the starter relay connector pin 5, circuit 30 (RD) and ground. • Is the voltage greater than 10 volts? **Yes** GO TO **A7** **No** REPAIR circuit 30 (RD). TEST the system for normal operation.

DIAGNOSIS AND TESTING (CONTINUED)

CONDITIONS	DETAILS/RESULTS/ACTIONS
A7: CHECK RELAY GROUND CIRCUIT	
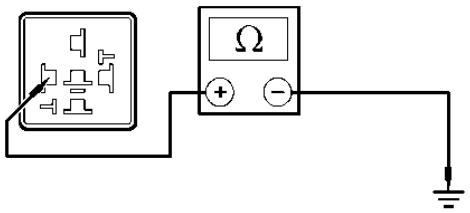	1 Measure the resistance between the starter relay connector pin 1, circuit 31 (BK) and ground. • Is the resistance less than 5 ohms? **Yes** GO TO **A8** **No** REPAIR circuit 31 (BK). TEST the system for normal operation.
A8: CHECK RELAY SWITCHING CIRCUIT	
1 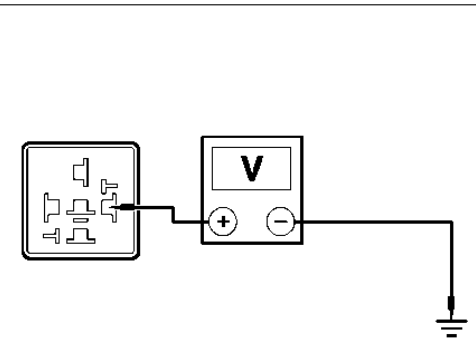	2 Measure the voltage between the starter relay connector pin 2, circuit 50 (GY) and ground. • Is the voltage greater than 10 volts? **Yes** GO TO **A13** **No** GO TO **A9**
A9: CHECK FUSE 40 (60A)	
1 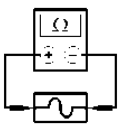 Fuse 40 (60A)	• Is the fuse OK? **Yes** GO TO **A10** **No** INSTALL a new fuse 40 (60A). TEST the system for normal operation. If fuse fails again GO TO **A15**

DIAGNOSIS AND TESTING (CONTINUED)

CONDITIONS	DETAILS/RESULTS/ACTIONS
A10: CHECK CIRCUIT 30 (RD) CONTINUITY	
1 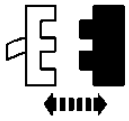 Ignition switch 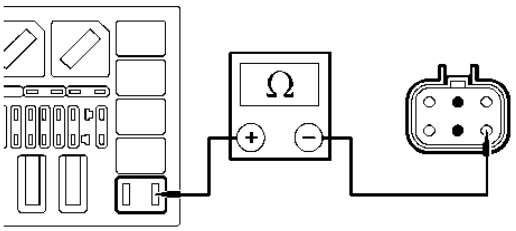 TIW2601013	2 Remove the fuse 40 (60A). 3 Measure the resistance between the fuse 40 connector pin 1, circuit 30 (RD) and ignition switch connector pin 4, circuit 30 (RD). • Is the resistance less than 5 ohms? **Yes** GO TO **A11** **No** REPAIR circuit 30 (RD). TEST the system for normal operation.
A11: CHECK THE IGNITION SWITCH	
1 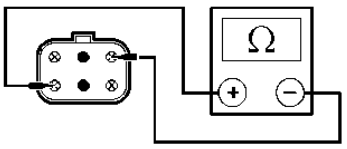 TIW2601014	2 Measure the resistance between pin 4 and pin 3 of the ignition switch connector. • Is the resistance less than 5 ohms? **Yes** GO TO **A12** **No** INSTALL a new ignition switch. TEST the system for normal operation.
A12: CHECK CIRCUIT 50 (GY) CONTINUITY	
1 	

DIAGNOSIS AND TESTING (CONTINUED)

CONDITIONS	DETAILS/RESULTS/ACTIONS
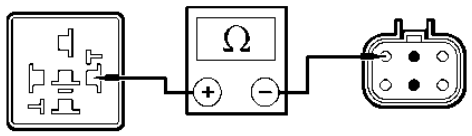 TIW2601015	**2** Measure the resistance between the ignition switch connector pin 3, circuit 50 (GY) and the starter relay connector pin 2, circuit 50 (GY). • Is the resistance less than 5 ohms? **Yes** RECONNECT the ignition switch. GO TO **A8** **No** REPAIR circuit 50 (GY). TEST the system for normal operation.
A13: CHECK THE CONTINUITY OF CIRCUIT 50 (GY/BK)	
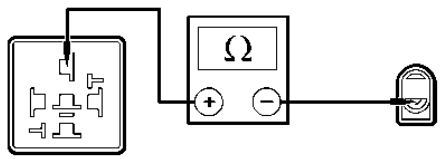 TIW2601016	**1** Measure the resistance between the starter motor solenoid connector, circuit 50 (GY/BK) and starter relay connector pin 3, circuit 50 (GY/BK). • Is the resistance less than 5 ohms? **Yes** GO TO **A14** **No** REPAIR circuit 50 (GY/BK). TEST the system for normal operation.
A14: CHECK CIRCUIT 50 (GY/BK) FOR SHORT TO GROUND	
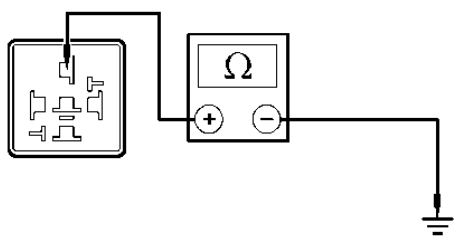 TIW2601017	**1** Measure the resistance between the starter relay connector pin 3, circuit 50 (GY/BK) and ground. • Is the resistance less than 5 ohms? **Yes** INSTALL a new starter relay. TEST the system for normal operation. **No** REPAIR circuit 50 (GY/BK). TEST the system for normal operation.

DIAGNOSIS AND TESTING (CONTINUED)

CONDITIONS	DETAILS/RESULTS/ACTIONS
A15: CHECK CIRCUIT 30 (RD) FOR SHORT TO GROUND	
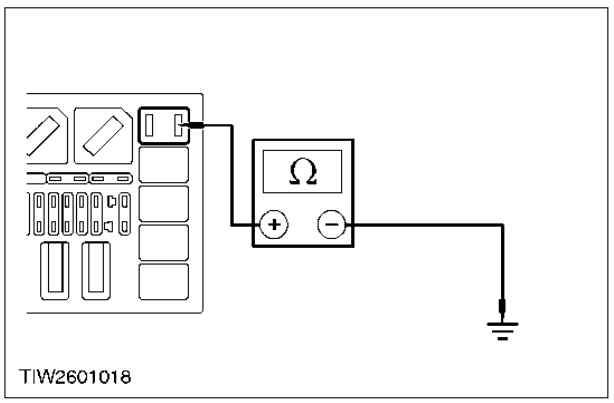	**1** Remove fuse 36 (60A). **2** Measure the resistance between fuse 36 connector pin 1, circuit 30 (RD) and ground. • Is the resistance greater than 10,000 ohms? **Yes** GO TO **A16** **No** REPAIR circuit 30 (RD). TEST the system for normal operation.
A16: CHECK CIRCUIT 50 FOR SHORT TO GROUND	
1 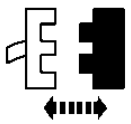 Ignition switch	
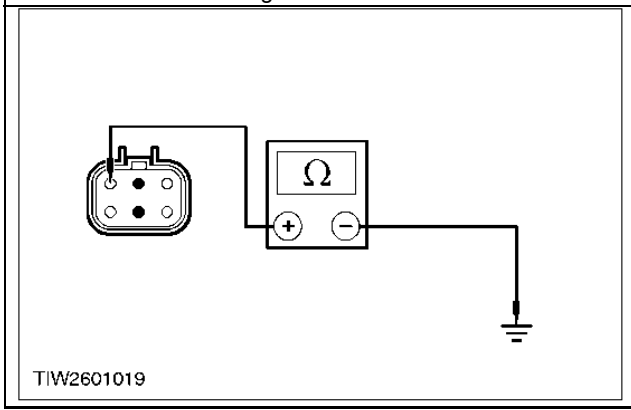	**2** Measure the resistance between the ignition switch connector pin 3, circuit 50 (GY) and ground. • Is the resistance greater than 10,000 ohms? **Yes** CONNECT the ignition switch. GO TO **A8** **No** REPAIR circuit 50 (GY). TEST the system for normal operation.

DIAGNOSIS AND TESTING (CONTINUED)

PINPOINT TEST B: THE ENGINE CRANKS SLOWLY

CONDITIONS	DETAILS/RESULTS/ACTIONS
B1: CHECK THE BATTERY VOLTAGE	
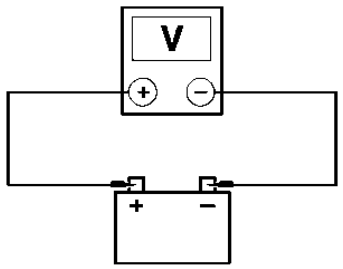 TIV2601012	1 Measure the voltage between the battery terminals. • Is the voltage greater than 12.5 volts? **Yes** GO TO **B2** **No** CHARGE or INSTALL a new battery as required. REFER to Section 414-00. TEST the system for normal operation.
B2: CHECK THE SUPPLY TO STARTER	
1 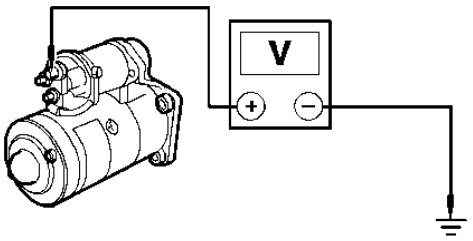 TIV2601013	2 Measure the voltage between the starter terminal B, circuit 30 (RD) and ground. • Is the voltage greater than 12.5 volts? **Yes** GO TO **B3** **No** REPAIR circuit 30 (RD). TEST the system for normal operation.
B3: CHECK THE STARTER GROUND CIRCUIT	
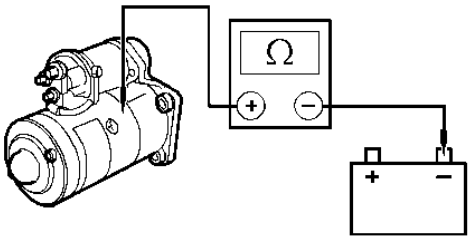 TIV2601016	1 Measure the resistance between the starter motor casing and negative (-) battery terminal. • Is the resistance less than 5 ohms? **Yes** INSTALL a new starter motor. TEST the system for normal operation. **No** CLEAN and REPAIR grounds as required. TEST the system for normal operation.

DIAGNOSIS AND TESTING (CONTINUED)

PINPOINT TEST C: UNUSUAL STARTER MOTOR NOISE	
CONDITIONS	**DETAILS/RESULTS/ACTIONS**
C1: CHECK THE STARTER MOUNTING	
	1 Check the starter and mounting brackets for correct alignment. • Is the starter mounted correctly? **Yes** GO TO **C2** **No** INSTALL the starter motor. Refer to the procedure in this section. TEST the system for normal operation.
C2: CHECK THE STARTER DRIVE	
	1 Remove the starter motor. Refer to the procedure in this section. **2** Inspect the ring gear for damage and wear. • Is the ring gear damaged? **Yes** REPAIR ring gear as required. TEST the system for normal operation. **No** INSTALL a new starter motor. TEST the system for normal operation.

REMOVAL AND INSTALLATION

Starter Motor — Vehicles with 1.6L / 1.3L Engine (26 204 0)

Removal

1. Disconnect the battery ground cable. For additional information, refer to Section 414-01.
2. Remove the engine undershield. For additional information, refer to Section 502-00.
3. Disconnect the electrical connector from the starter motor.

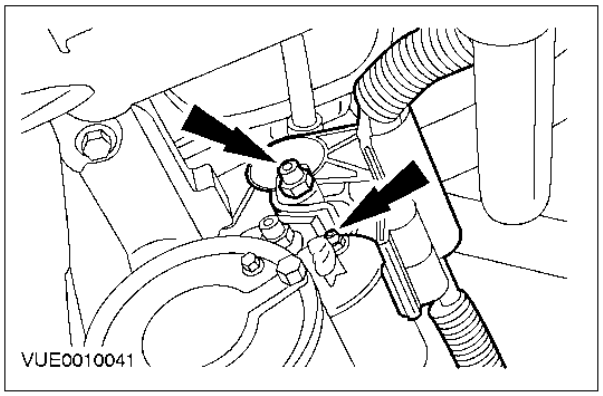

4. Remove the starter motor.

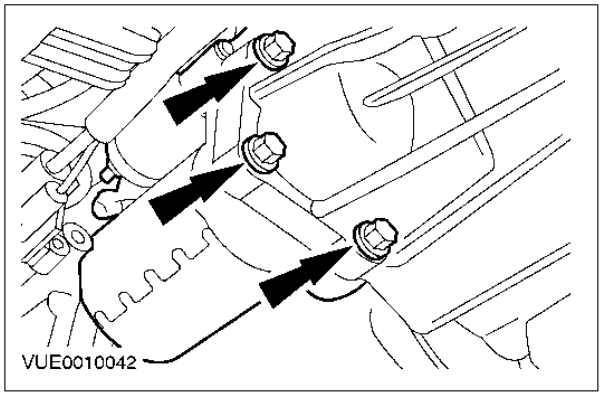

Installation

1. To install, reverse the removal procedure.

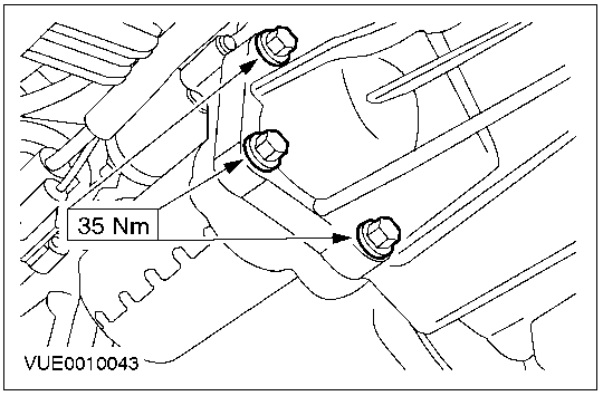

REMOVAL AND INSTALLATION (CONTINUED)

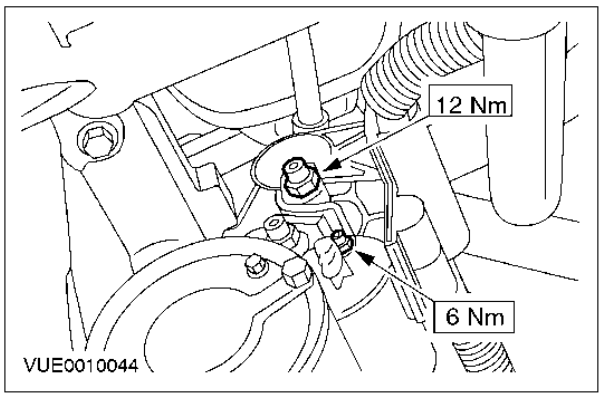

REMOVAL AND INSTALLATION (CONTINUED)

Starter Motor — Vehicles with 1.8L Endura DE Diesel Engine (26 204 0)

Removal

1. Disconnect the battery ground cable.
2. Raise the vehicle.
3. Disconnect the starter motor wiring.

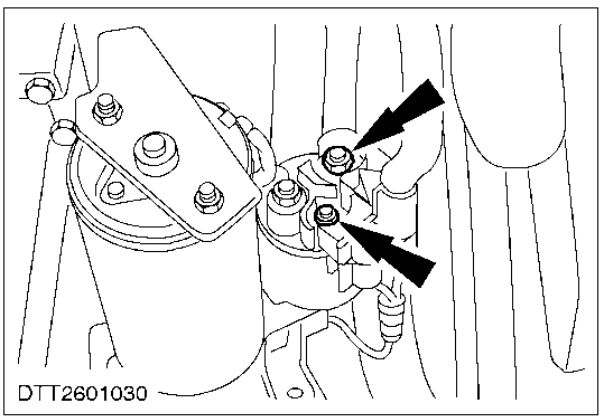

4. Remove the starter motor support bracket (two nuts, one bolt).

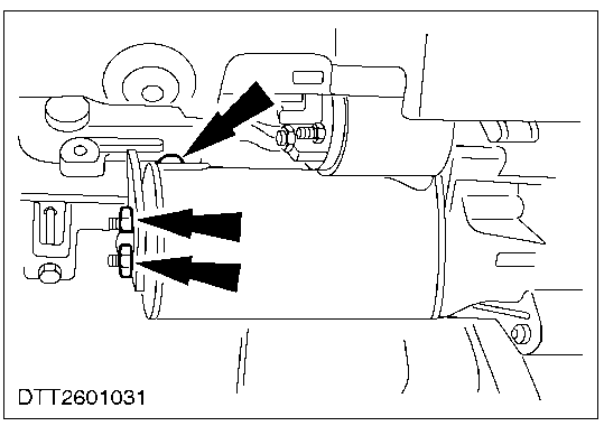

5. Remove the starter motor (three bolts).

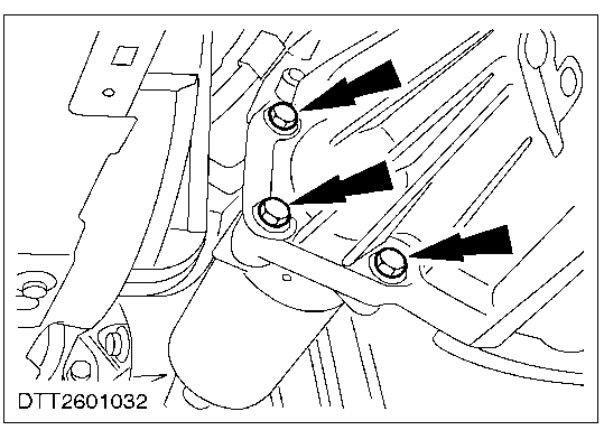

REMOVAL AND INSTALLATION (CONTINUED)

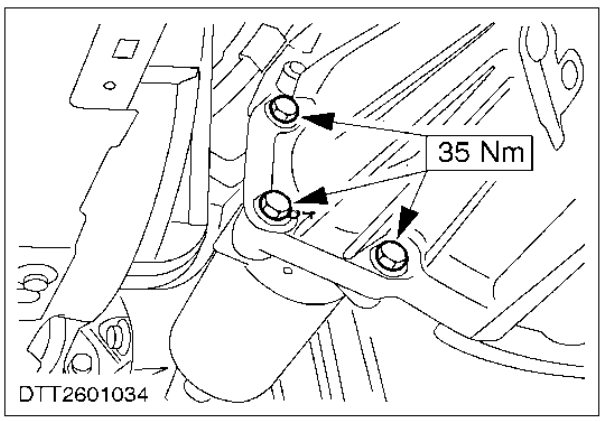

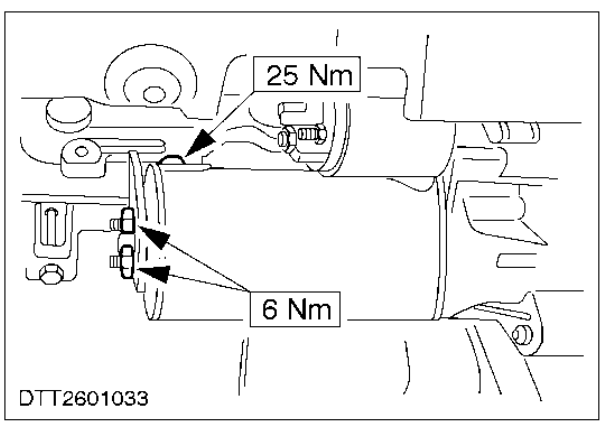

Installation

1. Refit the components in reverse order.

SPECIFICATIONS

Torque Specifications

Description	Nm
Starter motor retaining bolts	35
Starter motor electrical connector upper retaining nut	12
Starter motor electrical connector lower retaining nut	6

SECTION 303-07 Engine Ignition

VEHICLE APPLICATION: 2002 Bantam

SUBJECT **PAGE**

DESCRIPTION AND OPERATION
Engine Ignition 303-07-219

DIAGNOSIS AND TESTING
Engine Ignition 303-07-220
Inspection and Verification 303-07-220

REMOVAL AND INSTALLATION
Ignition Coil Pack — Vehicles with 1.6L / 1.3L Engine ..... (22 414 0) 303-07-221/222

SPECIFICATIONS
Specifications 303-07-223
Torque Specifications 303-07-223

DESCRIPTION AND OPERATION

Engine Ignition

The ignition system is of the distributor less type.

The crankshaft position sensor (CKP) signal is the basis for ignition timing calculations. The camshaft position (CMP) sensor signal is required only during starting as when the engine is running, the profile ignition pick-up (PIP) signal is used. The alternating voltage signal from the CKP sensor is digitized by the powertrain control module (PCM). This digitized signal is then used to time the closing of the ignition coils primary circuits.

Ignition timing is determined by the PCM in response to engine operating conditions. Once ignition timing has been determined, the PCM interrupts the current to the primary circuits of the ignition coils therefore triggering ignition sparks which are supplied to the cylinders through the spark plug wires and spark plugs.

The ignition coils are triggered by the PCM in pairs, cylinders No.1 and No. 4 and cylinders No. 2 and No. 3, sending an ignition spark to the firing cylinder and to the corresponding cylinder on the exhaust stroke. Having an ignition spark on the exhaust strokes makes sure that any un-burnt fuel left in the cylinder is ignited to provide cleaner exhaust emissions.

DIAGNOSIS AND TESTING

Engine Ignition

General Equipment
WDS

Inspection and Verification

1. Verify the customer concern.
2. Visually inspect for obvious signs of damage. Refer to the following chart:

Visual Inspection Chart

Mechanical	Electrical
• Damaged spark plug wires. • Damaged spark plugs.	• Connections to spark plugs and coil. • Loose or corroded ignition coil electrical connector. • Damaged wiring harness(s).

3. If visual inspection reveals an obvious cause, rectify this before continuing.
4. If the concern remains after visual inspection, use WDS to diagnose the system.

REMOVAL AND INSTALLATION

Ignition Coil Pack — Vehicles with 1.6L / 1.3L Engine (22 414 0)

Removal

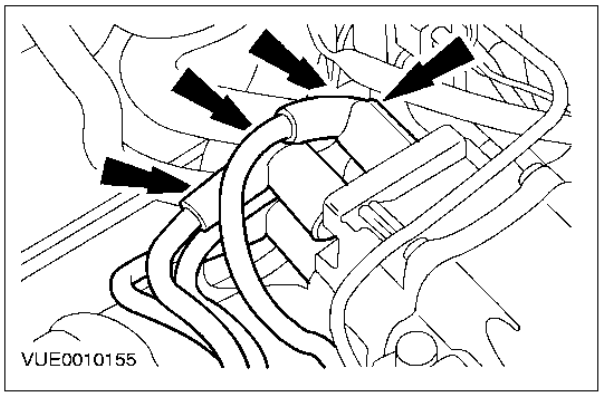

1. Disconnect the spark plug wires from the ignition coil pack.

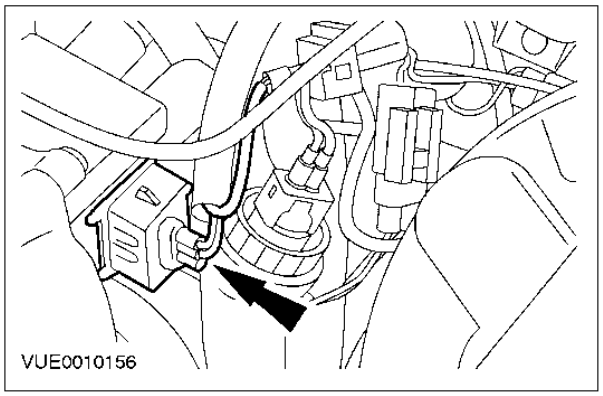

2. Disconnect the ignition coil pack electrical connector.

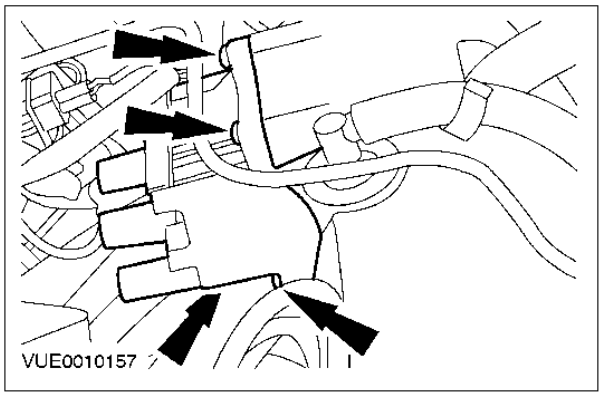

3. Remove the ignition coil pack.

Installation

CAUTION: The ignition coil pack and spark plug wires are numbered. Make sure the spark plug wires are correctly installed to the ignition coil pack. Failure to follow this instruction may result in damage to the engine.

REMOVAL AND INSTALLATION (CONTINUED)

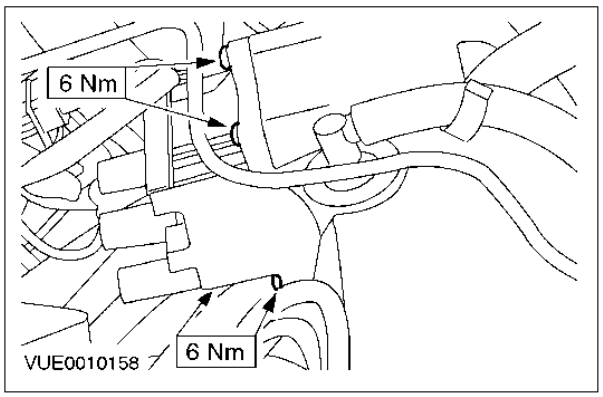

1. To install, reverse the removal procedure.

SPECIFICATIONS

Torque Specifications

Description	Nm
Ignition coil pack retaining screws	6

SECTION 303-12 Intake Air Distribution and Filtering

VEHICLE APPLICATION: 2002 Bantam

SUBJECT **PAGE**

DESCRIPTION AND OPERATION

Intake Air Distribution and Filtering - Vehicles with 1.6L / 1.3L engine 303-12-225
Intake Air Distribution and Filtering - Vehicles with Diesel engine 303-12-226

DIAGNOSIS AND TESTING

Intake Air Distribution and Filtering 303-12-227

REMOVAL AND INSTALLATION

Air Cleaner Intake Pipe..... (23 175 0) 303-12-228/230
Air Cleaner ..... (23 174 0) 303-12-231

SPECIFICATIONS

Specifications 303-12-232
Torque Specifications 303-12-232

DESCRIPTION AND OPERATION

Intake Air Distribution and Filtering

Vehicles with 1.3L or 1.6L Engine

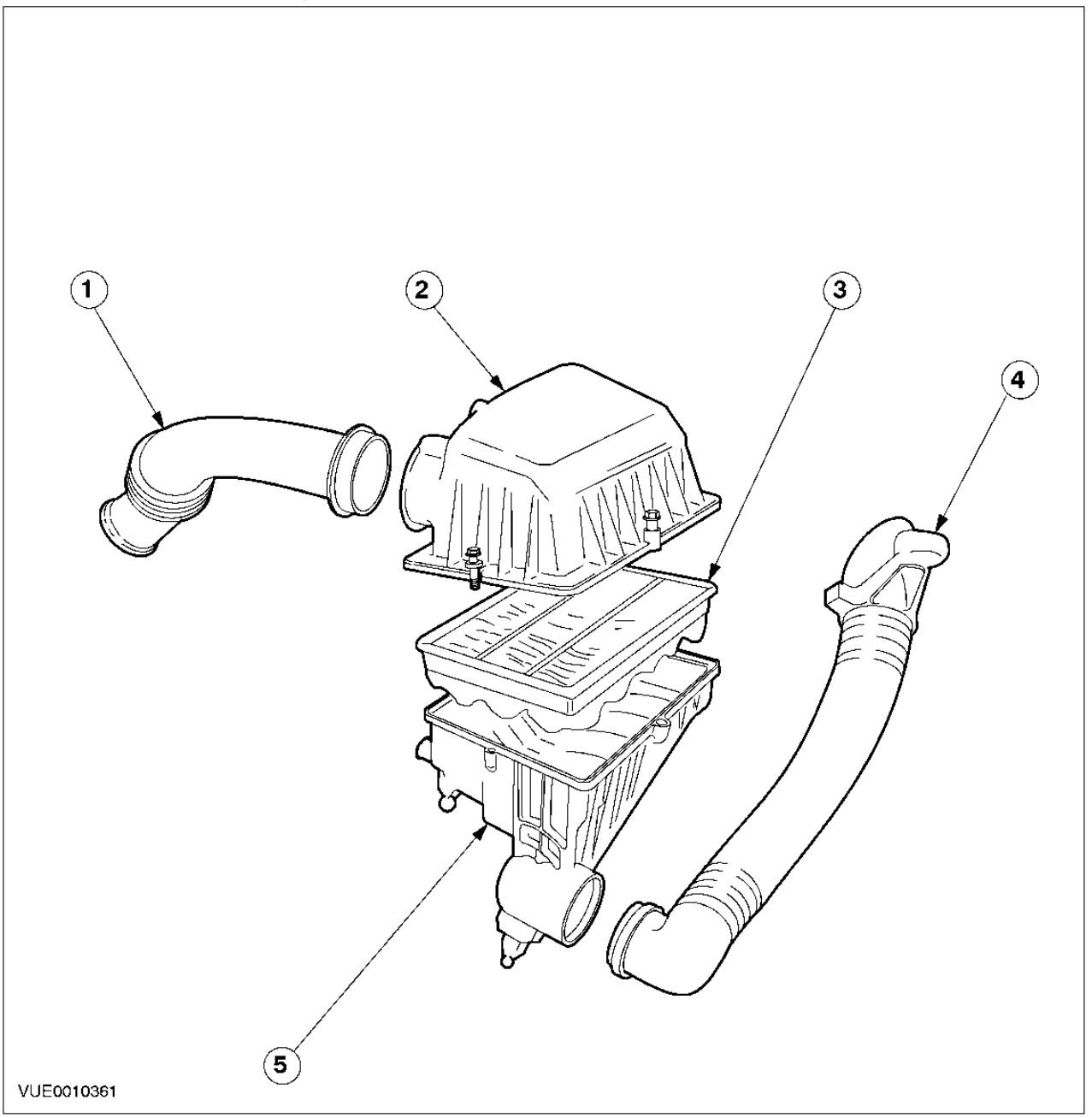

Item	Description
1	Air cleaner outlet pipe
2	Air cleaner housing cover

Item	Description
3	Air cleaner element
4	Air cleaner intake pipe
5	Air cleaner housing

DESCRIPTION AND OPERATION

Vehicles with Diesel Engine

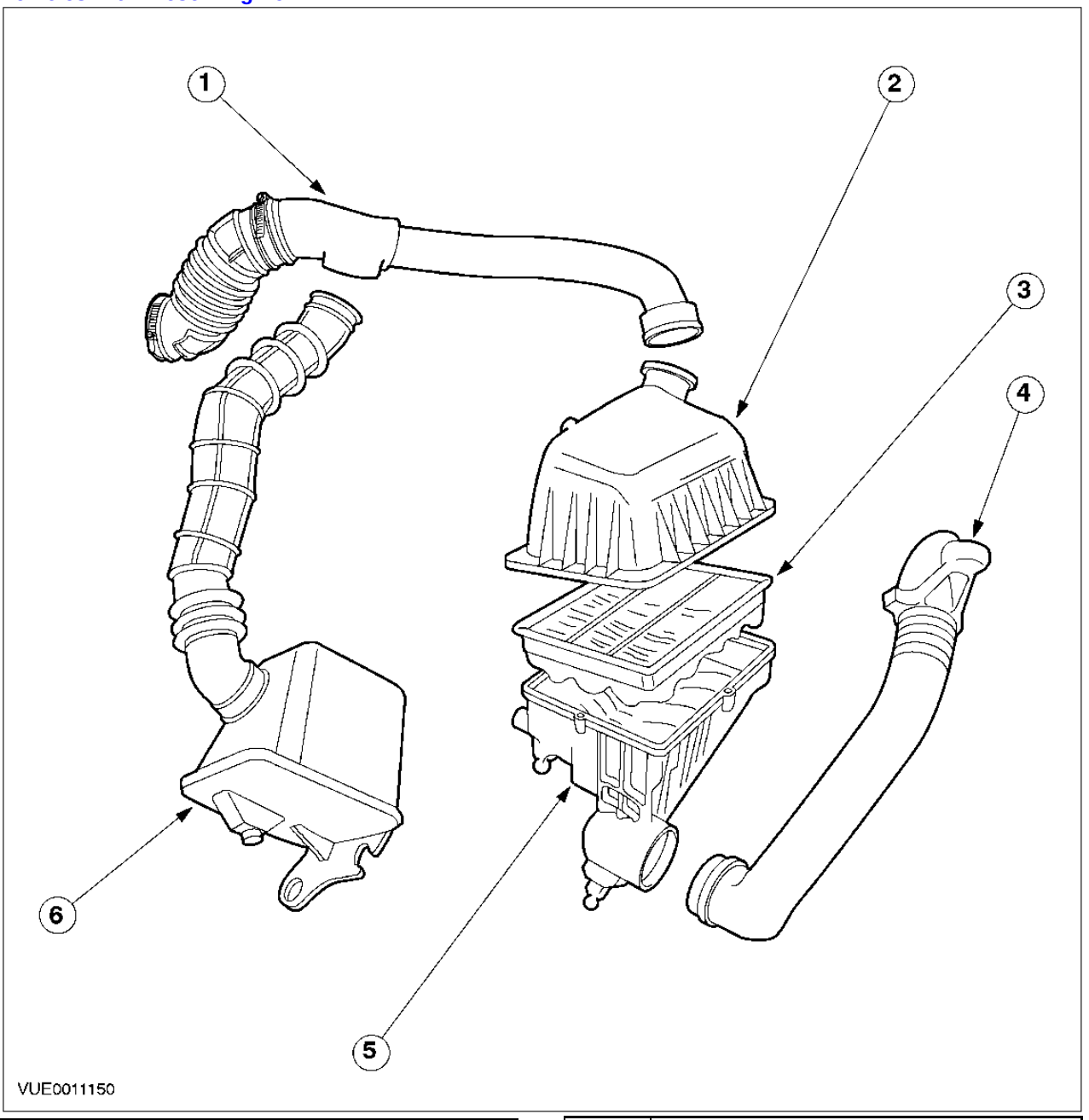

Item	Description
1	Air cleaner outlet pipe
2	Air cleaner housing cover
3	Air cleaner element

Item	Description
4	Air cleaner intake pipe
5	Air cleaner housing
6	Intake air resonator

DIAGNOSIS AND TESTING

Intake Air Distribution and Filtering

REFER to Section 303-00.

REMOVAL AND INSTALLATION

Air Cleaner Intake Pipe (23 175 0)

Removal

NOTE: The procedure shown is for vehicles with 1.6L / 1.3L engines, the procedure is similar for vehicles with diesel engine.

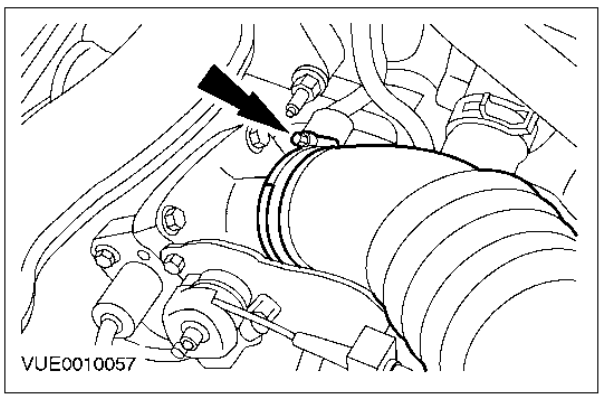

1. Disconnect the air cleaner outlet pipe from the throttle body.

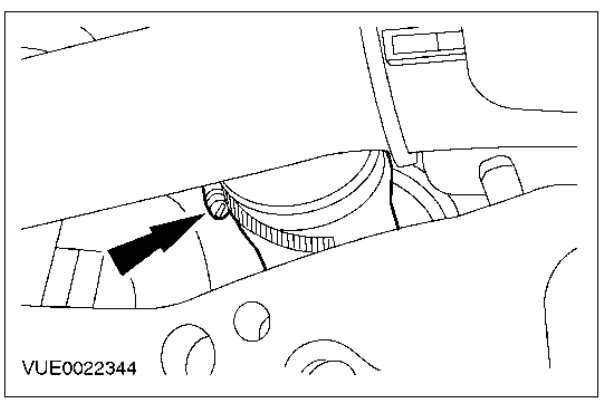

2. Disconnect the resonator pipe from the air cleaner outlet pipe.

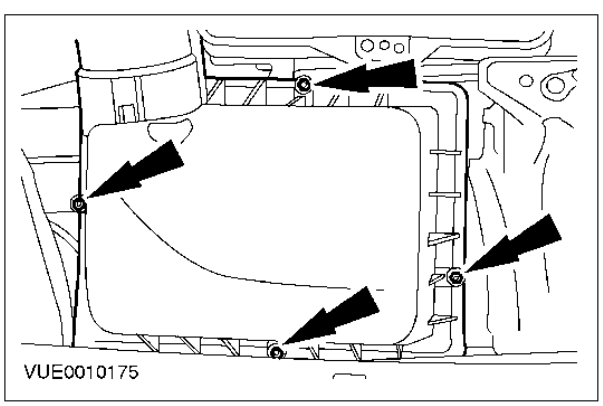

3. Remove the air cleaner housing cover and air cleaner outlet pipe.

REMOVAL AND INSTALLATION (CONTINUED)

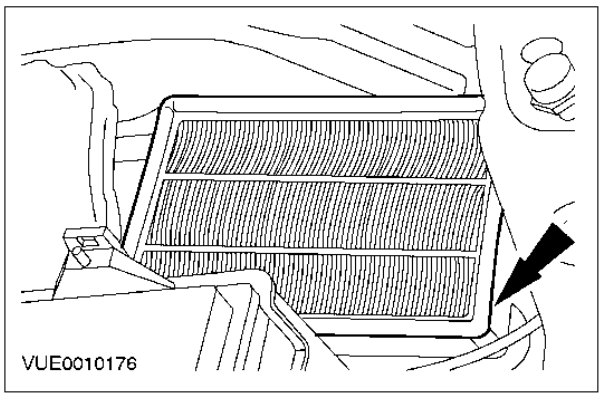

4. Remove the air cleaner element.

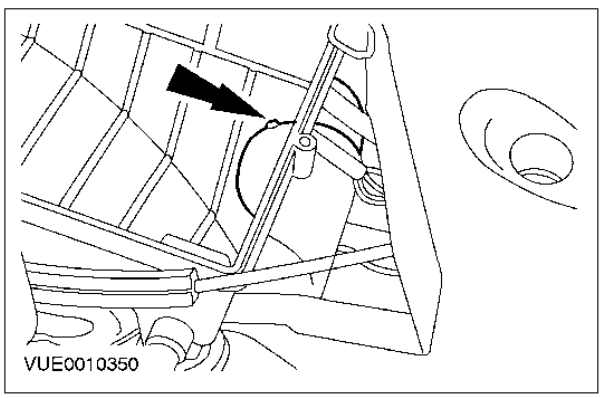

5. Disconnect the air cleaner intake pipe from the air cleaner.
   - Release the tang.

6. Loosen the left-hand front wheel nuts.
7. Raise and support the vehicle. For additional information, refer to Section 100-02.
8. Remove the left-hand front wheel.

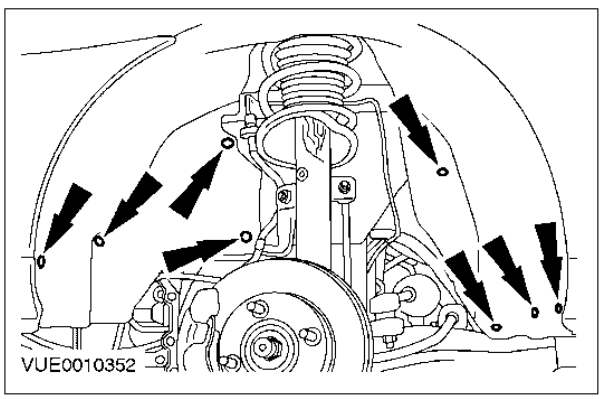

9. Remove the left-hand front fender splash shield.

REMOVAL AND INSTALLATION (CONTINUED)

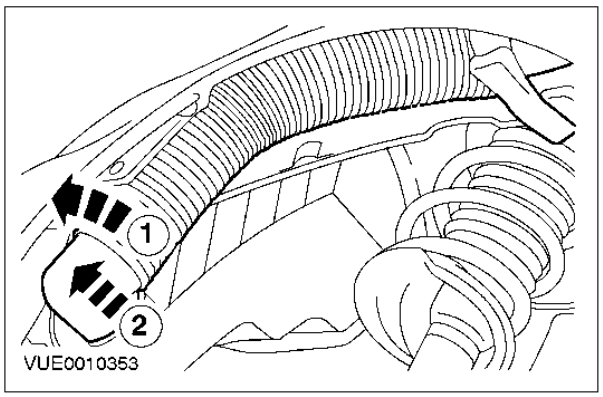

10. Remove the air cleaner intake pipe.
    1. Rotate the air cleaner intake pipe counterclockwise.
    2. Remove the air cleaner intake pipe.

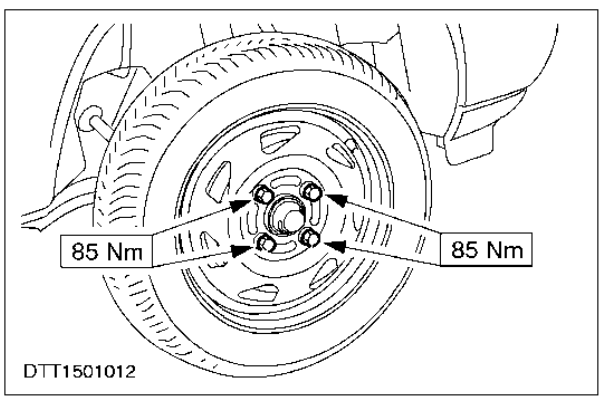

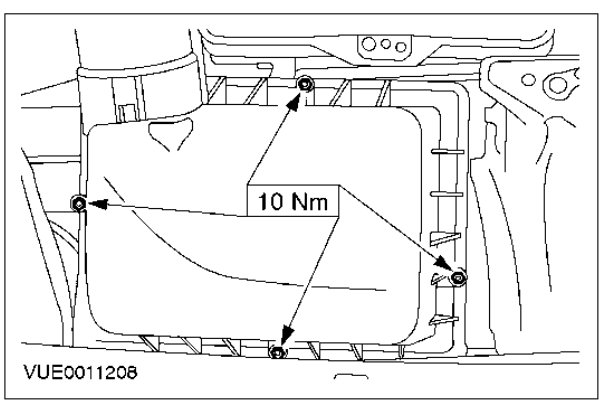

Installation

1. To install, reverse the removal procedure.

REMOVAL AND INSTALLATION

Air Cleaner (23 174 0)

Removal

All vehicles

1. Remove the air cleaner intake pipe.
   For additional information,
   refer to Air Cleaner Intake Pipe in this section.

Vehicles with 1.6L / 1.3L engines

2. Disconnect the engine ventilation hose.

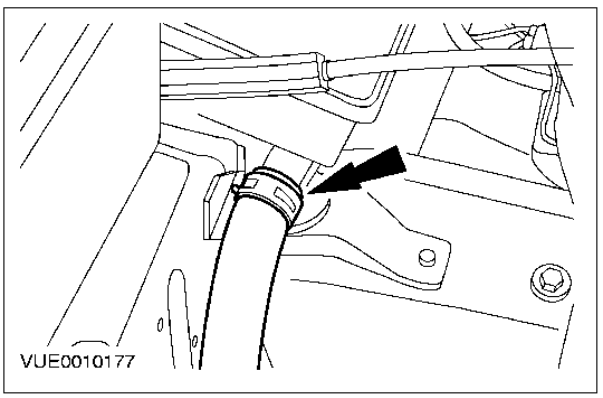

All vehicles

3. Detach the air cleaner housing.
   - Pull the rubber strap up, to release.

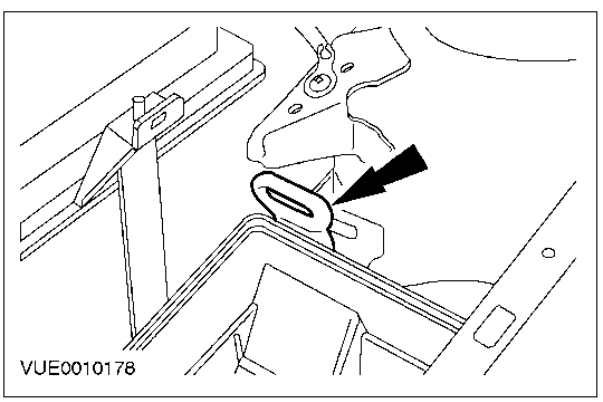

4. Remove the air cleaner housing.

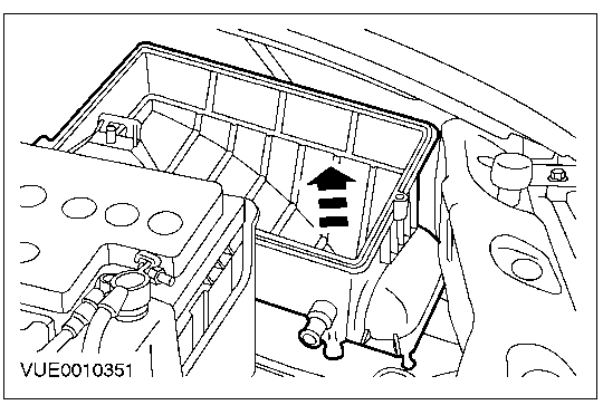

Installation

1. To install, reverse the removal procedure.

SPECIFICATIONS

Torque Specifications

Description	Nm
Wheel nuts	85
Air cleaner housing cover retaining screws	10

SECTION 303-14 Electronic Engine Controls

VEHICLE APPLICATION: 2002 Bantam

SUBJECT **PAGE**

DESCRIPTION AND OPERATION

Electronic Engine Controls 303-14-234
Vehicles with 1.3L or 1.6L Engine 303-14-235
Vehicles with Diesel Engine 303-14-236

DIAGNOSIS AND TESTING

Electronic Engine Controls 303-14-237
Inspection and Verification 303-14-237

REMOVAL AND INSTALLATION

Powertrain Control Module (PCM) — Vehicles with Petrol Engine ..... (29 200 0) 303-14-238/239
Crankshaft Position (CKP) Sensor — Vehicles with Petrol Engine ..... (29 230 0) 303-14-240
Power Steering Pressure (PSP) Switch — Vehicles with Petrol Engine ..... (33 611 0) 303-14-241
Throttle Position (TP) Sensor — Vehicles with Petrol Engine ..... (23 325 0) 303-14-242
Engine Coolant Temperature (ECT) Sensor — Vehicles with Petrol Engine ... (21 190 0) 303-14-243
Engine Knock Sensor— Vehicles with 1.3L Petrol Engine 303-14-244/249

SPECIFICATIONS

Specifications 303-14-250
Torque Specifications 303-14-250

DESCRIPTION AND OPERATION

Electronic Engine Controls

Vehicles with 1.6L / 1.3L Engines

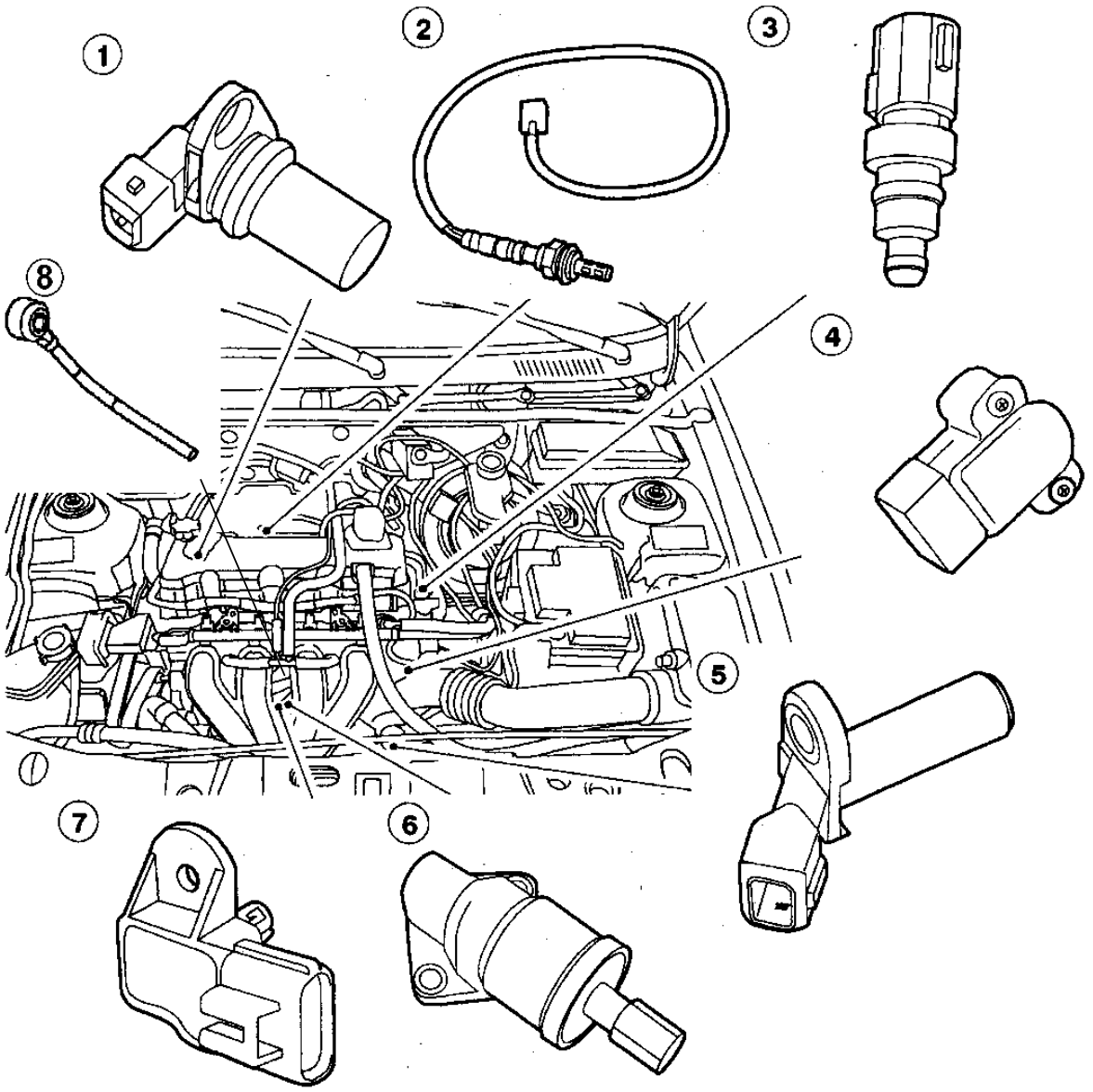

Item	Description
1	Camshaft position (CMP) sensor
2	Oxygen sensor (O2S)
3	Engine coolant temperature (ECT) sensor
4	Throttle position (TP) sensor
5	Crankshaft position (CKP) sensor
6	Idle air control (IAC) valve

Item	Description
7	Temperature and manifold absolute pressure (T-MAP) sensor
8	Knock Sensor

DESCRIPTION AND OPERATION (CONTINUED)

Vehicles with 1.3L or 1.6L Engine

The sensors supply the PCM with input signals, which relate to engine operating conditions and the IAC valve responds to output signals from the PCM. These output signals are based on the evaluated input signals, which are compared with calibrated data tables or maps before the output signal is generated.

Powertrain Control Module (PCM)

The PCM is located inside the vehicle, behind the left-hand cowl side trim panel and provides precise control of basic engine calibration parameters.

Crankshaft Position (CKP) Sensor

The CKP sensor is an inductive pulse generator, which scans 36 minus one cast protrusions on the flywheel. Minus one means that one of the cast protrusions is missing. This missing cast protrusion is located at 90º before top dead center (TDC) and is used by the PCM as a reference for crankshaft position. The CKP sensor sends an alternating voltage signal to the PCM where it is converted into the digital profile ignition pick-up (PIP) signal.

Camshaft Position (CMP) Sensor

The CMP sensor is an inductive pulse generator, which scans a reference cam on the camshaft. It sends an alternating voltage signal to the PCM from which the position and stroke of piston number one is calculated. The signal from the CMP sensor is required only during starting. When the engine is running, the PIP signal is used to sequentially control the fuel injectors.

Oxygen Sensor (O2S)

The O2S is a voltage generator, which is installed ahead of the catalyst in the exhaust flow. When the air/fuel ratio is ideal, theoretically 14.7:1 (lambda 1), a voltage signal is sent to the PCM. When the mixture is lean, the voltage signal is reduced and when the mixture is rich, the voltage signal is increased. The PCM sets the air/fuel mixture accordingly. This provides close control of exhaust emissions.

Engine Coolant Temperature (ECT) Sensor

The ECT sensor is a temperature dependent resistor, which has a negative temperature coefficient. This means its resistance decreases with increased temperature. It is supplied with a reference voltage by the PCM. When the engine coolant temperature changes, the resistance of the ECT sensor changes therefore changing the output voltage. The output voltage is assigned to a corresponding engine coolant temperature by the PCM.

Throttle Position (TP) Sensor

The TP sensor is a rotary variable resistor, which is secured to the throttle body and operated by the throttle plate shaft. It is supplied with a reference voltage by the PCM. When the throttle plate is opened, a sliding contact moves over a resistance track changing the output voltage. The output voltage is assigned to a corresponding throttle plate position by the PCM.

Idle Air Control (IAC) Valve

The IAC valve is fitted directly into the intake manifold. It is an electronically controlled solenoid valve, which allows a flow of air to bypass the throttle plate shaft. It is controlled by grounding pulses from the PCM, the length of which determines its position. Engine speed can therefore be maintained irrespective of engine load.

Temperature and Manifold Absolute Pressure (T-MAP) Sensor

The T-MAP sensor is fitted directly into the intake manifold and is therefore able to measure vacuum accurately whilst the engine is running. It consists of a pressure transducer and a temperature sensor, which provide the PCM with information relating to vacuum, barometric pressure and air temperature within the intake manifold. When the engine is running, it measures vacuum and when the engine is not running but the ignition is switched on, it measures barometric pressure.

Knock Sensor (1.3L engine only)

The knock sensor is fitted to the engine to sense the onset of engine knock and to return this information to the engine control module, which then can determine the optimum spark timing for the engine. The engine control module will then adjust the timing to reduce the tendency of engine knock. This accurate discrimination of combustion knocking allows engines to run generally higher spark advance than has previously been possible for improved power and fuel economy.

DESCRIPTION AND OPERATION (CONTINUED)

Vehicles with Diesel Engine

Air Conditioning (A/C) Cutoff Switch

The A/C cutoff switch is secured to the fuel injection pump and operated by the fuel injection pump throttle linkage. When the throttle linkage is at full travel, the A/C cutoff switch is pressed, therefore cutting off the A/C system to enable maximum engine power.

DIAGNOSIS AND TESTING

Electronic Engine Controls

General Equipment
WDS

Inspection and Verification

1. Verify the customer concern.
2. Visually inspect for obvious signs of damage. Refer to the following chart:

Visual Inspection Chart

Mechanical	Electrical
• Damaged sensors. • Damaged actuators.	• Damaged electrical connections. • Damaged wiring harness(s). • Loose or corroded powertrain control module electrical connector.

3. If visual inspection reveals an obvious cause, rectify this before continuing.
4. If the concern remains after visual inspection, use WDS to diagnose the system.

REMOVAL AND INSTALLATION

Powertrain Control Module (PCM) — Vehicles with Petrol Engine (29 200 0)

Removal

1. Disconnect the battery ground cable. For additional information, refer to Section 414-01.

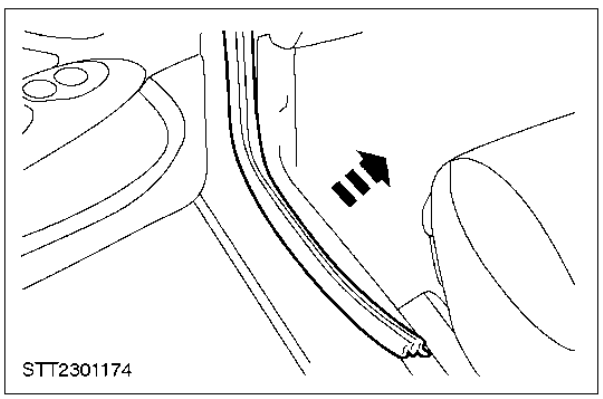

2. Detach the left-hand door opening weather strip.

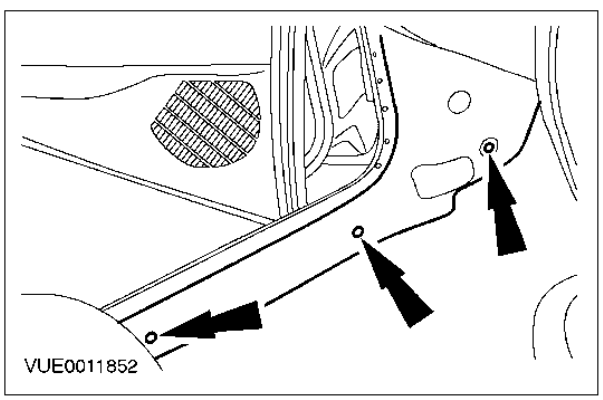

3. Detach the cowl side trim panel.

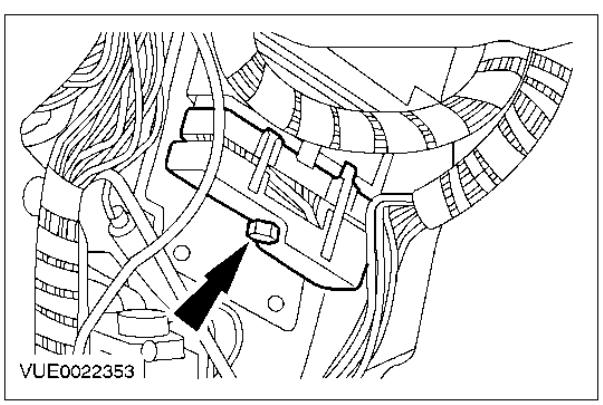

4. Disconnect the PCM electrical connector.

REMOVAL AND INSTALLATION (CONTINUED)

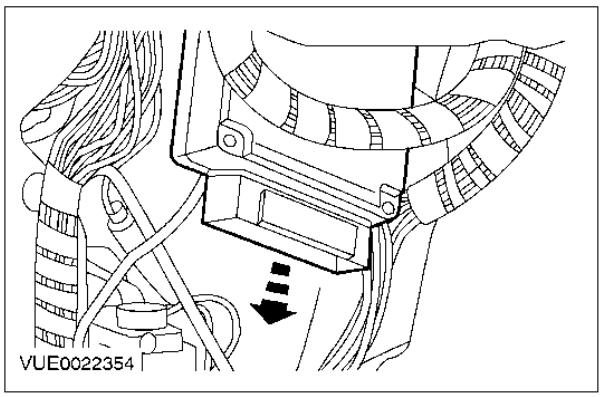

5. Remove the PCM.

Installation

1. **CAUTION: When installing the PCM electrical connector start the bolt by hand before tightening to avoid damaging the electrical connector pins.**

   To install, reverse the removal procedure.

REMOVAL AND INSTALLATION

Crankshaft Position (CKP) Sensor — Vehicles with 1.6L / 1.3L Engines (29 230 0)

Removal

1. Remove the engine undershield. For additional information, refer to Section 502-00.

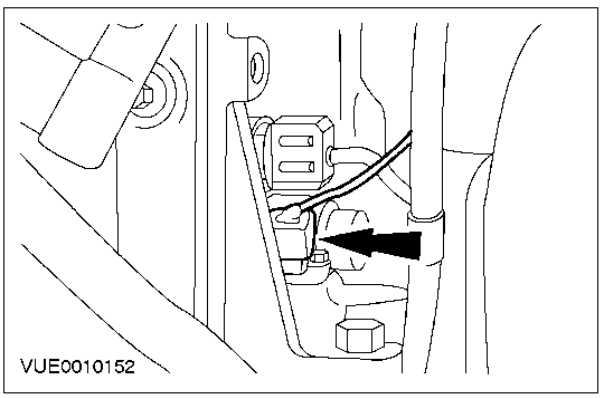

2. Disconnect the crankshaft position (CKP) sensor electrical connector (starter motor removed for clarity).

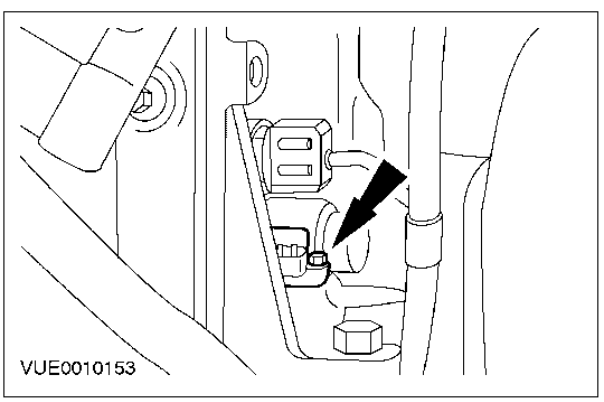

3. Remove the CKP sensor (starter motor removed for clarity).

Installation

1. To install, reverse the removal procedure.

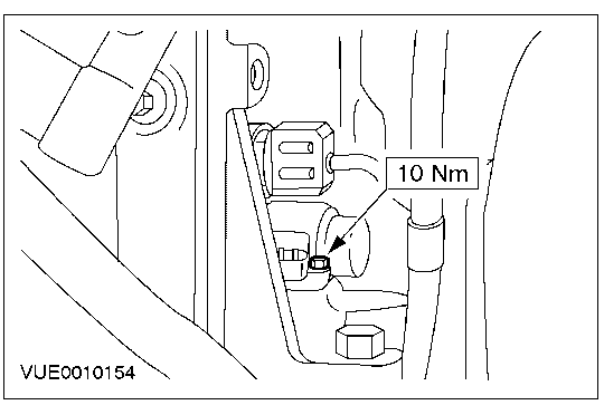

REMOVAL AND INSTALLATION

Power Steering Pressure (PSP) Switch — Vehicles with Petrol Engine (33 611 0)

Removal

1. Raise and support the vehicle. For additional information, refer to Section 100-02.

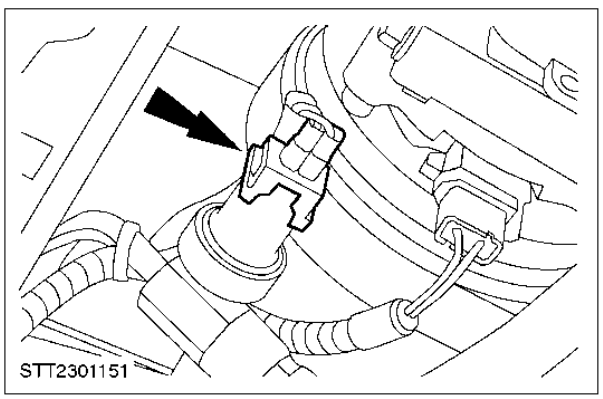

2. Disconnect the power steering pressure switch electrical connector.

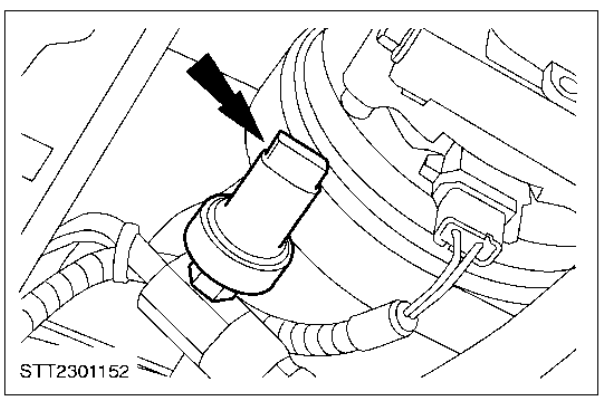

3. Remove the switch.

Installation

1. To install, reverse the removal procedure.

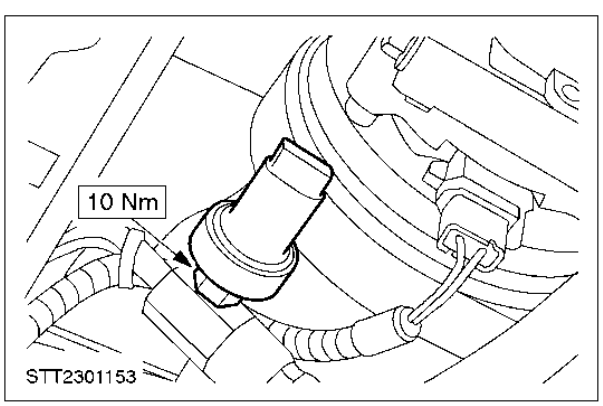

REMOVAL AND INSTALLATION

Throttle Position (TP) Sensor — Vehicles with 1.6L / 1.3L Engines (23 325 0)

Removal

1. Remove the throttle body. For additional information, refer to Section 303-04B.
2. Remove the throttle position (TP) sensor.

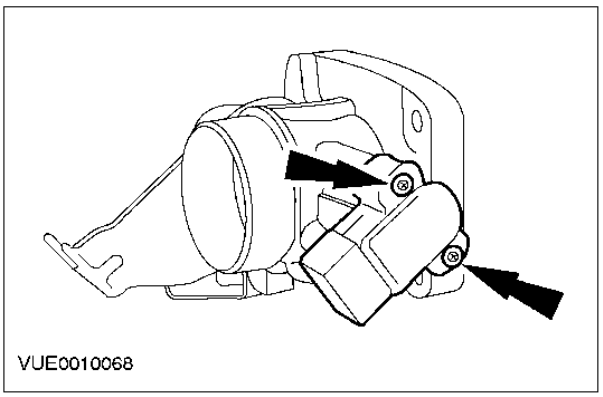

3. Remove and discard the O-ring seal.

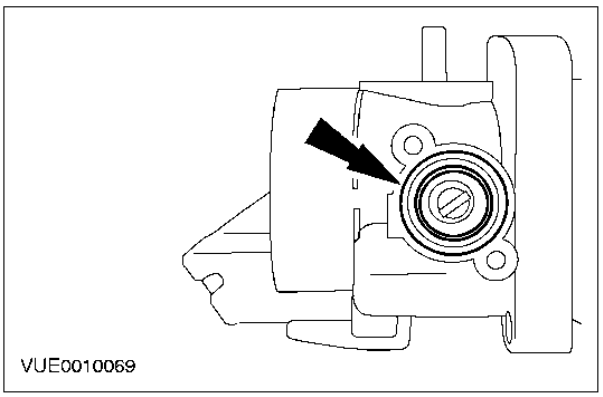

Installation

1. NOTE: Install a new TP sensor O-ring seal.
To install, reverse the removal procedure.

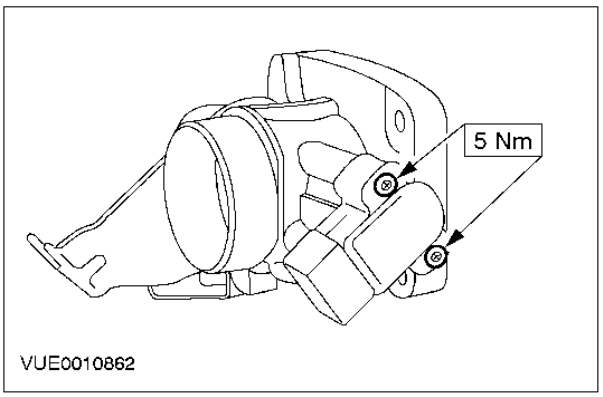

REMOVAL AND INSTALLATION

Engine Coolant Temperature (ECT) Sensor — Vehicles with 1.6L / 1.3L Engines (21 190 0)

Removal

1. Drain the cooling system. For additional information, refer to Section 303-03.
2. Disconnect the engine coolant temperature (ECT) sensor electrical connector.

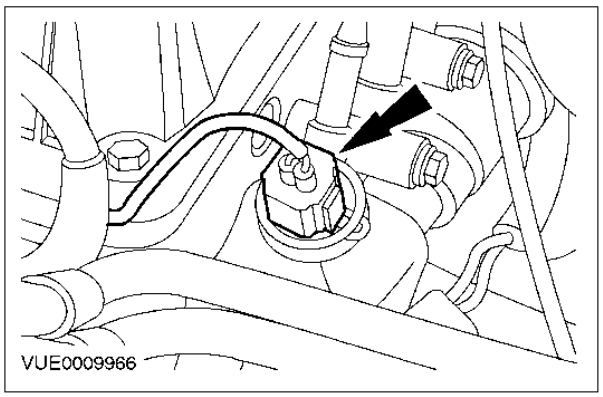

3. Remove the ECT sensor.
   1. Remove the clip.
   2. Remove the ECT sensor.

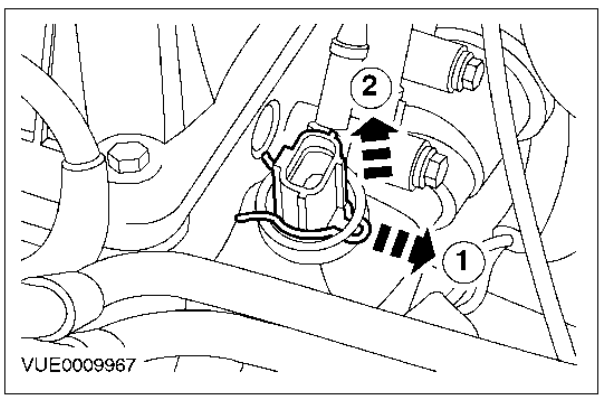

4. Remove and discard the O-ring seal.

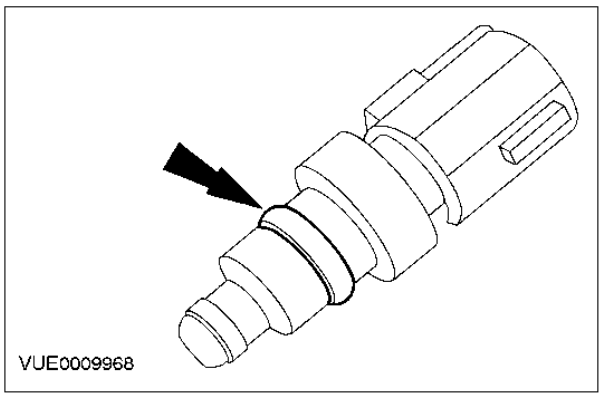

Installation

1. **NOTE:** Install a new ECT sensor O-ring seal. To install, reverse the removal procedure.

REMOVAL AND INSTALLATION (CONTINUED)

Engine Knock Sensor — Vehicles with 1.3L Engines

Removal

1. Disconnect the battery ground cable.

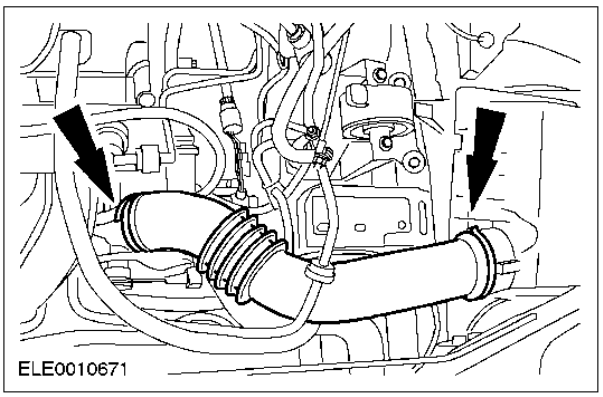

2. Remove the air cleaner intake pipe.

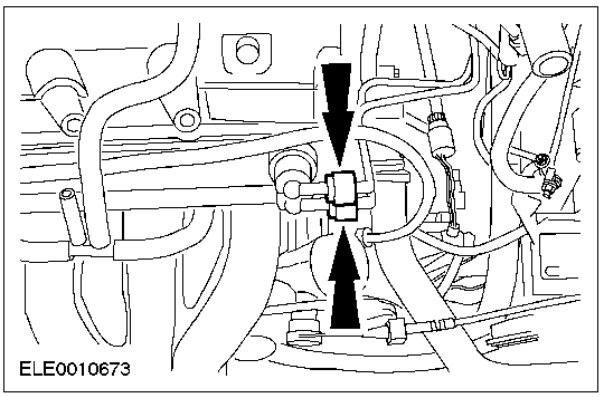

3. **WARNING: Watch for and collect escaping fuel. Observe the safety regulations for working with fuel.**
   Disconnect the fuel lines.

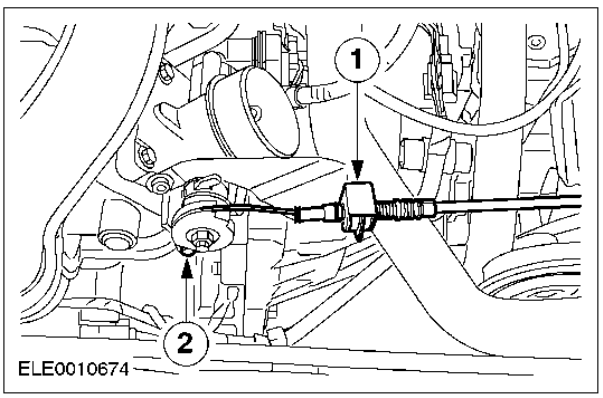

4. Disconnect the accelerator cable.
   1. Remove the clip and pull cable from the retaining bracket.
   2. Disconnect the inner cable.

REMOVAL AND INSTALLATION (CONTINUED)

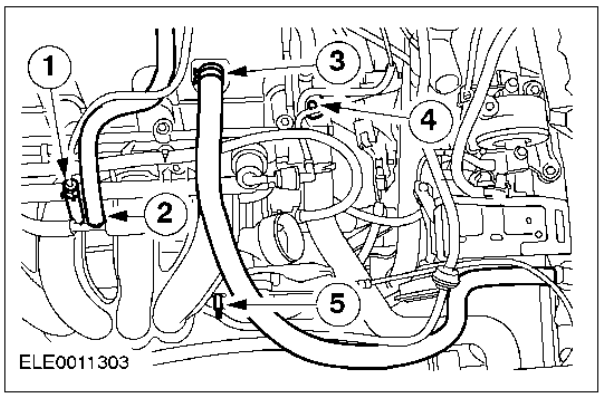

5. Remove the hoses and the electrical connector.
   1. EVAP solenoid valve vacuum hose.
   2. Positive crankcase ventilation (PCV) hose.
   3. Crankcase breather hose.
   4. Engine coolant temperature (ECT) sensor electrical connector.
   5. Brake booster vacuum hose.

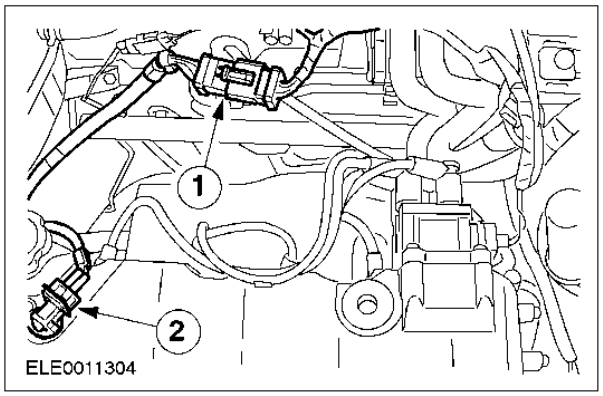

6. Disconnect the electrical connectors.
   1. Powertrain control module (PCM).
   2. Camshaft position (CMP) sensor.

7. Raise and support the vehicle. For additional information, refer to Section 100-02.

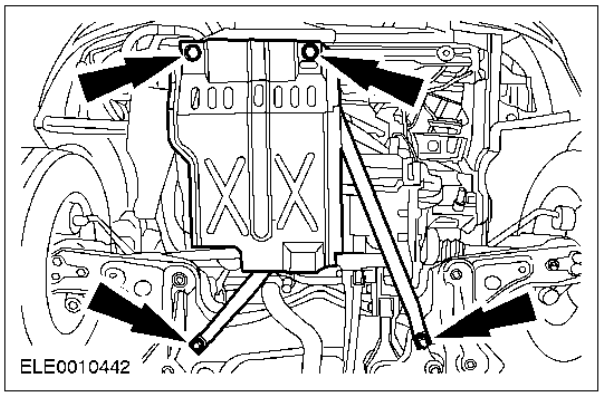

8. Remove the engine undershield.

REMOVAL AND INSTALLATION (CONTINUED)

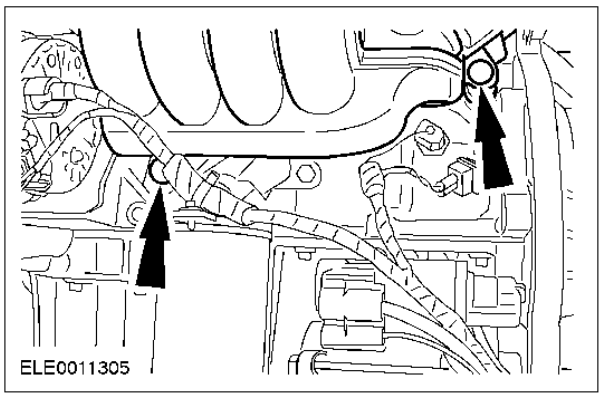

9. Remove the intake manifold lower retaining bolts (shown with the engine removed).

10. Lower the vehicle.

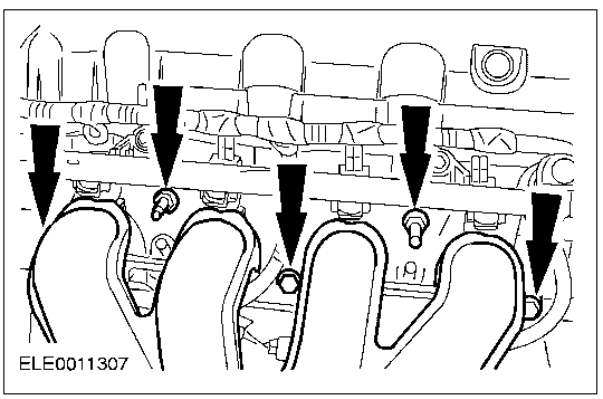

11. Remove the intake manifold.

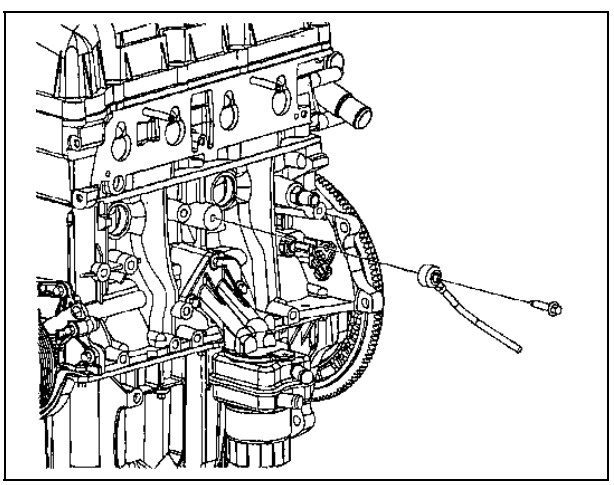

14. Remove the knock sensor.

REMOVAL AND INSTALLATION (CONTINUED)

Installation

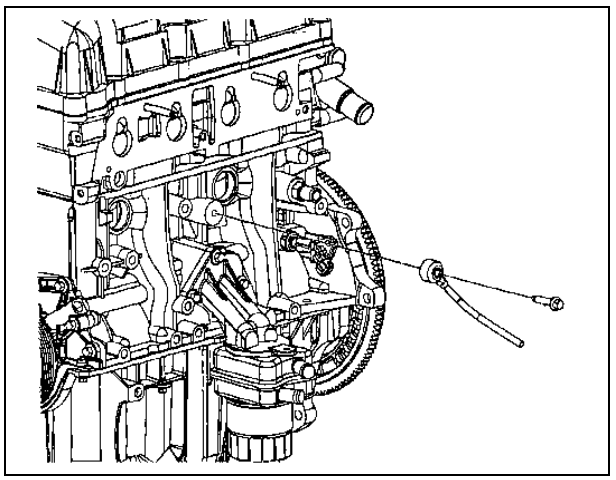

1. Install the knock sensor.

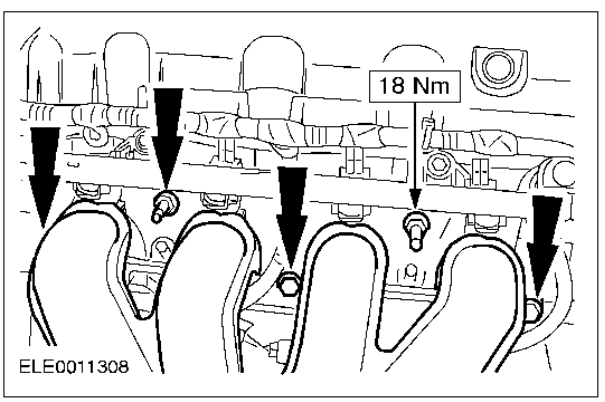

2. **NOTE:** Install a new gasket if the original is damaged.
   Install the intake manifold.

3. Raise and support the vehicle. For additional information, refer to Section 100-02.

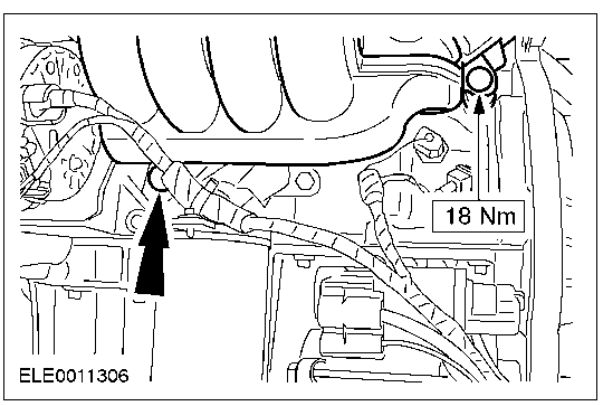

4. Install the intake manifold lower retaining bolts (shown with engine removed).

REMOVAL AND INSTALLATION (CONTINUED)

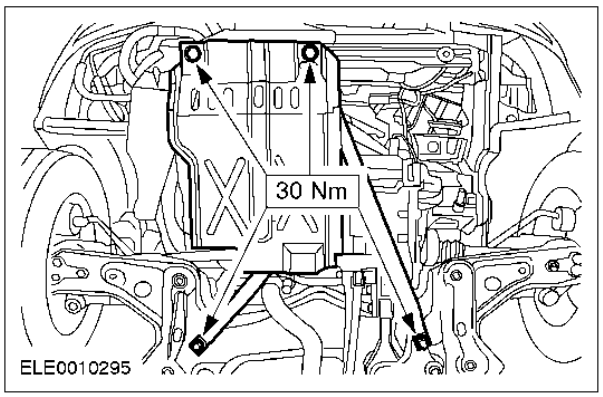

5. Install the engine undershield.

6. Lower the vehicle.

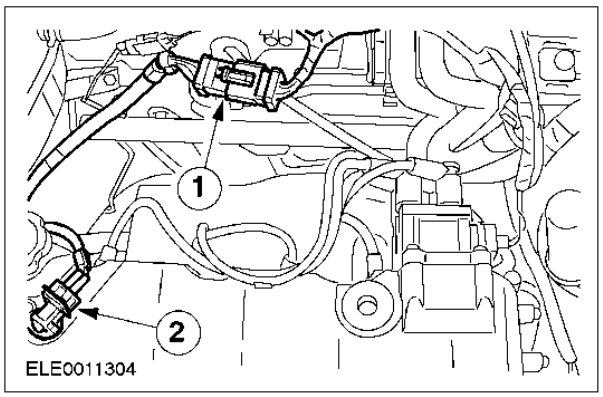

7. Connect the PCM and CMP electrical connectors.

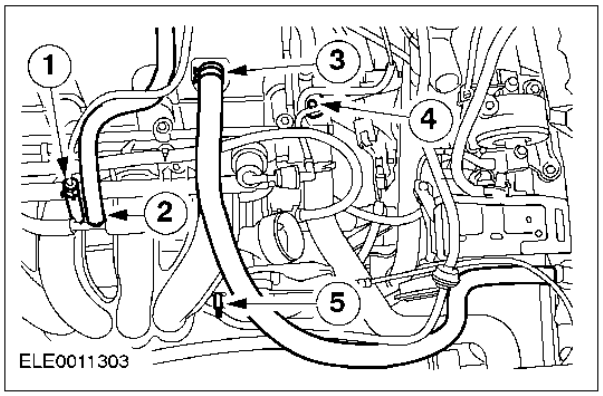

8. Install the hoses and connect the electrical connector.
   1. EVAP solenoid valve vacuum hose.
   2. PCV hose.
   3. Crankcase breather hose.
   4. ECT sensor electrical connector.
   5. Brake booster vacuum hose.

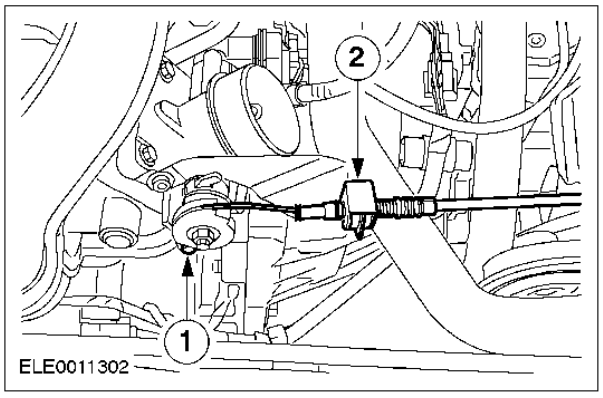

9. Install the accelerator cable.
   1. Connect the inner cable.
   2. Install the cable into the retaining bracket, check the cable setting and secure using the clip.

REMOVAL AND INSTALLATION (CONTINUED)

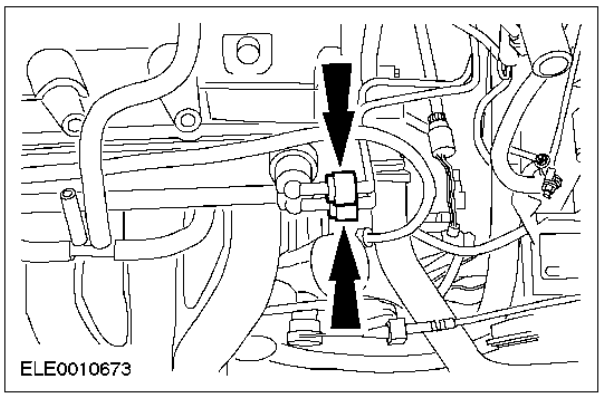

10. Connect the fuel lines.

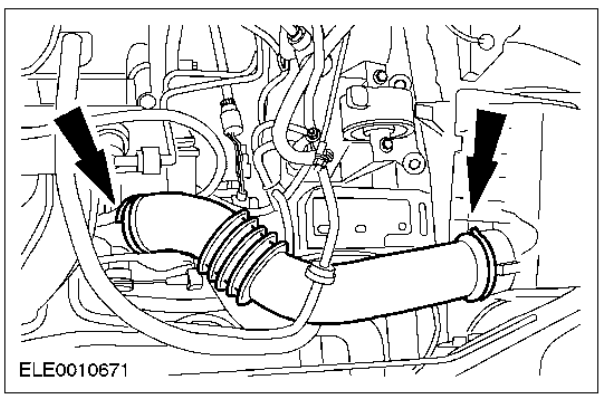

11. Install the air cleaner intake pipe.

12. Connect the battery ground cable.

SPECIFICATIONS

Torque Specifications

Description	Nm
Crankshaft position (CKP) sensor retaining bolt	10
Power steering pressure (PSP) switch	10
Throttle position (TP) sensor retaining screws	5
Knock sensor retaining bolt	20

SECTION 308-00 Manual Transaxle and Clutch — General Information

VEHICLE APPLICATION: 2002 Bantam

SUBJECT **PAGE**

DESCRIPTION AND OPERATION

Manual Transaxle and Clutch 308-00-2

DIAGNOSIS AND TESTING

Manual Transaxle and Clutch 308-00-3
- Inspection and Verification - Clutch 308-00-3
- Inspection and Verification - Manual Transaxle 308-00-3
- Symptom Charts 308-00-4/8A
- Pinpoint Tests 308-00-8B/14

GENERAL PROCEDURES

Clutch Disc Check 308-00-15
Clutch Master Cylinder Check 308-00-16
Clutch Pressure Plate Check 308-00-17
Clutch Slave Cylinder Check 308-00-18
Clutch System Bleeding ..... (16 843 0) 308-00-19/20
Gearshift Linkage Adjustment ..... (16 513 0) 308-00-21/23

SPECIFICATIONS

Specifications 308-00-24
- Lubricants, Fluids, Sealers and Adhesives 308-00-24
- Clutch 308-00-24
- Torque Specifications 308-00-24

DESCRIPTION AND OPERATION

Manual Transaxle and Clutch

Clutch

For additional information, refer to Section 308-01.

Clutch Controls

For additional information, refer to Section 308-02.

iB5 Manual Transmission

For additional information, refer to Section 308-03.

DIAGNOSIS AND TESTING

Manual Transaxle and Clutch

Special Tool(s)	
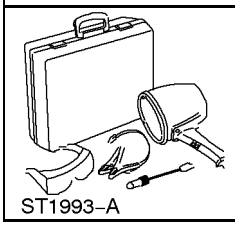 ST1993–A	12 Volt UV Spot Lamp or equivalent 164-R0751

Inspection and Verification - Clutch

1. Verify the customer concern by operating the system.
2. Visually inspect for obvious signs of mechanical or electrical damage.
3. If an obvious cause for an observed or reported concern is found, correct the cause (if possible) before proceeding to the next step.
4. If the concern is not evident, verify the symptom and refer to the Symptom Chart.

Visual Inspection Chart

Mechanical
• Fluid leaks from the transaxle. • Visibly damaged or worn parts. • Loose or missing bolts or nuts.

Inspection and Verification - Manual Transaxle

The following checks should be carried out before repairing or installing a new transaxle:

Poor gear shifting

1. Check the operation of the clutch: Lay a block of wood approximately 25 mm thick under the clutch pedal and depress the clutch pedal as far as the stop. If 1st or 2nd gear can be selected with no problem with the engine running and the parking brake applied, the clutch is OK. If the gear cannot be selected, repair the clutch.
2. Check the selector mechanism:

The free play in the gearshift lever must be no more than 15 mm.

- If the gearshift lever free play is too great, check the gearshift cables and install new cables if necessary.

If the gearshift lever free play is OK, adjust the gearshift linkage.

REFER to Gearshift Linkage Adjustment in this section

3. Check the transmission fluid level and top up with manual transmission fluid BOT 130, if necessary.

Transaxle noise

If transaxle noise is reported, first check the transmission fluid level. If damage has occurred due to a lack of fluid, install a new transaxle.

Fluid leakage

- Check that the leaking fluid is actually transmission fluid and not hydraulic fluid (from the hydraulically operated clutch) or engine oil.
- Check the transmission fluid level and, if necessary, drain off any excess fluid.
- Locate the oil leak with the aid of a fluorescent test fluid and an Ultra Violet inspection lamp.
- Clean the transaxle and the adjacent areas carefully before the road test.

DIAGNOSIS AND TESTING

Symptom Charts

Poor Gear Shifting

Condition	Possible Sources	Action
•Significant effort required when downshifting or synchronizer crashing	•Gear synchronization is inadequate.	•INSTALL a complete set (synchronizer hub with synchronizer rings) and INSTALL two new gear wheels belonging to the synchronizer unit. •Because of various changes and the difficulty in estimating the level of wear, a complete new installation (as described above) is recommended.
•Gear jumps out of engagement while driving.	•Transaxle assembly error (missing snap rings or synchronizer components). •Manufacturing error (INCORRECT gear wheel toothing or synchronizer ring). •Selector fork.	•INSTALL a new gear set/synchronizer unit and selector fork concerned as necessary. CHECK the transaxle for any resulting damage, particularly on the reverse gear synchronizer.
•Gearshift problems in different gears (stiff or partially seized).	•Transaxle assembly error: missing snap rings or synchronizer components, foreign materials in the transaxle. Bolts of selector components loose.	•REPAIR the transaxle accordingly. CHECK the transaxle for any resulting damage.
•Gearshift problems in the neutral slot (sticking, scraping, locking).	•Reversing lamp actuating pin loose.	**NOTE:** There is a risk of breaking the actuating pin when screwing it in. •TIGHTEN the actuating pin to 6 Nm.
	•Reversing lamp actuating pin wrongly installed (chamfer at the selector shaft rotated by 180 degrees).	•REPAIR the gearshift cover or INSTALL a new gearshift cover as necessary. •Use new bolts and install them using locking compound.

Transaxle Noises

Condition	Possible Sources	Action
•Slight buzzing, rattling or metallic scraping noise from the transaxle at 2500 to 3500 rev/min when coasting or driving without load (particularly in 2nd and 3rd gear).	•Rotational vibration from the engine not sufficiently damped by the clutch.	•These noises do not affect the operation and durability of the transaxle.

DIAGNOSIS AND TESTING (CONTINUED)

Condition	Possible Sources	Action
•Brief scratching noise during gear shifting.	•Inadequate gear synchronization.	•INSTALL a complete set (synchronizer hub and synchronizer rings) and INSTALL two new gear wheels belonging to the synchronizer unit. – Because of various changes and difficulty in estimating the level of wear, a complete new installation (as described above) is recommended.

Fluid Leakage

Condition	Possible Sources	Action
•Fluid leakage	•Sealing lip of the halfshaft oil seal damaged.	•INSTALL a new oil seal.
	•Fluid leaking between the transaxle housing sections or from the selector mechanism mating face.	•Disassemble the transaxle; clean the mating faces (CHECK the surfaces for damage). Seal the transaxle with liquid sealer as described in the Service Microfiche.

General Concerns

Condition	Possible Sources	Action
•Clicking noises in reverse gear	•Gearwheels.	•INSTALL new gear wheels.
•Gearwheels banging when shifting.	•Damaged clutch.	•REFER to Section 308-01.
	•Selector forks or synchronizer rings.	•CHECK the components for damage.
•Noises in the forward gears	•Transmission fluid level too low.	•Top up the transmission fluid.
	•The engine/transaxle assembly is in contact with the chassis/body.	•Look for points of contact or damaged engine/transaxle isolator, roll restrictor.
	•Engine/transaxle flange bolts.	•TIGHTEN the transaxle flange bolts. REFER to Section 308-03.
	•Input and output shaft bearings. Gear wheels (usually on high-mileage vehicles).	•Remove the transaxle. CHECK the bearings and gear wheels and INSTALL new parts as necessary.

DIAGNOSIS AND TESTING (CONTINUED)

Condition	Possible Sources	Action
•Stiff gearshift	•Transmission fluid.	•CHECK that the transaxle is filled with the specified transmission fluid and, if necessary, fill up with transmission fluid of the type listed under “Specifications".
	•Damaged synchronizer rings or inner selector mechanism.	•CHECK the internal components for damage, INSTALL new parts as necessary.
•Gears jump out of engagement	•Malfunction between the gearshift lever and the gearshift lever housing.	•Adjust the gearshift mechanism or repair the fault.
	•Engine/transaxle isolator, roll restrictor.	•REPAIR or INSTALL new components as necessary.
	•Internal components.	•CHECK the selector shafts, selector forks and synchronizer units and INSTALL new parts as necessary.
•One of the gears cannot be selected	•Fault between the gearshift lever and gearshift lever housing.	•Adjust the gearshift mechanism or repair the defect.
•3rd gear jumps out of engagement	•Internal selector mechanism loose, causing the selector finger guide to move on the inner selector shaft.	•TIGHTEN the pin to 25 Nm.
•Reverse gear cannot be selected	•Outer gearshift mechanism.	•CHECK the outer gearshift mechanism for damage. As necessary, remove it to see whether reverse gear can then be selected.
	•Internal components.	•Remove the transaxle assembly and CHECK the reverse gear idler and the appropriate selector fork, selector shaft and synchronizer unit. INSTALL new parts as necessary.
•Stiff gearshift	•Gearshift lever housing broken or damaged.	•INSTALL a new gearshift lever housing.
	•Gearshift linkage joint housing. •Gearshift lever joint.	•INSTALL a new gearshift lever as necessary.
	•Gearshift lever not securely attached to mounting.	•TIGHTEN or INSTALL new self-tapping screws.
•Clattering, rattling or booming noises	•Gearshift lever joint.	•INSTALL a new gearshift lever.
	•Gearshift lever knob loose.	•TIGHTEN the gearshift lever knob or, INSTALL a new as necessary.

DIAGNOSIS AND TESTING (CONTINUED)

Condition	Possible Sources	Action
•Gearshift lever not functioning - no gear can be selected	•Gearshift lever housing detached at the floor assembly.	•Secure the gearshift lever housing.
•Gearshift lever feels loose	•Gearshift lever joint.	•INSTALL a new gearshift lever.
•Grinding or clashing noises when shifting into 3rd gear	•Deflected lubrication condition causing early 3rd gear wear	•INSTALL a new 3rd speed gear, 3rd/4th gearshift fork, outer synchronizer ring, inner synchronizer ring, 3rd speed synchronizer cone, 3rd / 4th synchronizer assembly.

Clutch

Condition	Possible Sources	Action
•Clutch slippage	•Clutch pedal free play. •Sticking clutch pedal. •Diaphragm springs. •Clutch pressure plate. •Clutch disc facing. •Hardened or oiled clutch disc facing surface. •Flywheel.	•Go To Pinpoint Test A
•Clutch chatter or shudder	•Engine mounts. •Oil on clutch disc facing. •Diaphragm springs. •Clutch pressure plate. •Clutch disc facing. •Flywheel.	•Go To Pinpoint Test B
•Clutch drag	•Insufficient brake fluid. •Air in hydraulic system. •Clutch pedal free play. •Diaphragm springs. •Clutch disc. •Clutch disc splines. •Oil on clutch disc facing.	•Go To Pinpoint Test C
•Clutch pedal pulsation	•Clutch and brake pedal pivot shaft not correctly lubricated. •Flywheel. •Worn springs in pressure plate.	•Go To Pinpoint Test D
•Clutch related vibrations	•Engine component grounding against frame. •Accessory drive belt. •Flywheel bolts. •Flywheel •Imbalanced clutch pressure plate.	•Go To Pinpoint Test E
•Hard shifting	•Insufficient brake fluid. •Clutch pedal free play. •Manual transaxle concern.	•Go To Pinpoint Test F

DIAGNOSIS AND TESTING (CONTINUED)

Condition	Possible Sources	Action
•Excessive noise	•Clutch pedal free play. •Clutch release bearing. •Poor lubrication of clutch release bearing. •Pilot bearing. •Excessive crankshaft endplay.	•Go To Pinpoint Test G
•Fluid leakage	•Clutch master cylinder. •Clutch slave cylinder. •Clutch hydraulic lines.	•Go To Pinpoint Test H

Pinpoint Tests

PINPOINT TEST A: CLUTCH SLIPPAGE

A1: CHECK FOR CLUTCH SLIPPAGE 308-00-8B

A2: CHECK THE CLUTCH PEDAL FREE TRAVEL 308-00-8B

A3: CLUTCH PEDAL OPERATION 308-00-8B

PINPOINT TEST B: CLUTCH CHATTER OR SHUDDER

B1: CHECK FOR CLUTCH CHATTER OR SHUDDER 308-00-9

B2: CHECK THE ENGINE/TRANSAXLE ISOLATOR, ROLL RESISTOR 308-00-9

B3: CHECK THE CLUTCH PRESSURE PLATE 308-00-9

B4: CHECK THE CLUTCH DISC 308-00-9

PINPOINT TEST C: CLUTCH DRAG

C1: CHECK THE BRAKE FLUID LEVEL 308-00-10

C2: CHECK THE CLUTCH PEDAL FREE TRAVEL 308-00-10

C3: CHECK THE BELLEVILLE SPRING WASHER OF THE CLUTCH PRESSURE PLATE 308-00-10

PINPOINT TEST D: CLUTCH PEDAL PULSATION

D1: CHECK THE CLUTCH PEDAL 308-00-10

PINPOINT TEST E: CLUTCH RELATED VIBRATIONS

E1: CHECK FOR ENGINE COMPONENT GROUNDING 308-00-11

E2: CHECK FOR ACCESSORY DRIVE VIBRATIONS 308-00-11

E3: CHECK FOR RELEASE BEARING NOISE 308-00-11

E4: INSPECT THE FLYWHEEL 308-00-11/12

PINPOINT TEST F: HARD SHIFTING

F1: CHECK THE FLUID LEVEL 308-00-12

F2: CHECK THE CLUTCH PEDAL FREE PLAY 308-00-12

PINPOINT TEST G: EXCESSIVE NOISE

G1: CHECK THE TRANSAXLE NEUTRAL POSITION 308-00-13

G2: TEST THE CLUTCH PEDAL FREE TRAVEL 308-00-13

G3: CHECK THE CLUTCH SLAVE CYLINDER WITH RELEASE BEARING 308-00-13

G4: CHECK THE CLUTCH FRICTION DISK TORSION SPRINGS 308-00-14

PINPOINT TEST H: FLUID LEAKAGE

H1: CHECK THE CLUTCH MASTER CYLINDER 308-00-14

H2: CHECK THE CLUTCH SLAVE CYLINDER 308-00-14

H3: CHECK THE SYSTEM HYDRAULIC TUBES 308-00-14

Pinpoint Tests

PINPOINT TEST A: CLUTCH SLIPPAGE

CONDITIONS	DETAILS/RESULTS/ACTIONS
A1: CHECK FOR CLUTCH SLIPPAGE	
2 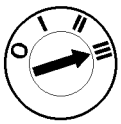	1 Check the road wheels and apply the parking brake. 3 Start the engine and engage fourth gear. 4 Run the engine at approximately 2000 rpm. 5 Release the clutch pedal slowly. • Does the engine stall when the clutch pedal is fully released? **Yes** Clutch OK. **No** GO TO **A2**
A2: CHECK THE CLUTCH PEDAL FREE TRAVEL	
	1 Depress the clutch pedal manually to the point of resistance and release. 2 Measure the pedal travel. • Is the measured dimension within 10 mm? **Yes** GO TO **A3** **No** GO TO **B3**
A3: CLUTCH PEDAL OPERATION	
	1 Check the lubrication. • Is the clutch pedal shaft sufficiently lubricated? **Yes** GO TO **B3** **No** Lubricate the clutch pedal shaft.

DIAGNOSIS AND TESTING (CONTINUED)

PINPOINT TEST B: CLUTCH CHATTER OR SHUDDER

CONDITIONS	DETAILS/RESULTS/ACTIONS
B1: CHECK FOR CLUTCH CHATTER OR SHUDDER	
1 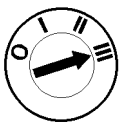	2 Start the engine and engage first gear.
	3 Run the engine at between 1200 rev/min and 1500 rpm. 4 Release the clutch pedal slowly. • Does the vehicle jerk when it starts off? **Yes** GO TO **B2** **No** Clutch OK.
B2: CHECK THE ENGINE/TRANSAXLE ISOLATOR, ROLL RESISTOR	
	1 Check the engine/transaxle mountings isolator, roll resistor for damage or loose bolts. • Are the engine/transaxle isolator, roll restrictor loose or damaged? **Yes** Tighten bolts or install new ones as necessary. TEST the system for normal operation. **No** GO TO **B3**
B3: CHECK THE CLUTCH PRESSURE PLATE	
	1 Remove the clutch pressure plate. - REFER to Section 308-01. • Does the clutch pressure plate have signs of wear or damage? **Yes** Install a new clutch pressure plate. **No** GO TO **B4**
B4: CHECK THE CLUTCH DISC	
	1 Visually check the clutch disc. • Is the clutch friction disk oil-fouled or does it have burn marks? **Yes** Install a new clutch friction disk. TEST the system for normal operation. **No** Check the flywheel. Refer flywheel in this section.

DIAGNOSIS AND TESTING (CONTINUED)

PINPOINT TEST C: CLUTCH DRAG

CONDITIONS	DETAILS/RESULTS/ACTIONS
C1: CHECK THE BRAKE FLUID LEVEL	
	1 Check the brake fluid level. • Is the brake fluid level between the MAX and MIN marks on the brake fluid reservoir? **Yes** GO TO **C2** **No** Top up brake fluid reservoir, check the brake and clutch systems for leaks.
C2: CHECK THE CLUTCH PEDAL FREE TRAVEL	
	1 Depress the clutch pedal manually to the point of resistance and release. 2 Measure the pedal travel. • Is the measured dimension within 10 mm? **Yes** GO TO **C3** **No** GO TO **B3**
C3: CHECK THE BELLEVILLE SPRING WASHER OF THE CLUTCH PRESSURE PLATE	
	1 Remove the transaxle. REFER to Section 308-03. • Does the clutch pressure plate or the Belleville spring washer of the clutch pressure plate show signs of wear or damage? **Yes** Install a new clutch pressure plate. TEST the system for normal operation. **No** GO TO **B4**

PINPOINT TEST D: CLUTCH PEDAL PULSATION

CONDITIONS	DETAILS/RESULTS/ACTIONS
D1: CHECK THE CLUTCH PEDAL	
	1 Check clutch pedal mechanism lubrication. • Is the clutch pedal shaft sufficiently lubricated? **Yes** Check the flywheel. Refer to Flywheel in this section. **No** Lubricate the clutch pedal shaft. TEST the system for normal operation.

DIAGNOSIS AND TESTING (CONTINUED)

PINPOINT TEST E: CLUTCH RELATED VIBRATIONS

CONDITIONS	DETAILS/RESULTS/ACTIONS
E1: CHECK FOR ENGINE COMPONENT GROUNDING	
	1 Raise and support the vehicle. REFER to Section 100-02.
	2 Check the engine mount interlocks for grounding on the body or frame. 3 Check the exhaust manifold or other engine component grounding on the body or frame. • Is there evidence of grounding on body or frame? **Yes** REPAIR or INSTALL a new as necessary. TEST the system for normal operation. **No** GO TO **E2**
E2: CHECK FOR ACCESSORY DRIVE VIBRATIONS	
	1 Check for accessory vibration at the clutch engage/disengage when engine torque changes. 2 Disconnect the accessory drive belt and check for vibration. • Does the vibration stop when the accessory drive belt is removed from the engine? **Yes** REPAIR or INSTALL new accessory drive belt components. REFER to Section 303-05. **No** GO TO **E3**
E3: CHECK FOR RELEASE BEARING NOISE	
1 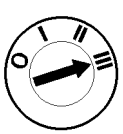	2 Depress and hold the clutch pedal. • Is a whirring, grating or grinding noise present? **Yes** Install a new clutch slave cylinder. REFER to Section 308-02. TEST the system for normal operation. **No** GO TO **E4**
E4: INSPECT THE FLYWHEEL	
	1 Remove the transaxle. REFER to Section 308-03. 2 Inspect for loose flywheel bolts.

DIAGNOSIS AND TESTING (CONTINUED)

CONDITIONS	DETAILS/RESULTS/ACTIONS
	3 Carry out flywheel run out check. REFER to Section 303-00. • Is the Flywheel OK? **Yes** Diagnose engine vibration concern. REFER to Section 303-00. **No** TIGHTEN or INSTALL a new flywheel. REFER to Section 308-01. TEST the system for normal operation.

PINPOINT TEST F: HARD SHIFTING

CONDITIONS	DETAILS/RESULTS/ACTIONS
F1: CHECK THE FLUID LEVEL	
NOTE: The hydraulic clutch fluid is supplied from the brake master cylinder.	
1 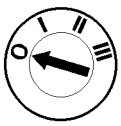	2 Inspect the brake fluid level in the brake master cylinder reservoir. • Is the fluid within the MAX and MIN level marks? **Yes** GO TO **F2** **No** ADD brake fluid and CHECK for leaks in the clutch and brake system. TEST the system for normal operation.
F2: CHECK THE CLUTCH PEDAL FREE PLAY	
	1 Depress the clutch pedal lightly by hand. 2 Measure the distance the clutch pedal travels. • Is the clutch pedal free play within 1-3 mm (0.04-0.12 inch)? **Yes** Diagnose hard shifting concern. REFER to Section 308-03. **No** Inspect the clutch pressure plate for damage. Refer to Clutch Pressure Plate in this section.

DIAGNOSIS AND TESTING (CONTINUED)

PINPOINT TEST G: EXCESSIVE NOISE

CONDITIONS	DETAILS/RESULTS/ACTIONS
G1: CHECK THE TRANSAXLE NEUTRAL POSITION	
1 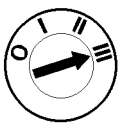	2 Start the engine and run it in NEUTRAL. 3 Depress the clutch pedal fully. • Are there noises when the clutch is operated? **Yes** GO TO **G2** **No** There is a problem with the transaxle. REFER to Symptom Chart(s).
G2: TEST THE CLUTCH PEDAL FREE TRAVEL	
	1 Depress the clutch down manually until resistance is felt, then release it again. 2 Measure the pedal travel. • Is the travel within 10 mm? **Yes** GO TO **G3** **No** REFER to the Clutch Master Cylinder General procedure in this section.
G3: CHECK THE CLUTCH SLAVE CYLINDER WITH RELEASE BEARING	
	1 Remove the transaxle. REFER to Section 308-03. 2 Check the clutch slave cylinder bolts. 3 Check the release bearing for wear and rust. • Are the bolts loose or are there signs of wear or rust? **Yes** TIGHTEN the bolts or install a new clutch slave cylinder with the release bearing. TEST the system for normal operation. **No** GO TO **G4**

DIAGNOSIS AND TESTING (CONTINUED)

CONDITIONS	DETAILS/RESULTS/ACTIONS
G4: CHECK THE CLUTCH FRICTION DISK TORSION SPRINGS	
	1 Check the torsion springs for wear. • Do the torsion springs have signs of wear? **Yes** Install a new clutch disc. TEST the system for normal operation. **No** Check the crankshaft endplay. REFER to Section 303-00.

PINPOINT TEST H: FLUID LEAKAGE

CONDITIONS	DETAILS/RESULTS/ACTIONS
H1: CHECK THE CLUTCH MASTER CYLINDER	
	1 Check clutch master cylinder for leaks. • Is the clutch master cylinder OK? **Yes** GO TO **H2** **No** REPAIR or INSTALL a new clutch master cylinder as necessary. REFER to Section 308-02.
H2: CHECK THE CLUTCH SLAVE CYLINDER	
	1 Check the clutch slave cylinder for leaks. • Is the clutch slave cylinder OK? **Yes** GO TO **H3** **No** REPAIR or INSTALL a new clutch slave cylinder as necessary. REFER to Section 308-02.
H3: CHECK THE SYSTEM HYDRAULIC TUBES	
	1 Check the clutch hydraulic lines for loose or damaged fittings causing leakage. • Are the clutch hydraulic lines OK? **Yes** Carry out a road test to verify customer complaint. **No** REPAIR or INSTALL new components as necessary. Carry out a road test.

GENERAL PROCEDURES

Clutch Disc Check

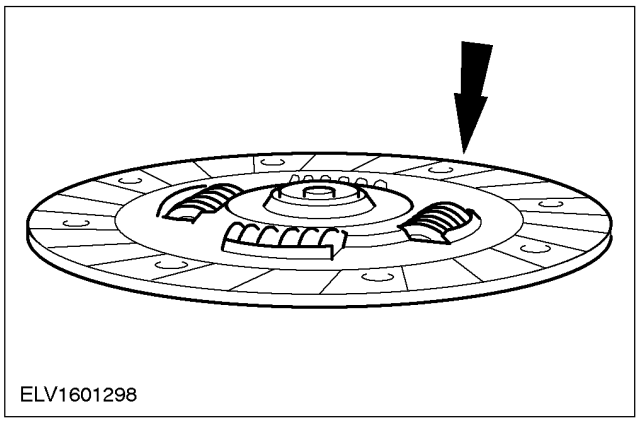

1. **CAUTION: Do not use paraffin based cleaning agents and solvents.**
   Clean the clutch disc.
   - Check the clutch disc for:
   - Oil fouling
   - Burn marks
   - Thickness (wear limit: 7,0 mm)
   - Check springs
     - If necessary, renew the clutch disc.

GENERAL PROCEDURES

Clutch Master Cylinder Check

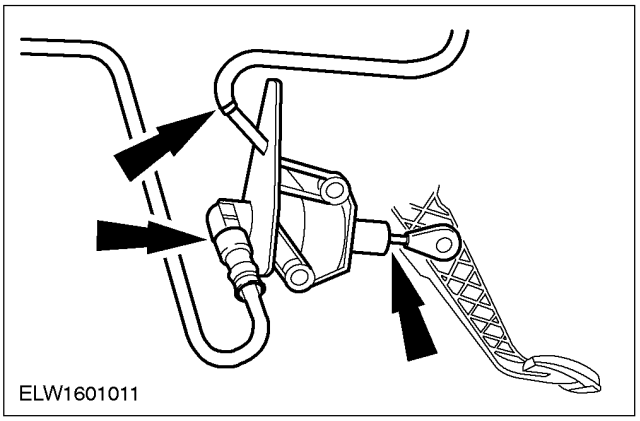

1. Check the clutch master cylinder:
   - For leaks
   - Retaining clip

GENERAL PROCEDURES

Clutch Pressure Plate Check

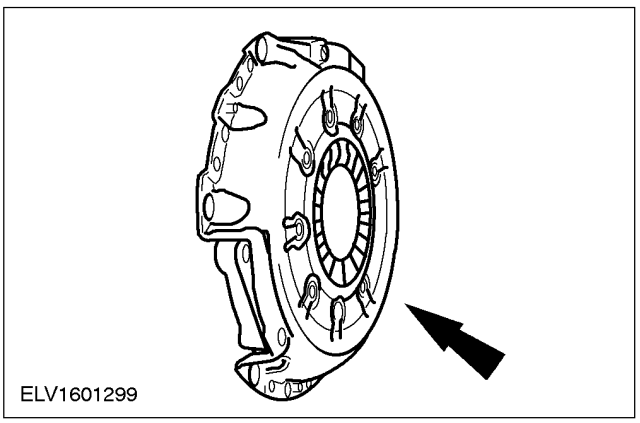

1. **CAUTION: Do not use paraffin based cleaning agents and solvents.**
   Clean the clutch pressure plate.
   - Check the clutch pressure plate for:
   - Broken or worn diaphragm spring tongues
   - Burn marks
   - Scoring
   - Flatness
   - If necessary, renew the clutch pressure plate.

GENERAL PROCEDURES

Clutch Slave Cylinder Check

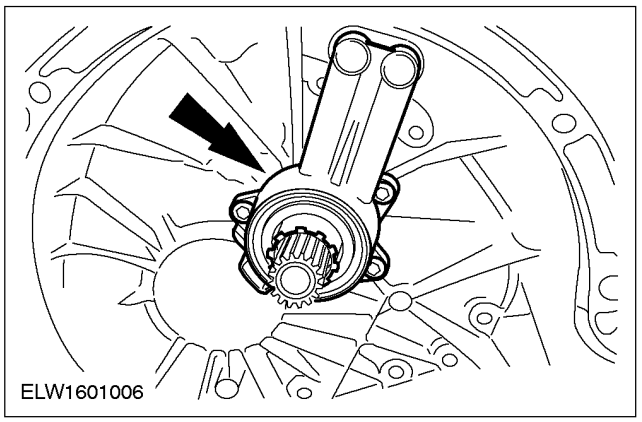

1. Check the clutch slave cylinder with release bearing:
   - For leaks
   - Extreme wear on the inner ring of the release bearing

GENERAL PROCEDURES

Clutch System Bleeding (16 843 0)

Special Tool(s)	
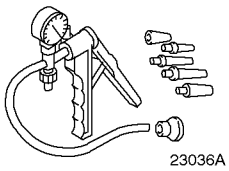 23036A	Vacuum and pressure hand pump 416-001D (23-036A)

General Equipment
Brake fluid collector
Transparent hose

Material	Specification
Brake fluid (Dot 4)	SAE J1703 JUN91

4. **NOTE:** If proprietary brake bleeding equipment is available, this can be used to bleed the clutch system.
   General note:
   - The clutch operation system is self-ventilating. The components are arranged in such a way that small amounts of air trapped in the system are removed automatically.

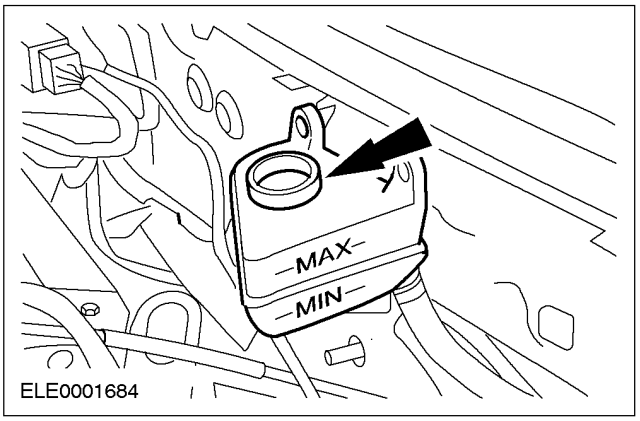

ELE0001684

5. Remove the brake fluid from the brake fluid reservoir under suction, until the level is at the MIN mark.

6. Put about 100 ml of brake fluid into the reservoir of Special Tool 416-D001.

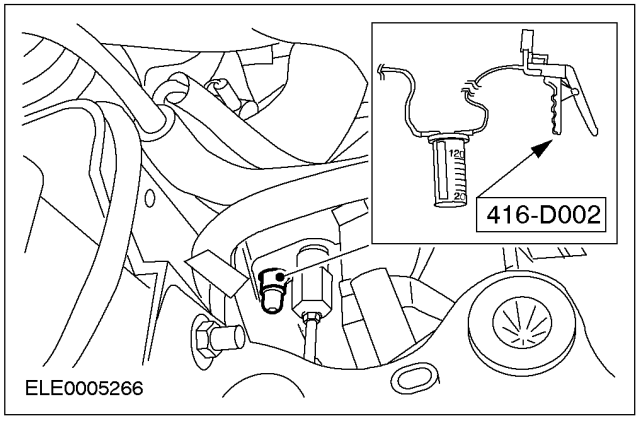

ELE0005266

7. **NOTE:** The reservoir of the special tool must be below the bleed nipple and the hose connection of the rising tube must be installed pointing towards the bleed nipple.
   Install the special tool, open the bleed nipple and use the special tool to pump about 80 ml of brake fluid into the clutch system.
   - Tighten the bleed nipple to 10 Nm.
   - Remove the special tool.
   - Bleed the system automatically by operating the clutch pedal several times (max. 4 - 5 times), using the full clutch pedal travel.

GENERAL PROCEDURES (CONTINUED)

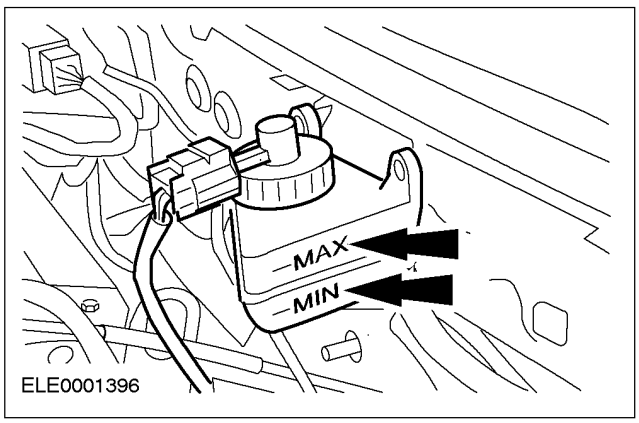

8. NOTE: Absolute cleanliness must be observed when topping up with brake fluid. Check the brake fluid level.

- The brake fluid level must be between the MIN and MAX marks. If the level drops below the MIN mark the brake warning light comes on.
- If necessary, top up the brake fluid reservoir with DOT4 brake fluid.

9. NOTE: Carefully engage reverse gear. Check that the clutch operates correctly.

- Start the engine and carefully engage reverse gear about 2 seconds after depressing the clutch pedal. If in doing so the gear engagement is particularly noisy, bleed the system automatically by operating the clutch several times (max. 4 - 5 times), using the full clutch pedal travel.
- After waiting about 30 seconds, check the operation of the clutch again. If the gearshift is still too noisy, repeat the previous job steps.

GENERAL PROCEDURES

Gearshift Linkage Adjustment (16 513 0)

All vehicles

1. Raise and support the vehicle. For additional information, refer to Section 100-02.

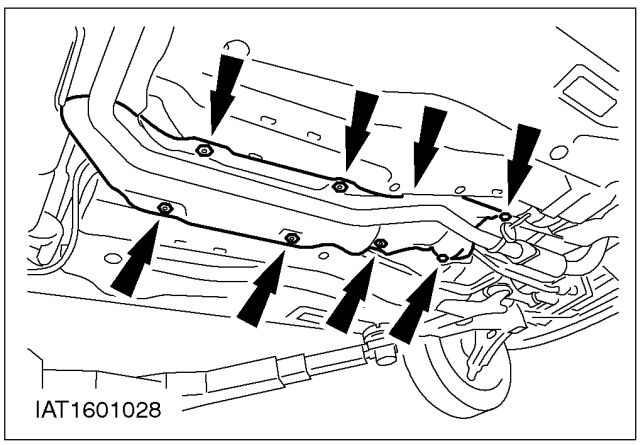

2. Remove the exhaust heat shield.

Vehicles with diesel engine

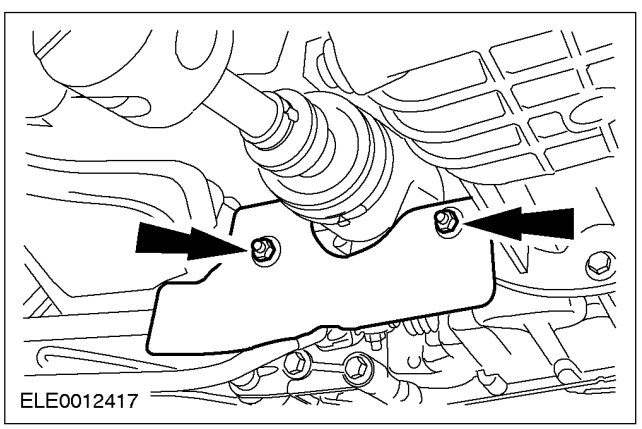

3. Remove the inner drive shaft joint heat shield.

Vehicles with 1.6L / 1.3L engine

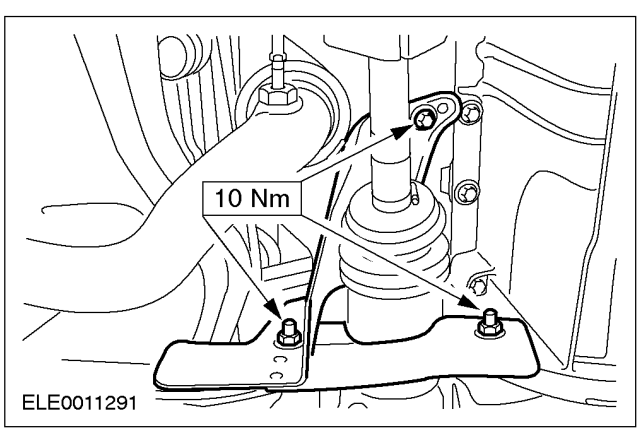

4. Remove the inner drive shaft joint heat shield.

GENERAL PROCEDURES (CONTINUED)

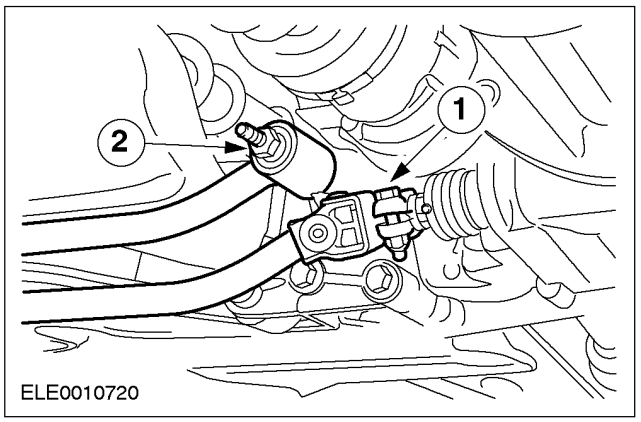

5. Remove the gearshift mechanism shift rod and stabilizer.
   1. Remove the shift rod
   2. Remove the gearshift stabilizer bar.

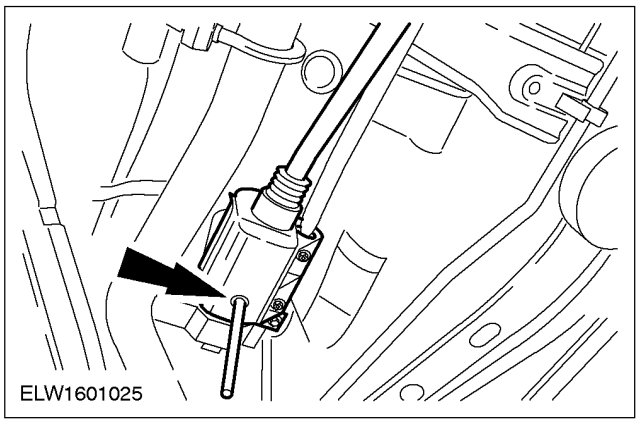

6. Adjust the gearshift mechanism.
   - Engage fourth gear (starting with the selector shaft in the neutral position).
   - Using 9 mm diameter drill bit, lock the gearshift lever in fourth gear position.

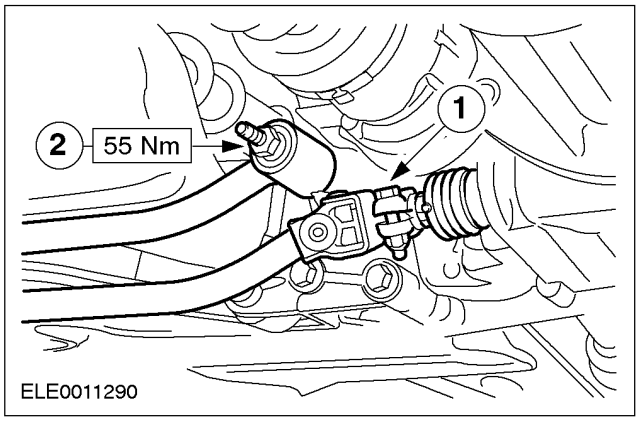

7. **NOTE:** If the gearshift stabilizer cannot be installed, loosen the engine and transaxle mounting.
   Install the gearshift stabilizer and the shift rod.
   1. Install the shift rod.
   2. Install the gearshift stabilizer.

8. Tighten the engine and transaxle mounting (as necessary). For additional information, refer to Section 303-01A.

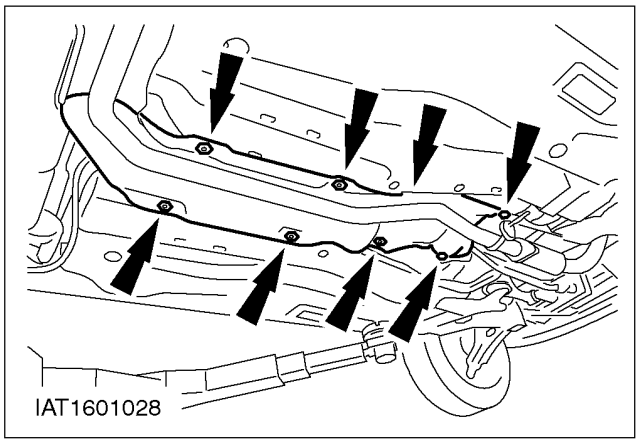

9. Install the exhaust heat shield.

GENERAL PROCEDURES (CONTINUED)

Vehicles with diesel engine

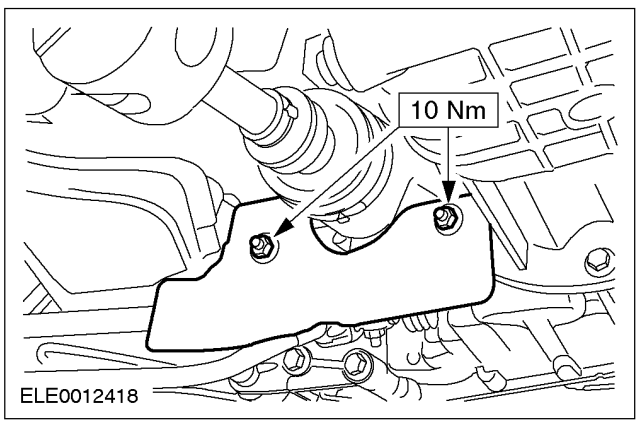

10. Install the inner drive shaft joint heat shield.

Vehicles with 1.6L / 1.3L engine

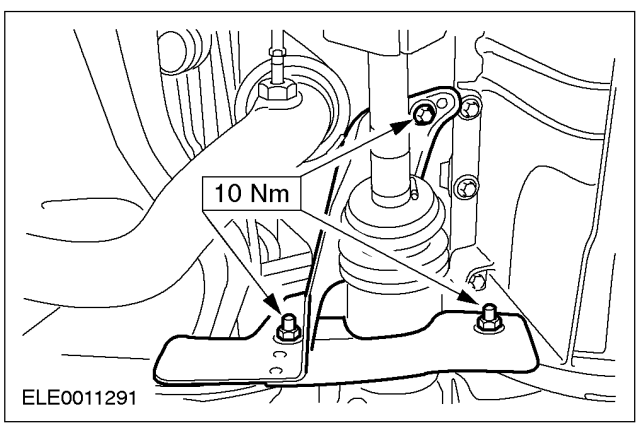

11. Install the inner drive shaft joint heat shield.

12. Lower the vehicle.

SPECIFICATIONS

Lubricants, Fluids, Sealers and Adhesives

Item	Specification
DOT 4 brake fluid	SAE J1703 JUN91

Clutch

Description	mm
Clutch disc wear limit	7.00

Torque Specifications

Description	Nm
Clutch bleed nipple	10
Gearshift stabilizers retaining nut	55
Heat shield retaining nut	12
Transaxle flange bolts	44

SECTION 308-01 Clutch

VEHICLE APPLICATION: 2002 Bantam

SUBJECT **PAGE**

DESCRIPTION AND OPERATION
Clutch 308-01-26

DIAGNOSIS AND TESTING
Clutch 308-01-27

REMOVAL AND INSTALLATION
Clutch Disc and Pressure Plate 308-01-28/29

SPECIFICATIONS
Specifications 308-01-30
Clutch 308-01-30
Torque Specifications 308-01-30

DESCRIPTION AND OPERATION

Clutch

Clutch Components

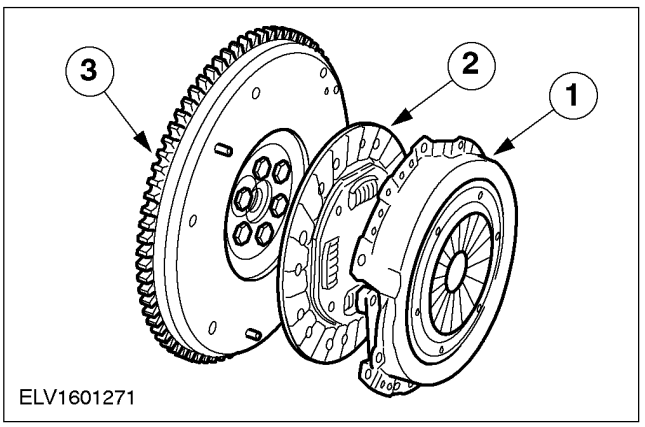

Item	Description
1	Clutch pressure plate
2	Clutch plate
3	Flywheel

The clutch transfers the engine power to the transmission.

The clutch consists of a friction disc and a pressure plate, which is bolted to the flywheel.

When the clutch pedal is operated the power transmission from the engine to the transmission is interrupted. The clutch is therefore engaged when the pedal is not depressed. Pressing down the pedal disengages the clutch.

DIAGNOSIS AND TESTING

Clutch

REFER to Section 308-00.

REMOVAL AND INSTALLATION

Clutch Disc and Pressure Plate

Special Tool(s)	
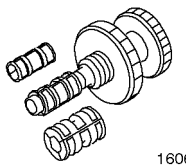 16067	Aligner, clutch disc 308-206 (16-067)

Removal

1. Detach the transmission. For additional information, refer to Section 308-03.
2. Detach the clutch from the flywheel.
   1. Unscrew the bolts (6x).
   2. Lift the clutch off the locating dowels and put it down with the clutch disc.

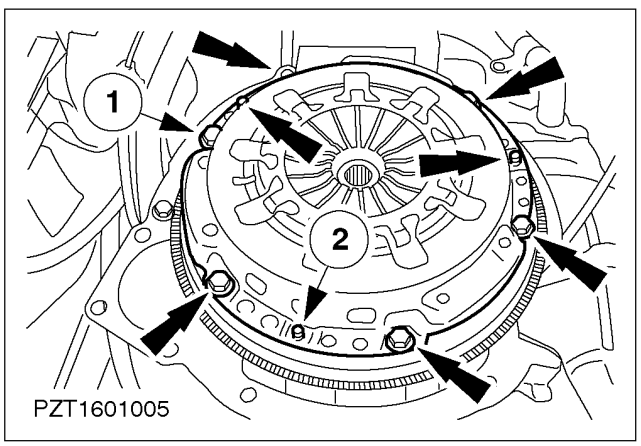

Installation

1. Center the clutch disc on the pressure plate.

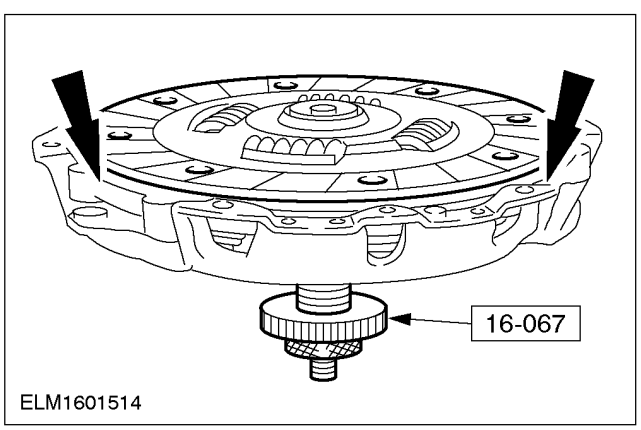

REMOVAL AND INSTALLATION (CONTINUED)

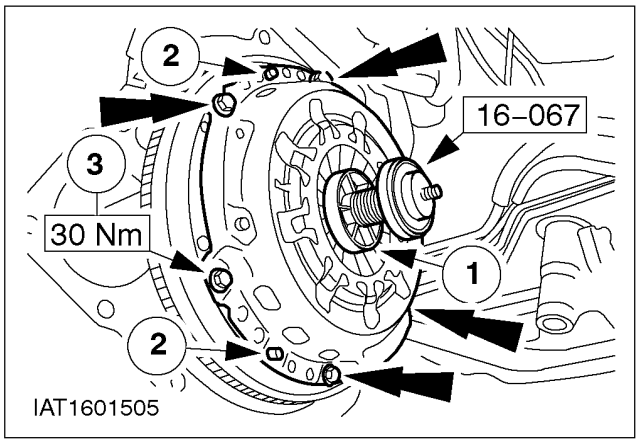

2. Attach the clutch to the flywheel.
   1. Fit the clutch pressure plate with centered clutch disc.
   2. Locate the clutch over the locating dowels on the flywheel.
   3. Secure the bolts, working diagonally.
3. Remove the special tool.
4. Install the transmission. For additional information, refer to Section 308-03.

SPECIFICATIONS

Clutch

Type	Single-plate dry clutch
Operation	Hydraulic
Clutch disc diameter (mm) (outer/inner) 1.6L / 1.3L SOHC	190/134
Clutch disc diameter (mm) (outer/inner) 1.8L diesel engine	210/160

Torque Specifications

Description	Nm
Clutch pressure plate retaining bolts	29
Clutch bleed nipple	10

SECTION 308-02 Clutch Controls

VEHICLE APPLICATION: 2002 Bantam

SUBJECT **PAGE**

DESCRIPTION AND OPERATION

Clutch Controls 308-02-32/33

DIAGNOSIS AND TESTING

Clutch Controls 308-02-34

REMOVAL AND INSTALLATION

Clutch Master Cylinder ..... (16 856 0) 308-02-35/36
Clutch Slave Cylinder ..... (16 862 0) 308-02-37

SPECIFICATIONS

Specifications 308-02-38
Lubricants, Fluids, Sealers and Adhesives 308-02-38
Clutch Controls 308-02-38
Torque Specifications 308-02-38

DESCRIPTION AND OPERATION

Clutch Controls

The brake fluid reservoir with separate chamber is used to supply the system.

Depressing the clutch pedal builds up pressure in the clutch master cylinder and operates the release bearing integrated in the clutch slave cylinder.

The clutch operation system is self-ventilating. The components are arranged in such a way that small amounts of air trapped in the system are removed automatically.

The clutch pedal operation is affected by damage in that greater pedal effort is required. The pedal also returns to its starting position very slowly.

The advantages of a hydraulic clutch are:

- automatic adjustment
- low operating force required
- low wear

Reservoir

The brake fluid reservoir supplies both the hydraulic clutch system and the brake system with brake fluid.

The hydraulic clutch system and the brake system are separate inside the brake fluid reservoir. In the event of any leaks in the hydraulic clutch system the brake system remains fully operative.

Clutch Master Cylinder

The clutch master cylinder generates the system pressure for operating the clutch.

If the clutch pedal is pushed down the piston rod moves the clutch master cylinder piston. The hydraulic fluid in the clutch master cylinder is put under pressure and fed through the pressure pipe to the clutch slave cylinder.

Slave Cylinder - Clutch

The central clutch slave cylinder is equipped with an integral release bearing and is attached to the clutch bell housing with three bolts. The release bearing is an interference fit on the clutch slave cylinder.

The hydraulic fluid displaced by the piston in the clutch master cylinder moves the piston in the clutch slave cylinder; this piston then moves the release bearing in an axial direction. The release bearing presses against the tongues of the diaphragm spring with the inner bearing ring. This breaks the friction contact between the clutch disc and the flywheel.

When the clutch pedal is released the diaphragm spring presses the piston in the slave cylinder back to its starting position. The spring induced adherence between the clutch disc and the flywheel is created again.

Pre-load valve

The pre-load is produced by a spring.

DESCRIPTION AND OPERATION

Clutch operating mechanism components

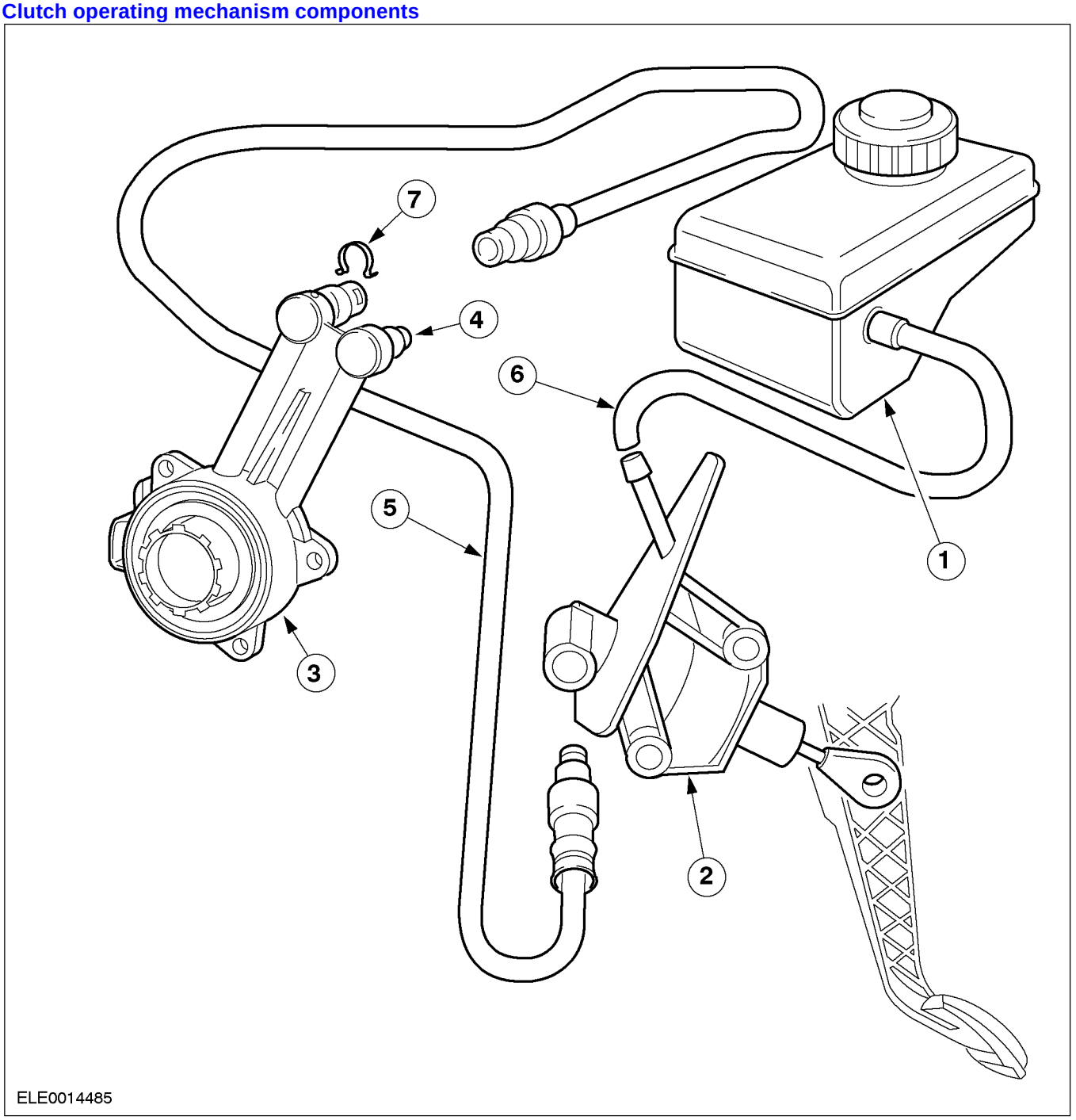

Item	Description
1	Brake fluid reservoir
2	Clutch master cylinder
3	Clutch slave cylinder with integral release bearing

Item	Description
4	Bleed nipple
5	Pressure pipe
6	Feed line
7	Retaining clip

DIAGNOSIS AND TESTING

Clutch Controls

REFER to Section 308-00.

REMOVAL AND INSTALLATION

Clutch Master Cylinder (16 856 0)

Material	Specification
DOT 4 brake fluid	SAE J1703 JUN91

Removal

WARNING: Brake fluid contains polyglycol ethers and polyglycols. Avoid contact with the eyes. Wash hands thoroughly after handling. If brake fluid contacts the eyes, flush the eyes for 15 minutes with cold running water. Get medical attention if irritation persists. If taken internally, drink water and induce vomiting. Get medical attention immediately Failure to follow these instructions may result in personal injury.

CAUTION: If brake fluid is split on the paintwork, the affected area must be immediately washed down with cold water.

1. Disconnect the battery ground cable. For additional information, refer to Section 414-01.
2. Drain the brake fluid reservoir.
3. Remove the fuel lines and the pressure hose from the clutch master cylinder.
   1. Remove the hose clamp.
   - Remove and seal the feed line.
   2. Remove the securing clip.
   - Remove and seal the pressure hose.

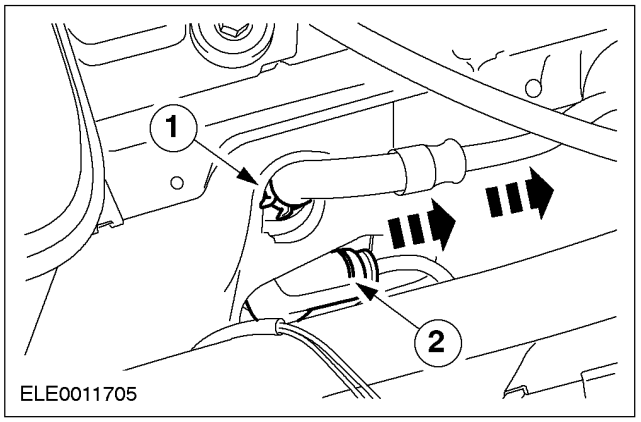

REMOVAL AND INSTALLATION (CONTINUED)

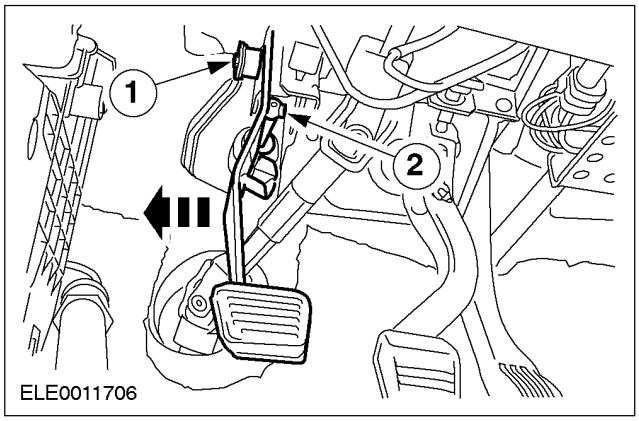

4. Remove the snap rings and move clutch pedal approximately 15 mm sidewards.
   1. Remove the pedal mounting
   2. Remove the piston clutch rod master cylinder
   - Move the pedal approximately 15 mm sidewards.

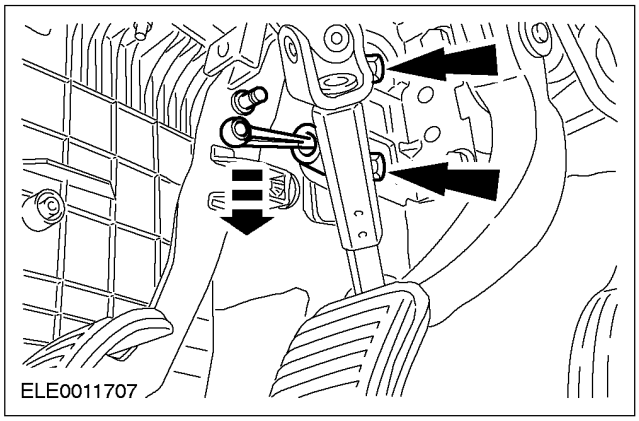

5. Remove the clutch master cylinder.
   1. Remove the two bolts.
   2. Pull the piston rod from the clutch pedal and remove the clutch master cylinder.

Installation

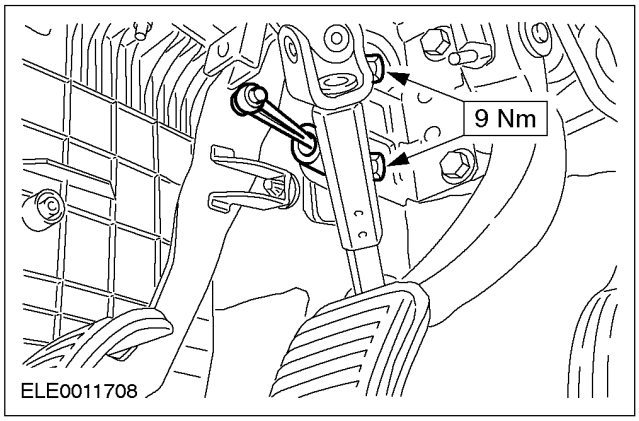

1. To install, reverse the removal procedure

2. Top up the brake fluid reservoir. For additional information, refer to Section 206-06.

3. Bleed the clutch system. For additional information, refer to Section 308-00.

4. Connect the battery ground cable. For additional information, refer to Section 414-01.

REMOVAL AND INSTALLATION

Clutch Slave Cylinder (16 862 0)

Removal

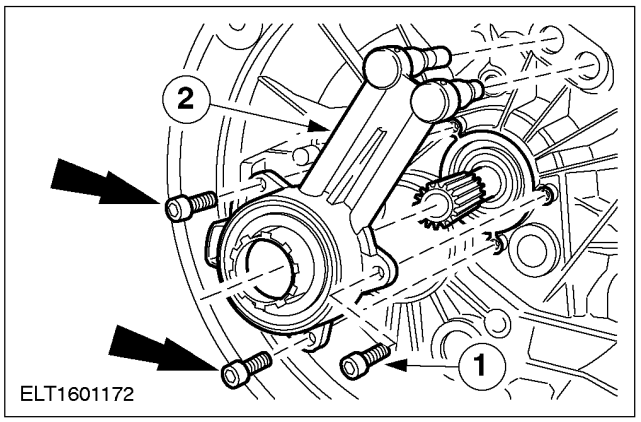

5. Remove the transmission. For additional information, refer to Section 308-03.
6. Remove the clutch slave cylinder.
   1. Remove the bolts.
   2. Remove the clutch slave cylinder.

Installation

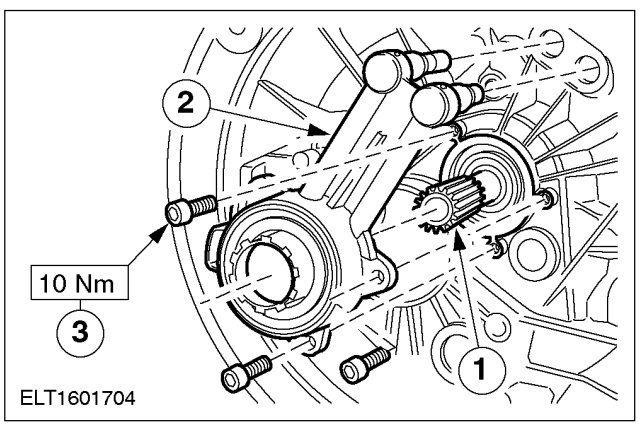

4. Fit the clutch slave cylinder.
   1. Coat the input shaft splines with high-temperature grease.
   2. Insert the clutch slave cylinder
   3. Tighten the bolts.

All vehicles

5. Install the transmission. For additional information, refer to Section 308-03.
6. Bleed the hydraulic clutch system. For additional information, refer to Section 308-00.

SPECIFICATIONS

Lubricants, Fluids, Sealers and Adhesives

Item	Specification
DOT 4 brake fluid	SAE J1703 JUN91

Clutch Controls

Description	
Operation	Hydraulic
Adjustment	Automatic

Torque Specifications

Description	Nm
Clutch master cylinder retaining bolts (two bolts)	9
Clutch slave cylinder retaining bolts (three bolts)	10
Pre-load valve	10

SECTION 308-03 Manual Transaxle

VEHICLE APPLICATION: 2002 Bantam

SUBJECT		PAGE
DESCRIPTION AND OPERATION		
Manual Transaxle		308-03-40
Components of the iB5 Manual Transmission		308-03-41/47
DIAGNOSIS AND TESTING		
Manual Transaxle		308-03-48
IN-VEHICLE REPAIR		
Input Shaft Oil Seal		308-03-49/50
LH Halfshaft Oil Seal	(14 303 0)	308-03-51/52
RH Halfshaft Oil Seal	(14 304 0)	308-03-53/55
REMOVAL		
Transaxle — Vehicles with 1.6L / 1.3L Engine	(16 114 0)	308-03-56/65
DISASSEMBLY		
Transaxle	(16 118 8)	308-03-66/72
DISASSEMBLY AND ASSEMBLY OF SUBASSEMBLIES		
Selector Plate	(16 284 5)	308-03-73/75
Input Shaft	(16 146 5)	308-03-76/77
Output Shaft		308-03-78/84
Differential		308-03-85/86
ASSEMBLY		
Transaxle	(16 118 8)	308-03-87/98
INSTALLATION		
Transaxle	(16 114 0)	308-03-99/108
GENERAL PROCEDURES		
Bearing Check		308-03-109/110
SPECIFICATIONS		
Specifications		308-03-111
Lubricants, Fluids, Sealers and Adhesives		308-03-111
Capacities		308-03-111
Transaxle Ratios		308-03-111
Measuring and Adjusting Shims		308-03-111
Torque Specifications		308-03-111/112

DESCRIPTION AND OPERATION

Manual Transaxle

Overview

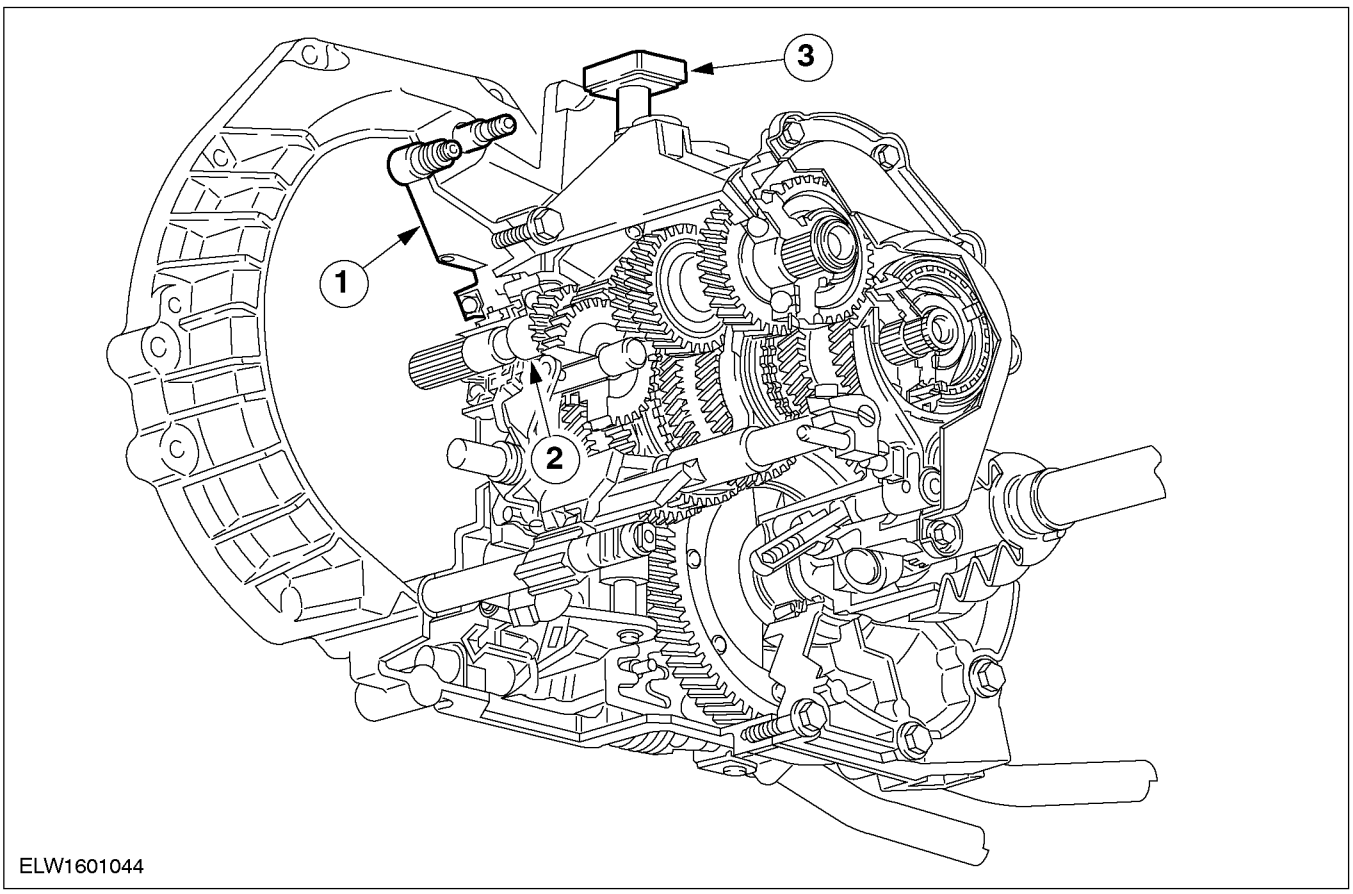

Item	Description
1	Slave Cylinder - Clutch
2	Sealed bearings
3	Transmission vent

The aluminum transmission housing features reinforcement ribs for additional strength. Liquid sealer is used between the two halves of the transmission (WSS - M2G348-A5) and the end cover (WSE - M4G323 - A4). On transmissions using liquid sealer the end cover is painted black.

In addition to this, components in the transmission have been modified although their design has not been changed.

The iB5 manual transmission is a "2 shaft transmission". The clutch is operated hydraulically.

On a "2 shaft transmission" all gearwheels are constantly in mesh. Each gear ratio is achieved through one pair of gearwheels.

The direction of rotation of the output shaft is reversed for reverse gear by using an idler gearwheel.

All gearwheels are helically splined, synchronized (except reverse gear) and run on friction bearings.

This reduces noise to a minimum and provides easy gear changing, together with low weight and compactness.

Fitting a selector lever relay with return spring inside the transmission eliminates the spring loaded return slide in the external gearshift mechanism.

The iB5 manual transmission is filled with 2,8 liters of synthetic oil, specification BOT 130. The correct filling level is 5 to 10 mm below the check bore. Fluid changes are not necessary.

DESCRIPTION AND OPERATION (CONTINUED)

Components of the iB5 Manual Transmission

Overview

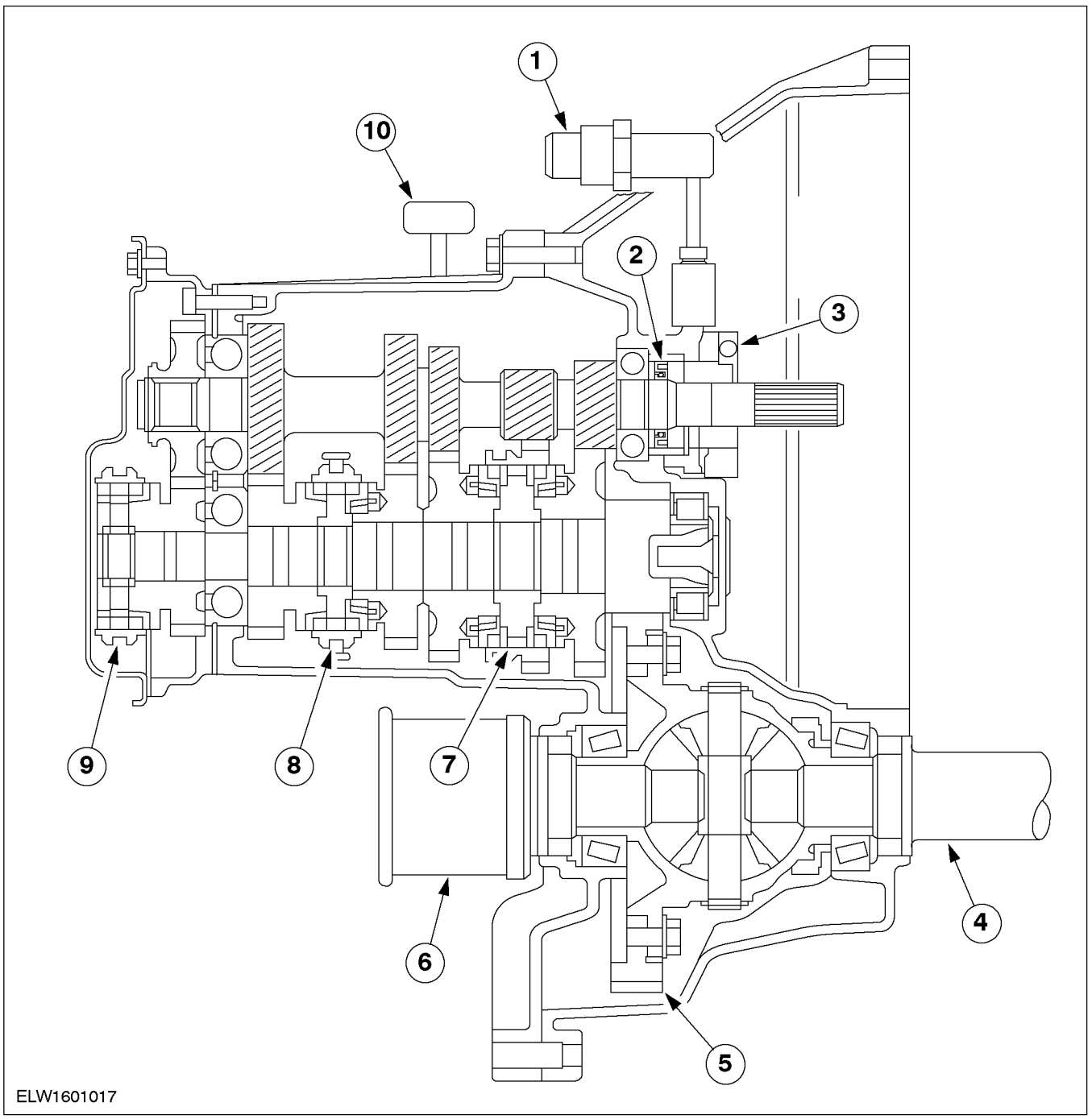

Item	Description
1	Pre-load valve (1 bar) (vehicles built up to build month 08/1999)
2	Oil seal (accessible from the outside)
3	Clutch release bearing (separately re-newable)
4	Front drive halfshaft intermediate shaft

Item	Description
5	Crown wheel
6	Tripod housing
7	First/second gear synchronizer clutch
8	Third/fourth gear synchronizer clutch
9	Fifth gear synchronizer clutch
10	Transmission vent

DESCRIPTION AND OPERATION (CONTINUED)

When the transmission is in neutral none of the gearwheels are connected to the output shaft by the synchronizer clutches. No power is transferred to the differential.

Internal Gearshift Mechanism

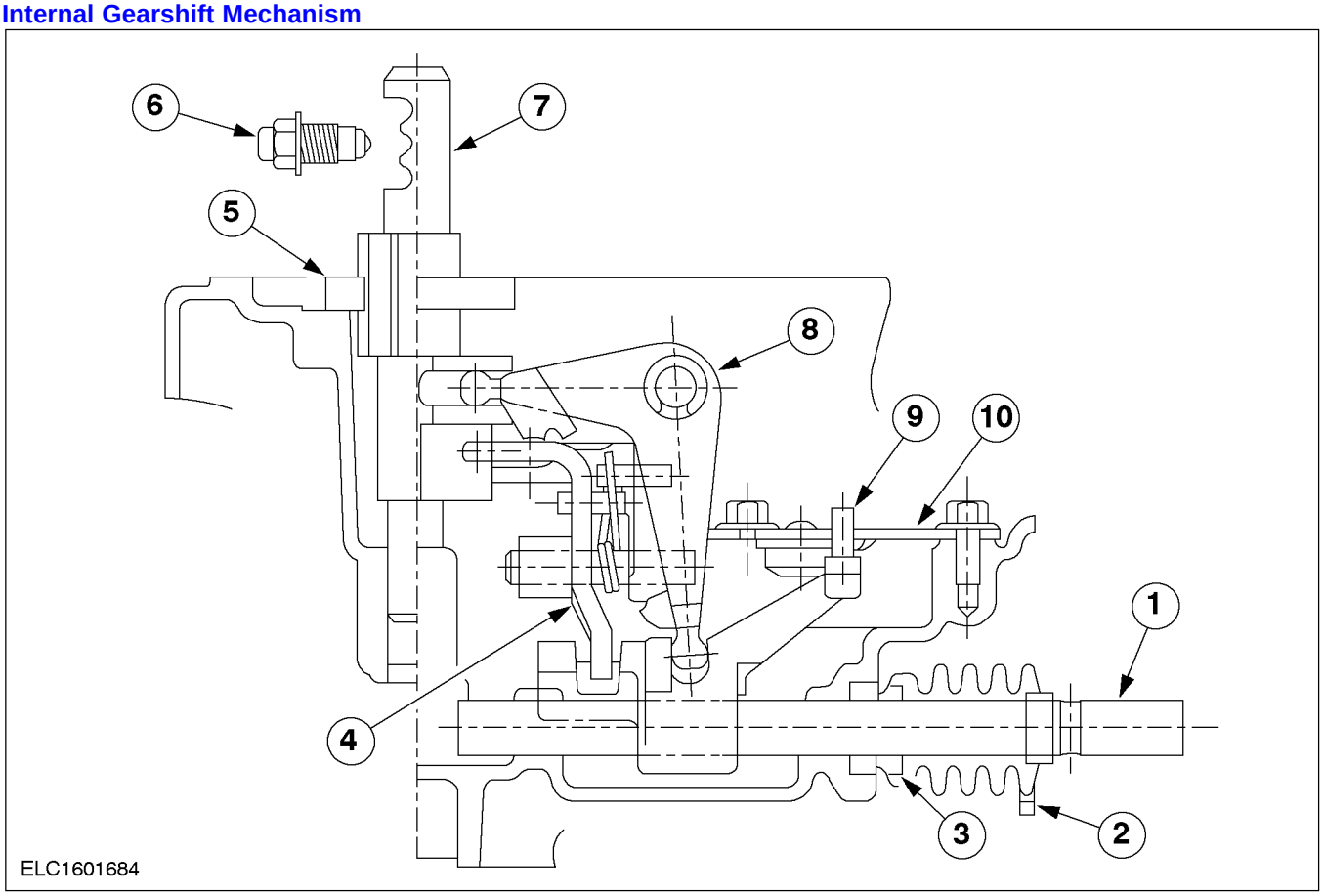

Item	Description
1	Main shift rod
2	Boot (vent pointing downwards)
3	Radial oil seal
4	Relay lever (select)
5	Shift locking plate

Item	Description
6	Detent mechanism
7	Auxiliary shift rod
8	Relay lever (shift)
9	Selector block
10	Selector gate

DESCRIPTION AND OPERATION

Input shaft

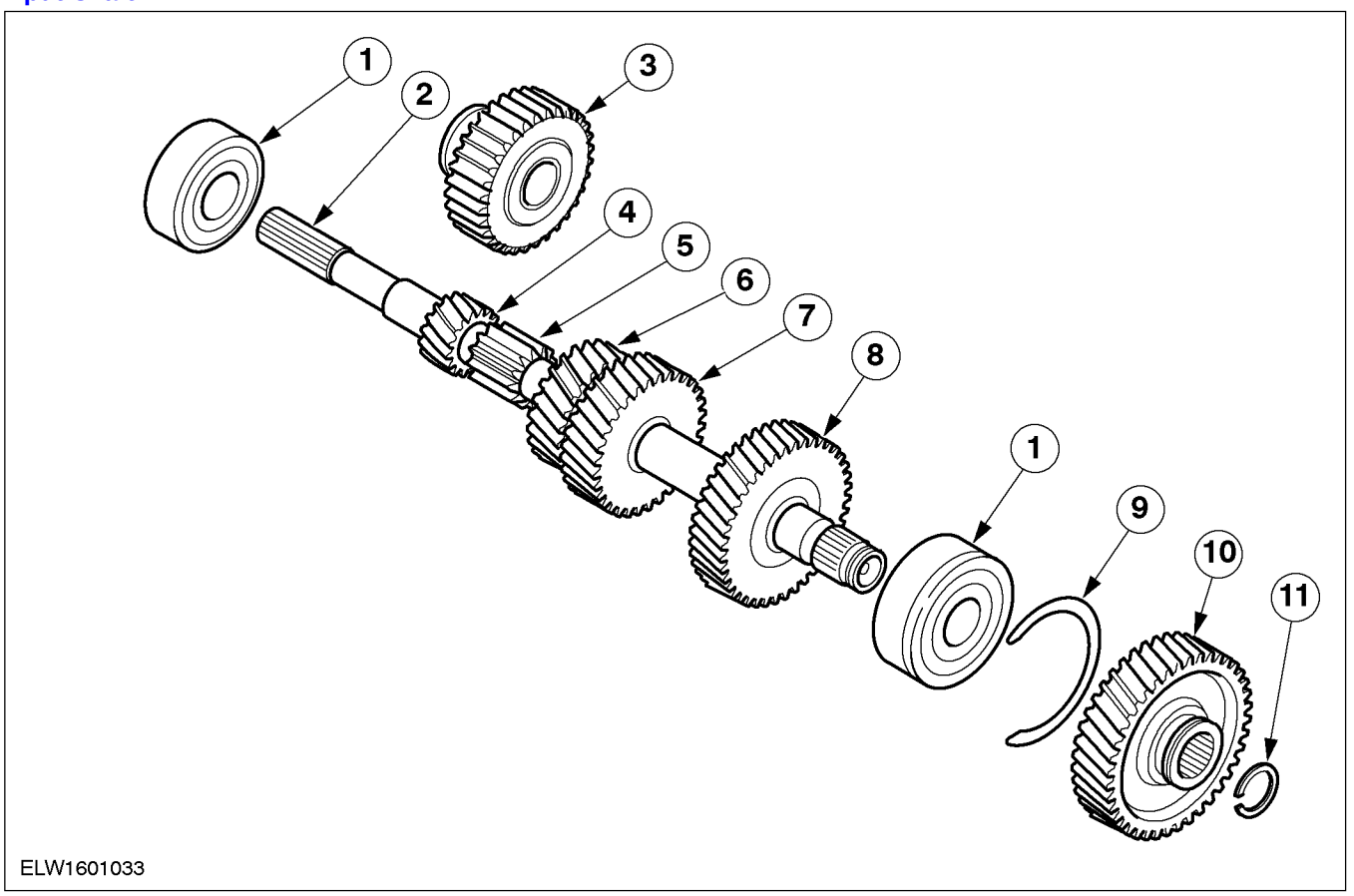

Item	Description
1	Ball bearing
2	Input shaft
3	Reverse gear idler
4	Gearwheel - 1st gear
5	Gearwheel - reverse gear
6	Gearwheel - 2nd gear

Item	Description
7	Gearwheel - 3rd gear
8	Gearwheel - 4th gear
9	Snap-ring
10	Gearwheel - 5th gear
11	Snap-ring.

DESCRIPTION AND OPERATION

Output shaft

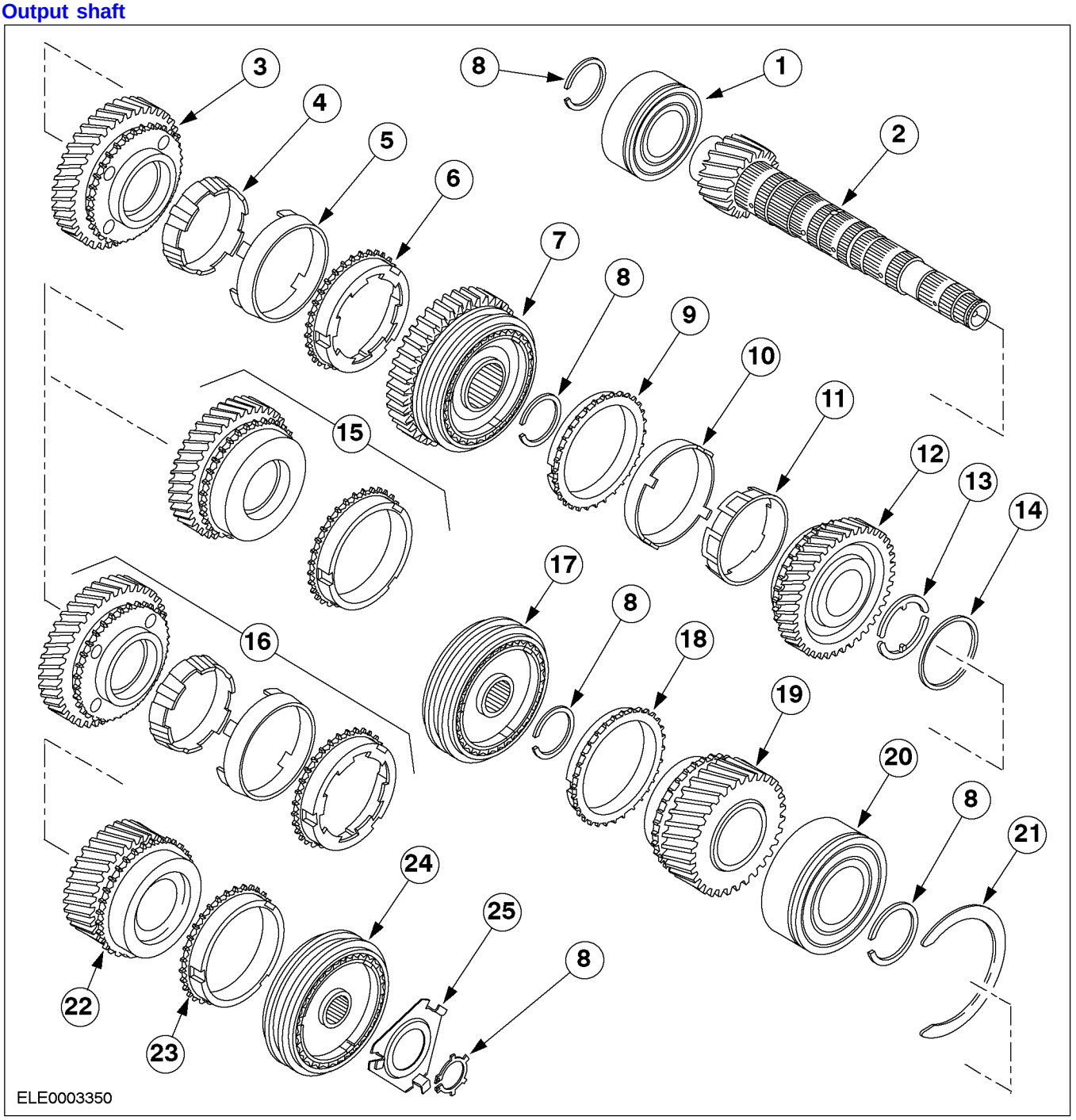

Item	Description
1	Parallel roller bearing
2	Output shaft
3	1st gearwheel
4	Inner synchronizer ring
5	Synchronizer cone
6	Outer synchronizer ring

Item	Description
7	1st/2nd gear synchronizer clutch with reverse gearwheel
8	Snap-ring
9	Outer synchronizer ring
10	Synchronizer cone
11	Inner synchronizer ring
12	2nd gearwheel

DESCRIPTION AND OPERATION (CONTINUED)

Item	Description
13	Half rings
14	Snap-ring
15	3rd gearwheel with simple synchronization
15	3rd gearwheel with double synchronization
17	Synchronizer clutch - 3rd/4th gear
18	Synchronizer ring (4th gear)

Item	Description
19	Gearwheel - 4th gear
20	Ball bearing (closed on both sides)
21	Snap-ring.
22	Gearwheel - 5th gear
23	Synchronizer ring (5th gear)
24	5th gear synchronizer clutch
25	Retaining plate

Double synchronization

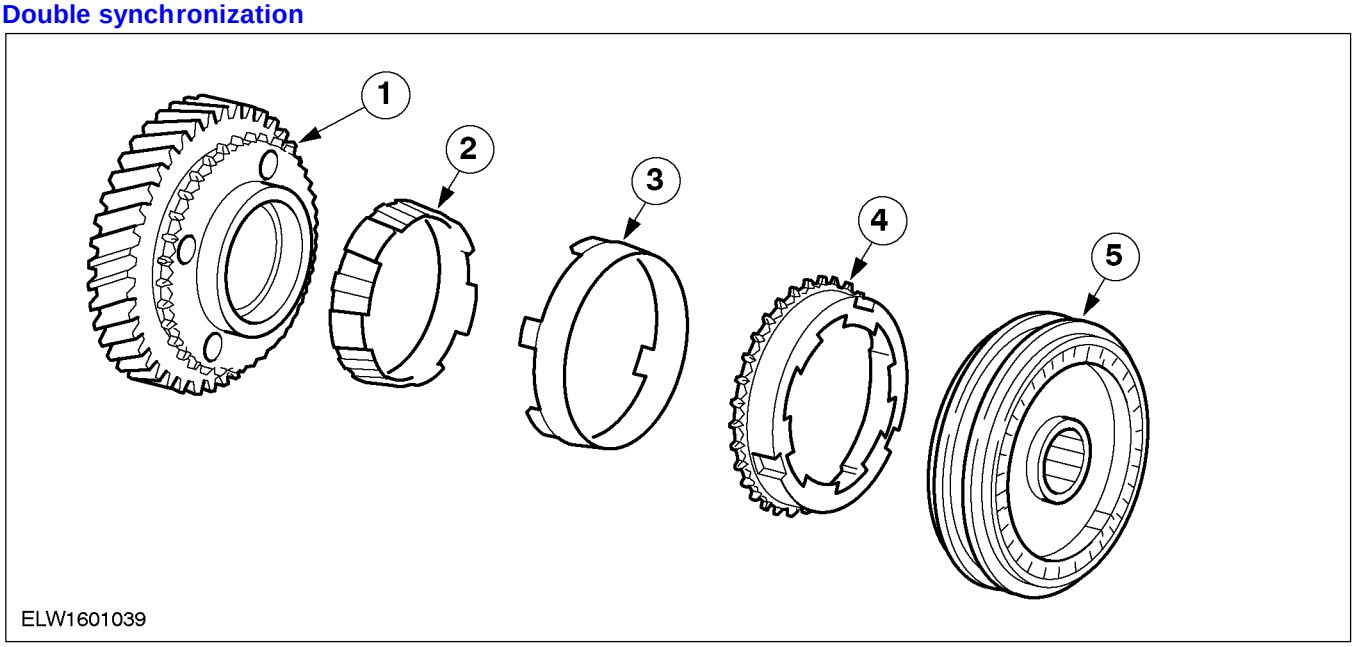

Item	Description
1	Gearwheel
2	Inner synchronizer ring
3	Synchronizer cone
4	Outer synchronizer ring
5	Synchronizer hub

Double synchronization

The first and second gears are double synchronised. Because a second synchronizer ring is used, the effective surface compared with the simple synchronizer is approximately doubled. Ease of gear changing is considerably improved through double synchronization.

The double synchronization components are: inner synchronizer ring, synchronizer cone, outer synchronizer ring and synchronizer hub.

The conical surface on the gearwheel is no longer present. Synchronisation is achieved through the two synchronizer rings and the synchronizer cone which fits on the gearwheel.

Differential

The basic components of the differential are:

- Crown wheel
- Differential housing with two taper roller bearings
- Differential pinions
- Drive halfshaft pinions

DESCRIPTION AND OPERATION (CONTINUED)

The transmission and differential are located inside an aluminum two part housing, which is connected to the engine by a flange.

The input shafts are splined.

Driving torque is transferred to the differential cage by the crown wheel, which is bolted to it.

Inside the differential housing are the differential pinions, which are located on a spindle, and the drive halfshaft pinions, which are connected to the front, drive halfshafts by splines.

When there is a speed difference between the two front wheels (for instance when driving through a curve), the front drive halfshaft pinions are able to turn on the differential pinions.

Power Flow

Neutral

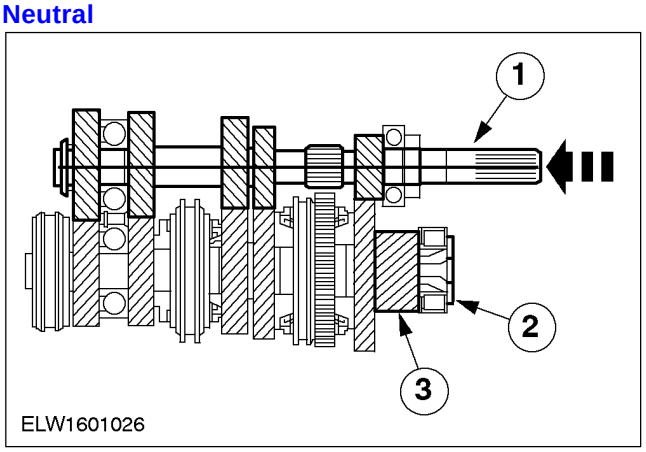

Item	Description
1	Input shaft
2	Output shaft
3	Output pinion

First gear

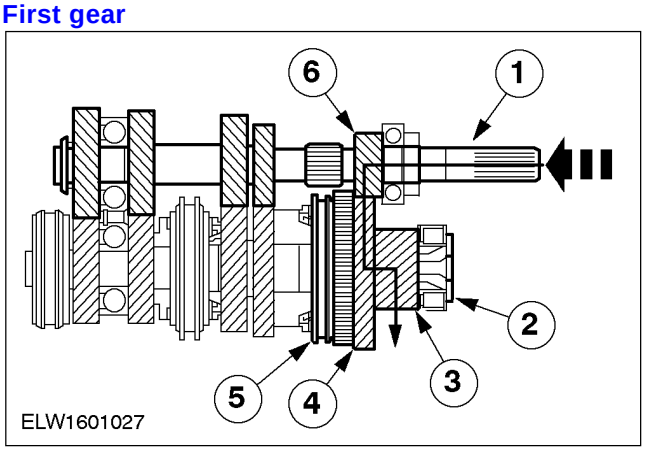

Item	Description
1	Input shaft
2	Output shaft
3	Output pinion
4	1st gearwheel
5	1st/2nd gear synchronizer clutch
6	1st gear teeth

Second gear

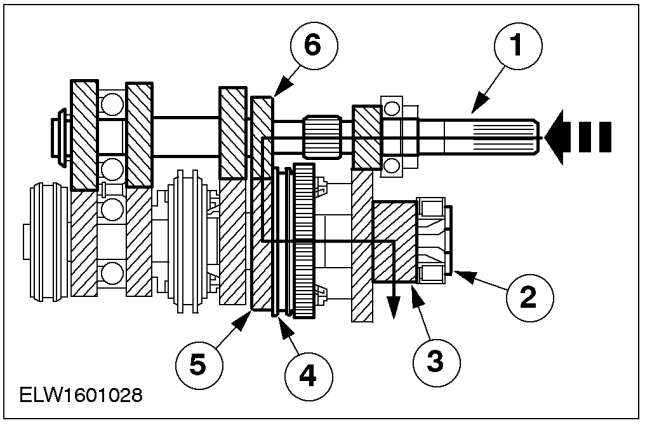

Item	Description
1	Input shaft
2	Output shaft
3	Output pinion
4	1st/2nd gear synchronizer clutch
5	2nd gearwheel
6	2nd gear teeth

Third gear

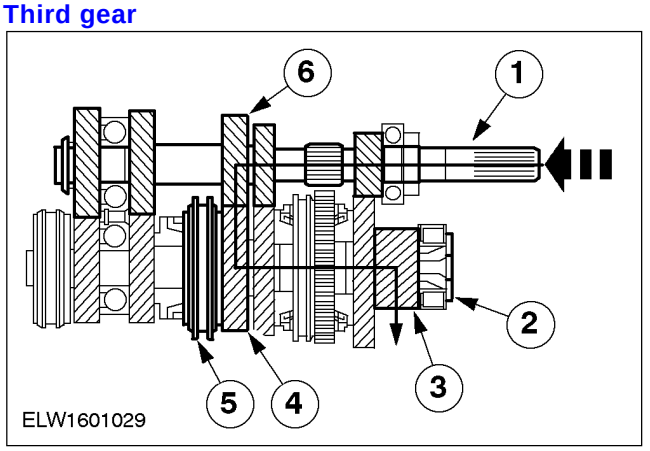

DESCRIPTION AND OPERATION (CONTINUED)

Item	Description
1	Input shaft
2	Output shaft
3	Output pinion
4	3rd gear teeth
5	3rd/4th gear synchronizer clutch
6	3rd gearwheel

Item	Description
1	Input shaft
2	Output shaft
3	Output pinion
4	5th gear teeth
5	5th gear synchronizer clutch
6	5th gearwheel

Fourth gear

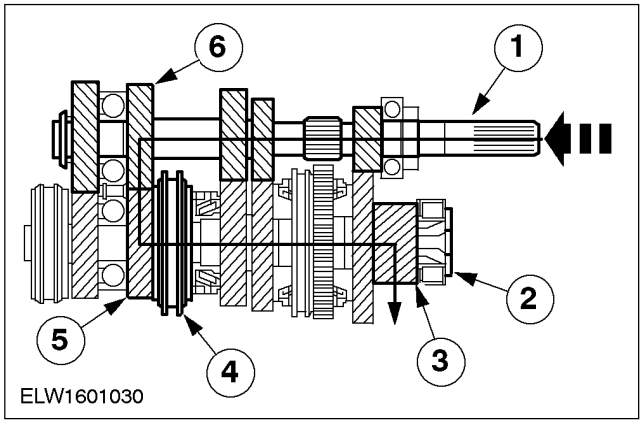

Item	Description
1	Input shaft
2	Output shaft
3	Output pinion
4	3rd/4th gear synchronizer clutch
5	4th gear teeth
6	4th gearwheel

Fifth gear

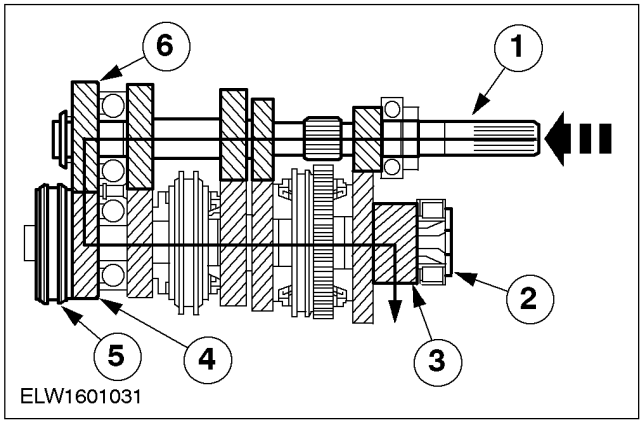

Reverse gear

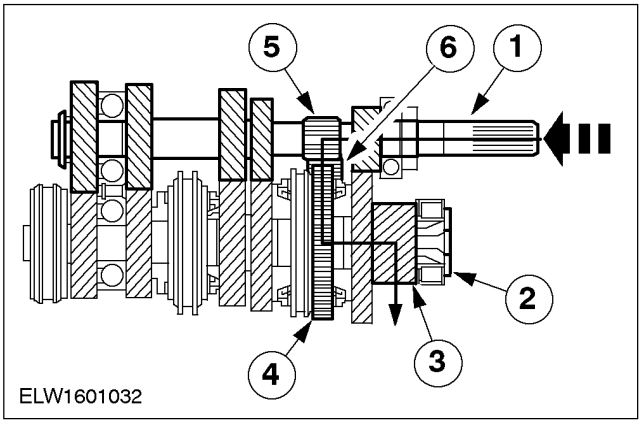

Item	Description
1	Input shaft
2	Output shaft
3	Output pinion
4	Reverse gearwheel
5	Teeth - reverse gear
6	Reverse gear idler

The reverse gear idler is driven by the input shaft and its purpose is to reverse the direction of rotation of the output shaft when reverse gear is engaged.

The reverse gear idler is carried on a needle roller bearing on the idler shaft, and also on a mounting.

The detent mechanism and the gear selector finger are mounted on a sleeve in the selector mechanism housing, and they use a spring-loaded ball keep the chosen gear engaged until another gear is selected.

The selector lock mechanism has three selector positions.

DIAGNOSIS AND TESTING

Manual Transaxle

REFER to Section 308-00.

IN-VEHICLE REPAIR

Input Shaft Oil Seal

Special Tool(s)	
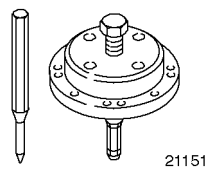 21151	Remover, oil seal 303-336 (21-151)

Material	Specification
Self-tapping screw 2,5 x 15 mm	

Removal

All vehicles

1. Remove the clutch slave cylinder.
   1. Remove the bolts.
   2. Detach the clutch slave cylinder from the clutch housing.

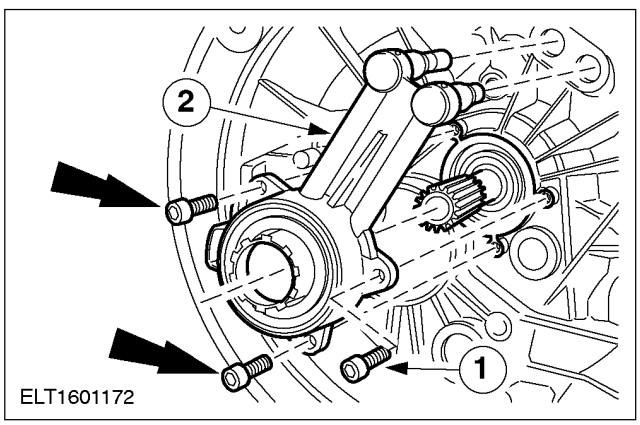

2. NOTE: Also see the following job step.
Punch mark the input shaft oil seal

- Punch mark the input shaft oil seal using the special tool.

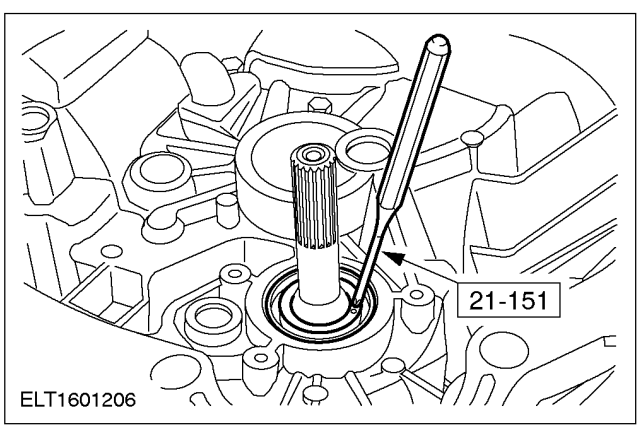

3. NOTE: Carry out this step only in the position shown.
Remove the input shaft oil seal (cont.).

1. Input shaft
2. Radial oil seal
3. Closed ball bearing

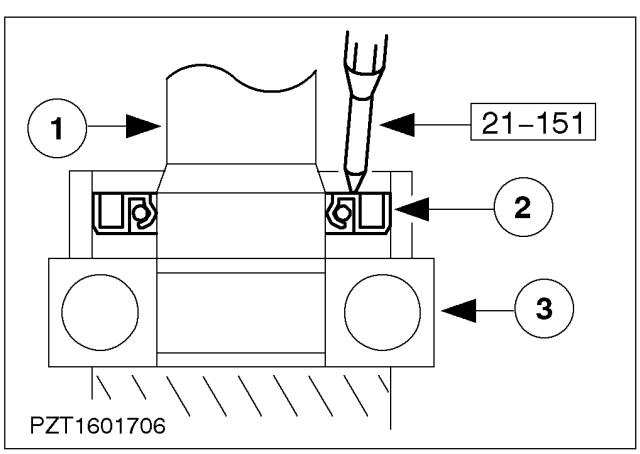

IN-VEHICLE REPAIR (CONTINUED)

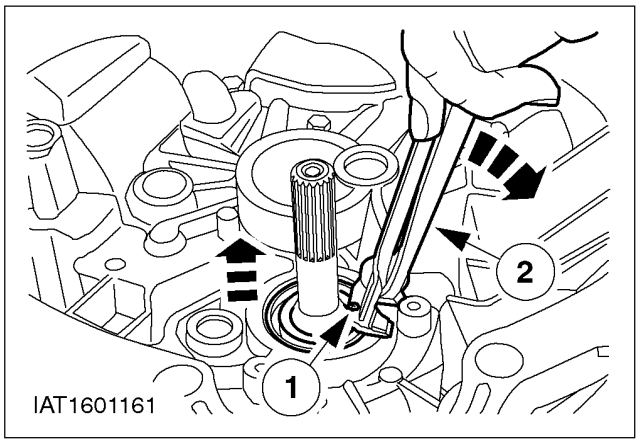

4. ⚠ **CAUTION: Do not damage the input shaft ball bearing.**
   Remove the drive halfshaft oil seal.
   1. Screw a 2,5 x 15 mm self-tapping screw a maximum of two turns into the input shaft oil seal.
   2. Lever out the input shaft oil seal.

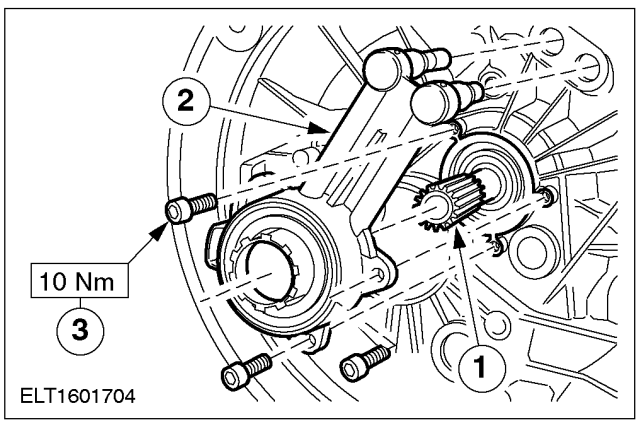

Installation

1. Fit the drive halfshaft oil seal and the clutch slave cylinder.
   1. Position the input shaft oil seal.
   2. Position the clutch slave cylinder.
   3. Tighten the bolts evenly. In doing so, press the input shaft oil seal into the transmission housing.

IN-VEHICLE REPAIR

LH Halfshaft Oil Seal (14 303 0)

Special Tool(s)	
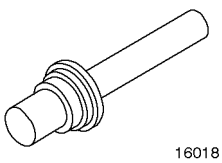 16018	Installer, Halfshaft Oil Seal 308-039 (16-018)

Special Tool(s)	
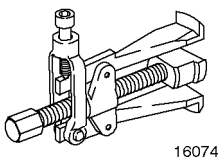 16074	Remover, Halfshaft Oil Seal 308-208 (16-074)

Removal

1. **CAUTION: Support the halfshaft. The inner joint must not be bent more than 18 degrees. The outer joint must not be bent more than 45 degrees.**

CAUTION: Pull the right-hand halfshaft out straight, otherwise the oil seal will be damaged.

NOTE: Escaping oil.
Remove the right-hand halfshaft and secure it. For additional information, refer to Section 205-04.

2. **NOTE:** Escaping oil.
Remove the left-hand halfshaft. For additional information, refer to Section 205-04.

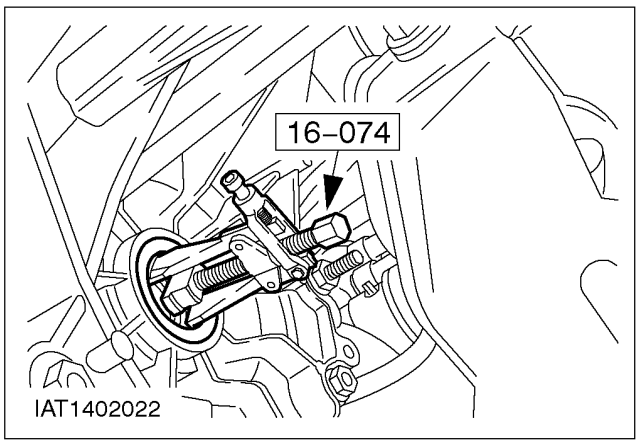

3. Using the special tool, remove the left-hand front drive halfshaft oil seal.

IN-VEHICLE REPAIR (CONTINUED)

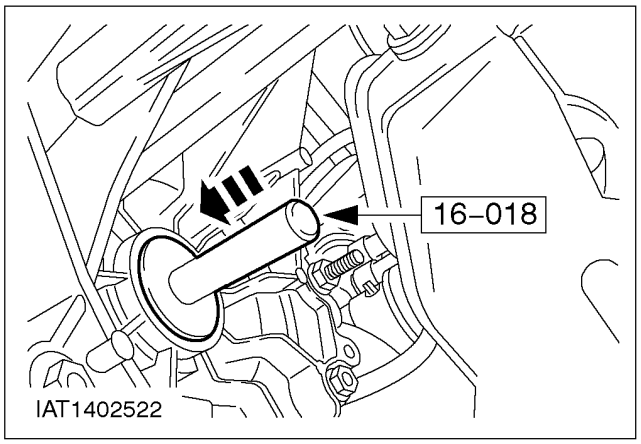

Installation

1. Using the special tool, install the left-hand halfshaft oil seal.
2. Install the left-hand halfshaft. For additional information, refer to Section 205-04.
3. Install the right-hand halfshaft. For additional information, refer to Section 205-04.

IN-VEHICLE REPAIR

RH Halfshaft Oil Seal (14 304 0)

Special Tool(s)	
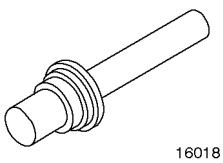 16018	Installer, Halfshaft Oil Seal 308-039 (16-018)

Special Tool(s)	
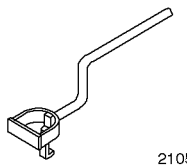 21051	Remover, Oil Seal 303-112 (21-051)

Removal

Vehicles with diesel engine

1. Remove the halfshaft heat shield.

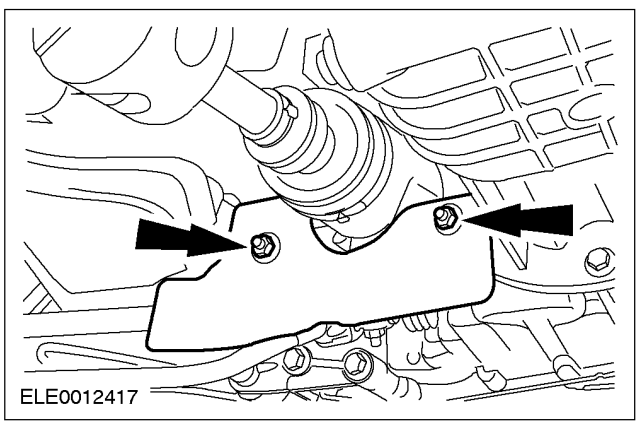

Vehicles with 1.6L / 1.3L engine

2. Remove the halfshaft heat shield.

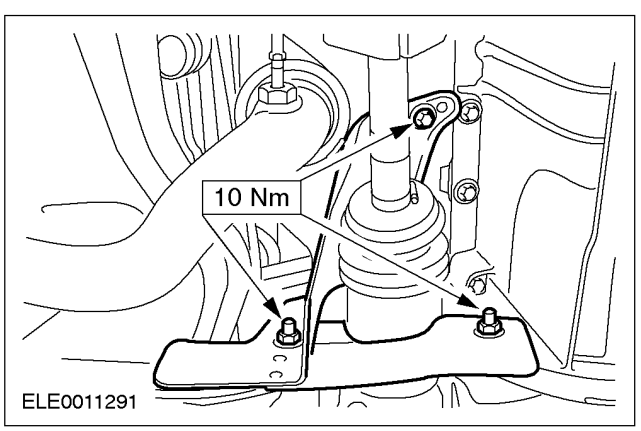

All vehicles

3. NOTE: Escaping oil.
Remove the right-hand halfshaft. For additional information, refer to Section 205-04.

IN-VEHICLE REPAIR (CONTINUED)

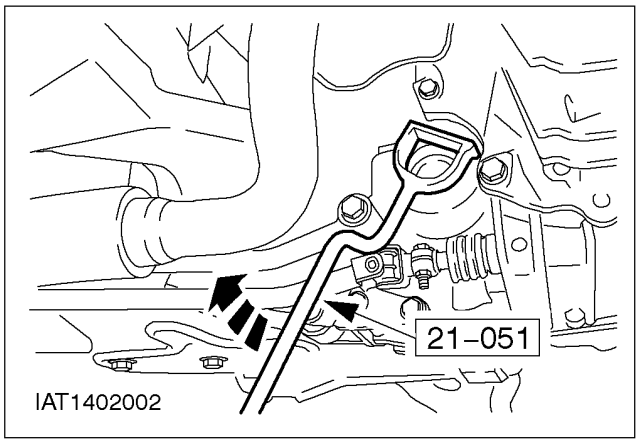

4. Using the special tool, remove the right-hand halfshaft oil seal.

Installation

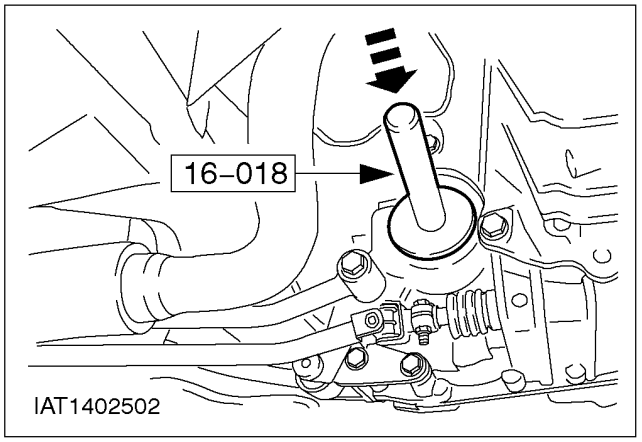

1. Using the special tool, install the right-hand halfshaft oil seal.

Vehicles with diesel engine

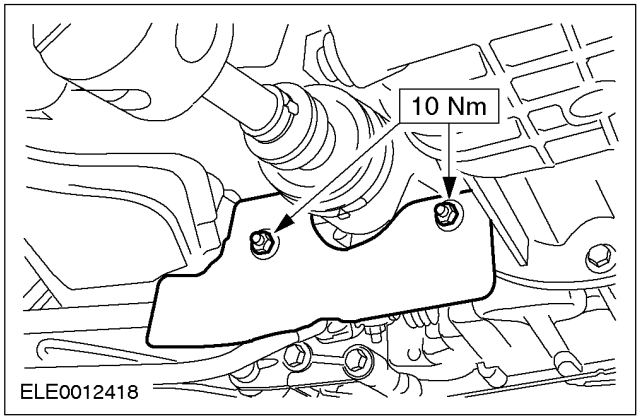

2. Install the halfshaft heat shield.

IN-VEHICLE REPAIR (CONTINUED)

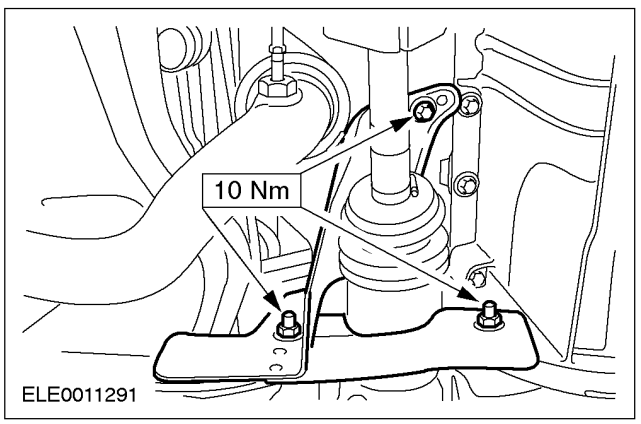

Vehicles with 1.6L / 1.3L engine

3. Install the halfshaft heat shield.

All Vehicles

4. Install the right-hand halfshaft. For additional information, refer to Section 205-04.

REMOVAL

Transaxle — Vehicles with 1.6L / 1.3L Engine (16 114 0)

Special Tool(s)	
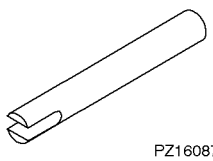 PZ16087	Remover, Halfshaft 308-237 (16-087)
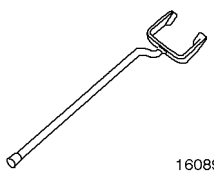 16089	Remover, Halfshaft 308-256 (16-089)
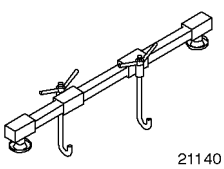 21140	Support Bar, Engine 303-290 (21-140)
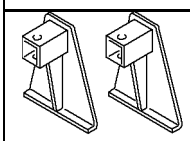 2114001	Adapter for 303-290 303-290-01 (21-140-01)

Special Tool(s)	
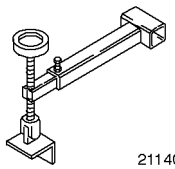 2114003	Adapter for 303-290 303-290-03 (21-140-03)

General Equipment
Engine lifting eye
Transmission jack
Auxiliary plugs
Retaining straps

Material	Specification
Manual transmission fluid	BOT 130
Cable ties	

Removal

1. **NOTE:** The position descriptions for the engine mountings and the engine roll restrictor are given looking from the transaxle towards the engine.
   Remove the battery. For additional information, refer to Section 414-01.

2. Remove the battery tray.
   1. Remove the cable ties.
   2. Remove the bolts.

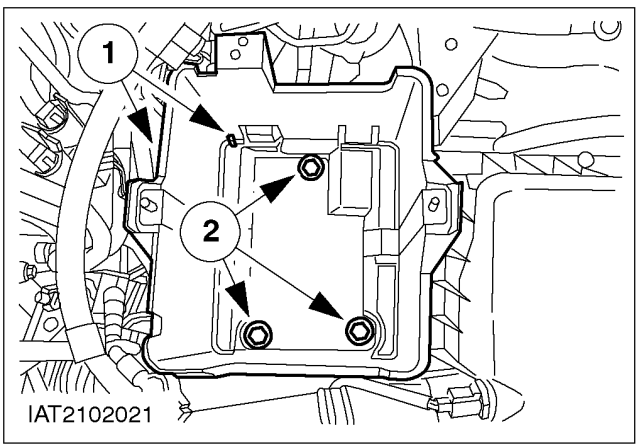

REMOVAL (CONTINUED)

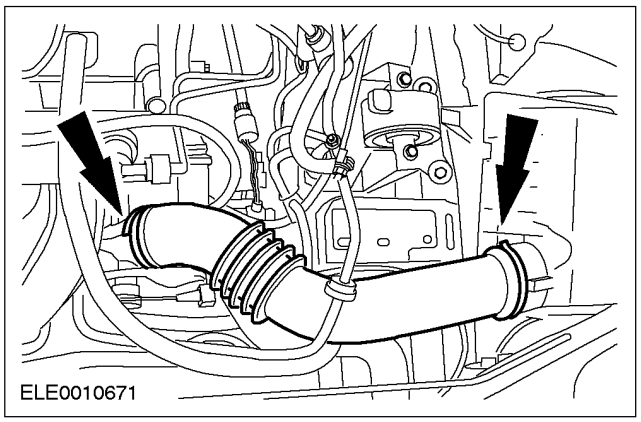

Vehicles with 1.6L / 1.3L engine

3. Remove the air cleaner intake pipe.

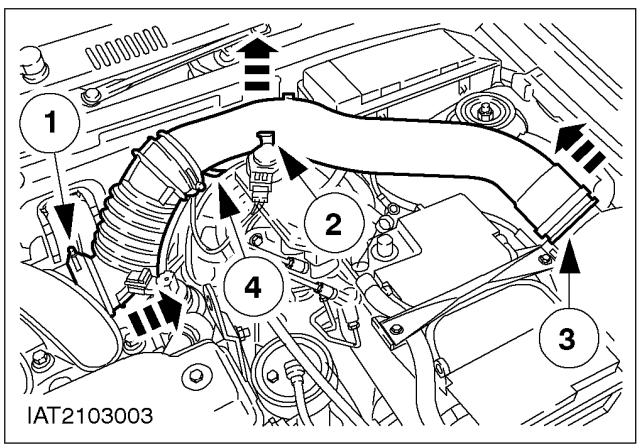

Vehicles with diesel engine

4. Remove the air cleaner intake pipe.
   1. Remove the air cleaner intake from the intake manifold.
   2. Detach the air cleaner intake pipe from the retaining clip.
   3. Remove the air cleaner housing.
   4. Remove the air cleaner intake pipe from the resonator hose.

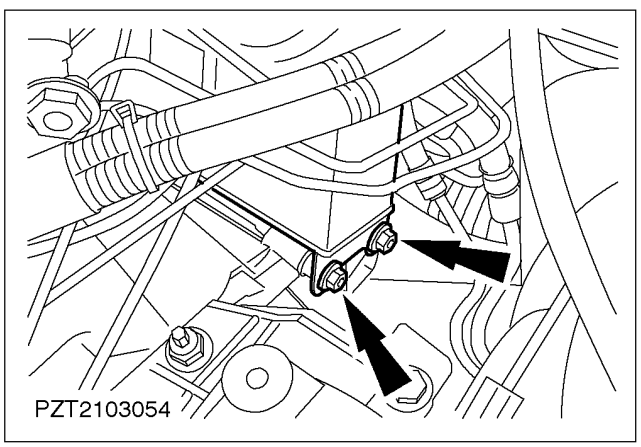

5. Remove the resonator.

REMOVAL (CONTINUED)

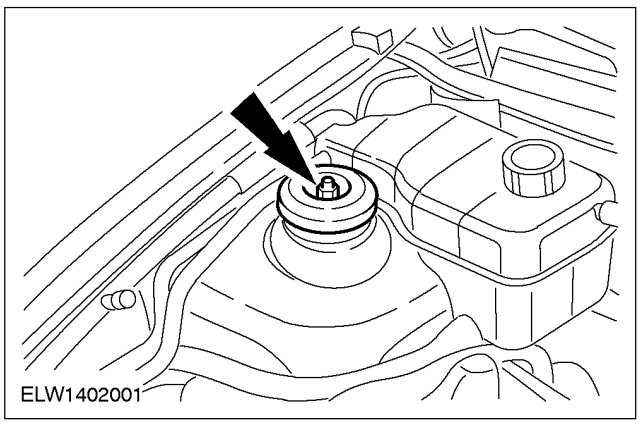

All vehicles

6. **NOTE:** Use an Allen key to prevent the piston rod turning.
   Loosen the left-hand and the right-hand suspension strut nut five turns.

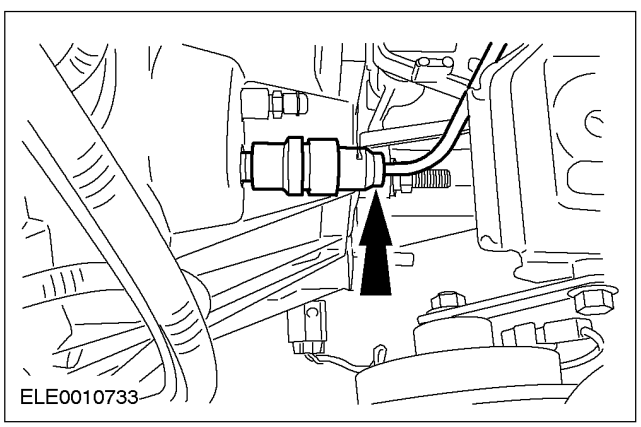

7. **WARNING: Escaping brake fluid. Do not allow brake fluid to come into contact with the skin or the eyes. If brake fluid does come into contact with the skin or the eyes, rinse the affected areas with water immediately. Failure to follow these instructions may result in personal injury.**

   CAUTION: If brake fluid is spilt on the paintwork, the affected area must be immediately washed down with cold water.
   Disconnect the high-pressure line from the clutch slave cylinder.

Vehicles with 1.6L / 1.3L engine

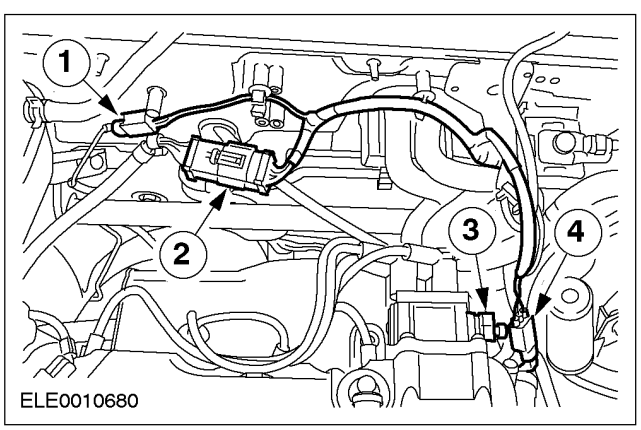

8. Disconnect the electrical connectors.
   1. Disconnect the heated oxygen sensor (HO2S) electrical connector
   2. Disconnect the ignition coil electrical connector
   3. Disconnect the powertrain control module (PCM) electrical connector
   4. Disconnect the vehicle speed sensor (VSS) electrical connector.

REMOVAL (CONTINUED)

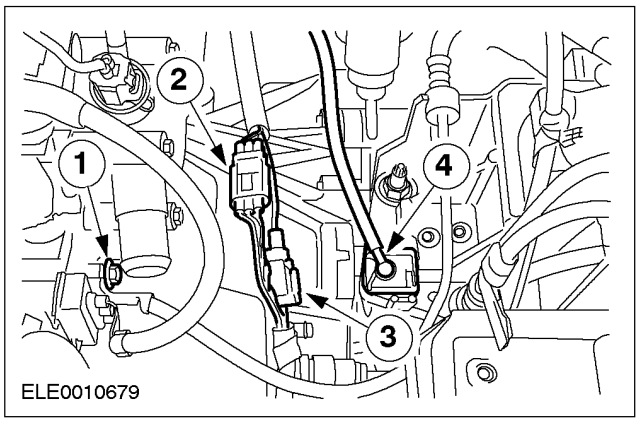

9. Remove the transaxle upper flange bolts with ground cable and the hose.
   1. Remove the ground cable flange bolt
   2. Disconnect the generator electrical connector
   3. Disconnect the starter motor electrical connector
   4. Detach the transaxle ventilation hose

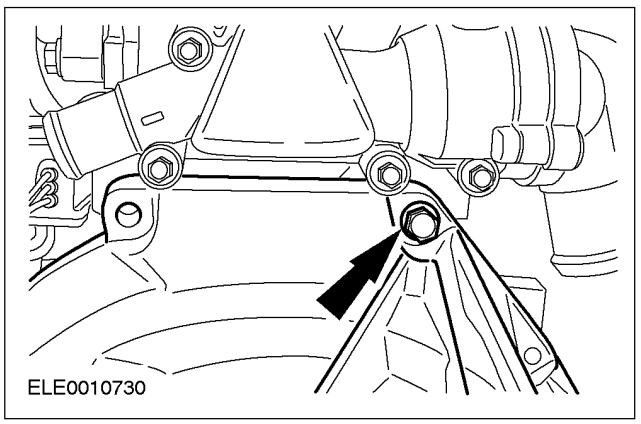

10. Remove the transaxle upper flange bolts.

Vehicles with diesel engine

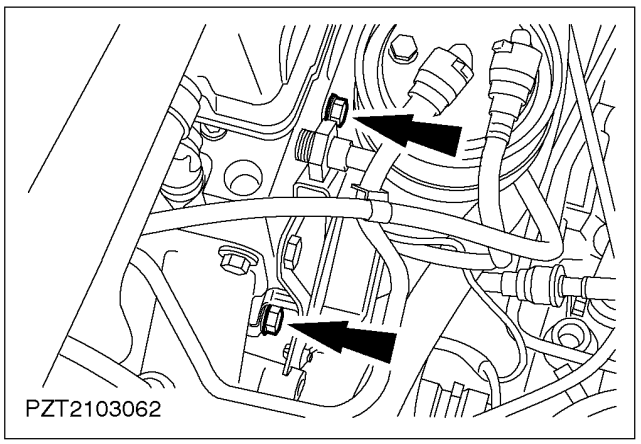

11. Remove the transaxle upper flange bolts with ground cable.

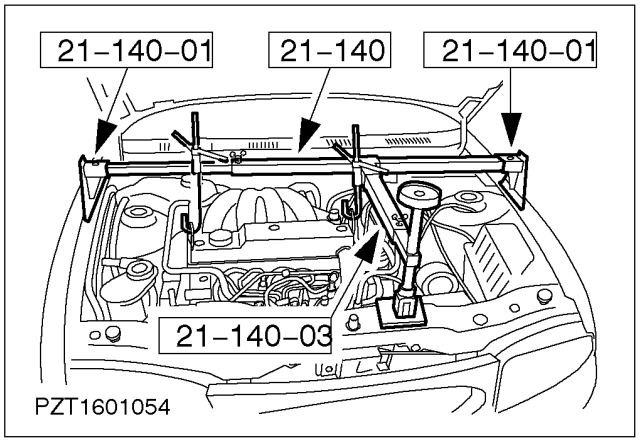

12. Using the special tools support the engine and transaxle assembly.
   - Using the special tool slightly raise the.

REMOVAL (CONTINUED)

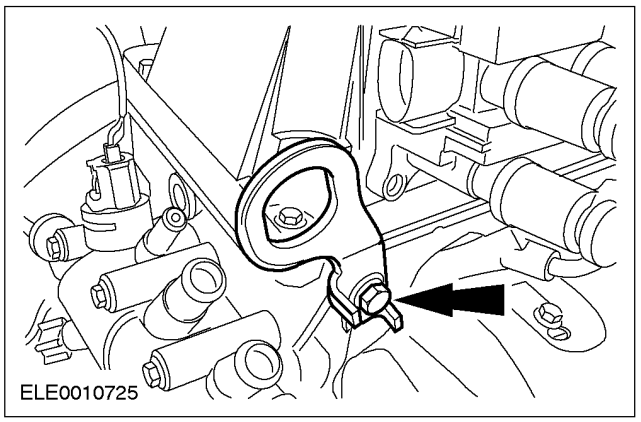

Vehicles with 1.6L / 1.3L engine

13. Install an engine (cylinder No. 4) using the existing thread in the cylinder head.

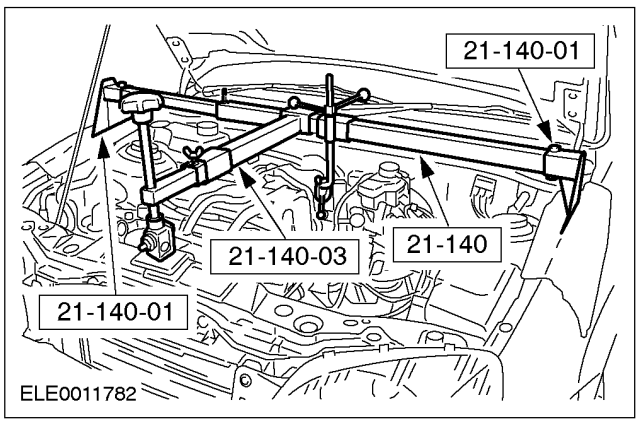

14. Using the special tools support the engine and transaxle assembly.

All vehicles

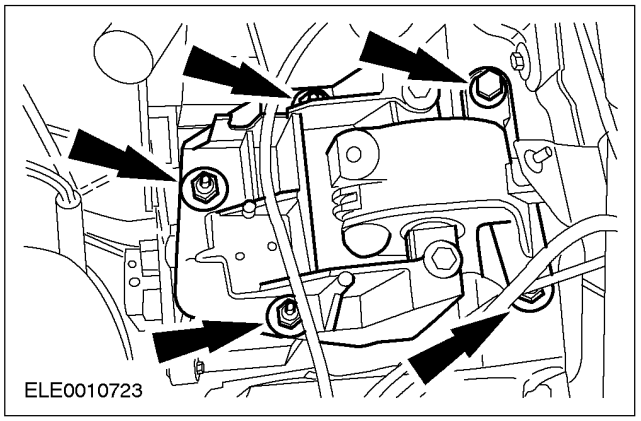

15. Remove the engine rear mounting bracket.

Vehicles with diesel engine

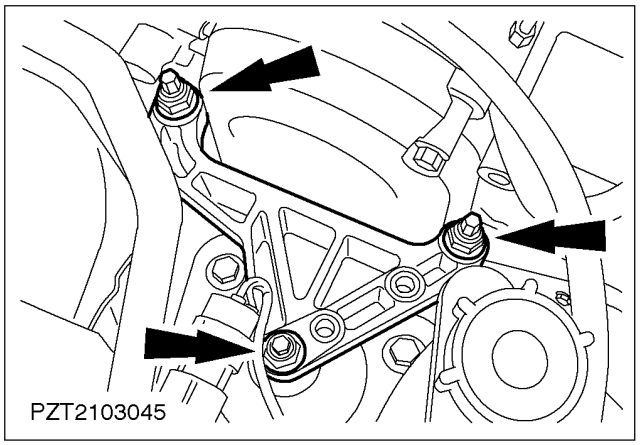

16. Remove the engine front mounting bracket.

REMOVAL (CONTINUED)

All vehicles

17. Raise and support the vehicle. For additional information, refer to Section 100-02.

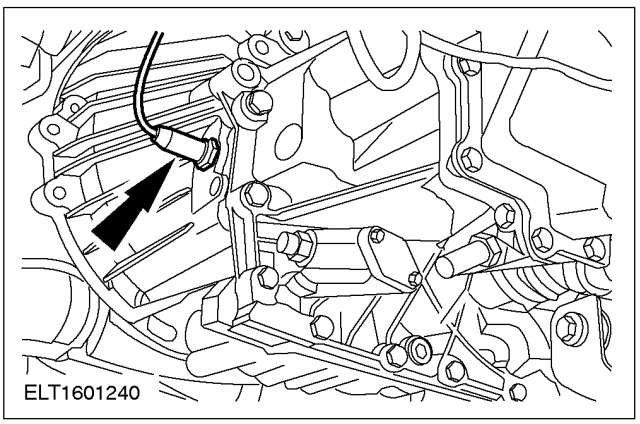

18. Disconnect the reversing lamp switch electrical connector.

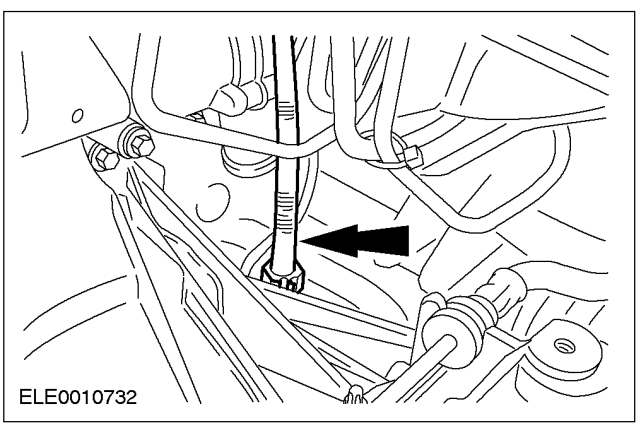

19. Disconnect the speedometer drive cable from the transaxle.

Vehicles with diesel engine

20. Remove the halfshaft heat shield.

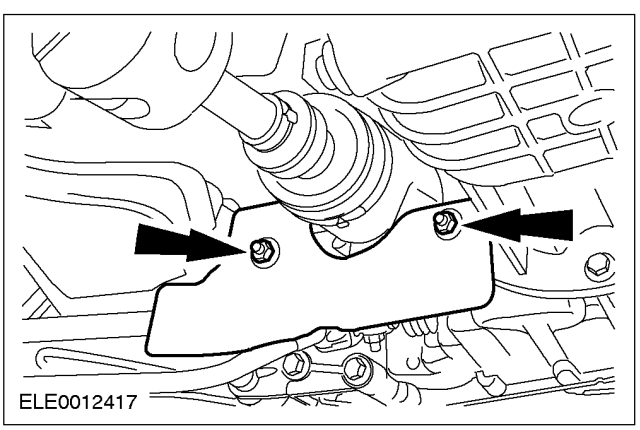

REMOVAL (CONTINUED)

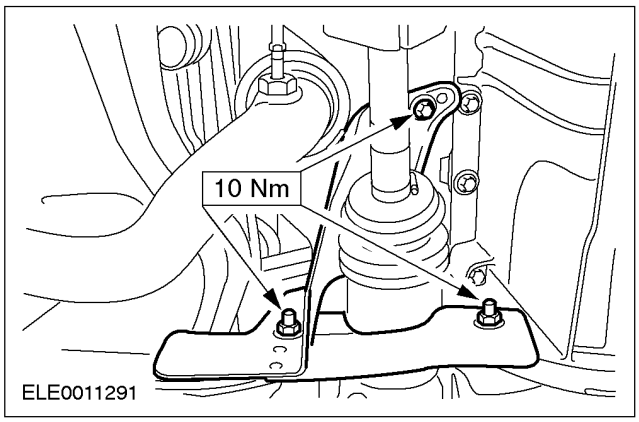

Vehicles with 1.6L / 1.3L engine

21. Remove the halfshaft heat shield.

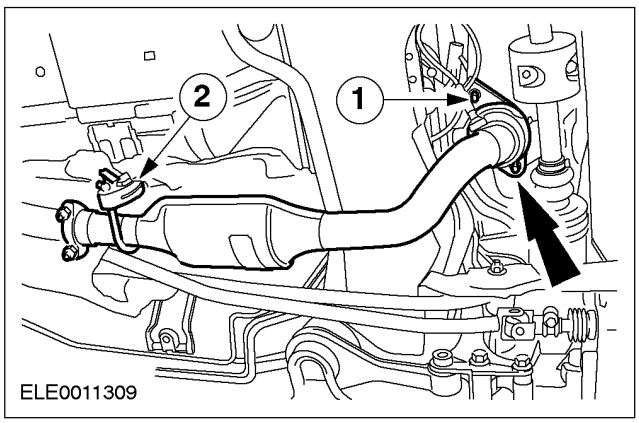

22. Remove the exhaust down pipe from the exhaust manifold and secure it to one side.
    1. Remove the nuts.
    2. Detach the hanger insulator.
    - Remove and discard the gasket.

All vehicles

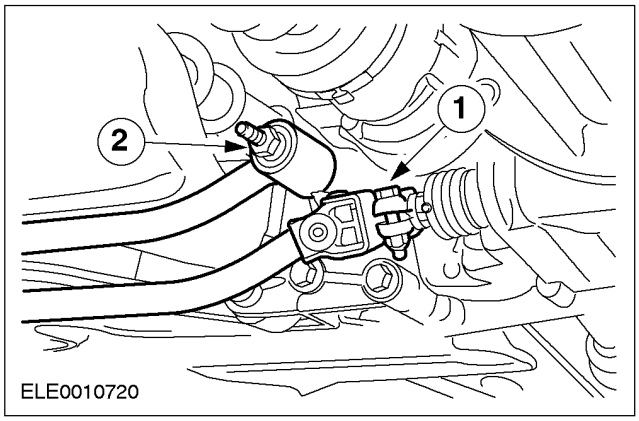

23. Disconnect the shift rod and shift rod stabilizer.
    1. Disconnect the shift rod
    2. Disconnect the shift rod stabilizer

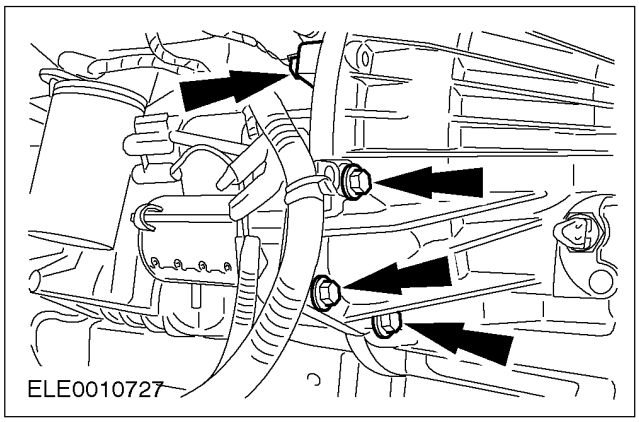

24. **NOTE:** Do not disconnect the starter motor. Remove the starter motor bolts retaining and secure the starter motor to one side and the left-hand transaxle flange bolt.

REMOVAL (CONTINUED)

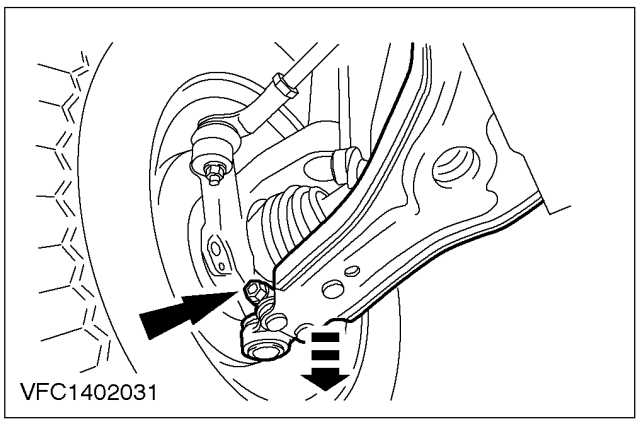

25. Remove the lower arm ball joints on both sides (left-hand side shown).

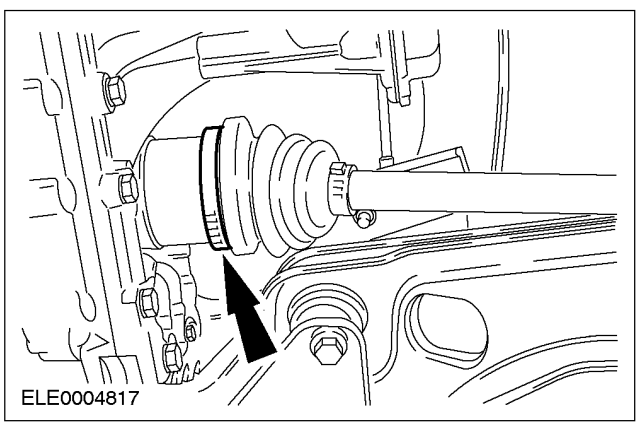

26. Remove the constant velocity joint boot clamp.

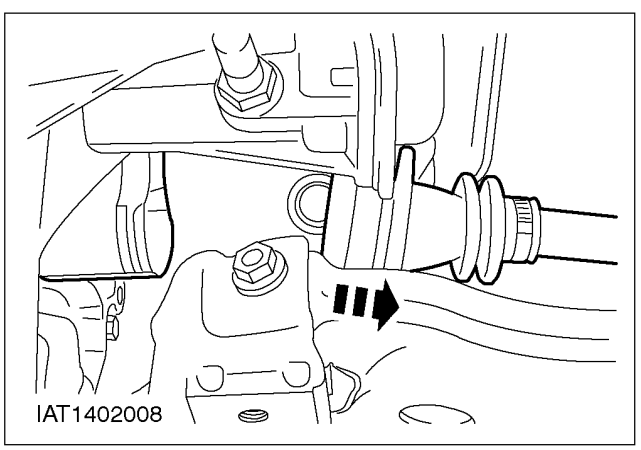

27. ⚠ **CAUTION: The inner joint must not be bent at more than 18 degrees; the outer joint must not be bent at more than 45 degrees.**

NOTE: Remove the grease filling.
Remove the halfshafts on both sides (left-hand side shown, right-hand side similar).
Secure halfshafts with cable ties.

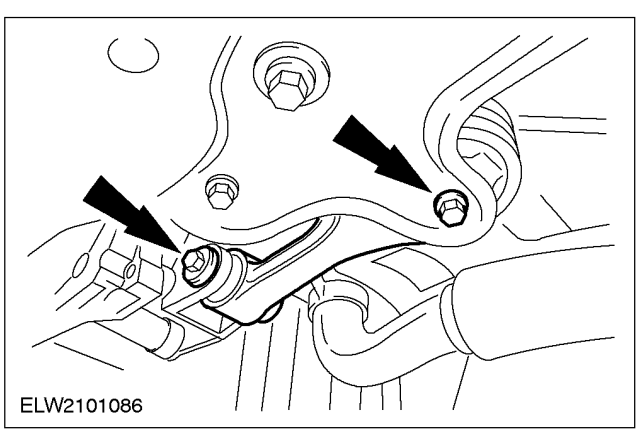

28. **NOTE:** The engine roll restrictor is under tension.
Remove the engine roll restrictor.

29. Lower the vehicle.

REMOVAL (CONTINUED)

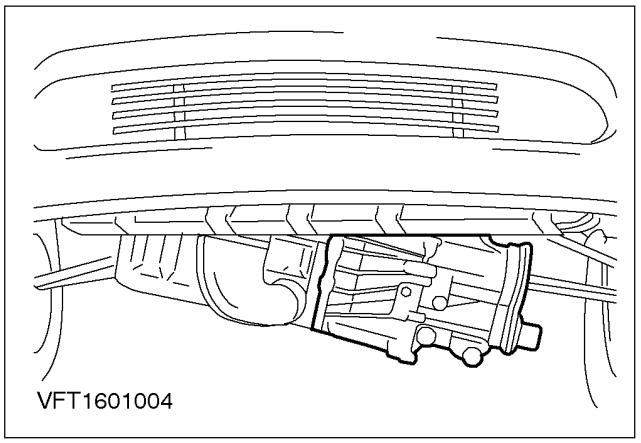

30. Using the special tools, lower the transaxle.

31. Raise and support the vehicle. For additional information, refer to Section 100-02.

Vehicles with 1.6L / 1.3L engine

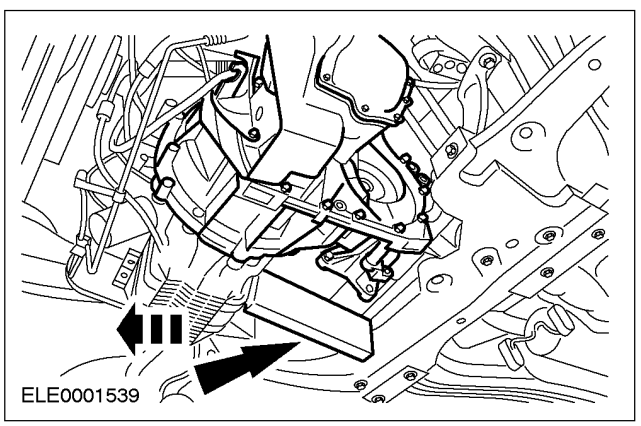

32. Push the engine forward and position a wooden block (260 mm) between the crossmember and the oil pan.

All vehicles

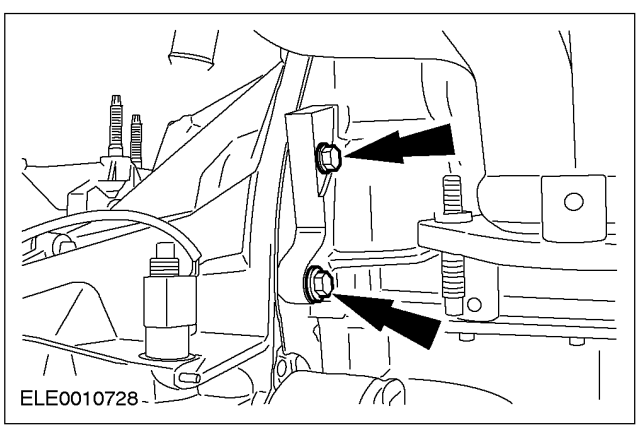

33. Remove the transaxle right-hand flange bolts.

REMOVAL (CONTINUED)

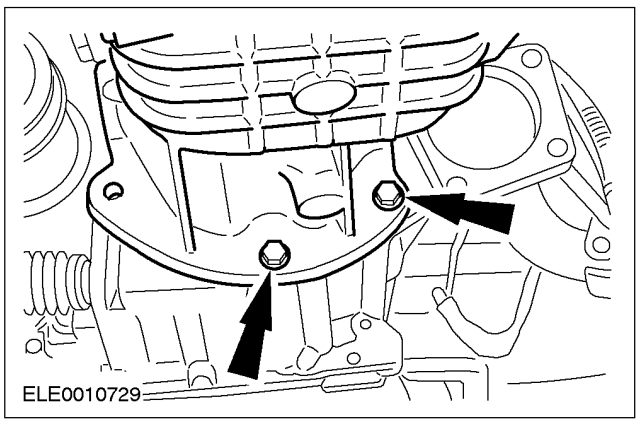

34. Remove the transaxle lower flange bolts.

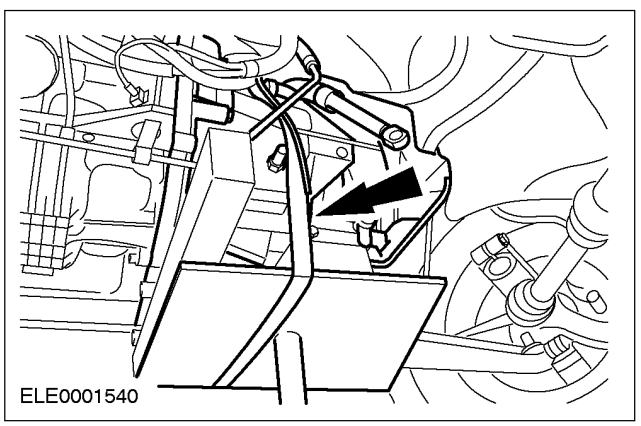

35. **NOTE:** Secure the transaxle with a retaining strap and support it by using a transmission jack.
    Withdraw the transaxle from the engine and remove it.

DISASSEMBLY

Transaxle (16 118 8)

Special Tool(s)	
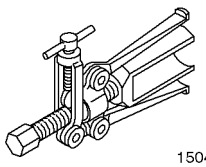 15048	Remover, input pinion oil seal 205-078 (15-048)
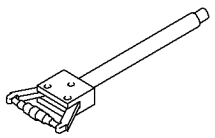 15074	Remover, output shaft bearing cones 205-176 (15-074)
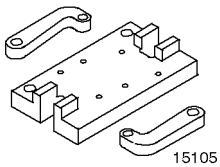 15105	Transmission mounting bracket 205-329 (15-105)
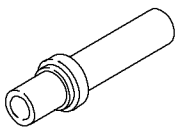 16015	Installer 308-045 (16-015)

Special Tool(s)	
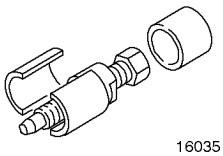 16035	Remover, fifth gearwheel 308-082 (16-035)
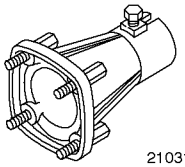 21031B	Transmission mounting bracket 303-435-06 (21-031B)
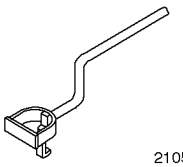 21051	Oil seal remover 303-112 (21-051)

General Equipment
Assembly stand

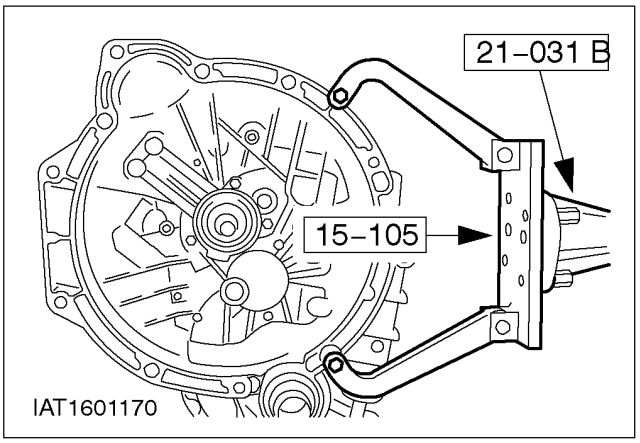

Disassembly

1. ⚠ **CAUTION: Handle the double synchronizer components carefully.**
   General note:
   - Always use vice jaw protectors when working with a vice.
   - Use copper or plastic headed hammers to avoid causing any damage.
2. Fit the special tools.

DISASSEMBLY (CONTINUED)

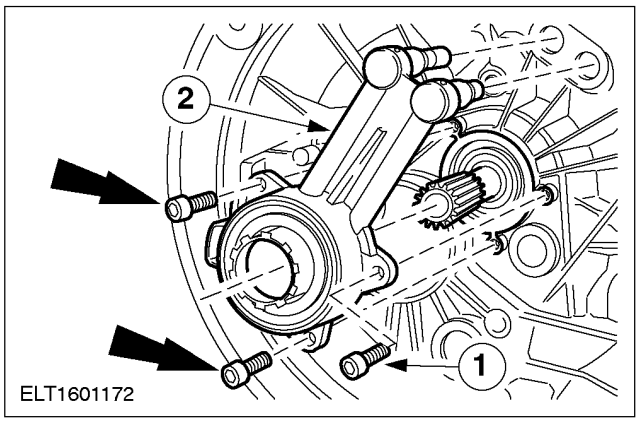

All vehicles

3. Remove the clutch slave cylinder.
   1. Remove the bolts.
   2. Detach the clutch slave cylinder.

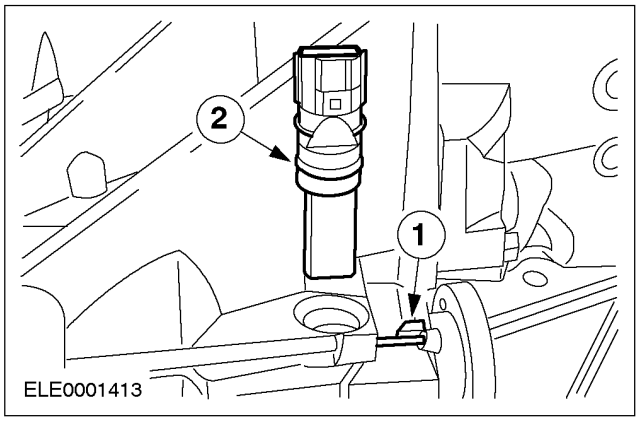

4. Remove the vehicle speed sensor (VSS).
   1. Pull out the retaining pin.
   2. Pull out the VSS.

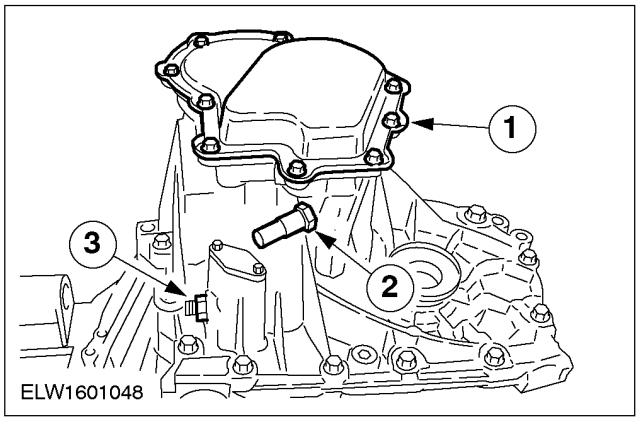

5. Detach the cover and the detent mechanism.
   1. Cover
   2. Fifth gear detent mechanism
   3. Auxiliary shift rod detent mechanism

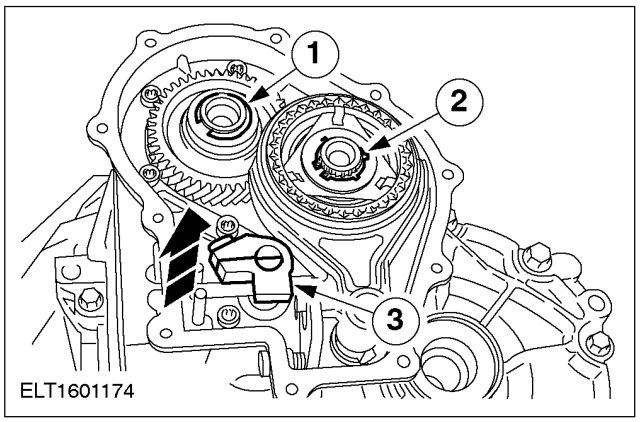

6. Remove the snap-rings and the selector finger.
   1. 5th gearwheel snap-ring
   2. 5th gear synchronizer snap-ring
   3. Slacken the bolt and remove the selector finger.

DISASSEMBLY (CONTINUED)

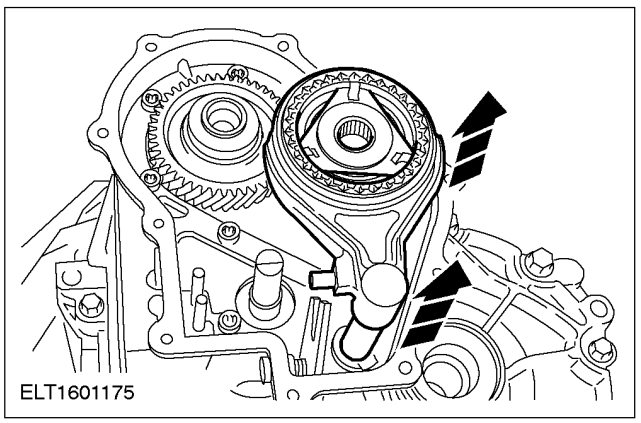

7. Take out the 5th gear synchronizer and selector fork.

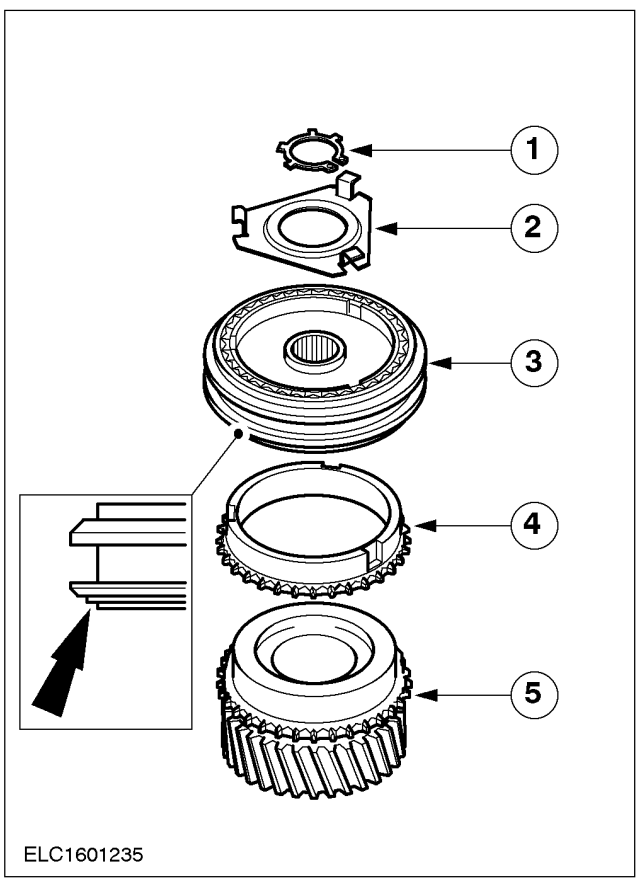

8. **NOTE:** Mark the installation position of the synchronizer clutch assembly before dismantling it.
   Dismantle the 5th gear synchronizer assembly.
   1. Snap-ring
   2. Retaining plate
   3. Synchronizer clutch
   4. Synchronizer ring
   5. 5th gearwheel

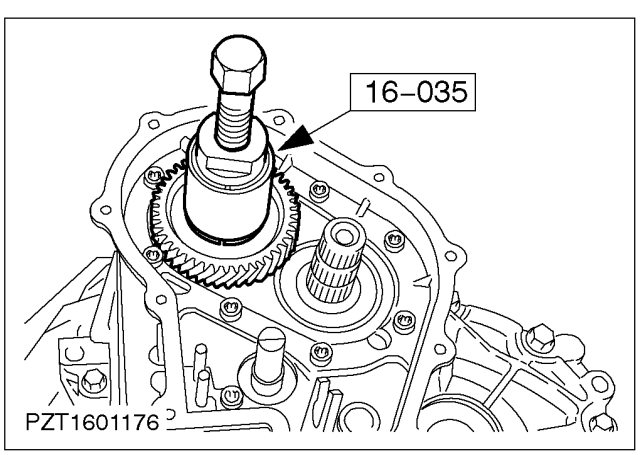

9. Pull off the 5th gearwheel.

DISASSEMBLY (CONTINUED)

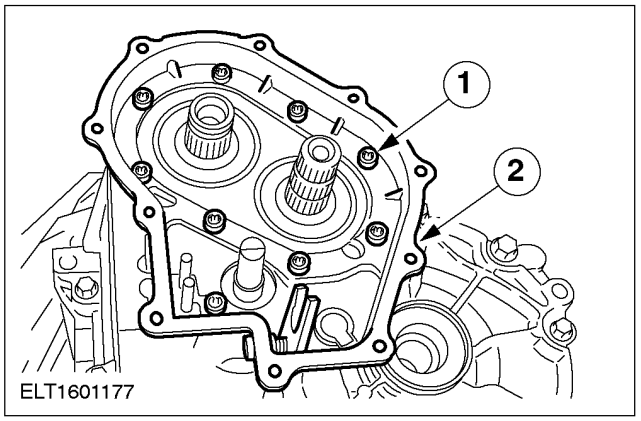

10. ⚠ CAUTION: Do not strike the mating face.

Detach the 5th gear housing.

1. Unscrew the bolts and carefully tap the housing sections apart.
2. Release and remove the housing gasket.

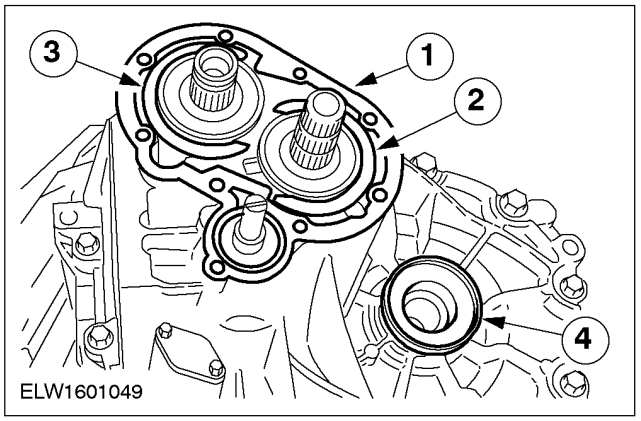

11. ⚠ CAUTION: Do not strike the mating face.

Remove the gasket, detach the snap-rings and pull out the auxiliary plug.

1. Gasket
2. Output shaft snap-ring
3. Input shaft snap-ring
4. Pull out the auxiliary plug.

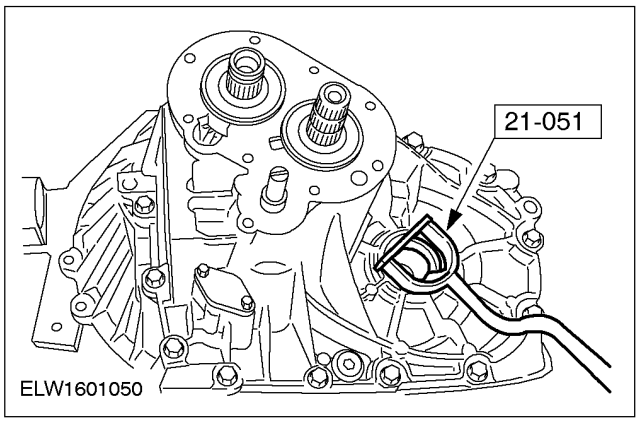

12. Remove both oil seals (left-hand side shown).
    - Lever out the front drive halfshaft oil seals using the special tool.
    - The reversing lamp switch only needs to be removed for sealing work.

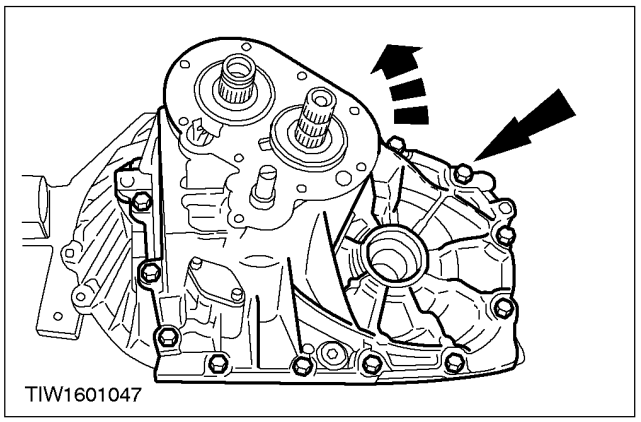

13. NOTE: To lift the housing off, turn it slightly (the transmission breather pipe catches on the input shaft).

Separate the transmission housing sections.

- Remove the bolts and lightly tap on the transmission housing sections to carefully separate them.

DISASSEMBLY (CONTINUED)

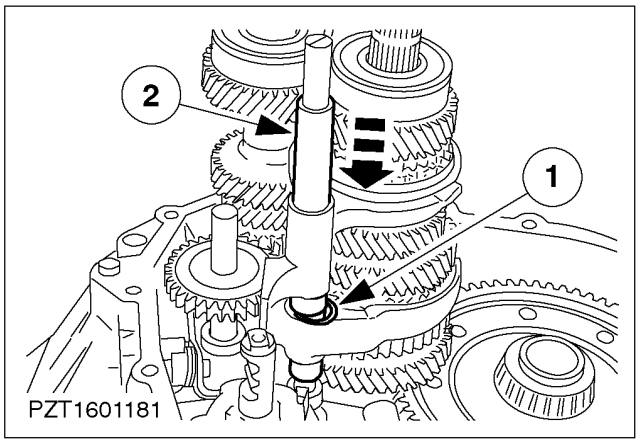

14. Remove the upper snap-ring from the shift rod guide sleeve.
    1. Upper snap-ring
    2. Slide the shift rod guide sleeve downwards.

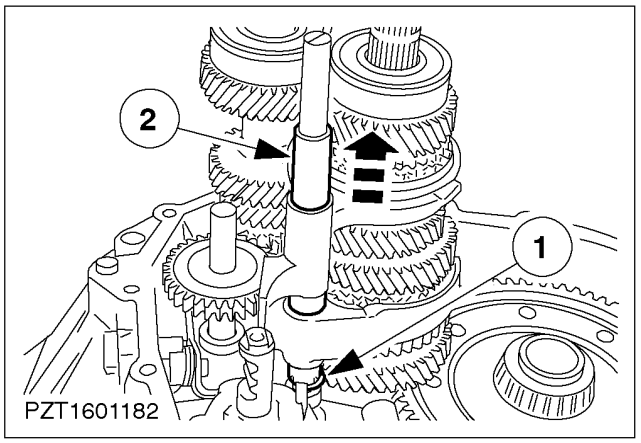

15. Remove the shift rod guide sleeve.
    1. Remove the guide sleeve lower snap-ring.
    2. Pull out the shift rod guide sleeve.

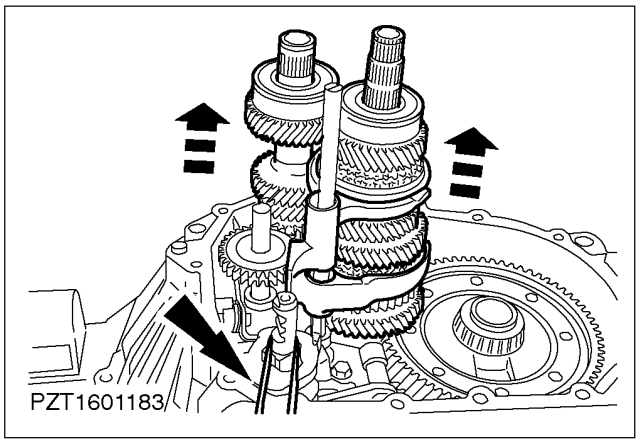

16. NOTE: Attach a rubber band to the auxiliary shift rod as an aid during assembly.
Lift out the input and output shafts together with the selector forks.

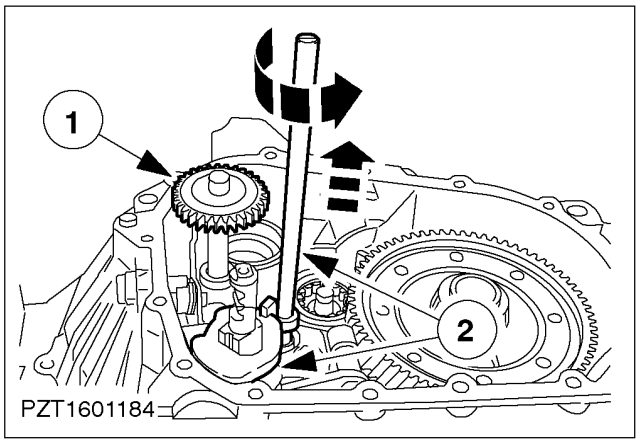

17. Remove the reverse gear idler and the shift rod with locking plate.
    1. Remove the reverse gear idler.
    2. Take out the shift rod and locking plate together.

DISASSEMBLY (CONTINUED)

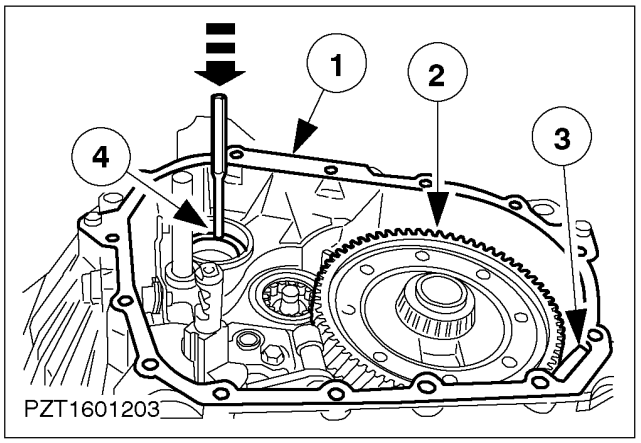

18. Remove the differential assembly, the permanent magnet and the input shaft oil seal.
    1. Take off the housing gasket.
    2. Lift out the differential assembly.
    3. Permanent magnet
    4. Drive out the drive halfshaft oil seal.

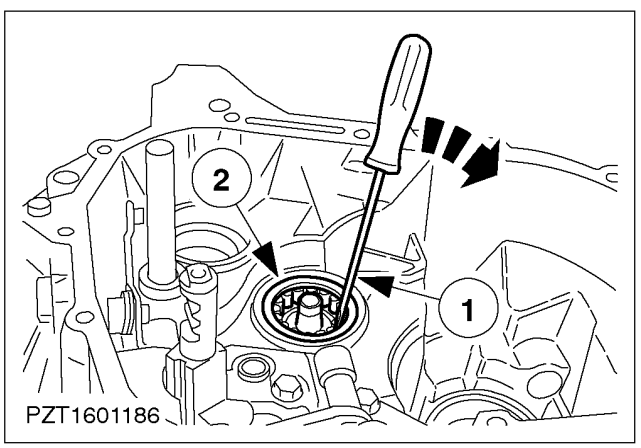

19. Remove the output shaft taper roller bearing.
    1. Press the rollers out of the bearing cage.
    2. Remove the bearing cage.

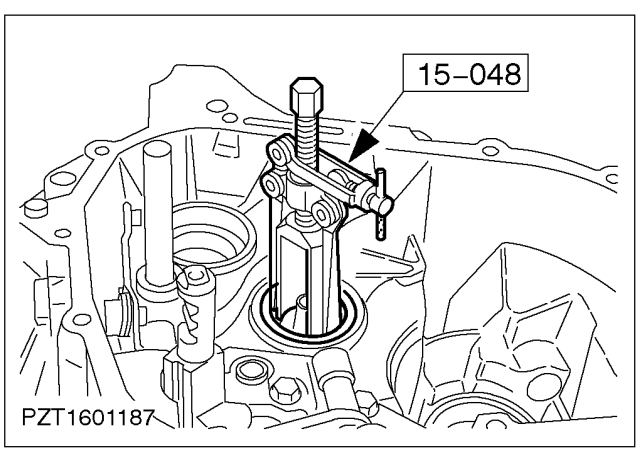

20. ⚠ **CAUTION: Use the special tool only in the position shown, otherwise the blanking plug will be pushed out of the housing.**
    Remove the output shaft bearing cone.
    - Remove the oil slinger.

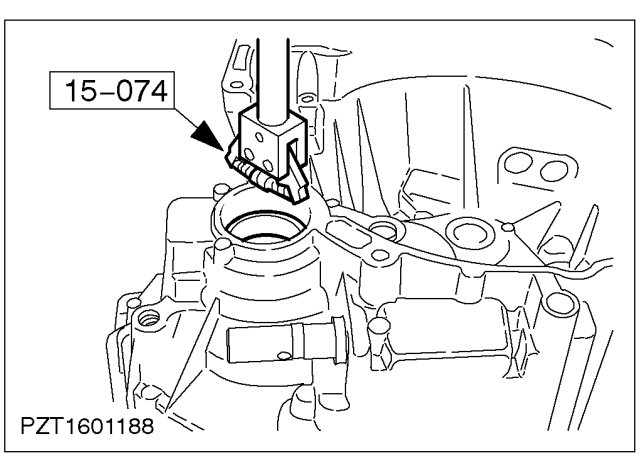

21. **NOTE:** Position the special tool in the cutouts in the housing.
    Remove the differential bearing cone.

DISASSEMBLY (CONTINUED)

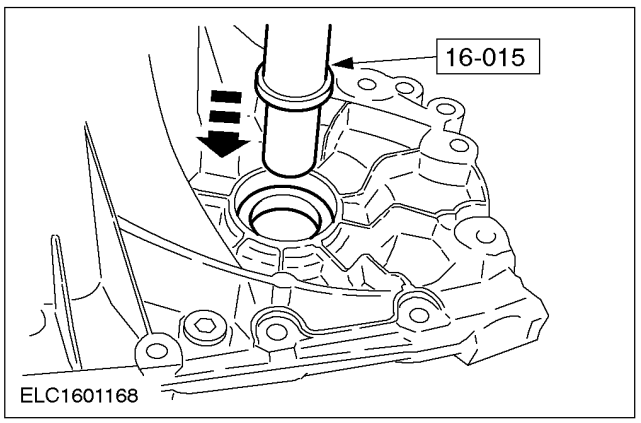

22. NOTE: Disc pack installation position (see following job step).
Remove the bearing cone.

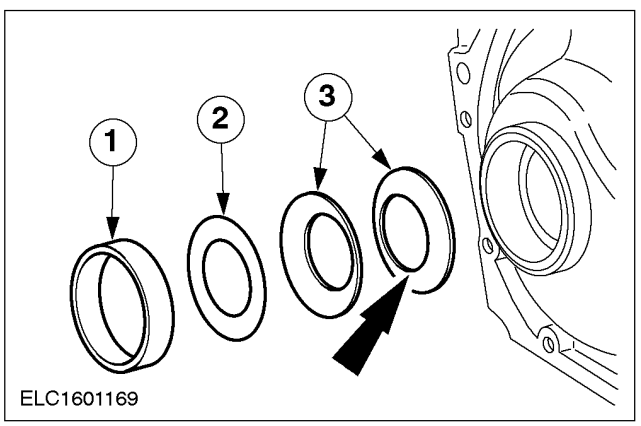

23. Order of installation of differential shim pack.
    1. Bearing cone
    2. Shim
    3. Spring washer

DISASSEMBLY AND ASSEMBLY OF SUBASSEMBLIES

Selector Plate (16 284 5)

Special Tool(s)	
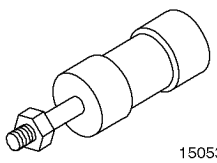 15053	Draw hammer 205-102 (15-053)

Special Tool(s)	
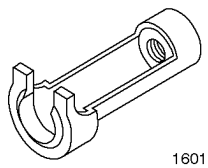 16019	Remover and installer, shift rod oil seal 308-040 (16-019)

Material	Specification
Universal sealant (Hylomar)	

Disassembly

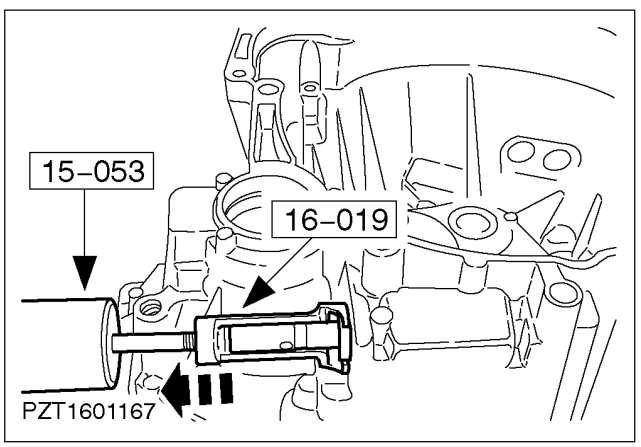

1. Remove the shift rod oil seal.
   - Pull off the boot.

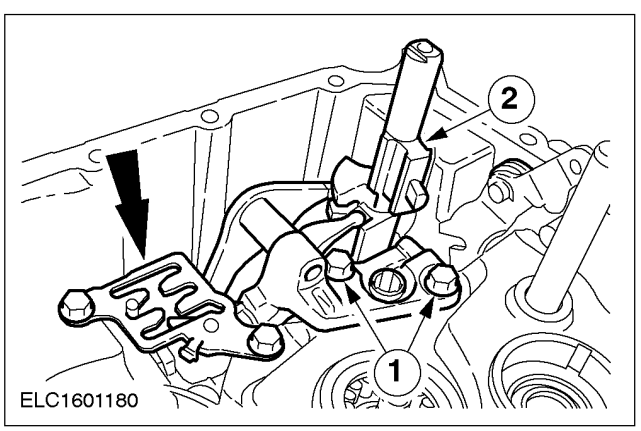

2. **CAUTION: The shift gate is set in production. If it is undone a Service shift gate must be installed in its place.**

   Remove the auxiliary shift rod.

   1. Remove the bolts from the relay lever mounting.
   2. Remove the auxiliary shift rod together with the relay levers.

DISASSEMBLY AND ASSEMBLY OF SUBASSEMBLIES (CONTINUED)

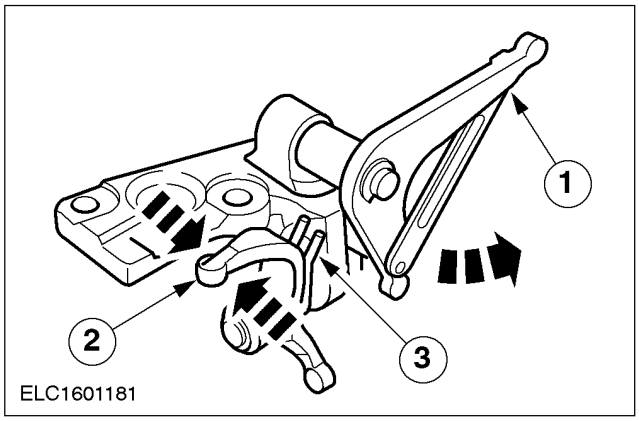

3. NOTE: Ease of movement and correct resetting to "neutral" position.

Check the relay levers and the detent mechanism.

1. Relay lever (shift)
2. Relay lever (select)
3. Return spring (shift mechanism neutral)

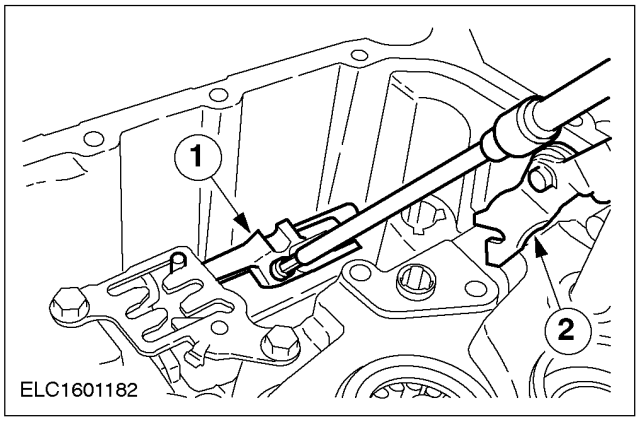

4. Remove the shift rod and the reverse gear shift lever.
   1. Detach the selector block from the shift rod (remove the bolt).
   - Pull out the shift rod and take out the selector block.
   2. Detach the snap-ring and remove the reverse gear shift lever with spring.

Assembly

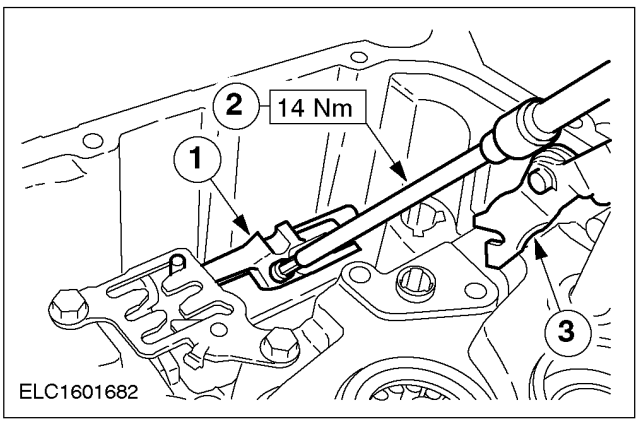

1. Install the shift rod and the reverse gear shift lever.
   1. Insert the selector block.
   - Introduce the shift rod.
   2. Coat the bolt with universal sealer (Hylomar) and screw in.
   3. Install the reverse gear shift lever and spring and fit the snap-ring.

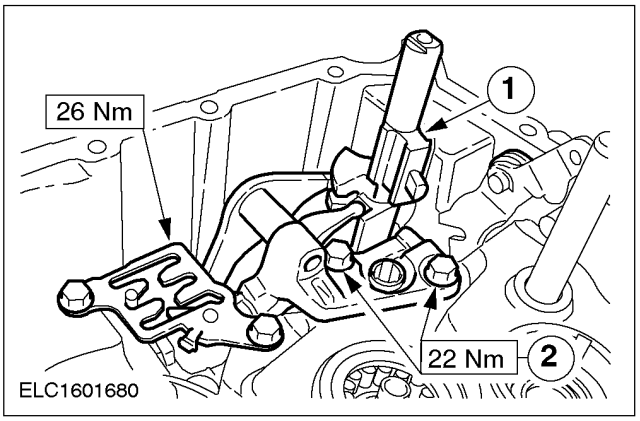

2. ⚠CAUTION: The shift gate is set in production. If it is undone, a service shift gate must be installed in its place.

Install the auxiliary shift rod.

1. Insert the auxiliary shift rod together with the relay levers.
2. Insert the bolts.

DISASSEMBLY AND ASSEMBLY OF SUBASSEMBLIES (CONTINUED)

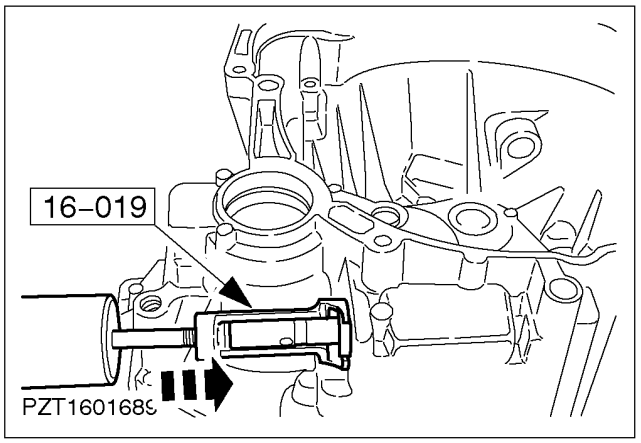

3. Install the shift rod oil seal.
   - Fit the boot.

DISASSEMBLY AND ASSEMBLY OF SUBASSEMBLIES

Input Shaft (16 146 5)

Special Tool(s)	
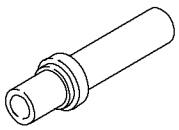 16015	Installer 308-045 (16-015)

General Equipment
Puller
Press

Material	Specification
Transmission fluid	BOT 130

Disassembly

CAUTION: Handle synchronizer rings and cones with care.

1. Pull off the ball bearing on the transmission end.
   1. Fit the snap-ring.
   2. Engage a proprietary puller under the snap-ring and pull off the ball bearing.

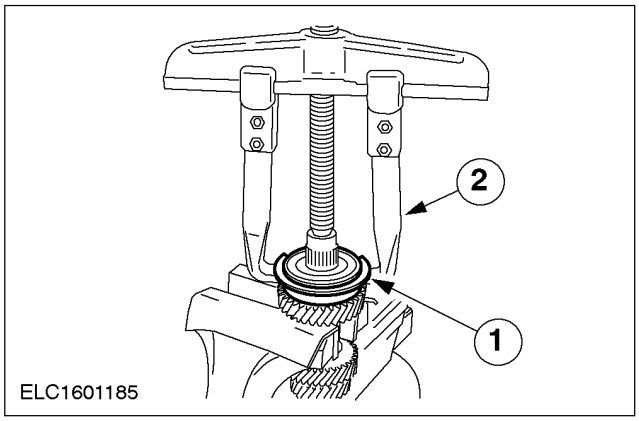

ELC1601185

2. Pull off the ball bearing on the clutch end.

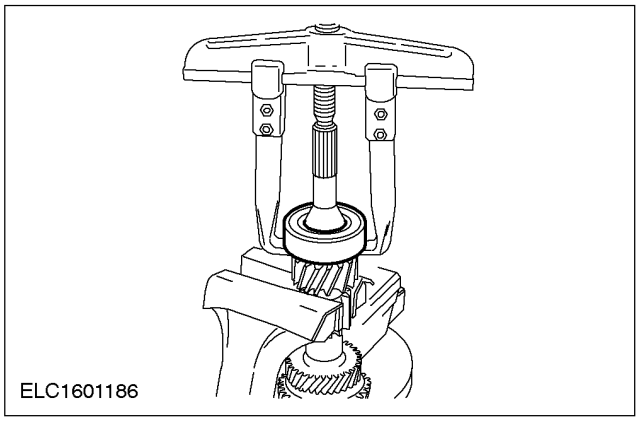
ELC1601186

Assembly

1. Carefully clean and check all parts and coat with transmission fluid before assembling.

DISASSEMBLY AND ASSEMBLY OF SUBASSEMBLIES (CONTINUED)

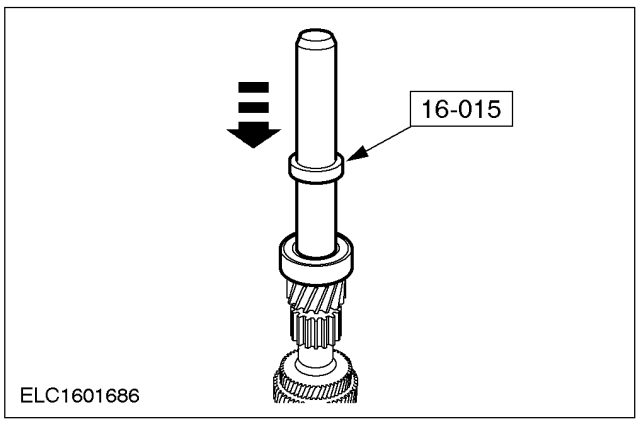

2. Press on the ball bearing (clutch end) with the workshop press.

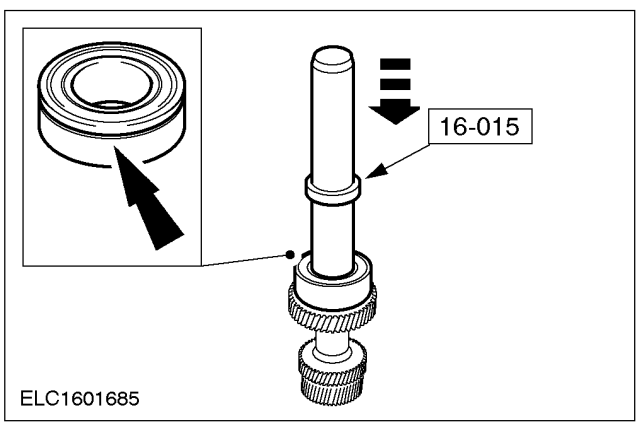

3. **NOTE:** The groove on the ball bearing should be towards the outside.
   Press on the ball bearing (transmission end) using the workshop press.

DISASSEMBLY AND ASSEMBLY OF SUBASSEMBLIES

Output Shaft

Special Tool(s)	
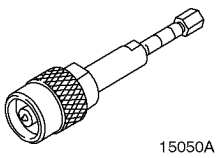 15050A	Remover, basic tool 205-295 (15-050A)
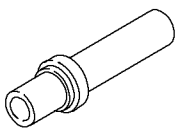 16015	Installer 308-045 (16-015)
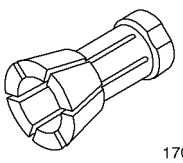 17048	Collet for 15-050 A 307-217 (17-048)

General Equipment
Puller
Press

Material	Specification
Transmission fluid	BOT 130

Disassembly

CAUTION: Handle synchronizer rings and cones carefully.

1. Detach the ball bearing and the 4th gearwheel.
   1. Detach the small snap ring.
   2. Remove the snap-ring.
   3. Pull off the ball bearing using a proprietary remover.
   4. Remove the 4th gearwheel and synchronizer ring.

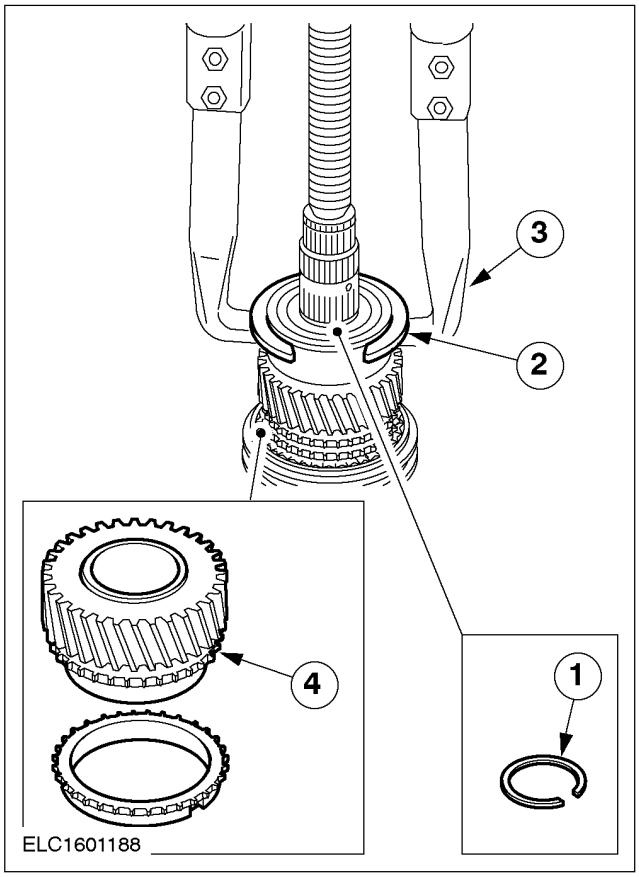

DISASSEMBLY AND ASSEMBLY OF SUBASSEMBLIES (CONTINUED)

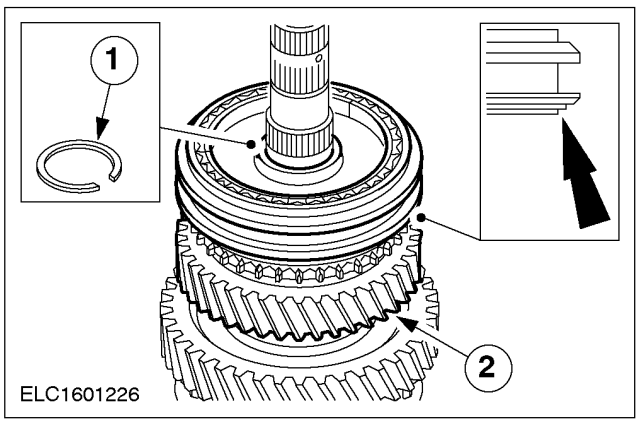

2. Detach the 3rd/4th gearwheel
   1. Detach the snap-ring.
   2. Remove the synchronizer clutch, the 3rd/4th gear synchronizer assembly and the 3rd gearwheel.

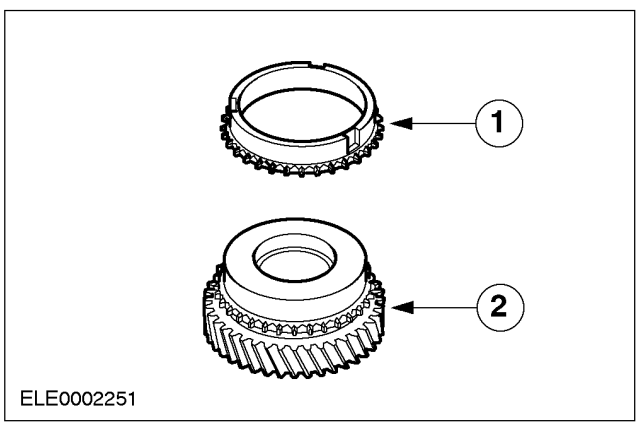

3. Remove the third gear synchronizer ring.
   1. Synchronizer ring
   2. Third gearwheel

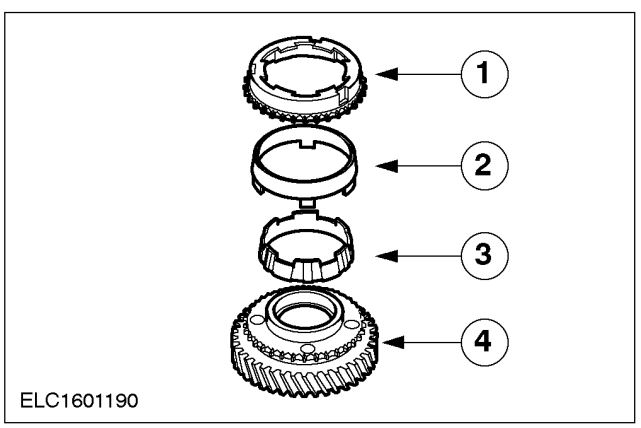

4. **NOTE:** Double synchronisation (as shown in the illustration) is used for service repairs. Dismantle the 3rd/4th gear synchronizer assembly.
   1. Outer synchronizer ring
   2. Synchronizer cone
   3. Inner synchronizer ring
   4. 3rd gearwheel

DISASSEMBLY AND ASSEMBLY OF SUBASSEMBLIES (CONTINUED)

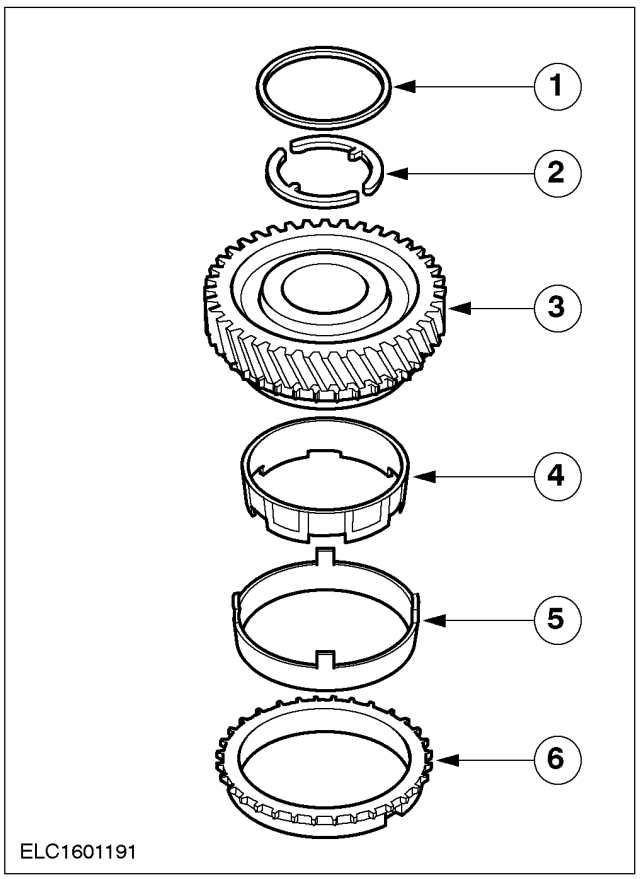

5. Detach the 2nd gearwheel and synchronizer assembly.
   1. Retaining ring
   2. Half rings
   3. 2nd gearwheel
   4. Inner synchronizer ring
   5. Synchronizer cone
   6. Outer synchronizer ring

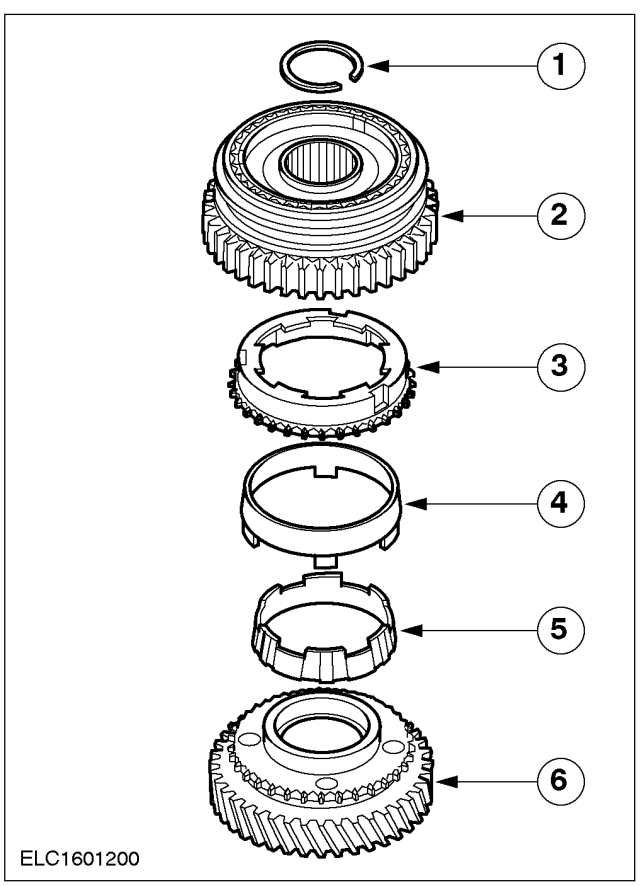

6. **NOTE:** Detach the 1st gearwheel and synchronizer assembly together.
   Detach the 1st gearwheel and the reverse gearwheel together with the synchronizer clutch and synchronizer assembly.
   1. Detach the snap-ring.
   2. Take off the 1st/2nd gear synchronizer clutch with the reverse gearwheel.
   3. Outer synchronizer ring
   4. Synchronizer cone
   5. Inner synchronizer ring
   6. Gearwheel - 1st gear

DISASSEMBLY AND ASSEMBLY OF SUBASSEMBLIES (CONTINUED)

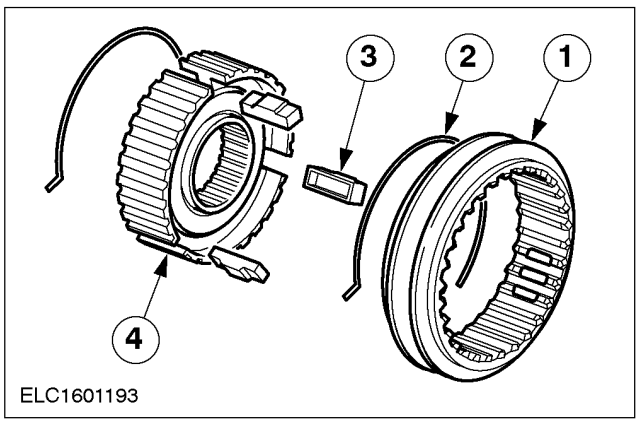

7. **CAUTION: Mark the components to show the way the shift ring and synchronizer clutch hub fit together.**
   Dismantle the synchronizer assembly.
   1. Shift ring
   2. Synchronizer spring
   3. Blocker bar
   4. Synchronizer clutch hub

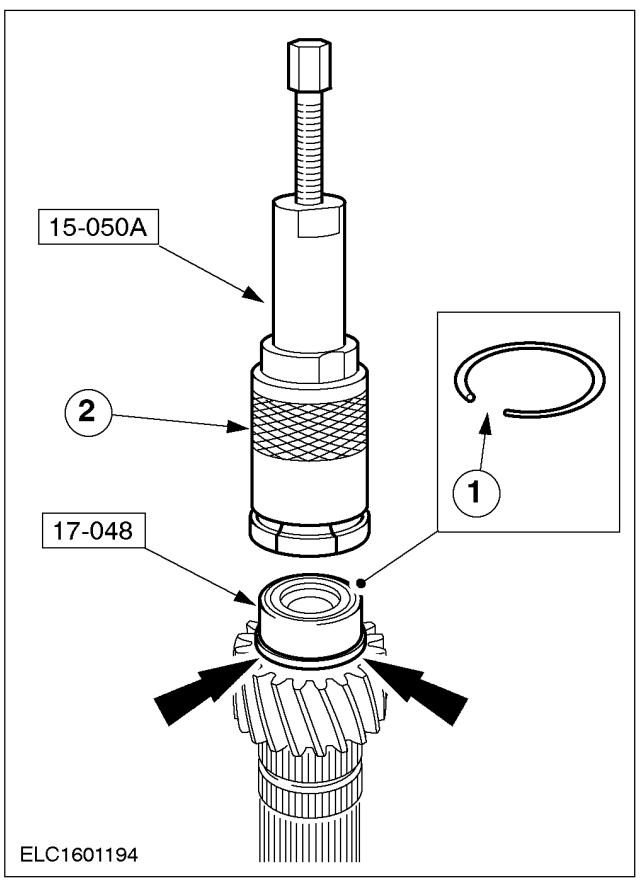

8. **NOTE:** Insert the thrust ring into the oil slinger bore.
   Detach the output shaft bearing cone.
   1. Remove the snap-ring.
      - Locate the expanding claws underneath the bearing cone.
   2. Pull off the bearing cup.

Assembly

CAUTION: Lay the double synchronizer units in transmission fluid before installing them.

1. Carefully clean and check all sliding parts and coat with transmission fluid before assembling.

DISASSEMBLY AND ASSEMBLY OF SUBASSEMBLIES (CONTINUED)

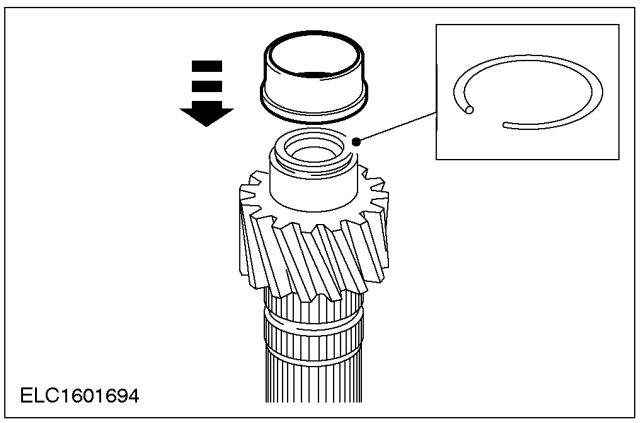

2. Fit the output shaft bearing cone.
   - Heat the bearing cone evenly to about 80 °C and slide it onto the output shaft.
   - Fit the snap-ring.

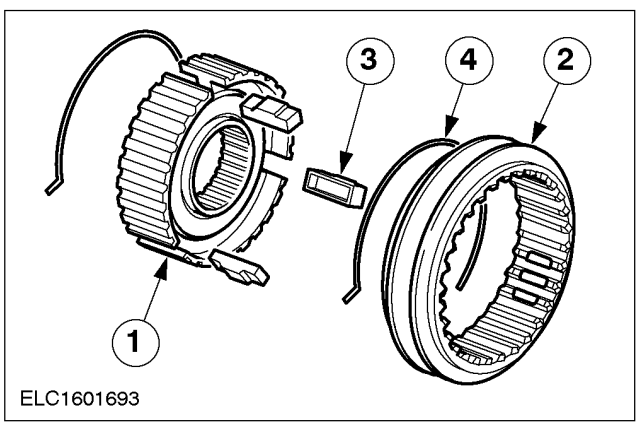

3. NOTE: Assembly markings on the shift ring and synchronizer clutch hub.

Assemble the synchronizer clutch.

1. Synchronizer clutch hub
2. Place the shift ring onto the synchronizer clutch hub.
3. Install the blocker bar.
4. Install the synchronizer spring.

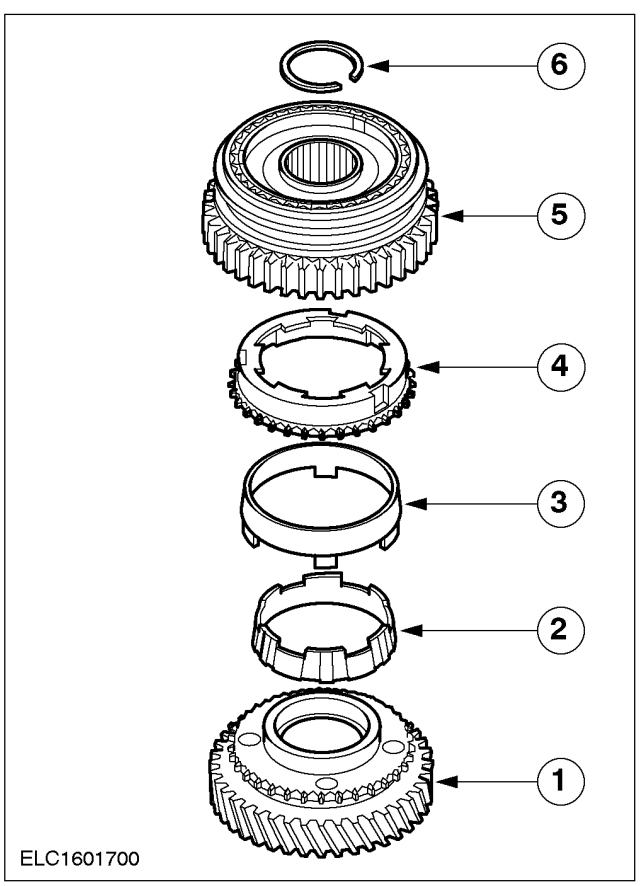

4. Fit the 1st gearwheel and the reverse gearwheel with the synchronizer clutch and synchronizer assembly on the output shaft.
   1. 1st gearwheel
   2. Inner synchronizer ring
   3. Synchronizer cone
   4. Outer synchronizer ring
   5. 1st/2nd gear synchronizer clutch with reverse gearwheel
   6. Snap-ring

DISASSEMBLY AND ASSEMBLY OF SUBASSEMBLIES (CONTINUED)

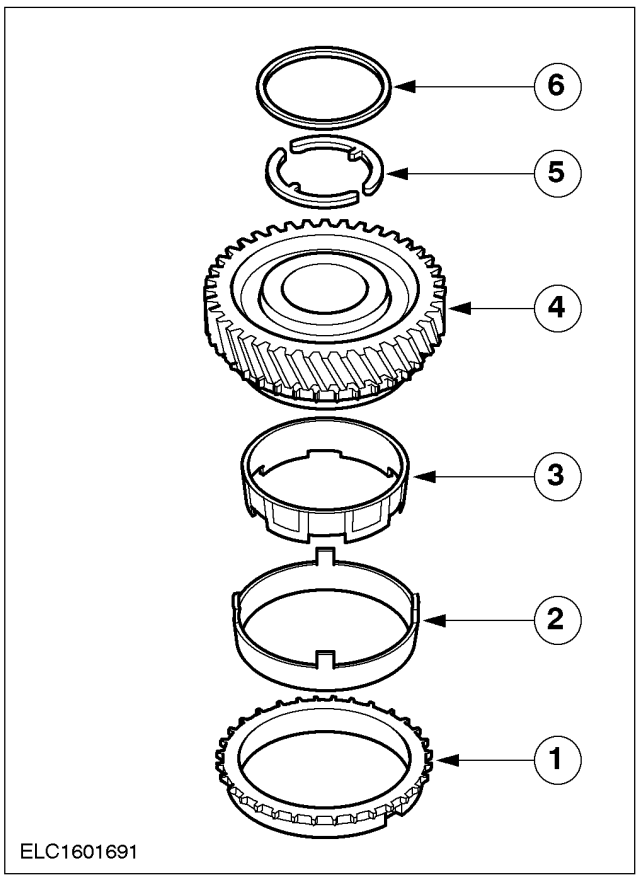

5. NOTE: Assembly the synchronizer before fitting it.

Fit the 2nd gearwheel and synchronizer assembly on the output shaft.

1. Outer synchronizer ring
2. Synchronizer cone
3. Inner synchronizer ring
4. 2nd gearwheel
5. Half rings
6. Retaining ring

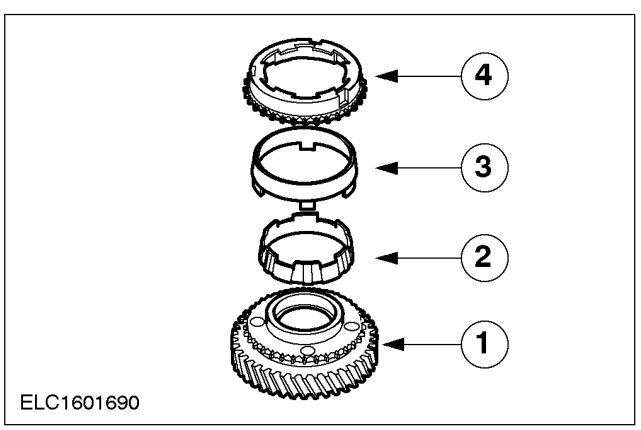

6. NOTE: Double synchronizer shown - is used for servicing.

Assemble the 3rd/4th gear synchronizer.

1. 3rd gearwheel
2. Inner synchronizer ring
3. Synchronizer cone
4. Outer synchronizer ring

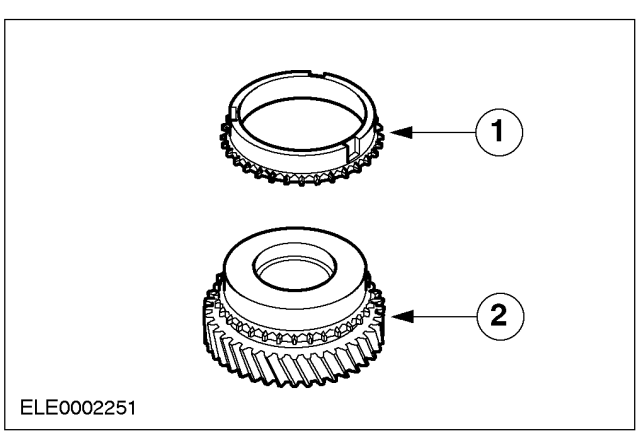

7. Fit the third gear synchronizer ring.
   1. Synchronizer ring
   2. Third gearwheel

DISASSEMBLY AND ASSEMBLY OF SUBASSEMBLIES (CONTINUED)

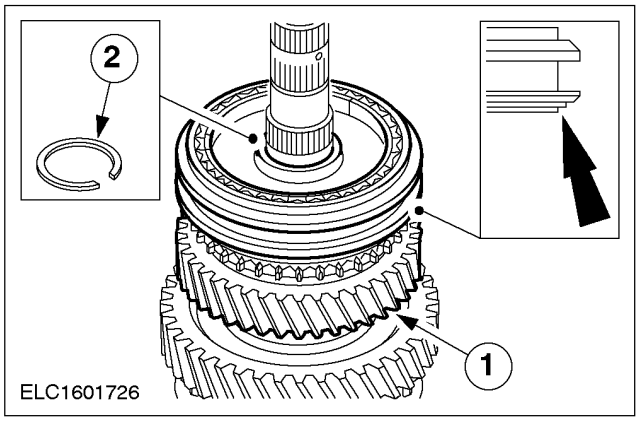

8. NOTE: Fit the shift ring with the annular groove downwards and the smaller collar on the hub upwards.

Fit the 3rd/4th gear synchronizer

1. Put on the synchronizer clutch, the 3rd/4th gear synchronizer assembly and the 3rd gearwheel.
2. Fit the snap-ring.

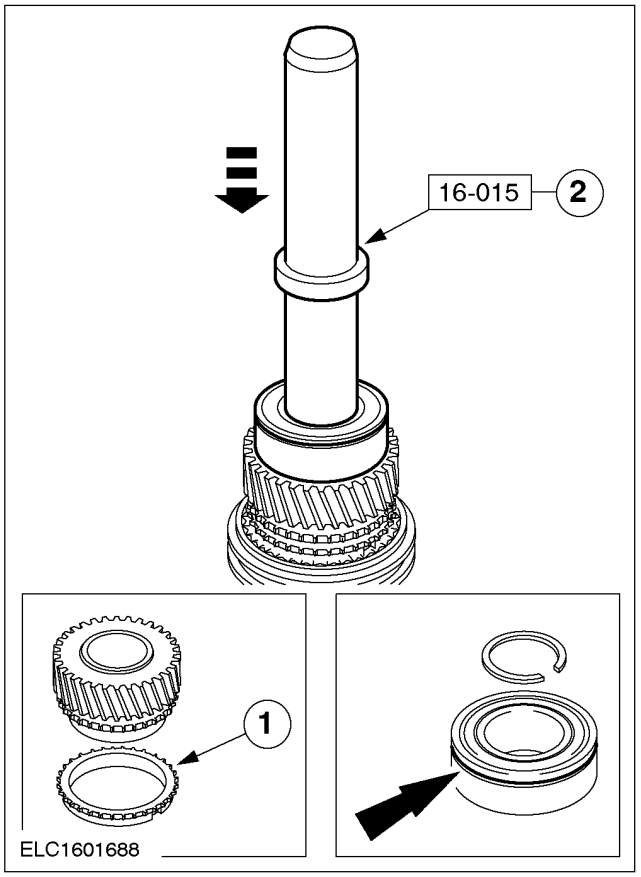

9. NOTE: Fit the ball bearing with the annular groove towards the outside.

Fit the 4th gearwheel and the ball bearing.

1. Put on the 4th gear synchronizer ring and the 4th gearwheel.
2. Press on the ball bearing using the workshop press.

- Fit the snap-ring.

DISASSEMBLY AND ASSEMBLY OF SUBASSEMBLIES

Differential

Special Tool(s)	
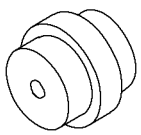 1403801	Thrust pad 204-158-01 (14-038-01)
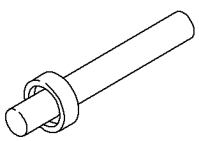 15025A	Installer, differential bearing 205-062 (15-025A)
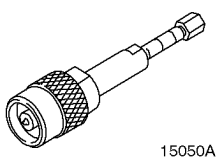 15050A	Remover, basic tool 205-295 (15-050A)

Special Tool(s)	
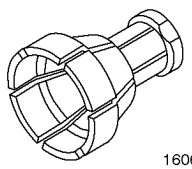 16062	Collet for 15-050 A 308-197 (16-062)

General Equipment
Press

Material	Specification
Transmission fluid	BOT 130

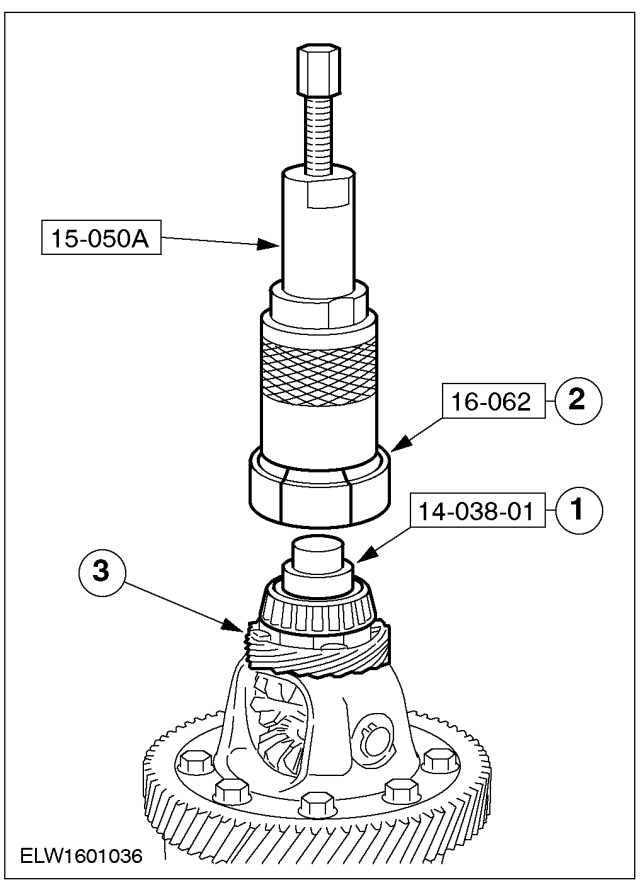

Disassembly

1. Pull the taper roller bearings off the differential assembly.
   1. Insert the thrust ring.
   2. Pull off both taper roller bearings.
   3. Remove the sensor ring for the vehicle speed sensor (VSS)

DISASSEMBLY AND ASSEMBLY OF SUBASSEMBLIES (CONTINUED)

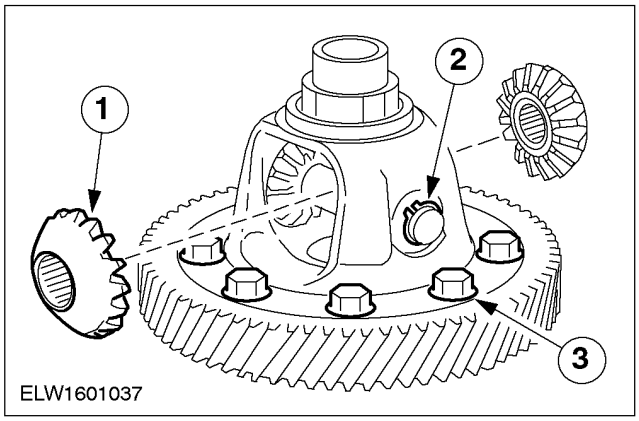

2. Remove the differential pinions.
   1. Turn the front drive halfshaft pinion gears through 90 degrees in the differential cage and remove them.
   2. Remove the snap-ring and drive out the shaft.
   - Take out the two differential pinions and the plastic thrust washers.
   3. Remove the eight bolts and drive the crown wheel evenly off the differential cage.

Assembly

1. NOTE: Do not oil taper roller bearings, which are going to be re-used. New taper roller bearings may be fitted without lubricating them.
Carefully clean and check all parts and coat with transmission fluid before assembling.

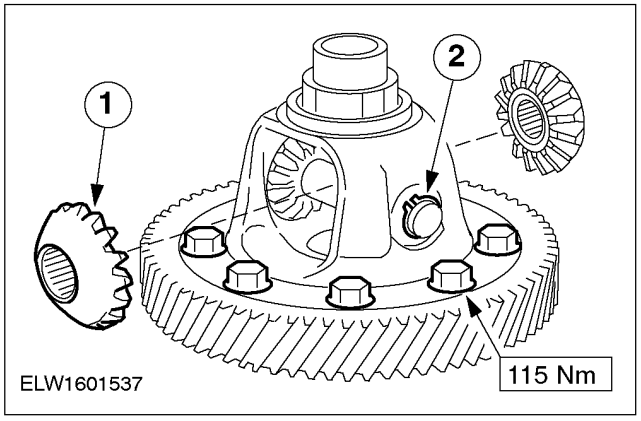

2. Install the differential pinions.
   1. Pull on the crown wheel evenly using the old bolts.
   - Position the plastic thrust washers and the differential pinions.
   2. Drive in the spindle and fit the snap-ring.
   3. Insert the front drive halfshaft pinion gears and turn them through 90 degrees in the differential cage.

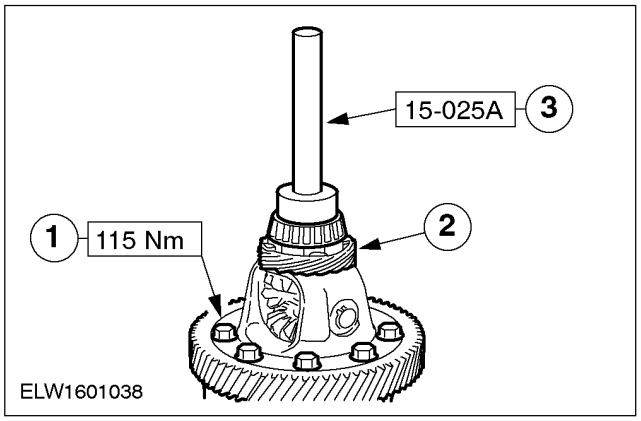

3. NOTE: The speedometer drive wheel must engage in the cutouts in the differential cage. Use new crown wheel bolts.
Install the taper roller bearings and screw in the eight crown wheel bolts.
   1. Tighten the crown wheel bolts evenly, working diagonally.
   2. Put on the VSS sensor ring.

NOTE: Do not use the lower taper roller bearing for support.
   3. Press on both taper roller bearings using the workshop press.

ASSEMBLY

Transaxle (16 118 8)

Special Tool(s)	
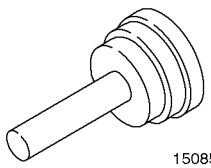 15085	Installer, differential bearing 205-296 (15-085)
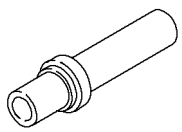 16015	Installer, bush and transmission extension oil seal 308-045 (16-015)
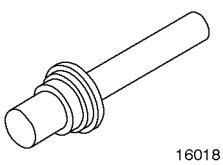 16018	Drive halfshaft oil seal installer 308-039 (16-018)
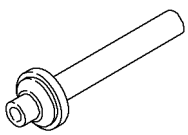 16020	Installer, bearing cone 308-041 (16-020)
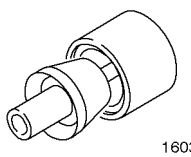 16031	Replacer, snap-ring 308-076 (16-031)

Special Tool(s)	
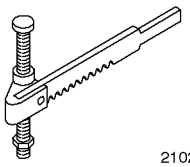 21024	Valve spring compressor 303-060 (21-024)
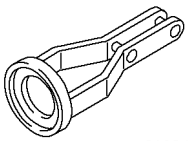 2102402	Adapter for 21-024 303-060-02 (21-024-02)
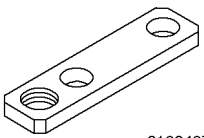 2102407	Adapter for 21-024 303-060-07 (21-024-07)

General Equipment
Press
Dial gauge
Magnetic fixture

Material	Specification
Universal sealer (Hylomar)	
End cap sealer	WSE-M4G323-A4
Sealant, transmission housing	WSK-M2G348-A5
Transmission fluid	BOT 130

Assembly

1. Carefully clean and check all components before assembly.
   - Coat all sliding parts with transmission fluid.

ASSEMBLY (CONTINUED)

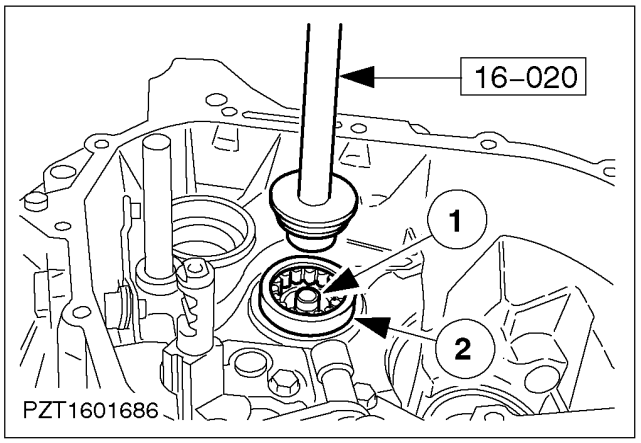

2. Install the output shaft roller bearing with bearing cone.
   1. Fit the oil slinger.
   2. Drive in the roller bearing as far as the stop.

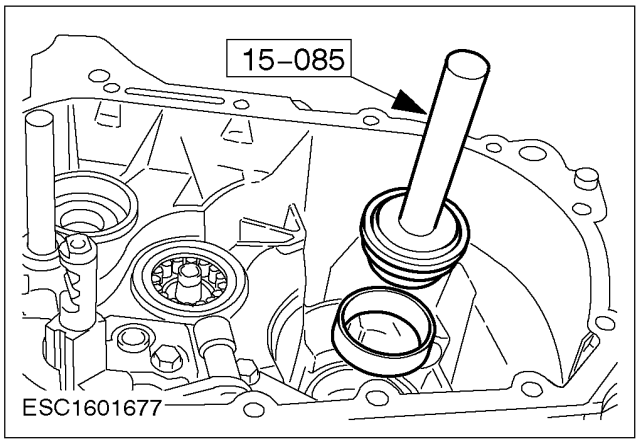

3. Fit the differential bearing cone.

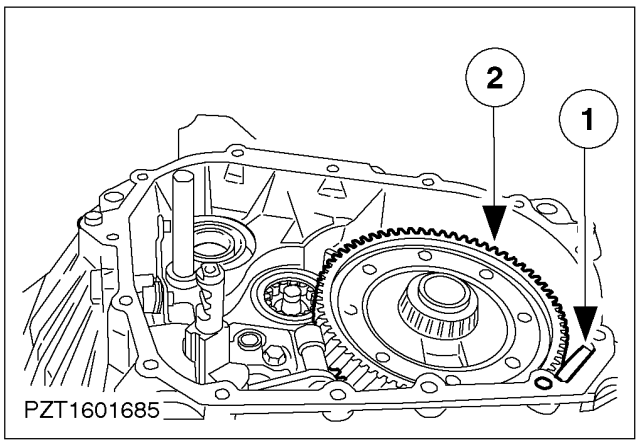

4. Install the differential assembly and permanent magnet.
   1. Permanent magnet
   2. Differential

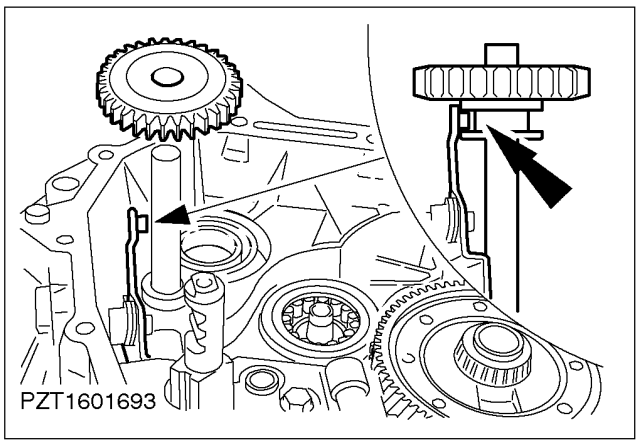

5. **NOTE:** Correct location of the reverse gear idler
   Put on the reverse gear idler.

ASSEMBLY (CONTINUED)

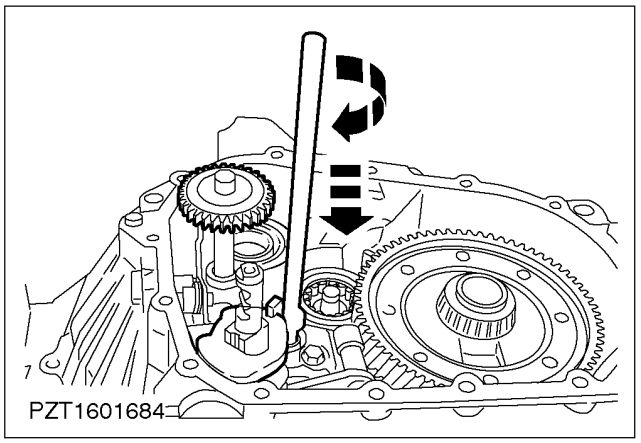

6. Fit the shift rod with the locking plate.

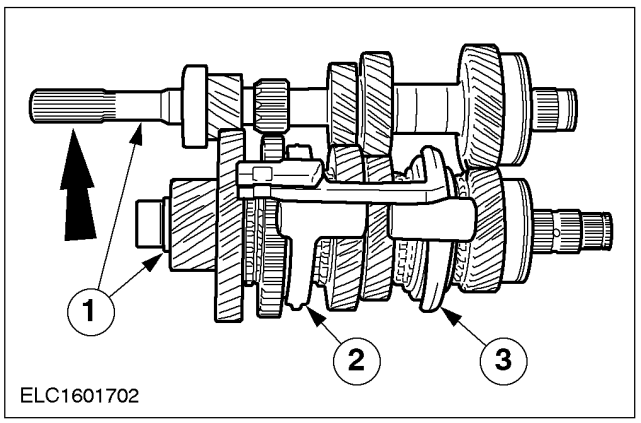

7. Prepare input and output shaft for installation.
   1. Bring the input shaft and output shaft into mesh with one another.
   2. Move the 1st/2nd gear selector fork into position.
   3. Move the 3rd/4th gear selector fork into position.

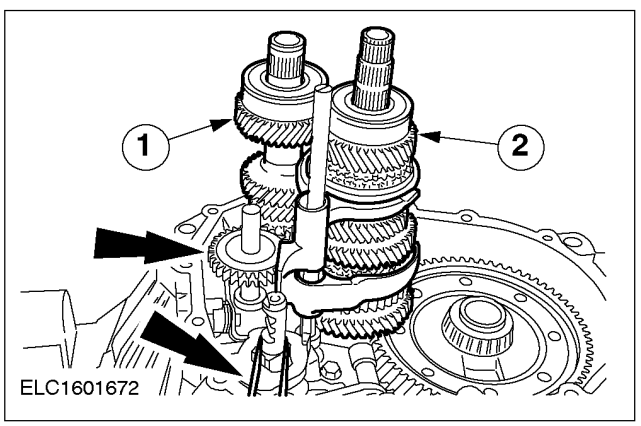

8. Install the input shaft and output shaft.
   - Attach a rubber band to the auxiliary shift rod as an aid to assembly.
   1. Guide the input shaft in about 50 mm and angle it slightly to the side.
   2. Put in the output shaft to about the same level as the input shaft and engage the gearwheel teeth again.
   - Move the input and output shafts into their final positions.

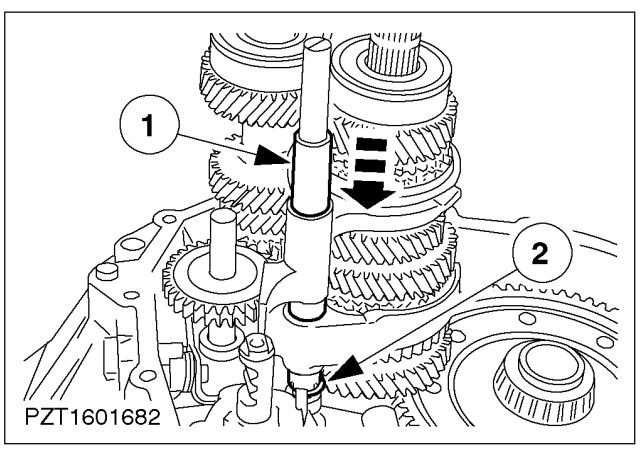

9. Install the shift rod guide sleeve.
   1. Slide the guide sleeve into position.
   2. Fit the lower snap-ring.

ASSEMBLY (CONTINUED)

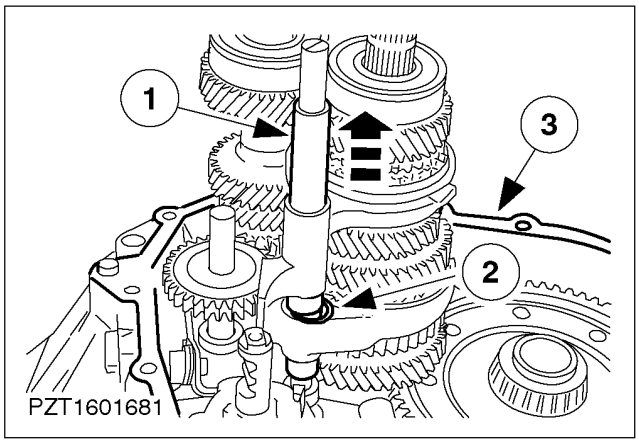

10. Fit the shift rod guide upper snap-ring.
    1. Raise the guide sleeve.
    2. Install the upper snap-ring.
    3. Fit the housing gasket.
    - Move the inner selector mechanism into 5th gear position (the 5th gear selector rod moves downwards).

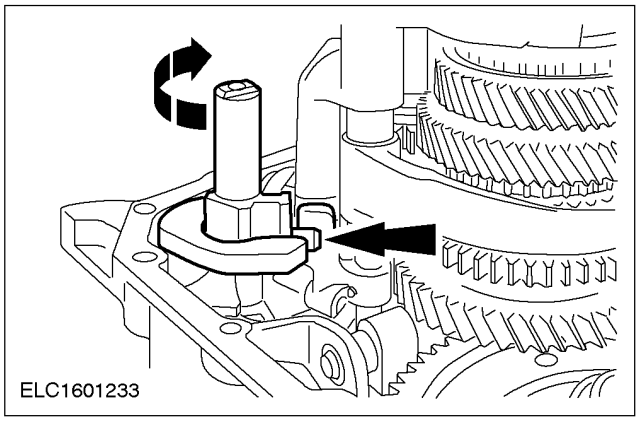

11. Move the inner selector mechanism into 5th gear.
    - Turn the auxiliary shift rod clockwise until the reverse/5th gear gate is reached.

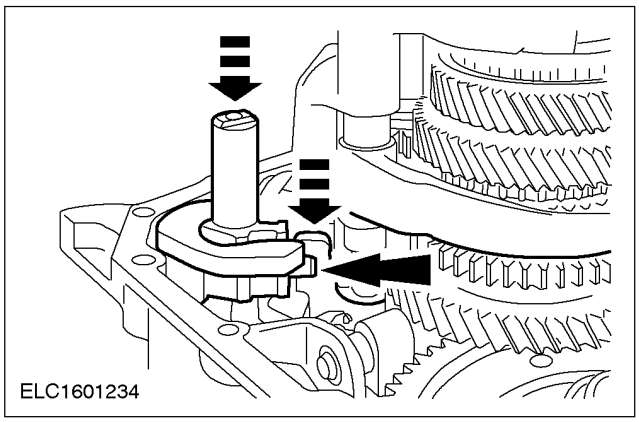

12. Move the inner gearshift linkage into 5th gear.
    - Press the auxiliary shift rod down together with the shift rod.

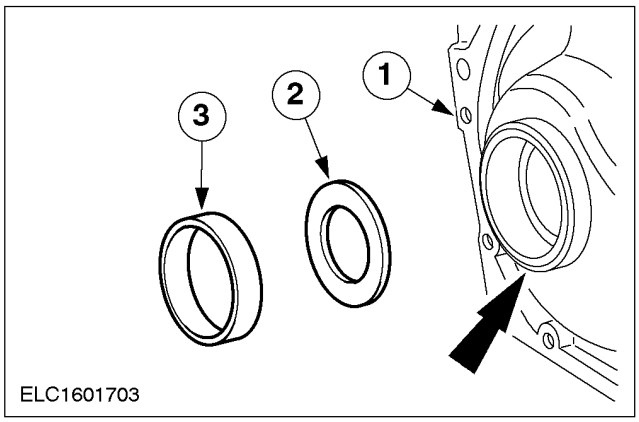

13. Fit the measuring shim and secure it with a blow from a punch.
    1. Transmission housing
    2. Measuring shim (3,8 mm thick)
    3. Bearing cone

ASSEMBLY (CONTINUED)

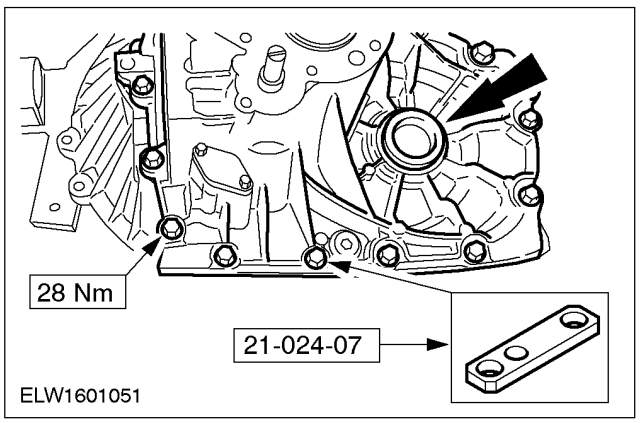

14. ⚠ **CAUTION: On transmissions without liquid sealers the transmission gasket must be in place for the following measurement.**
    Assemble the transmission housing.
    - Fit the special tool with the longer bolt.
    - Fit the auxiliary plug.
    - Tighten the bolts.
    - Turn the transmission through 180 degrees.

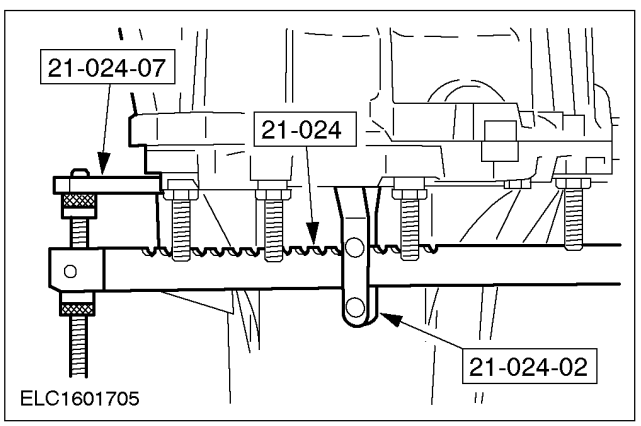

15. Fit the special tool.
    - Remove the assembly plug.

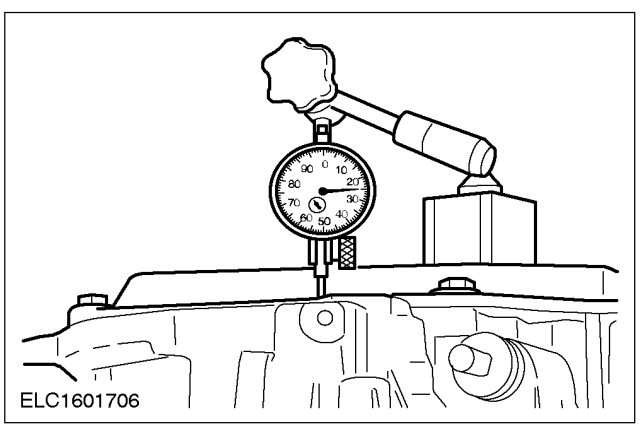

16. Prepare the differential for measuring.
    - Rotate the differential at least 10 revolutions to settle the bearings.
    - Put the dial gauge in position with the magnetic fixture and zero it.

ASSEMBLY (CONTINUED)

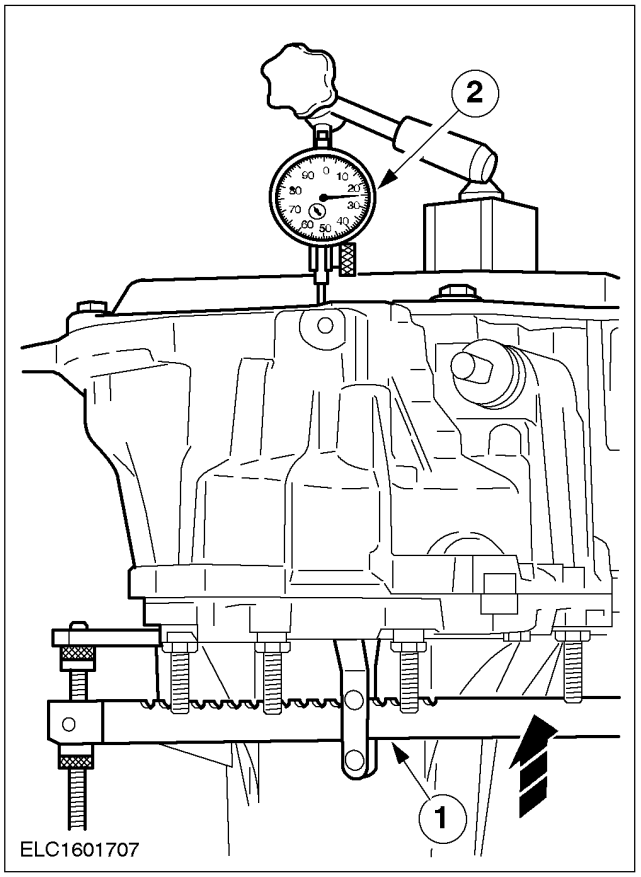

17. NOTE: Carry out steps and three times and calculate the average measurement.
Measure the differential end float.

1. Lift the differential assembly using the special tool.
2. Read off the measurement.

- Example:
- 1st measurement: 0,73 mm
- 2nd measurement: 0,74 mm
- 3rd measurement: 0,72 mm
- Average = 0,73 mm + 0,74 mm + 0,72 mm / 3 = 0,73 mm.
- The shim thickness should be rounded down up to 0.05 mm and rounded up from 0.06 mm.
- The shims are available in thicknesses from 0,1 mm to 1,1 mm in increments of 0,1 mm.
- Continue with step 18

18. Establish the required adjustment shim (example).
    - Thickness of the adjustment shim =
    - measuring shim (3,80 mm) +
    - average value (0,73 mm) +
    - bearing preload (0,40 mm) -
    - thickness of the Belleville washers (4,42 mm) =
    - 3,80 mm + 0,73 mm + 0,40 mm - 4,42 mm = 0,51 mm.
    - The resulting adjustment shim thickness is 0,51 mm, which is rounded down to 0,5 mm.

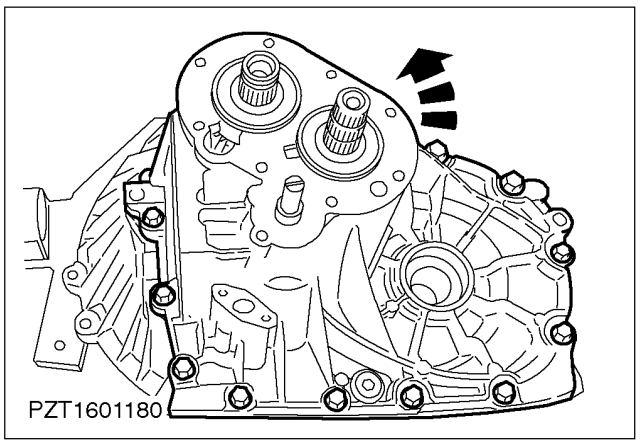

19. Separate the transmission housing halves
    - Insert the upper assembly plug.
    - Turn the transmission through 180 degrees.
    - Detach the dial gauge, magnetic fixture and special tool.

ASSEMBLY (CONTINUED)

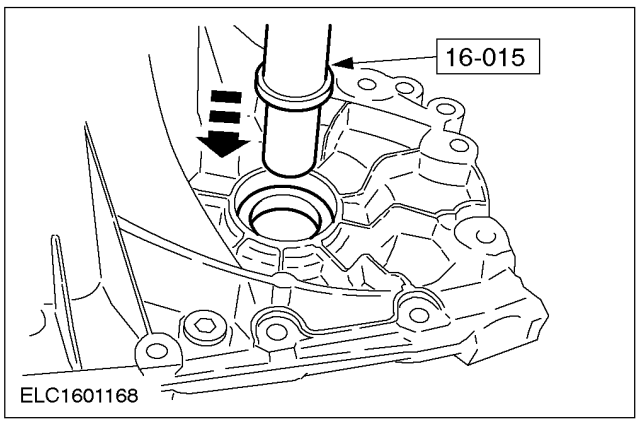

20. Remove the bearing cone with the measuring shim.

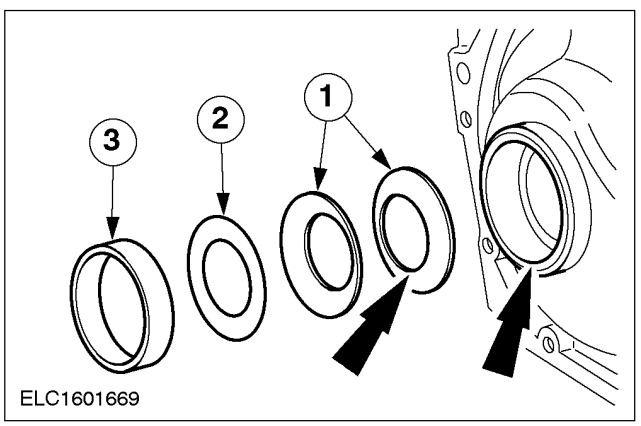

21. NOTE: The Belleville washers are inserted with the inside edges touching.

Fit the required shim and secure it with a blow from a punch.

1. Spring washers
2. Required shim
3. Fit the bearing cone and secure it with a blow from a punch on the edge of the housing.

22. On transmissions with a black end cover apply transmission housing sealer evenly to the mating faces of the transmission housing halves.

NOTE: On transmissions without liquid sealer note the installation position of the housing gasket.

NOTE: Tighten the studs to 33 Nm.

23. Put the housing parts together and tighten the bolts evenly.

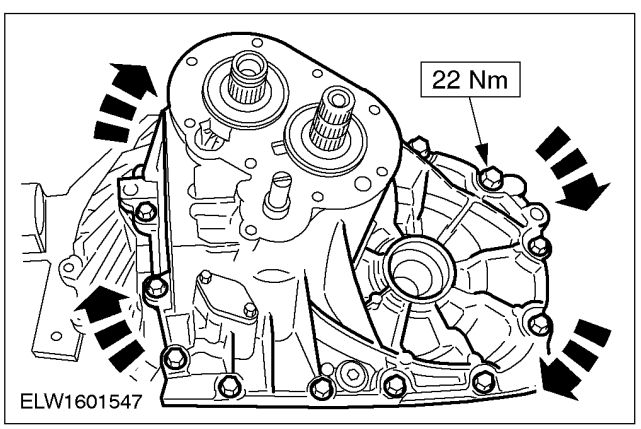

ASSEMBLY (CONTINUED)

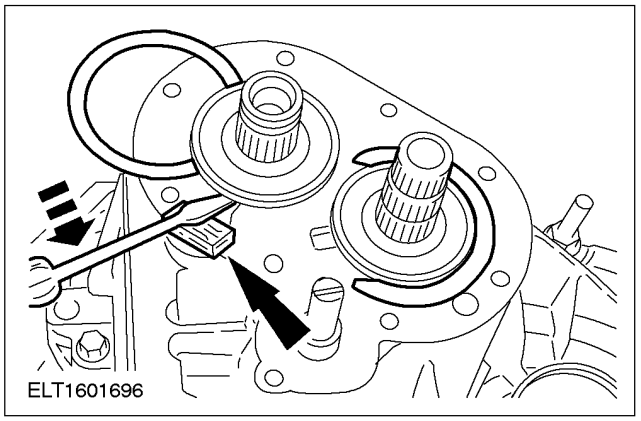

24. NOTE: Use a wooden support.
Fit the snap-rings for the input and output shafts.

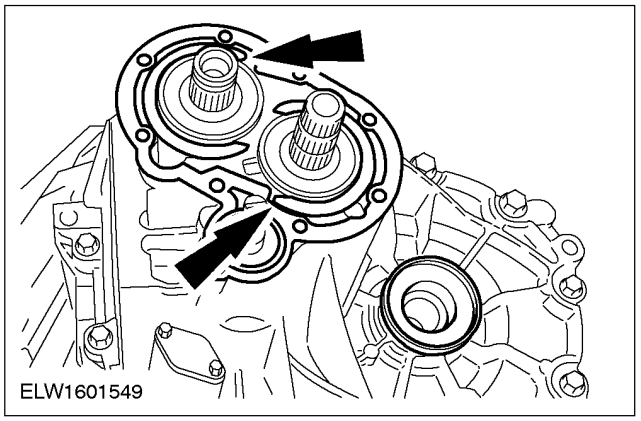

25. NOTE: Turn the snap-rings so that these lie in the recesses in the gasket.
Fit the gasket.

- Insert the assembly plug.

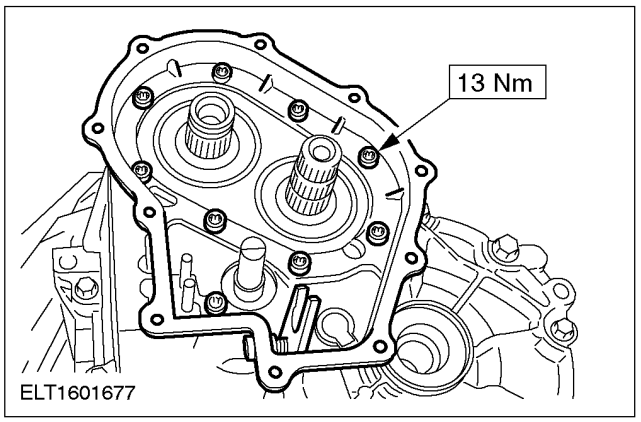

26. Install the 5th gear housing.

CAUTION: Detach the transmission from the assembly stand and carry out the following steps on the press.

ASSEMBLY (CONTINUED)

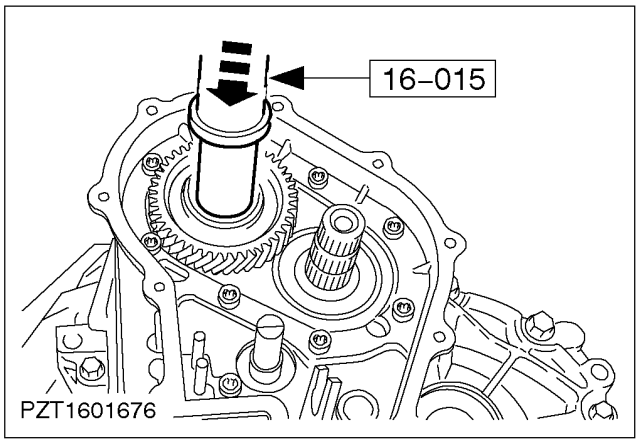

27. NOTE: The transmission housing must not sit on the press table. Support the assembly on the splined clutch input shaft on the press table.

Press the 5th gearwheel onto the input shaft using the workshop press.

- Detach the transmission from the assembly stand.
- Press on the 5th gearwheel using the workshop press.
- Mount the transmission on an assembly stand.

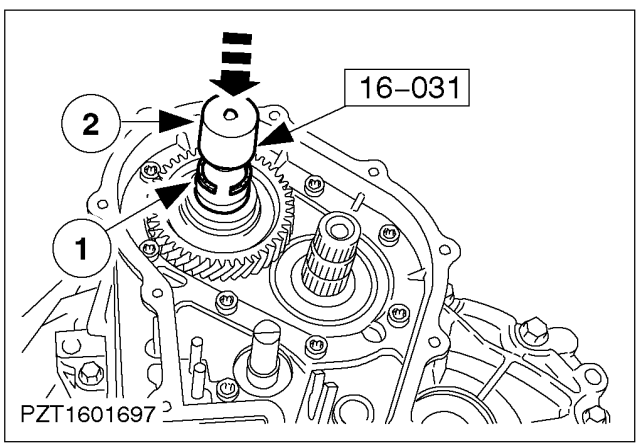

28. Fit the 5th gearwheel snap-ring.
    1. Fit the snap-ring on the special tool.
    2. Put the special tool in place and drive on the snap-ring.

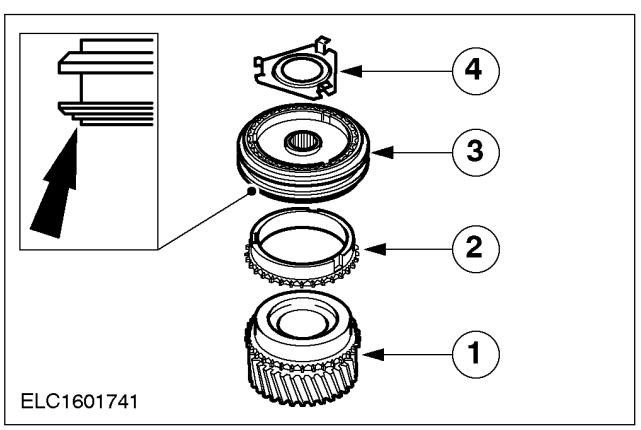

29. NOTE: Marking showing the correct assembly position of the synchronizer clutch.

Assemble the 5th gear synchronizer clutch.

1. 5th gearwheel
2. Synchronizer ring
3. Synchronizer clutch
4. Retaining plate

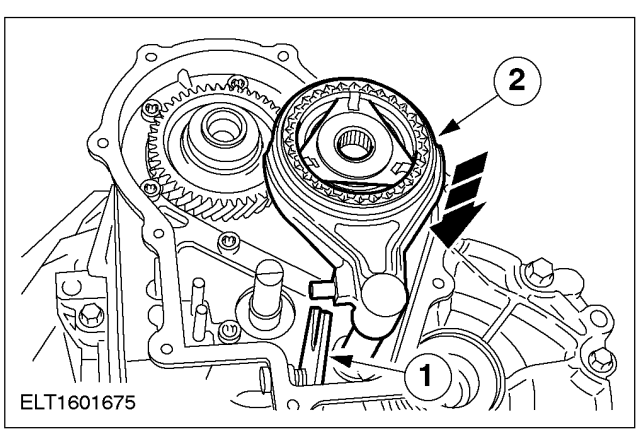

30. Install the 5th gear synchronizer assembly together with the selector fork.
    1. Swivel the lever upwards.
    2. Slide on the 5th gear synchronizer assembly until it reaches the actuator.

ASSEMBLY (CONTINUED)

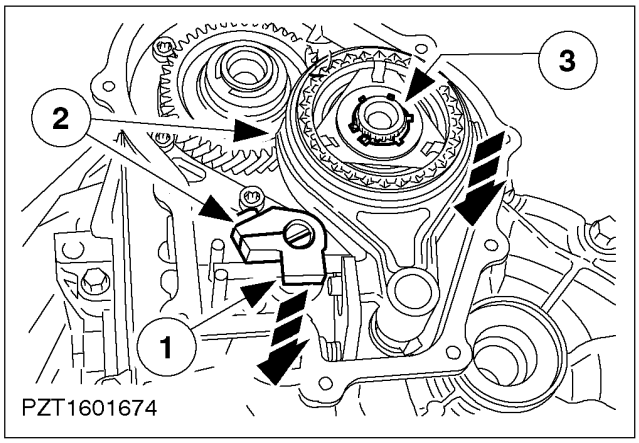

31. NOTE: Do not tighten the selector finger bolt yet.

Install the selector finger and the snap-ring.

1. Insert the selector finger.
2. Move the selector finger and 5th gear synchronizer unit into position together.
3. Fit the 5th gear synchronizer snap-ring.

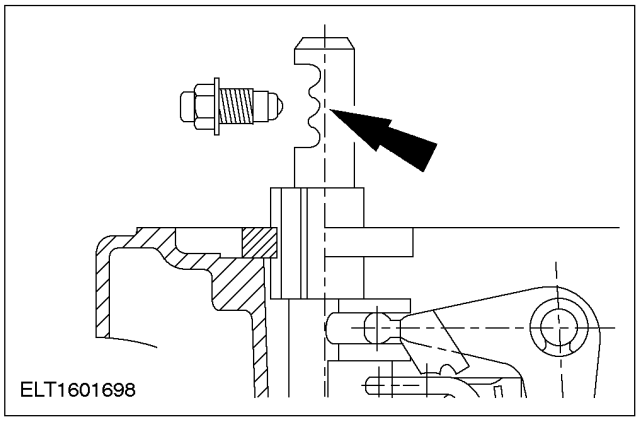

32. NOTE: Only fit in the neutral position.

Installation setting of the auxiliary shaft detent mechanism.

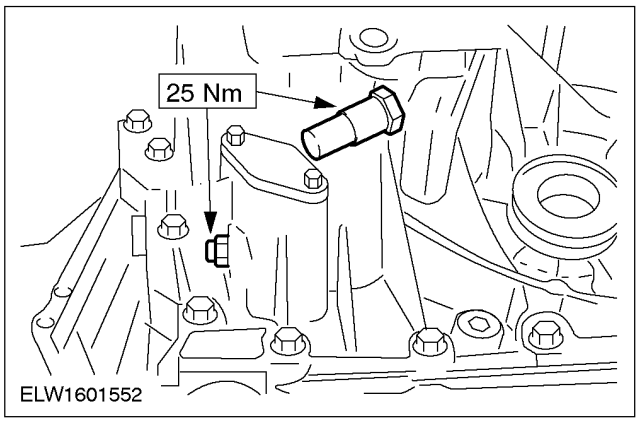

33. Fit the detent mechanisms.
    - Coat the thread with universal sealer (Hylomar).

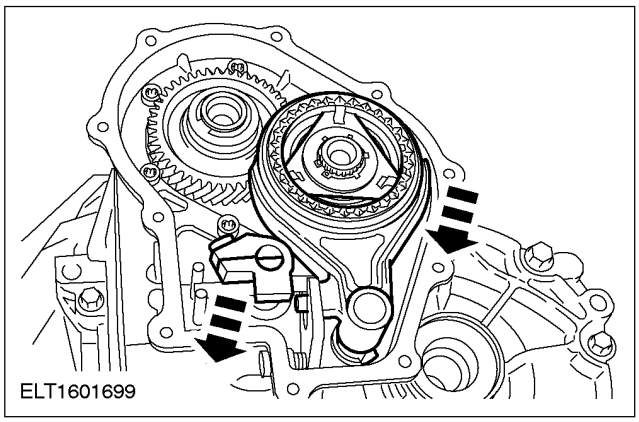

34. Engage fifth gear.
    - Press the selector fork and selector finger down together.

ASSEMBLY (CONTINUED)

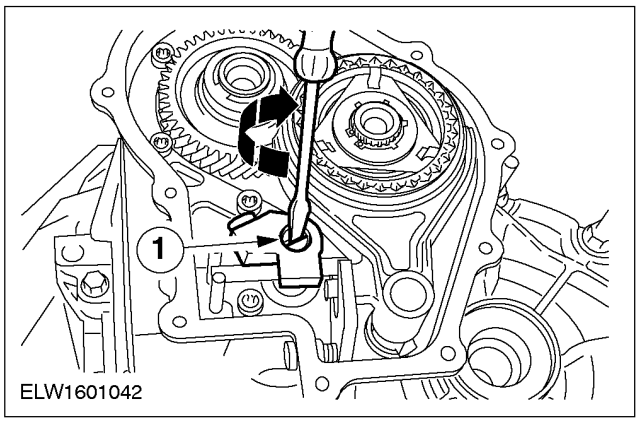

35. Engage fifth gear.
    - Turn the fifth gearshift rod clockwise as far as the stop.

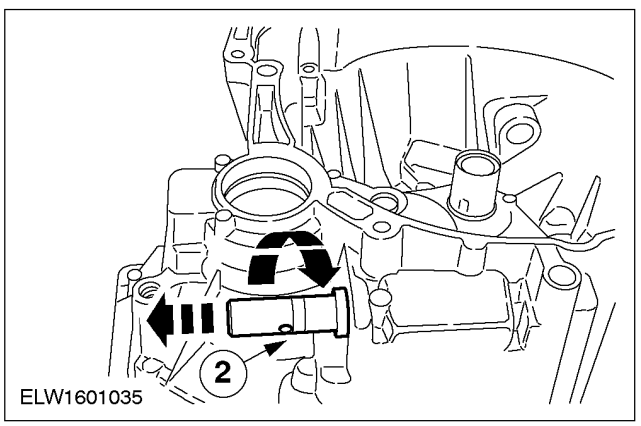

36. Engage fifth gear.
    - Turn the main shift rod clockwise as far as the stop and pull it out.

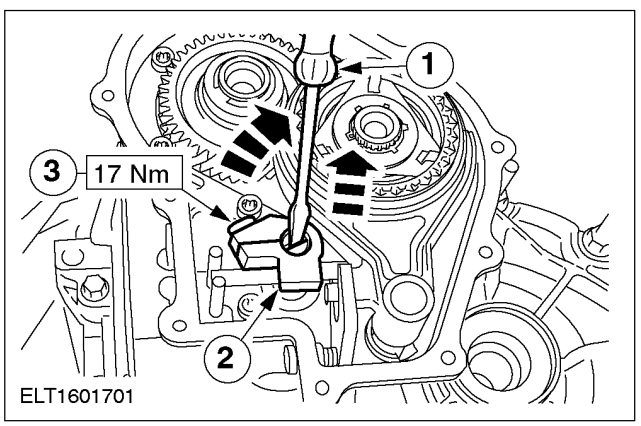

37. Adjust the selector finger.
    1. Turn the main shift rod clockwise and press it down.
    2. Remove the end float of the selector finger by lifting it.
    3. Tighten the bolt in this position.

38. On transmissions with a black end cover apply end cover sealer evenly to the mating face of the end cover.

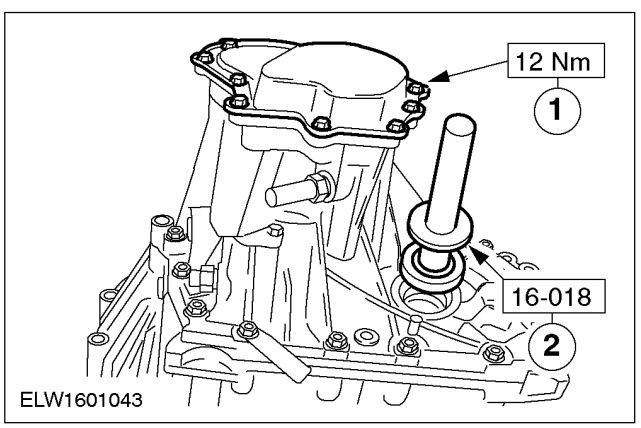

39. Fit the cover and install the input shaft oil seal.
    1. Fit the end cover with the gasket.
    2. Drive in the input shaft oil seal until it is felt to reach its stop.
    - Fit the assembly plug.

ASSEMBLY (CONTINUED)

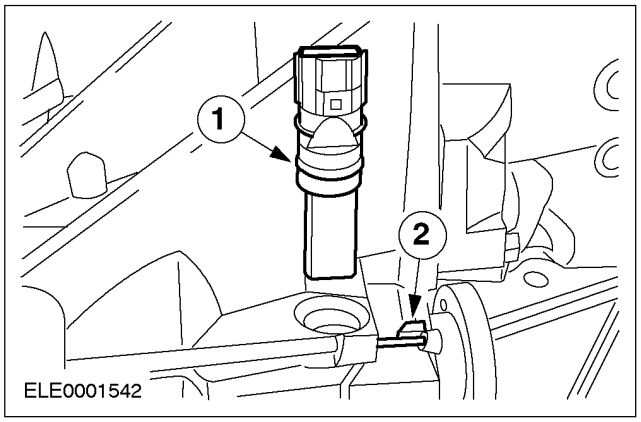

40. Install the vehicle speed sensor (VSS).
    1. Insert the VSS.
    2. Insert the retaining pin.

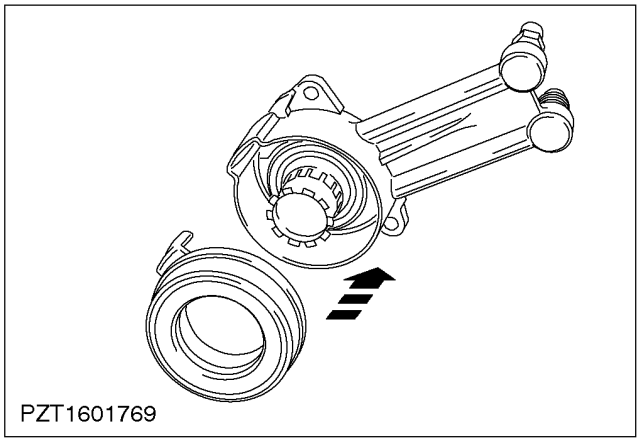

42. Install the clutch release bearing in the clutch slave cylinder.

All vehicles

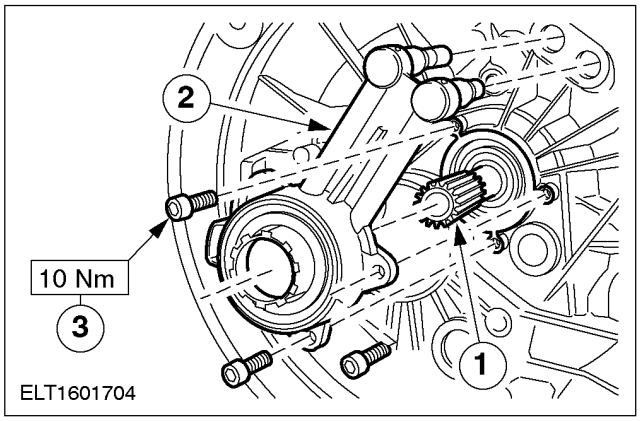

43. Fit the drive halfshaft oil seal and the clutch slave cylinder.
    1. Position the input shaft oil seal.
    2. Position the clutch slave cylinder.
    3. Tighten the bolts evenly. In doing so, press the input shaft oil seal into the transmission housing.

2. Detach the transmission from the assembly stand.

INSTALLATION

Transaxle (16 114 0)

Special Tool(s)	
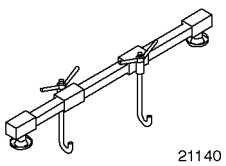 21140	Support Bar, Engine 303-290 (21-140)
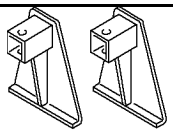 2114001	Adapter for 303-290 303-290-01 (21-140-01)
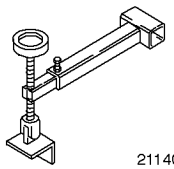 2114003	Adapter for 303-290 303-290-03 (21-140-03)

General Equipment
Engine lifting eye
Transmission jack
Auxiliary plugs
Retaining strap

Material	Specification
Manual transmission fluid	BOT 130
High-durability grease	WSD-M1C230-A
Cable ties	

Installation

1. Raise and support the vehicle. For additional information, refer to Section 100-02.

2. Secure the transaxle with a retaining strap and position under the vehicle by using a transmission jack.

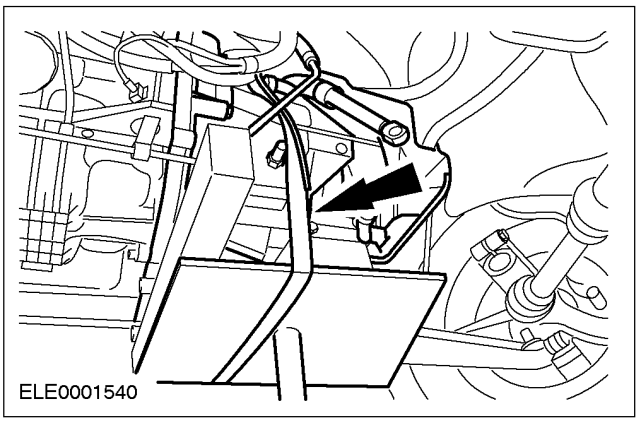

INSTALLATION (CONTINUED)

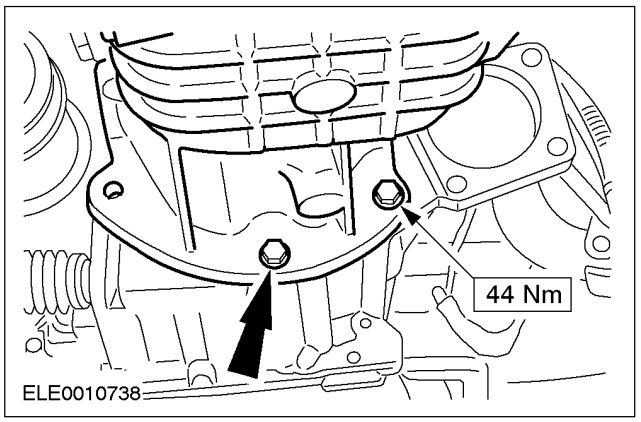

3. Install the transaxle lower flange bolts.

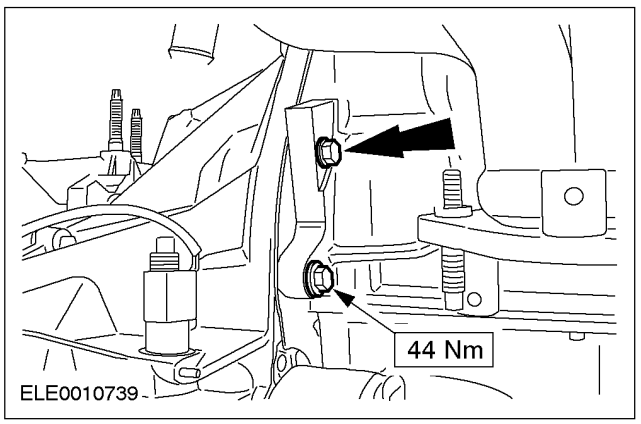

4. Install the transaxle right-hand flange bolts.

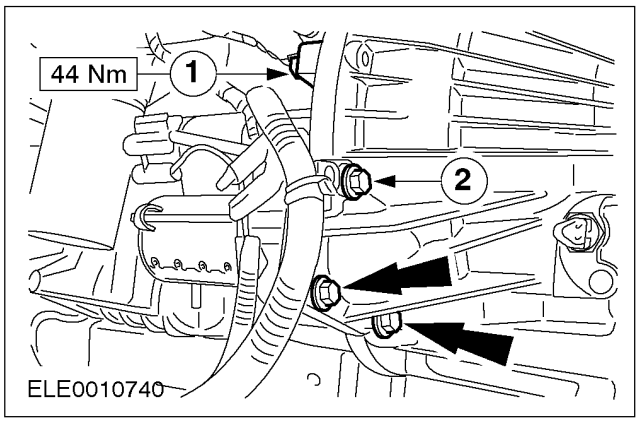

5. Install the left-hand transaxle flange bolt and starter motor bolts.

Vehicles with 1.6L / 1.3L engine

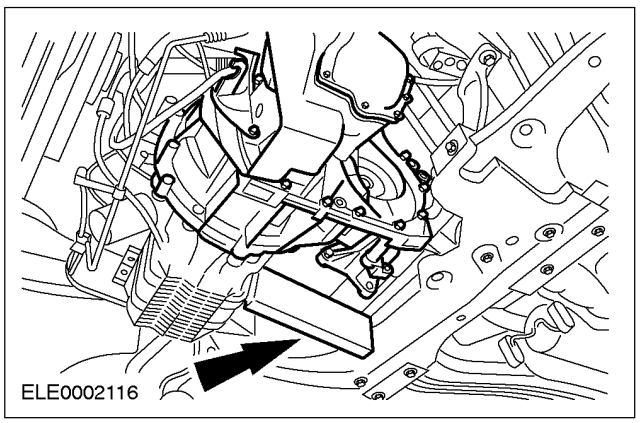

6. Remove the wooden block.

All vehicles

7. Lower the vehicle.

INSTALLATION (CONTINUED)

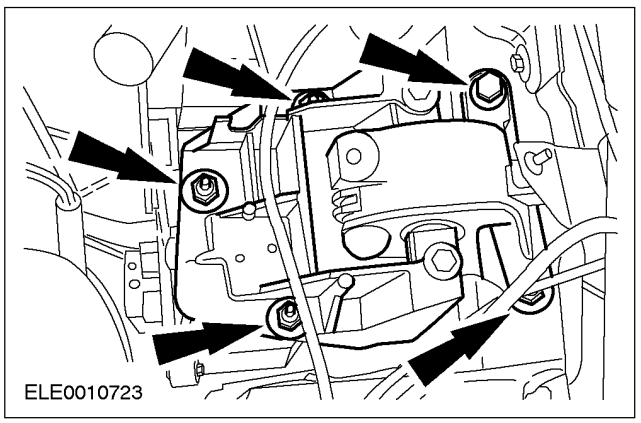

8. Using the special tools, raise the engine and transaxle.

9. NOTE: Do not tighten the nuts and bolts.
Install the engine rear mounting bracket.

Vehicles with diesel engine

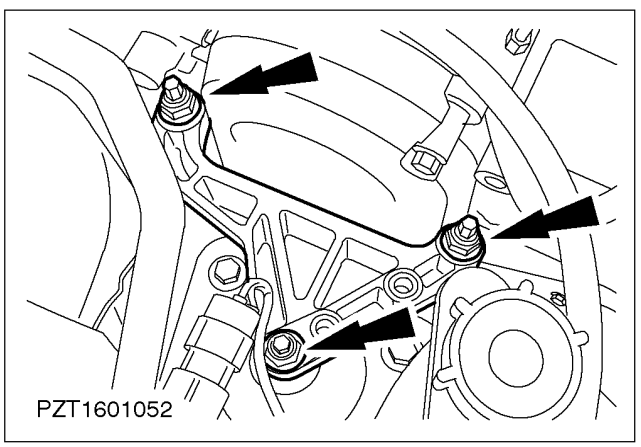

10. NOTE: Do not tighten the nuts.
Install the engine front mounting bracket.

All vehicles

11. Raise and support the vehicle. For additional information, refer to Section 100-02.

12. Adjust gearshift linkage. For additional information, refer to Section 308-00.

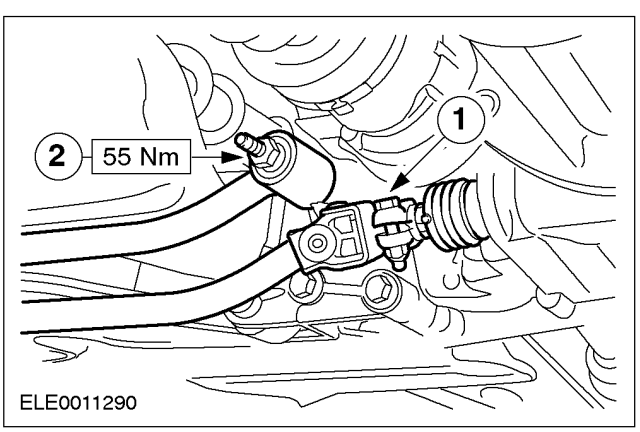

13. Attach the shift rod and gearshift mechanism stabilizer.
    1. Attach the shift rod
    2. Attach the shift rod stabilizer

INSTALLATION (CONTINUED)

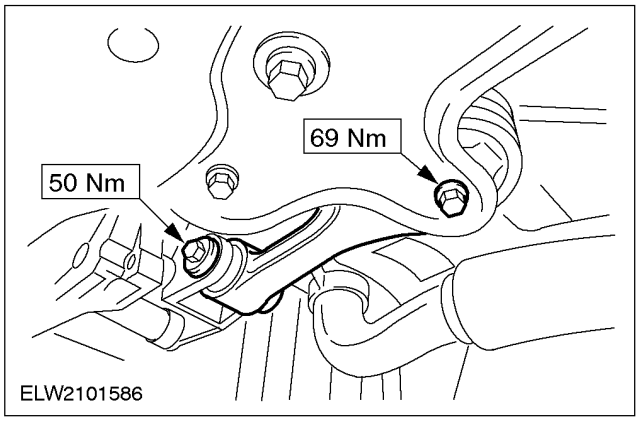

14. Install the engine roll restrictor.

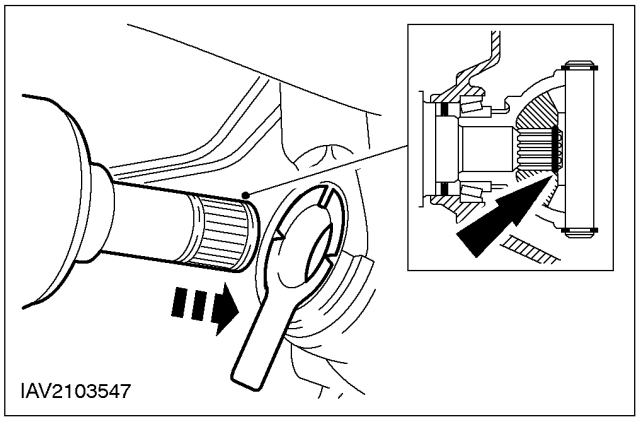

15. **CAUTION: The inner joint must not be bend more than 18 degrees, the outer joint must not be bend more than 45 degrees.**

CAUTION: Use the installation sleeve (supplied with every new oil seal) to protect the oil seal when inserting the front halfshaft.

NOTE: Fill the inner constant velocity housing with High-durability grease.

NOTE: Make sure the snap rings are securely in place.

Install the left-hand and the right-hand halfshaft in the transaxle together with new snap rings.

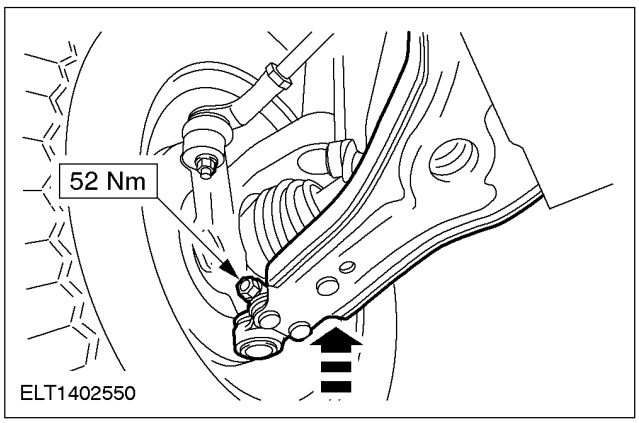

16. Install the left-hand and right-hand lower arm ball joints.

INSTALLATION (CONTINUED)

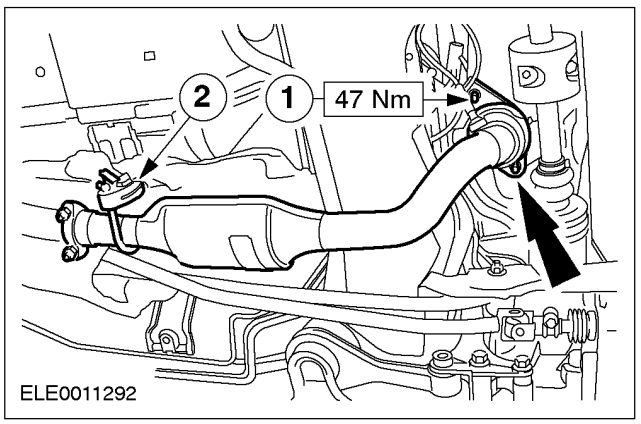

Vehicles with 1.6L / 1.3L engine

17. NOTE: Use a new gasket.
Install the exhaust down pipe.

1. Install the nuts.
2. Connect the exhaust hanger insulator.

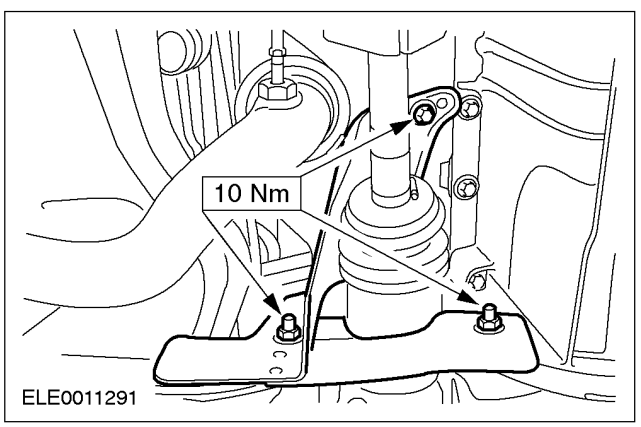

18. Install the halfshaft heat shield.

Vehicles with diesel engine

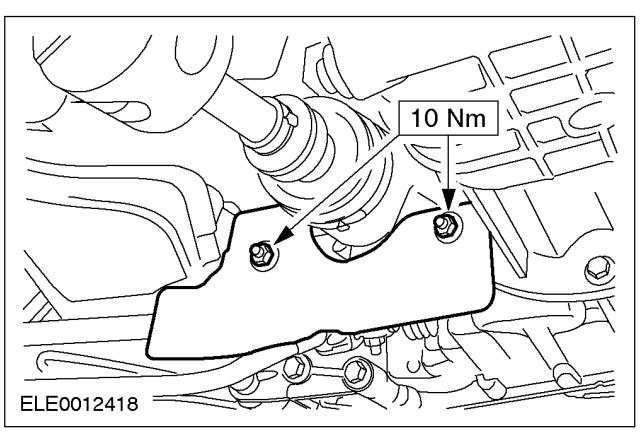

19. Install the halfshaft heat shield.

All vehicles

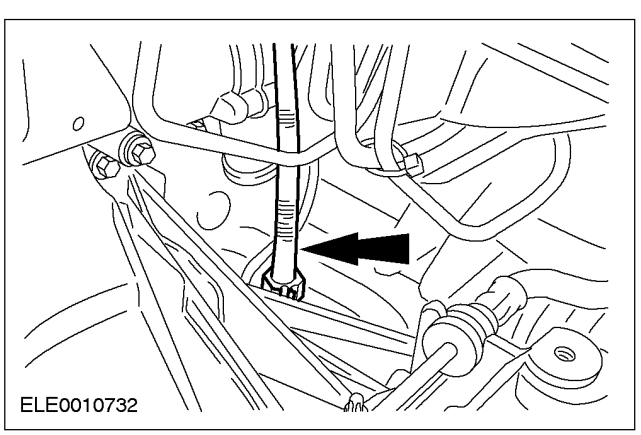

20. Connect the speedometer drive cable.

INSTALLATION (CONTINUED)

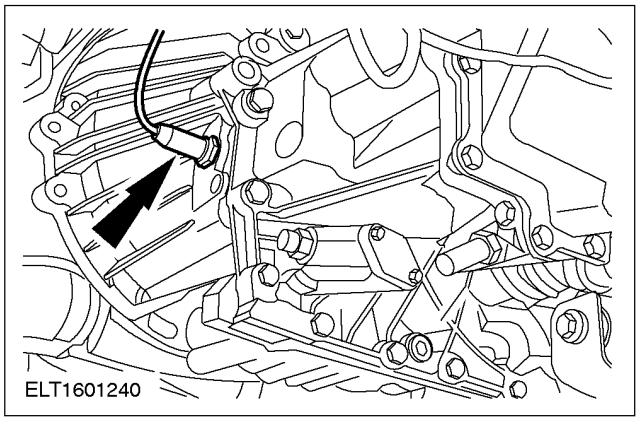

21. Connect the reversing lamp switch electrical connector.

22. Lower the vehicle.

Vehicles with 1.6L / 1.3L engine

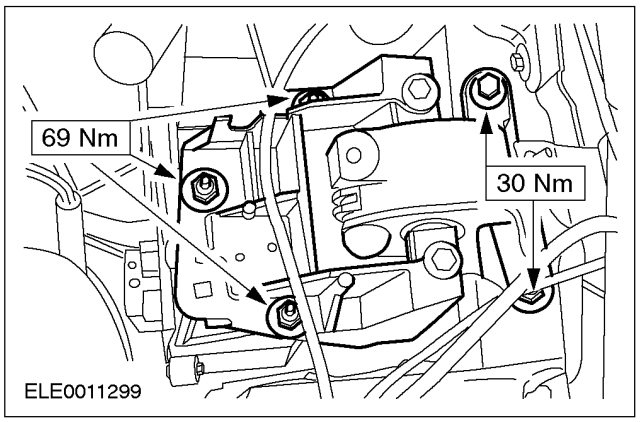

23. Tighten the bolts and nuts of the engine rear mounting bracket.

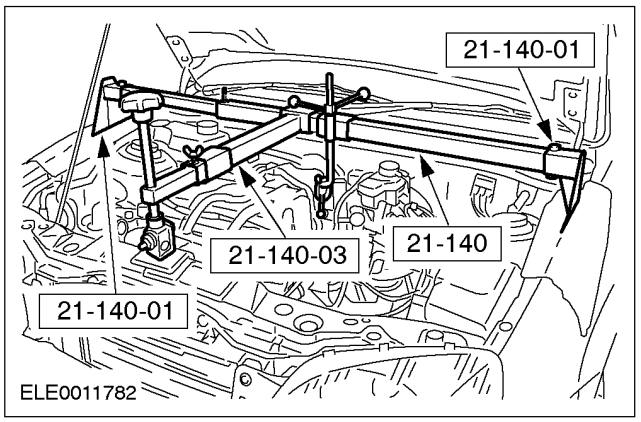

24. Remove the special tools.

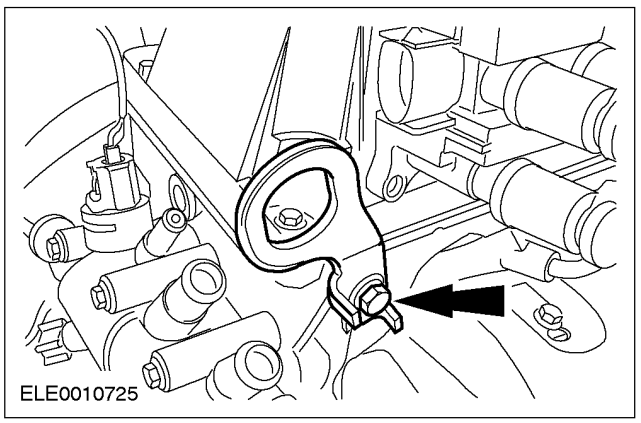

25. Remove the engine lifting eye.

INSTALLATION (CONTINUED)

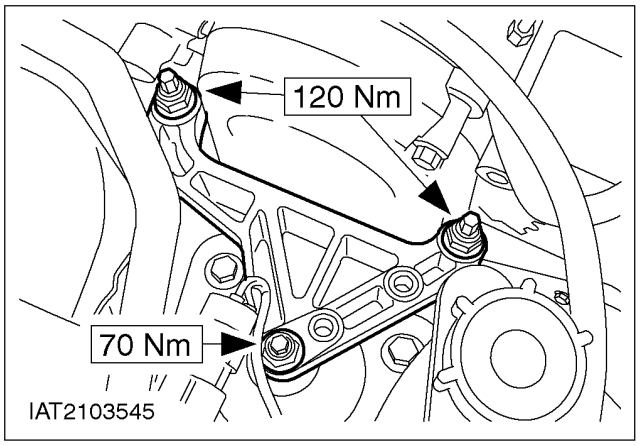

Vehicles with diesel engine

26. **CAUTION: Always tighten the engine front mounting before tightening the engine rear mounting.**
    Tighten the engine front mounting.

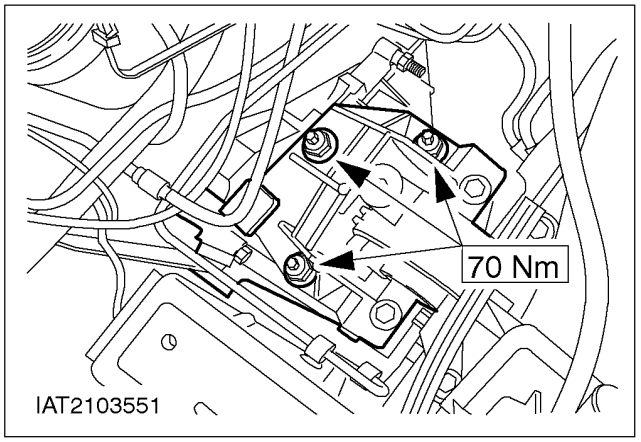

27. Tighten the engine rear mounting bracket.

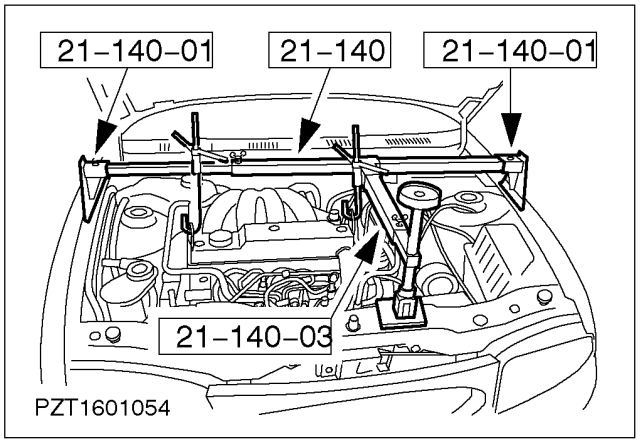

28. Remove the special tools.

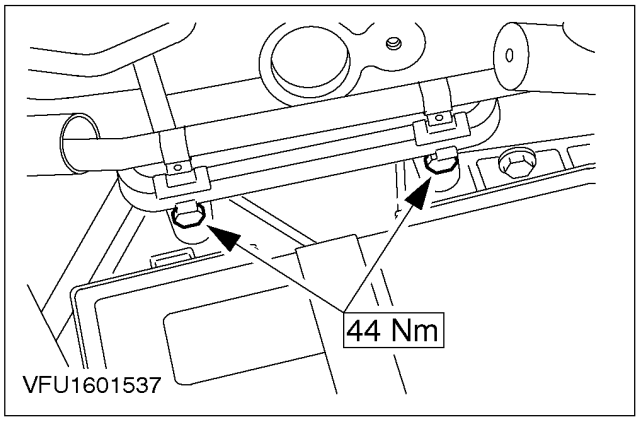

29. Install the transaxle upper flange bolts and the ground cable.

INSTALLATION (CONTINUED)

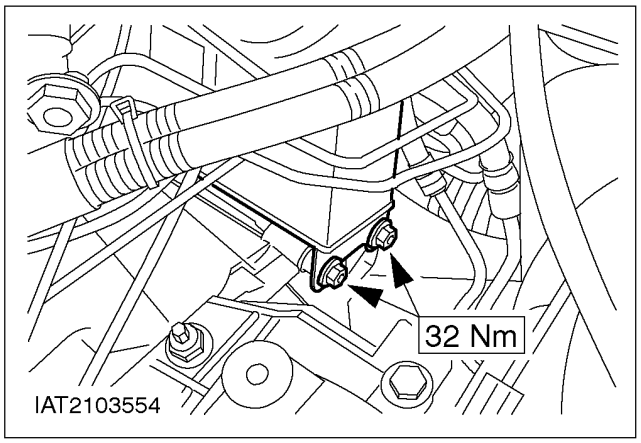

30. Install the resonator.

Vehicles with 1.6L / 1.3L engine

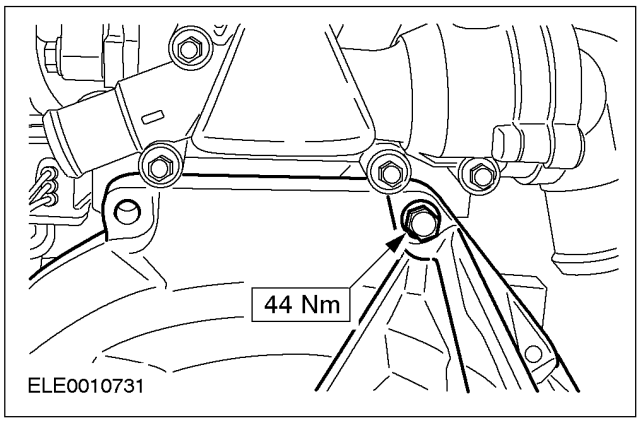

31. Install the transaxle upper flange bolt.

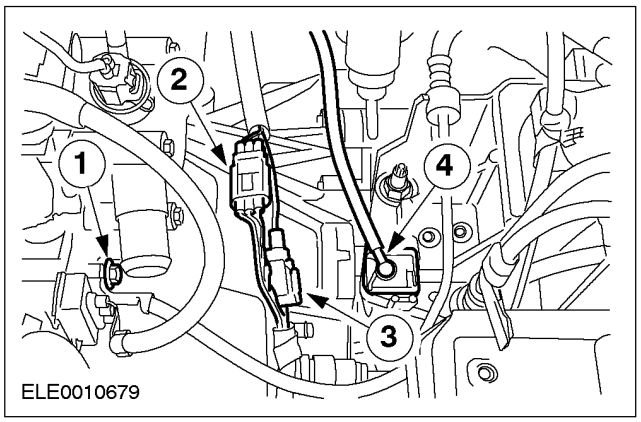

32. Install the transaxle upper flange bolt and ground cable, connect the electrical connectors and the hose.
    1. Install the flange bolt with ground cable
    2. Reconnect the generator electrical connector
    3. Reconnect the starter motor electrical connector
    4. Attach the transaxle ventilation hose

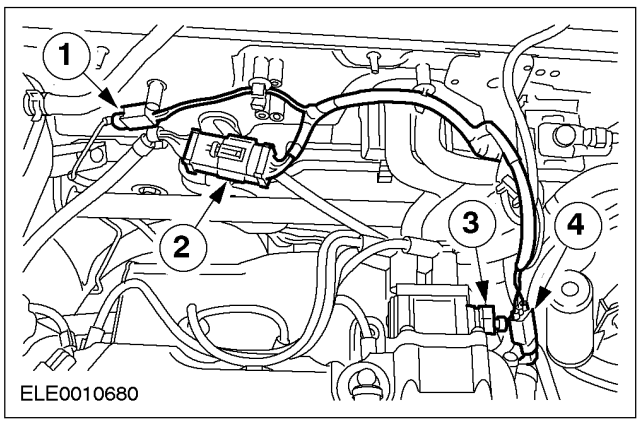

33. Connect the electrical connectors.
    1. Heated oxygen sensor (HO2S) electrical connector
    2. Ignition coil electrical connector
    3. Powertrain control module (PCM) electrical connector
    4. Vehicle speed sensor (VSS) electrical connector

INSTALLATION (CONTINUED)

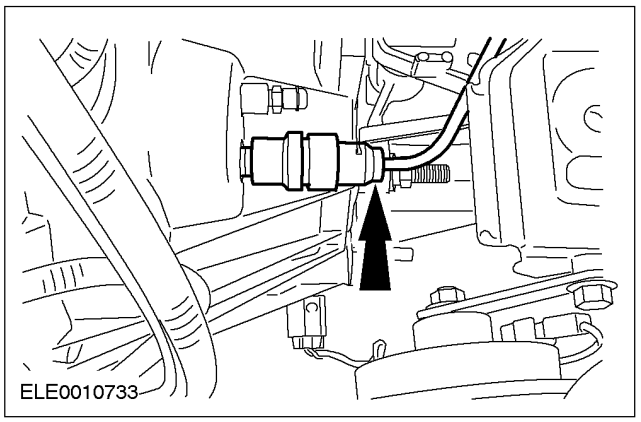

All vehicles

34. **WARNING: Escaping brake fluid. Do not allow brake fluid to come into contact with the skin or the eyes. If brake fluid does come into contact with the skin or the eyes, rinse the affected areas with water immediately. Failure to follow these instructions may result in personal injury.**

CAUTION: If brake fluid is spilt on the paintwork, the affected area must be immediately washed down with cold water.

Install the clutch slave cylinder high-pressure line.

- Insert the clutch slave cylinder high-pressure line in the bracket.

35. Bleed the clutch hydraulic system. For additional information, refer to Section 308-00.

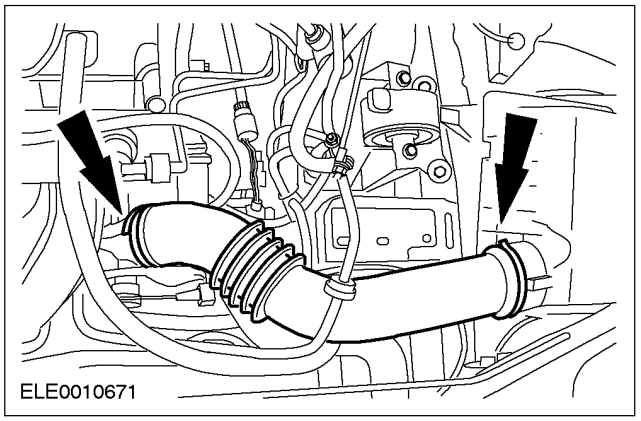

Vehicles with 1.6L / 1.3L engine

36. Install the air cleaner (ACL) intake pipe.

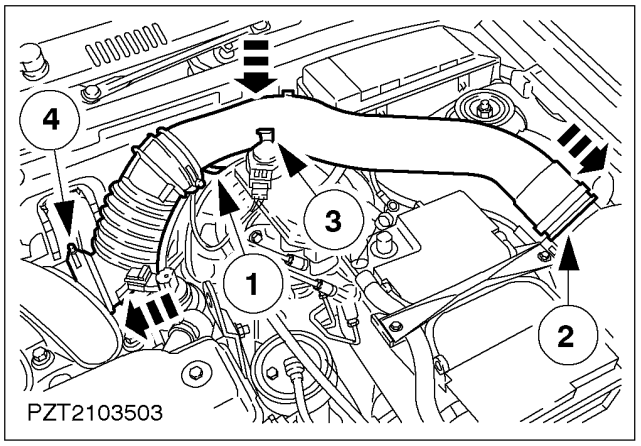

Vehicles with diesel engine

37. Install the air cleaner intake hose.
    1. Install the resonator pipe (clip).
    2. Install the intake pipe to the air cleaner housing.
    3. Install the clip.
    4. Install the air cleaner housing to the intake manifold.

INSTALLATION (CONTINUED)

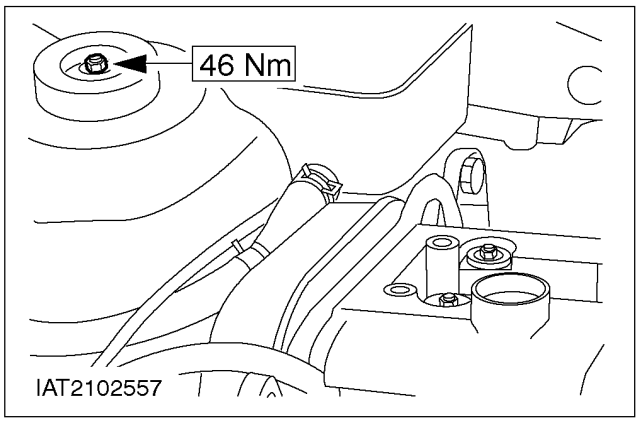

All Vehicles

38. NOTE: Use an Allen key to prevent the piston rod turning.
Tighten the suspension strut nut on both sides.

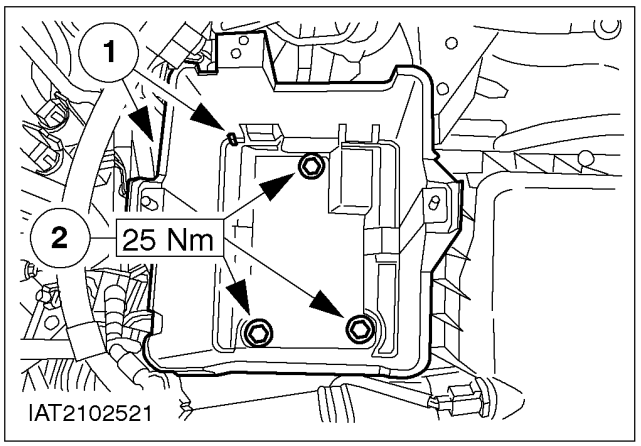

39. Install the battery tray.
    1. Install new the cable ties.
    2. Install the bolts.

40. Install the battery. For additional information, refer to Section 414-01.

GENERAL PROCEDURES

Bearing Check

1. **NOTE:** Use the following procedure when checking taper roller bearings and roller bearings:
   General notes.
   - Check the condition of all the components when disassembling them.
   - Find out the cause of the damage with the aid of the following illustrations.
   - Remedy the problem and, if necessary, renew the bearing (see bearing checks).

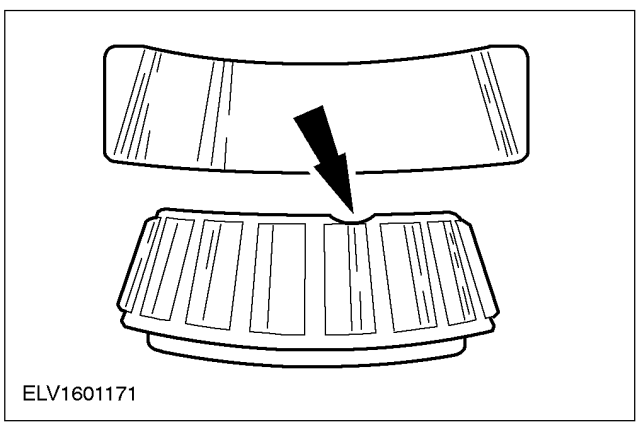
ELV1601171

2. Bearing cage damaged at the top or side through incorrect use of a special tool or use of the wrong tool.
   - Renew the bearing.

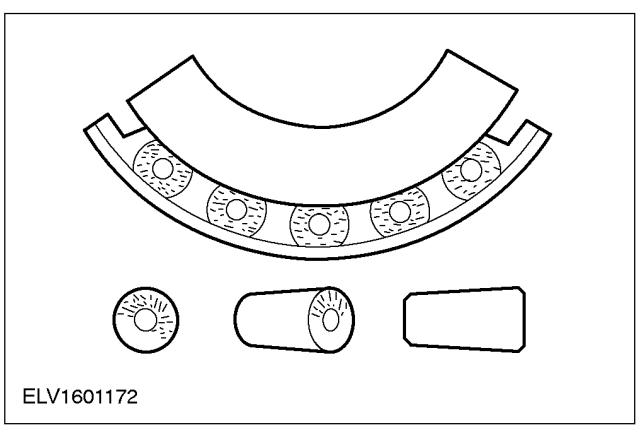
ELV1601172

3. The taper roller ends are discolored as a result of inadequate lubrication, overheating or excessive bearing preload.
   - Renew the bearings and gaskets and make sure there is adequate lubrication.

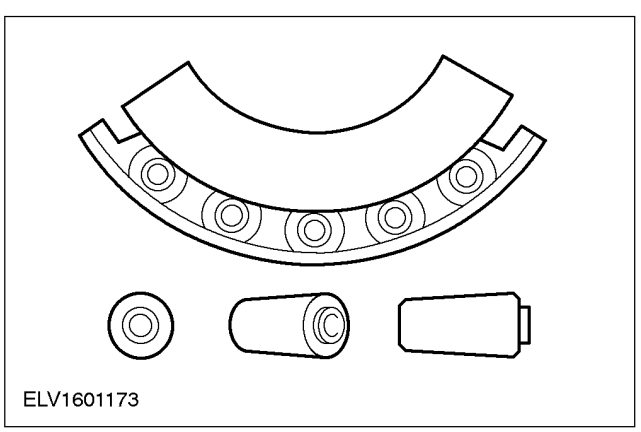
ELV1601173

4. Taper roller ends are worn away as a result of incorrect installation, excessive bearing preload or incorrect seating.
   - Renew the bearings and gaskets and make sure there is adequate lubrication.

GENERAL PROCEDURES (CONTINUED)

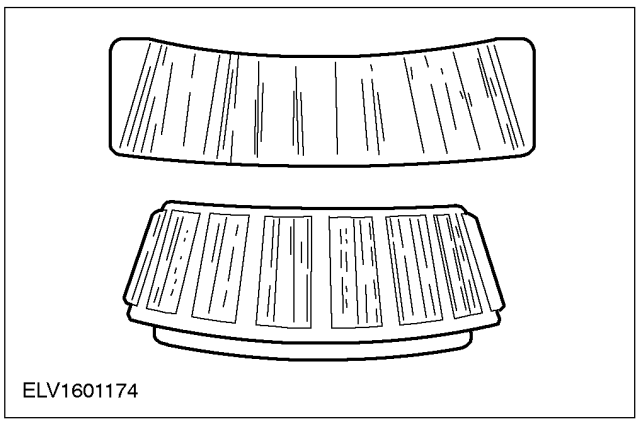

5. The bearing surfaces are gray or gray/black with abraded particles between the taper rollers.
   - Renew the bearings and gaskets and make sure there is adequate lubrication.

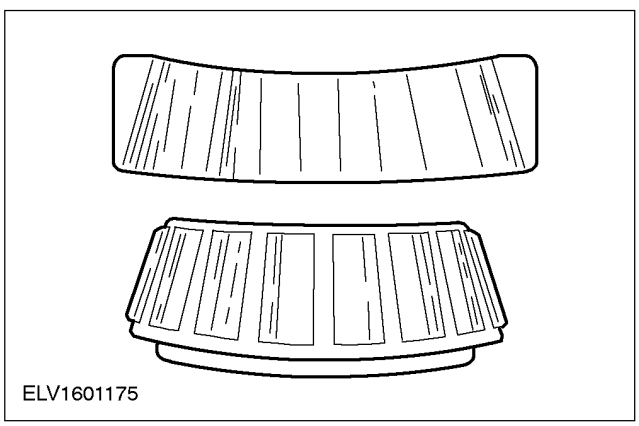

6. The surface of the bearing race is notched as a result of impacts at standstill.
   - Renew the bearing if its surface is rough, or if it is noisy.

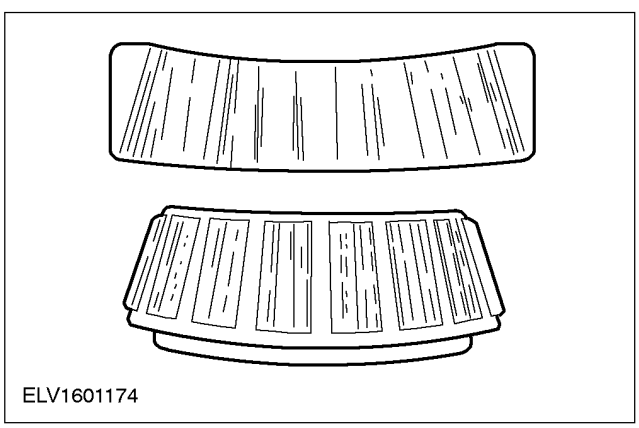

7. Dark blue coloring from overheating (yellow or brown color is normal) due to excessive bearing preload or inadequate lubrication. Overheating can cause the bearing to lose its surface hardness. Use a file to test the surface hardness. Material can be filed away from soft bearings but not from hard bearings.
   - If overheating is diagnosed, renew the bearing and check the gaskets and other components.

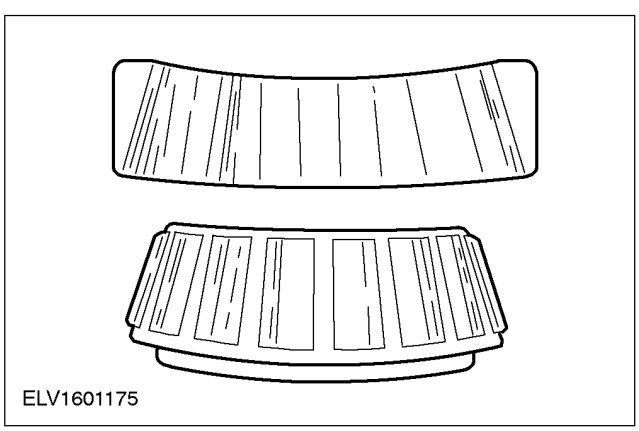

8. Surface abrasion due to material fatigue.
   - Renew the bearing and clean all the affected components.

SPECIFICATIONS

Lubricants, Fluids, Sealers and Adhesives

Item	Specification
High-temperature grease	ESD-1C220-A
Manual transmission fluid	BOT 130
Brake fluid (DOT 4)	SAE J1703 JUN91
Universal Sealer (Hylomar)	

Capacities

	Liters
Manual transmission fluid (5 - 10 mm below the level check lower edge)	2.8

Transaxle Ratios

Ratio	1.6L	1.3l	1.8L diesel
First gear	3.58	3.58	3.583
Second gear	1.93	1.92	1.926
Third gear	1.28	1.41	1.281
Fourth gear	0.95	1.10	0.951
Fifth gear	0.76	0.87	0.756
Reverse gear	3.61	3.61	3.615
Differential	4.06	4.25	4.25
Speedometer driven pinion	19	19	19
Speedometer drive worm wheel	21	21	21

Measuring and Adjusting Shims

		Shim Thickness
Measuring shims	mm	3.8
Available shims (0,1 mm increments)	mm	0.1 - 1.1

Torque Specifications

Description	Nm
Crown wheel to differential	115
Clutch slave cylinder	10
Selector block to main selector shaft	14
Selector gate	26
Auxiliary selector shaft	22
Transaxle housing	28
Fifth gear housing to transaxle housing	13
Detent mechanism	25
Reversing lamp switch	18

SPECIFICATIONS (CONTINUED)

Description	Nm
Transaxle housing cover	12
Pre-load valve for clutch slave cylinder	10
Flange bolts - transaxle to engine	44
Engine roll restrictor to engine	50
Engine roll restrictor to crossmember	69
Stabiliser link rod to suspension strut	47
Lower suspension arm to spindle carrier	52
Driveshaft stub nut	270
Suspension strut top nut	46
Battery box	25
Gear selector finger	17
Transaxle filler plug	35
Wheel nuts	85
Catalytic converter to exhaust manifold	47
Starter motor	44
Shift rod stabiliser	55
Heat shield	12
Rear engine mounting bracket (1.6L / 1.3L engine)	69
Rear engine mounting bracket to frame (1.6L / 1.3L engine)	30
Rear engine mounting bracket (diesel engine)	70
Front engine mounting bracket (diesel engine)	70
Front engine mounting bracket	130

SECTION 308-06 Manual Transaxle External Controls

VEHICLE APPLICATION: 2002 Bantam

SUBJECT **PAGE**

DESCRIPTION AND OPERATION

External Controls 308-06-114

DIAGNOSIS AND TESTING

External Controls 308-06-115
Pinpoint Test 308-06-115/116

REMOVAL AND INSTALLATION

Gearshift Linkage ..... (16 534 0) 308-06-117/121
Gearshift Stabilizer Bar Bushing ..... (16 589 4) 308-06-122
Gearshift Stabilizer Bar ..... (16 588 0) 308-06-123

DISASSEMBLY AND ASSEMBLY

Shift Lever 308-06-124/126

SPECIFICATIONS

Specifications 308-06-127
Torque Specifications 308-06-127

DESCRIPTION AND OPERATION

External Controls

Overview - Gearshift Mechanism

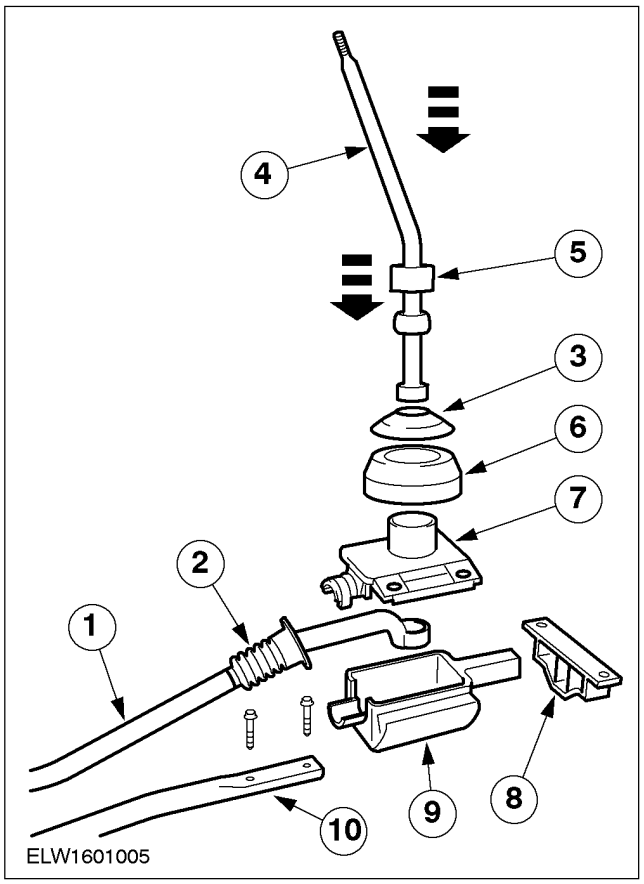

Item	Description
1	Shift rod
2	Boot - shift rod
3	Inner boot - gear lever
4	Gear lever
5	Mounting sleeve - gear lever
6	Noise damping pad
7	Gearshift mechanism housing top cover
8	Gearshift mounting
9	Gearshift mechanism housing lower cover
10	Gearshift stabiliser

A selector rod operates the iB5 manual transmission in the 2002 Bantam.

In order to isolate the outer gearshift mechanism from the bodywork, the gearshift housing is located in the gearshift mounting. This mounting can move lengthways to balance the rotational movements of the engine / transmission.

The gearshift housing is rigidly joined to the transmission by the gearshift stabiliser.

DIAGNOSIS AND TESTING

External Controls

Since troubleshooting actually begins when repairs are taken on, the following procedure is recommended:

1. Check customer concern is clear. If necessary, reconstruct the concern on the vehicle.
2. If the concern cannot be reproduced, carry out a road test and/or a visual check with the aid of the following table:

Visual Inspection Chart

Mechanical
• Visibly damaged or worn parts • Loose or missing nuts or bolts

3. If the concern can be visually identified, resolve it and check that the system operates correctly.
4. If the concern cannot be clearly located, use the following troubleshooting table to exactly identify it.

Troubleshooting Table

Condition	Possible Sources	Action
•Gearshift mechanism difficult to move	•Outer gearshift mechanism out of alignment	•Adjust REFER to Section 308-00
	•Faulty gear lever	•Go to Pinpoint Test A
	•Gearshift stabiliser stressed	•Go to Pinpoint Test A

Pinpoint Test

PINPOINT TEST A: GEARSHIFT MECHANISM DIFFICULT TO MOVE

CONDITIONS	DETAILS/RESULTS/ACTIONS
A1: CHECK GEAR LEVER	
	1 Detach shift rod from the transmission. • Is the outer gearshift mechanism difficult to move? **Yes** Dismantle the gear lever and check for defective parts. REFER to Section 308-06. **No** GO TO **A2**

DIAGNOSIS AND TESTING (CONTINUED)

CONDITIONS	DETAILS/RESULTS/ACTIONS
A2: CHECK FOR STRESSED GEARSHIFT STABILISER	
	1 Detach the gearshift stabiliser from the transmission. • Is the stabiliser stressed? **Yes** Undo the engine/transmission mountings; align the engine/transmission in such a way that the gearshift stabiliser can be installed free from tension. Tighten the engine/ transmission mounting. REFER to Section 303-01A. REFER to Section 303- 01B. Adjust the gearshift mechanism. REFER to Section 308-00. **No** Faulty transmission. REFER to Section 308-03

REMOVAL AND INSTALLATION

Gearshift Linkage (16 534 0)

Removal

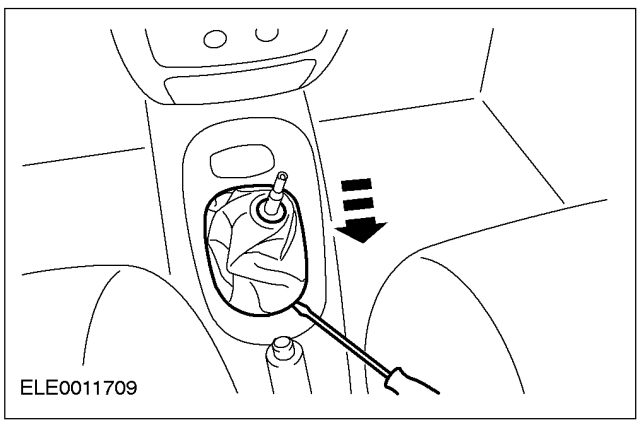

1. Remove the gearshift lever knob.
2. Remove the gearshift lever outer boot.

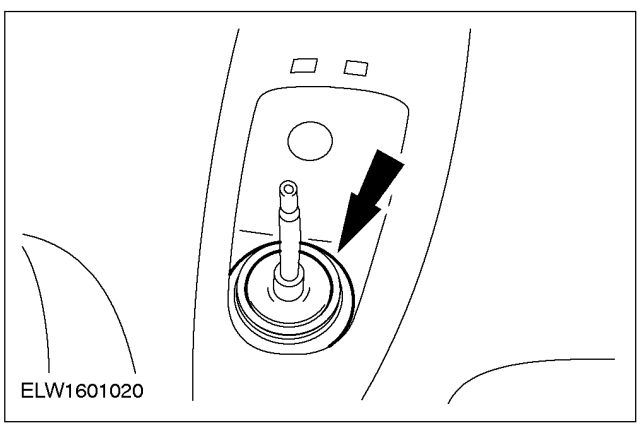

3. Remove the gearshift lever inner boot.
4. Raise and support the vehicle. For additional information, refer to Section 100-02.

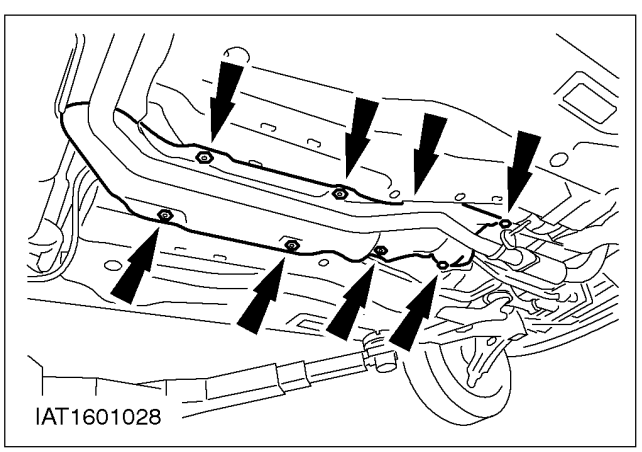

5. Remove the exhaust heat shield.

REMOVAL AND INSTALLATION (CONTINUED)

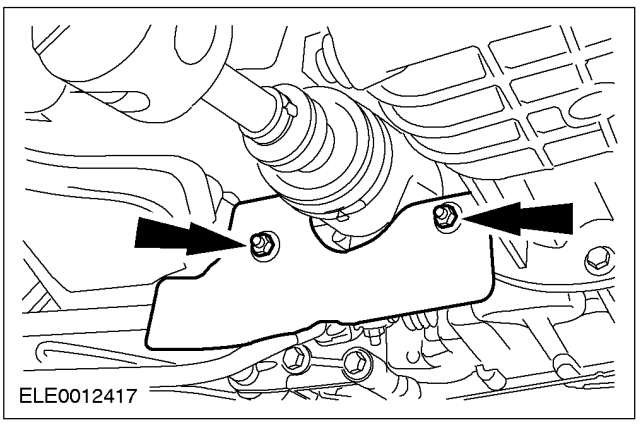

Vehicles with diesel engine

6. Remove the halfshaft heat shield.

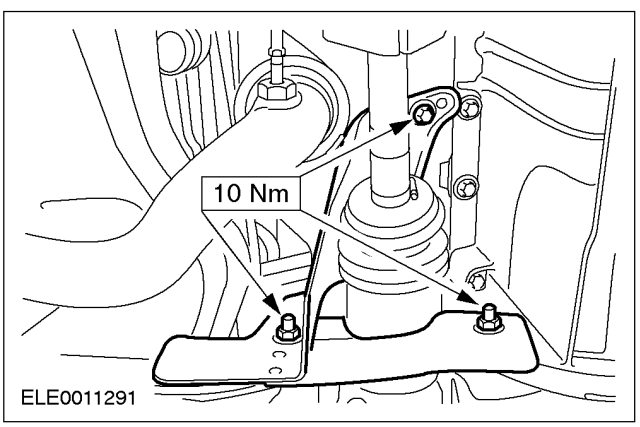

Vehicles with 1.6L / 1.3L engine

7. Remove the halfshaft heat shield.

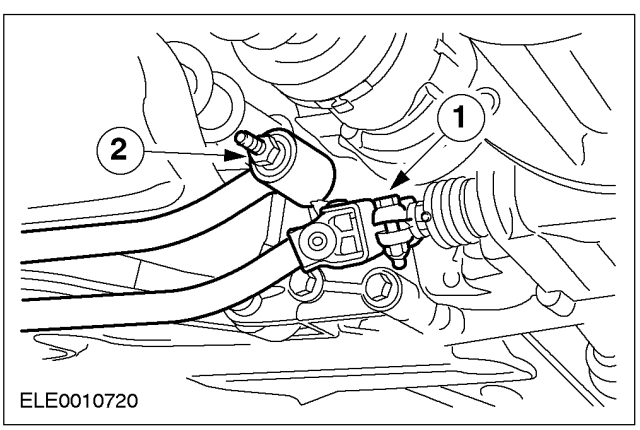

8. Disconnect the shift rod and the shift rod stabilizer.
   1. Disconnect the shift rod
   2. Disconnect the shift rod stabilizer

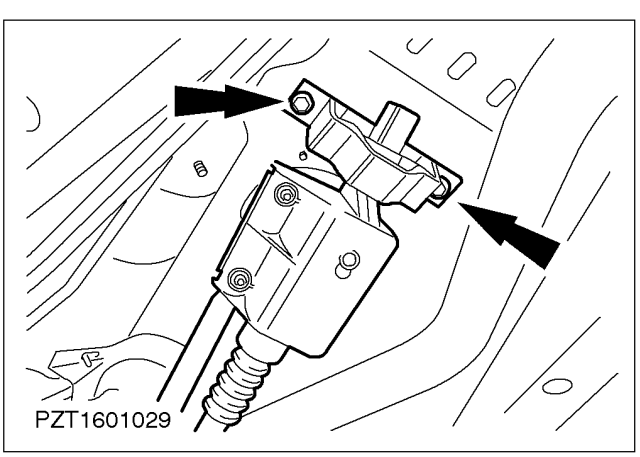

9. Remove the gearshift mounting.

REMOVAL AND INSTALLATION (CONTINUED)

Installation

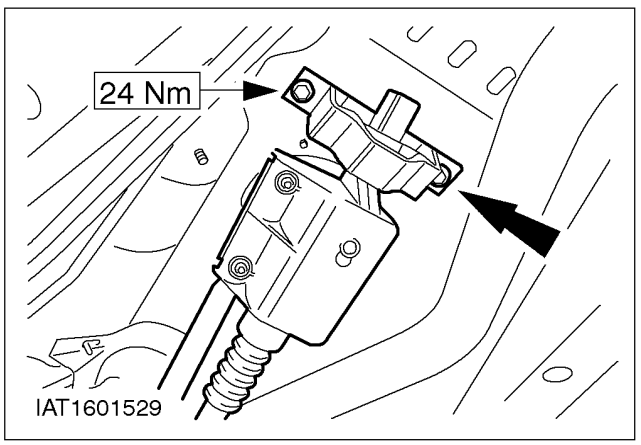

1. Install the gearshift mounting.

2. Adjust the gearshift mechanism. For additional information, refer to Section 308-00.

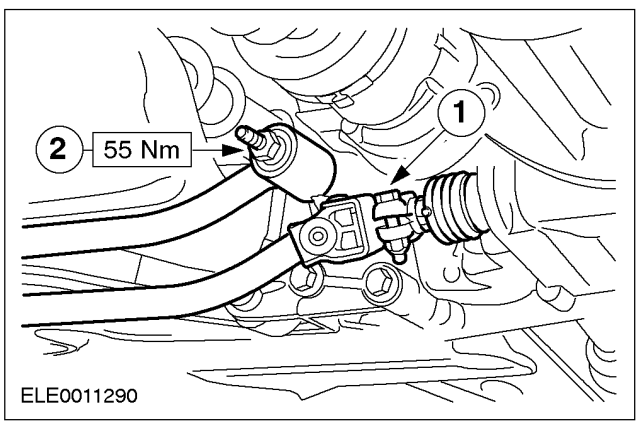

3. **NOTE:** If the gearshift stabilizer cannot be installed without stress, loosen the engine/transaxle mounting and align.
   Install the gearshift stabilizer and shift rod.
   1. Attach the shift rod
   2. Attach the shift rod stabilizer

4. Tighten the engine / transmission mounting (if necessary). For additional information, refer to Section 303-01A. For additional information, refer to Section 303-01B.

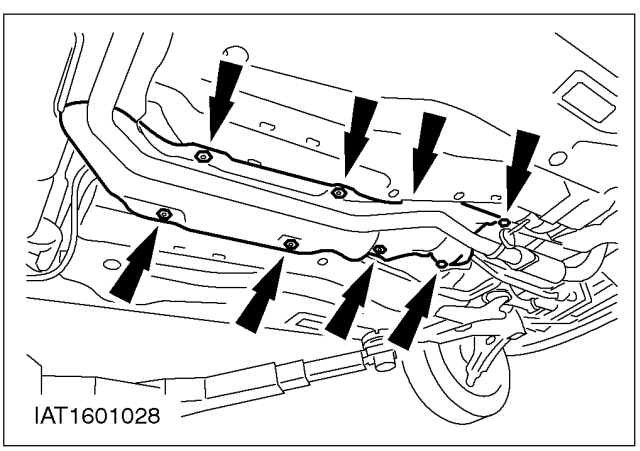

5. Install the exhaust heat shield.

REMOVAL AND INSTALLATION (CONTINUED)

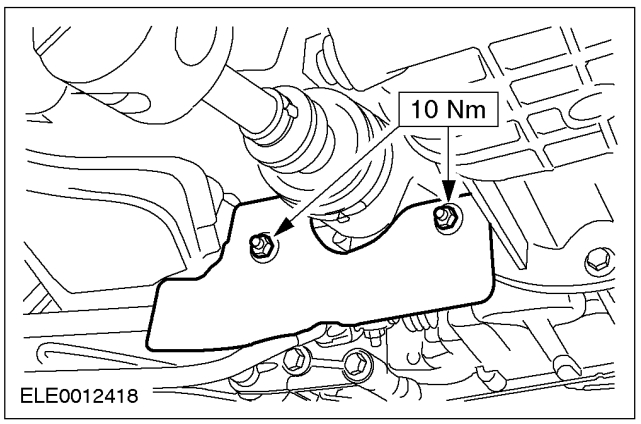

Vehicles with diesel engine

6. Install the halfshaft heat shield.

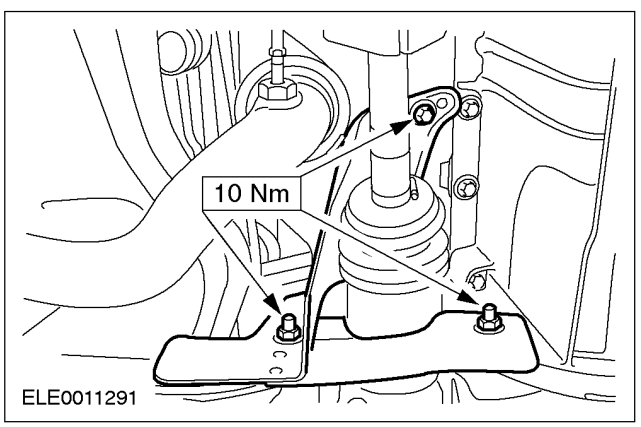

Vehicles with 1.6L / 1.3L engine

7. Install the halfshaft heat shield.

8. Lower the vehicle.

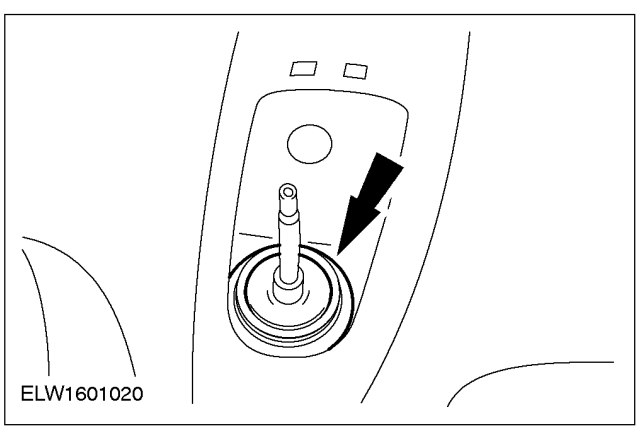

9. Install the inner boot to the gear lever.

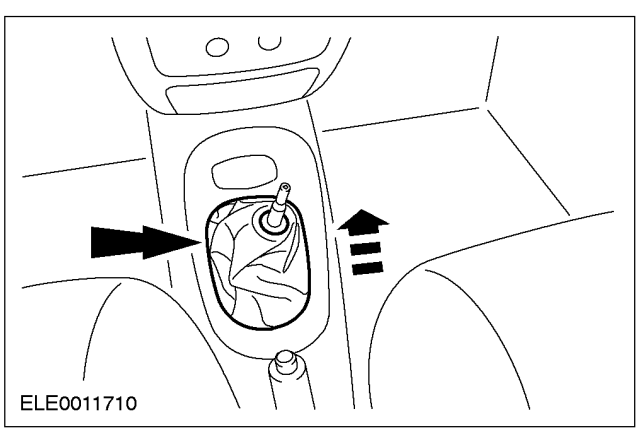

10. Install the gearshift lever boot.

REMOVAL AND INSTALLATION (CONTINUED)

11. Install the gearshift lever knob.

REMOVAL AND INSTALLATION

Gearshift Stabilizer Bar Bushing (16 589 4)

Special Tool(s)	
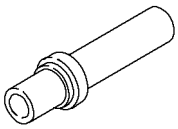 16015	Installer 308-045 (16-015)

Removal

1. Remove the gearshift mechanism and detach the gearshift stabiliser. For additional information, refer to Section 308-06.

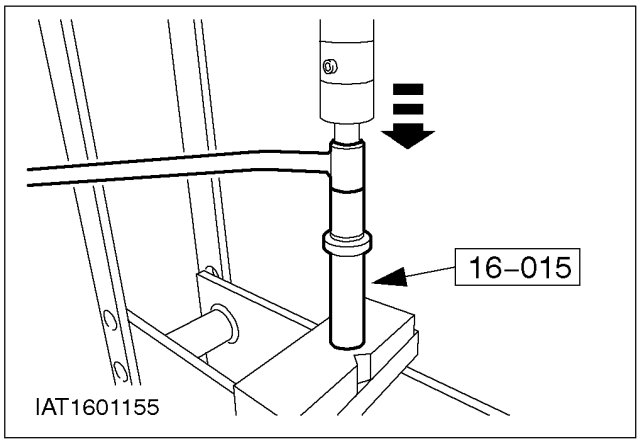

2. Press out the stabiliser bush using a suitable thrust element.

Installation

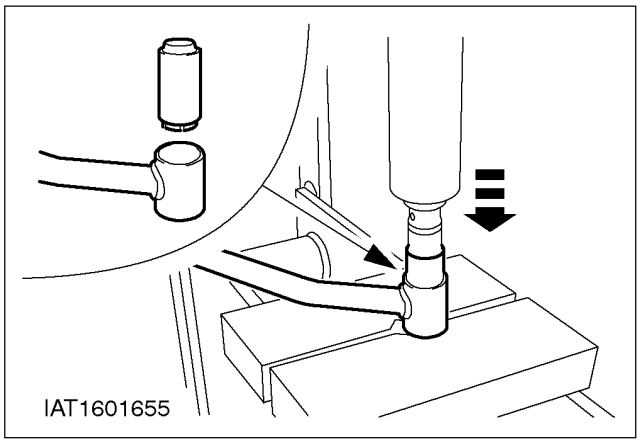

1. **NOTE:** The bush is tapered and can only be inserted from one side.
   Press in the stabiliser bush.

2. Fit the gearshift stabiliser and install the gearshift mechanism. For additional information, refer to Section 308-06.

REMOVAL AND INSTALLATION

Gearshift Stabilizer Bar (16 588 0)

Removal

1. Remove the gearshift mechanism. For additional information, refer to Section 308-06.

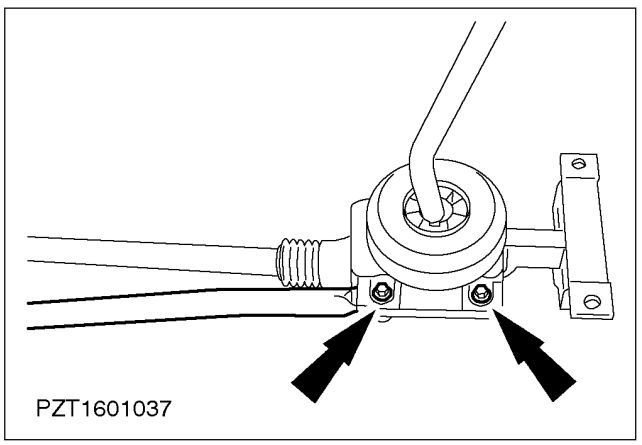

2. Detach the gearshift stabiliser.

Installation

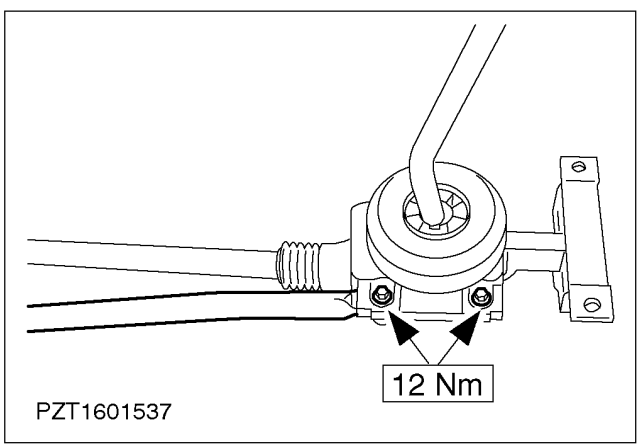

1. Fit the gearshift stabiliser.

2. Install the gearshift mechanism. For additional information, refer to Section 308-06.

DISASSEMBLY AND ASSEMBLY

Shift Lever

Special Tool(s)	
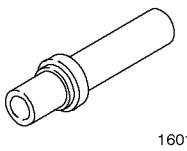 16015	Installer, Extension Housing Bushing/Oil Seal 308-045 (16-015)

Disassembly

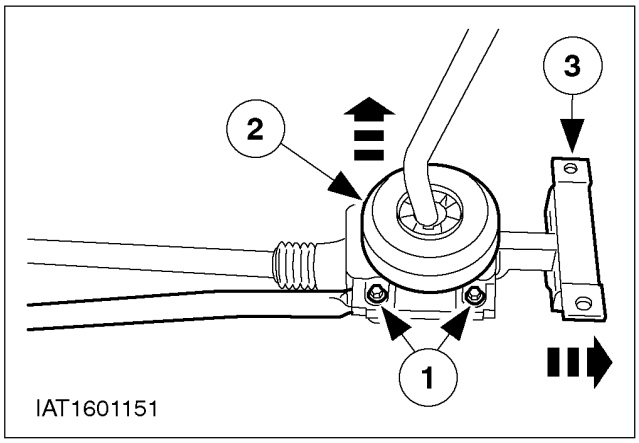

1. Remove the following parts:
   1. Remove the stabilizer
   2. Remove the noise damping pad
   3. Remove the gearshift mounting

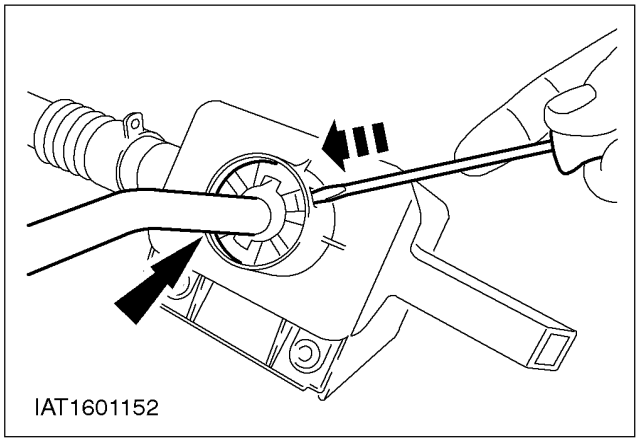

2. Remove the gearshift lever.
   1. Press the mounting sleeve locking lugs out of the housing cover using a screwdriver.
   2. Remove the gearshift lever.

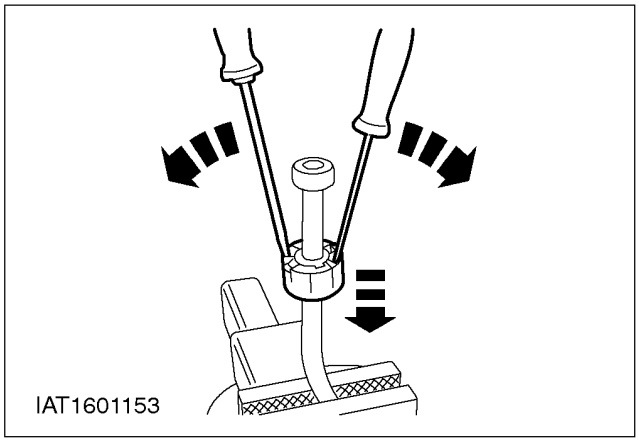

3. Remove the gearshift lever mounting sleeve from the gearshift lever.

DISASSEMBLY AND ASSEMBLY (CONTINUED)

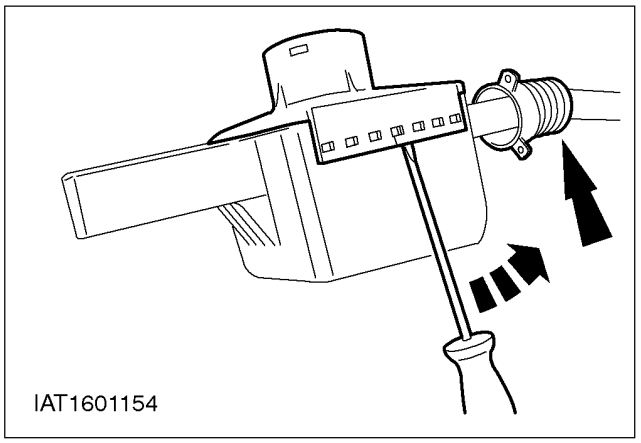

4. Remove the shift rod boot and the housing cover.

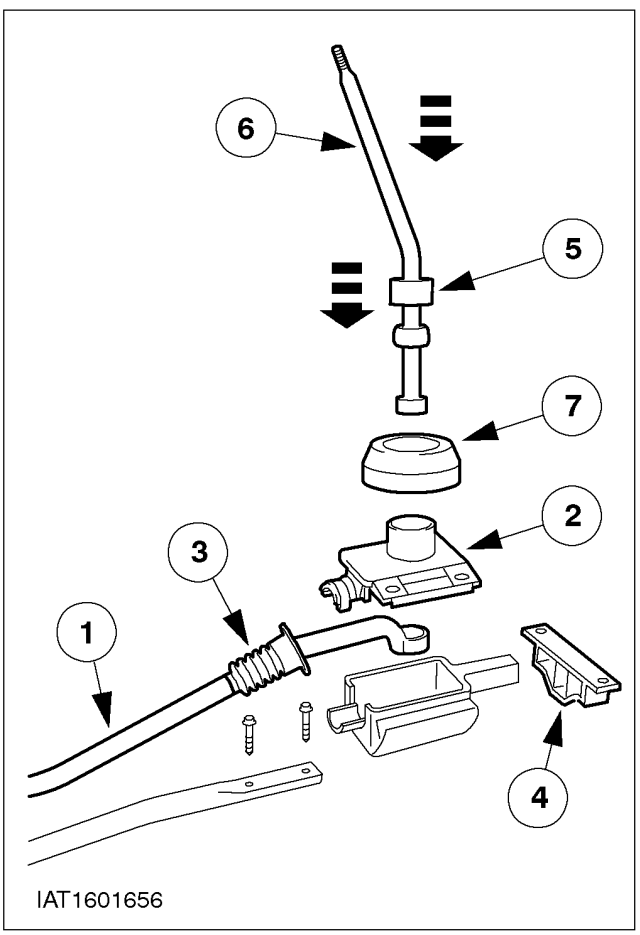

Assembly

1. Reassemble the gearshift mechanism.
   1. Insert the shift rod.
   2. Install the housing cover.
   3. Slide on the shift rod boot.
   4. Slide on the gearshift mounting.
   5. Slide the mounting sleeve onto the gearshift lever.

NOTE: Make sure that the gearshift lever is placed correctly in the shift rod.

   6. Install the gear lever.
   7. Install the noise damping pad.

DISASSEMBLY AND ASSEMBLY (CONTINUED)

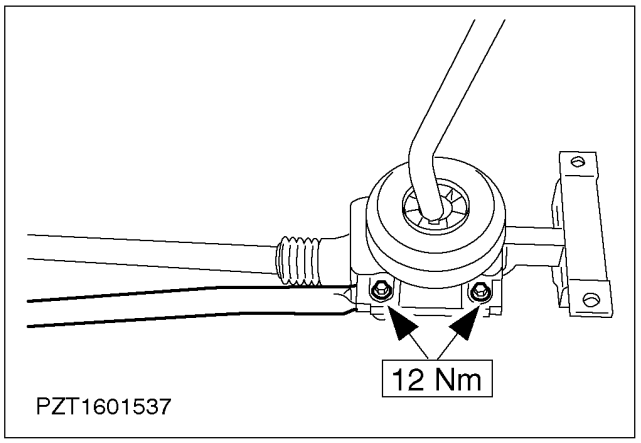

2. Install the gearshift stabilizer bar.

SPECIFICATIONS

Torque Specifications

	Nm
Gearshift mechanism pilot bearing to body	14
Gearshift stabiliser to transmission	55
Gearshift stabiliser to gearshift mechanism housing	12
Shift rod to selector shaft	23

SECTION 309-00 Exhaust System — General Information

VEHICLE APPLICATION: 2002 Bantam

SUBJECT **PAGE**

DESCRIPTION AND OPERATION

Exhaust System - Diesel Engine 309-00-2
Exhaust System - Petrol Engine 309-00-3

DIAGNOSIS AND TESTING

Exhaust System 309-00-4
Inspection and Verification 309-00-4
Symptom Chart 309-00-4

REMOVAL AND INSTALLATION

Exhaust System ..... (25 250 0) 309-00-5/6
Exhaust Flexible Pipe - Diesel Engine 309-00-7/8
Muffler and Tailpipe ..... (25 202 0) 309-00-9/11

SPECIFICATIONS

Specifications 309-00-12
Lubricants, Fluids, Sealers and Adhesives 309-00-12
Torque Specifications 309-00-12

DESCRIPTION AND OPERATION

Exhaust System

Diesel engine

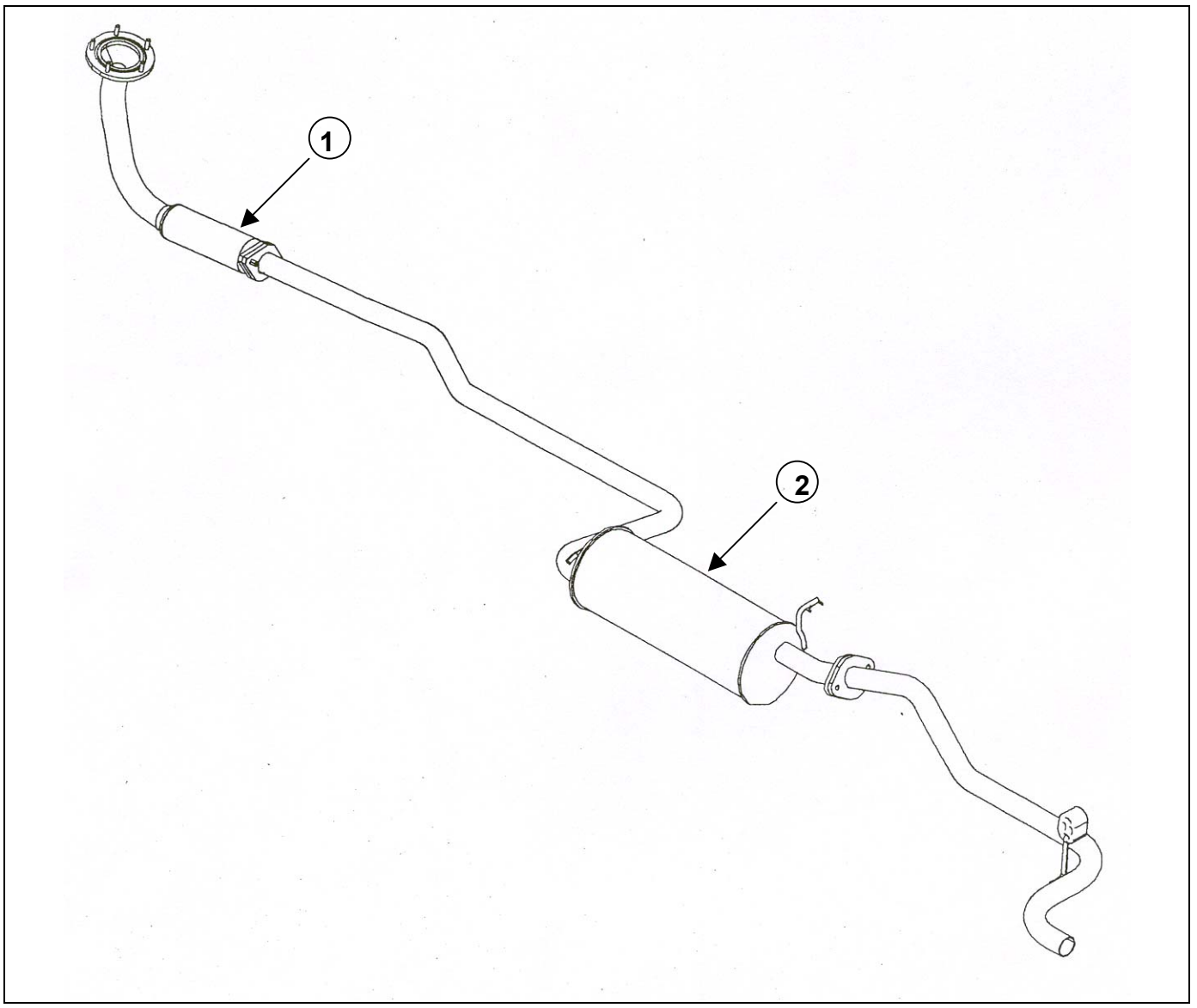

Item	Description
1	Flexible coupling

Item	Description
2	Rear muffler

DESCRIPTION AND OPERATION

Petrol Engine

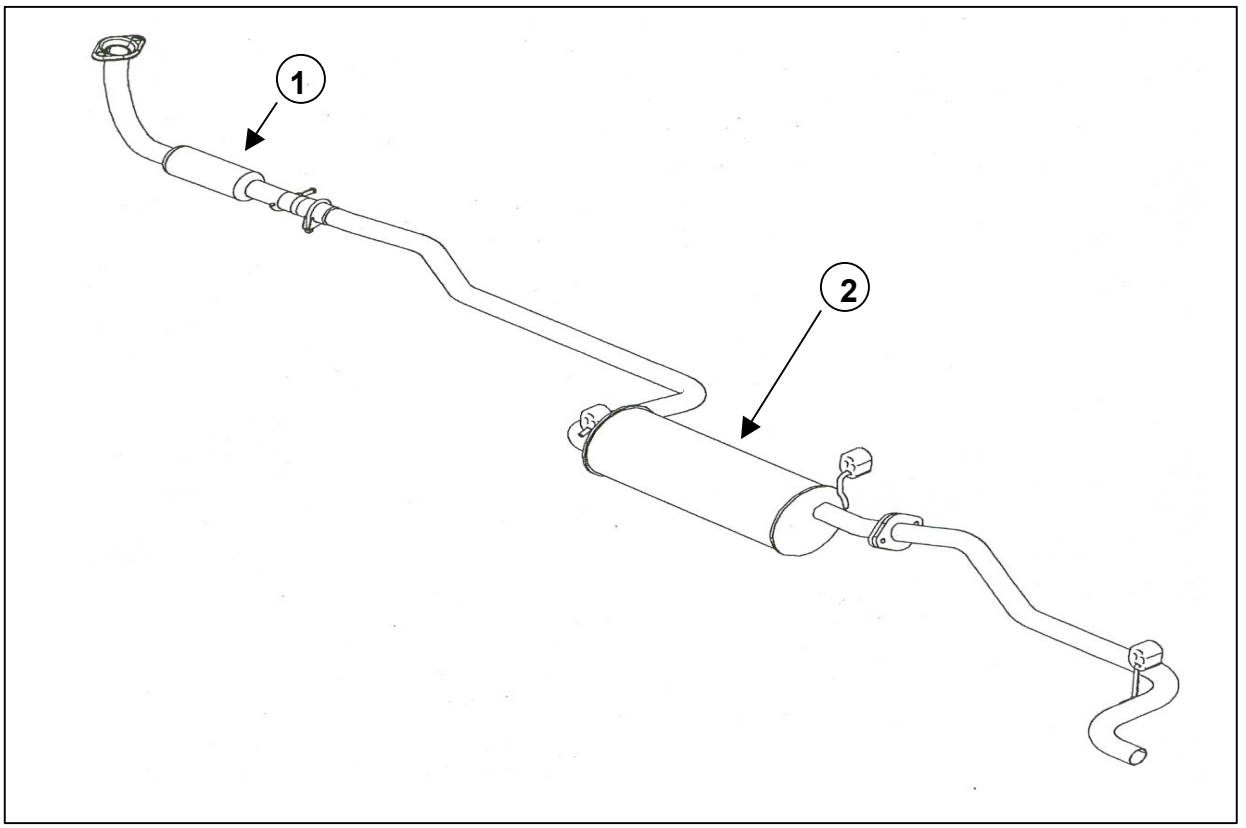

Item	Description
1	Front muffler
2	Rear muffler

DIAGNOSIS AND TESTING

Exhaust System

Inspection and Verification

1. Verify the customer concern by operating the system.
2. Visually inspect for obvious signs of mechanical damage.
3. If an obvious cause is observed or reported concern is found, correct the cause (if possible) before proceeding to the next step.
4. If the concern is not visually evident, verify the symptom and refer to the Symptom Chart.

Visual Inspection Chart

Mechanical
• Leaks • Metal fatigue or weld failure • Pipes, mufflers. • Joints and flexible coupling • Mountings and clamps • Clearance around components

Symptom Chart

Condition	Possible Sources	Action
•Engine has lack of power	•Fuel system	•REFER to Section 310-00 / 310- 01A / 310-01B / 310-02.
	•Ignition system	•REFER to Section 303-00 / 303- 04D.
	•Electronic engine control	•REFER to Section 303-00 / 303- 04D.
	•Restricted exhaust system	•CHECK the exhaust system for restriction. INSTALL new components as necessary

REMOVAL AND INSTALLATION

Exhaust System

Material	Specification
Anti-seize grease	Loctite "Never Seize"

Removal

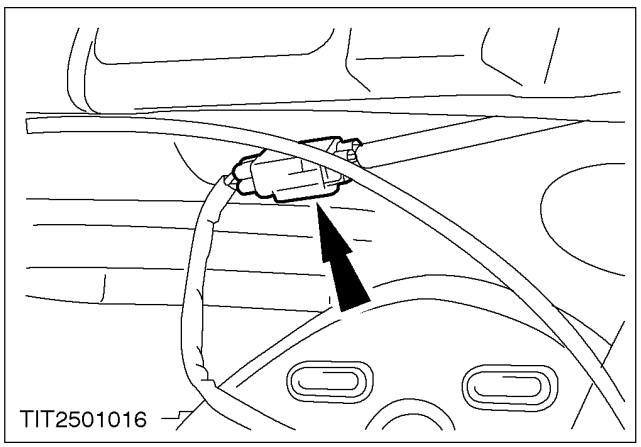

1. Disconnect the battery ground cable.
2. Disconnect the heated oxygen sensor multiplug.

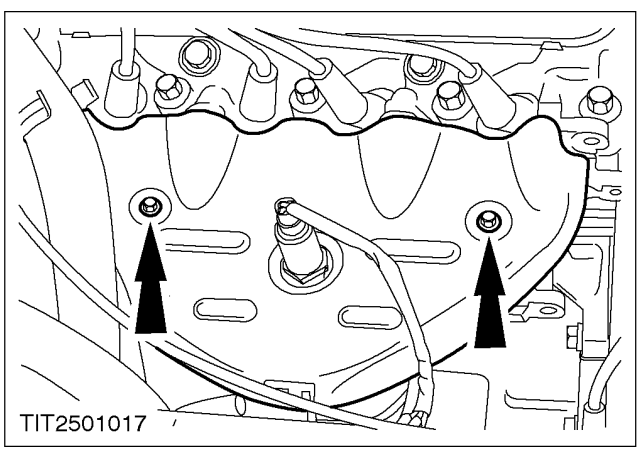

3. Remove the manifold heat shield.
4. Disconnect the exhaust downpipe from the manifold.
   - Discard the retaining nuts and any studs that may have been extracted with the nuts.

Note: For vehicles with diesel engines, refer to Exhaust Flexible Pipe in this section.

5. Raise the vehicle. Refer to Section 100-02

REMOVAL AND INSTALLATION (CONTINUED)

6. Remove the bottom rear shock absorber mountings (Refer to Section 204-02) and lower the rear axle to allow the removal of the center and rear muffler.

7. Disconnect the exhaust system from the downpipe and remove the exhaust system.

Installation

1. Install components in reverse order.

Note: Petrol engine - Renew ring seal and exhaust springs.

Diesel engine - Renew ring gasket and exhaust pipe flange gaskets.

REMOVAL AND INSTALLATION

Exhaust Flexible Pipe — Vehicles with Diesel Engines

Removal

1. Raise the vehicle. Refer to Section 100-02

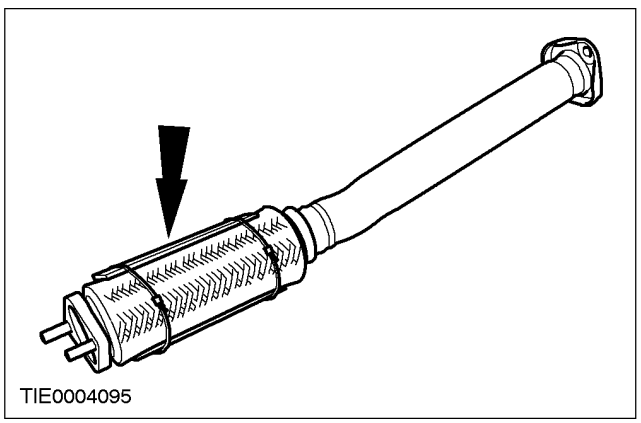

2. Support the flexible pipe with a support wrap or suitable splint.

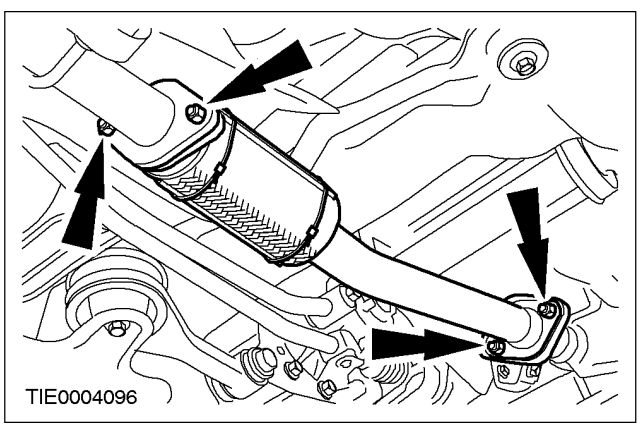

3. Remove the flexible pipe.
   - Discard the gasket and nuts.

Installation

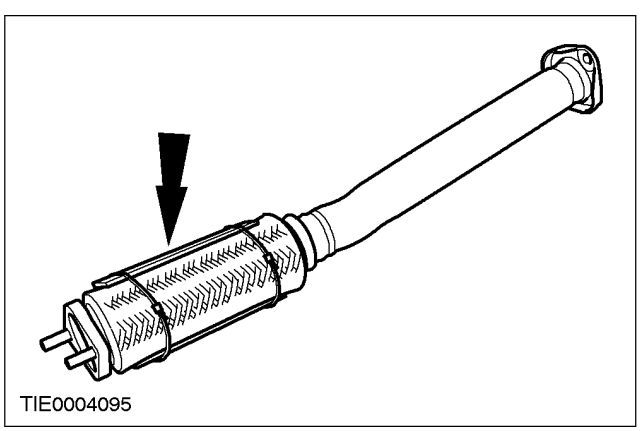

1. ⚠ **CAUTION: Over-bending or twisting of the flexible pipe may cause damage resulting in failure.**
   Support the flexible pipe with a support wrap or suitable splint.

REMOVAL AND INSTALLATION (CONTINUED)

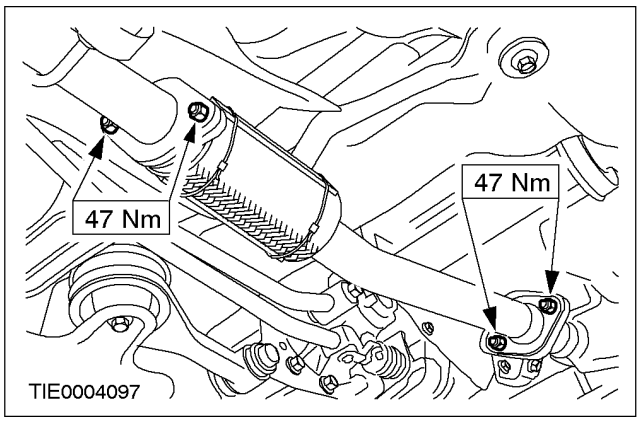

2. Install the flexible pipe.
   - Install a new gasket and nuts.
3. Remove the flexible pipe support.
4. Lower the vehicle.

REMOVAL AND INSTALLATION

Muffler and Tailpipe (25 202 0)

Material	Specification
Anti-seize grease	Loctite "Never Seize"

Removal

NOTE: The exhaust systems are of two or three-piece construction for production and three-piece construction for service replacement exhaust systems. However, for the purposes of this section only we will be referring to the exhaust system as the portion starting from the flange joint after the flexible coupling and in front of the center muffler.

1. Disconnect the battery ground cable.

2. **NOTE:** If no part of the exhaust system is to be renewed i.e. the system is to be removed and installed complete; it will be necessary to lower the rear axle. For additional information, refer to Section 100-02

Raise the vehicle.

3. Cut the exhaust pipe as specified to suit the model type and the extent of the section to be renewed.

4. Disconnect the flexible coupling refer to Section 309-00-7.

   Discard the gaskets and nuts.

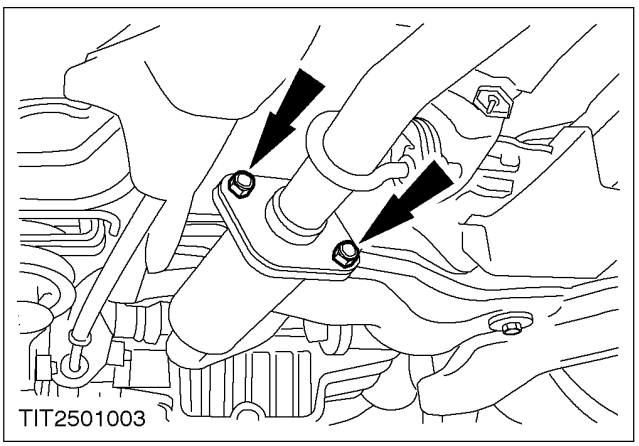

REMOVAL AND INSTALLATION (CONTINUED)

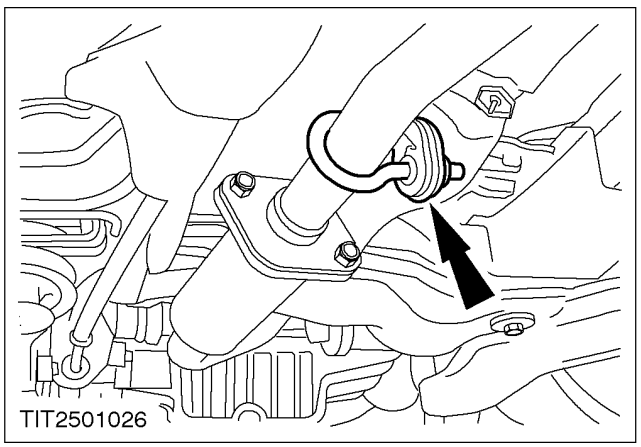

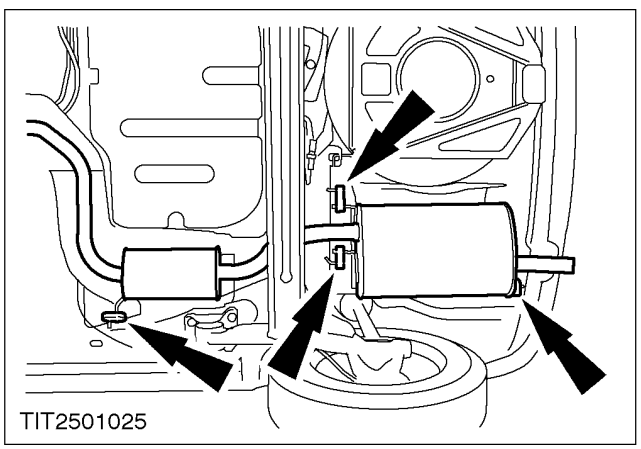

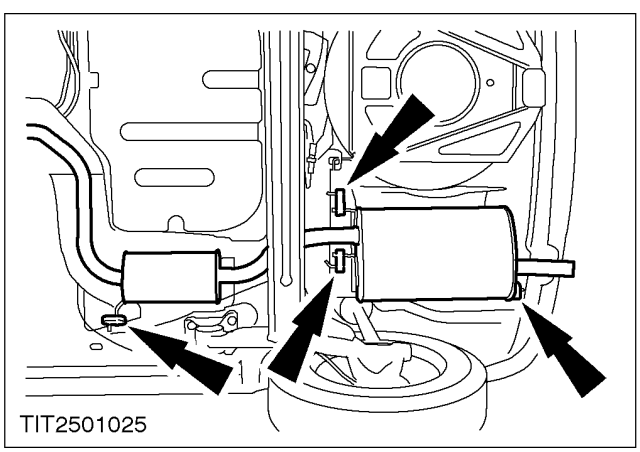

5. Remove the exhaust system by detaching it from the rubber insulators.
   - Four or five rubber insulators depending on variant.

Installation

1. Assemble the exhaust system.
   - Loosely connect the service exhaust components.
2. Install the exhaust system.
   - Examine the rubber insulators for damage/fatigue and renew as necessary.
   - Align the exhaust system to the vehicle and attach it into the rubber insulators.

REMOVAL AND INSTALLATION (CONTINUED)

3. ⚠ **CAUTION: Over-bending or twisting of the flexible pipe may cause damage resulting in failure.**
   Loosely refit the flexible coupling to the exhaust system.
   - Install new gaskets and nuts.
   - Coat the studs with anti-seize grease.

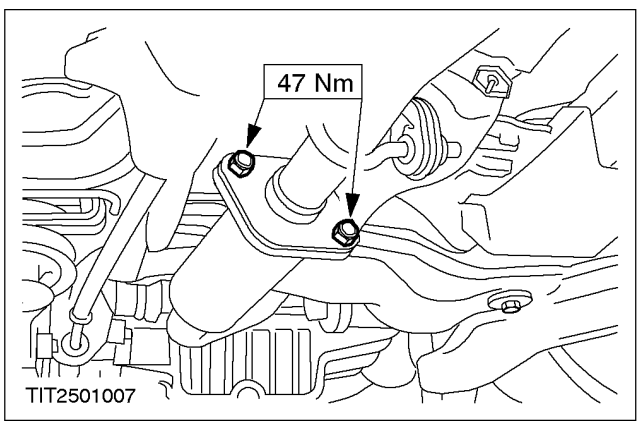

4. Check alignment of the system and tighten the nuts.
   - Tighten the pipe clamps

5. Lower the vehicle.

SPECIFICATIONS

Lubricants, Fluids, Sealers and Adhesives

Item	Specification
Anti-seize grease	Loctite "Never Seize"

Torque Specifications

Description	Nm
Exhaust pipe flange bolts and nuts	47
Manifold downpipe to exhaust pipe flange nuts and bolts	17
Engine manifold to down pipe manifold	37
Exhaust pipe clamp nuts	47

SECTION 310-00 Fuel System — General Information

VEHICLE APPLICATION: 2002 Bantam

SUBJECT **PAGE**

DESCRIPTION AND OPERATION

Fuel System 310-00-2/3

GENERAL PROCEDURES

Fuel System Pressure Relief ..... (23 420 0) 310-00-4
Fuel Tank Draining ..... (23 551 0) 310-00-5
Push Connect Fittings 310-00-6/8

SPECIFICATIONS

Specifications 310-00-9
Capacities 310-00-9
Torque Specifications 310-00-9

DESCRIPTION AND OPERATION

Fuel System

The fuel system comprises a rear mounted fuel tank, an in-tank fuel pump, a fuel tank filler pipe, a fuel filter and a fuel heater (in the case of Endura -DE variants) and a number of fuel supply and return pipes.

The fuel tank is of steel construction and has a capacity of 54 litres. The fuel tank is fixed to the vehicle by means of four bolts. Fuel tank ventilation is achieved via a fuel vapour hose fitted to the fuel tank and vents into the chassis crossmember. The fuel tank vapour assembly prevents fuel loss from the fuel tank if the vehicle becomes inverted.

The fuel pump is located inside the fuel tank and is fixed to the top of the fuel tank by a locking ring. The fuel pump is of the regenerative turbine type and will deliver fuel at a rate of 80 lph at a pressure of 3,0 bar. The fuel pump has an integral fuel tank sender unit and features excellent hot fuel handling, low noise, highly reliable operation and integral radio frequency interference (RFI) protection.

The fuel tank filler pipe is of steel construction and is fixed to the vehicle by means of two bolts. The fuel tank filler pipe is fitted with a locking filler cap, which seals the system.

The fuel supply and return pipes are made of a combination of plastic, steel and rubber. Plastic fuel pipes are connected to the fuel tank, fuel injection pump (in the case of diesel variants) and fuel filter and fuel resistant rubber pipes are connected to the fuel rail (in the case of petrol variants). The plastic and rubber pipes are joined by means of two steel pipes, which run along the underside of the vehicle. All fuel pipe connectors are of the quick release type. Supply pipe connectors are white or are identified by a white band and return pipe connectors are red or are identified by a red band.

The fuel filter (in the case of petrol variants) is located at the rear chassis crossmember. The fuel filter clamp is fixed to the chassis rail by means of two rivets and the fuel filter is retained by the clamp with a single bolt.

The fuel filter (in the case of Endura -DE variants) is located on the rear face of the cylinder head, adjacent to the battery tray. The fuel filter clamp is fixed to the cylinder head using two of the bolts, which retain the rear engine lifting eye. The fuel filter is retained by the clamp with a single bolt.

Both petrol and diesel fuel filters have a paper element contained within a steel canister.

The diesel fuel heater (in the case of Endura -DE variants) is located on the right hand side of the cylinder block in front of the fuel filter. The diesel fuel heater bracket is fixed to the cylinder block by a single bolt and the diesel fuel heater is retained to the bracket by two clips.

The diesel fuel heater is designed to warm the diesel fuel in order to prevent waxing at cold temperatures. The heating element is a temperature dependent resistance, which has a positive temperature coefficient, i.e., the resistance of the heating element increases with increasing temperature. The heater is fitted with an integral thermo switch, which prevents overheating of the heater element.

A fuel shut -off switch (in the case of petrol variants) is located behind the passenger cowl side trim panel adjacent to the powertrain control module. Two screws retain the fuel shut -off switch. The fuel shut -off switch is designed to cut the electrical supply to the fuel pump in the event of an accident or parking impact, thus reducing the risk of fire.

DESCRIPTION AND OPERATION (CONTINUED)

Diesel Fuel System Description and Operation

The diesel injection equipment fitted to the 1,8 litre naturally aspirated Endura-DE diesel engine in the 2002 Bantam comprises of a fuel injection pump, four injectors and four glow plugs.

The glow plugs and certain fuel injection pump components are controlled by the powertrain control module (EEC V).

Fuel Injection Pump

The engine is equipped with a Bosch VE distributor type fuel injection pump, which is driven by the crankshaft via a toothed rubber drive belt. The fuel injection pump is retained to the engine by three bolts at the front and a support bracket at the rear (two bolts). Setting the injector pump timing is achieved using the familiar peg method.

The fuel injection pump is fitted with a light load retard device and a cold start advance solenoid, both of which change the natural injection timing characteristics dependent on engine operating conditions.

Light Load retard Device

The light load retard device is a mechanical / hydraulic device incorporating a solenoid which is controlled by the powertrain control module. Under normal operating conditions and for engine loads up to approximately 80% full load, the device retards the injection timing by approximately 3°. Where engine load is above 80% of full load, engine coolant temperature is below 50°C and / or engine speed is above 3500 rev/min, the powertrain control module energizes the solenoid which inhibits the operation of the light load retard device, thus advancing the injection timing.

Cold Start Advance Solenoid

The powertrain control module controls the cold start advance solenoid. When engine coolant temperature is below 50°C, the powertrain control module energizes the solenoid which advances the injection timing throughout the engine speed / load range.

The amount of time, which the solenoid is also energized, decreases as engine coolant temperature increases.

The solenoid is also energized when engine coolant temperature is below 0°C and engine speed is just above idle to improve drivability take off.

Fuel Injectors

The engine is equipped with four Bosch fuel injectors, which have throttling pintle nozzles.

The fuel injectors are screwed into the cylinder head and sealed by means of copper washers.

Glow Plugs

The engine is equipped with four glow plugs, which are screwed into the cylinder head below the fuel injectors. The glow plugs improve starting, especially from cold.

The powertrain control module controls the glow plugs and the glow plug indicator lamp. When the ignition is switched on, the glow plugs are switched on and the glow plug indicator lamp is illuminated for between 1 and 10 seconds dependant on engine coolant temperature.
(1 second at 80°C and 10 seconds at -30°C).

The glow plugs remain on for a period of 3 seconds after the glow plug indicator lamp has been extinguished. However, if the engine is started during this 3-second period, the glow plug will remain on for a further 0 to 40 seconds dependant on engine coolant temperature.
(0 seconds at 80°C and 40 seconds at -40°C)

GENERAL PROCEDURES

Fuel System Pressure Relief (23 420 0)

Release

WARNING: Do not smoke or carry lighted tobacco or open flame of any type when working on or near any fuel related components. Highly flammable vapours are always present and may ignite. Failure to follow these instructions may result in personal injury.

WARNING: The fuel system remains pressurized for a long time after the ignition is switched off. The fuel pressure must be released before attempting any repairs. Failure to follow this instruction may result in personal injury.

1. Remove the fuel pump fuse.
2. Start the engine and allow it to idle until the engine stalls.
3. Crank the engine for approximately five seconds to make sure the fuel injection supply manifold pressure has been released.
4. Install the fuel pump fuse.

GENERAL PROCEDURES

Fuel Tank Draining (23 551 0)

Draining

WARNING: Do not smoke or carry lighted tobacco or open flame of any type when working on or near any fuel related components. Highly flammable vapours are always present and may ignite. Failure to follow these instructions may result in personal injury.

WARNING: The fuel system remains pressurized for a long time after the ignition is switched off. The fuel pressure must be relieved before attempting any repairs. Failure to follow these instructions may result in personal injury.

1. Disconnect the battery ground cable.
2. Remove the fuel filler cap.
3. **NOTE:** To enable the hose to enter the fuel tank it is necessary to cut a 40mm long taper at the end.
   Drain the fuel from the fuel tank using a 12.5mm nylon drain tube with the approved Ford fuel drain tank.

GENERAL PROCEDURES

Push Connect Fittings

Disconnection

WARNING: Do not carry lighted tobacco or open flame of any type when working on or near any fuel related components. Highly flammable mixtures are always present and can ignite. Failure to follow these instructions may result in personal injury.

CAUTION: Fuel injection equipment is manufactured to very precise tolerances and fine clearances. It is therefore essential that absolute cleanliness be observed when working with these components. Always install blanking plugs to any open orifices or lines.

NOTE: Fuel supply line connectors are white or are identified by a white band. Fuel return line connectors are red or are identified by a red band.

1. De-pressurize the fuel system. For additional information, refer to Fuel System Pressure Release in this section.

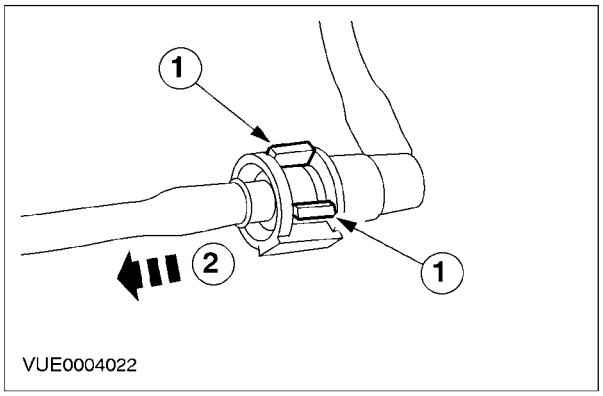

2. Disconnect the fuel line quick release coupling.
   1. Press the fuel line quick release coupling locking tangs.
   2. Disconnect the fuel line quick release coupling.

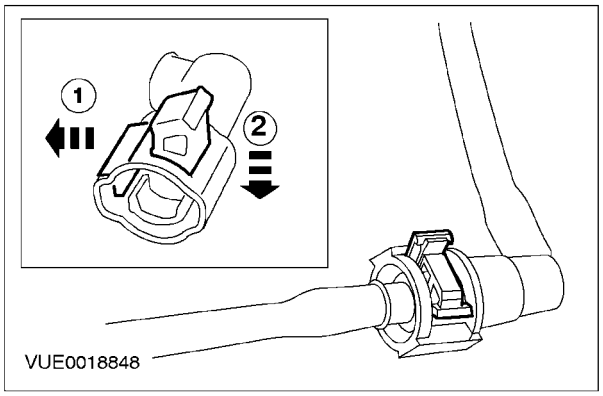

3. Disconnect the fuel line quick release coupling.
   1. Pull the fuel line quick release coupling locking tang.
   2. Push the clip through the fuel line quick release coupling to release the fuel line.

GENERAL PROCEDURES (CONTINUED)

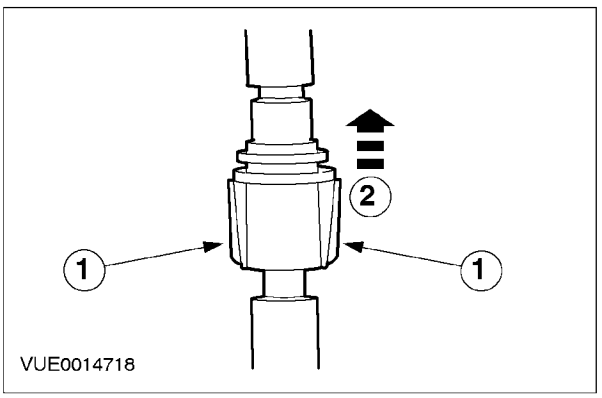

4. Disconnect the fuel line quick release coupling.
   1. Press the fuel line quick release coupling locking tangs.
   2. Disconnect the fuel line quick release coupling.

Connect

WARNING: Do not carry lighted tobacco or open flame of any type when working on or near any fuel related components. Highly flammable mixtures are always present and can ignite. Failure to follow these instructions may result in personal injury.

CAUTION: Fuel injection equipment is manufactured to very precise tolerances and fine clearances. It is therefore essential that absolute cleanliness be observed when working with these components. Always install blanking plugs to any open orifices or lines.

NOTE: Fuel supply line connectors are white or are identified by a white band. Fuel return line connectors are red or are identified by a red band.

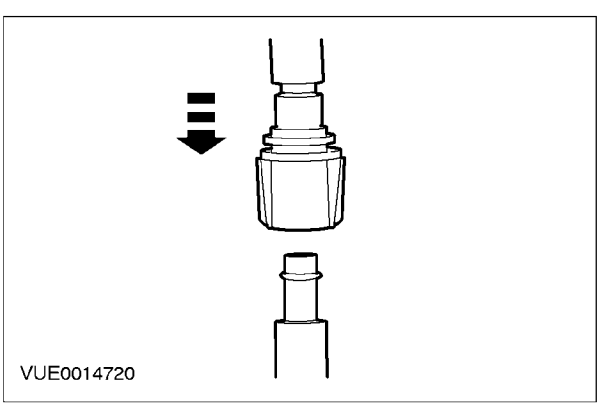

1. **NOTE:** Make sure the collar on the fuel line is inserted fully into the fuel line quick release coupling.
   Install the fuel line quick release coupling.

GENERAL PROCEDURES (CONTINUED)

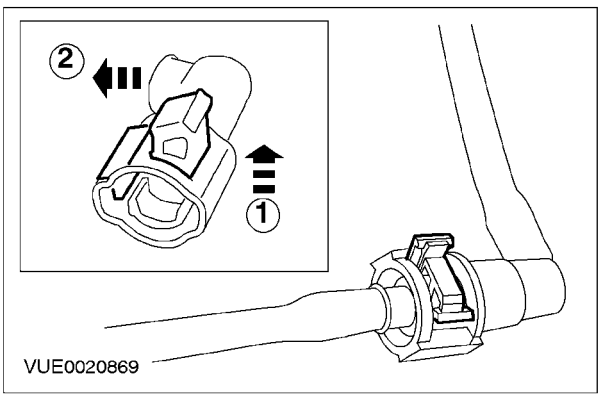

2. NOTE: Make sure the collar on the fuel line is inserted fully into the fuel line quick release coupling before the locking tang is locked.

Install the fuel line quick release coupling.

1. Install the fuel line quick release coupling locking tang.
2. Rotate the fuel line quick release coupling locking tang into position.

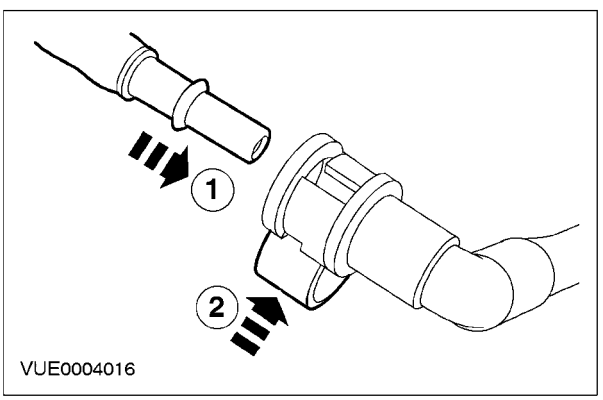

3. NOTE: Make sure the collar on the fuel line is inserted fully into the fuel line quick release coupling before the locking tang is locked.

Install the fuel line quick release coupling.

1. Install the fuel line quick release coupling.
2. Press the fuel line quick release coupling locking tang into position.

SPECIFICATIONS

Capacities

	Litres
Fuel tank capacity	54 litres

Torque Specifications

Description	Nm
Engine cover retaining bolts.	6
Fuel tank retaining bolts	21

SECTION 310-01A Fuel Tank and Lines — Petrol Engines

VEHICLE APPLICATION: 1996 2002 Bantam

SUBJECT **PAGE**

DESCRIPTION AND OPERATION

Fuel Tank and Lines 310-01A-11

DIAGNOSIS AND TESTING

Fuel Tank and Lines 310-01A-12
Inspection and Verification 310-01A-12

REMOVAL AND INSTALLATION

Fuel Tank ..... (23 554 0) 310-01A-13/16
Fuel Filter 310-01A-17/18
Fuel Pump Module ..... (23 534 0) 310-01A-19/20
Fuel Tank Filler Pipe ..... (23 572 0) 310-01A-21
Fuel Pump to Fuel Filter Line ..... (23 588 0) 310-01A-22/23
Fuel Filter to Fuel Supply Manifold Line ..... (23 590 0) 310-01A-24/27
Fuel Return Line ..... (23 594 0) 310-01A-28/31
Inertia Fuel Shutoff (IFS) Switch ..... (33 577 0) 310-01A-32/33

SPECIFICATIONS

Specifications 310-01A-34
Torque Specifications 310-01A-34

DESCRIPTION AND OPERATION

Fuel Tank and Lines

Refer to Section 310-00

DIAGNOSIS AND TESTING

Fuel Tank and Lines

General Equipment
WDS

Inspection and Verification

1. Verify the customer concern by operating the system.
2. Visually inspect for obvious signs of mechanical or electrical damage.

Visual Inspection Chart

Mechanical	Electrical
• Damaged fuel lines. • Damaged push connect fittings. • Fuel Leaks. • Damaged fuel tank filler cap. • Damaged fuel tank filler pipe. • Incorrectly fitted fuel filter	• Inertia fuel shutoff switch. • Loose or corroded electrical connectors.

3. If an obvious cause for an observed or reported concern is found, correct the cause (if possible) before proceeding to the next step.
4. If the concern is not visually evident, verify the symptom and refer to WDS.

REMOVAL AND INSTALLATION

Fuel Tank (23 554 0)

Removal

⚠ **WARNING: Do not smoke or carry lighted tobacco or open flame of any type when working on or near fuel related components. Highly flammable vapours are always present and may ignite. Failure to follow these instructions may result in personal injury.**

1. Drain the fuel tank. For additional information, refer to Section 310-00.
2. Raise and support the vehicle. For additional information, refer to Section 100-02.

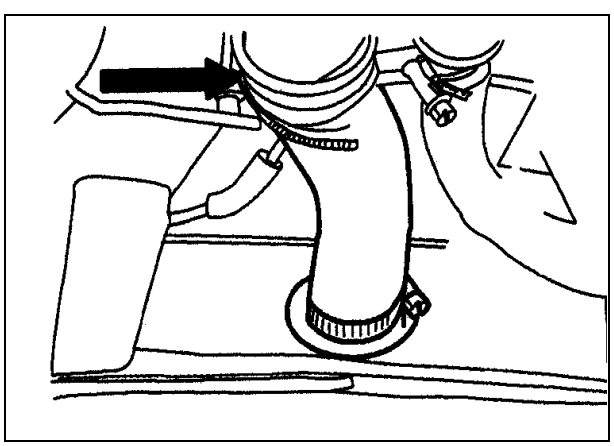

3. Disconnect the fuel tank filler hose from the fuel tank.
4. Disconnect the vent hose from the fuel tank filler pipe.

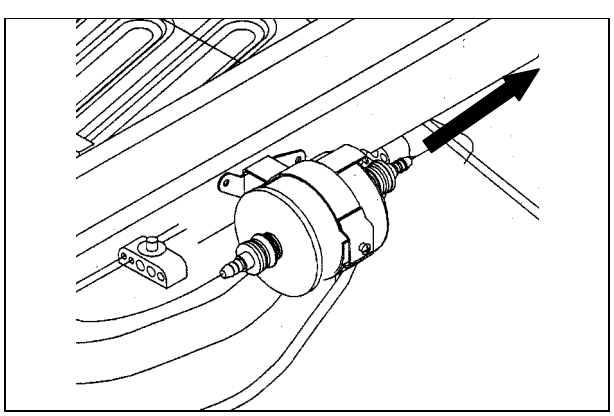

5. Disconnect the fuel filter supply line from the fuel filter. For additional information, refer to Section 310-00.

REMOVAL AND INSTALLATION (CONTINUED)

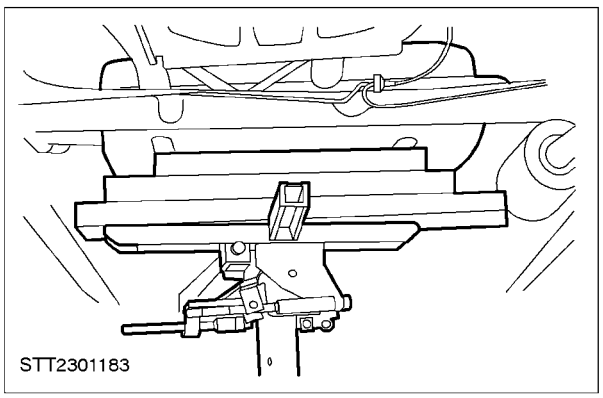

6. **⚠CAUTION: When supporting the fuel tank, use a suitable packing material to prevent damage to the underside of the fuel tank.**
   Support the fuel tank with a suitable jack.

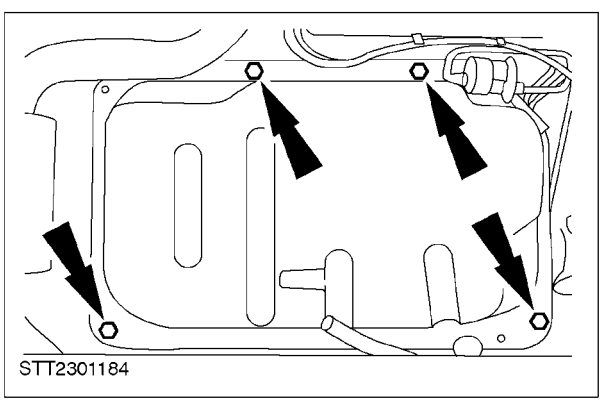

7. Remove the fuel tank retaining bolts (jack removed for clarity).

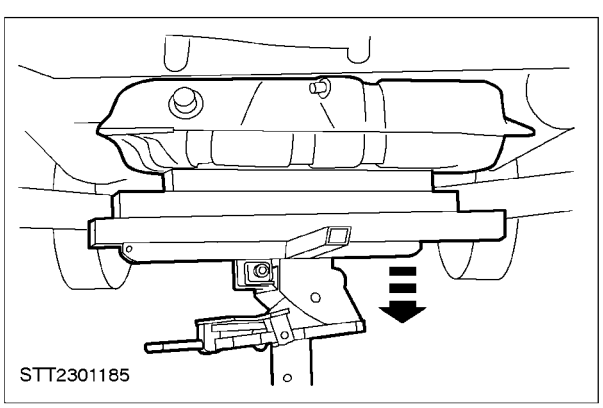

8. Partially lower the fuel tank.

REMOVAL AND INSTALLATION (CONTINUED)

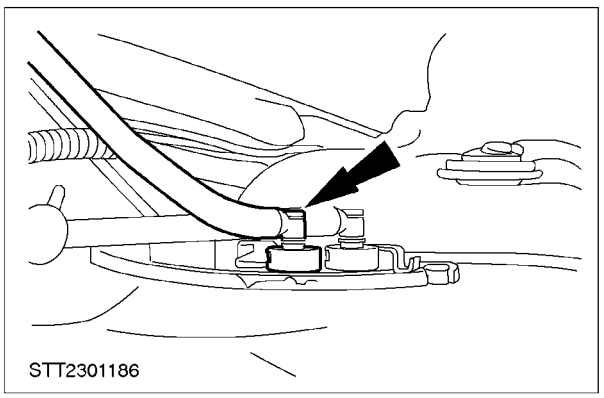

9. **NOTE:** Fuel return line connectors are red or identified by a red band.
   Disconnect the fuel return line from the fuel tank. For additional information, refer to Section 310-00.

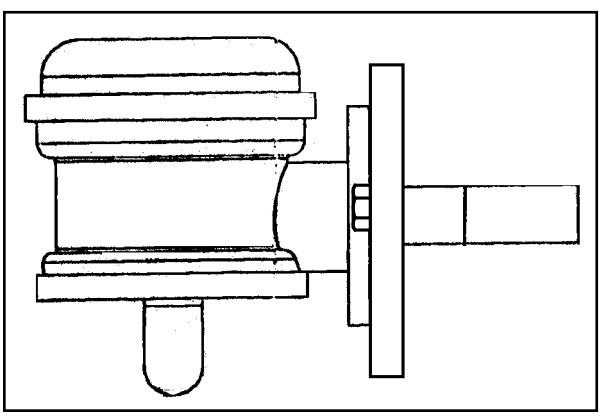

10. Disconnect the fuel tank ventilation hose from the rear chassis cross member.

11. Detach the fuel tank vent valve from the canister bracket.

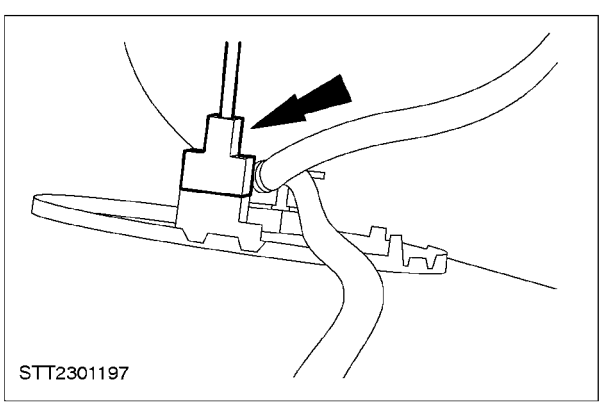

12. Disconnect the fuel pump electrical connector.

REMOVAL AND INSTALLATION (CONTINUED)

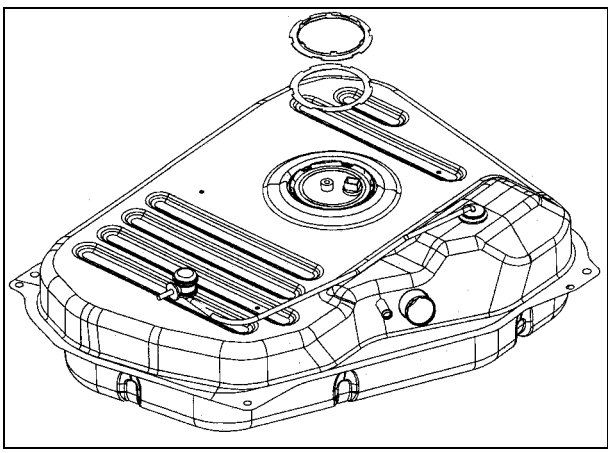

13. Remove the fuel tank.

Installation

WARNING: Do not smoke or carry lighted tobacco or open flame of any type when working on or near fuel related components. Highly flammable mixtures are always present and can ignite. Failure to follow these instructions can result in personal injury.

1. To install, reverse the removal procedure.

REMOVAL AND INSTALLATION

Fuel Filter

Removal

WARNING: This procedure involves fuel handling. Be prepared for fuel spillage at all times and always observe fuel handling precautions.

WARNING: Do not smoke or carry lighted tobacco or open flame of any type when working on or near any fuel related components. Highly flammable mixtures are always present and can ignite. Failure to follow these instructions may result in personal injury.

1. Disconnect the battery ground cable. For additional information, refer to Section 414-01.
2. Release the fuel system pressure. For additional information, refer to Section 310-00.
3. Raise and support the vehicle. For additional information, refer to Section 310-02.
4. Disconnect the fuel lines. For additional information, refer to Section 310-00.

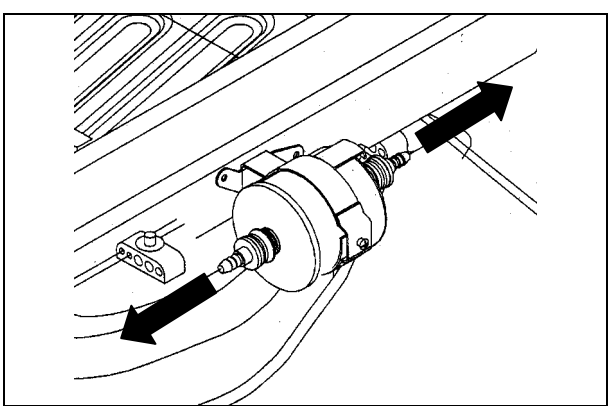

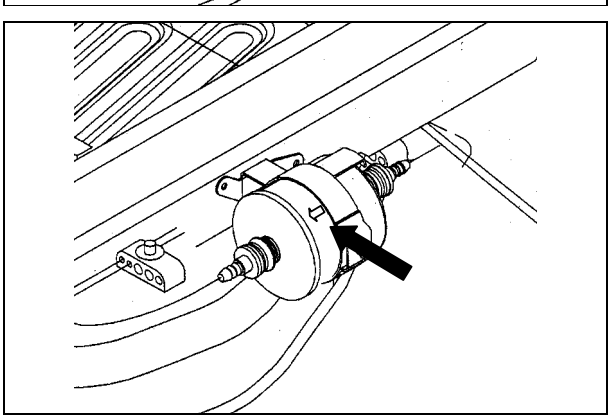

5. **NOTE:** There is a fuel flow arrow on the fuel filter. Note its direction.
   Remove the fuel filter.

REMOVAL AND INSTALLATION (CONTINUED)

Installation

WARNING: This procedure involves fuel handling. Be prepared for fuel spillage at all times and always observe fuel handling precautions.

WARNING: Do not smoke or carry lighted tobacco or open flame of any type when working on or near any fuel related components. Highly flammable mixtures are always present and can ignite. Failure to follow these instructions may result in personal injury.

1. **NOTE:** When the battery is disconnected and reconnected, some abnormal drive symptoms may occur while the vehicle relearns its adaptive strategy. It may need to be driven 16 km or more to relearn its adaptive strategy.

NOTE: Make sure the fuel flow arrow on the fuel filter is in the correct direction.

To install, reverse the removal procedure.

REMOVAL AND INSTALLATION

Fuel Pump Module (23 534 0)

Special Tool(s)	
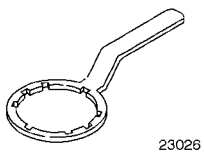 23026	Wrench, fuel tank sender unit. 23-026

Removal

WARNING: Do not smoke or carry lighted tobacco or open flame of any type when working on or near any fuel related components. Highly flammable mixtures are always present and can ignite. Failure to follow these instructions can result in personal injury.

1. Remove the fuel tank. For additional information, refer to Fuel Tank in this section

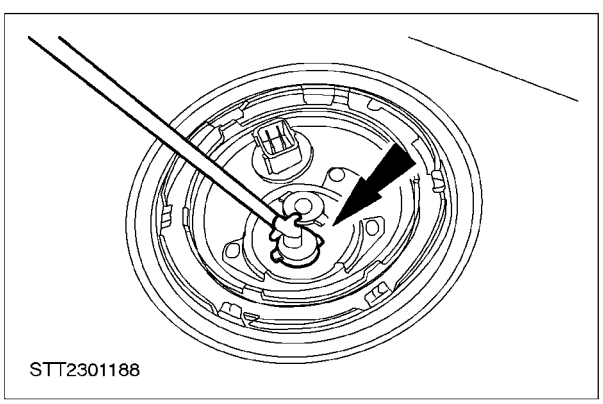

2. **NOTE:** Fuel supply line connections are white or are identified by a white band.
   Disconnect the fuel supply line from the fuel pump. For additional information, refer to Section 310-00.

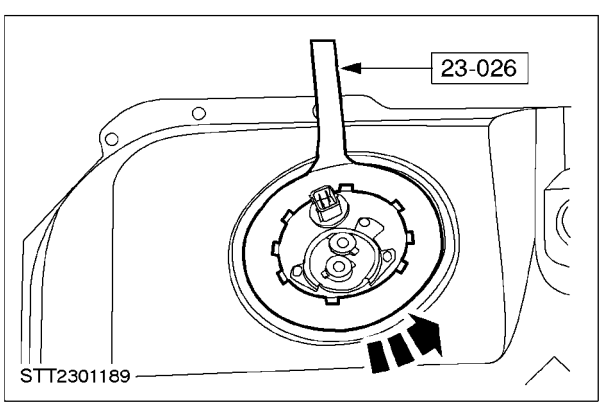

3. Remove the fuel pump locking ring.

REMOVAL AND INSTALLATION (CONTINUED)

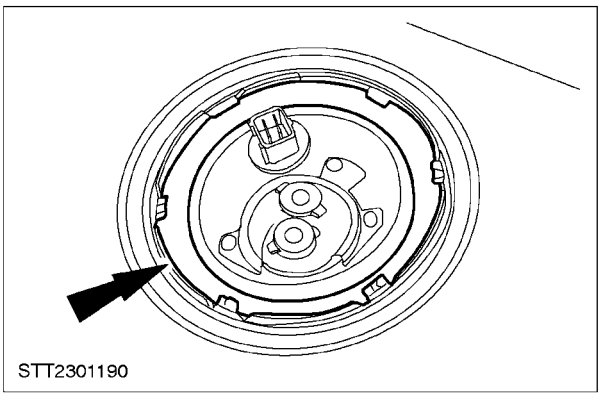

4. Remove the fuel pump nylon insert.

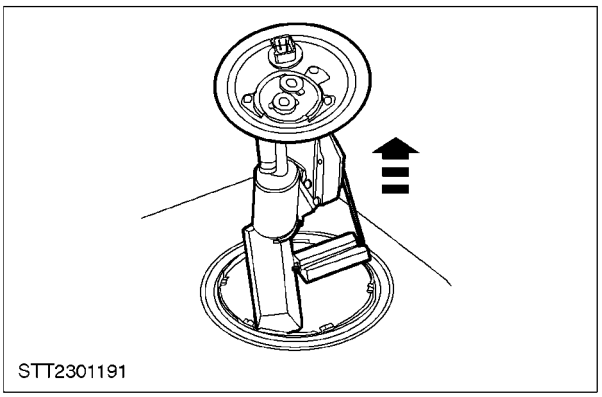

5. Remove the fuel pump.

Installation

WARNING: Do not smoke or carry lighted tobacco or open flame of any type when working on or near any fuel related components. Highly flammable mixtures are always present and can ignite. Failure to follow these instructions can result in personal injury.

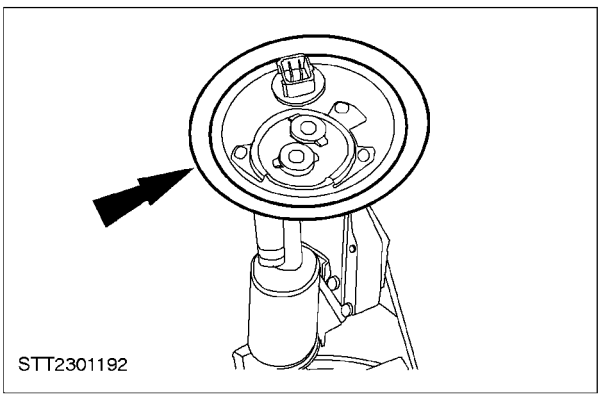

1. Install a new fuel pump seal.

2. To install, reverse the removal procedure.

REMOVAL AND INSTALLATION

Fuel Tank Filler Pipe (23 572 0)

Removal

WARNING: Do not smoke or carry lighted tobacco or open flame of any type when working on or near any fuel related components. Highly flammable mixtures are always present and can ignite. Failure to follow these instructions may result in personal injury.

1. Remove the fuel tank filler pipe retaining bolts.
2. Remove the fuel filler cap.
3. Remove the fuel tank. For additional information,
   refer to Fuel Tank in this section
4. Remove the fuel tank filler pipe.

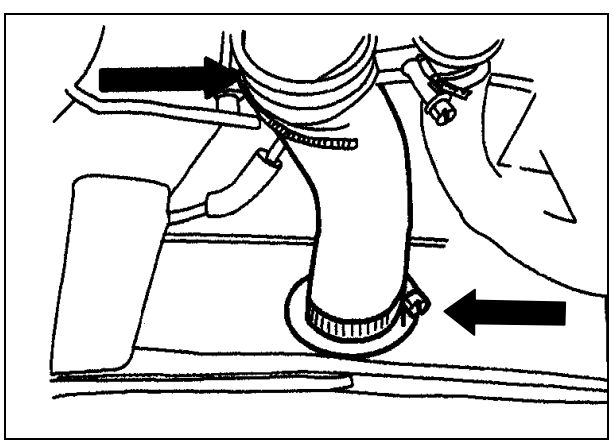

Installation

WARNING: Do not smoke or carry lighted tobacco or open flame of any type when working on or near any fuel related components. Highly flammable mixtures are always present and can ignite. Failure to follow these instructions may result in personal injury.

1. To install, reverse the removal procedure.

REMOVAL AND INSTALLATION

Fuel Pump to Fuel Filter Line (23 588 0)

Removal

WARNING: Do not smoke or carry lighted tobacco or open flame or any type when working near any fuel related components. Highly flammable vapours are always present and may ignite. Failure to follow these instructions can result in personal injury.

1. De-pressurize the fuel system. For additional information, refer to Section 310-00.
2. Remove the fuel tank. For additional information, refer to Fuel Tank in this section
3. Disconnect the fuel supply line from the fuel filter. For additional information, refer to Section 310-00.

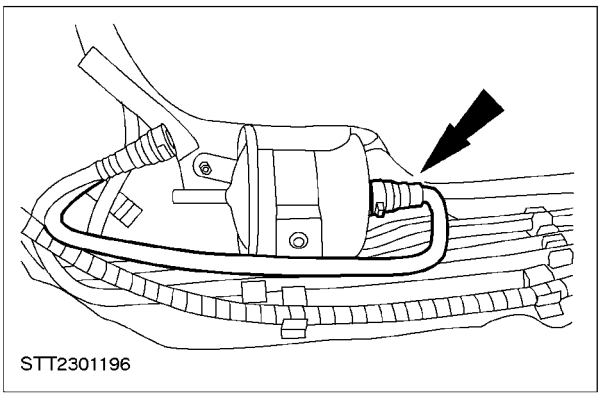
STT2301196

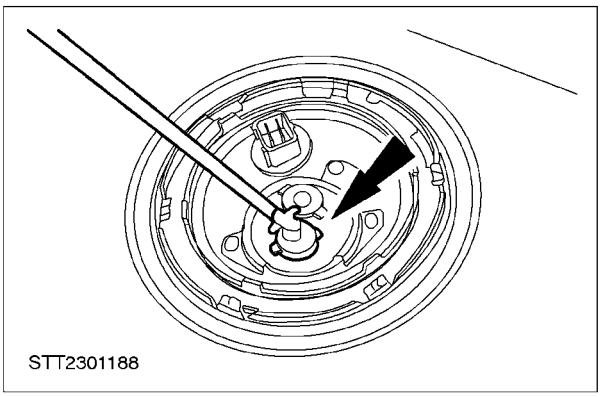
STT2301188

4. **NOTE:** Fuel supply line connectors are white or are identified by a white band.
   Disconnect the fuel supply line from the fuel tank. For additional information, refer to Section 310-00.

REMOVAL AND INSTALLATION (CONTINUED)

Installation

WARNING: Do not smoke or carry lighted tobacco or open flame of any type when working on or near any fuel related components. Highly flammable vapours are always present and may ignite. Failure to follow these instructions can result in personal injury.

1. To install, reverse the removal procedure.

REMOVAL AND INSTALLATION

Fuel Filter to Fuel Supply Manifold Line (23 590 0)

WARNING: This procedure involves fuel handling. Be prepared for fuel spillage at all times and always observe fuel handling precautions. Failure to follow these instructions can result in personal injury.

NOTE: It will be necessary to raise the vehicle in order to carry out this procedure.

Removal

1. Disconnect the battery ground cable.
2. Remove the flexible coupling to pinion shaft pinch bolt.

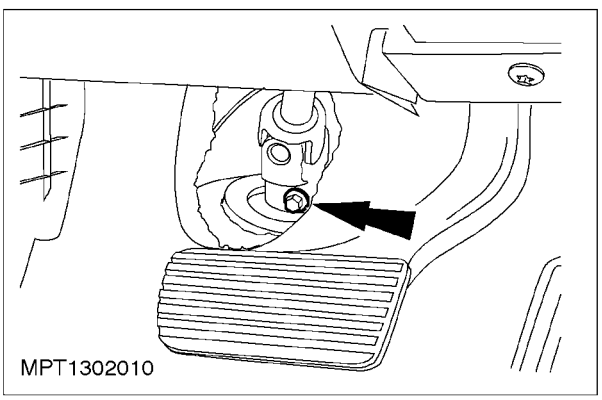

3. Loosen the flexible coupling to column shaft pinch bolt.

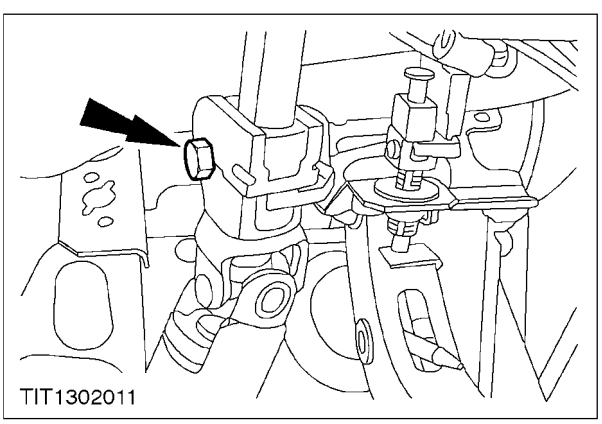

4. Loosen the wheel nuts, raise the vehicle and remove the front road wheels.

REMOVAL AND INSTALLATION (CONTINUED)

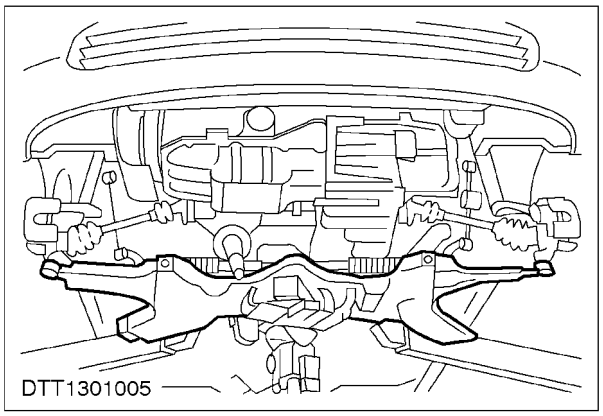

6. Partially lower the front crossmember. For additional information, refer to Section 502-00.

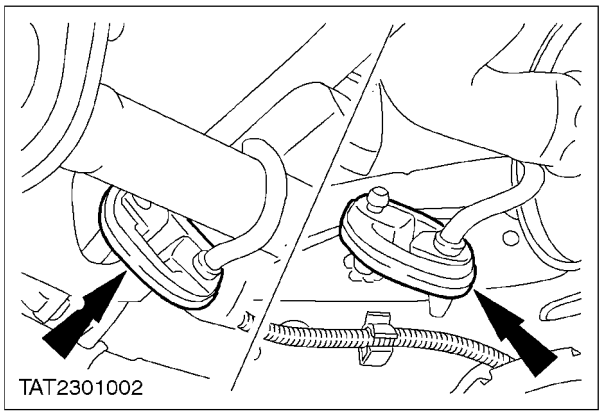

7. Detach the exhaust system from the front and centre rubber insulators.

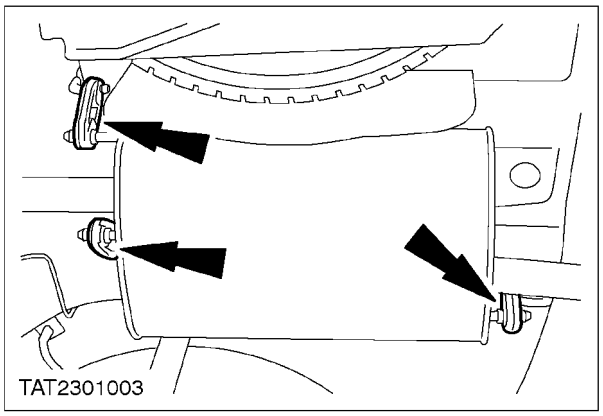

8. Detach the exhaust system from the three rear rubber insulators.
   - Allow the exhaust system to be supported by the rear suspension assembly.

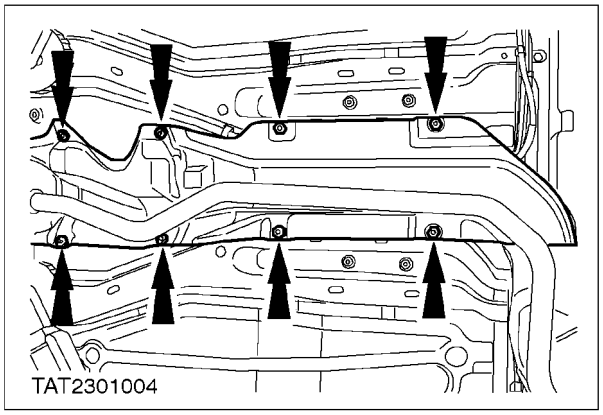

9. Remove the exhaust heat shields.

REMOVAL AND INSTALLATION (CONTINUED)

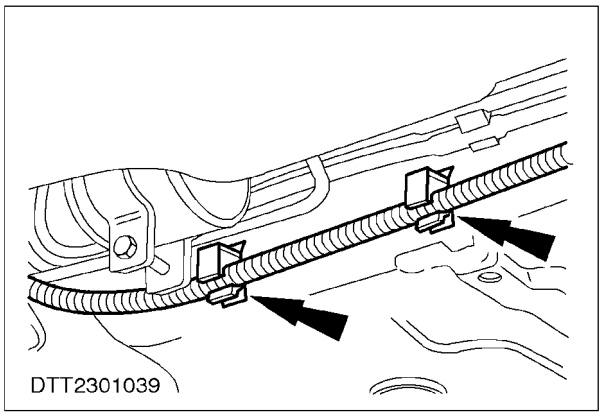

10. Detach the handbrake cable from the two retaining clips.

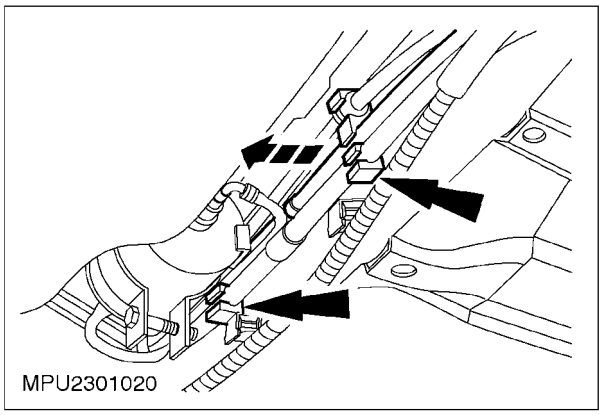

11. Detach the fuel supply pipe from the six retaining clips.

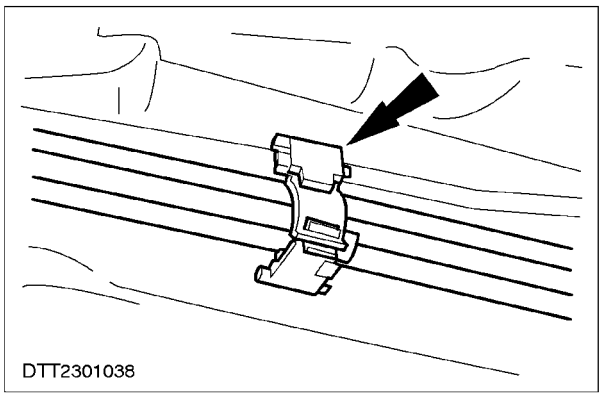

12. Release the fuel supply and return pipes from the six retaining clips.

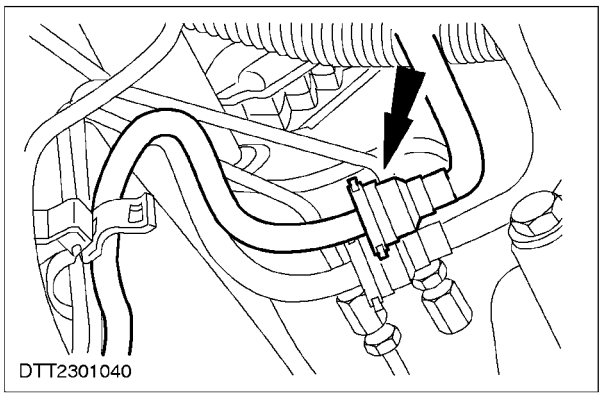

13. Disconnect the fuel supply pipe from the fuel rail supply pipe.
    - Fuel supply pipe connectors are white or are identified by a white band.

REMOVAL AND INSTALLATION (CONTINUED)

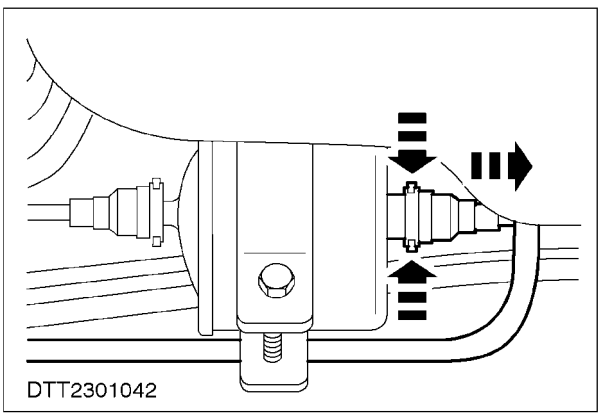

14. Disconnect the fuel supply pipe from the fuel filter.

15. Remove the fuel supply pipe.

Installation

1. Refit the components in reverse order.

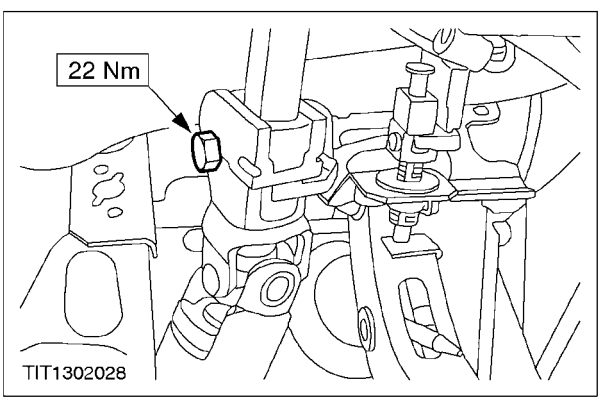

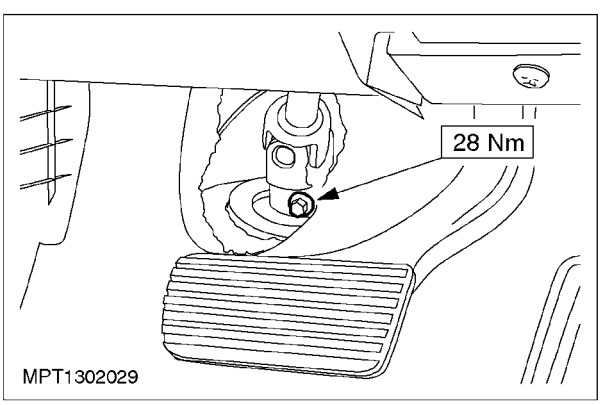

REMOVAL AND INSTALLATION

Fuel Return Line (23 594 0)

General Equipment
Fuel tank draining equipment

WARNING: This procedure involves fuel handling. Be prepared for fuel spillage at all times and always observe fuel handling precautions. Failure to follow these instructions can result in personal injury.

NOTE: It will be necessary to raise the vehicle in order to carry out this procedure.

Removal

1. Disconnect the battery ground cable.
2. Drain the fuel tank using proprietary fuel tank draining equipment.
3. Remove the flexible coupling to pinion shaft pinch bolt.

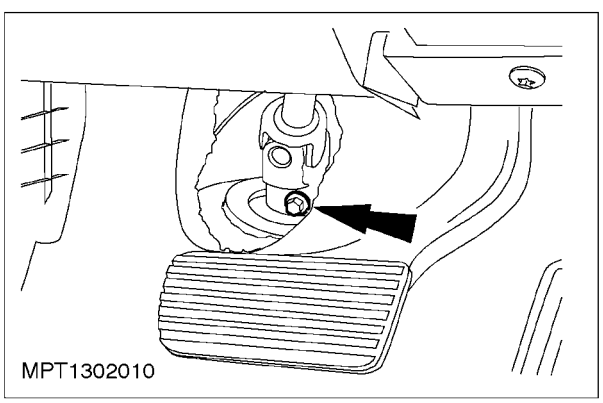

4. Loosen the flexible coupling to column shaft pinch bolt.

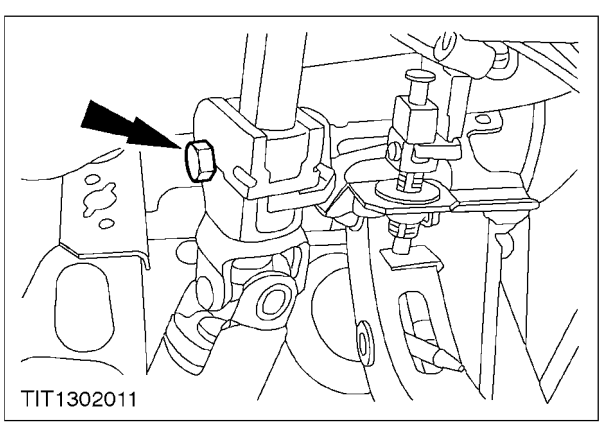

5. Loosen the wheel nuts, raise the vehicle and remove the front road wheels.

REMOVAL AND INSTALLATION (CONTINUED)

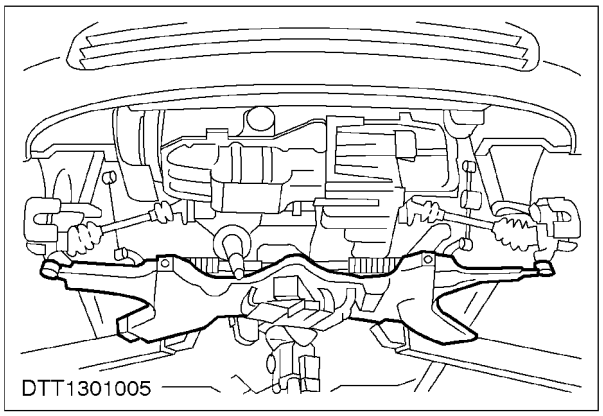

7. Partially lower the front crossmember. For additional information, refer to Section 502-00.

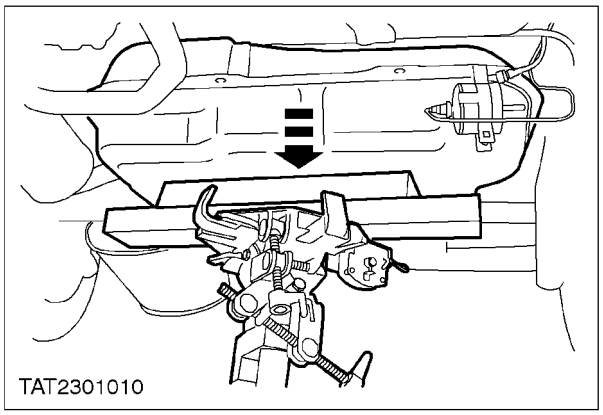

8. Partially lower the fuel tank; refer to procedure contained in this section.

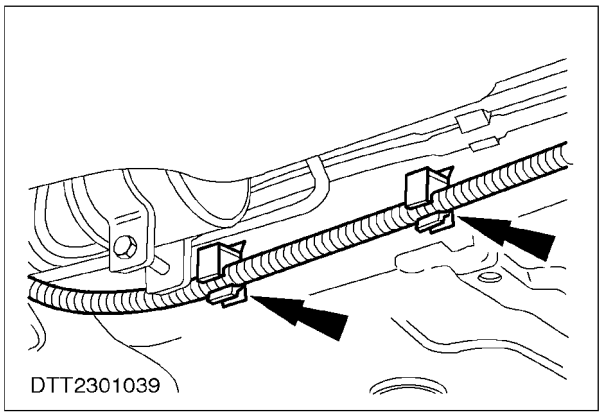

9. Detach the handbrake cable from the six retaining clips.

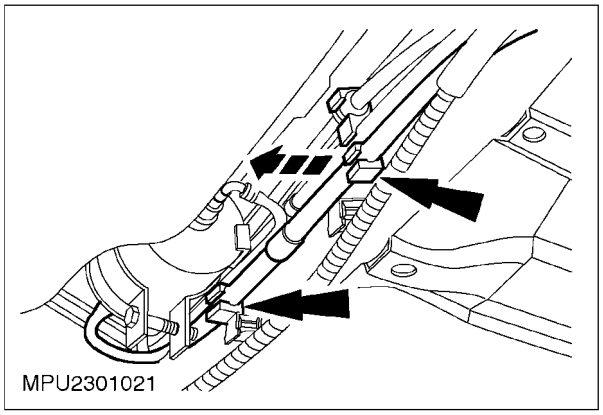

10. Detach the fuel return pipe from the six retaining clips.

REMOVAL AND INSTALLATION (CONTINUED)

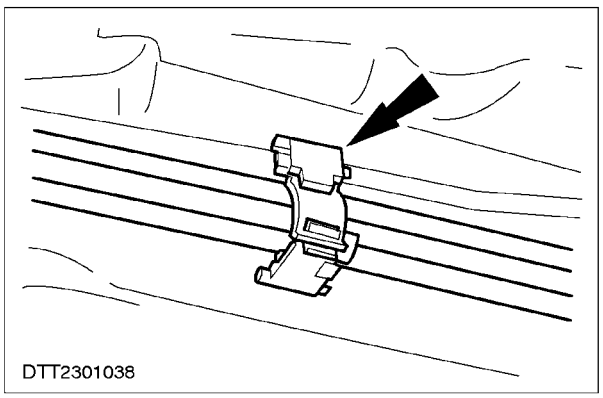

11. Release the fuel supply and return pipes from the four retaining clips.

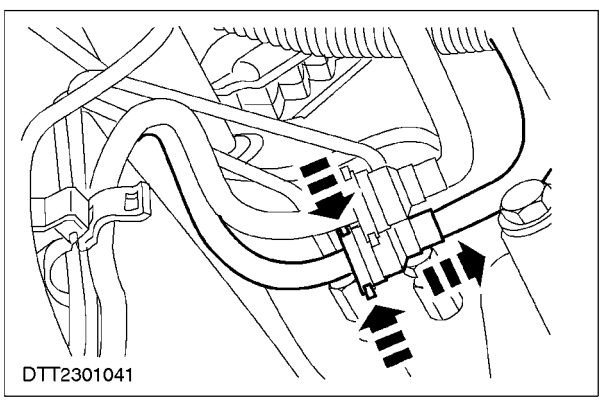

12. Disconnect the fuel return pipe from the fuel rail return pipe.
    - Fuel return pipe connectors are red or are identified by a red band.

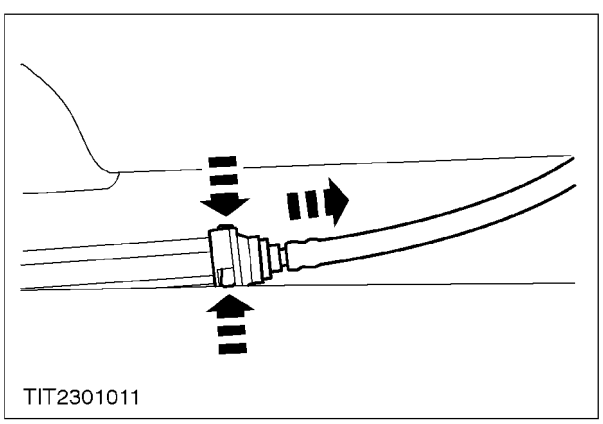

13. Disconnect the fuel return pipe from the fuel tank.
    - Fuel return pipe connectors are red or are identified by a red band.

14. Remove the fuel return pipe.

REMOVAL AND INSTALLATION (CONTINUED)

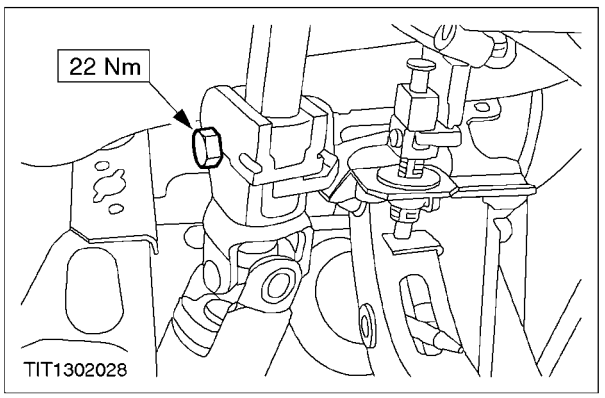

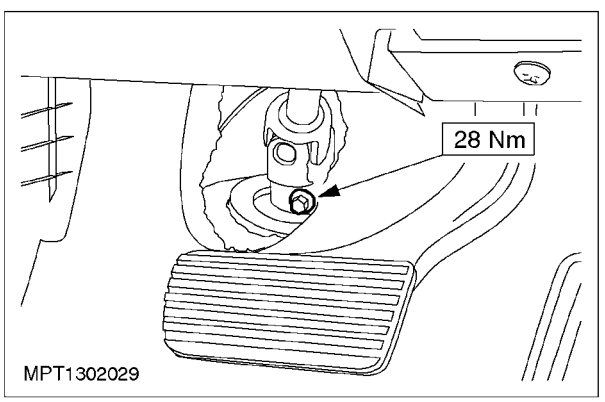

Installation

1. Refit the components in reverse order.

REMOVAL AND INSTALLATION

Inertia Fuel Shutoff (IFS) Switch (33 577 0)

Removal

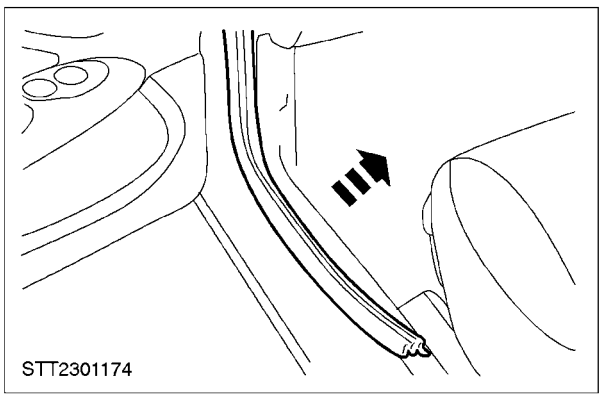

1. Detach the right-hand door weather strip.

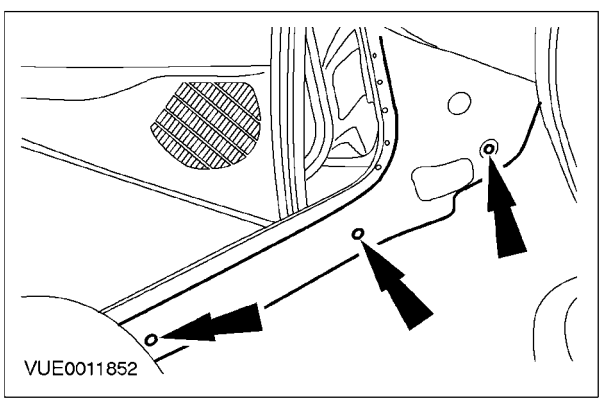

2. Detach the cowl side trim panel.

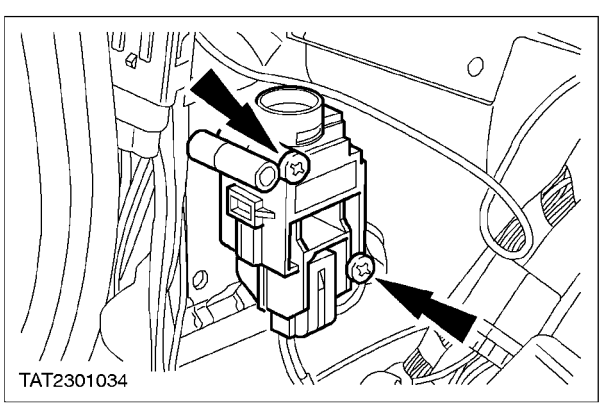

3. Detach the inertia fuel shutoff (IFS) switch.

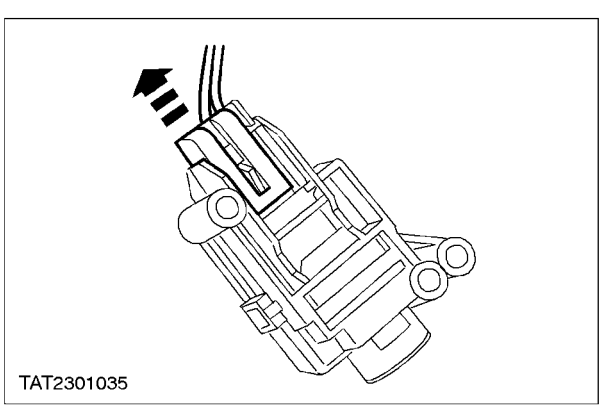

4. Remove the IFS switch.
   - Disconnect the IFS switch electrical connector.

REMOVAL AND INSTALLATION (CONTINUED)

Installation

1. **NOTE:** Make sure the IFS switch is in the reset position.
   Depress the button on the IFS switch.
   To install, reverse the removal procedure.

SPECIFICATIONS

Torque Specifications

Description	Nm
Flexible coupling to the column shaft pinch bolt	28
Flexible coupling to steering gear pinion shaft pinch bolt	26

SECTION 310-01B Fuel Tank and Lines — Diesel Engines

VEHICLE APPLICATION: 1996 2002 Bantam

SUBJECT **PAGE**

DESCRIPTION AND OPERATION

Fuel Tank and Lines 310-01B-36

DIAGNOSIS AND TESTING

Fuel Tank and Lines 310-01B-37

REMOVAL AND INSTALLATION

Fuel Tank..... (23 554 0) 310-01B-38/40
Fuel Sender Unit..... (33 286 0) 310-01B-41/43
Fuel Filter Element..... (23 546 0) 310-01B-44
Fuel Tank to Fuel Filter Line ..... (23 588 0) 310-01B-45/49
Fuel Return Line ..... (23 594 0) 310-01B-50/53

SPECIFICATIONS

Specifications..... 310-01B-54
Lubricants, Fluids, Sealers and Adhesives..... 310-01B-54
Capacities 310-01B-54
Torque Specifications..... 310-01B-54

DESCRIPTION AND OPERATION

Fuel Tank and Lines

For additional information,
refer to Section 310-01A.

DIAGNOSIS AND TESTING

Fuel Tank and Lines

REFER to Section 310-01A.

REMOVAL AND INSTALLATION

Fuel Tank (23 554 0)

General Equipment
Fuel tank draining equipment

Removal

WARNING: This procedure involves fuel handling. Be prepared for fuel spillage at all times and always observe fuel handling precautions. Failure to follow these instructions may result in personal injury.

CAUTION: Diesel fuel injection equipment is manufactured to very precise tolerances and fine clearances. It is therefore essential that absolute cleanliness be observed when working with these components. Always fit blanking plugs to any open orifices or pipes.

1. Disconnect the battery ground cable. For additional information, refer to Section 414-01.
2. Release the fuel pressure. For additional information, refer to Section 310-00.
3. Drain the fuel tank. For additional information, refer to Section 310-00.
4. Raise and support the vehicle. For additional information, refer to Section 100-02.
5. Disconnect the fuel tank filler tube.

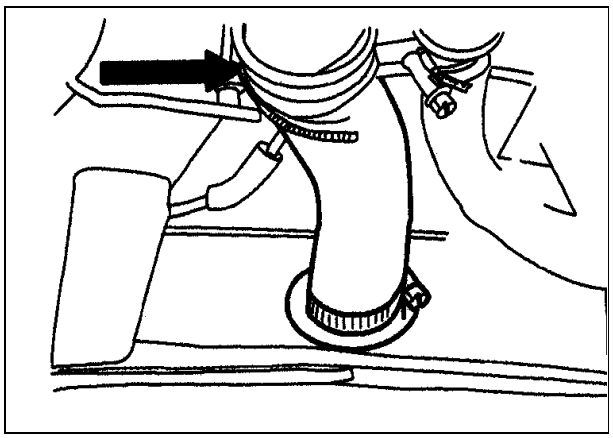

6. Disconnect the fuel tank vent pipe from the fuel filler pipe.

REMOVAL AND INSTALLATION (CONTINUED)

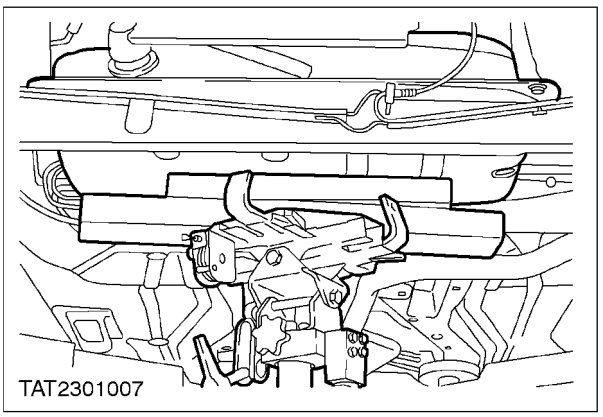

7. ⚠ **CAUTION: When supporting the fuel tank, use a suitable packing material to prevent damage to the underside of the fuel tank.**
   Support the fuel tank with a suitable jack.

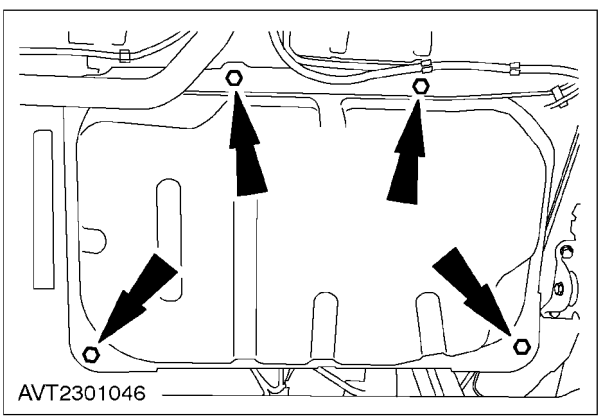

8. Remove the four fuel tank retaining bolts.

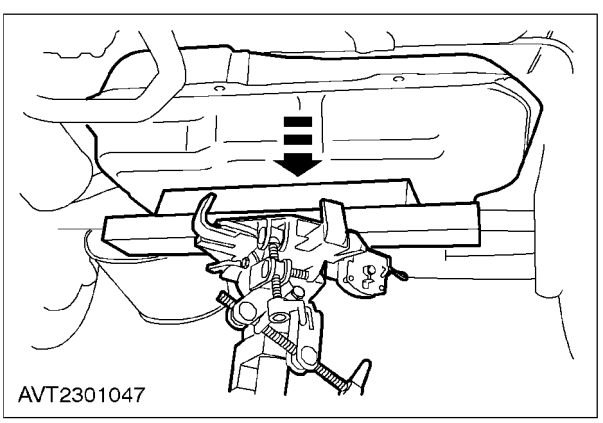

9. Partially lower the fuel tank.

10. Detach the fuel tank vent valve bracket from chassis cross member.

11. ⚠ **CAUTION: When disconnecting multiplugs do not pull on the wiring, pull on the multiplug body.**
    Disconnect the fuel tank sender unit multiplug.

REMOVAL AND INSTALLATION (CONTINUED)

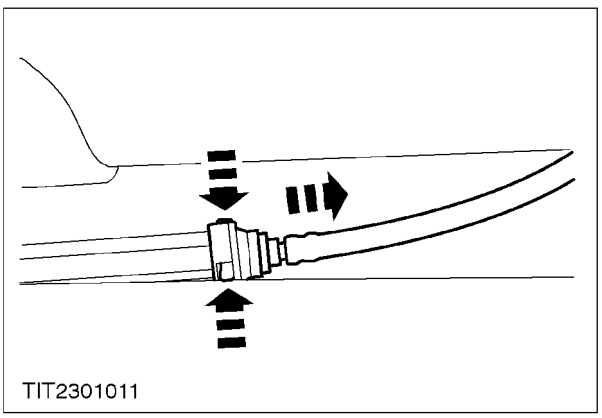

12. NOTE: Fuel return pipe connectors are red or are identified by a red band.
Disconnect the fuel return pipe from the fuel tank.

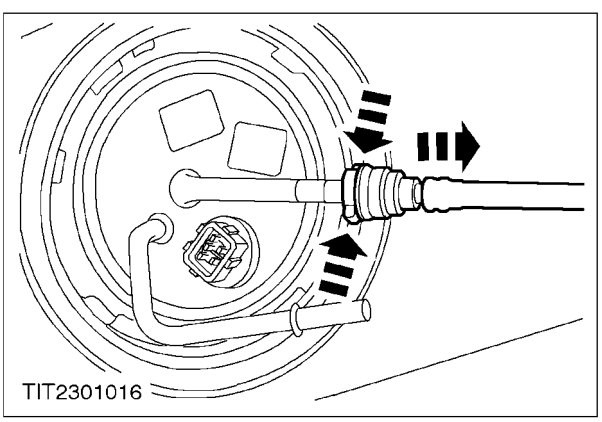

13. Disconnect the fuel supply pipe from the fuel tank.
    - Fuel supply pipe connectors are white or are identified by a white band.

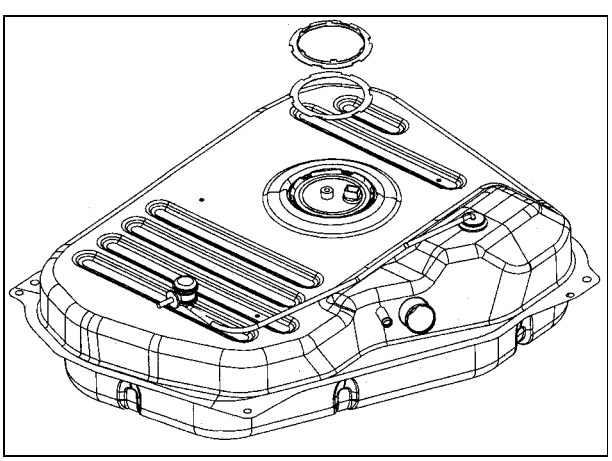

14. Remove the fuel tank.

Installation

1. To install, reverse the removal procedure.
    - Lubricate the fuel tank filler pipe seal with clean engine oil to aid fuel tank installation.

REMOVAL AND INSTALLATION

Fuel Sender Unit (33 286 0)

WARNING: This procedure involves fuel handling. Be prepared for fuel spillage at all times and always observe fuel handling precautions. Failure to follow these instructions can result in personal injury.

CAUTION: Diesel fuel injection equipment is manufactured to very precise tolerances and fine clearances. It is therefore essential that absolute cleanliness be observed when working with these components. Always fit blanking plugs to any open orifices or pipes.

NOTE: It will be necessary to raise the vehicle in order to carry out this procedure.

Removal

1. Disconnect the battery ground cable.

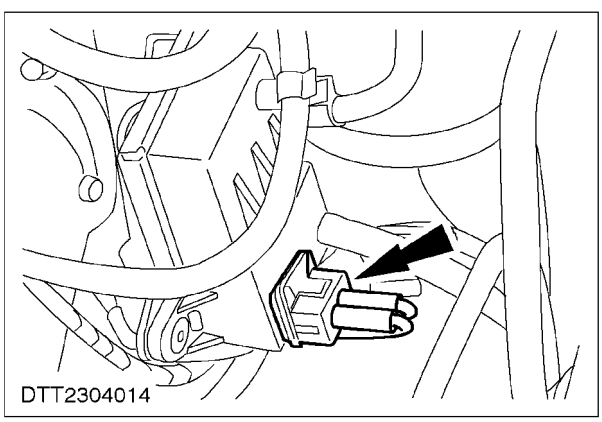

2. **CAUTION: When disconnecting multiplugs do not pull on the wiring, pull on the multiplug body.**
   Disconnect the diesel fuel heater multiplug.

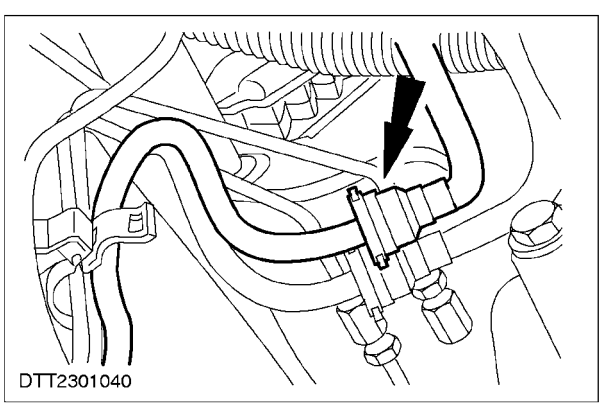

3. Disconnect the fuel supply pipe from the diesel fuel heater inlet pipe.

REMOVAL AND INSTALLATION (CONTINUED)

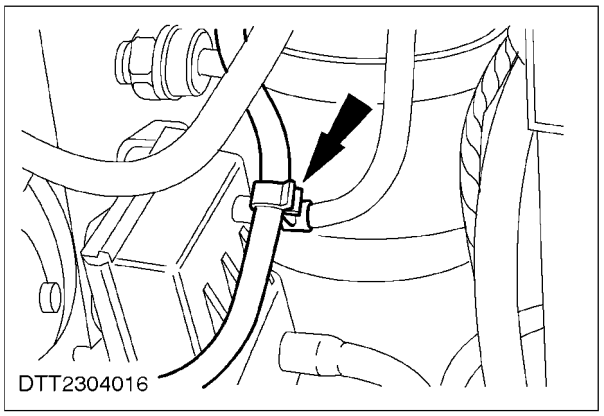

4. Detach the fuel filter inlet pipe from the retaining clip.

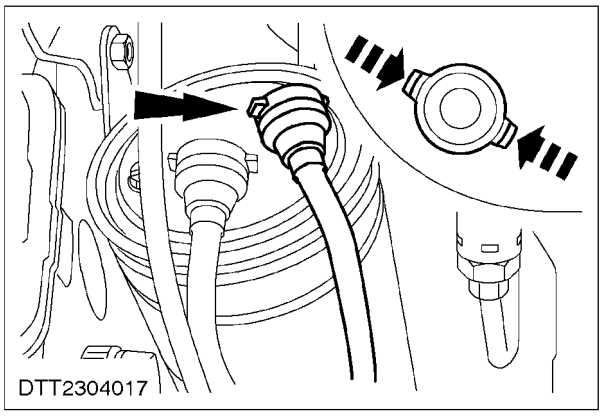

5. Disconnect the inlet pipe from the fuel filter.

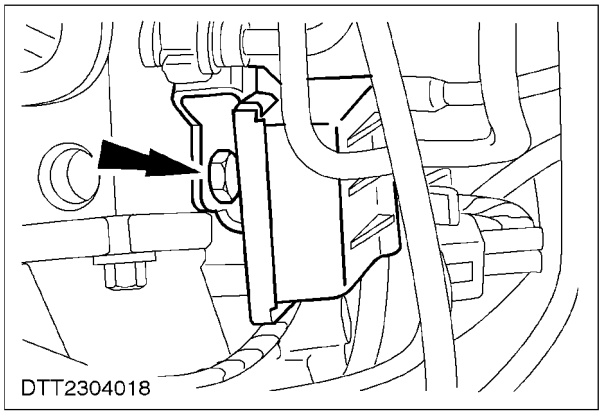

6. Remove the diesel fuel heater and bracket assembly (one bolt).

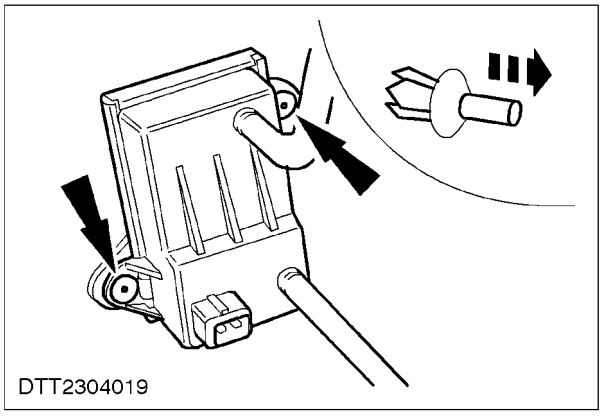

7. Remove the diesel fuel heater from the retaining bracket (two clips).

REMOVAL AND INSTALLATION (CONTINUED)

Installation

1. Refit the components in reverse order.

REMOVAL AND INSTALLATION

Fuel Filter Element (23 546 0)

Renewal

1. Disconnect the battery ground cable.
2. Drain the fuel filter.
3. Remove the bolt.
   - Catch the displaced fuel in a suitable container.

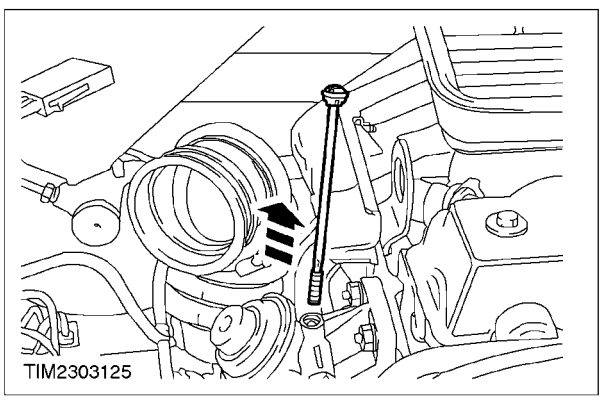

4. Remove the filter element.

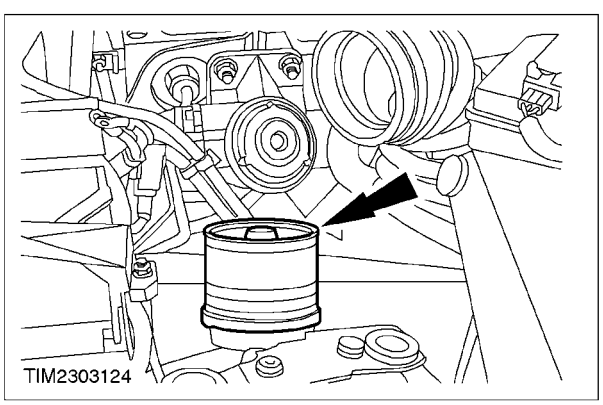

Installation

1. Install the components in reverse order.
   - Install new O-rings.
2. Prime the fuel filter.

REMOVAL AND INSTALLATION

Fuel Tank to Fuel Filter Line (23 588 0)

General Equipment
Fuel tank draining equipment

WARNING: This procedure involves fuel handling. Be prepared for fuel spillage at all times and always observe fuel handling precautions. Failure to follow these instructions can result in personal injury.

CAUTION: Diesel fuel injection equipment is manufactured to very precise tolerances and fine clearances. It is therefore essential that absolute cleanliness be observed when working with these components. Always fit blanking plugs to any open orifices or pipes.

NOTE: It will be necessary to raise the vehicle in order to carry out this procedure.

Removal

1. Disconnect the battery ground cable.
2. Drain the fuel tank using proprietary fuel tank draining equipment.
3. Remove the flexible coupling to pinion shaft pinch bolt.

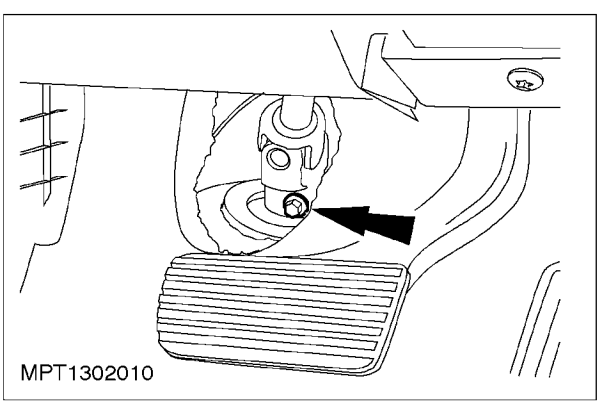

REMOVAL AND INSTALLATION (CONTINUED)

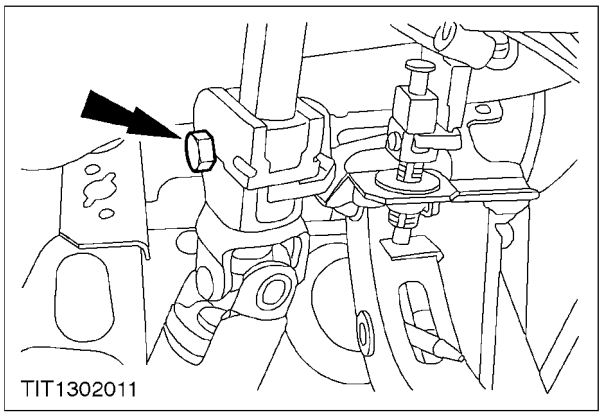

4. Loosen the flexible coupling to column shaft pinch bolt.

5. Remove the exhaust down pipe (refer to Operation Number 25 250 0).

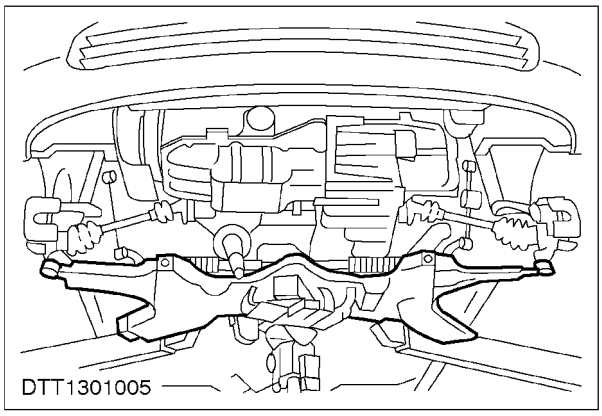

6. Partially lower the front crossmember. For additional information, refer to Section 502-00.

REMOVAL AND INSTALLATION (CONTINUED)

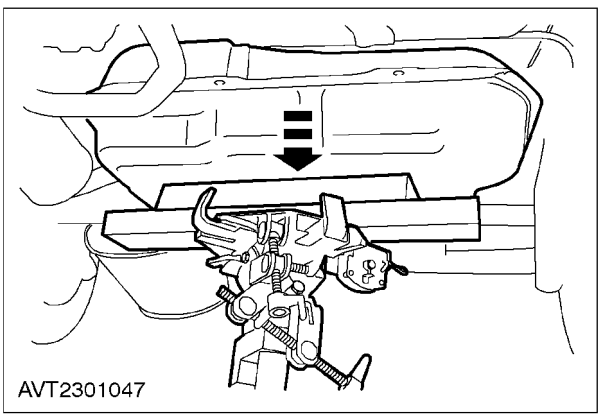

7. Partially lower the fuel tank (refer to procedure contained in this section).

8. Lower exhaust system.

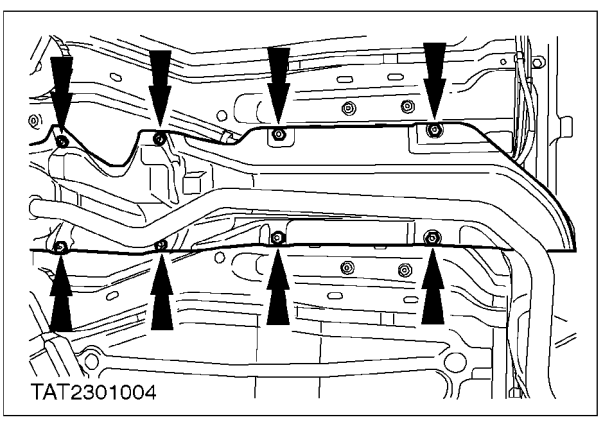

9. Remove the heat sheilds.

10. Detach the handbrake cable and fuel supply pipe from the six retaining clips.

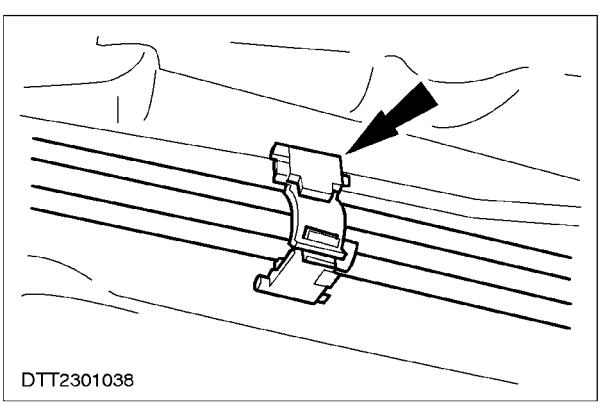

11. Release the fuel supply and return pipes from the five retaining clips.

REMOVAL AND INSTALLATION (CONTINUED)

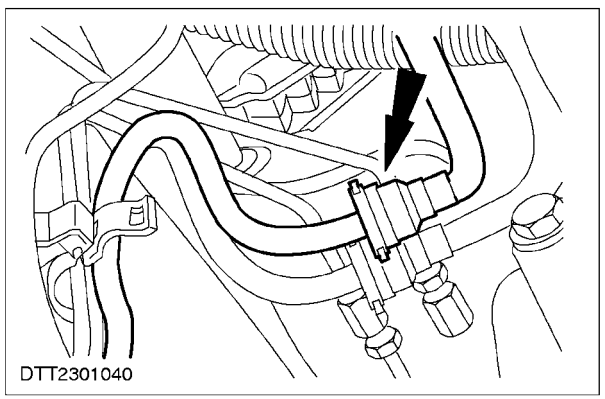

12. Disconnect the fuel supply pipe from the diesel fuel heater inlet pipe.
    - Fuel supply pipe connectors are white or are identified with a white band.

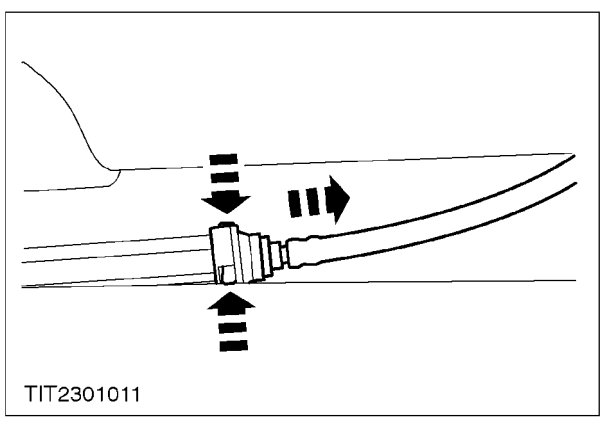

13. Disconnect the fuel supply pipe from the fuel tank.
    - Fuel supply pipe connectors are white or are identified with a white band.

14. Remove the fuel supply pipe.

Installation

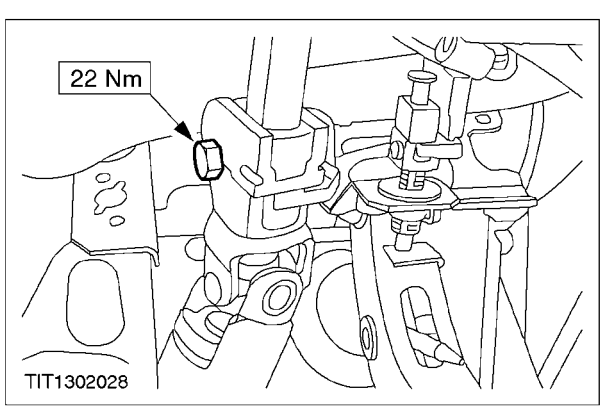

1. Refit the components in reverse order.

REMOVAL AND INSTALLATION (CONTINUED)

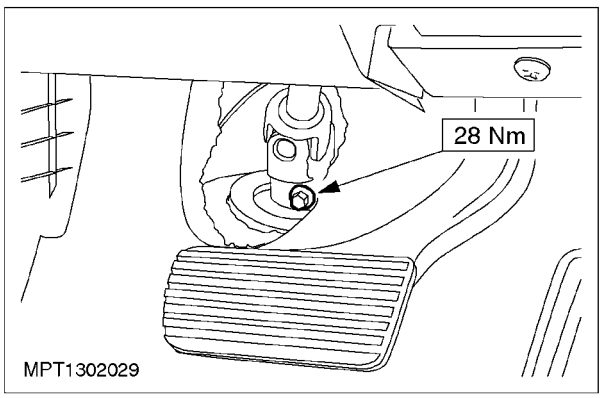

REMOVAL AND INSTALLATION

Fuel Return Line (23 594 0)

General Equipment
Fuel tank draining equipment

WARNING: This procedure involves fuel handling. Be prepared for fuel spillage at all times and always observe fuel handling precautions. Failure to follow these instructions can result in personal injury.

CAUTION: Diesel fuel injection equipment is manufactured to very precise tolerances and fine clearances. It is therefore essential that absolute cleanliness be observed when working with these components. Always fit blanking plugs to any open orifices or pipes.

NOTE: It will be necessary to raise the vehicle in order to carry out this procedure.

Removal

1. Disconnect the battery ground cable.
2. Drain the fuel tank using proprietary fuel tank draining equipment.
3. Remove the flexible coupling to pinion shaft pinch bolt.

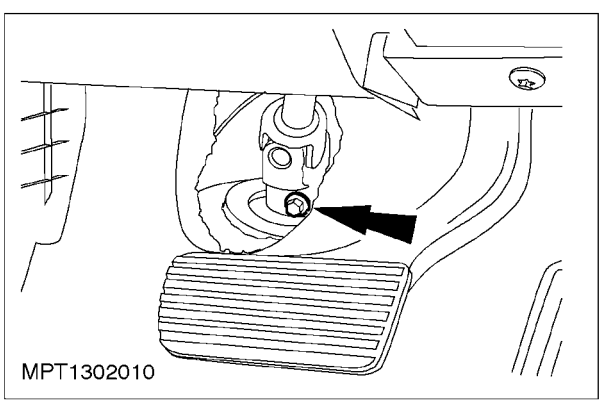

REMOVAL AND INSTALLATION (CONTINUED)

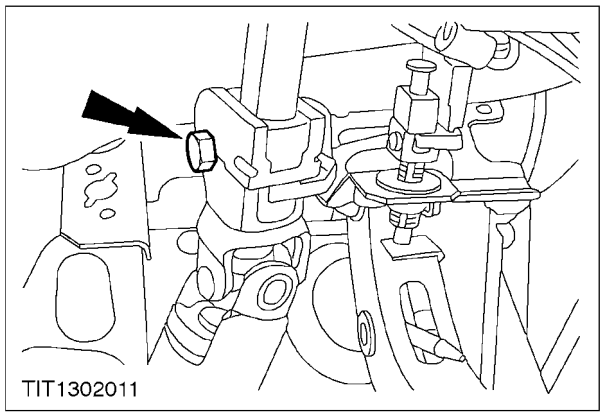

4. Loosen the flexible coupling to column shaft pinch bolt.

5. Remove the exhaust down pipe. For additional information, refer to Section 309-00.

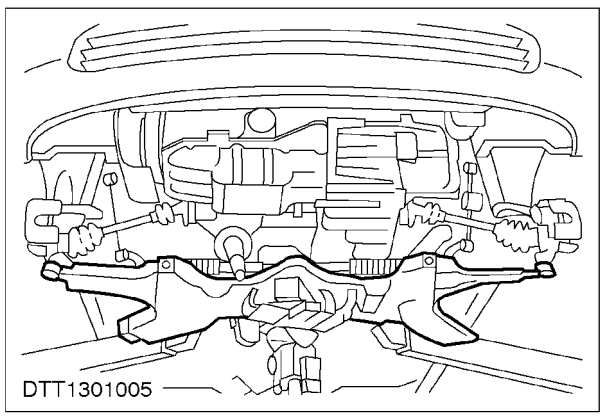

6. Partially lower the front crossmember. For additional information, refer to Section 502-00.

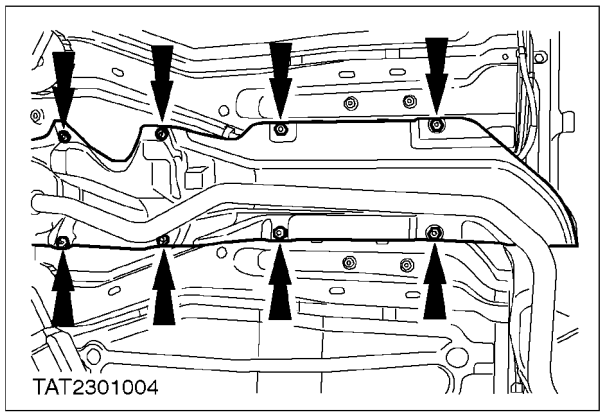

7. Remove the heat sheilds.

REMOVAL AND INSTALLATION (CONTINUED)

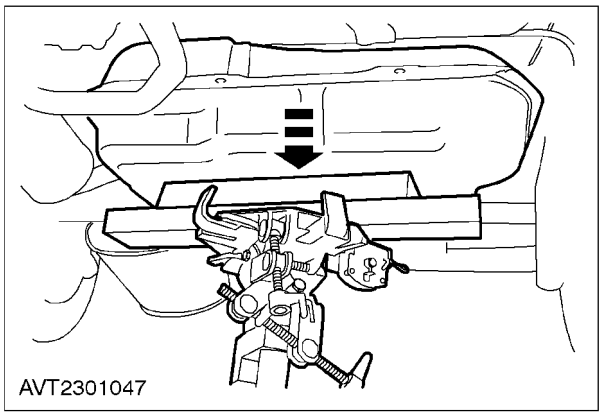

8. Partially lower the fuel tank
(refer to procedure contained in this section).

9. Detach the handbrake cable and the fuel return pipe from the five retaining clips.

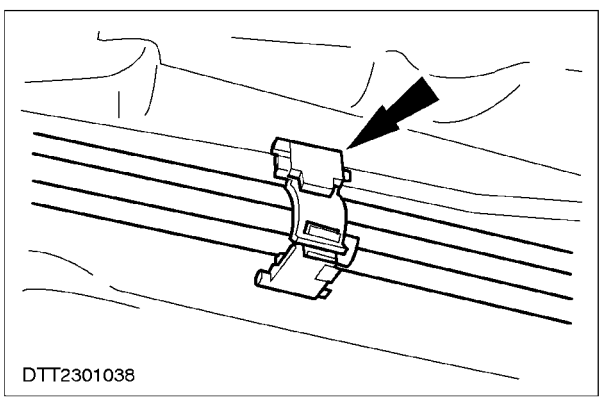

10. Release the supply and return pipes from the five retaining clips.

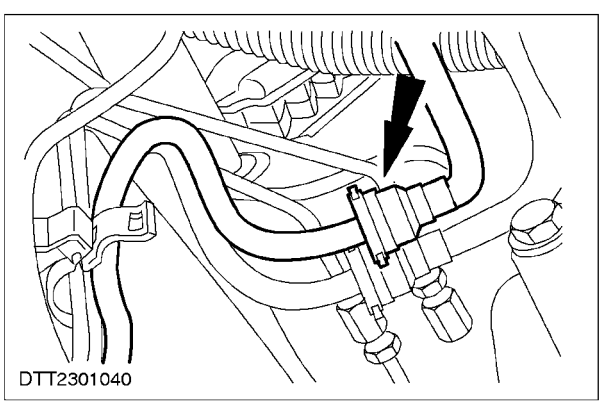

11. Disconnect the fuel return pipe from the fuel injection pump return pipe.

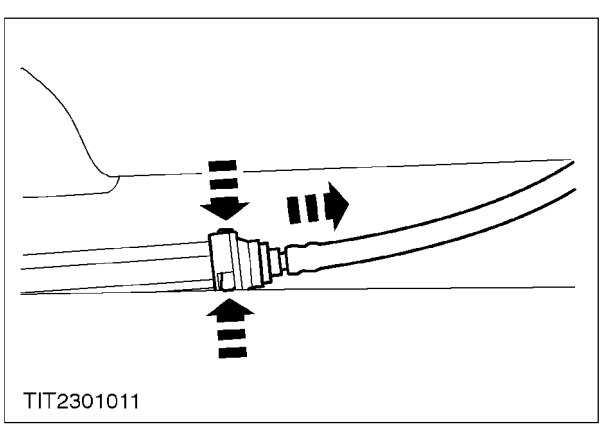

12. Disconnect the fuel return pipe from the fuel tank.
   - Fuel return pipe connectors are red or are identified by a red band.

REMOVAL AND INSTALLATION (CONTINUED)

12. Remove the fuel return pipe.

Installation

1. Refit the components in reverse order.

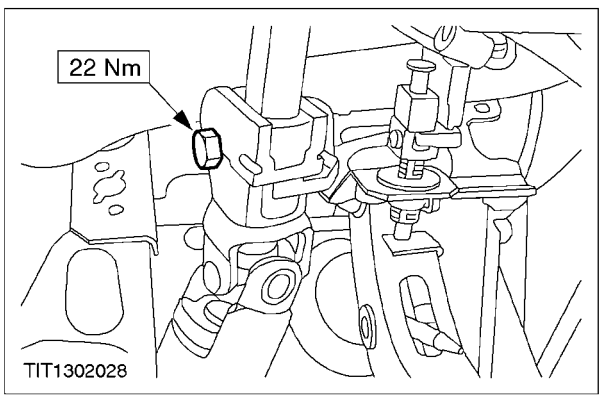

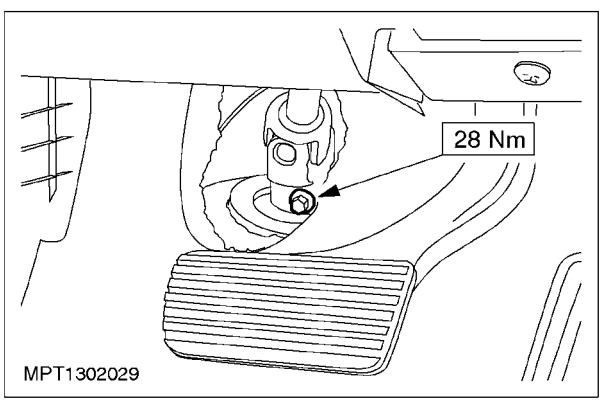

SPECIFICATIONS

Lubricants, Fluids, Sealers and Adhesives

Item	Specification
Fuel tank filler pipe seal	Clean engine oil
Fuel tank roll-over valve seal	Clean engine oil

Capacities

	Litres
Fuel tank	54

Torque Specifications

Description	Nm
Flexible coupling to steering column shaft pinch bolt	28
Flexible coupling to pinion shaft pinch bolt	26

SECTION 310-02 Acceleration Control

VEHICLE APPLICATION: 2002 Bantam

SUBJECT **PAGE**

DESCRIPTION AND OPERATION

Acceleration Control....310-02-56
Vehicles with Petrol Engine....310-02-56
Vehicles with Diesel Engine....310-02-56

DIAGNOSIS AND TESTING

Acceleration Control....310-02-57
Inspection and Verification....310-02-57

GENERAL PROCEDURES

Accelerator Cable Adjustment — Vehicles with 1.6L / 1.3L Engine.... (23 811 0) 310-02-58
Accelerator Cable Adjustment — Vehicles with Diesel Engine.... (23 811 0) 310-02-59

DESCRIPTION AND OPERATION

Acceleration Control

Vehicles with Petrol Engine

The acceleration control system consists of an accelerator pedal, accelerator cable and accelerator cable bracket, which is fitted to the throttle body. Accelerator pedal return is achieved by means of throttle return springs.

Vehicles with Diesel Engine

The acceleration control system consists of an accelerator pedal and accelerator cable. Accelerator pedal return is achieved by means of throttle return springs.

DIAGNOSIS AND TESTING

Acceleration Control

Inspection and Verification

1. Verify the customer concern by operating the system.
2. Visually inspect for obvious signs of mechanical damage.

Visual Inspection Chart

Mechanical
• Linkage • Return spring • Accelerator cable

3. If an obvious cause for an observed or reported concern is found, correct the cause (if possible) before proceeding to the next step.
4. If the concern is not visually evident, verify the symptom and refer to the symptom chart.

Symptom Chart

Condition	Possible Sources	Action
•Excessive pressure required to depress the accelerator pedal	•Worn accelerator pedal pivot or bush.	•INSTALL a new accelerator pivot or bushing.
	•Accelerator cable binding.	•INSTALL a new accelerator cable.
•Accelerator pedal feels rough or jerky	•Frayed or binding accelerator cable.	•INSTALL a new accelerator cable.
•Accelerator pedal binds or sticks	•Kinked accelerator cable.	•INSTALL a new accelerator cable.
	•Foreign object caught in the accelerator pedal or linkage.	•REMOVE foreign object and CHECK the accelerator pedal and linkage for damage.
	•Broken or binding return spring.	•INSTALL a new spring.
•High engine idle speed	•Kinked accelerator cable.	•INSTALL a new accelerator cable.
	•Binding accelerator cable.	•CHECK the acceleration linkage.
	•Foreign object caught in accelerator pedal or linkage.	•REMOVE foreign object and CHECK the accelerator pedal and linkage for damage.
	•Broken or binding return spring.	•INSTALL a new spring.

GENERAL PROCEDURES

Accelerator Cable Adjustment — Vehicles with 1.6L / 1.3L Engine (23 811 0)

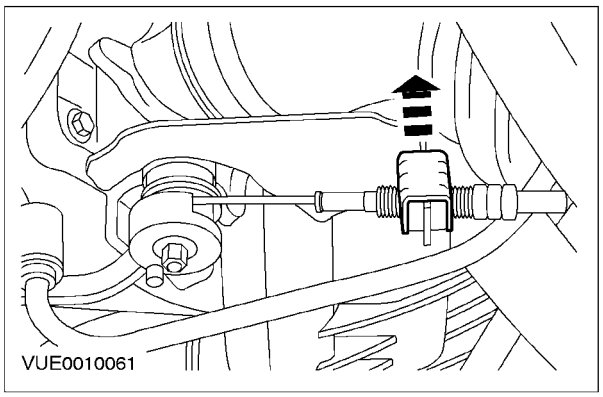

1. Remove the accelerator cable retaining clip.

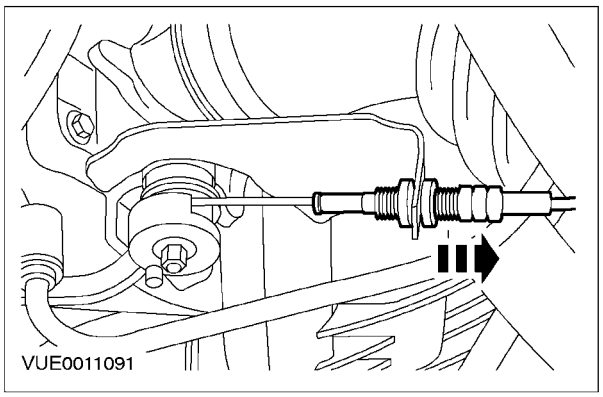

2. Pull the accelerator cable adjuster through the grommet until the grommet is at the end of the accelerator cable adjuster.

3. Depress the accelerator pedal to the floor stop and hold.

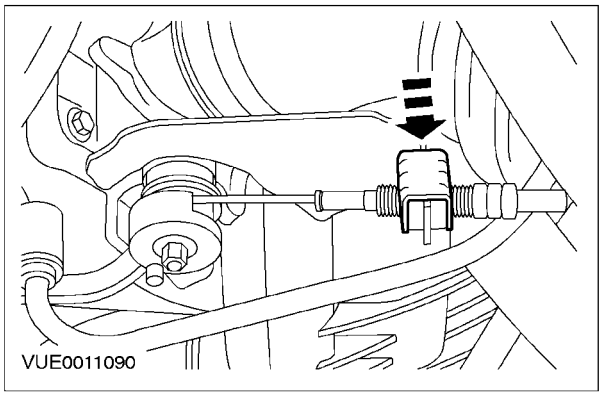

4. Install the accelerator cable retaining clip.

5. Depress the accelerator pedal to the floor stop to make sure that full travel is achieved at the throttle body and release the accelerator pedal to make sure that the throttle plate returns to the fully closed position.

GENERAL PROCEDURES (CONTINUED)

Accelerator Cable Adjustment — Vehicles with Diesel Engine (23 811 0)

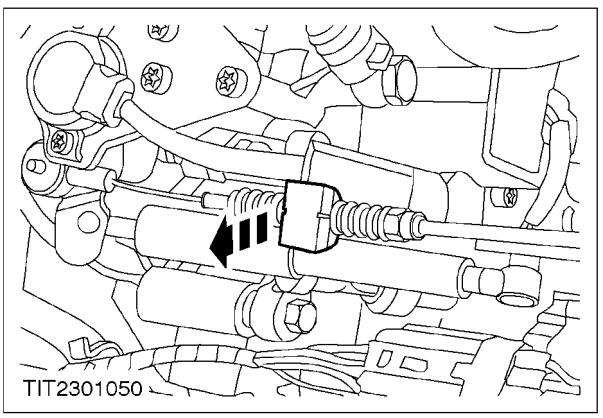

1. Remove the accelerator cable retaining clip.

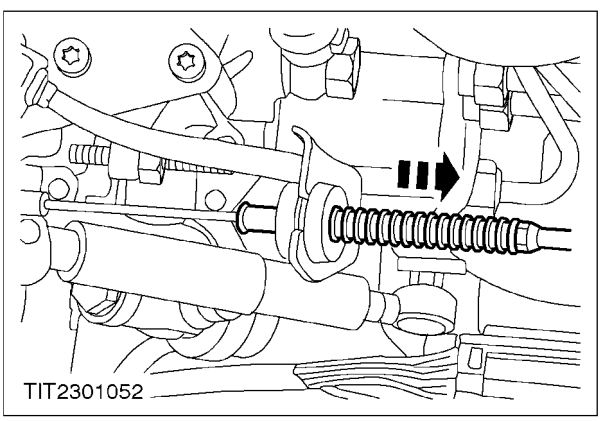

2. Pull the accelerator cable adjuster through the grommet until the grommet is at the end of the accelerator cable adjuster.

3. Depress the accelerator pedal to the floor stop and hold.

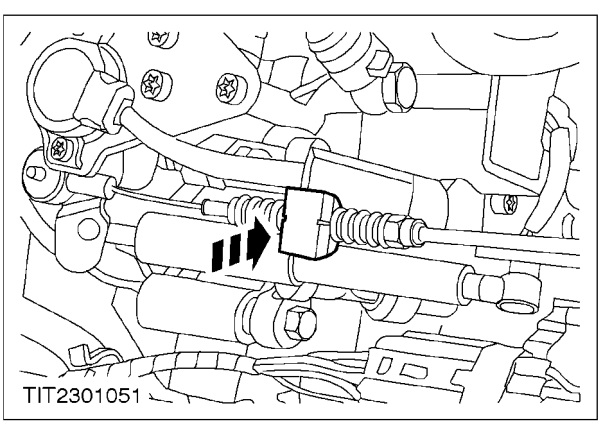

4. Install the accelerator cable retaining clip.

5. Depress the accelerator pedal to the floor stop to make sure that full travel is achieved at the throttle body and release the accelerator pedal to make sure that the throttle plate returns to the fully closed position.

Electrical Group 4

SECTION TITLE	PAGE
Climate Control System	
Climate Control System - General Information	412-00
Air Distribution and Filtering	412-01
Heating and Ventilation	412-02
Air Conditioning	412-03
Control Components	412-04
Instrumentation and Warning Systems	
Instrument Cluster	413-01
Battery and Charging Systems	
Charging System - General Information	414-00
Battery, Mounting and Cables	414-01
Generator and Regulator	414-02
Audio System	
Audio System - General Information	415-00
Audio Unit	415-01
Antenna	415-02
Speakers	415-03
Lighting	
Exterior Lighting	417-01
Electrical Distribution	
Module Communications Network	418-00
Anti-Theft — Passive	419-01B

SECTION 412-00 Climate Control System — General Information

VEHICLE APPLICATION: 2002 Bantam

SUBJECT **PAGE**

DESCRIPTION AND OPERATION

Climate Control System 412-00-2

DIAGNOSIS AND TESTING

Climate Control System 412-00-3A
Inspection and Testing 412-00-3A/3B
System Checks 412-00-4/33
Component Test 412-00-33/37

GENERAL PROCEDURES

Spring Lock Coupling ..... (34 639 1) 412-00-38/39
Air Conditioning (A/C) Clutch Air Gap Adjustment ..... (34 628 6) 412-00-40
Electronic Leak Detection ..... (34 620 5) 412-00-41
Air Conditioning (A/C) System Flushing 412-00-42/45
Tracer Dye Leak Detection ..... (34 620 5) 412-00-46
Vacuum Leak Detection ..... (34 620 5) 412-00-47
Air Conditioning (A/C) System Evacuation and Charging ..... (34 620 2) 412-00-48/50
Refrigerant Oil Addition ..... (34 621 1) 412-00-51
Air Distribution System Cleaning 412-00-52/53
Contaminated Refrigerant Handling ..... (34 620 5) 412-00-54

SPECIFICATIONS

Specifications 412-00-55
General Specifications 412-00-55
Addition of Air Conditioning Refrigerant Oil 412-00-55
Air conditioning compressor 412-00-55
Fixed orifice tube 412-00-55
Torque Specifications 412-00-55

DESCRIPTION AND OPERATION

Climate Control System

Instead of Bowden cables, air distribution is controlled via a splined shaft and the interior temperature is regulated via a potentiometer, which is integrated into the control panel. The potentiometer operates the control valve, which controls the flow of hot water through the heat exchanger in accordance with the selected interior temperature.

The heat exchanger and (depending on the model variant) the air conditioning evaporator are easily accessible from the engine compartment.

The vehicle is also equipped with recirculated air mode, which can be activated by operating a switch on the control panel.

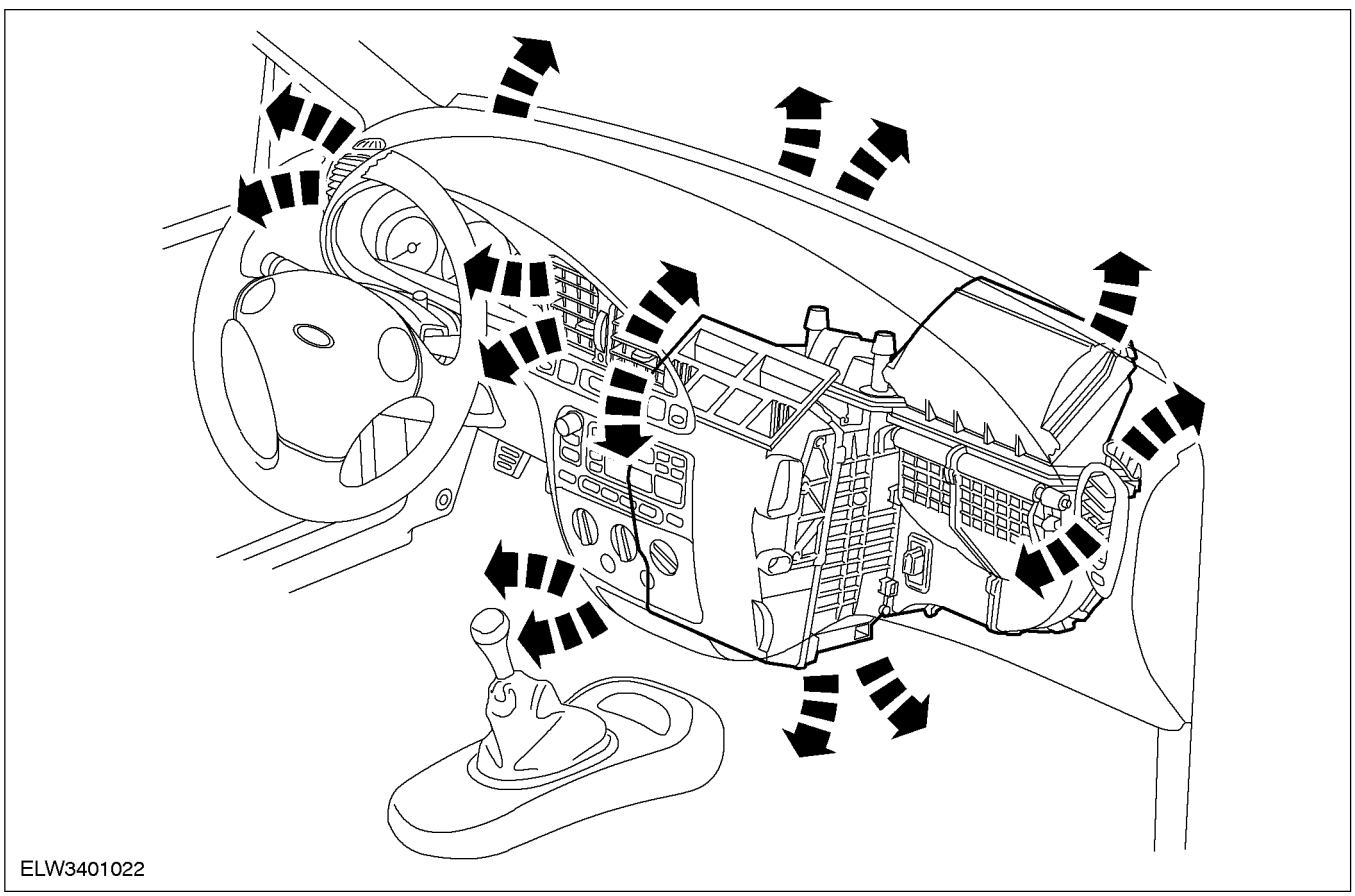

DIAGNOSIS AND TESTING

Climate Control System

Refer to Wiring Diagrams Petrol and Diesel Cell:41200,for schematic and connector information.

Inspection and Testing

1. Verify the customer concern.
2. Visually inspect for obvious signs of mechanical or electrical damage.

Visual Inspection Chart

Mechanical	Electrical
• Vacuum hoses. • Refrigerant (filling or leaks). • Drive belt. • Coolant level.	• Fuse(s). • Circuit(s). • Connector damaged or loose.

3. If an obvious cause for an observed or reported concern is found, correct the cause (if possible) before proceeding to the next step.
4. If the cause is not visually evident, verify the symptom and refer to the Symptom Chart.

Symptom Chart

Condition	Possible Sources	Action
•No / insufficient heating power.	•Fuse(s). •Circuit(s). •Heater control module. •Heater control solenoid valve.	•Go To Pinpoint Test A
•The A/C system is inoperative (the heater blower is OK).	•Fuse(s). •Circuit(s). •A/C compressor clutch. •A/C Wide Open Throttle (W.O.T) relay. •A/C switch relay. •Air conditioning high-pressure switch. •Air conditioning low pressure switch. •Heater and A/C control assembly. •PCM.	•Go To Pinpoint Test B
•The heater blower system is inoperative.	•Fuse(s). •Circuit(s). •Heater blower motor. •Heater blower switch. •Heater blower series resistor.	•Go To Pinpoint Test C
•The air re-circulation flap is in-operative.	•Fuse(s). •Circuit(s). •Re-circulation air actuator. •A/C re-circulation flap relay. •Re-circulation switch.	•Go To Pinpoint Test D
•Engine cooling fan motor is in-operative.	•Fuse(s). •Circuit(s). •Engine cooling fan motor. •Powertrain control module (PCM).	•REFER to Section 303-03.

DIAGNOSIS AND TESTING (CONTINUED)

Condition	Possible Sources	Action
• Condensed water from the air conditioning system in the foot-well.	• Air conditioning outlet pipe is not connected to the heater. • Air conditioning outlet pipe is incorrectly routed through the body panel. • Air conditioning outlet pipe is bent or blocked.	• Check that the air conditioning outlet pipe is routed correctly.

System Checks

PAGE 1 OF 3

PINPOINT TEST A: NO/INSUFFICIENT HEATING POWER

A1: CHECK THE FUSE F13..... 412-00-4
A2: CHECK THE POWER SUPPLY OF THE FUSE F13 412-00-4
A3: CHECK THE FUSE F2 412-00-4
A4: CHECK THE POWER SUPPLY OF THE FUSE F2 412-00-5
A5: DETERMINE THE FAULT CONDITION OF THE HEATING SYSTEM..... 412-00-5
A6: CHECK THE HEATER CONTROL SOLENOID VALVE 412-00-5
A7: CHECK THE POWER SUPPLY OF THE HEATER CONTROL
SOLENOID VALVE..... 412-00-6
A8: CHECK THE HEATER CONTROL SOLENOID VALVE 412-00-6
A9: CHECK THE POWER SUPPLY OF THE HEATER CONTROL MODULE..... 412-00-7
A10: CHECK THE POWER SUPPLY OF THE HEATER CONTROL MODULE.... 412-00-7
A11: CHECK THE SIGNAL FROM THE TACHOMETER 412-00-7/8
A12: CHECK THE GROUND SUPPLY OF THE HEATER CONTROL
SOLENOID VALVE..... 412-00-8
A13: CHECK THE GROUND SUPPLY OF THE HEATER
CONTROL MODULE 412-00-8
A14: CHECK THE HEATER CONTROL SOLENOID VALVE 412-00-9
A15: CHECK THE CIRCUIT 31-CA82 FOR SHORT TO GROUND 412-00-9

PINPOINT TEST B: THE A/C SYSTEM IS INOPERATIVE
(THE HEATER BLOWER IS OK)

B1: CHECK THE FUSE F14..... 412-00-10
B2: CHECK THE POWER SUPPLY OF THE FUSE F14 412-00-10
B3: CHECK THE FUSE F13..... 412-00-10
B4: CHECK THE POWER SUPPLY OF THE FUSE F13 ..... 412-00-10/11
B5: CHECK THE POWER SUPPLY OF RELAY – A/C W.O.T 412-00-11
B6: CHECK THE POWER SUPPLY OF RELAY – A/C W.O.T 412-00-11
B7: CHECK THE A/C COMPRESSOR CLUTCH.....412-00-12
B8: CHECK CIRCUIT 14S-CA6 (VT/YE) FOR OPEN..... 412-00-12/13
B9: CHECK THE GROUND SUPPLY OF THE A/C COMPRESSOR CLUTCH..... 412-00-13
B10: CHECK THE RELAY – A/C WOT 412-00-13
B11: CHECK THE RELAY – A/C SWITCH 412-00-14
B12: CHECK THE POWER SUPPLY OF THE HEATER
AND A/C CONTROL ASSEMBLY 412-00-14
B13: CHECK THE CIRCUIT 14S-FA90 (VT/BK) FOR OPEN 412-00-15
B14: CHECK THE GROUND SUPPLY OF THE RELAY – A/C SWITCH..... 412-00-15

System Checks

PAGE 2 OF 3

B15: CHECK THE GROUND SUPPLY OF THE RELAY – A/C SWITCH..... 412-00-16
B16: CHECK THE RELAY – A/C SWITCH 412-00-16/17
B17: CHECK THE A/C COMPRESSOR CYCLING SWITCH 412-00-17
B18: CHECK THE CIRCUIT 31S-CA17 (BK/RD) FOR OPEN 412-00-17/18
B19: CHECK CIRCUIT 31S-PC72 (BK/BU) FOR OPEN..... 412-00-18
B20: CHECK THE CIRCUIT 31S-CA11 (BK/YE) FOR OPEN..... 412-00-18/19
B21: CHECK THE CIRCUIT 31S-CA12A (BK/BU) FOR OPEN 412-00-19
B22: CHECK THE DUAL PRESSURE SWITCH..... 412-00-19
B23: CHECK THE CIRCUIT 31S-CA12 (BK/BU) FOR OPEN..... 412-00-20
B24: CHECK THE A/C INHIBIT DIODE..... 412-00-20

PINPOINT TEST C: THE HEATER BLOWER SYSTEM IS INOPERATIVE

C1: DETERMINE THE FAULT CONDITION..... 412-00-20
C2: CHECK THE FUSE F16 412-00-21
C3: CHECK THE POWER SUPPLY OF THE FUSE F16 412-00-21
C4: CHECK THE POWER SUPPLY OF THE HEATER BLOWER MOTOR..... 412-00-21
C5: CHECK THE HEATER BLOWER MOTOR 412-00-22
C6: CHECK THE CIRCUIT 31S-CA18 (BK/RD) FOR OPEN 412-00-22
C7: CHECK THE GROUND SUPPLY OF THE HEATER BLOWER SWITCH 412-00-23
C8: CHECK THE CIRCUIT FOR HEATER BLOWER, HIGH SPEED 412-00-23
C9: CHECK THE CIRCUIT FOR HEATER BLOWER, MEDIUM SPEED..... 412-00-23
C10: CHECK THE COMMON CIRCUIT FOR HEATER BLOWER;
LOWER SPEEDS 412-00-24
C11: CHECK THE CIRCUIT FOR HEATER BLOWER, MEDIUM SPEED..... 412-00-24
C12: CHECK THE CIRCUIT FOR HEATER BLOWER, LOW SPEED..... 412-00-25
C13: CHECK THE CIRCUIT FOR HEATER BLOWER, LOW SPEED..... 412-00-25
C14: CHECK THE CIRCUIT FOR HEATER BLOWER, SLOW SPEED 412-00-26
C15: CHECK THE CIRCUIT FOR HEATER BLOWER, SLOW SPEED 412-00-26

PINPOINT TEST D: THE AIR RE-CIRCULATION FLAP IS INOPERATIVE

D1: CHECK THE FUSE F16 412-00-26
D2: CHECK THE POWER SUPPLY OF THE FUSE F16 412-00-27
D3: CHECK THE FUSE F13 412-00-27
D4: CHECK THE POWER SUPPLY OF THE FUSE F13 412-00-27
D5: CHECK THE POWER SUPPLY OF THE RE-CIRCULATION
AIR ACTUATOR 412-00-28
D6: CHECK THE GROUND SUPPLY OF THE RE-CIRCULATION
AIR ACTUATOR 412-00-28

System Checks

D7: CHECK THE CONTROL CIRCUIT OF THE RE-CIRCULATION AIR ACTUATOR 412-00-29
D8: CHECK THE RE-CIRCULATION AIR ACTUATOR 412-00-29/30
D9: CHECK THE GROUND SUPPLY OF THE RELAY – A/C RE-CIRCULATION FLAP 412-00-30/31
D10: CHECK THE GROUND CONNECTION OF RELAY – A/C RE-CIRCULATION FLAP 412-00-31
D11: CHECK THE RELAY – A/C RE-CIRCULATION FLAP 412-00-32
D12: CHECK THE CONTROL CIRCUIT OF THE RELAY – A/C RE-CIRCULATION FLAP 412-00-32
D13: CHECK THE RE-CIRCULATION SWITCH 412-00-32/33

DIAGNOSIS AND TESTING (CONTINUED)

System Checks

PINPOINT TEST A: NO/INSUFFICIENT HEATING POWER

CONDITIONS	DETAILS/RESULTS/ACTIONS
A1: CHECK THE FUSE F13	
1 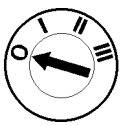 2 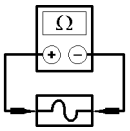 Fuse F13 (CJB)	• Is the fuse OK? ☐ **Yes** GO TO **A2** ☐ **No** INSTALL a new fuse F13 (15 A). If the fuse blows again, LOCATE and REPAIR the short to ground of the circuit(s) by using the wiring diagrams. TEST the system for normal operation.
A2: CHECK THE POWER SUPPLY OF THE FUSE F13	
1 2 Fuse F13 (CJB)	3 Measure the voltage between fuse F13 and ground. • Is battery voltage indicated? ☐ **Yes** GO TO **A3** ☐ **No** REPAIR the power supply of the fuse F13 by using the wiring diagrams. TEST the system for normal operation.
A3: CHECK THE FUSE F2	
1 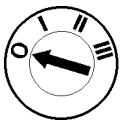 2 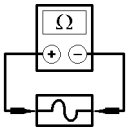 Fuse F2 (CJB)	• Is the fuse F2 OK? ☐ **Yes** GO TO **A4**. ☐ **No** INSTALL a new fuse F2 (10 A). If the fuse blows again, LOCATE and REPAIR the short to ground of the circuit(s) by using the wiring diagrams. TEST the system for normal operation.

DIAGNOSIS AND TESTING (CONTINUED)

CONDITIONS	DETAILS/RESULTS/ACTIONS
A4: CHECK THE POWER SUPPLY OF THE FUSE F2	
1 2 Fuse F2 (CJB)	3 Measure the voltage between fuse F2 and ground. • Is battery voltage indicated? ☐ **Yes** GO TO **A5**. ☐ **No** REPAIR the power supply of the fuse F2 by using the wiring diagrams. TEST the system for normal operation.
A5: DETERMINE THE FAULT CONDITION OF THE HEATING SYSTEM	
1 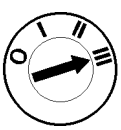	2 Check the temperature of the airflow. • Is the airflow permanently cold? ☐ **Yes** GO TO **A14** ☐ **No** GO TO **A6**
A6: CHECK THE HEATER CONTROL SOLENOID VALVE	
⚠ **WARNING: The heater control solenoid valve can be very hot.**	
	1 Turn the temperature selector switch to the medium position. • Is the heater control solenoid valve pulsating? ☐ **Yes** CHECK the cooling system for blockages. TEST the system for normal operation. If the concern is not rectified, CHECK the heater control solenoid valve. If necessary INSTALL a new one. TEST the system for normal operation. ☐ **No** GO TO **A7**

DIAGNOSIS AND TESTING (CONTINUED)

CONDITIONS	DETAILS/RESULTS/ACTIONS
A7: CHECK THE POWER SUPPLY OF THE HEATER CONTROL SOLENOID VALVE	
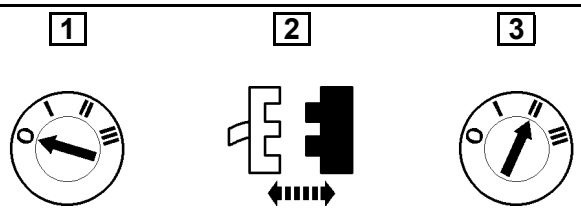 Heater control solenoid valve C49 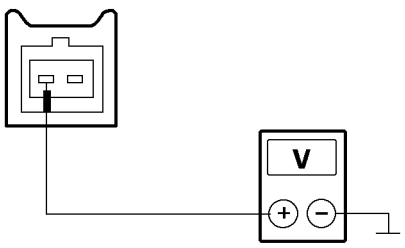 VFE0018156	**4** Measure the voltage between heater control solenoid valve, connector C49, pin 1, circuit 14-CA82 (VT/BK), harness side and ground. • Is battery voltage indicated? ☐ **Yes** GO TO **A8** ☐ **No** REPAIR the open circuit(s) between fuse F13 and heater control solenoid valve by using the wiring diagrams. TEST the system for normal operation.
A8: CHECK THE HEATER CONTROL SOLENOID VALVE	
NOTE: If the temperature adjustment is changed, the heater control solenoid valve is reacting with a delay in time.	
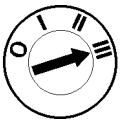 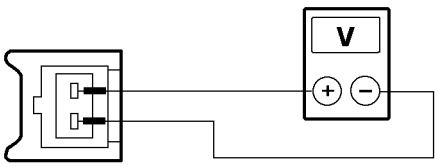 VFE0016218	**2** Measure the voltage between heater control solenoid valve, connector C49, pin 1, circuit 14-CA82 (VT/BK), harness side and pin 2, circuit 31S-CA82 (BK/GN), harness side. • Is an alternating voltage indicated? ☐ **Yes** CHECK the heater control solenoid valve, and INSTALL a new one if necessary. TEST the system for normal operation. ☐ **No** GO TO **A9**

DIAGNOSIS AND TESTING (CONTINUED)

CONDITIONS	DETAILS/RESULTS/ACTIONS
A9: CHECK THE POWER SUPPLY OF THE HEATER CONTROL MODULE	
1 2 3 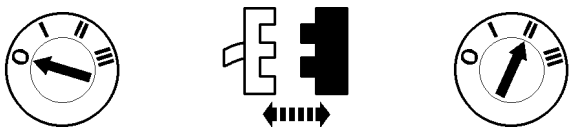 Heater control module C28 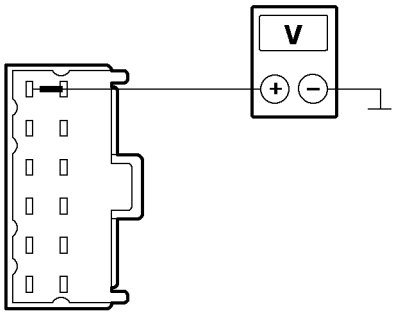 VFE0022877	4 Measure the voltage between heater control module, connector C28, pin 12, circuit 14-CA83 (VT/OG), harness side and ground. • Is battery voltage indicated? ☐ **Yes** GO TO **A10**. ☐ **No** REPAIR the open circuit(s) between fuse F13 and heater control module by using the wiring diagrams. TEST the system for normal operation.
A10: CHECK THE POWER SUPPLY OF THE HEATER CONTROL MODULE	
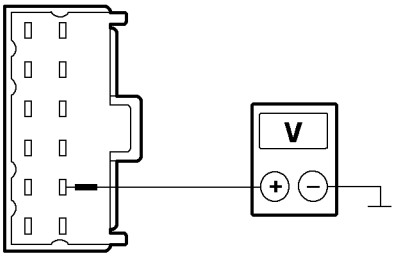 VFE0022878	1 Measure the voltage between heater control module, connector C28, pin 2, circuit 29-CA83 (OG/GN), harness side and ground. • Is battery voltage indicated? ☐ **Yes** GO TO **A11** ☐ **No** REPAIR the open circuit(s) between fuse F2 and heater control module by using the wiring diagrams. TEST the system for normal operation.
A11: CHECK THE SIGNAL FROM THE TACHOMETER	
NOTE: The proper function of the heater control solenoid valve is dependent from the signal of the tachometer	
1 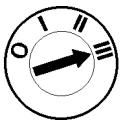	

DIAGNOSIS AND TESTING (CONTINUED)

CONDITIONS	DETAILS/RESULTS/ACTIONS
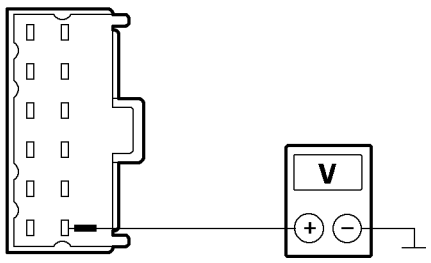 VFE0023408	**2** Measure the voltage between heater control module, connector C28, pin 1, circuit 8-GB10A (WH/BK), harness side and ground. • Is the indicated voltage between 5 and 9 volts? ☐ **Yes** GO TO **A12** ☐ **No** REPAIR the open circuit(s) between instrument cluster and heater control module by using the wiring diagrams. TEST the system for normal operation. If the concern is not rectified REFER to Section 413-01.
A12: CHECK THE GROUND SUPPLY OF THE HEATER CONTROL SOLENOID VALVE	
1 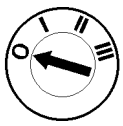 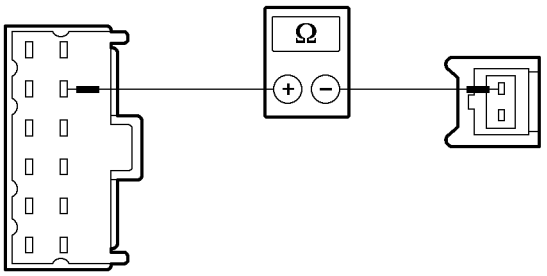 VFE0023409	**2** Measure the resistance between heater control solenoid valve, connector C49, pin 2, circuit 31S-CA82 (BK/GN), harness side and heater control solenoid valve, connector C28, pin 5, circuit 31S-CA82 (BK/GN), harness side. • Is the resistance less than 2 ohms? ☐ **Yes** GO TO **A13** ☐ **No** REPAIR the open circuit(s) between heater control solenoid valve and heater control module by using the wiring diagrams. TEST the system for normal operation.
A13: CHECK THE GROUND SUPPLY OF THE HEATER CONTROL MODULE	
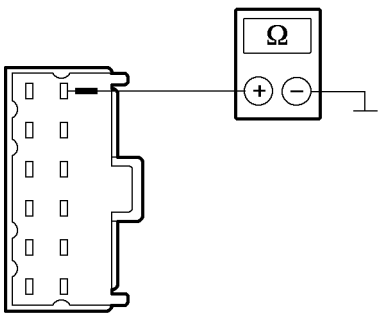 VFE0017959	**1** Measure the resistance between heater control module, connector C28, pin 6, circuit 91-CA83 (BK/RD), harness side and ground. • Is the resistance less than 2 ohms? ☐ **Yes** CHECK the heater control module and INSTALL a new one if necessary. TEST the system for normal operation. ☐ **No** REPAIR the open circuit(s) between heater control module and ground G5 by using the wiring diagrams. TEST the system for normal operation.

DIAGNOSIS AND TESTING (CONTINUED)

CONDITIONS	DETAILS/RESULTS/ACTIONS
A14: CHECK THE HEATER CONTROL SOLENOID VALVE	
1 2 3 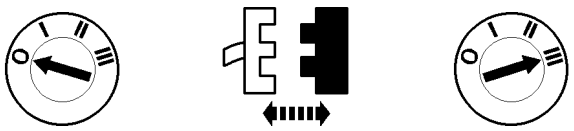 Heater control solenoid valve C49	4 Check the temperature of the airflow. • Is the air flow permanent cold? ☐ **Yes** CHECK the heater control solenoid valve for blockages. TEST the system for normal operation. If necessary INSTALL a new one. TEST the system for normal operation. ☐ **No** GO TO **A15**
A15: CHECK THE CIRCUIT 31-CA82 FOR SHORT TO GROUND	
NOTE: The proper function of the heater control solenoid valve is dependent from the signal of the tachometer.	
1 2 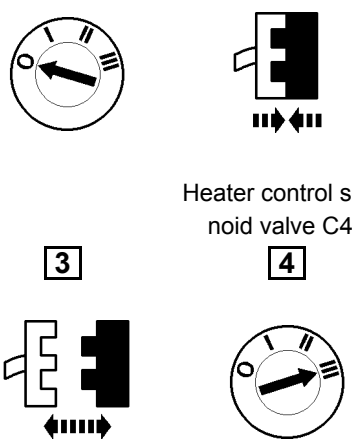 Heater control solenoid valve C49 3 4 Heater control module C28	5 Check the temperature of the airflow. • Is the air flow permanent cold? ☐ **Yes** REPAIR the open circuit(s) between heater control solenoid valve and heater control module by using the wiring diagrams. TEST the system for normal operation. ☐ **No** CHECK the heater control module. If necessary INSTALL a new one. TEST the system for normal operation.

DIAGNOSIS AND TESTING (CONTINUED)

PINPOINT TEST B: THE A/C SYSTEM IS INOPERATIVE (THE HEATER BLOWER IS OK)

CONDITIONS	DETAILS/RESULTS/ACTIONS
B1: CHECK THE FUSE F14	
1 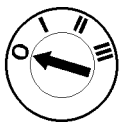 2 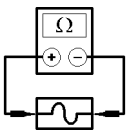 Fuse F14 (CJB)	• Is the fuse OK? ☐ **Yes** GO TO **B2** ☐ **No** INSTALL a new fuse F14 (15 A). If the fuse blows again, LOCATE and REPAIR the short to ground of the circuit(s) by using the wiring diagrams or if necessary CHECK the A/C compressor clutch diode and INSTALL a new one. TEST the system for normal operation.
B2: CHECK THE POWER SUPPLY OF THE FUSE F14	
1 2 Fuse F14 (CJB)	3 Measure the voltage between fuse F14 and ground. • Is battery voltage indicated? ☐ **Yes** GO TO **B3** ☐ **No** REPAIR the power supply of the fuse F14. TEST the system for normal operation.
B3: CHECK THE FUSE F13	
1 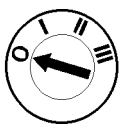 2 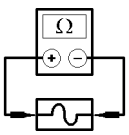 Fuse F13 (CJB)	• Is the fuse F13 OK? ☐ **Yes** GO TO **B4**. ☐ **No** INSTALL a new fuse F13 (10 A). If the fuse blows again, LOCATE and REPAIR the short to ground of the circuit(s) by using the wiring diagrams. TEST the system for normal operation.
B4: CHECK THE POWER SUPPLY OF THE FUSE F13	
1 2 Fuse F13 (CJB)	

DIAGNOSIS AND TESTING (CONTINUED)

CONDITIONS	DETAILS/RESULTS/ACTIONS
	3 Measure the voltage between fuse F13 and ground. • Is battery voltage indicated? ☐ **Yes** GO TO **B5**. ☐ **No** REPAIR the power supply of the fuse F13. TEST the system for normal operation.
B5: CHECK THE POWER SUPPLY OF RELAY – A/C W.O.T	
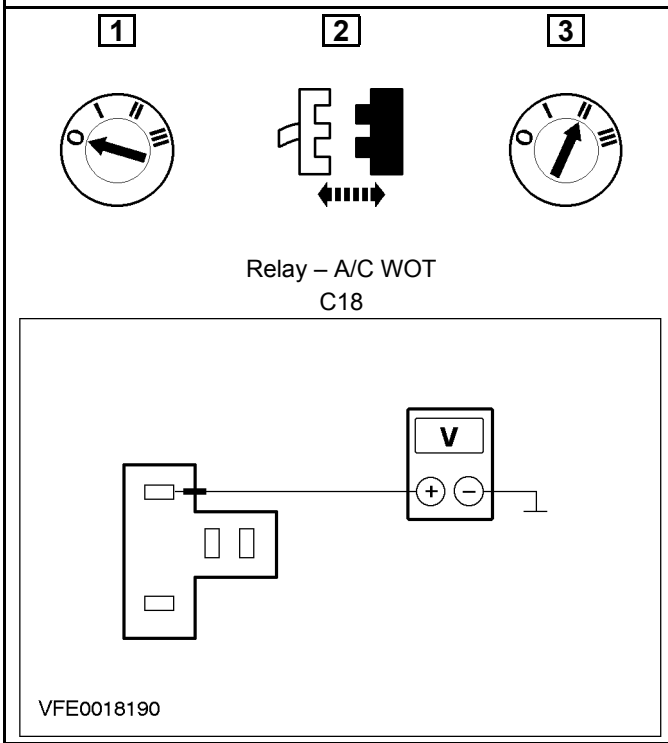	**4** Measure the voltage between relay socket – A/C W.O.T, connector C18, pin 2, circuit 14-CA11 (VT/YE) and ground. • Is battery voltage indicated? ☐ **Yes** GO TO **B6** ☐ **No** REPAIR the open circuit(s) between fuse F14 and relay – A/C W.O.T by using the wiring diagrams. TEST the system for normal operation.
B6: CHECK THE POWER SUPPLY OF RELAY – A/C W.O.T	
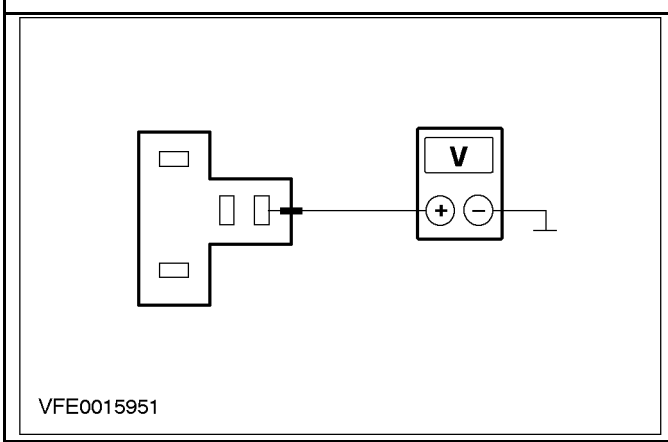	**1** Measure the voltage between relay socket – A/C W.O.T, connector C18, pin 3, circuit 14-CA67 (VT/BK) and ground. • Is battery voltage indicated? ☐ **Yes** GO TO **B7** ☐ **No** REPAIR the open circuit(s) between fuse F14 and relay – A/C W.O.T by using the wiring diagrams. TEST the system for normal operation.

DIAGNOSIS AND TESTING (CONTINUED)

CONDITIONS	DETAILS/RESULTS/ACTIONS
B7: CHECK THE A/C COMPRESSOR CLUTCH	
1 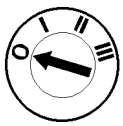	
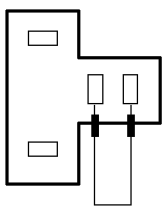 VFE0023410	2 Connect a jumper wire at the relay socket – A/C W.O.T, connector C18, between pin 3, circuit 14-CA67 (VT/BK) and pin 5, circuit 14S-CA1 (VT/BU).
3	• Is the A/C compressor clutch engaged? ☐ **Yes** GO TO **B10** ☐ **No** GO TO **B8**
B8: CHECK CIRCUIT 14S-CA6 (VT/YE) FOR OPEN	
1 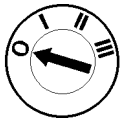 2 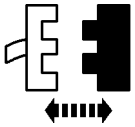 A/C compressor clutch C75	
3 Relay – A/C W.O.T C18 4	5 Switch on the A/C system and the heater blower system.

DIAGNOSIS AND TESTING (CONTINUED)

CONDITIONS	DETAILS/RESULTS/ACTIONS
VFE0013989	**6** Measure the voltage between A/C compressor clutch, connector C75, pin 1, circuit 14S-CA6 (VT/YE), harness side and ground. • Is battery voltage indicated? ☐ **Yes** GO TO **B9** ☐ **No** REPAIR the open circuit(s) between relay – A/C W.O.T and A/C compressor clutch by using the wiring diagrams. TEST the system for normal operation.
B9: CHECK THE GROUND SUPPLY OF THE A/C COMPRESSOR CLUTCH	
1 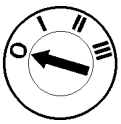 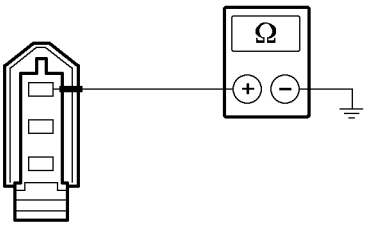 VFE0013139	**2** Measure the resistance between A/C compressor clutch, connector C75, pin 2, circuit 31-CA6 (BK), harness side and ground. • Is the resistance less than 2 ohms? ☐ **Yes** CHECK the A/C compressor clutch, if necessary INSTALL a new one. TEST the system for normal operation. ☐ **No** REPAIR the open circuit(s) between A/C compressor clutch and ground G9 by using the wiring diagrams. TEST the system for normal operation.
B10: CHECK THE RELAY – A/C WOT	
	1 Check the relay – A/C W.O.T referring to the Component Test. • Is the relay OK? ☐ **Yes** GO TO **B11** ☐ **No** INSTALL a new relay – A/C W.O.T. TEST the system for normal operation.

DIAGNOSIS AND TESTING (CONTINUED)

CONDITIONS	DETAILS/RESULTS/ACTIONS
B11: CHECK THE RELAY – A/C SWITCH	
1 2 3 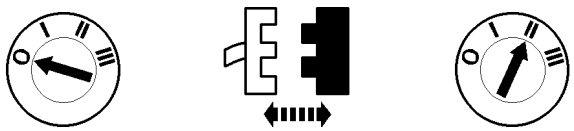 Relay – A/C switch C19 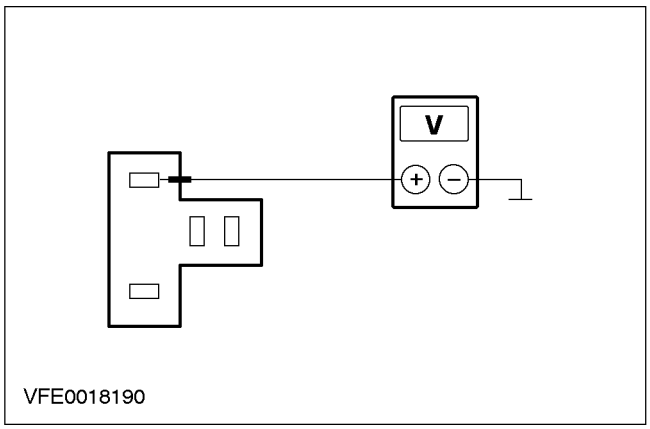 VFE0018190	4 Switch on the A/C system. 5 Measure the voltage between relay socket – A/C switch, connector C19, pin 2, circuit 14S-FA90 (VT/BK) and ground. • Is battery voltage indicated? ☐ **Yes** GO TO **B14** ☐ **No** GO TO **B12**
B12: CHECK THE POWER SUPPLY OF THE HEATER AND A/C CONTROL ASSEMBLY	
1 2 3 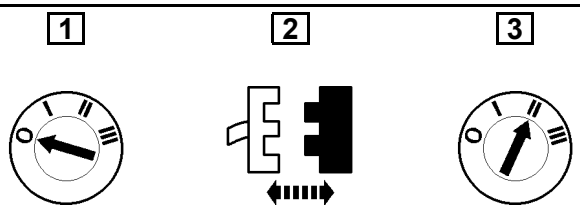 Heater and A/C control assembly C329 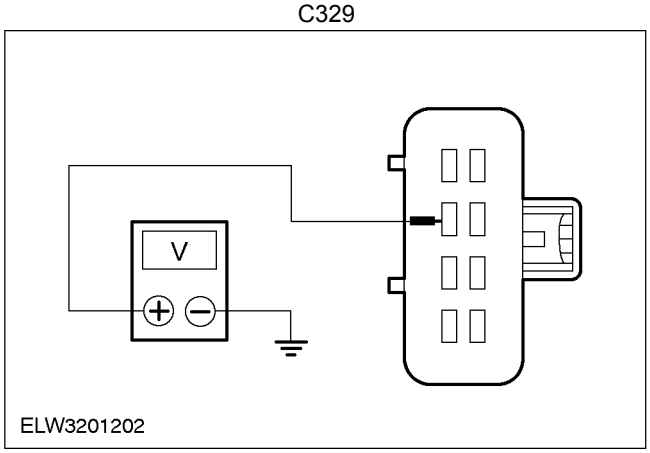 ELW3201202	4 Measure the voltage between heater and A/C control assembly, connector C329, pin 2, circuit 14-FA90 (VT/BK), harness side and ground. • Is battery voltage indicated? ☐ **Yes** GO TO **B13** ☐ **No** REPAIR the open circuit(s) between fuse F13 and heater and A/C control assembly by using the wiring diagrams. TEST the system for normal operation.

DIAGNOSIS AND TESTING (CONTINUED)

CONDITIONS	DETAILS/RESULTS/ACTIONS
B13: CHECK THE CIRCUIT 14S-FA90 (VT/BK) FOR OPEN	
1 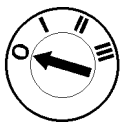 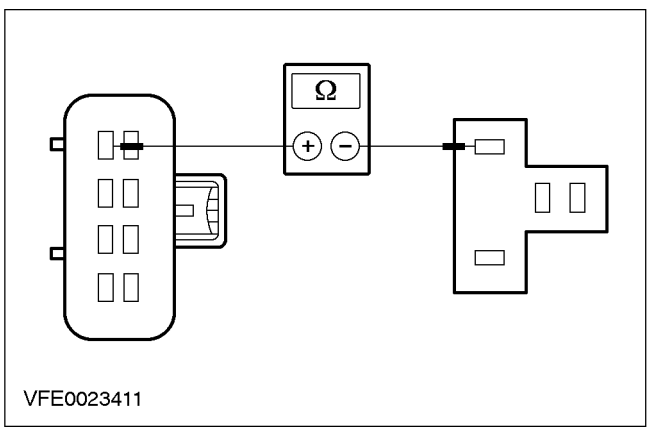	2 Measure the resistance between heater and A/C control assembly, connector C329, pin 1, circuit 14S-FA90 (VT/BK), harness side and relay socket – A/C switch, connector C19, pin 2, circuit 14S-FA90 (VT/BK). • Is the resistance less than 2 ohms? ☐ **Yes** CHECK the heater and A/C control assembly. If necessary INSTALL a new one. TEST the system for normal operation. ☐ **No** REPAIR the open circuit(s) between heater and A/C control assembly and relay – A/C switch by using the wiring diagrams. TEST the system for normal operation.
B14: CHECK THE GROUND SUPPLY OF THE RELAY – A/C SWITCH	
1 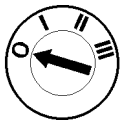 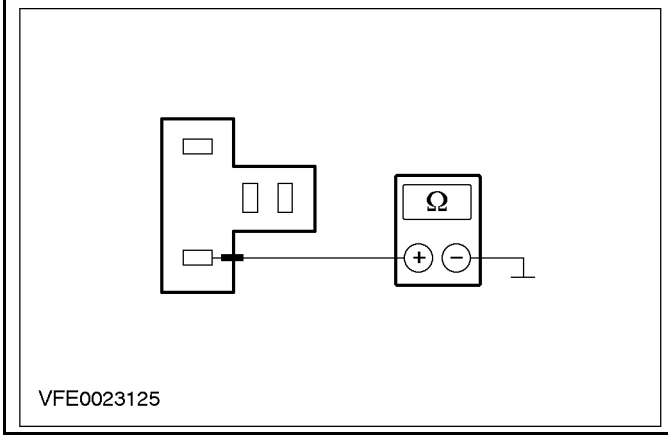	2 Turn the heater blower to the LOW SPEED position. 3 Measure the resistance between relay socket – A/C switch, connector C19, pin 1, circuit 31S-FA90 (BK/GN) and ground. • Is the resistance less than 2 ohms? ☐ **Yes** GO TO **B15** ☐ **No** REPAIR the open circuit(s) between relay – A/C switch and ground by using the wiring diagrams. TEST the system for normal operation.

DIAGNOSIS AND TESTING (CONTINUED)

CONDITIONS	DETAILS/RESULTS/ACTIONS
B15: CHECK THE GROUND SUPPLY OF THE RELAY – A/C SWITCH	
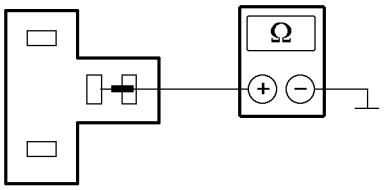 VFE0023412	1 Measure the resistance between relay socket – A/C switch, connector C19, pin 3, circuit 31-CA66B (BK) and ground. • Is the resistance less than 2 ohms? ☐ **Yes** GO TO **B16** ☐ **No** REPAIR the open circuit(s) between relay – A/C switch and ground G6 by using the wiring diagrams. TEST the system for normal operation.
B16: CHECK THE RELAY – A/C SWITCH	
1 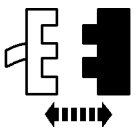 Relay – A/C W.O.T C18 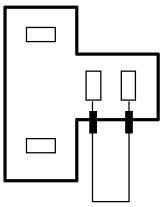 VFE0023410 3 	

DIAGNOSIS AND TESTING (CONTINUED)

CONDITIONS	DETAILS/RESULTS/ACTIONS
	4 Connect a jumper wire at the relay socket – A/C switch, connector C19, between pin 5, circuit 31S-CA66B (BK/RD) and pin 3, circuit 31-CA66B (BK). • Is the A/C compressor clutch engaged? ☐ **Yes** CHECK the relay – A/C switch according to the Component Test. If necessary INSTALL a new one. TEST the system for normal operation. ☐ **No** GO TO **B17**
B17: CHECK THE A/C COMPRESSOR CYCLING SWITCH	
1 **2** **3** 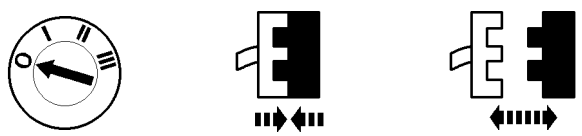 Relay – A/C switch C19 — A/C compressor cycling switch C91 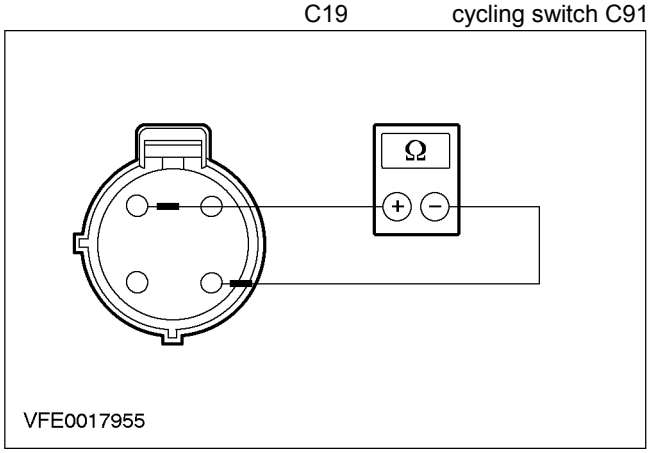 	**4** Measure the resistance between A/C compressor cycling switch, connector C91, pin 1 and pin 4, component side. • Is the resistance less than 2 ohms? ☐ **Yes** GO TO **B18** ☐ **No** CHECK the A/C compressor cycling switch; INSTALL a new one if necessary. TEST the system for normal operation. If the concern is not rectified, CHECK the refrigerant circuit(s) for leakage. TEST the system for normal operation.
B18: CHECK THE CIRCUIT 31S-CA17 (BK/RD) FOR OPEN	
1 	**2** Switch on the A/C system and the heater blower.

DIAGNOSIS AND TESTING (CONTINUED)

CONDITIONS	DETAILS/RESULTS/ACTIONS
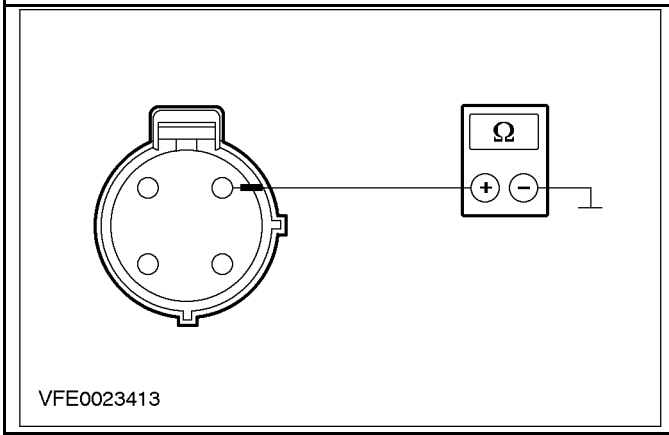	**3** Measure the resistance between A/C compressor cycling switch, connector C91, pin 1, circuit 31S-CA17 (BK/RD), harness side and ground. • Is the resistance less than 2 ohms? ☐ **Yes** GO TO **B19** ☐ **No** GO TO **B22**
B19: CHECK CIRCUIT 31S-PC72 (BK/BU) FOR OPEN	
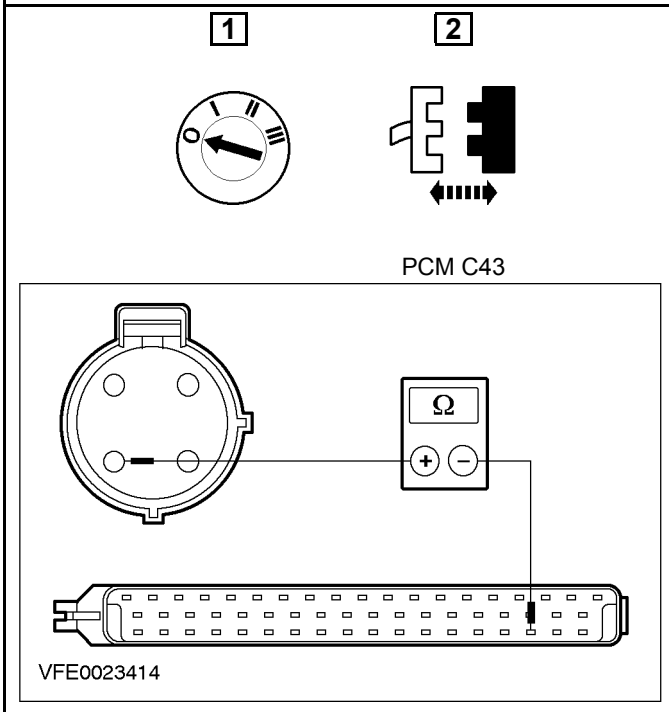	**3** Measure the resistance between A/C compressor cycling switch, C91, pin 4, circuit 31S-PC72 (BK/BU), harness side and PCM, connector C43, pin 40, circuit 31S-PC72 (BK/BU), harness side. • Is the resistance less than 2 ohms? ☐ **Yes** GO TO **B20** ☐ **No** REPAIR the open circuit(s) between A/C compressor cycling switch and PCM by using the wiring diagrams. TEST the system for normal operation.
B20: CHECK THE CIRCUIT 31S-CA11 (BK/YE) FOR OPEN	

DIAGNOSIS AND TESTING (CONTINUED)

CONDITIONS	DETAILS/RESULTS/ACTIONS
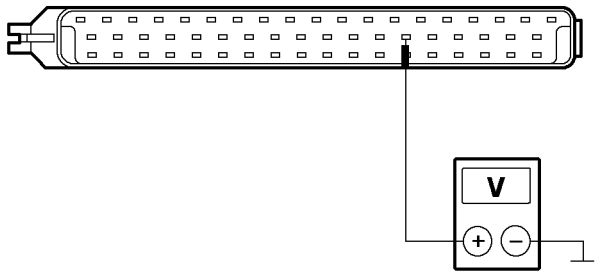 VFE0023415	**2** Measure the voltage between PCM, connector C43, pin 25, circuit 31S-CA11 (BK/YE), harness side and ground. • Is battery voltage indicated? ☐ **Yes** GO TO **B21** ☐ **No** REPAIR the open circuit(s) between relay – A/C W.O.T and PCM by using the wiring diagrams. TEST the system for normal operation.
B21: CHECK THE CIRCUIT 31S-CA12A (BK/BU) FOR OPEN	
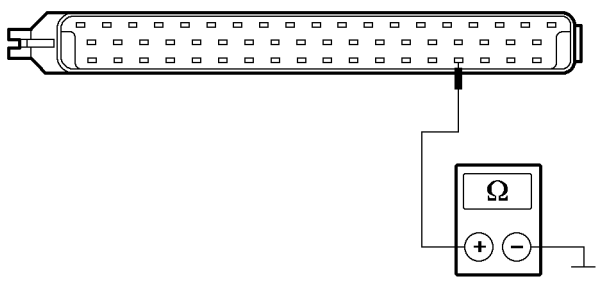 VFE0023416	**1** Switch on the A/C system and the heater blower. **2** Measure the resistance between PCM, connector C43, pin 41, circuit 31S-CA12A (BK/BU), harness side and ground. • Is battery voltage indicated? ☐ **Yes** CHECK the PCM. If necessary INSTALL a new one. TEST the system for normal operation. ☐ **No** REPAIR the open circuit(s) between PCM and ground by using the wiring diagrams. TEST the system for normal operation.
B22: CHECK THE DUAL PRESSURE SWITCH	
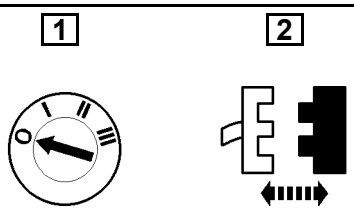 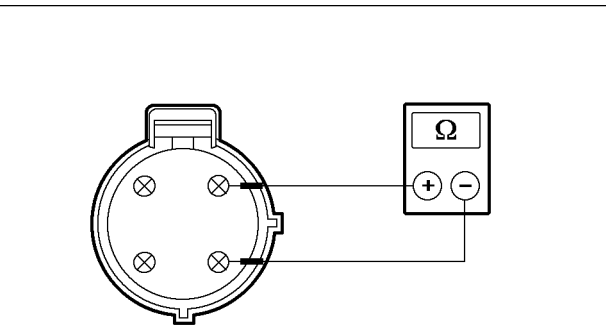 VFE0015916	**3** Measure the resistance between the dual pressure switch, connector C77, pin 2 and pin 4, component side. • Is the resistance less than 2 ohms? ☐ **Yes** GO TO **B23** ☐ **No** CHECK the dual pressure switch; INSTALL a new one if necessary. TEST the system for normal operation.

DIAGNOSIS AND TESTING (CONTINUED)

CONDITIONS	DETAILS/RESULTS/ACTIONS
B23: CHECK THE CIRCUIT 31S-CA12 (BK/BU) FOR OPEN	
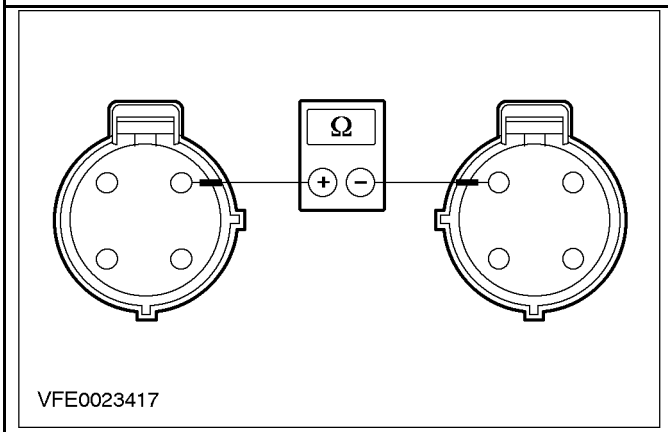	1 Measure the resistance between A/C compressor cycling switch, connector C91, pin 1, circuit 31S-CA17 (BK/RD), harness side and dual pressure switch, connector C77, pin 2, circuit 31S-CA12 (BK/BU), harness side. • Is the resistance less than 2 ohms? ☐ **Yes** GO TO **B24** ☐ **No** REPAIR the open circuit(s) between dual pressure switch and PCM by using the wiring diagrams. TEST the system for normal operation.
B24: CHECK THE A/C INHIBIT DIODE	
	1 Check the A/C inhibit diode referring to the diode test. • Is the A/C diode OK? ☐ **Yes** REPAIR the open circuit(s) between dual pressure switch and relay – A/C switch by using the wiring diagrams. TEST the system for normal operation. ☐ **No** INSTALL a new A/C inhibit diode. TEST the system for normal operation.

PINPOINT TEST C: THE HEATER BLOWER SYSTEM IS INOPERATIVE

CONDITIONS	DETAILS/RESULTS/ACTIONS
C1: DETERMINE THE FAULT CONDITION	
1 	2 Turn the heater blower switch from SLOW SPEED to HIGH SPEED position. 3 Check the airflow. • Is the heater blower in all positions inoperative? ☐ **Yes** GO TO **C2** ☐ **No** GO TO **C8**

DIAGNOSIS AND TESTING (CONTINUED)

CONDITIONS	DETAILS/RESULTS/ACTIONS
C2: CHECK THE FUSE F16	
1 2 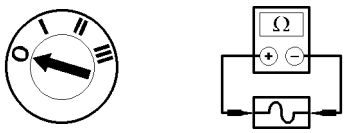 Fuse F16 (CJB)	• Is the fuse OK? ☐ **Yes** GO TO **C3** ☐ **No** INSTALL a new fuse F16 (30 A). If the fuse blows again, REPAIR the short to ground of the circuit(s) by using the wiring diagrams. TEST the system for normal operation.
C3: CHECK THE POWER SUPPLY OF THE FUSE F16	
1 2 Fuse F16 (CJB)	3 Measure the voltage between fuse F16 and ground. • Is battery voltage indicated? ☐ **Yes** GO TO **C4** ☐ **No** REPAIR the power supply of the fuse F16. TEST the system for normal operation.
C4: CHECK THE POWER SUPPLY OF THE HEATER BLOWER MOTOR	
1 2 3 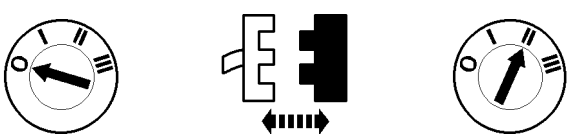 Heater blower motor C53 VFE0016017	4 Measure the voltage between heater blower motor, connector C53, pin 1, circuit 14-CA18 (VT/OG), harness side and ground. • Is battery voltage indicated? ☐ **Yes** GO TO **C5** ☐ **No** REPAIR the open circuit(s) between fuse F16 and heater blower motor by using the wiring diagrams. TEST the system for normal operation.

DIAGNOSIS AND TESTING (CONTINUED)

CONDITIONS	DETAILS/RESULTS/ACTIONS
C5: CHECK THE HEATER BLOWER MOTOR	
1 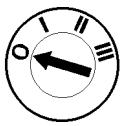 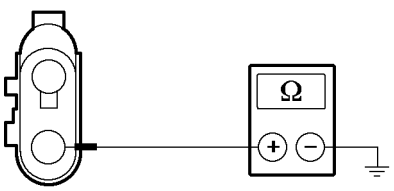 VFE0005847	2 Turn the heater blower switch to HIGH SPEED position 3 Measure the resistance between heater blower switch, connector C53, pin 2, circuit 31S-CA18 (BK/RD), harness side and ground. • Is the resistance less than 2 ohms? ☐ **Yes** CHECK the heater blower motor; INSTALL a new one if necessary. TEST the system for normal operation. ☐ **No** GO TO **C6**
C6: CHECK THE CIRCUIT 31S-CA18 (BK/RD) FOR OPEN	
1 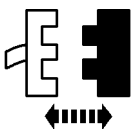 Heater blower switch C72 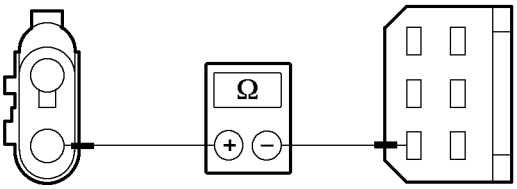 VFE0022795	2 Measure the resistance between heater blower motor, connector C53, pin 2, circuit 31S-CA18 (BK/RD), harness side and heater blower switch, connector C72, pin 4, circuit 31S-CA33 (BK/OG), harness side. • Is the resistance less than 2 ohms? ☐ **Yes** GO TO **C7** ☐ **No** REPAIR the open circuit(s) between heater blower motor and heater blower switch by using the wiring diagrams. TEST the system for normal operation.

DIAGNOSIS AND TESTING (CONTINUED)

CONDITIONS	DETAILS/RESULTS/ACTIONS
C7: CHECK THE GROUND SUPPLY OF THE HEATER BLOWER SWITCH	
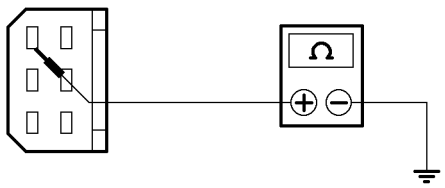 ELW3201164	**1** Measure the resistance between heater blower switch, connector C72, pin 6, circuit 31-CA25 (BK), harness side and ground. • Is the resistance less than 2 ohms? ☐ **Yes** CHECK the heater blower switch; INSTALL a new one if necessary. TEST the system for normal operation. ☐ **No** REPAIR the open circuit(s) between heater blower switch and ground by using the wiring diagrams. TEST the system for normal operation.
C8: CHECK THE CIRCUIT FOR HEATER BLOWER, HIGH SPEED	
1 **2** **3** 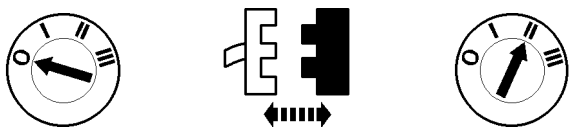 Heater blower switch C72 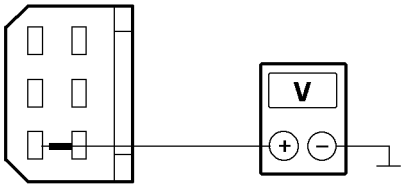 VFE0023418	**4** Measure the voltage between heater blower switch, connector C72, pin 4, circuit 31S-CA33 (BK/OG), harness side and ground. • Is battery voltage indicated? ☐ **Yes** GO TO **C9** ☐ **No** REPAIR the open circuit(s) between heater blower motor and heater blower switch by using the wiring diagrams. TEST the system for normal operation.
C9: CHECK THE CIRCUIT FOR HEATER BLOWER, MEDIUM SPEED	
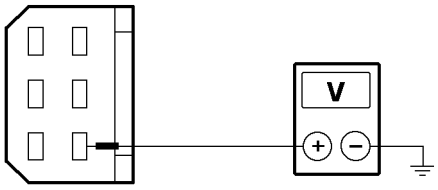 VFE0008719	**1** Measure the voltage between heater blower switch, connector C72, pin 1, circuit 31S-CA32 (BK/BU), harness side and ground. • Is battery voltage indicated? ☐ **Yes** GO TO **C12** ☐ **No** GO TO **C10**

DIAGNOSIS AND TESTING (CONTINUED)

CONDITIONS	DETAILS/RESULTS/ACTIONS
C10: CHECK THE COMMON CIRCUIT FOR HEATER BLOWER; LOWER SPEEDS	
1 2 3 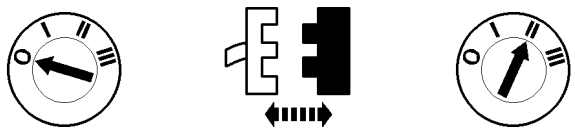 Heater blower series resistor C90 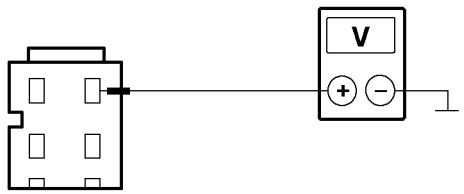 VFE0023419	4 Measure the voltage between heater blower series resistor, connector C90, pin 1, circuit 31S-CA18A (BK/RD), harness side and ground. • Is battery voltage indicated? ☐ **Yes** GO TO **C11** ☐ **No** REPAIR the open circuit(s) between heater blower motor and heater blower series resistor by using the wiring diagrams. TEST the system for normal operation.
C11: CHECK THE CIRCUIT FOR HEATER BLOWER, MEDIUM SPEED	
1 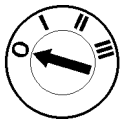 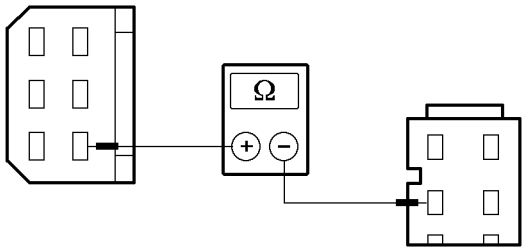 VFE0008720	2 Measure the resistance between heater blower series resistor, connector C90, pin 4, circuit 31S-CA32 (BK/BU), harness side and heater blower switch, connector C72, pin 1, circuit, 31S-CA32 (BK/BU), harness side. • Is the resistance less than 2 ohms? ☐ **Yes** CHECK the heater blower series resistor; INSTALL a new one if necessary. TEST the system for normal operation. ☐ **No** REPAIR the open circuit(s) between heater blower series resistor and heater blower switch by using the wiring diagrams. TEST the system for normal operation.

DIAGNOSIS AND TESTING (CONTINUED)

CONDITIONS	DETAILS/RESULTS/ACTIONS
C12: CHECK THE CIRCUIT FOR HEATER BLOWER, LOW SPEED	
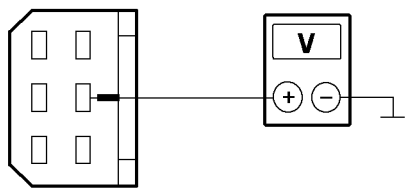 VFE0023420	**1** Measure the voltage between heater blower switch, connector C72, pin 2, circuit 31S-CA31 (BK/YE), harness side and ground. • Is battery voltage indicated? ☐ **Yes** GO TO **C14** ☐ **No** GO TO **C13**
C13: CHECK THE CIRCUIT FOR HEATER BLOWER, LOW SPEED	
1 **2** Heater blower series resistor C90 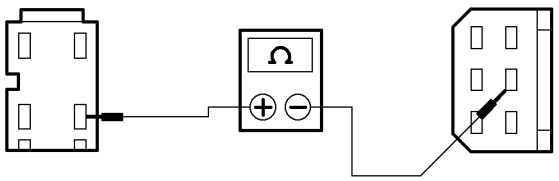 ELW3201170	**3** Measure the resistance between heater blower series resistor, connector C90, pin 2, circuit 31S-CA31 (BK/YE), harness side and heater blower switch, connector C72, pin 2, circuit 31S-CA31 (BK/YE), harness side. • Is the resistance less than 2 ohms? ☐ **Yes** CHECK the heater blower series resistor; INSTALL a new one if necessary. TEST the system for normal operation. ☐ **No** REPAIR the open circuit(s) between heater blower series resistor and heater blower switch by using the wiring diagrams. TEST the system for normal operation.

DIAGNOSIS AND TESTING (CONTINUED)

CONDITIONS	DETAILS/RESULTS/ACTIONS
C14: CHECK THE CIRCUIT FOR HEATER BLOWER, SLOW SPEED	
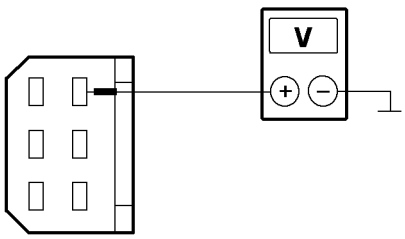 VFE0023421	**1** Measure the voltage between heater blower switch, connector C72, pin 3, circuit 31S-CA30 (BK/WH), harness side and ground. • Is battery voltage indicated? ☐ **Yes** CHECK the heater blower switch; INSTALL a new one if necessary. TEST the system for normal operation. ☐ **No** GO TO **C15**
C15: CHECK THE CIRCUIT FOR HEATER BLOWER, SLOW SPEED	
1 **2** Heater blower series resistor C90 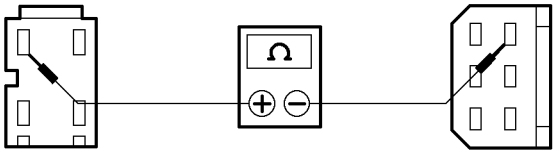 ELW3201172	**3** Measure the resistance between heater blower series resistor, connector C90, pin 3, circuit 31S-CA30 (BK/WH), harness side and heater blower switch, connector C72, pin 3, circuit 31S-CA30 (BK/WH), harness side. • Is the resistance less than 2 ohms? ☐ **Yes** CHECK the heater blower series resistor, INSTALL a new on if necessary. TEST the system for normal operation. ☐ **No** REPAIR the open circuit(s) between heater blower series resistor and heater blower switch by using the wiring diagrams. TEST the system for normal operation.

PINPOINT TEST D: THE AIR RE-CIRCULATION FLAP IS INOPERATIVE

CONDITIONS	DETAILS/RESULTS/ACTIONS
D1: CHECK THE FUSE F16	
1 **2** 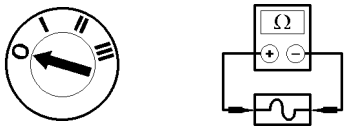 Fuse F16 (CJB)	• Is the fuse OK? ☐ **Yes** GO TO **D2** ☐ **No** INSTALL a new fuse F16 (30 A). If the fuse blows again, REPAIR the short to ground of the circuit(s) by using the wiring diagrams. TEST the system for normal operation.

DIAGNOSIS AND TESTING (CONTINUED)

CONDITIONS	DETAILS/RESULTS/ACTIONS
D2: CHECK THE POWER SUPPLY OF THE FUSE F16	
1 2 Fuse F16 (CJB)	3 Measure the voltage between fuse F16 and ground. • Is battery voltage indicated? ☐ **Yes** GO TO **D3** ☐ **No** REPAIR the power supply of the fuse F16 by using the wiring diagrams. TEST the system for normal operation.
D3: CHECK THE FUSE F13	
1 2 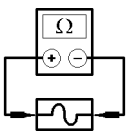 Fuse F13 (CJB)	• Is the fuse OK? ☐ **Yes** GO TO **D4** ☐ **No** INSTALL a new fuse F13 (15 A). If the fuse blows again, LOCATE and REPAIR the short to ground of the circuit(s) by using the wiring diagrams. TEST the system for normal operation.
D4: CHECK THE POWER SUPPLY OF THE FUSE F13	
1 2 Fuse F13 (CJB)	3 Measure the voltage between fuse F13 and ground. • Is battery voltage indicated? ☐ **Yes** GO TO **D5** ☐ **No** REPAIR the power supply of the fuse F13 by using the wiring diagrams. TEST the system for normal operation.

DIAGNOSIS AND TESTING (CONTINUED)

CONDITIONS	DETAILS/RESULTS/ACTIONS
D5: CHECK THE POWER SUPPLY OF THE RE-CIRCULATION AIR ACTUATOR	
1 2 3 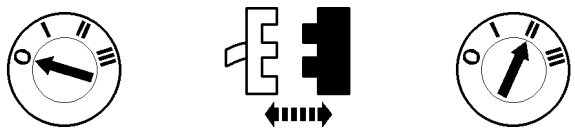 Re-circulation air actuator C54 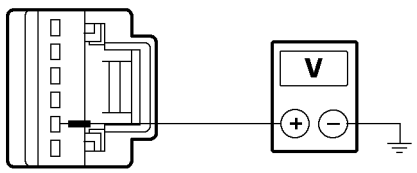 VFE0013198	4 Measure the voltage between re-circulation air actuator, connector C54, pin 2, circuit 14-CA76 (VT), harness side and ground. • Is battery voltage indicated? ☐ **Yes** GO TO **D6** ☐ **No** REPAIR the open circuit(s) between fuse F16 and re-circulation air actuator by using the wiring diagrams. TEST the system for normal operation.
D6: CHECK THE GROUND SUPPLY OF THE RE-CIRCULATION AIR ACTUATOR	
1 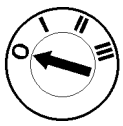 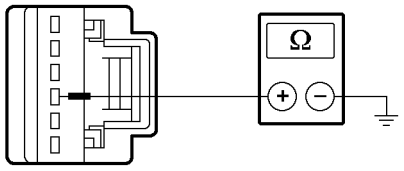 VFE0013203	2 Measure the resistance between re-circulation air actuator, connector C54, pin 3, circuit 31-CA76 (BK), harness side and ground. • Is the resistance less than 2 ohms? ☐ **Yes** GO TO **D7** ☐ **No** REPAIR the open circuit(s) between re-circulation air actuator and ground G6 by using the wiring diagrams. TEST the system for normal operation.

DIAGNOSIS AND TESTING (CONTINUED)

CONDITIONS	DETAILS/RESULTS/ACTIONS
D7: CHECK THE CONTROL CIRCUIT OF THE RE-CIRCULATION AIR ACTUATOR	
1 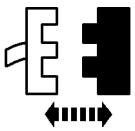 Relay – A/C re-circulation flap C342 2 Re-circulation air actuator C54 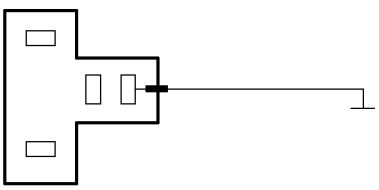 VFE0023422 4	3 Connect a jumper wire between relay socket – A/C re-circulation flap, connector C342, pin 5, circuit 31S-CA76 (BK/OG) and ground. • Is the re-circulation air actuator activated? ☐ **Yes** GO TO **D9** ☐ **No** GO TO **D8**
D8: CHECK THE RE-CIRCULATION AIR ACTUATOR	
1 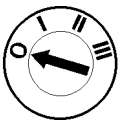	

DIAGNOSIS AND TESTING (CONTINUED)

CONDITIONS	DETAILS/RESULTS/ACTIONS
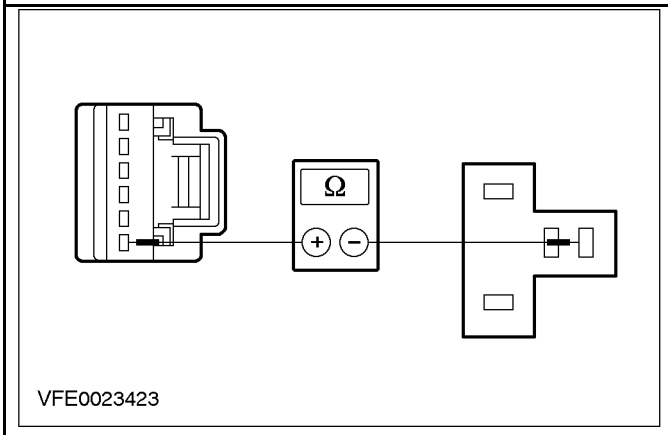	**2** Measure the resistance between re-circulation air actuator, connector C54, pin 1, circuit 31S-CA76 (BK/OG), harness side and relay socket – A/C re-circulation flap relay, connector C342. pin 5, circuit 31S-CA76 (BK/OG). • Is the resistance less than 2 ohms? ☐ **Yes** CHECK the re-circulation air actuator; INSTALL a new one if necessary. TEST the system for normal operation. ☐ **No** REPAIR the open circuit(s) between re-circulation air actuator and relay – A/C re-circulation flap by using the wiring diagrams. TEST the system for normal operation.
D9: CHECK THE GROUND SUPPLY OF THE RELAY – A/C RE-CIRCULATION FLAP	
1 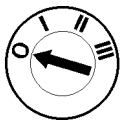 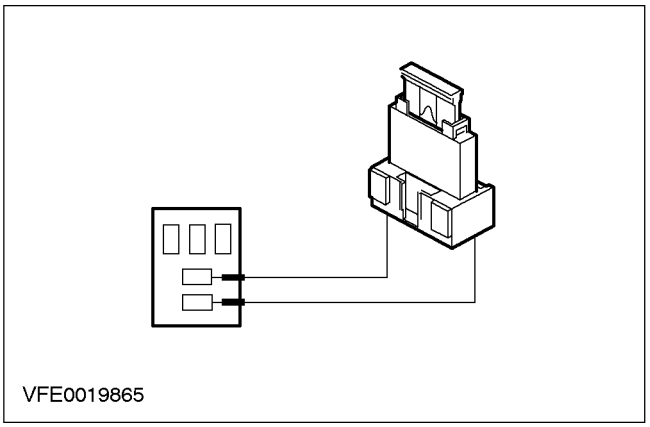 **3** 	

DIAGNOSIS AND TESTING (CONTINUED)

CONDITIONS	DETAILS/RESULTS/ACTIONS
	4 Connect a jumper wire at the relay socket – A/C re-circulation flap, connector C342, between pin 5, circuit 31S-CA76 (BK/OG) and pin 3, circuit 31-CA76A (BK). • Is the re-circulation air actuator activated? ☐ **Yes** GO TO **D10** ☐ **No** REPAIR the open circuit(s) between relay – A/C re-circulation flap and ground G6 by using the wiring diagrams. TEST the system for normal operation.
D10: CHECK THE GROUND CONNECTION OF RELAY – A/C RE-CIRCULATION FLAP	
1 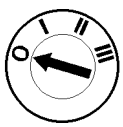 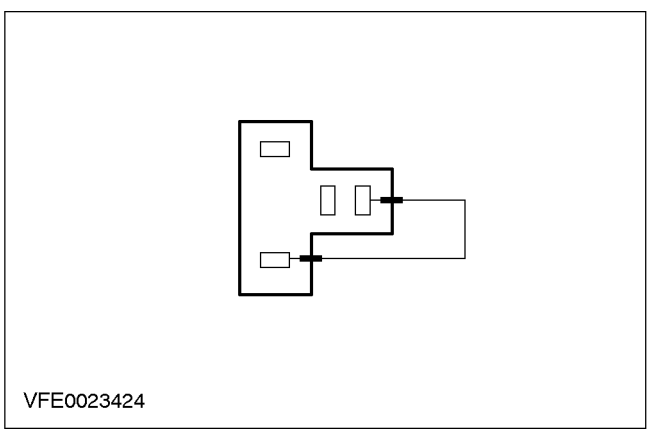 VFE0023424 **3** 	**4** Connect a jumper wire at the relay socket – A/C re-circulation flap, connector C342, between pin 5, circuit 31S-CA76 (BK/OG) and pin 1, circuit 31-CA66 (BK). • Is the re-circulation air actuator activated? ☐ **Yes** GO TO **D11** ☐ **No** REPAIR the open circuit(s) between relay – A/C re-circulation flap and ground G6 by using the wiring diagrams. TEST the system for normal operation.

DIAGNOSIS AND TESTING (CONTINUED)

CONDITIONS	DETAILS/RESULTS/ACTIONS
D11: CHECK THE RELAY – A/C RE-CIRCULATION FLAP	
	1 Check the relay – A/C re-circulation flap according to the Component Testing attached to the wiring diagrams. • Is the relay OK? ☐ **Yes** GO TO **D12** ☐ **No** INSTALL a new relay – A/C re-circulation flap. TEST the system for normal operation.
D12: CHECK THE CONTROL CIRCUIT OF THE RELAY – A/C RE-CIRCULATION FLAP	
1 2 Re-circulation switch C353 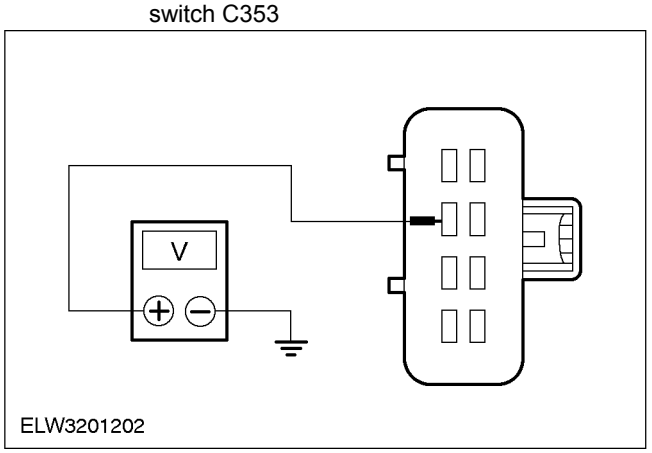 	3 Measure the voltage between re-circulation switch, connector C353, pin 2, circuit 14-CA66 (VT/OG), harness side and ground. • Is battery voltage indicated? ☐ **Yes** GO TO **D13** ☐ **No** REPAIR the open circuit(s) between fuse F13 and re-circulation switch by using the wiring diagrams. TEST the system for normal operation.
D13: CHECK THE RE-CIRCULATION SWITCH	
1 	

DIAGNOSIS AND TESTING (CONTINUED)

CONDITIONS	DETAILS/RESULTS/ACTIONS
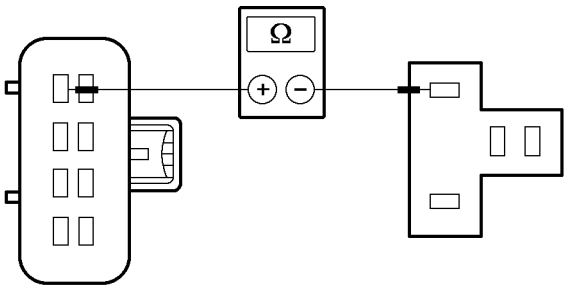 VFE0023411	**2** Measure the resistance between re-circulation switch, connector C353, pin 1, circuit 14S-CA66 (VT/OG), harness side and relay socket – A/C re-circulation flap, connector C342, pin 2, circuit 14S-CA66 (VT/OG). • Is the resistance less than 2 ohms? ☐ **Yes** CHECK the re-circulation switch; INSTALL a new one if necessary. TEST the system for normal operation. ☐ **No** REPAIR the open circuit(s) between re-circulation switch and relay – A/C re-circulation flap by using the wiring diagrams. TEST the system for normal operation.

Component Test

Relay – A/C W.O.T

1. Check the relay contact in normal condition

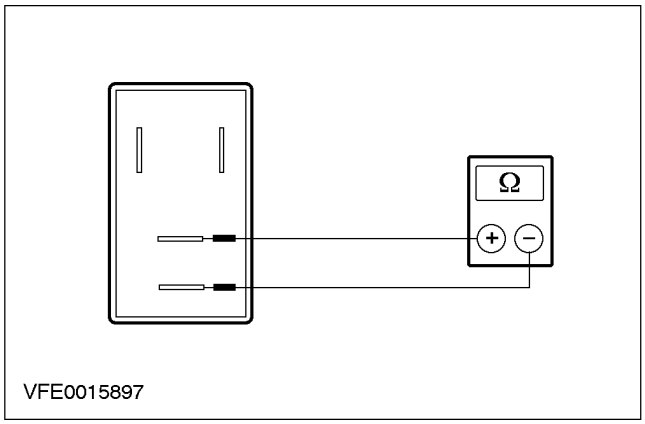

VFE0015897

Measure the resistance at the relay between pin 3 and pin 5.

Is the resistance greater than 100 Kohm?

If yes, GO to 2.

If not, INSTALL a new relay.

2. Check relay contact in activated condition

Using a test cable and set up the test as in the following description.

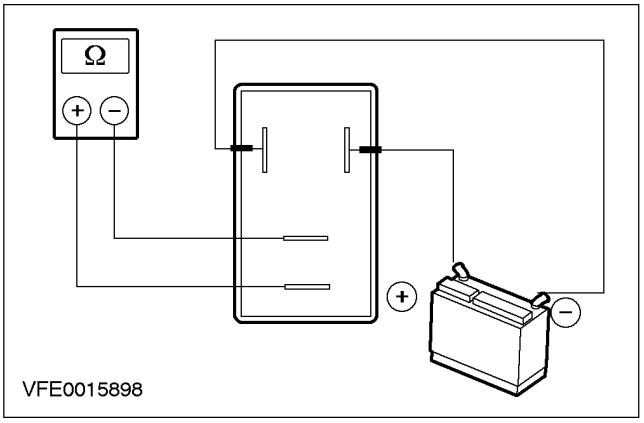

VFE0015898

- Connect the battery positive terminal with the relay, pin 1.
- Connect the battery negative terminal with the relay, pin 2.

Measure the resistance at the relay between pin 3 and pin 5.

Does the relay switch (audible click) when battery voltage is applied and is the resistance less than 1,0 Ohm?

If yes, the relay is OK.

If not, INSTALL a new relay.

Relay – A/C switch

1. Check the relay contact in normal condition

DIAGNOSIS AND TESTING (CONTINUED)

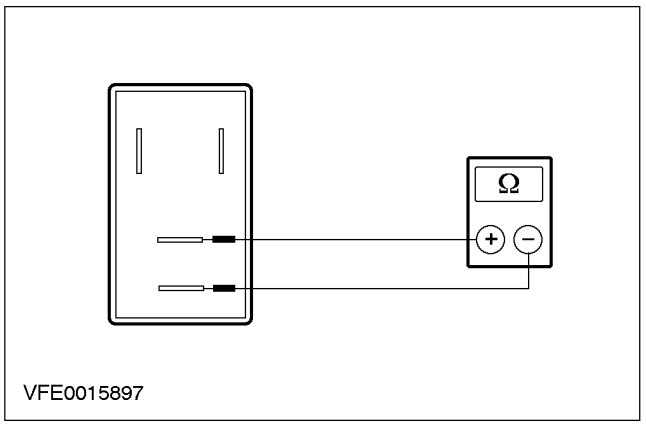

Measure the resistance at the relay between pin 3 and pin 5.

Is the resistance greater than 100 Kohm?

If yes, GO to 2.

If not, INSTALL a new relay.

2. Check relay contact in activated condition

Using a test cable and set up the test as in the following description.

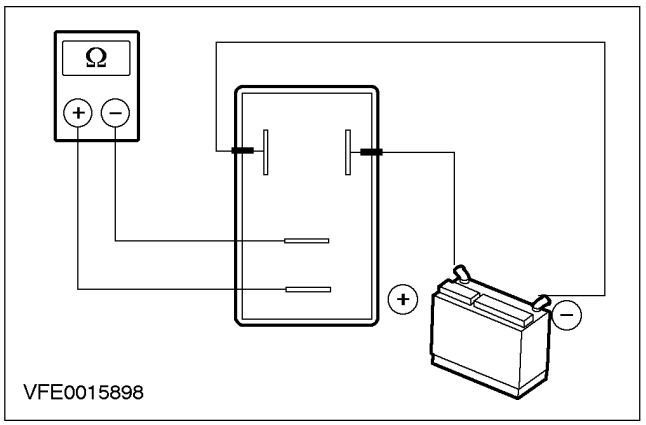

- Connect the battery positive terminal with the relay, pin 2.
- Connect the battery negative terminal with the relay, pin 1.

Measure the resistance at the relay between pin 3 and pin 5.

Does the relay switch (audible click) when battery voltage is applied and is the resistance less than 1,0 ohm?

If yes, the relay is OK.

If not, INSTALL a new relay.

Relay – high speed engine cooling fan

1. Check the relay contacts in normal condition

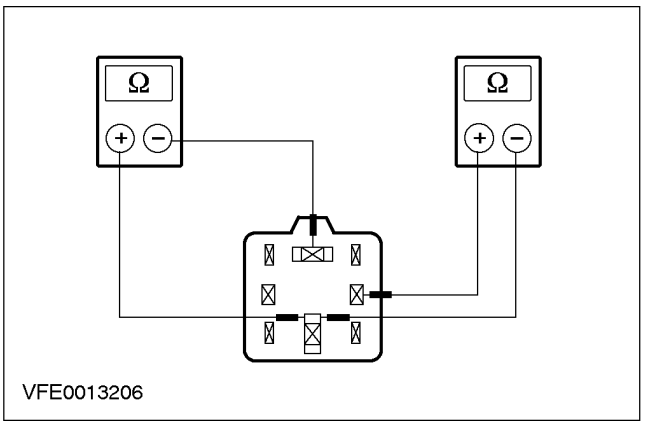

Measure the resistance at the relay between pin 3 and pin 5 and between pin 3 and pin 2.

Is in both measures the resistance greater than 100 Kohm?

If yes, GO to 2.

If not, INSTALL a new relay.

2. Check relay contact (1) in activated condition

Using a test cable and set up the test as in the following description.

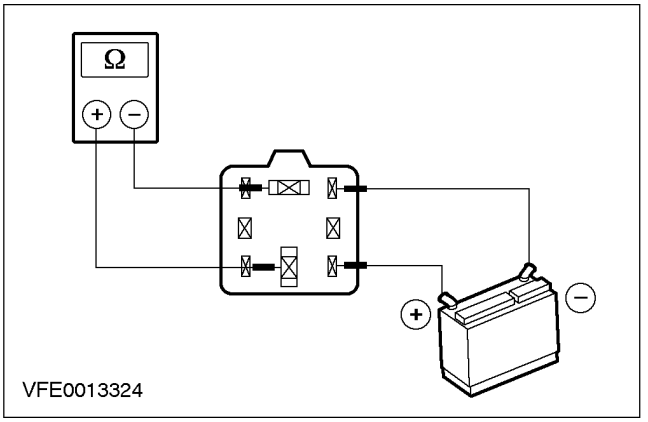

- Connect the battery positive terminal with the relay, pin 8.
- Connect the battery negative terminal with the relay, pin 7.

Measure the resistance at the relay between pin 3 and pin 5.

Does the relay switch (audible click) when battery voltage is applied and is the resistance less than 1,0 ohm?

If yes, GO to 3.

If not, INSTALL a new relay.

3. Check relay contact (2) in activated condition

Using a test cable and set up the test as in the following description.

DIAGNOSIS AND TESTING (CONTINUED)

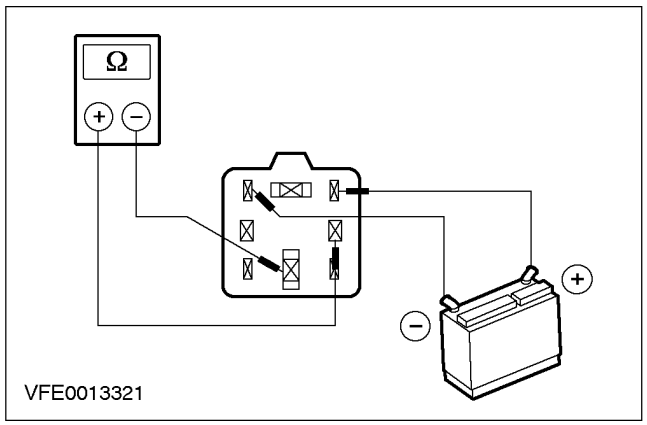

- Connect the battery positive terminal with the relay, pin 8.
- Connect the battery negative terminal with the relay, pin 9.

Measure the resistance at the relay between pin 3 and pin 2.

Does the relay switch (audible click) when battery voltage is applied and is the resistance less than 1,0 ohm?

If yes, the relay is OK.

If not, INSTALL a new relay.

Refrigerant Circuit

Workshop Equipment

Servicing unit/pressure gauges

Stopwatch

Electronic leak tester

Leak test

Test all components and refrigerant lines with an electronic leak tester. Follow the equipment manufacturer's instructions.

If necessary switch on the motor and the air conditioning to locate any small leaks in the high-pressure lines.

NOTE: Heavy oil contamination on lines or components is an indication of leaks.

Leaks

In the event of any leaks, rectify the leak(s), renew any faulty components and drain and refill the air conditioning system.

System Test

Three values are used for the fault diagnosis:

- Low-pressure
- High-pressure
- Compressor switching cycles (on/off)

Connecting the testing equipment

The following requirements must be met in order to carry out an accurate test:

- Close both of the manual valves on the pressure gauges. Connect the pressure gauges to the high-pressure and the low-pressure side of the air conditioning system.
- Start the engine, set the air conditioning to maximum cooling and air re-circulation, and set the blower to maximum power.
- Run the engine at 1500 rev/min.

Specified values for high and low-pressure

The measured values for high and low-pressure depend on the outside temperature. This is shown in the diagram and the table.

The area between the two curves corresponds to the tolerance range. The measured value must lie in this range.

Specified values for high-pressure

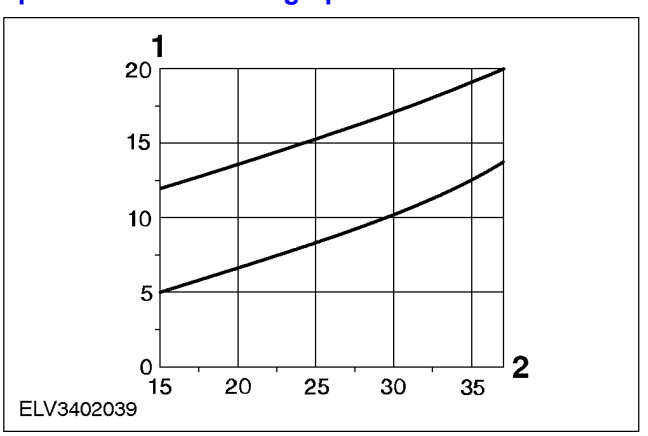

Item	Description
1	High-pressure (bar)
2	Outside temperature (°C)

Specified values for low-temperature

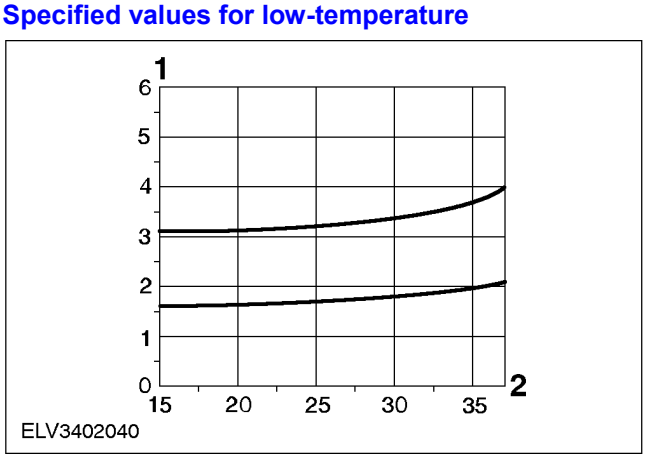

DIAGNOSIS AND TESTING (CONTINUED)

Item	Description
1	Low-pressure (bar)
2	Outside temperature (°C)

Required values: switching cycles

The following three diagrams show the required values for the compressor switching cycles. Measure the cycles using a stopwatch and make a note of the result.

If the measured value lies outside the tolerance range then there is an error in the system. Refer to the Symptom Chart in this section.

NOTE: The total cycle time is obtained by adding the on time to the off time.

Specified values for on time

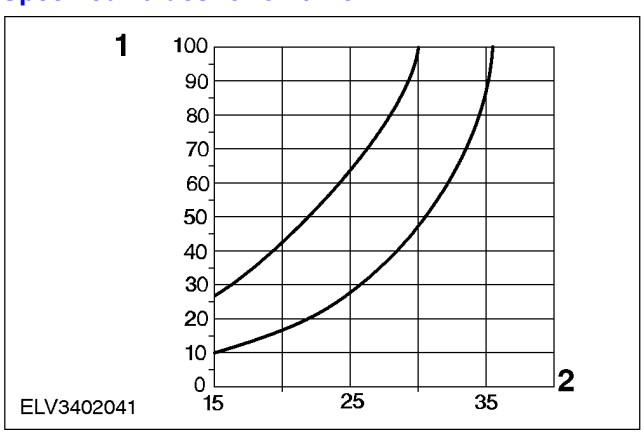

Item	Description
1	On-time (s)
2	Outside temperature (°C)

Specified values for off time

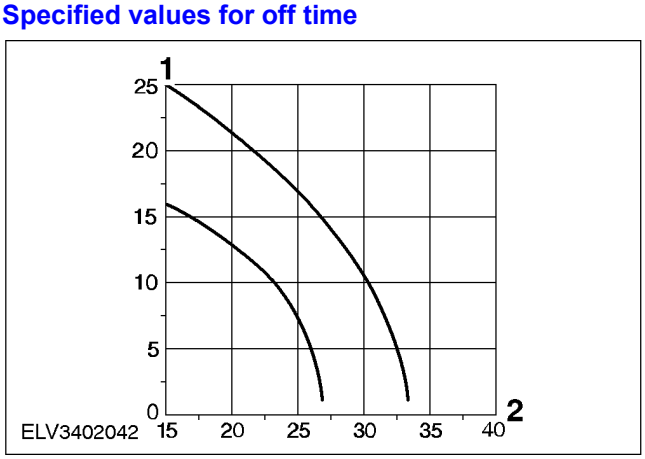

Item	Description
1	Off-time (s)
2	Outside temperature (°C)

Specified values for total cycle time

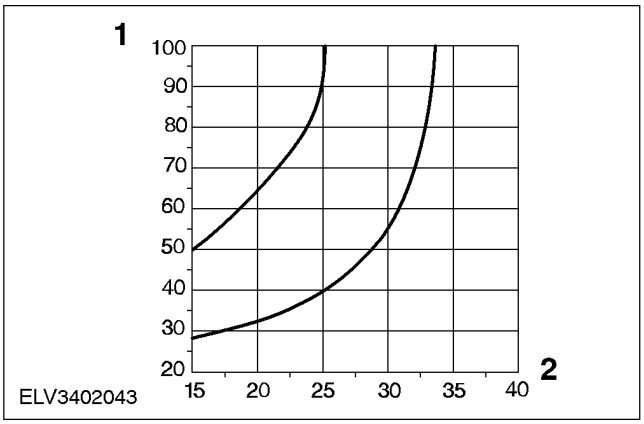

Item	Description
1	Total cycle time (s)
2	Outside temperature (°C)

Check the on/off-cycles

The following conditions must be met before checking the switching cycle:

1. Connect the pressure gauges to the high and low-pressure side of the air conditioning system.
2. Start the engine and allow it to run for approx. 10 min at 1500 rev/min.
3. Set the air conditioning to maximum cooling and air re-circulation.
4. Set the blower to maximum power.
5. Adjust the interior temperature to approx. 22 °C.
6. Measure the switching cycles using a stopwatch and make a note of the results.
7. Read off the pressure from the pressure gauges, make a note of the values and compare them with the required values in the diagrams.

As an example, after comparison with the diagrams the following five faults could be present. Next compare these statements with those in the Symptom Chart on the next page and read off the cause of the fault.

Example:

- High-pressure - too low
- Low-pressure - normal
- Switching cycles per minute - too many

DIAGNOSIS AND TESTING (CONTINUED)

- Clutch on time - too short
- Clutch off time - too short

Fault present: not enough refrigerant in the system.

Symptom Chart - Refrigerant Circuit

High-pressure	Low-pressure	Clutch cycle times: cycle	Clutch cycle times: on-time	Clutch cycle times: off-time	Fault cause/action
Too high	Too high	Compressor running constantly	Compressor running constantly	Compressor running constantly	Condenser contaminated
Too high	Normal to too high	Compressor running constantly	Compressor running constantly	Compressor running constantly	Engine overheated
Normal to too high	Normal	Compressor running constantly	Compressor running constantly	Compressor running constantly	Air or contaminants in the circuit. Too much refrigerant in the system.
Normal	Too high	Compressor running constantly	Compressor running constantly	Compressor running constantly	Fixed orifice tube, O-rings damaged or leaking
Normal	Normal	Too slow	Too long or constantly	Normal or not at all	Contaminants in the circuit or too much refrigerant oil
Normal	Too low	Too slow	Too long	Too long	Low-pressure switch faulty
Normal to too low	Too high	Compressor running constantly	Compressor running constantly	Compressor running constantly	Compressor faulty
Normal to too low	Normal to too high	Compressor running constantly	Compressor running constantly	Compressor running constantly	Low-pressure line blocked
Normal to too low	Normal	Too fast	Too short	Normal	Evaporator blocked
Normal to too low	Normal	Too fast	Too short	Normal to too long	Condenser, fixed orifice tube or high-pressure line blocked
Normal to too low	Normal	Too fast	Too short	Too short	Not enough refrigerant in the system
Normal to too low	Normal	Too fast	Too short	Too long	Evaporator input line blocked
Normal to too low	Too low	Compressor running constantly	Compressor running constantly	Compressor running constantly	Low-pressure line
-	-	Irregular operation or inoperative	Irregular operation or inoperative	Irregular operation or inoperative	Low-pressure switch contacts dirty or permanently open. Connector of low-pressure switch or compressor clutch dirty or damaged.

GENERAL PROCEDURES

Spring Lock Coupling (34 639 1)

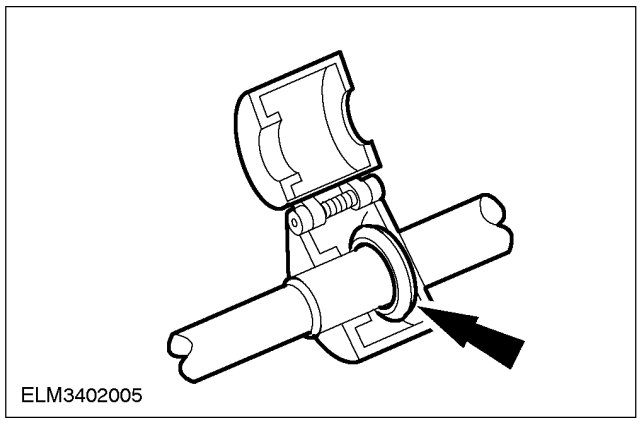
ELM3402005

1. **NOTE:** Select special tool to suit the line diameter.
   Fit the special tool.
   - Fit the special tool so that the inner collar can be guided into the clamping spring.

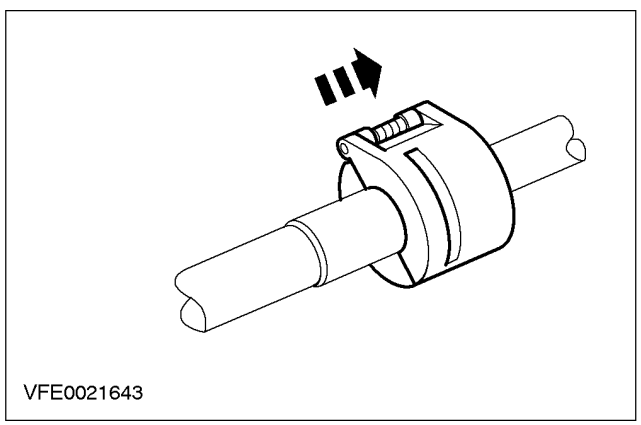
VFE0021643

2. Press the special tool into the clamping spring.

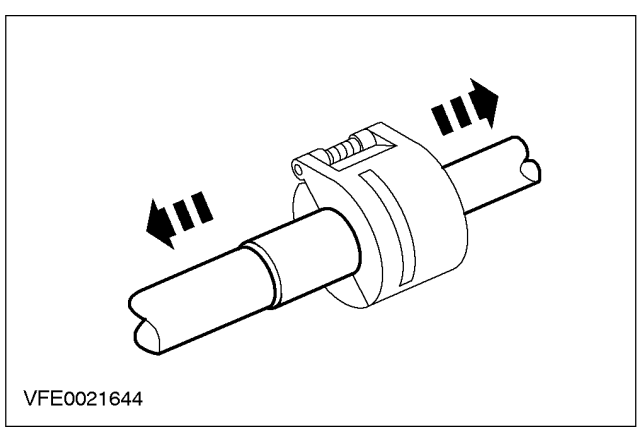
VFE0021644

3. Disconnect the refrigerant line.
   - Discard the O-ring seals.

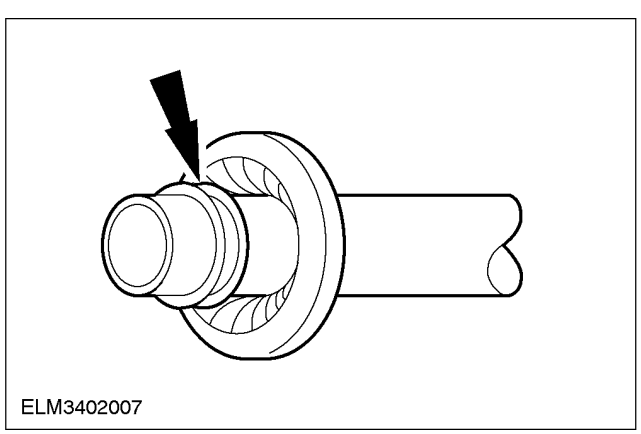
ELM3402007

4. Connect the refrigerant line.
   - Check the clamping spring for damage.
   - Carefully pull out any damaged clamping springs using a thin piece of wire and install new one.

GENERAL PROCEDURES (CONTINUED)

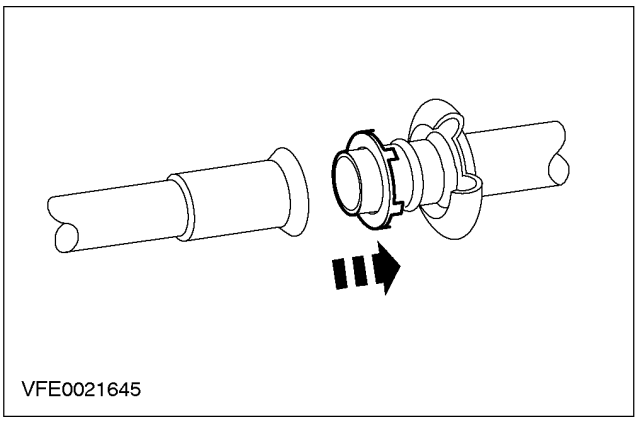
VFE0021645

5. NOTE: Clean the connections using refrigerant oil and a lint-free cloth.

Press the indicator ring into the clamping spring.

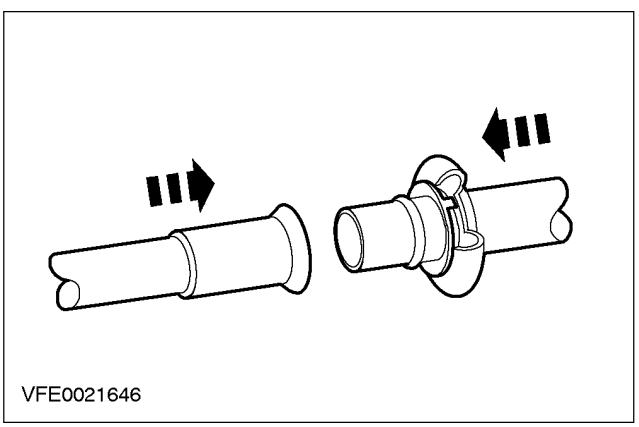
VFE0021646

6. NOTE: Install new refrigerant line O-ring seals.

NOTE: Coat the refrigerant line O-ring seals in clean refrigerant oil prior to installation.

Connect the refrigerant lines.

- Check that the clamping spring engages correctly.

GENERAL PROCEDURES

Air Conditioning (A/C) Clutch Air Gap Adjustment (34 628 6)

Material	Specification
Spacer washer set	

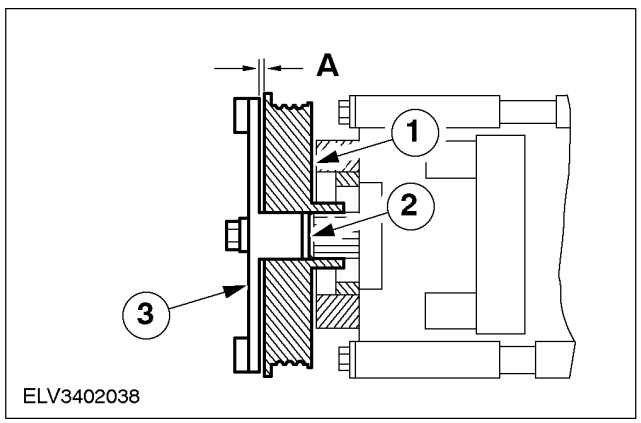

1. Check the air gap A between the drive plate and the pulley at 60 degrees intervals around the circumference. For additional information, refer to Specifications. in this section
   1. Belt pulley
   2. Spacer washer
   3. Drive plate

NOTE: The refrigerant circuit can remain closed if possible.

2. If the air gap A is outside the tolerance range, if necessary detach the air conditioning compressor. For additional information, refer to Section 412-02/ 412-03.
   - Tie up the compressor with wire if necessary.

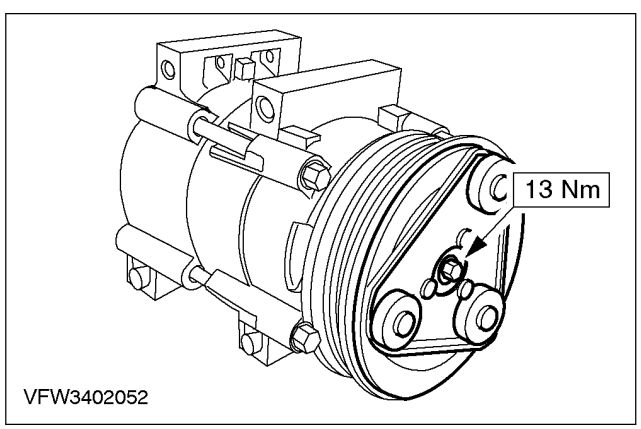

3. Detach the drive plate.
4. Correct air gap A as necessary using spacer washers.
5. Attach the drive plate.
6. Check air gap A as described in step 1. Repeat steps 3-6 if necessary.
7. Install the air conditioning compressor. For additional information, refer to Section 412-02 / 412-03.

GENERAL PROCEDURES

Electronic Leak Detection (34 620 5)

Special Tool(s)	
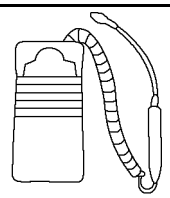 ST1245–A	Automatic Calibration Halogen Leak Detector or equivalent

Special Tool(s)	
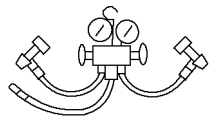 ST1460–A	R-134a Manifold Gauge Set or equivalent

WARNING: Good ventilation before leak detection is necessary in the area where it is to be performed. If the surrounding air is contaminated with refrigerant gas, the leak detector will indicate this gas all the time. Odors from other chemicals such as antifreeze, diesel fuel, disc brake cleaner, or other cleaning solvents can cause the same problem. While leak detection air movement must be prevented.

1. Attach R-134a Manifold Gauge Set to the service gauge port valves.
   - Leave both R-134a Manifold Gauge Set valves closed.
   - Both gauges should indicate 4,1-5,5 bar (413-551 kPa at 24°C with the engine off.
   - If little or no pressure is indicated, charge the system with approx. 300g of refrigerant. For additional information, refer to Drain, Evacuate and Refill the A/C System in this section
2. Use R-134a Automatic Calibration Halogen Leak Detector to leak test the refrigerant system. Follow the instructions included with leak detector for handling and operation techniques.
3. **NOTE:** Refilling the system is only permitted when the amount of refrigerant is well known. If a leak is found, reclaim the refrigerant if necessary. For additional information, refer to A/C System Evacuation and Charging in this section.

GENERAL PROCEDURES

Air Conditioning (A/C) System Flushing

Special Tool(s)	
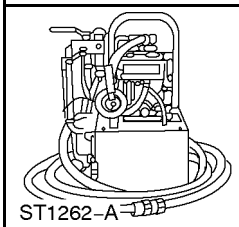 ST1262–A	A/C Flusher Kit or equivalent
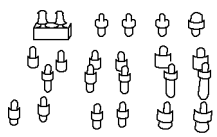 ST1476–A	A/C Flushing Kit or equivalent

Special Tool(s)	
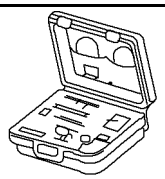 ST1457–A	A/C Refrigerant Analyzer or equivalent

WARNING: Use extreme care and observe all safety precautions related to the use of refrigerants. Warning: Due to refrigerant hazards, always wear safety goggles and non-penetrable gloves when working on or flushing A/C systems.

CAUTION: The A/C refrigerant Analyzer must be used before recovering, otherwise the refrigerant of the refrigerant center may contaminate. All contaminated A/C refrigerant must be disposed of as hazardous waste. For all equipment, follow the equipment manufacturers instructions.

CAUTION: Suction accumulator, muffler, hoses, thermal expansion valve, and fixed orifice tube should be removed when flushing the A/C system. Internal plumbing of these devices makes it impossible to properly remove any residual flushing agent. Except for the hoses, these components are typically discarded after A/C system contamination. Hoses can normally be reused unless they are clogged with debris. The Ford A/C Flushing Solvent and filter used in A/C Flusher are intended for use on one vehicle only. They may be used to flush both the A/C condenser core and the A/C evaporator core on an individual vehicle, but under no circumstances should they be used on more than one vehicle. For additional information, refer to Specifications in this section.

GENERAL PROCEDURES (CONTINUED)

1. **NOTE:** Prior to using A/C Flusher for the first time, review its operating instructions.
   A procedure to provide technicians with a non-CFC method of flushing contaminated A/C system heat exchangers (A/C evaporator core and A/C condenser core) has approved. This procedure allows the specified components to be cleaned and flushed while installed in their normal in-vehicle location. The types of contamination flushed include particle matter that results from A/C compressor and desiccant failure within the suction accumulator and gummy residue that may form when refrigerant oil is overheated during A/C compressor seizure. The flushing process is a two-step procedure that involves the use of an A/C Flusher to:
   - Circulate the flushing solvent through the heat exchanger in the reverse direction of normal refrigerant flow (back-flushing). Particulate matter picked up during flushing is filtered from the returning solvent before the solvent is returned to the reservoir for continued circulation.
   - Remove the flushing solvent from the heat exchanger. In this step of the procedure, pressurized air 6.2-8.6 bar (621-862 kPa) is used to push and evaporate any remaining flush solvent from the heat exchanger.

2. **NOTE:** Only A/C Flushing Kit, which includes A/C Flusher, A/C Flusher Fitting Kit and Ford A/C System Flushing Solvent, is approved for use on Ford vehicles. No other flushing device or solvent is approved for flushing heat exchangers. Use of any other flusher or solvent may cause damage to the A/C system and the flushing unit.
   A/C flusher components consist of:
   - Valve No. 1 (Part of 014-00991)
   - Valve No. 2 (Part of 014-00991)
   - Flush Quick Coupler (Part of 014-00991)
   - Moisture Trap (Part of 014-00991)
   - Air Purge Valve (Part of 014-00991)

3. Reclaim the refrigerant. For additional information, refer to A/C System Evacuation and Charging in this section.

GENERAL PROCEDURES (CONTINUED)

4. Disconnect refrigerant lines from the heat exchanger(s) to be flushed. For additional information, refer to Section 412-02/ refer to Section 412-03.

5. Connect A/C Flusher and A/C Flusher Fitting Kit to the heat exchanger to be flushed. Do not flush through the A/C evaporator core orifice, mufflers or lines. Internal plumbing and material make-up of these components make it impossible to properly remove debris and residual flushing solvent.

6. Use Ford A/C Flushing Solvent to flush the heat exchanger for a minimum of 15 minutes. The flush solvent may be used for one or both heat exchangers in the A/C system. However, the flush solvent is intended for one vehicle only. The filter used on the flushing unit is also intended for use on one vehicle only.

7. Flush component for a minimum of 15 minutes.

8. Apply 6.2-8.6 bar (621-862 kPa) pressurised air to the component for a minimum of 30 minutes. The 30-minute purge time is required to force and evaporate all residual flush solvent from the A/C system component. Failure to successfully remove all residual solvent within the component can result in system damage when reconnected and operated. Dispose of used flush solvent and filter in accordance with local, state and federal ordinances.

9. **NOTE:** A/C system filtering as described in this section is optional if system flushing is performed. However, filter kit use is recommended after flushing if A/C system contamination is extensive.
   Install new suction accumulator and A/C evaporator core orifice on any vehicle being repaired for A/C compressor or desiccant failure.

10. Install new refrigerant lines if clogged with debris.

11. Reconnect the heat exchanger being flushed.

GENERAL PROCEDURES (CONTINUED)

12. Add additional refrigerant oil as required. For additional information, refer to Refrigerant Oil Addition in this section
13. Evacuate, charge and leak test A/C system.
14. Check A/C system for correct operation.

GENERAL PROCEDURES

Tracer Dye Leak Detection (34 620 5)

Special Tool(s)	
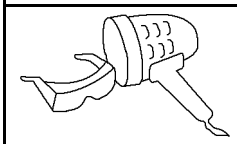 ST1261–A	120 Watt UV Spot Lamp or equivalent

Special Tool(s)	
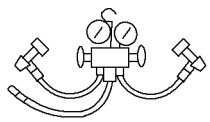 ST1460–A	R-134a Manifold Gauge Set or equivalent

NOTE: Since July 1999 vehicles have a fluorescent tracer dye tablet inserted into the A/C system. If tracer dye is present, there is a green cross on the suction accumulator.

NOTE: If it is necessary to add tracer dye, use the dye injector. A/C systems require 7.4 ml of Fluoro-Light / P Fluorescent Tracer Dye. For additional information,
refer to Specification in this section

NOTE: Some vehicles may have signs of refrigerant oil at the spring lock couplers. This may be caused from the assembly process, which applies to the fittings before installation to aid in assembly. When a spring lock coupler is suspected of leaking, always wipe the fitting clean and verify the leak with R-134a Automatic Calibration Halogen Leak Detector.

NOTE: The exact location of leaks can be pinpointed by the bright yellow-green glow of the tracer dye. Since more than one leak may exist, always inspect each component.

1. Check for leaks using a 120 Watt UV Spot Lamp. Always scan all components, fittings and lines of the A/C system.
2. After the leak is found and repaired, remove any traces of dye with a general purpose oil solvent.
3. Verify the repair by operating the system for some minutes and inspecting with the UV lamp again.

GENERAL PROCEDURES

Vacuum Leak Detection (34 620 5)

Special Tool(s)	
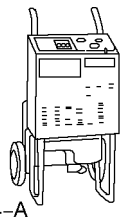 ST1834-A	R-134a refrigerant station or equivalent equipment 023-00106

Special Tool(s)	
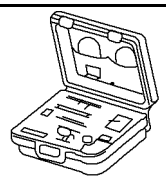 ST1457-A	Refrigerant identifier or equivalent equipment 198-0003

WARNING: Observe “Health and Safety Precautions„.

CAUTION: The refrigerant identifier must be used before the system is evacuated, otherwise the service station may become contaminated. Contaminated refrigerant must be disposed of as special waste. The manufacturer's instructions must be followed when dealing with the service station.

1. Empty the air conditioning system under suction and evacuate it. For additional information, refer to Air Conditioning - drain, evacuate and re-fill in this section.

2. **NOTE:** If an air conditioning system that was filled with refrigerant is being evacuated, then some refrigerant will still be in the refrigerant oil in the compressor. This residual amount of refrigerant may still evaporate and during the leak test may result in a minor increase on the pressure gauge (max. two sub-divisions). However, despite this pressure increase the air conditioning system is free from leaks.
   Carry out the leak test.
   - Close the gauge head manual valves.
   - Switch off the service station vacuum pump.
   - Watch the low pressure gauge on the service station. If the gauge reading increases by more than 20 mbar (2 kPa), the system is leaking.
   - If there are leaks, fill the air conditioning system with approx. 300 g of refrigerant and check it using leak testing equipment. For additional information, refer to Leak testing in this section
   - If the system is free of leaks, continue with the filling procedure.

GENERAL PROCEDURES

Air Conditioning (A/C) System Evacuation and Charging (34 620 2)

General Equipment
Service unit

WARNING: Observe "Health and Safety Rules". For additional information, refer to Section 100-00.

CAUTION: The refrigerant detector must be used before evacuation; otherwise, the service unit may become contaminated. Contaminated refrigerant must be disposed of as hazardous waste. Always follow the manufacturer instructions when using the service units.

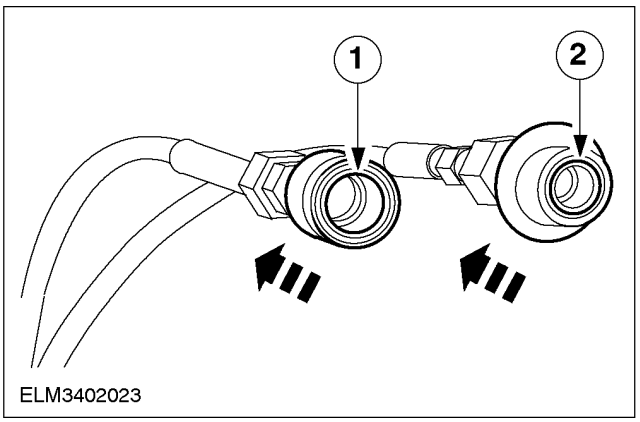

1. Remove the protective caps of the filler valves and connect the service unit leads to the filler valves.
   - Pull back the lock on the quick-release connector.
   1. Larger inside diameter for high-pressure side.
   2. Smaller inside diameter for low-pressure side.

2. **WARNING: Avoid releasing the refrigerant into the atmosphere at all costs.**
   Drain the air conditioning system through the low-pressure port in accordance with the service unit manufacturer instructions.

3. **NOTE:** The air conditioning system has to be evacuated for approximately 30 minutes in order to make sure that the system will work perfectly again once refilled.

NOTE: If moisture has entered the open system over an extended period of time (several hours), install a new accumulator / dryer and extend the evacuation time to 2-3 hours.

Evacuate the air conditioning system in accordance with the service unit manufacturer instructions.

GENERAL PROCEDURES (CONTINUED)

4. **NOTE:** If an air conditioning system is evacuated before the refrigerant has been drained, some of the refrigerant will remain in the compressor refrigerant oil. This remaining refrigerant may evaporate, causing a slight increase (maximum two marks) in the reading on the pressure gauge during the leak test. This increase in pressure does not mean the air conditioning system is leaking.
   Carry out a leak test.
   - To test for leaks, close the hand valves on the pressure gauge head, switch off the service unit vacuum pump and observe the low-pressure gauge.
   - If the reading increases by more than 20 mbar (2 kPa), this means that the system is leaking.
   - If the air conditioning system is leaking, fill it with approximately 300 g refrigerant and check using a leakage detector. For additional information, refer to Leak test in this section

⚠CAUTION: Always evacuate the air conditioning system before filling it.

NOTE: Depending on the service unit and equipment (with or without heatable filler cylinder), the air conditioning system can be filled in liquid form through the high-pressure port or in gaseous form through the low-pressure port.

NOTE: Fill quantity indicated on sticker in engine compartment.

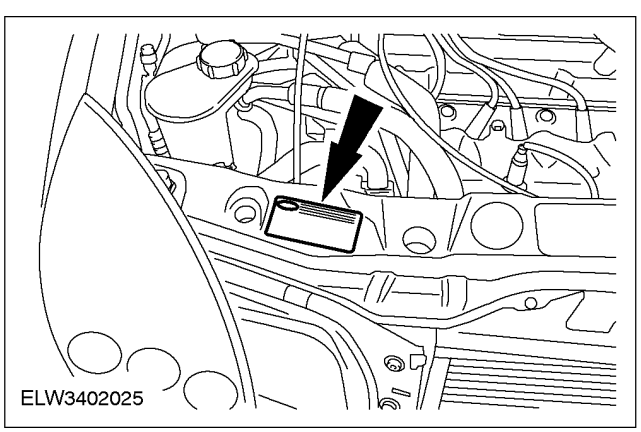

5. Filling the air conditioning system through the high-pressure port (liquid fill).
   - Open the high-pressure shut-off valve on the pressure gauge head.
   - Switch the service unit to "Fill" mode and fill the system with the prescribed quantity of liquid refrigerant (R134a).

GENERAL PROCEDURES (CONTINUED)

6. ⚠ **CAUTION: Filling the air conditioning system through the low-pressure port (gas fill only).**

   Filling the air conditioning system through the low-pressure port.

   - Open the low-pressure shut-off valve on the pressure gauge head.
   - Switch the service unit to "Fill" mode and fill the system with the prescribed quantity of gaseous refrigerant.
   - Top up with the remaining refrigerant whilst the air conditioning is switched on. Let the engine run at about 1200-1500 rpm for this purpose. Switch the air conditioning to maximum cooling power and fresh air mode. Set the blower to maximum power. Allow the remainder of the prescribed amount to be drawn in.

7. **NOTE:** Do not detach the high-pressure hose whilst the air conditioning is switched on.

   Disconnect the service unit.

   - Close the shut-off valves.
   - Switch off the service unit.
   - Disconnect the refrigerant hoses from the air conditioning system.
   - Screw the protective caps onto the filler valves.

GENERAL PROCEDURES

Refrigerant Oil Addition (34 621 1)

1. **NOTE:** If more than one air conditioning system component is being renewed, the oil quantity to be added is the sum of each individual quantity. For additional information, refer to General Specifications in this section.

NOTE: Always keep refrigerant oil in a closed and sealed container to prevent entry of moisture.

Top up with the calculated quantity of new refrigerant oil.

2. **NOTE:** Only remove the protective caps just before fitting, in order to prevent entry of moisture and dirt.

When repairs are complete, evacuate the air conditioning system, fill with R134a and check operation. For additional information, refer to Air Conditioning - Drain, Evacuate and Re-fill in this section

GENERAL PROCEDURES

Air Distribution System Cleaning

General Equipment
Spray gun with hose

Material	Specification
Odor eliminating agent (240 ml) (TOX Number 142040)	

All vehicles

1. ⚠ **WARNING: Avoid contact with eyes and skin; wear gloves and respiratory protection. Ensure that you perform this operation in a well ventilated room. Keep all vehicle doors and windows open for the duration of the operation. Do not inhale vapors under any circumstances. Do not smoke and avoid open fire and unprotected light sources.**

NOTE: Precisely locate the musty or damp odor. The odor eliminating agent can remove deposits in the heater housing but cannot prevent odorous that are distributed by the ventilation system, for example those caused by damp carpets.

Disconnect the low pressure switch connector.

2. Turn on the ignition.

3. **NOTE:** All ventilation nozzles must be open.
Open all ventilation nozzles, set the temperature switch to maximum heat, set the heater motor switch to the highest position and set the ventilation to "fresh air".

4. Start the engine and let it warm up to operating temperature.

5. To dry out the system, switch off the air conditioning system and ventilate the vehicle for approx. 15 minutes.

6. Switch off the engine.

7. Remove the blower motor. For additional information, refer to Section 412-02.

8. Fill the spray gun with the odor eliminating agent (240 ml).

GENERAL PROCEDURES (CONTINUED)

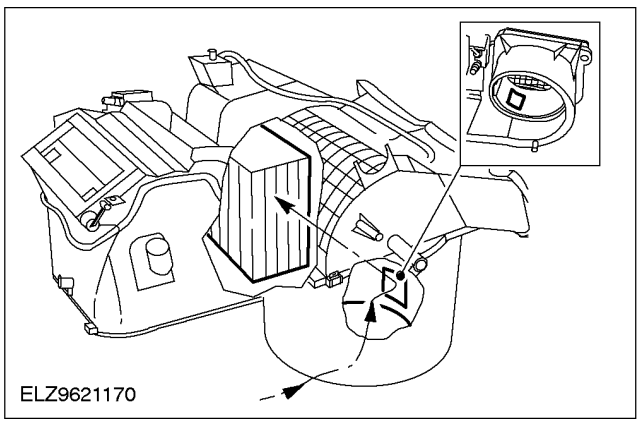

9. ⚠ **CAUTION: The maximum pressure of 13.5 bar must not be exceeded.**
   Use the tyre inflator to apply pressure of 5.5 to 10 bar (operating pressure) to the spray gun.

10. Insert the spray gun hose as far as possible into the opening in the heater blower, working towards the evaporator (Mondeo heater housing shown).
    - By moving the hose, spray the odor eliminating agent over the entire surface of the evaporator.
    - Spray the entire odor eliminating agent into the opening.
    - Allow the odor eliminating agent to take effect for 10 minutes.

11. Install the components in reverse order.

12. Start the engine, switch off the air conditioning system and ventilate the vehicle for approx. 15 minutes. While this is being done, have all ventilation nozzles open, the temperature switch set to maximum heat, the heater motor switch to the highest position and the ventilation to "fresh air".

13. Switch off the engine.

14. Connect the low pressure switch connector.

15. Ventilate the vehicle with the doors open for another 30 minutes.

GENERAL PROCEDURES

Contaminated Refrigerant Handling (34 620 5)

1. If contaminated refrigerant is detected DO NOT recover the refrigerant into your R-134a OR R-12 recovery / recycling equipment. Take the following actions:
   1. Repeat the test to verify contaminated refrigerant is present.
   2. Advise the customer of the contaminated A/C system and any additional cost to repair the system. The customer may wish to return to the repair facility performing the last A/C repair.
   3. Recover the contaminated refrigerant using suitable recovery only equipment designed for capturing and storing contaminated refrigerant. This equipment must only be used to recover contaminated refrigerant to prevent the spread to other vehicles.

SPECIFICATIONS

General Specifications

	Specification
A/C Refrigerant R134a, YN-11	WSH-M17B19-A
PAG A/C Refrigerant Oil, F2AZ-19577-AC (MC YN-12b)	WSH-M1C231-B
A/C Clutch Air Gap	0.35 mm-0.75 mm
Ford A/C Flushing Solvent, F4AZ-19579-A	-
Fluoro-Lite / P Florescent Tracer Dye, 164-R 3712	-

Addition of Air Conditioning Refrigerant Oil

When Installing a New:	Specification
Air conditioning condenser	Add 30 ml.
Air conditioning evaporator	Add 90 ml.
Suction accumulator	Fill with the same quantity + 90 ml.
Air conditioning compressor, if the quantity of oil taken from the compressor is less than 90 ml.	Add 90 ml.
Air conditioning compressor, if the quantity of oil taken from the compressor is between 90 ml and 150 ml.	Fill with the same quantity + 30 ml.
Air conditioning compressor, if the quantity of oil taken from the compressor is greater than 150 ml.	Add 150 ml.
Air conditioning lines, if air conditioning has been switched on with defective line.	Add 60 ml.
Per evacuation process	Add 30 ml.

Air conditioning compressor

Description	Type
Air conditioning compressor	FS-10

Fixed orifice tube

Description	Color
Fixed orifice tube	Orange

Torque Specifications

Description	Nm
Drive plate to compressor bolt	13
Air conditioning compressor retaining bolts	25
Manifold and tube to A/C compressor retaining bolt	20
Suction accumulator bracket retaining bolts	6
Pressure cutoff switch	10

SECTION 412-01 Air Distribution and Filtering

VEHICLE APPLICATION: 2002 Bantam

SUBJECT **PAGE**

DESCRIPTION AND OPERATION

Air Distribution and Filtering 412-01-2

DIAGNOSIS AND TESTING

Air Distribution and Filtering 412-01-3

REMOVAL AND INSTALLATION

Center Vent Nozzle ..... (34 489 0) 412-01-4

DESCRIPTION AND OPERATION

Air Distribution and Filtering

The heating system has been improved in terms of power output, user-friendliness and ease of maintenance.

A splined shaft instead of cables controls the air distribution, and the interior temperature by a potentiometer integrated into the operating panel. The potentiometer also controls the heater control valve, which regulates the flow of hot water through the heat exchanger according to the interior temperature setting.

The heat exchanger and, depending on equipment level, the air-conditioning evaporator are easily accessible from the engine compartment.

The air temperature, volume and distribution can be controlled by the operating switch.

Ventilation nozzles

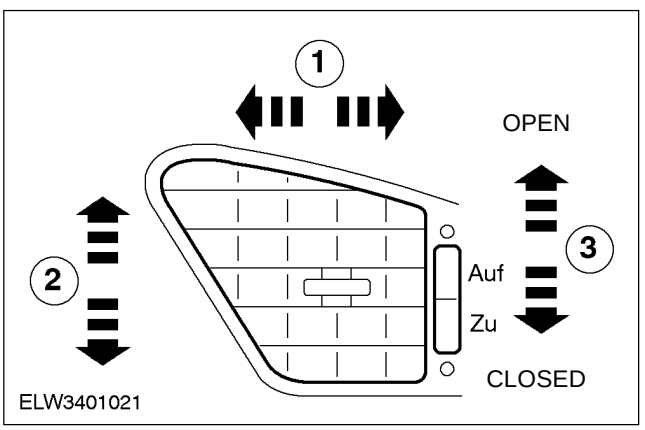

The vehicle may also have recirculated air mode as an option, and which can be activated by operating a switch on the control panel.

From the air intake aperture, fresh air passes through the fan, and heater / air conditioning system and air ducts to various air distribution nozzles and then into the passenger compartment.

While the vehicle is traveling a draught free current of air is emitted by specially shaped demisting nozzles and passes along close to the side windows and then through to the outside.

This active ventilation keeps the side windows clear and provides constant ventilation.

Item	Description
1	Right / left adjustment
2	Up / down adjustment
3	Open / Closed adjustment

- The fan is switched off completely when the air distribution switch is turned to OFF.

DIAGNOSIS AND TESTING

Air Distribution and Filtering

REFER to Section 412-00.

REMOVAL AND INSTALLATION

Center Vent Nozzle (34 489 0)

Removal

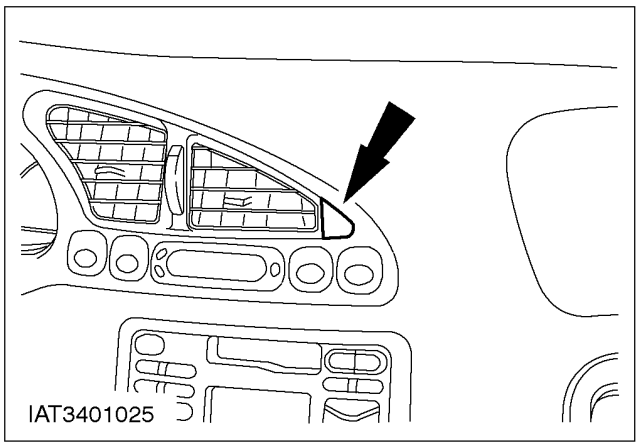

1. Remove the instrument cluster bezel.
   - Unclip the cover.

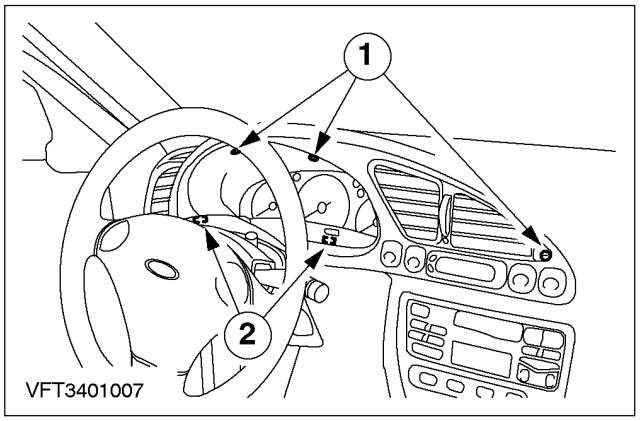

2. Remove the instrument cluster bezel (continued).
   1. Screws
   2. Clips
   - Disconnect the plug.

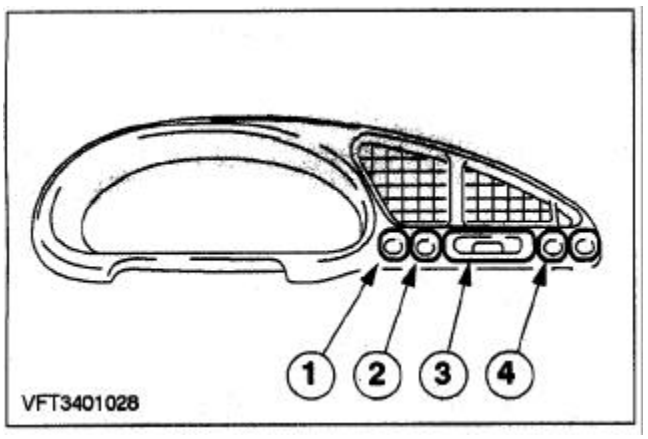

3. Remove the switches (bezel shown removed).
   1. Spot lights
   2. Air conditioner.
   3. Clock.
   4. A/C re-circulation.

Installation

1. Refit the components in reverse order.

SECTION 412-02 Heating and Ventilation

VEHICLE APPLICATION: 2002 Bantam

SUBJECT **PAGE**

DESCRIPTION AND OPERATION
Heating and Ventilation 412-02-2

DIAGNOSIS AND TESTING
Heating and Ventilation 412-02-3

REMOVAL AND INSTALLATION
Blower Motor ..... (34 374 0) 412-02-4/7
Heater Core Housing ..... (34 354 0) 412-02-8/11
Heater Core ..... (34 364 0) 412-02-12/15
Heater Control Valve ..... (34 328 0) 412-02-16/19

DISASSEMBLY AND ASSEMBLY
Heater Core Housing ..... (34 354 8) 412-02-20/22

SPECIFICATIONS
Specifications 412-02-23
Torque Specifications 412-02-23

DESCRIPTION AND OPERATION

Heating and Ventilation

The heater temperature is set using the temperature control switch. Depending on the setting of this switch, the heater control module (located in the heater/air conditioning system controls) monitors the position of the heater control valve, which in turn controls the flow of hot coolant through the heat exchanger.

A splined shaft adjusts the position of the air distribution flap. A control motor operates the recirculated air flap.

The blower motor has four speeds, controlled by the blower motor operating switch through a resistance.

If the air conditioning system is switched on but the blower motor switch is off, the air conditioning system will not operate. The air conditioning system will only operate if the blower motor is on.

Procedure if there is regular knocking noises coming from the fascia crash padding area.

The water flow through the heater control valve can cause a regular knocking noise when the operating temperature switch is set between Min and Max. This noise is carried into the interior of the vehicle via the fascia /crash padding and can be intensified if any air is trapped in the system. If concerns are expressed over this, the noise can be reduced by installing modified insulation on the heater control valve along with a modified heater coolant hose. For additional information, refer to Heater Control Valve in this section

Procedure if the heating cannot be controlled.

If there is a concern that the heating cannot be controlled (only hot air or only cold air is produced), the cause may be a damaged wiring harness, damaged multiplug, a defective heater control valve or a defective heater control. To resolve the concern, check the heating system and renew any damaged components. An additional cover should be installed on the heater control valve on the vehicle. For additional information,
refer to Section 412-00 Diagnosis and Testing

DIAGNOSIS AND TESTING

Heating and Ventilation

REFER to Section 412-00.

REMOVAL AND INSTALLATION

Blower Motor (34 374 0)

Special Tool(s)	
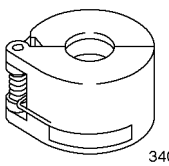 34003	Separator, quick-fit coupling 5/8" (black) 412-038 (34-003)

Material	Specification
O-rings	(Green)
Adhesive butyl rubber strips (6 off, if required)	
Sealer (if required)	

Removal

Vehicles with air conditioning

NOTE: Observe the Health and Safety regulations for working with refrigerant. For additional information, refer to Section 100-00.

1. Drain the air conditioning system. For additional information, refer to Section 412-00.

All vehicles

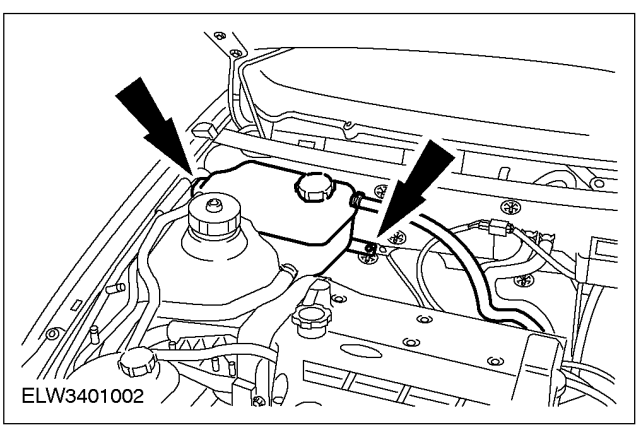

2. Detach the coolant expansion tank.
   - Remove the single screw.
   - Unhook the coolant expansion tank from its bracket.

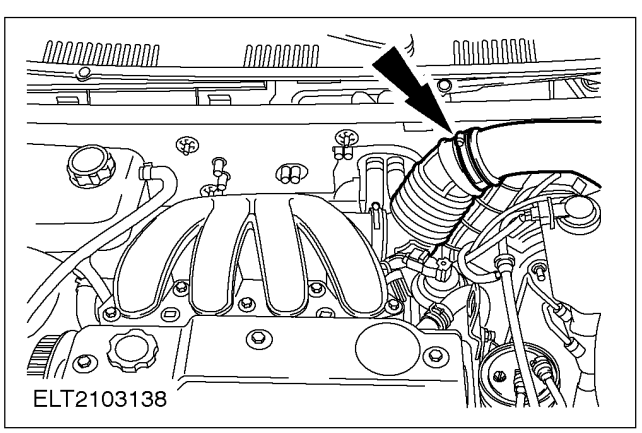

Vehicles with diesel engine

3. Release the air cleaner intake pipe.
   - Undo the hose clip.
   - Lay the intake pipe to one side.

REMOVAL AND INSTALLATION (CONTINUED)

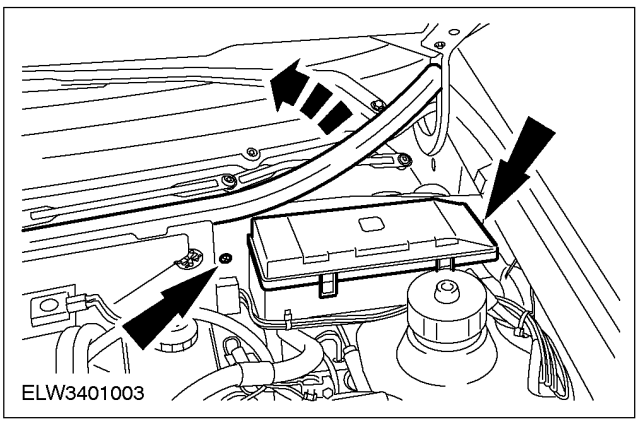

4. Remove the bulkhead extension.
   - Remove the rubber seal.
   - Unclip the cover of the central junction box (CJB).
   - Remove the single screw.

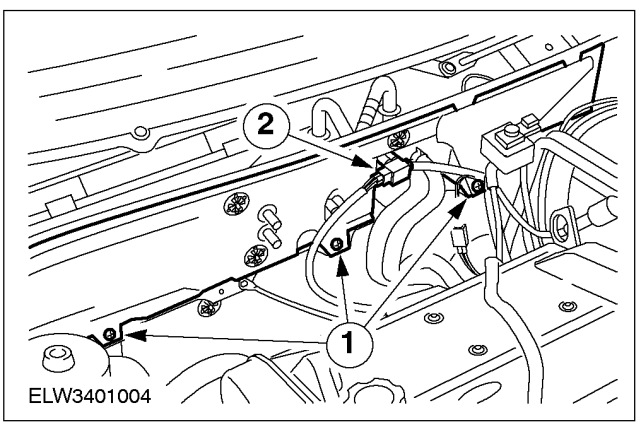

5. Remove the bulkhead extension (continued).
   1. Remove the bolts.
   2. Disconnect the plug.

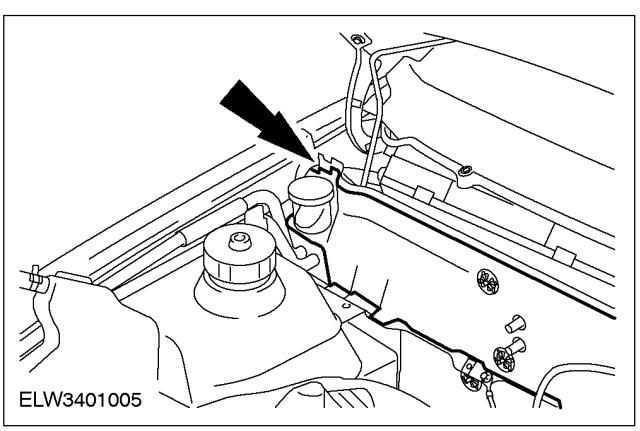

6. Remove the bulkhead extension (continued).
   - Remove the single screw.

Vehicles with air conditioning

NOTE: Seal the evaporator and refrigerant lines with plugs.

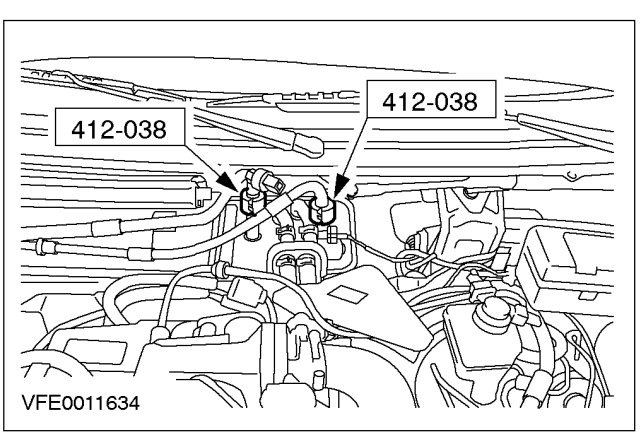

1. Disconnect the refrigerant lines.

REMOVAL AND INSTALLATION (CONTINUED)

All vehicles

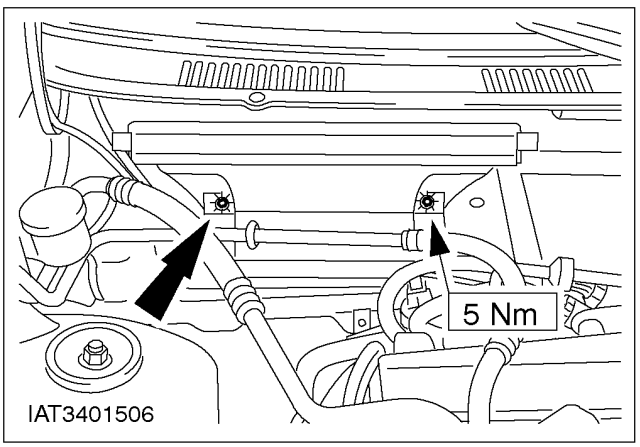

8. Remove the pollen filter housing.

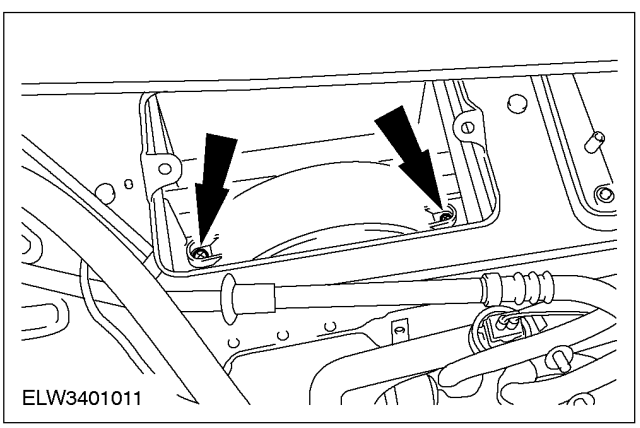

9. Remove the blower motor cover.

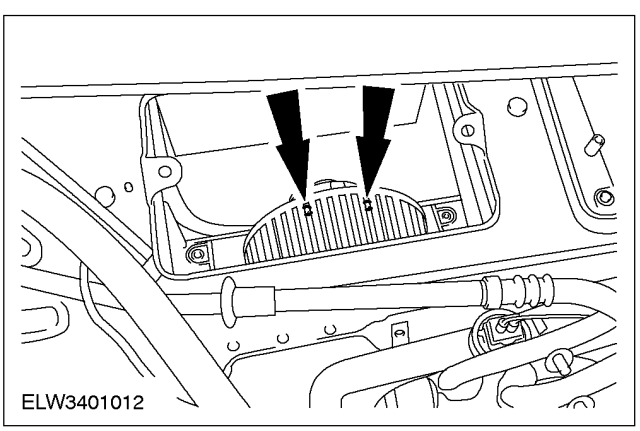

10. Remove the blower motor.
    - Unscrew the bolts.
    - Separate the connector located in the passenger footwell.
    - Pull out the grommet together with the wire and the plug.

Installation

1. Install the blower motor.

NOTE: Perform steps 2 and 3 only if water is entering through the pollen filter on the bulkhead.

2. Thoroughly clean the area around the pollen filter opening on the bulkhead.

REMOVAL AND INSTALLATION (CONTINUED)

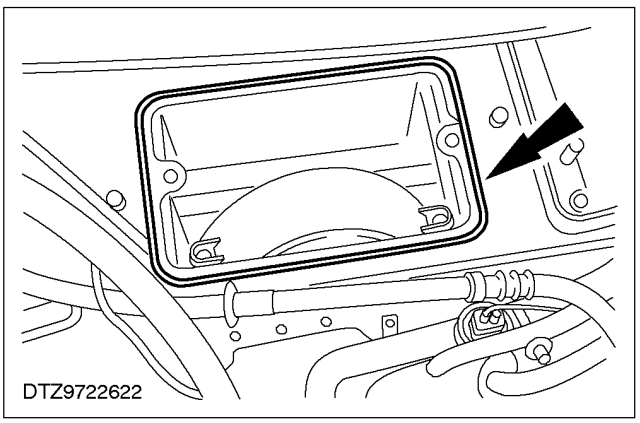

3. Apply a layer of sealer (see "Materials") approximately 10 mm thick to the horizontal top face around the pollen filter opening.

4. Install the remaining components in reverse order.

Vehicles with air conditioning

NOTE: Before connecting the refrigerant lines, fit them with new O-rings. Coat the new O-rings with refrigerant oil before fitting them.

1. Evacuate the air conditioning system and fill it. For additional information, refer to Section 412-00.

All vehicles

6. Check the operation of the heating and air conditioning system (if fitted).

REMOVAL AND INSTALLATION

Heater Core Housing (34 354 0)

Special Tool(s)	
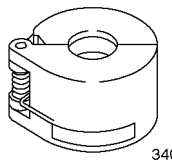 34003	Disconnecting tool, refrigerant line 5/8" (black) 34-003

Material	Specification
O-rings	(Green)

Removal

NOTE: "Health and Safety Regulations". For additional information, refer to Section 100-00.

1. Standard preparatory measures
   - Make a note of the radio keycode.
   - Make a note of the preset radio stations.
   - Place protective covers over the fenders.

CAUTION: Disconnect the battery negative lead.

2. On vehicles with air conditioning, drain the system. For additional information, refer to Section 412-03.

3. Remove the fascia crash panel. For additional information, refer to Section 501-12.

4. Detach the coolant expansion tank.
   - Remove the single screw.
   - Unhook the coolant expansion tank from its bracket.

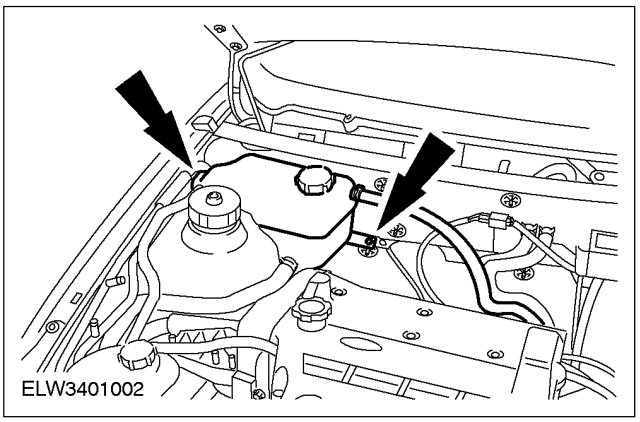

REMOVAL AND INSTALLATION (CONTINUED)

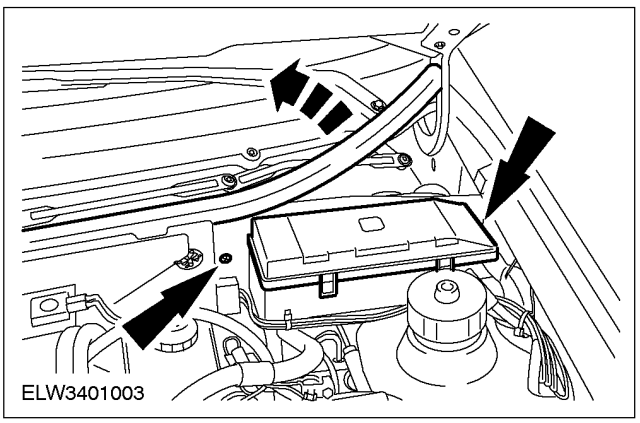

5. Remove the bulkhead extension.
   - Remove the rubber seal.
   - Unclip the central junction box (CJB) cover.
   - Remove the single screw.

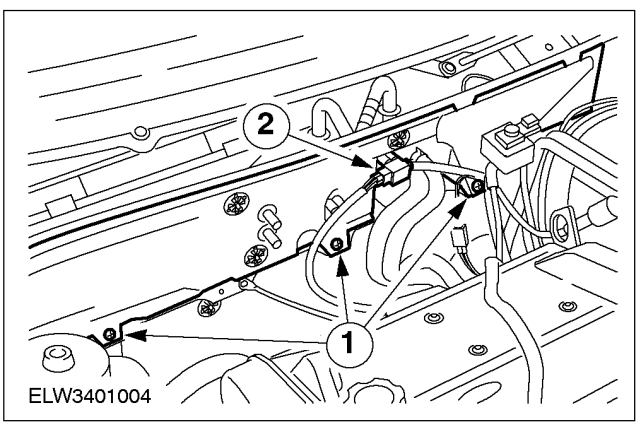

6. Remove the bulkhead extension (continued).
   1. Remove the bolts.
   2. Unclip the connector.

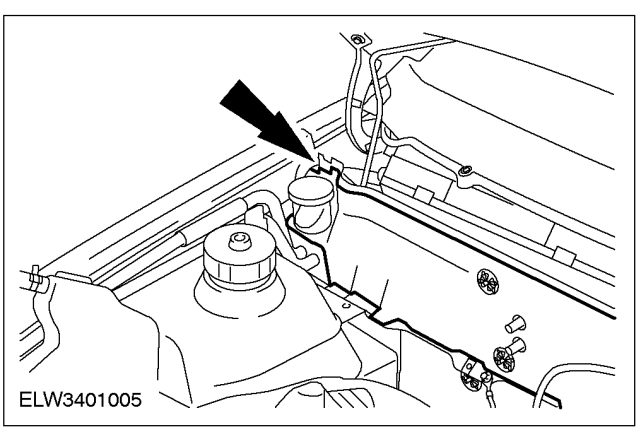

7. Remove the bulkhead extension (continued).
   - Remove the single screw.

Vehicles with air conditioning

NOTE: Seal the evaporator and refrigerant lines with plugs.

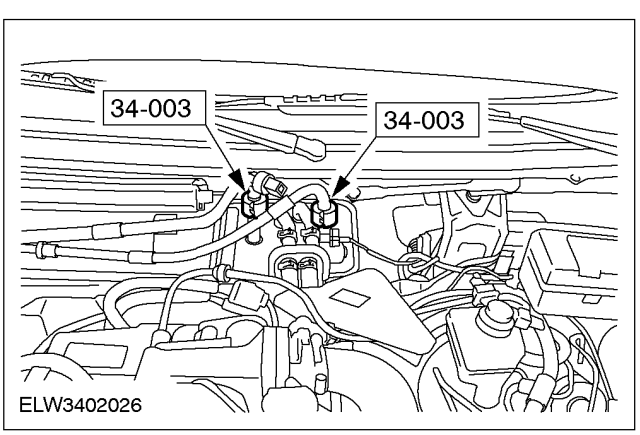

1. Disconnect the refrigerant lines.

REMOVAL AND INSTALLATION (CONTINUED)

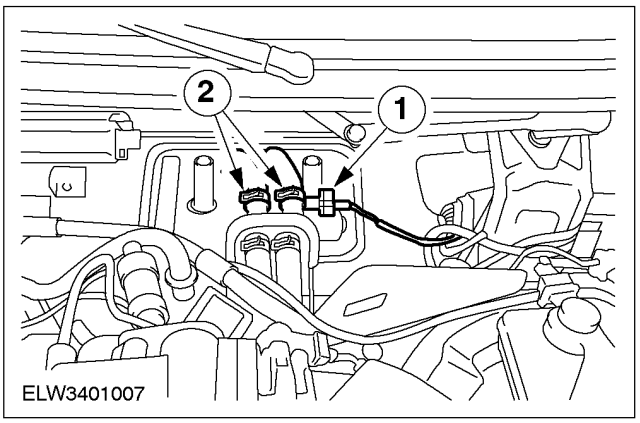

NOTE: Plug the heat exchanger.

9. Pull off the connector and detach the coolant hoses.
   1. Disconnect the plug from the heater regulating valve.
   2. Undo the clamps and disconnect the coolant hoses.

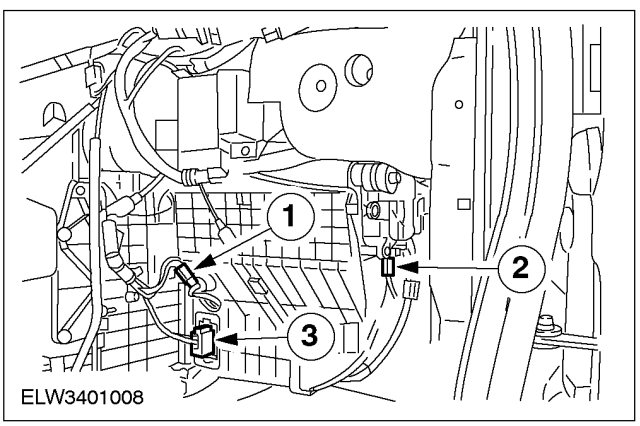

10. Separate the connectors.
    1. Blower motor
    2. Air re-circulation valve control motor
    3. Blower motor resistor assembly

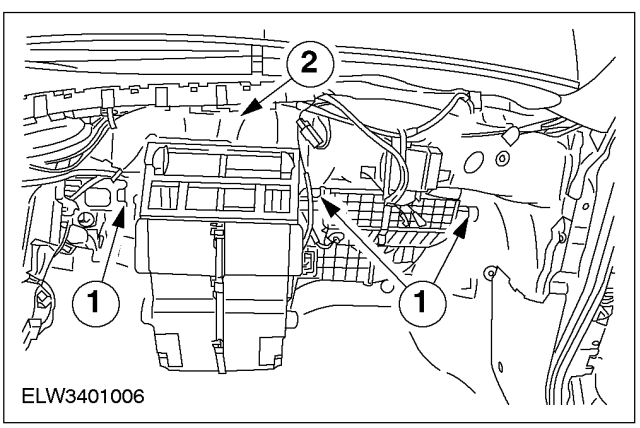

11. Remove the heater.
    - Pull off the side air ducts.
    1. Unscrew the three nuts.
    - Undo the wiring harness.
    2. Undo the heater from the bracket.

Vehicles with air conditioning

12. Pull off the air conditioning condenser drain hose.

Installation

NOTE: Torques For additional information, refer to Section 412-02, Specifications

NOTE: Before connecting the refrigerant lines, fit them with new O-rings. Coat the new O-rings with refrigerant oil before fitting them.

1. Refit the components in the reverse order.

REMOVAL AND INSTALLATION (CONTINUED)

2. Install the fascia crash padding.
   For additional information,
   refer to Section 501-12.

Vehicles with air conditioning

3. Evacuate and fill the air conditioning system. For additional information,
   refer to Section 412-03.

4. Fill the cooling system with coolant.
   For additional information,
   refer to Section 303-03.

5. Standard finishing operations.
   - Connect the battery negative lead.
   - Remove the protective covers.
   - Enter the radio keycode.
   - Reprogram the preset radio stations.
   - Reset the clock.
   - Road test the vehicle to collect data for the PCM.

6. Check the operation of the heating and air conditioning system (if fitted).

REMOVAL AND INSTALLATION

Heater Core (34 364 0)

Special Tool(s)	
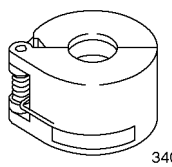 34003	Disconnecting tool, refrigerant line 5/8" (black) 34-003

Material	Specification
O-rings	(Green)

Removal

NOTE: "Health and Safety Regulations". For additional information, refer to Section 100-00.

1. Standard preparatory measures
   - Make a note of the radio keycode.
   - Make a note of the preset radio stations.
   - Place protective covers over the fenders.

Vehicles with air conditioning

2. Drain the air conditioning system. For additional information, refer to Section 412-03.

CAUTION: Disconnect the battery negative lead.

3. Detach the coolant expansion tank.
   - Remove the single screw.
   - Unhook the coolant expansion tank from its bracket.

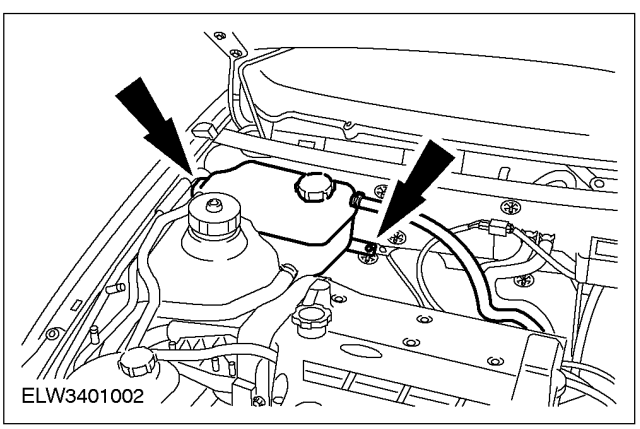

REMOVAL AND INSTALLATION (CONTINUED)

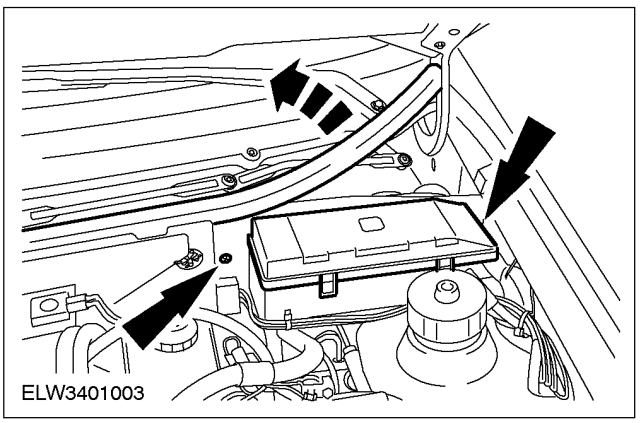

4. Remove the bulkhead extension.
   - Remove the rubber seal.
   - Unclip the central junction box (CJB) cover.
   - Remove the single screw.

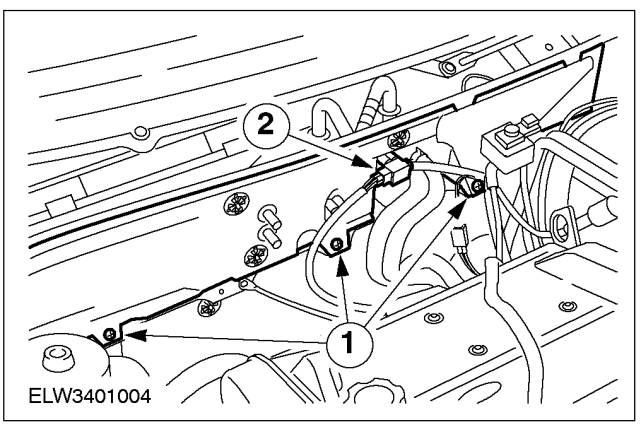

5. Remove the bulkhead extension (continued)
   1. Remove the bolts.
   2. Unclip the connector.

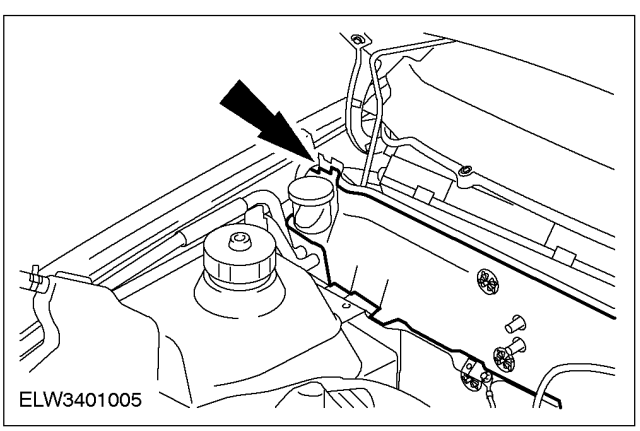

6. Remove the bulkhead extension (continued)
   - Remove the single screw.

Vehicles with air conditioning

NOTE: Seal the evaporator and refrigerant lines with plugs.

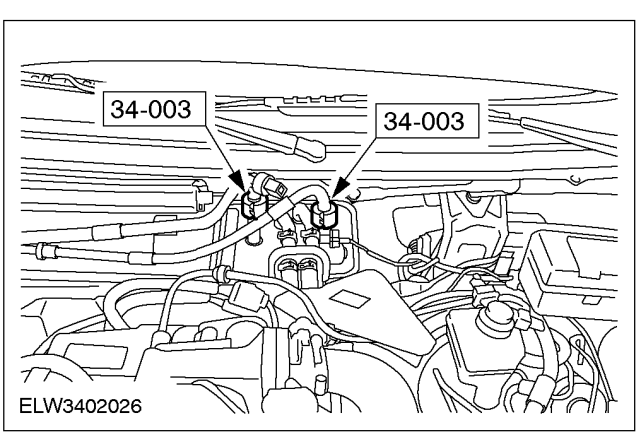

1. Disconnect the refrigerant lines.

REMOVAL AND INSTALLATION (CONTINUED)

NOTE: Plug the heat exchanger. Do not mix up the heater hoses during installation (mark them if required)

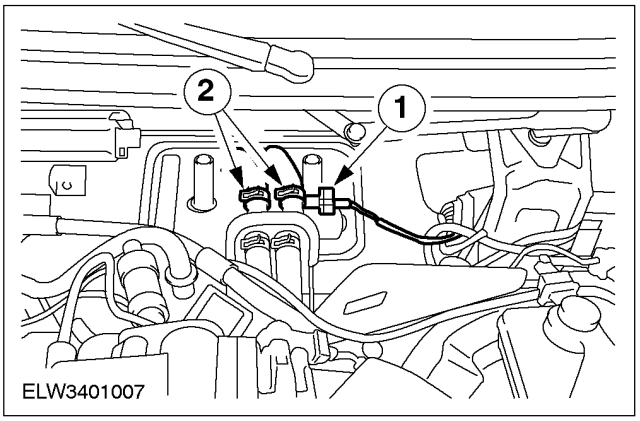

8. Disconnect the coolant hoses.
   1. Pull off the connector from the heater control valve.
   2. Undo the clamps and detach the coolant hoses.

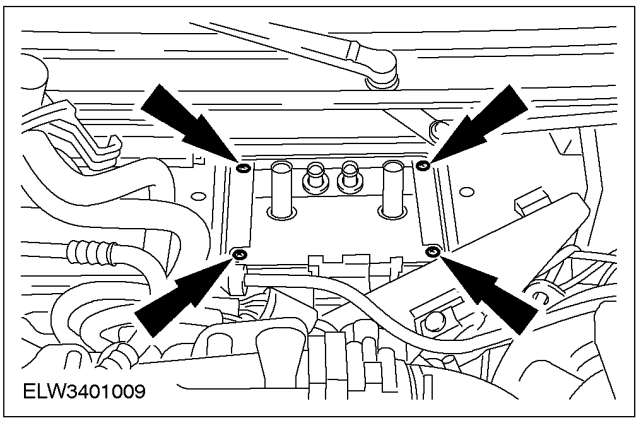

9. Remove the heater cover.
   - Remove the four bolts.

Vehicles with air conditioning

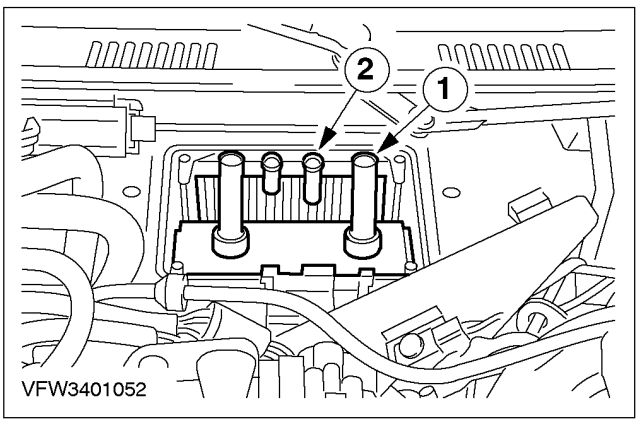

10. Pull out the evaporator/heat exchanger.
    1. Evaporator (push fit)
    2. Heat exchanger (push fit)

Installation

NOTE: Torques For additional information, refer to Section 412-02, Specifications

NOTE: Before connecting the refrigerant lines, fit them with new O-rings Coat the new O-rings with refrigerant oil before fitting them.

1. Refit the components in reverse order.

REMOVAL AND INSTALLATION (CONTINUED)

Vehicles with air conditioning

2. Evacuate the air conditioning system and fill it. For additional information, refer to Section 412-03.

3. Standard finishing operations.
   - Connect the battery negative lead.
   - Remove the protective covers.
   - Enter the radio keycode.
   - Reprogram the preset radio stations.
   - Reset the clock.
   - Road test the vehicle to collect data for the PCM.

4. Check the operation of the heater and the air conditioning system (if fitted).

REMOVAL AND INSTALLATION

Heater Control Valve (34 328 0)

Removal

1. Standard preparatory measures
   - Make a note of the radio keycode.
   - Make a note of the preset radio stations.

⚠CAUTION: Disconnect the battery negative lead.

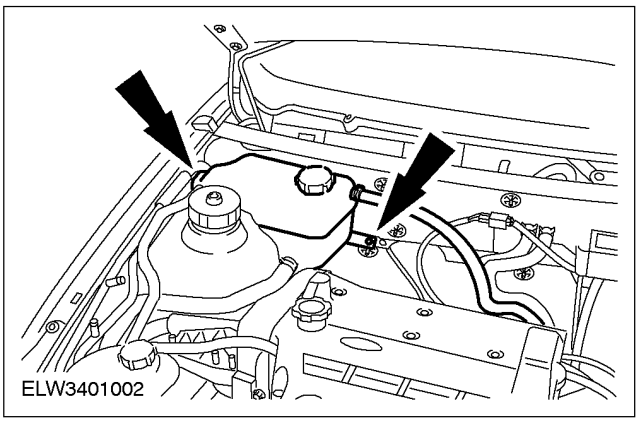

2. Detach the coolant expansion tank.
   - Remove the single screw.
   - Unhook the coolant expansion tank from its bracket.

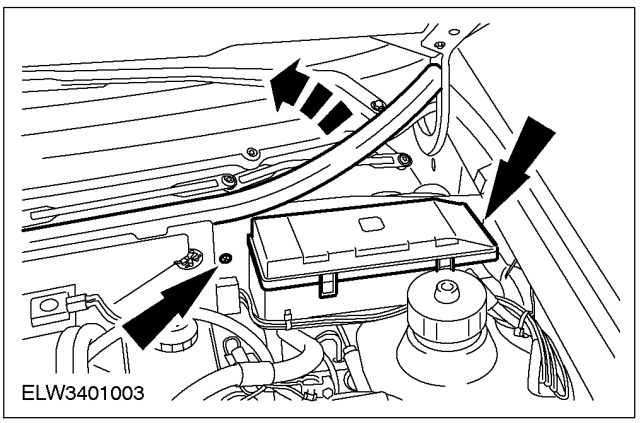

3. Remove the bulkhead extension.
   - Remove the rubber seal.
   - Unclip the cover of the central junction box (CJB).
   - Remove the single screw.

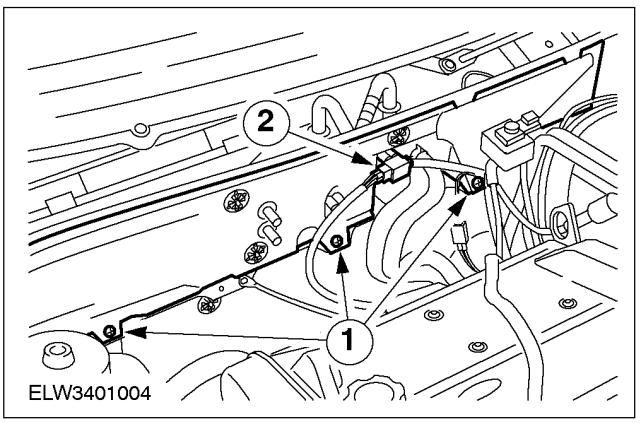

4. Remove the bulkhead extension (continued).
   1. Remove the bolts.
   2. Disconnect the plug.

REMOVAL AND INSTALLATION (CONTINUED)

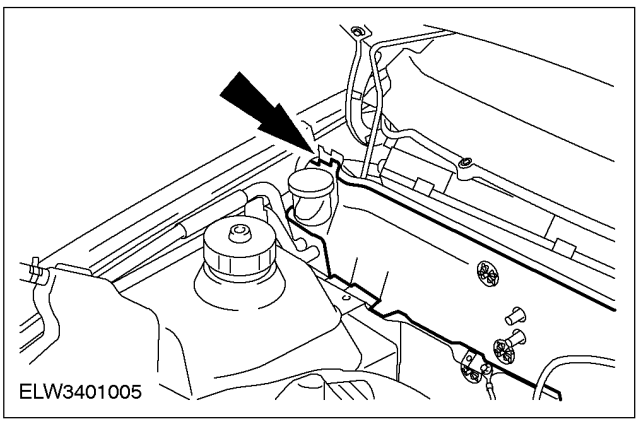

5. Remove the bulkhead extension (continued).
   - Remove the single screw.

NOTE: Plug the heat exchanger.

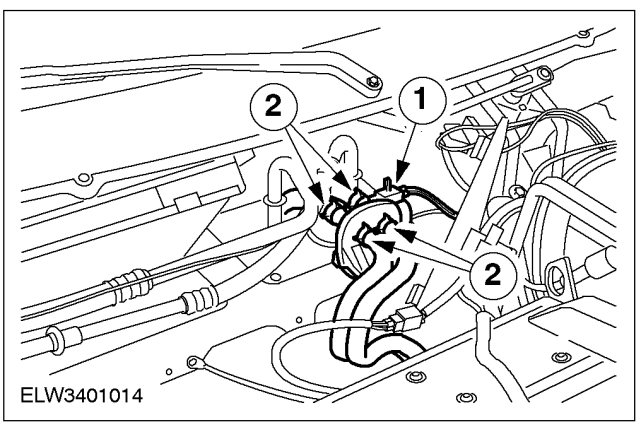

6. Remove the heater control valve.
   1. Disconnect the plug from the heater control valve.
   2. Undo the four clamps and detach the coolant hoses.

Installation

NOTE: Only carry out steps 1 to 4 if there is a regular knocking noise coming from the fascia crash padding when the heater control is set to between Min and Max.

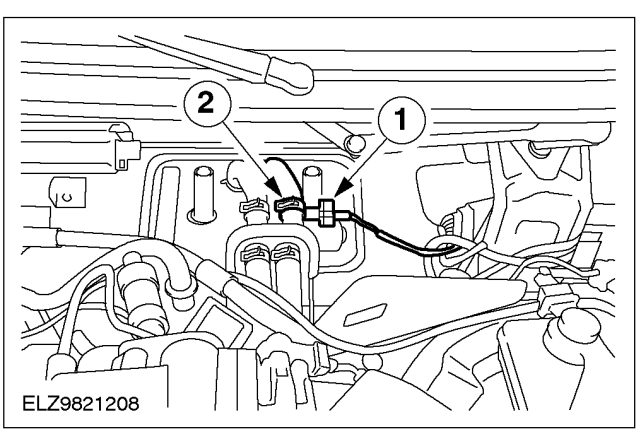

1. NOTE: Coolant will escape.
Remove the left-hand heater coolant hose (shown without refrigerant line).
   1. Disconnect the plug.
   2. Remove the left-hand heater coolant hose.

REMOVAL AND INSTALLATION (CONTINUED)

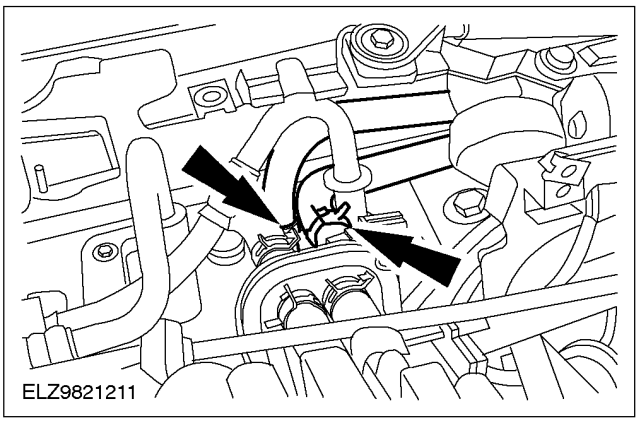

LHD vehicles

2. NOTE: Do not allow the coolant hose clamps to touch the bodywork.

Install a new left-hand heater coolant hose.

- Route the heater coolant hose and install the coolant hose clamps.

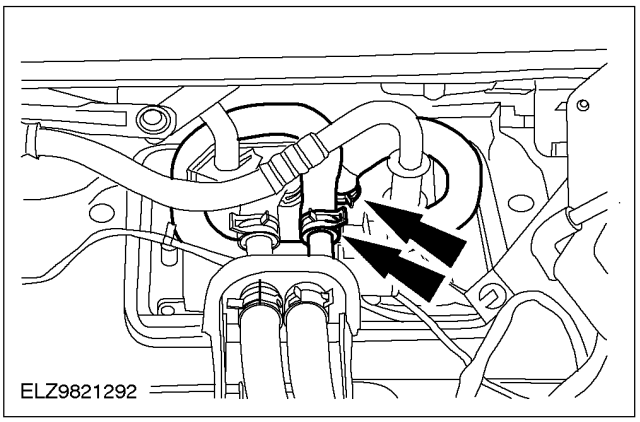

RHD vehicles

3. NOTE: Position of the heater coolant hose. The coolant hose must be routed below the connections on the heater control valve and around the refrigerant lines.

NOTE: Do not allow the coolant hose clamps to touch the bodywork.

Install a new left-hand heater coolant hose.

- Route the heater coolant hose and install the coolant hose clamps.

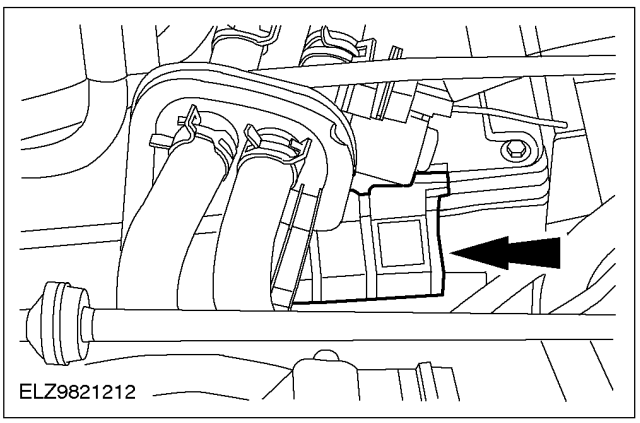

All vehicles

4. Renew the heater control valve insulation.
5. Install the remaining components in reverse order.
6. Bleed the cooling system. For additional information, refer to Section 303-03.
7. Connect the battery negative lead.
   - Enter the radio keycode.
   - Reprogram the pre-set radio stations.
   - Reset the clock.
   - Carry out a road test to enable the PCM to collect data.

REMOVAL AND INSTALLATION (CONTINUED)

8. Check the operation of the heater.

DISASSEMBLY AND ASSEMBLY

Heater Core Housing (34 354 8)

Disassembly

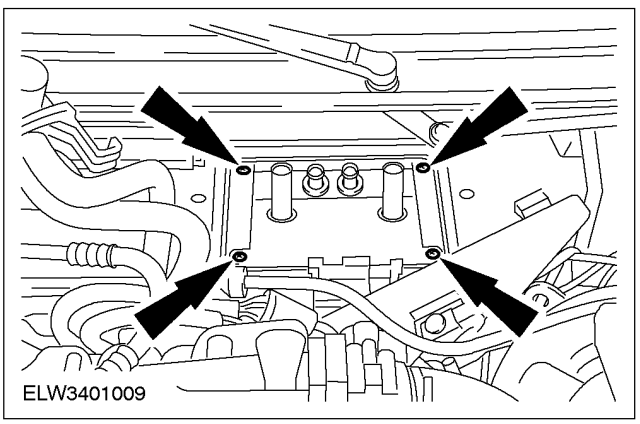

1. Remove the heater housing cover.

Vehicles with air conditioning

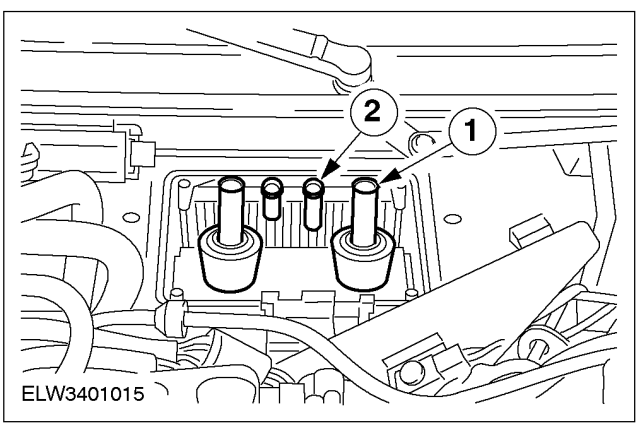

2. Pull out the evaporator/heat exchanger (push fit).
   1. Evaporator.
   2. Heat exchanger.

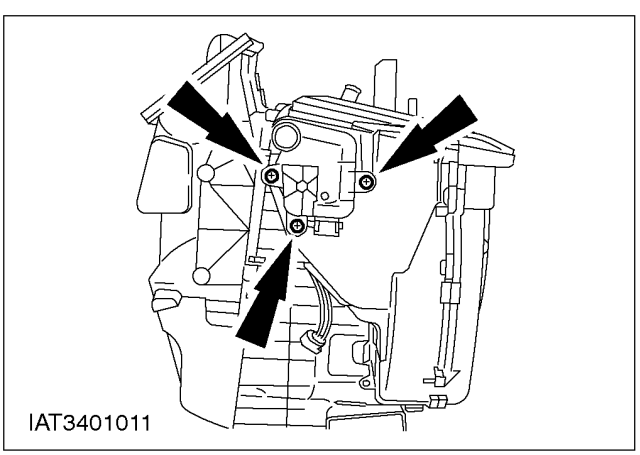

3. Remove the air re-circulation valve control motor.

DISASSEMBLY AND ASSEMBLY (CONTINUED)

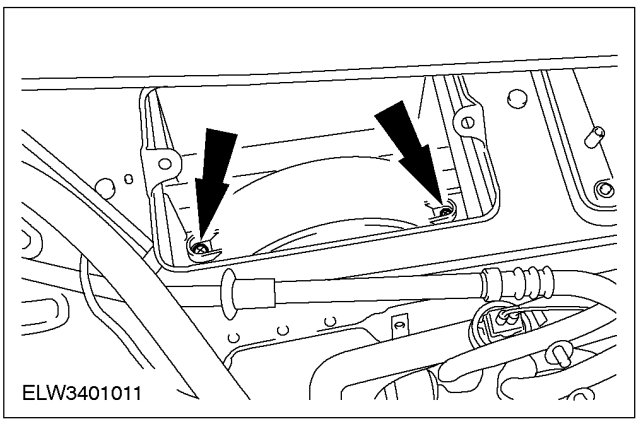

4. Remove the blower motor cover.

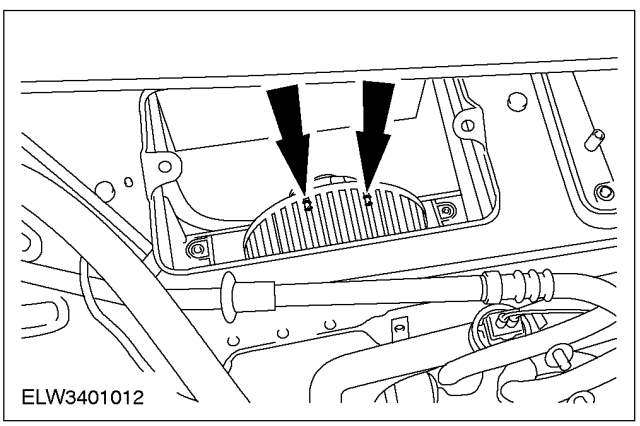

5. Remove the blower motor.

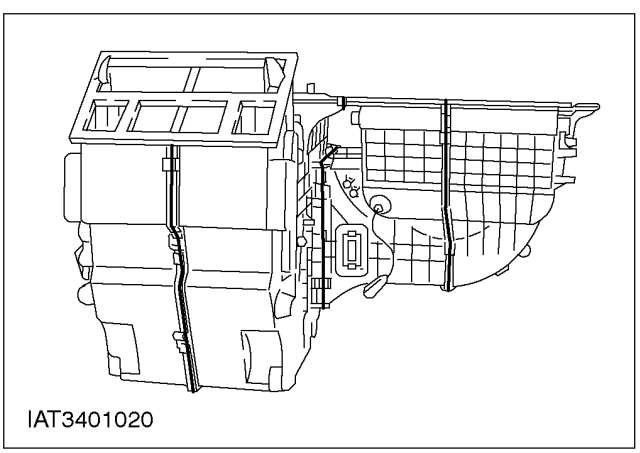

6. Dismantle the heater housing (held together by clips) (heater shown from the front).

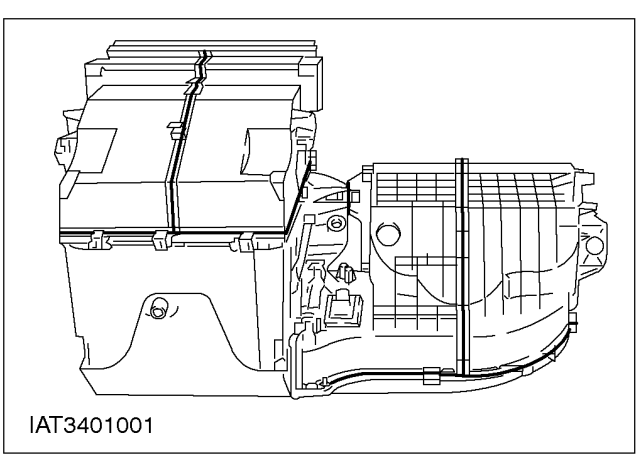

7. Dismantle the heater housing (held together by clips) (heater shown from the below).

DISASSEMBLY AND ASSEMBLY (CONTINUED)

Assembly

1. Assemble the components in reverse order.
   - Use new clips if necessary.

SPECIFICATIONS

Torque Specifications

Description	Nm
Heater to bulkhead	9
Pollen filter housing	5

SECTION 412-03 Air Conditioning

VEHICLE APPLICATION: 2002 Bantam

SUBJECT PAGE

DESCRIPTION AND OPERATION

Air Conditioning 412-03-2
Refrigerant Circuit with Fixed Orifice Tube 412-03-2/5

DIAGNOSIS AND TESTING

Air Conditioning 412-03-6

REMOVAL AND INSTALLATION

Air Conditioning (A/C) Compressor ..... (34 626 0) 412-03-7/8
Clutch and Clutch Field Coil ..... (34 628 0) 412-03-9/12
Evaporator Core ..... (34 622 0) 412-03-13/16
Evaporator Core Orifice ..... (34 624 0) 412-03-17/19
Suction Accumulator ..... (34 630 0) 412-03-20/22
Low Pressure Cut-Off Switch ..... (34 629 0) 412-03-23/25
High Pressure Cut-Off Switch ..... (34 631 0) 412-03-26/27
Evaporator to Condenser Line ..... (34 645 0) 412-03-28/30
Suction Accumulator to Condenser Line ..... (34 643 0) 412-03-31/33
Suction Accumulator to Evaporator Line ..... (34 644 0) 412-03-34/37
Specifications 412-03-38

DESCRIPTION AND OPERATION

Air Conditioning

Refrigerant Circuit with Fixed Orifice Tube

Refrigerant Circuit

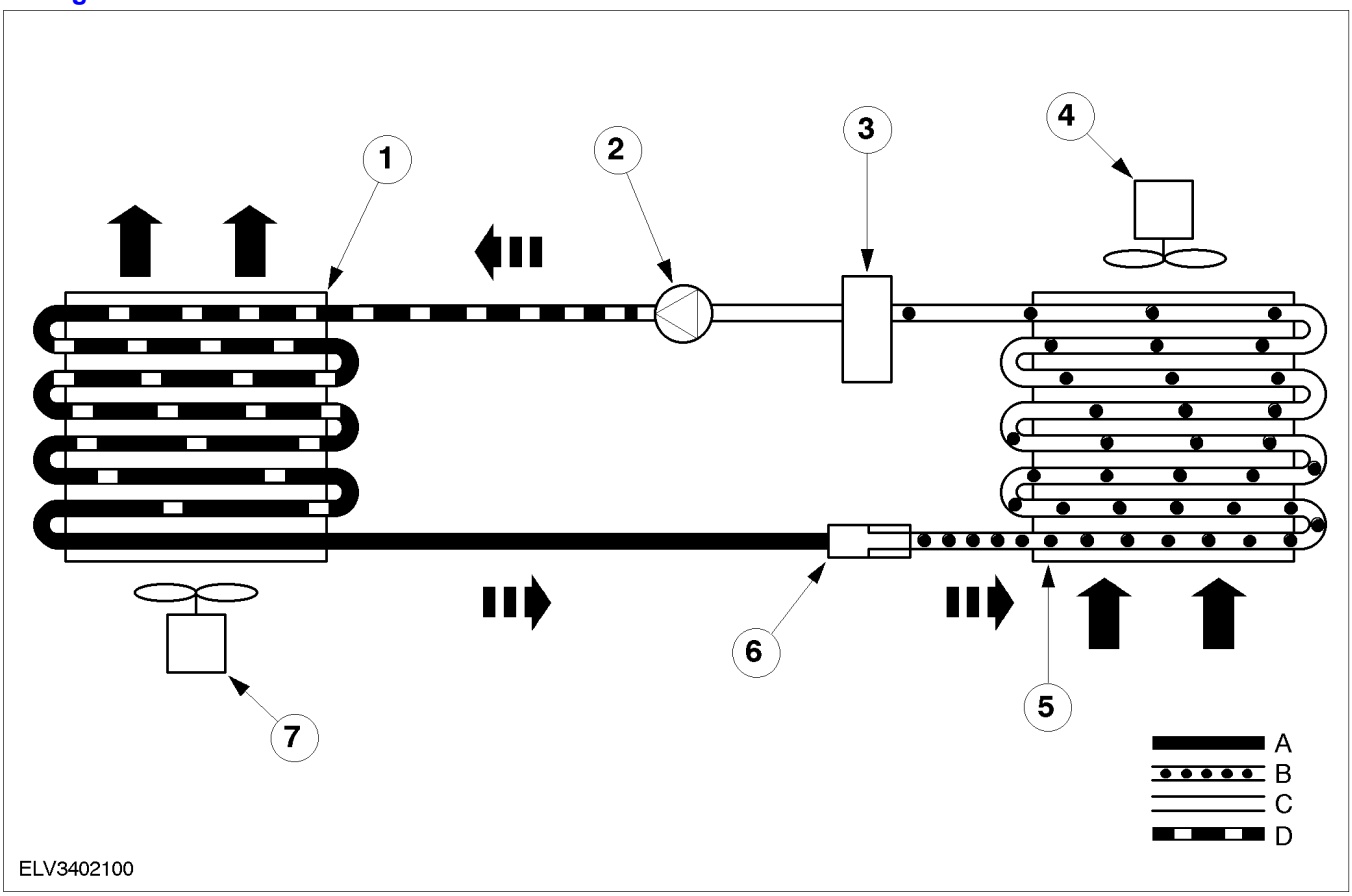

Item	Description
1	Condenser
2	Compressor
3	Accumulator/dehydrator
4	Fan - heater/air conditioning
5	Evaporator
6	Fixed orifice tube
7	Electric fan
A	High-pressure, liquid and warm
B	Low-pressure, liquid and cool
C	Low-pressure, gaseous and cool
D	High-pressure, gaseous and hot

Function

The gaseous refrigerant is sucked up on the intake side of the compressor and is then compressed. As a result of this compression, the refrigerant heats up to a temperature between 70°C and 110°C.

The gas is then pumped to the condenser. The condenser consists of many cooling fins, through which the gas is passed. The refrigerant gas is cooled so much by the ram air and the air from the radiator fan that it condenses.

The condensed, liquid refrigerant is then passed through a tube of constant diameter (fixed orifice tube). After the fixed orifice tube the pressure and therefore the temperature drop rapidly, and some of the refrigerant evaporates.

The fixed orifice tube is located in the refrigerant line just before the evaporator, in which complete evaporation of the refrigerant occurs. Because of this the evaporator is cooled, and therefore the air, which passes over it, is also cooled.

DESCRIPTION AND OPERATION (CONTINUED)

This cool air is then directed by the by the heater/air conditioning system fan through the air distribution system into the vehicle.

The refrigerant gas is then passed to the collector/dehydrator, before being sucked up again by the compressor.

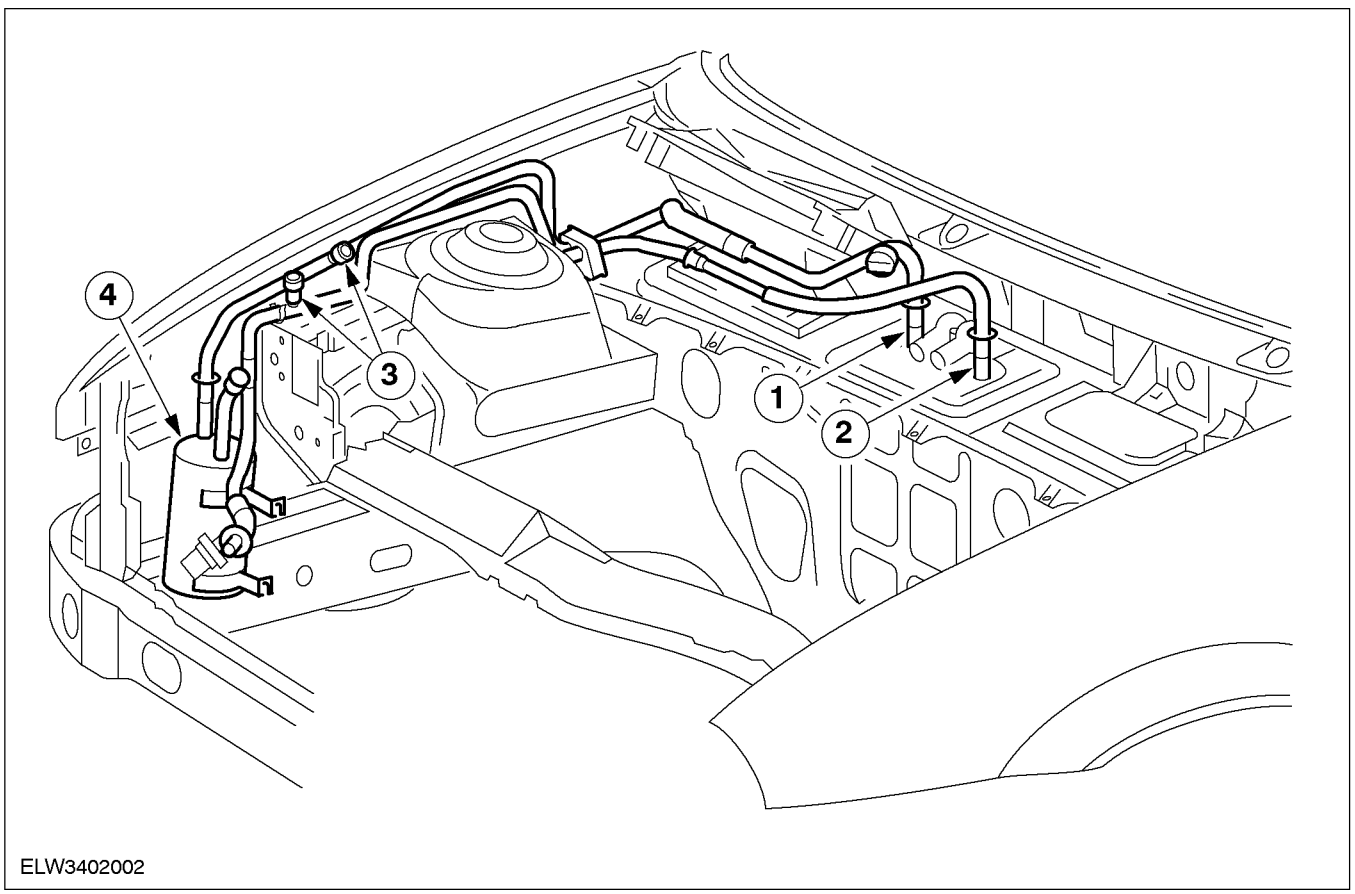

Item	Description
1	Suction pipe
2	Fluid line
3	Filling valves
4	Dehydrator

DESCRIPTION AND OPERATION (CONTINUED)

Air Conditioning System Components

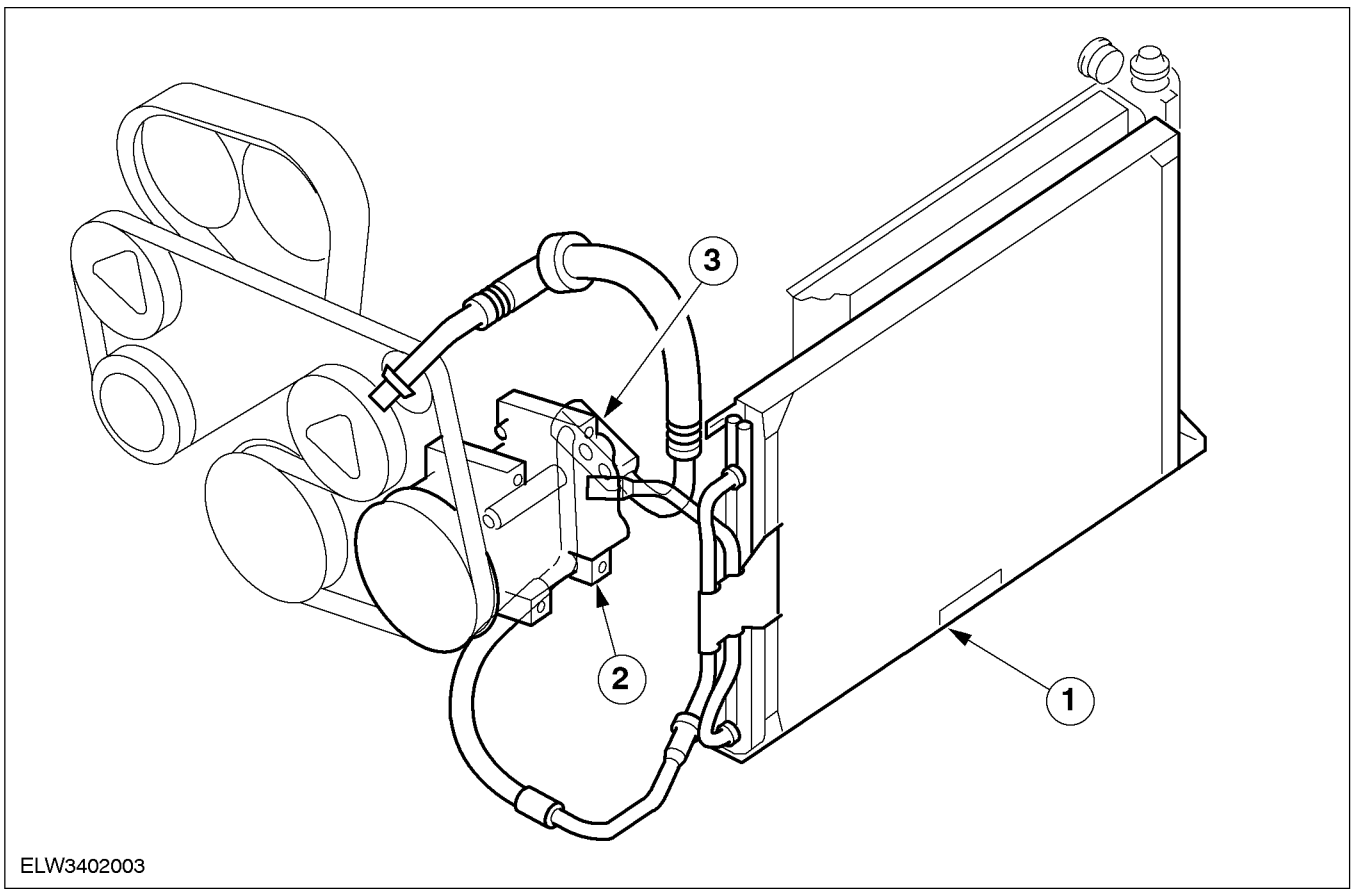

Item	Description
1	Condenser
2	Compressor
3	Compressor line connection

DESCRIPTION AND OPERATION (CONTINUED)

Compressor

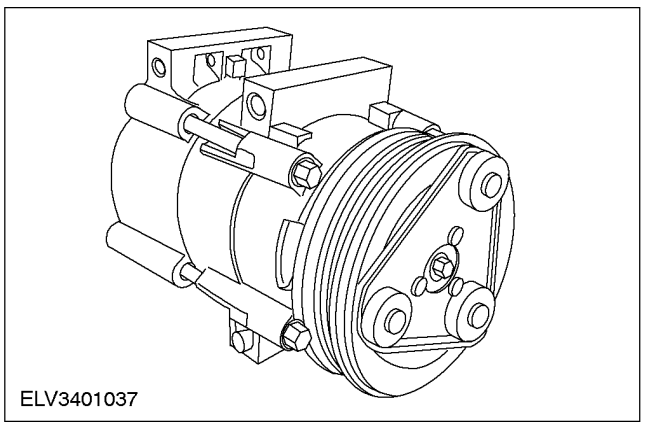

The compressor draws the gaseous refrigerant out of the evaporator.

The compressor pumps gaseous refrigerant to the condenser. As a result of this compression, the gaseous refrigerant heats up to between 70°C and 110°C.

DIAGNOSIS AND TESTING

Air Conditioning

REFER to Section 412-00.

REMOVAL AND INSTALLATION

Air Conditioning (A/C) Compressor

Removal

1. Drain the air conditioning system. For additional information, refer to Section 412-00.

2. Raise and support the vehicle. For additional information, refer to Section 100-02.

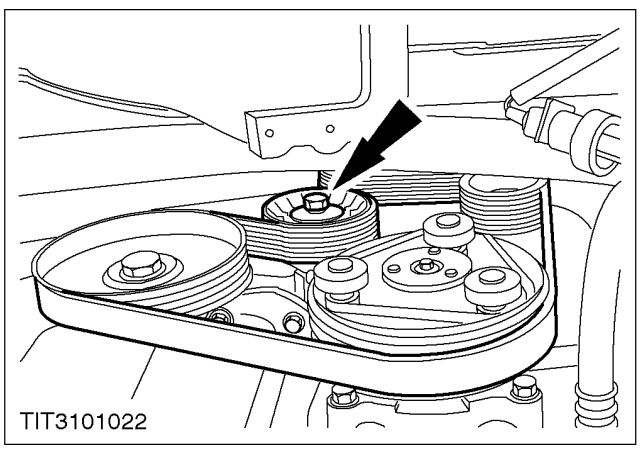

3. Remove the accessory drive belt.
   - Turn the belt tensioner clockwise.

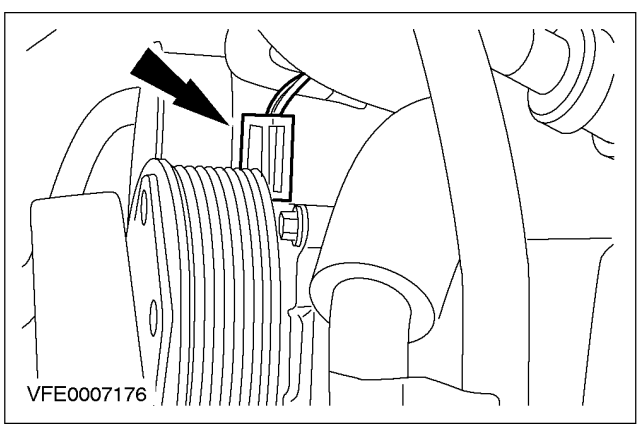

4. Disconnect the A/C compressor clutch electrical connector.

⚠CAUTION: Support the A/C compressor before removing the retaining bolts and secure it to prevent load being placed on the refrigerant lines.

REMOVAL AND INSTALLATION (CONTINUED)

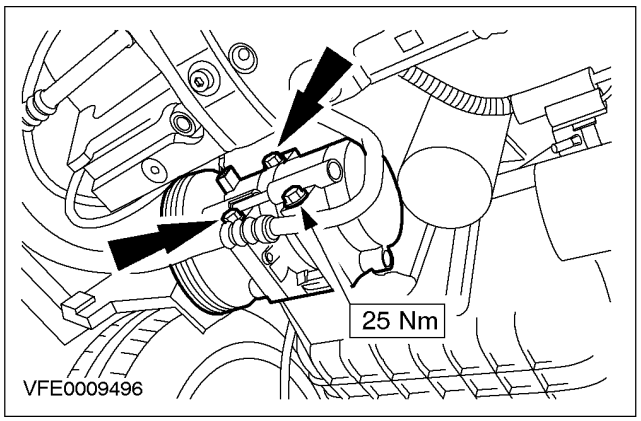

5. Detach the A/C compressor from the mounting bracket.

CAUTION: Cap the refrigerant lines and the A/C compressor to prevent dirt ingress.

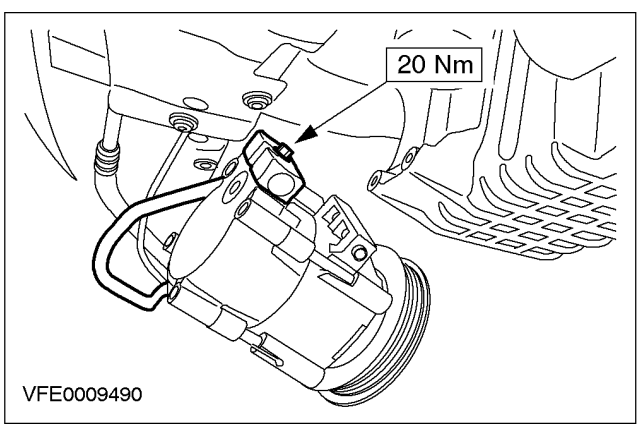

6. Disconnect the refrigerant lines and remove the A/C compressor.
   - Discard the O-ring seals

Installation

NOTE: Install new refrigerant line O-ring seals.

NOTE: Coat the refrigerant line O-ring seals in clean refrigerant oil prior to installation.

1. To install, reverse the removal procedure.

REMOVAL AND INSTALLATION

Clutch and Clutch Field Coil (34 628 0)

General Equipment
Puller
Clamping strap

Material	Specification
Set of spacer shims	
Snap ring - pulley	

Removal

1. **NOTE:** The compressor clutch can be changed without needing to detach the compressor from the refrigerant circuit. If necessary the compressor must be held in place using a cable tie, so that the refrigerant lines are not damaged.
   Remove the air-conditioning compressor.
   For additional information,
   refer to Air-conditioning Compressor in this section

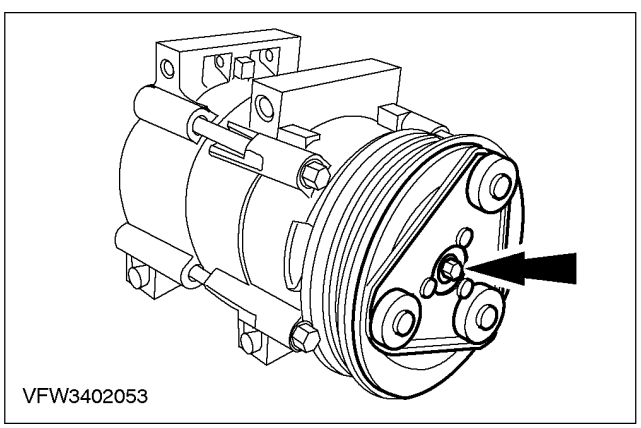
VFW3402053

2. Detach the compressor drive plate (shown removed).
   - Remove the bolt, in doing so use a clamping strap to stop the drive plate from turning.

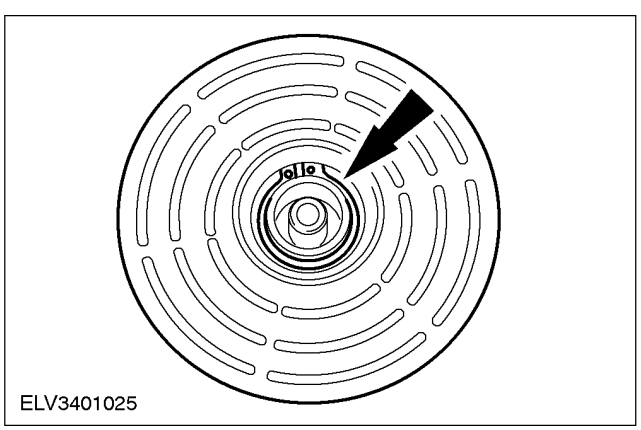
ELV3401025

3. Detach the compressor pulley.
   - Detach the pulley snap-ring.
   - Detach the spacer shims.

REMOVAL AND INSTALLATION (CONTINUED)

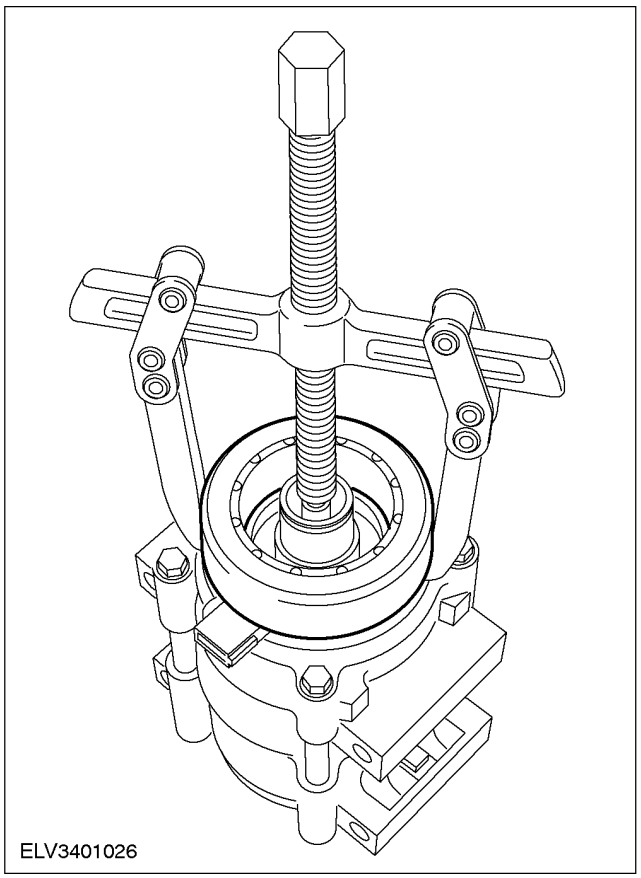

4. Pull out the compressor magnetic coil.

Installation

CAUTION: After attaching the magnetic coil, remove the thrust washer.

NOTE: Do not skew the electromagnetic pull-in clutch when fitting it on the compressor.

REMOVAL AND INSTALLATION (CONTINUED)

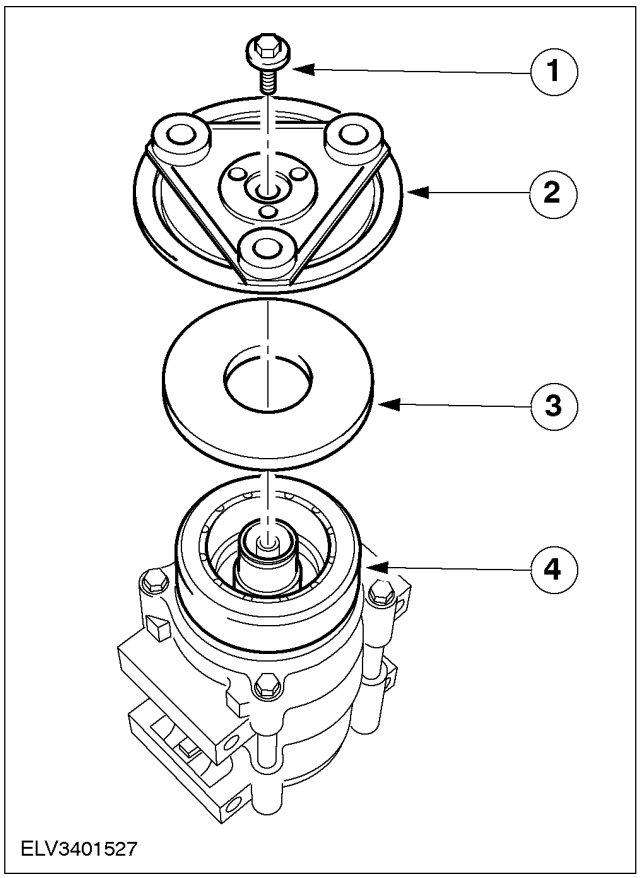

1. Fit the compressor electromagnetic pull-in clutch.
   - Press on the compressor magnetic coil using a suitable thrust washer.
   1. Bolt M6x30 with washer
   2. Drive plate
   3. Thrust washer
   4. Electromagnetic pull-in clutch

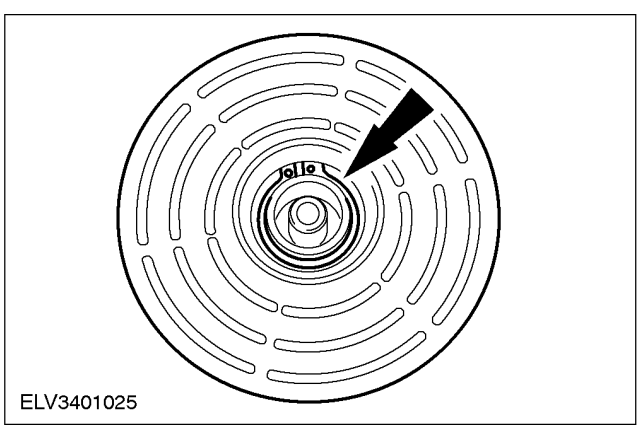

NOTE: Renew the pulley snap ring.

2. Fit the compressor pulley.
   - Fit the pulley snap-ring.

NOTE: There is a gap between the compressor drive plate and the compressor pulley.

REMOVAL AND INSTALLATION (CONTINUED)

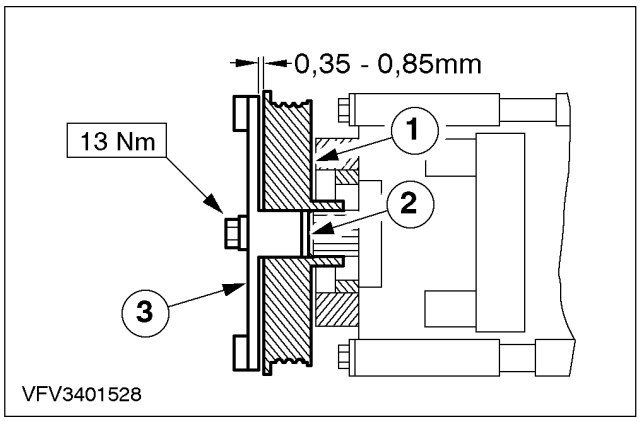

3. Fit the compressor drive plate.
   1. Compressor pulley
   2. Insert a spacer washer from spacer washer set to set the gap.
   3. Fit the compressor drive plate and check the gap at several places around the circumference.

4. Install the air-conditioning compressor. For additional information,
   refer to Air-conditioning Compressor in this section

5. Check the operation of the air conditioning system.

REMOVAL AND INSTALLATION

Evaporator Core (34 622 0)

Special Tool(s)	
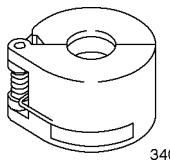 34003	Separator, quick-fit coupling 5/8" (black) 412-038 (34-003)

Material	Specification
O-rings	(Green)

Removal

1. Standard preparatory measures
   - Make a note of the radio keycode.
   - Make a note of the preset radio stations.

CAUTION: Disconnect the battery negative lead.

NOTE: "Safety Precautions" and "General Requirements and Safety Measures for Maintenance and Repair Work". For additional information, refer to Section 100-00.

2. Drain the air conditioning system. For additional information, refer to Section 412-00.

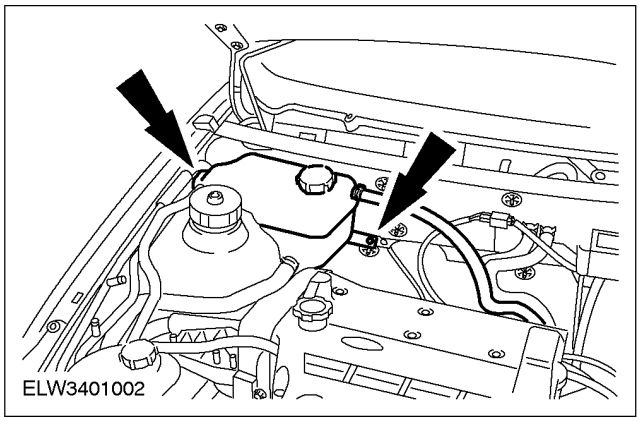

3. Detach the coolant expansion tank.
   - Remove the single screw.
   - Unhook the coolant expansion tank from its bracket.

REMOVAL AND INSTALLATION (CONTINUED)

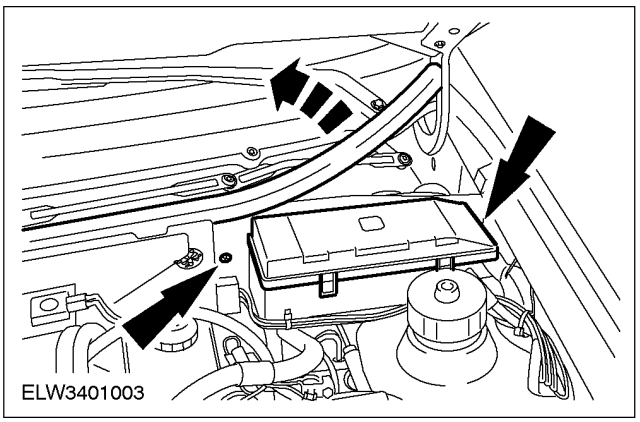

4. Remove the bulkhead extension.
   - Remove the rubber seal.
   - Unclip the cover of the central junction box (CJB).
   - Remove the single screw.

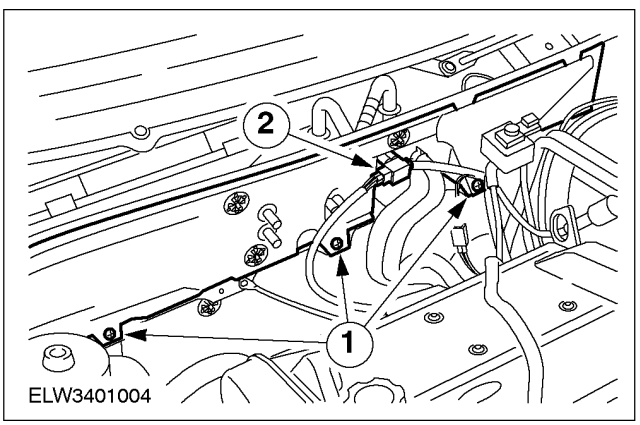

5. Remove the bulkhead extension (continued).
   1. Remove the bolts.
   2. Unclip the connector.

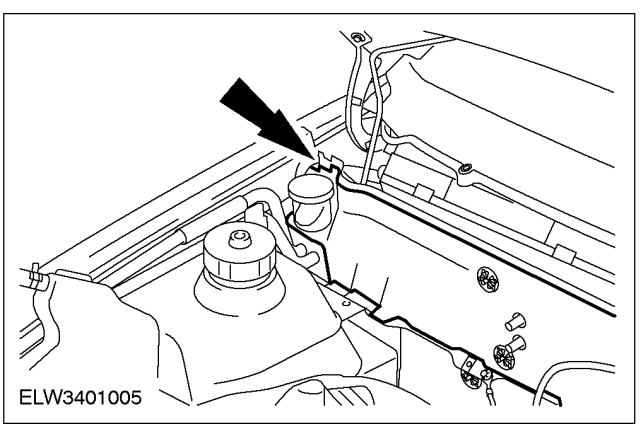

6. Remove the bulkhead extension (continued).
   - Remove the single screw.

NOTE: Seal the evaporator and refrigerant lines with plugs.

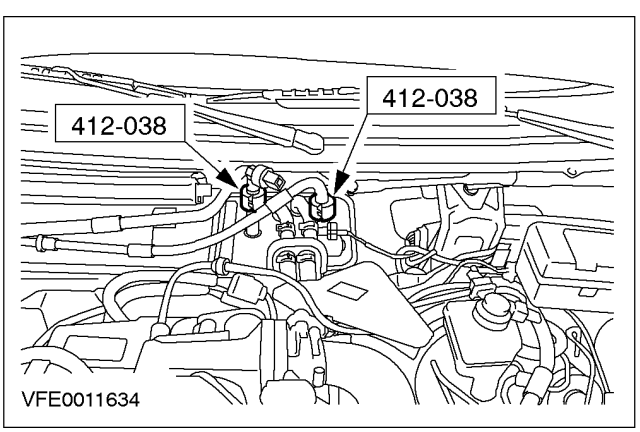

7. Disconnect the refrigerant lines.

NOTE: Plug the heat exchanger.

REMOVAL AND INSTALLATION (CONTINUED)

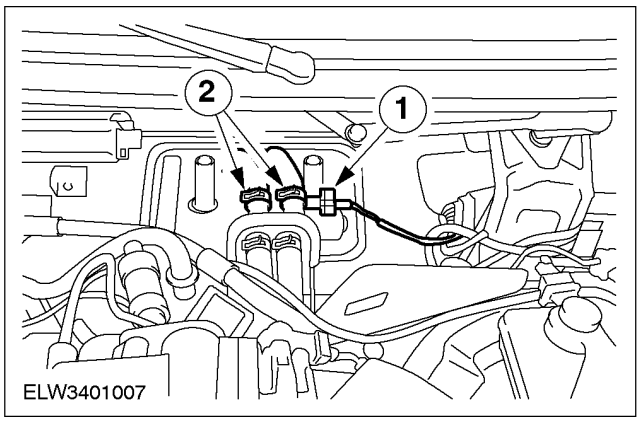

8. Pull off the connector and detach the coolant hoses.
   1. Separate the electrical connector of the heater control valve.
   2. Undo the clamps and detach the coolant hoses.

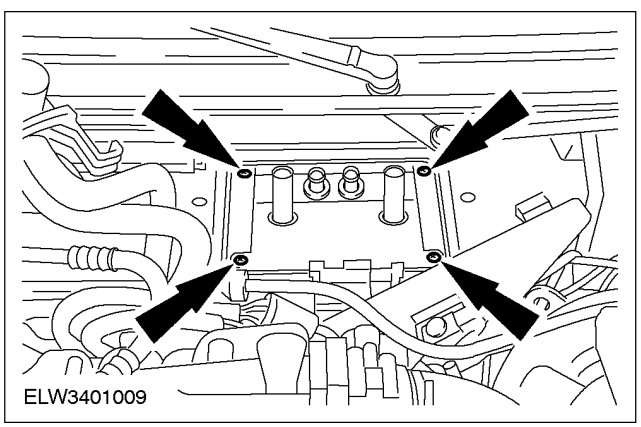

9. Remove the heater cover.
   - Remove the four bolts.

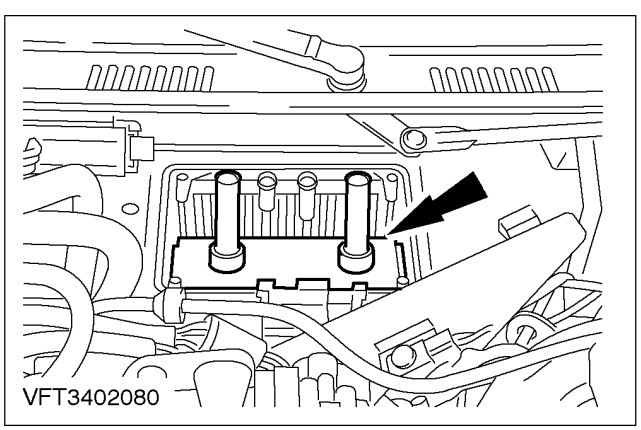

10. Pull out the evaporator (push fit).

Installation

NOTE: Before connecting the refrigerant lines, fit them with new O-rings. Coat the new O-rings with refrigerant oil before fitting them.

1. Refit the components in the reverse order.
2. Drain and refill the air conditioning system. For additional information, refer to Section 412-00.

REMOVAL AND INSTALLATION (CONTINUED)

3. Connect the battery negative lead.
   - Enter the radio keycode.
   - Reprogram the preset radio stations.
   - Reset the clock.
   - Road test the vehicle to collect data for the PCM.
4. Check that the heater/air conditioning operates properly.

REMOVAL AND INSTALLATION

Evaporator Core Orifice (34 624 0)

Special Tool(s)	
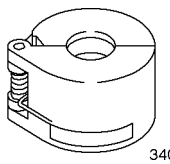 34001	Disconnect Tool, Spring Lock Coupling 1/2 inch (blue) 412-027 (34-001)
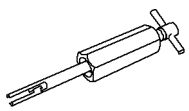 34004	Remover/Installer, Fixed Orifice 412-034 (34-004)

Special Tool(s)	
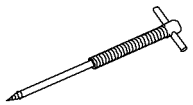 34005	Remover, Broken Orifice 412-035 (34-005)

Removal

1. Drain the air conditioning system. For additional information, refer to Section 412-00.

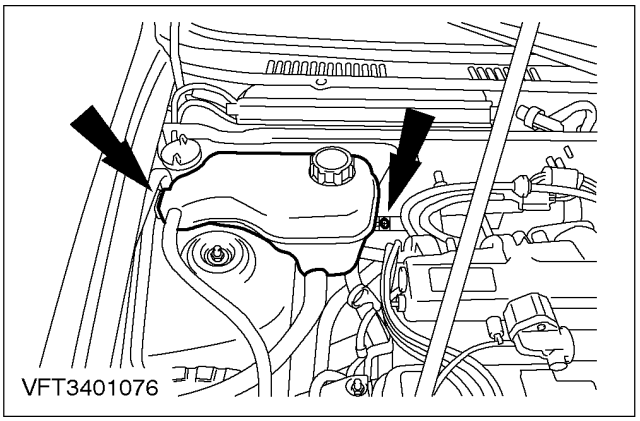

2. Detach the coolant expansion tank and secure it to one side.

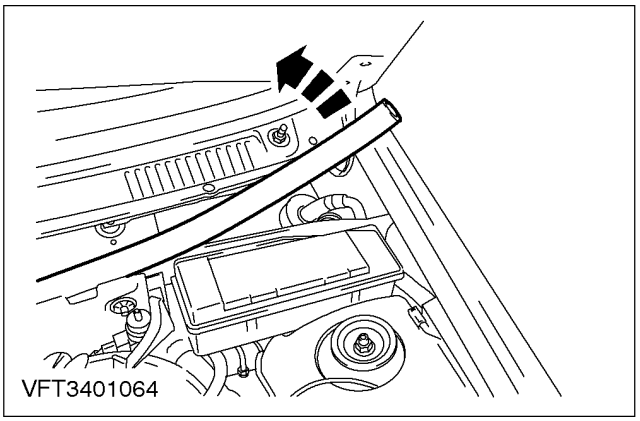

3. Remove the weather strip rubber seal.

REMOVAL AND INSTALLATION (CONTINUED)

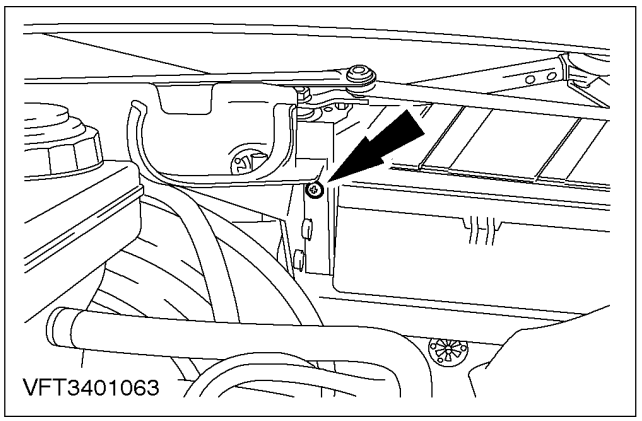

4. Remove the bulkhead extension left hand retaining bolt.

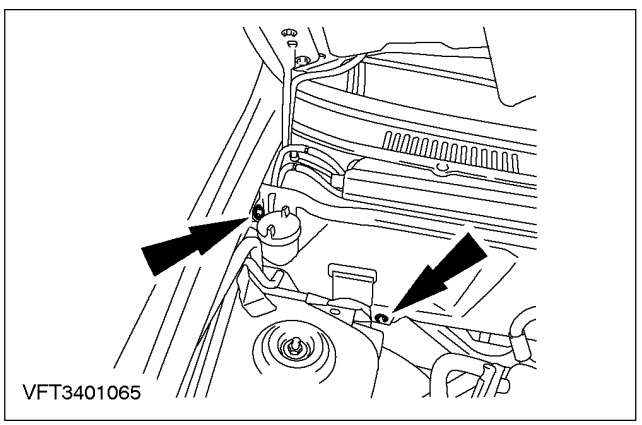

5. Remove the bulkhead extension right hand retaining bolts.

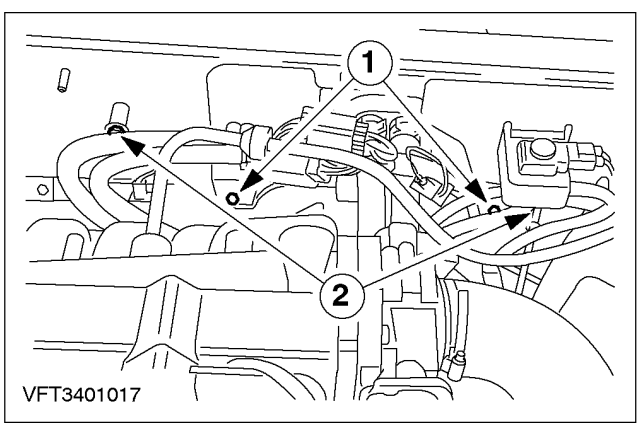

6. Remove the bulkhead extension.
   1. Remove the bolts.
   2. Unclip the clips from the bulkhead extension.

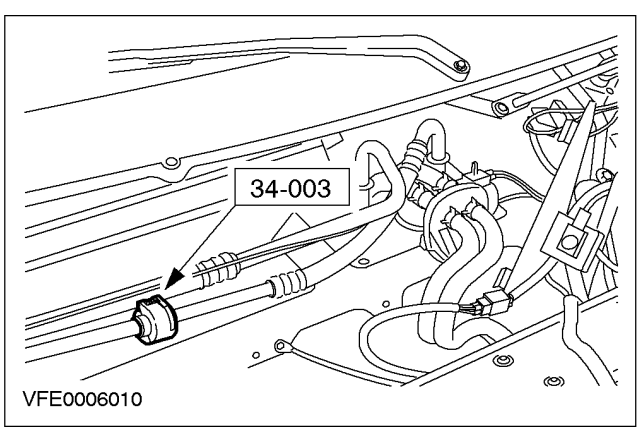

7. Using the special tool, disconnect the refrigerant line.

REMOVAL AND INSTALLATION (CONTINUED)

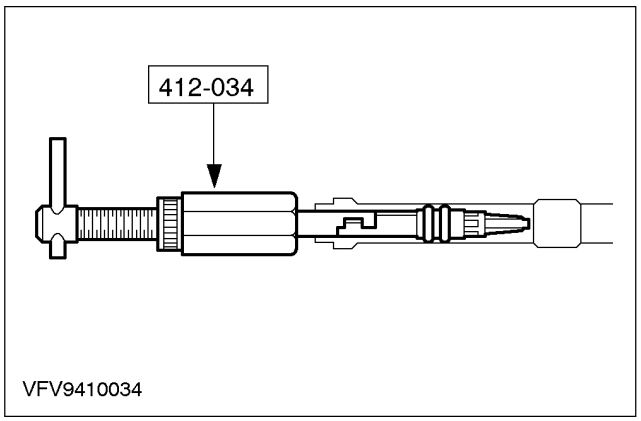

8. Using the special tool, remove the evaporator core orifice.
   - Guide the tool into the line and hook it into the evaporator core orifice.
   - Turn the tool clockwise and pull out the evaporator core orifice.

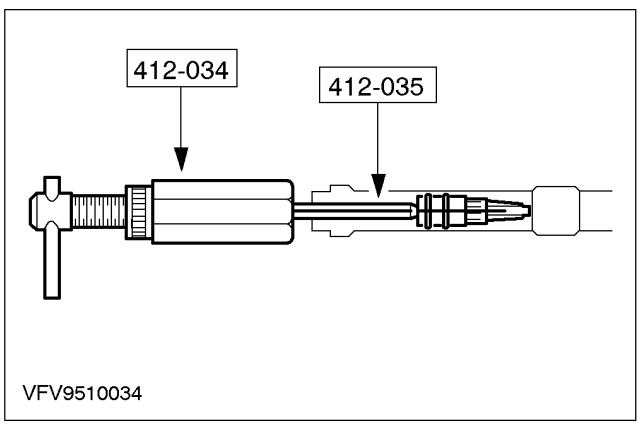

9. **NOTE:** Only necessary if the evaporator core orifice is broken.
   Using the special tool, remove the broken evaporator core orifice.

Installation

NOTE: Install new refrigerant line O-ring seals.

NOTE: Coat the refrigerant line O-ring seals in clean refrigerant oil prior to installation.

1. To install, reverse the removal procedure.

REMOVAL AND INSTALLATION

Suction Accumulator (34 630 0)

Special Tool(s)	
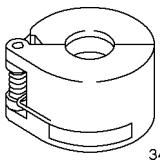 34003	Disconnecting tool, refrigerant line 5/8" (black) 34-003

Material	Specification
O-rings	(Green)

Removal

NOTE: "Safety Regulations". For additional information, refer to Section 100-00.

1. Standard preparatory measures
   - Make a note of the radio keycode.
   - Make a note of the preset radio stations.
   - Place protective covers over the fenders.

CAUTION: Disconnect the battery negative lead.

2. Drain the air conditioning system. For additional information, refer to Section 412-03.

NOTE: Seal the accumulator/dehydrator and the refrigerant lines with plugs.

3. Disconnect the refrigerant line at the accumulator / dehydrator.

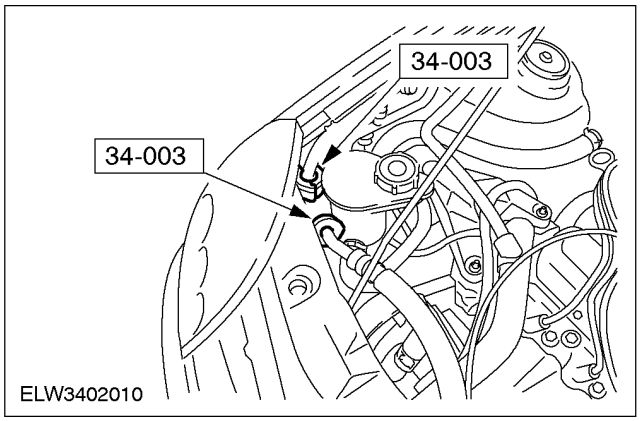

REMOVAL AND INSTALLATION (CONTINUED)

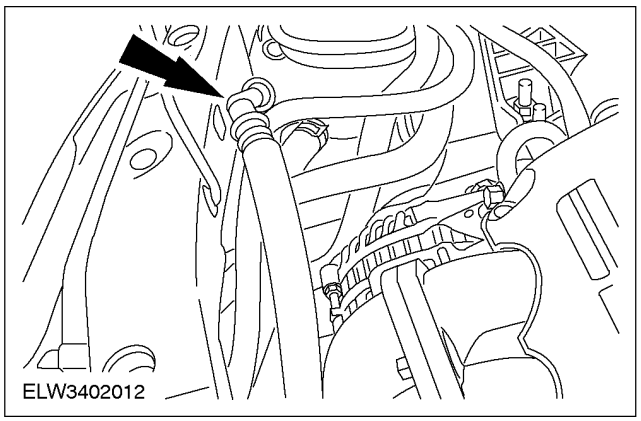

4. Remove the accumulator / dehydrator.

5. Raise the vehicle. For additional information, refer to Section 100-02.

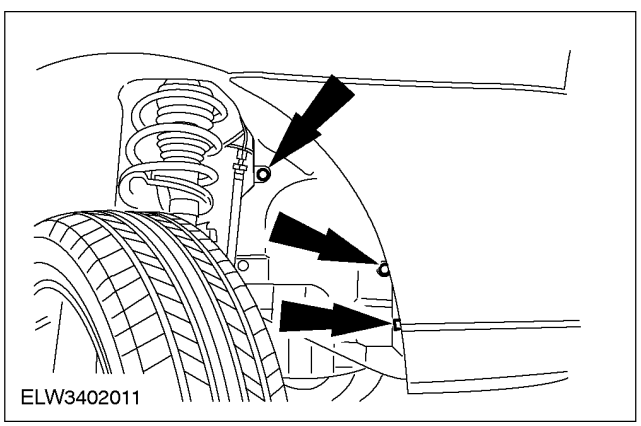

6. Remove the front right-hand wheelhouse cover.
   - Remove the bolts.

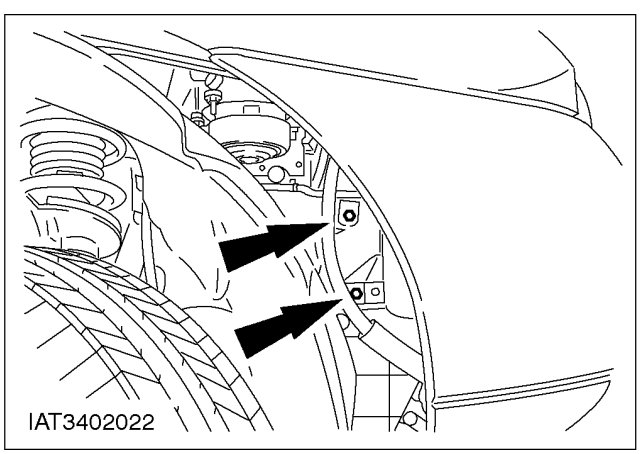

7. Remove the accumulator / dehydrator from below.

Installation

NOTE: Tightening torques. For additional information, refer to Section 412-03. Specifications

NOTE: Before connecting the refrigerant lines, fit them with new O-rings. Coat the new O-rings with refrigerant oil before fitting them.

1. Refit the components in reverse order.

REMOVAL AND INSTALLATION (CONTINUED)

2. Evacuate and refill the air conditioning system. For additional information, refer to Section 412-03.

3. Standard finishing operations.
   - Connect the battery negative lead.
   - Remove the protective covers.
   - Enter the radio keycode.
   - Reprogram the preset radio stations.
   - Set the clock.
   - Road test the vehicle to collect data for the PCM.

4. Check the operation of the air conditioning system.

REMOVAL AND INSTALLATION

Low Pressure Cut-Off Switch (34 629 0)

Removal

NOTE: "Safety Regulations". For additional information, refer to Section 100-00.

1. Standard preparatory measures
   - Make a note of the radio keycode.
   - Make a note of the preset radio stations.
   - Place protective covers over the fenders.

CAUTION: Disconnect the battery negative lead.

2. Detach the coolant expansion tank.
   - Remove the single screw.
   - Unhook the coolant expansion tank from its bracket.

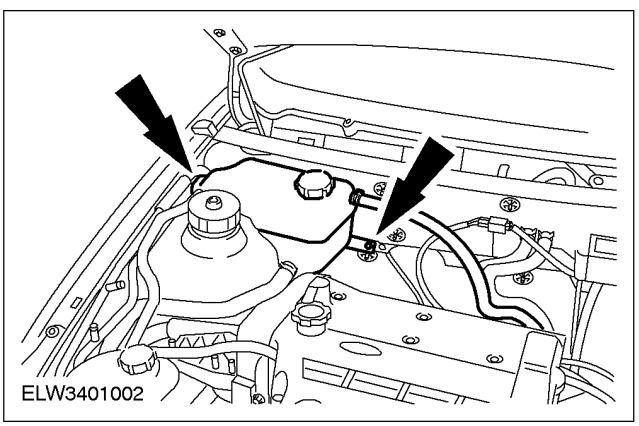
ELW3401002

3. Remove the bulkhead extension.
   - Remove the rubber seal.
   - Unclip the central junction box (CJB) cover.
   - Remove the single screw.

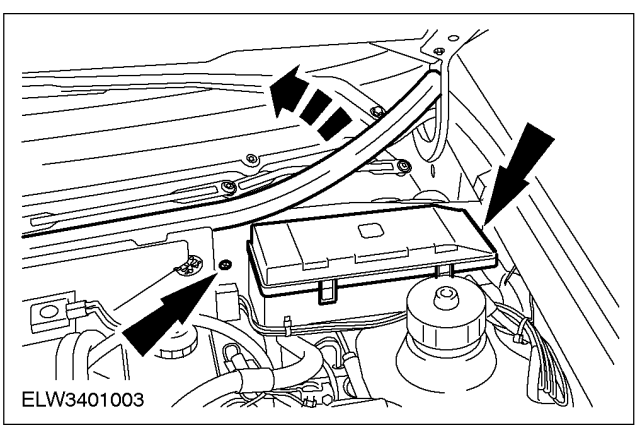
ELW3401003

4. Remove the bulkhead extension (continued).
   1. Remove the bolts.
   2. Unclip the electrical connector.

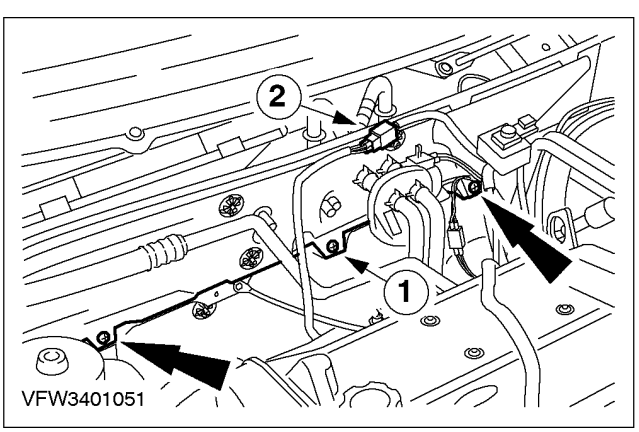

VFW3401051

REMOVAL AND INSTALLATION (CONTINUED)

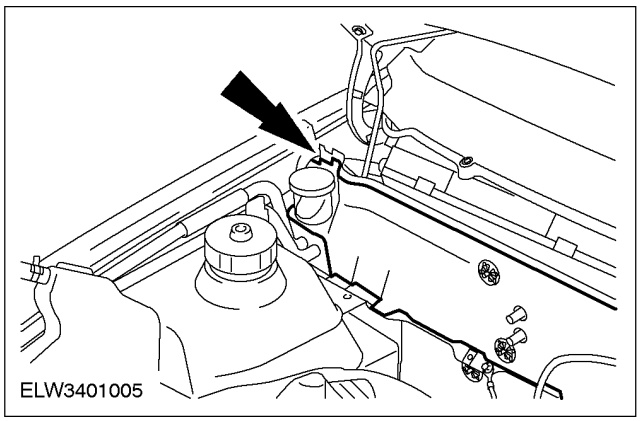

5. Remove the bulkhead extension (continued).
   - Remove the single screw.

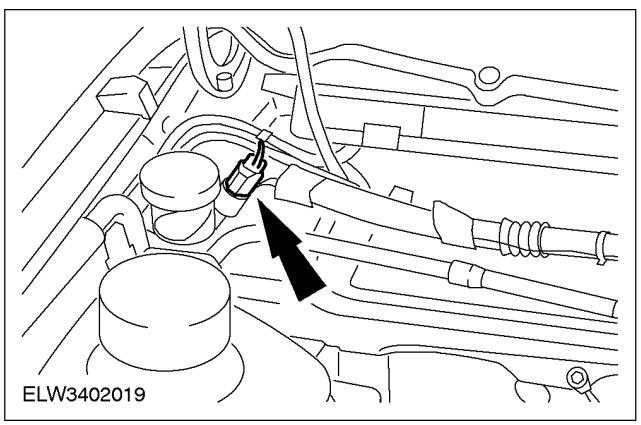

6. Remove the air conditioning low-pressure switch.
   - Disconnect the plug.

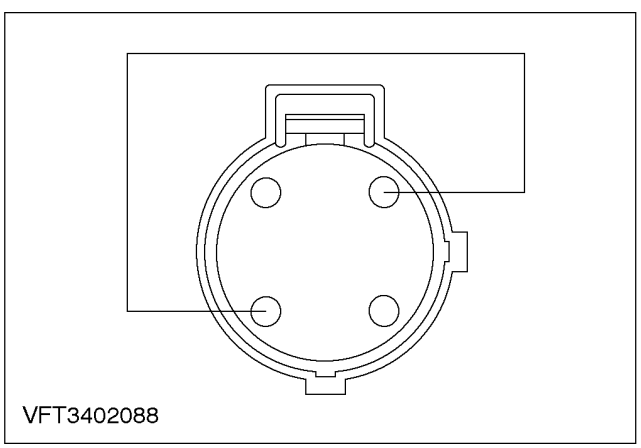

7. By-pass the plug contacts for the air conditioning low pressure switch.
   - Start the engine.
   - Switch on the air conditioning.

NOTE: Run the engine at idle for 30 seconds with the air conditioning switched on before removing the air conditioning low pressure switch.

8. Remove the air conditioning low pressure switch.

Installation

NOTE: Tightening torques. For additional information,
refer to Section 412-03. Specifications

REMOVAL AND INSTALLATION (CONTINUED)

1. Refit the components in reverse order.
   - Switch off the air conditioning.
   - Switch off the engine.
   - Remove the by-pass from the plug of the air conditioning low pressure switch.
   - Connect the plug of the air conditioning low pressure switch.
2. Standard finishing operations.
   - Connect the battery negative lead.
   - Remove the protective covers.
   - Enter the radio keycode.
   - Reprogram the preset radio stations.
   - Reset the clock.
   - Road test the vehicle to collect data for the PCM.
3. Check the operation of the air conditioning system.

REMOVAL AND INSTALLATION

High Pressure Cut-Off Switch (34 631 0)

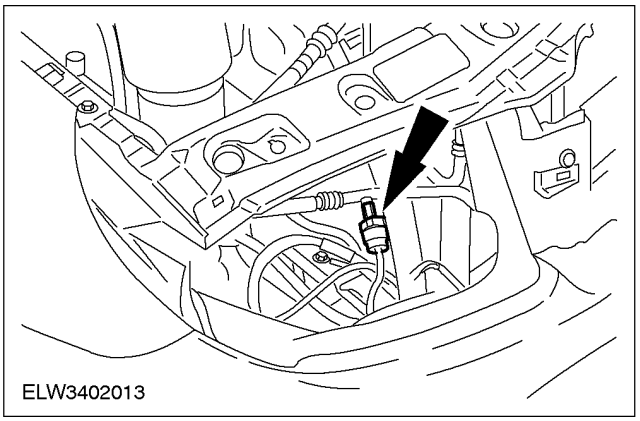

Removal

NOTE: "Safety Regulations". For additional information, refer to Section 100-00.

1. Standard preparatory measures
   - Make a note of the radio keycode.
   - Make a note of the preset radio stations.
   - Place protective covers over the fenders.

CAUTION: Disconnect the battery negative lead.

2. Remove the right-hand headlamp assembly. For additional information, refer to Section 417-01.
3. Remove the air conditioning high-pressure switch.
   - Disconnect the plug.

Installation

NOTE: Tightening torques. For additional information,
refer to Section 412-03. Specifications

1. Refit the components in reverse order.
2. Install the right-hand headlamp. For additional information, refer to Section 417-01.
3. Check the headlamp adjustment and correct it as necessary. For additional information, refer to Section 417-01.

REMOVAL AND INSTALLATION (CONTINUED)

4. Standard finishing operations.
   - Connect the battery negative lead.
   - Remove the protective covers.
   - Enter the radio keycode.
   - Re-program the preset radio stations.
   - Reset the clock.
   - Road test the vehicle to collect data for the PCM.
5. Check the operation of the air conditioning system.

REMOVAL AND INSTALLATION

Evaporator to Condenser Line (34 645 0)

Special Tool(s)	
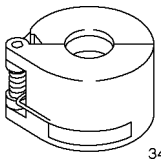 34001	Separator, quick-fit coupling 1/2" (blue) 412-027 (34-001)

Special Tool(s)	
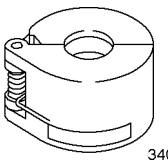 34003	Separator, quick-fit coupling 5/8" (black) 412-038 (34-003)

Material	Specification
O-rings	(Green)

Removal

1. Standard preparatory measures
   - Make a note of the radio keycode.
   - Make a note of the preset radio stations.

CAUTION: Disconnect the battery negative lead.

NOTE: "Safety Precautions" and "General Requirements and Safety Measures for Maintenance and Repair Work". For additional information, refer to Section 100-00.

2. Drain the air conditioning system. For additional information, refer to Section 412-00.

3. Detach the coolant expansion tank.
   - Remove the single screw.
   - Unhook the coolant expansion tank from its bracket.

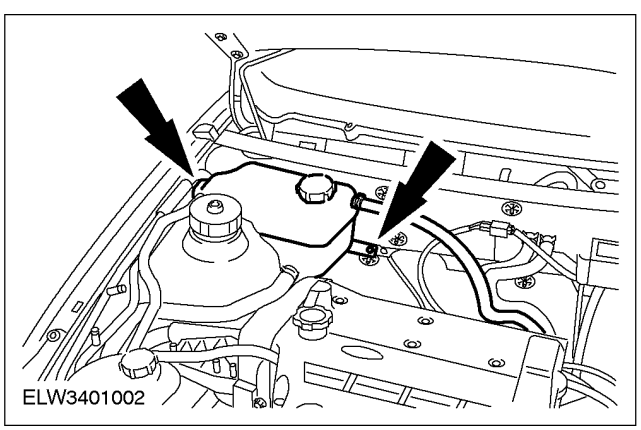

REMOVAL AND INSTALLATION (CONTINUED)

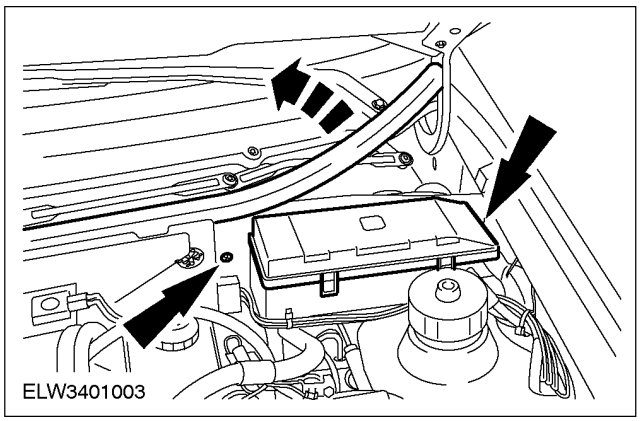

4. Remove the bulkhead extension.
   - Remove the rubber seal.
   - Unclip the cover of the central junction box (CJB).
   - Remove the single screw.

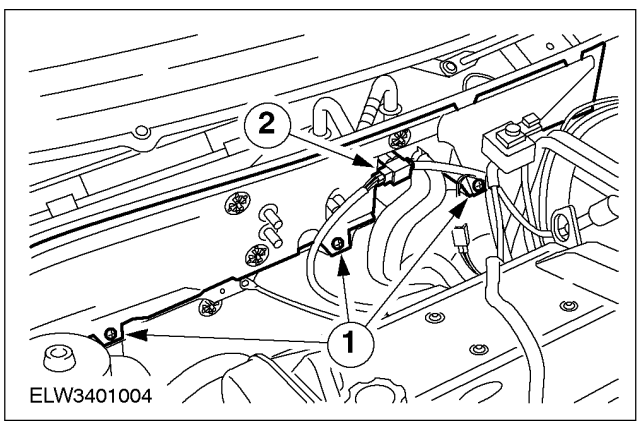

5. Remove the bulkhead extension (continued).
   1. Remove the bolts.
   2. Unclip the connector.

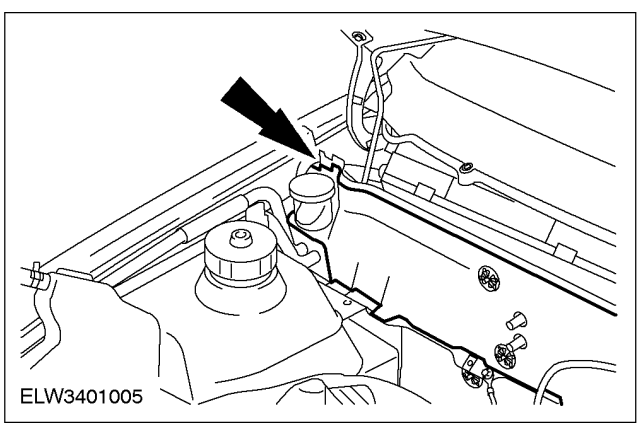

6. Remove the bulkhead extension (continued).
   - Remove the single screw.

NOTE: Plug the refrigerant line and the evaporator.

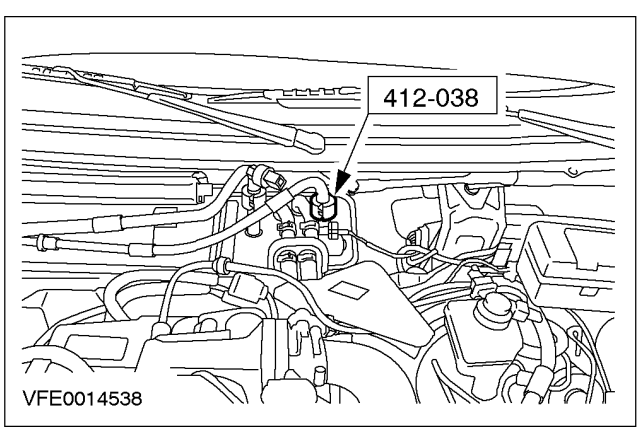

7. Disconnect the refrigerant line at the evaporator.

REMOVAL AND INSTALLATION (CONTINUED)

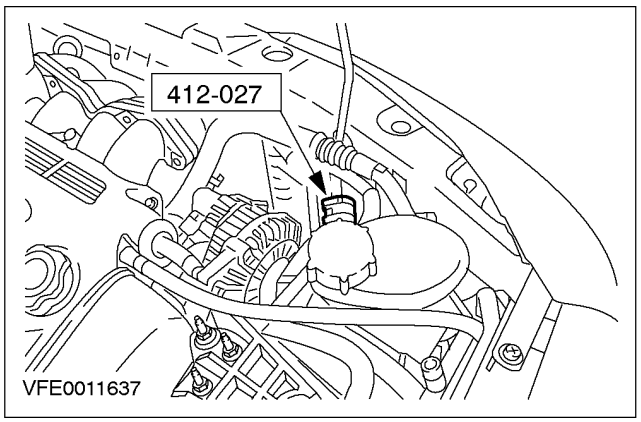

NOTE: Plug the refrigerant line and the condenser.

8. Disconnect the refrigerant line at the condenser.

Installation

NOTE: Fit new O-rings on the refrigerant pipes before connecting them. Coat the new O-rings with refrigerant oil before fitting them.

1. Refit the components in reverse order.
2. Evacuate the air conditioning system and fill it. For additional information, refer to Section 412-00.
3. Connect the battery negative lead.
   - Enter the radio keycode.
   - Reprogram the preset radio stations.
   - Reset the clock.
   - Road test the vehicle to collect data for the PCM.
4. Check the operation of the air conditioning system.

REMOVAL AND INSTALLATION

Suction Accumulator to Condenser Line (34 643 0)

Special Tool(s)	
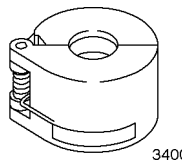 34001	Disconnecting tool, refrigerant line 1/2" (blue) 34-001

Special Tool(s)	
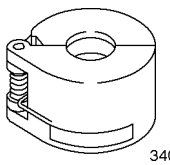 34003	Disconnecting tool, refrigerant line 5/8" (black) 34-003

Material	Specification
O-rings	(Green)

Removal

NOTE: "Safety Regulations". For additional information, refer to Section 100-00.

1. Standard preparatory measures
   - Make a note of the radio keycode.
   - Make a note of the preset radio stations.
   - Place protective covers over the fenders.

⚠ **CAUTION: Disconnect the battery negative lead.**

2. Drain the air conditioning system. For additional information, refer to Section 412-03.

3. Raise the vehicle. For additional information, refer to Section 100-02.

NOTE: Plug the refrigerant line and the condenser.

4. Disconnect the refrigerant line at the condenser.

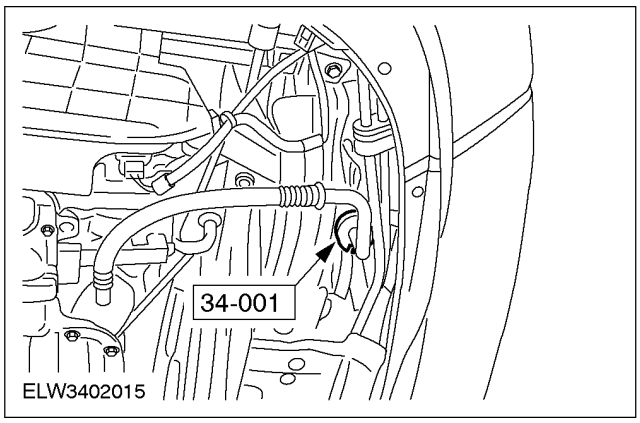

REMOVAL AND INSTALLATION (CONTINUED)

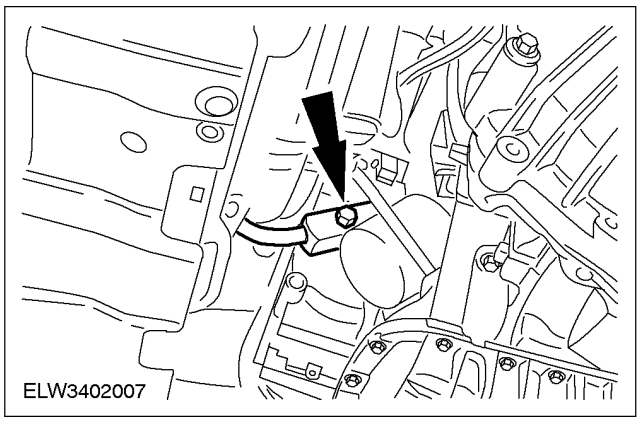

5. Separate the refrigerant line at the compressor.

NOTE: Seal the refrigerant line and the accumulator / dehydrator with plugs.

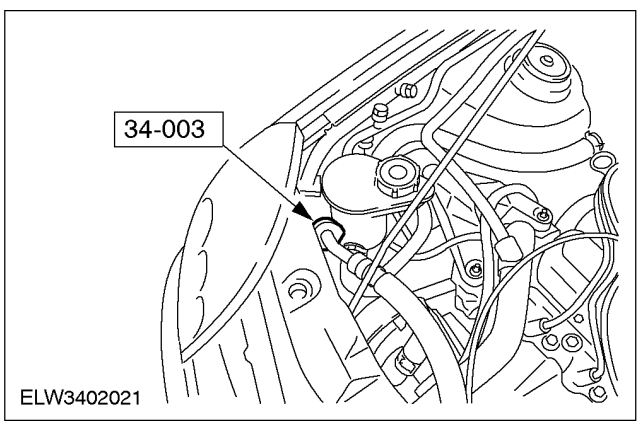

6. Disconnect the refrigerant line at the accumulator / dehydrator.

Installation

NOTE: Tightening torques. For additional information, refer to Section 412-03. Specifications

NOTE: Before connecting the refrigerant lines, fit them with new O-rings. Coat the new O-rings with refrigerant oil before fitting them.

1. Refit the components in reverse order.
2. Evacuate and refill the air conditioning system. For additional information, refer to Section 412-03.
3. Standard finishing operations.
   - Connect the battery negative lead.
   - Remove the protective covers.
   - Enter the radio keycode.
   - Re-program the preset radio stations.
   - Set the clock.
   - Road test the vehicle to collect data for the PCM.

REMOVAL AND INSTALLATION (CONTINUED)

4. Check the operation of the air conditioning system.

REMOVAL AND INSTALLATION

Suction Accumulator to Evaporator Line (34 644 0)

Special Tool(s)	
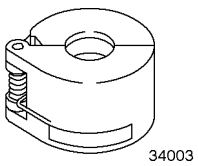 34003	Disconnecting tool, refrigerant line 5/8" (black) 34-003

REMOVAL AND INSTALLATION

Removal

NOTE: "Safety Regulations". For additional information, refer to Section 100-00.

1. Standard preparatory measures
   - Make a note of the radio keycode.
   - Make a note of the preset radio stations.
   - Place protective covers over the fenders.

CAUTION: Disconnect the battery negative lead.

2. Drain the air conditioning system. For additional information, refer to Section 412-03.

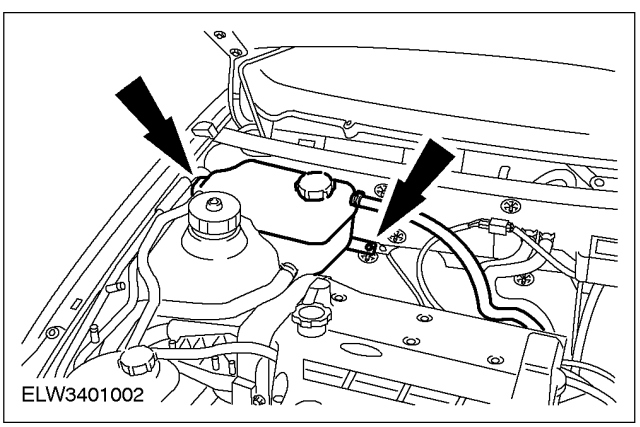

3. Detach the coolant expansion tank.
   - Remove the single screw.
   - Unhook the coolant expansion tank from its bracket.

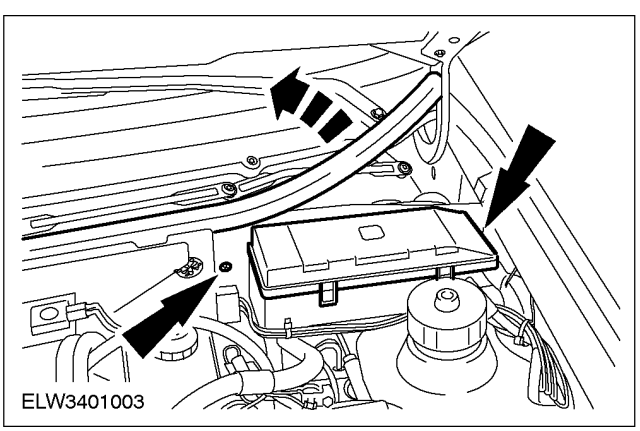

4. Remove the bulkhead extension.
   - Remove the rubber seal.
   - Unclip the central junction box (CJB) cover.
   - Remove the single screw.

SPECIFICATIONS

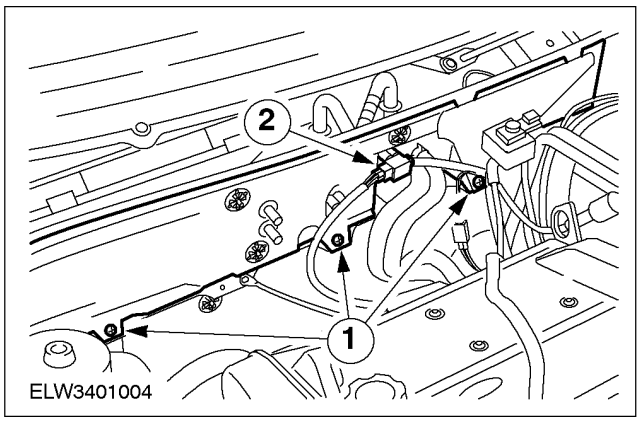

5. Remove the bulkhead extension (continued).
   1. Remove the bolts.
   2. Unclip the electrical connector.

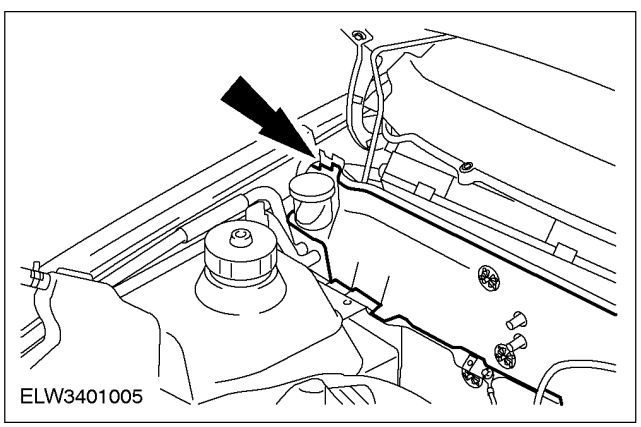

6. Remove the bulkhead extension (continued).
   - Remove the single screw.

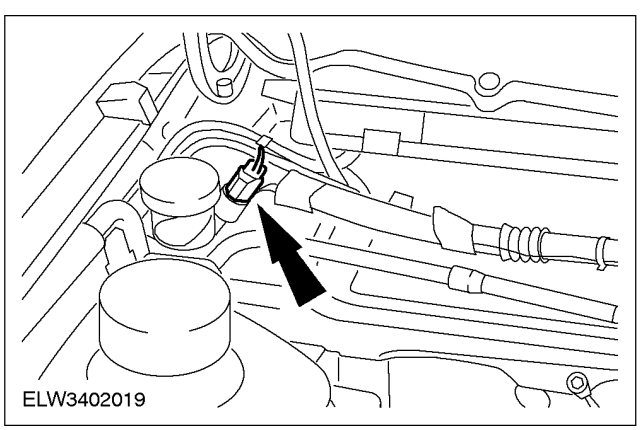

7. Remove the air conditioning low-pressure switch.
   - Disconnect the plug.

NOTE: Plug the refrigerant line and the evaporator.

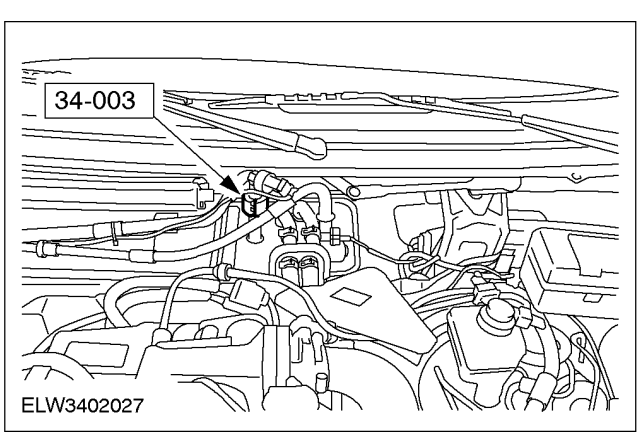

8. Disconnect the refrigerant line at the evaporator.

REMOVAL AND INSTALLATION

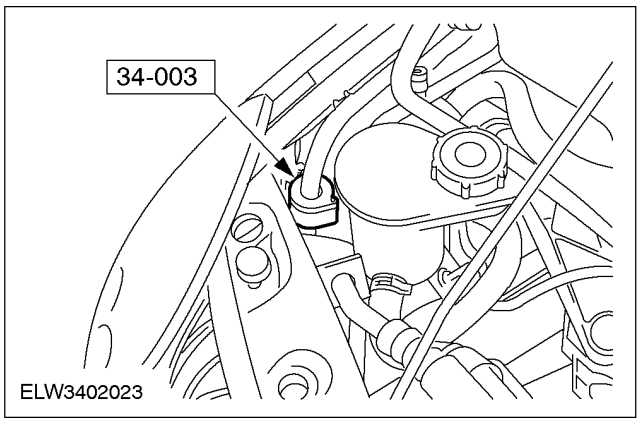

NOTE: Seal the refrigerant line and the accumulator/dehydrator with plugs.

9. Disconnect the refrigerant line at the accumulator/dehydrator.

Installation

NOTE: Tightening torques. For additional information,
refer to Section 412-03. Specifications

NOTE: Before connecting the refrigerant lines, fit them with new O-rings. Coat the new O-rings with refrigerant oil before fitting them.

1. Refit the components in reverse order.
2. Evacuate and refill the air conditioning system. For additional information,
refer to Section 412-03.
3. Standard finishing operations.
   - Connect the battery negative lead.
   - Remove the protective covers.
   - Enter the radio keycode.
   - Reprogram the preset radio stations.
   - Reset the clock.
   - Road test the vehicle to collect data for the PCM.
4. Check the operation of the air conditioning system.

SPECIFICATIONS

Lubricants, Fluids, Sealers and Adhesives

Item	Specification
Refrigerant R134a	WSH-M17B19-A
Refrigerant oil for R134a	WSH-M1C231-B

Fill Capacity

	Grams
Refrigerant - Air Conditioning	740 g ± 15 g
Refrigerant - refrigeration system	1000 g ± 15 g

Capacities

	Liters
Air conditioning system refrigerant oil, quantity for first fill	200 ml
Refrigeration system refrigerant oil, quantity for first fill	250 ml
Correction of oil quantity when components have been exchanged	For additional information, refer to Section 412-00.

Torque Specifications

Description	Nm
Condenser to radiator	6
Collector/dehydrator to bracket	6
High pressure switch to refrigerant line	8
Compressor to bracket	25
Suction / pressure pipe to compressor	20
Drive belt tensioner lock bolt (1,8l diesel engine)	20
Drive plate to compressor (FS10)	13
Drive plate to compressor (FVS 090, diesel engine only)	17
Refrigerant line (3/8") to additional oil reservoir - refrigeration system	23
Union nut - de-ice line (1/2") to evaporator - refrigeration system	14
Union nut - refrigerant line (3/8") to evaporator - refrigeration system	23
Union nut - refrigerant line (5/8") to evaporator - refrigeration system	33
Bolts for blower motor - refrigeration system	6
Bolts for evaporator cover - refrigeration system	6

SECTION 412-04 Control Components

VEHICLE APPLICATION: 2002 Bantam

SUBJECT **PAGE**

DESCRIPTION AND OPERATION
Control Components 412-04-2

DIAGNOSIS AND TESTING
Control Components 412-04-3

REMOVAL AND INSTALLATION
Climate Control Assembly ..... (34 300 0) 412-04-4/6
Blower Motor Switch ..... (33 574 0) 412-04-7/8
Air Inlet Blend Door Actuator ..... (34 606 0) 412-04-9

DESCRIPTION AND OPERATION

Control Components

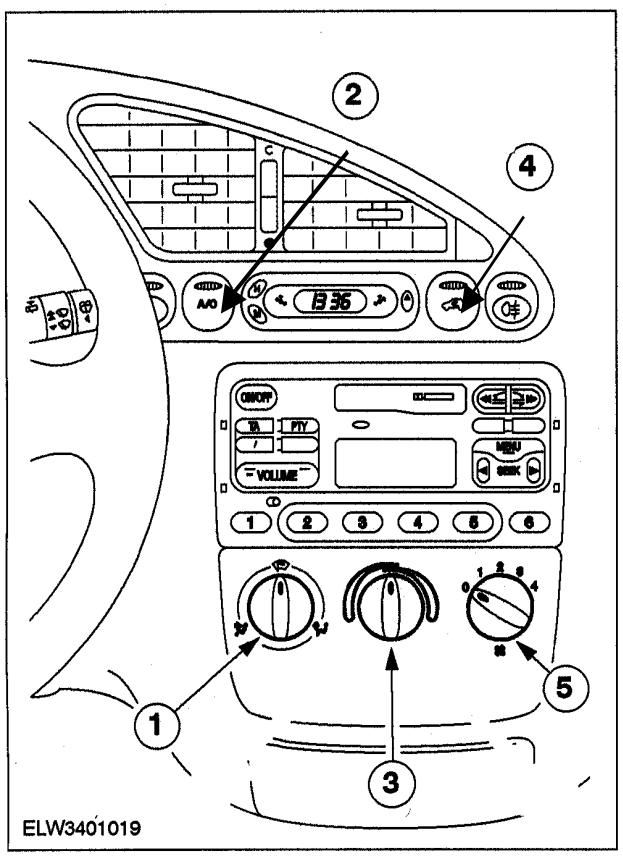

Item	Description
1	Air distribution switch
2	Air conditioning switch
3	Temperature control switch
4	Recirculated air/fresh air control switch
5	Fan motor operating switch

The fan motor operating switch sets the heater/fresh air fan to one of four different speeds.

The temperature control switch allows choice of temperature and controls the heater regulator valve.

The air distribution switch uses a cable to provide step less control of the air distribution in the passenger compartment.

Pressing the recirculated air/fresh air control switch starts recirculated air operation, and the control lamp in the switch comes on.

Pressing the air conditioning switch and when the temperature is above +4 °C and the fan is switched on starts the air conditioning system and the control lamp in the switch comes on.

DIAGNOSIS AND TESTING

Control Components

REFER to Section 412-00.

REMOVAL AND INSTALLATION

Climate Control Assembly (34 300 0)

Removal

1. Standard preparatory measures
   - Make a note of the radio keycode.
   - Make a note of the preset radio stations.

⚠CAUTION: Disconnect the battery negative lead.

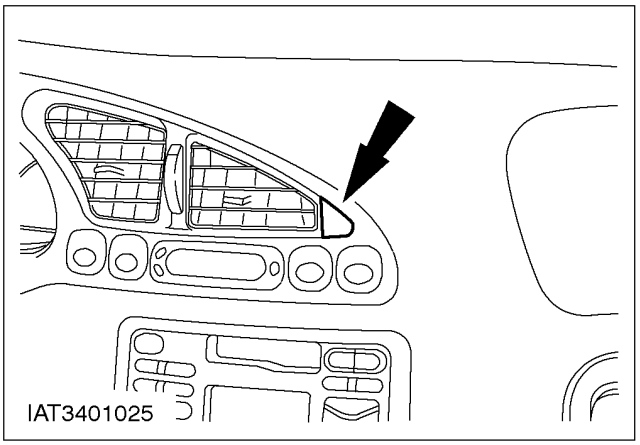

2. Remove the instrument cluster bezel.
   - Unclip the cover.

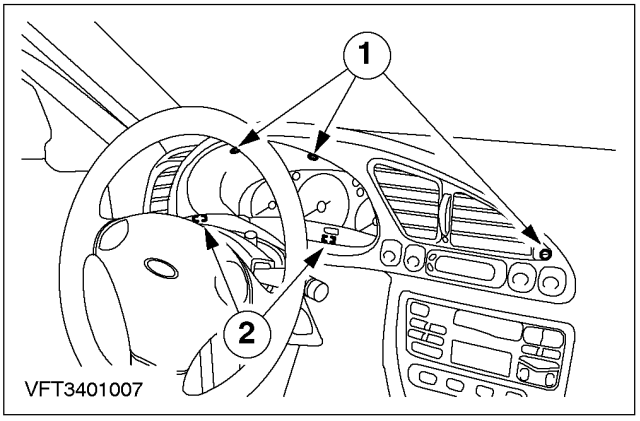

3. Remove the instrument cluster bezel (continued).
   1. Screws
   2. Clips
   - Disconnect the plug.

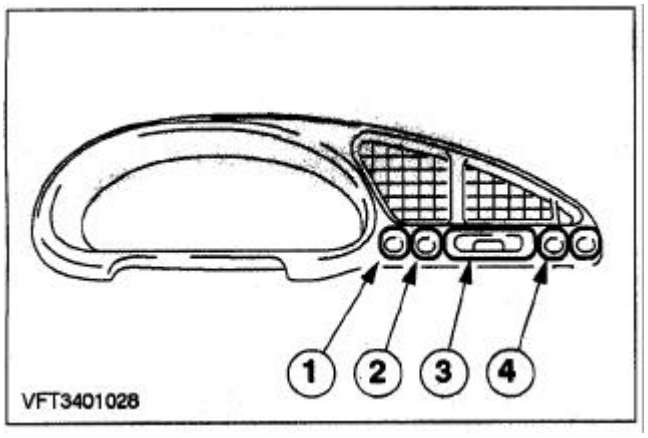

4. Remove the switches (bezel shown removed).
   1. Spot lights
   2. Air conditioner.
   3. Clock.
   4. A/C re-circulation.

REMOVAL AND INSTALLATION

5. Remove the radio. For additional information, refer to Section 415-01.

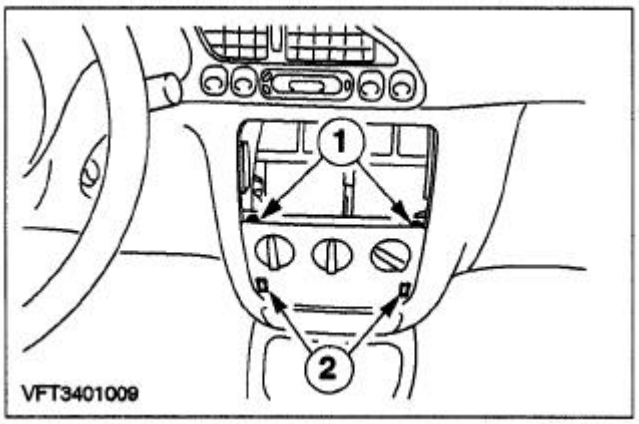

6. Remove the bezel.
   1. Remove the screws.
   2. Unclip the clips.
   - Pull the bezel forwards.
   - Disconnect the plug

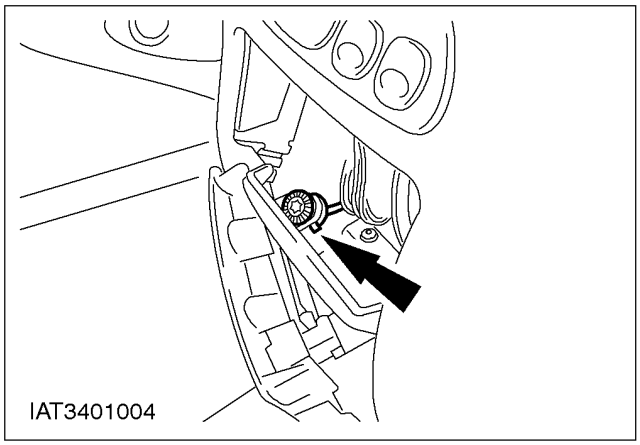

7. Unclip the air distribution shaft.

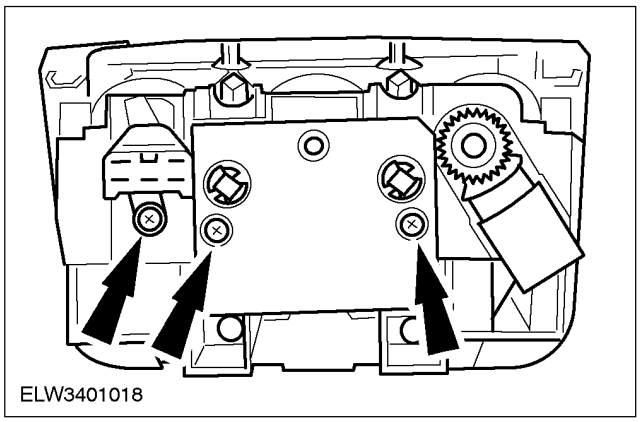

8. Remove the heater / air conditioning module and the fan operating switch.

Installation

1. Refit the components in the reverse order.
2. Install the radio. For additional information, refer to Section 415-01.

REMOVAL AND INSTALLATION (CONTINUED)

3. Connect the battery ground lead.
   - Enter the radio keycode.
   - Reprogram the preset radio stations.
   - Reset the clock.
   - Carry out a road test to enable the PCM to collect data.
4. Check that the heater / air conditioning operates correctly.

REMOVAL AND INSTALLATION

Blower Motor Switch (33 574 0)

Removal

1. Standard preparatory measures
   - Ask for the radio keycode.
   - Make a note of the preset radio stations.
   - Place protective covers over the wings.

⚠ CAUTION: Disconnect the battery ground lead.

2. Remove the radio. For additional information, refer to Section 415-01.

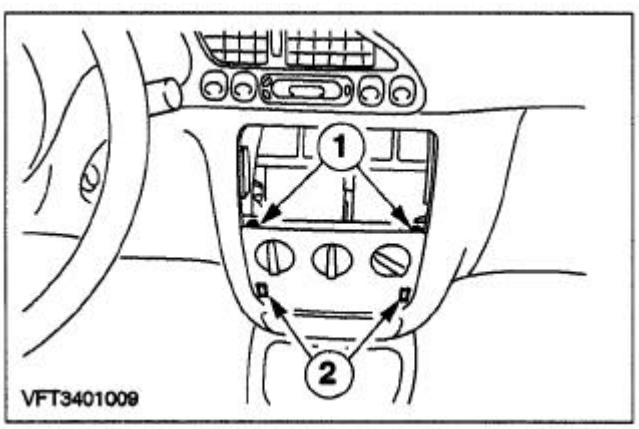

3. Remove the bezel.
   1. Remove the bolts.
   2. Unclip the clips.
   - Pull the bezel forwards.
   - Disconnect the plug.

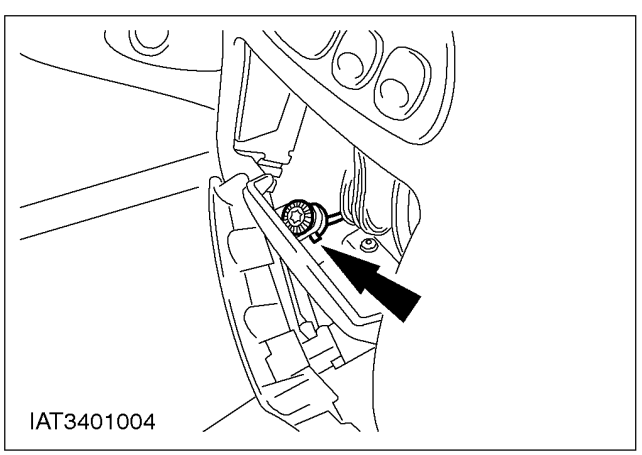

4. Unclip the air distribution shaft.

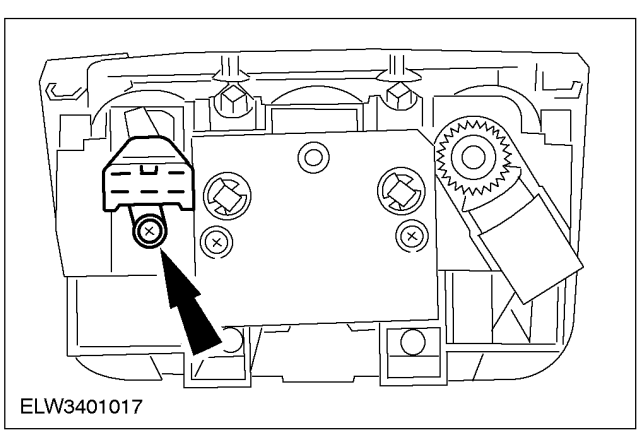

5. Remove the fan motor operating switch.

REMOVAL AND INSTALLATION (CONTINUED)

Installation

1. Refit the components in the reverse order.
2. Install the radio. For additional information, refer to Section 415-01.
3. Standard finishing operations.
   - Connect the battery ground lead.
   - Remove the protective covers.
   - Enter the radio keycode.
   - Reprogram the preset radio stations.
   - Reset the clock.
4. Check the operation of the heater.

REMOVAL AND INSTALLATION

Air Inlet Blend Door Actuator (34 606 0)

Removal

NOTE: "Observe Health and Safety Regulations". For additional information, refer to Section 100-00.

1. Standard preparatory measures
   - Make a note of the radio keycode.
   - Make a note of the preset radio stations.
2. Disconnect the battery ground cable.
3. Remove the instrument panel. For additional information, refer to Section 501-12.
4. Remove the actuator.
   1. Disconnect the plug.
   2. Remove the three screws.

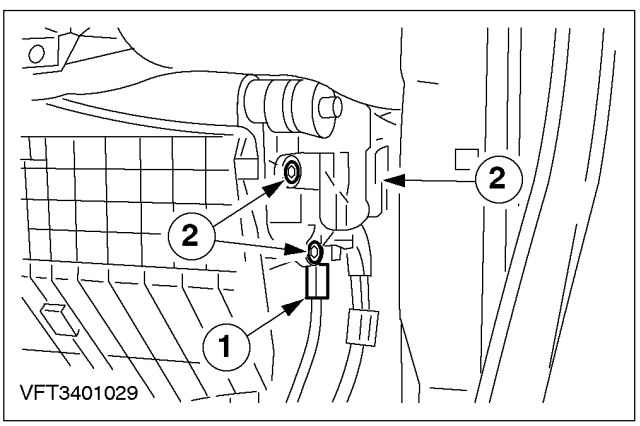

Installation

1. Install the components in reverse order.
2. Connect the battery ground cable.
3. Standard finishing operations.
   - Enter the radio keycode.
   - Reprogram the preset radio stations.
   - Check operation of the actuator.

SECTION 413-01 Instrument Cluster

VEHICLE APPLICATION: 2002 Bantam

SUBJECT **PAGE**

DESCRIPTION AND OPERATION

Instrument Cluster - With Tachometer 413-01-2/3
- Instrument Cluster Gauges 413-01-3
- Warning Indicators - With Tachometer 413-01-3/4
- Without Tachometer 413-01-4

DIAGNOSIS AND TESTING

Instrument Cluster 413-01-5
- Inspection and Verification – All Vehicles 413-01-5
- Symptom Chart - (With or Without Tachometer) 413-01-5/6
- Self-Diagnostic Mode 413-01-6/8
- Worldwide Diagnostic System (WDS) Tester Diagnostics – All Vehicles 413-01-8
- Instrument Cluster Diagnostic Trouble Code (DTC) Index 413-01-8
- Pinpoint Tests 413-01-9A/18

REMOVAL AND INSTALLATION

Instrument Cluster ..... (33 214 0) 413-01-19/21
Instrument Cluster Printed Circuit ..... (33 224 4) 413-01-22

SPECIFICATIONS

Specifications 413-01-26
- Torque Specifications 413-01-26

DESCRIPTION AND OPERATION

Instrument Cluster

With Tachometer

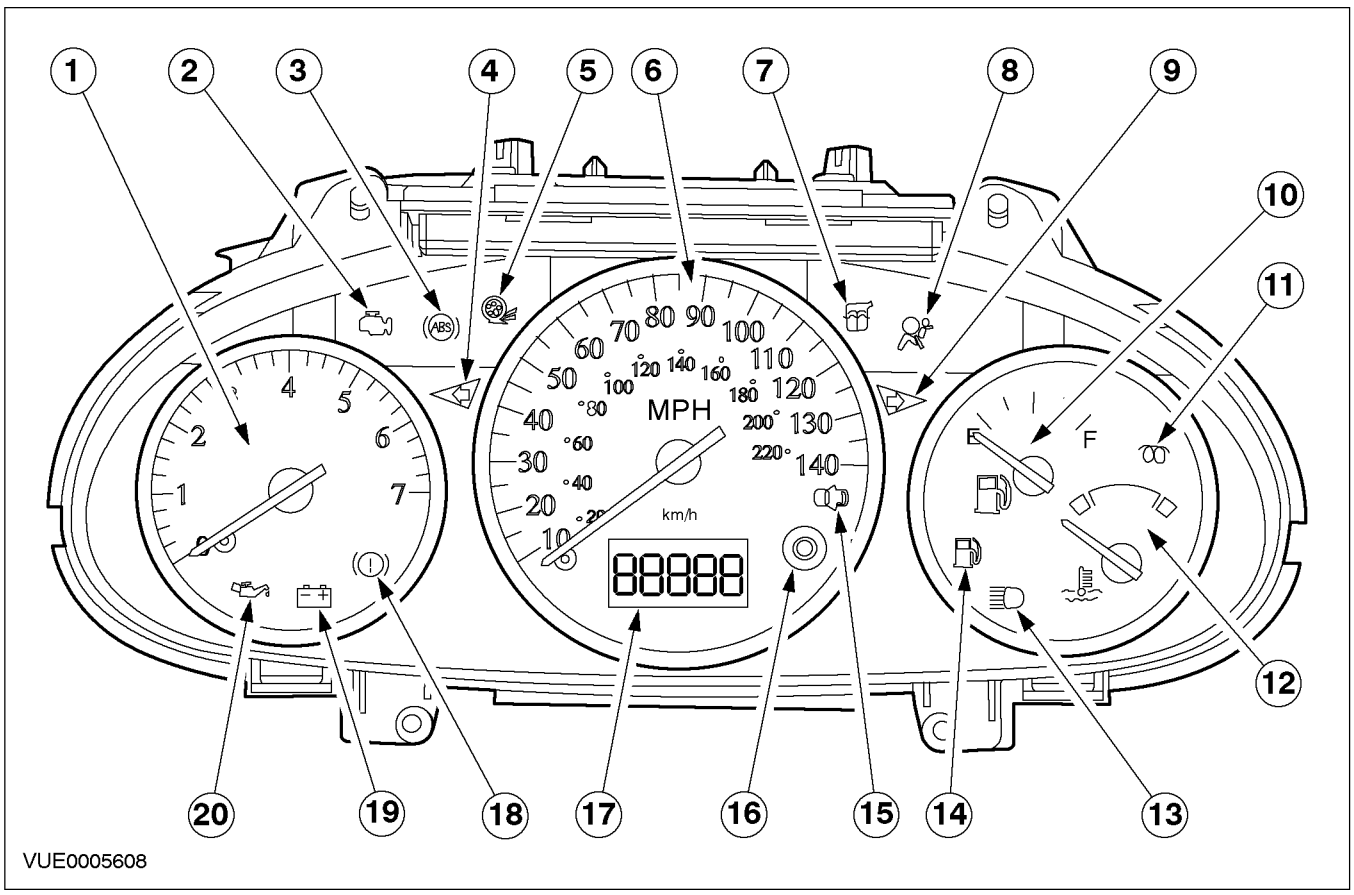

Item	Description
1	Tachometer
2	Malfunction Indicator Lamp (MIL) - not specified for South Africa.
3	Anti-lock Brake System (ABS) warning indicator - not specified for South Africa.
4	Turn signal indicator
5	Traction control indicator - not specified for South Africa.
6	Speedometer
7	Low coolant warning indicator
8	Air bag warning indicator
9	Turn signal indicator
10	Fuel gauge
11	Glow plug indicator (Diesel)
12	Temperature gauge
13	High beam indicator

Item	Description
14	Low fuel indicator
15	Door ajar indicator - not specified for South Africa.
16	Trip meter reset button
17	Odometer
18	Parking brake/brake warning indicator
19	Charge warning indicator
20	Low oil pressure warning indicator

The instrument cluster fitted to the 2002 Bantam is electronic. The instrument cluster consists of gauges, indicators and warning indicators and has a built-in self-diagnostic mode.

When the ignition switch is in position II with the engine off, the instrument cluster carries out a display test to verify that the warning indicators and monitored systems are functioning correctly. The warning indicators that illuminate during this display test are:

DESCRIPTION AND OPERATION (CONTINUED)

- Air bag system
- Charging system
- Park brake and low fluid level
- Low fuel
- Low oil pressure

Other indicators that are incorporated into the instrument cluster are:

- High beam
- Low washer fluid

Instrument Cluster Gauges

Engine Coolant Temperature Gauge

Temperature information is received by the instrument cluster from the engine coolant temperature (ECT) sensor or the gauge sender for diesel. If the engine coolant temperature signal is missing or invalid, the engine coolant temperature gauge will indicate a default position below cold.

Fuel Gauge

The instrument cluster receives the fuel level information from the fuel sender unit (part of the fuel pump module). This is a variable resistor, which varies the ground supply to the gauge, therefore altering the gauge position. If no input signal or a faulty input signal is received, the fuel gauge will indicate a default position below empty. The fuel level input signal is dampened to prevent movement of fuel in the tank affecting the gauge position.

Speedometer

The instrument cluster receives vehicle speed information from the vehicle speed sensor (VSS), which is then indicated in km/h at the gauge. If there is no input from the VSS the instrument cluster defaults the speedometer to zero.

Odometer

The instrument cluster records the total mileage of the vehicle using information that is received from the VSS. This total mileage is shown by a liquid crystal display (LCD) built into the speedometer. If VSS information is not received the LCD will not increment. Incorporated into the odometer is a tripmeter, which is reset by using the trip meter reset button.

Tachometer

The instrument cluster receives tachometer information from the powertrain control module (PCM). If the engine speed (RPM) information sent to the instrument cluster is invalid or missing, the instrument cluster will default the tachometer to zero.

Warning Indicators

Air Bag Warning Indicator

The air bag module controls the air bag warning indicator. For additional information, refer to Section 501-20B.

Brake System Warning Indicator

The brake system warning indicator has multiple functions. The warning indicator illuminates if the brake fluid level is low or if the parking brake is set.

Charging System Warning Indicator

The generator controls the charging system and the charging system warning indicator. The generator is therefore responsible for turning the warning indicator OFF when the system is running, and illuminating it under fault conditions (including stall conditions). For additional information, refer to Section 414-00.

The High Beam Indicator

The high beam indicator is hardwired directly from the multifunction switch. When the high beam is activated, the indicator illuminates.

Low Oil Pressure Warning Indicator

The low oil pressure warning indicator is hardwired to the engine oil pressure switch. When the ignition is switched to position II, the low oil pressure indicator illuminates. After the engine is started and the oil pressure rises to a safe level, the oil pressure switch opens and switches off the oil pressure warning indicator.

Low Washer Fluid Indicator

The low washer fluid indicator illuminates when the washer fluid falls below a preset level.

DESCRIPTION AND OPERATION (CONTINUED)

Low Fuel Warning Indicator

The low fuel warning indicator illuminates when the fuel level falls below a preset level.

Without Tachometer

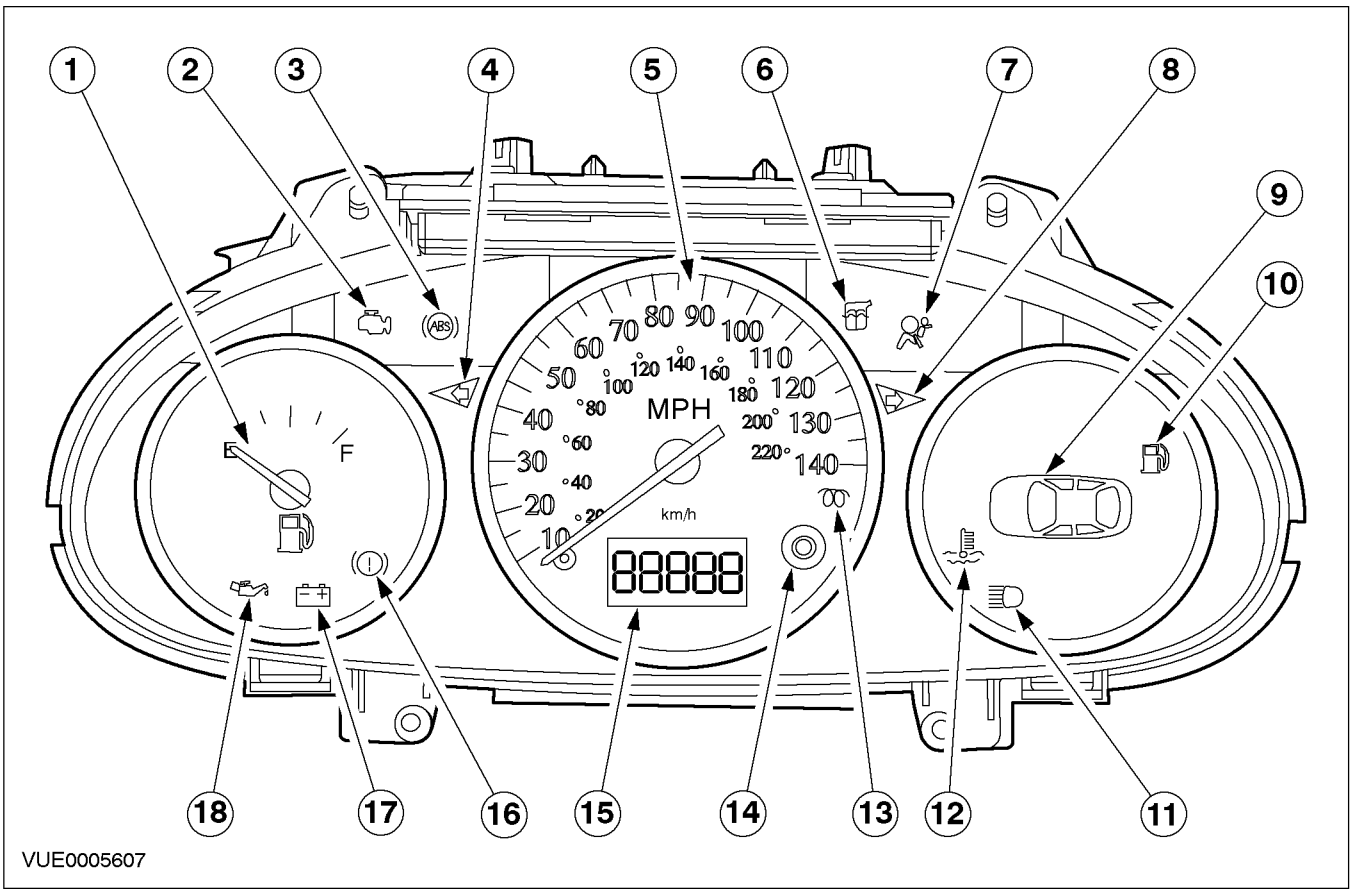

Item	Description
1	Fuel gauge
2	Malfunction indicator lamp (MIL) - not specified for South Africa.
3	Anti-lock brake system (ABS) warning indicator - not specified for South Africa.
4	Turn signal indicator
5	Speedometer
6	Low washer fluid indicator
7	Air bag warning indicator
8	Turn signal indicator
9	Door ajar indicator - not specified for South Africa
10	Low fuel indicator
11	High beam indicator

Item	Description
12	Temperature warning indicator
13	Glow plug indicator (Diesel)
14	Trip meter reset button
15	Odometer
16	Parking brake / brake warning indicator
17	Charge warning indicator
18	Low oil pressure warning indicator

The instrument cluster without tachometer is fitted to vehicles with low option content. This instrument cluster differs from the high option vehicles as follows:

- The Tachometer is removed.
- The Temperature gauge is replaced by a warning indicator, which illuminates if the engine overheats.

DIAGNOSIS AND TESTING

Instrument Cluster

Refer to Wiring Diagrams Petrol and Diesel Cell: 41301, Instrument Cluster for schematic and connector information.

Inspection and Verification – All Vehicles

1. Verify the customer concern by operating the system.
2. Visually inspect for obvious signs of mechanical or electrical damage.

Visual Inspection Chart

Mechanical	Electrical
• Damaged engine oil filter • Low engine oil level • Stuck engine temperature gauge • Door adjustment • Speedometer cable (up to 01/99) • Low engine coolant level • Damaged coolant thermostat • Collapsed or dented fuel tank	• Fuse(s) • Input sensors • Wiring harness • Loose or corroded connector(s) • Instrument cluster

3. If an obvious cause for an observed or reported concern is found, correct the cause (if possible) before proceeding to the next step.
4. If the concern is not visually evident, verify the symptom and refer to the Symptom Chart applicable to the vehicle build date.

Symptom Chart – (With or Without Tachometer)

Symptom Chart

Condition	Possible Sources	Action
•Incorrect fuel gauge indication	•Circuit. •Fuel pump module. •Instrument cluster.	•Go To Pinpoint Test A.
•The speedometer is inoperative	•Circuit. •Vehicle speed sensor. •Instrument cluster.	•Go To Pinpoint Test B.
•Incorrect temperature gauge indication	•Circuit. •Engine coolant temperature (ECT) sensor (petrol). •Gauge sender unit (diesel). •PCM. •Instrument cluster.	•Go To Pinpoint Test C.
•The tachometer is inoperative	•Circuit. •PCM. •Instrument cluster.	•Go To Pinpoint Test D.
•The high beam indicator is inoperative	•Circuit. •High beam indicator. •Instrument cluster. •Switch.	•Go To Pinpoint Test E.

DIAGNOSIS AND TESTING (CONTINUED)

Condition	Possible Sources	Action
•The low oil pressure warning indicator is inoperative	•Circuit. •Oil pressure switch. •Low oil pressure warning indicator. •Instrument cluster.	•Go To Pinpoint Test F.
•The brake warning indicator is inoperative	•Circuit. •Brake warning indicator LED. •Low brake fluid level switch. •Park brake switch. •ABS module (if equipped). •Instrument cluster.	•Go To Pinpoint Test G.
•The low fuel indicator is inoperative	•Circuit. •Low fuel warning indicator. •Fuel pump module •Instrument cluster.	•Go To Pinpoint Test H.
•The low fuel indicator is always on	•Circuit. •Low fuel level. •Fuel pump module. •Instrument cluster.	•Go To Pinpoint Test A.
•The charging system warning indicator is inoperative	•Circuit. •Generator. •Charging system warning indicator. •Instrument cluster.	•Go To Pinpoint Test J.
•The charging system warning indicator is always on	•Circuit. •Charging system. •Accessory drive belt. •Instrument cluster.	•Use WDS to diagnose.
•The air-bag indicator is always on	•Circuit. •Air bag module. •Instrument cluster.	•Use WDS to diagnose.
•The odometer display does not increment	•Circuit. •Vehicle speed sensor (VSS). •Instrument cluster.	•Go To Pinpoint Test B.

Self-Diagnostic Mode

1. To select the instrument cluster Self-Diagnostic Mode depress and hold the trip meter reset button then turn the ignition switch to position II.
2. Release the trip meter reset button when TEST is displayed on the odometer LCD. This will take between five and eight seconds.
3. The instrument cluster will enter the gauge sweep test.
4. To navigate to the following tests (see chart), depress the trip meter reset button.
5. The Self-Diagnostic Mode is deactivated when the ignition is turned to the position 0.
6. If the Self-Diagnostic Mode cannot be accessed, use WDS to diagnose the PCM and the ISO link.

NOTE: Additional tests are available after the following Self-Diagnostic Mode tests, but are not useful for diagnostics.

DIAGNOSIS AND TESTING

Self-Diagnostic Mode

Test	Odometer Display	Gauge/Indicator/Display Tested	Description
1. Gauge sweep	GAGE	Tachometer, speedometer, temperature and fuel	All gauges go through an up and down sweep smoothness check, which takes approximately five seconds.
2. Fill in all LCD	All segments illuminated	Odometer LCD	Fills in LCD.
3. Indicator LEDs	Bulb	Indicators and warning indicators	Illuminates all the warning indicators that are controlled by the instrument cluster.
4. ROM level	r XX PASS or FAIL	Instrument cluster read only memory (ROM)	Displays the instrument cluster ROM revision level.
5. Non-volatile memory level	EE XX PASS or FAIL	Instrument cluster non-volatile memory	Displays the instrument cluster non-volatile memory condition.
6. DTC	dtc or XXXX	Diagnostic trouble codes (DTCs)	To list the DTCs stored, press the RESET button. REFER to the instrument cluster (DTC) index. The DTC codes will scroll through if there is more than 1.
7. Vehicle speed mph	EXXX.X	Speedometer	Displays the speed signal input in mph.
8. Vehicle speed km/h	XXX.X	Speedometer	Displays the speed signal input in km/h.
9. Engine speed	t XXXX	Tachometer	Displays the tachometer input signal (RPM).
10. Fuel volume	F XXX	Fuel sender system	Displays the fuel volume signal input.
11. Engine type	Eng -X	PCM engine information	Displays the engine type.
12. Engine coolant temperature	XXXC	Engine coolant temperature	Displays the engine coolant temperature signal input.
13. Battery voltage	batXX.X	Battery Voltage	Displays battery voltage input.
14. Illumination	IL-[H/L]	Instrument cluster and instrument panel illumination	Displays instrument cluster and panel illumination.
15. LCD dimming	LCdXXX	Odometer display	Displays LCD dimming (18%-100%).
16. Crank sense	Cr -X	Crank sense circuit	Displays the crankshaft sensor input to the instrument cluster.
17. Ignition sense	IG -X	Ignition sense circuit	Displays the ignition input to the instrument cluster.
18. Washer fluid input	LS -X	Status of the low washer fluid level switch	Displays low washer fluid switch input.

DIAGNOSIS AND TESTING

7. If the concern is still evident after the self diagnostic mode refer to the Symptom Chart

Worldwide Diagnostic System (WDS) Tester Diagnostics – All Vehicles

1. REFER to the Instrument Cluster Diagnostic Trouble Code (DTC) Index.(BELOW) If the DTCs retrieved are related to the concern then carry out the relevant action in the DTC index.
2. If no DTCs related to the concern are retrieved, refer to the Symptom Chart applicable to the vehicle build date to continue diagnostics.

Instrument Cluster Diagnostic Trouble Code (DTC) Index

Self-Diagnostic Mode Displayed DTC	WDS DTC	Description	Source	Action
9201	B1201	Fuel pump module circuit open or short to B+	Instrument cluster	Go To Pinpoint Test A.
9204	B1204	Fuel pump module short to ground	Instrument cluster	Go To Pinpoint Test A.
9342	B1342	Instrument cluster electronic control unit is defective	Instrument cluster	Use WDS to diagnose.
9317	B1317	Battery voltage high (greater than 16V)	Instrument cluster	Use WDS to diagnose.
9318	B1318	Battery voltage low (less than 8V)	Instrument cluster	Use WDS to diagnose.
9359	B1359	Ignition Run/Acc circuit failure	Instrument cluster	Use WDS to diagnose.
A143	B2143	Instrument cluster non-volatile memory failure	Instrument cluster	Use WDS to diagnose.
0115	P0115	ECT sensor circuit failure	Instrument cluster	Use WDS to diagnose.

Pinpoint Tests

PINPOINT TEST A: INCORRECT FUEL GAUGE INDICATION

A1: TEST OPERATION OF FUEL GAUGE 413-01-9A

A2: VERIFY FAULT OF FUEL GAUGE 413-01-9B

A3: TEST FOR VALID INPUT FROM THE FUEL PUMP MODULE 413-01-9B

A4: TEST FOR SHORT TO GROUND ON FUEL PUMP MODULE UNIT 413-01-9B

A5: TEST CIRCUIT 8-GA7 (WH/RD) FOR SHORT TO GROUND 413-01-9B/10

A6: RETRIEVE ANY STORED DTCS 413-01-10

A7: TEST CIRCUIT 8-GA7 (WH/RD) FOR OPEN 413-01-10/11

A8: TEST CIRCUIT 31-GA7 (BK) FOR SHORT TO GROUND 413-01-11

PINPOINT TEST B: THE SPEEDOMETER IS INOPERATIVE

B1: TEST OPERATION OF SPEEDOMETER 413-01-11

B2: RETRIEVE ANY STORED DTCS 413-01-11

B3: TEST VEHICLE SPEED SENSOR (VSS) OUTPUT 413-01-12

PINPOINT TEST C: INCORRECT TEMPERATURE GAUGE INDICATION

C1: TEST OPERATION OF TEMPERATURE GAUGE 413-01-12

C2: RETRIEVE ANY STORED DTCS 413-01-12

C3: TEST OPERATION OF THE ENGINE COOLANT TEMPERATURE SENSOR 413-01-13

PINPOINT TEST D: THE TACHOMETER IS INOPERATIVE

D1: TEST OPERATION OF THE TACHOMETER 413-01-13

D2: RETRIEVE ANY STORED DTCS 413-01-13

PINPOINT TEST E: THE HIGH BEAM INDICATOR IS INOPERATIVE

E1: CHECK OPERATION OF HIGH BEAM 413-01-13/14

E2: CHECK FOR VOLTAGE ON CIRCUIT 14-LE11 (VT/WH) 413-01-14

E3: CHECK CIRCUIT 31-WC43B (BK) FOR GROUND ON HIGH BEAM INDICATOR 413-01-14

PINPOINT TEST F: THE LOW OIL PRESSURE INDICATOR IS INOPERATIVE

F1: TEST OPERATION OF LOW OIL PRESSURE WARNING INDICATOR 413-01-15

F2: CHECK OPERATION OF OIL PRESS RE SWITCH 413-01-15

PINPOINT TEST G: THE BRAKE WARNING INDICATOR IS INOPERATIVE – FROM 01/99 ONWARDS

G1: TEST OPERATION OF BRAKE WARNING INDICATOR 413-01-15

G2: CHECK OPERATION OF PARK BRAKE WARNING INDICATOR 413-01-16

G3: CHECK OPERATION OF BRAKE FLUID LEVEL SWITCH 413-01-16

G4: CHECK OPERATION OF PARKING BRAKE SWITCH 413-01-16

Pinpoint Tests

G5: CHECK OPERATION OF PARKING BRAKE SWITCH 413-01-17

PINPOINT TEST H: THE LOW FUEL WARNING INDICATOR IS INOPERATIVE – FROM 01/99 ONWARDS

H1: TEST OPERATION OF WARNING INDICATOR..... 413-01-17

PINPOINT TEST J: THE CHARGING SYSTEM WARNING INDICATOR IS INOPERATIVE – FROM 01/99 ONWARDS

J1: TEST OPERATION OF CHARGING SYSTEM WARNING INDICATOR 413-01-18

DIAGNOSIS AND TESTING (CONTINUED)

Pinpoint Tests

PINPOINT TEST A: INCORRECT FUEL GAUGE INDICATION

CONDITIONS	DETAILS/RESULTS/ACTIONS
A1: TEST OPERATION OF FUEL GAUGE	
	1 Select the instrument cluster self-diagnostic mode test 1 – gauge sweep. • Does the fuel gauge carry out a gauge sweep? ☐ **Yes** GO TO **A2** ☐ **No** INSTALL a new instrument cluster. TEST the system for normal operation.

DIAGNOSIS AND TESTING (CONTINUED)

CONDITIONS	DETAILS/RESULTS/ACTIONS
A2: VERIFY FAULT OF FUEL GAUGE	
1	• Does the fuel gauge pointer indicate below the empty (default position)? ☐ **Yes** GO TO **A3** ☐ **No** GO TO **A6**
A3: TEST FOR VALID INPUT FROM THE FUEL PUMP MODULE	
	1 Select the Instrument cluster self-diagnostic mode test 10 – fuel volume input test. • Is the value F010 or less? ☐ **Yes** GO TO **A4** ☐ **No** If the value is between F011 and F254 GO TO **A6** If the value is F255 GO TO **A7**
A4: TEST FOR SHORT TO GROUND ON FUEL PUMP MODULE UNIT	
1 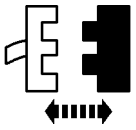 Fuel Pump Module C88	2 Leave the instrument cluster in self-diagnostic mode test 10 – fuel volume input test. • Does the fuel input value change to F255 when the fuel pump module is disconnected? ☐ **Yes** INSTALL a new fuel pump module. TEST the system for normal operation. ☐ **No** GO TO **A5**
A5: TEST CIRCUIT 8-GA7 (WH/RD) FOR SHORT TO GROUND	
1 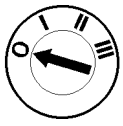 2 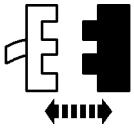 Instrument Cluster C39	

DIAGNOSIS AND TESTING (CONTINUED)

CONDITIONS	DETAILS/RESULTS/ACTIONS
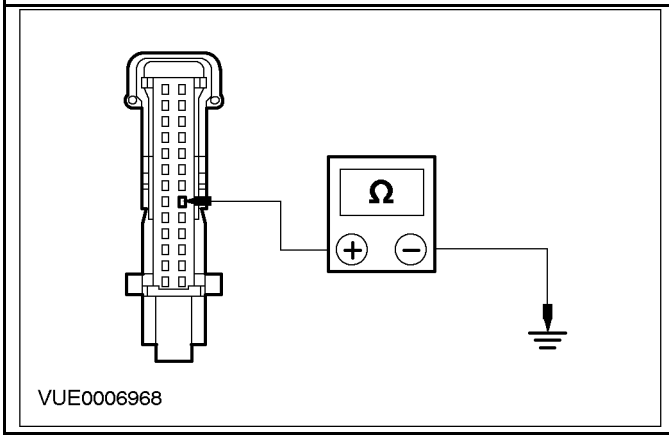	3 Measure the resistance between the instrument cluster C39 pin 24, circuit 8-GA7 (WH/RD) and ground. • Is the resistance less than 5 ohms? ☐ **Yes** REPAIR circuit 8-GA7 (WH/RD) TEST the system for normal operation. ☐ **No** INSTALL a new instrument cluster. TEST the system for normal operation.
A6: RETRIEVE ANY STORED DTCS	
1 2 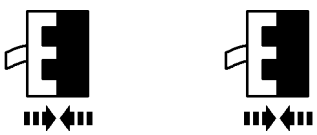 Instrument Cluster C39 — Fuel Pump Module C88	3 Select the Instrument cluster self-diagnostic mode test 6 – list DTCs stored. • Are there any DTCs stored? ☐ **Yes** REFER to the Instrument Cluster DTC Index. ☐ **No** INSTALL a new fuel pump module. REFER to Section 310-01. TEST the system for normal operation.
A7: TEST CIRCUIT 8-GA7 (WH/RD) FOR OPEN	
1 2 3 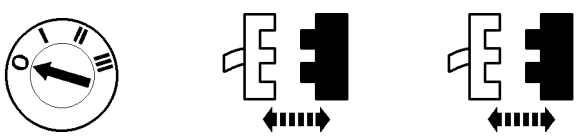 Instrument Cluster C39 — Fuel Pump Module C88	

DIAGNOSIS AND TESTING (CONTINUED)

CONDITIONS	DETAILS/RESULTS/ACTIONS
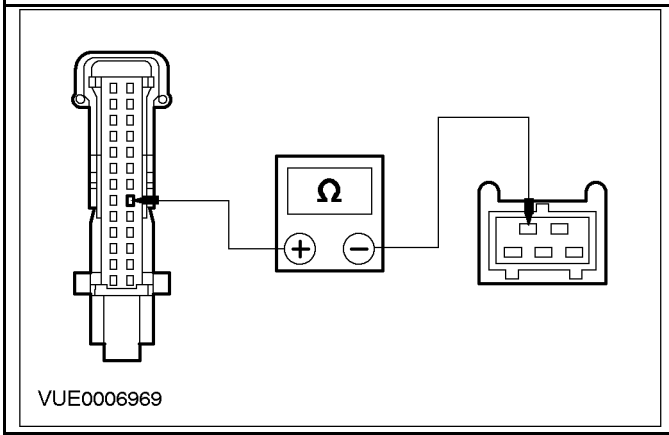	**4** Measure the resistance between the instrument cluster C39 pin 24, circuit 8-GA7 (WH/RD) and the fuel pump module C88 pin 5. • Is the resistance less than 5 ohms? ☐ **Yes** GO TO **A8** ☐ **No** REPAIR circuit 8-GA7 (WH/RD). TEST the system for normal operation.
A8: TEST CIRCUIT 31-GA7 (BK) FOR SHORT TO GROUND	
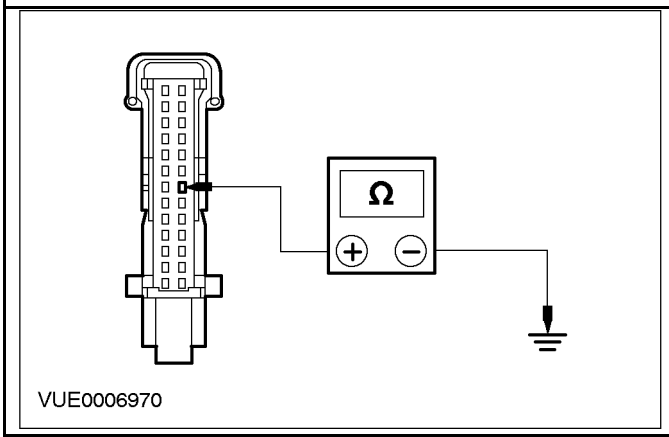	**1** Measure the resistance between instrument cluster C39 pin 23, circuit 31-GA7 (BK) and ground. • Is the resistance less than 5 ohms? ☐ **Yes** INSTALL a new fuel pump module. TEST system for normal operation. ☐ **No** REPAIR circuit 31-GA7 (BK). TEST the system for normal operation.

PINPOINT TEST B: THE SPEEDOMETER IS INOPERATIVE

CONDITIONS	DETAILS/RESULTS/ACTIONS
B1: TEST OPERATION OF SPEEDOMETER	
	1 Select the instrument cluster self-diagnostic mode test 1 – gauge sweep. • Does the speedometer carry out a gauge sweep? ☐ **Yes** GO TO **B2** ☐ **No** INSTALL a new instrument cluster. TEST the system for normal operation.
B2: RETRIEVE ANY STORED DTCS	
	1 Select the instrument cluster self-diagnostic mode test 6 – list DTCs stored. • Are there any DTCs stored? ☐ **Yes** REFER to the Instrument Cluster DTC Index. ☐ **No** GO TO **B3**

DIAGNOSIS AND TESTING (CONTINUED)

CONDITIONS	DETAILS/RESULTS/ACTIONS
B3: TEST VEHICLE SPEED SENSOR (VSS) OUTPUT	
	1 Select the instrument cluster self-diagnostic mode test 7 for mph or self-diagnostic mode test 8 for km/h – speed signal input. - During this test, the vehicle has to be driven in order that the vehicle speed sensor input can be monitored. • Does the vehicle speed signal vary according to vehicle speed? ☐ **Yes** INSTALL a new instrument cluster. TEST the system for normal operation. ☐ **No** USE WDS to diagnose the PCM, the ISO link and the VSS.

PINPOINT TEST C: INCORRECT TEMPERATURE GAUGE INDICATION

CONDITIONS	DETAILS/RESULTS/ACTIONS
C1: TEST OPERATION OF TEMPERATURE GAUGE	
	1 Select the instrument cluster self-diagnostic mode test 1 – gauge sweep. • Does the temperature gauge carry out a gauge sweep? ☐ **Yes** GO TO **C2** ☐ **No** INSTALL a new instrument cluster. TEST the system for normal operation.
C2: RETRIEVE ANY STORED DTCS	
	1 Select the instrument cluster self-diagnostic mode test 6 – retrieve stored DTCs. • Are there any stored DTCs? ☐ **Yes** REFER to the Instrument Cluster DTC Index. ☐ **No** GO TO **C3**

DIAGNOSIS AND TESTING (CONTINUED)

CONDITIONS	DETAILS/RESULTS/ACTIONS
C3: TEST OPERATION OF THE ENGINE COOLANT TEMPERATURE SENSOR	
	1 Select the instrument cluster self-diagnostic mode test 11 – engine coolant temperature signal input. - Check the input when the engine is cold and then when the engine is warm. • Is there an input from the engine coolant temperature sensor? ☐ **Yes** USE WDS to diagnose the PCM and the ISO link. ☐ **No** INSTALL a new engine coolant temperature sensor. TEST the system for normal operation.

PINPOINT TEST D: THE TACHOMETER IS INOPERATIVE

CONDITIONS	DETAILS/RESULTS/ACTIONS
D1: TEST OPERATION OF THE TACHOMETER	
	1 Select the instrument cluster self-diagnostic mode test 1 – gauge sweep. • Does the tachometer carry out a gauge sweep? ☐ **Yes** GO TO **D2** ☐ **No** INSTALL a new instrument cluster. TEST the system for normal operation.
D2: RETRIEVE ANY STORED DTCS	
	1 Select the instrument cluster self-diagnostic mode test 6 – list DTCs stored. • Are there any stored DTCs? ☐ **Yes** REFER to the Instrument Cluster DTC Index. ☐ **No** USE WDS to diagnose the PCM and the ISO link.

PINPOINT TEST E: THE HIGH BEAM INDICATOR IS INOPERATIVE

CONDITIONS	DETAILS/RESULTS/ACTIONS
E1: CHECK OPERATION OF HIGH BEAM	
1	

CONTINUED

DIAGNOSIS AND TESTING (CONTINUED)

CONDITIONS	DETAILS/RESULTS/ACTIONS
	2 Place the headlamp switch in the LOW beam position. **3** Place the multifunction switch in the HIGH beam position. • Do the high beam lamps operate? ☐ **Yes** GO TO **E2** ☐ **No** DIAGNOSE the high beam lamps. REFER to Section 417-01.
E2: CHECK FOR VOLTAGE ON CIRCUIT 14-LE11 (VT/WH)	
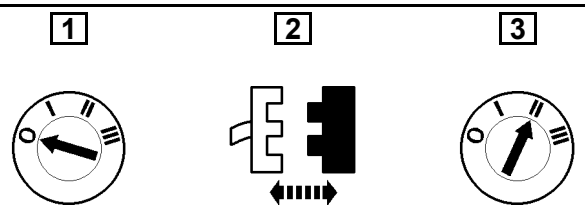 Instrument Cluster C39 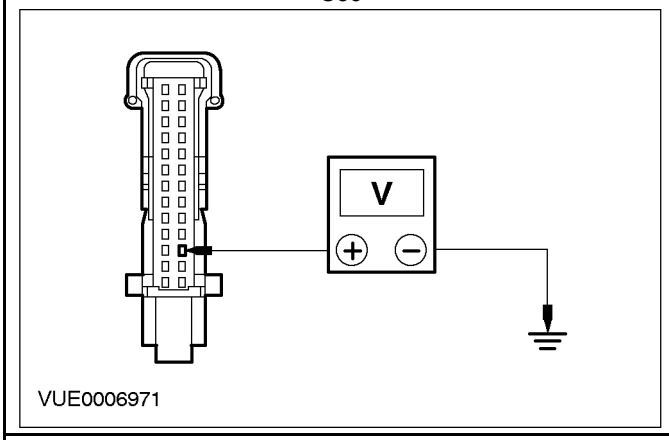	**4** Measure the voltage between the instrument cluster C39 pin 30, circuit 14-LE11 (VT/WH), harness side and ground. • Is the voltage greater than 10 volts? ☐ **Yes** GO TO **E3** ☐ **No** REPAIR circuit 14-LE11. TEST the system for normal operation.
E3: CHECK CIRCUIT 31-WC43B (BK) FOR GROUND ON HIGH BEAM INDICATOR	
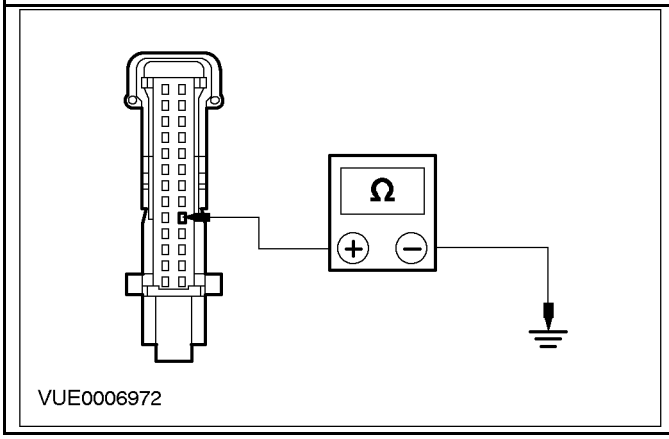	**1** Measure the resistance between the instrument cluster C39 pin 28, circuit 31-WC43B (BK), harness side and ground. • Is the resistance less than 5 ohms? ☐ **Yes** INSTALL a new instrument cluster. TEST the system for normal operation. ☐ **No** REPAIR circuit 31-WC43B. TEST the system for normal operation.

CONTINUED

DIAGNOSIS AND TESTING (CONTINUED)

PINPOINT TEST F: THE LOW OIL PRESSURE INDICATOR IS INOPERATIVE

CONDITIONS	DETAILS/RESULTS/ACTIONS
F1: TEST OPERATION OF LOW OIL PRESSURE WARNING INDICATOR	
1 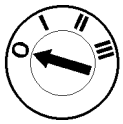 2	• Does the low oil pressure warning indicator illuminate? ☐ **Yes** GO TO **F2** ☐ **No** INSTALL a new instrument cluster. TEST the system for normal operation.
F2: CHECK OPERATION OF OIL PRESSURE SWITCH	
1 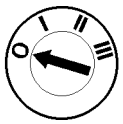 2 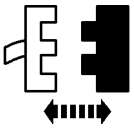 3 Oil Pressure Switch C3 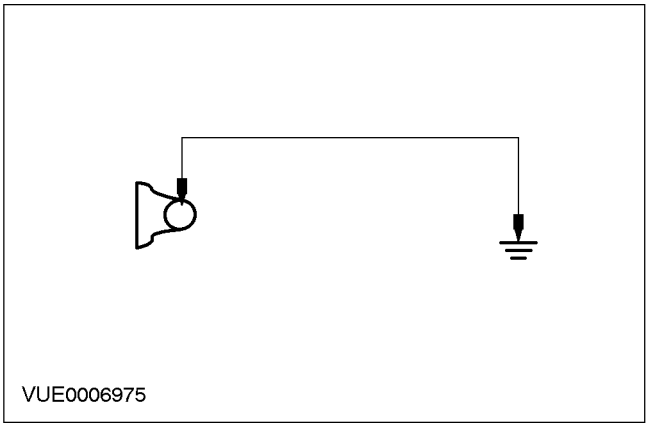 VUE0006975	4 Connect a jumper wire between the oil pressure switch C3 pin and ground. • Does the low oil pressure warning indicator illuminate? ☐ **Yes** INSTALL a new oil pressure switch. TEST the system for normal operation. ☐ **No** REPAIR circuit 31S-WD9 (BK/GN) OR 31-PC2C (BK). TEST the system for normal operation.

PINPOINT TEST G: THE BRAKE WARNING INDICATOR IS INOPERATIVE – FROM 01/99 ONWARDS

CONDITIONS	DETAILS/RESULTS/ACTIONS
G1: TEST OPERATION OF BRAKE WARNING INDICATOR	
	1 Select the instrument cluster self-diagnostic mode test 3 – illuminate warning indicators. • Does the brake warning indicator illuminate? ☐ **Yes** GO TO **G2** ☐ **No** INSTALL a new instrument cluster. TEST the system for normal operation.

CONTINUED

DIAGNOSIS AND TESTING (CONTINUED)

CONDITIONS	DETAILS/RESULTS/ACTIONS
G2: CHECK OPERATION OF PARK BRAKE WARNING INDICATOR	
	1 Make sure the parking brake is in the ON position. • Does the brake warning indicator illuminate? ☐ **Yes** GO TO **G3** ☐ **No** GO TO **G4**
G3: CHECK OPERATION OF BRAKE FLUID LEVEL SWITCH	
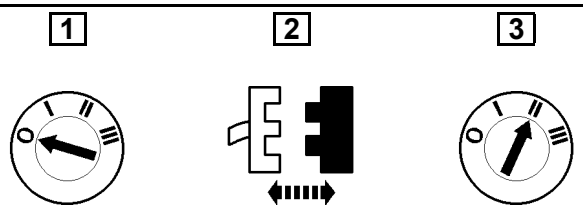 Brake Fluid Level Switch C34 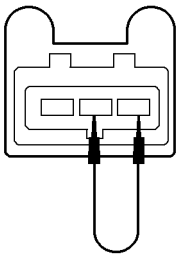 GK5550–A	**4** Connect a jumper wire between the brake fluid level switch C34 pin 2, circuit 31S-WB7 (BK/BU), harness side and C34 pin 3, circuit 31-WB7 (BK), harness side. • Does the brake warning indicator illuminate? ☐ **Yes** INSTALL a new brake fluid level switch. TEST the system for normal operation. ☐ **No** REPAIR circuit 31-WB37 (BK) or circuit 31S-WB7 (BK/BU). TEST the system for normal operation.
G4: CHECK OPERATION OF PARKING BRAKE SWITCH	
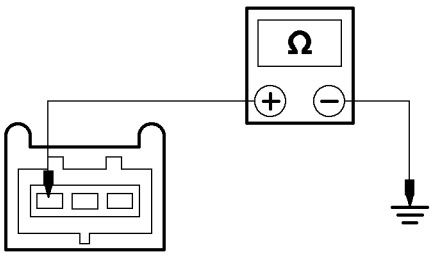 VUE0006976	**1** Make sure that the parking brake is in ON position. **2** Measure the resistance between the brake fluid level switch C34 pin 1, circuit 31S-WC18 (BK), harness side and ground. • Is the resistance less than 5 ohms? ☐ **Yes** REPAIR circuit 31S-WC18 (BK). TEST the system for normal operation. ☐ **No** GO TO **G5**

CONTINUED

DIAGNOSIS AND TESTING (CONTINUED)

CONDITIONS	DETAILS/RESULTS/ACTIONS
G5: CHECK OPERATION OF PARKING BRAKE SWITCH.	
1 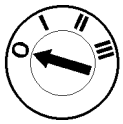 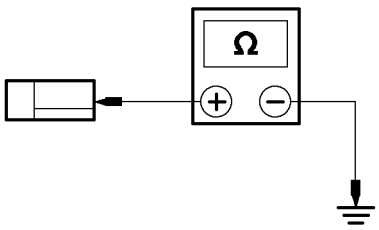 VUE0006977	2 Make sure the parking brake is in the ON position. 3 Measure the resistance between the parking brake switch C26 pin 2, circuit 31S-WC18 (BK/RD), and ground. • Is the resistance less than 5 ohms? ☐ **Yes** REPAIR circuit 31S-WC18 (BK/RD). TEST the system for normal operation. ☐ **No** INSTALL a new parking brake switch. TEST the system for normal operation.

PINPOINT TEST H: THE LOW FUEL WARNING INDICATOR IS INOPERATIVE – FROM 01/99 ONWARDS

CONDITIONS	DETAILS/RESULTS/ACTIONS
H1: TEST OPERATION OF WARNING INDICATOR	
NOTE: The low fuel warning indicator is only active when enabled by the module configuration.	
	1 Select the instrument cluster self-diagnostic mode test 3 – illuminate warning indicators. • Does the low fuel warning indicator illuminate? ☐ **Yes** GO TO **A1** ☐ **No** INSTALL a new instrument cluster. TEST the system for normal operation.

CONTINUED

DIAGNOSIS AND TESTING (CONTINUED)

PINPOINT TEST J: THE CHARGING SYSTEM WARNING INDICATOR IS INOPERATIVE – FROM 01/99 ONWARDS

CONDITIONS	DETAILS/RESULTS/ACTIONS
J1: TEST OPERATION OF CHARGING SYSTEM WARNING INDICATOR	
	1 Select the instrument cluster self-diagnostic mode test 3 – illuminate warning indicators. • Does the charging system warning indicator illuminate? ☐ **Yes** Charging system fault. REFER to Section 414-02. ☐ **No** INSTALL a new instrument cluster. TEST the system for normal operation.

CONTINUED

REMOVAL AND INSTALLATION

Instrument Cluster (33 214 0)

Removal

All vehicles

1. Remove the steering column upper shroud.

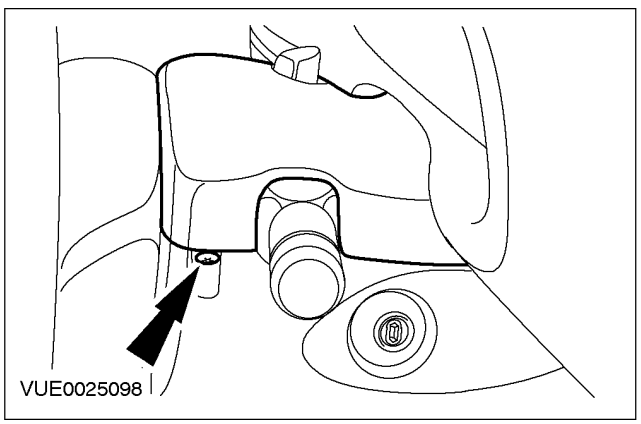

2. Remove the multi-function switch.
   1. Disconnect the multi-function switch electrical connectors.
   2. Remove the retaining screw.
   3. Remove the switch.

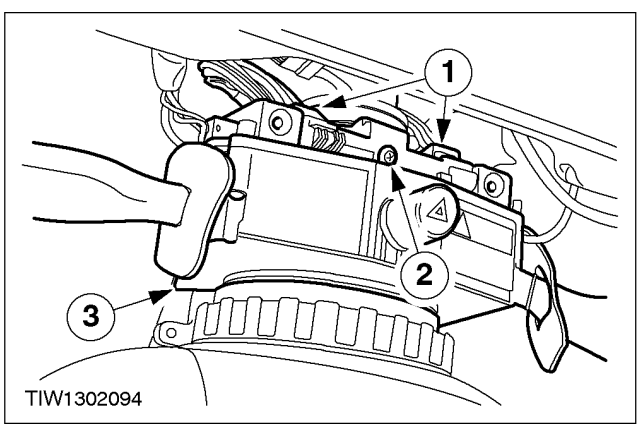

3. Lever the instrument cluster bezel retaining screw cover off.

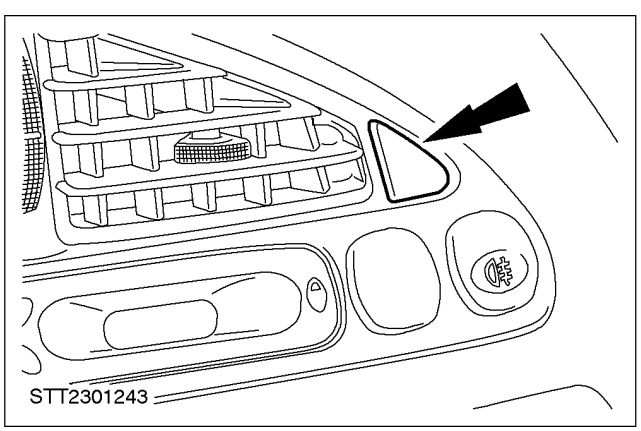

CONTINUED

REMOVAL AND INSTALLATION (CONTINUED)

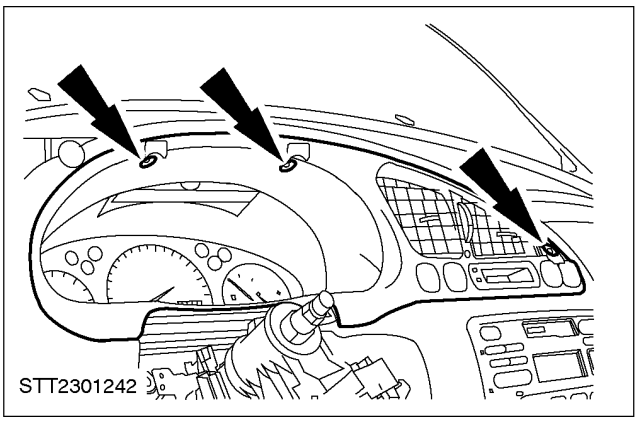

4. Remove the bezel (steering wheel shown removed for clarity).

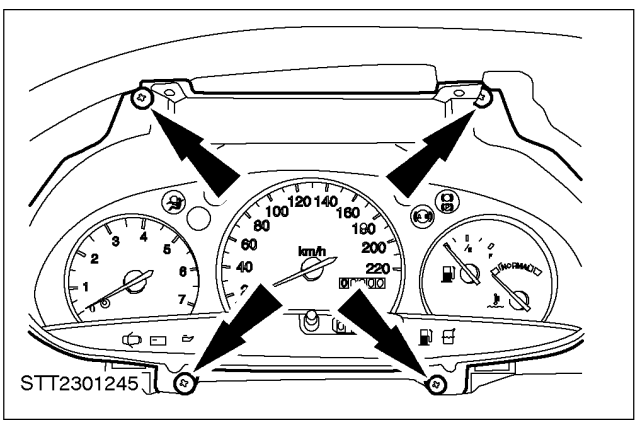

6. Remove the instrument cluster.

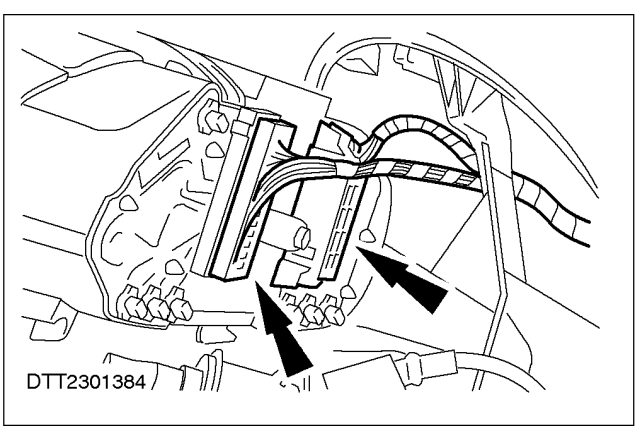

9. ⚠ **CAUTION: Do not place the instrument cluster, lens down.**
Disconnect the electrical connectors and remove the instrument cluster.

CONTINUED

REMOVAL AND INSTALLATION (CONTINUED)

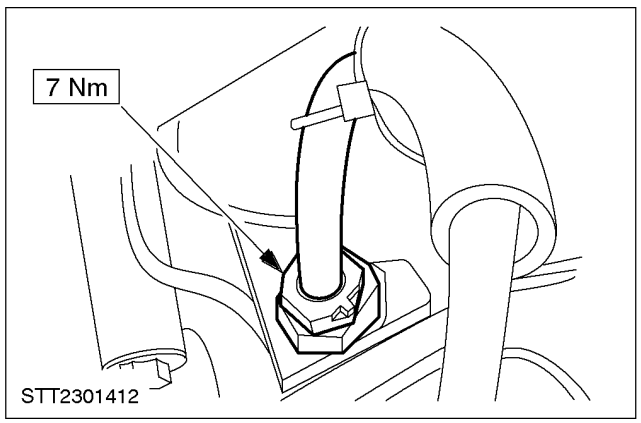

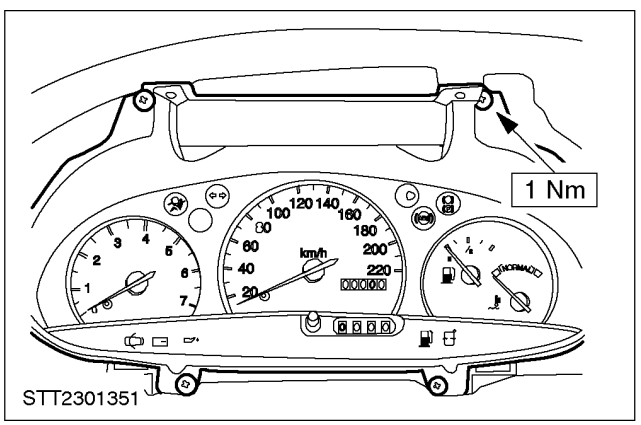

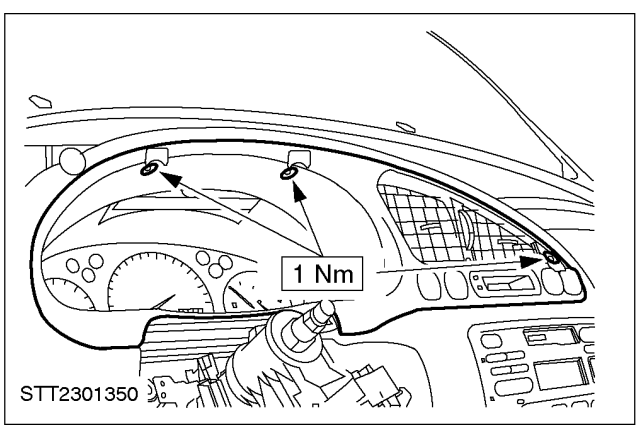

Installation

1. To install, reverse the removal procedure.

CONTINUED

REMOVAL AND INSTALLATION

Instrument Cluster Printed Circuit (33 224 4)

Removal

1. Remove the instrument cluster.
   Refer to the procedure in this section.

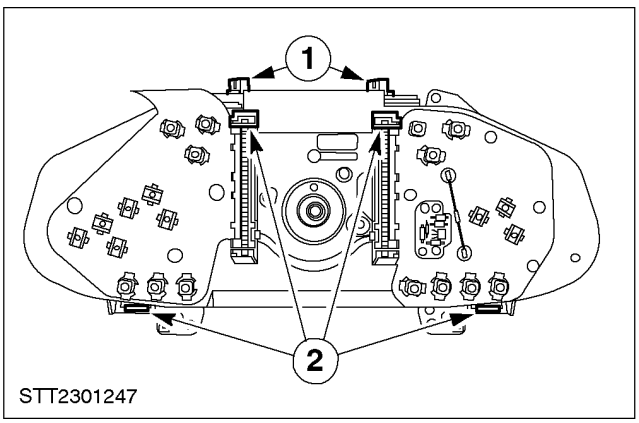

2. Remove the lens.
   1. Remove the two bulbs.
   2. Release the retaining lugs and remove the lens.

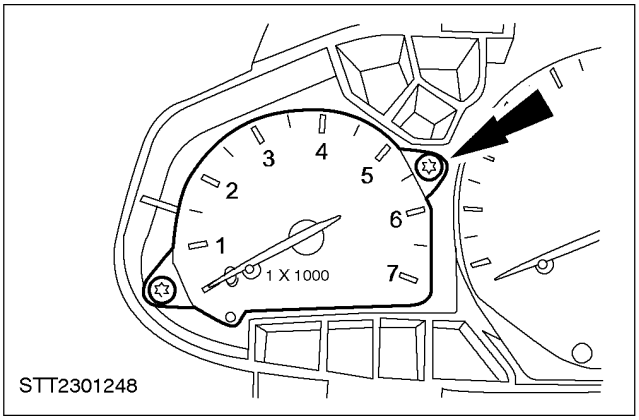

3. Remove the tachometer.

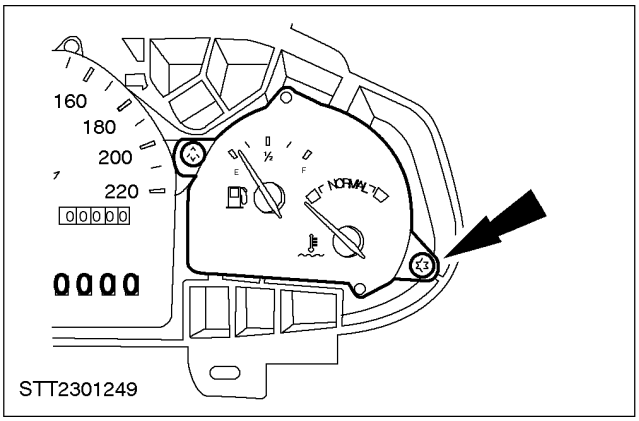

4. Remove the fuel / temperature gauge.

CONTINUED

REMOVAL AND INSTALLATION (CONTINUED)

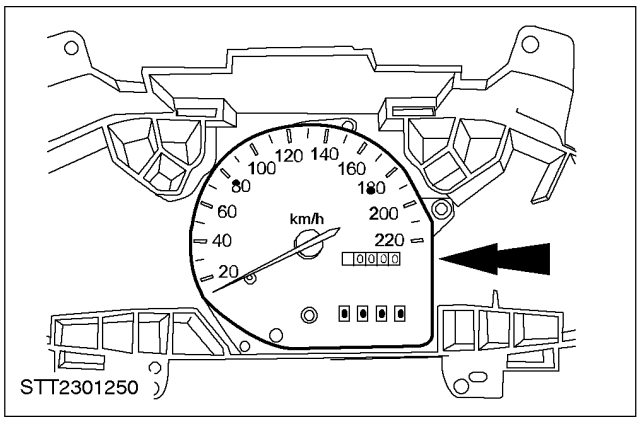

5. Remove the speedometer head.

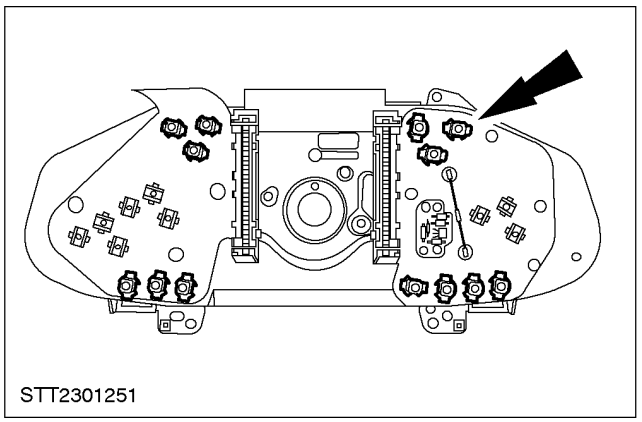

6. Remove the bulb holders.

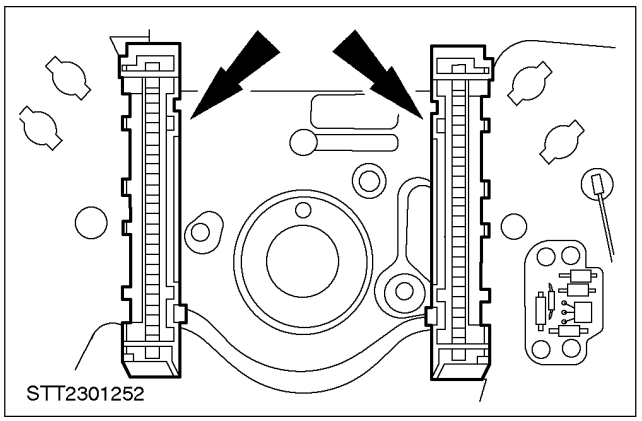

7. Remove the printed circuit electrical connector retainers.

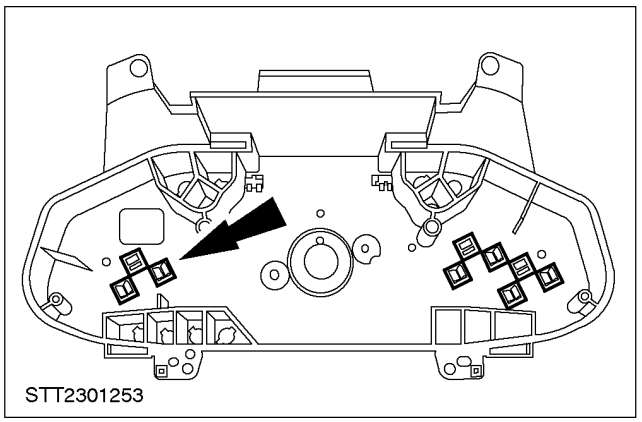

8. Release the pin contacts from the cluster moulding.

CONTINUED

REMOVAL AND INSTALLATION (CONTINUED)

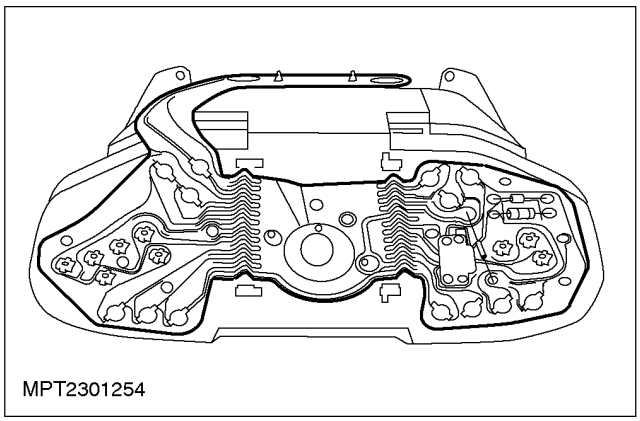
MPT2301254

9. ⚠**CAUTION: Take care not to bend or damage the printed circuit and the electrical components when lifting it off the locating dowels.**
   Remove the printed circuit.

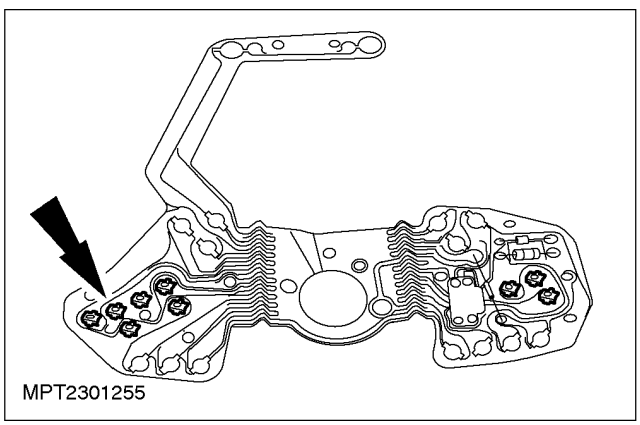
MPT2301255

10. Remove the pin contacts from the printed circuit.

Installation

⚠**CAUTION: Take care not to bend or damage the printed circuit and the electrical components when installing.**

1. To install, reverse the removal procedure.

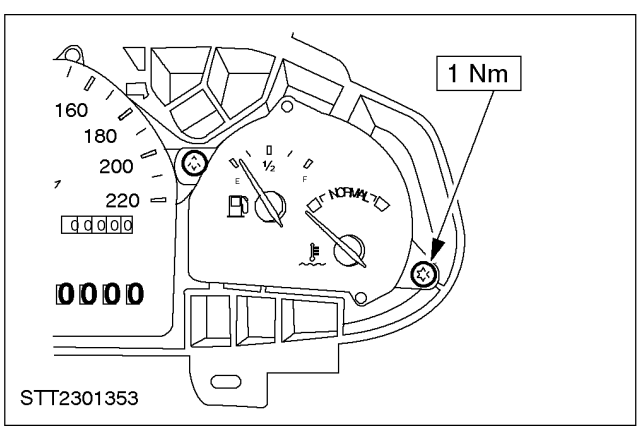

STT2301353

CONTINUED

REMOVAL AND INSTALLATION (CONTINUED)

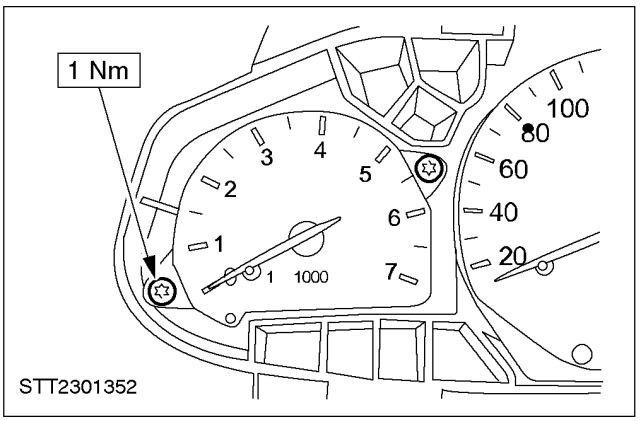

CONTINUED

SPECIFICATIONS

Torque Specifications

Description	Nm
Instrument cluster bezel retaining screws	1
Instrument cluster retaining screws	1
Speedometer cable to speed sender unit retaining nut	7
Tachometer retaining screws	1
Fuel / temperature gauge retaining screws	1

CONTINUED

SECTION 414-00 Charging System — General Information

VEHICLE APPLICATION: 2002 Bantam

SUBJECT **PAGE**

DESCRIPTION AND OPERATION

Charging System 414-00-2/3

DIAGNOSIS AND TESTING

Charging System 414-00-4
- Inspection and Verification 414-00-4
- Symptom Chart 414-00-4
- Pinpoint Tests 414-00-5/7
- Component Tests 414-00-8

GENERAL PROCEDURES

Battery Charging 414-00-9

DESCRIPTION AND OPERATION

Charging System

Vehicles with 1.6L / 1.3L RoCam Engine shown, Vehicles with Diesel Engine similar

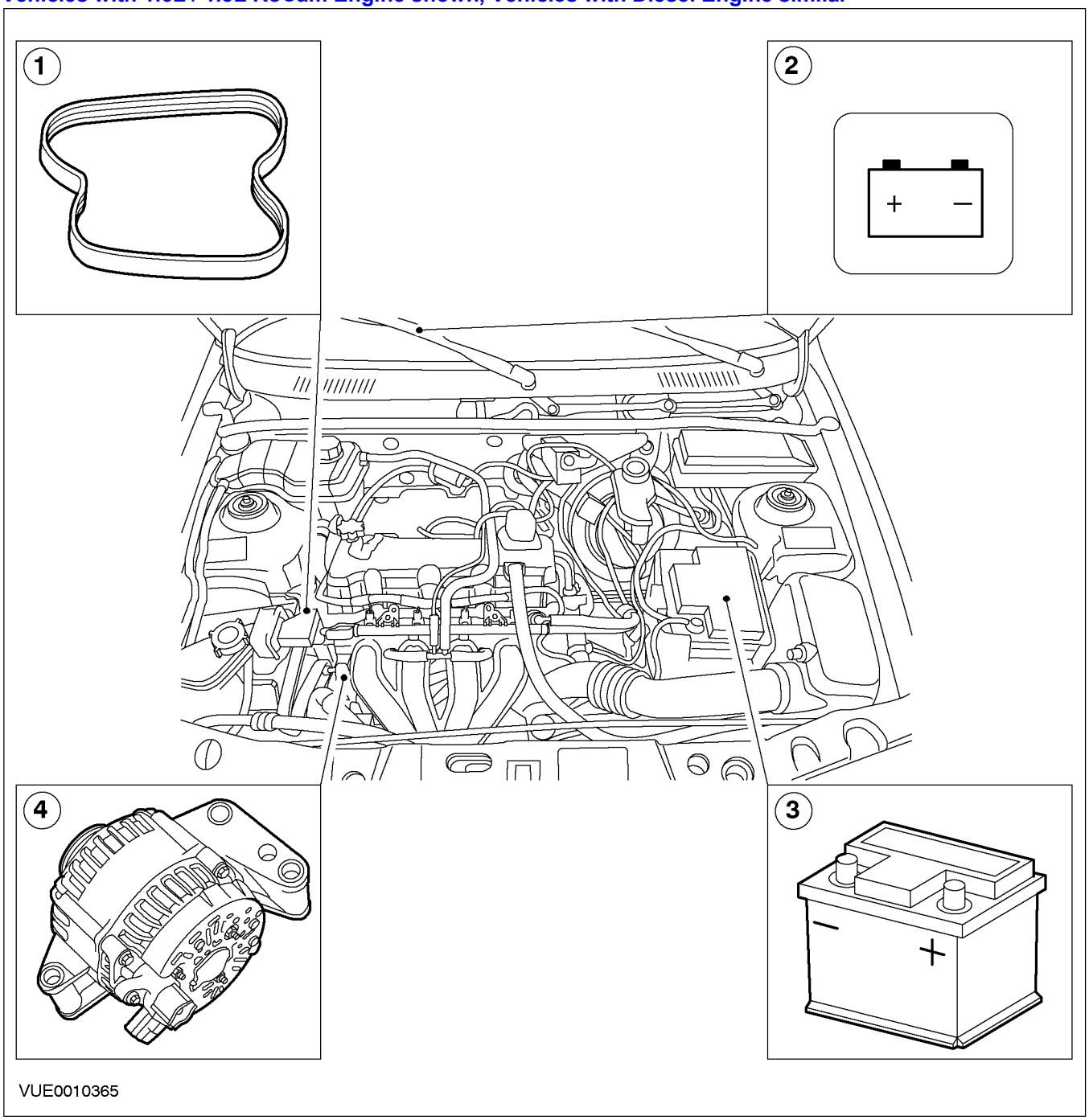

Item	Description
1	Accessory drive belt
2	Charge warning indicator
3	Battery
4	Generator

The generator is mounted solidly towards the front of the engine cylinder block and is driven by the crankshaft pulley at approximately twice engine speed through a drive belt. For additional information, refer to Section 303-05.

When the engine is started, the generator begins to generate alternating current (AC), which is converted to direct current (DC) internally. The DC current is controlled by the voltage regulator and then supplied to the battery. When the engine is not running and the ignition is switched on, the generator will illuminate the charge

DESCRIPTION AND OPERATION (CONTINUED)

warning indicator in the instrument cluster. If however, there is an open circuit in the regulator or generator rotor circuits, the charge warning indicator will not illuminate.

The generator should be repaired as an assembly and not dismantled for repair. For additional information, refer to Section 414-02.

CONTINUED

DIAGNOSIS AND TESTING

Charging System

Inspection and Verification

1. Verify the customer concern.
2. Visually inspect for obvious signs of damage. Refer to the following chart:

Visual Inspection Chart

Mechanical	Electrical
• Loose or damaged auxiliary drive belt. • Generator mounting. • Loose/missing hardware.	• Battery. • Damaged wiring. • Loose or corroded electrical connectors. • Generator.

3. If visual inspection reveals an obvious cause, rectify this before continuing.
4. If the concern remains after visual inspection, proceed to the Symptom Chart.

Symptom Chart

Condition	Possible Sources	Action
•The charging system warning indicator stays on	•Auxiliary drive belt.	•CHECK the auxiliary drive belt tension. REFER to Section 303-05.
	•Circuit. •Generator. •Voltage regulator.	•GO to Pinpoint Test A.
•The charging system warning indicator is inoperative	•Bulb.	•INSTALL a new bulb.
	•Ignition switch.	•CHECK the ignition switch. REFER to Section 211-05.
	•Circuit. •Generator.	•GO to Pinpoint Test B.
•Radio interference	•Circuit. •Generator.	•Go to Pinpoint Test C.
•Generator noisy	•Auxiliary drive belt. •Pulley.	•CHECK the auxiliary drive belt and pulleys. REFER to Section 303-05.
	•Generator. •Mountings/hardware	•INSTALL a new generator. •CHECK security of hardware.

CONTINUED

DIAGNOSIS AND TESTING (CONTINUED)

Pinpoint Tests

PINPOINT TEST A: THE CHARGING SYSTEM WARNING INDICATOR STAYS ON

CONDITIONS	DETAILS/RESULTS/ACTIONS
A1:	
	1 Carry out a No-Load Component Test. Refer to the procedure in this section. • Is there an increase in voltage? ☐ **Yes** GO TO **A2** ☐ **No** GO TO **A4**
A2: CHECK CIRCUIT 31 (BK)	
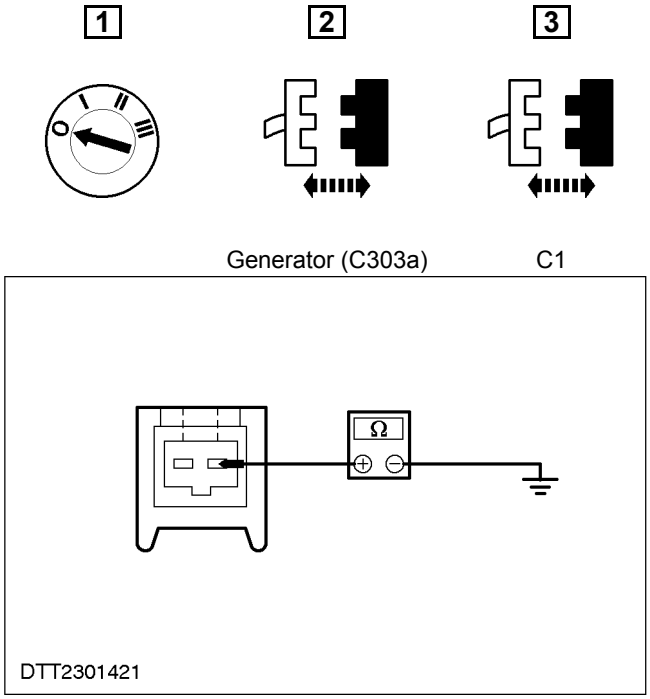	**4** Measure the resistance between the generator connector C303a pin 1, circuit 31 (BK) and ground. • Is the resistance greater than 10,000 ohms? ☐ **Yes** GO TO **A3** ☐ **No** REPAIR circuit 31 (BK).
A3: CHECK CIRCUIT 64 BA9 (BU-BK)	
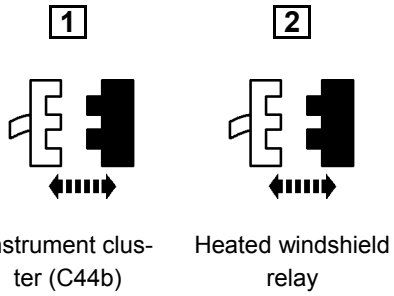	

CONTINUED

DIAGNOSIS AND TESTING (CONTINUED)

CONDITIONS	DETAILS/RESULTS/ACTIONS
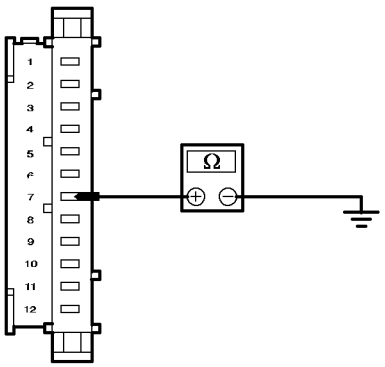 DTT2301424	**3** Measure the resistance between the instrument cluster C44b pin 7, circuit 64 (BU-BK) and ground. • Is the resistance greater than 10,000 ohms? ☐ **Yes** INSTALL a new printed circuit board. ☐ **No** REPAIR circuit 64 (BU-BK). TEST the system for normal operation.
A4: CHECK FOR VOLTAGE	
1 **2** 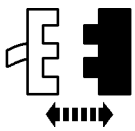 Generator (C303a) 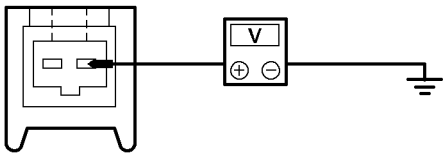 DTT2301428	**3** Measure the voltage between the generator connector C303a pin 1, circuit 31 (BK) and ground. • Is the voltage greater than 10 volts? ☐ **Yes** INSTALL a new generator. ☐ **No** GO TO **A2**

PINPOINT TEST B: THE CHARGING SYSTEM WARNING INDICATOR IS INOPERATIVE

CONDITIONS	DETAILS/RESULTS/ACTIONS
B1: CHECK LAMP CIRCUIT	
1 **2** 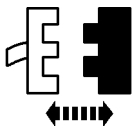 Generator (C303a)	

CONTINUED

DIAGNOSIS AND TESTING (CONTINUED)

CONDITIONS	DETAILS/RESULTS/ACTIONS
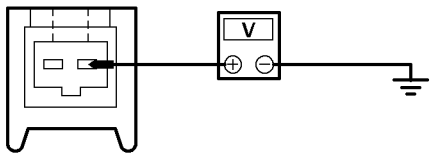 DTT2301422	**3** Measure the voltage between generator D+ connector C303a pin 1, circuit 31 (BK) and ground. • Is the voltage greater than 10 volts? ☐ **Yes** GO TO **B2** ☐ **No** GO TO **B3**
B2: CHECK BULB	
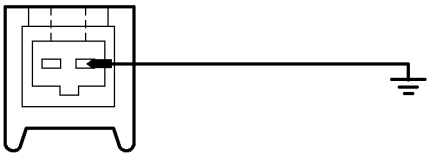 DTT2301423	**1** Connect a jumper wire between the generator D+ connector C303a pin 1, circuit 31 (BK) and ground. • Does the lamp illuminate? ☐ **Yes** INSTALL a new generator. TEST the system for normal operation. ☐ **No** INSTALL a new bulb. TEST the system for normal operation.
B3: CHECK CIRCUIT 64-DA1 (BU)	
1 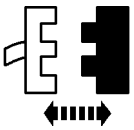 C1 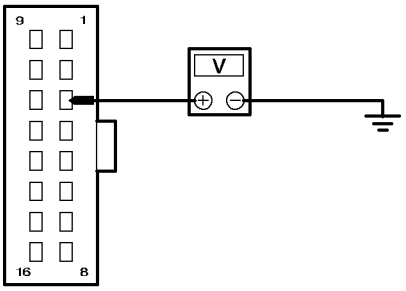 DTT2301420	**2** Measure the voltage between in-line connector C1 pin 3 circuit 64 (BU) and ground. • Is the voltage greater than 10 volts? ☐ **Yes** REPAIR circuit 31 (BK). TEST the system for normal operation. ☐ **No** REPAIR circuit 64. TEST the system for normal operation.

CONTINUED

DIAGNOSIS AND TESTING (CONTINUED)

PINPOINT TEST C: RADIO INTERFERENCE

CONDITIONS	DETAILS/RESULTS/ACTIONS
C1: DISABLE GENERATOR	
2 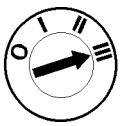	1 Remove the auxiliary drive belt. REFER to Section 303-05. 3 Run the engine for a few seconds with the radio turned on. • Is interference still present? ☐ **Yes** REFER to Section 415-00. ☐ **No** REPAIR circuit 30-DA2 (RD). TEST the system for normal operation. If interference is still present. INSTALL a new generator.

Component Tests

No-Load Test

1. Turn off all electrical loads and the ignition switch.
2. Connect the leads of multimeter across the battery terminals.
3. Read the voltage (base voltage).
4. Start the engine.
5. Run the engine at 1500 rpm with no electrical load.
6. Read the voltage. The voltage should be in the range of 14.1 to 15.1 volts. If the voltage increase is less than 2.5 volts above the base voltage, perform the load test. If the
7. Voltage increase is greater than 2.5 volts; perform the generator on-vehicle tests in this section.

Load Test

1. With the engine running, turn on the air conditioning unit, turn the blower motor to high speed and the headlamps to high beam.
2. Increase the engine speed to 2000 rpm. The voltage should increase a minimum of 0.5 volts above the base voltage. If the voltage does not increase as specified, refer to the generator on vehicle tests in this section. If the voltage increases as specified, the charging system is charging correctly. Refer to the Symptom Chart.

CONTINUED

GENERAL PROCEDURES

Battery Charging

WARNING: Keep batteries out of reach of children. Batteries contain sulphuric acid; avoid contact with skin, eyes or clothing. Shield your eyes when working near the battery to protect against possible splashing of the acid solution. In case of acid contact with the skin or the eyes, flush immediately with water for a minimum of 15 minutes and seek prompt medical attention. If acid is swallowed, call a physician immediately. Failure to follow these instructions may result in personal injury.

WARNING: Batteries normally produce explosive gases, which can cause personal injury, therefore do not allow flames, sparks or lighted substances to come near the battery. When charging or working near the battery always shield your face and protect your eyes. Always provide adequate ventilation. Failure to follow these instructions may result in personal injury.

WARNING: Always observe all manufacturers instructions when using any charging equipment. Failure to follow this instruction may result in personal injury.

WARNING: Connect the charger to the battery before switching the charger on. Failure to follow this instruction may result in personal injury.

WARNING: Switch the charger off before disconnecting the charger from the battery. Failure to follow this instruction may result in personal injury.

CAUTION: Batteries should not be charged in the vehicle.

CAUTION: Do not rely on the generator to recharge a discharged battery, as it would take in excess of eight hours of continuous driving with no additional loads placed on the charging system.

CONTINUED

GENERAL PROCEDURES (CONTINUED)

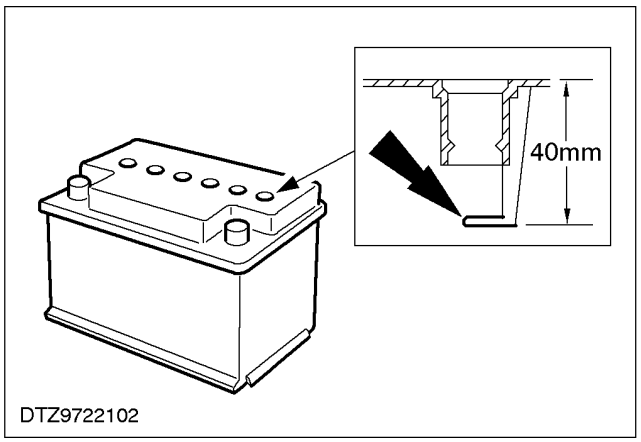

1. **NOTE:** The maximum level mark is approximately 40mm below the top of the battery.
   Place the battery on a level surface and check the electrolyte level through the casing, reaches the indicated maximum mark.

WARNING: It is important not to overfill a battery, as this can cause acid leakage and corrosion damage to the vehicle. Failure to follow this instruction may result in personal injury.

2. If the level is below the maximum mark, remove the vent covers and top up the cell(s) to the correct level.

3. Cold batteries will not readily accept a charge. Therefore batteries should be allowed to warm up to approximately 5°C. before charging. This may require four to eight hours at room temperature depending on the initial temperature and the battery size.

4. A battery, which has been completely discharged, may be slow to accept a charge initially, and in some cases may not accept a charge at the normal charger setting. When batteries are in this condition, charging can be started by use of the dead battery switch on chargers that have this facility equipped.

5. To determine whether a battery is accepting a charge, follow the manufacturer's instructions for the charger, for use of the dead battery switch. If the switch is the spring-loaded type, it should be held in the ON position for up to three minutes.

CONTINUED

GENERAL PROCEDURES (CONTINUED)

6. After releasing the dead battery switch and with the charger still on, measure the battery voltage. If it shows 12 volts or higher, the battery is accepting a charge and is capable of being recharged. However, it may require up to two hour of charging with batteries colder than 5°C before the charge rate is high enough to show a charge on an ammeter. It has been found that all non-damaged batteries can be charged by this procedure. If a battery cannot be charged by this procedure, a new one should be installed.

7. A rapid recharge procedure has been developed for recharging batteries that have passed the Load Test and only need a recharge. This can be due to in-service no-start battery failures (vehicle will not crank due to low battery state of charge) or battery discharged in vehicle due to key-off loads.

8. With the cables then disconnected, the battery can be rapidly recharged by using either of the following methods:
   - Carry out a two hour charge using 20A constant current (manual setting on charger).
   - Carry out a two hour charge using a constant potential (automatic setting on charger).

CONTINUED

SECTION 414-01 Battery, Mounting and Cables

VEHICLE APPLICATION: 2002 Bantam

SUBJECT **PAGE**

DESCRIPTION AND OPERATION
Battery and Cables 414-01-2

DIAGNOSIS AND TESTING
Battery 414-01-3

REMOVAL AND INSTALLATION
Battery 414-01-4/5
Battery to Starter Motor Solenoid Cable — Vehicles with 1.6L / 1.3L Engine 414-01-6/9
Battery to Starter Motor Solenoid Cable — Vehicles with 1.8L Endura DE Diesel Engine 414-01-10/12
Battery Tray 414-01-13

SPECIFICATIONS
Specifications 414-01-14
Torque Specifications 414-01-14

DESCRIPTION AND OPERATION

Battery and Cables

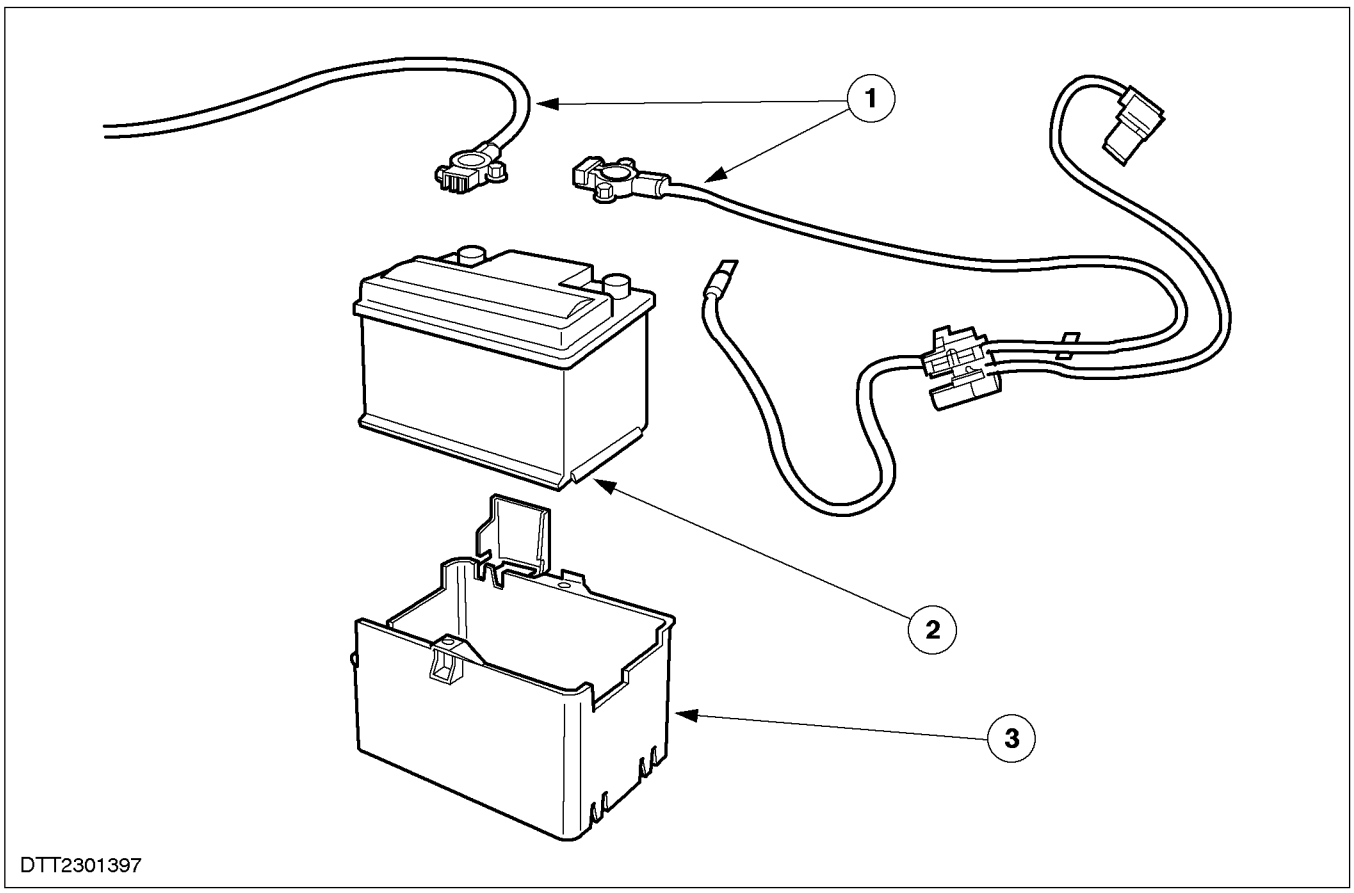

Item	Description
1	Battery cables
2	Battery

Item	Description
3	Battery tray

CONTINUED

DIAGNOSIS AND TESTING

Battery

REFER to Section 414-00.

CONTINUED

REMOVAL AND INSTALLATION

Battery (31 214 0)

Removal

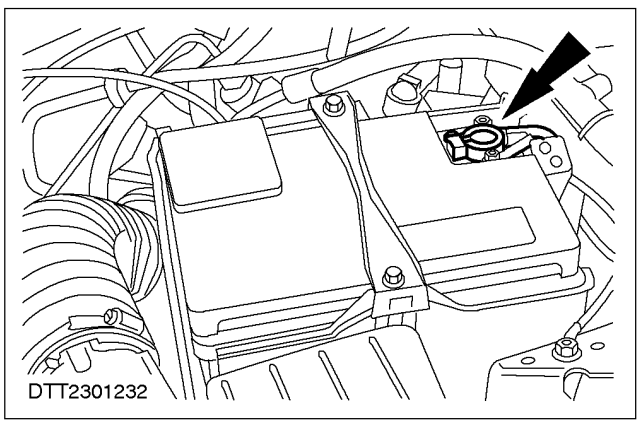

1. Disconnect the battery ground cable.

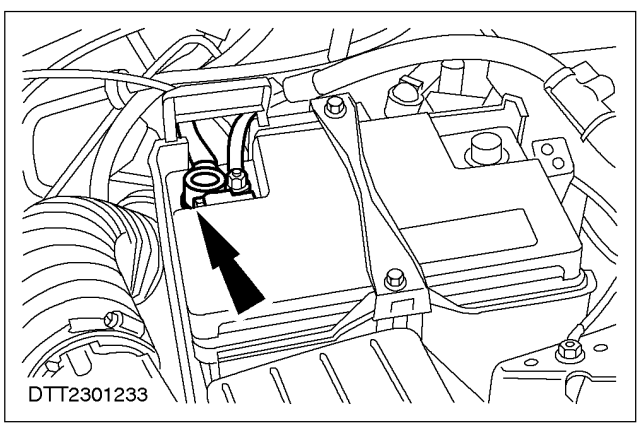

2. Disconnect the battery power and auxiliary power cable.

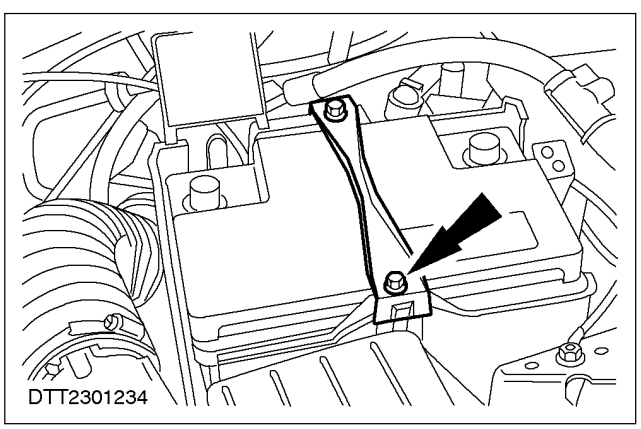

3. Remove the battery clamp.

4. Remove the battery.

CONTINUED

REMOVAL AND INSTALLATION (CONTINUED)

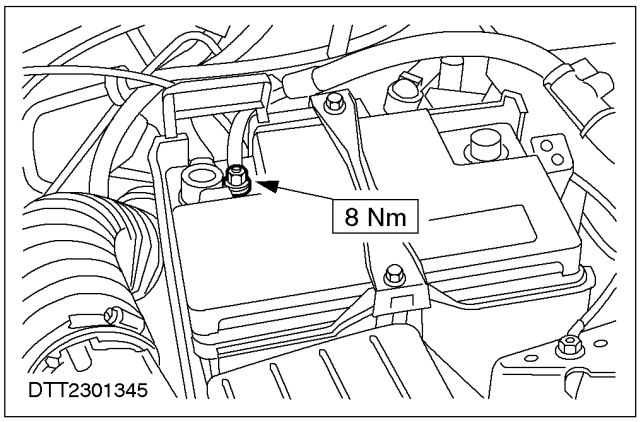

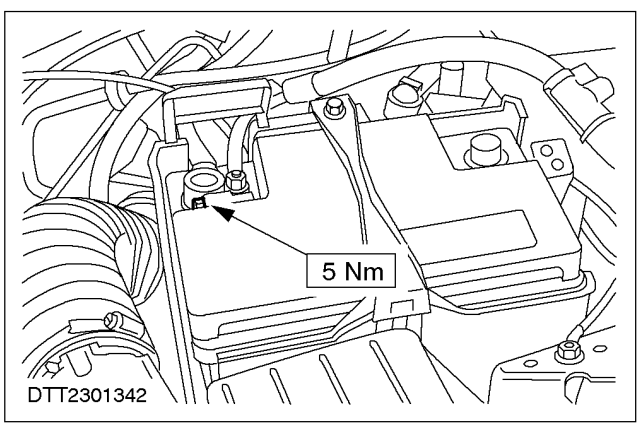

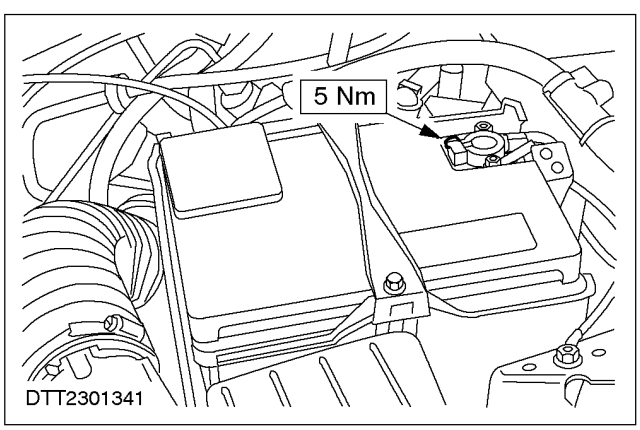

Installation

1. To install, reverse the removal procedure.

CONTINUED

REMOVAL AND INSTALLATION

Battery to Starter Motor Solenoid Cable — Vehicles with 1.6L / 1.3L Engine

Removal

1. Disconnect the battery ground cable.
   For additional information,
   refer to Section 414-01.

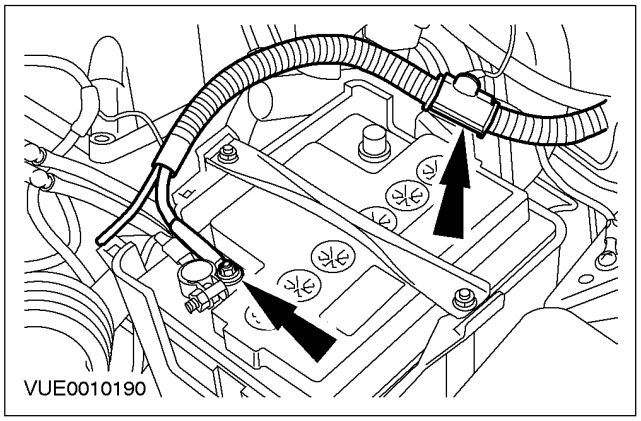

2. Disconnect and detach the battery auxiliary positive cable.

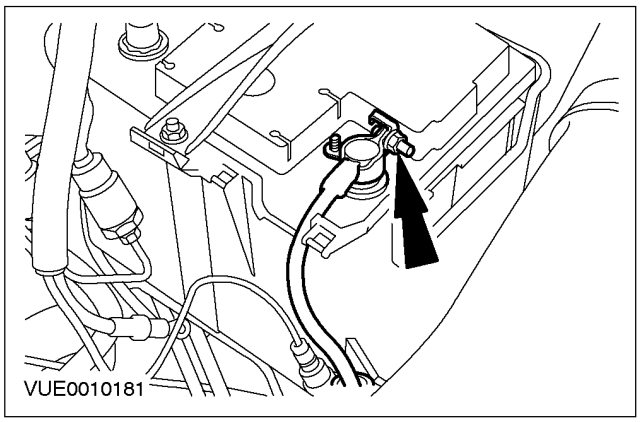

3. Disconnect the battery positive cable.

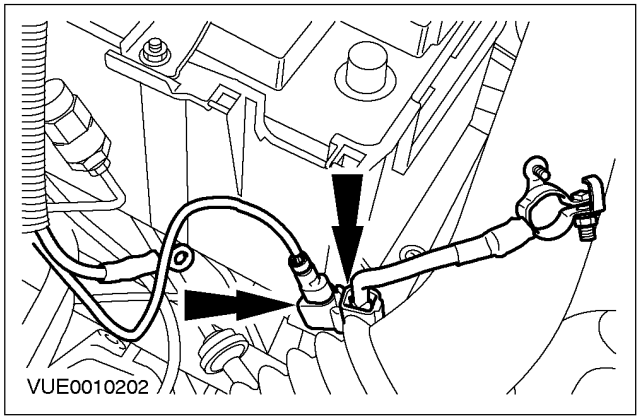

4. Disconnect and detach the electrical connector.

CONTINUED

REMOVAL AND INSTALLATION (CONTINUED)

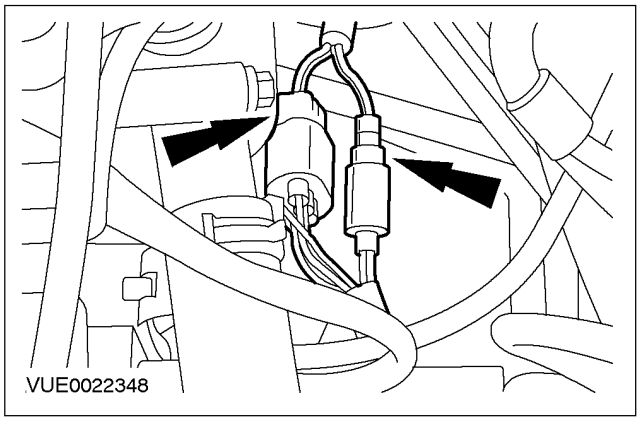

5. Disconnect the in-line electrical connectors below the thermostat housing.

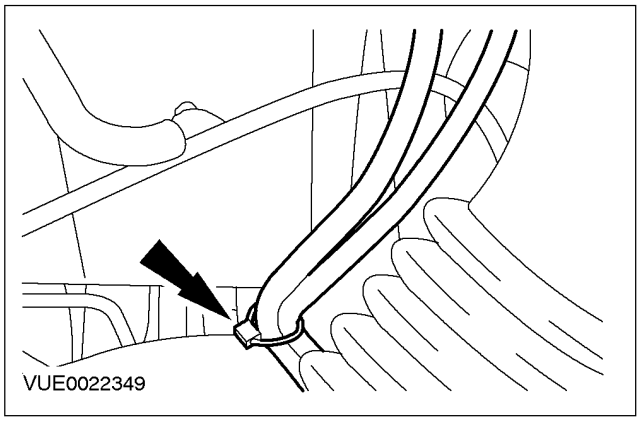

6. Detach the electrical cables below the battery tray.

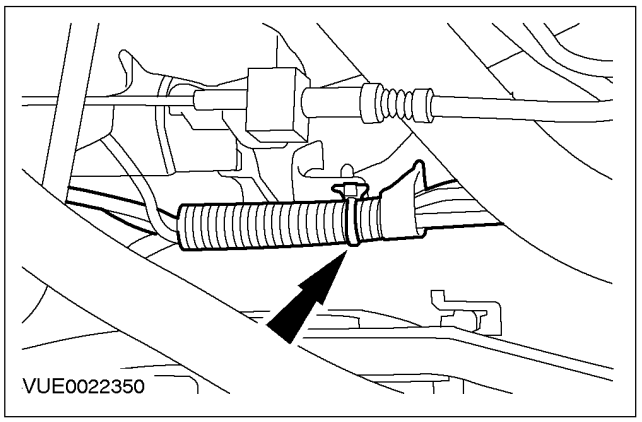

7. Detach the battery to starter motor solenoid cable from the transaxle mounting bracket.

8. Remove the engine undershield.
For additional information,
refer to Section 502-00.

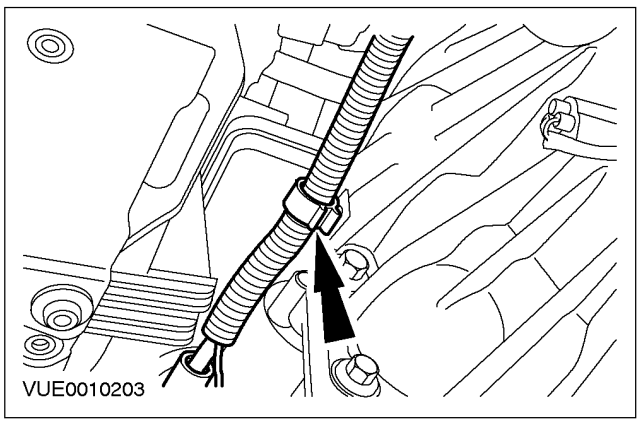

9. Detach the battery to starter motor solenoid cable from the transaxle.

CONTINUED

REMOVAL AND INSTALLATION (CONTINUED)

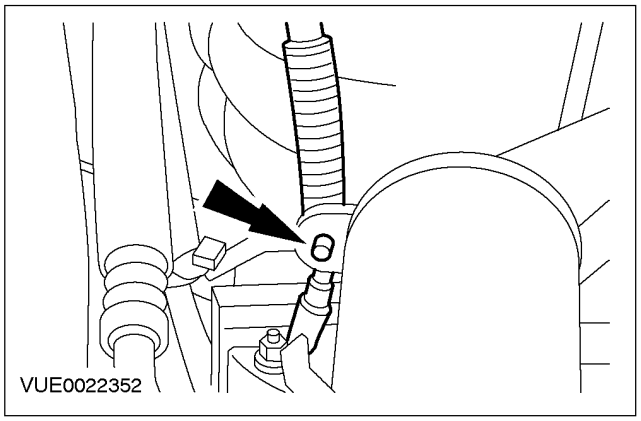

10. Detach the battery to starter motor solenoid cable from the oil filter housing.

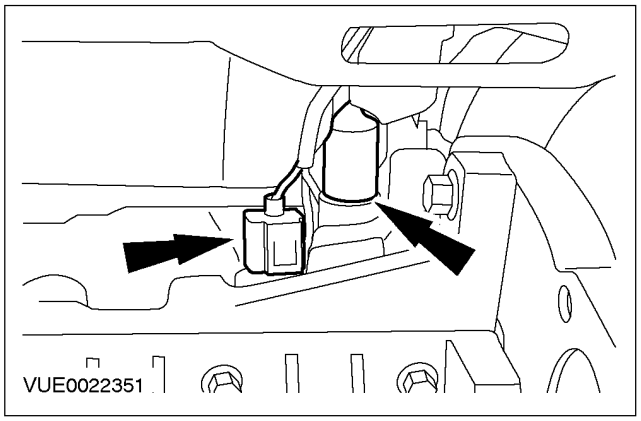

11. Disconnect the crankshaft position (CKP) sensor and oil pressure switch electrical connectors.

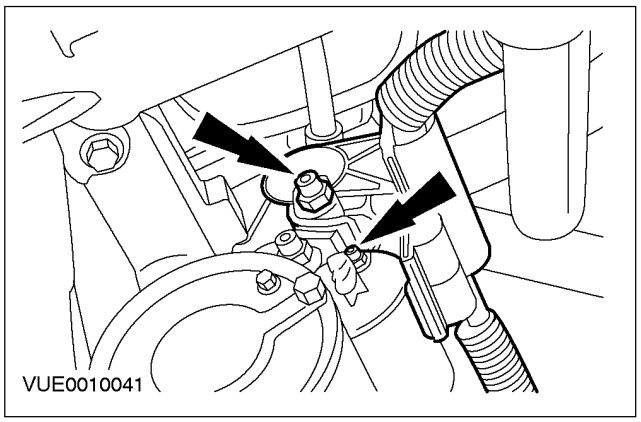

12. Disconnect the starter motor electrical connector.

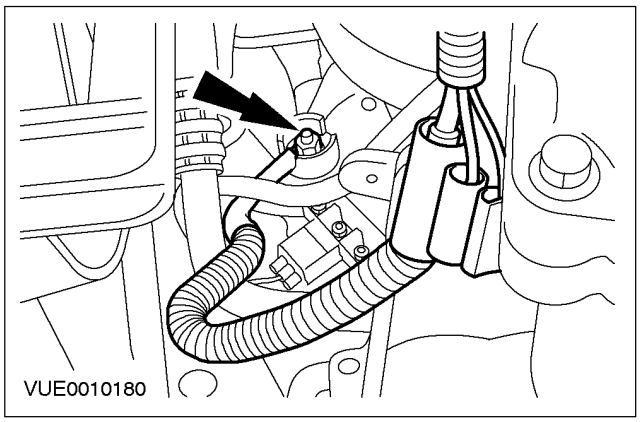

13. Disconnect the generator electrical connector and remove the battery to starter motor solenoid cable.

CONTINUED

REMOVAL AND INSTALLATION (CONTINUED)

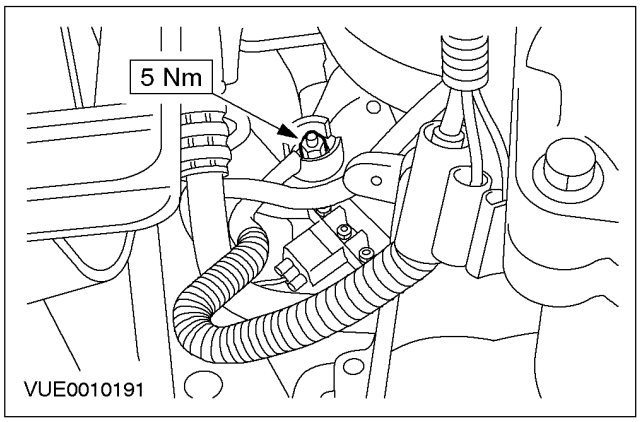

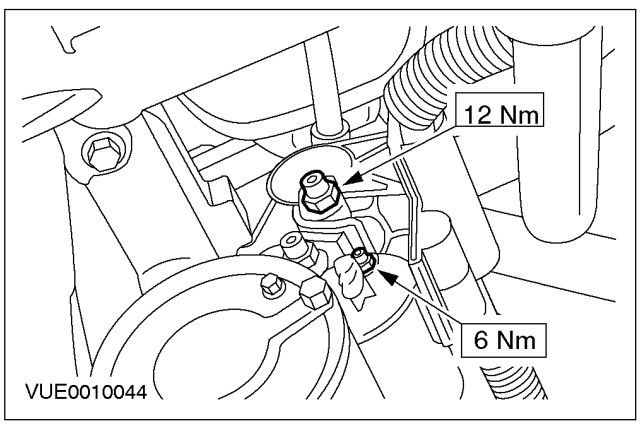

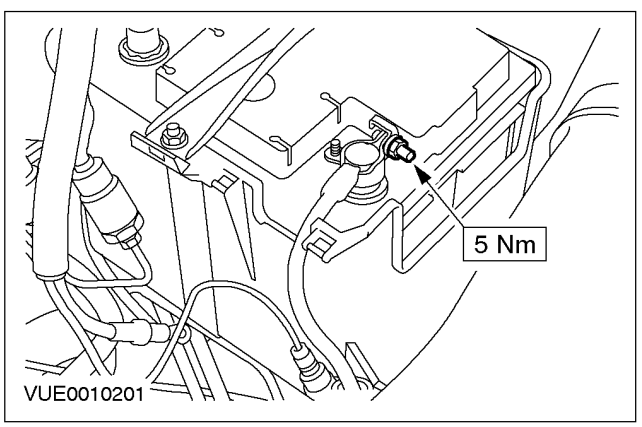

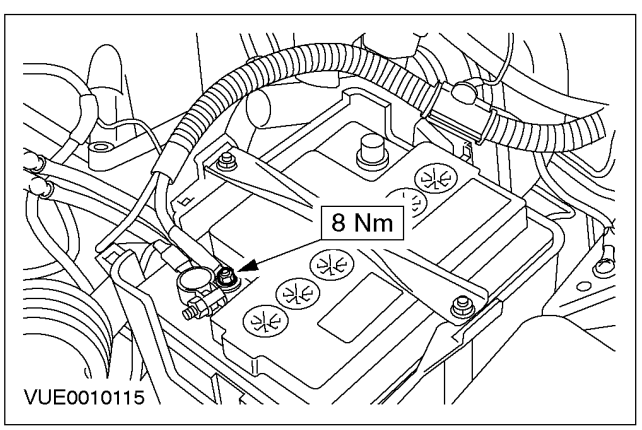

Installation

1. To install, reverse the removal procedure.

CONTINUED

REMOVAL AND INSTALLATION

Battery to Starter Motor Solenoid Cable — Vehicles with 1.8L Endura DE Diesel Engine

Removal

1. Disconnect the battery ground cable.
2. Open the battery positive terminal cover.

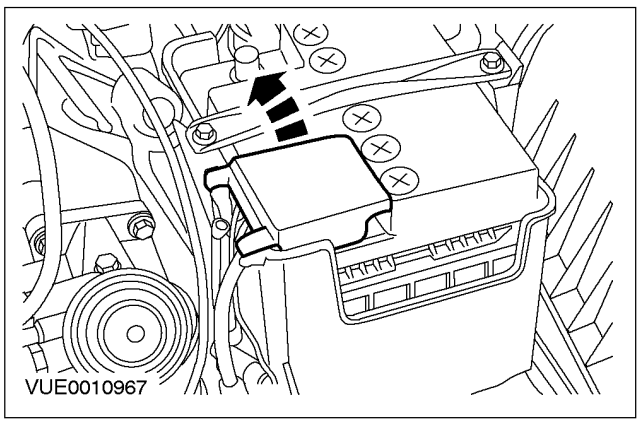

3. Disconnect the battery auxiliary positive cable.

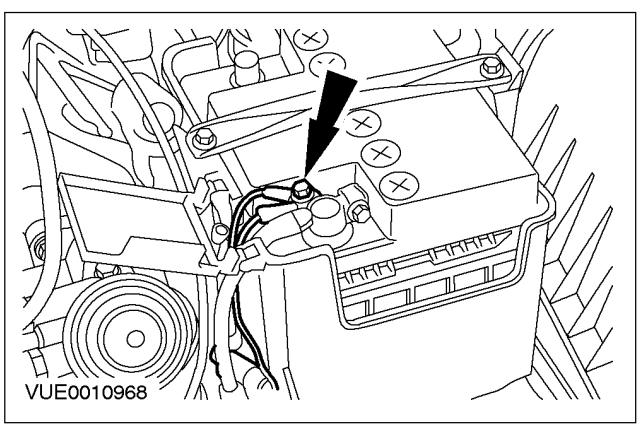

4. Disconnect the battery positive cable.

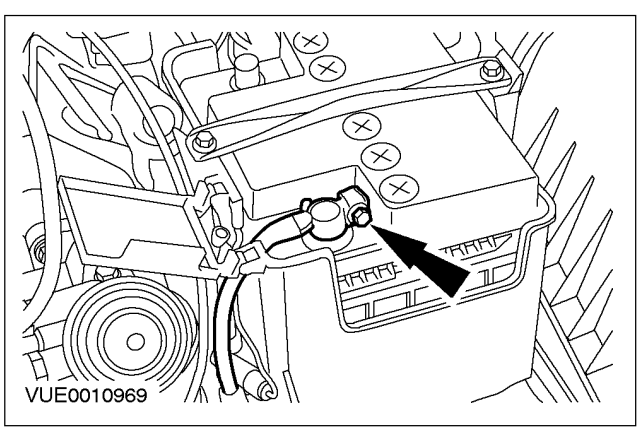

CONTINUED

REMOVAL AND INSTALLATION (CONTINUED)

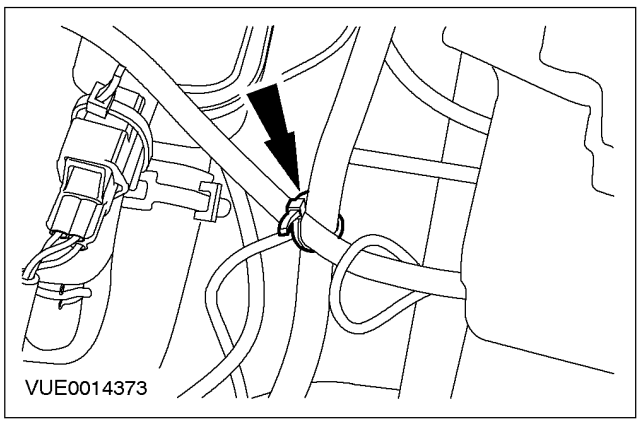

5. Release the battery to starter motor solenoid cable.
   - Cut the tie strap.

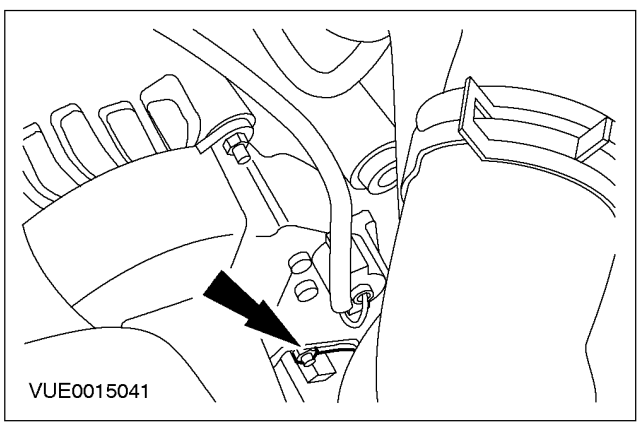

6. Disconnect the generator electrical connector.

7. Raise and support the vehicle.
   For additional information,
   refer to Section 100-02.

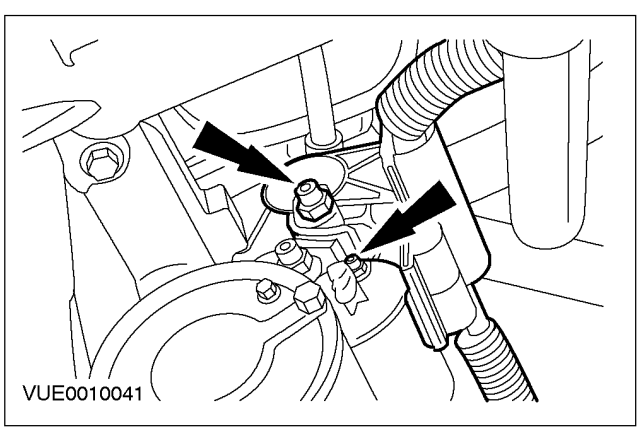

8. Remove the battery to starter motor solenoid cable.
   - Disconnect the starter motor electrical connector.

CONTINUED

REMOVAL AND INSTALLATION (CONTINUED)

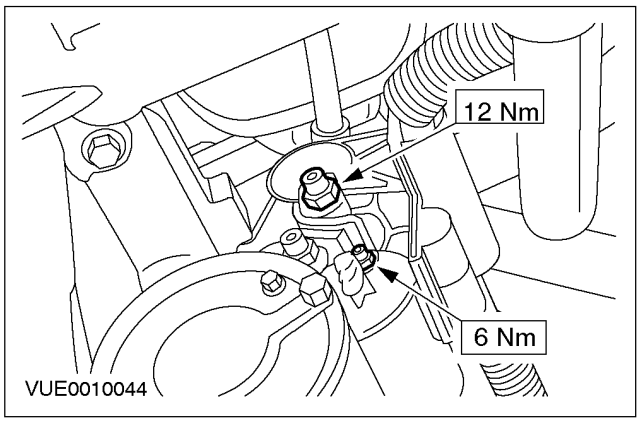

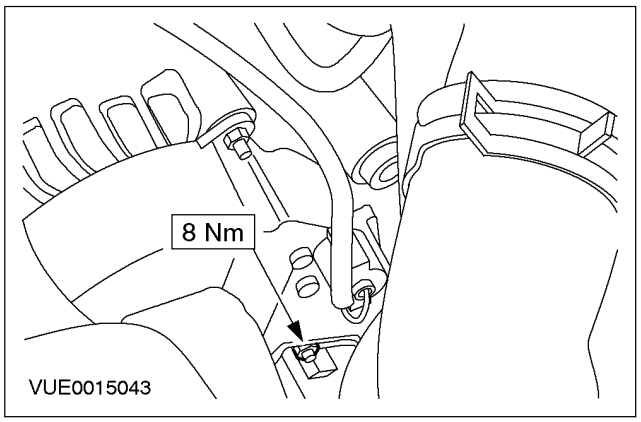

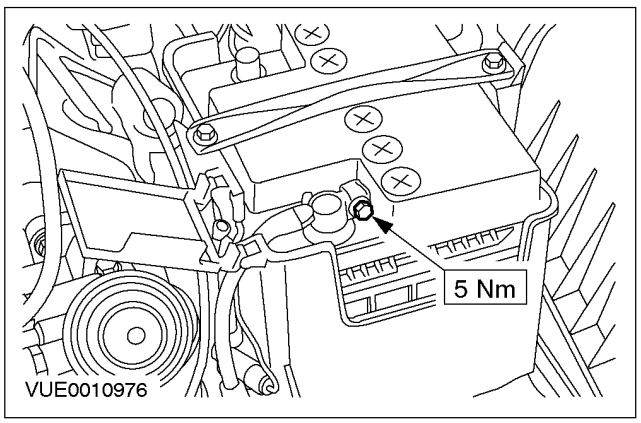

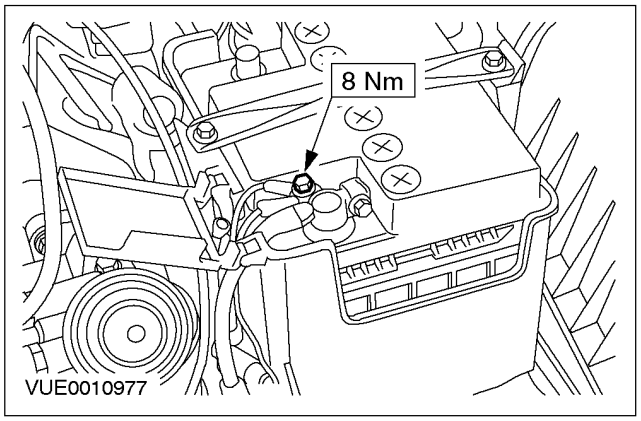

Installation

1. **NOTE:** When the battery is disconnected and reconnected, some abnormal drive symptoms may occur while the vehicle relearns its adaptive strategy. It may need to be driven 16 km or more to relearn its adaptive strategy.
   To install, reverse the removal procedure.

CONTINUED

REMOVAL AND INSTALLATION

Battery Tray (44 271 4)

Removal

1. Remove the battery. For additional information, refer to Battery in this section
2. Remove the cable tie.

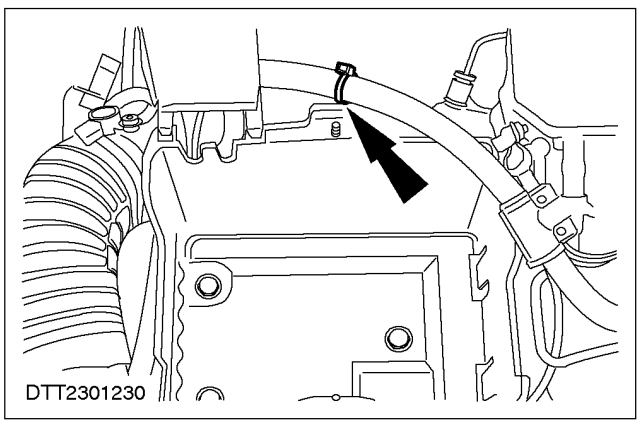

3. Remove the battery tray.

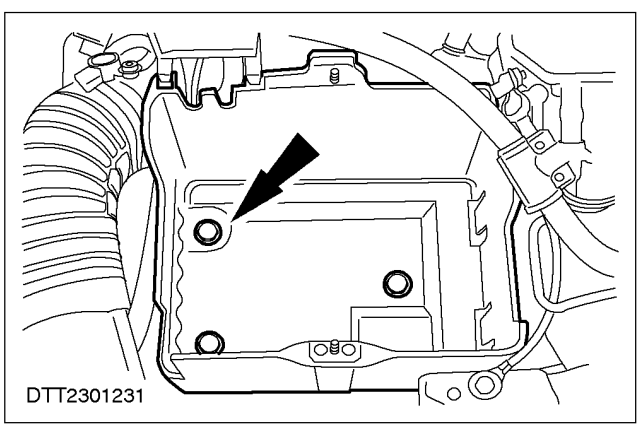

Installation

1. To install, reverse the removal procedure.

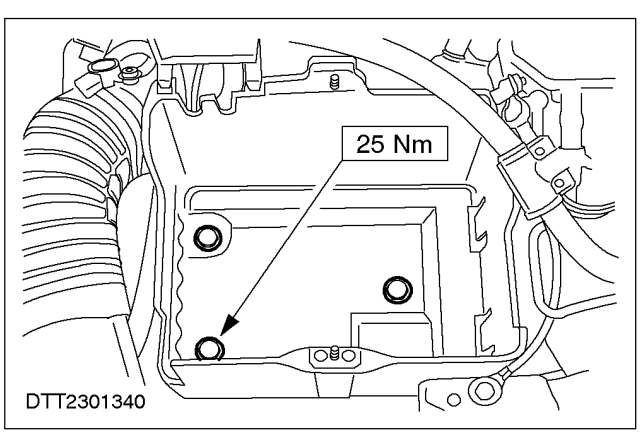

CONTINUED

SPECIFICATIONS

Torque Specifications

Description	Nm
Battery hold-down clamp retaining nuts	8
Battery terminal clamp retaining nuts	5
Generator electrical connector retaining nut(s)	5
Starter motor electrical connector upper retaining nut	12
Starter motor electrical connector lower retaining nut	6
Battery auxiliary positive cable retaining nut	8
Battery tray retaining bolts	25

CONTINUED

SECTION 414-02 Generator and Regulator

VEHICLE APPLICATION: 2002 Bantam

SUBJECT **PAGE**

DIAGNOSIS AND TESTING

Generator 414-02-2

REMOVAL AND INSTALLATION

Generator — Vehicles with 1.6L Engine ..... (31 414 0) 414-02-3
Generator — Vehicles with 1.8L Endura DE diesel Engine ..... (31 414 0) 414-02-3/13

SPECIFICATIONS

Specifications 414-02-14
Torque Specifications 414-02-14

DIAGNOSIS AND TESTING

Generator

REFER to Section 414-00.

CONTINUED

REMOVAL AND INSTALLATION

Generator — Vehicles with 1.6L / 1.3L Engine (31 414 0)

Removal

All vehicles

1. Disconnect the battery ground cable. For additional information, refer to Section 414-01.

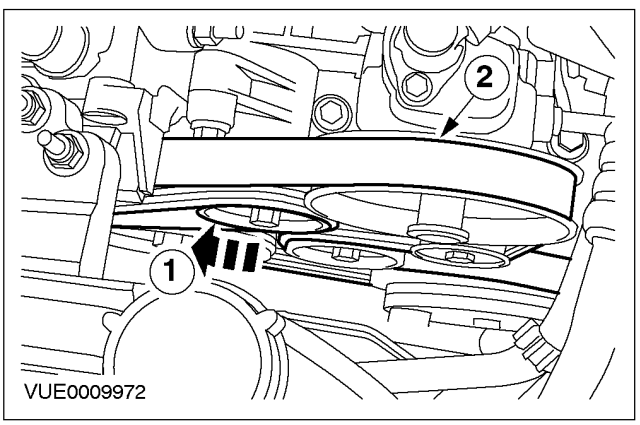

2. Remove the accessory drive belt.
   1. Rotate the belt tensioner clockwise.
   2. Remove the accessory drive belt.

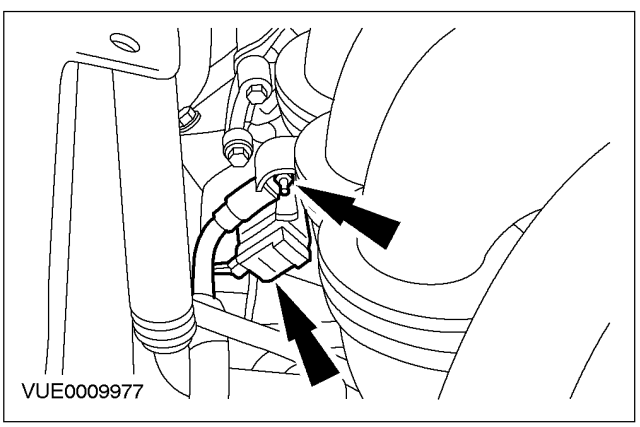

3. Disconnect the generator electrical connectors.

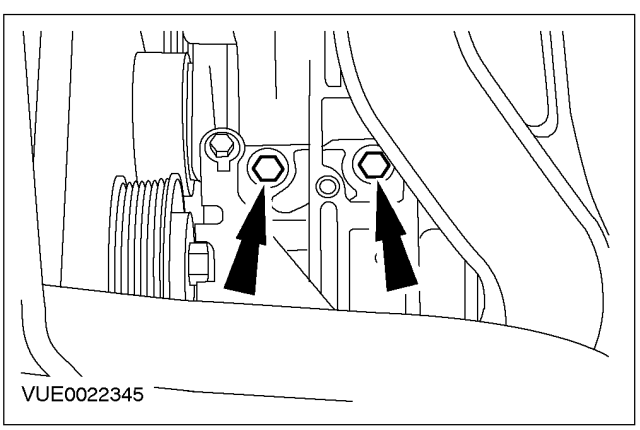

4. Remove the generator upper retaining bolts.

CONTINUED

REMOVAL AND INSTALLATION (CONTINUED)

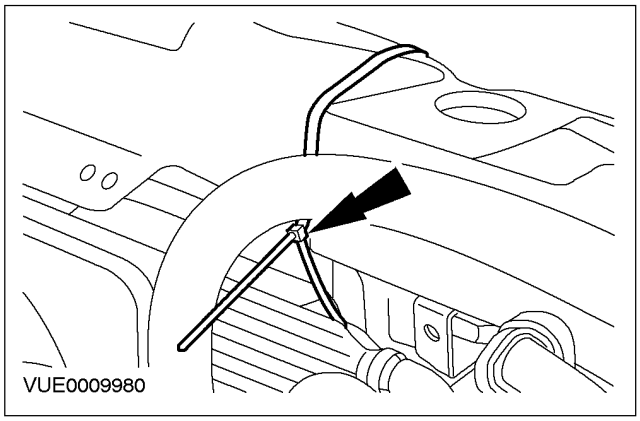

5. Support the right-hand side of the radiator.

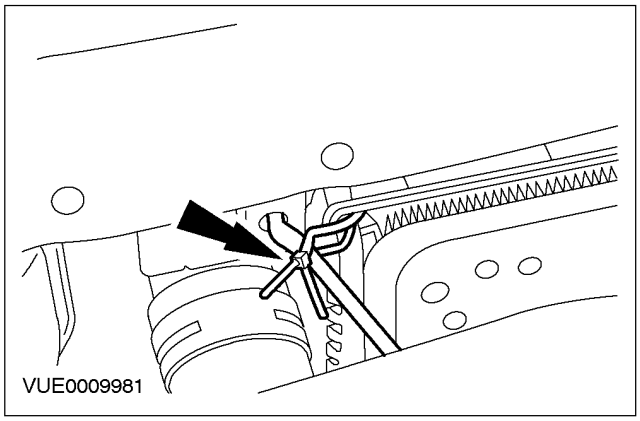

6. Support the left-hand side of the radiator.

7. Remove the engine undershield.
   For additional information,
   refer to Section 502-00.

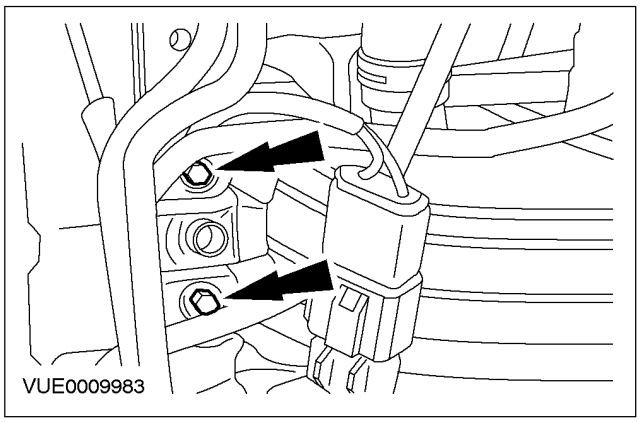

8. Remove the radiator support bracket left-hand retaining bolts.

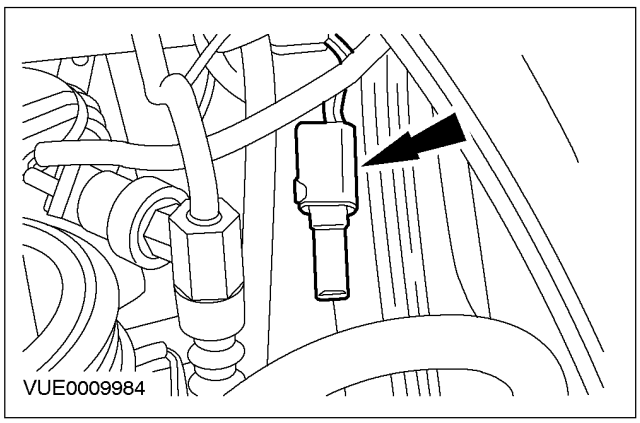

9. Detach the diode from the radiator support bracket.

CONTINUED

REMOVAL AND INSTALLATION (CONTINUED)

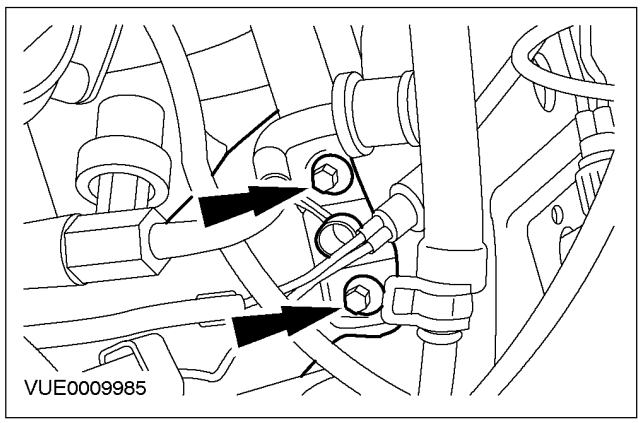

10. Remove the radiator support bracket.

Vehicles with power steering

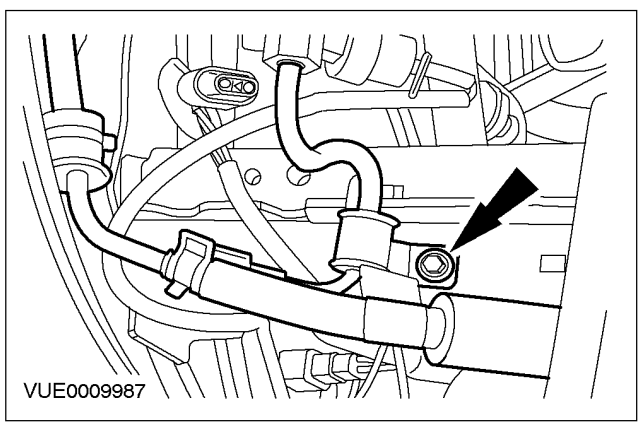

11. Detach the power steering lines clamp.

All vehicles

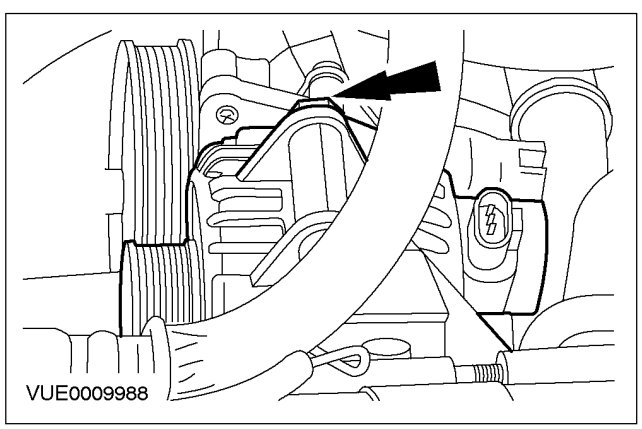

12. Remove the generator.

CONTINUED

REMOVAL AND INSTALLATION (CONTINUED)

Installation

All vehicles

1. To install, reverse the removal procedure.

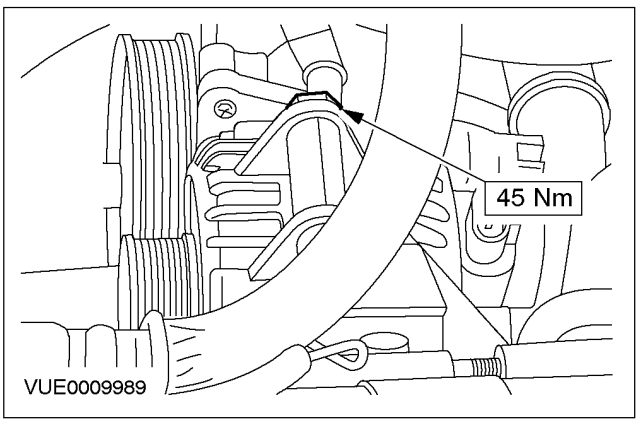

Vehicles with power steering

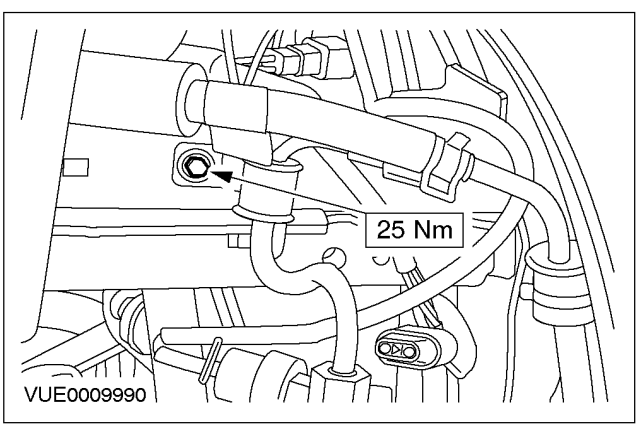

All vehicles

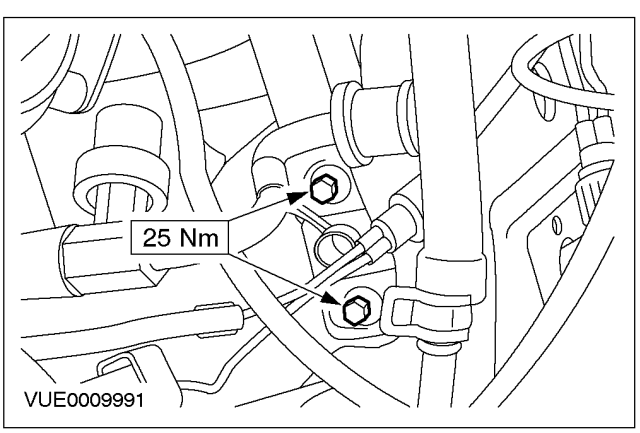

CONTINUED

REMOVAL AND INSTALLATION (CONTINUED)

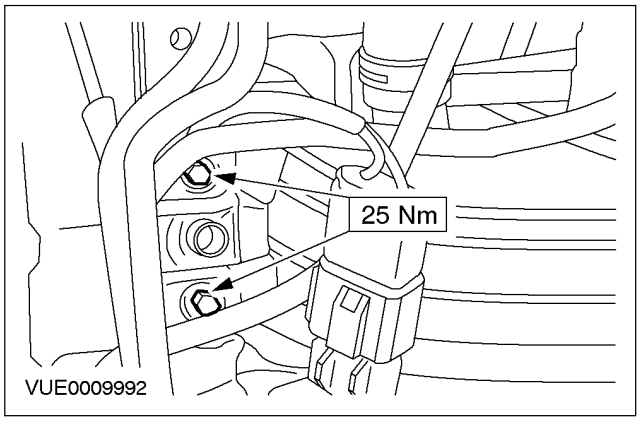

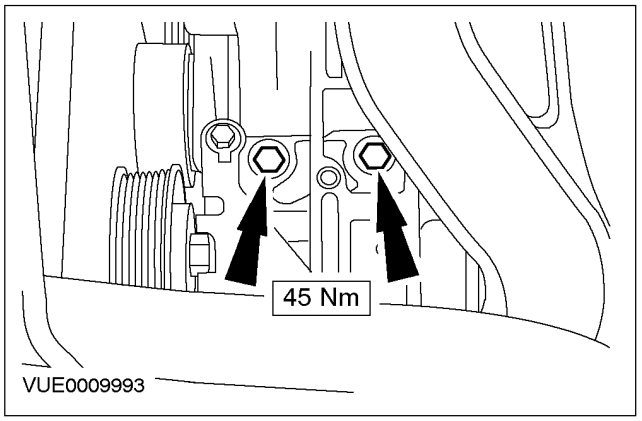

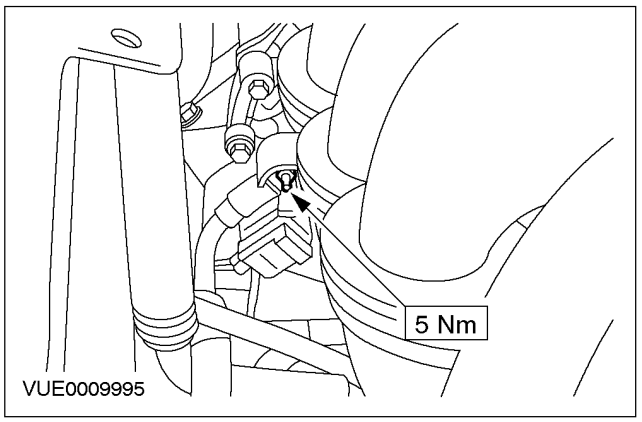

CONTINUED

REMOVAL AND INSTALLATION

Generator — Vehicles with 1.8L Endura DE Diesel Engine (31 414 0)

Removal

1. Disconnect the battery ground cable.

Vehicles fitted with power assisted steering

2. Remove the power assisted steering pump assembly. For additional information, refer to Section 211-02.

All vehicles

3. Remove the generator drive belt. For additional information, refer to Section 303-05.

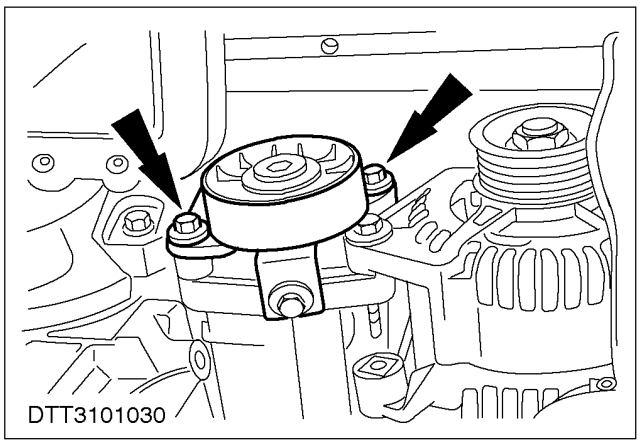

4. Remove the drive belt tensioner (two bolts).

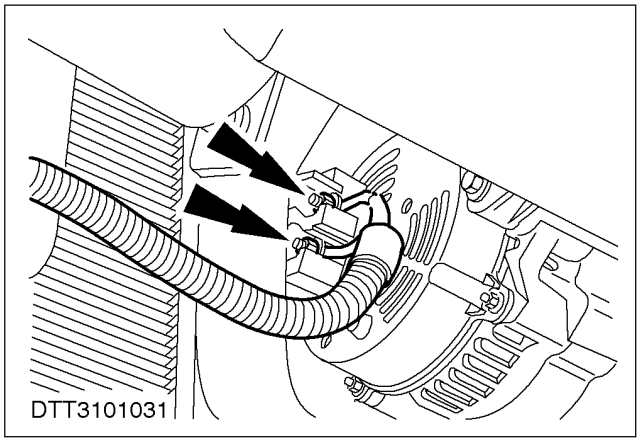

5. Disconnect the generator wiring.

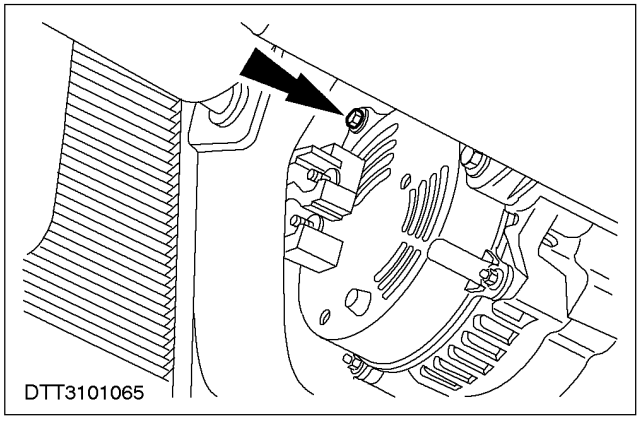

6. Remove the generator upper bolt.

CONTINUED

REMOVAL AND INSTALLATION (CONTINUED)

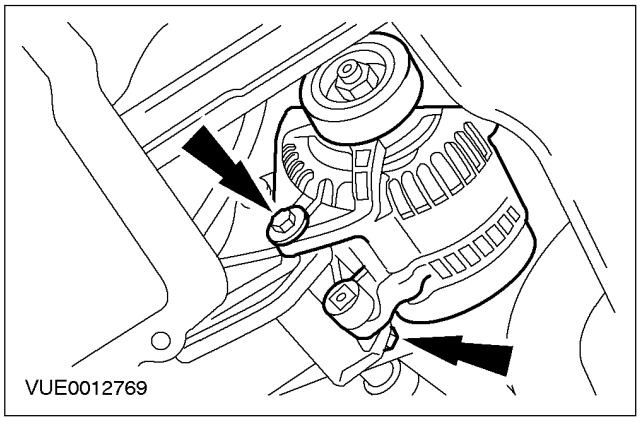

7. Remove the generator (two bolts).

Installation

CAUTION: Make sure the generator is tightened using the following graphical sequence; otherwise premature failure of the mounting bracket may occur.

1. Refit the components in reverse order.

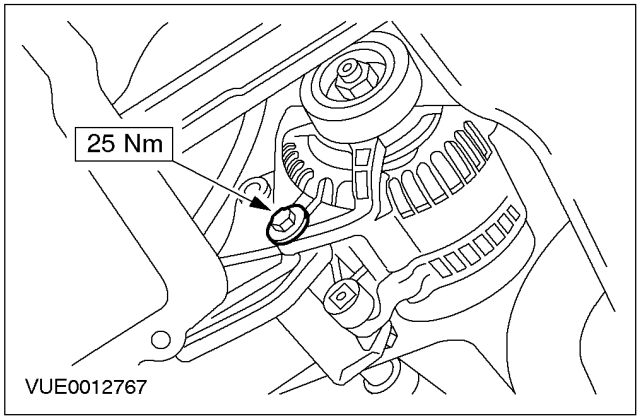

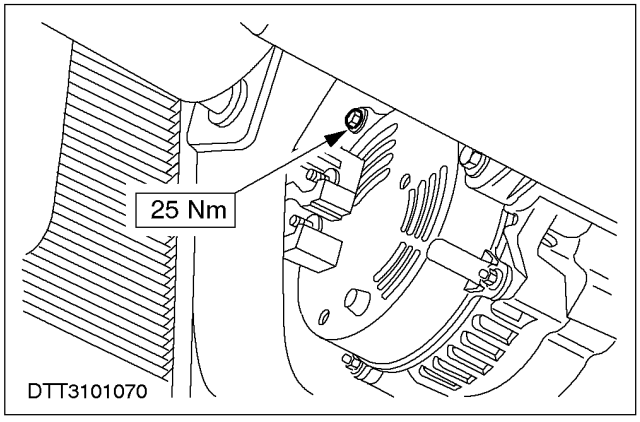

CONTINUED

REMOVAL AND INSTALLATION (CONTINUED)

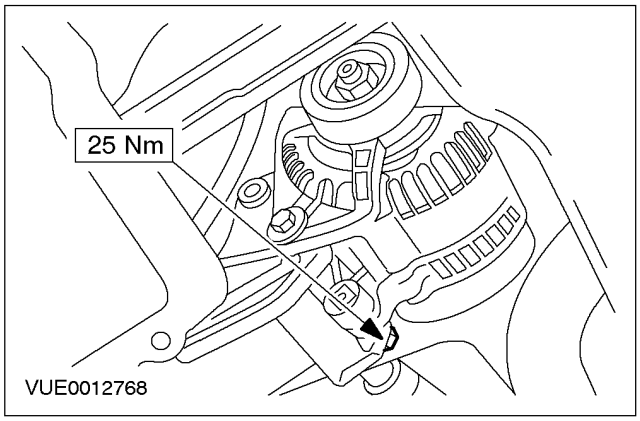

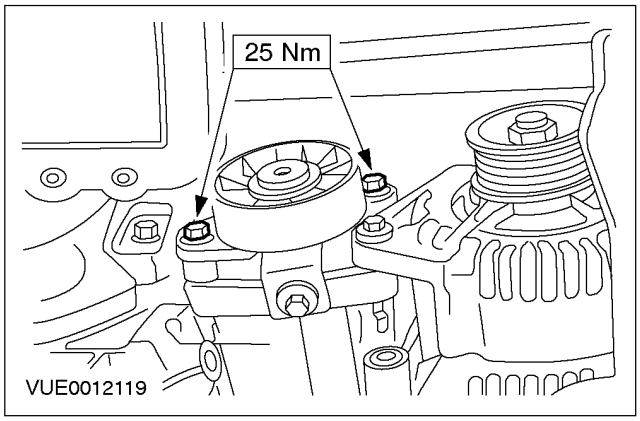

CONTINUED

REMOVAL AND INSTALLATION

Generator — Vehicles with 1.8L Endura DE Diesel Engine and Air Conditioning (31 414 0)

Removal

1. Disconnect the battery ground cable.
2. Remove the generator drive belt.
   For additional information,
   refer to Section 303-05.
3. Detach the air conditioning compressor (four bolts).
   - Support the compressor using suitable wire or cable tie.

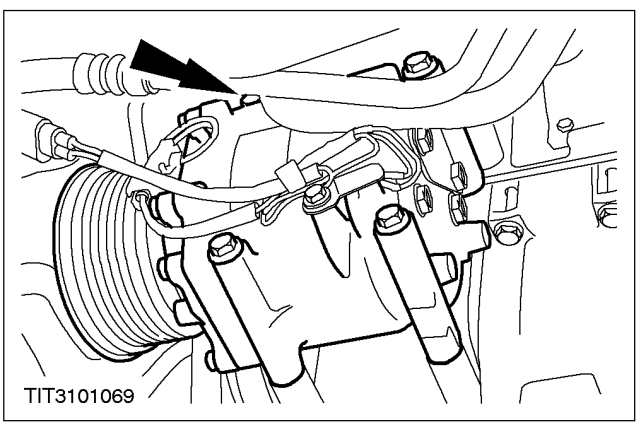

4. Remove the drive belt tensioner (two bolts).

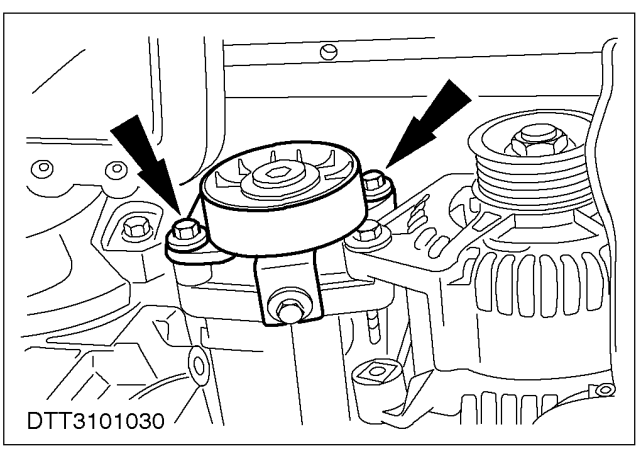

5. Disconnect the generator wiring.

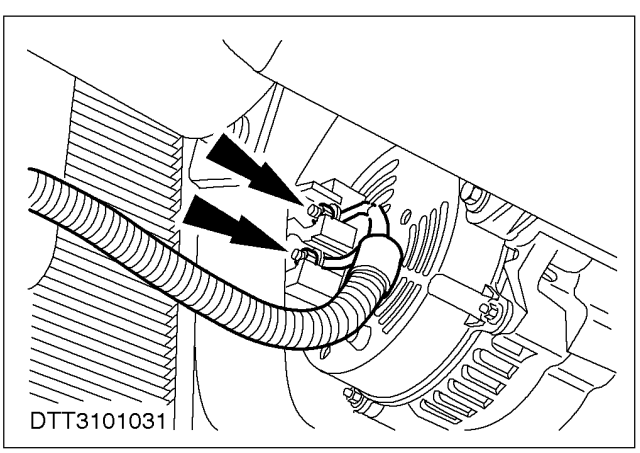

CONTINUED

REMOVAL AND INSTALLATION (CONTINUED)

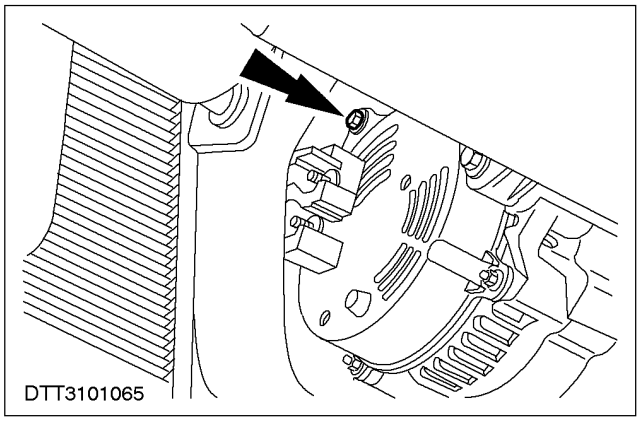

6. Remove the generator upper bolt.

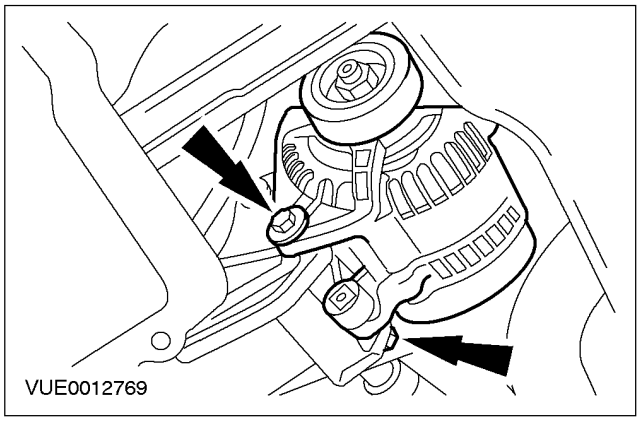

7. Remove the generator (two bolts).

Installation

CAUTION: Make sure the generator is tightened using the following graphical sequence; otherwise premature failure of the mounting bracket may occur.

1. Refit the components in reverse order.

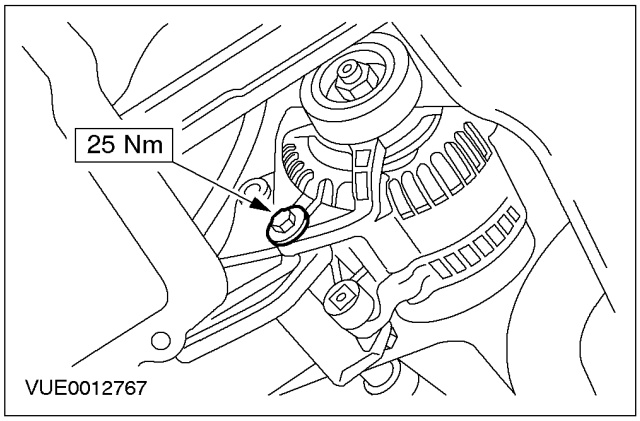

CONTINUED

REMOVAL AND INSTALLATION (CONTINUED)

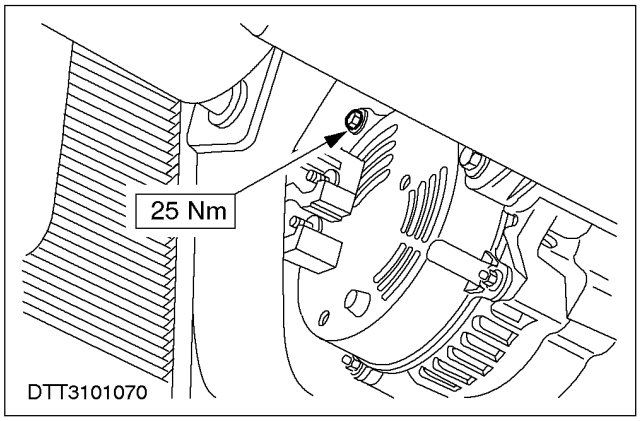

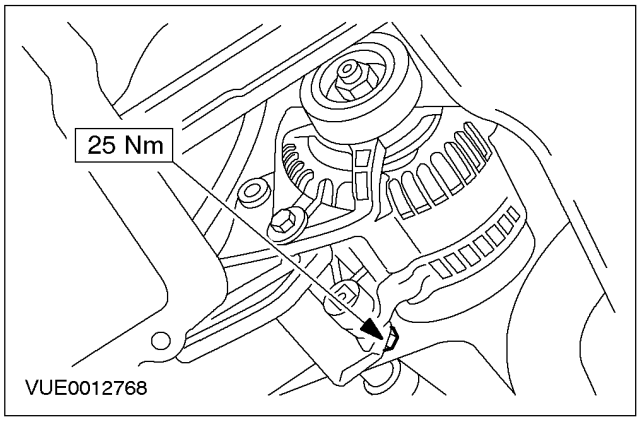

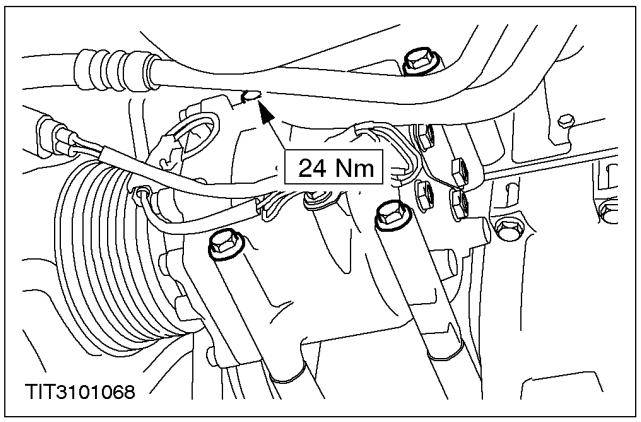

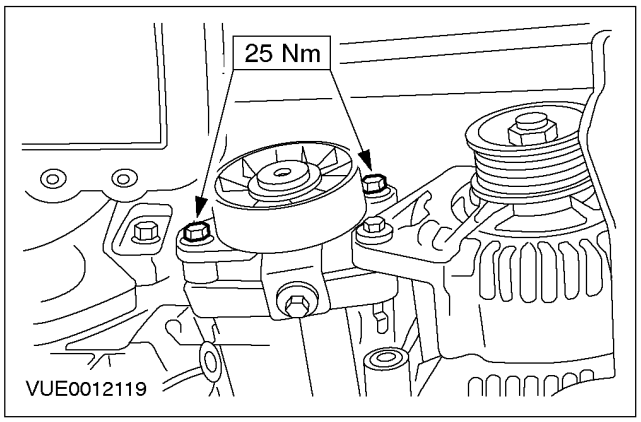

CONTINUED

SPECIFICATIONS

Torque Specifications

Description	Nm
Generator lower retaining bolt (1.6L)	45
Power steering lines bracket retaining bolt	25
Radiator support bracket retaining bolts	25
Generator upper retaining bolts (1.6L)	45
Generator electrical connector retaining nut (1.6L)	5
Generator lower retaining nuts (diesel)	25
Generator upper retaining nut (diesel)	25
Air conditioning (A/C) compressor retaining bolts	24
Endura DI Diesel Engine Accessory drive belt tensioner retaining nuts	47

CONTINUED

SECTION 415-00 Audio System — General Information

VEHICLE APPLICATION: 2002 Bantam

SUBJECT **PAGE**

DIAGNOSIS AND TESTING

Audio System 415-00-2
Inspection and Verification 415-00-2
Symptom Chart 415-00-2/3A
Pinpoint Tests 415-00-3B/12

DIAGNOSIS AND TESTING

Audio System

Inspection and Verification

1. Verify the customer concern.
2. Make sure you understand the customer concern; does the concern arise during start-up, with the vehicle in motion, do ambient conditions effect, alter or induce the concern?

Visual Inspection Chart

Mechanical	Electrical
• Audio unit damage • Cassette player jammed, not loading • Compact disc (CD) player jammed, not loading • Audio entertainment module damage • Radio receiver/cassette player power amplifier damage • Antenna/alignment • Speakers/water damage • Speakers/incorrectly mounted • Speaker cones damaged • Foreign material contacting speaker cone • Accessory installation • Trim reso-nance/incorrectly fit-ted trim.	• Fuse 2 (10 A) • Fuse 19 (10 A) • Wiring harness • Loose or corroded electrical connectors • Over stressed wiring, internally dam-aged/chaffing of wires.

3. Visually inspect for obvious signs of mechanical or electrical damage.
4. If an obvious cause for an observed or reported concern is found, correct the cause (if possible) before proceeding to the next step.
5. If the cause is not visually evident, verify the symptom and refer to the Symptom Chart.

Symptom Chart

Condition	Possible Sources	Action
•The audio unit is inoperative / does not operate correctly.	•Fuse(s). •Ground circuit. •Power circuit. •Audio unit.	•Go to Pinpoint Test A.
•The display is blank-radio re-ceiver / cassette player operates	•Audio unit.	•INSTALL a new audio unit.
•Poor reception AM only, FM only or both AM/FM	•Antenna. •Antenna connections. •Suppression equipment. •Audio unit.	•Go to Pinpoint Test B.

DIAGNOSIS AND TESTING (CONTINUED)

Condition	Possible Sources	Action
•Distorted sound from one or more speakers	•Speaker(s). •Trim resonance. •Wiring to speaker(s). •Audio unit.	•Go to Pinpoint Test C.
•No sound from all of the speakers	•Speaker(s). •Wiring to speaker(s). •Audio unit.	•Go to Pinpoint Test D.

Pinpoint Tests

PINPOINT TEST A: THE AUDIO UNIT IS INOPERATIVE/DOES NOT OPERATE CORRECTLY.

A1: CHECK THE OPERATION OF THE AUDIO UNIT 415-00-3B

A2: CHECK FOR SOUND FROM THE SPEAKERS..... 415-00-3B

A3: CHECK BATTERY SUPPLY FUSE..... 415-00-3B

A4: CHECK THE ACCESSORY SUPPLY FUSE..... 415-00-4

A5: CHECK CIRCUIT 29-MD15/74-MD15 AUDIO UNIT SUPPLY 415-00-4

A6: CHECK CIRCUIT 91-MD15 AUDIO CONTROL UNIT GROUND..... 415-00-4

A7: CHECK CIRCUIT 29 MD15/74-MD15 FOR CONTINUITY 415-00-5

A8: CHECK CIRCUIT 29-MD15/74-MD15 FOR SHORT..... 415-00-5

A9: CHECK THE RADIO RECEIVER, CASSETTE PLAYER FOR CORRECT OPERATION 415-00-5/6

PINPOINT TEST B: POOR RECEPTION

B1: CHECK THE ANTENNA RECEPTION..... 415-00-6

B2: CHECK THE ANTENNA GROUND..... 415-00-6/7

B3: CHECK THE ANTENNA CORE RESISTANCE..... 415-00-7

B4: CHECK THE ANTENNA BASE CONNECTOR RESISTANCE..... 415-00-7

B5: CHECK THE ANTENNA CORE FOR SHORT 415-00-8

B6: CHECK THE ANTENNA CABLE FOR SHORT 415-00-8

PINPOINT TEST C: DISTORTED SOUND FROM ONE OR MORE SPEAKERS

C1: CHECK THE AUDIO CONTROL OF THE SPEAKER (S) 415-00-8/9

C2: CHECK THE SPEAKER CIRCUIT RESISTANCE..... 415-00-9

C3: CHECK THE RESISTANCE OF THE SPEAKER..... 415-00-9/10

C4: CHECK THE SPEAKER CIRCUIT CONTINUITY..... 415-00-10

PINPOINT TEST D: NO SOUND FROM ALL OF THE SPEAKERS

D1: CHECK THE ELECTRICAL CONNECTORS TO THE AUDIO UNIT . 415-00-11

D2: CHECK THE SPEAK OSITIVE CIRCUIT FOR SHORT TO GROUND..... 415-00-11

D3: CHECK THE SPEAKER NEGATIVE CIRCUIT FOR SHORT TO GROUND..... 415-00-12

DIAGNOSIS AND TESTING (CONTINUED)

Pinpoint Tests

PINPOINT TEST A: THE AUDIO UNIT IS INOPERATIVE/DOES NOT OPERATE CORRECTLY.

CONDITIONS	DETAILS/RESULTS/ACTIONS
A1: CHECK THE OPERATION OF THE AUDIO UNIT	
1	2 Switch the radio receiver on. • Is the display illuminated? ☐ **Yes** GO TO **A2** ☐ **No** GO TO **A3**
A2: CHECK FOR SOUND FROM THE SPEAKERS	
	1 Verify that sound is coming from the speakers. • Is there sound coming from the speakers? ☐ **Yes** GO TO **C1** ☐ **No** GO TO **D1**
A3: CHECK BATTERY SUPPLY FUSE	
	1 Check fuse 2 (10 A) in the central junction box (CJB). • Is fuse 2 (10 A) OK? ☐ **Yes** GO TO **A4** ☐ **No** INSTALL a new fuse 2 (10 A). TEST the system for normal operation. If the fuse blows again, GO TO **A8**

DIAGNOSIS AND TESTING (CONTINUED)

CONDITIONS	DETAILS/RESULTS/ACTIONS
A4: CHECK THE ACCESSORY SUPPLY FUSE	
	1 Check fuse 19 (10 A) in the central junction box (CJB). • Is fuse 19 (10 A) OK? ☐ **Yes** GO TO **A5** ☐ **No** INSTALL a new fuse 19 (10 A). TEST the system for normal operation. If the fuse blows again, GO TO **A8**
A5: CHECK CIRCUIT 29-MD15/74-MD15 AUDIO UNIT SUPPLY	
2 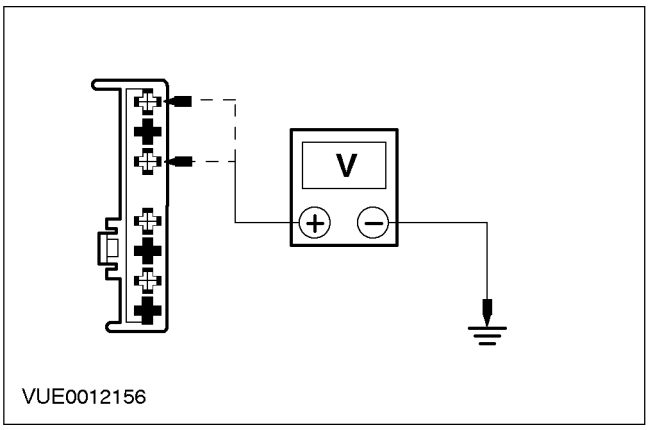 	**1** Remove the audio unit. **3** Using a digital multimeter, measure the voltages between the audio unit C52 - pin 1, circuit 29-MD15 (OG/BK) - pin 3, circuit 74-MD15 (BU/BK) • Are the voltages 10 volts or greater? ☐ **Yes** GO TO **A6** ☐ **No** GO TO **A7**
A6: CHECK CIRCUIT 91-MD15 AUDIO CONTROL UNIT GROUND	
	1 Using a digital multimeter, measure the resistance between the audio unit C52, pin 6, circuit 91-MD15 (BK/GN) and ground. • Is the resistance greater than 0.1 ohms? ☐ **Yes** REPAIR circuit 91-MD15A (BK/GN) as appropriate. TEST the system for normal operation. ☐ **No** INSTALL a new audio unit. TEST the system for normal operation.

DIAGNOSIS AND TESTING (CONTINUED)

CONDITIONS	DETAILS/RESULTS/ACTIONS
A7: CHECK CIRCUIT 29-MD15/74-MD15 FOR CONTINUITY	
1 2 3 Battery ground cable / Fuse 2 (10 A) / Fuse 19 (10 A) VUE0012189	4 Using a digital multimeter, measure the resistance between the output side of: - fuse 2 (10 A) and the audio unit C52, pin1, circuit 29-MD15 (OG/BK). - fuse 19 (10 A) and the audio unit C52, pin 3, circuit 74-MD15 (BU/BK). • Is the resistance greater than 0.1 ohms? ☐ **Yes** REPAIR circuit 29-MD15 (OG/BK)/74-MD15 (BU/BK) as appropriate. TEST the system for normal operation. ☐ **No** CHECK the CJB and associated circuits, GO TO **A8**
A8: CHECK CIRCUIT 29-MD15/74-MD15 FOR SHORT	
VUE0012190	1 Using a digital multimeter, measure the resistance between the audio control unit C52: - pin 1, circuit 29-MD15 (OG/BK) and ground. - pin 3, circuit 74-MD15 (BU/BK) and ground. • Are the resistances greater than 10,000 ohms? ☐ **Yes** INSTALL a new audio unit. ☐ **No** REPAIR circuit 29-MD15 (OG/BK) or 74-MD15 (BU/BK) as appropriate. TEST the system for normal operation.
A9: CHECK THE RADIO RECEIVER, CASSETTE PLAYER FOR CORRECT OPERATION	
1	
	2 Switch the radio receiver on.

DIAGNOSIS AND TESTING (CONTINUED)

CONDITIONS	DETAILS/RESULTS/ACTIONS
	3 Using the Audio Guide, CHECK the audio unit features and functions. • Does the unit operate correctly? ☐ **Yes** Make sure the customer understands the operation. Use the Audio Guide, supplied with the vehicle. ☐ **No** INSTALL a new audio control unit. TEST the system for normal operation.

PINPOINT TEST B: POOR RECEPTION

CONDITIONS	DETAILS/RESULTS/ACTIONS
B1: CHECK THE ANTENNA RECEPTION	
1 	2 Switch the radio receiver on. 3 Verify the radio is functioning correctly. • Is the radio receiver retaining known preset stations and sound coming from the speakers? ☐ **Yes** GO TO **B2** ☐ **No** GO TO **A3**
B2: CHECK THE ANTENNA GROUND	
1 2 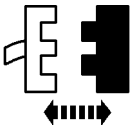 Audio Unit Antenna Connector	

DIAGNOSIS AND TESTING (CONTINUED)

CONDITIONS	DETAILS/RESULTS/ACTIONS
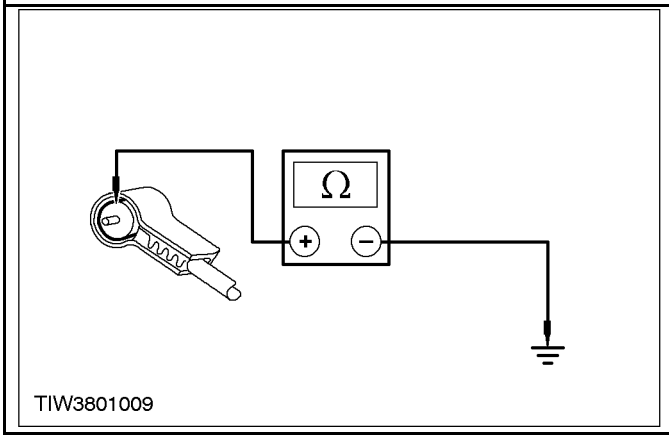	**3** Using a digital multimeter, measure the resistance between the antenna screen and ground. • Is the resistance less than 1 ohm? ☐ **Yes** GO TO **B3** ☐ **No** GO TO **B4**
B3: CHECK THE ANTENNA CORE RESISTANCE	
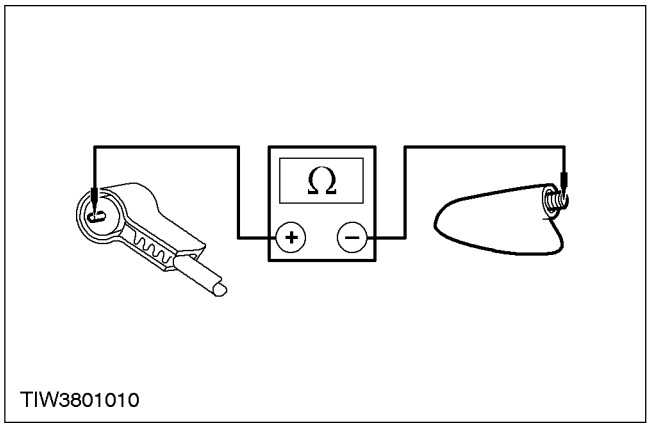	**1** Remove the antenna mast. **2** Using a digital multimeter, measure the resistance between the center pin on the antenna connector and the antenna mast screw thread • Is the resistance less than 1 ohms? ☐ **Yes** GO TO **B5** ☐ **No** CHECK the in-line connectors. INSTALL a new antenna cable.
B4: CHECK THE ANTENNA BASE CONNECTOR RESISTANCE	
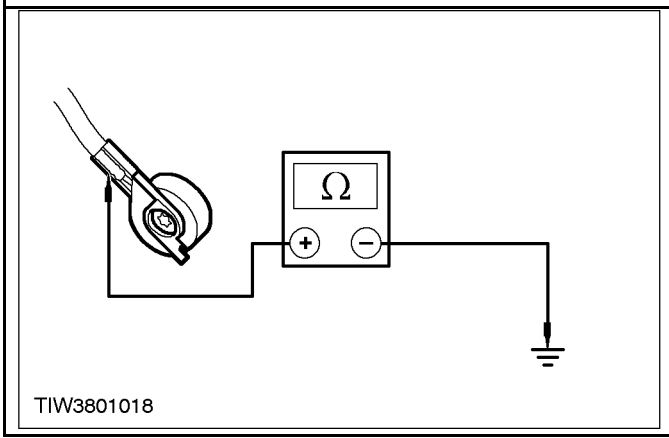	**1** Using a digital multimeter, measure the resistance between the antenna base screen connector and ground. • Is the resistance less than 1 ohm? ☐ **Yes** GO TO **B6** ☐ **No** CHECK and CLEAN the antenna screen/ground connections as required. TEST the system for normal operation.

DIAGNOSIS AND TESTING (CONTINUED)

CONDITIONS	DETAILS/RESULTS/ACTIONS
B5: CHECK THE ANTENNA CORE FOR SHORT	
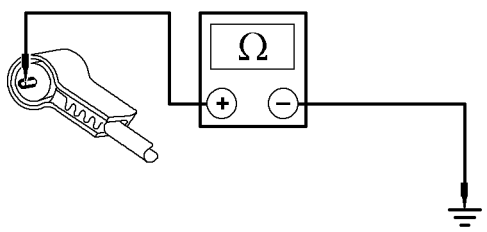 TIW3801011	1 Using a digital multimeter, measure the resistance between the center pin, on the antenna connector and ground. • Is the resistance greater than 10,000 ohms? ☐ **Yes** GO TO **B2** ☐ **No** GO TO **B6**
B6: CHECK THE ANTENNA CABLE FOR SHORT	
1 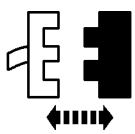 Antenna Base Connector 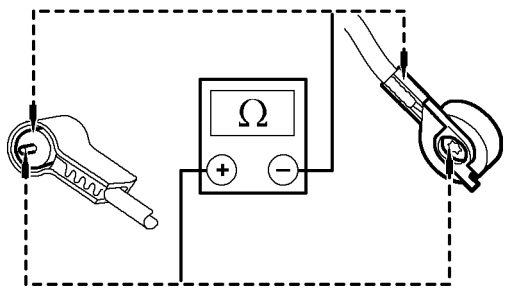 TIW3801012	2 Using a digital multimeter, measure the resistance between the center pin, antenna core and the antenna screen. • Is the resistance greater than 10,000 ohms? ☐ **Yes** INSTALL a new antenna. ☐ **No** INSTALL a new antenna cable. CHECK routing.

PINPOINT TEST C: DISTORTED SOUND FROM ONE OR MORE SPEAKERS

CONDITIONS	DETAILS/RESULTS/ACTIONS
C1: CHECK THE AUDIO CONTROL OF THE SPEAKER (S)	
1 	
	2 Switch the radio receiver on.

DIAGNOSIS AND TESTING (CONTINUED)

CONDITIONS	DETAILS/RESULTS/ACTIONS
	3 With the concern evident, use fade/balance control to pinpoint which speaker(s) is affected. • Is distortion present only at high volume? ☐ **Yes** Make sure the customer understands the operation. Use the Audio Guide, supplied with the vehicle. ☐ **No** GO TO **C2**
C2: CHECK THE SPEAKER CIRCUIT RESISTANCE	
1 **2** 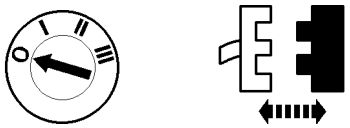 Audio Unit (C52b) 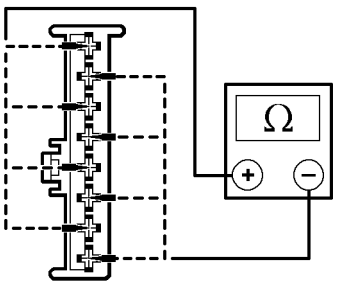 TIW3801013	**3** Using a digital multimeter, measure the resistance at the audio unit C52b between pins for the appropriate speaker(s). - Pin 1; circuit 33-MD10 (YE/BK) and pin 2, circuit 32-MD10 (WH/BK). (LHF) - Pin 3, circuit 33 MD11 (YE/VT) and pin 4, circuit 32-MD11 (WH/VT). (LHR) - Pin 5; circuit 33-MD17 (YE/RD) and pin 6, circuit 32-MD17 (WH/RD). (RHF) - Pin 7; circuit 33-MD18 (YE) and pin 8, circuit 32-MD18 (WH). (RHR) • Is the resistance 4.5 ohms (Rated speaker resistance ± 0.5) ? ☐ **Yes** GO TO **C4** ☐ **No** If the resistance is higher than 4.5 Ohms, GO TO **C3**
C3: CHECK THE RESISTANCE OF THE SPEAKER	
1 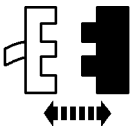 Speaker Connec- tor	

DIAGNOSIS AND TESTING (CONTINUED)

CONDITIONS	DETAILS/RESULTS/ACTIONS
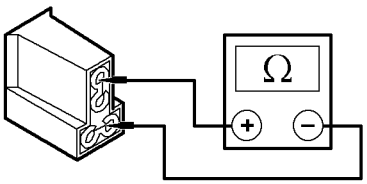 TIW3801015	**2** Using a digital multimeter, measure the resistance between the pins on the back of the appropriate speaker(s). • Is the resistance 4.5 ohms? (Rated resistance of speaker) ☐ **Yes** GO TO **C4** ☐ **No** INSTALL a new speaker. TEST the system for normal operation.
C4: CHECK THE SPEAKER CIRCUIT CONTINUITY	
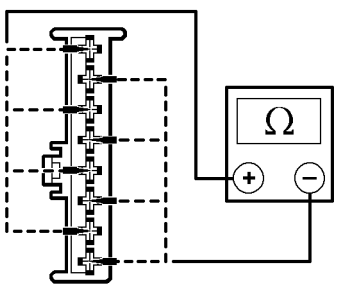 TIW3801013	**1** Using a digital multimeter, measure the resistance between the audio unit C52b and the speaker connector on the appropriate speaker(s). - C52b, pin 1, circuit 33-MD10 (YE/BK) and C116, pin 1, circuit 33-MD28 (YE). (LHF) - C52b, pin 2, circuit 32-MD10 (WH/BK) and C116, pin 2, circuit 32-MD28 (WH). (LHF) - C52b, pin 3, circuit 33-MD11 (YE/VT) and C91, pin 2, circuit 33-MD28 (YE/VT). (LHR) - C52b, pin 4, circuit 32-MD11 (WH/VT) and C91, pin 2, circuit 32-MD11 (WH/VT). (LHR) - C52b, pin 5, circuit 33-MD17 (YE/RD) and C116, pin 2, circuit 33-MD28 (YE). (RHF) - C52b, pin 6, circuit 32-MD17 (WH/RD) and C116, pin 2, circuit 32-MD28 (WH). (RHF) - C52b, pin 7, circuit 33-MD18 (YE) and C90, pin 2, circuit 33-MD18 (YE). (RHR) - C52b, pin 8, circuit 32-MD18 (WH) and C90, pin 2, circuit 32-MD18 (WH). (RHR) • Is the resistance less than 5 ohms? ☐ **Yes** INSTALL a new appropriate speaker. TEST the system for normal operation. ☐ **No** REPAIR the appropriate circuit. TEST the system for normal operation.

DIAGNOSIS AND TESTING (CONTINUED)

PINPOINT TEST D: NO SOUND FROM ALL OF THE SPEAKERS

CONDITIONS	DETAILS/RESULTS/ACTIONS
D1: CHECK THE ELECTRICAL CONNECTORS TO THE AUDIO UNIT	
	1 Check the electrical connectors at the back of the audio unit. • Are the electrical connectors engaged? ☐ **Yes** GO TO **D2** ☐ **No** CHECK the locking tangs and connector terminals engage fully. TEST the system for normal operation.
D2: CHECK THE SPEAKER POSITIVE CIRCUIT FOR SHORT TO GROUND	
1 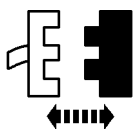 Audio Unit C52b 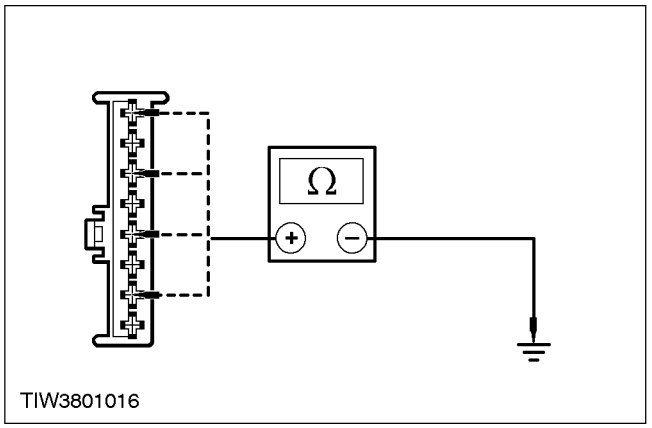 	2 Using a digital multimeter, measure the appropriate speaker circuit between: - C52b, pin 1, circuit 33-MD10 (YE/BK) and ground. (LHF) - C52b, pin 3, circuit 33-MD11 (YE/VT) and ground. (LHR) - C52b, pin 5, circuit 33-MD17 (YE/RD) and ground. (RHF) - C52b, pin 7, circuit 33-MD18 (YE) and ground. (RHR) • Is the resistance greater than 10,000 ohms? ☐ **Yes** GO TO **D3** ☐ **No** REPAIR the appropriate circuit. TEST the system for normal operation.

DIAGNOSIS AND TESTING (CONTINUED)

CONDITIONS	DETAILS/RESULTS/ACTIONS
D3: CHECK THE SPEAKER NEGATIVE CIRCUIT FOR SHORT TO GROUND	
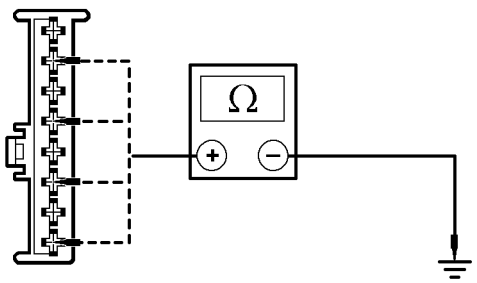 TIW3801017	**1** Using a digital multimeter, measure the appropriate speaker circuit between; - C52b, pin 2, circuit 32-MD10 (WH/BK) and ground. (LHF) - C52b, pin 4, circuit 32-MD11 (WH/VT) and ground. (LHR) - C52b, pin 6, circuit 32-MD17 (WH/RD) and ground. (RHF) - C52b, pin 8, circuit 32-MD18 (WH) and ground. (RHR) • Is the resistance greater than 10,000 ohms? ☐ **Yes** INSTALL a new audio unit. TEST the system for normal operation. ☐ **No** REPAIR the appropriate circuit. TEST the system for normal operation.

SECTION 415-01 Audio Unit

VEHICLE APPLICATION: 2002 Bantam

SUBJECT **PAGE**

DIAGNOSIS AND TESTING

Audio System 415-01-2

REMOVAL AND INSTALLATION

Audio Unit ..... (38 222 0) 415-01-3

DIAGNOSIS AND TESTING

Audio System

REFER to Section 415-00.

REMOVAL AND INSTALLATION

Audio Unit (38 222 0)

General Equipment
Radio removal tool

Removal

NOTE: Make a note of the audio keycode and the preset radio stations before disconnecting the audio control unit.

1. Detach the audio unit.
   1. Insert the radio removal tools into the locating holes until they click into place.
   2. Pull the tools gently towards the side of the unit to release the locking tangs.
   3. Pull the unit out of the instrument panel.

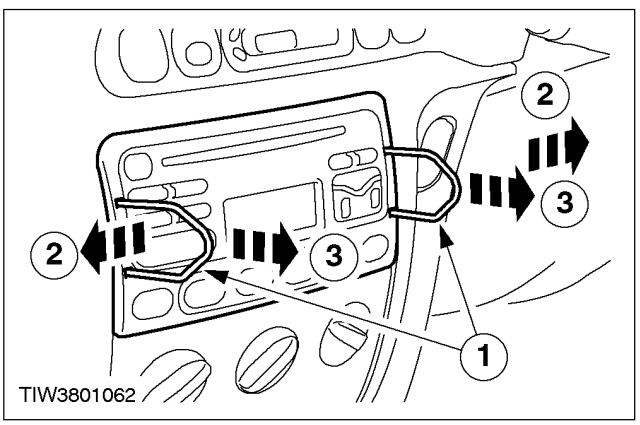

2. Remove the audio unit.
   - Disconnect the electrical connectors.
   - Disconnect the antenna lead.

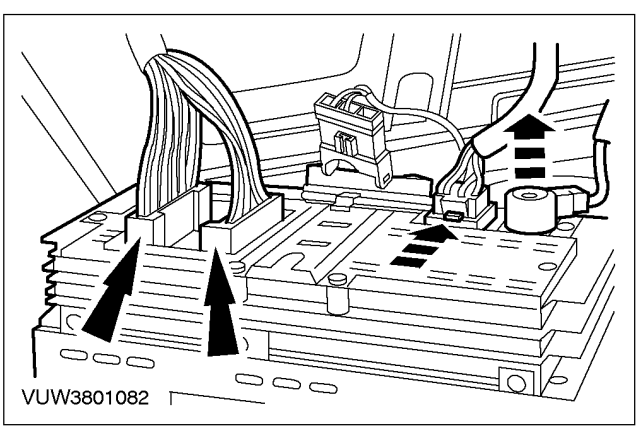

Installation

1. NOTE: When installing the audio unit make sure the rear support engages on the carrier. To install, reverse the removal procedure.
   - Enter the audio unit keycode and reprogram the preset radio stations.

SECTION 415-02 Antenna

VEHICLE APPLICATION: 2002 Bantam

SUBJECT **PAGE**

DESCRIPTION AND OPERATION
Antenna 415-02-2

DIAGNOSIS AND TESTING
Antenna 415-02-3

REMOVAL AND INSTALLATION
Antenna ..... (38 352 0) 415-02-4/5

DESCRIPTION AND OPERATION

Antenna

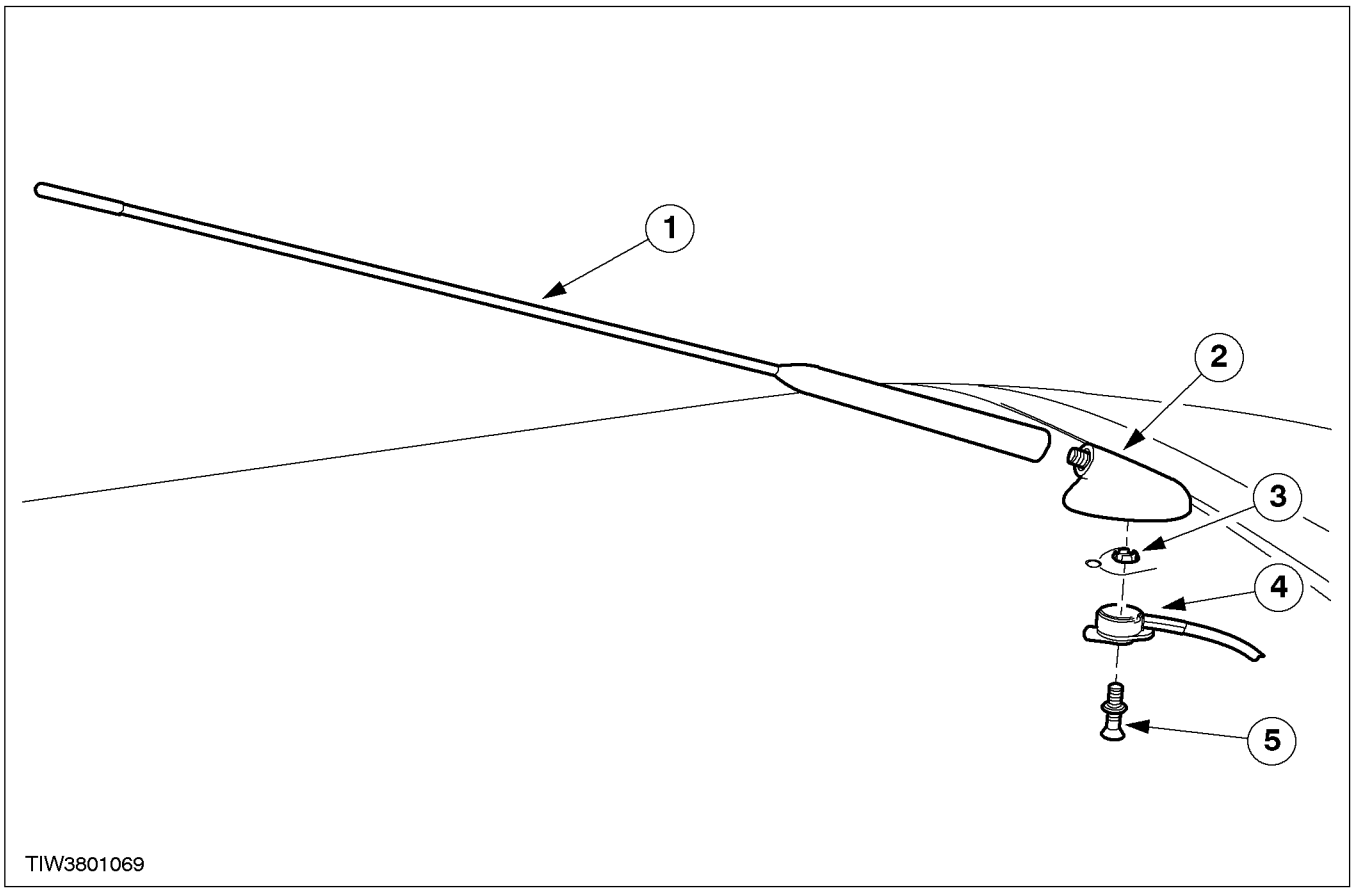

Item	Description
1	Antenna mast
2	Antenna base
3	Insulator clip
4	Antenna cable

Item	Description
5	Retaining screw

The fixed roof mounted mast antenna is connected to the audio control unit by an antenna cable routed down the A-pillar.

DIAGNOSIS AND TESTING

Antenna

REFER to Section 415-00.

REMOVAL AND INSTALLATION

Antenna (38 352 0)

Removal

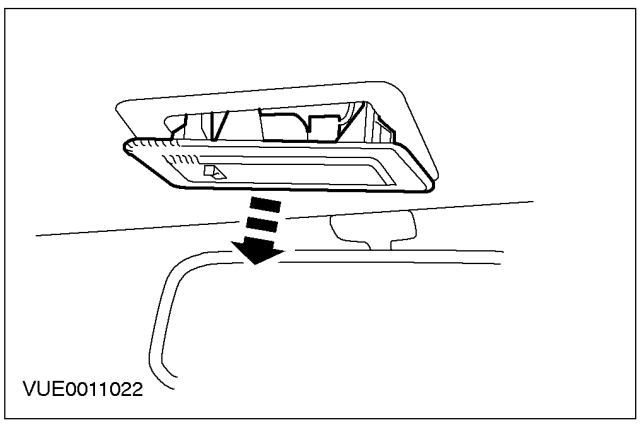

1. Detach the interior lamp.

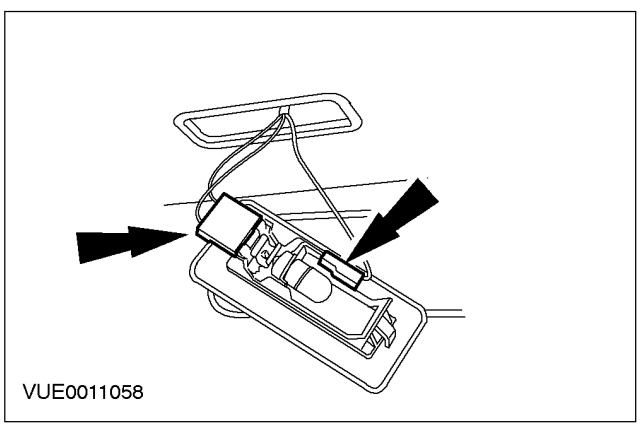

2. Remove the interior lamp.

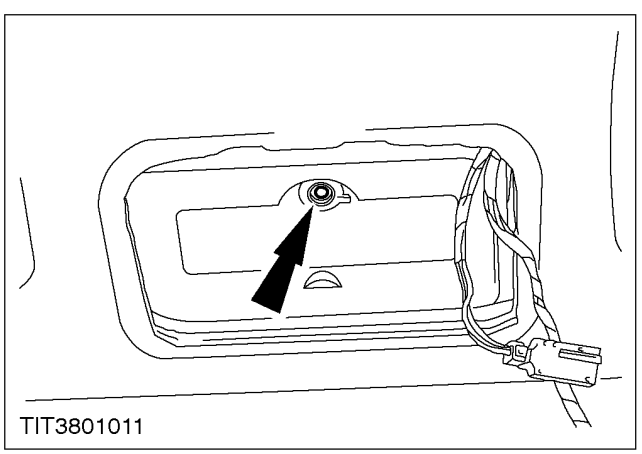

3. Detach the antenna cable.

REMOVAL AND INSTALLATION (CONTINUED)

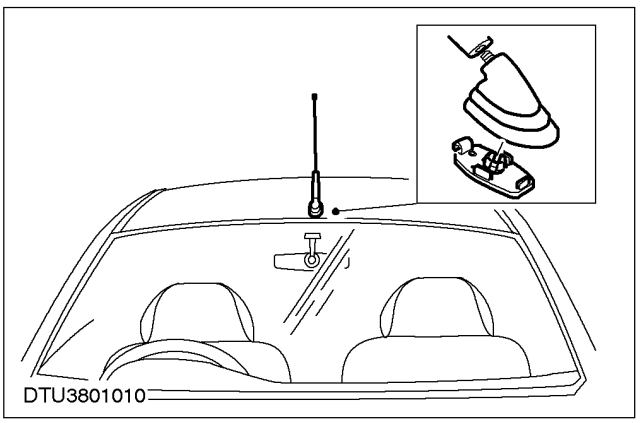

4. Remove the antenna and seal.

Installation

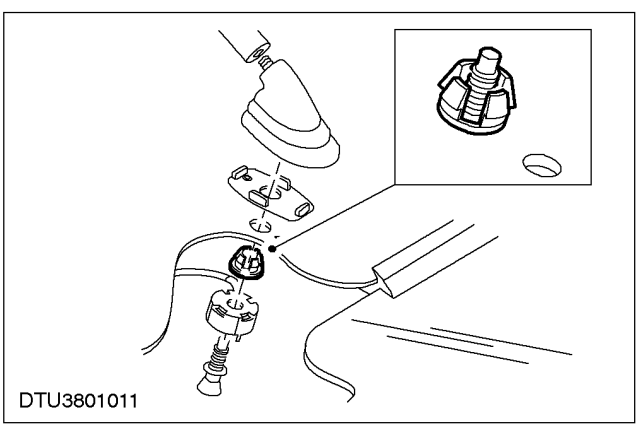

1. **NOTE:** Make sure the antenna cable insulator clip is correctly located before installing the antenna.
   To install, reverse the removal procedure.

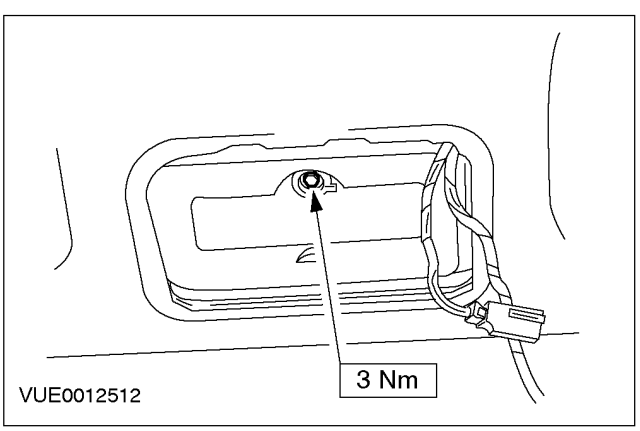

SECTION 415-03 Speakers

VEHICLE APPLICATION: 2002 Bantam

SUBJECT **PAGE**

DESCRIPTION AND OPERATION
Speakers 415-03-2

DIAGNOSIS AND TESTING
Speakers 415-03-3

REMOVAL AND INSTALLATION
Front Door Speaker ..... (38 268 0) 415-03-4

DESCRIPTION AND OPERATION

Speakers

Large diameter round speakers are fitted to the front doors.

DIAGNOSIS AND TESTING

Speakers

REFER to Section 415-00.

REMOVAL AND INSTALLATION

Front Door Speaker (38 268 0)

Removal

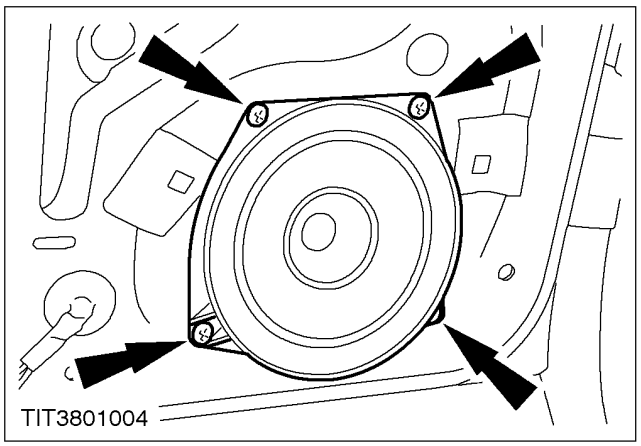

1. Remove the front door trim panel.
   For additional information,
   refer to Section 501-05.

2. Detach the loudspeaker (four screws).

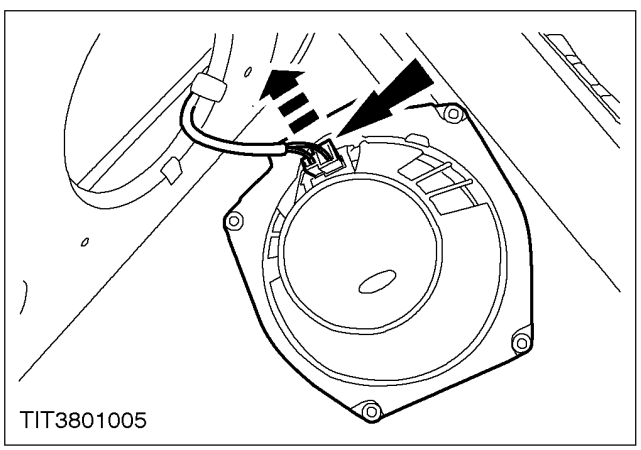

3. ⚠ **CAUTION: When disconnecting the multiplugs do not pull the wiring; pull on the multiplug body.**
   Disconnect the multiplug and remove the loudspeaker.

Installation

1. Refit the components in reverse order.

SECTION 417-01 Exterior Lighting

PAGE 1 OF 2

VEHICLE APPLICATION: 2002 Bantam

SUBJECT **PAGE**

DESCRIPTION AND OPERATION

Exterior Lighting 417-01-3
Headlamp System 417-01-3
Multifunction switch 417-01-3
Side lamps 417-01-3
License plate lamps 417-01-3
Stop lamp switch 417-01-3
Reversing lamps 417-01-4
Stop lamps 417-01-4
Turn signal and hazard warning lamps 417-01-4
Hazard warning lamp switch 417-01-4
Turn signal relay 417-01-4
Fuses and Relays 417-01-4/7

DIAGNOSIS AND TESTING

Headlamps 417-01-8
Inspection and Verification 417-01-8
Symptom Chart 417-01-8
Pinpoint Tests 417-01-9/26
Component Tests 417-01-26
Stop lamps 417-01-27
Inspection and Verification 417-01-27
Pinpoint Tests 417-01-27/31
Turn Signal and Hazard Lamps 417-01-32
Inspection and Verification 417-01-32
Pinpoint Tests 417-01-33A/50
Parking, Rear and License Lamps 417-01-51A
Inspection and Verification 417-01-51A
Pinpoint Tests 417-01-51B/60
Reversing Lamps 417-01-61
Inspection and Verification 417-01-61
Symptom Chart 417-01-61
Pinpoint Tests 417-01-61/64
Fog Lamps 417-01-65
Inspection and Verification 417-01-65
Symptom Chart 417-01-65
Pinpoint Tests 417-01-65/72
Component Tests 417-01-72

REMOVAL AND INSTALLATION

Headlamp Assembly ..... (32 115 0) 417-01-73
Rear Lamp Assembly ..... (32 305 0) 417-01-74

GENERAL PROCEDURES

Headlamp Adjustment 417-01-75

SECTION 417-01 Exterior Lighting

PAGE 2 OF 2

SPECIFICATIONS

Specifications 417-01-77
Exterior Lighting 417-01-77
Headlamp Adjustment 417-01-77
General Specifications 417-01-77
Torque Specifications 417-01-77

CONTINUED

DESCRIPTION AND OPERATION

Exterior Lighting

The headlamp unit consists of two compartments. The turn signal and the high and low beam, side lights are contained in two separate compartments.

High and low beams each use a HB3LL bulb. Both bulbs are switched on for high beam.

NOTE: Only use original equipment bulbs in service.

The turn signal lamp consists of an orange lens and a clear bulb.

Headlamp System

The headlamp system consists of:

- Two headlamp assemblies,
- A multifunction switch on the steering column,
- Low beam relay,
- High beam relay,
- Turn signal and low beam switch,
- High beam display,
- Wiring harness,
- Fuses.

The voltage to the multifunction switch is supplied through fuse F9 and the ignition switch. Fuse F9 is located in the central junction box (CJB).

When the headlamps are switched on, a voltage is supplied to the high and low beam switch and to the coil of the low beam relay. The low beam relay is located in the CJB.

⚠CAUTION: The voltage supply to the low beam relay, Pin 5, is not fused.

If the main and low beam switch is set to “low beam", then a voltage is supplied through the low beam relay to the low beam bulb.

The left and right-hand low beams are fused separately through fuses F10 and F11. These fuses are located in the CJB.

⚠CAUTION: The voltage supply to the high beam relay, Pin 5, is not fused.

If the high and low beam switch is set to “high beam", then a voltage is supplied via the high beam relay to the high beam bulb. The left and right-hand high beams are fused separately through fuses F21 and F22. These fuses are located in the CJB.

Multifunction switch

The multifunction switch has the following settings for the exterior lights:

- Off,
- Side lamps,
- Driving lamps, set to either
  - Low beam or
  - High beam,
- Headlamp flash.

If the multifunction switch is set to “side lamps", then a voltage is supplied to the front and rear side lamps, as well as to the license plate lamp.

Low beam and high beam can only be switched on if the ignition is switched on. If the switch is set to “low beam", the low beam relay is activated first, which then switches the voltage to the bulbs. If the switch is set to “high beam" or “headlamp flash", the high beam relay is activated first, which then switches the voltage to the bulbs.

Side lamps

- The voltage to the side lamps is switched through the multifunction switch on the left-hand side of the steering column.
- The circuits for left and right-hand side are fused separately through fuses F6 and F7 in the CJB.
- The lamps are in operation when the switch is set to “side lamps" or “driving lamps".

License plate lamps

There is one license plate lamp to illuminate the license plate. The lamp is supplied with a voltage through fuse F7.

The license plate lamp illuminates when the switch is set to “side lamps" or “driving lamps".

Stop lamp switch

The stop lamp switch is installed underneath the instrument panel on the brake pedal bracket. It switches the voltage to the stop lamps through fuse F13 in the CJB.

CONTINUED

DESCRIPTION AND OPERATION (CONTINUED)

Reversing lamps

The reversing lamp system consists of:

- Reversing lamp bulb,
- Reversing lamp switch,
- Wiring harness,
- Fuse F13.

The reversing lamp switch supplies the reversing lamps with voltage. This circuit is fused through fuse F13 in the CJB.

Stop lamps

- The stop lamps are integrated in the rear lamp assemblies.
- The stop lamp switch supplies the stop lamps with voltage.

Turn signal and hazard warning lamps

The turn signal and hazard warning lamp system consists of:

- Turn signal switch (included in the multifunction switch on the steering column),
- Turn signal relay,
- Turn signal lamps,
- Turn signal and hazard warning lamp indicator in the instrument cluster,
- Wiring harness,
- Fuses F5 and F17.

The turn signal relay is supplied with voltage through fuse F17 in the CJB and the turn signal lamp switch.

Hazard warning lamp switch

- The hazard warning lamp switch is incorporated in the multifunction switch on the steering column. It is located on top of the steering column shroud.
- When the hazard warning lamp switch is switched on all four turn signal lamps and the hazard warning lamp indicator in the instrument cluster are supplied with a voltage through fuse F5 in the CJB and the turn signal relay.

Turn signal relay

The turn signal relay operates electronically and is plugged into the multifunction switch.

Fuses and Relays

Battery junction box (BJB)

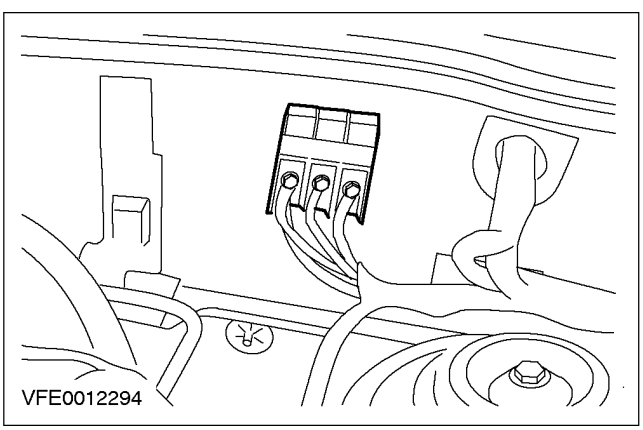

CONTINUED

DESCRIPTION AND OPERATION

Central junction box (CJB)- front view, fuses

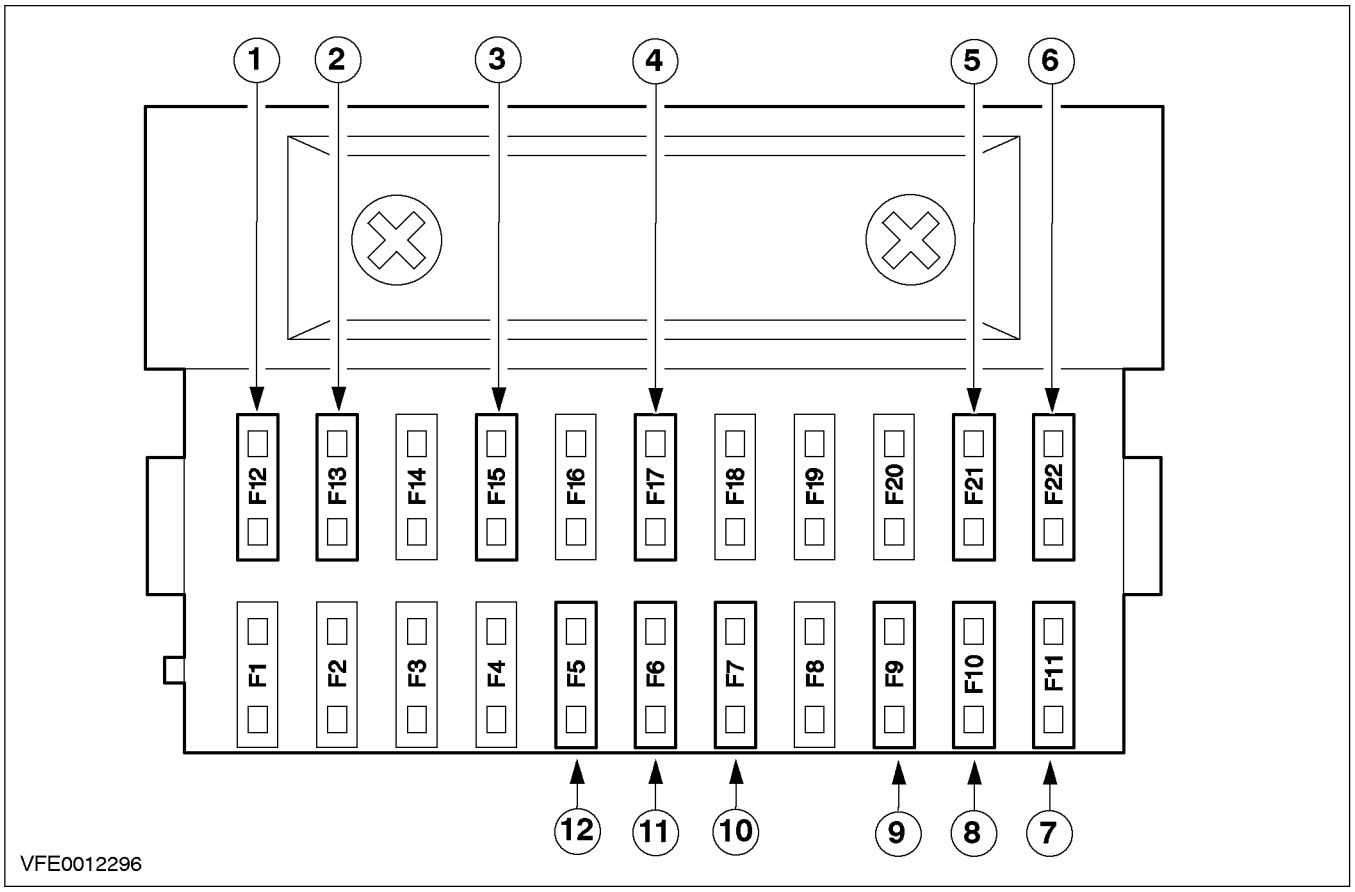

Item	Description
1	Fuse F12 - multifunction switch, windshield wiper motor, wiper relay
2	Fuse F13 - stop lamp, transmission switch, instrument cluster illumination, heating
3	Fuse F15 - multifunction switch
4	Fuse F17 - multifunction switch
5	Fuse F21 - headlamp LH, instrument cluster illumination
6	Fuse F22 - headlamp RH

Item	Description
7	Fuse F11 - headlamp RH
8	Fuse F10 - headlamp LH
9	Fuse F9 - multifunction switch
10	Fuse F7 - front parking lamp RH, license plate lamp, rear lamp assembly RH
11	Fuse F6 - front parking lamp LH, rear lamp assembly LH, front parking lamp LH, instrument cluster illumination, radio, heating
12	Fuse F5 - multifunction switch

CONTINUED

DESCRIPTION AND OPERATION

Central Junction Box (CJB)- top view

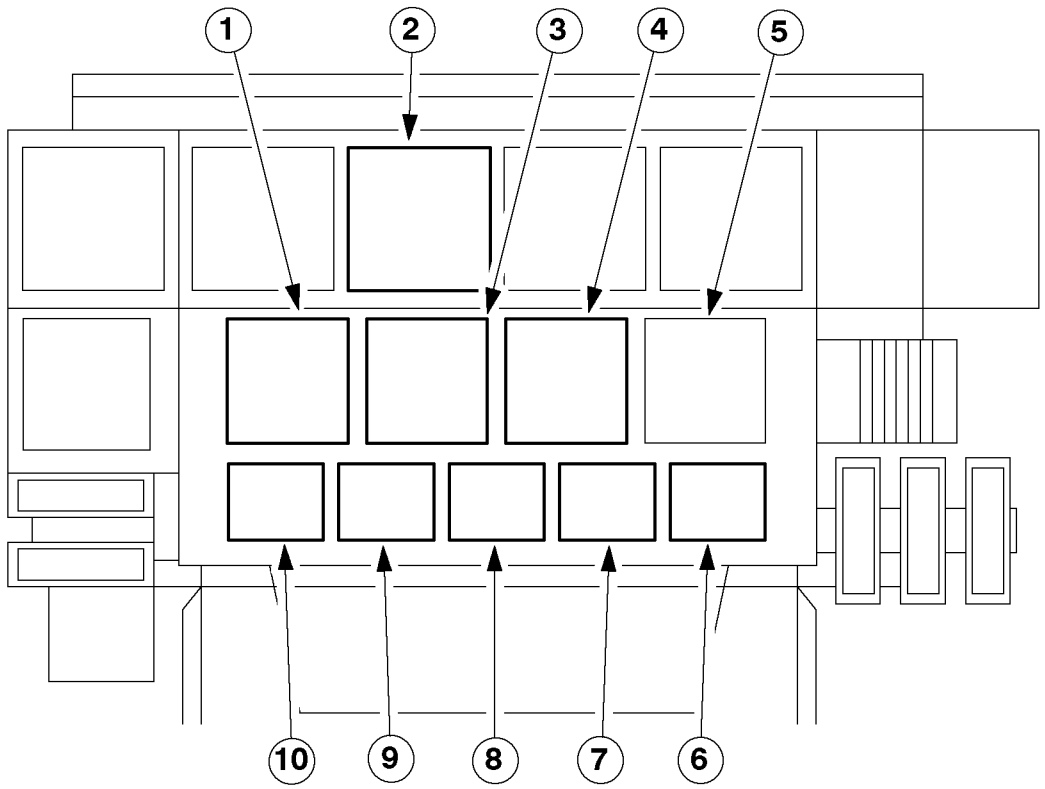

VFE0012297

Item	Description
1	Ignition relay
2	Windshield wiper relay
3	Horn relay
4	A/C switch relay
5	Not used

Item	Description
6	WOT relay (petrol)
7	Power hold relay
8	Fuel pump relay (petrol)
9	Low beam relay
10	High beam relay

CONTINUED

DESCRIPTION AND OPERATION

Multifunction switch

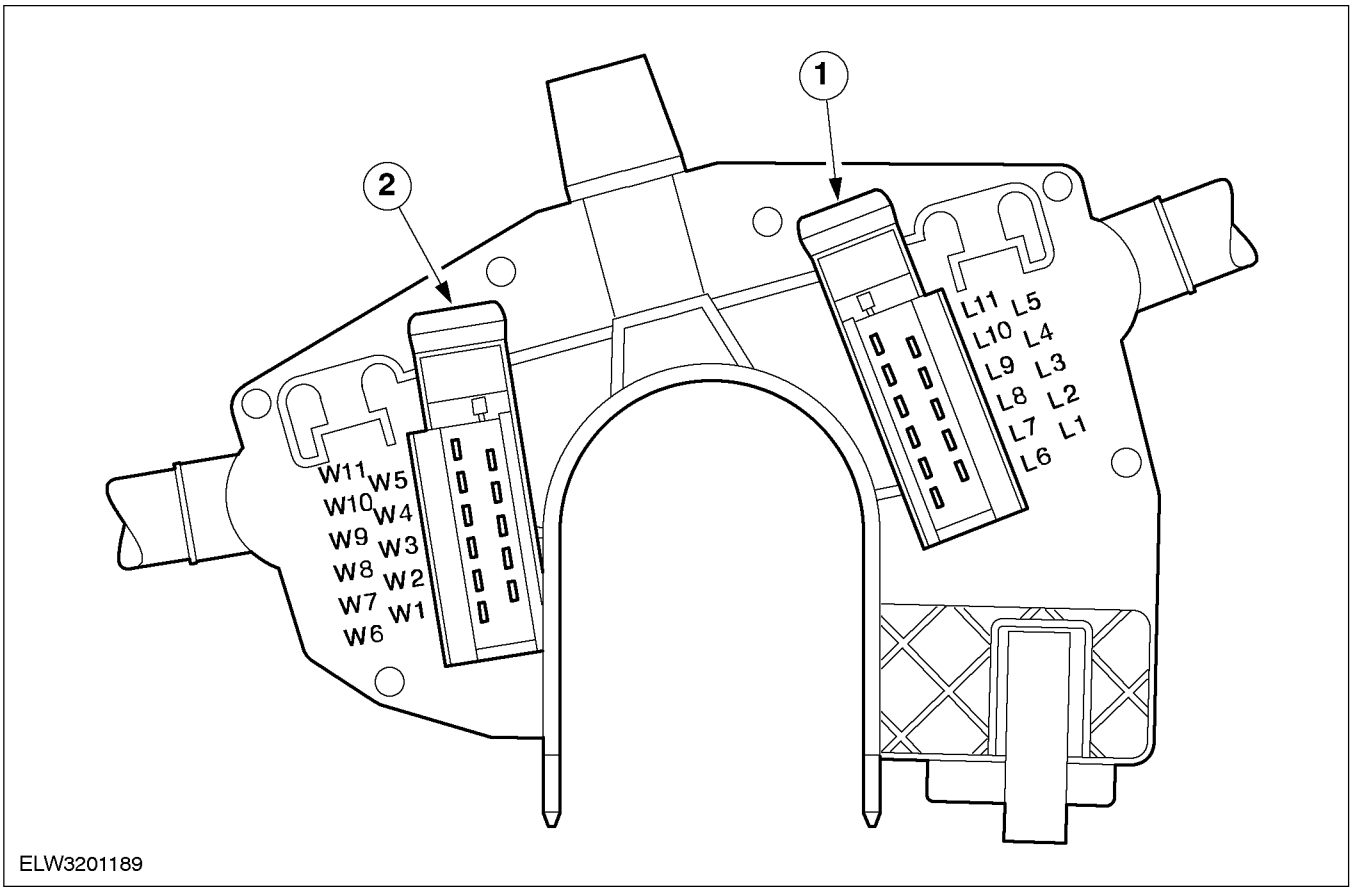

Item	Description
1	Connection point for connector C15a

Item	Description
2	Connection point for connector C15b

CONTINUED

DIAGNOSIS AND TESTING

Headlamps

Refer to Wiring Diagram Cell: 41701, for schematic and connector information.

Inspection and Verification

1. Verify the customer concern.
2. Visually inspect for obvious signs of mechanical or electrical damage.

Visual Inspection Chart

Electrical
• Fuse(s). • Bulb(s). • Wiring harnesses. • Electrical connector(s).

3. If an obvious cause for an observed or reported concern is found, correct the cause (if possible) before proceeding to the next step.
4. If the cause is not visually evident, verify the symptom and refer to the Symptom Chart.

Symptom Chart

Condition	Possible Sources	Action
•Both headlamps are inoperative.	•Fuse. •Circuit(s). •Multifunction switch. •Central Junction Box (CJB).	•Go To Pinpoint Test A
•The low beams are inoperative.	•Circuit(s). •Relay – low beam. •Multifunction switch.	•Go To Pinpoint Test B
•The high beams are inoperative.	•Circuit(s). •Relay – high beam. •Multifunction switch.	•Go To Pinpoint Test C
•One low beam headlamp is inoperative.	•Fuse(s). •Bulb(s). •Circuit(s). •Headlamp, left-hand side / right-hand side.	•Go To Pinpoint Test D
•One high beam headlamp is inoperative.	•Fuse(s). •Bulb(s). •Circuit(s). •Headlamp, left-hand side / right-hand side.	•Go To Pinpoint Test E
•The Headlamps are on continuously.	•Circuit(s). •Multifunction switch. •Relay – low beam. •Relay – high beam. •Instrument cluster.	•Go To Pinpoint Test F
•Flash-to-pass feature is inoperative.	•Multifunction switch.	•Go To Pinpoint Test G

Pinpoint Tests

PAGE 1 OF 2

PINPOINT TEST A: BOTH HEADLAMPS ARE INOPERATIVE

A1: CHECK THE FUSE F9 417-01-9

A2: CHECK THE POWER SUPPLY OF FUSE F9 417-01-9

A3: CHECK THE POWER SUPPLY OF MULTIFUNCTION SWITCH 417-01-10

A4: CHECK THE GROUND CONNECTION OF BOTH HEADLAMPS 417-01-10

PINPOINT TEST B: THE LOW BEAMS ARE INOPERATIVE

B1: CHECK THE CONTROL VOLTAGE OF RELAY – LOW BEAM 417-01-10/11

B2: CHECK THE POWER SUPPLY OF RELAY – LOW BEAM 417-01-11

B3: CHECK THE MULTIFUNCTION SWITCH FOR PROPER FUNCTION 417-01-11

PINPOINT TEST C: THE HIGH BEAMS ARE INOPERATIVE

C1: CHECK THE CONTROL VOLTAGE OF RELAY – HIGH BEAM 417-01-12

C2: CHECK THE MULTIFUNCTION SWITCH FOR PROPER FUNCTION 417-01-12

C3: CHECK THE POWER SUPPLY OF RELAY – HIGH BEAM 417-01-13

C4: CHECK THE GROUND CONNECTION OF RELAY – HIGH BEAM 417-01-13

PINPOINT TEST D: ONE LOW BEAM HEADLAMP IS INOPERATIVE

D1: DETERMINE THE FAULT CONDITION 417-01-13/14

D2: CHECK THE FUSE F10 417-01-14

D3: CHECK THE POWER SUPPLY OF HEADLAMP, LEFT-HAND SIDE 417-01-14

D4: CHECK THE GROUND CONNECTION OF HEADLAMP, LEFT-HAND SIDE 417-01-15

D5: CHECK THE POWER SUPPLY OF FUSE F10 417-01-15

D6: CHECK THE FUSE F11 ..... 417-01-15/16

D7: CHECK THE POWER SUPPLY OF HEADLAMP, RIGHT-HAND SIDE 417-01-16

D8: CHECK THE GROUND CONNECTION OF HEADLAMP,
RIGHT-HAND SIDE 417-01-16/17

D9: CHECK THE POWER SUPPLY OF FUSE F11 417-01-17

PINPOINT TEST E: ONE HIGH BEAM HEADLAMP IS INOPERATIVE

E1: DETERMINE THE FAULT CONDITION 417-01-17

E2: CHECK THE FUSE F21 417-01-18

E3: CHECK THE POWER SUPPLY OF HEADLAMP, LEFT-HAND SIDE 417-01-18

E4: CHECK THE GROUND CONNECTION OF HEADLAMP, LEFT-HAND SIDE 417-01-18/19

E5: CHECK THE POWER SUPPLY OF FUSE F21 417-01-19

E6: CHECK THE FUSE F22 417-01-19

E7: CHECK THE POWER SUPPLY OF HEADLAMP, RIGHT-HAND SIDE 417-01-20

E8: CHECK THE GROUND CONNECTION OF HEADLAMP,
RIGHT-HAND SIDE 417-01-20

CONTINUED

Pinpoint Tests

E9: CHECK THE POWER SUPPLY OF FUSE F22 417-01-21

PINPOINT TEST F: THE HEADLAMPS ARE ON CONTINUOUSLY

F1: CHECK THE HEADLAMPS.....417-01-21

F2: CHECK THE MULTIFUNCTION SWITCH FOR PROPER FUNCTION 417-01-21

F3: CHECK THE RELAY – LOW BEAM F R PROPER FUNCTION 417-01-22

F4: CHECK THE CONTROL CIRCUIT OF RELAY –
LOW BEAM FOR SHORT TO POWER 417-01-22

F5: CHECK THE CIRCUI TO LEFT-HAN LOW BEAM HEADLAMP
FOR SHORT TO POWER 417-01-22

F6: CHECK THE CIRCUI TO RIGHT-HA D LOW BEAM HEADLAMP
FOR SHORT TO POWER 417-01-23

F7: CHECK THE MULTIFUNCTION SWITCH FOR PROPER FUNCTION 417-01-23

F8: CHECK RELAY – HIGH BEAM FOR PROPER FUNCTION.....417-01-23

F9: CHECK THE CONTROL CIRCUIT OF RELAY – HIGH BEAM
FOR SHORT TO POWER 417-01-24

F10: CHECK THE CIRCUIT TO RIGHT-HAND HIGH BEAM HEADLAMP
FOR SHORT TO POWER 417-01-24

F11: CHECK THE CIRCUIT TO LEFT-HAND HIGH BEAM HEADLAMP
FOR SHORT TO POWER 417-01-24/25

F12: CHECK THE INSTRUMENT CLUSTER.....417-01-25

PINPOINT TEST G: THE FLASH-TO-PASS FEATURE IS INOPERATIVE

G1: CHECK THE HIGH BEAM HEADLAMPS FOR PROPER FUNCTION.....417-01-25/26

CONTINUED

DIAGNOSIS AND TESTING (CONTINUED)

Pinpoint Tests

PINPOINT TEST A: BOTH HEADLAMPS ARE INOPERATIVE

CONDITIONS	DETAILS/RESULTS/ACTIONS
A1: CHECK THE FUSE F9	
1 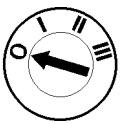 2 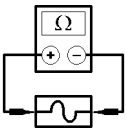 Fuse F9 (CJB)	3 South Africa: Check the fuse F9 (5 A). • Is the fuse OK? ☐ **Yes** GO TO **A2** ☐ **No** INSTALL a new fuse F9 (20 A) or F9 (5 A). If the fuse blows again, LOCATE and REPAIR the short circuit by using the wiring diagrams. TEST the system for normal operation.
A2: CHECK THE POWER SUPPLY OF FUSE F9	
1 2 Fuse F9 (CJB)	3 Measure the voltage between fuse F9 (5 A) or (20 A) and ground. • Is battery voltage indicated? ☐ **Yes** GO TO **A3** ☐ **No** REPAIR the power supply of fuse F9, by using the wiring diagrams. TEST the system for normal operation. If necessary INSTALL a new CJB.

CONTINUED

DIAGNOSIS AND TESTING (CONTINUED)

CONDITIONS	DETAILS/RESULTS/ACTIONS
A3: CHECK THE POWER SUPPLY OF MULTIFUNCTION SWITCH	
1 2 3 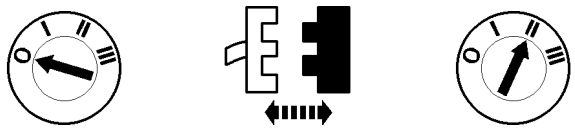 Multifunction switch C15a 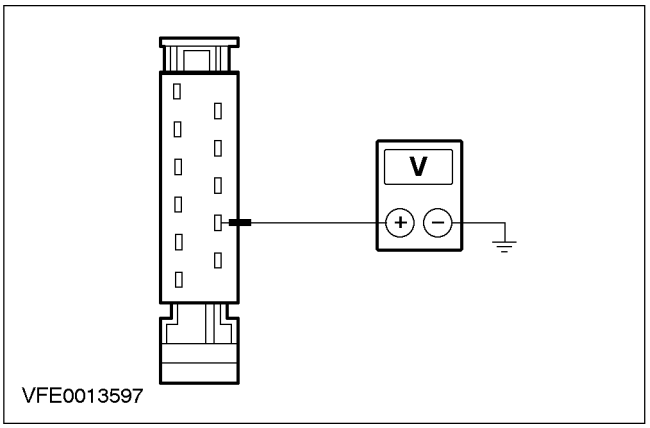 VFE0013597	4 Measure the voltage between multifunction switch, connector C15a, pin 4, circuit 14-LE29 (VT/BK), harness side and ground. • Is battery voltage indicated? ☐ **Yes** GO TO **A4** ☐ **No** REPAIR the open circuit(s) between fuse F9 and multifunction switch, by using the wiring diagrams. TEST the system for normal operation.
A4: CHECK THE GROUND CONNECTION OF BOTH HEADLAMPS	
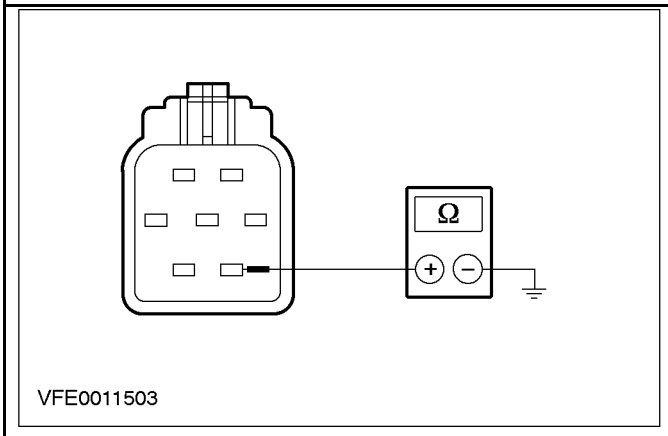 VFE0011503	1 Measure the resistance between headlamp, left-hand side, connector C45, pin 7, circuit 31-LE31A (BK), harness side and ground. • Is the resistance less than 2 ohms? ☐ **Yes** CHECK the multifunction switch, according to Component Testing attached to the wiring diagrams. If necessary INSTALL a new one. TEST the system for normal operation. ☐ **No** REPAIR the open circuit(s) between splice S24 and ground G9, by using the wiring diagrams. TEST the system for normal operation.

PINPOINT TEST B: THE LOW BEAMS ARE INOPERATIVE

CONDITIONS	DETAILS/RESULTS/ACTIONS
B1: CHECK THE CONTROL VOLTAGE OF RELAY – LOW BEAM	
1 2 3 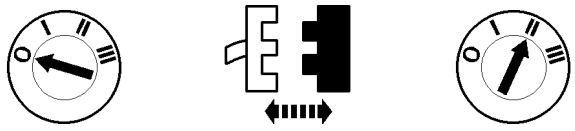 Relay – low beam C6	

CONTINUED

DIAGNOSIS AND TESTING (CONTINUED)

CONDITIONS	DETAILS/RESULTS/ACTIONS
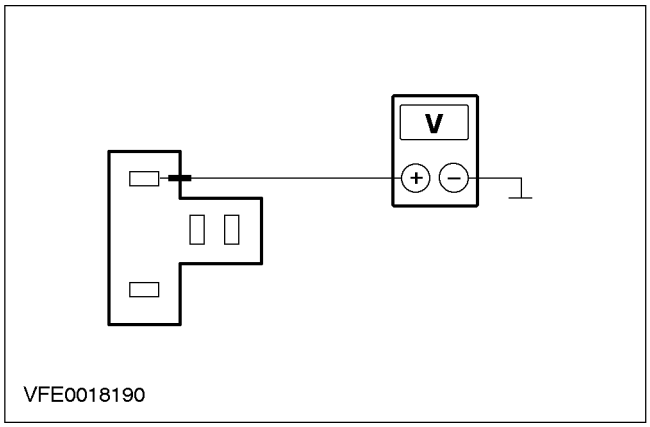	**4** Turn the multifunction switch to the LOW BEAM position. **5** Measure the voltage between relay socket – low beam, connector C6, pin 2, circuit 14S-LE19 (VT/BU) and ground. • Is battery voltage indicated? ☐ **Yes** GO TO **B2** ☐ **No** GO TO **B3**
B2: CHECK THE POWER SUPPLY OF RELAY – LOW BEAM	
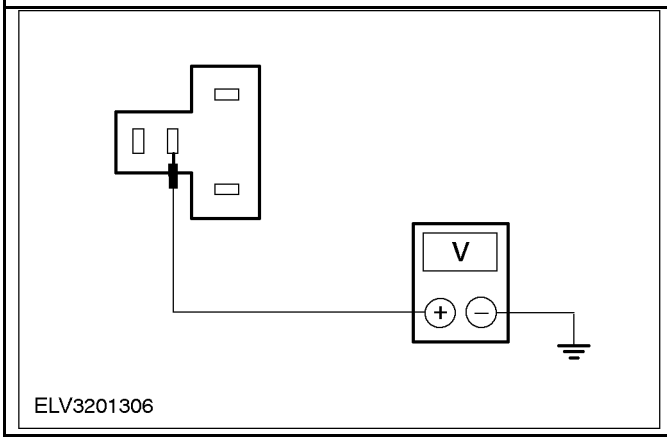	**1** Measure the voltage between relay socket – low beam, connector C6, pin 5, circuit 30-LE20 (RD) and ground. • Is battery voltage indicated? ☐ **Yes** INSTALL a new relay – low beam. TEST the system for normal operation. ☐ **No** REPAIR the power supply of relay – low beam, by using the wiring diagrams. TEST the system for normal operation.
B3: CHECK THE MULTIFUNCTION SWITCH FOR PROPER FUNCTION	
1 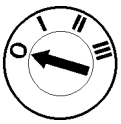	**2** Check the multifunction switch, according to Component Testing attached to the wiring diagrams. • Is the multifunction switch OK? ☐ **Yes** REPAIR the open circuit(s) between multifunction switch and relay – low beam, by using the wiring diagrams. TEST the system for normal operation. ☐ **No** INSTALL a new multifunction switch. TEST the system for normal operation.

CONTINUED

DIAGNOSIS AND TESTING (CONTINUED)

PINPOINT TEST C: THE HIGH BEAMS ARE INOPERATIVE

CONDITIONS	DETAILS/RESULTS/ACTIONS
C1: CHECK THE CONTROL VOLTAGE OF RELAY – HIGH BEAM	
1 2 3 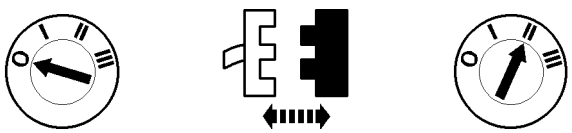 Relay – high beam C5 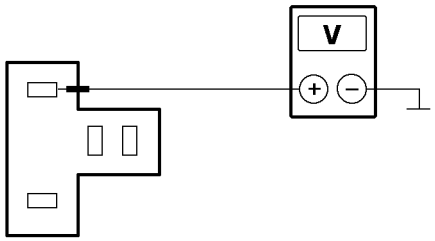 VFE0018190	4 Turn the multifunction switch to the LOW BEAM and HIGH BEAM position. 5 Measure the voltage between relay socket – high beam, connector C5, pin 2, circuit 14S-LE12 (VT/YE) and ground. • Is battery voltage indicated? ☐ **Yes** GO TO **C3** ☐ **No** GO TO **C2**
C2: CHECK THE MULTIFUNCTION SWITCH FOR PROPER FUNCTION	
1 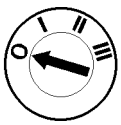	2 Check the multifunction switch, according to Component Testing attached to the wiring diagrams. • Is the multifunction switch OK? ☐ **Yes** REPAIR the open circuit(s) between multifunction switch and relay – high beam, by using the wiring diagrams. TEST the system for normal operation. ☐ **No** INSTALL a new multifunction switch. TEST the system for normal operation.

CONTINUED

DIAGNOSIS AND TESTING (CONTINUED)

CONDITIONS	DETAILS/RESULTS/ACTIONS
C3: CHECK THE POWER SUPPLY OF RELAY – HIGH BEAM	
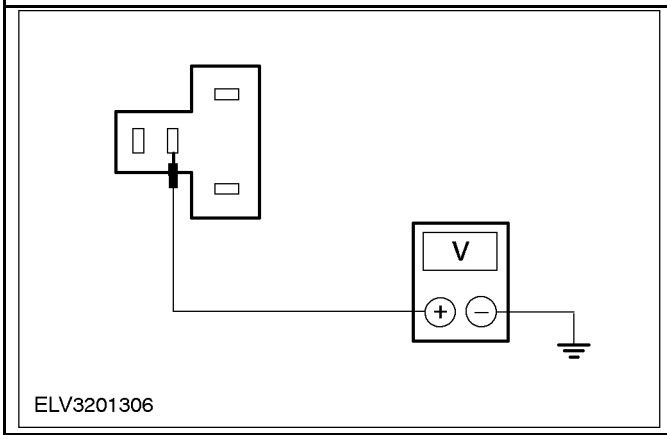	1 Measure the voltage between relay socket – high beam, connector C5, pin 5, circuit 30-LE13 (RD) and ground. • Is battery voltage indicated? ☐ **Yes** GO TO **C4** ☐ **No** REPAIR the power supply of relay – high beam, by using the wiring diagrams. TEST the system for normal operation.
C4: CHECK THE GROUND CONNECTION OF RELAY – HIGH BEAM	
1 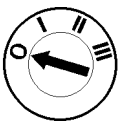 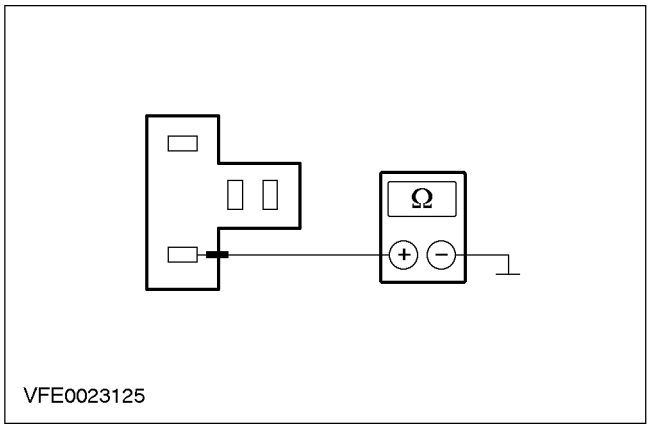	2 Measure the resistance between relay socket – high beam, connector C5, pin 1, circuit 31-LE12 (BK) and ground. • Is the resistance less than 2 ohms? ☐ **Yes** INSTALL a new relay – high beam. TEST the system for normal operation. ☐ **No** REPAIR the open circuit(s) between relay – high beam and ground G6, by using the wiring diagrams. TEST the system for normal operation. If necessary INSTALL a new CJB.

PINPOINT TEST D: ONE LOW BEAM HEADLAMP IS INOPERATIVE

CONDITIONS	DETAILS/RESULTS/ACTIONS
D1: DETERMINE THE FAULT CONDITION	
1 	2 Turn the multifunction switch to the LOW BEAM position.

CONTINUED

DIAGNOSIS AND TESTING (CONTINUED)

CONDITIONS	DETAILS/RESULTS/ACTIONS
	3 Check which low beam headlamp is inoperative. • Is the low beam headlamp at the left side inoperative? ☐ **Yes** GO TO **D2** ☐ **No** GO TO **D6**
D2: CHECK THE FUSE F10	
1 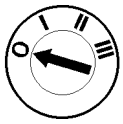 2 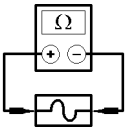 Fuse F10 (CJB)	**3** Check the fuse F10 (10 A). • Is the fuse OK? ☐ **Yes** GO TO **D3** ☐ **No** INSTALL a new fuse F10. If the fuse blows again, LOCATE and REPAIR the short circuit by using the wiring diagrams. TEST the system for normal operation.
D3: CHECK THE POWER SUPPLY OF HEADLAMP, LEFT-HAND SIDE	
1 2 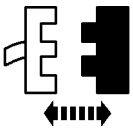 3 Fuse F10 (CJB) Headlamp, left-hand side C45 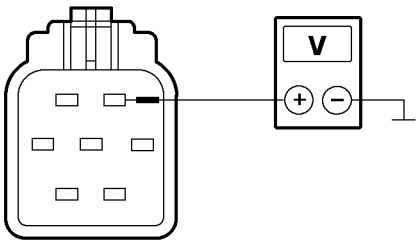 VFE0016224	**4** Turn the multifunction switch to the LOW BEAM position. **5** Measure the voltage between headlamp, left-hand side, connector C45, pin 2, circuit 14S-LE16 (VT/OG), harness side and ground. • Is battery voltage indicated? ☐ **Yes** GO TO **D4** ☐ **No** GO TO **D5**

CONTINUED

DIAGNOSIS AND TESTING (CONTINUED)

CONDITIONS	DETAILS/RESULTS/ACTIONS
D4: CHECK THE GROUND CONNECTION OF HEADLAMP, LEFT-HAND SIDE	
1 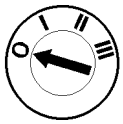 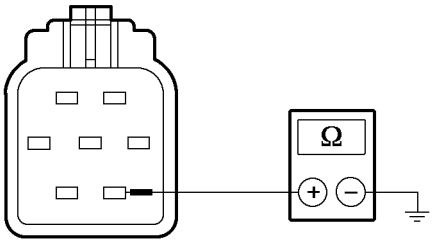 VFE0011503	2 Measure the resistance between headlamp, left-hand side, connector C45, pin 7, circuit 31-LE31A (BK), harness side and ground. • Is the resistance less than 2 ohms? ☐ **Yes** CHECK the headlamp, left-hand side. If necessary INSTALL a new one. TEST the system for normal operation. ☐ **No** REPAIR the open circuit(s) between headlamp, left-hand side and ground G9, by using the wiring diagrams. TEST the system for normal operation.
D5: CHECK THE POWER SUPPLY OF FUSE F10	
	1 Measure the voltage between fuse F10 (10 A) (CJB) and ground. • Is battery voltage indicated? ☐ **Yes** REPAIR the open circuit(s) between fuse F10 and headlamp, left-hand side, by using the wiring diagrams. TEST the system for normal operation. ☐ **No** REPAIR the open circuit(s) between relay – low beam and fuse F10, by using the wiring diagrams. TEST the system for normal operation.
D6: CHECK THE FUSE F11	
1 2 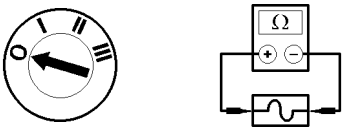 Fuse F11 (CJB)	

CONTINUED

DIAGNOSIS AND TESTING (CONTINUED)

CONDITIONS	DETAILS/RESULTS/ACTIONS
	3 Check the fuse F11 (10 A). • Is the fuse OK? ☐ **Yes** GO TO **D7** ☐ **No** INSTALL a new fuse F11. If the fuse blows again, LOCATE and REPAIR the short circuit by using the wiring diagrams. TEST the system for normal operation.
D7: CHECK THE POWER SUPPLY OF HEADLAMP, RIGHT-HAND SIDE	
1 Fuse F11 (CJB) **2** 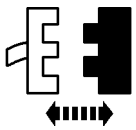 Headlamp, right-hand side C46 **3** 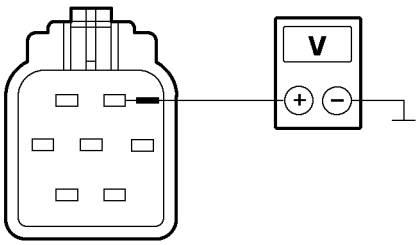 VFE0016224	**4** Turn the multifunction switch to the LOW BEAM position. **5** Measure the voltage between headlamp, right-hand side, connector C46, pin 2, circuit 14S-LE23 (VT/WH), harness side and ground. • Is battery voltage indicated? ☐ **Yes** GO TO **D8** ☐ **No** GO TO **D9**
D8: CHECK THE GROUND CONNECTION OF HEADLAMP, RIGHT-HAND SIDE	
1 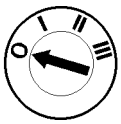	

CONTINUED

DIAGNOSIS AND TESTING (CONTINUED)

CONDITIONS	DETAILS/RESULTS/ACTIONS
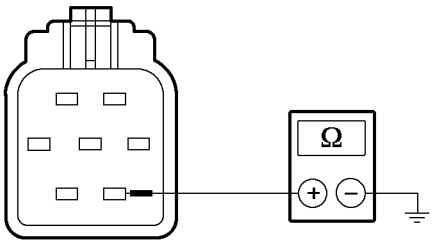 VFE0011503	**2** Measure the resistance between headlamp, right-hand side, connector C46, pin 7, circuit 31-LE30A (BK), harness side and ground. • Is the resistance less than 2 ohms? ☐ **Yes** CHECK the headlamp, right-hand side. If necessary INSTALL a new one. TEST the system for normal operation. ☐ **No** REPAIR the open circuit(s) between headlamp, right-hand side and ground G9, by using the wiring diagrams. TEST the system for normal operation.
D9: CHECK THE POWER SUPPLY OF FUSE F11	
	1 Measure the voltage between fuse F11 (10 A) (CJB) and ground. • Is battery voltage indicated? ☐ **Yes** REPAIR the open circuit(s) between fuse F11 and headlamp, right-hand side, by using the wiring diagrams. TEST the system for normal operation. ☐ **No** REPAIR the open circuit(s) between relay – low beam and fuse F11, by using the wiring diagrams. TEST the system for normal operation.

PINPOINT TEST E: ONE HIGH BEAM HEADLAMP IS INOPERATIVE

CONDITIONS	DETAILS/RESULTS/ACTIONS
E1: DETERMINE THE FAULT CONDITION	
1 	**2** Turn the multifunction switch to the LOW BEAM and HIGH BEAM position. **3** Check which high beam headlamp is inoperative. • Is the high beam headlamp at the left side inoperative? ☐ **Yes** GO TO **E2** ☐ **No** GO TO **E6**

CONTINUED

DIAGNOSIS AND TESTING (CONTINUED)

CONDITIONS	DETAILS/RESULTS/ACTIONS
E2: CHECK THE FUSE F21	
1 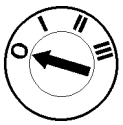 2 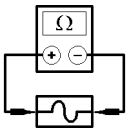 Fuse F21 (CJB)	**3** Check the fuse F21 (10 A). • Is the fuse OK? ☐ **Yes** GO TO **E3** ☐ **No** INSTALL a new fuse F21. If the fuse blows again, LOCATE and REPAIR the short circuit by using the wiring diagrams. TEST the system for normal operation.
E3: CHECK THE POWER SUPPLY OF HEADLAMP, LEFT-HAND SIDE	
1 2 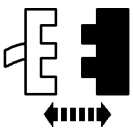 3 Fuse F21 (CJB) Headlamp, left-hand side C45 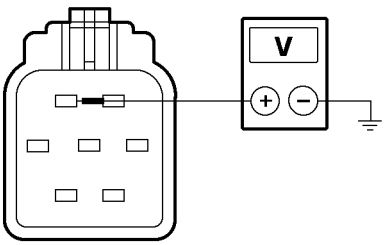 VFE0011505	**4** Turn the multifunction switch to the LOW BEAM and HIGH BEAM position. **5** Measure the voltage between headlamp, left-hand side, connector C45, pin 1, circuit 14S-LE15 (VT/BK), harness side and ground. • Is battery voltage indicated? ☐ **Yes** GO TO **E4** ☐ **No** GO TO **E5**
E4: CHECK THE GROUND CONNECTION OF HEADLAMP, LEFT-HAND SIDE	
1 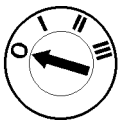	

CONTINUED

DIAGNOSIS AND TESTING (CONTINUED)

CONDITIONS	DETAILS/RESULTS/ACTIONS
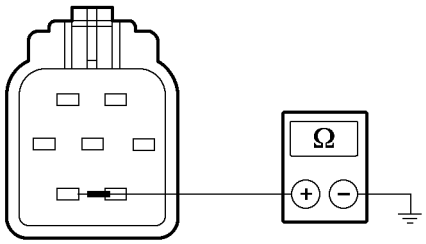 VFE0011568	**2** Measure the resistance between headlamp, left-hand side, connector C45, pin 6, circuit 31-LE31 (BK), harness side and ground. • Is the resistance less than 2 ohms? ☐ **Yes** CHECK the headlamp, left-hand side. If necessary INSTALL a new one. TEST the system for normal operation. ☐ **No** REPAIR the open circuit(s) between headlamp, left-hand side and ground G9, by using the wiring diagrams. TEST the system for normal operation.
E5: CHECK THE POWER SUPPLY OF FUSE F21	
	1 Measure the voltage between fuse F21 (10 A) (CJB) and ground. • Is battery voltage indicated? ☐ **Yes** REPAIR the open circuit(s) between fuse F21 and headlamp, left-hand side, by using the wiring diagrams. TEST the system for normal operation. ☐ **No** REPAIR the open circuit(s) between relay – high beam and fuse F21, by using the wiring diagrams. TEST the system for normal operation.
E6: CHECK THE FUSE F22	
1 **2** 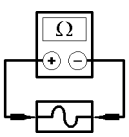 Fuse F22 (CJB)	**3** Check the fuse F22 (10 A). • Is the fuse OK? ☐ **Yes** GO TO **E7** ☐ **No** INSTALL a new fuse F22. If the fuse blows again, LOCATE and REPAIR the short circuit by using the wiring diagrams. TEST the system for normal operation.

CONTINUED

DIAGNOSIS AND TESTING (CONTINUED)

CONDITIONS	DETAILS/RESULTS/ACTIONS
E7: CHECK THE POWER SUPPLY OF HEADLAMP, RIGHT-HAND SIDE	
1 Fuse F22 (CJB) 2 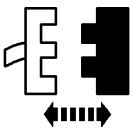 Headlamp, right-hand side C46 3 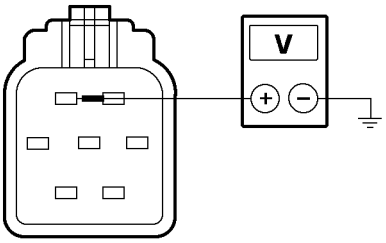 VFE0011505	4 Turn the multifunction switch to the LOW BEAM and HIGH BEAM position. 5 Measure the voltage between headlamp, right-hand side, connector C46, pin 1, circuit 14S-LE22 (VT/OG), harness side and ground. • Is battery voltage indicated? ☐ **Yes** GO TO **E8** ☐ **No** GO TO **E9**
E8: CHECK THE GROUND CONNECTION OF HEADLAMP, RIGHT-HAND SIDE	
1 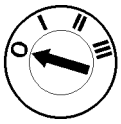 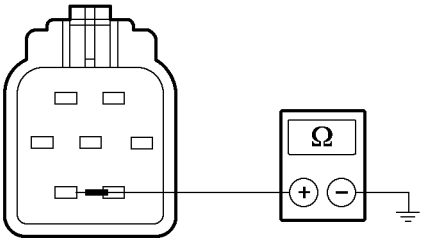 VFE0011568	2 Measure the resistance between headlamp, right-hand side, connector C46, pin 6, circuit 31-LE30 (BK), harness side and ground. • Is the resistance less than 2 ohms? ☐ **Yes** CHECK the headlamp, right-hand side. If necessary INSTALL a new one. TEST the system for normal operation. ☐ **No** REPAIR the open circuit(s) between headlamp, right-hand side and ground G9, by using the wiring diagrams. TEST the system for normal operation.

CONTINUED

DIAGNOSIS AND TESTING (CONTINUED)

CONDITIONS	DETAILS/RESULTS/ACTIONS
E9: CHECK THE POWER SUPPLY OF FUSE F22	
	1 Measure the voltage between fuse F22 (10 A) (CJB) and ground. • Is battery voltage indicated? ☐ **Yes** REPAIR the open circuit(s) between fuse F22 and headlamp, right-hand side, by using the wiring diagrams. TEST the system for normal operation. ☐ **No** REPAIR the open circuit(s) between relay – high beam and fuse F22, by using the wiring diagrams. TEST the system for normal operation.

PINPOINT TEST F: THE HEADLAMPS ARE ON CONTINUOUSLY

CONDITIONS	DETAILS/RESULTS/ACTIONS
F1: CHECK THE HEADLAMPS	
1 	2 Check whether the high and low beam headlamps are on continuously. • Are the high and low beam headlamps on continuously? ☐ **Yes** CHECK the multifunction switch, according to Component Testing attached to the wiring diagrams. If necessary INSTALL a new one. TEST the system for normal operation. ☐ **No** Low beam headlamps are on continuously: GO TO **F2** High beam headlamps are on continuously: GO TO **F7**
F2: CHECK THE MULTIFUNCTION SWITCH FOR PROPER FUNCTION	
1 2 3 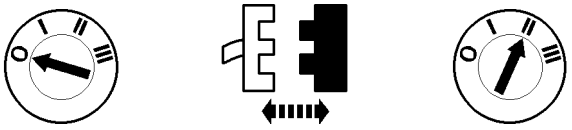 Multifunction switch C15a	• Are the low beam headlamps on continuously? ☐ **Yes** GO TO **F3** ☐ **No** CHECK the multifunction switch, according to Component Testing attached to the wiring diagrams. If necessary INSTALL a new one. TEST the system for normal operation.

CONTINUED

DIAGNOSIS AND TESTING (CONTINUED)

CONDITIONS	DETAILS/RESULTS/ACTIONS
F3: CHECK THE RELAY – LOW BEAM FOR PROPER FUNCTION	
1 2 3 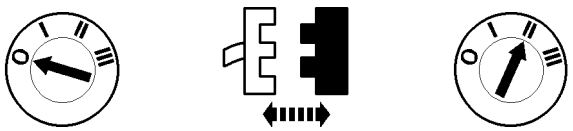 Relay – low beam C6	• Are the low beam headlamps on continuously? ☐ **Yes** GO TO **F5** ☐ **No** GO TO **F4**
F4: CHECK THE CONTROL CIRCUIT OF RELAY – LOW BEAM FOR SHORT TO POWER	
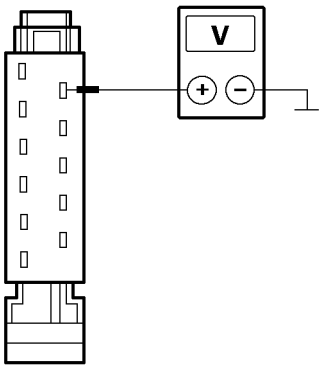 VFE0023126	1 Measure the voltage between multifunction switch, connector C15a, pin 1, circuit 14S-LE19 (VT/BU), harness side and ground. • Is battery voltage indicated? ☐ **Yes** REPAIR the short to power, circuit(s) connected with the multifunction switch, connector C15a, pin 1, by using the wiring diagrams. TEST the system for normal operation. ☐ **No** INSTALL a new relay – low beam. TEST the system for normal operation.
F5: CHECK THE CIRCUIT TO LEFT-HAND LOW BEAM HEADLAMP FOR SHORT TO POWER	
1 2 3 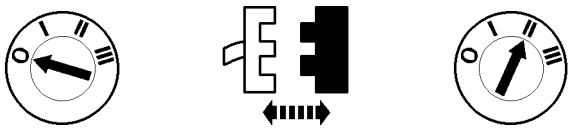 Fuse F10 (10 A) (CJB)	4 Check if the left-hand low beam headlamp is on continuously. • Is the left-hand low beam headlamp on continuously? ☐ **Yes** REPAIR the short to power, circuit(s) connected with the headlamp, left-hand side, connector C45, pin 2, by using the wiring diagrams. TEST the system for normal operation. ☐ **No** GO TO **F6**

CONTINUED

DIAGNOSIS AND TESTING (CONTINUED)

CONDITIONS	DETAILS/RESULTS/ACTIONS
F6: CHECK THE CIRCUIT TO RIGHT-HAND LOW BEAM HEADLAMP FOR SHORT TO POWER	
1 2 3 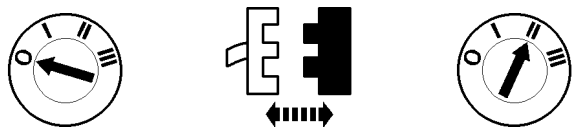 Fuse F11 (10 A) (CJB)	4 Check if the right-hand low beam headlamp is on continuously. • Is the right-hand low beam headlamp on continuously? ☐ **Yes** REPAIR the short to power, circuit(s) connected with the headlamp, right-hand side, connector C46, pin 2, by using the wiring diagrams. TEST the system for normal operation. ☐ **No** REPAIR the short to power, circuit(s) connected with the relay – low beam, connector C6, pin 3, by using the wiring diagrams. TEST the system for normal operation.
F7: CHECK THE MULTIFUNCTION SWITCH FOR PROPER FUNCTION	
1 2 3 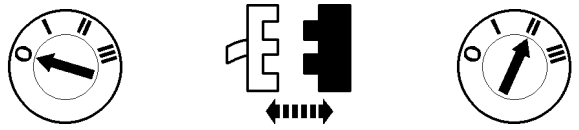 Multifunction switch C15a	• Are the high beam headlamps on continuously? ☐ **Yes** GO TO **F8** ☐ **No** CHECK the multifunction switch, according to Component Testing attached to the wiring diagrams. If necessary INSTALL a new one. TEST the system for normal operation.
F8: CHECK RELAY – HIGH BEAM FOR PROPER FUNCTION	
1 2 3 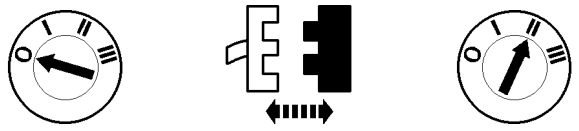 Relay – high beam C5	• Are the high beam headlamps on continuously? ☐ **Yes** GO TO **F10** ☐ **No** GO TO **F9**

CONTINUED

DIAGNOSIS AND TESTING (CONTINUED)

CONDITIONS	DETAILS/RESULTS/ACTIONS
F9: CHECK THE CONTROL CIRCUIT OF RELAY – HIGH BEAM FOR SHORT TO POWER	
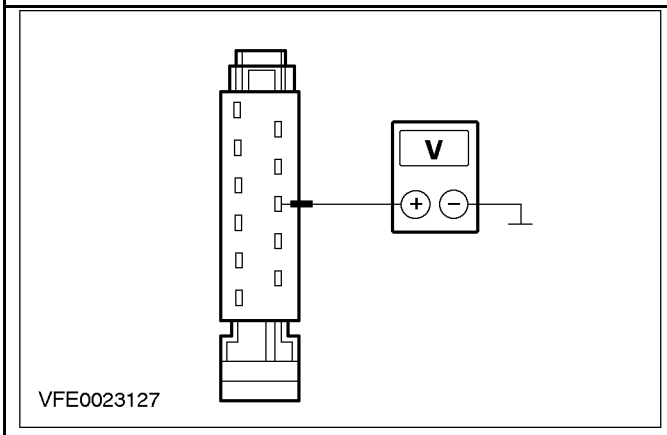	1 Measure the voltage between multifunction switch, connector C15a, pin 3, circuit 14S-LE12 (VT/YE), harness side and ground. • Is battery voltage indicated? ☐ **Yes** REPAIR the short to power, circuit(s) connected with the multifunction switch, connector C15a, pin 3, by using the wiring diagrams. TEST the system for normal operation. ☐ **No** INSTALL a new relay – high beam. TEST the system for normal operation.
F10: CHECK THE CIRCUIT TO RIGHT-HAND HIGH BEAM HEADLAMP FOR SHORT TO POWER	
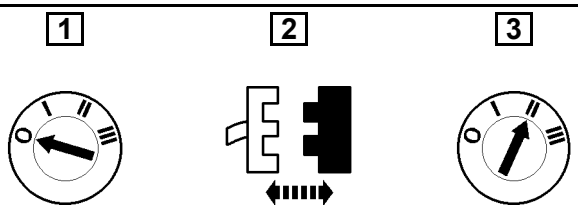 Fuse F22 (10 A) (CJB)	4 Check if the right-hand high beam headlamp is on continuously. • Is the right-hand high beam headlamp on continuously? ☐ **Yes** REPAIR the short to power, circuit(s) connected with the headlamp, right-hand side, connector C46, pin 1, by using the wiring diagrams. TEST the system for normal operation. ☐ **No** GO TO **F11**
F11: CHECK THE CIRCUIT TO LEFT-HAND HIGH BEAM HEADLAMP FOR SHORT TO POWER	
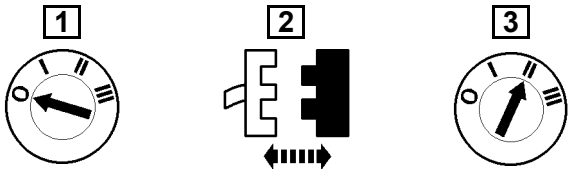 Fuse F21 (10 A) (CJB)	

CONTINUED

DIAGNOSIS AND TESTING (CONTINUED)

CONDITIONS	DETAILS/RESULTS/ACTIONS
	4 Check if the left-hand high beam headlamp is on continuously. • Is the left-hand high beam headlamp on continuously? ☐ **Yes** GO TO **F12** ☐ **No** REPAIR the short to power, circuit(s) connected with the relay – high beam, connector C5, pin 3, by using the wiring diagrams. TEST the system for normal operation.
F12: CHECK THE INSTRUMENT CLUSTER	
1 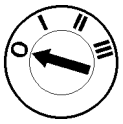 2 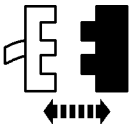 3 Instrument cluster C37a	4 Check if the left-hand high beam headlamp is on continuously. • Is the left-hand high beam headlamp on continuously? ☐ **Yes** REPAIR the short to power, circuit(s) connected with fuse F21, by using the wiring diagrams. TEST the system for normal operation. ☐ **No** CHECK the instrument cluster. If necessary INSTALL a new one. TEST the system for normal operation.

PINPOINT TEST G: THE FLASH-TO-PASS FEATURE IS INOPERATIVE

CONDITIONS	DETAILS/RESULTS/ACTIONS
G1: CHECK THE HIGH BEAM HEADLAMPS FOR PROPER FUNCTION	
1	

CONTINUED

DIAGNOSIS AND TESTING (CONTINUED)

CONDITIONS	DETAILS/RESULTS/ACTIONS
	2 Turn the multifunction switch to the LOW BEAM and HIGH BEAM position. • Are the high beam headlamps illuminated? ☐ **Yes** CHECK the multifunction switch, according to Component Testing attached to the wiring diagrams. If necessary INSTALL a new one. TEST the system for normal operation. ☐ **No** Go To Pinpoint Test C

Component Tests

Relays

Component testing applies to the following relays:

- Relay – low beam
- Relay – high beam

1. Check the relay contact in normal condition

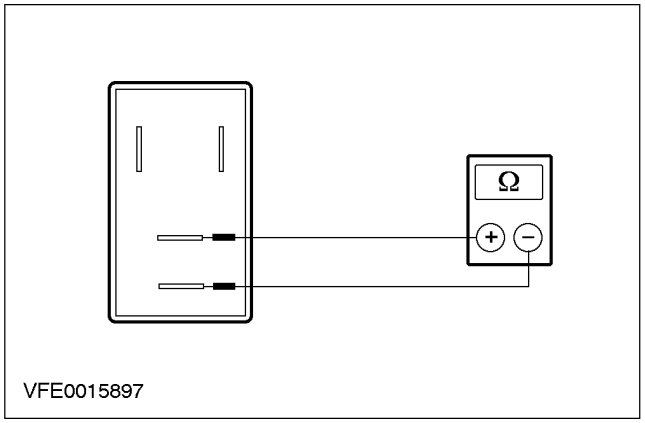

Measure the resistance between pin 3 and 5 (VFE0015897).

Is the resistance less than 2 ohms?

If yes, INSTALL a new relay.

If no, GO to step 2.

2. Check relay contact in activated condition

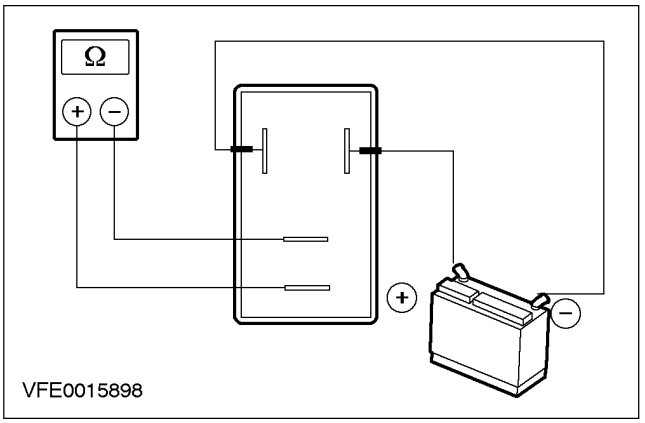

Connect the battery power between pin 1 and 2. Measure the resistance between pin 3 and 5 (VFE0015898).

Is the resistance less than 2 ohms?

If yes, the relay is OK.

If no, INSTALL a new relay.

CONTINUED

DIAGNOSIS AND TESTING

Stop lamps

Inspection and Verification

1. Verify the customer concern.
2. Visually inspect for obvious signs of mechanical or electrical damage.
3. If an obvious cause for an observed or reported concern is found, correct the cause (if possible) before proceeding to the next step.
4. If the cause is not visually evident, verify the symptom and refer to the Symptom Chart.

Visual Inspection Chart

Electrical
• Fuse(s). • Bulb(s). • Wiring harness. • Electrical connector(s).

Symptom Chart

Condition	Possible Sources	Action
•The stop lamps are inoperative.	•Fuse. •Circuit(s). •Stop lamp switch.	•Go To Pinpoint Test H
•One or more stop lamps are inoperative.	•Bulb(s). •Circuit(s). •Rear lamp assembly, right-hand side / left-hand side.	•Go To Pinpoint Test I
•The stop lamps are on continuously.	•Circuit(s). •Stop lamp switch.	•Go To Pinpoint Test J

Pinpoint Tests

PINPOINT TEST H: THE STOP LAMPS ARE INOPERATIVE

CONDITIONS	DETAILS/RESULTS/ACTIONS
H1: CHECK THE FUSE F13	
1 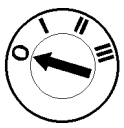 2 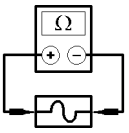 Fuse F13 (CJB)	3 Check the fuse F13 (15 A). • Is the fuse OK? ☐ **Yes** GO TO **H2** ☐ **No** INSTALL a new fuse F13 (15 A). If the fuse blows again, LOCATE and REPAIR the short circuit by using the wiring diagrams. TEST the system for normal operation.

CONTINUED

DIAGNOSIS AND TESTING (CONTINUED)

CONDITIONS	DETAILS/RESULTS/ACTIONS
H2: CHECK THE CIRCUIT TO STOP LAMP SWITCH FOR OPEN	
1 2 Stop lamp switch C50 V VFE0013598	3 Measure the voltage between stop lamp switch, connector C50, circuit 14-LG23 (VT/WH), harness side and ground. • Is battery voltage indicated? ☐ **Yes** GO TO **H3** ☐ **No** REPAIR the open circuit(s) between fuse F13 and stop lamp switch, by using the wiring diagrams. TEST the system for normal operation.
H3: CHECK THE STOP LAMP SWITCH FOR PROPER FUNCTION	
VFE0010894	1 Connect a jumper wire between stop lamp switch, connector C50, circuit 14-LG23 (VT/WH) and circuit 14S-LG1 (VT/BK), harness side. • Are the stop lamps illuminated? ☐ **Yes** INSTALL a new stop lamp switch. TEST the system for normal operation. ☐ **No** REPAIR the open circuit(s) between stop lamp switch and splice S37, by using the wiring diagrams. TEST the system for normal operation.

PINPOINT TEST I: ONE OR MORE STOP LAMPS ARE INOPERATIVE

CONDITIONS	DETAILS/RESULTS/ACTIONS
I1: DETERMINE THE FAULT CONDITION	
1	2 Depress the brake pedal.

CONTINUED

DIAGNOSIS AND TESTING (CONTINUED)

CONDITIONS	DETAILS/RESULTS/ACTIONS
	3 Check which stop lamp is inoperative. • Is the stop lamp at the left-hand side inoperative? ☐ **Yes** GO TO **I4** ☐ **No** GO TO **I2**
I2: CHECK THE POWER SUPPLY OF REAR LAMP ASSEMBLY, RIGHT-HAND SIDE	
1 2 3 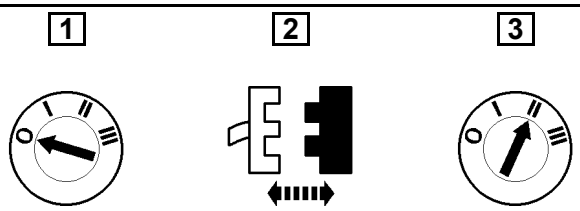 Rear lamp assembly, right-hand side C42 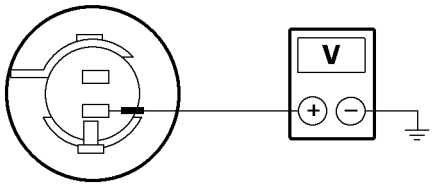 VFE0013600	4 Depress the brake pedal. 5 Measure the voltage between rear lamp assembly, right-hand side, connector C42, circuit 14S-LG38 (VT), harness side and ground. • Is battery voltage indicated? ☐ **Yes** GO TO **I3** ☐ **No** REPAIR the open circuit(s) between splice S37 and the rear lamp assembly, right-hand side, by using the wiring diagrams. TEST the system for normal operation.
I3: CHECK GROUND CONNECTION OF REAR LAMP ASSEMBLY, RIGHT-HAND SIDE	
1 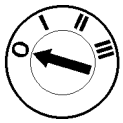	

CONTINUED

DIAGNOSIS AND TESTING (CONTINUED)

CONDITIONS	DETAILS/RESULTS/ACTIONS
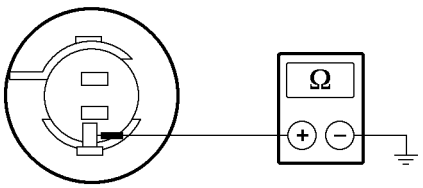 VFE0013601	**2** Measure the resistance between rear lamp assembly, right-hand side, connector C42, circuit 31-LF24 (BK), harness side and ground. • Is the resistance less than 2 ohms? ☐ **Yes** CHECK the rear lamp assembly, right-hand side. If necessary INSTALL a new one. TEST the system for normal operation. ☐ **No** REPAIR the open circuit(s) between rear lamp assembly, right-hand side and ground G3, by using the wiring diagrams. TEST the system for normal operation.
I4: CHECK THE POWER SUPPLY OF REAR LAMP ASSEMBLY, LEFT-HAND SIDE	
1 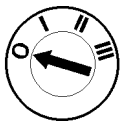 **2** 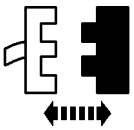 **3** Rear lamp assembly, left-hand side C39 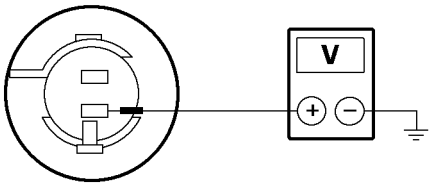 VFE0013600	**4** Depress the brake pedal. **5** Measure the voltage between rear lamp assembly, left-hand side, connector C39, circuit 14S-LG41 (VT/BK), harness side and ground. • Is battery voltage indicated? ☐ **Yes** GO TO **I5** ☐ **No** REPAIR the open circuit(s) between splice S37 and the rear lamp assembly, left-hand side, by using the wiring diagrams. TEST the system for normal operation.
I5: CHECK GROUND CONNECTION OF REAR LAMP ASSEMBLY, LEFT-HAND SIDE	
1 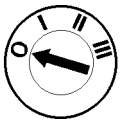	

CONTINUED

DIAGNOSIS AND TESTING (CONTINUED)

CONDITIONS	DETAILS/RESULTS/ACTIONS
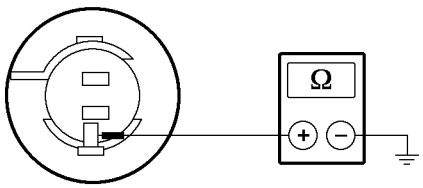 VFE0013601	2 Measure the resistance between rear lamp assembly, left-hand side, connector C39, circuit 31-LF23 (BK), harness side and ground. • Is the resistance less than 2 ohms? ☐ **Yes** CHECK the rear lamp assembly, left-hand side. If necessary INSTALL a new one. TEST the system for normal operation. ☐ **No** REPAIR the open circuit(s) between rear lamp assembly, left-hand side and ground G4, by using the wiring diagrams. TEST the system for normal operation.

PINPOINT TEST J: STOP LAMPS ARE ON CONTINUOUSLY

CONDITIONS	DETAILS/RESULTS/ACTIONS
J1: CHECK THE STOP LAMP SWITCH	
1 2 3 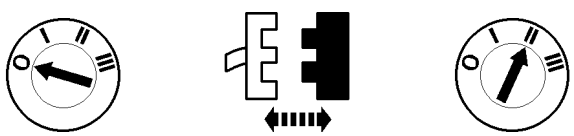 Stop lamp switch C50	• Are the stop lamps on continuously? ☐ **Yes** REPAIR the short to power; circuit(s) connected with splice S37, by using the wiring diagrams. TEST the system for normal operation. ☐ **No** INSTALL a new stop lamp switch. TEST the system for normal operation.

CONTINUED

DIAGNOSIS AND TESTING

Turn Signal and Hazard Lamps

Inspection and Verification

1. Verify the customer concern.
2. Visually inspect for obvious signs of mechanical or electrical damage.
3. If an obvious cause for an observed or reported concern is found, correct the cause (if possible) before proceeding to the next step.
4. If the cause is not visually evident, verify the symptom and refer to the Symptom Chart.

Visual Inspection Chart

Electrical
• Fuse(s). • Bulb(s). • Wiring harness. • Electrical connector(s).

Symptom Chart

Condition	Possible Sources	Action
•Turn signal lamps are inoperative or on continuously.	•Fuse F17. •Circuit(s). •Multifunction switch. •Hazard warning switch. •Instrument cluster.	•Go To Pinpoint Test K
•Hazard lamps are inoperative or on continuously.	•Fuse(s). •Circuit(s). •Hazard warning switch.	•Go To Pinpoint Test M
•One turn signal/hazard lamp is inoperative.	•Circuit(s). •Hazard warning switch. •Instrument cluster. •Turn signal lamp.	•Go To Pinpoint Test L

CONTINUED

Pinpoint Tests

PINPOINT TEST K: TURN SIGNAL LAMPS ARE INOPERATIVE OR ON CONTINUOUSLY

K1: DETERMINE THE FAULT CONDITION..... 417-01-33A/33B
K2: CHECK THE POWER SUPPLY OF MULTIFUNCTION SWITCH 417-01-33B
K3: CHECK THE FUSE F17..... 417-01-33B
K4: CHECK THE GROUND CONNECTION OF MULTIFUNCTION SWITCH 417-01-34
K5: CHECK THE POWER SUPPLY OF RELAY – TURN SIGNAL..... 417-01-34
K6: CHECK THE GROUND CONNECTION OF RELAY – TURN SIGNAL 417-01-34
K7: CHECK THE MULTIFUNCTION SWITCH FOR PROPER FUNCTION 417-01-34/35
K8: CHECK THE CIRCU FOR LEFT-HAND TURN SIGNAL FOR OPEN 417-01-35
K9: CHECK THE CIRCUIT FOR RIGHT-HAND TURN SIGNAL FOR OPEN..... 417-01-35/36
K10: CHECK THE RELAY – ANTI-THEFT FLASHER FOR PROPER FUNCTION 417-01-36
K11: CHECK THE RELAY – TURN SIGNAL FOR PROPER FUNCTION..... 417-01-36/37
K12: CHECK THE MULT FUNCTION SWITCH FOR PROPER FUNCTION 417-01-37
K13: CHECK THE INSTRUMENT CLUSTER..... 417-01-37/38
K14: CHECK THE RELAY – ANTI-THEFT FLASHER FOR PROPER FUNCTION 417-01-38
K15: CHECK THE RELAY – TURN SIGNAL FOR PROPER FUNCTION 417-01-38/39
K16: CHECK THE MULTIFUNCTION SWITCH FOR PROPER FUNCTION 417-01-39
K17: CHECK THE INSTRUMENT CLUSTER..... 417-01-39/40

PINPOINT TEST L: ONE TURN SIGNAL/HAZ ARD LAMP IS INOPERATIVE

L1: DETERMINE THE INOPERATIVE TURN SIGNAL LAMP 417-01-40
L2: CHECK THE POWER SUPPLY OF FRONT LEFT-HAND TURN SIGNAL LAMP 417-01-40/41
L3: CHECK THE GROUND CONNECTION OF FRONT TURN SIGNAL, LEFT-HAND SIDE..... 417-01-41
L4: DETERMINE THE INOPERATIVE TURN SIGNAL LAMP..... 417-01-41
L5: CHECK THE POWER SUPPLY OF SIDE TURN SIGNAL LAMP, LEFT-HAND SIDE..... 417-01-42
L6: CHECK THE GROUND CONNECTION OF SIDE TURN SIGNAL LAMP, LEFT-HAND SIDE..... 417-01-42
L7: DETERMINE THE INOPERATIVE LEFT-HAND TURN SIGNAL LAMP..... 417-01-42

CONTINUED

Pinpoint Tests

PAGE 2 OF 2

L8: CHECK THE POWER SUPPLY OF REAR TURN SIGNAL LAMP, LEFT-HAND SIDE..... 417-01-43
L9: CHECK THE GROUND CONNECTION OF REAR TURN SIGNAL LAMP, LEFT-HAND SIDE..... 417-01-43
L10: CHECK THE TURN SIGNAL INDICATOR 417-01-43
L11: CHECK THE POWER SUPPLY OF TURN INDICATOR, LEFT-HAND SIDE..... 417-01-44
L12: CHECK THE POWER SUPPLY OF TURN INDICATOR, RIGHT-HAND SIDE 417-01-44
L13: DETERMINE THE INOPERATIVE TURN SIGNAL LAMP 417-01-44
L14: CHECK THE POWER SUPPLY OF FRONT RIGHT-HAND TURN SIGNAL LAMP 417-01-45
L15: CHECK THE GROUND CONNECTION OF FRONT RIGHT-HAND TURN SIGNAL LAMP 417-01-45
L16: DETERMINE THE INOPERATIVE TURN SIGNAL LAMP 417-01-45
L17: CHECK THE POWER SUPPLY OF SIDE TURN SIGNAL LAMP, RIGHT-HAND SIDE 417-01-46
L18: CHECK THE GROUND CONNECTION OF SIDE TURN SIGNAL LAMP, RIGHT-HAND SIDE 417-01-46
L19: CHECK THE POWER SUPPLY OF REAR TURN SIGNAL LAMP, RIGHT-HAND SIDE 417-01-46/47
L20: CHECK THE GROUND CONNECTION OF REAR TURN SIGNAL LAMP, RIGHT-HAND SIDE 417-01-47

PINPOINT TEST M: HAZ ARD LAMPS ARE INOPERATIVE OR ON CONTINUOUSLY

M1: DETERMINE THE FAULT CONDITION 417-01-47
M2: CHECK THE POWER SUPPLY OF MULTIFUNCTION SWITCH 417-01-48
M3: CHECK THE GROUND CONNECTION OF MULTIFUNCTION SWITCH..... 417-01-48
M4: CHECK THE FUSE F5..... 417-01-48
M5: CHECK THE POWER SUPPLY OF RELAY – TURN SIGNAL 417-01-49
M6: CHECK THE GROUND CONNECTION OF RELAY – TURN SIGNAL..... 417-01-49
M7: CHECK THE MULTIFUNCTION SWITCH FOR PROPER FUNCTION 417-01-49
M8: CHECK THE RELAY – TURN SIGNAL FOR PROPER FUNCTION 417-01-50
M9: CHECK THE RELAY – ANTI-THEFT FLASHER FOR PROPER FUNCTION 417-01-50

CONTINUED

DIAGNOSIS AND TESTING (CONTINUED)

Pinpoint Tests

PINPOINT TEST K: TURN SIGNAL LAMPS ARE INOPERATIVE OR ON CONTINUOUSLY

CONDITIONS	DETAILS/RESULTS/ACTIONS
K1: DETERMINE THE FAULT CONDITION	
1	2 Turn the multifunction switch to the RIGHT-HAND TURN SIGNAL and to the LEFT-HAND TURN SIGNAL position.

CONTINUED

DIAGNOSIS AND TESTING (CONTINUED)

CONDITIONS	DETAILS/RESULTS/ACTIONS
	3 Check if the turn signal lamps are on continuously or inoperative. • Are the turn signal lamps inoperative? ☐ **Yes** All turn signal lamps: GO TO **K2** All left-hand turn signal lamps: GO TO **K8** All right-hand turn signal lamps: GO TO **K9** ☐ **No** All left-hand turn signal lamps are on continuously: GO TO **K10** All right-hand turn signal lamps are on continuously: GO TO **K14**
K2: CHECK THE POWER SUPPLY OF MULTIFUNCTION SWITCH	
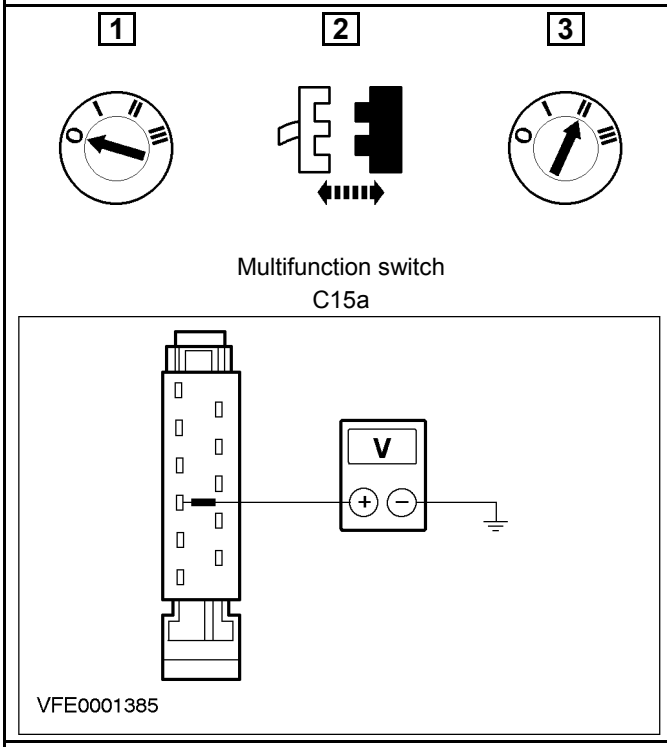	**4** Measure the voltage between multifunction switch, connector C15a, pin 9, circuit 14-LG5 (VT), harness side and ground. • Is battery voltage indicated? ☐ **Yes** GO TO **K4** ☐ **No** GO TO **K3**
K3: CHECK THE FUSE F17	
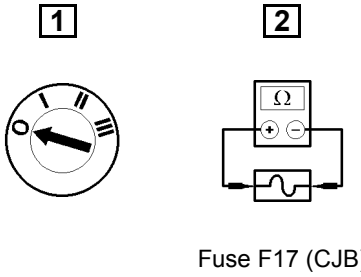	• Is the fuse F17 (15 A) OK? ☐ **Yes** REPAIR the open circuit(s) between fuse F17 and multifunction switch, by using the wiring diagrams. TEST the system for normal operation. ☐ **No** INSTALL a new fuse F17 (15 A). If the fuse blows again, LOCATE and REPAIR the short circuit by using the wiring diagrams. TEST the system for normal operation.

CONTINUED

DIAGNOSIS AND TESTING (CONTINUED)

CONDITIONS	DETAILS/RESULTS/ACTIONS
K4: CHECK THE GROUND CONNECTION OF MULTIFUNCTION SWITCH	
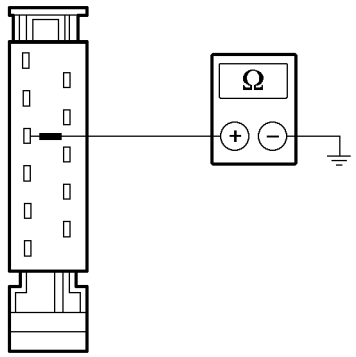 VFE0013681	**1** Measure the resistance between multifunction switch, connector C15a, pin 8, circuit 31-LE29 (BK), harness side and ground. • Is the resistance less than 2 ohms? ☐ **Yes** GO TO **K5** ☐ **No** REPAIR the open circuit(s) between multifunction switch and ground G6, by using the wiring diagrams. TEST the system for normal operation.
K5: CHECK THE POWER SUPPLY OF RELAY – TURN SIGNAL	
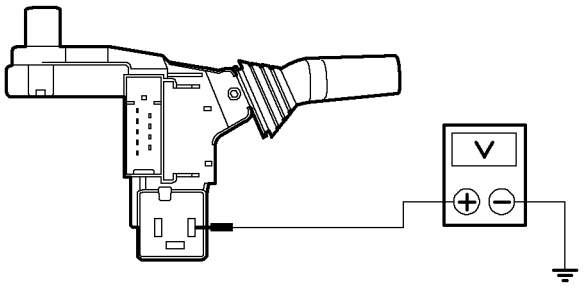 IAV3201136	**1** Measure the voltage between relay socket – turn signal, terminal 49 and ground. • Is battery voltage indicated? ☐ **Yes** GO TO **K6** ☐ **No** CHECK the multifunction switch, according to Component Testing attached to the wiring diagrams. If necessary INSTALL a new one. TEST the system for normal operation.
K6: CHECK THE GROUND CONNECTION OF RELAY – TURN SIGNAL	
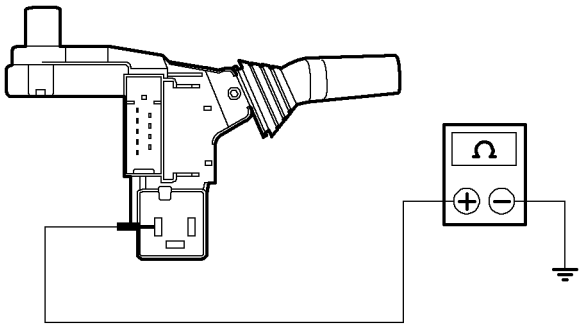 IAV3201140	**1** Measure the resistance between relay socket – turn signal, terminal 31 and ground. • Is the resistance less than 2 ohms? ☐ **Yes** GO TO **K7** ☐ **No** CHECK the multifunction switch, according to Component Testing attached to the wiring diagrams. If necessary INSTALL a new one. TEST the system for normal operation.
K7: CHECK THE MULTIFUNCTION SWITCH FOR PROPER FUNCTION	
	1 Turn the multifunction switch to the LEFT-HAND TURN SIGNAL position.

CONTINUED

DIAGNOSIS AND TESTING (CONTINUED)

CONDITIONS	DETAILS/RESULTS/ACTIONS
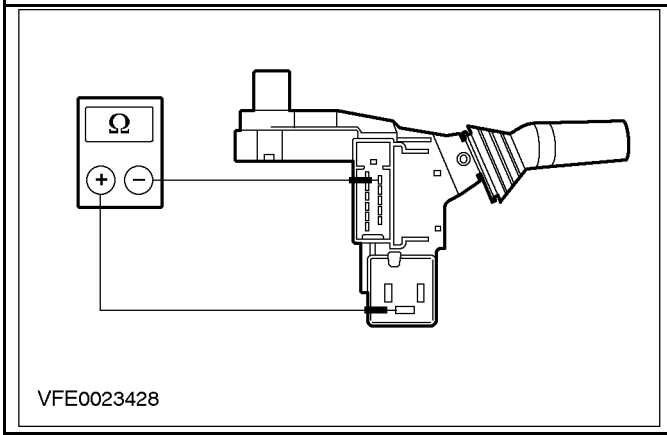	**2** Measure the resistance between relay socket – turn signal, terminal 49A and multifunction switch, connector C15a, pin 5, circuit 49-LG1 (BU), component side. • Is the resistance less than 2 ohms? ☐ **Yes** INSTALL a new relay – turn signal. TEST the system for normal operation. ☐ **No** INSTALL a new multifunction switch. TEST the system for normal operation.
K8: CHECK THE CIRCUIT FOR LEFT-HAND TURN SIGNAL FOR OPEN	
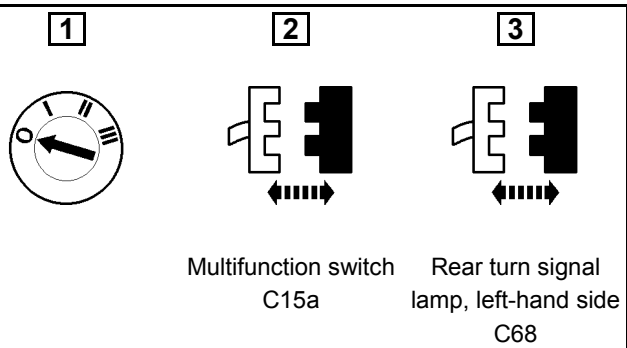 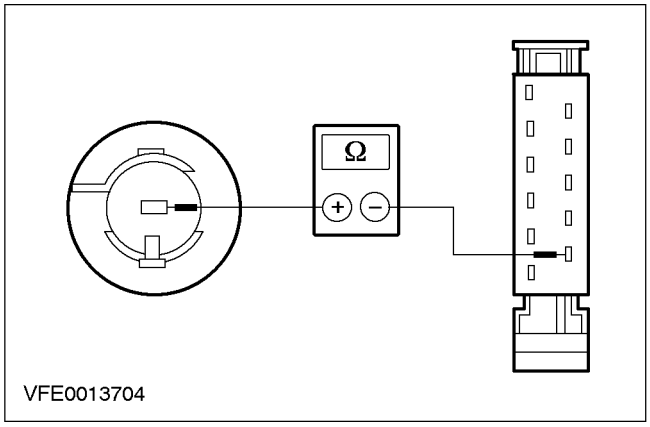	**4** Measure the resistance between multifunction switch, connector C15a, pin 5, circuit 49-LG1 (BU), harness side and rear turn signal lamp, left-hand side, connector C68, circuit 14S-LG12 (BU), harness side. • Is the resistance less than 2 ohms? ☐ **Yes** CHECK the multifunction switch, according to Component Testing attached to the wiring diagrams. If necessary INSTALL a new one. TEST the system for normal operation. ☐ **No** REPAIR the open circuit(s) between multi-function switch and splice S36, by using the wiring diagrams. TEST the system for normal operation.
K9: CHECK THE CIRCUIT FOR RIGHT-HAND TURN SIGNAL FOR OPEN	
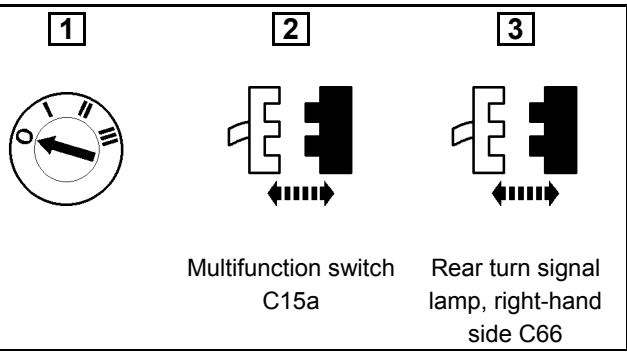	

CONTINUED

DIAGNOSIS AND TESTING (CONTINUED)

CONDITIONS	DETAILS/RESULTS/ACTIONS
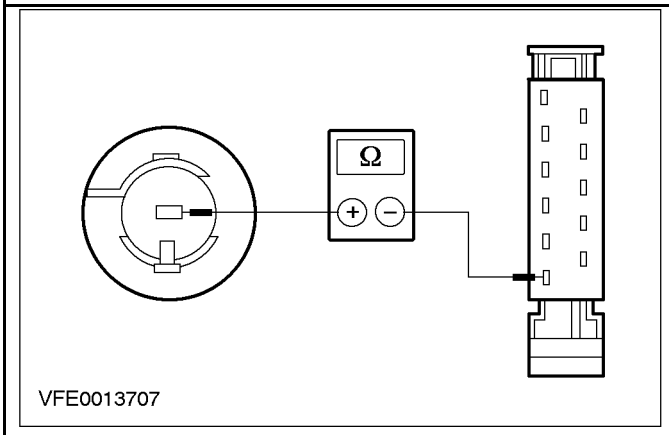	**4** Measure the resistance between multifunction switch, connector C15a, pin 11, circuit 49-LG2 (BU/RD), harness side and rear turn signal lamp, left-hand side, connector C66, circuit 49-LG19 (BU/RD), harness side. • Is the resistance less than 2 ohms? ☐ **Yes** CHECK the multifunction switch, according to Component Testing attached to the wiring diagrams. If necessary INSTALL a new one. TEST the system for normal operation. ☐ **No** REPAIR the open circuit(s) between multi-function switch and splice S35, by using the wiring diagrams. TEST the system for normal operation.
K10: CHECK THE RELAY – ANTI-THEFT FLASHER FOR PROPER FUNCTION	
1 2 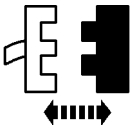 Relay – anti-theft flasher C323	**3** Check if the left-hand turn signal lamps are on continuously. • Are the left-hand turn signal lamps on continuously? ☐ **Yes** GO TO **K11** ☐ **No** INSTALL a new relay – anti-theft flasher. TEST the system for normal operation.
K11: CHECK THE RELAY – TURN SIGNAL FOR PROPER FUNCTION	
1 2 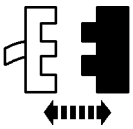 Relay – turn signal	**3** Turn the multifunction switch to the LEFT-HAND TURN SIGNAL position.

CONTINUED

DIAGNOSIS AND TESTING (CONTINUED)

CONDITIONS	DETAILS/RESULTS/ACTIONS
	4 Check if the left-hand turn signal lamps are on continuously. • Are the left-hand turn signal lamps on continuously? ☐ **Yes** GO TO **K12** ☐ **No** INSTALL a new relay – turn signal. TEST the system for normal operation.
K12: CHECK THE MULTIFUNCTION SWITCH FOR PROPER FUNCTION	
1 2 3 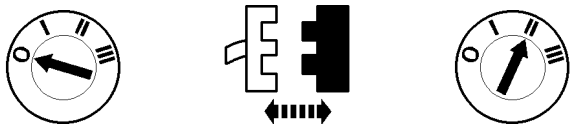 Multifunction switch C15a	4 Check if the left-hand turn signal lamps are on continuously. • Are the left-hand turn signal lamps on continuously? ☐ **Yes** GO TO **K13** ☐ **No** CHECK the multifunction switch, according to Component Testing attached to the wiring diagrams. If necessary INSTALL a new one. TEST the system for normal operation.
K13: CHECK THE INSTRUMENT CLUSTER	
1 2 3 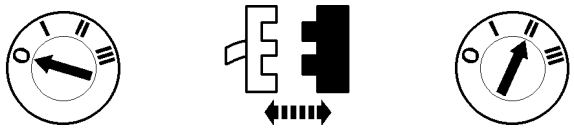 Instrument cluster C37a	

CONTINUED

DIAGNOSIS AND TESTING (CONTINUED)

CONDITIONS	DETAILS/RESULTS/ACTIONS
	4 Check if the left-hand turn signal lamps are on continuously. • Are the left-hand turn signal lamps on continuously? ☐ **Yes** REPAIR the short to power; circuit(s) connected with splice S36, by using the wiring diagrams. TEST the system for normal operation. ☐ **No** CHECK the instrument cluster, If necessary INSTALL a new one. TEST the system for normal operation.
K14: CHECK THE RELAY – ANTI-THEFT FLASHER FOR PROPER FUNCTION	
1 2 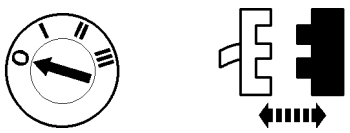 Relay – anti-theft flasher C323	**3** Check if the right-hand turn signal lamps are on continuously. • Are the right-hand turn signal lamps on continuously? ☐ **Yes** GO TO **K15** ☐ **No** INSTALL a new relay – anti-theft flasher. TEST the system for normal operation.
K15: CHECK THE RELAY – TURN SIGNAL FOR PROPER FUNCTION	
1 2 3 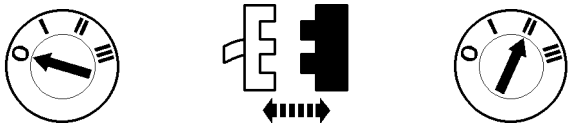 Relay – turn signal	**4** Turn the multifunction switch to the RIGHT-HAND TURN SIGNAL position.

CONTINUED

DIAGNOSIS AND TESTING (CONTINUED)

CONDITIONS	DETAILS/RESULTS/ACTIONS
	5 Check if the right-hand turn signal lamps are on continuously. • Are the right-hand turn signal lamps on continuously? ☐ **Yes** GO TO **K16** ☐ **No** INSTALL a new relay – turn signal. TEST the system for normal operation.
K16: CHECK THE MULTIFUNCTION SWITCH FOR PROPER FUNCTION	
1 2 3 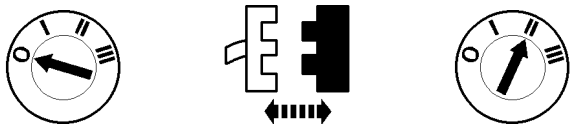 Multifunction switch C15a	**4** Check if the right-hand turn signal lamps are on continuously. • Are the right-hand turn signal lamps on continuously? ☐ **Yes** GO TO **K17** ☐ **No** INSTALL a new multifunction switch. TEST the system for normal operation.
K17: CHECK THE INSTRUMENT CLUSTER	
1 2 3 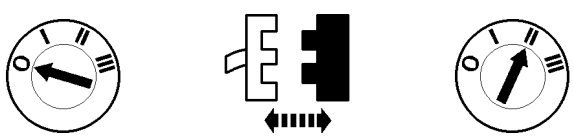 Instrument cluster C37a	

CONTINUED

DIAGNOSIS AND TESTING (CONTINUED)

CONDITIONS	DETAILS/RESULTS/ACTIONS
	4 Check if the right-hand turn signal lamps are on continuously. • Are the right-hand turn signal lamps on continuously? ☐ **Yes** REPAIR the short to power; circuit(s) connected with splice S35, by using the wiring diagrams. TEST the system for normal operation. ☐ **No** CHECK the instrument cluster. If necessary INSTALL a new one. TEST the system for normal operation.

PINPOINT TEST L: ONE TURN SIGNAL/HAZARD LAMP IS INOPERATIVE

CONDITIONS	DETAILS/RESULTS/ACTIONS
L1: DETERMINE THE INOPERATIVE TURN SIGNAL LAMP	
1 	**2** Turn the multifunction switch to the LEFT-HAND TURN SIGNAL position. **3** Determine the inoperative left-hand turn signal lamp. • Is the front turn signal lamp, left-hand side inoperative? ☐ **Yes** GO TO **L2** ☐ **No** GO TO **L4**
L2: CHECK THE POWER SUPPLY OF FRONT LEFT-HAND TURN SIGNAL LAMP	
1 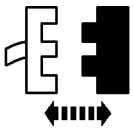 Headlamp, left-hand side C45	**2** Turn the multifunction switch to the LEFT-HAND TURN SIGNAL position.

CONTINUED

DIAGNOSIS AND TESTING (CONTINUED)

CONDITIONS	DETAILS/RESULTS/ACTIONS
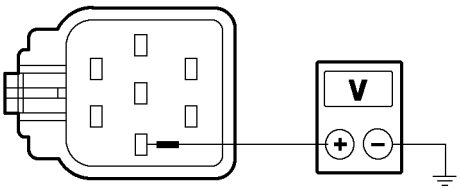 VFE0003174	**3** Measure the voltage between headlamp, left-hand side, connector C45, pin 3, circuit 49-LG11 (BU/OG), harness side and ground. • Is battery voltage indicated? ☐ **Yes** GO TO **L3** ☐ **No** REPAIR the open circuit(s) between splice S36 and headlamp, left-hand side, by using the wiring diagrams. TEST the system for normal operation.
L3: CHECK THE GROUND CONNECTION OF FRONT TURN SIGNAL, LEFT-HAND SIDE	
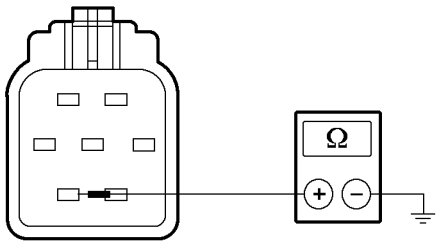 VFE0010914	**1** Measure the resistance between headlamp, left-hand side, connector C45, pin 6, circuit 31-LE31 (BK), harness side and ground. • Is the resistance less than 2 ohms? ☐ **Yes** CHECK the headlamp, left-hand side. If necessary INSTALL a new one. TEST the system for normal operation. ☐ **No** REPAIR the open circuit(s) between headlamp, left-hand side and ground G9, by using the wiring diagrams. TEST the system for normal operation.
L4: DETERMINE THE INOPERATIVE TURN SIGNAL LAMP	
1 	**2** Turn the multifunction switch to the LEFT-HAND TURN SIGNAL position. **3** Determine the inoperative left-hand turn signal lamp. • Is the side turn signal lamp, left-hand side inoperative? ☐ **Yes** GO TO **L5** ☐ **No** GO TO **L7**

CONTINUED

DIAGNOSIS AND TESTING (CONTINUED)

CONDITIONS	DETAILS/RESULTS/ACTIONS
L5: CHECK THE POWER SUPPLY OF SIDE TURN SIGNAL LAMP, LEFT-HAND SIDE	
1 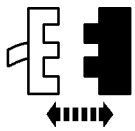 Side turn signal lamp, left-hand side C145 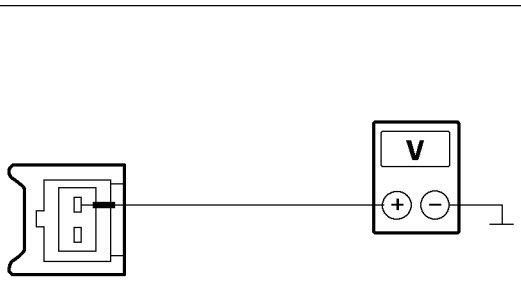 VFE0016093	2 Measure the voltage between side turn signal lamp, left-hand side, connector C145, pin 2, circuit 49-LG13 (BU/RD), harness side and ground. • Is battery voltage indicated? ☐ **Yes** GO TO **L6** ☐ **No** REPAIR the open circuit(s) between splice S36 and side turn signal lamp, left-hand side, by using the wiring diagrams. TEST the system for normal operation.
L6: CHECK THE GROUND CONNECTION OF SIDE TURN SIGNAL LAMP, LEFT-HAND SIDE	
VFE0014782	1 Measure the resistance between side turn signal lamp, left-hand side, connector C145, pin 1, circuit 31-LG13 (BK), harness side and ground. • Is the resistance less than 2 ohms? ☐ **Yes** CHECK the side turn signal lamp, left-hand side. If necessary INSTALL a new one. TEST the system for normal operation. ☐ **No** REPAIR the open circuit(s) between side turn signal lamp, left-hand side and ground G10, by using the wiring diagrams. TEST the system for normal operation.
L7: DETERMINE THE INOPERATIVE LEFT-HAND TURN SIGNAL LAMP	
	1 Turn the multifunction switch to the LEFT-HAND TURN SIGNAL position. 2 Determine the inoperative left-hand turn signal lamp. • Is the rear turn signal lamp, left-hand side inoperative? ☐ **Yes** GO TO **L8** ☐ **No** GO TO **L10**

CONTINUED

DIAGNOSIS AND TESTING (CONTINUED)

CONDITIONS	DETAILS/RESULTS/ACTIONS
L8: CHECK THE POWER SUPPLY OF REAR TURN SIGNAL LAMP, LEFT-HAND SIDE	
1 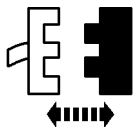 Rear signal lamp, left-hand side C68 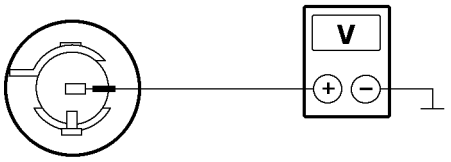 VFE0023425	2 Measure the voltage between rear turn signal lamp, left-hand side, connector C68, circuit 49-LG12 (BU), harness side and ground. • Is battery voltage indicated? ☐ **Yes** GO TO **L9** ☐ **No** REPAIR the open circuit(s) between splice S36 and rear turn signal lamp, left-hand side, by using the wiring diagrams. TEST the system for normal operation.
L9: CHECK THE GROUND CONNECTION OF REAR TURN SIGNAL LAMP, LEFT-HAND SIDE	
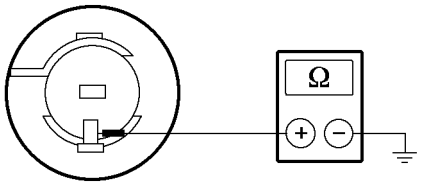 VFE0013671	1 Measure the resistance between rear turn signal lamp, left-hand side, connector C68, circuit 31-LG12 (BK), harness side and ground. • Is the resistance less than 2 ohms? ☐ **Yes** CHECK the rear turn signal lamp, left-hand side. If necessary INSTALL a new one. TEST the system for normal operation. ☐ **No** REPAIR the open circuit(s) between rear turn signal lamp, left-hand side and ground G4, by using the wiring diagrams. TEST the system for normal operation.
L10: CHECK THE TURN SIGNAL INDICATOR	
	1 Actuate the hazard warning switch. • Is a turn signal indicator inoperative? ☐ **Yes** GO TO **L11** ☐ **No** GO TO **L13**

CONTINUED

DIAGNOSIS AND TESTING (CONTINUED)

CONDITIONS	DETAILS/RESULTS/ACTIONS
L11: CHECK THE POWER SUPPLY OF TURN INDICATOR, LEFT-HAND SIDE	
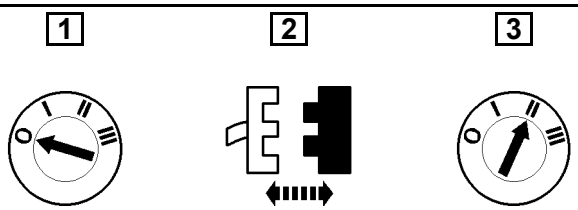 Instrument cluster C37 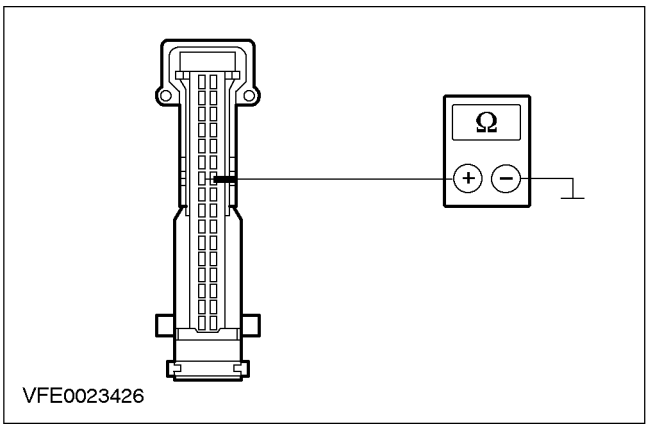	**4** Measure the voltage between instrument cluster, connector C37, pin 7, circuit 49-LG15 (BU/BK), harness side and ground. • Is battery voltage indicated? ☐ **Yes** GO TO **L12** ☐ **No** REPAIR the open circuit(s) between splice S36 and instrument cluster, by using the wiring diagrams. TEST the system for normal operation.
L12: CHECK THE POWER SUPPLY OF TURN INDICATOR, RIGHT-HAND SIDE	
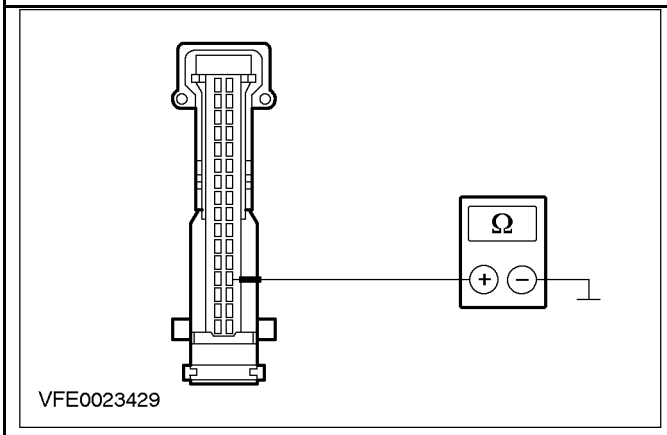	**1** Measure the voltage between instrument cluster, connector C37, pin 29, circuit 49-LG22 (BU/YE), harness side and ground. • Is battery voltage indicated? ☐ **Yes** CHECK the instrument cluster. If necessary INSTALL a new one. TEST the system for normal operation. ☐ **No** REPAIR the open circuit(s) between splice S35 and instrument cluster, by using the wiring diagrams. TEST the system for normal operation.
L13: DETERMINE THE INOPERATIVE TURN SIGNAL LAMP	
	1 Turn the multifunction switch to the RIGHT-HAND TURN SIGNAL position. **2** Determine the inoperative right-hand turn signal lamp. • Is the front turn signal lamp, right-hand side inoperative? ☐ **Yes** GO TO **L14** ☐ **No** GO TO **L16**

CONTINUED

DIAGNOSIS AND TESTING (CONTINUED)

CONDITIONS	DETAILS/RESULTS/ACTIONS
L14: CHECK THE POWER SUPPLY OF FRONT RIGHT-HAND TURN SIGNAL LAMP	
1 2 Headlamp, right-hand side C46 V VFE0003174	3 Measure the voltage between Headlamp, right-hand side, connector C46, pin 3, circuit 49-LG18 (BU), harness side and ground. • Is battery voltage indicated? ☐ **Yes** GO TO **L15** ☐ **No** REPAIR the open circuit(s) between splice S35 and headlamp, right-hand side, by using the wiring diagrams. TEST the system for normal operation.
L15: CHECK THE GROUND CONNECTION OF FRONT RIGHT-HAND TURN SIGNAL LAMP	
Ω VFE0010914	1 Measure the resistance between headlamp, right-hand side, connector C46, pin 6, circuit 31-LE30 (BK), harness side and ground. • Is the resistance less than 2 ohms? ☐ **Yes** CHECK the headlamp, right-hand side. If necessary INSTALL a new one. TEST the system for normal operation. ☐ **No** REPAIR the open circuit(s) between headlamp, right-hand side and ground G9, by using the wiring diagrams. TEST the system for normal operation.
L16: DETERMINE THE INOPERATIVE TURN SIGNAL LAMP	
	1 Turn the multifunction switch to the RIGHT-HAND TURN SIGNAL position. 2 Determine the inoperative right-hand turn signal lamp. • Is the side turn signal lamp, right-hand side inoperative? ☐ **Yes** GO TO **L17** ☐ **No** GO TO **L19**

CONTINUED

DIAGNOSIS AND TESTING (CONTINUED)

CONDITIONS	DETAILS/RESULTS/ACTIONS
L17: CHECK THE POWER SUPPLY OF SIDE TURN SIGNAL LAMP, RIGHT-HAND SIDE	
1 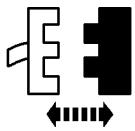 Side turn signal lamp, right-hand side C144 VFE0016093	2 Measure the voltage between side turn signal lamp, right-hand side, connector C144, pin 2, circuit 49-LG13 (BU/RD), harness side and ground. • Is battery voltage indicated? ☐ **Yes** GO TO **L18** ☐ **No** REPAIR the open circuit(s) between splice S35 and side turn signal lamp, right-hand side, by using the wiring diagrams. TEST the system for normal operation.
L18: CHECK THE GROUND CONNECTION OF SIDE TURN SIGNAL LAMP, RIGHT-HAND SIDE	
VFE0014782	1 Measure the resistance between side turn signal lamp, right-hand side, connector C144, pin 1, circuit 31-LG13 (BK), harness side and ground. • Is the resistance less than 2 ohms? ☐ **Yes** CHECK the side turn signal lamp, right-hand side. If necessary INSTALL a new one. TEST the system for normal operation. ☐ **No** REPAIR the open circuit(s) between side turn signal lamp, right-hand side and ground G6. TEST the system for normal operation.
L19: CHECK THE POWER SUPPLY OF REAR TURN SIGNAL LAMP, RIGHT-HAND SIDE	
1 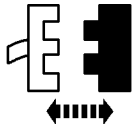 Rear turn signal lamp, right-hand side C66	

CONTINUED

DIAGNOSIS AND TESTING (CONTINUED)

CONDITIONS	DETAILS/RESULTS/ACTIONS
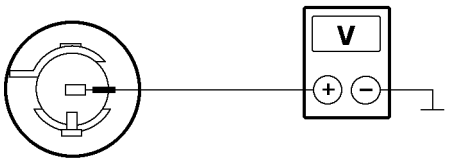 VFE0023425	**2** Measure the voltage between rear turn signal lamp, right-hand side, connector C66, circuit 49-LG19 (BU/RD), harness side and ground. • Is the resistance less than 2 ohms? ☐ **Yes** GO TO **L20** ☐ **No** REPAIR the open circuit(s) between splice S35 and rear turn signal lamp, right-hand side, by using the wiring diagrams. TEST the system for normal operation.
L20: CHECK THE GROUND CONNECTION OF REAR TURN SIGNAL LAMP, RIGHT-HAND SIDE	
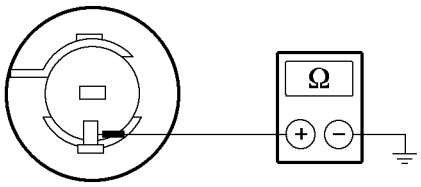 VFE0013671	**1** Measure the resistance between rear turn signal lamp, right-hand side, connector C66, circuit 31-LG19 (BK), harness side and ground. • Is the resistance less than 2 ohms? ☐ **Yes** CHECK the rear turn signal lamp, right-hand side. If necessary INSTALL a new one. TEST the system for normal operation. ☐ **No** REPAIR the open circuit(s) between rear turn signal lamp, right-hand side and ground G3, by using the wiring diagrams. TEST the system for normal operation.

PINPOINT TEST M: HAZARD LAMPS ARE INOPERATIVE OR ON CONTINUOUSLY

CONDITIONS	DETAILS/RESULTS/ACTIONS
M1: DETERMINE THE FAULT CONDITION	
1 	**2** Actuate the hazard warning switch. • Are the hazard warning lamps inoperative? ☐ **Yes** GO TO **M2** ☐ **No** The hazard warning lamps are on continuously: GO TO **M8**

CONTINUED

DIAGNOSIS AND TESTING (CONTINUED)

CONDITIONS	DETAILS/RESULTS/ACTIONS
M2: CHECK THE POWER SUPPLY OF MULTIFUNCTION SWITCH	
1 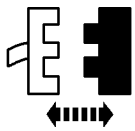 Multifunction switch C15a 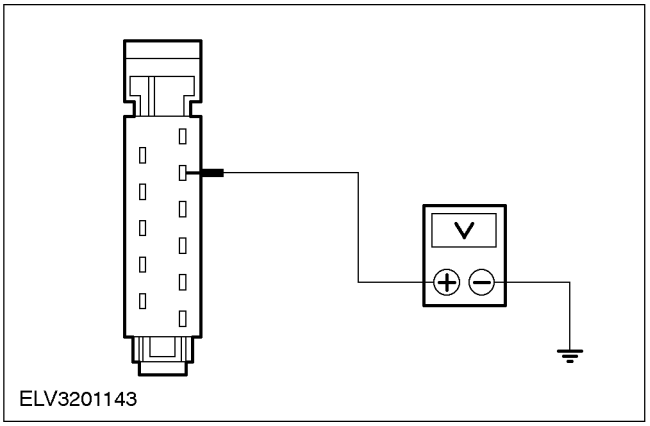 ELV3201143	2 Measure the voltage between multifunction switch, connector C15a, pin 10, circuit 29-DA1 (OG/YE), harness side and ground. • Is battery voltage indicated? ☐ **Yes** GO TO **M3** ☐ **No** GO TO **M4**
M3: CHECK THE GROUND CONNECTION OF MULTIFUNCTION SWITCH	
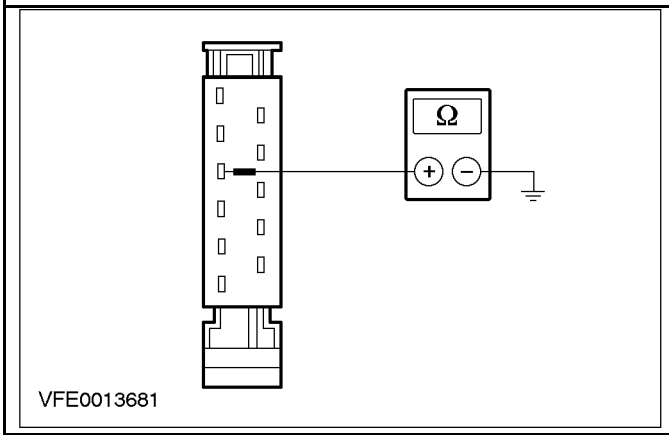 VFE0013681	1 Measure the resistance between multifunction switch, connector C15a, pin 8, circuit 31-LE29 (BK), harness side and ground. • Is the resistance less than 2 ohms? ☐ **Yes** GO TO **M5** ☐ **No** REPAIR the open circuit(s) between multi-function switch and ground G6, by using the wiring diagrams. TEST the system for normal operation.
M4: CHECK THE FUSE F5	
1 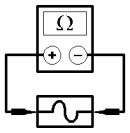 Fuse F5 (CJB)	• Is the fuse F5 (15 A) OK? ☐ **Yes** REPAIR the open circuit(s) between fuse F5 and multifunction switch, by using the wiring diagrams. TEST the system for normal operation. ☐ **No** INSTALL a new fuse F5 (15 A). If the fuse blows again, LOCATE and REPAIR the short circuit by using the wiring diagrams. TEST the system for normal operation.

CONTINUED

DIAGNOSIS AND TESTING (CONTINUED)

CONDITIONS	DETAILS/RESULTS/ACTIONS
M5: CHECK THE POWER SUPPLY OF RELAY – TURN SIGNAL	
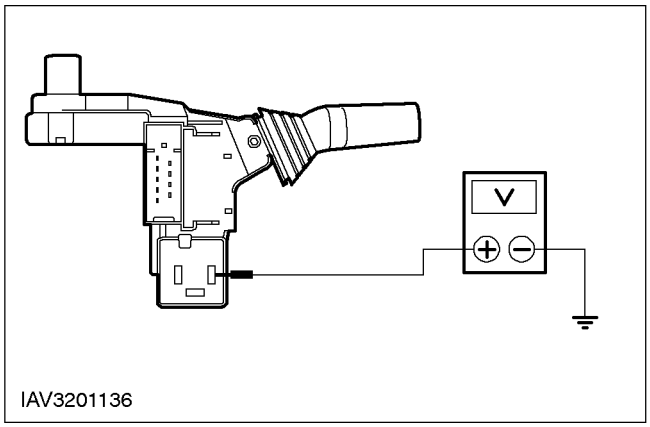 IAV3201136	**1** Actuate the hazard warning switch. **2** Measure the voltage between relay socket – turn signal, terminal 49 and ground. • Is battery voltage indicated? ☐ **Yes** GO TO **M6** ☐ **No** CHECK the multifunction switch, according to Component Testing attached to the wiring diagrams. If necessary INSTALL a new one. TEST the system for normal operation.
M6: CHECK THE GROUND CONNECTION OF RELAY – TURN SIGNAL	
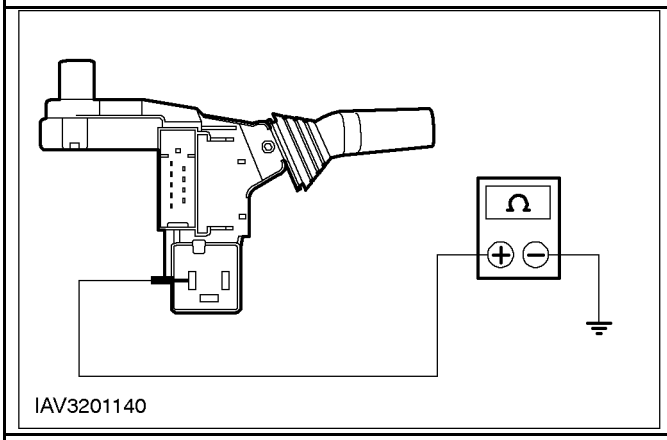 IAV3201140	**1** Measure the resistance between relay socket – turn signal, terminal 31and ground. • Is the resistance less than 2 ohms? ☐ **Yes** GO TO **M7** ☐ **No** CHECK the multifunction switch, according to Component Testing attached to the wiring diagrams. If necessary INSTALL a new one. TEST the system for normal operation.
M7: CHECK THE MULTIFUNCTION SWITCH FOR PROPER FUNCTION	
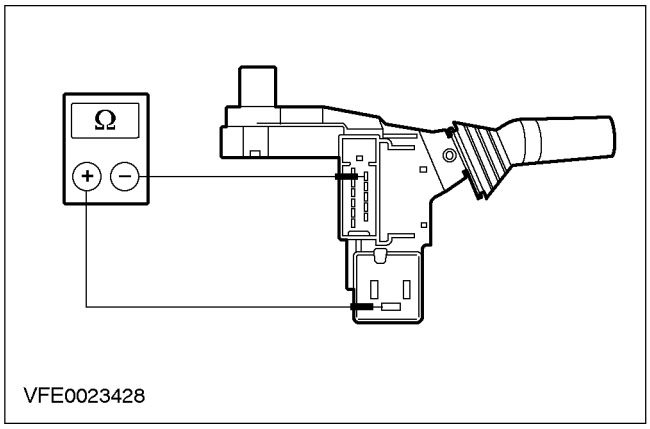 VFE0023428	**1** Actuate the hazard warning switch. **2** Measure the resistance between relay socket – turn signal, terminal 49A, and multifunction switch, connector C15a, pin 5, circuit 49-LG1 (BU), component side. • Is the resistance less than 2 ohms? ☐ **Yes** INSTALL a new relay – turn signal. TEST the system for normal operation. ☐ **No** INSTALL a new multifunction switch. TEST the system for normal operation.

CONTINUED

DIAGNOSIS AND TESTING (CONTINUED)

CONDITIONS	DETAILS/RESULTS/ACTIONS
M8: CHECK THE RELAY – TURN SIGNAL FOR PROPER FUNCTION	
1 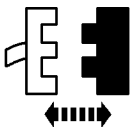 Relay – turn signal	2 Actuate the hazard warning switch. 3 Check if the hazard warning lamps are on continuously. • Are the hazard warning lamps on continuously? ☐ **Yes** GO TO **M9** ☐ **No** INSTALL a new relay – turn signal. TEST the system for normal operation.
M9: CHECK THE RELAY – ANTI-THEFT FLASHER FOR PROPER FUNCTION	
1 2 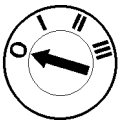 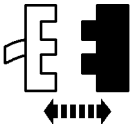 Relay – anti-theft flasher C323	3 Check if the hazard warning lamps are on continuously. • Are the hazard warning lamps on continuously? ☐ **Yes** CHECK the multifunction switch, according to Component Testing attached to the wiring diagrams. If necessary INSTALL a new one. TEST the system for normal operation. ☐ **No** INSTALL a new relay – anti-theft flasher. TEST the system for normal operation.

CONTINUED

DIAGNOSIS AND TESTING

Parking, Rear and License Lamps

Inspection and Verification

1. Verify the customer concern.
2. Visually inspect for obvious signs of mechanical or electrical damage.
3. If an obvious cause for an observed or reported concern is found, correct the cause (if possible) before proceeding to the next step.
4. If the cause is not visually evident, verify the symptom and refer to the Symptom Chart.

Visual Inspection Chart

Electrical
• Fuse(s). • Bulb(s). • Wiring harness. • Electrical connector(s).

Symptom Chart

Condition	Possible Sources	Action
•One or more parking, rear or license plate lamp(s) is/are in-operative.	•Fuse(s). •Bulb(s). •Circuit(s) •Headlamp, left-hand side / right-hand side. •Rear lamp assembly, left-hand side / right-hand side. •License plate lamp.	•Go To Pinpoint Test N
•The parking, rear or license plate lamps are on continuously.	•Circuit(s). •Multifunction switch. •Central Junction Box (CJB).	•Go To Pinpoint Test O
•The parking, rear or license plate lamps are inoperative.	•Fuse. •Circuit(s). •Multifunction switch. •Central Junction Box (CJB).	•Go To Pinpoint Test P

CONTINUED

Pinpoint Tests

PINPOINT TEST N: ONE OR MORE PARKING, REAR OR LICENSE PLATE LAMP (S) IS/ARE INOPERATIVE

N1: DETERMINE THE FAULT CONDITION..... 417-01-51B/52
N2: CHECK THE FUSE F6 417-01-52
N3: DETERMINE THE FAULT CONDITION..... 417-01-52
N4: CHECK THE FUSE F7 ..... 417-01-52/53
N5: DETERMINE THE FAULT CONDITION..... 417-01-53
N6: CHECK THE POWER SUPPLY OF FRONT PARKING LAMP, LEFT-HAND SIDE..... 417-01-53
N7: CHECK THE GROUND CONNECTION OF HEADLAMP, LEFT-HAND SIDE..... 417-01-54
N8: DETERMINE THE FAULT CONDITION..... 417-01-54
N9: CHECK THE POWER SUPPLY OF REAR PARKING LAMP, LEFT-HAND SIDE..... 417-01-54
N10: CHECK THE GROUND CONNECTION OF REAR PARKING LAMP, LEFT-HAND SIDE..... 417-01-55
N11: DETERMINE THE FAULT CONDITION..... 417-01-55
N12: CHECK THE POWER SUPPLY OF FRONT PARKING LAMP, RIGHT-HAND SIDE 417-01-55
N13: CHECK THE GROUND CONNECTION OF FRONT PARKING LAMP, RIGHT-HAND SIDE 417-01-56
N14: DETERMINE THE FAULT CONDITION..... 417-01-56
N15: CHECK THE POWER SUPPLY OF REAR PARKING LAMP, RIGHT-HAND SIDE 417-01-56
N16: CHECK THE GROUND CONNECTION OF REAR PARKING LAMP, RIGHT-HAND SIDE 417-01-57
N17: CHECK THE POWER SUPPLY OF LICENSE PLATE LAMP 417-01-57
N18: CHECK THE GROUND CONNECTION OF LICENSE PLATE LAMP 417-01-57/58

PINPOINT TEST O: THE PARKING, REAR OR LICENSE PLATE LAMPS ARE ON CONTINUOUSLY

O1: CHECK THE MULTIFUNCTION SWITCH FOR PROPER FUNCTION..... 417-01-58

PINPOINT TEST P: THE PARKING, REAR AND LICENSE PLATE LAMPS ARE INOPERATIVE

P1: CHECK THE POWER SUPPLY OF MULTIFUNCTION SWITCH 417-01-59
P2: CHECK THE FUSE F15..... 417-01-59

CONTINUED

Pinpoint Tests

P3: CHECK THE POWER SUPPLY OF FUSE F15 ..... 417-01-59/60

P4: CHECK THE POWER SUPPLY OF FUSE (S) F6 AND F7 417-01-60

CONTINUED

DIAGNOSIS AND TESTING (CONTINUED)

Pinpoint Tests

PINPOINT TEST N: ONE OR MORE PARKING, REAR OR LICENSE PLATE LAMP(S) IS/ARE INOPERATIVE

CONDITIONS	DETAILS/RESULTS/ACTIONS
N1: DETERMINE THE FAULT CONDITION	
1 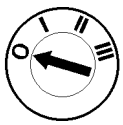	2 Turn the multifunction switch to the PARKING LIGHT position.

CONTINUED

DIAGNOSIS AND TESTING (CONTINUED)

CONDITIONS	DETAILS/RESULTS/ACTIONS
	3 Determine the fault condition. • Are both left-hand parking lamps inoperative? ☐ **Yes** GO TO **N2** ☐ **No** GO TO **N3**
N2: CHECK THE FUSE F6	
2 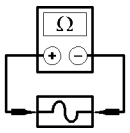 Fuse F6 (CJB)	**1** Turn the multifunction switch to the OFF position. **3** Check the fuse F6 (10 A). • Is the fuse OK? ☐ **Yes** REPAIR the open circuit(s) between fuse F6 and splice S9, by using the wiring diagrams. TEST the system for normal operation. ☐ **No** INSTALL a new fuse F6. If the fuse blows again, LOCATE and REPAIR the short circuit by using the wiring diagrams. TEST the system for normal operation.
N3: DETERMINE THE FAULT CONDITION	
	1 Determine the fault condition. • Are both parking lamps, right-hand side and the license plate lamp inoperative? ☐ **Yes** GO TO **N4** ☐ **No** GO TO **N5**
N4: CHECK THE FUSE F7	
2 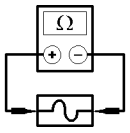 Fuse F7 (CJB)	**1** Turn the multifunction switch to the OFF position.

CONTINUED

DIAGNOSIS AND TESTING (CONTINUED)

CONDITIONS	DETAILS/RESULTS/ACTIONS
	3 Check the fuse F7 (10 A). • Is the fuse OK? ☐ **Yes** REPAIR the open circuit between fuse F7 and splice S10, by using the wiring diagrams. TEST the system for normal operation. ☐ **No** INSTALL a new fuse F7. If the fuse blows again, LOCATE and REPAIR the short circuit by using the wiring diagrams. TEST the system for normal operation.
N5: DETERMINE THE FAULT CONDITION	
	1 Determine the fault condition. • Is the front parking lamp, left-hand side inoperative? ☐ **Yes** GO TO **N6** ☐ **No** GO TO **N8**
N6: CHECK THE POWER SUPPLY OF FRONT PARKING LAMP, LEFT-HAND SIDE	
2 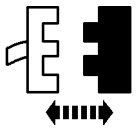 Headlamp, left-hand side C45 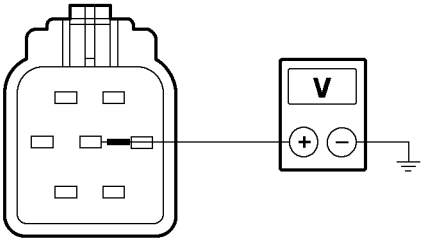 VFE0011567	**1** Turn the multifunction switch to the OFF position. **3** Turn the multifunction switch to the PARKING LIGHT position. **4** Measure the voltage between headlamp, left-hand side, connector C45, pin 4, circuit 29S-LF7 (BK), harness side and ground. • Is battery voltage indicated? ☐ **Yes** GO TO **N7** ☐ **No** REPAIR the open circuit(s) between splice S9 and headlamp, left-hand side, by using the wiring diagrams. TEST the system for normal operation.

CONTINUED

DIAGNOSIS AND TESTING (CONTINUED)

CONDITIONS	DETAILS/RESULTS/ACTIONS
N7: CHECK THE GROUND CONNECTION OF HEADLAMP, LEFT-HAND SIDE	
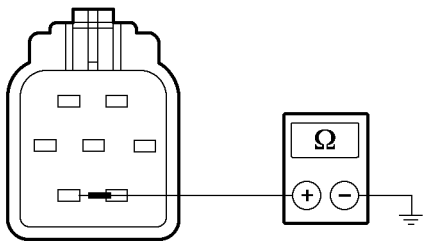 VFE0011568	**1** Measure the resistance between headlamp, left-hand side, connector C45, pin 6, circuit 31-LE31 (BK), harness side and ground. • Is the resistance less than 2 ohms? ☐ **Yes** CHECK the headlamp, left-hand side. If necessary INSTALL a new one. TEST the system for normal operation. ☐ **No** REPAIR the open circuit(s) between headlamp, left-hand side and ground G9, by using the wiring diagrams. TEST the system for normal operation.
N8: DETERMINE THE FAULT CONDITION	
	1 Determine the fault condition. • Is the rear parking lamp, left-hand side inoperative? ☐ **Yes** GO TO **N9** ☐ **No** GO TO **N11**
N9: CHECK THE POWER SUPPLY OF REAR PARKING LAMP, LEFT-HAND SIDE	
1 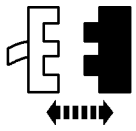 Rear lamp assembly, left-hand side C39 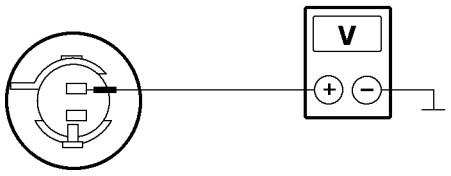 VFE0023430	**2** Measure the voltage between rear lamp assembly, left-hand side, connector C39, circuit 29S-LF11 (OG/WH), harness side and ground. • Is battery voltage indicated? ☐ **Yes** GO TO **N10** ☐ **No** REPAIR the open circuit(s) between splice S9 and rear lamp assembly, left-hand side, by using the wiring diagrams. TEST the system for normal operation.

CONTINUED

DIAGNOSIS AND TESTING (CONTINUED)

CONDITIONS	DETAILS/RESULTS/ACTIONS
N10: CHECK THE GROUND CONNECTION OF REAR PARKING LAMP, LEFT-HAND SIDE	
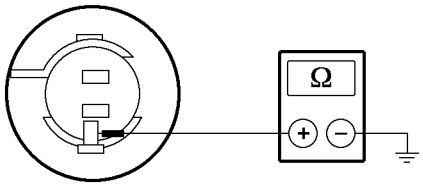 VFE0013601	**1** Measure the resistance between rear lamp assembly, left-hand side, connector C39, circuit 31-LF23 (BK), harness side and ground. • Is the resistance less than 2 ohms? ☐ **Yes** CHECK the rear lamp assembly, left-hand side. If necessary INSTALL a new one. TEST the system for normal operation. ☐ **No** REPAIR the open circuit(s) between rear lamp assembly, left-hand side and ground, by using the wiring diagrams. TEST the system for normal operation.
N11: DETERMINE THE FAULT CONDITION	
	1 Determine the fault condition. • Is the front parking lamp, right-hand side inoperative? ☐ **Yes** GO TO **N12** ☐ **No** GO TO **N14**
N12: CHECK THE POWER SUPPLY OF FRONT PARKING LAMP, RIGHT-HAND SIDE	
1 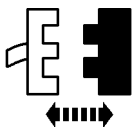 Headlamp, right-hand side C46 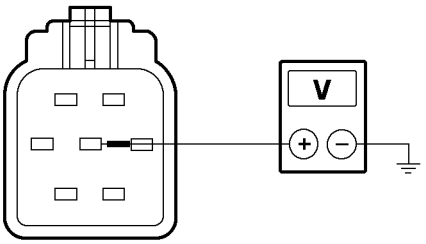 VFE0011567	**2** Measure the voltage between headlamp, right-hand side, connector C46, pin 4, circuit 29S-LF16 (OG/GN), harness side and ground. • Is battery voltage indicated? ☐ **Yes** GO TO **N13** ☐ **No** REPAIR the open circuit(s) between splice S10 and headlamp, right-hand side, by using the wiring diagrams. TEST the system for normal operation.

CONTINUED

DIAGNOSIS AND TESTING (CONTINUED)

CONDITIONS	DETAILS/RESULTS/ACTIONS
N13: CHECK THE GROUND CONNECTION OF FRONT PARKING LAMP, RIGHT-HAND SIDE	
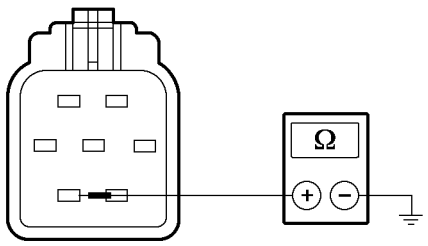 VFE0011568	**1** Measure the resistance between headlamp, right-hand side, connector C46, pin 6, circuit 31-LE30 (BK), harness side and ground. • Is the resistance less than 2 ohms? ☐ **Yes** CHECK the headlamp, right-hand side. If necessary INSTALL a new one. TEST the system for normal operation. ☐ **No** REPAIR the open circuit(s) between headlamp, right-hand side and ground G9, by using the wiring diagrams. TEST the system for normal operation.
N14: DETERMINE THE FAULT CONDITION	
	1 Determine the fault condition. • Is the rear parking lamp, right-hand side inoperative? ☐ **Yes** GO TO **N15** ☐ **No** GO TO **N17**
N15: CHECK THE POWER SUPPLY OF REAR PARKING LAMP, RIGHT-HAND SIDE	
1 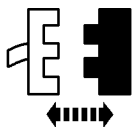 Rear lamp assembly, right-hand side C42 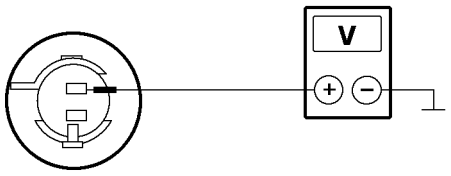 VFE0023430	**2** Measure the voltage between rear lamp assembly, right-hand side, connector C42, circuit 29S-LF20 (OG), harness side and ground. • Is battery voltage indicated? ☐ **Yes** GO TO **N15** ☐ **No** REPAIR the open circuit(s) between splice S10 and rear lamp assembly, right-hand side, by using the wiring diagrams. TEST the system for normal operation.

CONTINUED

DIAGNOSIS AND TESTING (CONTINUED)

CONDITIONS	DETAILS/RESULTS/ACTIONS
N16: CHECK THE GROUND CONNECTION OF REAR PARKING LAMP, RIGHT-HAND SIDE	
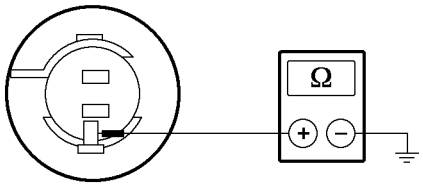 VFE0013601	**1** Measure the resistance between rear lamp assembly, right-hand side, connector C42, circuit 31-LF24 (BK), harness side and ground. • Is the resistance less than 2 ohms? ☐ **Yes** CHECK the rear lamp assembly, right-hand side. If necessary INSTALL a new one. TEST the system for normal operation. ☐ **No** REPAIR the open circuit(s) between rear lamp assembly, right-hand side and ground G3, by using the wiring diagrams. TEST the system for normal operation.
N17: CHECK THE POWER SUPPLY OF LICENSE PLATE LAMP	
1 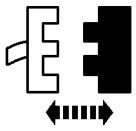 License plate lamp C40a 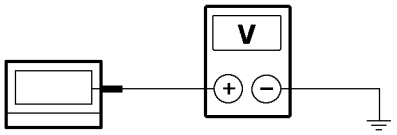 VFE0003181	**2** Measure the voltage between License plate lamp, connector C40a, circuit 29S-LF12 (OG/BK), harness side and ground. • Is battery voltage indicated? ☐ **Yes** GO TO **N18** ☐ **No** REPAIR the open circuit(s) between splice S10 and license plate lamp, by using the wiring diagrams. TEST the system for normal operation.
N18: CHECK THE GROUND CONNECTION OF LICENSE PLATE LAMP	
1 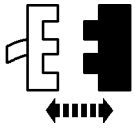 License plate lamp C40b	

CONTINUED

DIAGNOSIS AND TESTING (CONTINUED)

CONDITIONS	DETAILS/RESULTS/ACTIONS
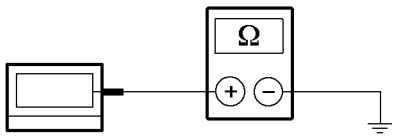 VFE0003180	**2** Measure the resistance between license plate lamp, connector C40b, circuit 31-LF12 (BK), harness side and ground. • Is the resistance less than 2 ohms? ☐ **Yes** CHECK the license plate lamp. If necessary INSTALL a new one. TEST the system for normal operation. ☐ **No** REPAIR the open circuit(s) between license plate lamp and ground G3, by using the wiring diagrams. TEST the system for normal operation.

PINPOINT TEST O: THE PARKING, REAR OR LICENSE PLATE LAMPS ARE ON CONTINUOUSLY

CONDITIONS	DETAILS/RESULTS/ACTIONS
O1: CHECK THE MULTIFUNCTION SWITCH FOR PROPER FUNCTION	
1 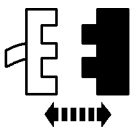 Multifunction switch C15a	**2** Check if the parking lamps are on continuously. • Are the parking lamps on continuously? ☐ **Yes** REPAIR the short to power, circuit(s) connected to multifunction switch, connector C15a, pin 7, by using the wiring diagrams. TEST the system for normal operation. If necessary INSTALL a new CJB. ☐ **No** CHECK the multifunction switch, according to Component Testing attached to the wiring diagrams. If necessary INSTALL a new one. TEST the system for normal operation.

CONTINUED

DIAGNOSIS AND TESTING (CONTINUED)

PINPOINT TEST P: THE PARKING, REAR AND LICENSE PLATE LAMPS ARE INOPERATIVE

CONDITIONS	DETAILS/RESULTS/ACTIONS
P1: CHECK THE POWER SUPPLY OF MULTIFUNCTION SWITCH	
1 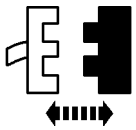 Multifunction switch C15a 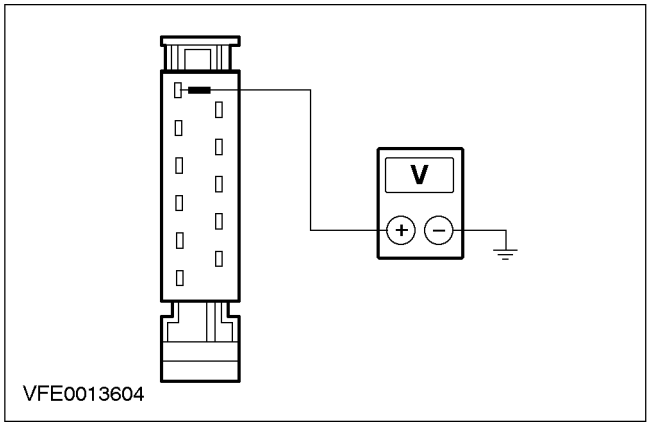 	2 Measure the voltage between multifunction switch, connector C15a, pin 6, circuit 29-LE29 (OG/BK), harness side and ground. • Is battery voltage indicated? ☐ **Yes** GO TO **P4** ☐ **No** GO TO **P2**
P2: CHECK THE FUSE F15	
1 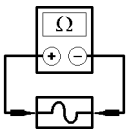 Fuse F15 (CJB)	• Is the fuse F15 (5 A) OK? ☐ **Yes** GO TO **P3** ☐ **No** INSTALL a new fuse F15 (5 A). If the fuse blows again, LOCATE and REPAIR the short circuit by using the wiring diagrams. TEST the system for normal operation.
P3: CHECK THE POWER SUPPLY OF FUSE F15	
1 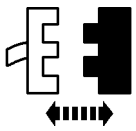 Fuse F15 (CJB)	

CONTINUED

DIAGNOSIS AND TESTING (CONTINUED)

CONDITIONS	DETAILS/RESULTS/ACTIONS
	2 Measure the voltage between fuse F15 (5 A) and ground. • Is battery voltage indicated? ☐ **Yes** REPAIR the open circuit(s) between fuse F15 and multifunction switch, by using the wiring diagrams. TEST the system for normal operation. ☐ **No** REPAIR the power supply of fuse F15, by using the wiring diagrams. TEST the system for normal operation.
P4: CHECK THE POWER SUPPLY OF FUSE (S) F6 AND F7	
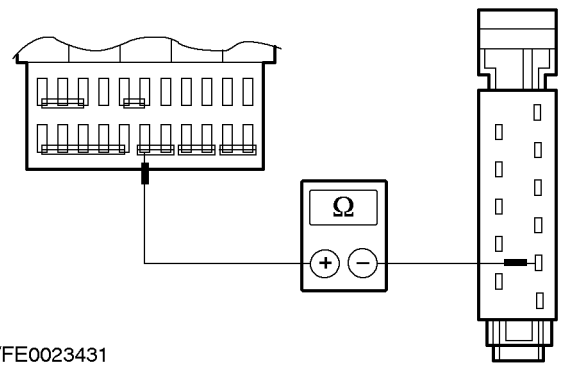	**1** Measure the resistance between multifunction switch, connector C15a, pin 7, circuit 29S-DB7 (OG/YE), harness side and fuse F6 (5 A) or fuse F7 (5A). • Is the resistance less than 2 ohms? ☐ **Yes** CHECK the multifunction switch, according to Component Testing attached to the wiring diagrams. If necessary INSTALL a new one. TEST the system for normal operation. ☐ **No** REPAIR the open circuit(s) between multi-function switch and fuse(s) F6 and F7, by using the wiring diagrams. TEST the system for normal operation.

CONTINUED

DIAGNOSIS AND TESTING

Reversing Lamps

Inspection and Verification

1. Verify the customer concern.
2. Visually inspect for obvious signs of mechanical or electrical damage.
3. If an obvious cause for an observed or reported concern is found, correct the cause (if possible) before proceeding to the next step.
4. If the cause is not visually evident, verify the symptom and refer to the Symptom Chart.

Visual Inspection Chart

Electrical
• Fuse(s). • Bulb(s). • Wiring harness. • Electrical connector(s).

Symptom Chart

Symptom Chart

Condition	Possible Sources	Action
•The reversing lamp is inoperative.	•Fuse. •Circuit(s). •Reversing lamp. •Transmission switch.	•Go To Pinpoint Test Q
•The reversing lamp is on continuously.	•Circuit(s). •Transmission switch.	•Go To Pinpoint Test R

Pinpoint Tests

PINPOINT TEST Q: THE REVERSING LAMP IS INOPERATIVE

CONDITIONS	DETAILS/RESULTS/ACTIONS
Q1: CHECK THE FUSE F13	
1 2 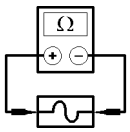 Fuse F13 (CJB)	3 Check the fuse F13 (15 A). • Is the fuse OK? ☐ **Yes** GO TO **Q2** ☐ **No** INSTALL a new fuse F13 (15 A). If the fuse blows again, LOCATE and REPAIR the short circuit by using the wiring diagrams. TEST the system for normal operation.

CONTINUED

DIAGNOSIS AND TESTING (CONTINUED)

CONDITIONS	DETAILS/RESULTS/ACTIONS
Q2: CHECK THE CIRCUIT TO TRANSMISSION SWITCH FOR OPEN	
1 2 3 Fuse F13 (CJB) Transmission switch C51 VFE0013669	4 Measure the voltage between transmission switch, connector C51, pin 2, circuit 14-LG28 (VT/WH), harness side and ground. • Is battery voltage indicated? ☐ **Yes** GO TO **Q3** ☐ **No** REPAIR the open circuit(s) between fuse F13 and transmission switch, by using the wiring diagrams. TEST the system for normal operation.
Q3: CHECK THE TRANSMISSION SWITCH FOR PROPER FUNCTION	
1 VFE0013668 3	2 Connect a jumper wire between transmission switch, connector C51, pin 2, circuit 14-LG28 (VT/WH) and pin 1, circuit 14S-LG36 (VT/BK), harness side. • Does the reversing lamp illuminate? ☐ **Yes** INSTALL a new transmission switch. TEST the system for normal operation. ☐ **No** GO TO **Q4**

CONTINUED

DIAGNOSIS AND TESTING (CONTINUED)

CONDITIONS	DETAILS/RESULTS/ACTIONS
Q4: CHECK THE POWER SUPPLY OF REVERSING LAMP	
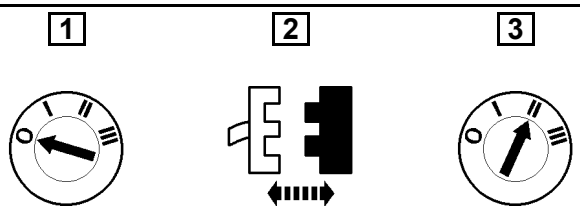 Reversing lamp C67 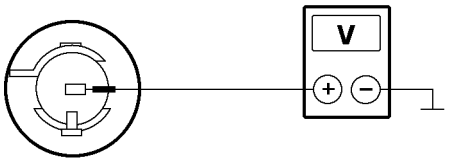 VFE0023425	**4** Set the transmission in the REVERSE position. **5** Measure the voltage between reversing lamp, connector C67, circuit 14S-LG36 (VT/BK), harness side and ground. • Is battery voltage indicated? ☐ **Yes** GO TO **Q5** ☐ **No** REPAIR the open circuit between transmission switch and reversing lamp, by using the wiring diagrams. TEST the system for normal operation.
Q5: CHECK THE GROUND CONNECTION OF REVERSING LAMP	
  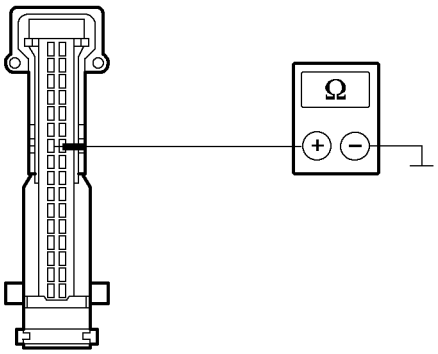 VFE0023426	**2** Measure the resistance between reversing lamp, connector C67, circuit 31-LG36 (BK), harness side and ground. • Is the resistance less than 2 ohms? ☐ **Yes** CHECK the reversing lamp. If necessary INSTALL a new one. TEST the system for normal operation. ☐ **No** REPAIR the open circuit(s) between reversing lamp and ground G3, by using the wiring diagrams. TEST the system for normal operation.

CONTINUED

DIAGNOSIS AND TESTING (CONTINUED)

PINPOINT TEST R: THE REVERSING LAMPS ARE ON CONTINUOUSLY

CONDITIONS	DETAILS/RESULTS/ACTIONS
R1: CHECK THE REVERSING LAMP SWITCH	
1 2 3 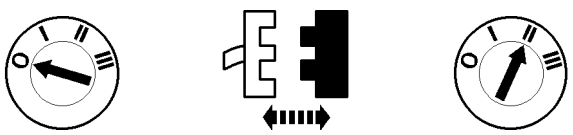 Reversing lamp switch C51	• Are the reversing lamps on continuously? ☐ **Yes** REPAIR the short to power, circuit(s) connected with transmission switch, connector C51, pin 1, by using the wiring diagrams. TEST the system for normal operation. ☐ **No** INSTALL a new reversing lamp switch. TEST the system for normal operation.

CONTINUED

DIAGNOSIS AND TESTING

Fog Lamps

Inspection and Verification

1. Verify the customer concern.
2. Visually inspect for obvious signs of mechanical or electrical damage.
3. If an obvious cause for an observed or reported concern is found, correct the cause (if possible) before proceeding to the next step.
4. If the cause is not visually evident, verify the symptom and refer to the Symptom Chart.

Visual Inspection Chart

Electrical
• Fuse(s). • Bulb(s). • Wiring harness. • Electrical connector(s).

Symptom Chart

Symptom Chart

Condition	Possible Sources	Action
•The fog lamps are inoperative.	•Fuse(s). •Circuit(s). •Relay – fog lamps. •Front fog lamp switch. •Central Junction Box (CJB).	•Go To Pinpoint Test S
•The individual fog lamp is inoperative.	•Bulb. •Circuit(s). •Front fog lamp. •Central Junction Box (CJB).	•Go To Pinpoint Test T
•The fog lamps are on continuously.	•Circuit(s). •Relay – fog lamps. •Front fog lamp switch.	•Go To Pinpoint Test U

Pinpoint Tests

PINPOINT TEST S: THE FOG LAMPS ARE INOPERATIVE

CONDITIONS	DETAILS/RESULTS/ACTIONS
S1: CHECK THE FUSE F14	
1 2 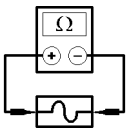 Fuse F14 (CJB)	

CONTINUED

DIAGNOSIS AND TESTING (CONTINUED)

CONDITIONS	DETAILS/RESULTS/ACTIONS
	3 Check the fuse F14 (15 A). • Is the fuse OK? ☐ **Yes** GO TO **S2** ☐ **No** INSTALL a new fuse F14 (15 A). If the fuse blows again, LOCATE and REPAIR the short circuit by using the wiring diagrams. TEST the system for normal operation.
S2: CHECK THE POWER SUPPLY OF FUSE F14	
1 	2 Measure the voltage between fuse F14 (CJB) and ground. • Is battery voltage indicated? ☐ **Yes** GO TO **S3** ☐ **No** REPAIR the power supply of fuse F14, by using the wiring diagrams. TEST the system for normal operation. If necessary INSTALL a new CJB.
S3: CHECK POWER SUPPLY OF RELAY – FOG LAMPS	
1 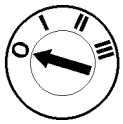 2 Fuse F14 (CJB) 3 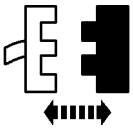 Relay – fog lamps C320 4 	

CONTINUED

DIAGNOSIS AND TESTING (CONTINUED)

CONDITIONS	DETAILS/RESULTS/ACTIONS
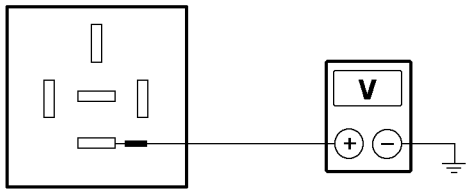 VFE0000230	**5** Measure the voltage between relay socket – fog lamps, connector C320, pin 5, circuit 14-LD9 (VT/BK) and ground. • Is battery voltage indicated? ☐ **Yes** GO TO **S4** ☐ **No** REPAIR the open circuit(s) between fuse F14 and relay – fog lamps, by using the wiring diagrams. TEST the system for normal operation.
S4: CHECK THE CONTROL CIRCUIT OF RELAY – FOG LAMPS	
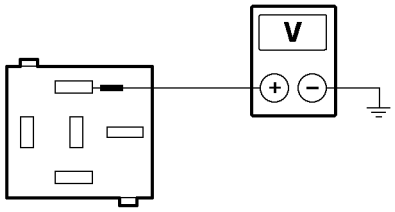 VFE0013195	**1** Turn the multifunction switch to the PARKING LIGHT position. **2** Switch ON the front fog lamps. **3** Measure the voltage between relay socket – fog lamps, connector C320, pin 1, circuit 29S-LD8 (OG) and ground. • Is battery voltage indicated? ☐ **Yes** GO TO **S5** ☐ **No** GO TO **S7**
S5: CHECK THE GROUND CONNECTION OF RELAY – FOG LAMPS	
1 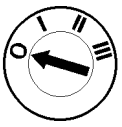 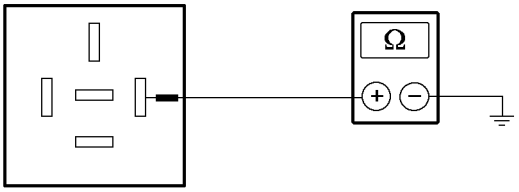 VFE0000233	**2** Measure the resistance between relay socket – fog lamps, connector C320, pin 2 and ground. • Is the resistance less than 2 ohms? ☐ **Yes** GO TO **S6** ☐ **No** REPAIR the open circuit(s) between relay – fog lamps and ground G6, by using the wiring diagrams. TEST the system for normal operation. If necessary INSTALL a new CJB.

CONTINUED

DIAGNOSIS AND TESTING (CONTINUED)

CONDITIONS	DETAILS/RESULTS/ACTIONS
S6: CHECK THE RELAY – FOG LAMPS FOR PROPER FUNCTION	
1 Relay – fog lamps C320 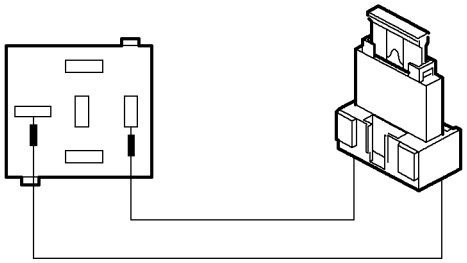 VFE0013150	2 Connect a jumper wire between relay socket – fog lamps, connector C320, pin 3, circuit 14S-LD11 (VT/WH) and pin 5, circuit 14-LD9 (VT/BK).
3 	• Do the front fog lamps illuminate? ☐ **Yes** INSTALL a new relay – fog lamps. TEST the system for normal operation. ☐ **No** REPAIR the open circuit(s) between front fog lamp, left-hand side and ground G9.
S7: CHECK THE FRONT FOG LAMP SWITCH FOR PROPER FUNCTION	
2 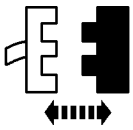 Front fog lamp switch C328	1 Turn the multifunction switch to the OFF position.

CONTINUED

DIAGNOSIS AND TESTING (CONTINUED)

CONDITIONS	DETAILS/RESULTS/ACTIONS
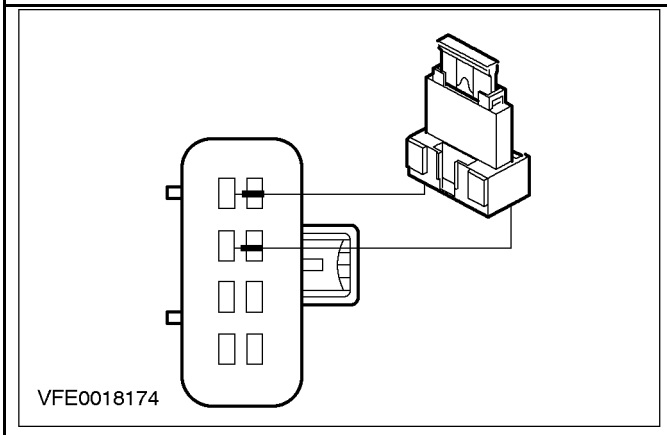	**3** Connect a jumper wire between front fog lamp switch, connector C328, pin 2, circuit 29S-LD10 (OG/GN) and pin 1, circuit 29S-LD8 (OG), harness side. **4** Turn the multifunction switch to the PARKING LIGHT position. • Do the front fog lamps illuminate? ☐ **Yes** INSTALL a new front fog lamp switch. TEST the system for normal operation. ☐ **No** GO TO **S8**
S8: CHECK THE POWER SUPPLY OF FRONT FOG LAMP SWITCH	
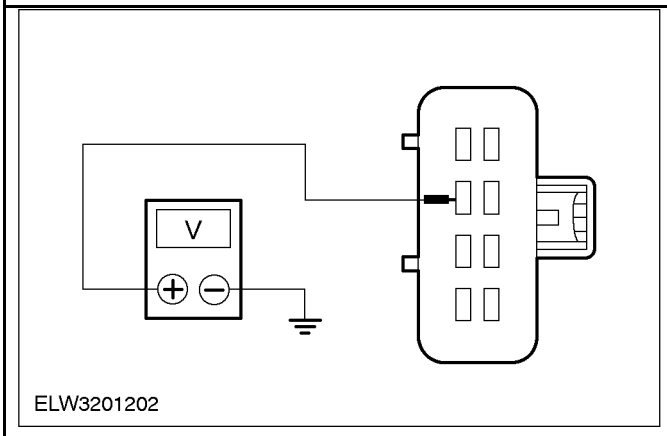	**1** Measure the voltage between front fog lamp switch, connector C328, pin 2, circuit 29S-LD10 (OG/GN), harness side and ground. • Is battery voltage indicated? ☐ **Yes** REPAIR the open circuit(s) between front fog lamp switch and relay – fog lamps, by using the wiring diagrams. TEST the system for normal operation. ☐ **No** REPAIR the open circuit(s) between splice S9 and front fog lamp switch, by using the wiring diagrams. TEST the system for normal operation.

PINPOINT TEST T: THE INDIVIDUAL FOG LAMP IS INOPERATIVE

CONDITIONS	DETAILS/RESULTS/ACTIONS
T1: DETERMINE THE INOPERATIVE FRONT FOG LAMP	
1 	**2** Turn the multifunction switch to the PARKING LIGHT position.

CONTINUED

DIAGNOSIS AND TESTING (CONTINUED)

CONDITIONS	DETAILS/RESULTS/ACTIONS
	3 Determine the inoperative front fog lamp. • Is the front fog lamp, left-hand side inoperative? ☐ **Yes** GO TO **T2** ☐ **No** GO TO **T3**
T2: CHECK THE GROUND CONNECTION OF FRONT FOG LAMP, LEFT-HAND SIDE	
1 2 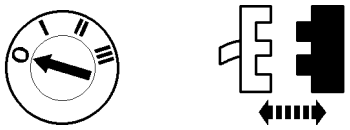 Front fog lamp, left-hand side C184 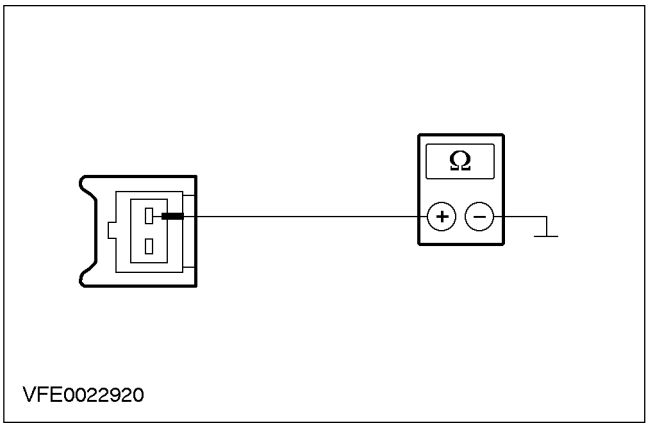 VFE0022920	**3** Measure the resistance between front fog lamp, left-hand side, connector C184, pin 2, circuit 31-LD11 (BK), harness side and ground. • Is the resistance less than 2 ohms? ☐ **Yes** REPAIR the open circuit(s) between relay – fog lamp and front fog lamp, left-hand side, by using the wiring diagrams. TEST the system for normal operation. If necessary INSTALL a new front fog lamp. ☐ **No** REPAIR the open circuit(s) between front fog lamp, left-hand side and ground G9, by using the wiring diagrams. TEST the system for normal operation. If necessary INSTALL a new front fog lamp.
T3: CHECK THE GROUND CONNECTION OF FRONT FOG LAMP, RIGHT-HAND SIDE	
1 2 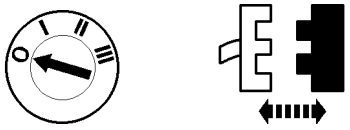 Front fog lamp, right-hand side C183	

CONTINUED

DIAGNOSIS AND TESTING (CONTINUED)

CONDITIONS	DETAILS/RESULTS/ACTIONS
VFE0022920	**3** Measure the resistance between front fog lamp, right-hand side, connector C183, pin 2, circuit 31-LD17 (BK), harness side and ground. • Is the resistance less than 2 ohms? ☐ **Yes** REPAIR the open circuit(s) between relay – fog lamp and front fog lamp, right-hand side, by using the wiring diagrams. TEST the system for normal operation. If necessary INSTALL a new front fog lamp. ☐ **No** REPAIR the open circuit(s) between front fog lamp, right-hand side and ground G9, by using the wiring diagrams. TEST the system for normal operation. If necessary INSTALL a new front fog lamp.

PINPOINT TEST U: THE FOG LAMPS ARE ON CONTINUOUSLY

CONDITIONS	DETAILS/RESULTS/ACTIONS
U1: CHECK THE FRONT FOG LAMP SWITCH FOR PROPER FUNCTION	
1 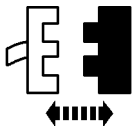 Front fog lamp switch C328 **3** 	**2** Turn the multifunction switch to the PARKING LIGHT position. **4** Check if the front fog lamps are on continuously. • Are the front fog lamps on continuously? ☐ **Yes** GO TO **U2** ☐ **No** INSTALL a new front fog lamp switch. TEST the system for normal operation.

CONTINUED

DIAGNOSIS AND TESTING (CONTINUED)

CONDITIONS	DETAILS/RESULTS/ACTIONS
U2: CHECK THE RELAY – FOG LAMPS FOR PROPER FUNCTION	
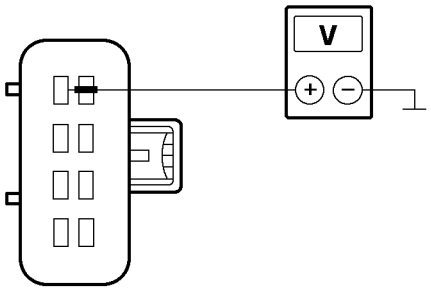 VFE0023128	**1** Measure the voltage between front fog lamp switch, connector C328, pin 1, circuit 29S-LD8 (OG), harness side and ground. • Is battery voltage indicated? ☐ **Yes** REPAIR the short to power, circuit(s) connected with the front fog lamp switch, connector C328, pin 1, by using the wiring diagrams. TEST the system for normal operation. ☐ **No** INSTALL a new relay – fog lamps. TEST the system for normal operation.

Component Tests

Relays

Component testing applies to the following relays:

- Relay – fog lamps

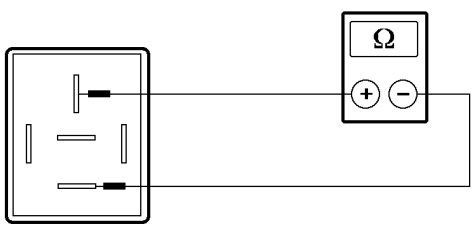

VFE0023129

1. Check relay contact in normal condition

Measure the resistance between pin 3 and pin 5 (VFE0023129).

Is the resistance less than 2 ohm?

If yes, INSTALL a new relay.

If no, GO to step 2.

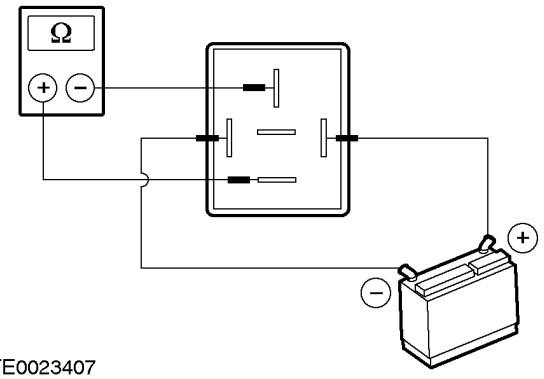

VFE0023407

2. Check relay contact in activated condition.

Connect the terminals of power supply to pins 1 and 2 (VFE0023407).

Measure the resistance between pin 3 and pin 5 (VFE0023407).

Is the resistance less than 2 ohm?

If yes, the relay is OK.

If no, INSTALL a new relay.

CONTINUED

REMOVAL AND INSTALLATION

Headlamp Assembly (32 115 0)

Removal

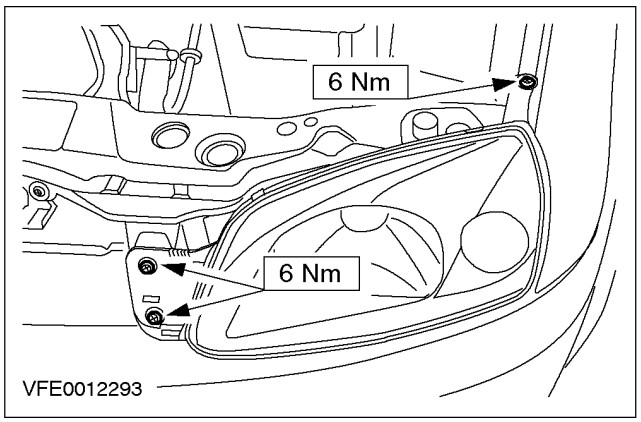

1. Remove the front bumper. For additional information, refer to Section 501-19.
2. Remove the headlamp assembly (left-hand side shown).
   - Disconnect the headlamp assembly electrical connector.

Installation

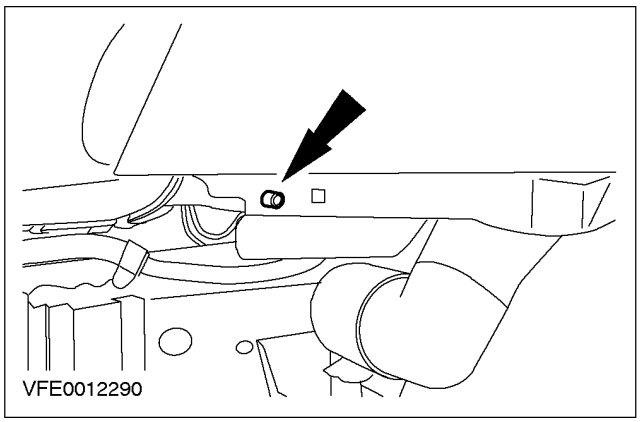

1. **NOTE:** Position the headlamp assembly with the guide pin.
   To install, reverse the removal procedure.
2. Adjust the headlamps. For additional information, refer to Headlamp Adjustment in this section.

CONTINUED

REMOVAL AND INSTALLATION
Rear Lamp Assembly (32 305 0)

Removal

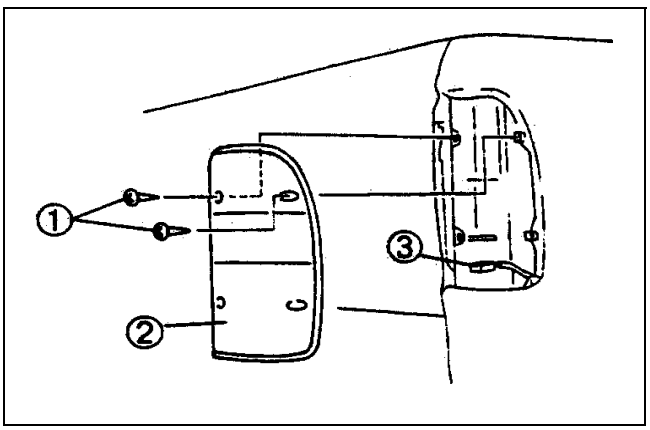

1. Remove the rear lamp assembly retaining screws and the electrical connector (Right hand side shown).
    1. Screw.
    2. Rear lamp.
    3. Rear lamp electrical connector.

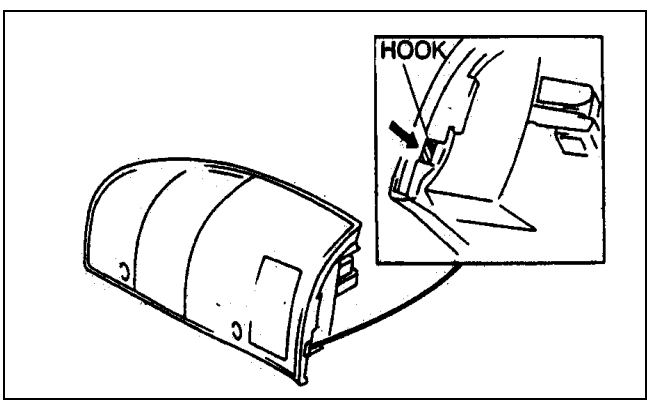

2. Unclip the lens cover.
    - Push the hook up using your fingers.

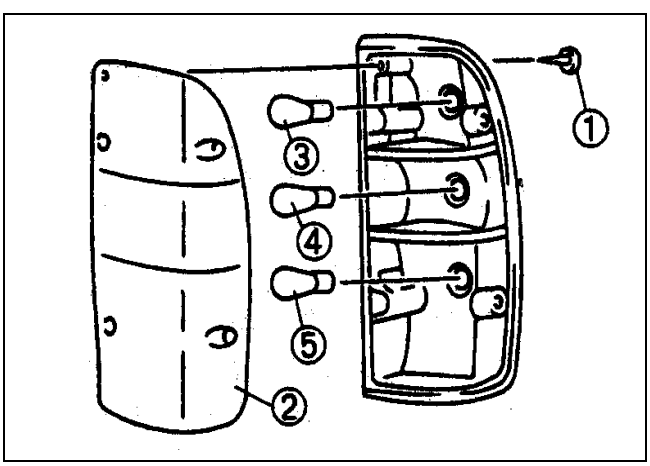

4. Remove the bulbs (bayonet fit).

1 Screw
2 Lens
3 Rear turn light bulb
4 Reverse light bulb
5 Brake / taillight bulb.

Installation

NOTE: Ensure the seal is seated correctly to prevent water ingress.

1. To install, reverse the removal procedure.

CONTINUED

GENERAL PROCEDURES
Headlamp Adjustment

General Equipment
Headlamp beam setting equipment

Adjustment

1. Before starting the headlamp adjustment:
   - Place the vehicle on a level surface.
   - Check the correct headlamp operation, and renew damaged components as necessary.
   - Check the tyre inflation.
   - Check that no other load is in the vehicle other than a half tank of gas.
   - Set the measuring screen of the beam setting equipment to the following headlamp adjustment value (X): X=10 cm/10 m=0 degrees 34 minutes=1.0%.

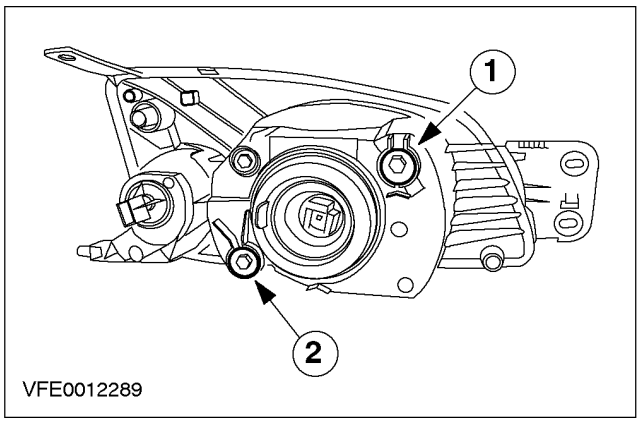

2. Adjust the low beam.
   - Switch on the low beam.
   1. Vertical alignment screw.
   2. Horizontal alignment screw.

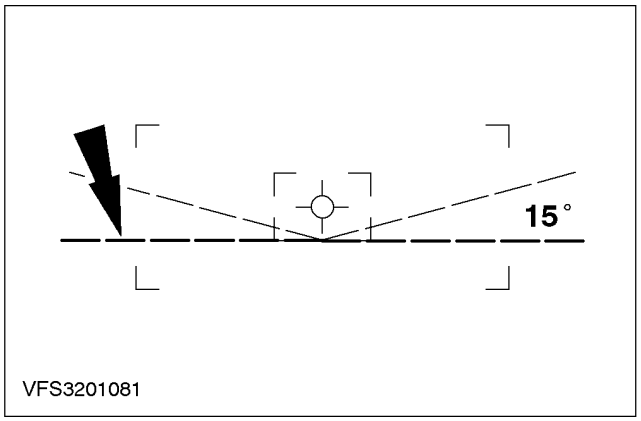

3. Vertical adjustment.
   - Adjust the low beam so that the light/dark boundary touches the horizontal line.

CONTINUED

GENERAL PROCEDURES (CONTINUED)

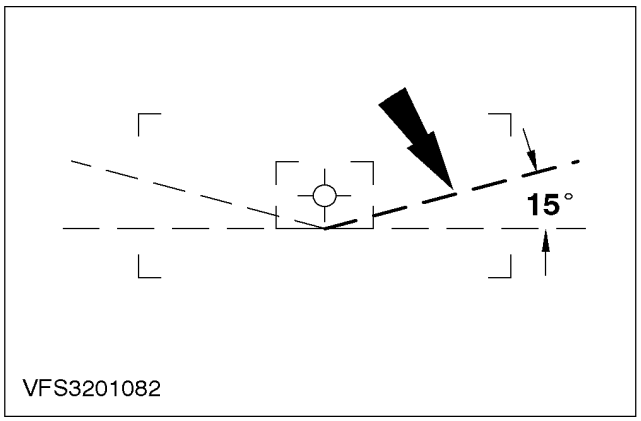

4. NOTE: Some scattered light from the low beam may lie above the 15 degrees line.

NOTE: After horizontal adjustment readjustment of the vertical axis might be necessary.

Horizontal adjustment (LHD variant shown).

- Adjust the low beam so that the rising line of the light/dark boundary lies at the intersection of horizontal and the 15 degrees line.

CONTINUED

SPECIFICATIONS

Exterior Lighting

Component	Type
Headlamp	Reflector system, alignment achieved by adjusting the reflector

Headlamp Adjustment

	X value
Headlamp	X = 10 cm/10 m = 0 degrees 34 minutes = 1.0%

General Specifications

Lamp	Type	Wattage
Halogen headlamp (high/low beam)	Bayonet	55/60
Side lamps	Push fit	5
Front turn signal lamps	Bayonet	21
Side turn signal lamps	Push fit	5
Rear turn signal lamps	Bayonet	21
Stop lamps/ rear lamps	Bayonet	21/5
Reversing lamps	Bayonet	21
License plate lamp	Bayonet	5

Torque Specifications

Description	Nm
Headlamp assembly retaining bolts	6

CONTINUED

SECTION 418-00 Module Communications Network

VEHICLE APPLICATION: 2002 Bantam

SUBJECT **PAGE**

DESCRIPTION AND OPERATION

Communications Network 418-00-2

DIAGNOSIS AND TESTING

Communications Network 418-00-2
Inspection and Verification 418-00-2
Pinpoint Tests 418-00-3/7

DESCRIPTION AND OPERATION

Communications Network

Refer to Wiring Diagrams Petrol and Diesel Cell: 41800, for schematic and connector information.

Special Tool(s)	
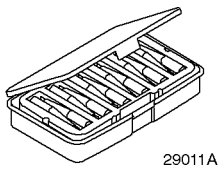 29011A	Terminal probe kit 29-011A

Inspection and Verification

1. Verify the customer concern.
2. Visually inspect for obvious signs of mechanical or electrical damage.
3. If an obvious cause for an observed or reported concern is found, correct the cause (if possible) before proceeding to the next step.
4. If the cause is not visually evident, verify the symptom and refer to the symptom Chart.

Visual Inspection Chart

Electrical
• Powertrain control module (PCM). • Instrument cluster. • Anti-theft warning system/ central locking module. • Air bag module. • Connector(s) loose or oxidised.

Symptom Chart

Condition	Possible Sources	Action
•Powertrain control module (PCM) does not respond to the WDS.	•Circuit(s). •PCM.	•Go To Pinpoint Test A
•Instrument cluster does not respond to the WDS.	•Circuit(s). •Instrument cluster.	•Go To Pinpoint Test B
•Air bag module does not respond to the WDS.	•Circuit(s). •Air bag module.	•Go To Pinpoint Test C
•Anti-theft/central locking module does not respond to the WDS.	•Circuit(s). •Anti-theft/central locking module.	•Go To Pinpoint Test D
•Not one of the installed modules responds to the WDS.	•Circuit(s).	•Go To Pinpoint Test E
•The diagnostic tester does not power up.	•Circuit(s).	•CHECK with the WDS.

CONTINUED

DIAGNOSIS AND TESTING (CONTINUED)

Pinpoint Tests

PINPOINT TEST A: POWERTRAIN CONTROL MODULE (PCM) DOES NOT RESPOND TO THE WDS

CONDITIONS	DETAILS/RESULTS/ACTIONS
A1: CHECK THE ISO 9141 LINE TO THE PCM FOR OPEN	
1 2 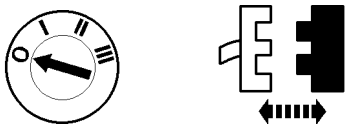 PCM C43	
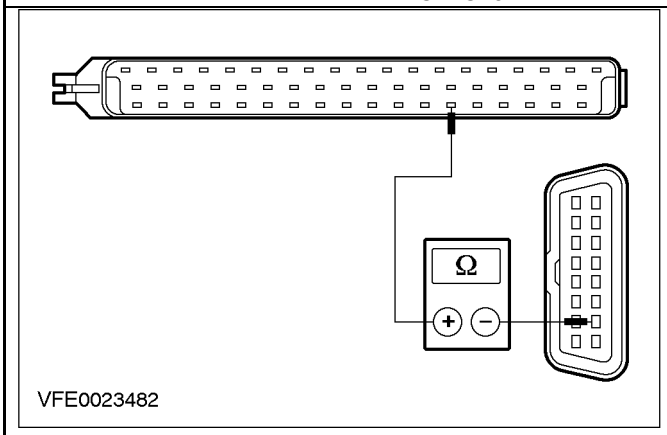	3 Measure the resistance between PCM, connector C43, pin 55, circuit 4-PB10 (GY/VT), harness side and data link connector C31, pin 7, circuit 4-DA1 (GY), harness side. • Is the resistance less than 2 ohms? ☐ **Yes** CHECK the PCM. If necessary INSTALL a new one. TEST the system for normal operation. ☐ **No** REPAIR the open circuit(s) between PCM and data link connector by using the wiring diagrams. TEST the system for normal operation.

PINPOINT TEST B: INSTRUMENT CLUSTER DOES NOT RESPOND TO THE WDS

CONDITIONS	DETAILS/RESULTS/ACTIONS
B1: CHECK THE ISO 9141 LINE TO THE INSTRUMENT CLUSTER FOR OPEN	
1 2 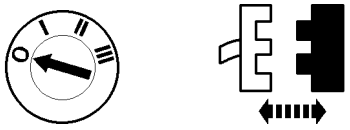 Instrument cluster C37	

CONTINUED

DIAGNOSIS AND TESTING (CONTINUED)

CONDITIONS	DETAILS/RESULTS/ACTIONS
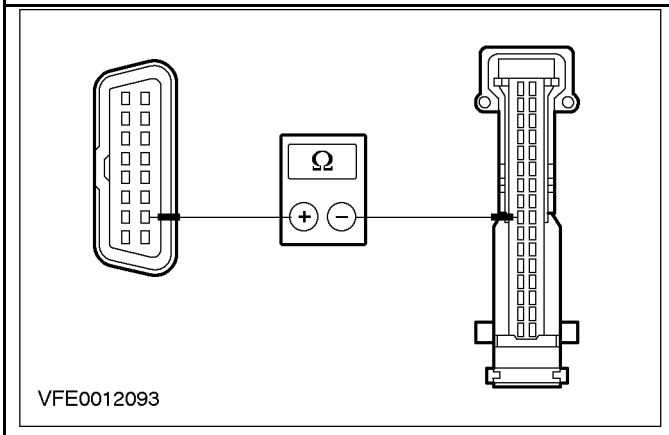	**3** Measure the resistance between instrument cluster, connector C37, pin 9, circuit 4-EE8 (GY/VT), harness side and data link connector C31, pin 7, circuit 4-DA1 (GY), harness side. • Is the resistance less than 2 ohms? ☐ **Yes** CHECK the instrument cluster. If necessary INSTALL a new one. TEST the system for normal operation. ☐ **No** REPAIR the open circuit(s) between instrument cluster and data link connector by using the wiring diagrams. TEST the system for normal operation.

PINPOINT TEST C: AIR BAG MODULE DOES NOT RESPOND TO THE WDS

CONDITIONS	DETAILS/RESULTS/ACTIONS
C1: CHECK THE ISO 9141 LINE TO THE AIR BAG MODULE FOR OPEN	
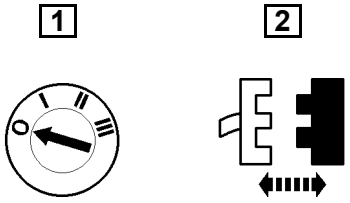 Air bag module C330 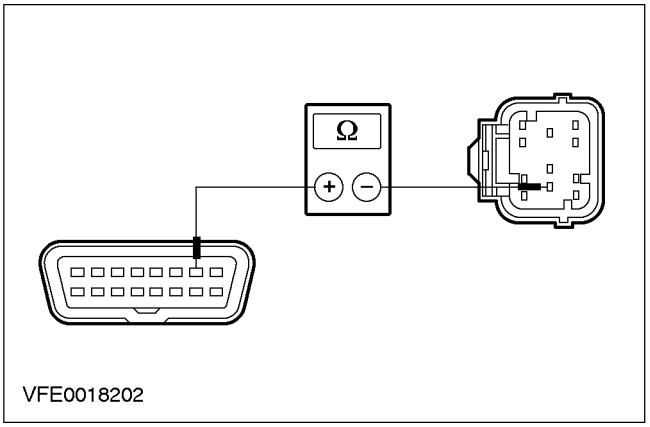	**3** Measure the resistance between air bag module, connector C334, pin 7, circuit 4-JA7 (GY/RD), harness side and data link connector C31, pin 7, circuit 4-DA1 (GY), harness side. • Is the resistance less than 2 ohms? ☐ **Yes** CHECK the air bag module. If necessary INSTALL a new one. TEST the system for normal operation. ☐ **No** REPAIR the open circuit(s) between instrument cluster and data link connector by using the wiring diagrams. TEST the system for normal operation.

CONTINUED

DIAGNOSIS AND TESTING (CONTINUED)

PINPOINT TEST D: ANTI-THEFT/CENTRAL LOCKING MODULE DOES NOT RESPOND TO THE WDS

CONDITIONS	DETAILS/RESULTS/ACTIONS
D1: CHECK THE ISO 9141 LINE TO THE ANTI-THEFT/CENTRAL LOCKING MODULE FOR OPEN	
1 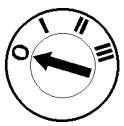 2 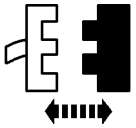 Anti-theft/central locking module C330 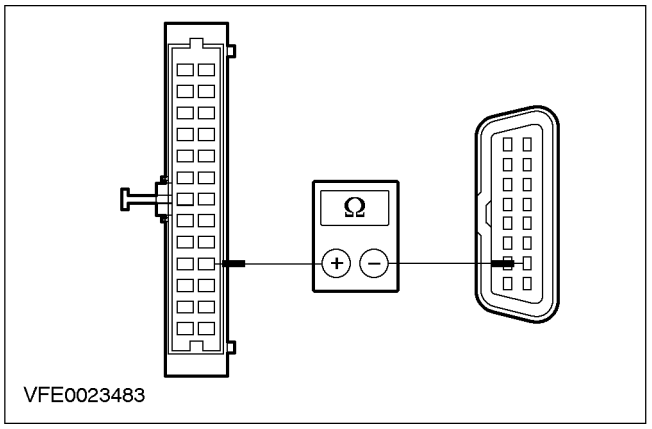 VFE0023483	3 Measure the resistance between anti-theft/central locking module, connector C330, pin 17, circuit 4-MB13 (GY), harness side and data link connector C31, pin 7, circuit 4-DA1 (GY), harness side. • Is the resistance less than 2 ohms? ☐ **Yes** CHECK the anti-theft/central locking module. If necessary INSTALL a new one. TEST the system for normal operation. ☐ **No** REPAIR the open circuit(s) between anti-theft/central locking module and data link connector by using the wiring diagrams. TEST the system for normal operation.

PINPOINT TEST E: NO ONE OF THE INSTALLED MODULES RESPONDS TO THE WDS

CONDITIONS	DETAILS/RESULTS/ACTIONS
E1: CHECK THE FUSE F2	
1 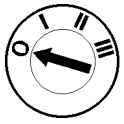 2 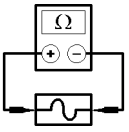 Fuse F2 (CJB)	• Is the fuse OK? ☐ **Yes** GO TO **E2** ☐ **No** INSTALL a new fuse F2 (10 A). If the fuse blows again, LOCATE and REPAIR the short to ground of the circuit(s) by using the wiring diagrams. TEST the system for normal operation.
E2: CHECK THE POWER SUPPLY OF FUSE F2	
1 2 Fuse F2 (CJB)	

CONTINUED

DIAGNOSIS AND TESTING (CONTINUED)

CONDITIONS	DETAILS/RESULTS/ACTIONS
	3 Measure the voltage between fuse F2 and ground. • Is battery voltage indicated? ☐ **Yes** GO TO **E3** ☐ **No** REPAIR the power supply of the fuse F2 by using the wiring diagrams by using the wiring diagrams. TEST the system for normal operation.
E3: CHECK THE POWER SUPPLY OF THE DATA LINK CONNECTOR	
1 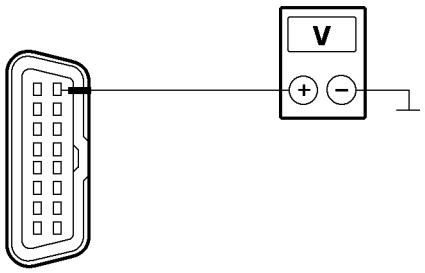 VFE0023484	**2** Measure the voltage between data link connector C31, pin 16, circuit 29-PB9 (OG), harness side and ground. • Is battery voltage indicated? ☐ **Yes** GO TO **E4** ☐ **No** REPAIR the open circuit(s) between fuse F2 and data link connector by using the wiring diagrams. TEST the system for normal operation.
E4: CHECK THE GROUND CONNECTION OF THE DATA LINK CONNECTOR	
1 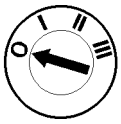 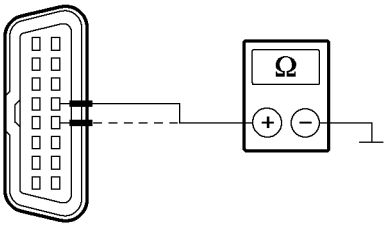 VFE0023485	**2** Measure the resistance between data link connector C31, pin 5, circuit 91-PC3 (BK/BU) and pin 4, circuit 31-PB9 (BK), harness side against ground. • Is the resistance in both measurements less than 2 ohms? ☐ **Yes** GO TO **E5** ☐ **No** REPAIR the open circuit(s) between data link connector and ground G1 or G8, by using the wiring diagrams. TEST the system for normal operation.

CONTINUED

DIAGNOSIS AND TESTING (CONTINUED)

CONDITIONS	DETAILS/RESULTS/ACTIONS
E5: CHECK THE ISO 9141 LINE TO THE ANTI-THEFT/CENTRAL LOCKING MODULE FOR OPEN	
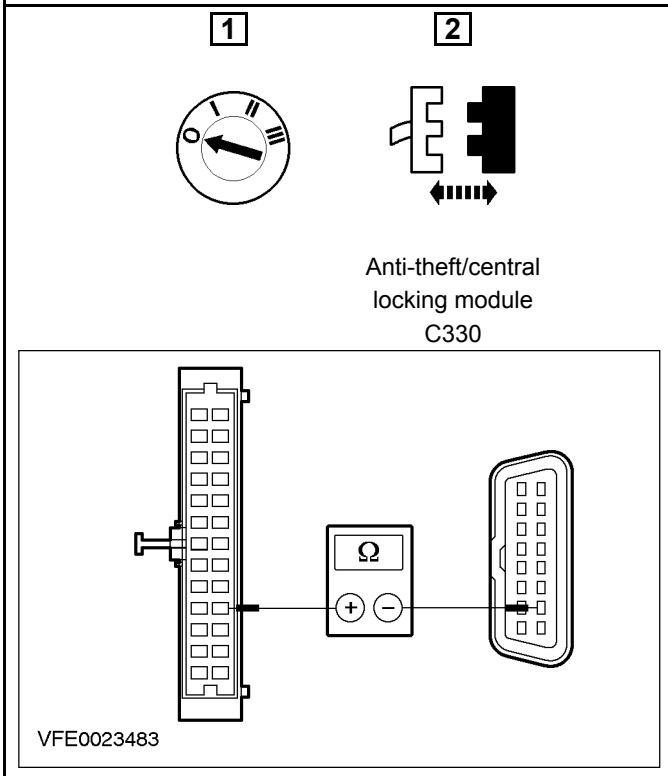	**3** Measure the resistance between anti-theft/central locking module, connector C330, pin 17, circuit 4-MB13 (GY), harness side and data link connector C31, pin 7, circuit 4-DA1 (GY), harness side. • Is the resistance less than 2 ohms? ☐ **Yes** CHECK with the WDS. ☐ **No** REPAIR the open circuit(s) between splice S74 and data link connector by using the wiring diagrams. TEST the system for normal operation.

CONTINUED

SECTION 419-01B Anti-Theft — Passive

VEHICLE APPLICATION: 2002 Bantam

SUBJECT **PAGE**

DESCRIPTION AND OPERATION

Anti-Theft 419-01B-2
Passive Anti-Theft System (PATS) 419-01B-2
Keys 419-01B-2
Key Programming 419-01B-2

DIAGNOSIS AND TESTING

Anti-Theft 419-01B-3
Principles of Operation 419-01B-3
Inspection and Verification 419-01B-4
Symptom Chart 419-01B-5/6
Pinpoint Tests 419-01B-6/10

REMOVAL AND INSTALLATION

Passive Anti-Theft System (PATS) Module 419-01B-11
Fuel Injection Pump Actuator — Vehicles with Diesel Engine 419-01B-12/15
Passive-Theft System (PATS) Transceiver ..... (33 662 0) 419-01B-16

GENERAL PROCEDURES

Key Programming Using Two Programmed Keys ..... (33 005 0) 419-01B-17/18
Key Programming Switch State Control 419-01B-19
Erasing All Key Codes Using Diagnostic Equipment ..... (33 005 0) 419-01B-20/21
Anti-Theft Security Access ..... (33 004 0) 419-01B-22

DESCRIPTION AND OPERATION

Passive Anti-Theft System (PATS)

The Passive Anti-Theft System (PATS) is fully passive in operation and requires no special procedures by the driver to arm or disarm the system. It is invisible to normal scrutiny and is operated by a miniature transponder within the key body. This communicates with the module through a transceiver mounted around the ignition switch lock barrel.

The PATS functionality for vehicles fitted with a manual transmission is incorporated within the powertrain control module.

PATS may be identified by the ignition key, which has an imprint in the casing (usually red) indicating the presence of the transponder that controls the system.

The transponder code reading is carried out when the key, having been inserted into the ignition lock barrel, is turned from position `0' to position `III' to crank the engine. If the control module receives the correct code signal, the engine will start. Should the code received not be recognised, the engine will not crank as the PATS is still armed and the engine is still immobilised.

Keys

The 2002 Bantam have two keys allocated to every new vehicle. Both keys are required to programme additional keys by the owner / operator. Up to a maximum of eight keys may be programmed to the system

Key Programming

NOTE: Additional keys can only be programmed with the two `known' PATS keys (A and B) or with WDS.

NOTE: This procedure can be repeated after 20 seconds. If programming is unsuccessful, the anti -theft indicator LED will flash when the ignition is switched on with the key that was being programmed.

Insert key A into the ignition switch and turn to position II.

Turn the key to position 0 and remove key A from the ignition switch.

Insert key B into the ignition switch and turn to position II.

Turn the key to position 0 and remove key B from the ignition switch.

Insert the new key into the ignition switch and turn to position II.

Remove the key from the ignition switch. The key is now programmed.

DIAGNOSIS AND TESTING

Anti-Theft

Principles of Operation

The passive anti-theft system (PATS) uses radio frequency identification technology to deter a drive away theft. Passive means that it does not require any activity from the user.

With this PATS system:

- No master key is required.
- VIN data is stored within the powertrain control module (PCM).
- Has fleet customer features.
- Spare key learning and erasing is possible.

CAUTION: There are two different types of encoded PATS keys. One with a red tag on the key, the other with a blue tag. The PATS keys for this vehicle must have a red tag or damage may be caused to the control module when used.

Encoded Ignition Key

The PATS uses a specially encoded ignition key. Each encoded ignition key contains a permanently installed electronic device called a transponder. Each transponder contains a unique electronic identification code from millions of combinations. Each encoded ignition key must be programmed into the vehicles PATS Control Function within the Powertrain Control Module (PCM) before it can be used to start the engine. There are special diagnostic repair procedures outlined in this manual that must be carried out if an encoded ignition key needs to be changed. The PATS keys have a red transponder within the head of the key. Only Ford approved ignition keys should be used as some aftermarket encoded ignition keys not purchased from a Ford approved source may fail to operate especially at high or low temperatures. A minimum of 2 encoded ignition keys must be programmed to a vehicle in order for the engine to start. A maximum of 8 ignition keys can be programmed to a vehicle. The PATS control function within the PCM will enter Anti-Scan Mode if a non-programmed ignition key (with the correct mechanical cut) is used to start the engine.

NOTE: If a non-programmed key has been used, any further key reading is inhibited for 20 seconds. During these 20 seconds, no ignition key will start the engine. To exit anti-scan mode turn the ignition key to the position II and wait 30 seconds, turn the ignition key to the position 0 and remove the key. Then turn the ignition key to the position II with the correct programmed key.

PATS Control Function

The PATS control function is contained in the PCM. This module carries out all of the PATS functions, such as receiving the identification code from the encoded ignition key and controlling engine and starter enable. The PATS control function initiates the key interrogation sequence when the vehicle ignition switch is turned to position II or position III.

Transceiver Module

The transceiver module communicates with the encoded ignition key. This module is located on the ignition key lock cylinder casting and contains an antenna connected to a small electronics module. During each vehicle start sequence, the transceiver module reads the encoded ignition key identification code and sends data to the PATS control function within the PCM. No configuration is required with the installation of a new PATS transceiver.

Anti-Theft Indicator

The PATS system uses a visual anti-theft indicator that is controlled by the PATS control function. This indicator will self-test for three seconds when the ignition switch is turned to position II or position III under normal operation. If there is a PATS problem, this indicator will either flash rapidly or glow steadily when the ignition switch is turned to position II or position III and then it will flash a fault code 10 times. Refer to the Diagnostic Trouble Code (DTC) Index in this section or connect WDS and follow the on-screen instructions. The PATS system also flashes the anti-theft indicator every two seconds at ignition 0 to act as a visual deterrent.

Starter Relay

The starter relay is also used as an additional means of disabling the vehicle engine. The relay is disabled when PATS cannot read an encoded ignition key at ignition position II. However, the system will not store a DTC or flash the anti-theft indicator if a valid ignition key is read but a fault occurs in the starter relay circuit. REFER to Section 303-06. The relay is enabled when PATS control function reads a valid encoded ignition key at ignition II. The PATS will be activated and will disable the vehicle from starting if there is a:

CONTINUED

DIAGNOSIS AND TESTING (CONTINUED)

- Damaged encoded ignition key
- Un-programmed key
- Non-encoded key (key has no transponder or is not the correct transponder key)
- Damaged wiring
- Damaged transceiver
- Damaged PCM
- Shielded ignition key

Inspection and Verification

1. Verify the customer concern by operating the system.
2. Visually inspect for obvious signs of mechanical or electrical damage.

Visual Inspection Chart

Mechanical	Electrical
• Ignition lock cylinder • PATS key • Use of a non-PATS key • More than one PATS key or metal object on key chain (key shielded by metal) • Using a non-encoded ignition key • Using a non-programmed encoded ignition key • Using the incorrect PATS key for the vehicle	• Central Junction Box (CJB) fuse 12 (15A) • Battery Junction Box (BJB) fuse 9 (20A) • PCM • Ignition switch • Loose or corroded connection(s) • PATS transceiver • Starter relay

3. If an obvious cause for an observed or reported concern is found, correct the cause (if possible) before proceeding to the next step.
4. If the concern is not visually evident, verify the symptom and use WDS in conjunction with the following Symptom Chart and Pinpoint Tests.

Diagnostic Trouble Code (DTC) Index

WDS DTC	Indicator Flash Code	Description/Condition	Possible Source	Action
0000	-	No DTC's, vehicle OK		
B1681	11	Transceiver module signal is not connected or wiring damage. Vehicle does not start	Transceiver wiring transceiver connector, transceiver or PCM	GO to Pinpoint Test A.
B2103	12	Transceiver antenna coil fault Vehicle does not start	Transceiver	Install a new transceiver.
B1600	13	Non-PATS key or damaged encoded ignition key, or no key code received. Vehicle does not start	PATS encoded ignition key	REFER to WDS. PATS test. Follow the instructions.
B2431	13	Transponder programming failed. Vehicle does not start	Ignition key	REFER to WDS. PATS test. Follow the instructions.

CONTINUED

DIAGNOSIS AND TESTING (CONTINUED)

WDS DTC	Indicator Flash Code	Description/Condition	Possible Source	Action
B1602	14	Partial key read of PATS key. Vehicle does not start	PATS encoded ignition key. Transceiver	REFER to WDS. PATS test. Follow the instructions.
B1601	15	Incorrect key code, Un-programmed PATS key (keycode format OK) Vehicle does not start (20 second anti-scan invoked)	PATS encoded ignition key	REFER to WDS. PATS test. Follow the instructions.
U1900	16	ISO communication link to the PCM. Vehicle does not start	Circuit or PCM	REFER to WDS. PATS test. Follow the instructions.
B1213	21	Number of programmed PATS encoded keys below minimum. Vehicle does not start	Incorrect number of keys programmed or PATS encoded ignition key	REFER to WDS. PATS test. Follow the instructions.
B2141	22	Non-volatile memory configuration failure. Vehicle does not start	New PCM	REFER to WDS. PATS test. Follow the instructions. Re-initialise the system.

Symptom Chart

Condition	Possible Sources	Action
•The anti-theft indicator is always / never on – no anti-theft indicator self-test	•Fuse. •Circuit. •Anti-theft LED. •PCM.	•Carry out WDS PATS test. Follow the instructions.
•The anti-theft system does not operate correctly – engine does not crank but the anti-theft LED self-test normally.	•Starter relay. •PCM. •Circuit.	•GO to Pinpoint Test B.
•Engine does not start	•Not a PATS concern (no fuel) •PATS concern	•If a PATS concern, check for LED flashing fault code or carry out WDS PATS test. Follow the instructions.

CONTINUED

DIAGNOSIS AND TESTING (CONTINUED)

Pinpoint Tests

PINPOINT TEST A: PATS TRANSCEIVER SIGNAL IS NOT RECEIVED

CONDITIONS	DETAILS/RESULTS/ACTIONS
A1: CHECK THE TRANSCEIVER POWER CIRCUIT FOR VOLTAGE – CIRCUIT 7-MB37 (YE/GN)	
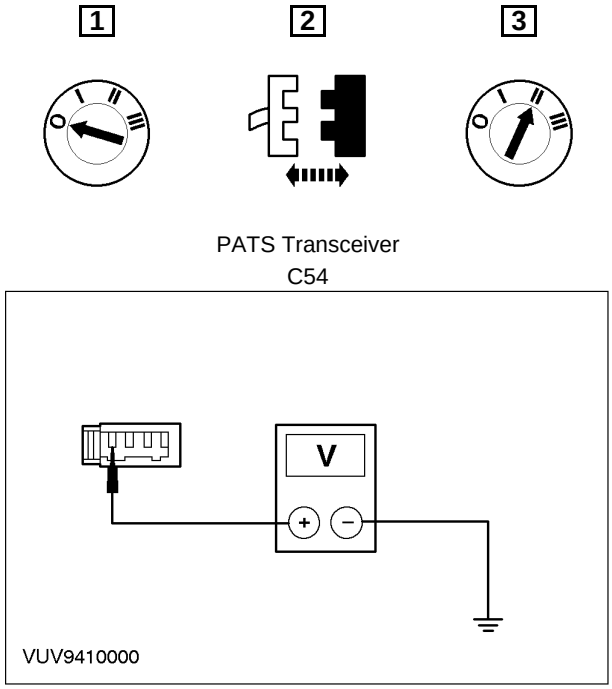	**4** Using a digital multimeter, measure the voltage between PATS transceiver C54 pin 1, circuit 7-MB37 (YE/GN), harness side and ground. • Is the voltage greater than 10 volts? **Yes** GO TO **A2** **No** REPAIR circuit 7-MB37 (YE/GN). REPEAT the self-test. CLEAR the DTCs.
A2: CHECK THE TRANSCEIVER GROUND FOR OPEN – CIRCUIT 91-MB37 (BK/GN)	
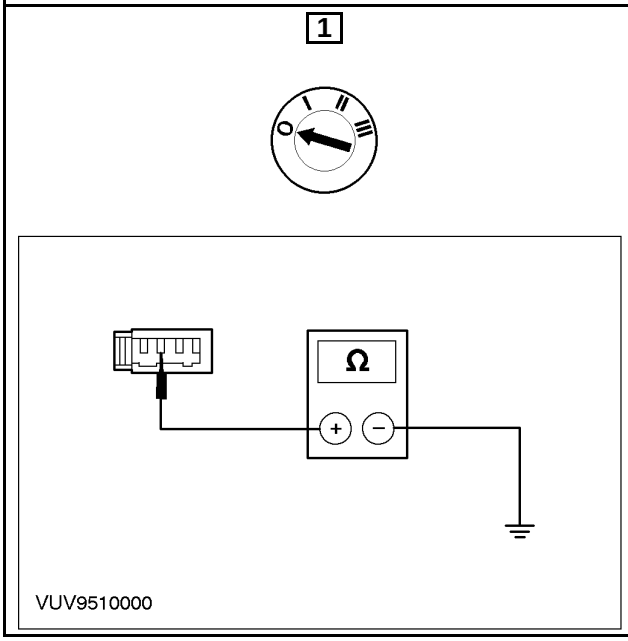	**2** Using a digital multimeter, measure the resistance between PATS transceiver C54 pin 2, circuit 91-MB37 (BK/GN), harness side and ground. • Is the resistance less than 5 ohms? **Yes** GO TO **A3** **No** REPAIR circuit 91-MB37 (BK/GN). REPEAT the self-test. CLEAR the DTCs.

CONTINUED

DIAGNOSIS AND TESTING (CONTINUED)

CONDITIONS	DETAILS/RESULTS/ACTIONS
A3: CHECK THE TRANSCEIVER TRANSMIT CIRCUIT FOR VOLTAGE – CIRCUIT 10-MB37 (GY/OG)	
1 2 PATS Transceiver C54 GK5096A	3 Using a digital multimeter, measure the voltage by carefully back probing between PATS transceiver C54 pin 3, circuit 10-MB37 (GY/OG), harness side and ground. • Is the voltage greater than 8 volts? **Yes** GO TO **A6** **No** GO TO **A4**
A4: CHECK THE TRANSCEIVER TRANSMIT CIRCUIT FOR SHORT TO GROUND – CIRCUIT 10-MB37 (GY/OG)	
NOTE: When a new PCM is installed, the encoded ignition keys must be reprogrammed.	
1 2 3 PCM C165 PATS Transceiver C54 VUV9710000	4 Using a digital multimeter, measure the resistance between PATS transceiver C54 pin 3, circuit 10-MB37 (GY/OG), harness side and ground. • Is the resistance greater than 10,000 ohms? **Yes** GO TO **A5** **No** REPAIR circuit 10-MB37 (GY/OG). CLEAR the DTCs. REPEAT the self-test. If the system fails again, INSTALL a new PCM. REFER to Section 303-14 / 303-14B / 303-14C / 303-14D.

CONTINUED

DIAGNOSIS AND TESTING (CONTINUED)

CONDITIONS	DETAILS/RESULTS/ACTIONS
A5: CHECK THE TRANSCEIVER TRANSMIT CIRCUIT FOR OPEN-CIRCUIT	
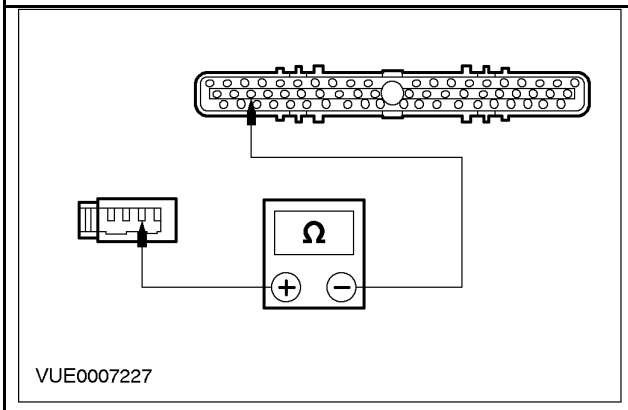	1 Using a digital multimeter, measure the resistance between the PATS transceiver C54 pin 3, circuit 10-MB37 (GY/OG), harness side and PCM C165 pin 38, circuit 10-MB37 (GY/OG), harness side. • Is the resistance less than 5 ohms? **Yes** INSTALL a new PCM. REFER to Section 303-14 / 303-14B / 303-14C / 303-14D. REPROGRAM the encoded ignition keys. REFER to Key Programming in this section . REPEAT the self-test. CLEAR the DTC's. **No** REPAIR circuit 10-MB37 (GY/OG). CLEAR the DTCs. REPEAT the self-test.
A6: CHECK THE TRANSCEIVER RECEIVE CIRCUIT FOR VOLTAGE – CIRCUIT 8-MB37 (WH/GN)	
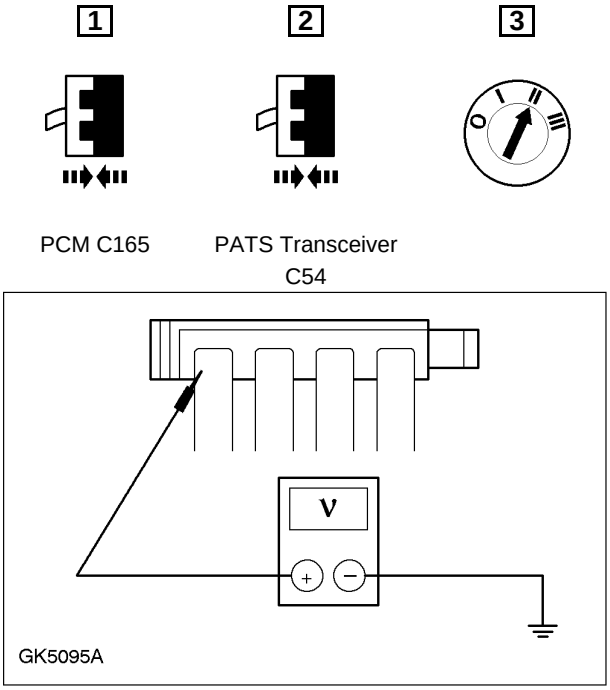	4 Using a digital multimeter, measure the voltage by carefully back probing between PATS transceiver C54 pin 4, circuit 8-MB37 (WH/GN), harness side and ground. • Is the voltage greater than 8 volts? **Yes** INSTALL a new PATS transceiver. REFER to Module - Transceiver in this section. REPEAT the self-test. Clear the DTC's. **No** GO TO **A7**
A7: CHECK THE TRANSCEIVER RECEIVE CIRCUIT FOR SHORT TO GROUND – TRANSCEIVER CONNECTED	
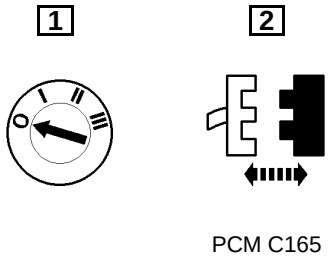	

CONTINUED

DIAGNOSIS AND TESTING (CONTINUED)

CONDITIONS	DETAILS/RESULTS/ACTIONS
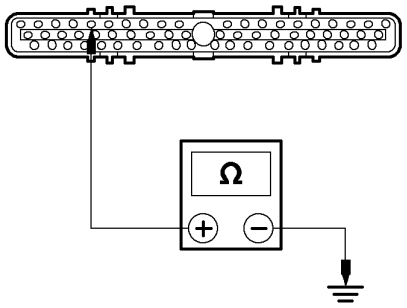 VUE0007228	**3** Using a digital multimeter, measure the resistance between PCM C165 pin 5, circuit 8-MB37 (WH/GN) harness side and ground. • Is the resistance greater than 10,000 ohms? **Yes** GO TO **A8** **No** REPAIR circuit 8-MB37 (WH/GN). REPEAT the self-test. CLEAR the DTCs.
A8: CHECK THE TRANSCEIVER TRANSMIT CIRCUIT FOR SHORT TO GROUND – TRANSCEIVER DISCONNECTED	
1 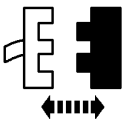 PATS Transceiver C54 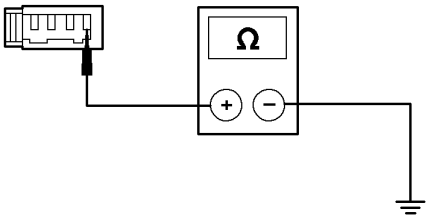 VUV9610000	**2** Using a digital multimeter, measure the resistance between PATS transceiver C54 pin 4, circuit 8-MB37 (WH/GN), harness side and ground. • Is the resistance greater than 10,000 ohms? **Yes** INSTALL a new PATS transceiver. REFER to Module-Transceiver in this section . REPEAT the self-test. CLEAR the DTCs. **No** REPAIR circuit 8-MB37 (WH/GN). REPEAT the self-test. CLEAR the DTCs.

PINPOINT TEST B: THE ANTI—THEFT SYSTEM DOES NOT OPERATE CORRECTLY – ENGINE DOES NOT CRANK BUT ANTI-THEFT LED PROVES OUT NORMALLY

CONDITIONS	DETAILS/RESULTS/ACTIONS
B1: CHECK THE STARTING SYSTEM GROUND	
1 **2** **3** 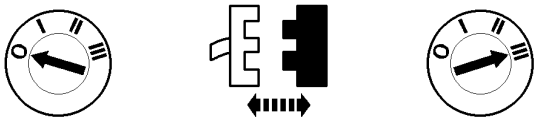 Starter Relay C156	

CONTINUED

DIAGNOSIS AND TESTING (CONTINUED)

CONDITIONS	DETAILS/RESULTS/ACTIONS
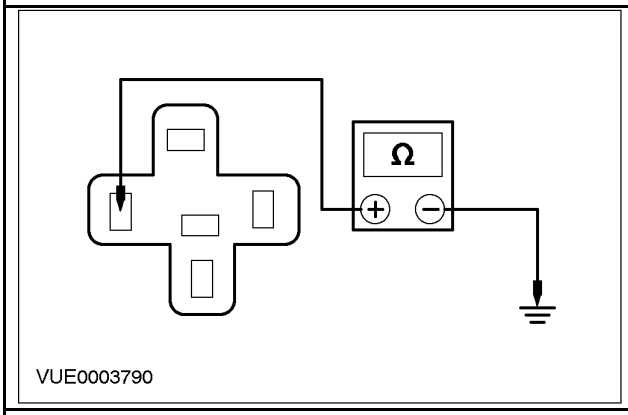	**4** Using a digital multimeter, measure the resistance between starter relay C156 pin 1, circuit 31S-MB36A (BK/BU), harness side and ground while holding the key in position III. • Is the resistance less than 5 ohms? **Yes** DIAGNOSE the starting system. REFER to Section 303-06. **No** GO TO **B2**
B2: CHECK CIRCUIT 31S-MB36A (BK/BU) FOR OPEN	
NOTE: When a new PCM is installed, the encoded ignition keys must be reprogrammed TURN the ignition to position 0 then to position II. RETRIEVE DTCs. If PATS DTCs are present, GO to Powertrain Control Module (PCM) Diagnostic Trouble Code (DTC) Index. If no DTCs are retrieved, the PATS system is OK.	
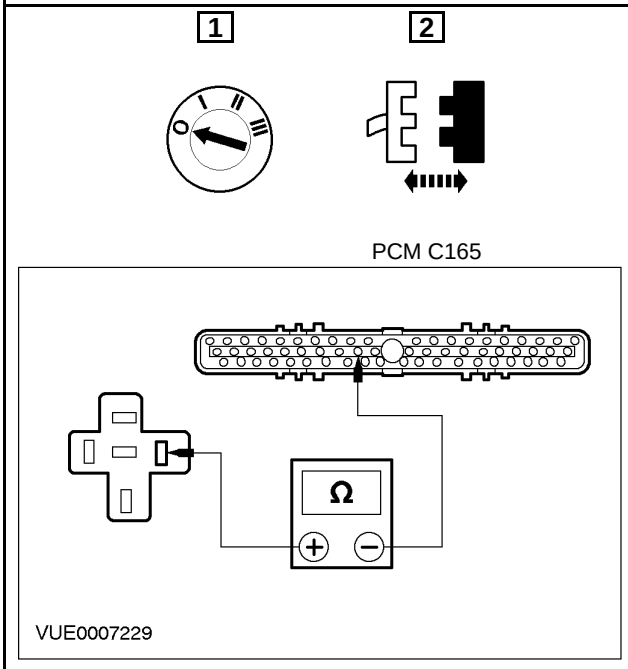	**3** Using a digital multimeter, measure the resistance between PCM C165 pin 32, and starter relay pin 1, circuit 31S-MB36A (BK/BU). • Is the resistance less than 5 ohms? **Yes** INSTALL a new PCM. REFER to Section 303-14 / 303-14B / 303-14C / 303-14D. REPROGRAM the encoded ignition keys. REFER to Key Programming in this section . TEST the system for normal operation. **No** REPAIR circuit 31S-MB36A (BK/BU). TEST the system for normal operation.

REMOVAL AND INSTALLATION

Passive Anti-Theft System (PATS) Module

NOTE: The immobiliser (PATS) functionality for petrol engine variants with manual transmission is incorporated in the powertrain control module.

NOTE: When fitting a new immobiliser (PATS) module the new module must be coded to the immobiliser system. To code the system two valid keys must be available before fitting a new module.

NOTE: If two valid keys are not available it will be necessary to code the system using WDS.

Removal

1. Disconnect the battery ground cable.
2. Remove the left hand side cowl side trim panel, for further information refer to Section 501-05.
3. Detach the Powertrain Control Module (PCM) for further information refer to Section 303-14.

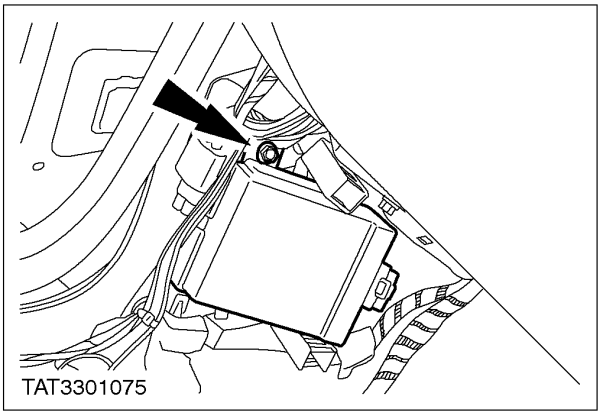

4. Disconnect the multiplug and remove the PCM module.

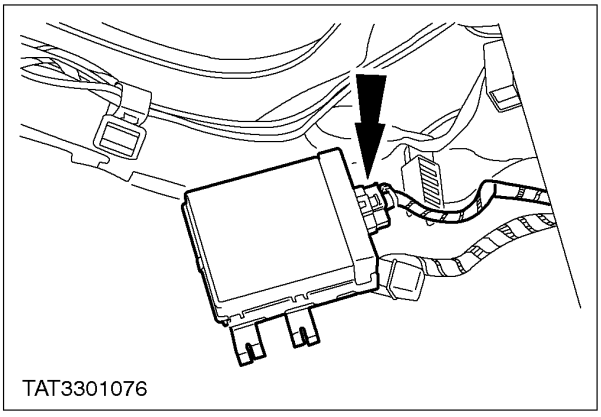

Installation

1. Refit the components in reverse order.

REMOVAL AND INSTALLATION

Fuel Injection Pump Actuator — Vehicles with Diesel Engine

Removal

1. Disconnect the battery ground cable.
2. Remove the wax stat cable adjusting clip.

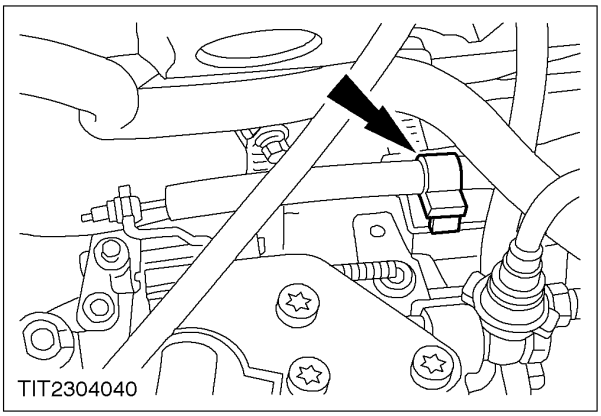

3. Detach the wax stat cable from the fuel injection pump.

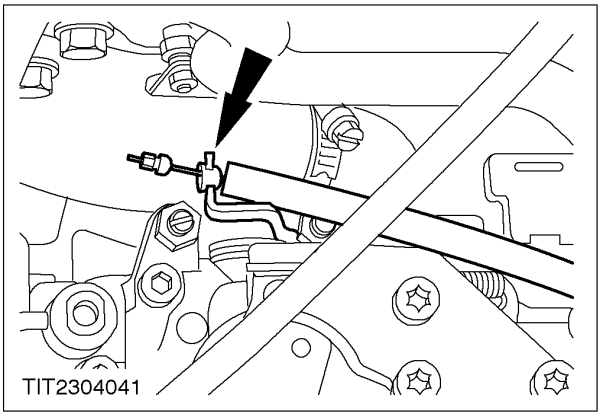

4. Detach the accelerator cable mounting bracket (two bolts).

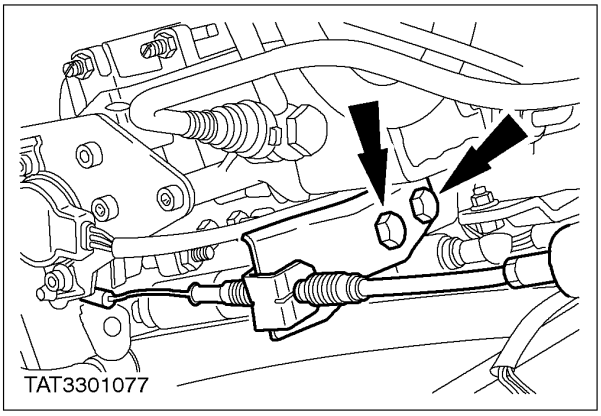

CONTINUED

REMOVAL AND INSTALLATION (CONTINUED)

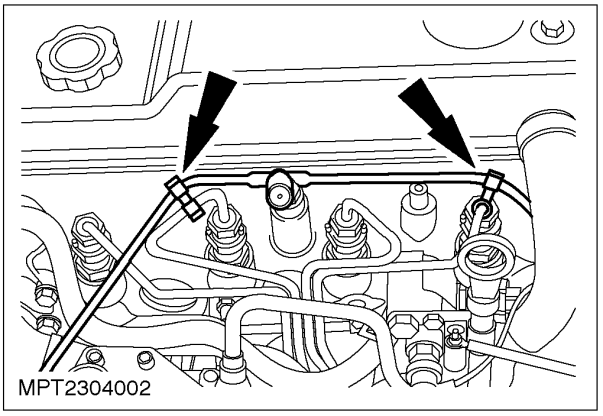

5. Detach the fuel supply pipe from the two retaining clips.

6. Remove the injector delivery pipes

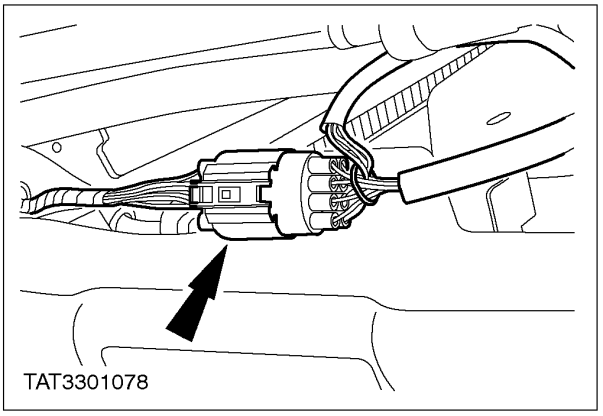

7. ⚠ **CAUTION: When disconnecting the multiplug do not pull on the wiring; pull on the multiplug body.**
Disconnect the fuel injection pump wiring multiplug.

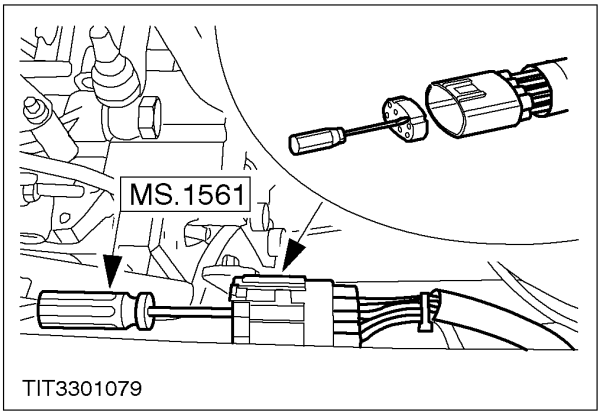

8. **NOTE:** When dismantling multiplugs / connectors refer to Connector Repair Procedure in the appropriate wiring diagram.

Remove the multiplug terminal spacer.

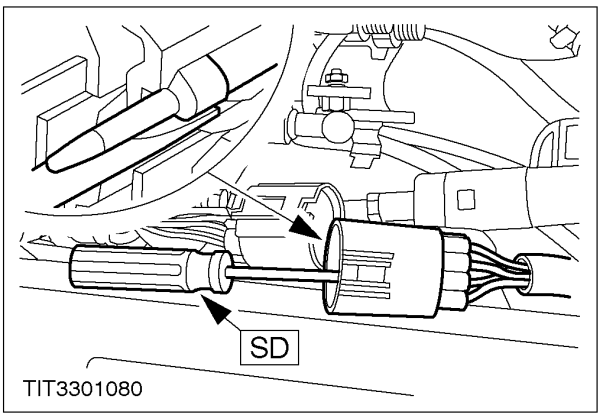

9. **NOTE:** Note the positions of the terminals in the multiplug before removing the terminals.
Remove the immobiliser solenoid terminals from the multiplug.

CONTINUED

REMOVAL AND INSTALLATION (CONTINUED)

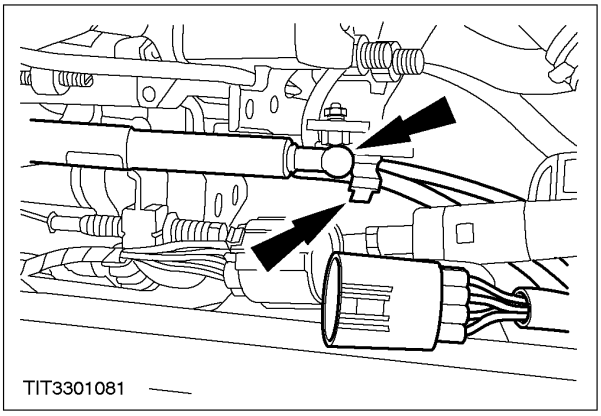

10. Detach the accelerator damper and immobiliser solenoid wiring from the fuel injection pump.

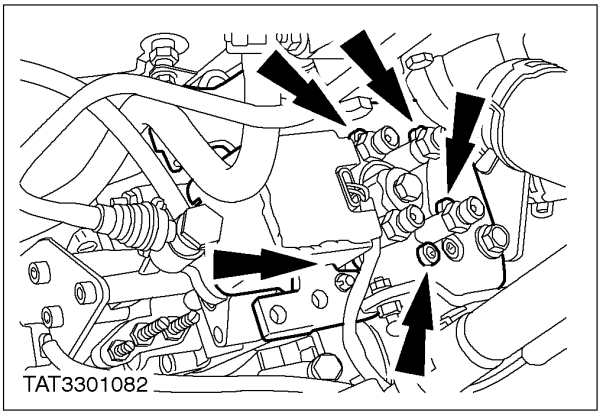

11. Remove the immobiliser solenoid shield (five bolts).

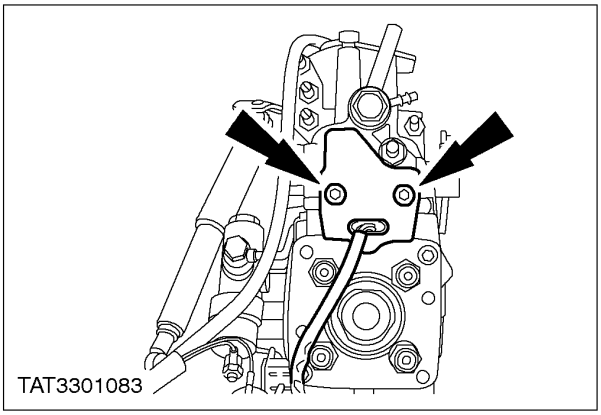

12. Remove the immobiliser solenoid (two bolts) (fuel injection pump shown removed for clarity).

CONTINUED

REMOVAL AND INSTALLATION (CONTINUED)

Installation

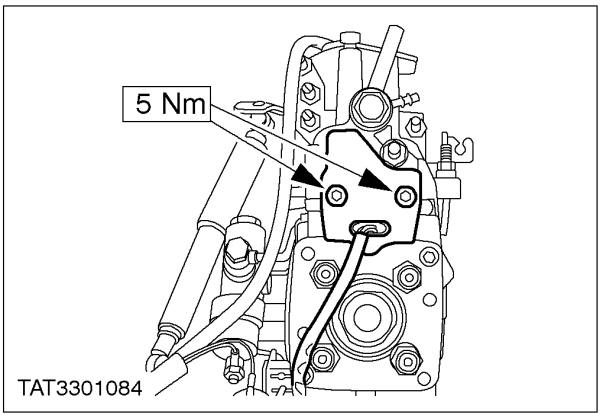

1. Refit the components in reverse order.

CONTINUED

REMOVAL AND INSTALLATION

Passive-Theft System (PATS) Transceiver (33 662 0)

Removal

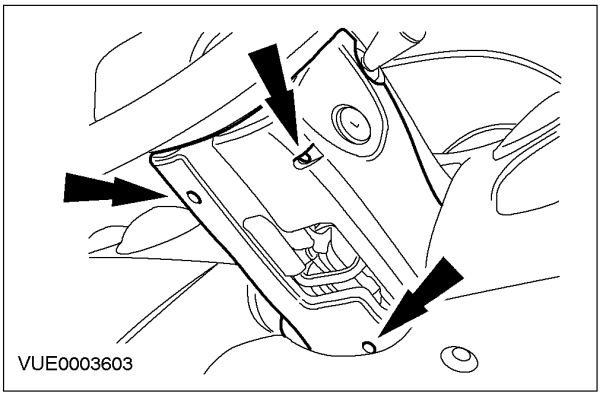

1. Remove the steering column lower shroud.

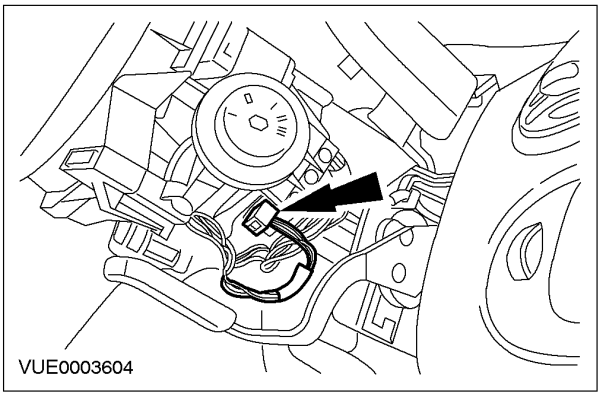

2. Disconnect the passive anti-theft system (PATS) transceiver electrical connector.

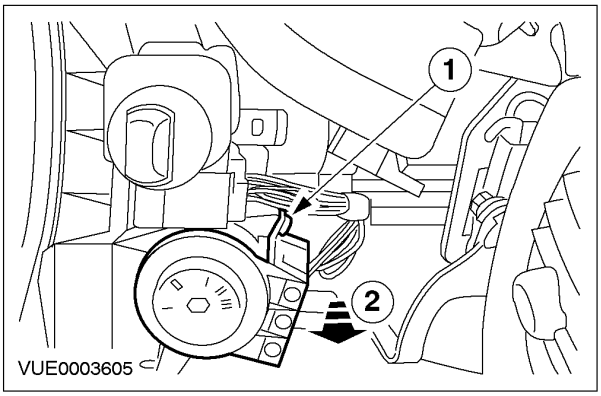

3. Remove the PATS transceiver.
   1. Remove the PATS transceiver retaining screw.
   2. Remove the PATS transceiver.

Installation

1. To install, reverse the removal procedure.

CONTINUED

GENERAL PROCEDURES

Key Programming Using Two Programmed Keys (33 005 0)

NOTE: This procedure only works if two or more programmed ignition keys are available and it is desired to program additional key(s). If two keys are not available, refer to Key Programming-Erase All Keys and Program Two Keys in this section

NOTE: The Spare Key Programming Switch is a WDS programmable switch, which provides the capability to enable / disable the normal customer Spare Key Programming Procedure. If the Spare Key Programming Switch is not enabled, refer to Security Access then select Spare Key Programming Switch; Enabled.

NOTE: If the programming procedure is not successful, the new key(s) will not start the vehicle and the anti-theft indicator will flash. If the programming procedure was not successful leave the ignition switch in the RUN position for at least 30 seconds, repeat the Key Programming procedure from step 1. If the failure repeats, refer to Diagnostic and testing to review DTCs an carry out Pinpoint Tests.

NOTE: A maximum of eight ignition keys can be programmed to a passive anti-theft system (PATS) equipped vehicle.

NOTE: If the steps are not carried out as outlined, the programming procedure will end.

NOTE: Ignition keys must have correct mechanical key cut for the vehicle and must be a PATS encoded key.

1. Insert the first programmed key into the ignition lock cylinder and turn the lock cylinder from the OFF position to the RUN position (maintain ignition lock cylinder in the RUN position for one second).
2. Turn ignition lock cylinder to the OFF position and remove the first key from the ignition lock cylinder.
3. Within five seconds of turning the ignition lock cylinder to the OFF position, insert the second programmed ignition key into the ignition lock cylinder and turn the ignition lock from the OFF position to the RUN position (maintain the ignition lock cylinder in the RUN position for one second).

CONTINUED

GENERAL PROCEDURES (CONTINUED)

4. Turn the ignition lock cylinder to the OFF position and remove the second key from the lock cylinder.
5. Within ten seconds of turning the ignition lock cylinder to the OFF position, insert the un-programmed ignition key (new key) into the lock cylinder and turn the lock cylinder from the OFF position to the RUN position (maintain the ignition lock cylinder in the RUN position for less than 5 seconds).
6. Check the new-programmed key starts the engine. Turn the ignition key to the OFF position for five seconds then try to start vehicle with the new programmed key.
7. To programme additional key(s), repeat the applicable key programming procedure from step 1.

CONTINUED

GENERAL PROCEDURES

Key Programming Switch State Control

NOTE: The Spare Key Programming Switch is a WDS programmable switch which provides the capability to enable / disable the normal customer Spare Key Programming Procedure detailed in the owner's manual (customer scan program a spare ignition key by cycling two programmed ignition keys and then cycling the new key). This programmable switch is provided as a convenience for rental company fleets or other fleet purchasers who may not want the Spare Key Programming procedure available to the vehicle driver.

NOTE: The default setting on delivery of all new vehicles is ENABLE.

1. Insert a programmed ignition key into the ignition lock cylinder and turn the lock cylinder from the OFF position to the RUN position.
2. Using WDS select powertrain control module (PCM) from the menu.
3. Select Security Access. For additional information, refer to Security Access in this section
4. Using WDS select Spare Key Programming Switch from the menu. Follow the on-screen directions.

CONTINUED

GENERAL PROCEDURES

Erasing All Key Codes Using Diagnostic Equipment (33 005 0)

NOTE: This procedure is used when a customer needs keys programmed into the system and does not have two programmed ignition keys available. This procedure is also useful when programmed ignition key(s) have been lost or when the ignition lock cylinder has been replaced or when you are required to erase a key(s) from the passive anti-theft alarm system (PATS) memory.

NOTE: This procedure will erase all programmed ignition keys from the vehicle memory and the vehicle will not start until two keys have been reprogrammed to the vehicle.

NOTE: Two PATS encoded keys with the correct mechanical cut must be available to carry out this procedure. One or both of them may be the original keys.

NOTE: If the remaining keys are with the customer and are not available with the vehicle, then instruct the customer to refer to the Owner's Manual under the Programming Spare PATS Key Procedure, for instructions on programming the remaining keys.

1. Turn the ignition lock cylinder from the OFF position to the RUN position.
2. Using WDS select Powertrain control module (PCM) from the menu. Obtain security access. For additional information, refer to Security Access in this section
3. Using WDS menu select Ignition Key Code Erase.
4. Turn the ignition lock cylinder to the OFF position and disconnect WDS.
5. Insert the first encoded key into the ignition lock cylinder and turn the lock cylinder to the RUN position for three seconds.
6. Remove the first encoded key from the ignition lock cylinder.
7. Insert the second encoded key into the ignition lock cylinder and turn the lock cylinder to the RUN position for three seconds.
8. Remove the second encoded key from the ignition lock cylinder.

CONTINUED

GENERAL PROCEDURES (CONTINUED)

9. The vehicle should now start with both ignition keys.

CONTINUED

GENERAL PROCEDURES

Anti-Theft Security Access (33 004 0)

NOTE: This procedure is utilized to obtain passive anti-theft system (PATS) security access. PATS security access must be granted to erase ignition key codes or enable/disable the spare key programming switch. This procedure invokes an inherent 10 minute time delay prior to granting security access during which WDS must remain connected to the vehicle. Once security access has been granted, a security access command menu is displayed which offers various command options.

NOTE: Once security access has been granted, multiple security access commands should be executed (if necessary) prior to exiting the command menu. This avoids repeating the procedure and thus avoids any additional 10 minute time delay.

1. Use WDS to obtain anti-theft security access.
2. After the 10 minute security access procedure has been completed, a new menu will be displayed with command options. Select the function as required before exiting out of this menu. (do not select more functions than the procedure calls for). Once exited out of this menu, the security access procedure must be carried out again to carry out additional commands.

CONTINUED

Body and Paint Group 5

SECTION TITLE	PAGE
Body	
Interior Trim and Ornamentation	501-05
Rear View Mirrors	501-09
Seating	501-10
Glass, Frames and Mechanisms	501-11
Instrument Panel	501-12
Handles, Locks, latches and Entry Systems	501-14
Wipers and Washers	501-16
Bumpers	501-19
Occupant Restraint - Active	501-20A
Occupant Restraint - Passive - Supplementary Air Bag System	501-20B
Uni-Body, Subframe and Mounting Frame.	
Uni-Body, Subframe and Mounting Frame - General Information	502-00

SECTION 501-05 Interior Trim and Ornamentation

VEHICLE APPLICATION: 2002 Bantam

SUBJECT **PAGE**

DESCRIPTION AND OPERATION

Interior Trim 501-05-2

REMOVAL AND INSTALLATION

Front Door Trim Panel ..... (43 705 0) 501-05-3/5
Headliner ..... (43 612 0) 501-05-6/7
A-Pillar Trim Panel ..... (43 616 0) 501-05-8
B-Pillar Trim Panel ..... (43 617 0) 501-05-9/10
Cab Back Panel Trim Panel ..... (43 618 0) 501-05-11

SPECIFICATIONS

Specifications 501-05-12
Torque Specifications 501-05-12

DESCRIPTION AND OPERATION

Interior Trim

This section covers removal and installation of the interior mouldings and trim panels. In most instances, one component overlaps another component. If this condition is found, it will be necessary to loosen or remove the overlapping component before removal of the desired component.

The headliner is a one-piece design covering the entire interior roof and is made of a moulded composite with a cloth covering.

The vehicle is carpeted throughout.

REMOVAL AND INSTALLATION
Front Door Trim Panel (43 705 0)

Removal

All vehicles

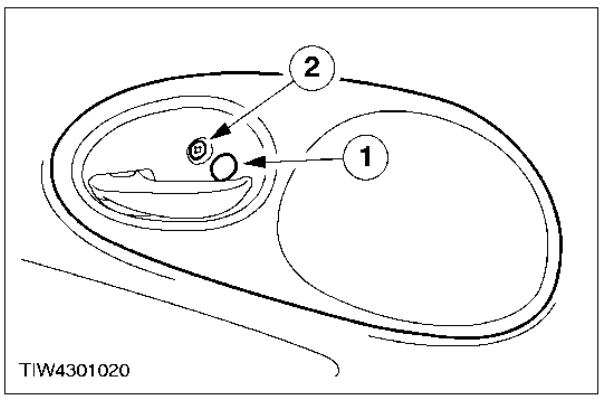

1. Remove the remote control lever bezel.
   1. Remove the screw cover.
   2. Remove the screw.

Vehicles with Power Windows

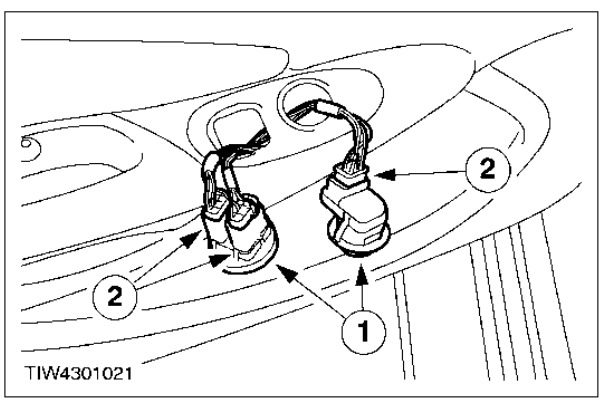

2. Remove the power window switch and the exterior rear view mirror switch (if equipped).
   1. Pry out the switches.
   2. Disconnect the electrical connectors.

Vehicles with Manual Windows

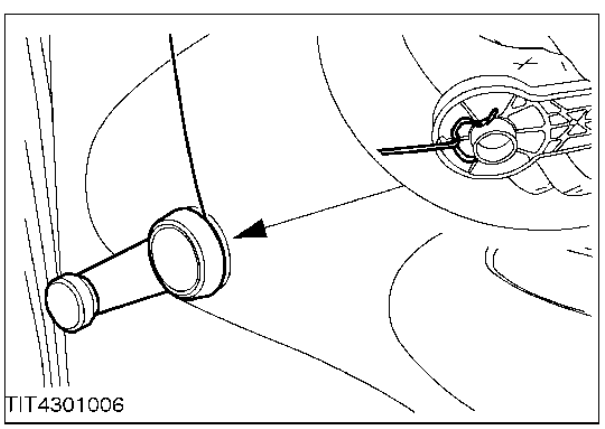

3. Remove the window regulator handle.
   - Use a suitable piece of hooked wire or similar.

REMOVAL AND INSTALLATION (CONTINUED)

Vehicles with Manual Windows

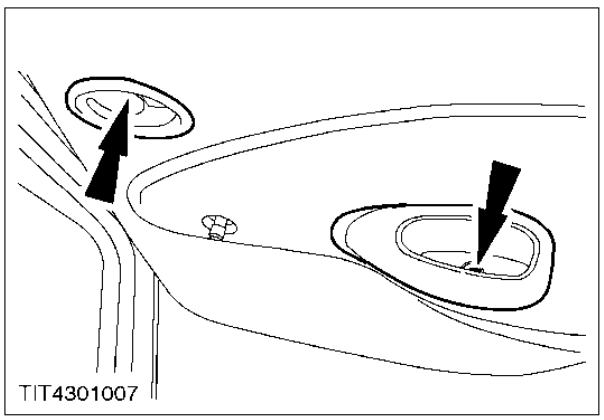

4. Remove two retaining screws.

Vehicles with electric Power Windows.

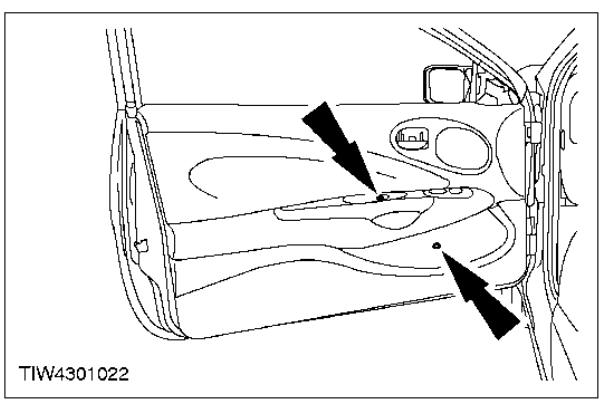

5. Remove the two trim panel retaining screws.

Vehicles with electric Power Windows.

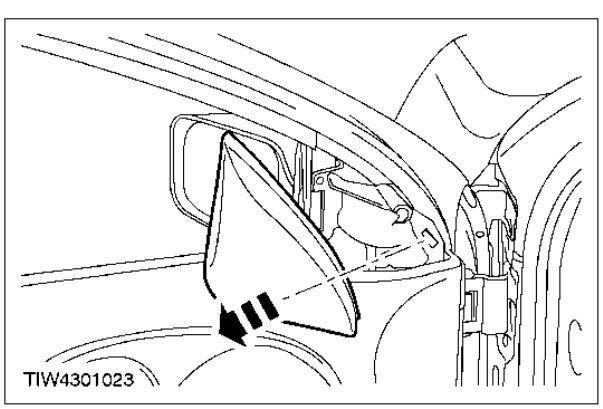

6. Remove the door mirror bezel.

REMOVAL AND INSTALLATION (CONTINUED)

Vehicles with Manual Mirrors

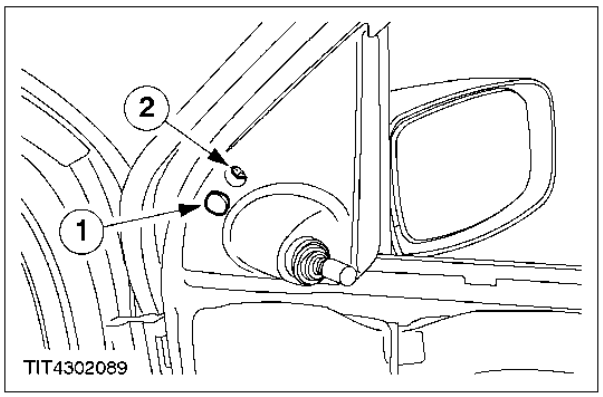

7. Detach the mirror inner trim panel.
   1. Remove the blanking plug.
   2. Remove the screw.

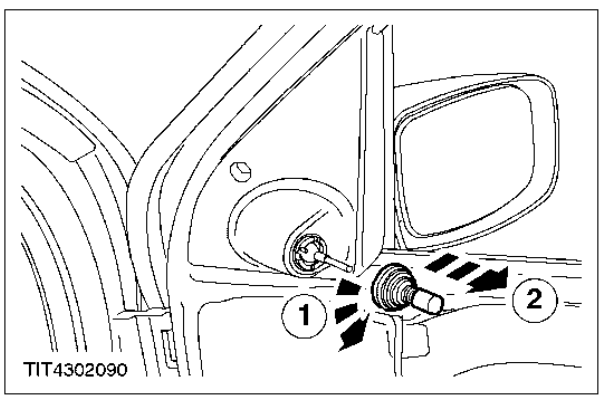

8. Remove the mirror inner trim panel.
   1. Unlock the remote control lever cover.
   2. Remove the remote control lever cover.

All vehicles.

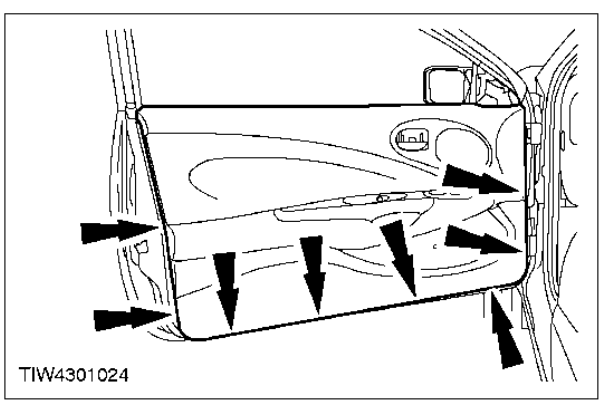

9. Remove the door panel.
   - Pry the eight retaining clips out from the door panel.

Installation

1. To install, reverse the removal procedure.

REMOVAL AND INSTALLATION

Headliner (43 612 0)

Removal

1. Remove the A-pillar trim panels. For additional information, refer to A-Pillar Trim Panel in this section.
2. Remove the rear panel trim panel. For additional information, refer to Rear Trim Panel in this section.
3. Remove the B-pillar trim panels. For additional information, refer to B-Pillar Trim Panel in this section.
4. Remove the sun visors.

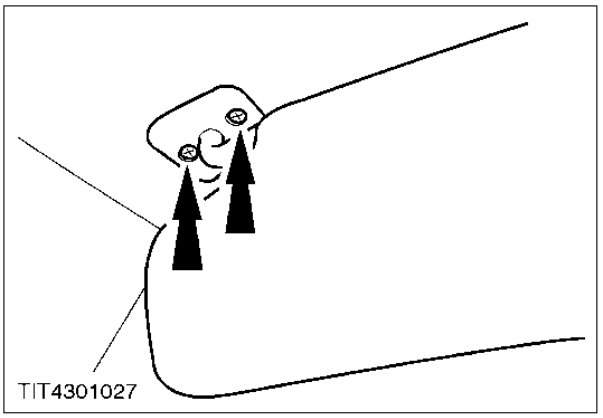

5. Remove the sun visor clips.

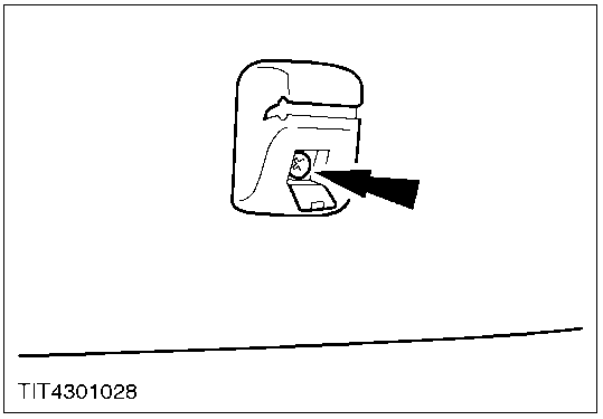

6. Detach the interior lamp.

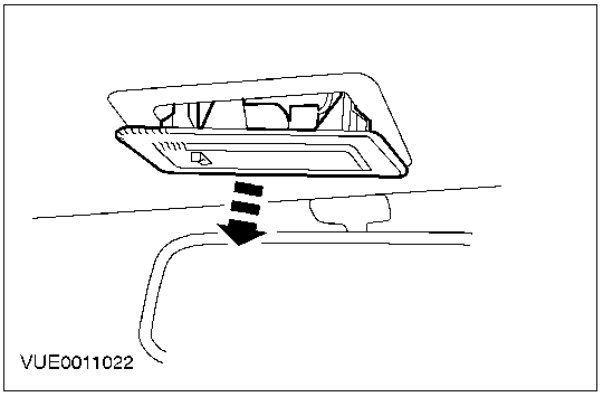

REMOVAL AND INSTALLATION (CONTINUED)

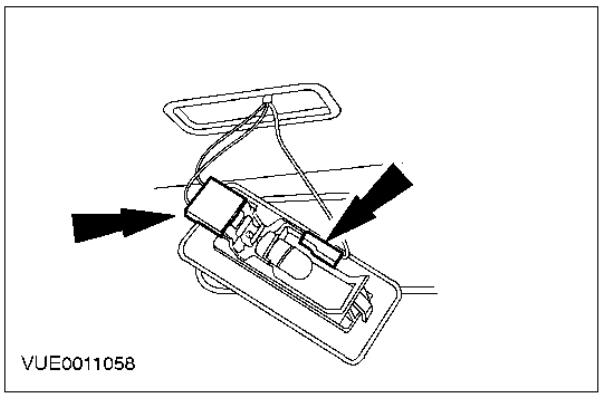

7. Disconnect the electrical connectors and remove the interior lamp.

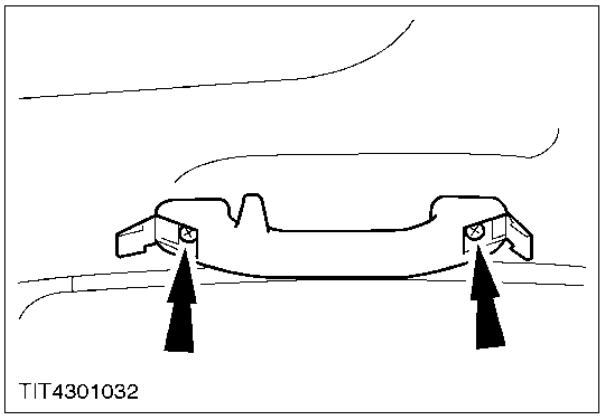

8. Remove the passenger assist handle.

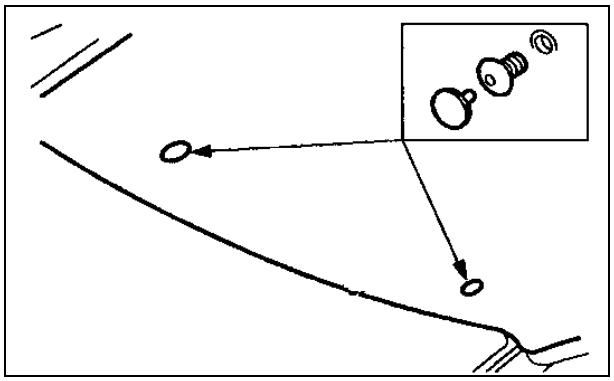

9. ⚠ **CAUTION: When removing fasteners, take extreme care, as they may be easily broken.**

NOTE: Remove the headliner rear fastener centre pins before removing the fasteners.

Remove the headliner rear fasteners.

10. Recline both front seats.
11. Remove the headliner through the door opening.

Installation

1. To install, reverse the removal procedure.

REMOVAL AND INSTALLATION

A-Pillar Trim Panel (43 616 0)

Removal

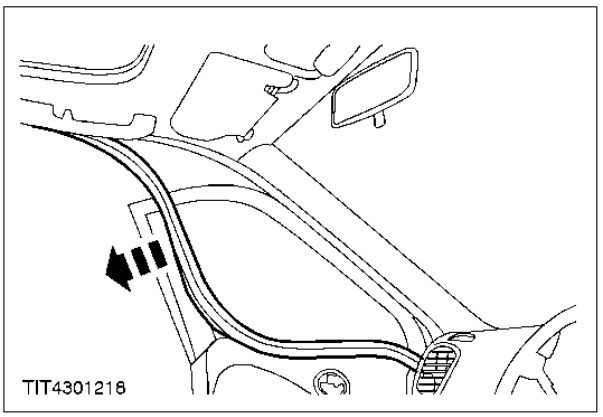

1. Locally detach the door aperture weather-strip.

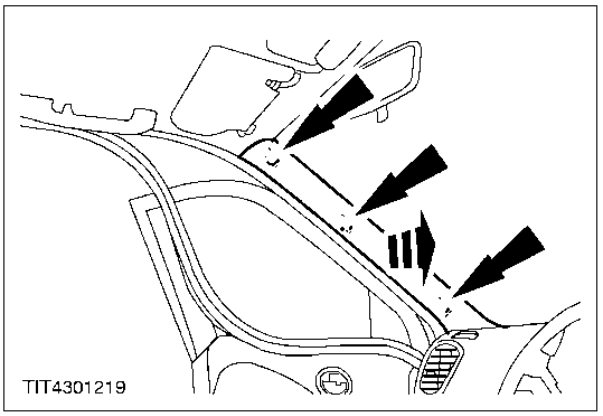

2. Remove the A-pillar trim panel (three clips).

Installation

1. To install, reverse the removal procedure.

REMOVAL AND INSTALLATION

B-Pillar Trim Panel (43 617 0)

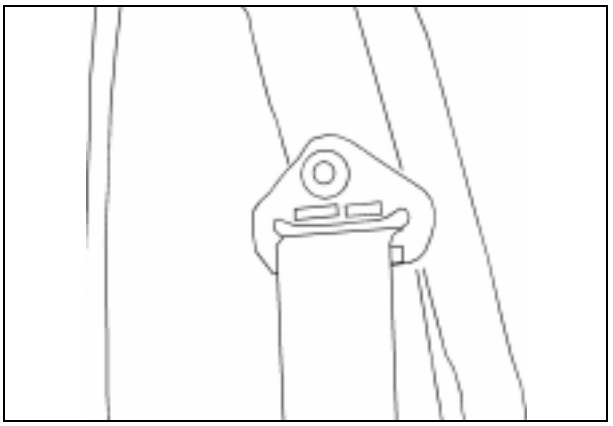

1. Detach the upper front seat belt anchor bolt (one Torx bolt).

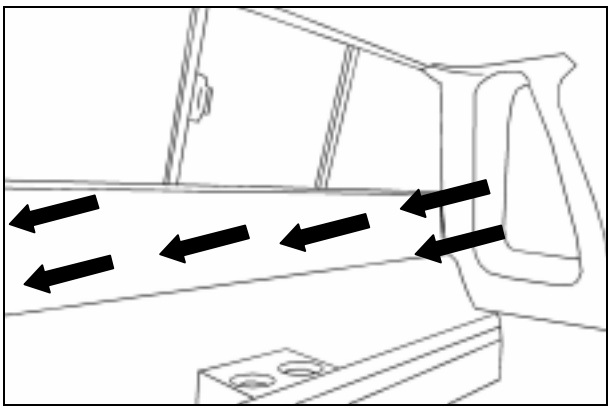

2. ⚠**CAUTION: Extreme care should be used when removing items of trim, as retaining clips are easily broken.**

   Fully recline both seats and remove the cab back panel trim (six clips).

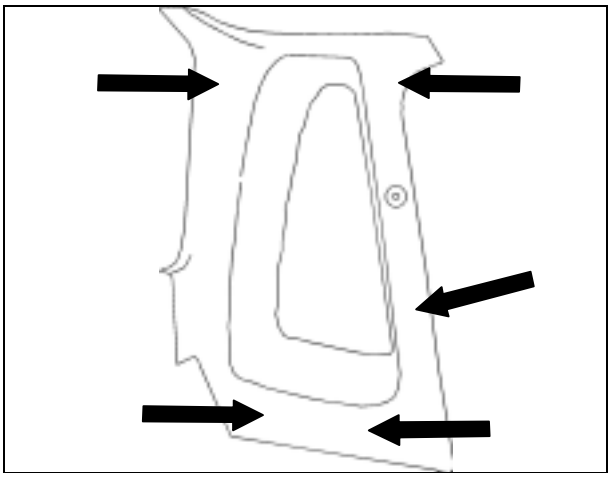

3. ⚠**CAUTION: Extreme care should be used when removing items of trim, as retaining clips are easily broken.**

   Unclip and remove the trim (five clips).

REMOVAL AND INSTALLATION (CONTINUED)

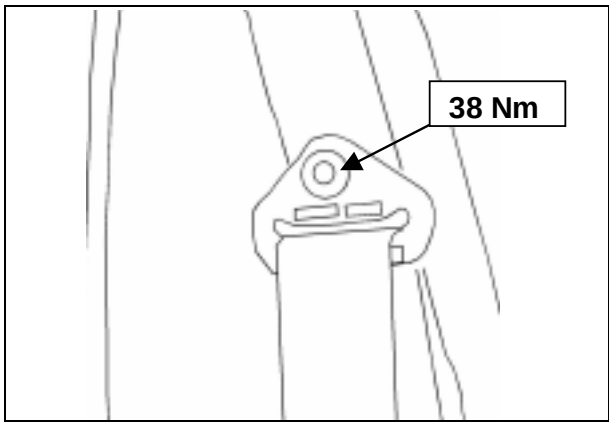

Installation

1. To install, reverse the removal procedure.

REMOVAL AND INSTALLATION

Cab Back Panel Trim (Plastic Panel)

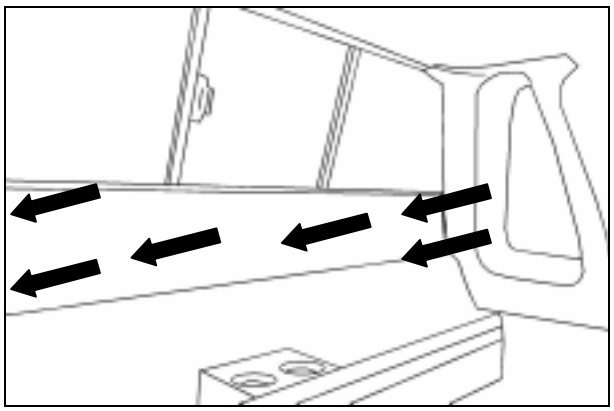

Removal

1. ⚠**CAUTION: Extreme care should be used when removing items of trim, as retaining clips are easily broken.**

   Fully recline both seats and remove the cab back panel trim (six clips).

Installation

1. To install, reverse the removal procedure.

SPECIFICATIONS

Torque Specifications

Description	Nm
Safety belt anchor bolts	38

SECTION 501-09 Rear View Mirrors

VEHICLE APPLICATION: 2002 Bantam

SUBJECT **PAGE**

DIAGNOSIS AND TESTING

Rear View Mirrors 501-09-2
Inspection and Verification 501-09-2
Symptom Chart 501-09-2
Pinpoint Test 501-09-2/8

REMOVAL AND INSTALLATION

Exterior Mirror - Electrically Operated 501-09-9/10
Exterior Mirror - Manually Operated 501-09-11/12
Glass removal 501-09-13

DIAGNOSIS AND TESTING

Rear View Mirrors

Refer to Wiring Diagrams
Cell: 50109, Rear View Mirrors
for schematic and connector information.

Inspection and Verification

1. Verify the customer concern.
2. Visually inspect for obvious signs of mechanical and electrical damage.

Visual Inspection Chart

Mechanical	Electrical
Exterior mirror(s)	Fuse(s)
	Relay Electrical connector(s) Switch

3. If an obvious cause for an observed or reported concern is found, correct the cause (if possible) before proceeding to the next step.
4. If the cause is not visually evident, verify the symptom and refer to the Symptom Chart.

Symptom Chart

Condition	Possible Sources	Action
•The mirrors are inoperative	•Exterior mirror control switch.	•CARRY OUT the Exterior Mirror Control Switch Component Test. REFER to the Wiring Diagrams.
	•Circuit(s).	•Go To Pinpoint Test A
•A single mirror is inoperative	•Exterior mirror control switch.	•CARRY OUT the Exterior Mirror Control Switch Component Test. REFER to the Wiring Diagrams.
	•Circuit(s). •Exterior mirror motor(s).	•Go To Pinpoint Test B
•A single mirror does not function with switch logic	•Exterior mirror control switch.	•CARRY OUT the Exterior Mirror Control Switch Component Test. REFER to the Wiring Diagrams.
	•Circuit(s). •Exterior mirror motor(s).	•Go To Pinpoint Test C

Pinpoint Test

NOTE: Use a digital multimeter for all electrical measurements.

DIAGNOSIS AND TESTING

PINPOINT TEST A: THE MIRRORS ARE INOPERATIVE

CONDITIONS	DETAILS/RESULTS/ACTIONS
A1: CHECK THE VOLTAGE TO THE EXTERIOR MIRROR CONTROL SWITCH CIRCUIT 29-AD12 (OG/YE)	
1 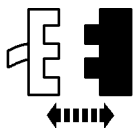 Exterior Mirror Control Switch C325 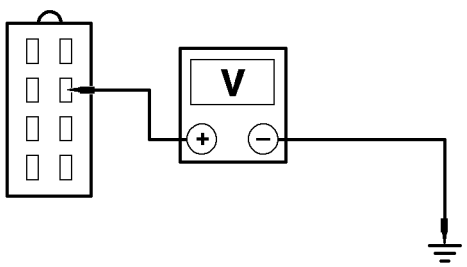 TIE0014407	2 Measure the voltage between the exterior mirror control switch C325 pin 6, circuit 29-AD12 (OG/YE), harness side and ground. • Is the voltage greater than 10 volts? ☐ **Yes** GO TO **A2** ☐ **No** REPAIR circuit 29-AD12 (OG/YE). TEST the system for normal operation.
A2: CHECK CIRCUIT 31-AD12 (BK) FOR CONTINUITY	
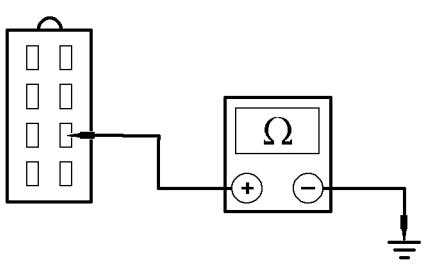 TIE0014408	1 Measure the resistance between the exterior mirror control switch C325 pin 4, circuit 31-AD12 (BK), harness side and ground. • Is the resistance less than 5 ohms? ☐ **Yes** GO TO **A3** ☐ **No** REPAIR circuit 31-AD12 (BK). TEST the system for normal operation.
A3: CHECK CIRCUIT 9-AD1 (BN/RD) FOR CONTINUITY	
1 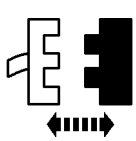 Driver Door A - pillar C24	

DIAGNOSIS AND TESTING (CONTINUED)

CONDITIONS	DETAILS/RESULTS/ACTIONS
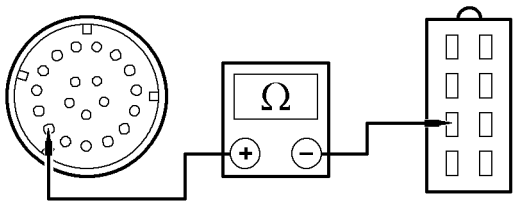 TIE0017793	**2** Measure the resistance between the exterior mirror control switch C325 pin 3, circuit 9-AD1 (BN/RD) harness side, and the driver door A-pillar C24 pin 3, circuit 9-AD17 (BN/GN) harness side. • Is the resistance less than 5 ohms? ☐ **Yes** VERIFY the customer concern. ☐ **No** REPAIR circuit 9-AD1 (BN/RD). TEST the system for normal operation.

PINPOINT TEST B: A SINGLE MIRROR IS INOPERATIVE

CONDITIONS	DETAILS/RESULTS/ACTIONS
B1: CHECK FOR CONTINUITY TO THE INOPERATIVE EXTERIOR MIRROR	
1 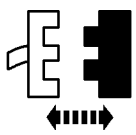 Exterior Mirror Control Switch C325 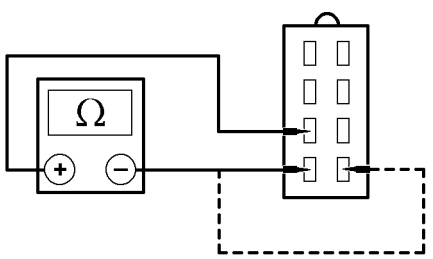 TIE0014174	**2** Measure the resistance between: **NOTE:** Driver Exterior Mirror - the exterior mirror control switch C325 pin 3, circuit 9-AD1 (BN/RD) and pin 2, circuit 10-AD8 (GY/VT) harness side. **NOTE:** Passenger Exterior Mirror - the exterior mirror control switch C325 pin 3, circuit 9-AD1 (BN/RD) and pin 1, circuit 10-AD11 (GY/WH) harness side. • Is the resistance less than 50 ohms? ☐ **Yes** VERIFY the customer concern. ☐ **No** Driver side INSTALL a new exterior mirror. Passenger side GO TO **B2**
B2: CHECK CIRCUIT 9-AD17 (BN/GN) FOR CONTINUITY	
1 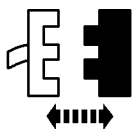 Passenger Exterior Mirror C311	

DIAGNOSIS AND TESTING (CONTINUED)

CONDITIONS	DETAILS/RESULTS/ACTIONS
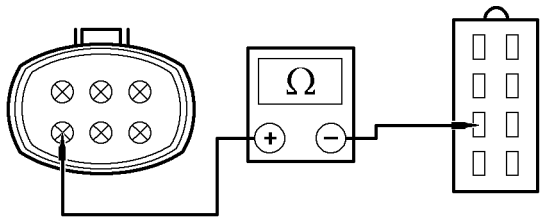 TIE0014175	**2** Measure the resistance between the exterior mirror control switch C325 pin 3, circuit 9-AD1 (BN/RD) harness side, and the passenger exterior mirror C311 pin 6, circuit 9-AD17 (BN/GN) harness side. • Is the resistance less than 5 ohms? ☐ **Yes** INSTALL a new exterior mirror. TEST the system for normal operation. ☐ **No** REPAIR circuit 9-AD17 (BN/GN). TEST the system for normal operation.

PINPOINT TEST C: A SINGLE MIRROR DOES NOT FUNCTION WITH SWITCH LOGIC

CONDITIONS	DETAILS/RESULTS/ACTIONS
C1: CHECK THE EXTERIOR MIRROR FUNCTIONS WITH SWITCH LOGIC	
	1 Operate the exterior mirror control switch. • Does the exterior mirror function with switch logic? ☐ **Yes** VERIFY the customer concern. ☐ **No** Driver exterior mirror up/down function inoperative GO TO **C2** Driver exterior mirror left/right function inoperative GO TO **C3** Passenger exterior mirror up/down function inoperative GO TO **C4** Passenger exterior mirror left/right function inoperative GO TO **C6**
C2: CHECK THE DRIVER EXTERIOR MIRROR UP/DOWN CIRCUIT	
1 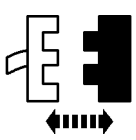 Exterior Mirror Control Switch C325	

DIAGNOSIS AND TESTING (CONTINUED)

CONDITIONS	DETAILS/RESULTS/ACTIONS
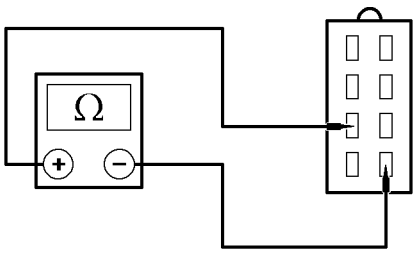 TIE0023558	**2** Measure the resistance between the exterior mirror control switch C325 pin 3, circuit 9-AD1 (BN/RD) and pin 2, circuit 10-AD8 (GY/VT) harness side. • Is the resistance less than 50 ohms? ☐ **Yes** VERIFY the customer concern. ☐ **No** INSTALL a new exterior mirror. TEST the system for normal operation.
C3: CHECK THE DRIVER EXTERIOR MIRROR LEFT/RIGHT CIRCUIT	
1 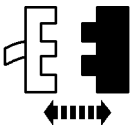 Exterior Mirror Control Switch C325	
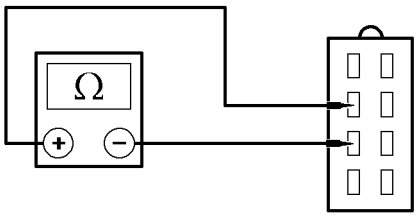 TIE0023559	**2** Measure the resistance between the exterior mirror control switch C325 pin 3, circuit 9-AD1 (BN/RD) and pin 5, circuit 8-AD7 (WH/RD) harness side. • Is the resistance less than 50 ohms? ☐ **Yes** VERIFY the customer concern. ☐ **No** INSTALL a new exterior mirror. TEST the system for normal operation.
C4: CHECK THE PASSENGER EXTERIOR MIRROR UP/DOWN CIRCUIT	
1 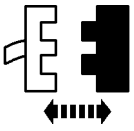 Exterior Mirror Control Switch C325	

DIAGNOSIS AND TESTING (CONTINUED)

CONDITIONS	DETAILS/RESULTS/ACTIONS
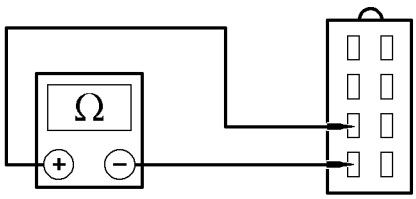 TIE0023560	**2** Measure the resistance between the exterior mirror control switch C325 pin 3, circuit 9-AD1 (BN/RD) and pin 1, circuit 10-AD11 (GY/WH) harness side. • Is the resistance less than 50 ohms? ☐ **Yes** VERIFY the customer concern. ☐ **No** GO TO **C5**
C5: CHECK CIRCUIT 10-AD11 (GY/WH) FOR CONTINUITY	
1 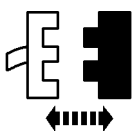 Passenger Exterior Mirror C311 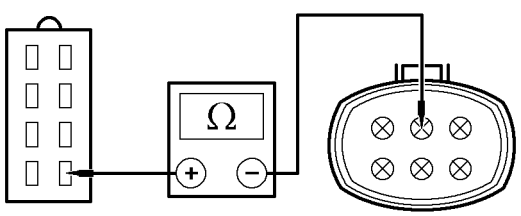 TIE0023182	**2** Measure the resistance between the exterior mirror control switch C325 pin 1, circuit 10-AD11 (GY/WH) harness side, and the passenger exterior mirror C311 pin 2, circuit 10-AD11 (GY/WH) harness side. • Is the resistance less than 5 ohms? ☐ **Yes** INSTALL a new exterior mirror. TEST the system for normal operation. ☐ **No** REPAIR circuit 10-AD11 (GY/WH). TEST the system for normal operation.
C6: CHECK THE PASSENGER EXTERIOR MIRROR LEFT/RIGHT CIRCUIT	
1 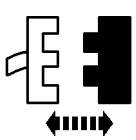 Exterior Mirror Control Switch C325	

DIAGNOSIS AND TESTING (CONTINUED)

CONDITIONS	DETAILS/RESULTS/ACTIONS
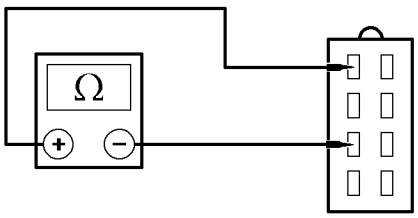 TIE0023180	**2** Measure the resistance between the exterior mirror control switch C325 pin 3, circuit 9-AD1 (BN/RD) and pin 7, circuit 8-AD10 (WH/BK) harness side. • Is the resistance less than 50 ohms? ☐ **Yes** VERIFY the customer concern. ☐ **No** GO TO **C7**
C7: CHECK CIRCUIT 8-AD10 (WH/BK) FOR CONTINUITY	
1 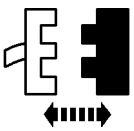 Passenger Exterior Mirror C311 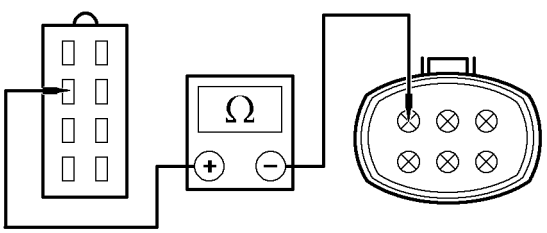 TIE0023188	**2** Measure the resistance between the exterior mirror control switch C325 pin 7, circuit 8-AD10 (WH/BK) harness side, and the passenger exterior mirror C311 pin 3, circuit 8-AD10 (WH/BK) harness side. • Is the resistance less than 5 ohms? ☐ **Yes** INSTALL a new exterior mirror. TEST the system for normal operation. ☐ **No** REPAIR circuit 8-AD10 (WH/BK). TEST the system for normal operation.

REMOVAL AND INSTALLATION

Exterior Mirror (Electrically operated)

Removal

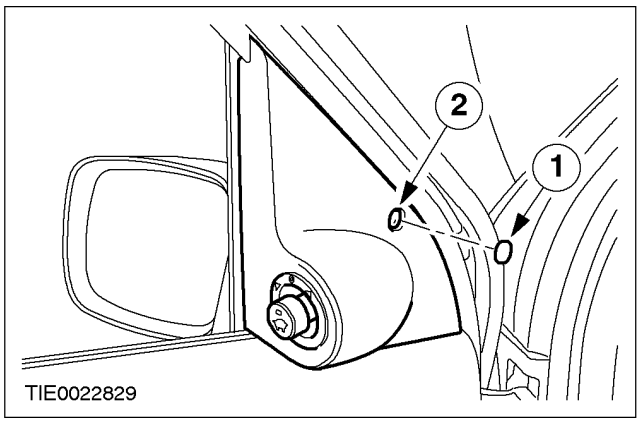

1. Remove the exterior mirror trim panel.
   1. Remove the screw cover.
   1. Remove the retaining screw.

1. Remove the front door trim panel. For additional information, refer to Section 501-05.

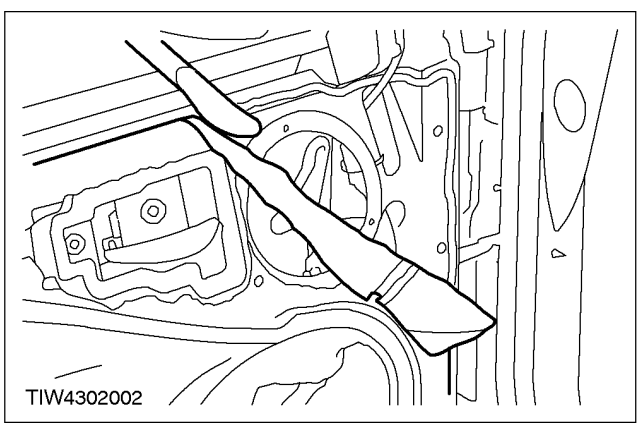

3. **CAUTION: Do not touch the adhesive surfaces, as re-bonding will be impaired.**
   Detach the watershield from the door panel.
   - Using a plastic knife (disposable cutlery), cut through the Butyl strip to enable the watershield to be peeled back.

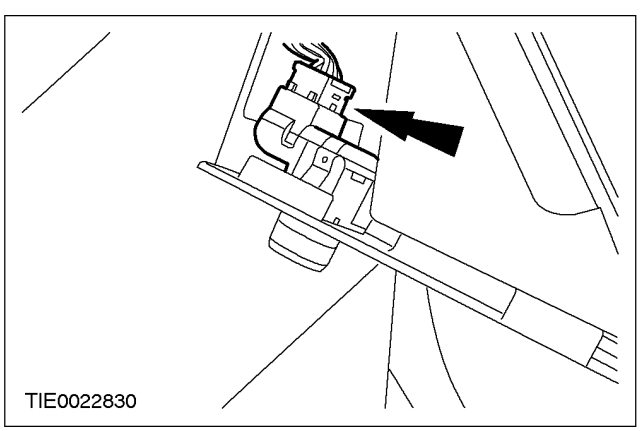

1. Disconnect the mirror control switch electrical connector.

REMOVAL AND INSTALLATION (CONTINUED)

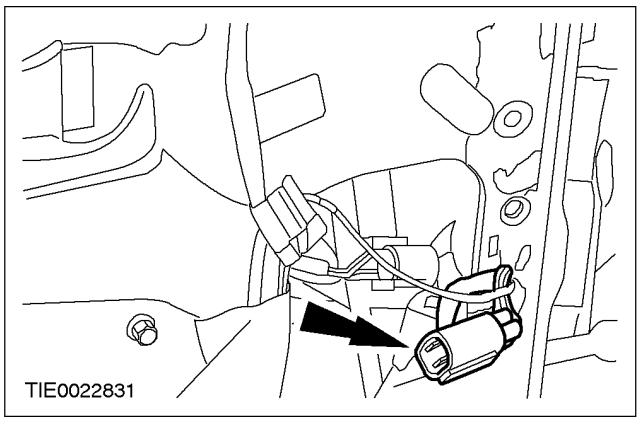

1. Disconnect the mirror electrical connector.

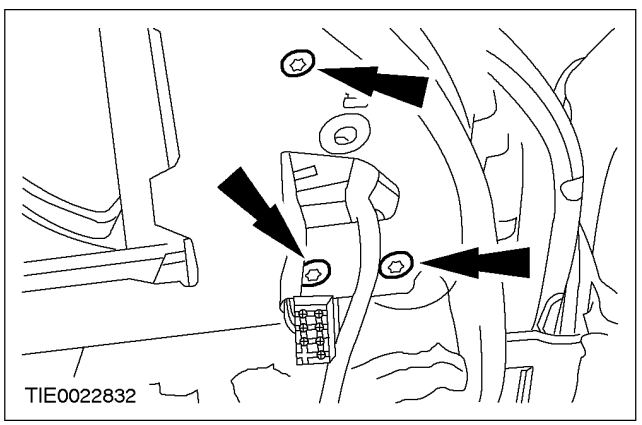

6. **NOTE:** Note the position of the gasket.
   Remove the mirror.
   - Remove the mirror retaining screws.

Installation

1. **NOTE:** Make sure the gasket is correctly positioned.

To install, reverse the removal procedure.

REMOVAL AND INSTALLATION (CONTINUED)

Exterior Mirror — Manually Operated (43 364 0)

Removal

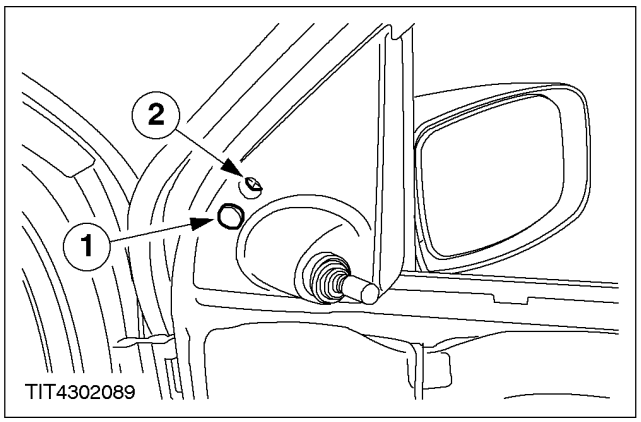

1. Detach the mirror inner trim panel.
   1. Remove the blanking plug.
   2. Remove the screw.

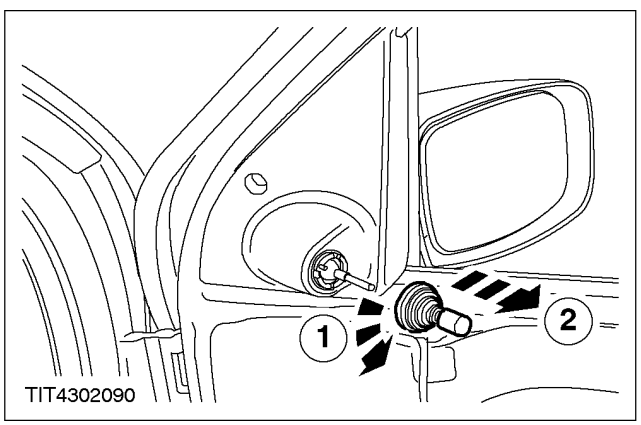

2. Remove the mirror inner trim panel.
   1. Unlock the remote control lever cover.
   2. Remove the remote control lever cover.

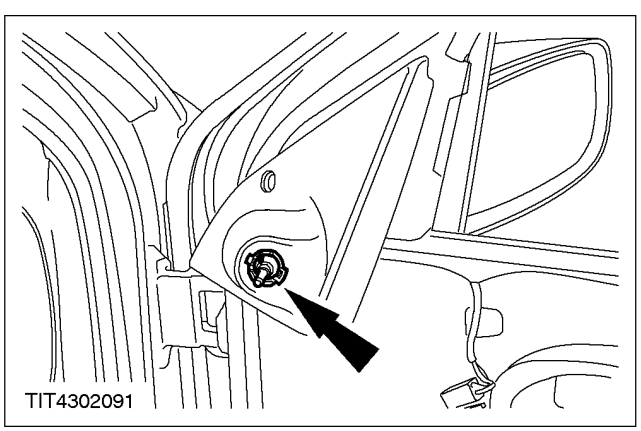

3. Push the remote control lever out of the mirror inner trim panel.

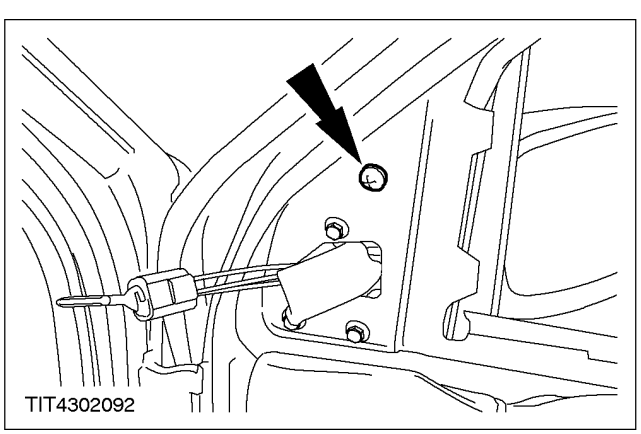

4. **NOTE:** Remove any sound deadening material from where the mirror is fixed to the door.
   Detach the mirror outer trim panel.

REMOVAL AND INSTALLATION (CONTINUED)

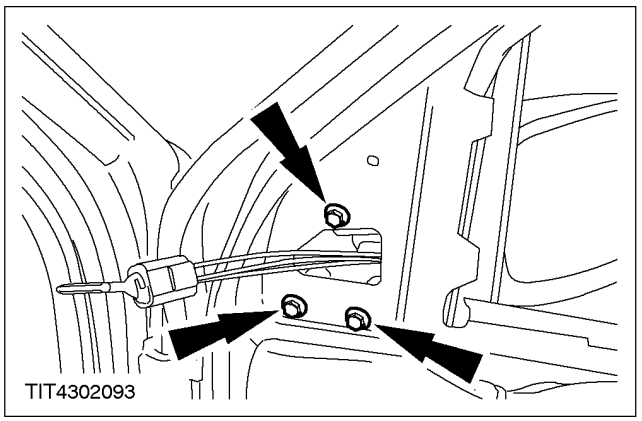

5. Remove the mirror (three bolts).

Installation

1. Refit the components in reverse order.

REMOVAL AND INSTALLATION

Exterior Mirror Glass (43 366 0)

Removal

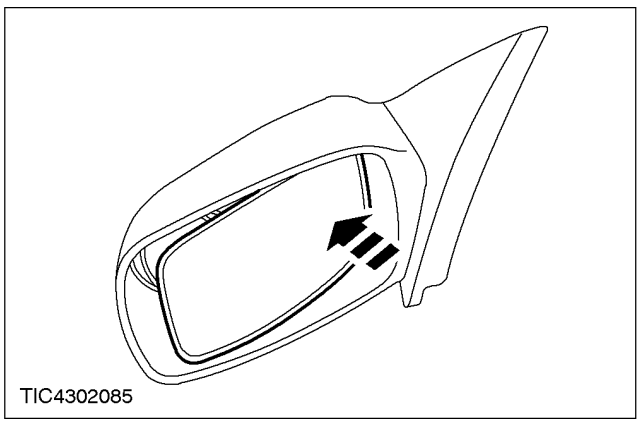

1. Push in the inboard edge of the glass towards the back of the mirror case.

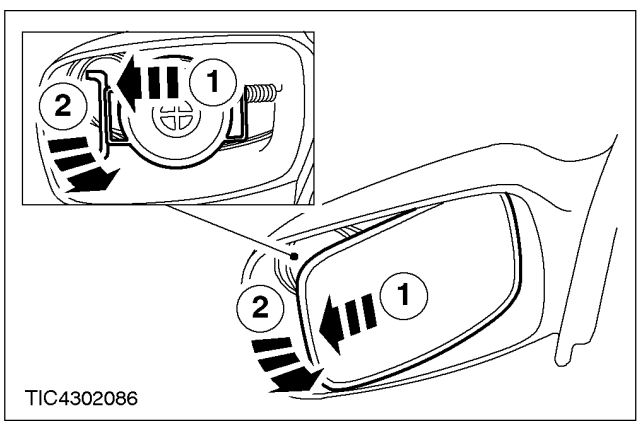

2. Detach the door mirror glass.
   1. Holding the outboard edge of the glass pull it outwards.
   2. While pulling the glass outwards, pull it towards you.

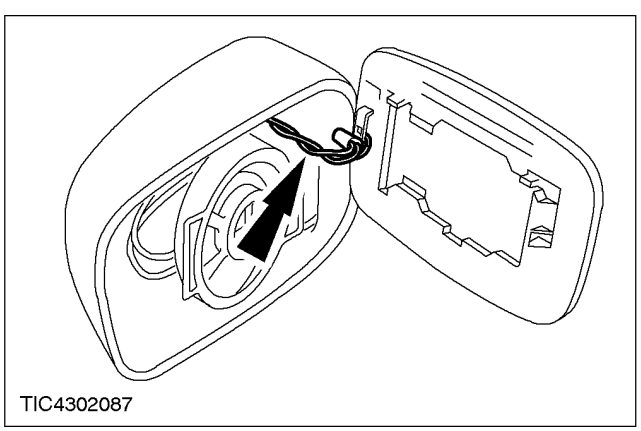

3. **NOTE:** Disconnect the electrical connectors where fitted.
   Remove the door mirror glass.

REMOVAL AND INSTALLATION (CONTINUED)

Installation

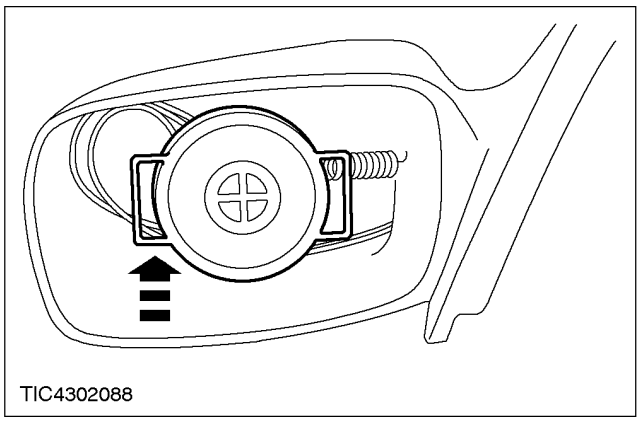

1. Push in the outboard edge of the door mirror glass mounting towards the back of the mirror case.

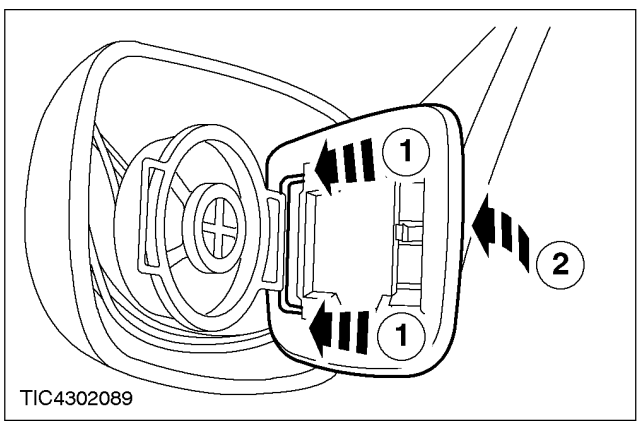

2. **NOTE:** Connect the electrical connector where fitted.
   Locate the glass onto the door mirror glass mounting.
   1. Attach the inboard edge of the door mirror glass mounting to the glass.
   2. Lay the glass across the door mirror glass mounting.

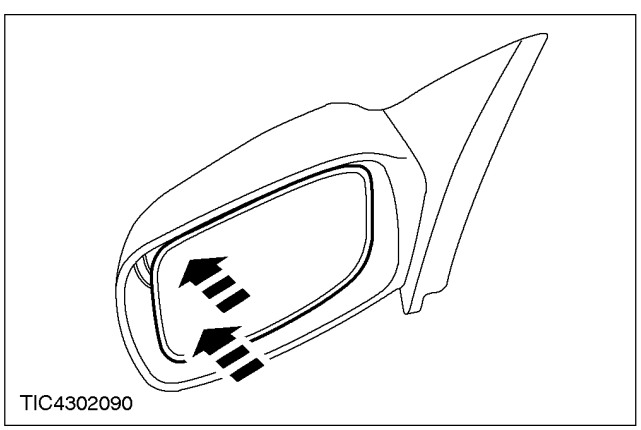

3. Push the outboard edge of the glass onto the door mirror glass mounting.

SECTION 501-10 Seating

VEHICLE APPLICATION: 2002 Bantam

SUBJECT **PAGE**

DESCRIPTION AND OPERATION

Seats 501-10-2

REMOVAL AND INSTALLATION

Front Seat 501-10-3/4
Front Seat Cushion 501-10-7
Front Seat Backrest 501-10-8/9

DISASSEMBLY AND ASSEMBLY

Front Seat Cushion ..... (40 104 0) 501-10-10/11
Front Seat Backrest ..... (40 106 0) 501-10-12/14

SPECIFICATIONS

Specifications 501-10-15
Torque Specifications 501-10-15

DESCRIPTION AND OPERATION

Seats

Front seats have cut and sew covers over foam padding supported by sprung wire on a steel frame. The cushion and backrest are contoured for lateral support. Both front seats can be folded forward to allow access to the vehicle jack and wheel spanner and are fitted with two way adjustable head restraints with foam pads. Seat tracks allow forwards and rearwards travel. All front seats incorporate an outer trim panel; inner trim panels are fitted depending on vehicle specifications.

REMOVAL AND INSTALLATION

Front Seat

Removal

Vehicles with driver air bag

WARNING: To avoid accidental deployment the air bag control module backup power supply must be depleted. Wait at least one minute after disconnecting the battery ground cable(s) before commencing any repair or adjustment to the supplemental restraint system (SRS), or any component(s) adjacent to the SRS sensors. Failure to follow these instructions may result in personal injury.

WARNING: Always wear safety glasses when working on an air bag equipped vehicle and when handling an air bag module. Failure to follow these instructions may result in personal injury.

1. Disconnect the battery ground cable. For additional information, refer to Section 414-01.

All vehicles

2. Remove the head restraint.
3. Detach the seat side trim panel from the seat track.

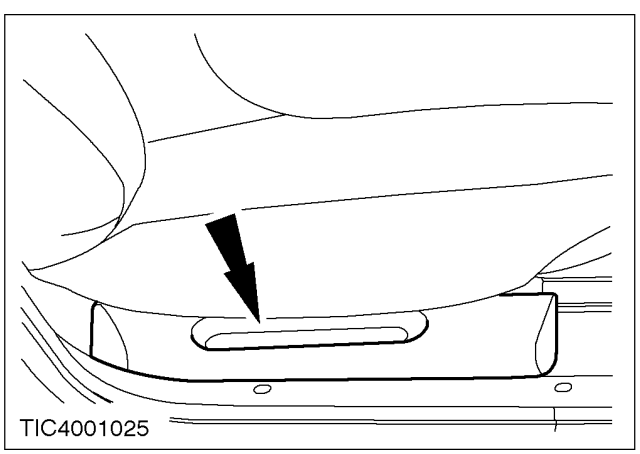

REMOVAL AND INSTALLATION (CONTINUED)

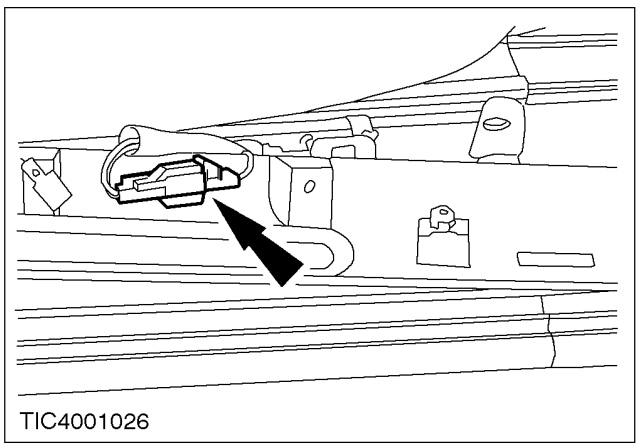
TIC4001026

Vehicles with driver air bag

4. Disconnect the safety belt buckle pre-tensioner electrical connector.

All vehicles

5. Move the seat fully rearwards.
6. Remove the seat front retaining bolts.

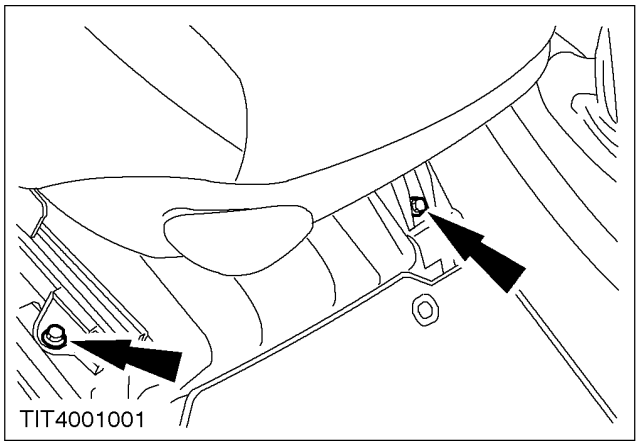
TIT4001001

7. Move the seat fully forwards.
8. Remove the seat rear retaining bolts and remove the seat.

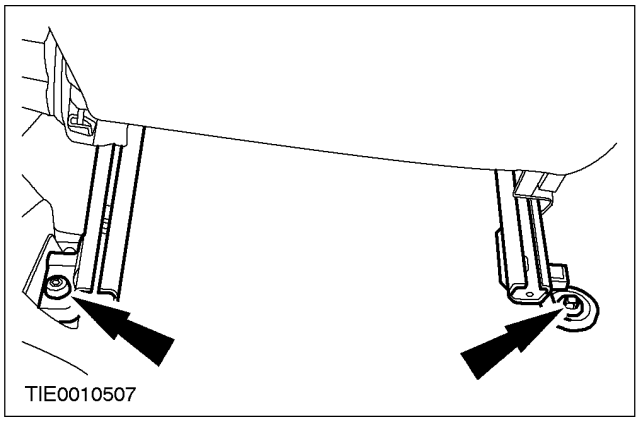
TIE0010507

Installation

All vehicles

1. **NOTE:** Do not fully tighten the seat retaining bolts at this stage.
   Install the seat.

REMOVAL AND INSTALLATION (CONTINUED)

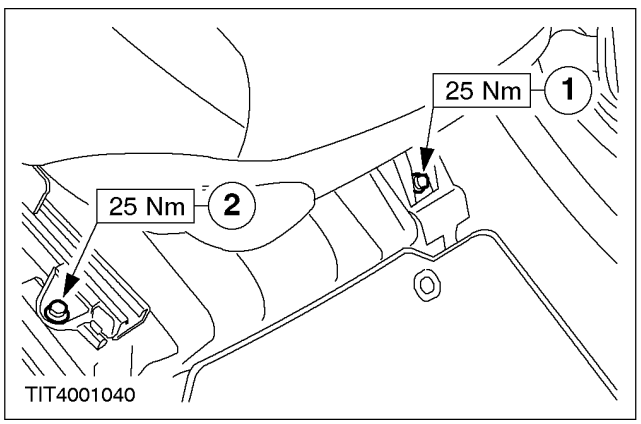

2. Move the seat fully rearwards.
3. Tighten the seat in the following sequence.
   1. Tighten the front inner retaining bolt.
   2. Tighten the front outer retaining bolt.

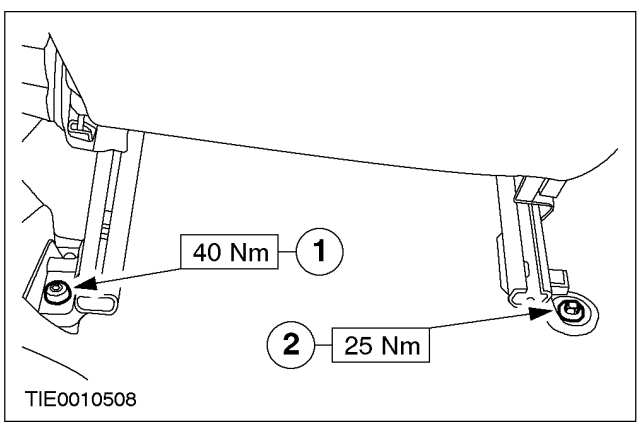

4. Move the seat fully forwards.
5. Tighten the seat in the following sequence.
   1. Tighten the rear inner retaining bolt.
   2. Tighten the rear outer retaining bolt.

Vehicles with driver air bag

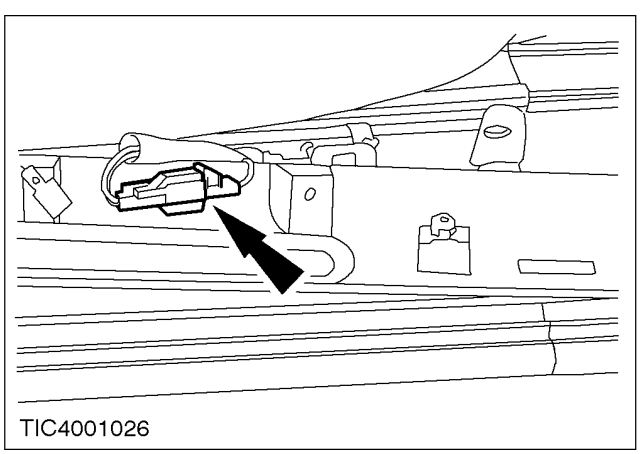

6. Connect the safety belt buckle pre-tensioner electrical connector.

CONTINUED

REMOVAL AND INSTALLATION (CONTINUED)

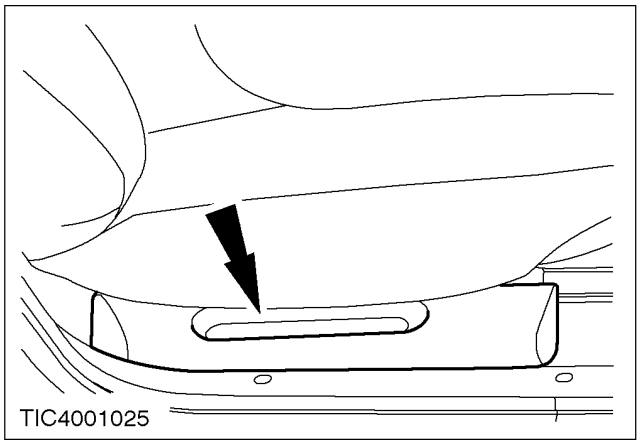

All vehicles

7. Attach the seat side trim panel.

8. Install the head restraint.

9. Connect the battery ground cable. For additional information, refer to Section 414-01.

CONTINUED

REMOVAL AND INSTALLATION

Front Seat Cushion

Removal

1. Remove the front seat. For additional information, refer to Front Seat in this section.

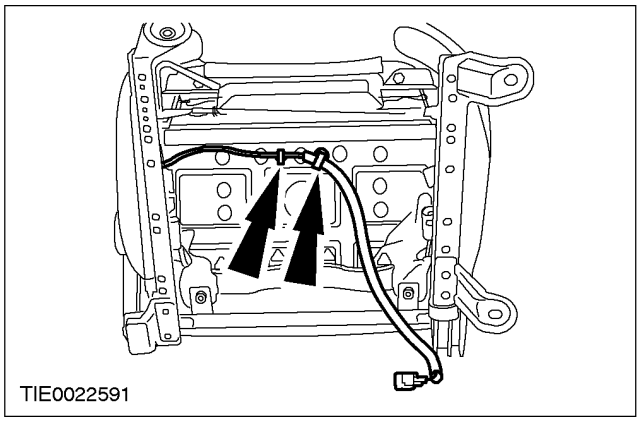

2. **CAUTION: Note the position and routing of the safety belt buckle pre-tensioner wiring harness to aid assembly. An incorrectly routed wiring harness may lead to the wiring harness becoming damaged on the seat mechanism.**

   Detach the safety belt buckle pre-tensioner wiring harness from the underside of the seat.
   - Detach the clips.

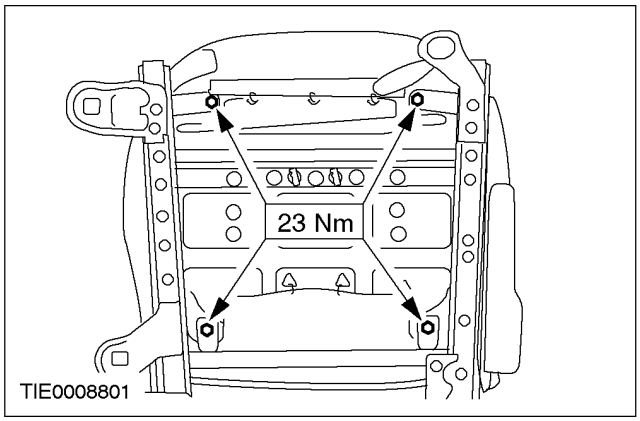

3. Remove the front seat cushion.
   - Remove the bolts.

Installation

1. To install, reverse the removal procedure.

CONTINUED

REMOVAL AND INSTALLATION

Front Seat Backrest

Removal

All vehicles

1. Remove the front seat. For additional information, refer to Front Seat in this section.

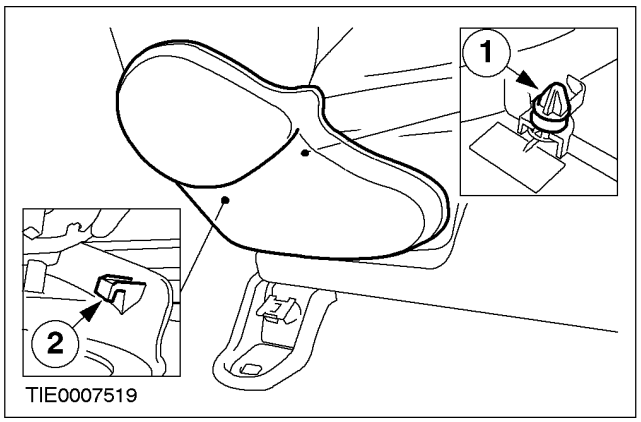

TIE0007519

2. Remove the seat outer trim panel.
   1. Detach the front retaining clip.
   2. Detach the rear locating tang.

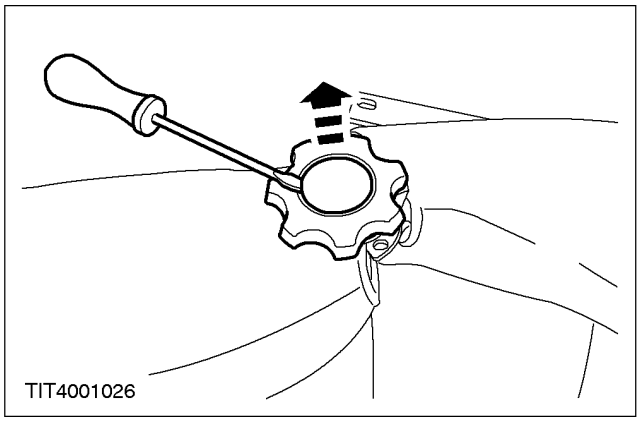
TIT4001026

3. Remove the backrest recliner hand wheel.
   - Remove the cover.

Vehicles without driver airbag

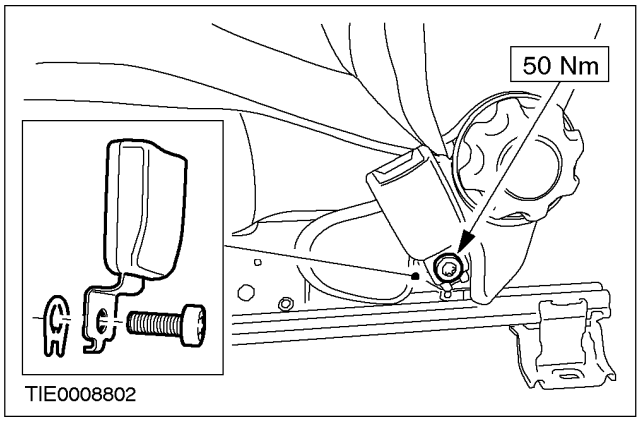

TIE0008802

4. Remove the safety belt buckle.

CONTINUED

REMOVAL AND INSTALLATION (CONTINUED)

All vehicles

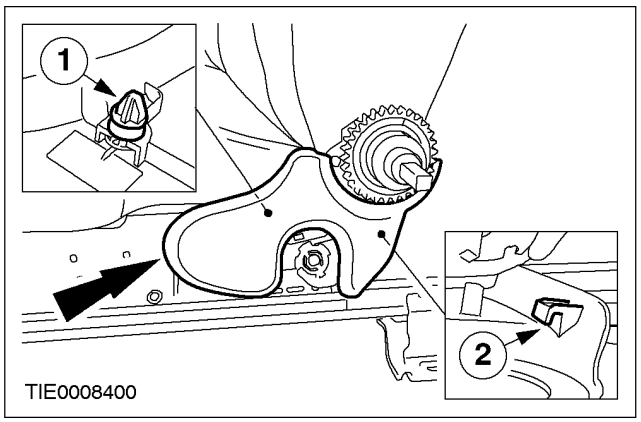

5. Remove the seat inner trim panel.
   1. Detach the front retaining clip.
   2. Detach the rear locating tang.

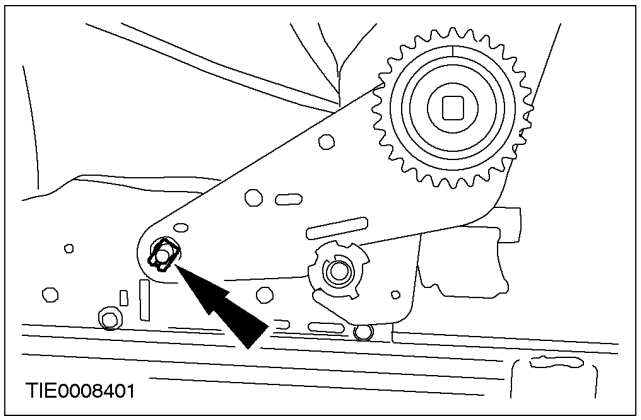

6. Remove the front seat backrest retaining clips.

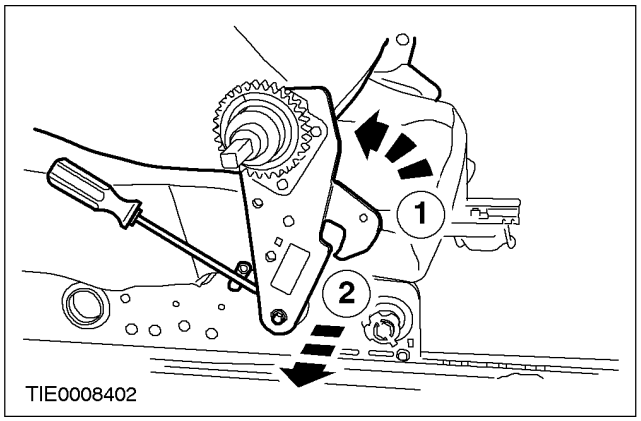

7. **NOTE:** The seat may be equipped with an additional inner trim panel, depending on seat specifications. Care must be taken when removing the backrest not to damage the inner trim panel.
   Remove the backrest.
   1. Fold the backrest forward.
   2. Detach the backrest from the spindle.

Installation

1. To install, reverse the removal procedure.

CONTINUED

DISASSEMBLY AND ASSEMBLY
Front Seat Cushion (40 104 0)

General Equipment
Hog ring pliers

Disassembly

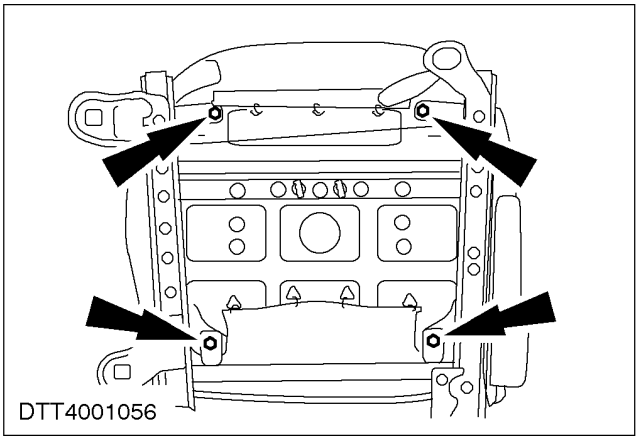

1. Remove the front seat cushion.

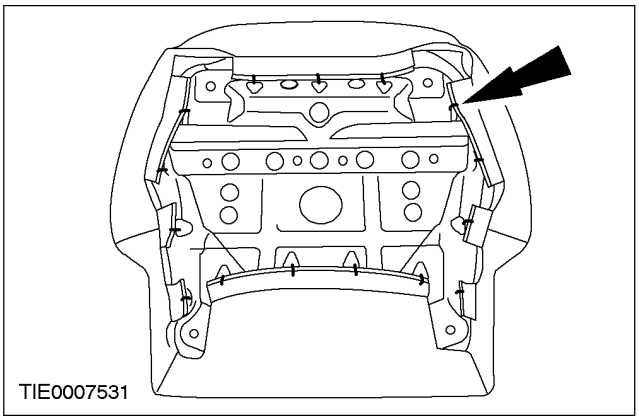

2. Detach the seat cover.
   - Cut the 15 hog rings.

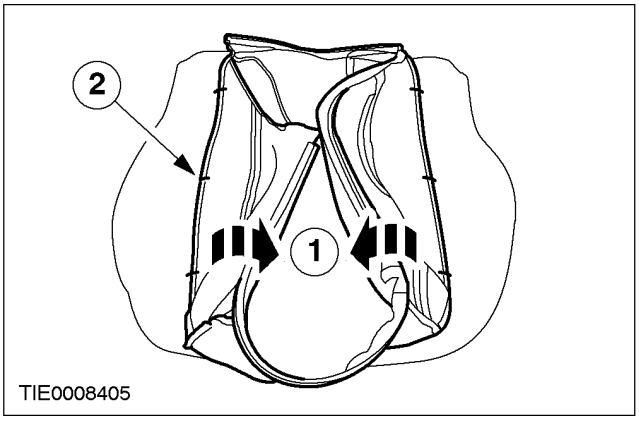

3. Remove the seat cover.
   1. Roll the seat cover towards the centre of the foam pad to access the pleating hog rings.
   2. Cut the six hog rings.

4. **NOTE:** Note the position of the anti-squeak mat to aid assembly.
   Remove the foam pad.

CONTINUED

DISASSEMBLY AND ASSEMBLY (CONTINUED)

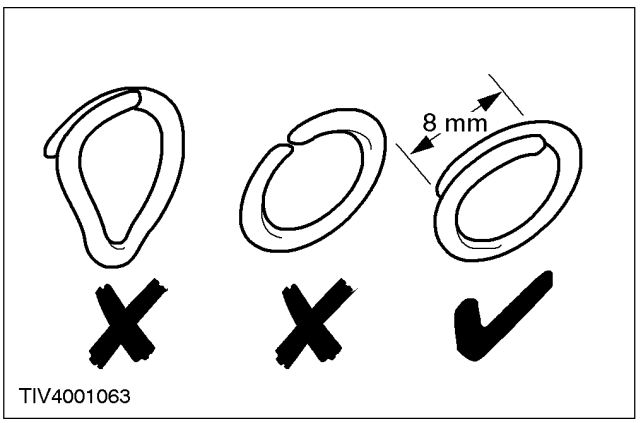

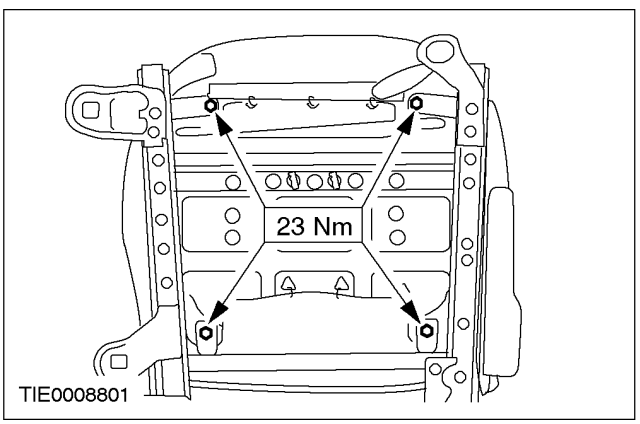

Assembly

1. To assemble, reverse the disassemble procedure.

NOTE: The anti-squeak mat is available as a one size service part, which should be cut to match the mat it is replacing.

- Use hog ring pliers to close the hog rings. Do not use any other tool. The hog rings must be closed to overlap 8 mm as illustrated.

CONTINUED

DISASSEMBLY AND ASSEMBLY

Front Seat Backrest (40 106 0)

Disassembly

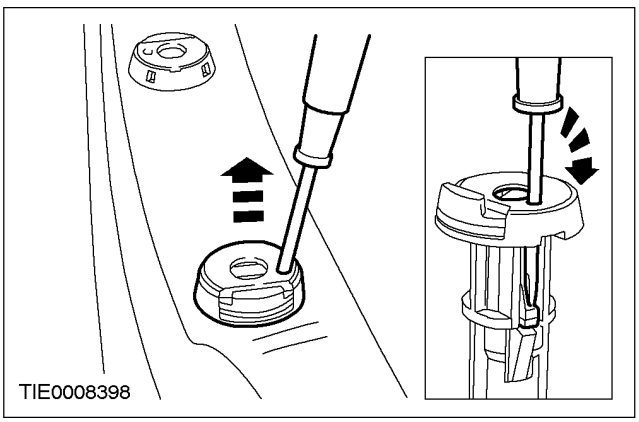

1. Remove the head restraint.
2. Remove the head restraint guides.

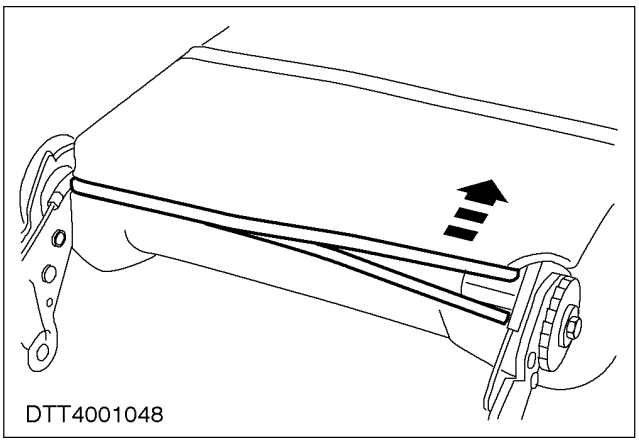

3. Detach the retaining strip from the base of the backrest.

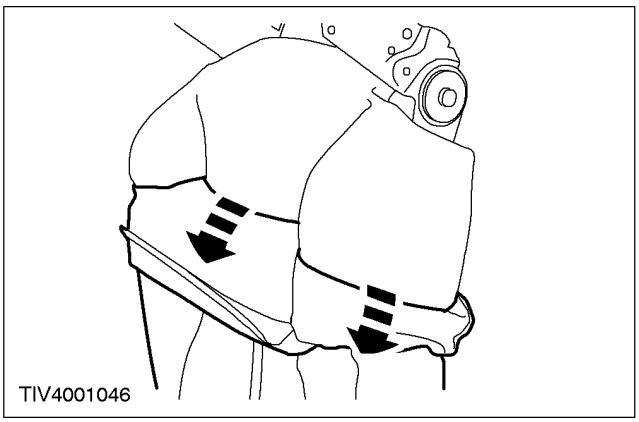

4. Roll the seat cover up the backrest to access the lower lateral tensioner rod retaining clips.

CONTINUED

DISASSEMBLY AND ASSEMBLY (CONTINUED)

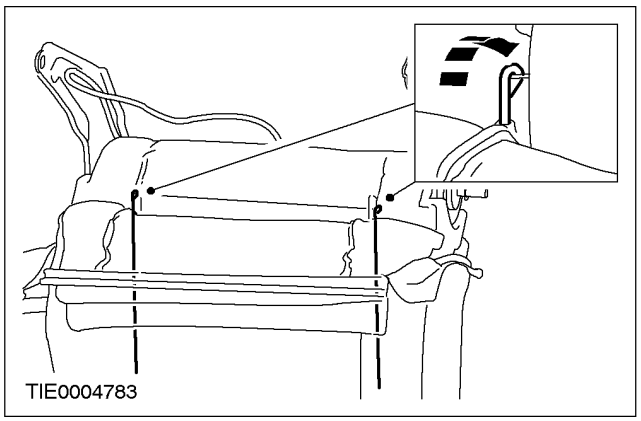

5. Detach the lower lateral tension rod retaining clips.

6. Roll the cover up the backrest.

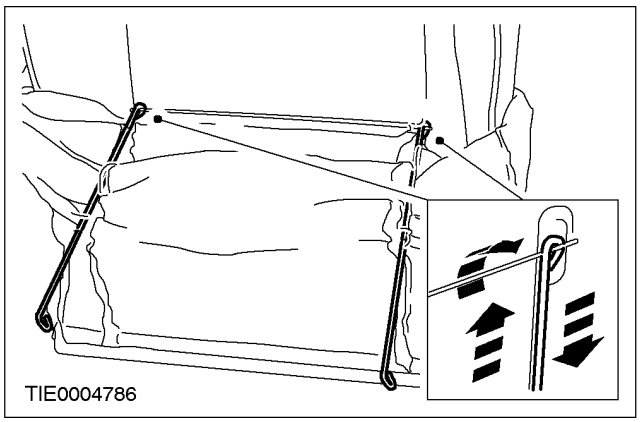

7. Detach the upper lateral tension rod retaining clips.

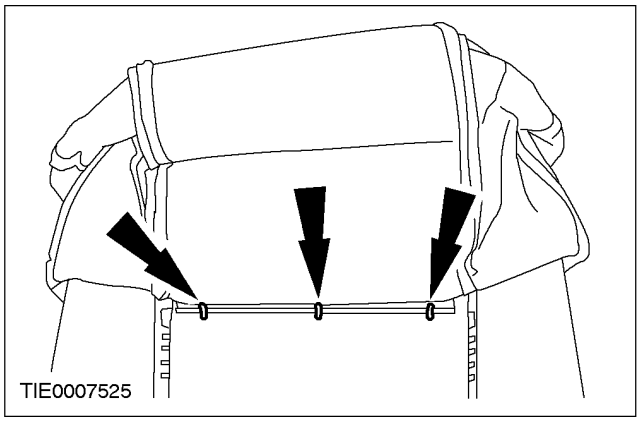

8. **NOTE:** Make sure the lateral tension rod retaining clips do not enter the retaining sleeves.
   Roll the backrest cover upwards to access the pleating hog rings.
   - Cut the hog rings.

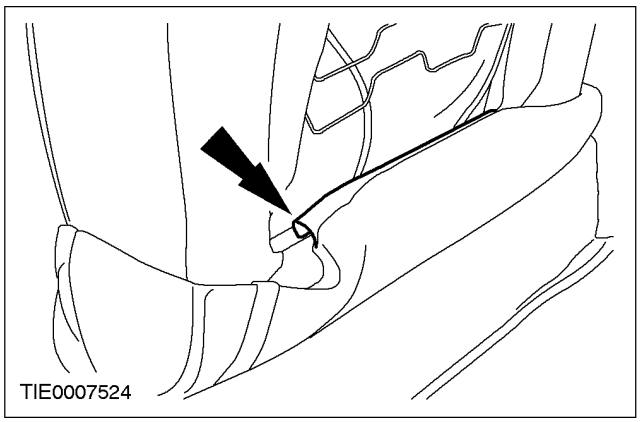

9. Remove the backrest cover.
   - Detach the retaining strip.

CONTINUED

DISASSEMBLY AND ASSEMBLY (CONTINUED)

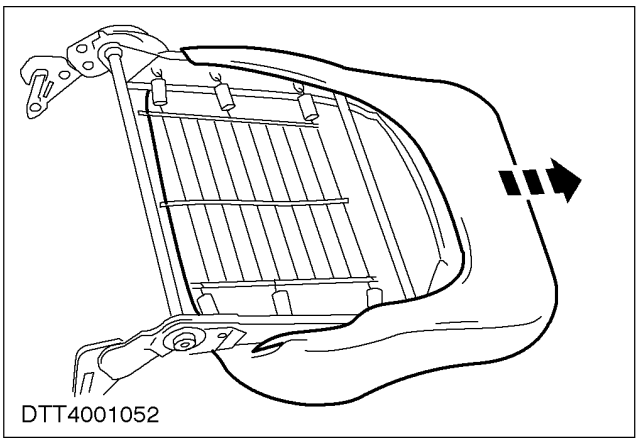

10. Remove the front seat backrest.

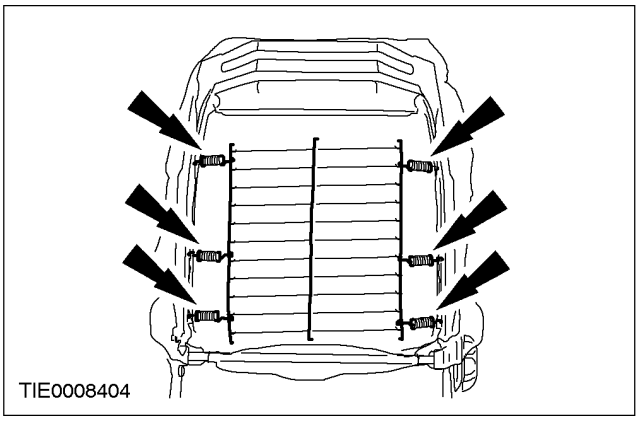

11. Remove the anti-squeak mat.
    - Remove the clips.

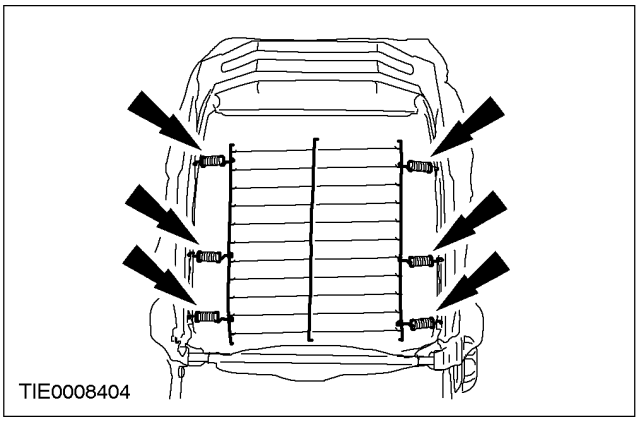

12. **NOTE:** Note the position of the springs to aid assembly.
    Remove the suspension mat.
    - Remove the springs.

Assembly

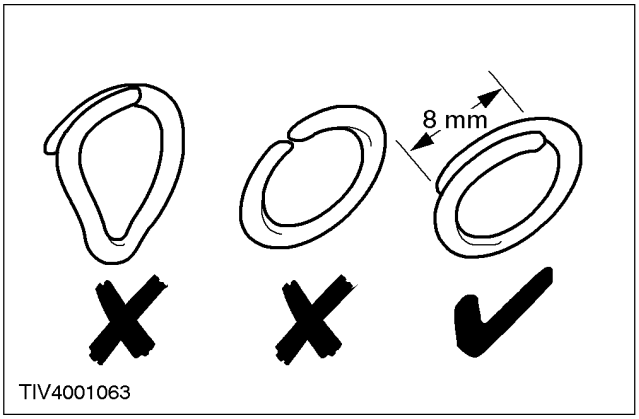

1. To assemble, reverse the disassemble procedure.

NOTE: The anti-squeak mat is available as a one size service part, which should be cut to match the mat it is replacing.
Use hog ring pliers to close the hog rings. Do not use any other tool. The hog rings must be closed to overlap as illustrated.

CONTINUED

SPECIFICATIONS

Torque Specifications

Description	Nm
Front seat, front retaining bolts	25
Front seat, rear outer retaining bolt	25
Front seat, rear inner retaining bolt	40
Front safety belt buckle bolt	50

CONTINUED

SECTION 501-11 Glass, Frames and Mechanisms

VEHICLE APPLICATION: 2002 Bantam

SUBJECT PAGE

DIAGNOSIS AND TESTING

Glass, Frames and Mechanisms 501-11-2
Inspection and Verification 501-11-2
Pinpoint Tests 501-11-2/8
Component Tests 501-11-3

REMOVAL AND INSTALLATION

Front Door Window Glass ..... (42 314 0) 501-11-9/12
Opera Window Glass 501-11-13/16
Rear Window Glass 501-11-17/20
Front Door Window Regulator and Motor ..... (42 338 0) 501-11-21/23
Windshield Glass ..... (42 115 0) 501-11-24/30

GENERAL PROCEDURES

Door Window Glass Adjustment ..... (42 001 0) 501-11-31/32

SPECIFICATIONS

Specifications 501-11-33
Lubricants, Fluids, Sealers and Adhesives 501-11-33
Torque Specifications 501-11-33

DIAGNOSIS AND TESTING

Glass, Frames and Mechanisms

Refer to Wiring Diagrams Cell: 50111, for schematic and connector information.

Inspection and Verification

1. Verify the customer concern.
2. Visually inspect for obvious signs of mechanical or electrical damage.

Visual Inspection Chart

Mechanical	Electrical
• Window seal • Door window frame	• Fuse(s) • Electrical connector(s) • Switch(s) • Circuit(s)

3. If an obvious cause for an observed or reported concern is found, correct the cause (if possible) before proceeding to the next step.
4. If the cause is not visually evident, verify the symptom and refer to the Symptom Chart.

Symptom Chart

Condition	Possible Sources	Action
•All power windows are inoperative	•Driver power window control switch.	•CARRY OUT the Driver Power Window Control Switch Component Test. REFER to the Wiring Diagrams.
•Single power window is inoperative - driver side	•Driver power window control switch	•CARRY OUT the Driver Power Window Control Switch Component Test. REFER to the Wiring diagrams.
	•Circuit(s). •Driver power window motor.	•Go To Pinpoint Test A
•Single power window is inoperative - passenger side	•Passenger power window control switch.	•CARRY OUT the Passenger Power Window Control Switch Component Test. REFER to the Wiring Diagrams.
	•Driver power window control switch.	•CARRY OUT the Driver Power Window Control Switch Component Test. REFER to the Wiring Diagrams.
	•Circuit(s). •Passenger power window motor.	•Go To Pinpoint Test B

Pinpoint Tests

NOTE: Use a digital multimeter for all electrical measurements.

CONTINUED

DIAGNOSIS AND TESTING

PINPOINT TEST A: SINGLE POWER WINDOW IS INOPERATIVE - DRIVER SIDE

CONDITIONS	DETAILS/RESULTS/ACTIONS
A1: CHECK THE DRIVER POWER WINDOW CONTROL SWITCH LEDS	
1	• Do the driver power window control switch LEDs illuminate? ☐ **Yes** GO TO **A2** ☐ **No** GO TO **A5**
A2: CHECK THE DRIVER POWER WINDOW MOTOR CIRCUIT FOR CONTINUITY	
1 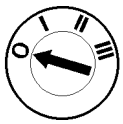 2 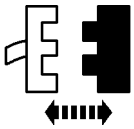 Driver Window Control Switch C55a 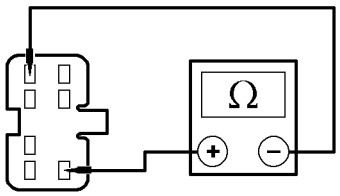 TIE0022961	3 Measure the resistance between the driver power window control switch C55a pin 1, circuit 32-AJ26 (WH) and pin 7, circuit 33-AJ26 (YE) harness side. • Is the resistance less than 5 ohms? ☐ **Yes** VERIFY the customer concern. ☐ **No** GO TO **A3**
A3: CHECK FOR CONTINUITY BETWEEN THE DRIVER POWER WINDOW CONTROL SWITCH AND THE DRIVER POWER WINDOW MOTOR DOWN CIRCUIT	
1 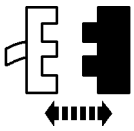 Power Window Motor C106	

CONTINUED

DIAGNOSIS AND TESTING (CONTINUED)

CONDITIONS	DETAILS/RESULTS/ACTIONS
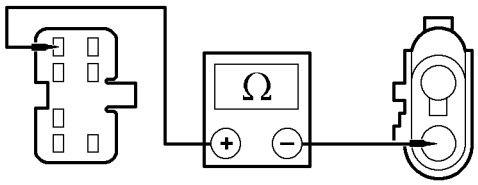 TIE0013521	**2** Measure the resistance between the driver power window control switch C55a pin 1, circuit 32-AJ26 (WH) and the driver power window motor C106 pin 2, circuit 32-AJ26 (WH). • Is the resistance less than 5 ohms? ☐ **Yes** GO TO **A4** ☐ **No** REPAIR circuit 32-AJ26 (WH). TEST the system for normal operation.
A4: CHECK FOR CONTINUITY BETWEEN THE DRIVER POWER WINDOW CONTROL SWITCH AND THE DRIVER POWER WINDOW MOTOR UP CIRCUIT	
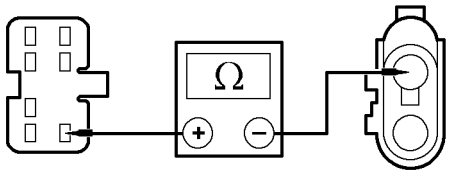 TIE0013520	**1** Measure the resistance between the driver power window control switch C55a pin 7, circuit 33-AJ26 (YE) and the driver power window motor C106 pin 1, circuit 33-AJ26 (YE). • Is the resistance less than 5 ohms? ☐ **Yes** INSTALL a new motor. TEST the system for normal operation. ☐ **No** REPAIR circuit 33-AJ26 (YE). TEST the system for normal operation.
A5: CHECK FOR CONTINUITY BETWEEN THE DRIVER POWER WINDOW CONTROL SWITCH AND GROUND	
1 2 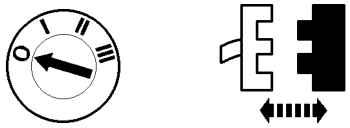 Driver Window Control Switch C55a 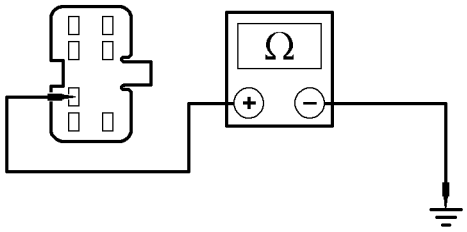 TIE0010806	**3** Measure the resistance between the driver power window control switch C55a pin 3, circuit 31-AJ7 (BK) harness side and ground. • Is the resistance less than 5 ohms? ☐ **Yes** REPAIR circuit 14-AJ7 (VT/BU). TEST the system for normal operation. ☐ **No** REPAIR circuit 31-AJ7 (BK). TEST the system for normal operation.

CONTINUED

DIAGNOSIS AND TESTING (CONTINUED)

PINPOINT TEST B: SINGLE POWER WINDOW IS INOPERATIVE - PASSENGER SIDE

CONDITIONS	DETAILS/RESULTS/ACTIONS
B1: CHECK THE PASSENGER POWER WINDOW FUNCTION FROM THE DRIVER SIDE POWER WINDOW CONTROL SWITCH	
1	2 Operate the passenger power window from the driver power window control switch. • Does the passenger power window operate? ☐ **Yes** REPAIR circuit 14-AJ18 (VT/WH). TEST the system for normal operation. ☐ **No** GO TO **B2**
B2: CHECK THE DRIVER SIDE PASSENGER POWER WINDOW CONTROL SWITCH LED	
	1 Observe the driver side passenger power window control switch LED. • Is the driver side passenger power window control switch LED illuminated? ☐ **Yes** GO TO **B3** ☐ **No** GO TO **B8**
B3: CHECK THE DOWN CIRCUIT VOLTAGE TO THE PASSENGER POWER WINDOW CONTROL SWITCH	
1 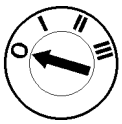 2 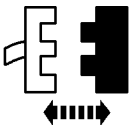 3 Passenger Power Window Control Switch C56	4 Operate the driver side passenger power window control switch to the DOWN position.

CONTINUED

DIAGNOSIS AND TESTING (CONTINUED)

CONDITIONS	DETAILS/RESULTS/ACTIONS
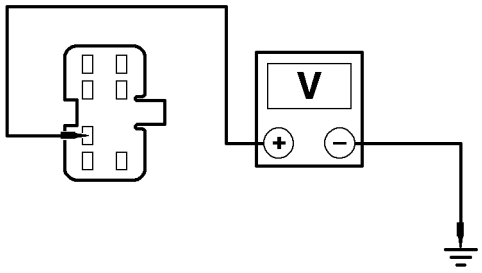 TIE0014549	**5** Measure the voltage between the passenger power window control switch C56 pin 3, circuit 33-AJ18 (YE/VT) harness side and ground. • Is the voltage greater than 10 volts? ☐ **Yes** GO TO **B4** ☐ **No** REPAIR circuit 33-AJ18 (YE/VT). TEST the system for normal operation.
B4: CHECK THE UP CIRCUIT VOLTAGE TO THE PASSENGER POWER WINDOW CONTROL SWITCH	
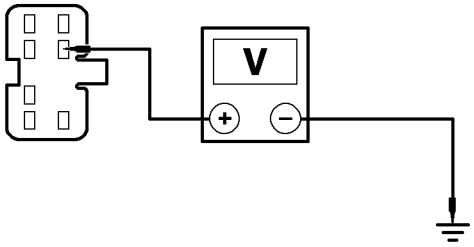 TIE0014550	**1** Operate the driver side passenger power window control switch to the UP position. **2** Measure the voltage between the passenger power window control switch C56 pin 6, circuit 32-AJ18 (WH/VT) harness side and ground. • Is the voltage greater than 10 volts? ☐ **Yes** GO TO **B5** ☐ **No** REPAIR circuit 32-AJ18 (WH/VT). TEST the system for normal operation.
B5: CHECK THE PASSENGER POWER WINDOW MOTOR CIRCUIT FOR CONTINUITY	
1 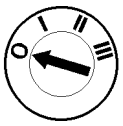 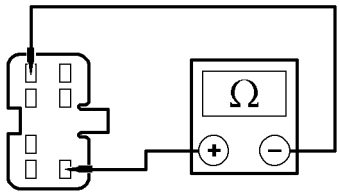 TIE0022961	**2** Measure the resistance between the passenger power window control switch C56 pin 1, circuit 32-AJ27 (WH/VT) and pin 7, circuit 33-AJ27 (YE/VT) harness side. • Is the resistance less than 5 ohms? ☐ **Yes** VERIFY the customer concern ☐ **No** GO TO **B6**

CONTINUED

DIAGNOSIS AND TESTING (CONTINUED)

CONDITIONS	DETAILS/RESULTS/ACTIONS
B6: CHECK FOR CONTINUITY BETWEEN THE PASSENGER POWER WINDOW CONTROL SWITCH DOWN CIRCUIT AND THE PASSENGER POWER WINDOW MOTOR	
1 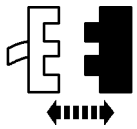 Power Window Motor C107 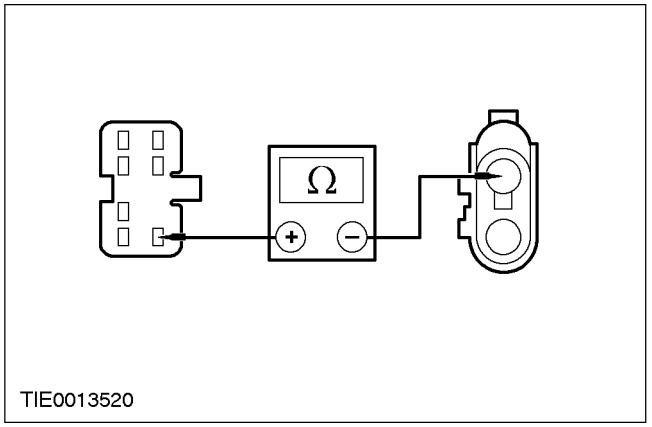	2 Measure the resistance between passenger power window control switch C56 pin 7, circuit 33-AJ27 (YE/VT) and the passenger power window motor C107 pin 1, circuit 33-AJ27 (YE/VT). • Is the resistance less than 5 ohms? ☐ **Yes** GO TO **B7** ☐ **No** REPAIR circuit 33-AJ27 (YE/VT). TEST the system for normal operation.
B7: CHECK FOR CONTINUITY BETWEEN THE PASSENGER POWER WINDOW CONTROL SWITCH UP CIRCUIT AND THE PASSENGER POWER WINDOW MOTOR	
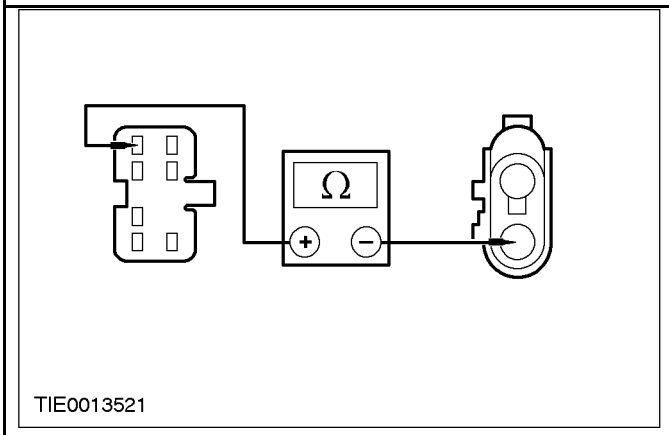	1 Measure the resistance between passenger power window control switch C56 pin 1, circuit 32-AJ27 (WH/VT) and the passenger power window motor C107 pin 2, circuit 32-AJ27 (WH/VT). • Is the resistance less than 5 ohms? ☐ **Yes** INSTALL a new motor. TEST the system for normal operation. ☐ **No** REPAIR circuit 32-AJ27 (WH/VT). TEST the system for normal operation.
B8: CHECK FOR CONTINUITY BETWEEN THE DRIVER POWER WINDOW CONTROL SWITCH AND GROUND	
1 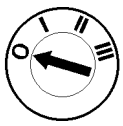 2 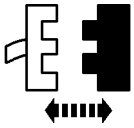 Driver Power Window Control Switch C55b	

CONTINUED

DIAGNOSIS AND TESTING (CONTINUED)

CONDITIONS	DETAILS/RESULTS/ACTIONS
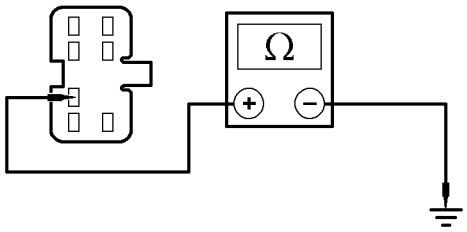 TIE0010806	**3** Measure the resistance between the driver power window control switch C55b pin 3, circuit 31-AJ9 (BK) harness side and ground. • Is the resistance less than 5 ohms? ☐ **Yes** GO TO **B9** ☐ **No** REPAIR circuit 31-AJ9 (BK). TEST the system for normal operation.
B9: CHECK FOR VOLTAGE TO THE DRIVER POWER WINDOW CONTROL SWITCH	
1 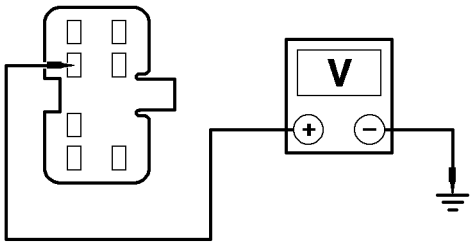 TIE0009478	**2** Measure the voltage between the driver power window control switch C55b pin 2, circuit 14-AJ9 (VT/BK) harness side and ground. • Is the voltage greater than 10 volts? ☐ **Yes** VERIFY the customer concern. ☐ **No** REPAIR circuit 14-AJ9 (VT/BK). TEST the system for normal operation.

CONTINUED

REMOVAL AND INSTALLATION

Front Door Window Glass (42 314 0)

Removal

All vehicles

1. Remove the front door trim panel. For additional information, refer to Section 501-05.

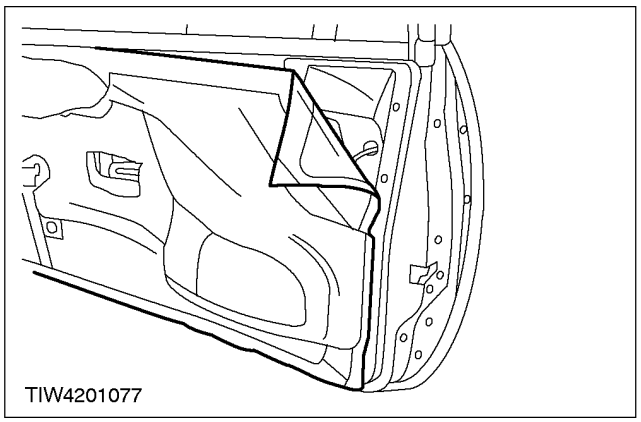

2. **CAUTION: Do not touch the adhesive surface, as re-bonding will be impaired.**
   Detach the watershield from the door panel.

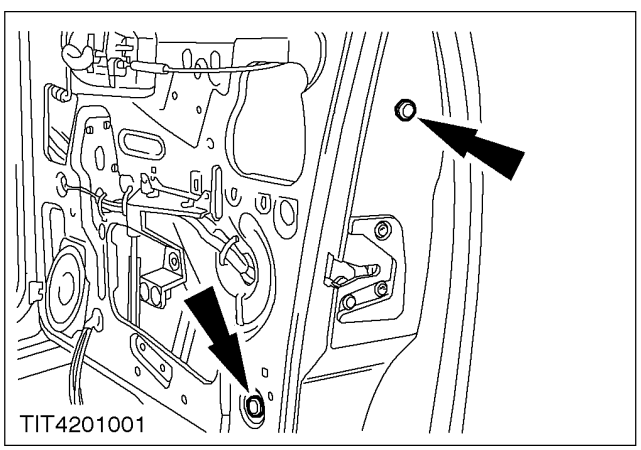

3. Detach the door glass top run retainer.
4. Remove the door glass top run retainer.

Vehicles with power windows

5. Connect the window control switch electrical connector.

Vehicles with manual windows

6. Install the window regulator handle.

CONTINUED

REMOVAL AND INSTALLATION (CONTINUED)

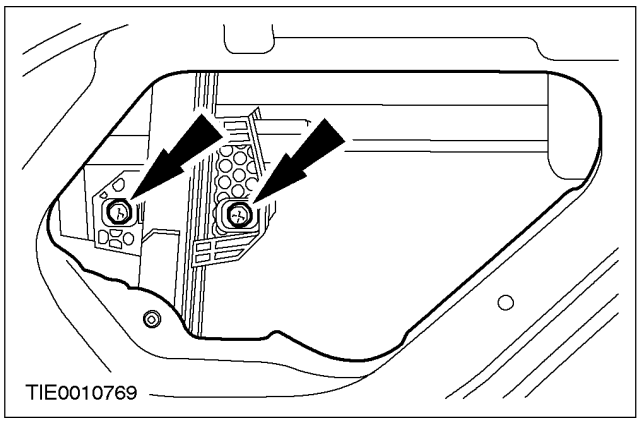

All vehicles

7. Remove the window glass retaining screws (power window shown).
   - Align the retaining screws with the access hole.

8. Detach the window glass from the regulator.

9. Lower the window glass to the bottom of the door.

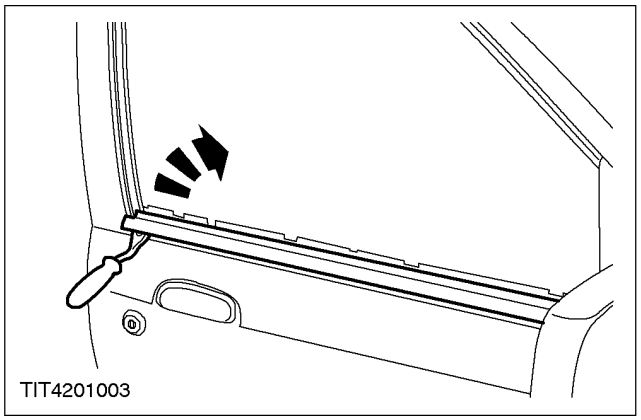

10. Remove the window glass weather strip.

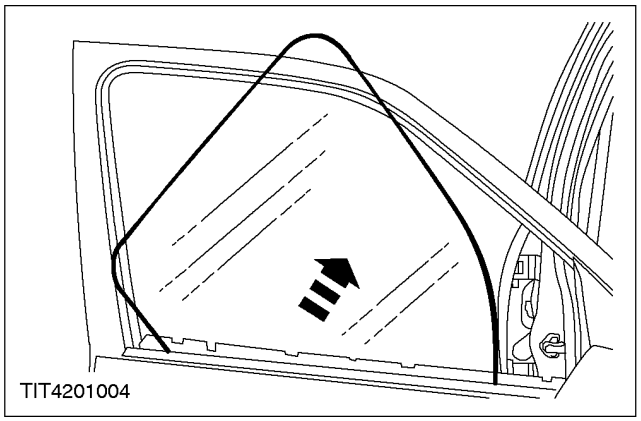

11. Remove the front door window glass.

CONTINUED

REMOVAL AND INSTALLATION (CONTINUED)

Installation

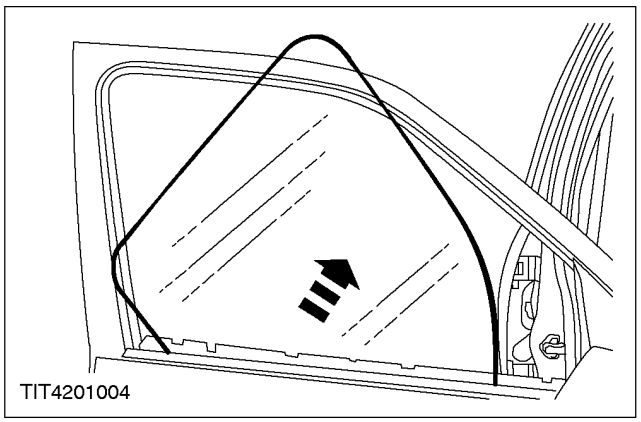

All vehicles

1. Install the front door window glass.

2. Install the door glass weather strip.

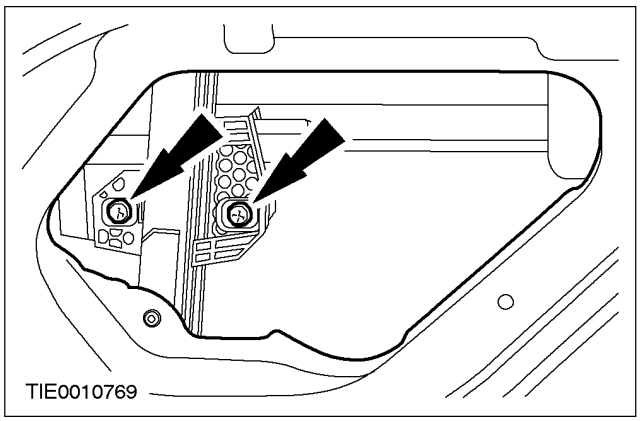

3. **NOTE:** Do not fully tighten the retaining screws at this stage.
   Attach the front door window glass to the window regulator (power window shown).
   - Install the retaining screws.

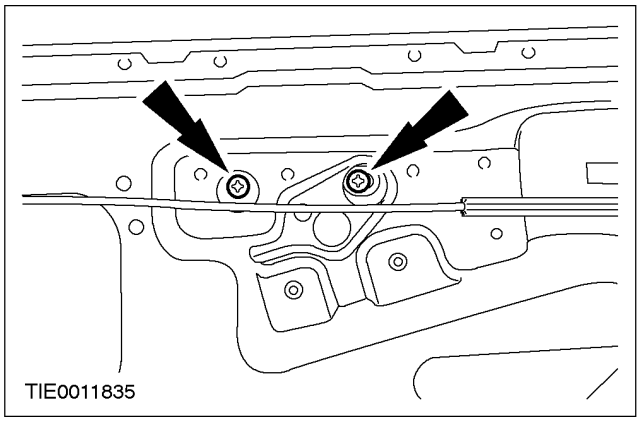

4. Align the retaining screws with the access holes.
   - Raise the front door window glass.

CONTINUED

REMOVAL AND INSTALLATION (CONTINUED)

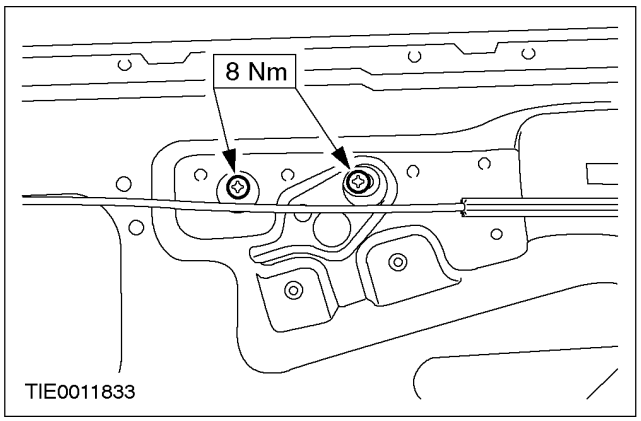

5. Tighten the retaining screws.

Vehicles with manual windows

6. Remove the window regulator handle.

Vehicles with power windows

7. Disconnect the window control switch electrical connector.

All vehicles

8. Install the door glass top run retainer.

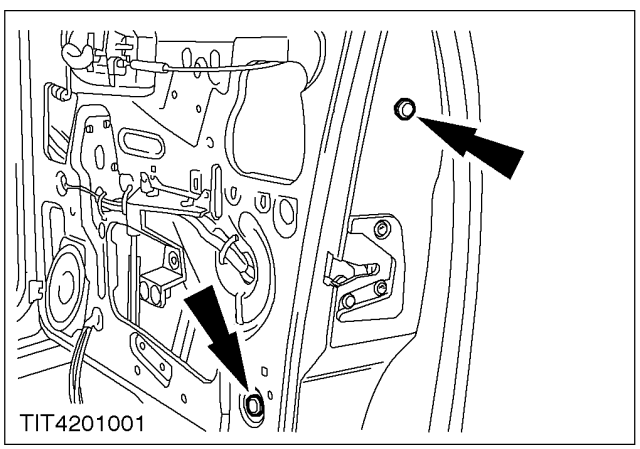

9. Attach the watershield to the door panel.
10. Install the front door trim panel. For additional information, refer to Section 501-05.

CONTINUED

REMOVAL AND INSTALLATION

Opera Window Glass

General Equipment
Hot air gun
Direct glazing cutter for bonded glass
Mixer/Application gun

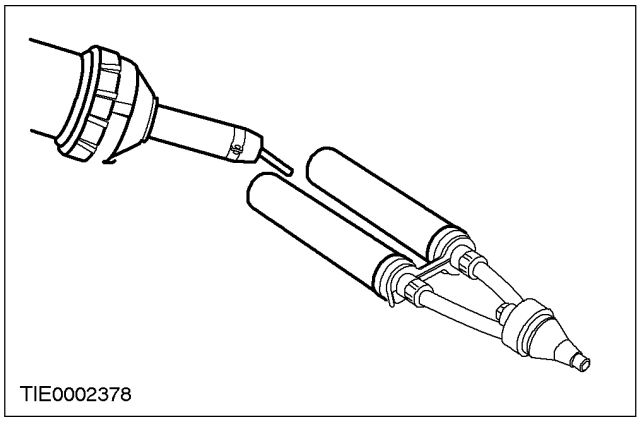
TIE0002378

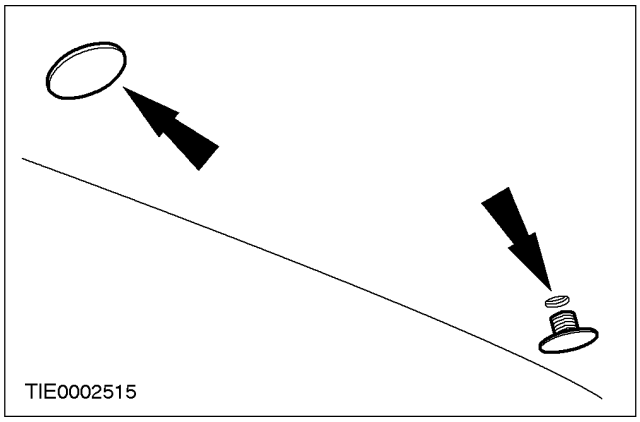
TIE0002515

Removal

1. **NOTE:** Should the ambient temperature fall below 10°C heat the cartridges for approximately 15 minutes by placing them on a warm radiator, or by using a hot air gun set at approximately 25°C.
   Heat the polyurethane (PU) adhesive if necessary.

All vehicles

CAUTION: When removing fasteners, take extreme care, as they may be easily broken.

1. Remove the C pillar trim cover.

CONTINUED

REMOVAL AND INSTALLATION (CONTINUED)

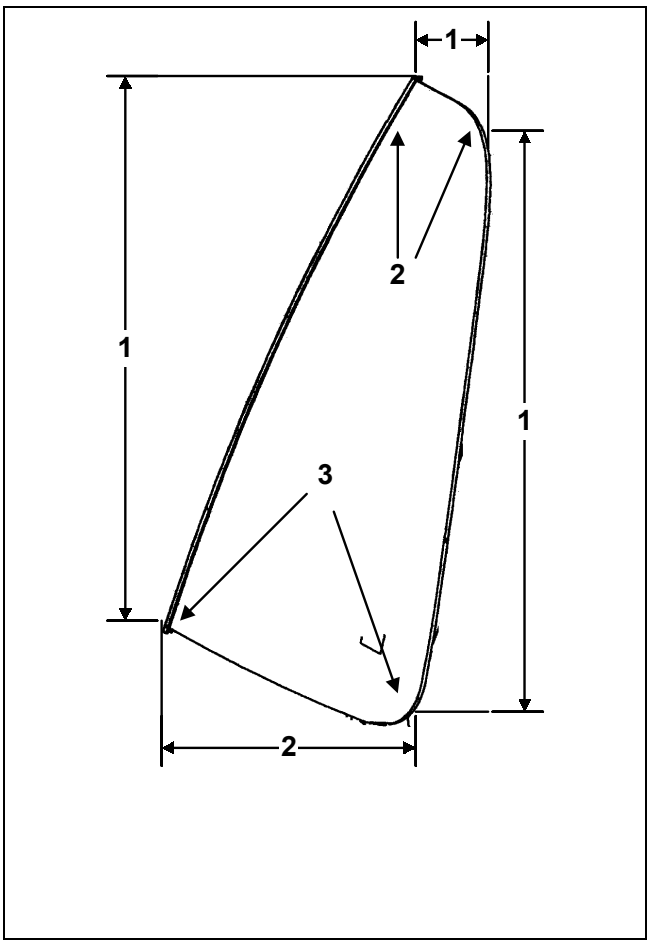

WARNING: Wear gloves and eye protection when working with the glass cutting tool as the cutting operation may produce splinters. When using the cutter wear ear protectors. Failure to follow these instructions may result in personal injury.

CAUTION: Make sure the cutting blades are changed where the cutting depth changes to avoid damage to the body and trim panels.

NOTE: Some resistance may be encountered when cutting through the glass locating pegs in the top corners of the glass.

NOTE: Carefully remove the remaining part of the locating pegs from the window opening flange.

From inside the vehicle cut the PU adhesive at the given maximum depths. Use the recommended blades, following the proprietary tool manufacturers instructions.

1. 25 mm.
2. 60 mm.
3. 70 mm.

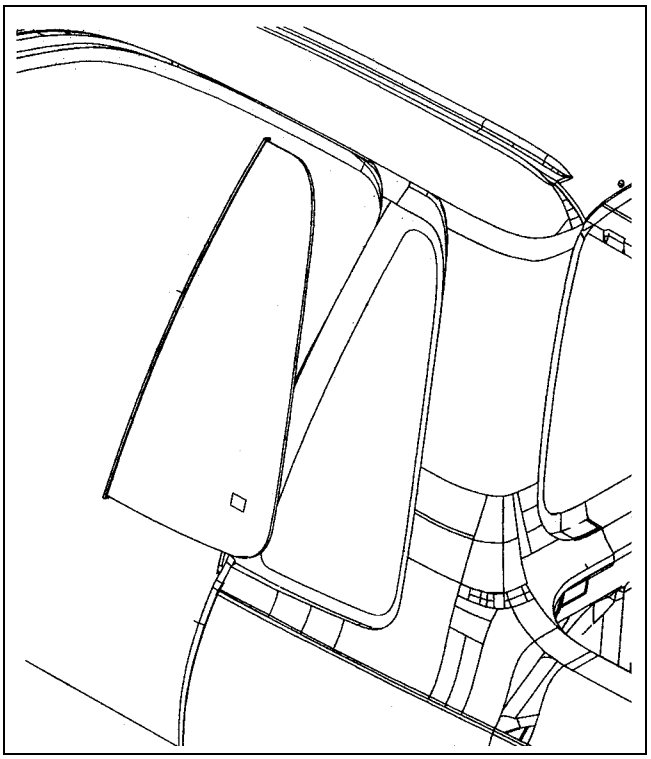

2. Use a suction cup to remove the opera window glass.

CONTINUED

REMOVAL AND INSTALLATION (CONTINUED)

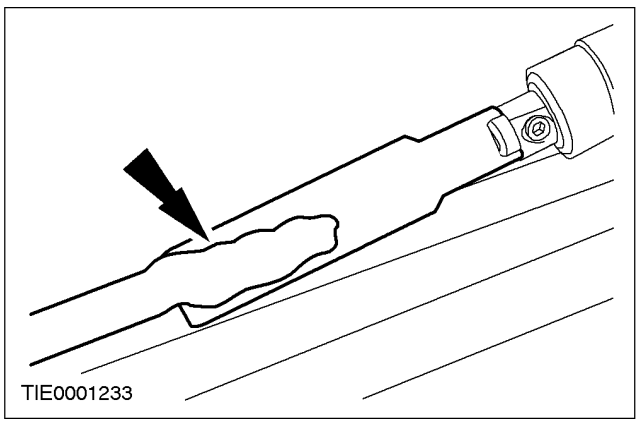

Installation

1. **CAUTION: During the curing period of the PU adhesive the door windows must be left open to avoid a build up of pressure when the doors are opened and closed.**

   CAUTION: Avoid touching the trimmed surface, as this will inhibit the bonding of the new adhesive.

   Remove the excess PU adhesive from the opening flange.

   - Carefully trim the remaining PU adhesive from the rear window opening flange to leave approximately 1 mm of trimmed PU adhesive adhered to the opening flange.

2. Check window aperture sealing area for damaged sheet metal, rust or foreign material, which may have caused, or may cause glass breakage.

3. **CAUTION: To make sure the PU adhesive cures, it is essential that all bonding surfaces are free of moisture.**

   Using a hot air gun, apply warm air (25°C) to the opera window opening flange and glass bond line to remove all traces of moisture.

4. Prepare the glass, opera window opening flange and trimmed PU adhesive in accordance with the instructions supplied with the adhesive kit.

CONTINUED

REMOVAL AND INSTALLATION (CONTINUED)

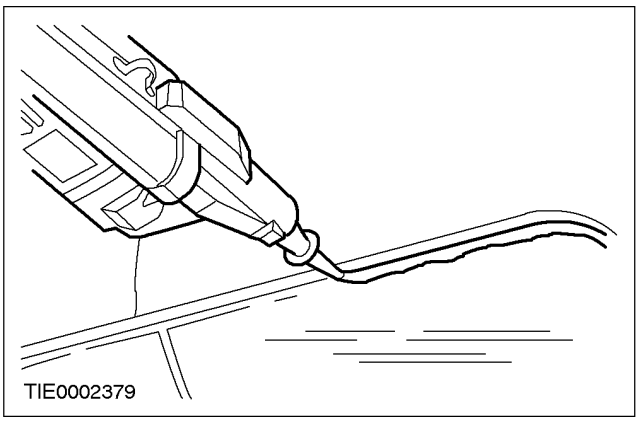

5. **NOTE:** Discard the first 100 mm of PU adhesive as this may have a reduced working time.

NOTE: To avoid water leaks, any breakage in the continuous bead should be overlapped by 20 mm.

Apply the PU adhesive in a continuous bead of between 8 and 10 mm height to the rear window glass along the bond line.

6. **NOTE:** Firmly and evenly press in position; tape the glass in the correct position until the PU adhesive has cured.

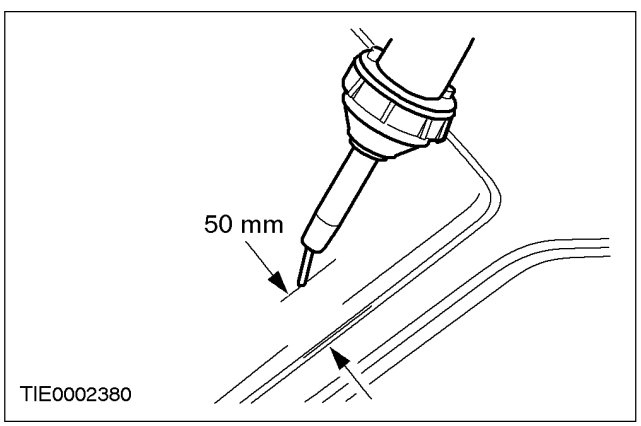

7. Should the ambient temperature fall below 10°C, use a hot air gun at a distance of approximately 50 mm from the surface and apply warm air (25°C) continuously for 15 minutes (inside or outside the vehicle).

8. Install the C pillar trim cover.

CONTINUED

REMOVAL AND INSTALLATION

Rear Window Glass

General Equipment
Hot air gun
Direct glazing cutter for bonded glass
Mixer/Application gun

Removal

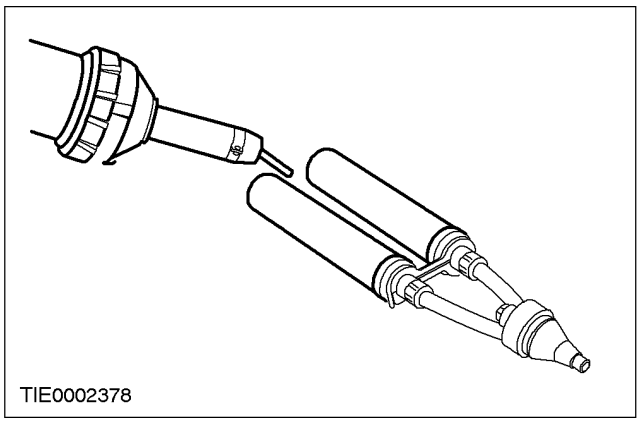

1. **NOTE:** Should the ambient temperature fall below 10°C heat the cartridges for approximately 15 minutes by placing them on a warm radiator, or by using a hot air gun set at approximately 25°C.
   Heat the polyurethane (PU) adhesive if necessary.

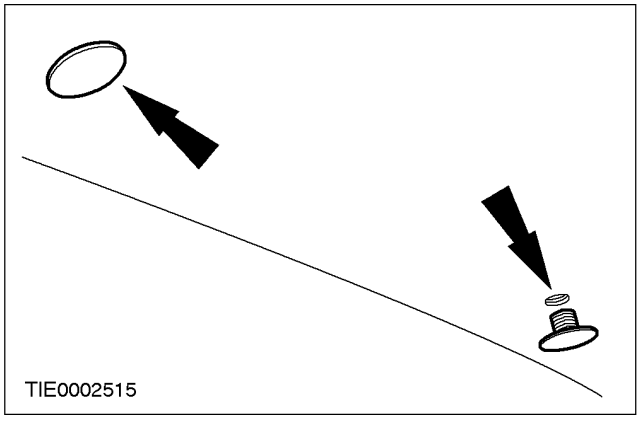

2. ⚠ **CAUTION: When removing fasteners, take extreme care, as they may be easily broken.**

NOTE: Remove the headliner rear fastener centre pins before removing the fasteners.
Detach the rear of the headliner.
- Remove the headliner fasteners.

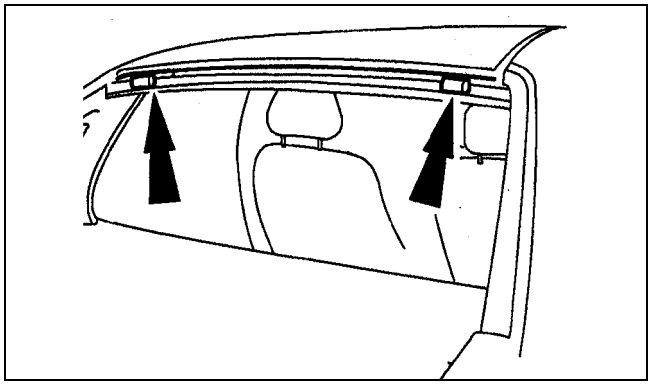

3. Lower the headliner.
   - Place two blocks of suitable material between the headliner and the roof panel to act as spacers.

CONTINUED

REMOVAL AND INSTALLATION (CONTINUED)

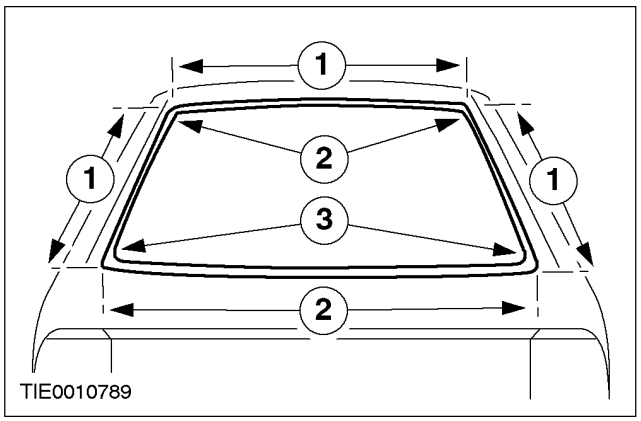

4. **WARNING: Wear gloves and eye protection when working with the glass cutting tool as the cutting operation may produce splinters. When using the cutter wear ear protectors. Failure to follow these instructions may result in personal injury.**

CAUTION: Make sure the cutting blades are changed where the cutting depth changes to avoid damage to the body and trim panels.

NOTE: Some resistance may be encountered when cutting through the glass locating pegs in the top corners of the glass.

NOTE: Carefully remove the remaining part of the locating pegs from the window opening flange.

From inside the vehicle cut the PU adhesive at the given maximum depths. Use the recommended blades, following the proprietary tool manufacturers instructions.

1. 25 mm.
2. 60 mm.
3. 70 mm.

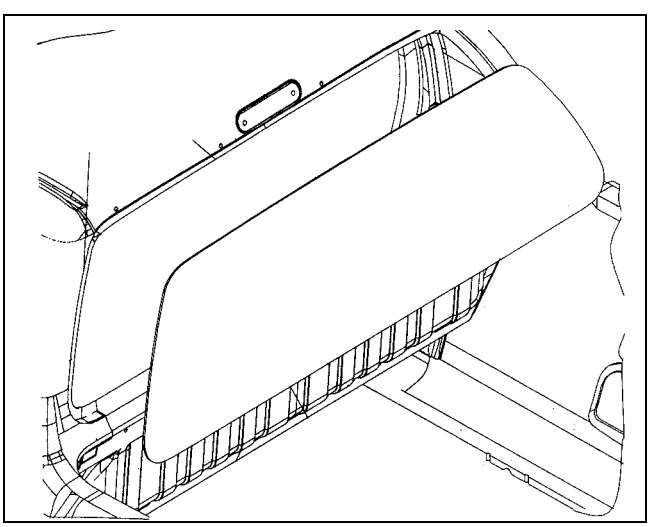

5. With the aid of another technician, use suction cups to remove the rear window glass.

CONTINUED

REMOVAL AND INSTALLATION (CONTINUED)

Installation

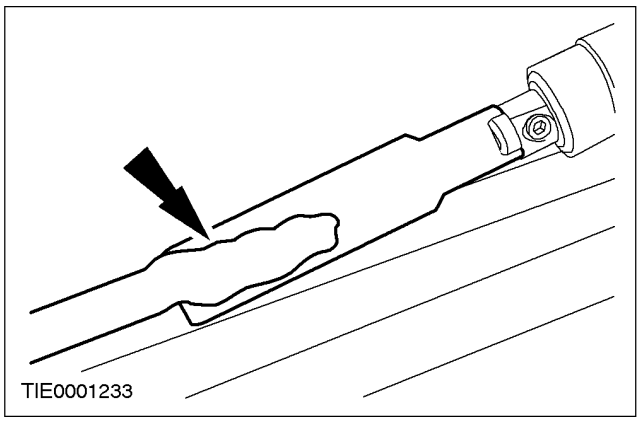

1. **CAUTION: During the curing period of the PU adhesive the door windows must be left open to avoid a build up of pressure when the doors are opened and closed.**

CAUTION: Avoid touching the trimmed surface, as this will inhibit the bonding of the new adhesive.

Remove the excess PU adhesive from the opening flange.

- Carefully trim the remaining PU adhesive from the rear window opening flange to leave approximately 1 mm of trimmed PU adhesive adhered to the opening flange.

2. Check the pinch weld sealing area for damaged sheet metal, rust or foreign material, which may have caused, or may cause glass breakage.

3. **CAUTION: To make sure the PU adhesive cures, it is essential that all bonding surfaces are free of moisture.**

Using a hot air gun, apply warm air (25°C) to the rear window opening flange and glass bond line to remove all traces of moisture.

4. Prepare the glass, rear window opening flange and trimmed PU adhesive in accordance with the instructions supplied with the adhesive kit.

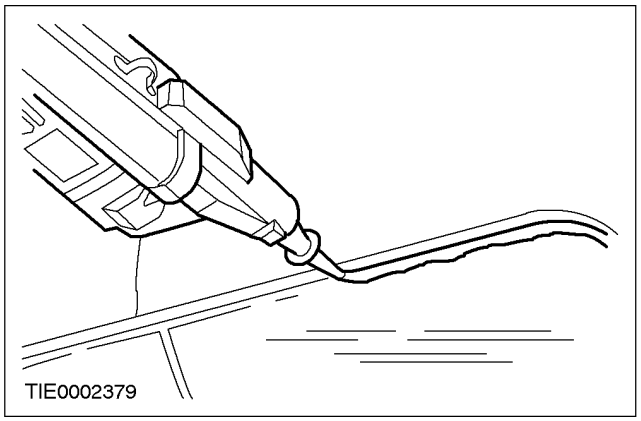

5. **NOTE:** Discard the first 100 mm of PU adhesive as this may have a reduced working time.

NOTE: To avoid water leaks, any breakage in the continuous bead should be overlapped by 20 mm.

Apply the PU adhesive in a continuous bead of between 8 and 10 mm height to the rear window glass along the bond line.

CONTINUED

REMOVAL AND INSTALLATION (CONTINUED)

6. **NOTE:** Firmly and evenly press in position; tape the glass in the correct position until the PU adhesive has cured.
   With the aid of another technician, use suction cups to install the rear window glass.

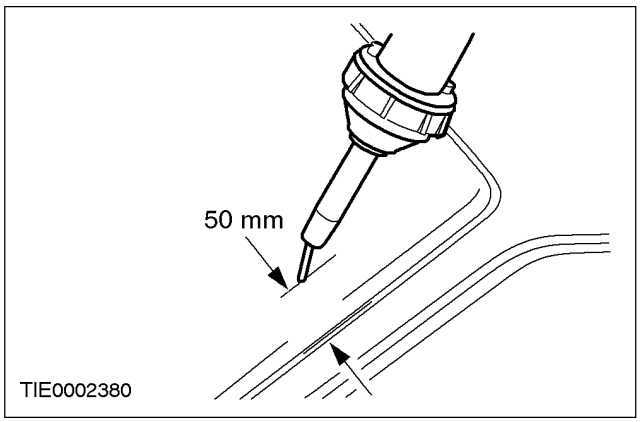

7. Should the ambient temperature fall below 10°C, use a hot air gun at a distance of approximately 50 mm from the surface and apply warm air (25°C) continuously for 15 minutes (inside or outside the vehicle).

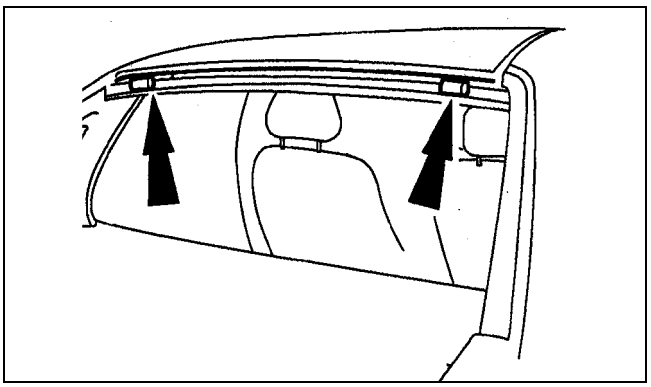

8. Install the headliner.
   - Remove the spacers.

CONTINUED

REMOVAL AND INSTALLATION

Front Door Window Regulator and Motor (42 338 0)

Removal

1. Remove the front door trim panel. For additional information, refer to Section 501-05.

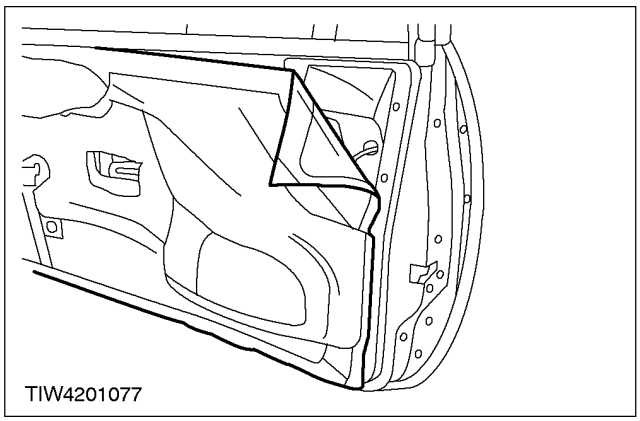

2. **CAUTION: Do not touch the adhesive surface, as re-bonding will be impaired.**
   Detach the door panel watershield.

3. Connect the window control switch electrical connector.

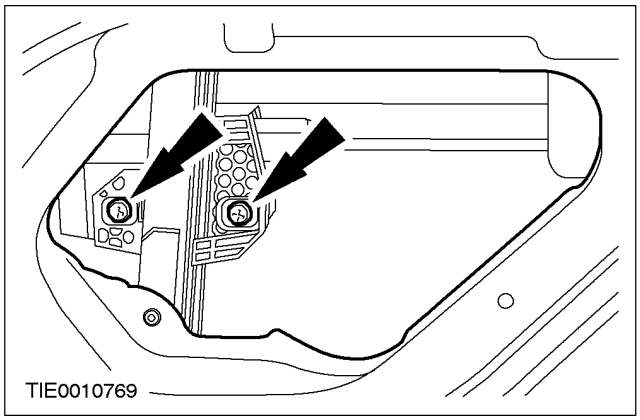

4. Remove the window glass retaining screws.
   - Align the retaining screws with the access hole.

5. Detach the window glass from the window regulator.

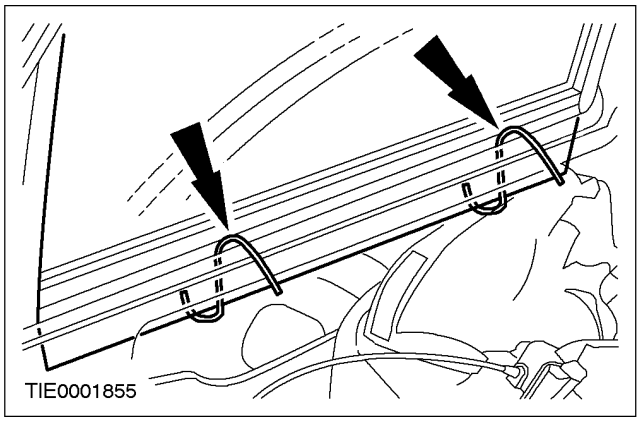

6. **CAUTION: Make sure the window glass is adequately supported at the top of the opening.**
   Using suitable hooks, raise and secure the window glass.

CONTINUED

REMOVAL AND INSTALLATION (CONTINUED)

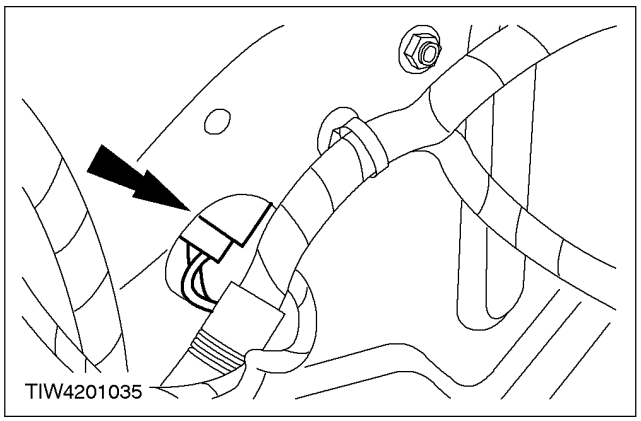

7. Disconnect the window regulator motor electrical connector.

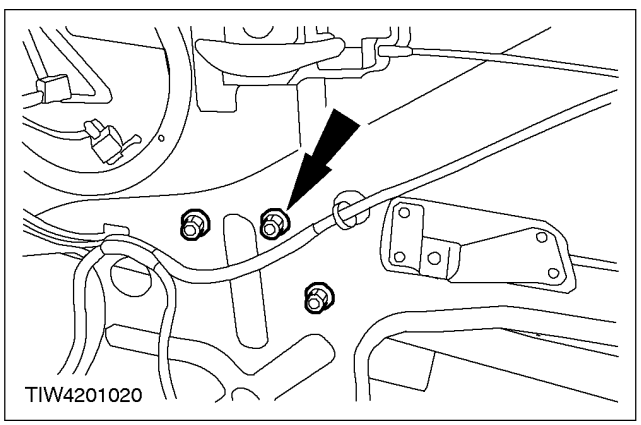

8. Remove the window regulator and motor.

Installation

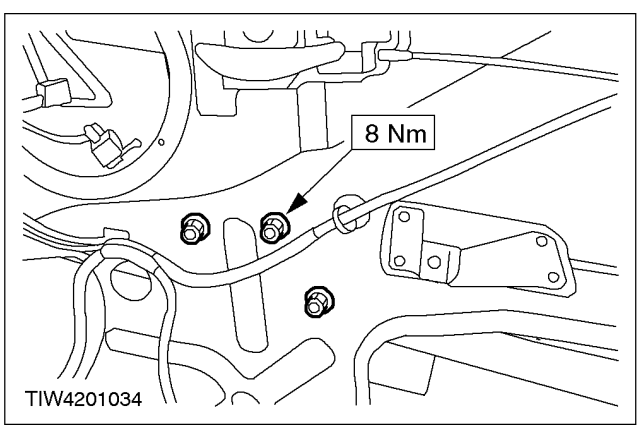

1. Install the window regulator and motor.

2. Connect the window regulator motor electrical connector.

CONTINUED

REMOVAL AND INSTALLATION (CONTINUED)

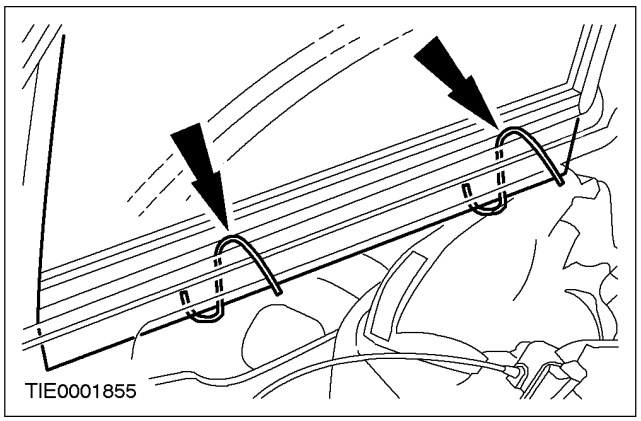

3. **CAUTION: Make sure the window glass is adequately supported at the top of the opening.**
   Remove the hooks

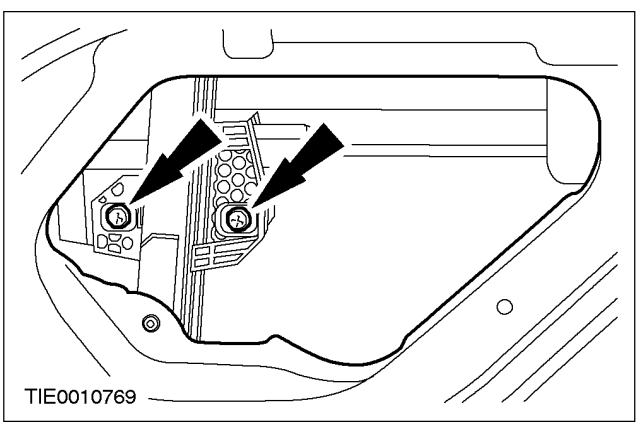

4. Align the window regulator clamp with the access hole.
5. Attach the window glass to the window regulator clamp.
6. Adjust the window glass. For additional information, refer to Door Window Glass Adjustment. in this section
7. Disconnect the window control switch electrical connector.
8. Attach the door panel watershield.
9. Install the front door trim panel. For additional information, refer to Section 501- 05.

CONTINUED

REMOVAL AND INSTALLATION

Windshield Glass (42 115 0)

General Equipment
Hot air gun
Direct glazing cutter for bonded glass
Mixer/Application gun

Removal

1. Disconnect the battery ground cable. For additional information, refer to Section 414- 01.

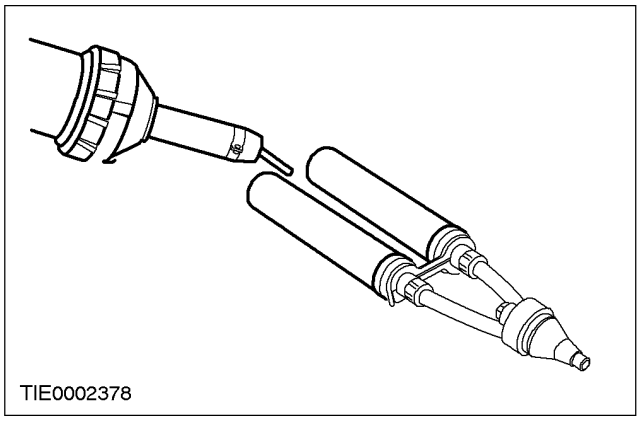

2. **NOTE:** Should the ambient temperature fall below 10°C heat the cartridges for approximately 15 minutes by placing them on a warm radiator, or by using a hot air gun set at approximately 25°C.
   Heat the polyurethane (PU) adhesive if necessary.

3. Raise the hood.

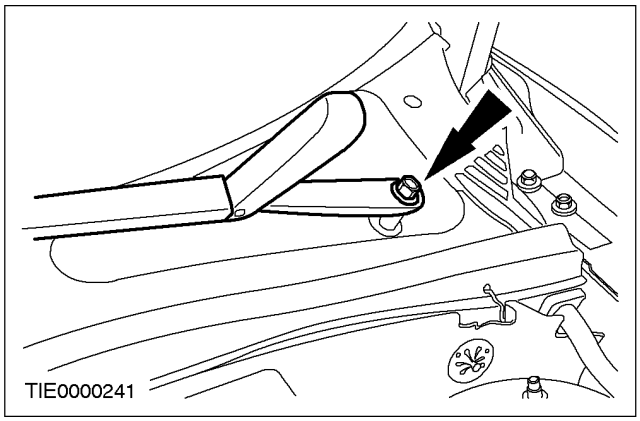

4. Remove the windshield wipers.

5. Lower the hood.

6. Remove the interior lamp.

CONTINUED

REMOVAL AND INSTALLATION (CONTINUED)

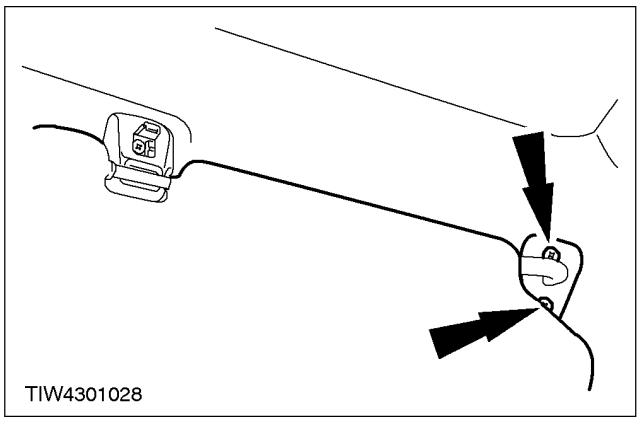

7. Remove the sun visors.

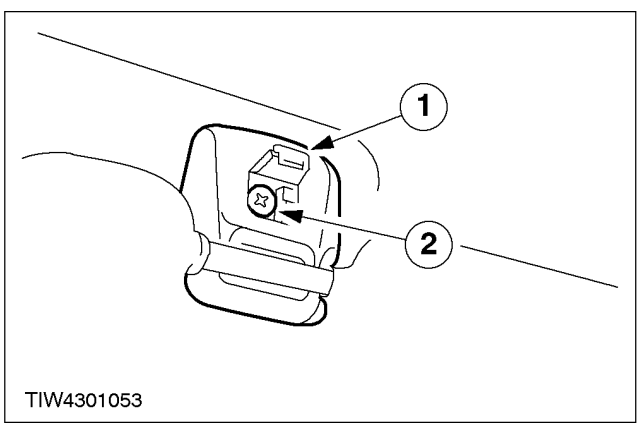

8. Remove the sun visor retaining clip.
   1. Open the screw cover.
   2. Remove the screw.

9. Remove the rear view mirror.

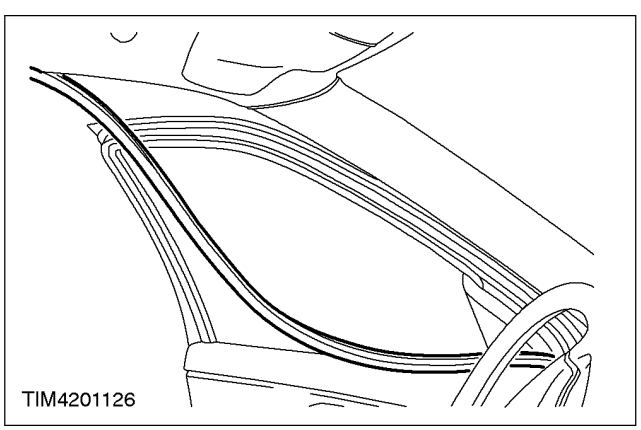

10. Detach the door weather strip on each side.

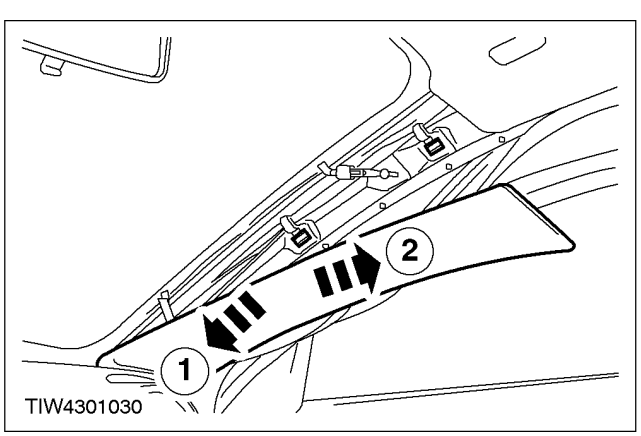

11. Remove the A-pillar trim panels on each side.
    1. Unclip the trim panel.
    2. Slide the trim panel upwards.

CONTINUED

REMOVAL AND INSTALLATION (CONTINUED)

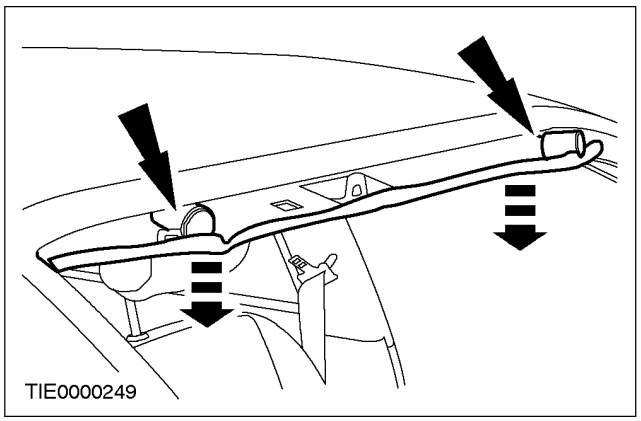

12. Detach the front of the headliner.
    - Place two blocks of suitable material between the headliner and the roof panel to act as spacers.

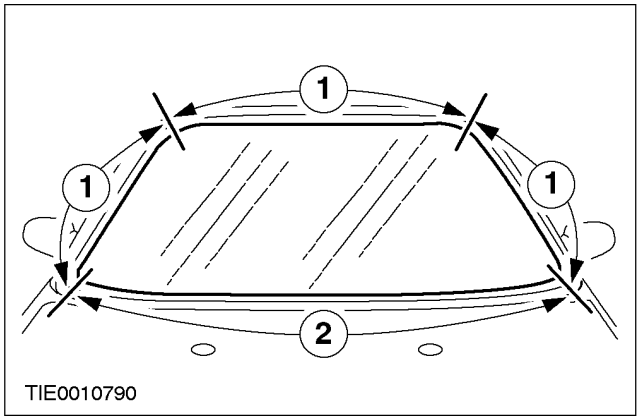

13. **WARNING: Wear gloves and eye protection when working with the glass cutting tool as the cutting operation may produce splinters. When using the cutter wear ear protectors. Failure to follow these instructions may result in personal injury.**

CAUTION: Make sure the cutting blades are changed where the cutting depth changes to avoid damage to the body and trim panels.

NOTE: Some resistance may be encountered when cutting through the glass locating pegs in the top corners of the glass.

NOTE: Carefully remove the remaining part of the locating pegs from the window opening flange.

From inside the vehicle cut the PU adhesive at the given maximum depths. Use the recommended blades, following the proprietary tool manufacturers instructions.

1. 15 mm.
2. 18 mm.

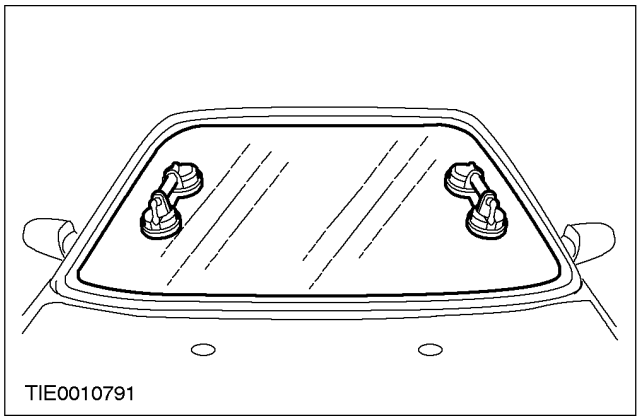

14. With the aid of another technician, use suction cups to remove the windshield.

15. Remove the windshield weather strip.

CONTINUED

REMOVAL AND INSTALLATION (CONTINUED)

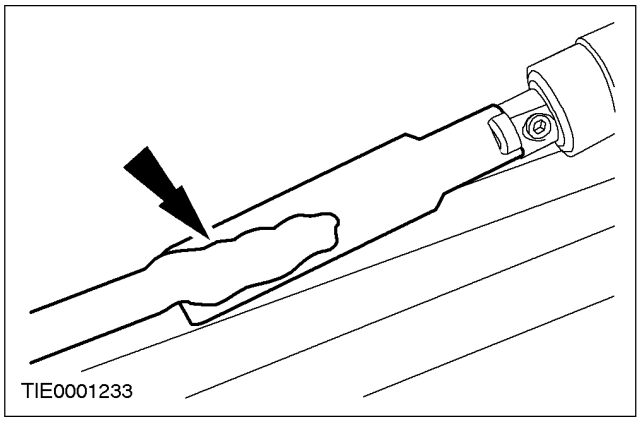

Installation

1. **CAUTION: During the curing period of the PU adhesive the door windows must be left open to avoid a build up of pressure when the doors are opened and closed.**

   CAUTION: Avoid touching the trimmed surface, as this will inhibit the bonding of the new adhesive.

   Remove the excess PU adhesive from the opening flange.

   - Carefully trim the remaining PU adhesive from the windshield opening flange to leave approximately 1 mm of trimmed PU adhesive adhered to the opening flange.

2. Check the pinch weld sealing area for damaged sheet metal, rust or foreign material, which may have caused, or may cause glass breakage.

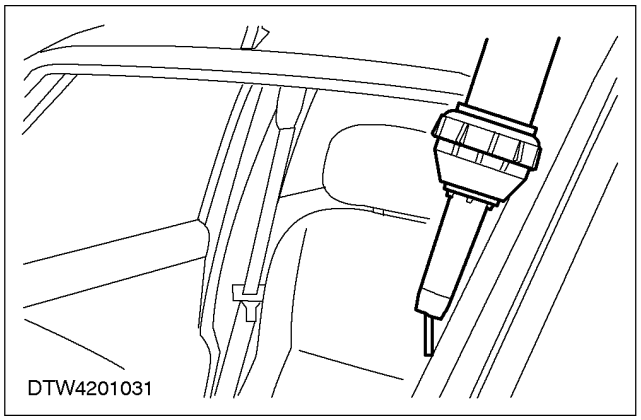

3. **CAUTION: To make sure the PU adhesive cures, it is essential that all bonding surfaces are free of moisture.**

   Using a hot air gun, apply warm air (25°C) to the windshield opening flange and glass bond line to remove all traces of moisture.

4. Prepare the glass, windshield opening and trimmed PU adhesive in accordance with the instructions supplied with the adhesive kit.

5. **NOTE:** Discard the first 100 mm of PU adhesive as this may have a reduced working time.

NOTE: To avoid water leaks, any breakage in the continuous bead should be overlapped by 20 mm.

Apply a thin continuous bead of PU adhesive to the edge of the windshield.

6. Install the windshield weather strip.

CONTINUED

REMOVAL AND INSTALLATION (CONTINUED)

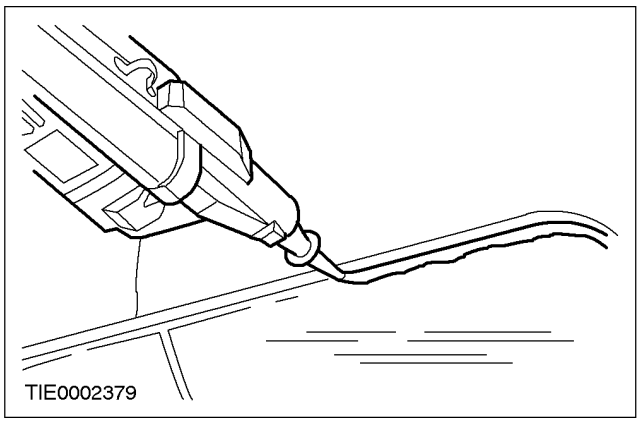

7. **NOTE:** Discard the first 100 mm of PU adhesive as this may have a reduced working time.

NOTE: To avoid water leaks, any breakage in the continuous bead should be overlapped by 20 mm.

Apply the PU adhesive in a continuous bead of between 8 and 10 mm height to the windshield opening flange along the bond line.

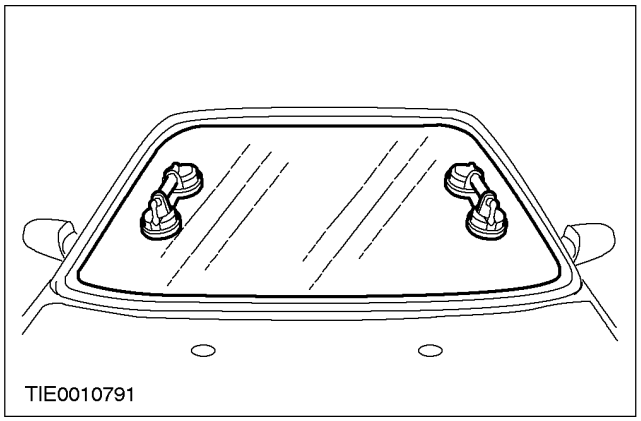

8. **NOTE:** Firmly and evenly press in position. With the aid of another technician, use suction cups to install the windshield.

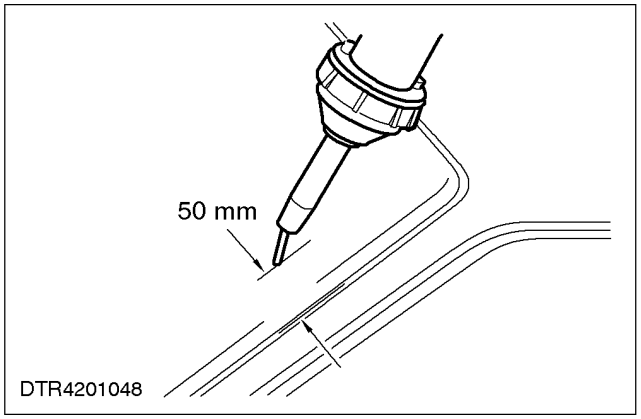

9. Should the ambient temperature fall below 10°C use a hot air gun at a distance of approximately 50 mm from the surface and apply warm air (25°C) continuously for 15 minutes (inside or outside the vehicle).

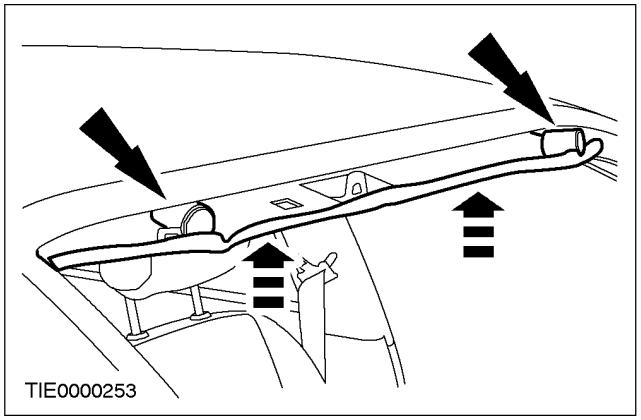

10. Install the headliner.
    - Remove the spacers.

11. Install the A-pillar trim panels on each side.

CONTINUED

REMOVAL AND INSTALLATION (CONTINUED)

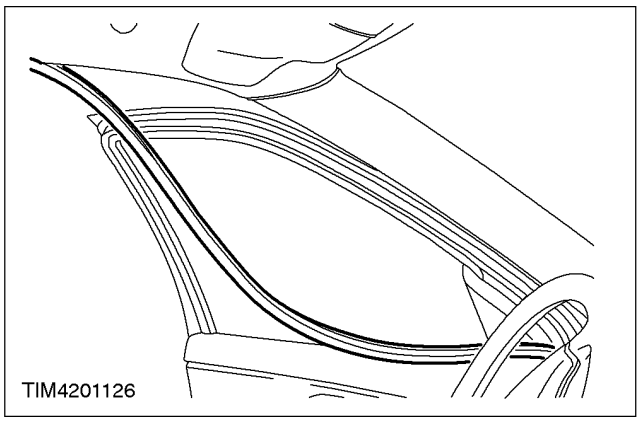

12. Attach the door weather strip on each side.

13. Install the rear view mirror.

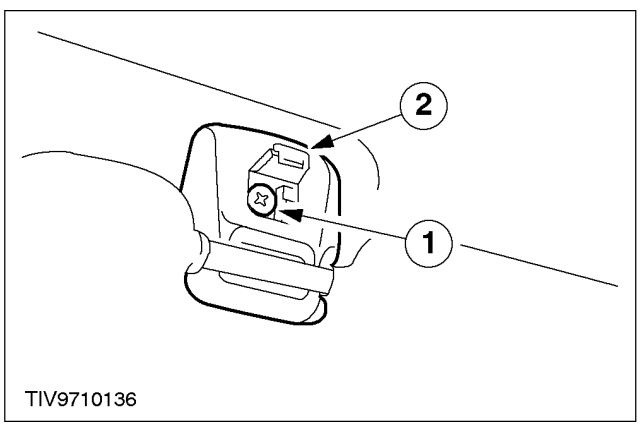

14. Install the sun visor retaining clips.
    1. Install the screw.
    2. Close the screw cover.

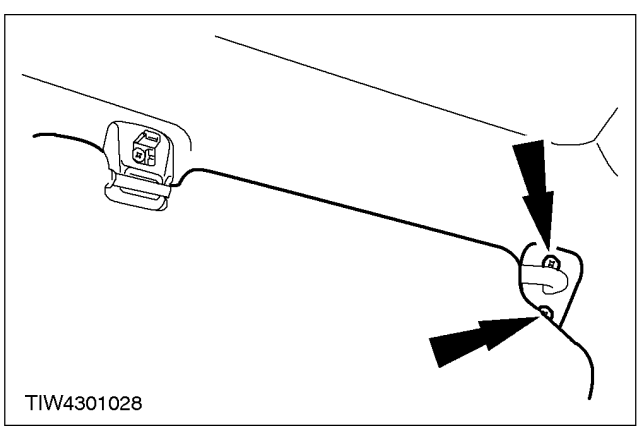

15. Install the sun visors.

16. Install the interior lamp.

17. Raise the hood.

CONTINUED

REMOVAL AND INSTALLATION (CONTINUED)

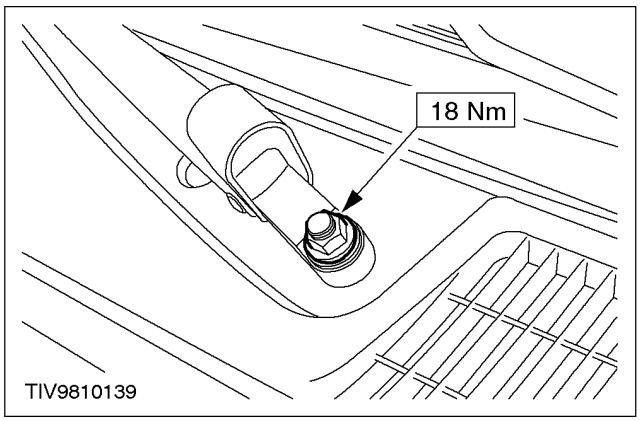

18. Install the windshield wipers.

19. Lower the hood.

20. Connect the battery ground cable. For additional information, refer to Section 414-01.

GENERAL PROCEDURES

Door Window Glass Adjustment (42 001 0)

Adjustment

1. Remove the door trim panel. For additional information, refer to Section 501-05.

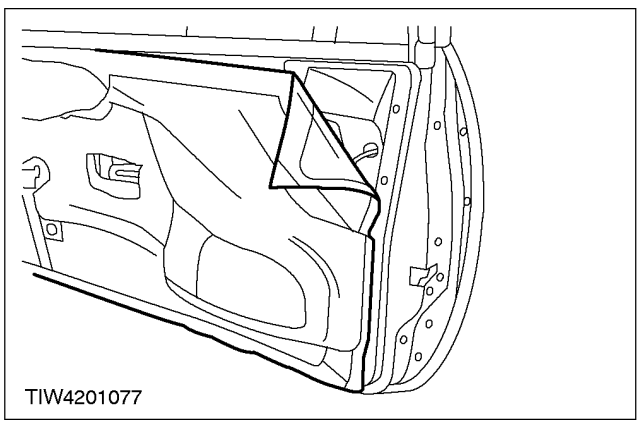

2. **CAUTION: Do not touch the adhesive surface, as re-bonding will be impaired.**
   Detach the door panel watershield.
   - Using a plastic knife (disposable cutlery), cut through the Butyl strip to enable the watershield to be peeled back.

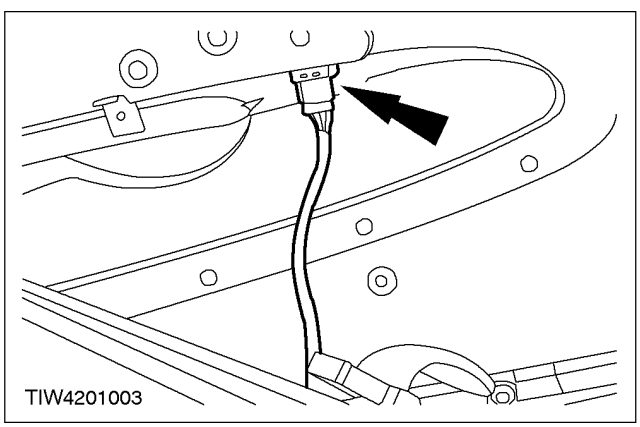

3. Connect the window operating switch electrical connector.

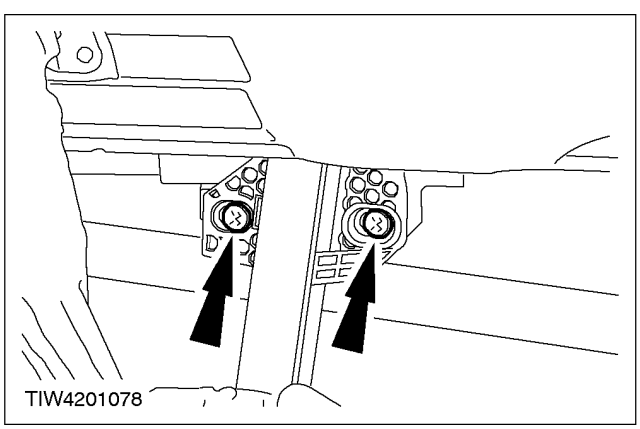

4. Loosen the window glass clamp retaining screws.
   - Align the retaining screws with the access hole.

GENERAL PROCEDURES (CONTINUED)

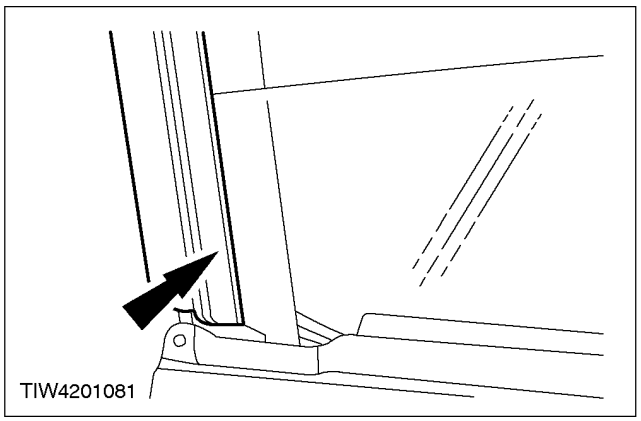

5. Make sure the glass is inside the doorframe outer seal.

6. Lower the glass to the bottom.

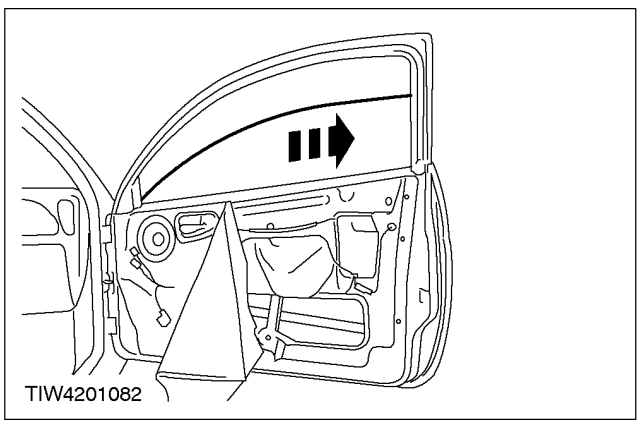

7. Standing inside the door, apply rearward hand pressure on the outside of the window glass, at the same time raising the glass to its fully closed position.

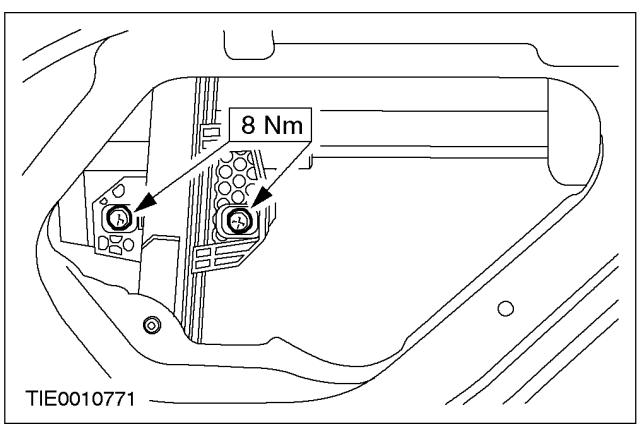

8. Tighten the window glass clamp retaining screws.

9. Attach the door panel watershield.

10. Install the door trim panel. For additional information, refer to Section 501-05.

SPECIFICATIONS

Lubricants, Fluids, Sealers and Adhesives

Item	Specification
Cleaner	SKM-2G9524-A
Primer	SKM-2G9525-A
1K Adhesive	WSKM-2G309-B
2K Adhesive	ESK-M2G369-A1
2K Hardener	ESK-M2G369-A2

Torque Specifications

Description	Nm
Wiper arm retaining nuts	18
Glass retaining clamp screws	5
Window regulator motor retaining nuts	8

SECTION 501-12 Instrument Panel

VEHICLE APPLICATION: 2002 Bantam

SUBJECT **PAGE**

REMOVAL AND INSTALLATION
Instrument Panel ..... (43 644 0) 501-12-2/5

SPECIFICATIONS
Specifications 501-12-6
Torque Specifications 501-12-6

REMOVAL AND INSTALLATION

Instrument Panel (43 644 0)

Removal

WARNING: Always wear safety glasses when working on a vehicle equipped with an air bag and when handling the air bag module. Failure to follow this instruction may result in personal injury.

1. Remove the audio unit. For additional information, refer to Section 415-01.
2. Detach the heater control panel.

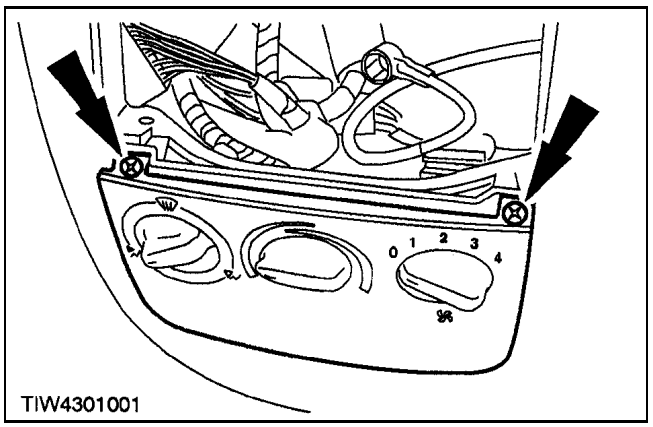

3. Disconnect the electrical connectors and heater control cable.

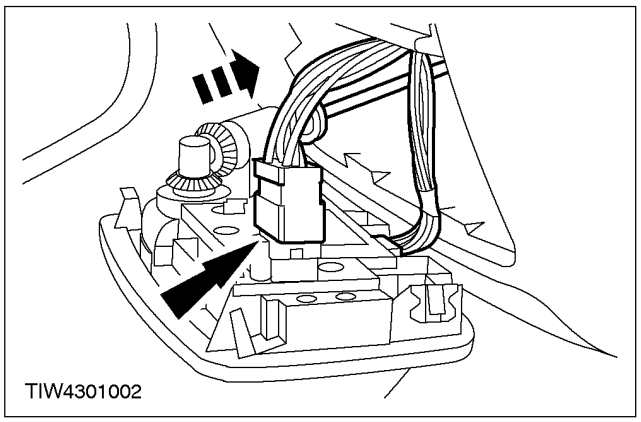

4. Remove the ashtray.

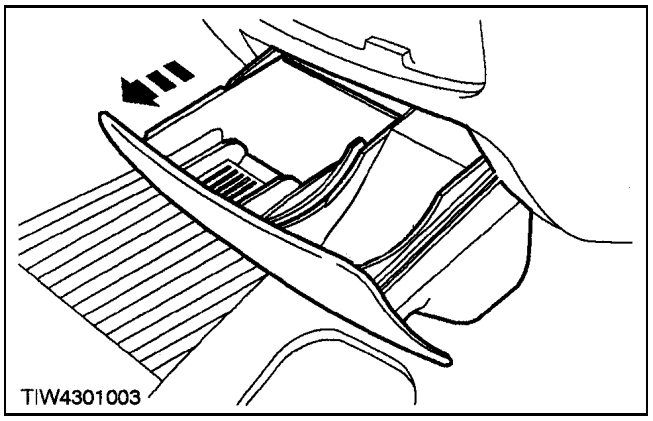

5. Remove the steering column. For additional information, refer to Section 211-04.

REMOVAL AND INSTALLATION (CONTINUED)

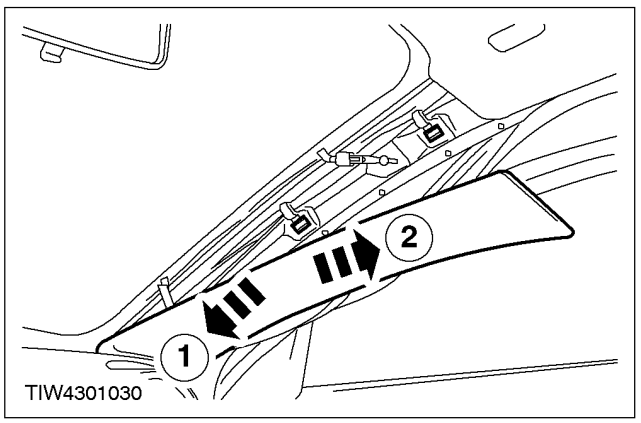

6. Remove the A-pillar trim panels.
   1. Unclip the trim panel.
   2. Slide the trim panel upwards.

7. Remove the instrument cluster. For additional information, refer to Section 413-01.

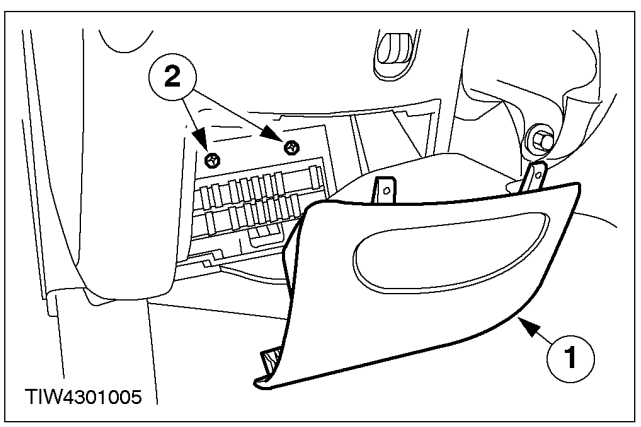

8. Detach the central junction box.
   1. Remove the cover.
   2. Remove the central junction box screws.

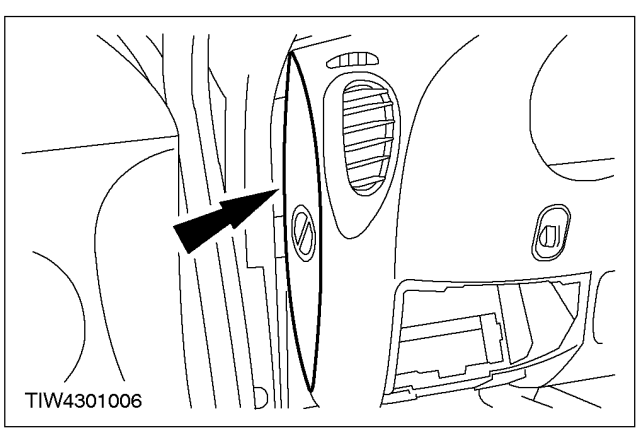

9. Remove the instrument panel side trim panels (left-hand side shown, right-hand side similar).

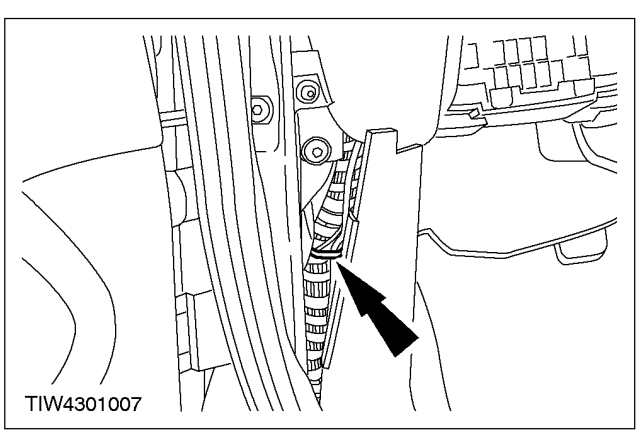

10. Detach the wiring harness.

REMOVAL AND INSTALLATION (CONTINUED)

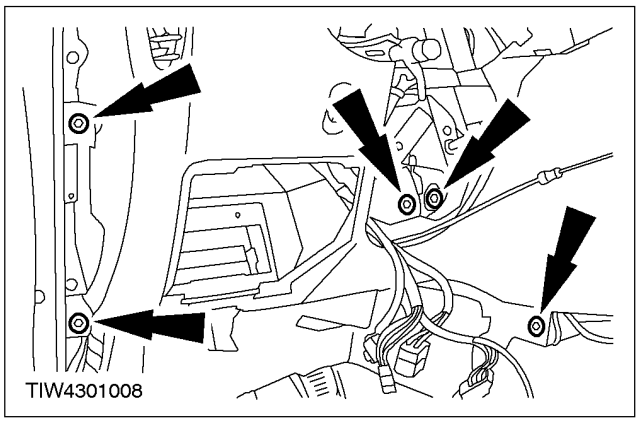

11. NOTE: Fold the floor covering back to reveal the instrument panel lower bolts.
Remove the instrument panel left-hand side retaining bolts.

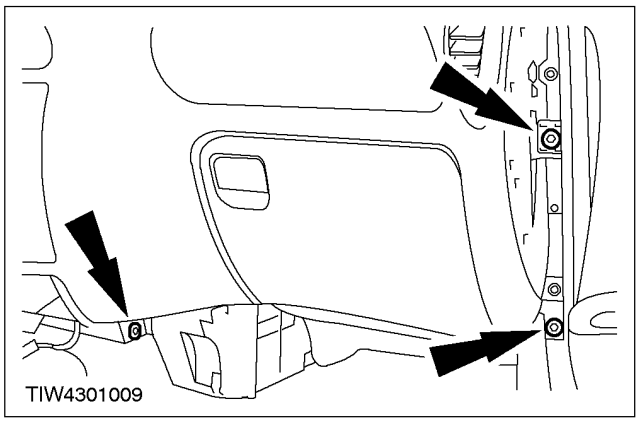

12. Remove the instrument panel right-hand side retaining bolts.

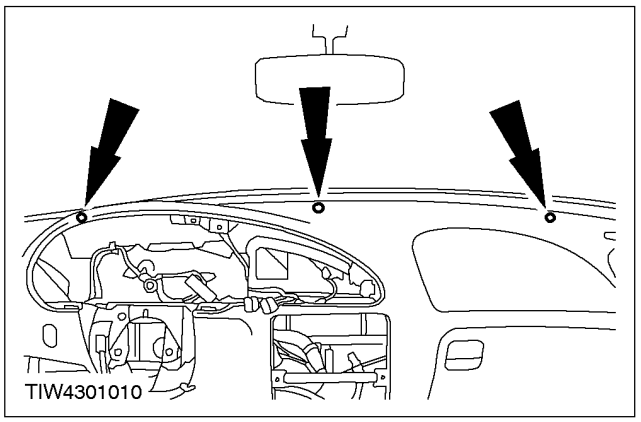

13. Remove the instrument panel upper retaining bolts.

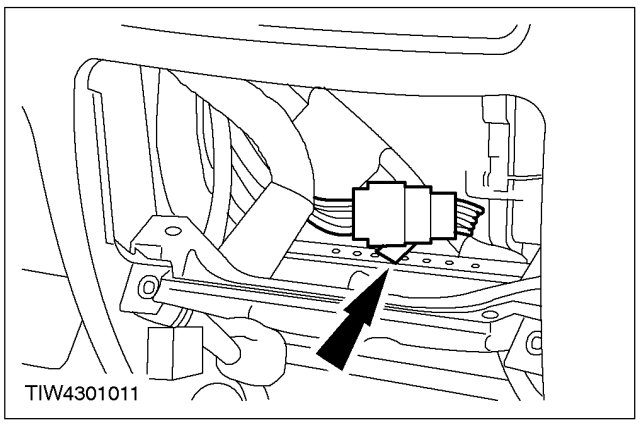

14. Detach the electrical connector.

15. Remove the passenger air bag module.
For additional information,
refer to Section 501-20B.

REMOVAL AND INSTALLATION (CONTINUED)

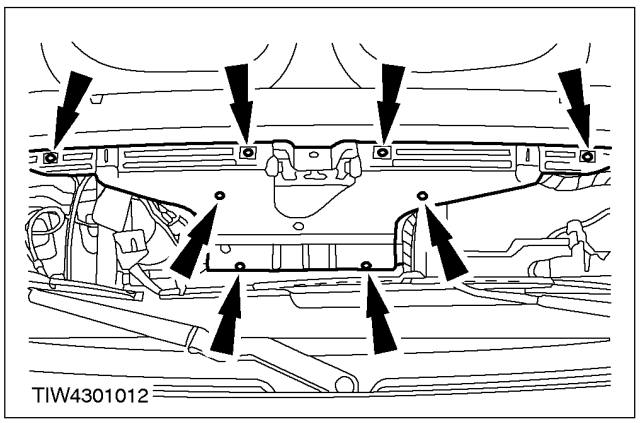

16. Remove the air ducting.

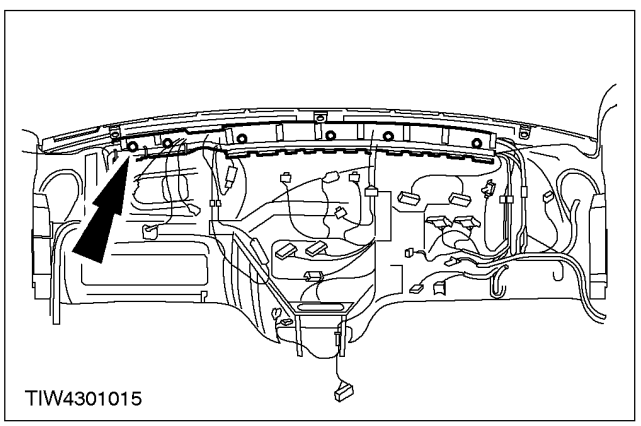

17. Detach the instrument panel wiring harness.

18. Remove the instrument panel.

Installation

1. To install, reverse the removal procedure.

SPECIFICATIONS

Torque Specifications

Description	Nm
Instrument panel upper retaining bolts	3
Instrument panel side retaining bolts	19
Instrument panel lower retaining bolts	19

SECTION 501-14 Handles, Locks, Latches and Entry Systems

VEHICLE APPLICATION: 2002 Bantam

SUBJECT **PAGE**

DESCRIPTION AND OPERATION

Handles, Locks, Latches and Entry Systems 501-14-2

DIAGNOSIS AND TESTING

Locks, Latches and Entry Systems 501-14-3
Inspection and Verification 501-14-3

REMOVAL AND INSTALLATION

Hood Latch ..... (41 232 0) 501-14-4
Front Door Latch ..... (41 351 0) 501-14-5/8
Hood Latch Release Handle ..... (41 226 0) 501-14-9
Exterior Door Handle ..... (41 333 0) 501-14-10/11
Door Latch Remote Control 501-14-12
Tailgate Hinge 501-14-13
Tailgate Handle Assembly 501-14-14
Tailgate Actuating Rods and Catches 501-14-15
Ignition Lock Cylinder ..... (33 513 0) 501-14-16
Door Lock Cylinder ..... (41 336 0) 501-14-17/18

DISASSEMBLY AND ASSEMBLY

Door Lock Cylinder 501-14-19/21

SPECIFICATIONS

Specifications 501-14-22
Torque Specifications 501-14-22

DESCRIPTION AND OPERATION

Handles, Locks, Latches and Entry Systems

The passenger compartment doors and hood are of the conventional latch to striker design.

The door latches are operated by the conventional actuating rod system connected to the exterior door handles and the door latch remote controls, with the front door latches also connected to the door lock cylinders.

The door latch remote controls have a single lever to lock, unlock and open the doors from the interior.

A cable operates the hood latch and release handle. On vehicles equipped with central locking, actuators supplement the door latches and the fuel filler flap. The door latch actuators are mounted directly onto the individual latch assemblies while the fuel filler flap actuator is mounted onto the vehicle body from inside the luggage compartment.

The door and fuel filler cap lock cylinders may be overhauled using a service kit which consists of a lock housing, tumbler magazine, tumbler set, barrel return spring, operating lever and a sachet of grease. For additional information, refer to Door Lock Cylinder in this section.

DIAGNOSIS AND TESTING

Locks, Latches and Entry Systems

Inspection and Verification

1. Verify the customer concern.
2. Visually inspect for obvious signs of mechanical or electrical damage.

Visual Inspection Chart

Mechanical	Electrical
• Misaligned door(s) • Misaligned hood • Door latch(s) • Actuating rod(s) • Exterior door handle(s) • Door latch remote control(s) • Door lock cylinder(s) • Cable(s)	• Door latch actuator(s) • Battery • Fuse(s) • Loose or corroded electrical connector(s) • Wiring harness

3. If an obvious cause for an observed or reported concern is found, correct the cause (if possible) before proceeding to the next step.
4. If the cause is not visually evident, verify the symptom and refer to WDS to diagnose the system.

REMOVAL AND INSTALLATION

Hood Latch (41 232 0)

Removal

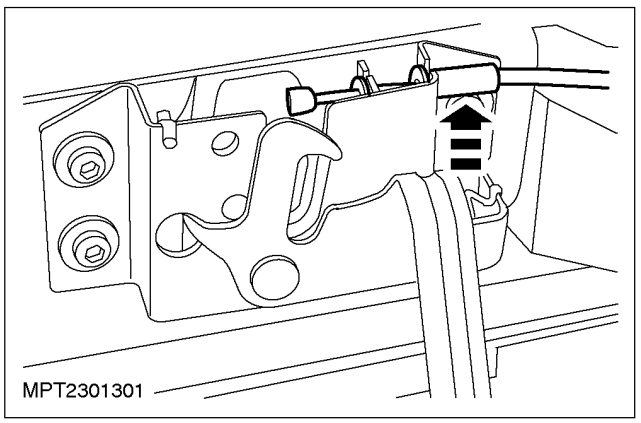

1. Detach the hood latch release cable.

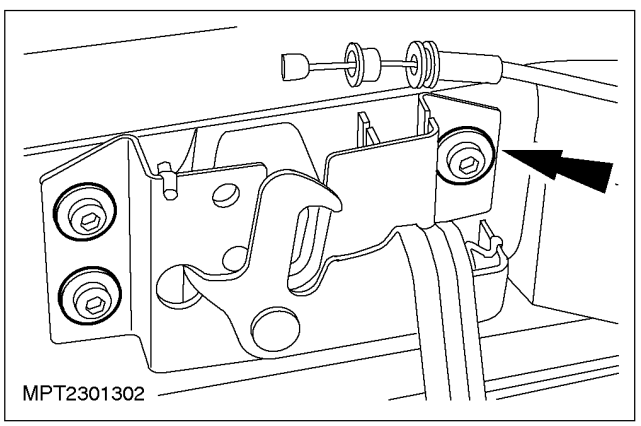

2. Remove the hood latch.

Installation

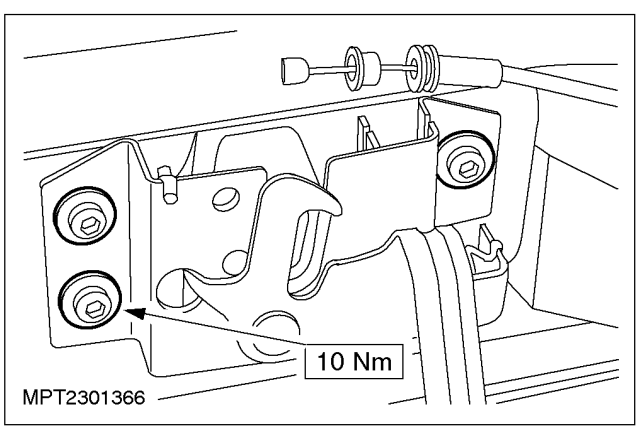

1. To install, reverse the removal procedure.

REMOVAL AND INSTALLATION

Front Door Latch (41 351 0)

Removal

1. Remove the front door trim panel. For additional information, refer to Section 501-05.

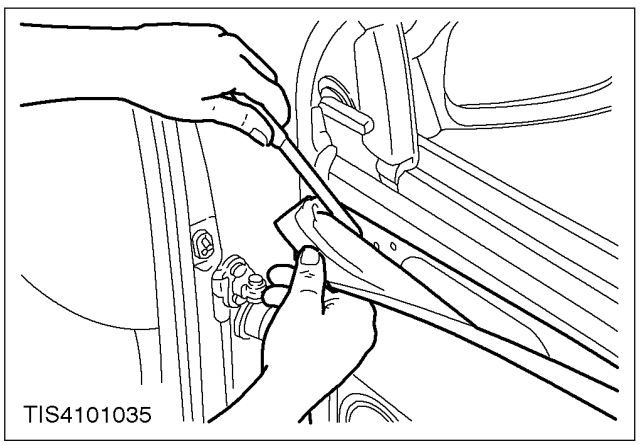

2. **CAUTION: Do not touch the adhesive surface, as re-bonding will be impaired.**
   Peel back the watershield.

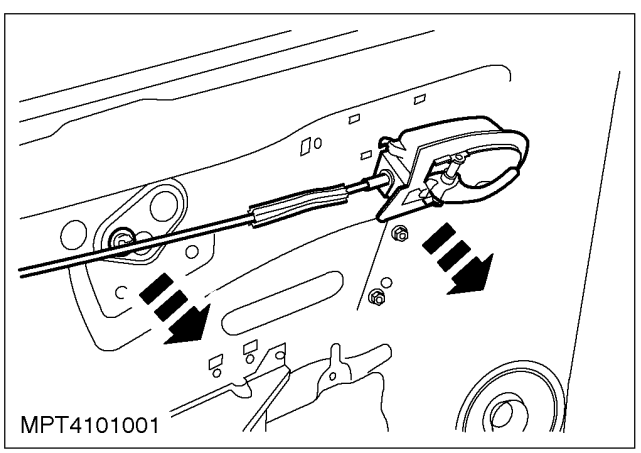

3. Detach the front door latch remote control.

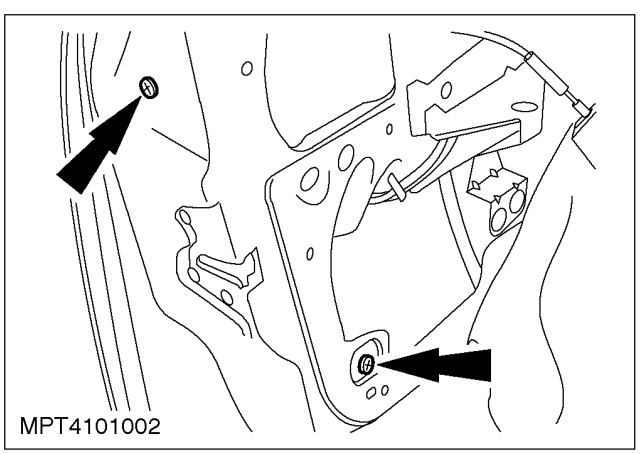

4. Remove the window top run.

REMOVAL AND INSTALLATION (CONTINUED)

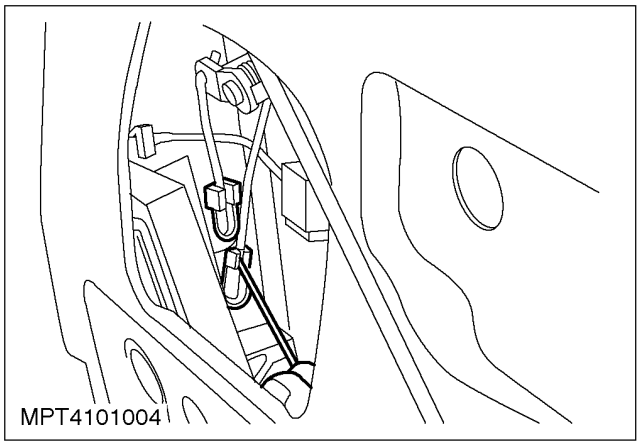

5. Disconnect the door latch actuating rods.

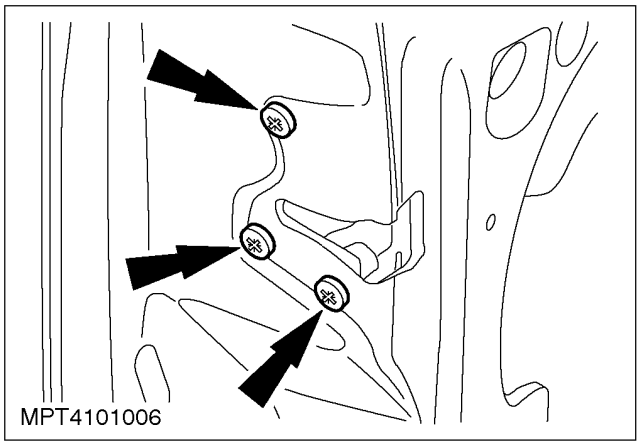

6. Remove the front door latch and front door latch remote control assembly.

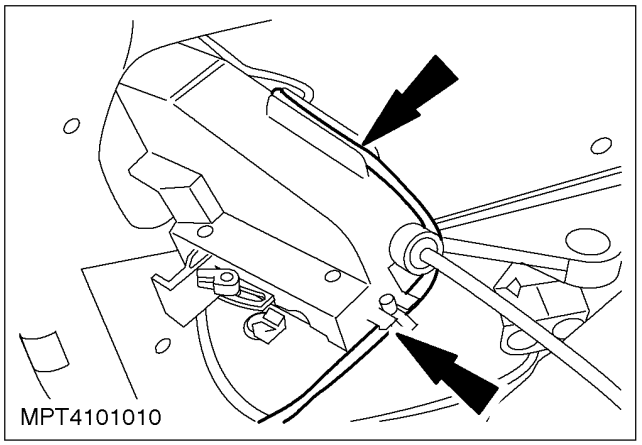

7. Detach the front door latch actuator wiring harness.

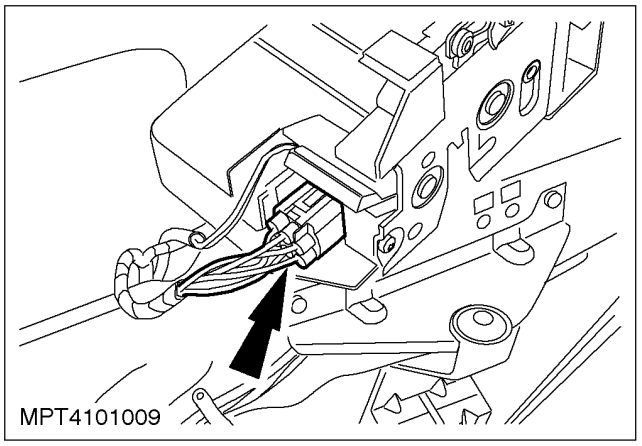

8. Remove the front door latch and front door latch remote control assembly.
   - Disconnect the front door latch actuator electrical connector.

REMOVAL AND INSTALLATION (CONTINUED)

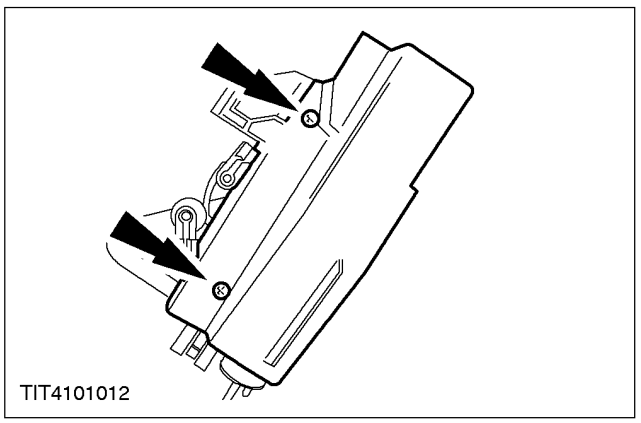

9. Remove the front door latch cover retaining screws.

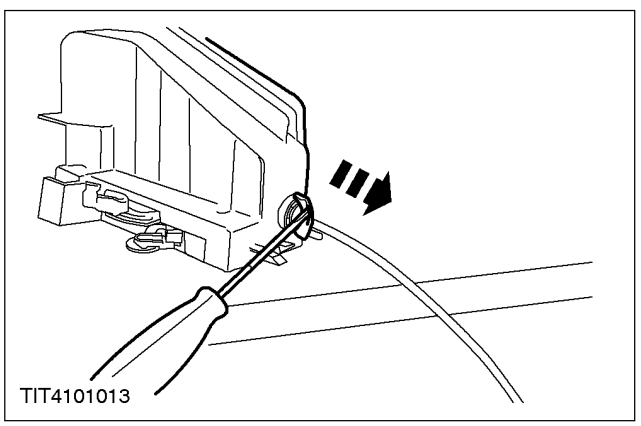

10. Slide the front door latch cover away from the front door latch.
    - Detach the front door latch cover grommet.

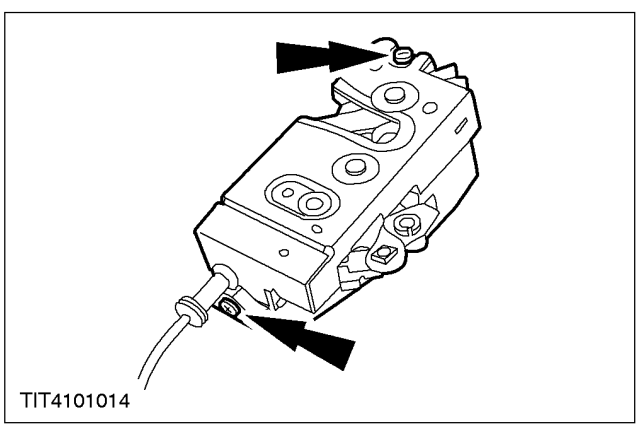

11. Remove the front door latch actuator.

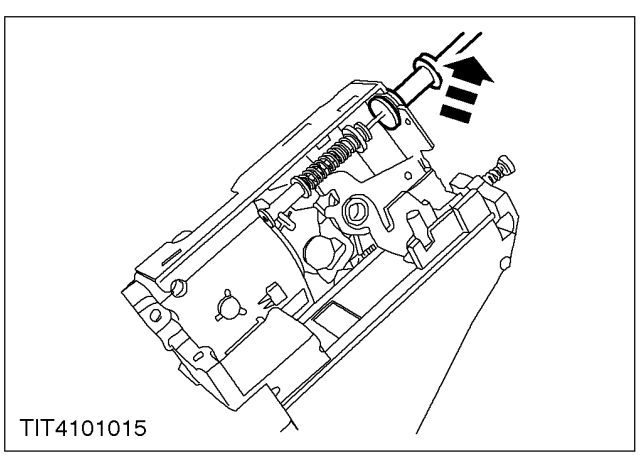

12. Detach the front door latch remote control outer cable from the door latch.

REMOVAL AND INSTALLATION (CONTINUED)

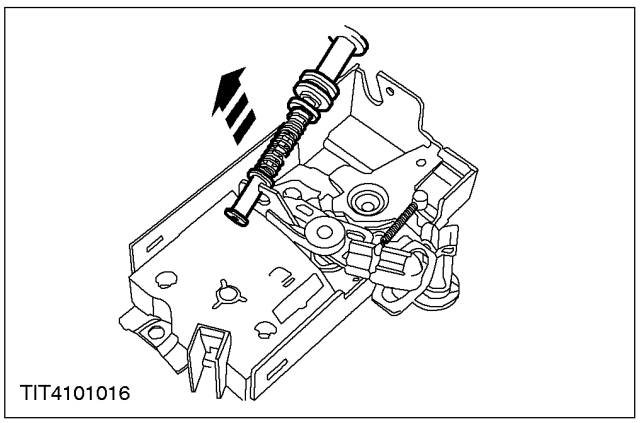

13. Remove the front door latch remote control outer cable from the door latch.

Installation

1. To install, reverse the removal procedure.

REMOVAL AND INSTALLATION
Hood Latch Release Handle (41 226 0)

Removal

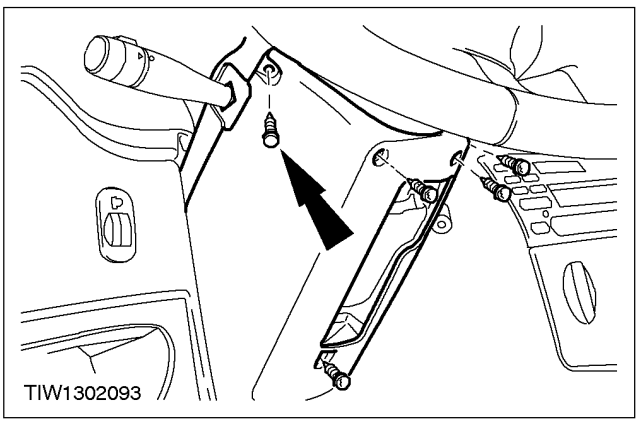

1. Remove the steering column upper and lower shrouds.

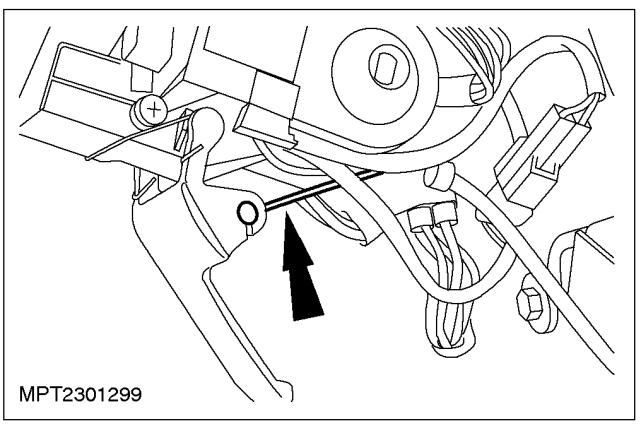

2. Detach the hood latch release cable.

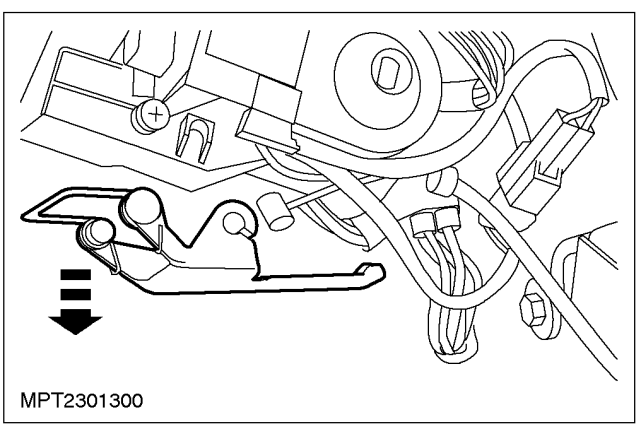

3. Remove the hood release handle.

Installation

1. To install, reverse the removal procedure.

REMOVAL AND INSTALLATION

Exterior Door Handle (41 333 0)

Removal

1. Disconnect the battery ground cable.
2. Remove the door trim panel. For additional information, refer to Section 501-05.

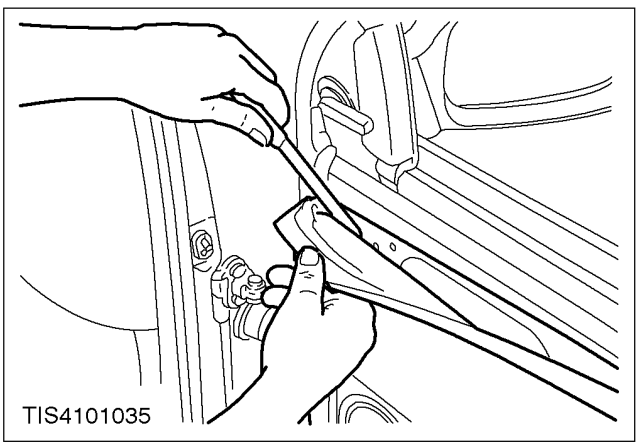

3. **CAUTION: Do not touch watershield adhesive surfaces, as re-bonding will be impaired.**
   Locally detach the watershield.
   - Using a plastic knife, (disposable cutlery) cut through the butyl strip to enable the protective sheet to be peeled back for access. Do not attempt to peel the sheet from the door without cutting the butyl.

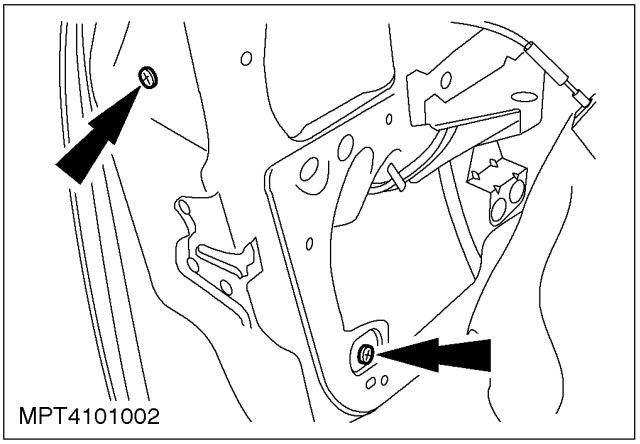

4. Detach the window guide runner and lock shield (two screws).

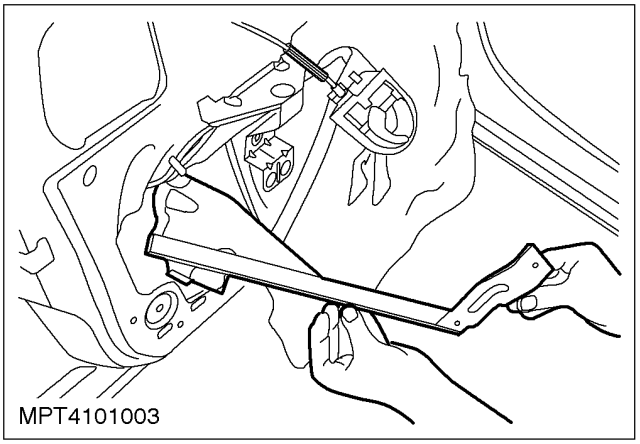

5. Remove the window guide runner.

REMOVAL AND INSTALLATION (CONTINUED)

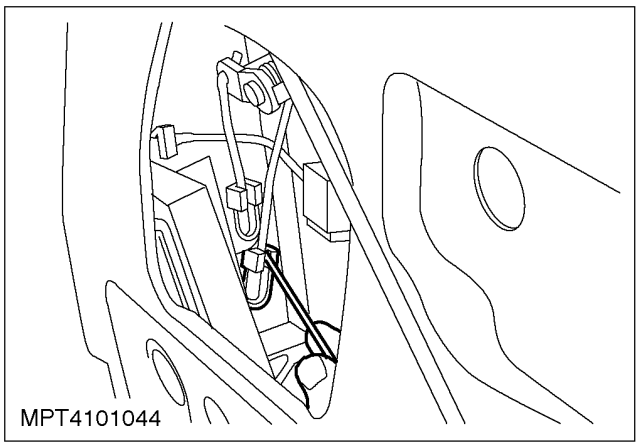

6. Disconnect the door lock actuating rod.
   - Prise open the clip and pull out the rod.

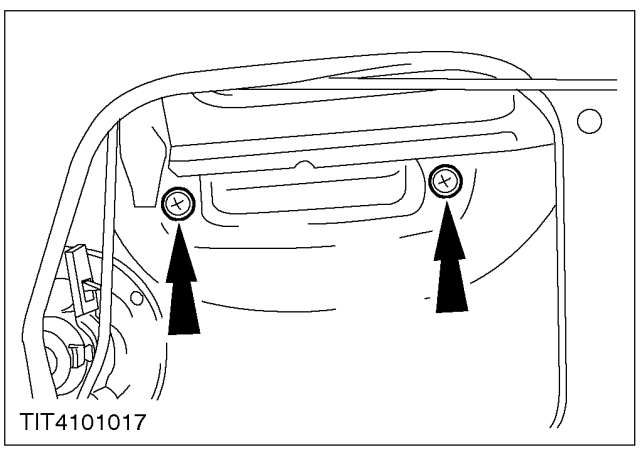

7. Remove the door handle (two screws).

Installation

1. Refit the components in reverse order.

REMOVAL AND INSTALLATION

Door Latch Remote Control

Removal

1. Disconnect the battery ground cable.
2. Remove the door trim panel. For additional information, refer to Section 501-05.

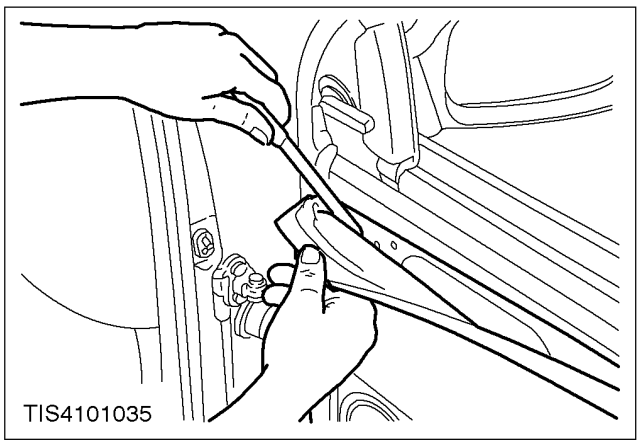

3. **CAUTION: Do not touch the watershield adhesive surfaces, as re-bonding will be impaired.**
   Locally peel back the trim watershield.
   - Using a plastic knife, (disposable cutlery) cut through the Butyl strip to enable the protective sheet to be peeled back for access. Do not attempt to peel the sheet from the door without cutting the butyl.

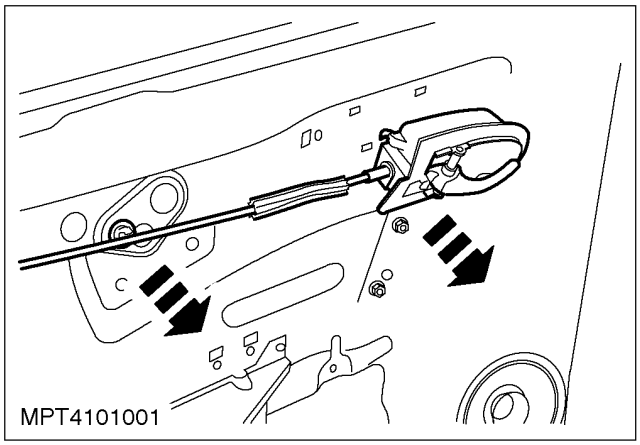

4. Unclip and detach the remote control lever and cable from the door.

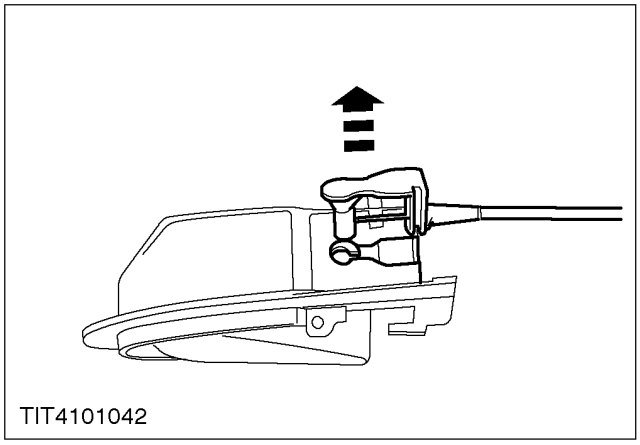

5. Disconnect the lock actuating cable.
   - Align the inner cable nipple with the outer cable clip molding. Push the nipple up to remove both inner and outer cables from the handle.

Installation

1. To install, reverse the removal procedure.

REMOVAL AND INSTALLATION (CONTINUED)

Tailgate - Hinge

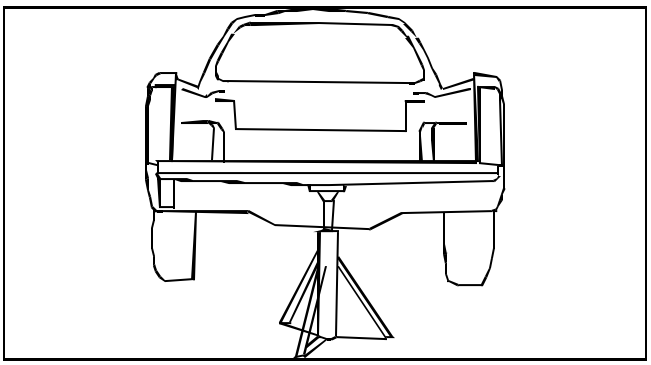

Removal

1. Using an axle stand and a piece of wood, support the tailgate.

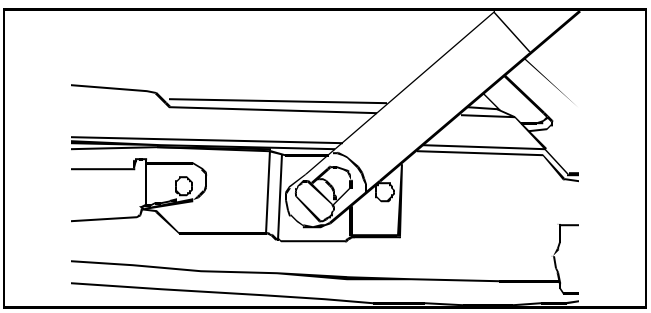

2. Remove the hinge from the tailgate.

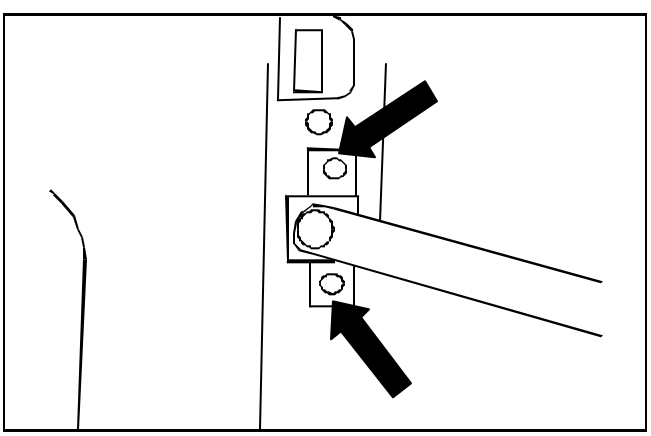

3. Remove the hinge securing bolts.

Installation

1. To install, reverse the removal procedure.

REMOVAL AND INSTALLATION (CONTINUED)

Tailgate Handle Assembly

Removal

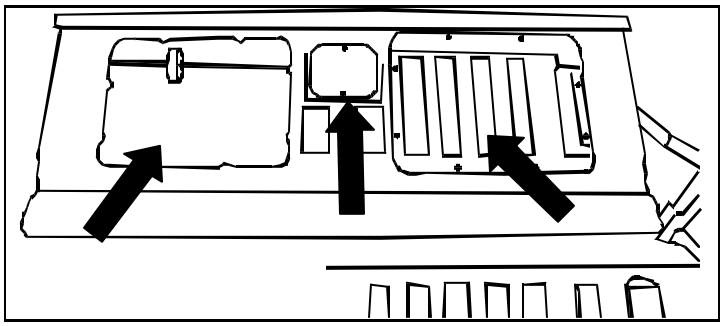

1. Remove the access panels (3 off)

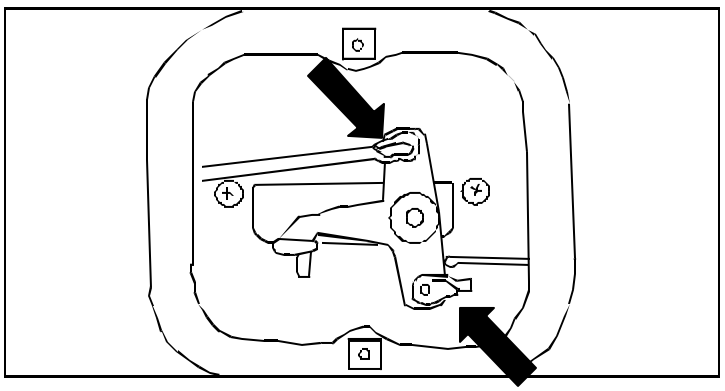

2. Unclip the actuating rods from the handle.

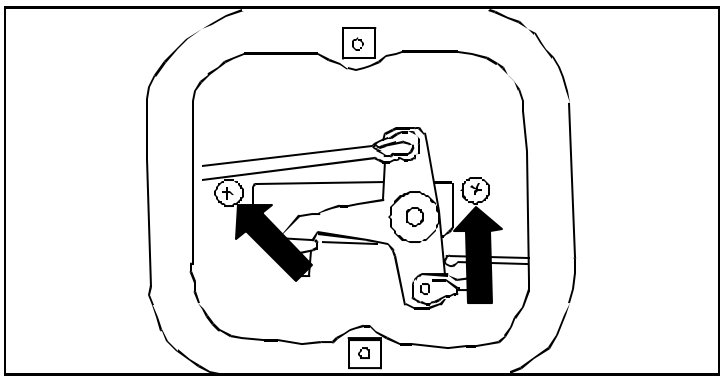

3. Remove the handle retaining screws and remove the handle

Installation

1. To install, reverse the removal procedure.

REMOVAL AND INSTALLATION (CONTINUED)

Tailgate - Actuating Rods and Latches

Removal

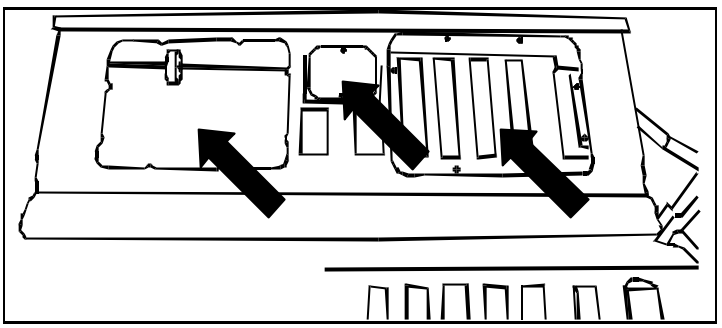

1. Remove the access panels (3 off).

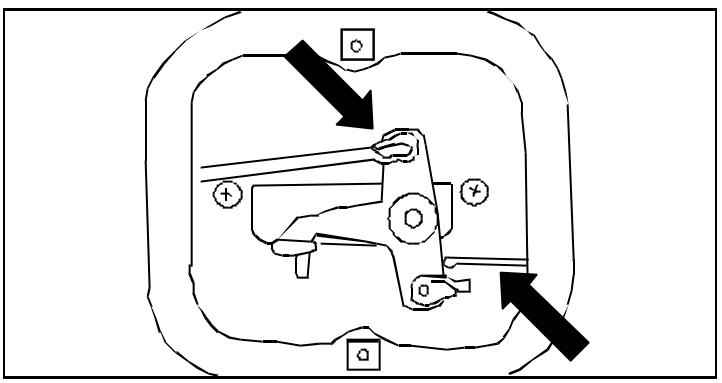

2. Unclip the actuating rods from the handle.

3. Unclip the actuating rods from the latch.

4. Remove the two bolts and remove the latch.

5. Remove the two screws and remove the catch.

Installation

1. To install, reverse the removal procedure.

Note: Ensure that the rubber grommet is positioned correctly into the latch to prevent rattles.

REMOVAL AND INSTALLATION

Ignition Lock Cylinder (33 513 0)

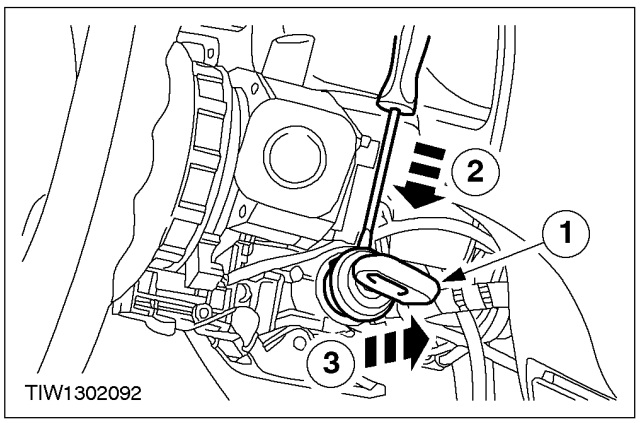

Removal

1. Remove the passive anti-theft system (PATS) transceiver.
2. Remove the ignition switch lock cylinder.
   1. Turn the key to accessory (position I).
   2. Depress the locking detent.
   3. Remove the lock cylinder.

Installation

1. To install, reverse the removal procedure.

REMOVAL AND INSTALLATION

Door Lock Cylinder (41 336 0)

Special Tool(s)	
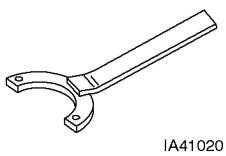 IA41020	Remover/Installer, Door Lock Cylinder 501-033 (41-020 A)

Removal

1. Remove the front door trim panel. For additional information, refer to Section 501-05.

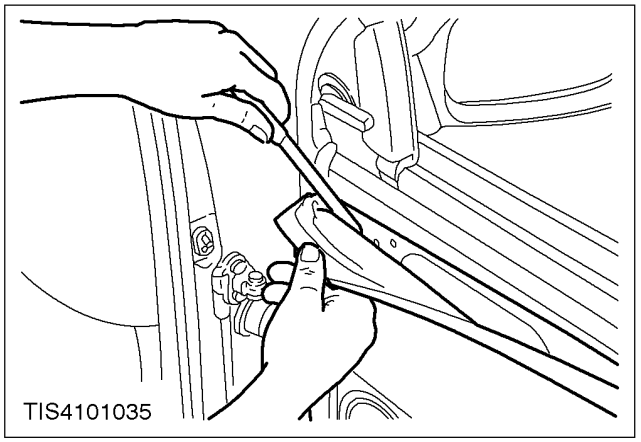

2. **CAUTION: Do not touch the adhesive surface, as re-bonding will be impaired.**
   Peel back the watershield.

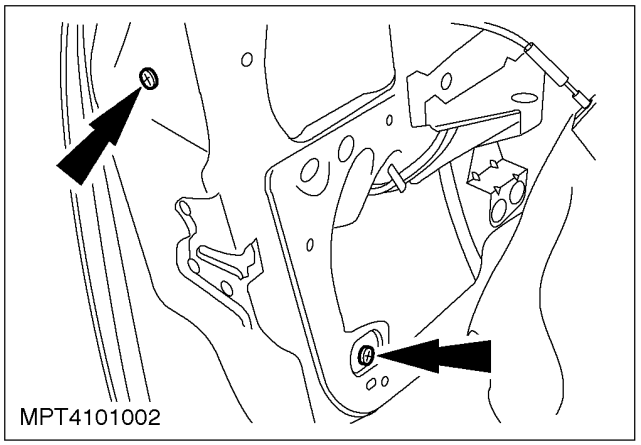

3. Remove the window guide runner.

REMOVAL AND INSTALLATION (CONTINUED)

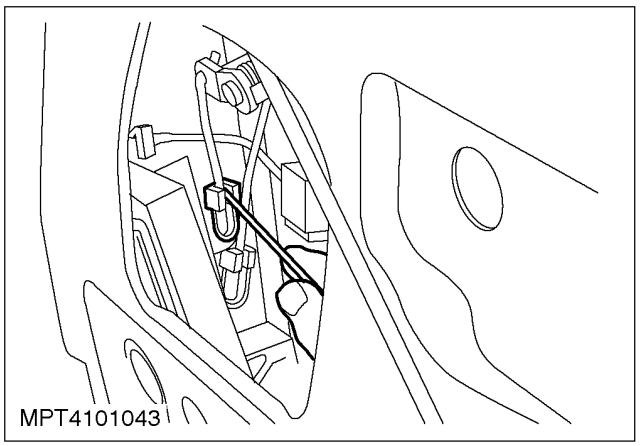

4. Disconnect the door lock actuating rod.

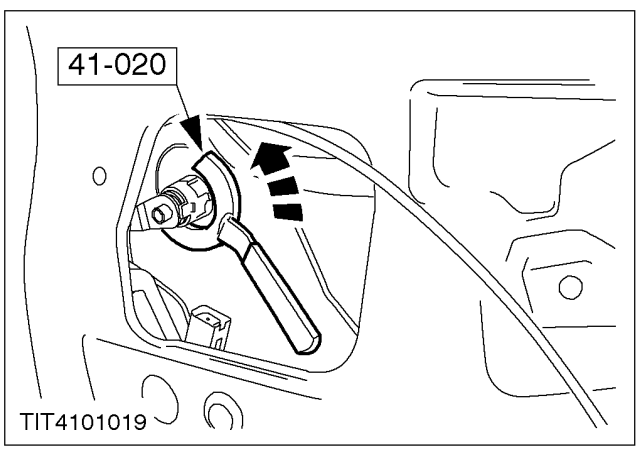

5. Using the special tool, remove the door lock cylinder locking ring.

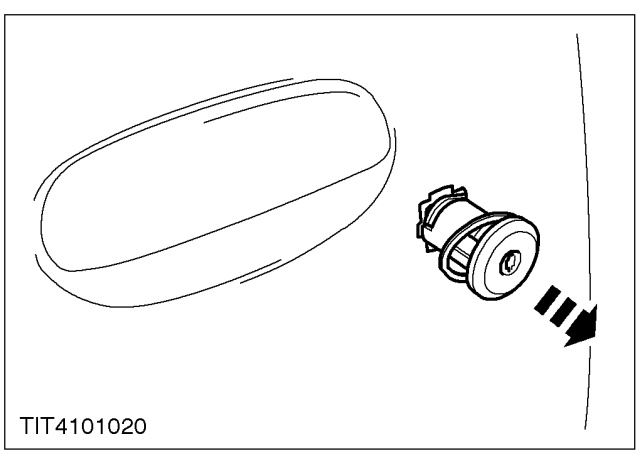

6. Remove the door lock cylinder.

Installation

1. **NOTE:** Make sure the door lock cylinder gasket is correctly installed to the door lock cylinder.
   To install, reverse the removal procedure.

DISASSEMBLY AND ASSEMBLY

Door Lock Cylinder

Material	Specification
Lock barrel grease	WSS-M1C253-A

Disassembly

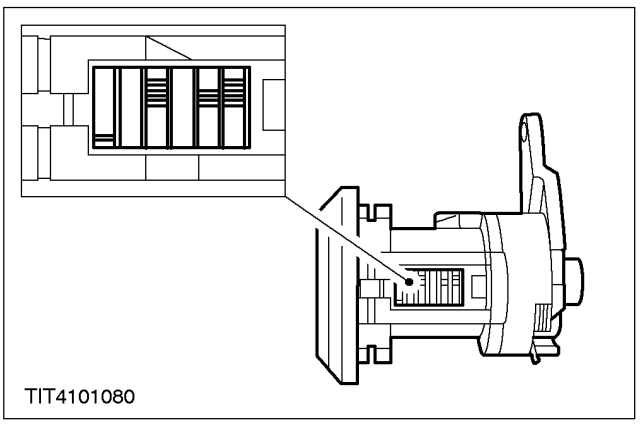

1. **NOTE:** Determine the key code of the lock either by examining the key, key cutting kit instructions, the customers service records or by dismantling the lock and examining the numbers stamped on each number. Alternatively, identify the tumblers (by reading the notches on each tumbler edge) and make a note of the key code.
   Read the key code.
   - The key code can be read as follows:
   - 1 notch = 1, 2 notches = 2, 3 notches = 3 and 0 notches =4

Assembly

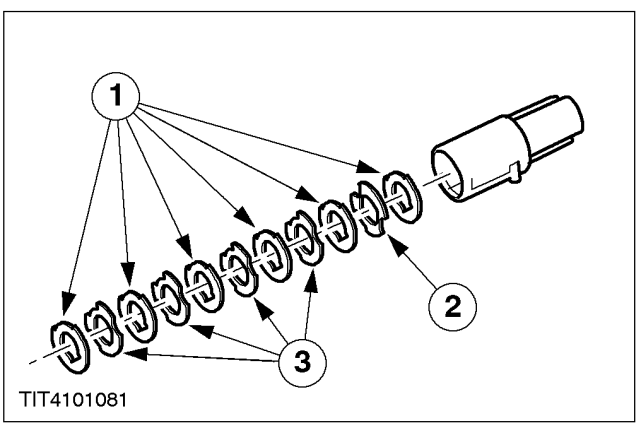

1. **NOTE:** The first tumbler inserted into the tumbler magazine should be the last number of the key code. This should be followed by the spring washer.
   Arrange the tumblers, spring washer and the spacers to enter the tumbler magazine.
   1. Tumblers.
   2. Spring washer.
   3. Spacers.

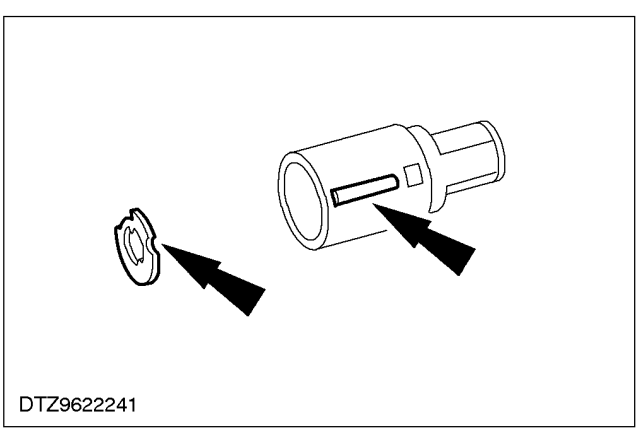

2. Install the tumblers and the spacers so that their grooves are aligned with the cutout slot in the side of the tumbler magazine.

3. Pack the tumbler magazine with lock barrel grease.

DISASSEMBLY AND ASSEMBLY (CONTINUED)

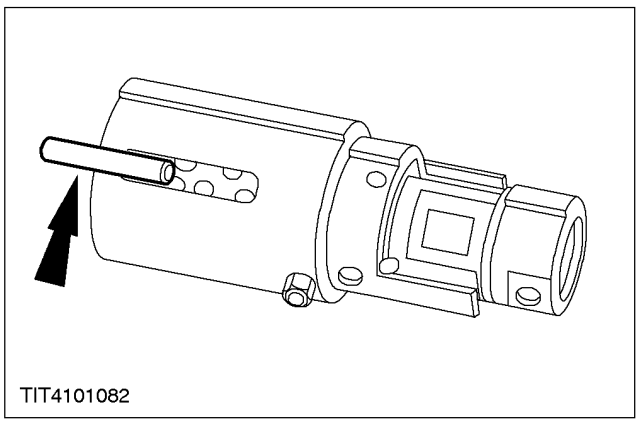

4. NOTE: Cover the roller with lock barrel grease.

Insert the roller into the cutout slot in the side of the tumbler magazine.

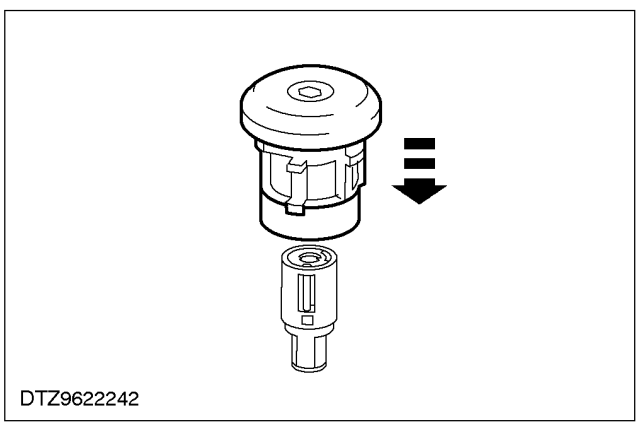

5. NOTE: Make sure the roller locates into the corresponding slot in the lock housing.

Insert the tumbler magazine into the lock housing.

6. NOTE: Keep the lock assembly in its current position.

Insert the relevant key to make sure that the barrel operates correctly.

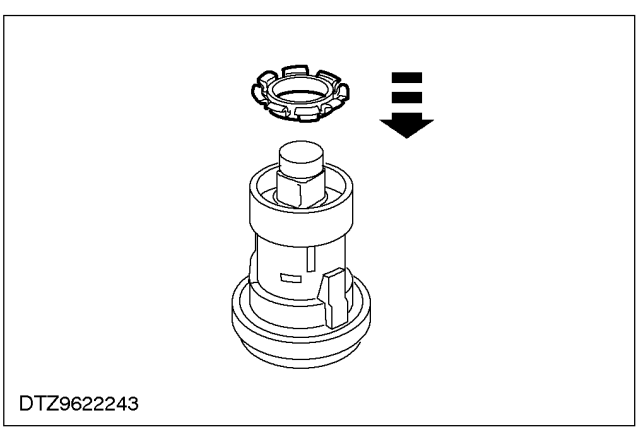

7. Fit the self-locking retainer ensuring that all of the tangs are locked into position.

DISASSEMBLY AND ASSEMBLY (CONTINUED)

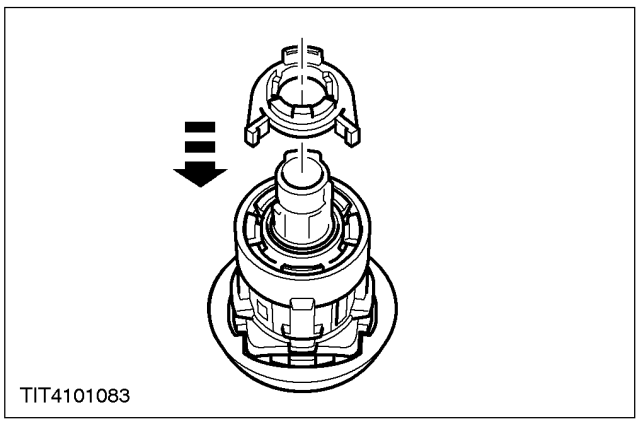

8. Fit the alarm actuator.

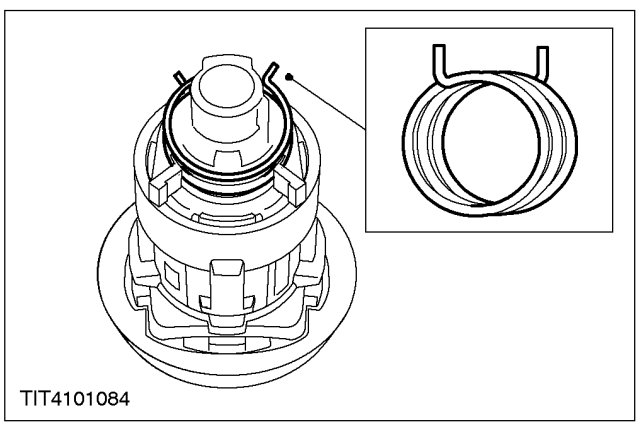

9. NOTE: Cross the lever return spring tangs.
Install the lever return spring.

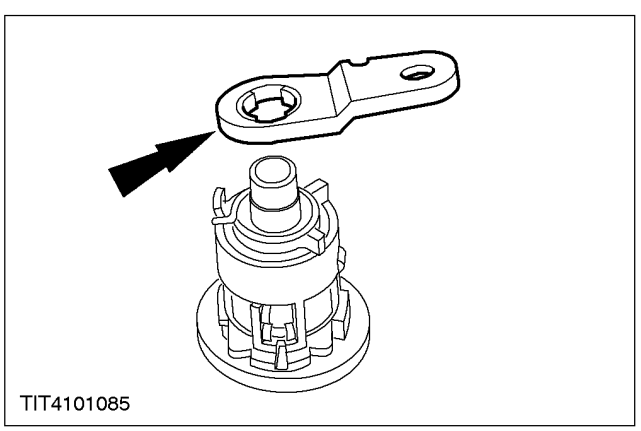

10. NOTE: An R for right-hand or L for left-hand stamped on to the operating lever will determine which door lock it operates.
Install the operating lever.

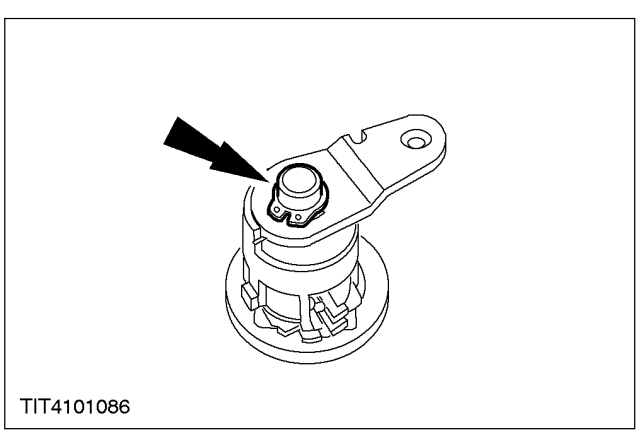

11. Install the retaining clip.

SPECIFICATIONS

Torque Specifications

Description	Nm
Hood latch retaining bolts	10
Luggage compartment lid latch retaining bolts	10

SECTION 501-16 Wipers and Washers

VEHICLE APPLICATION: 2002 Bantam

SUBJECT **PAGE**

DESCRIPTION AND OPERATION

Wipers and Washers 501-16-2
Windshield wiper 501-16-2
Windshield wiper functions 501-16-2/3
Windshield washer 501-16-3

DIAGNOSIS AND TESTING

Wipers and Washers 501-16-4
Inspection and Verification 501-16-4
Pinpoint Tests 501-16-5/23
Component Tests 501-16-23/25

REMOVAL AND INSTALLATION

Mounting Arm and Pivot Table ..... (32 554 0) 501-16-26/27
Windshield Wiper Motor ..... (32 524 0) 501-16-28/30
Windshield Washer Pump ..... (32 624 0) 501-16-31/32
Windshield Washer Reservoir ..... (32 622 0) 501-16-33/34

GENERAL PROCEDURES

Wiper Blade and Pivot Arm Adjustment ..... (32 591 0) 501-16-35

SPECIFICATIONS

Specifications 501-16-36
Lubricants, Fluids, Sealers and Adhesives 501-16-36
Capacities 501-16-36
Setting angle between wiper arms and windshield 501-16-36
Torque Specifications 501-16-36

DESCRIPTION AND OPERATION

Wipers and Washers

All functions are initiated by means of a multi-function switch, which is operated by the wiper lever on the right of the steering column.

The circuits of the windshield wash/wipe system are protected via fuse F12 (20 A, in the central junction box CJB).

The associated wiring diagrams are contained in the
Wiring Diagrams Binder, see subsection 501-16.

Precise information relating to the location of the components is contained in the Wiring Diagrams Binder (component location chart and views of the components, see subsection 501-16).

Windshield wiper

The windshield wiper comprises the following parts:

- Front wiper arm (2)
- Windshield wiper motor on the air cowl grille
- Front wiper linkage
- Front wiper blade (2)
- Wiper delay relay, in the CJB
- Multi-function switch, comprising
  - Windshield wiper switch
  - Windshield washer switch

Windshield wiper functions

The windshield wiper motor can run at two speeds and incorporates a park position limit switch. It is controlled by the multi-function switch on the steering column and by the wiper delay relay.

After switching on the ignition (position II) the following five wiper functions are available:

- Off
- Wipe once
- Intermittent
- Slow
- Fast

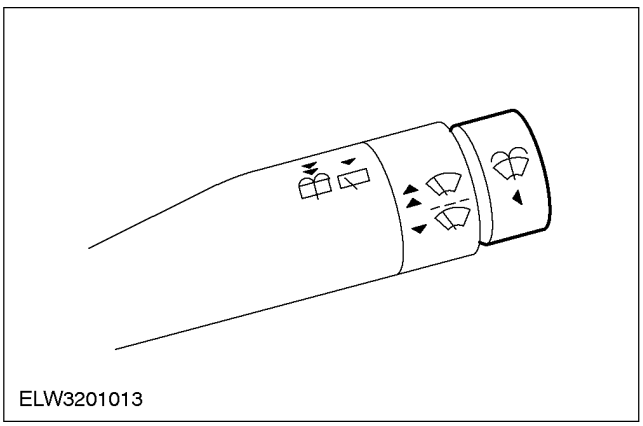

Wiper lever in the OFF position

If the wiper lever is moved from any other setting to the OFF position, then the windshield wiper motor continues to run at slow speed until the wipers reach the park position. This is affected through a second circuit via the limit switch, which supplies a voltage to the windshield wiper motor after it has been switched off. The voltage supply remains intact until the limit switch interrupts the circuit through the wiper delay relay (normally closed contact) and the multi-function switch to the windshield wiper motor.

Wiper lever in the WIPE ONCE position

Press the wiper lever up until resistance is felt and then release it. The windshield wipers perform an individual slow wipe. Current is supplied to the windshield wiper motor via the multi-function switch.

Wiper lever in the INTERMITTENT position

Press the wiper lever down. The windshield wipers perform intermittent slow wipes. The wiper delay time is set to 9 seconds.

The multi-function switch sends a 12 V signal to the wiper delay relay, which picks up in 9-second intervals and supplies a voltage to the windshield wiper motor. The flow of current is routed through the wiper delay relay (normally open contact) and the multi-function switch (connector C65b, pin 8) to the windshield wiper motor.

Wiper lever in the SLOW WIPE position

Press the wiper lever up one notch. The wipers operate at slow speed. Current flows through the multi-function switch to the windshield wiper motor.

DESCRIPTION AND OPERATION (CONTINUED)

Wiper lever in the FAST WIPE position

Press the wiper lever up two notches. The wipers operate at high speed. Current flows through the multi-function switch to the windshield wiper motor.

Windshield washer

WARNING: The washer fluid contains methanol, which is poisonous. Follow the safety guidelines. Failure to observe these instructions could cause personal injury.

CAUTION: Never operate the washer system for more than 10 seconds or when the washer reservoir is empty.

The windshield washer comprises the following parts:

- Washer reservoir, underneath the right-hand front fender
- Washer pump, on the washer reservoir
- Two washer nozzles on the hood, adjustable.

Two functions are available depending on how the wipers are operating:

Wiper lever in the OFF or INTERMITTENT position

The windshield wiper and washer pump operate as long as the end of the wiper lever is pressed in. The washer pump stops immediately when the wiper lever is released. The windshield wipers perform two more wipe cycles before they return to intermittent operation (INTERMITTENT position) or stop at the park position (OFF position). Current flows from the multi-function switch (connector C65b, pin 2) via the washer pump back to the multi-function switch (connector C65b, pin 1). The multi-function switch makes the ground connection when it is set to WINDSHIELD WASHER ON.

Wiper lever in the position SLOW WIPE or FAST WIPE

The washer system operates together with the windshield wiper as long as the end of the wiper lever is pressed in. The washer pump stops immediately when the wiper lever is released. The current flows through the same circuit as described before.

Washer fluid level warning light

This consists of the following components:

- Washer fluid level warning light (in the instrument panel)
- Float-activated switch in the washer reservoir
- Auxiliary warning system module

The warning light comes on when the washer reservoir is only a quarter full. This is sensed by a switch, which is activated by a float in the washer reservoir. When there is sufficient fluid in the washer reservoir the switch makes a connection to ground with one of the digital inputs on the auxiliary warning module. It opens when the fluid level drops to a quarter full. This then prompts the auxiliary warning module to switch on the washer fluid level warning light. The warning light goes out when the washer fluid level is topped up and the switch in the reservoir closes again.

DIAGNOSIS AND TESTING

Wipers and Washers

Inspection and Verification

1. Verify the customer concern.
2. Visually inspect for obvious signs of mechanical or electrical damage.
3. If an obvious cause for an observed or reported concern is found, correct the cause (if possible) before proceeding to the next step.
4. If the concern is not visually evident, verify the symptom and refer to the Symptom Chart.

Visual Inspection Chart

Electrical
• Fuse(s). • Wiring harnesses. • Electrical connector(s).

Symptom Chart

Condition	Possible Sources	Action
•The wipers are inoperative.	•Fuse. •Circuit(s). •Windshield wiper motor. •Multifunction switch. •Central Junction Box (CJB).	•Go To Pinpoint Test A
•The wipers stay on continuously.	•Circuit(s). •Windshield wiper motor. •Multifunction switch.	•Go To Pinpoint Test B
•The high/low wiper speeds do not operate correctly (intermittent wiper mode OK).	•Circuit(s). •Relay – intermittent wipe. •Windshield wiper motor. •Multifunction switch.	•Go To Pinpoint Test C
•The intermittent wiper speed does not operate correctly (high/low speeds OK).	•Circuit(s). •Relay – intermittent wipe. •Windshield wiper motor. •Multifunction switch.	•Go To Pinpoint Test D
•The wash and wipe function are inoperative.	•Circuit(s). •Relay – intermittent wipe. •Multifunction switch	•Go To Pinpoint Test E
•The wipers will not park at the correct position.	•Circuit(s). •Relay – intermittent wipe. •Windshield wiper motor. •Multifunction switch.	•Go To Pinpoint Test F
•The wipers do not operate correctly in the MIST position.	•Circuit(s). •Relay – intermittent wipe.	•Go To Pinpoint Test G
•The washer pump is inoperative.	•Circuit(s). •Washer pump motor. •Multifunction switch.	•Go To Pinpoint Test H

DIAGNOSIS AND TESTING

PINPOINT TESTS

PINPOINT TEST A: THE WIPERS ARE INOPERATIVE

PAGE 1 OF 3

A1: DETERMINE THE FAULT CONDITION 501-16-5
A2: DETERMINE THE FAULT CONDITION 501-16-5
A3: CHECK THE FUSE F12 501-16-5
A4: CHECK THE POWER SUPPLY OF FUSE F12 501-16-6
A5: CHECK THE POWER SUPPLY OF MULTIFUNCTION SWITCH 501-16-6
A6: CHECK THE MULTIFUNCTION SWITCH FOR PROPER FUNCTION 501-16-6/7
A7: CHECK THE GROUND CONNECTION OF WINDSHIELD WIPER MOTOR 501-16-7
A8: CHECK THE WINDSHIELD WIPER MOTOR FOR PROPER FUNCTION 501-16-7/8
A9: CHECK THE MULTIFUNCTION SWITCH FOR PROPER FUNCTION 501-16-8
A10: CHECK THE WIND HIELD WIPER OTOR FOR PROPER FUNCTION 501-16-9
A11: CHECK THE MULTIFUNCTION SWITCH FOR PROPER FUNCTION 501-16-9/10

PINPOINT TEST B: THE WIPERS STAY ON CONTINUOUSLY

B1: CHECK THE RELAY – INTERMITTENT WIPE FOR SHORT TO POWER 501-16-10
B2: CHECK THE RELAY – INTERMITTENT WIPE 501-16-10
B3: CHECK THE CIRCUIT (WIPER PARK) TO RELAY – INTERMITTENT WIPE FOR SHORT TO POWER 501-16-11
B4: CHECK THE MULTIFUNCTION SWITCH FOR PROPER FUNCTION 501-16-11
B5: CHECK THE CIRCUIT (WIPER PARK) TO MULTIFUNCTION SWITCH FOR SHORT TO POWER 501-16-12
B6: CHECK THE CIRCUIT (LOW WIPER SPEED) TO WINDSHIELD WIPER MOTOR FOR SHORT TO POWER 501-16-12
B7: CHECK THE CIRCUIT (FAST WIPER SPEED) TO WINDSHIELD WIPER MOTOR FOR SHORT TO POWER 501-16-13

DIAGNOSIS AND TESTING

PINPOINT TESTS

PINPOINT TEST C: THE HIGH/LOW WIPER SPEEDS DO NOT OPERATE CORRECTLY (INTERMITTENT WIPER MODE OK)

C1: CHECK THE POWER SUPPLY OF WINDSHIELD WIPER MOTOR (SLOW WIPER SPEED) 501-16-13
C2: CHECK THE POWER SUPPLY OF WINDSHIELD WIPER MOTOR (FAST WIPER SPEED) 501-16-13/14
C3: CHECK THE CIRCUIT (FAST WIPER SPEED) FOR OPEN 501-16-14
C4: CHECK THE WINDSHIELD WIPER MOTOR FOR PROPER FUNCTION 501-16-15

PINPOINT TEST D: THE INTERMITTENT WIPER SPEED DOES NOT OPERATE CORRECTLY (HIGH/LOW SPEEDS OK)

D1: CHECK THE POWER SUPPLY OF RELAY – INTERMITTENT WIPE 501-16-15
D2: CHECK THE CONTROL VOLTAGE (INTERMITTENT WIPE) TO RELAY – INTERMITTENT WIPE 501-16-15/16
D3: CHECK THE MULTIFUNCTION SWITCH FOR PROPER FUNCTION 501-16-16
D4: CHECK THE CONTROL CIRCUIT (INTERMITTENT WIPE) TO MULTIFUNCTION SWITCH 501-16-16/17
D5: CHECK THE MULTIFUNCTION SWITCH FOR PROPER FUNCTION 501-16-17
D6: CHECK THE GROUND CONNECTION OF RELAY – INTERMITTENT WIPE 501-16-18

PINPOINT TEST E: THE WASH AND WIPE FUNCTION ARE INOPERATIVE

E1: CHECK THE GROUND CONNECTION OF MULTIFUNCTION SWITCH 501-16-18

DIAGNOSIS AND TESTING

PINPOINT TESTS

PINPOINT TEST F: THE WIPERS WILL NOT PARK AT THE CORRECT POSITION

F1: CHECK THE RELAY – INTERMITTENT WIPE FOR PROPER FUNCTION 501-16-19
F2: CHECK THE POWER SUPPLY (WIPER PARK) OF RELAY – INTERMITTENT WIPE 501-16-19
F3: CHECK THE CIRCUIT FOR INTERMITTENT WIPE AND WIPER PARK FOR OPEN 501-16-19/20
F4: CHECK THE MULTIFUNCTION SWITCH FOR PROPER FUNCTION 501-16-20
F5: CHECK THE CIRCUIT (WIPER PARK) TO RELAY – INTERMITTENT WIPE FOR OPEN 501-16-20/21
F6: CHECK THE WINDSHIELD WIPER MOTOR FOR PROPER FUNCTION 501-16-21

PINPOINT TEST G: THE WIPERS DO NOT OPERATE CORRECTLY IN THE MIST POSITION

G1: CHECK THE RELAY – INTERMITTENT WIPE FOR PROPER FUNCTION 501-16-21/22

PINPOINT TEST H: THE WASHER PUMP IS INOPERATIVE

H1: CHECK THE POWER SUPPLY OF WASHER PUMP MOTOR 501-16-22
H2: CHECK THE MULTIFUNCTION SWITCH FOR PROPER FUNCTION 501-16-22/23

DIAGNOSIS AND TESTING

Pinpoint Tests

PINPOINT TEST A: THE WIPERS ARE INOPERATIVE

CONDITIONS	DETAILS/RESULTS/ACTIONS
A1: DETERMINE THE FAULT CONDITION	
1	2 Turn the multifunction switch to the SLOW WIPER SPEED position. • Is the slow wiper speed inoperative? ☐ **Yes** GO TO **A2** ☐ **No** GO TO **A8**
A2: DETERMINE THE FAULT CONDITION	
	1 Turn the multifunction switch to the FAST WIPER SPEED position. • Is the fast wiper speed inoperative? ☐ **Yes** GO TO **A3** ☐ **No** GO TO **A10**
A3: CHECK THE FUSE F12	
1 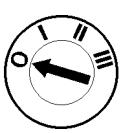 2 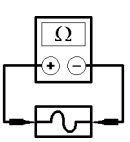 Fuse F12 (CJB)	3 Check the fuse F12 (20 A). • Is the fuse OK? ☐ **Yes** GO TO **A4** ☐ **No** INSTALL a new fuse F12. If the fuse blows again, LOCATE and REPAIR the short circuit by using the wiring diagrams. TEST the system for normal operation.

DIAGNOSIS AND TESTING (CONTINUED)

CONDITIONS	DETAILS/RESULTS/ACTIONS
A4: CHECK THE POWER SUPPLY OF FUSE F12	
1 2 Fuse F12 (CJB)	3 Measure the voltage between fuse F12 (20 A) and ground. • Is battery voltage indicated? ☐ **Yes** GO TO **A5** ☐ **No** CHECK the CJB. If necessary INSTALL a new one. TEST the system for normal operation.
A5: CHECK THE POWER SUPPLY OF MULTIFUNCTION SWITCH	
1 2 3 Multifunction switch C15b V VFE0013667	4 Measure the voltage between multifunction switch, connector C15b, pin 7, circuit 14-AK19 (VT/OG), harness side and ground. • Is battery voltage indicated? ☐ **Yes** GO TO **A6** ☐ **No** REPAIR the power supply of multifunction switch, by using the wiring diagrams. TEST the system for normal operation.
A6: CHECK THE MULTIFUNCTION SWITCH FOR PROPER FUNCTION	
1 2 Multifunction switch C15b	

DIAGNOSIS AND TESTING (CONTINUED)

CONDITIONS	DETAILS/RESULTS/ACTIONS
3 4 Windshield wiper motor C47 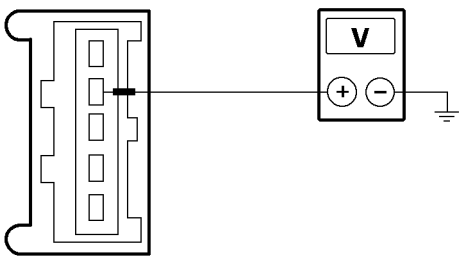 VFE0003741	**5** Turn the multifunction switch to the SLOW WIPER SPEED position. **6** Measure the voltage between windshield wiper motor, connector C47, pin 4, circuit 14S-AK10 (VT/BK), harness side and ground. • Is battery voltage indicated? ☐ **Yes** GO TO **A7** ☐ **No** CHECK the multifunction switch, according to Component Testing attached to the wiring diagrams. If necessary INSTALL a new one. TEST the system for normal operation.
A7: CHECK THE GROUND CONNECTION OF WINDSHIELD WIPER MOTOR	
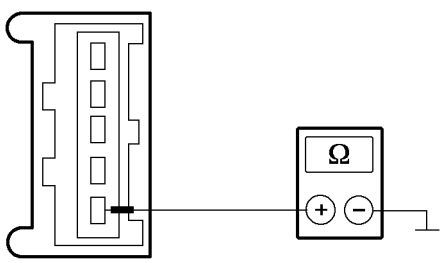 VFE0017173	**1** Measure the resistance between windshield wiper motor, connector C47, pin 1, circuit 31-AK8 (BK), harness side and ground. • Is the resistance less than 2 ohms? ☐ **Yes** CHECK the windshield wiper motor. If necessary INSTALL a new one. TEST the system for normal operation. ☐ **No** REPAIR the open circuit(s) between windshield wiper motor and ground G10, by using the wiring diagrams. TEST the system for normal operation.
A8: CHECK THE WINDSHIELD WIPER MOTOR FOR PROPER FUNCTION	
1 2 3 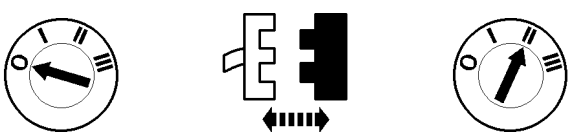 Windshield wiper motor C47	**4** Turn the multifunction switch to the FAST WIPER SPEED position.

DIAGNOSIS AND TESTING (CONTINUED)

CONDITIONS	DETAILS/RESULTS/ACTIONS
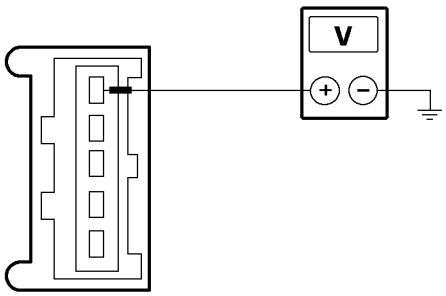 VFE0011611	**5** Measure the voltage between windshield wiper motor, connector C47, pin 5, circuit 14S-AK11 (VT/OG), harness side and ground. • Is battery voltage indicated? ☐ **Yes** CHECK the windshield wiper motor. If necessary INSTALL a new one. TEST the system for normal operation. ☐ **No** GO TO **A9**
A9: CHECK THE MULTIFUNCTION SWITCH FOR PROPER FUNCTION	
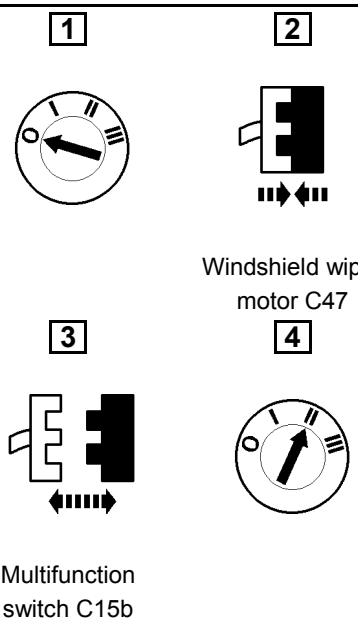 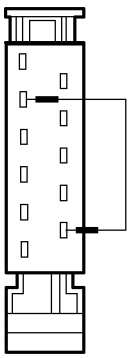 VFE0023432	**5** Connect a jumper wire between multifunction switch, connector C15b, pin 5, circuit 14S-AK11 (VT/OG) and pin 7, circuit 14-AK19 (VT/OG), harness side. • Does the windshield wiper motor operate correctly (fast wiper speed)? ☐ **Yes** CHECK the multifunction switch, according to Component Testing attached to the wiring diagrams. If necessary INSTALL a new one. TEST the system for normal operation. ☐ **No** REPAIR the open circuit(s) between multi-function switch, connector C15b, pin 5 and windshield wiper motor, by using the wiring diagrams. TEST the system for normal operation.

DIAGNOSIS AND TESTING (CONTINUED)

CONDITIONS	DETAILS/RESULTS/ACTIONS
A10: CHECK THE WINDSHIELD WIPER MOTOR FOR PROPER FUNCTION	
1 2 3 Windshield wiper motor C47 V VFE0003741	4 Turn the multifunction switch to the LOW WIPER SPEED position. 5 Measure the voltage between windshield wiper motor, connector C47, pin 4, circuit 14S-AK10 (VT/BK), harness side and ground. • Is battery voltage indicated? ☐ **Yes** CHECK the windshield wiper motor. If necessary INSTALL a new one. TEST the system for normal operation. ☐ **No** GO TO **A11**
A11: CHECK THE MULTIFUNCTION SWITCH FOR PROPER FUNCTION	
1 2 Windshield wiper motor C47 3 4 Multifunction switch C15b	

DIAGNOSIS AND TESTING (CONTINUED)

CONDITIONS	DETAILS/RESULTS/ACTIONS
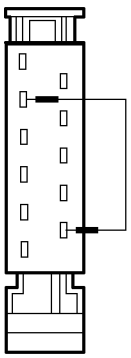 VFE0023432	**5** Connect a jumper wire between multifunction switch, connector C15b, pin 3, circuit 14S-AK10 (VT/BK) and pin 7, circuit 14-AK19 (VT/OG), harness side. • Does the windshield wiper motor operate correctly (low wiper speed)? ☐ **Yes** CHECK the multifunction switch, according to Component Testing attached to the wiring diagrams. If necessary INSTALL a new one. TEST the system for normal operation. ☐ **No** REPAIR the open circuit(s) between multi-function switch, connector C15b, pin 3 and windshield wiper motor, by using the wiring diagrams. TEST the system for normal operation.

PINPOINT TEST B: THE WIPERS STAY ON CONTINUOUSLY

CONDITIONS	DETAILS/RESULTS/ACTIONS
B1: CHECK THE RELAY – INTERMITTENT WIPE FOR SHORT TO POWER	
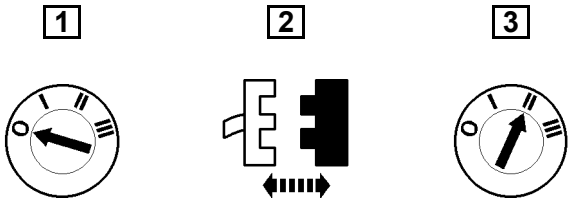 Relay – intermittent wipe C48	• Stay the wipers on continuously? ☐ **Yes** GO TO **B4** ☐ **No** GO TO **B2**
B2: CHECK THE RELAY – INTERMITTENT WIPE	
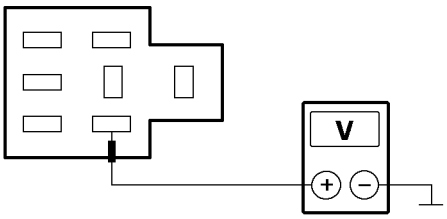 VFE0022757	**1** Measure the voltage between relay socket – intermittent wipe, connector C48, pin 1, circuit 31S-AK9 (BK/OG) and ground. • Is battery voltage indicated? ☐ **Yes** GO TO **B3** ☐ **No** CHECK the relay – intermittent wipe. If necessary INSTALL a new one. TEST the system for normal operation.

DIAGNOSIS AND TESTING (CONTINUED)

CONDITIONS	DETAILS/RESULTS/ACTIONS
B3: CHECK THE CIRCUIT (WIPER PARK) TO RELAY – INTERMITTENT WIPE FOR SHORT TO POWER	
1 2 3 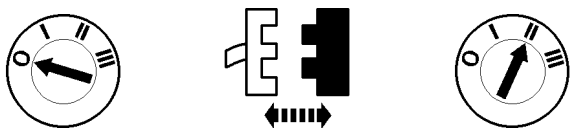 Windshield wiper motor C47 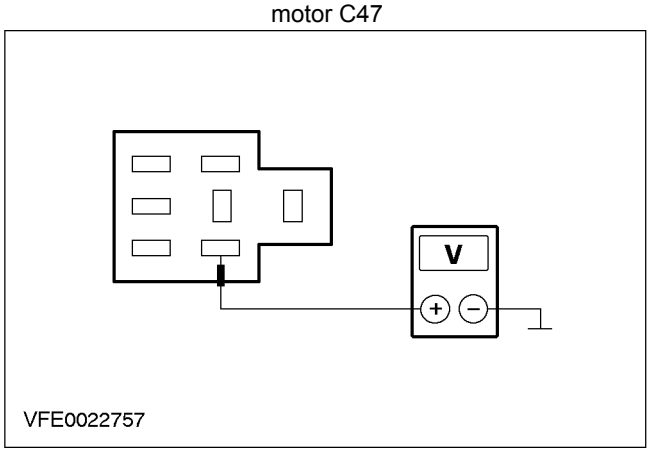 	**4** Measure the voltage between relay socket – intermittent wipe, connector C48, pin 1, circuit 31S-AK9 (BK/OG) and ground. • Is battery voltage indicated? ☐ **Yes** REPAIR the short to power, circuit(s) connected with the relay – intermittent wipe, connector C48, pin 1, by using the wiring diagrams. TEST the system for normal operation. ☐ **No** CHECK the windshield wiper motor. If necessary INSTALL a new one. TEST the system for normal operation.
B4: CHECK THE MULTIFUNCTION SWITCH FOR PROPER FUNCTION	
1 2 3 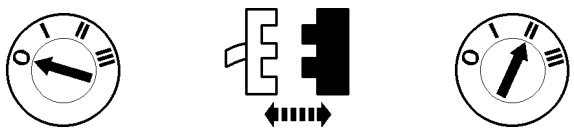 Multifunction switch C15b	• Stay the wiper on continuously? ☐ **Yes** GO TO **B6** ☐ **No** GO TO **B5**

DIAGNOSIS AND TESTING (CONTINUED)

CONDITIONS	DETAILS/RESULTS/ACTIONS
B5: CHECK THE CIRCUIT (WIPER PARK) TO MULTIFUNCTION SWITCH FOR SHORT TO POWER	
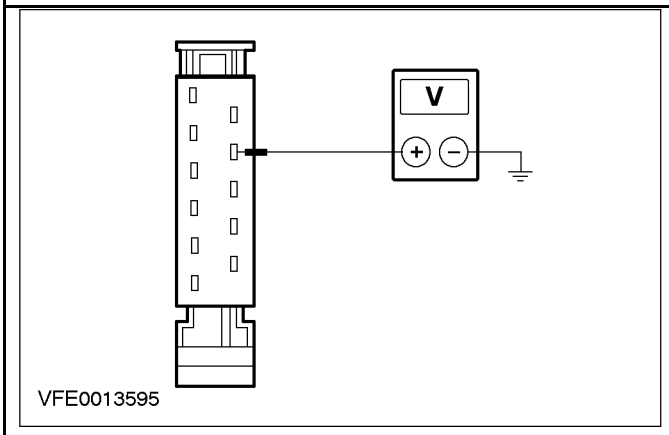	**1** Measure the voltage between multifunction switch, connector C15b, pin 2, circuit 31S-AK15 (BK/RD), harness side and ground. • Is battery voltage indicated? ☐ **Yes** REPAIR the short to power, circuit(s) connected with the multifunction switch, connector C15b, pin 9, by using the wiring diagrams. TEST the system for normal operation. ☐ **No** CHECK the multifunction switch, according to Component Testing attached to the wiring diagrams. If necessary INSTALL a new one. TEST the system for normal operation.
B6: CHECK THE CIRCUIT (LOW WIPER SPEED) TO WINDSHIELD WIPER MOTOR FOR SHORT TO POWER	
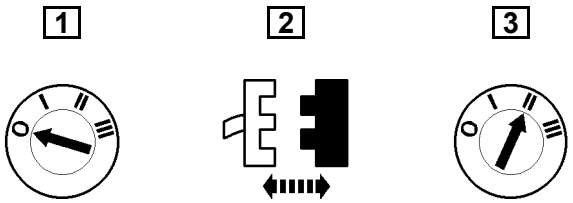 Windshield wiper motor C47 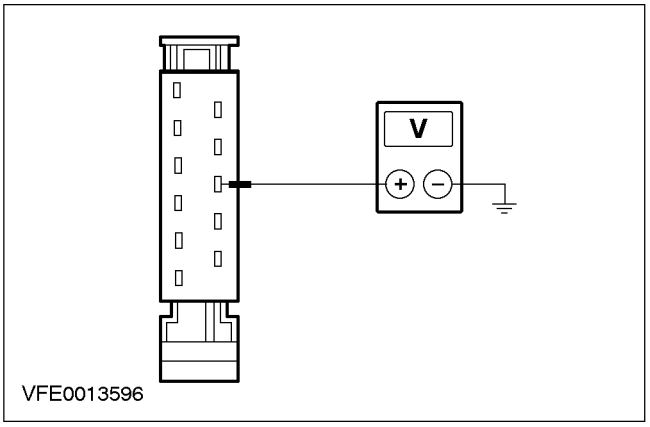	**4** Measure the voltage between multifunction switch, connector C15b, pin 3, circuit 14S-AK10 (VT/BK), harness side and ground. • Is battery voltage indicated? ☐ **Yes** REPAIR the short to power, circuit(s) connected with the multifunction switch, connector C15b, pin 3, by using the wiring diagrams. TEST the system for normal operation. ☐ **No** GO TO **B7**

DIAGNOSIS AND TESTING (CONTINUED)

CONDITIONS	DETAILS/RESULTS/ACTIONS
B7: CHECK THE CIRCUIT (FAST WIPER SPEED) TO WINDSHIELD WIPER MOTOR FOR SHORT TO POWER	
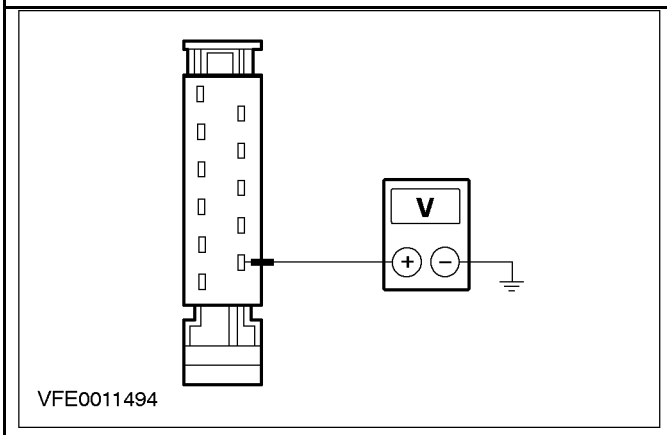	**1** Measure the voltage between multifunction switch, connector C15b, pin 5, circuit 14S-AK11 (VT/OG), harness side and ground. • Is battery voltage indicated? ☐ **Yes** REPAIR the short to power, circuit(s) connected with the multifunction switch, connector C15b, pin 5, by using the wiring diagrams. TEST the system for normal operation. ☐ **No** CHECK the windshield wiper motor. If necessary INSTALL a new one. TEST the system for normal operation.

PINPOINT TEST C: THE HIGH/LOW WIPER SPEEDS DO NOT OPERATE CORRECTLY (INTERMITTENT WIPER MODE OK)

CONDITIONS	DETAILS/RESULTS/ACTIONS
C1: CHECK THE POWER SUPPLY OF WINDSHIELD WIPER MOTOR (SLOW WIPER SPEED)	
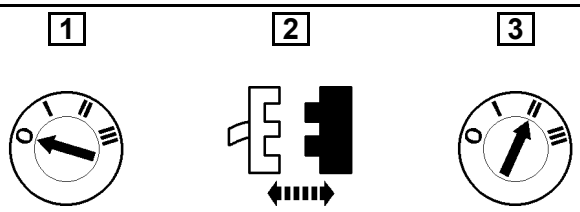 Windshield wiper motor C47 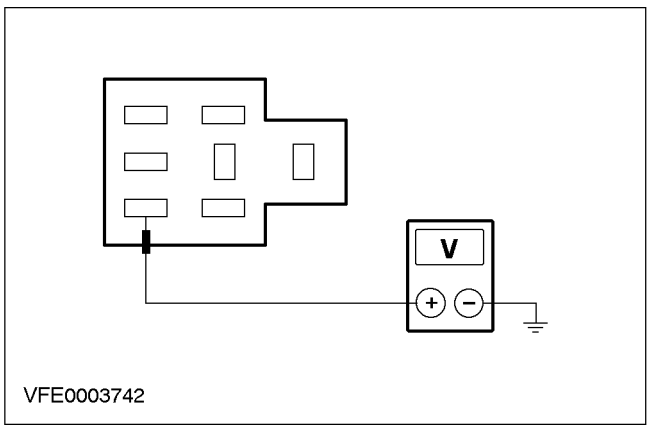	**4** Turn the multifunction switch to the LOW WIPER SPEED position. **5** Measure the voltage between windshield wiper motor, connector C47, pin 4, circuit 14S-AK10 (VT/BK) and ground. • Is battery voltage indicated? ☐ **Yes** GO TO **C2** ☐ **No** CHECK the multifunction switch, according to Component Testing attached to the wiring diagrams. If necessary INSTALL a new one. TEST the system for normal operation.
C2: CHECK THE POWER SUPPLY OF WINDSHIELD WIPER MOTOR (FAST WIPER SPEED).	
	1 Turn the multifunction switch to the FAST WIPER SPEED position.

DIAGNOSIS AND TESTING (CONTINUED)

CONDITIONS	DETAILS/RESULTS/ACTIONS
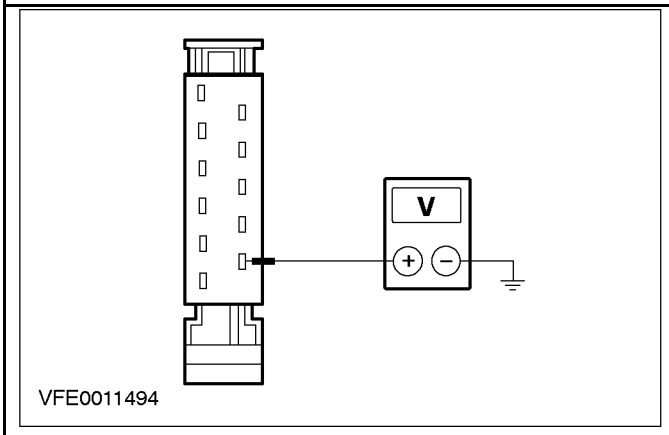	**2** Measure the voltage between windshield wiper motor, connector C47, pin 5, circuit 14S-AK11 (VT/BU) and ground. • Is battery voltage indicated? ☐ **Yes** REPAIR the short to power, circuit(s) connected with the multifunction switch, connector C15b, pin 5, by using the wiring diagrams. TEST the system for normal operation. ☐ **No** GO TO **C3**
C3: CHECK THE CIRCUIT (FAST WIPER SPEED) FOR OPEN	
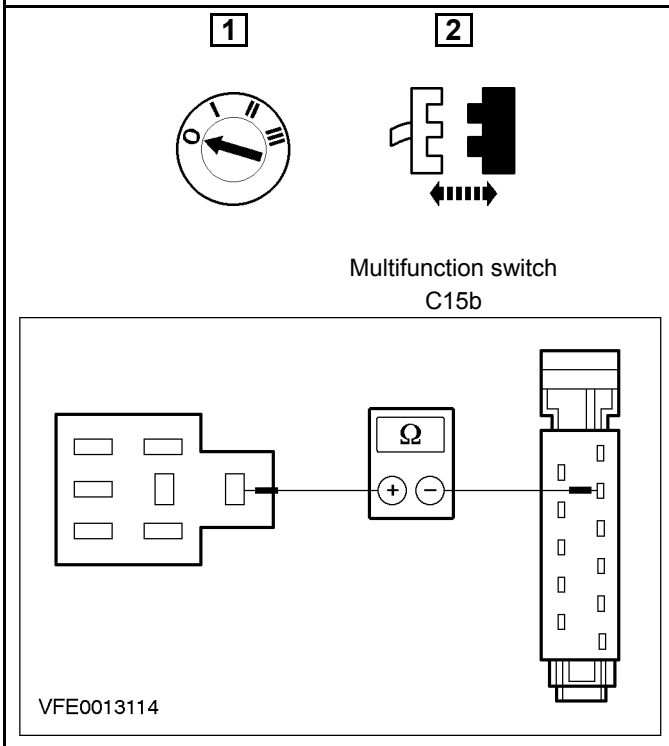	**3** Measure the resistance between multifunction switch, connector C15b, pin 5, circuit 14S-AK11 (VT/BU), harness side and windshield wiper motor, connector C47, pin 5, circuit 14S-AK11 (VT/BU). • Is the resistance less than 2 ohms? ☐ **Yes** CHECK the multifunction switch, according to Component Testing attached to the wiring diagrams. If necessary INSTALL a new one. TEST the system for normal operation. ☐ **No** REPAIR the open circuit(s) between multi-function switch and windshield wiper motor, by using the wiring diagrams. TEST the system for normal operation.

DIAGNOSIS AND TESTING (CONTINUED)

CONDITIONS	DETAILS/RESULTS/ACTIONS
C4: CHECK THE WINDSHIELD WIPER MOTOR FOR PROPER FUNCTION	
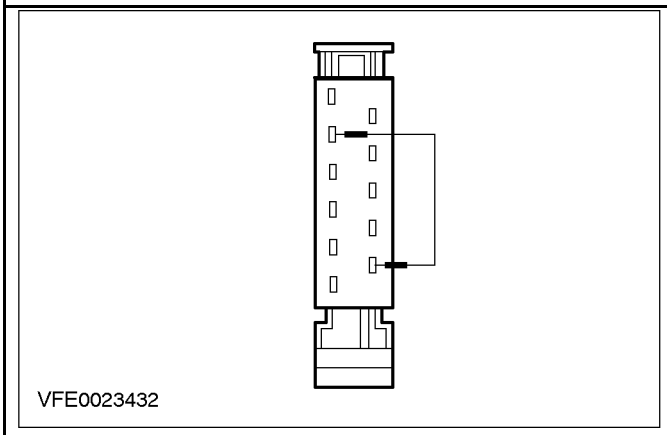	1 Connect a jumper wire between multifunction switch, connector C15b, pin 5, circuit 14S-AK11 (VT/OG) and pin 7, circuit 14-AK19 (VT/BU), harness side. • Does the windshield wiper motor operate correctly (fast wiper speed)? ☐ **Yes** CHECK the multifunction switch, according to Component Testing attached to the wiring diagrams. If necessary INSTALL a new one. TEST the system for normal operation. ☐ **No** CHECK the windshield wiper motor. If necessary INSTALL a new one. TEST the system for normal operation.

PINPOINT TEST D: THE INTERMITTENT WIPER SPEED DOES NOT OPERATE CORRECTLY (HIGH/LOW SPEEDS OK)

CONDITIONS	DETAILS/RESULTS/ACTIONS
D1: CHECK THE POWER SUPPLY OF RELAY – INTERMITTENT WIPE	
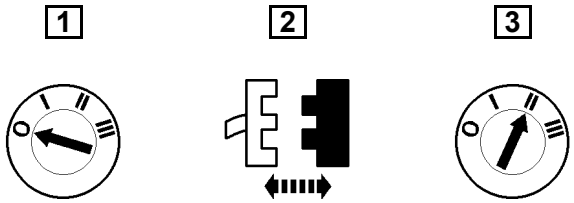 Relay – intermittent wipe C48 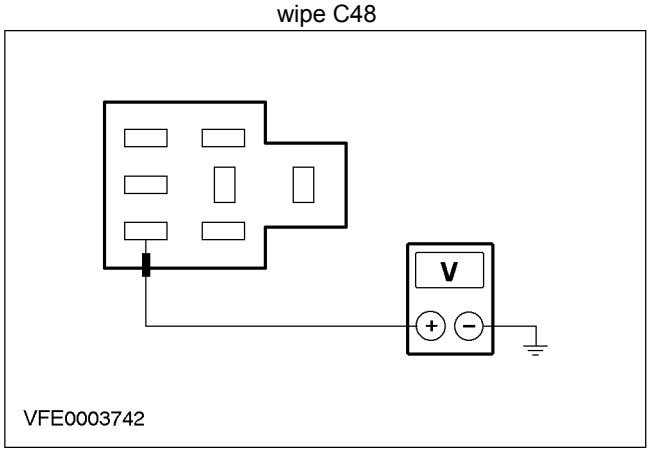	4 Measure the voltage between relay socket – intermittent wipe, connector C48, pin 6, circuit 14-AK14 (VT/BK) and ground. • Is battery voltage indicated? ☐ **Yes** GO TO **D2** ☐ **No** REPAIR the open circuit(s) between splice S11 and relay – intermittent wipe, by using the wiring diagrams. TEST the system for normal operation.
D2: CHECK THE CONTROL VOLTAGE (INTERMITTENT WIPE) TO RELAY – INTERMITTENT WIPE	
	1 Turn the multifunction switch to the INTERMITTENT WIPE position.

DIAGNOSIS AND TESTING (CONTINUED)

CONDITIONS	DETAILS/RESULTS/ACTIONS
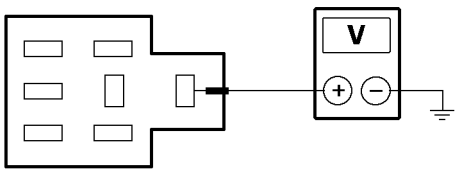 VFE0013112	**2** Measure the voltage between relay socket – intermittent wipe, connector C48, pin 5, circuit 14S-AK14 (VT/BK) and ground. • Is battery voltage indicated? ☐ **Yes** GO TO **D4** ☐ **No** GO TO **D3**
D3: CHECK THE MULTIFUNCTION SWITCH FOR PROPER FUNCTION	
1 **2** 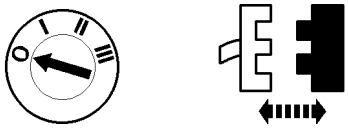 Multifunction switch C15b 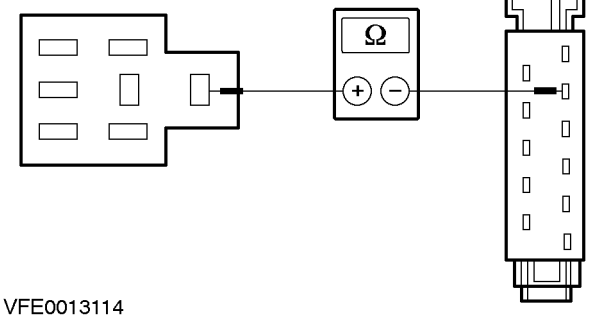 VFE0013114	**3** Measure the resistance between multifunction switch, connector C15b, pin 10, circuit 14S-AK14 (VT/BK), harness side and relay socket – intermittent wipe, connector C48, pin 5, circuit 14S-AK14 (VT/BK). • Is the resistance less than 2 ohms? ☐ **Yes** CHECK the multifunction switch, according to Component Testing attached to the wiring diagrams. If necessary INSTALL a new one. TEST the system for normal operation. ☐ **No** REPAIR the open circuit(s) between multi-function switch and relay – intermittent wipe, by using the wiring diagrams. TEST the system for normal operation.
D4: CHECK THE CONTROL CIRCUIT (INTERMITTENT WIPE) TO MULTIFUNCTION SWITCH	
1 **2** 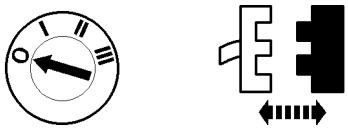 Windshield wiper motor C47	

DIAGNOSIS AND TESTING (CONTINUED)

CONDITIONS	DETAILS/RESULTS/ACTIONS
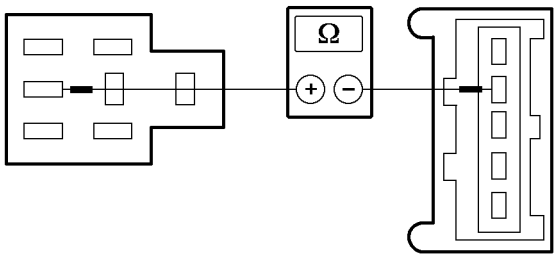 VFE0023488	**3** Measure the resistance between windshield wiper motor, connector C47, pin 4, circuit 14S-AK10 (VT/BK), harness side and relay socket – intermittent wipe, connector C48, pin 3, circuit 31S-AK19 (BK/RD). • Is the resistance less than 2 ohms? ☐ **Yes** GO TO **D6** ☐ **No** GO TO **D5**
D5: CHECK THE MULTIFUNCTION SWITCH FOR PROPER FUNCTION	
1 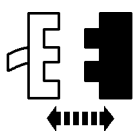 Multifunction switch C15b 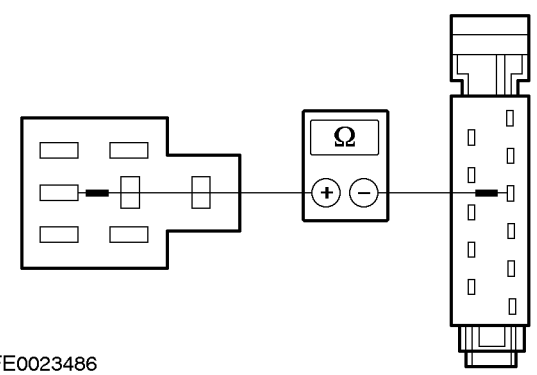 VFE0023486	**2** Measure the resistance between multifunction switch, connector C15b, pin 9, circuit 31S-AK19 (BK/RD), harness side and relay socket – intermittent wipe, connector C48, pin 3, circuit 31S-AK19 (BK/RD). • Is the resistance less than 2 ohms? ☐ **Yes** CHECK the multifunction switch, according to Component Testing attached to the wiring diagrams. If necessary INSTALL a new one. TEST the system for normal operation. ☐ **No** REPAIR the open circuit(s) between multi-function switch and relay – intermittent wipe, by using the wiring diagrams. TEST the system for normal operation.

DIAGNOSIS AND TESTING (CONTINUED)

CONDITIONS	DETAILS/RESULTS/ACTIONS
D6: CHECK THE GROUND CONNECTION OF RELAY – INTERMITTENT WIPE	
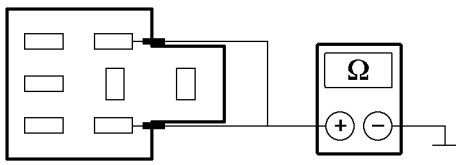 VFE0023487	**1** Measure the resistance between relay socket – intermittent wipe, connector C48, pin 2, circuit 31-AK14 (BK) and ground. • Is the resistance less than 2 ohms? ☐ **Yes** INSTALL a new relay – intermittent wipe. TEST the system for normal operation. ☐ **No** REPAIR the open circuit(s) between relay socket – intermittent wipe and ground G6, by using the wiring diagrams. TEST the system for normal operation. If necessary INSTALL a new CJB.

PINPOINT TEST E: THE WASH AND WIPE FUNCTION ARE INOPERATIVE

CONDITIONS	DETAILS/RESULTS/ACTIONS
E1: CHECK THE GROUND CONNECTION OF MULTIFUNCTION SWITCH	
1 **2** 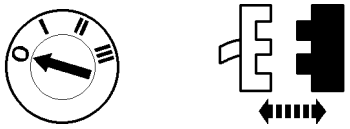 Multifunction switch C15a 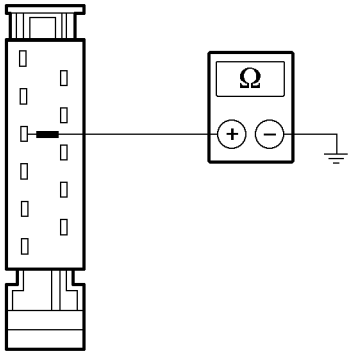 VFE0013681	**3** Measure the resistance between multifunction switch, connector 15a, pin 8, circuit 31-LE29 (BK), harness side and ground. • Is the resistance less than 2 ohms? ☐ **Yes** CHECK the multifunction switch, according to Component Testing attached to the wiring diagrams. If necessary INSTALL a new one. TEST the system for normal operation. ☐ **No** REPAIR the open circuit(s) between multifunction switch and ground G6, by using the wiring diagrams. TEST the system for normal operation.

DIAGNOSIS AND TESTING (CONTINUED)

PINPOINT TEST F: THE WIPERS WILL NOT PARK AT THE CORRECT POSITION

CONDITIONS	DETAILS/RESULTS/ACTIONS
F1: CHECK THE RELAY – INTERMITTENT WIPE FOR PROPER FUNCTION	
1 2 3 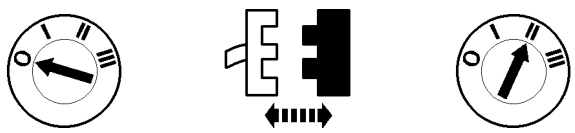 Relay – intermittent wipe C48 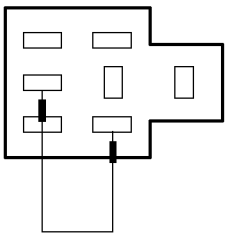 VFE0023489	4 Connect a jumper wire between relay socket – intermittent wipe, connector C48, pin 1, circuit 31S-AK9 (BK/OG) and pin 3, circuit 31S-AK19 (BK/RD). • Actuate the SINGLE WIPE: Does the wipers park in the correct position? ☐ **Yes** INSTALL a new relay – intermittent wipe. TEST the system for normal operation. ☐ **No** GO TO **F2**
F2: CHECK THE POWER SUPPLY (WIPER PARK) OF RELAY – INTERMITTENT WIPE	
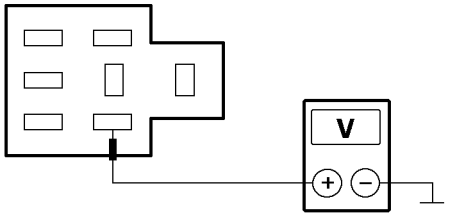 VFE0022757	1 Turn the multifunction switch to the LOW WIPER SPEED position. 2 Measure the voltage between relay socket – intermittent wipe, connector C48, pin 1, circuit 31S-AK9 (BK/OG) and ground. • Is battery voltage indicated? ☐ **Yes** GO TO **F3** ☐ **No** GO TO **F5**
F3: CHECK THE CIRCUIT FOR INTERMITTENT WIPE AND WIPER PARK FOR OPEN	
1 2 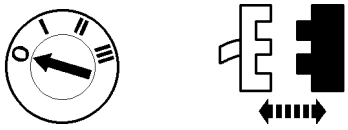 Multifunction switch C15b	

DIAGNOSIS AND TESTING (CONTINUED)

CONDITIONS	DETAILS/RESULTS/ACTIONS
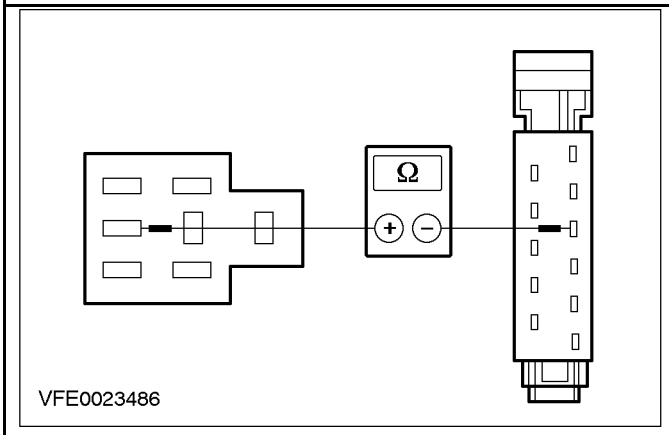	**3** Measure the resistance between multifunction switch, connector C15b, pin 9, circuit 31S-AK19 (BK/RD), harness side and relay socket – intermittent wipe, connector C48, pin 3, circuit 31S-AK19 (BK/RD). • Is the resistance less than 2 ohms? ☐ **Yes** GO TO **F4** ☐ **No** REPAIR the open circuit(s) between multifunction switch and relay – intermittent wipe, by using the wiring diagrams. TEST the system for normal operation.
F4: CHECK THE MULTIFUNCTION SWITCH FOR PROPER FUNCTION	
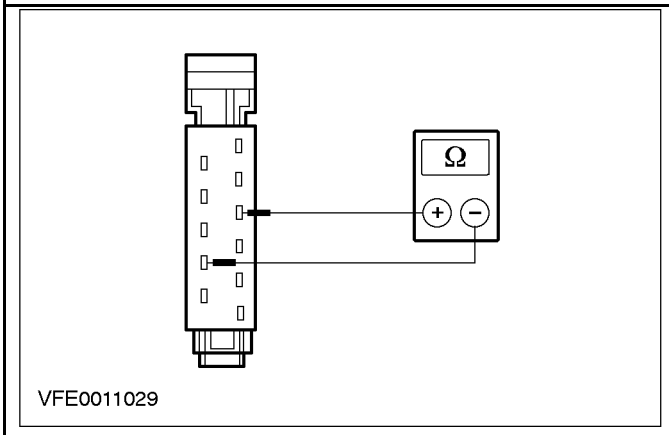	**1** Measure the resistance between multifunction switch, connector C15b, pin 9, circuit 31S-AK15 (BK/RD) and pin 2, circuit 31S-AK15 (BK/RD), harness side. • Is the resistance less than 2 ohms? ☐ **Yes** CHECK the multifunction switch, according to Component Testing attached to the wiring diagrams. If necessary INSTALL a new one. TEST the system for normal operation. ☐ **No** REPAIR the open circuit(s) at the multifunction switch, connector C15b, between pin 2 and pin 9, by using the wiring diagrams. TEST the system for normal operation.
F5: CHECK THE CIRCUIT (WIPER PARK) TO RELAY – INTERMITTENT WIPE FOR OPEN	
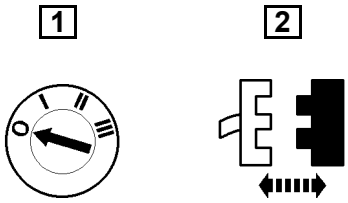 Windshield wiper motor C47	

DIAGNOSIS AND TESTING (CONTINUED)

CONDITIONS	DETAILS/RESULTS/ACTIONS
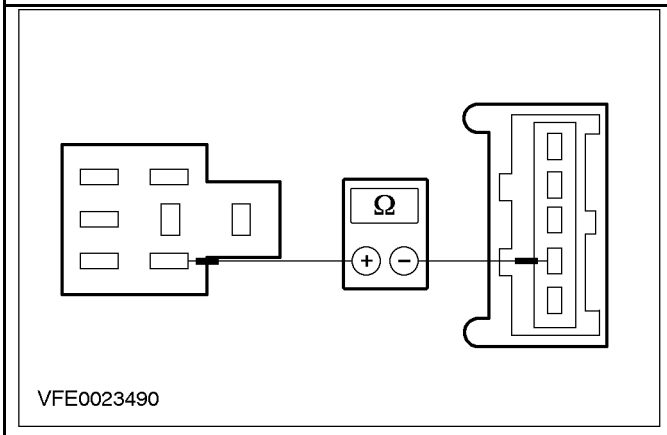	**3** Measure the resistance between windshield wiper motor, connector C47, pin 2, circuit 31S-AK9 (BK/OG), harness side and relay socket – intermittent wipe, connector C48, pin 1, circuit 31S-AK9 (BK/OG). • Is the resistance less than 2 ohms? ☐ **Yes** GO TO **F6** ☐ **No** REPAIR the open circuit(s) between windshield wiper motor and relay – intermittent wipe, by using the wiring diagrams. TEST the system for normal operation.
F6: CHECK THE WINDSHIELD WIPER MOTOR FOR PROPER FUNCTION	
1 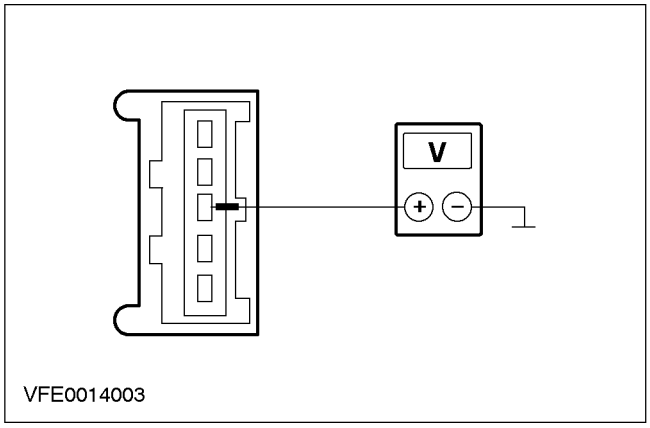	**2** Measure the voltage between windshield wiper motor, connector C47, pin 3, circuit 14-AK8 (VT/BU), harness side and ground. • Is battery voltage indicated? ☐ **Yes** CHECK the windshield wiper motor. If necessary INSTALL a new one. TEST the system for normal operation. ☐ **No** REPAIR the power supply of windshield wiper motor, by using the wiring diagrams. TEST the system for normal operation.

PINPOINT TEST G: THE WIPERS DO NOT OPERATE CORRECTLY IN THE MIST POSITION

CONDITIONS	DETAILS/RESULTS/ACTIONS
G1: CHECK THE RELAY – INTERMITTENT WIPE FOR PROPER FUNCTION	
1 **2** **3** 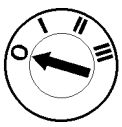 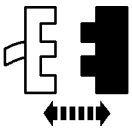 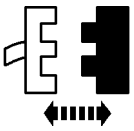 Relay – intermittent wipe C48 Multifunction switch C15b	

DIAGNOSIS AND TESTING (CONTINUED)

CONDITIONS	DETAILS/RESULTS/ACTIONS
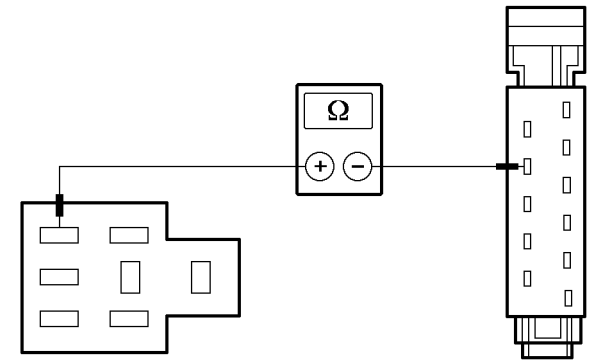 VFE0013115	**4** Measure the resistance between multifunction switch, connector C15b, pin 4, circuit 32-AK14 (WH/GN), harness side and relay socket – intermittent wipe, connector C48, pin 7, circuit 32-AK14 (WH/GN). • Is the resistance less than 2 ohms? ☐ **Yes** INSTALL a new relay – intermittent wipe. TEST the system for normal operation. ☐ **No** REPAIR the open circuit(s) between multifunction switch and relay – intermittent wipe, by using the wiring diagrams. TEST the system for normal operation.

PINPOINT TEST H: THE WASHER PUMP IS INOPERATIVE

CONDITIONS	DETAILS/RESULTS/ACTIONS
H1: CHECK THE POWER SUPPLY OF WASHER PUMP MOTOR	
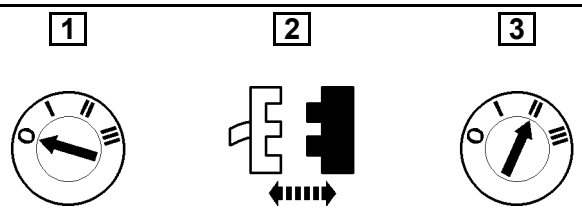 Washer pump motor C121 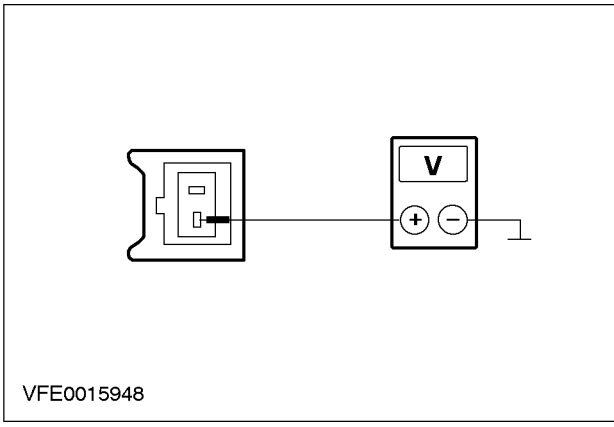 VFE0015948	**4** Measure the voltage between washer pump motor, connector C121, pin 2, circuit 33-AK34 (YE/BK), harness side and ground. • Is battery voltage indicated? ☐ **Yes** GO TO **H3** ☐ **No** GO TO **H2**
H2: CHECK THE MULTIFUNCTION SWITCH FOR PROPER FUNCTION	
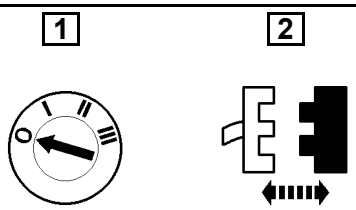 Multifunction switch C15b	

DIAGNOSIS AND TESTING (CONTINUED)

CONDITIONS	DETAILS/RESULTS/ACTIONS
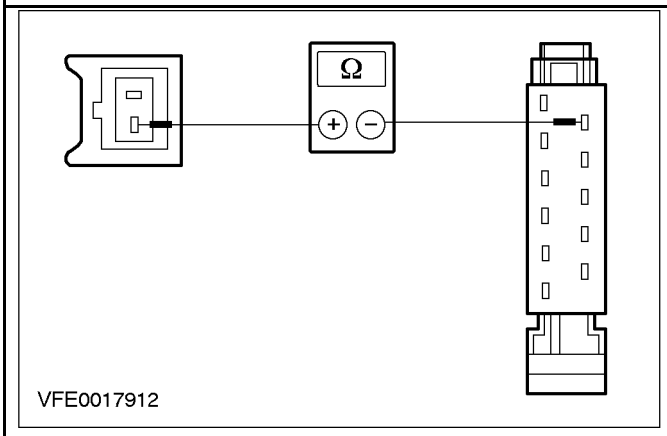	**3** Measure the resistance between multifunction switch, connector C15b, pin 1, circuit 33-AK34 (YE/BK), harness side and washer pump motor, connector C121, pin 2, circuit 33-AK34 (YE/BK), harness side. • Is the resistance less than 2 ohms? ☐ **Yes** CHECK the multifunction switch, according to Component Testing attached to the wiring diagrams. If necessary INSTALL a new one. TEST the system for normal operation. ☐ **No** REPAIR the open circuit(s) between multi-function switch and washer pump motor, by using the wiring diagrams. TEST the system for normal operation.
H3: CHECK THE WASHER PUMP MOTOR FOR PROPER FUNCTION	
1 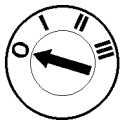 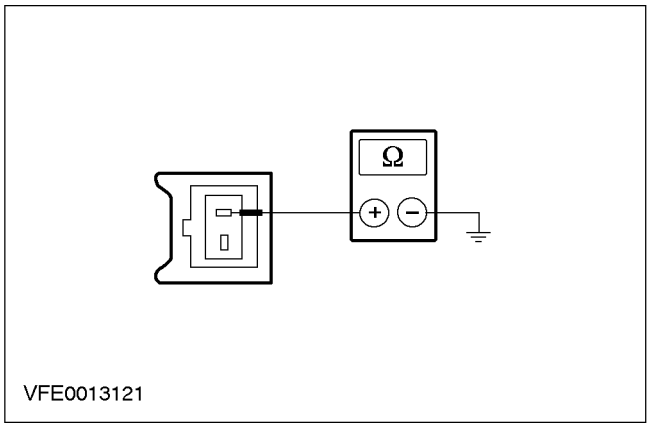	**2** Actuate the WINDSHIELD WASHER and hold it during the measure. **3** Measure the resistance between washer pump motor, connector C121, pin 1, circuit 32-AK34 (WH/BK), harness side and ground. • Is the resistance less than 2 ohms? ☐ **Yes** CHECK the washer pump motor. If necessary INSTALL a new one. TEST the system for normal operation. ☐ **No** REPAIR the open circuit(s) between multi-function switch; connector C15b, pin 4 and washer pump motor, by using the wiring diagrams. TEST the system for normal operation.

Component Tests

Windshield wiper motor

Switch the ignition OFF.

Disconnect the connector.

Using a test cable and set up the test as in the following description.

1. Check the windshield wiper motor in SLOW WIPER SPEED condition

DIAGNOSIS AND TESTING (CONTINUED)

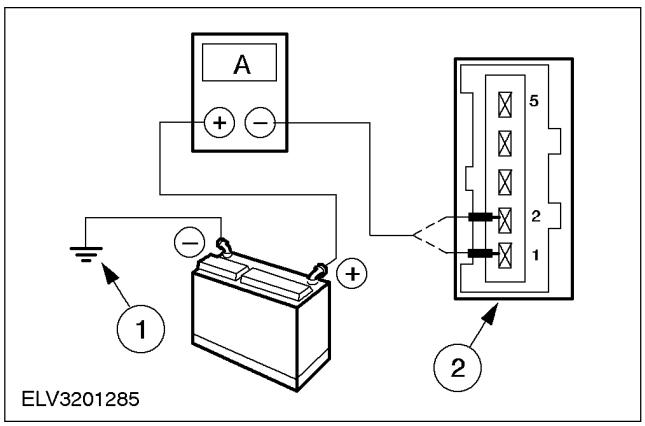

- Connect the battery positive terminal with the positive terminal of the ammeter.
- Connect the battery negative terminal with the windshield wiper motor housing (1).
- Connect the negative terminal of the ammeter with the windshield wiper motor (2), pin 4. The windshield wiper motor will run at slow speed.

Measure the amperage.

Is the value at the ammeter next to 1,5 A?

If yes, GO to 2.

If no, INSTALL a new windshield wiper motor.

2. Check the windshield wiper motor in FAST WIPER SPEED condition (figure ELV3201285)

- Connect the battery positive terminal with the positive terminal of the ammeter.
- Connect the battery negative terminal with the windshield wiper motor housing (1).
- Connect the negative terminal of the ammeter with the windshield wiper motor (2), pin 5. The windshield wiper motor will run at fast speed.

Measure the amperage.

Is the value at the ammeter next to 2,2 A?

If yes, GO to 3.

If no, INSTALL a new windshield wiper motor.

3. Check the windshield wiper motor in WIPER PARK position

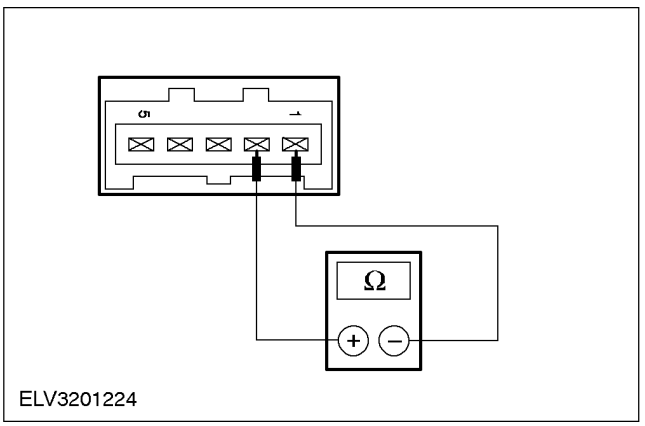

Measure the resistance at the windshield wiper motor, connector C47, between pin 2 and pin 1.

Is the resistance less than 2 ohms?

If yes, GO to 4.

If no, GO to 5.

4. Check the windshield wiper motor out of WIPER PARK position

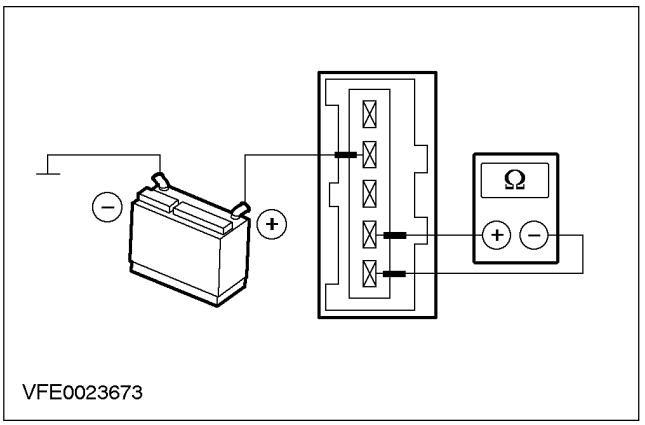

- Connect the battery positive terminal with windshield wiper motor, connector C47, pin 4
- Connect the battery negative terminal, for a half cycle, with the windshield wiper motor housing.

Measure the resistance at the windshield wiper motor, connector C47, between pin 2 and pin 1.

Is the resistance less than 2 ohms?

If yes, GO to 6. Repeat this test step. If yes again, INSTALL a new windshield wiper motor.

If no, GO to 5.

5. Check the windshield wiper motor out of WIPER PARK position

DIAGNOSIS AND TESTING (CONTINUED)

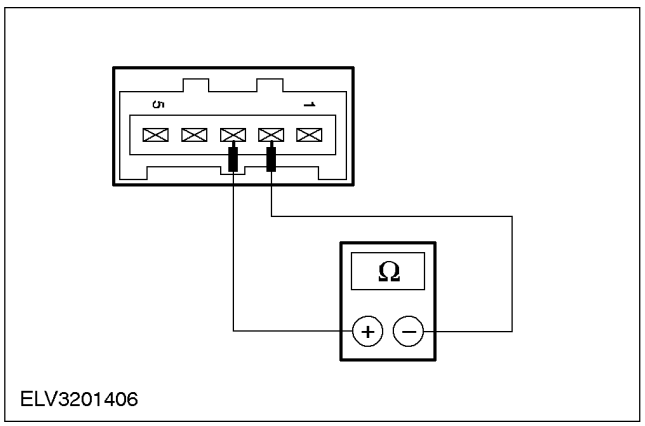

Measure the resistance at the windshield wiper motor, connector C47, between pin 2 and pin 3.

Is the resistance less than 2 ohms?

If yes, GO to 6.

If no, INSTALL a new windshield wiper motor.

6. Check the WIPER PARK function of the windshield wiper motor

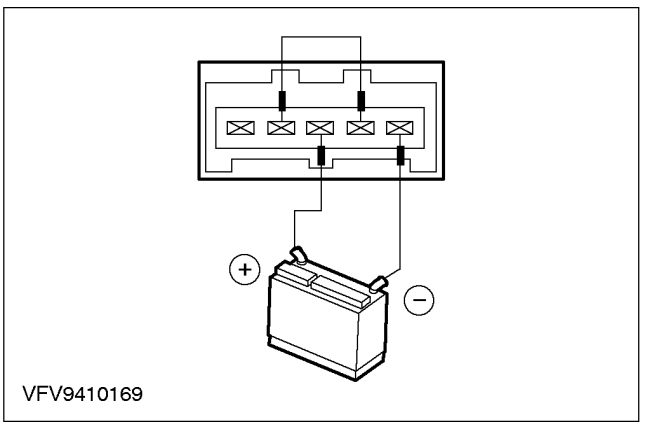

- Connect the battery positive terminal with windshield wiper motor, connector C47, pin 3.
- Connect the battery negative terminal with windshield wiper motor, connector C47, pin 1.
- Connect a jumper wire with the windshield wiper motor, connector C47, between pin 2 and pin 4.

Determine the condition

Does the windshield wiper motor move to the WIPER PARK position?

If yes, the windshield wiper motor is OK.

If no, INSTALL a new windshield wiper motor.

REMOVAL AND INSTALLATION
Mounting Arm and Pivot Table (32 554 0)

Removal

NOTE: Only disassemble the wiper linkage when overhauling it.

1. Remove the wiper motor. For additional information, refer to 32 524 0 in this section

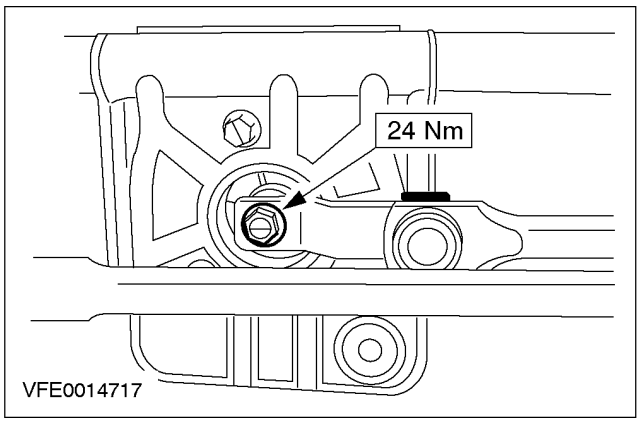

2. **NOTE:** Mark the position of the wiper motor crank before undoing it.
   Detach the wiper motor crank.
   - Unscrew the nut from the crank.
   - Release the crank from the taper by moving it back and forth.

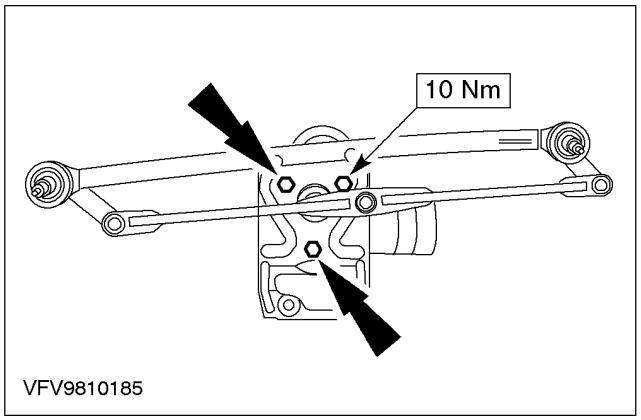

3. Detach the wiper linkage from the wiper motor.

Installation

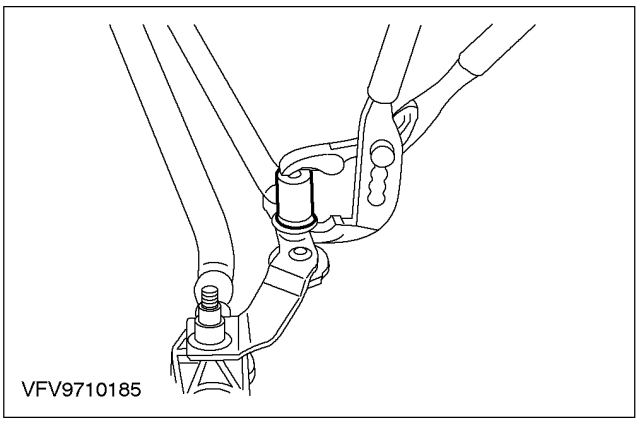

1. Attach the wiper motor crank.
   - Put the crank into position and crew on the crank nut.
   - Clip the wiper linkage into the pivot points using a suitable hollow tool (e.g. a socket).

2. Install the remaining components in reverse order.

REMOVAL AND INSTALLATION (CONTINUED)

3. Install the wiper motor. For additional information, refer to 32 524 0 in this section
4. Check operation of wipers.

REMOVAL AND INSTALLATION

Windshield Wiper Motor (32 524 0)

Removal

1. Standard preparatory measures
   - Note the radio keycode.
   - Note the pre-set radio stations.

⚠ **CAUTION: Disconnect the battery negative lead.**

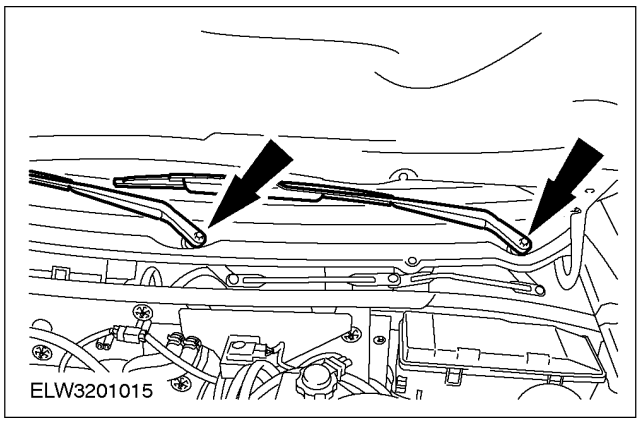

2. **NOTE:** The wiper motor must be in the park position.
   Remove the wiper arms.
   - Unclip the cover.
   - Undo the nuts two turns.
   - Lift the wiper arms and release them from the taper by moving them from side to side.
   - Unscrew the nuts and remove the wiper arms.
   - Unscrew the nuts from the pivot shaft bearings.

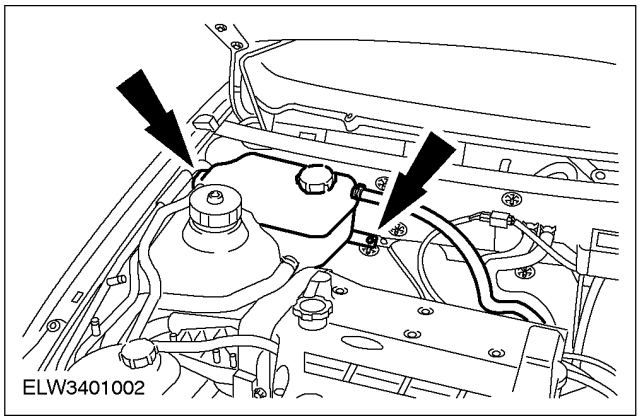

3. Detach the coolant recovery tank.
   - Remove the bolt.
   - Pull it out and lay it to one side.

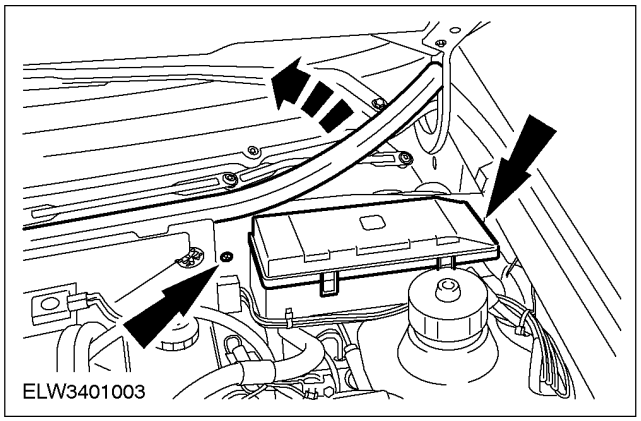

4. Remove the bulkhead cover.
   - Remove the rubber sealing strip.
   - Unclip the central junction box (CJB) cover.
   - Unscrew the bolt.

REMOVAL AND INSTALLATION (CONTINUED)

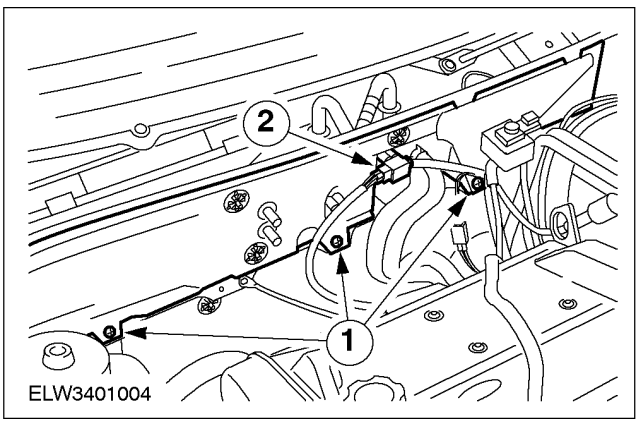

5. Remove the bulkhead cover (cont.).
   1. Unscrew the bolts.
   2. Unclip the connector.

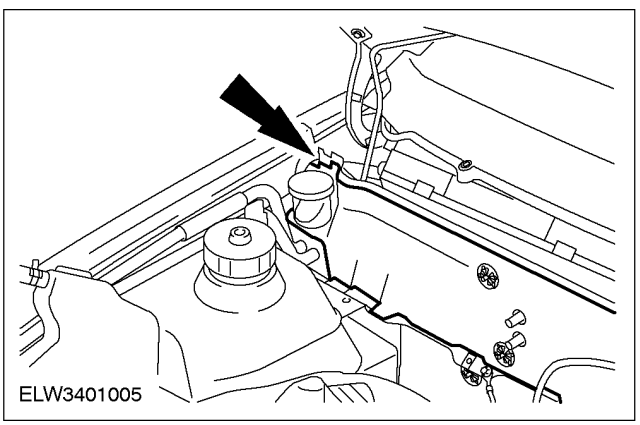

6. Remove the bulkhead cover (cont.).
   - Remove the bolt.

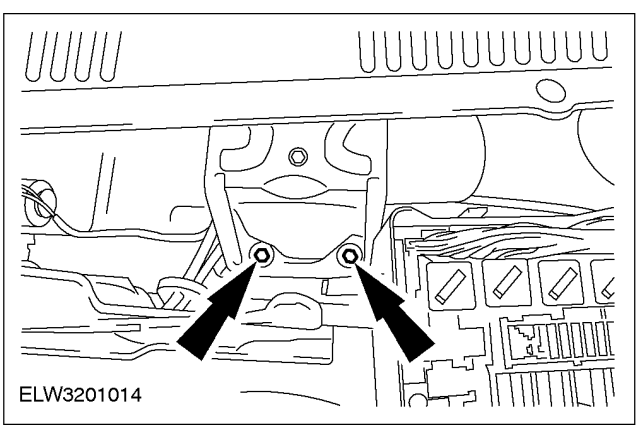

7. Remove the wiper motor.
   - Unscrew the bolts.
   - Unplug the connector.
   - Take out the wiper motor with linkage.

Installation

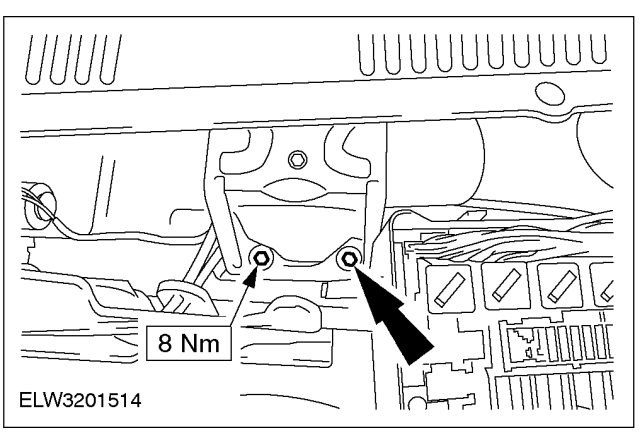

1. Install the wiper motor.
   - Connect the plug.
   - Position the wiper motor with linkage.
   - Tighten the pivot shaft bearing nuts finger tight.
   - Tighten the bolts.

REMOVAL AND INSTALLATION (CONTINUED)

2. Install the bulkhead cover, working through the steps in reverse order.

3. Clip the CJB cover in place.

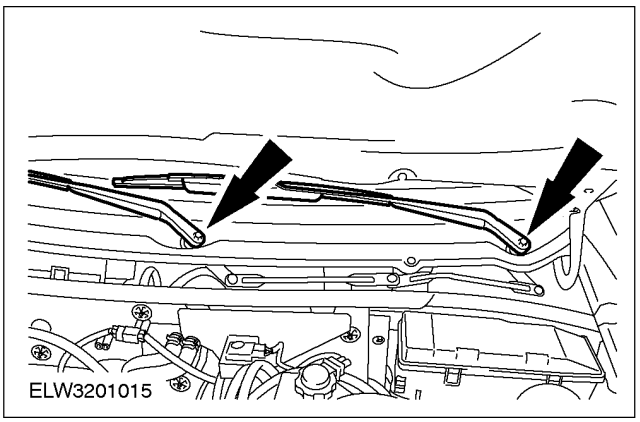

4. **NOTE:** The wiper motor must be in the park position.
   Fit the wiper arms.
   - Tighten the pivot shaft bearing nuts.
   - Attach the wiper arms and tighten the nuts finger tight.
   - Connect the battery negative lead.
   - Switch on the wipers and check that the wiper blades move smoothly.
   - Tighten the nuts.

5. Standard finishing operations
   - Enter the radio keycode.
   - Program the pre-set radio stations.
   - Reset the clock.
   - Carry out a road test to enable the PCM to collect data.

REMOVAL AND INSTALLATION

Windshield Washer Pump (32 624 0)

Removal

1. Undo the right-hand front wheel nuts.
2. Raise the vehicle. For additional information, refer to Section 100-02.
3. Detach the right-hand front wheel.
4. Remove the wheelhouse cover.

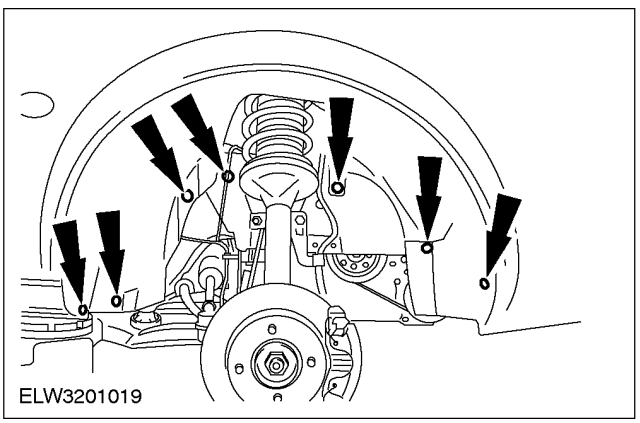

5. Remove the washer pump.
   1. Disconnect the hoses and drain the washer reservoir.
   2. Disconnect the plug.
   - Pull out the washer pump (push fit).
   - Remove the rubber grommet from the washer reservoir.

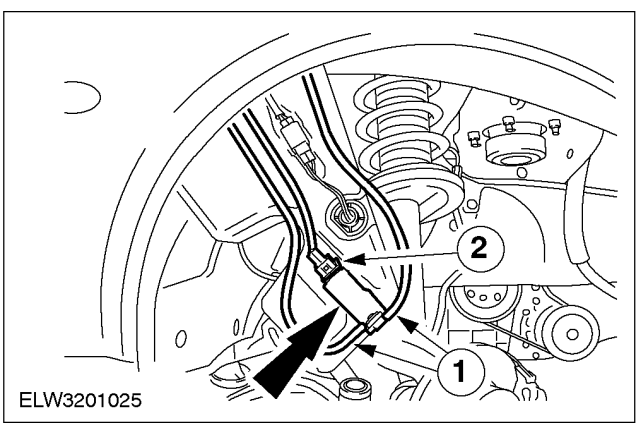

Installation

1. **NOTE:** Coat the rubber grommet with soap solution before fitting it.
   Refit the components in reverse order.

REMOVAL AND INSTALLATION (CONTINUED)

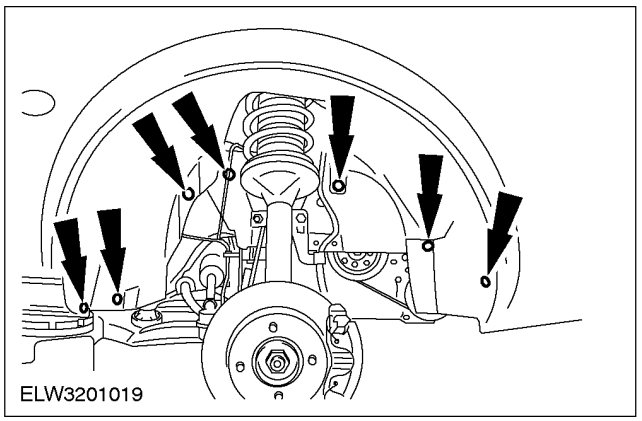

2. Install the wheelhouse cover.

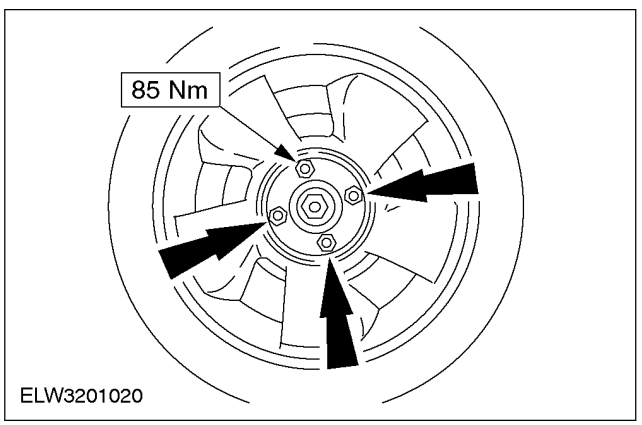

3. Fit the front wheel.
   - Lower the vehicle.

4. Fill up the washer reservoir.

5. Check the operation of the washer system.

REMOVAL AND INSTALLATION

Windshield Washer Reservoir (32 622 0)

Removal

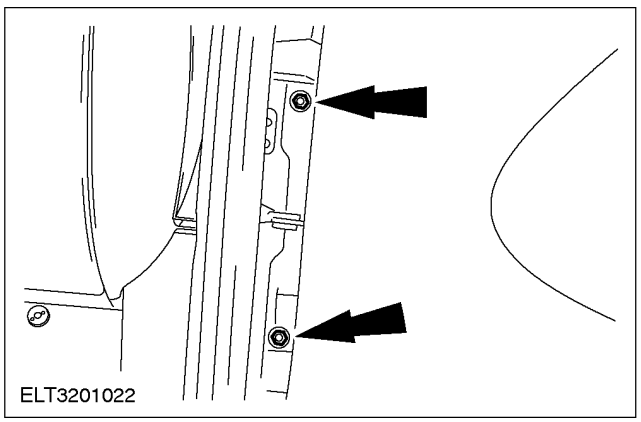

1. Unscrew the nuts on the A-pillar, working from the inside.

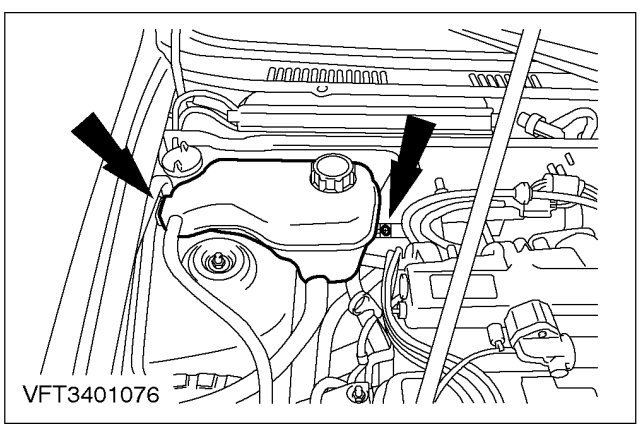

2. **NOTE:** There is no need to empty the coolant expansion tank.
   Detach the coolant expansion tank.
   - Remove the single screw.
   - Unhook the coolant expansion tank from its bracket.

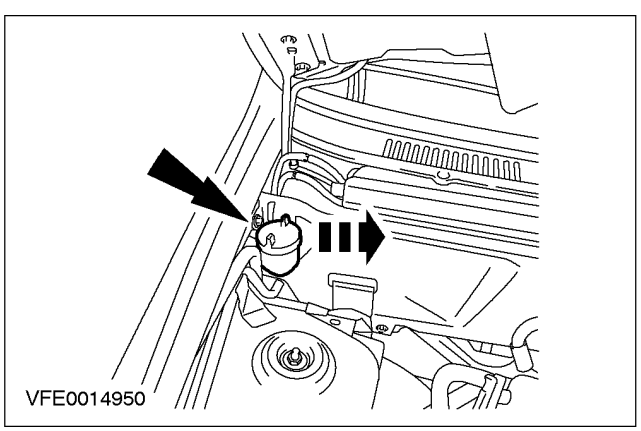

3. Pull off the filler neck.

4. Raise the vehicle. For additional information, refer to Section 100-02.

REMOVAL AND INSTALLATION (CONTINUED)

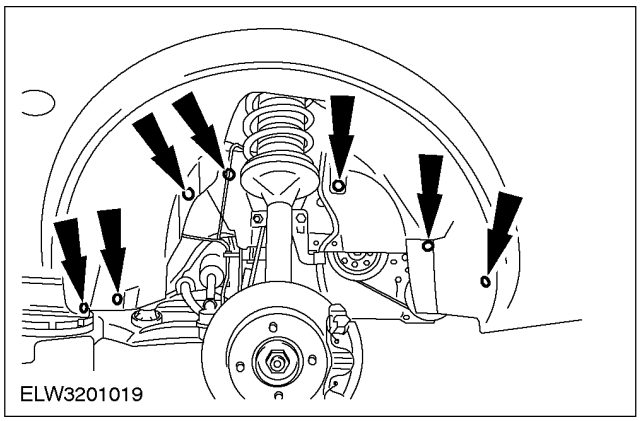

5. Remove the wheelhouse cover (shown without wheel).

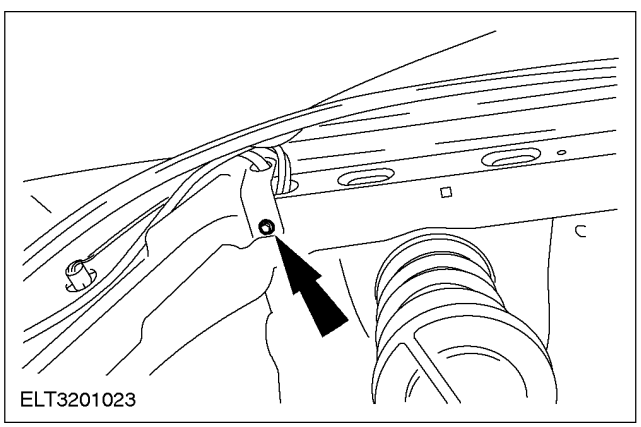

6. Remove the washer reservoir.
   - Drain the reservoir by pulling off the hoses at the pump.
   - Remove the single screw.

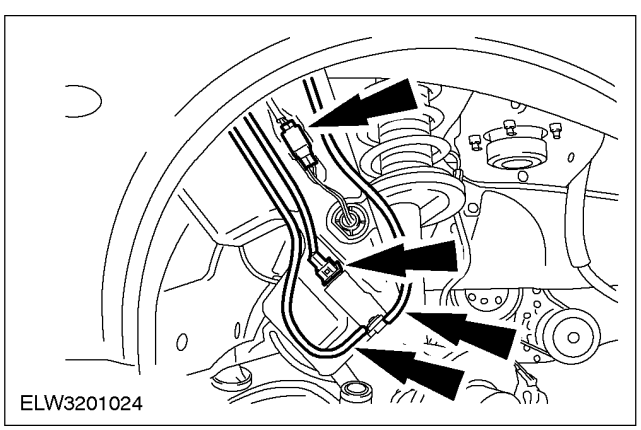

7. Remove the washer reservoir (continued).
   - Disconnect the plug.
   - Take out the washer reservoir.

Installation

1. **NOTE:** When inserting the reservoir check that the filler neck is correctly seated.
   Refit the components in reverse order.

2. Lower the vehicle.

3. Fill up the washer reservoir.

4. Check the operation of the windscreen washer system

GENERAL PROCEDURES

Wiper Blade and Pivot Arm Adjustment (32 591 0)

Special Tool(s)	
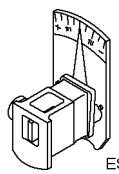 ES32006	Aligner, Wiper Arm 501-027 (32-006)

Adjustment

1. Position the wiper blades in the park position.
2. Remove the wiper blade.
   - Insert the wiper arm in the aligner and lay it on the windshield.

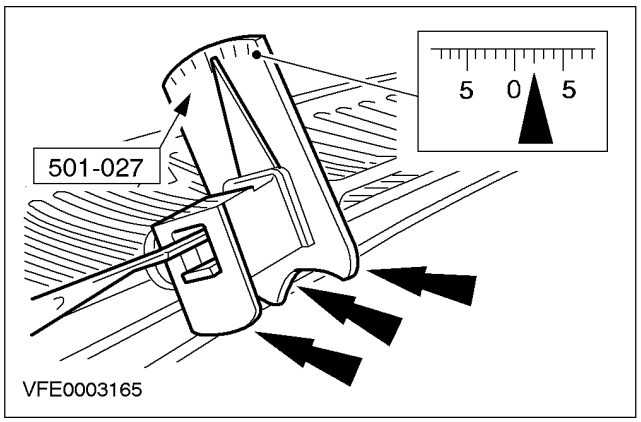

3. **NOTE:** All three points of support of the aligner must be placed on the windshield.

NOTE: Required values: For additional information, refer to General Specifications in this section.

Using the special tool, read off the angle between the wiper arm and the windshield.

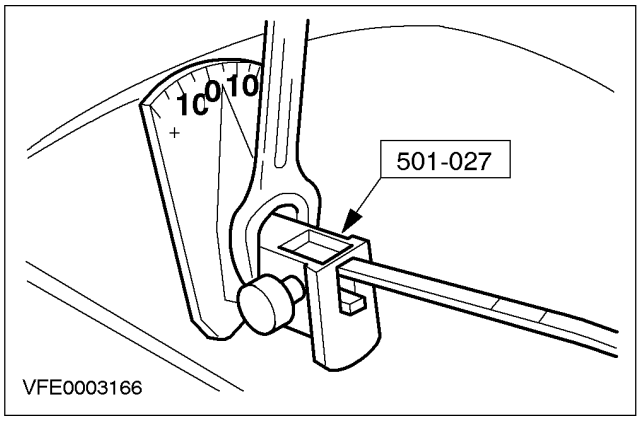

4. **NOTE:** Lift the special tool away from the windshield when correcting the angle, in order to prevent damage.

   Using the special tool, adjust the wiper arm.
   - Using an open-ended spanner on the special tool, adjust the angle.
5. Remove the special tool.
6. Install the wiper blade.

SPECIFICATIONS

Lubricants, Fluids, Sealers and Adhesives

Item	Specification
Grease (for wiper linkage bearings/pivot shaft bearing bushings)	SAM-1C-9111-A

Capacities

	Litres
Washer reservoir	3

Setting angle between wiper arms and windshield

Description	Angle
Windshield wiper arms	4 degrees

Torque Specifications

Description	Nm
Windshield wiper arm retaining nut	18
Windshield wiper motor retaining bolt	8
Windshield wiper motor bracket retaining bolt	10
Windshield wiper crank arm retaining nut	24

SECTION 501-19 Bumpers

VEHICLE APPLICATION: 2002 Bantam

SUBJECT **PAGE**

REMOVAL AND INSTALLATION

Front Bumper ..... (43 423 0) 501-19-2/3
Rear Bumperettes ..... (43 432 0) 501-19-4

SPECIFICATIONS

Specifications 501-19-5
Torque Specifications 501-19-5

REMOVAL AND INSTALLATION

Front Bumper (43 423 0)

Removal

1. For additional information, refer to Section 100-02. Raise and support the vehicle.

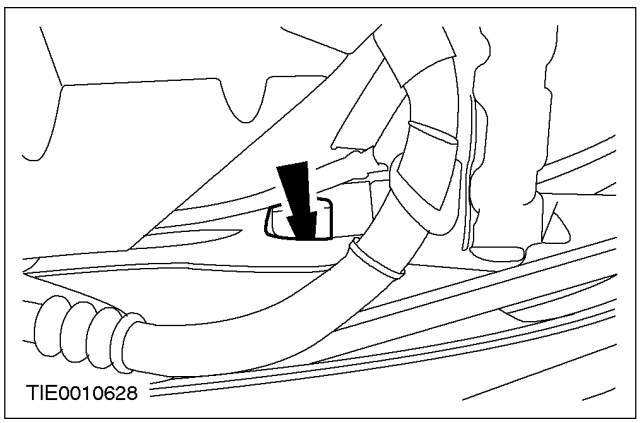

2. Remove the front bumper right - hand retaining bolt.

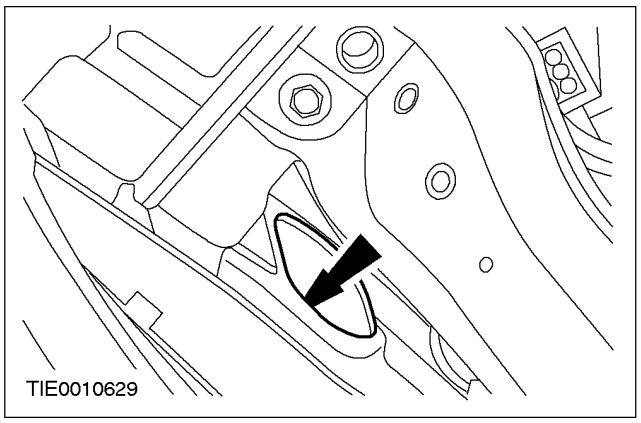

3. Remove the front bumper left - hand retaining bolt.

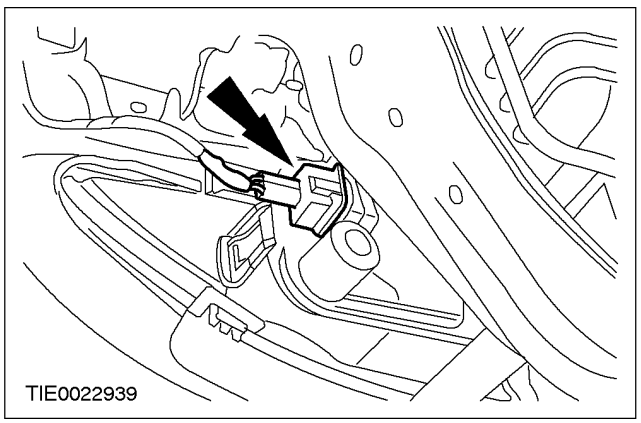

4. Disconnect the fog lamp electrical connectors, one each side (if equipped).

5. Lower the vehicle.

REMOVAL AND INSTALLATION (CONTINUED)

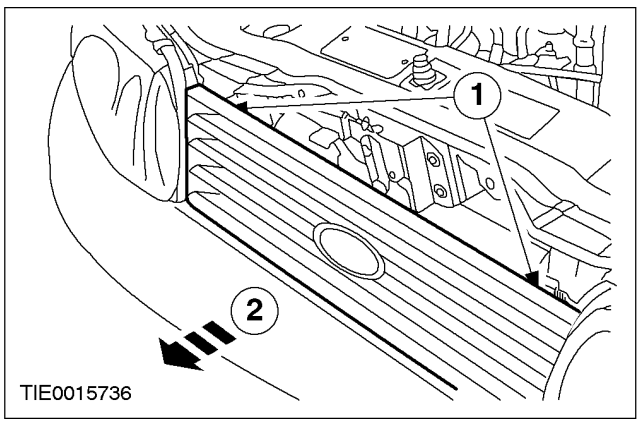

6. Remove the radiator grille.
   1. Detach the clips.
   2. Remove the radiator grille.

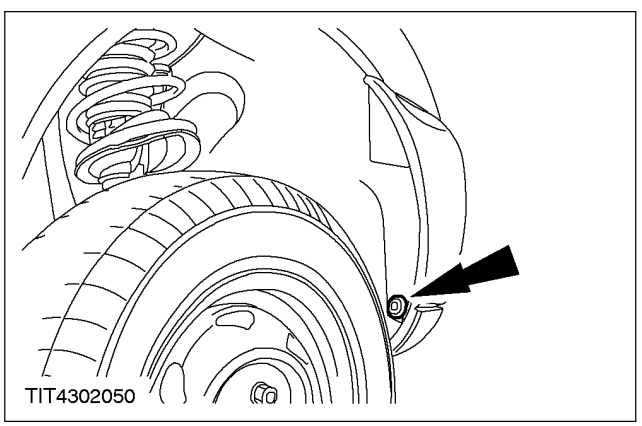

7. Remove the front bumper retaining screws.

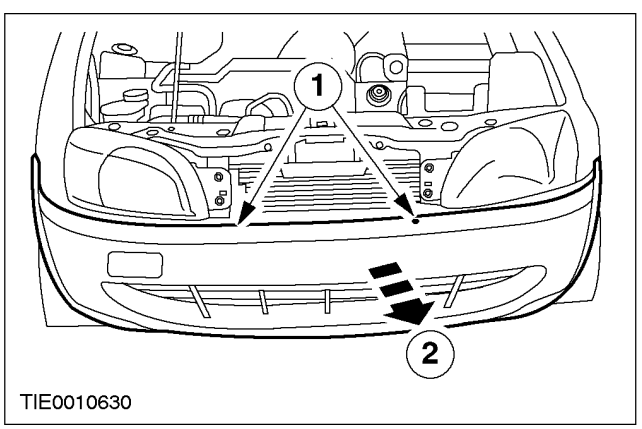

8. Remove the front bumper.
   1. Remove the fasteners.
   2. Remove the front bumper.

Installation

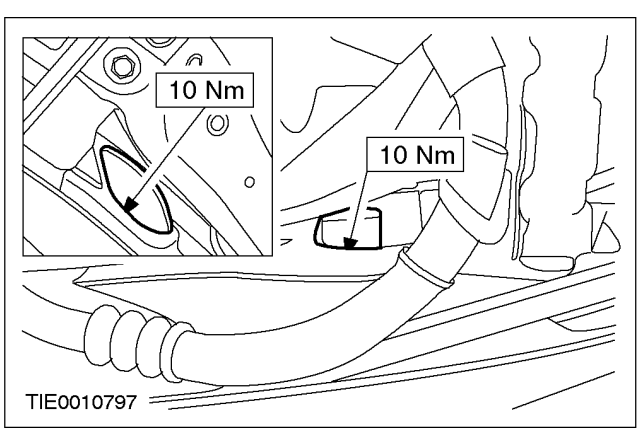

1. To install, reverse the removal procedure.

REMOVAL AND INSTALLATION

Rear Bumperette (43 432 0)

Removal

1. Remove the tail light assembly
   refer to Section 417-01.
2. Remove the foam seal.
3. Remove the bumperette retaining nuts.
4. Remove the bumperette.

Installation

1. To install, reverse the removal procedure.

SPECIFICATIONS

Torque Specifications

Description	Nm
Front Bumper retaining nuts	10
Rear Bumperette retaining nuts	10

SECTION 501-20A Occupant Restraints — Active

VEHICLE APPLICATION: 2002 Bantam

SUBJECT **PAGE**

DESCRIPTION AND OPERATION

Occupant Restraint System 501-20A-2

DIAGNOSIS AND TESTING

Occupant Restraint System 501-20A-3
- Principles of Operation 501-20A-3
- Inspection and Verification 501-20A-3
- Symptom Chart 501-20A-3
- Safety Belt Testing 501-20A-4
- Component Test 501-20A-4

REMOVAL AND INSTALLATION

Front Safety Belt Retractor ..... (40 222 0) 501-20A-5/7
Safety Belt Buckle and Pretensioner 501-20A-8/9

SPECIFICATIONS

Specifications 501-20A-10
- Torque Specifications 501-20A-10

DESCRIPTION AND OPERATION

Occupant Restraint System

WARNING: All safety belt components including retractors, buckles, child safety seat tether brackets and attaching hardware in use during a collision must be removed and new components installed. New safety belt components should also be installed where safety belts not in use during a collision, are inspected and found to be damaged or operate incorrectly. Failure to follow these instructions may result in personal injury.

TIE0018196

WARNING: All vehicles fitted with a passenger air bag have a WARNING sticker attached to the instrument panel PROHIBITING the use of rear facing child seats in the front seating positions. Failure to follow this instruction may result in personal injury.

The safety belt system utilizes three-point lap and diagonal safety belts in the front seat positions.

The front safety belt retractors incorporate a webbing grabber and a load limiting device. The webbing grabber is activated by sudden deceleration of the vehicle, excessive vehicle tilt or rapid acceleration of the safety belt webbing. When the webbing grabber is activated the safety belt webbing is clamped against a force guide and clamp ring preventing further safety belt webbing payout. The load limiting device allows progressive payout of additional safety belt webbing when the force exerted exceeds a predetermined limit.

The front seat safety belt buckles incorporate pre-tensioner's. The safety belt buckle pre-tensioner's are connected to the air bag control module, which monitors the circuits, and if a fault is detected will illuminate the air bag warning indicator located in the instrument cluster. For additional information, refer to Section 501-20B.

In the event of a collision, the safety belt buckle pre-tensioner's will deploy at the same time as the front air bags.

DIAGNOSIS AND TESTING

Occupant Restraint System

Principles of Operation

WARNING: All safety belt assemblies, including retractors, buckles and front safety belt buckle support assemblies (slider bar), if equipped, child safety seat tether brackets and attaching hardware should be inspected after any collision. New safety belt assemblies should be fitted unless a qualified technician finds the assemblies show no damage and operate correctly. Failure to follow these instructions may result in personal injury.

The safety belt system utilizes the conventional lap and diagonal three point fixing in both front seat positions

The front seat safety belt buckles are attached to the seat frame of each front seat.

The front safety belt retractors incorporate a torsion bar load limiting device. The device consists of a retractor reel, which is mounted onto a spindle (torsion bar), which, once the sensor has locked the retractor reel and a predetermined load is applied, twists and pays out additional webbing into the system. The torsion bar load limiting device will only react if the safety belt is in use at the time of impact.

Emergency Locking Retractor (ELR)

The retractors in all seat positions feature ELR. During normal operation the ELR allows free movement of the belted occupant. In an emergency the ELR will lock, preventing webbing payout and hence forward movement of the occupant. Locking may be achieved by one of two mechanisms:

Vehicle Motion Sensor (VMS)

The ELRs VMS is operated by sudden deceleration of the vehicle or excessive tilt. Once operated the VMS causes a locking pawl to be engaged, thus locking the retractor, preventing webbing payout. The locking method used is dependent on which type of ELR is fitted.

When the vehicle is stationary, the VMS stabilizes, causing the pawl to disengage and unlock the retractor, allowing webbing payout.

Webbing Motion Sensor (WMS)

The ELRs WMS is operated by rapid acceleration of the webbing. Once operated, it causes a locking pawl to be engaged thus locking the retractor. Webbing payout is prevented in the same manner as VMS.

Inspection and Verification

1. Verify the customer concern by operating the system.
2. Visually inspect for obvious signs of mechanical and electrical damage.

Visual Inspection Chart

Mechanical
• Loose webbing • Damaged/frayed webbing • Safety belt retractor and tongue assembly • Safety belt buckle

3. If an obvious cause for an observed or reported concern is found, correct the cause (if possible) before proceeding to the next stop.
4. If the concern is not visually evident, verify the symptom and refer to the Symptom Chart.

Symptom Chart

Condition	Possible Sources	Action
•Normal mode - occupant restraint system inoperative	•Broken tooth on retractor sensor gear. •Loose webbing.	•REFER to the Functional Test in this section.

DIAGNOSIS AND TESTING

Safety Belt Testing

Functional Test

Poor Retraction

If a safety belt does not retract correctly, check that the anchor covers and trim bezels are correctly installed and not rubbing against the safety belt webbing. Where necessary, check that the safety belt webbing is not rubbing at one end of the retractor cover slot and, if so, correct by loosening the retaining bolt, aligning the retractor to centralize the safety belt webbing and retighten the bolt.

Both the vehicle motion sensor and the webbing motion sensor should be fully operational and can be checked by the following tests:

Vehicle Motion Sensor Test

Either of the following two procedures may be used to check correct operation of the vehicle motion sensor. Both methods require two technicians but note that technicians of larger than normal build should not be asked to conduct these tests. This is to avoid the possibility of a fully unrolled safety belt webbing being mistaken for a correctly locked safety belt retractor.

Test Method 1 (braking)

WARNING: It is important that during this test, the wearers allow the safety belts to provide the restraint and do not attempt to anticipate the sudden deceleration. The steering wheel should not be used as a brace. However, both driver and passenger should prepare themselves for the possibility that the safety belt will not lock. The passenger should hold their hands in front of them, just clear of the instrument panel or front seat backrest, depending on which safety belt is being tested. Failure to follow these instructions may result in personal injury.

- Select for this test a quiet or private stretch of road. Make sure that the road is clear and that full visibility is maintained at all times.
- Both driver and passenger should adopt a normal, comfortable seating position. Both occupants should wear the safety belts and the safety belt webbing must be correctly adjusted, with no slack.
- Proceed at a speed of 10 km/h. Do not exceed 10 km/h for this test.
- Apply the foot brake sharply to stop the vehicle. If the vehicle motion sensitive lock mechanism is operating correctly, the safety belt webbing will lock and restrain the wearer.
- Conduct the test twice in each front passenger seat position.
- Any safety belt retractor, which does not restrain the wearer during this test, must not be reused. A new safety belt must be installed.

Test Method 2 (turning circle)

This method requires a flat open area of private road, sufficient for the vehicle to be driven in a continuous circle on full steering lock.

- Both driver and passenger should adopt a normal, comfortable seating position. Both occupants should wear the safety belts and the safety belt webbing must be correctly adjusted, with no slack.
- Start the engine and, with the steering on full right-hand lock, drive the vehicle in a continuous circle at 16 km/h. Do not exceed 16 km/h for this test.
- When the speed is stable, the passenger should attempt to slowly extract the safety belt webbing from each safety belt retractor in turn. If the vehicle motion sensitive lock mechanism is operating correctly, it will not be possible to extract the webbing.
- Any safety belt retractor from which it is possible to extract the webbing during this test must not be used. A new safety belt must be installed.

Component Test

With the vehicle stationary and on level ground take firm hold of the safety belt webbing (on the tongue side of the upper safety belt anchor) and pull out quickly. The retractor should lock within 0.25 meter, preventing further webbing payout. Any safety belt retractor from which it is possible to extract further webbing must not be used. A new safety belt must be installed.

REMOVAL AND INSTALLATION

Front Safety Belt Retractor (40 222 0)

Removal

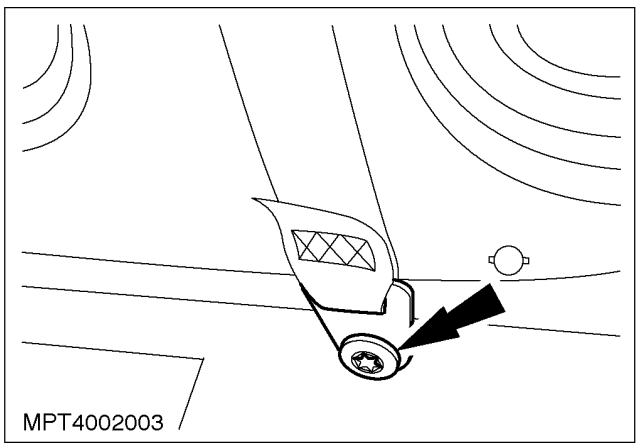

1. **CAUTION: The bolt securing the safety belt anchor is held captive by a paper washer. The bolt, spacer and paper washer must remain on the safety belt anchor at all times when the safety belt is detached or removed.**
   Detach the safety belt lower anchor from the floor panel.

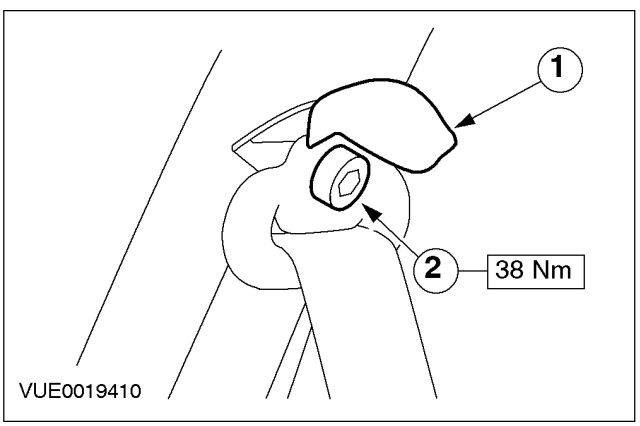

2. **CAUTION: The bolt securing the safety belt anchor is held captive by a paper washer. The bolt, spacer and paper washer must remain on the safety belt anchor at all times when the safety belt is detached or removed.**
   Detach the safety belt upper anchor from the B-pillar.
   1. Detach the trim panel.
   2. Remove the retaining bolt.

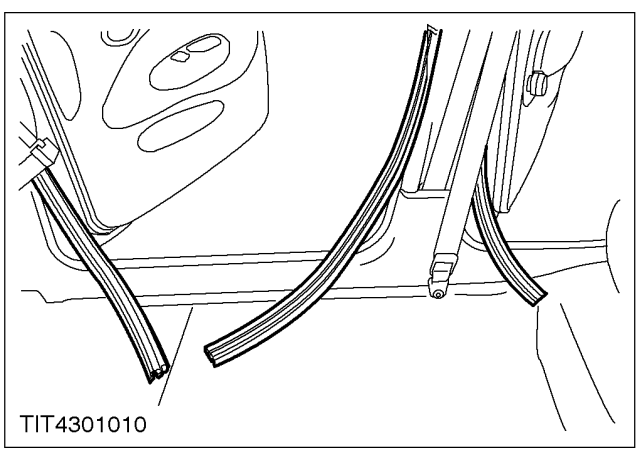

3. Detach the door opening weather strips.

REMOVAL AND INSTALLATION (CONTINUED)

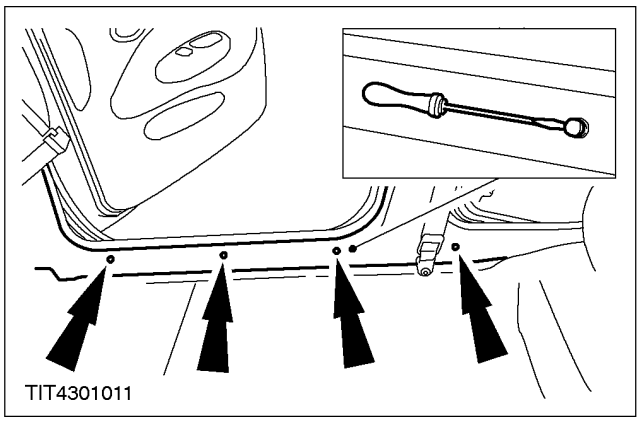

4. Detach the cowl side trim panel.
   - Using a suitable screwdriver remove the four lower clips.

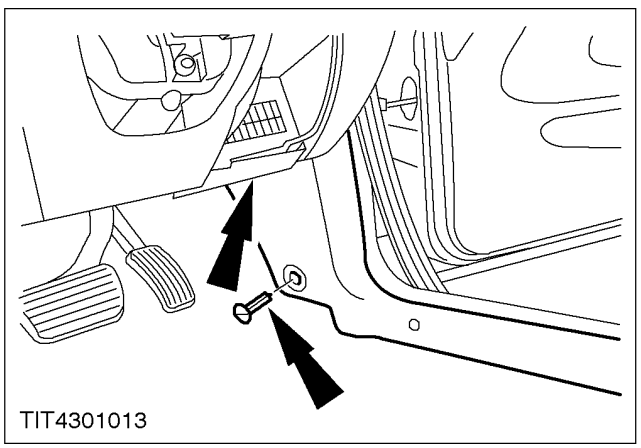

5. Remove the cowl side trim panel.
   - Using a suitable screwdriver remove the two front clips.

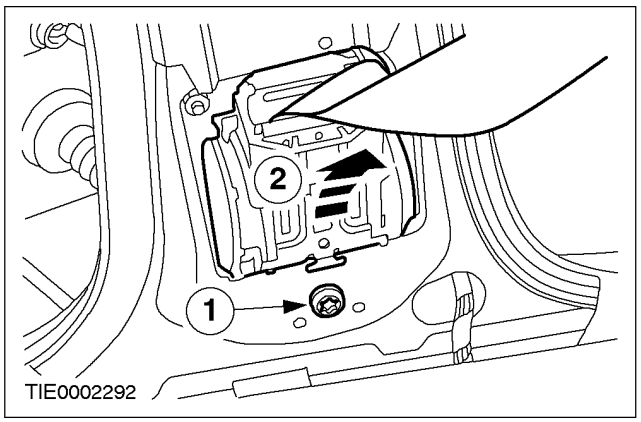

6. Remove the front safety belt retractor.
   1. Remove the retaining bolt.
   2. Lift the retractor to detach the locating tang.

Installation

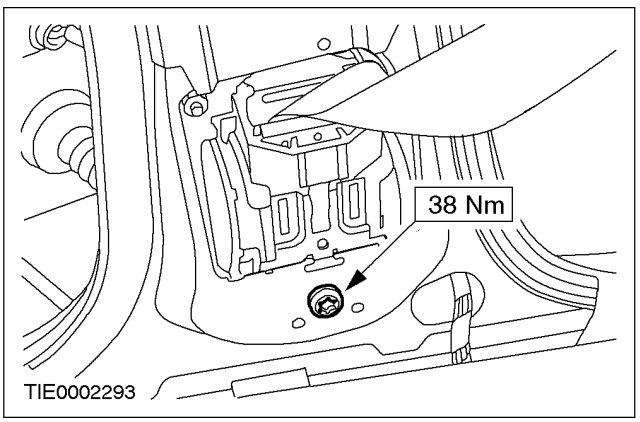

1. To install, reverse the removal procedure.

REMOVAL AND INSTALLATION (CONTINUED)

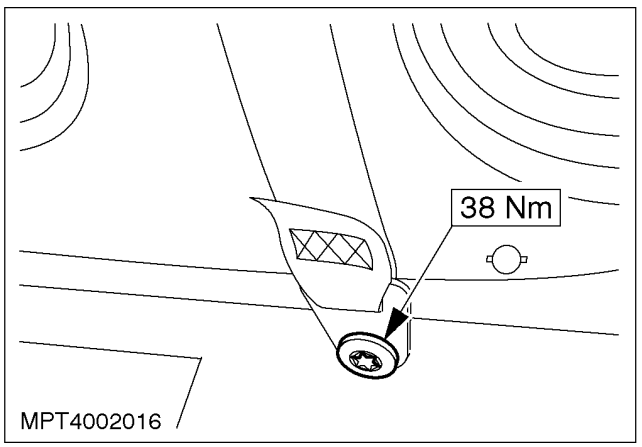

REMOVAL AND INSTALLATION

Safety Belt Buckle and Pretensioner

Removal

WARNING: Never probe the electrical connectors of air bag modules or any other supplemental restraint system component. Failure to follow this instruction may result in personal injury.

1. Remove the front seat backrest. For additional information, refer to Section 501-10.

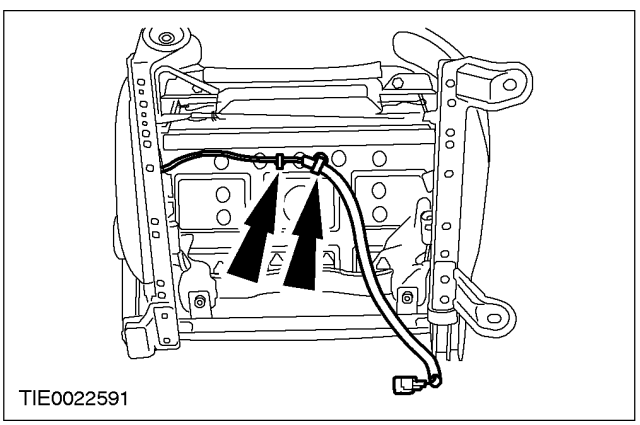

2. **CAUTION: Note the position and routing of the safety belt buckle pretensioner wiring harness to aid assembly. An incorrectly routed wiring harness may lead to the wiring harness becoming damaged on the seat mechanism.**
   Detach the safety belt buckle pretensioner wiring harness from the underside of the seat.

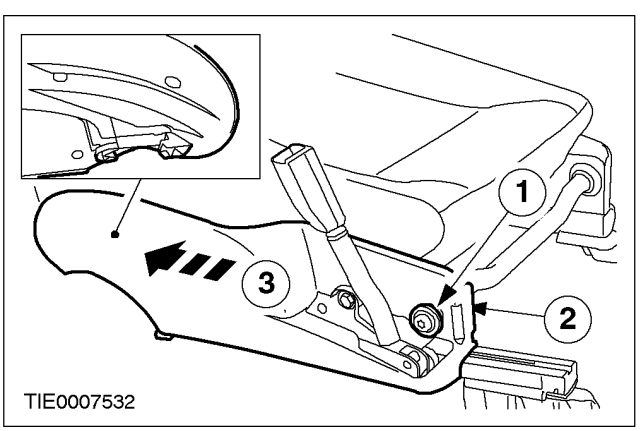

3. Remove the seat inner trim panel.
   1. Remove the retaining bolt and spacer.
   2. Detach the rear locating tang.
   3. Slide the inner trim panel forwards to detach the front locating tang.

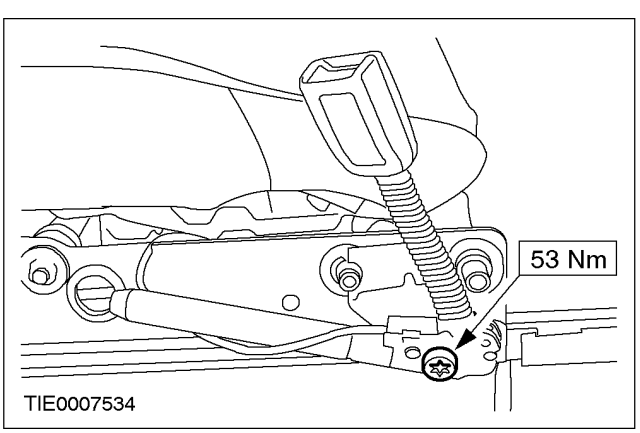

4. Remove the safety belt buckle and pretensioner.

REMOVAL AND INSTALLATION (CONTINUED)

Installation

WARNING: Never probe the electrical connectors of air bag modules or any other supplemental restraint system component. Failure to follow this instruction may result in personal injury.

1. To install, reverse the removal procedure.

SPECIFICATIONS

Torque Specifications

Description	Nm
Pretensioner bolt	50
Safety belt Torx bolts – All	38

SECTION 501-20B Occupant Restraints — Passive — Supplemental Air Bag System

VEHICLE APPLICATION: 2002 Bantam

SUBJECT **PAGE**

DESCRIPTION AND OPERATION

Air Bag Supplemental Restraint System (SRS) 501-20B-2/4
Lamp Fault Codes (LFC) 501-20B-4

DIAGNOSIS AND TESTING

Air Bag and Safety Belt Pretensioner Supplemental Restraint System (SRS) 501-20B-5
Diagnosing Customer Concerns Without Hard DTCs/LFCs 501-20B-5
Diagnosing Customer Concerns with Hard DTCs/LFCs 501-20B-5
Deactivation 501-20B-5/6
Reactivation 501-20B-6
Glossary 501-20B-6
Principles of Operation 501-20B-6/7
Diagnostic Instructions — Air Bag and Safety Belt Pretensioner Supplemental Restraint System (SRS) 501-20B-8
Pinpoint Tests — Air Bag and Safety Belt Pretensioner Supplemental Restraint System (SRS) 501-20B-9
Pinpoint Tests 501-20B-9/47

REMOVAL AND INSTALLATION

Driver Air Bag Module ..... (40 700 0) 501-20B-48/49
Passenger Air Bag Module ..... (40 701 0) 501-20B-50/52
Air Bag Sliding Contact ..... (33 392 0) 501-20B-53/54
Air Bag Control Module ..... (33 650 0) 501-20B-55/56

GENERAL PROCEDURES

Unserviceable Air Bag Disposal 501-20B-57/58
Scrapped Vehicle Air Bag Disposal 501-20B-59/61
Deployed Air Bag Disposal 501-20B-62

SPECIFICATIONS

Specifications 501-20B-63
Torque Specifications 501-20B-63

DESCRIPTION AND OPERATION

Air Bag Supplemental Restraint System (SRS)

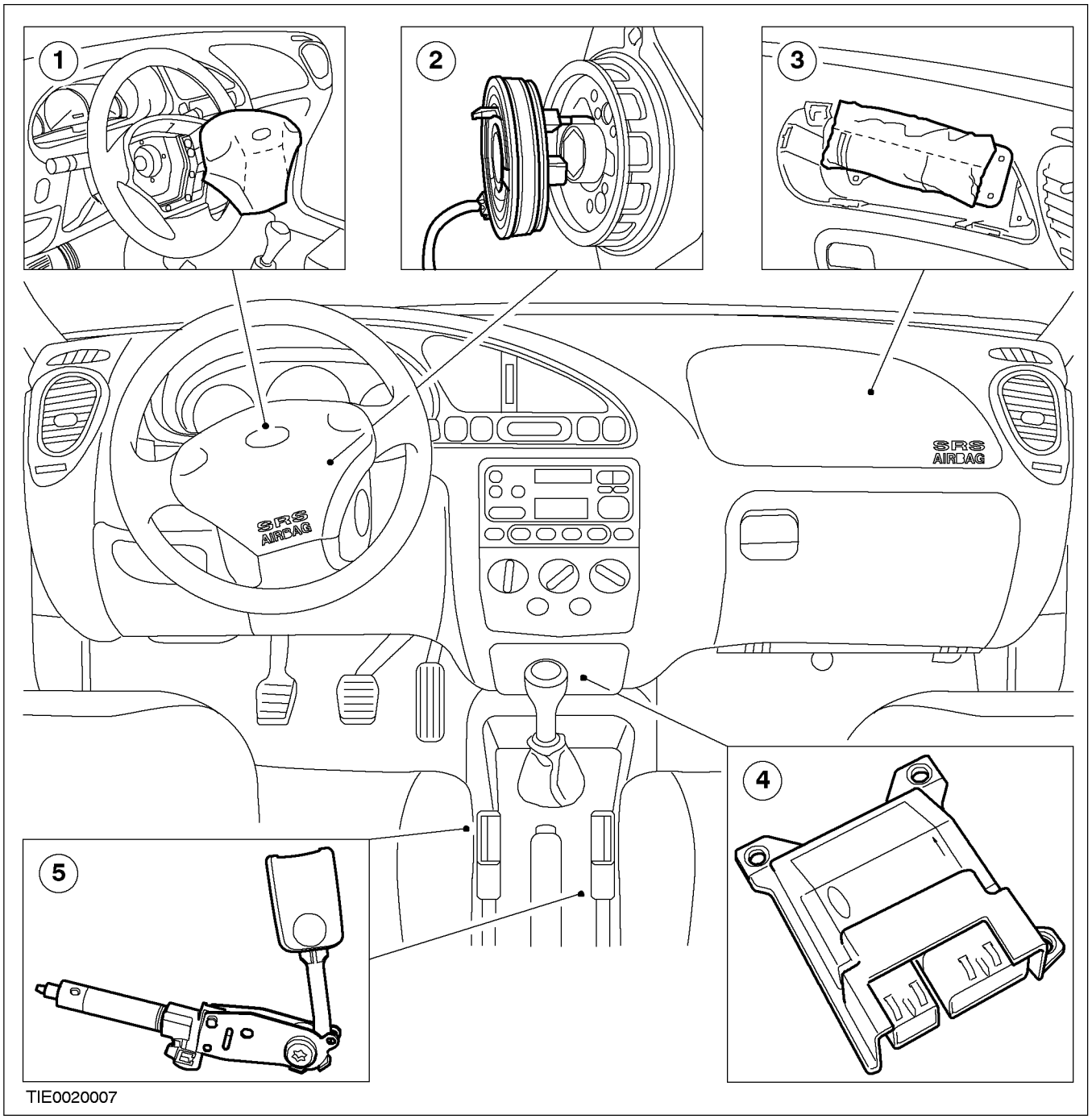

Item	Description
1	Driver air bag module
2	Air bag sliding contact
3	Passenger air bag module
4	Air bag control module
5	Safety belt buckle and pretensioner

The supplementary restraint system (SRS) is AC fired and has been specifically designed to protect the driver and passenger from sustaining severe facial and upper body injuries in the event of a serious impact. Optimum protection can only be achieved when used in conjunction with a conventional three-point safety belt. The safety belts form an integral part of the SRS.

DESCRIPTION AND OPERATION (CONTINUED)

TIE0018196

WARNING: All vehicles equipped with the optional passenger air bag from the factory have a WARNING sticker attached to the instrument cluster. PROHIBITING the use of rear facing child or baby seats.

The SRS consists of the following components:

- air bag control module
- wiring harness
- air bag sliding contact
- warning indicator
- air bag module(s)
- safety belt buckle and pre-tensioner's

The air bag control module governs the operation of the whole system, including the diagnostics element. It contains two frontal impact sensors, a crash sensor and a safing sensor. The crash sensor produces a signal corresponding to the rate of deceleration. The safing sensor detects only deceleration. These two sensors are connected in series and if they both sense a deceleration in excess of a predetermined limit, the air bag control module will deploy the air bag module(s) and the safety belt buckle pre-tensioner's. The air bag control module will always deploy the safety belt buckle pretensioner before or at the same time as the air bag(s) and in that sequence only.

The air bag control module performs continual system diagnostics. In the event of a fault being detected the warning indicator is illuminated either constantly or intermittently. The behaviour of the warning indicator depends on the type of fault present. The warning indicator is located in the instrument cluster.

The wiring harness provides power to the air bag control module from the vehicle supply and hence to the air bag module(s), safety belt buckles pre-tensioner's and the warning indicator.

The air bag sliding contact is designed to carry signals between the air bag control module and the driver air bag module. The air bag sliding contact is fitted to the steering column and consists of fixed and moving parts connected by a coiled Mylar tape with integral conducting tracks. The Mylar tape is able to `wind up' and `unwind' as the steering wheel (to which the moving part is attached) is turned, maintaining electrical contact at all times between the air bag control module and the driver air bag module.

The driver and passenger air bag modules consist of the following components, which cannot be disassembled:

- inflator
- bag
- container
- cover

Driver and passenger air bag module inflator

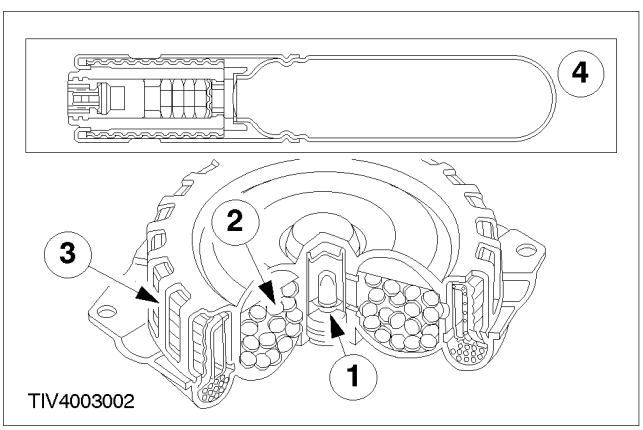

Item	Description
1	Igniter
2	Propellant charge
3	Catalyst
4	Passenger inflator unit

The inflator is screwed into a metal cup-shaped container. The air bag is then folded on top of the inflator and the cover closes the whole sub-assembly.

The driver air bag module is fitted to the steering wheel, the cover forming the outer surface of the steering wheel boss. The cover has invisible `split lines' moulded in its surfaces allowing the air bag to easily exit though the cover when the system deploys.

DESCRIPTION AND OPERATION (CONTINUED)

The passenger air bag module is located above the glove compartment and is integrated into the instrument panel to provide an unobtrusive appearance. The cover is a one-piece moulding held by clips and a short retaining strap. As the air bag deploys, the cover is forced free of the clips, but remains attached to the instrument panel by the short retaining strap.

The purpose of the inflator is to generate the gas needed to fill the air bag. It consists of a high strength steel casing filled with a solid propellant charge and an electrically activated Igniter. The igniter is activated by a signal from the air bag control module, which in turn ignites the propellant charge. The very rapid burning of the propellant produces sufficient gas to fill the air bag(s). As the gases expand they cool, preventing heat damage to the air bag. The driver air bag module has one inflator and an air bag, with a filled volume of 30 litres. The passenger air bag module has a single inflator and an air bag with a filled volume of 60 litres.

The air bag(s) are a one-piece woven item with a silicon coating to provide flame and heat protection in the vicinity of the inflator.

The SRS will communicate concerns detected during a driving cycle or after initial key ON by means of a warning indicator located in the instrument cluster.

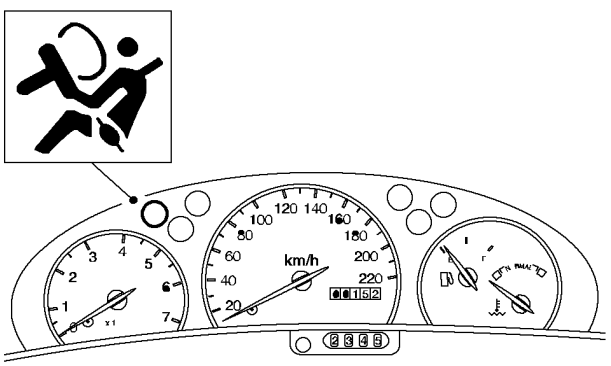

TIW4003020

If a concern is detected, the air bag control module will communicate by flashing the warning indicator to give a lamp fault code (LFC). A diagnostic trouble code (DTC) is logged by the air bag control module in a non-volatile memory. For additional information,
refer to Diagnosis and Testing in this section.

Lamp Fault Codes (LFC)

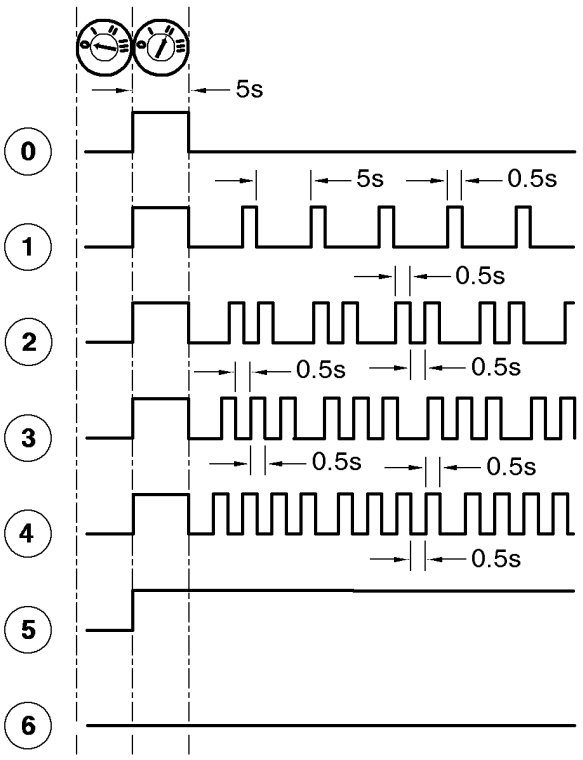

DTV4003020

Item	Flash Codes
0	Normal indicator operation
1	One flash cycle: Driver air bag circuit LFC
2	Two flash cycle: Passenger air bag circuit LFC
3	Three flash cycle: LFC common to both driver and passenger air bag circuits
4	Four flash cycle: LFC common to both driver and passenger safety belt buckle pretensioner circuits
5	Continuous light: Air bag control module fault.
6	No warning indicator: Instrument cluster circuit fault.

DIAGNOSIS AND TESTING

Air Bag and Safety Belt Pretensioner Supplemental Restraint System (SRS)

Refer to Wiring Diagrams Cell: 50120, Occupant Restraints - Passive for schematic and connector information.

Special Tool(s)	
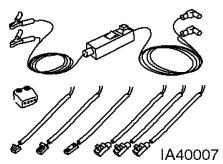 IA40007	Test and Deployment Lead, Air Bag/Pyrotechnic Safety Belt 418-S055 (40-007)
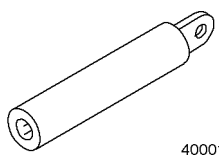 40001	Simulator - Driver and Passenger Air Bags 418-037 (40-001)
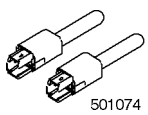 501074	Simulator - Pyrotechnic Safety Belt 501-074 (40-017)

General Equipment
WDS

Diagnosing Customer Concerns Without Hard DTCs/LFCs

WARNING: The battery back up power supply must be depleted before any work is carried out on the supplemental restraint system and adjacent components. Failure to follow this instruction may result in personal injury.

NOTE: Following the pinpoint tests when a diagnostic trouble code/lamp fault code (DTC/LFC) is not present, will result in needless replacement of air bag system components and repeat repairs.

Speak with the customer to determine if a particular set of conditions must be met in order to indicate a fault. If a LFC is reported by the customer but is not present when the vehicle comes in for repair, pinpoint test diagnostics cannot be used. Instruct the customer on how to count a LFC.

Diagnosing Customer Concerns with Hard DTCs / LFCs

WARNING: Do not use substitute air bag simulators when working on the supplemental restraint system. Use only the appropriate tool. Failure to follow these instructions may result in personal injury.

Most air bag system diagnostic procedures require the use of system deactivation and system reactivation procedures. These procedures require the air bag module(s) and safety belt pre-tensioner's to be disconnected from the SRS, thereby removing the risk of the air bag deployment while diagnostics are carried out.

Air bag simulators are required to carry out diagnosis and testing of the air bag system. It is not acceptable to short-circuit the air bag module connections with a 0 ohm jumper wire. If a 0 ohm jumper wire is used to short-circuit the air bag module connections, a LFC will be displayed and a DTC logged by the air bag control module.

Deactivation

WARNING: The back up power supply must be depleted before any work is carried out on the supplemental restraint system. Wait at least one minute after disconnecting the battery ground cable before disconnecting any supplemental restraint system electrical connector. Failure to follow this instruction may result in personal injury.

1. Disconnect the battery ground cable.
   REFER to Section 414-01.
2. Wait at least one minute for the backup power supply in the air bag control module to deplete its stored energy.

WARNING: Place the air bag module(s) on a ground wired bench, with the trim cover facing up. Failure to follow this instruction may result in personal injury.

3. Remove the driver air bag module from the vehicle.
   REFER to Driver Air Bag Module in this section.
4. Connect the driver air bag simulator to the sub-harness in place of the driver air bag module at the top of the steering column.

DIAGNOSIS AND TESTING (CONTINUED)

5. Remove the passenger air bag module. REFER to Passenger Air Bag Module in this section.
6. Connect the passenger air bag simulator to the harness in place of the passenger air bag module.
7. Disconnect the driver under seat safety belt pretensioner electrical connector.
8. Connect the driver safety belt pretensioner simulator to the driver under seat floor harness in place of the safety belt pretensioner.
9. Disconnect the passenger under seat safety belt pretensioner electrical connector.
10. Connect the passenger safety belt pretensioner simulator to the passenger under seat floor harness in place of the safety belt pretensioner.
11. Connect the battery ground cable. REFER to Section 414-01.

Reactivation

WARNING: The air bag simulators must be removed and the air bag modules reconnected when reactivated to avoid non-deployment in a collision. Failure to follow this instruction may result in personal injury.

1. Disconnect the battery ground cable. REFER to Section 414-01.
2. Wait at least one minute for the backup power supply in the air bag control module to deplete its stored energy.
3. Remove the driver air bag simulator from the sub-harness at the top of the steering column.
4. Connect and install the driver air bag module. REFER to Driver Air Bag Module in this section.
5. Remove the passenger air bag simulator from the passenger air bag module harness.
6. Connect and install the passenger air bag module. REFER to Passenger Air Bag Module in this section.
7. Remove the driver safety belt pretensioner simulator from the driver under seat floor harness electrical connector.
8. Connect the driver safety belt pretensioner to the under seat floor harness electrical connector.
9. Remove the passenger safety belt pretensioner simulator from the passenger under seat floor harness electrical connector.
10. Connect the passenger safety belt pretensioner to the under seat floor harness electrical connector.
11. Connect the battery ground cable. REFER to Section 414-01.
12. Prove out the system.

Glossary

Air Bag Simulator

Air bag simulators are used to simulate air bag module connections to the system.

Deactivate The System

Deactivate the system means to carry out deactivation. REFER to Deactivation in this Section.

Prove Out The System

The air bag warning indicator will illuminate for approximately three seconds.

- Fail to illuminate
- Illuminate continuously
- Flash

Reactivate The System

Reactivate the system means to carry out reactivation. REFER to Reactivation in this section.

Principles of Operation

Supplemental Restraint System (SRS) Operation

The supplemental restraint system is AC fired.

In the event of a severe frontal or three-quarter frontal impact, in excess of a predetermined limit, the driver and passenger (if equipped) front air bag(s) will deploy.

Air bag deployment will only occur, in the event of a severe collision when the ignition key is in the RUN position.

DIAGNOSIS AND TESTING (CONTINUED)

Air Bag Control Module

The air bag control module is mounted horizontally to the crossmember beneath the centre console, to facilitate impact sensing along the longitudinal axis. The air bag control module retains full control of the whole system, providing continual system checks and full diagnostic capabilities. The non-volatile memory stores the fault codes, which can then be downloaded through the data link connector (DLC) to WDS. A visual warning indicator, which is housed within the instrument cluster, is illuminated when the ignition is switched ON for approximately three seconds then goes out. If a fault occurs the warning indicator, depending on the nature of the fault, begins to flash or illuminates continuously after five seconds.

In the event of a failure in the vehicle power supply during or after an accident, the air bag control module provides an auxiliary power supply, sufficient to deploy the air bag(s) for a minimum of 150mS. The air bag control module discharges the back up power supply within 60 seconds of the battery ground cable being disconnected. Thus making sure the supplemental restraint system remains operational.

The air bag control module contains a micro-controller to evaluate and process impact data and two micro machine sensors. An electronic accelerometer, which converts the actual acceleration and deceleration force, along the vehicles longitudinal axis into electrical signals. When both these sensors sense an impact in excess of a predetermined limit, the air bag control module initiates the circuit to deploy the frontal air bags. The two micro machine sensors prevent unintentional deployment of the frontal air bags.

Air Bag Warning Indicator

The air bag warning indicator is incorporated into the instrument cluster, together with the automatic detach detect (ADD) circuit, the air bag warning indicator comes on for three seconds at key ON. If the system self-tests OK the indicator goes out, if a fault is detected the indicator will flash after five seconds, illuminate continually from key ON or not illuminate at all, depending on the nature of the fault.

The ADD circuit is designed to illuminate the air bag warning indicator continuously, if the air bag control module circuit is broken, either by loss of power or ground supply. The air bag control module retaining bolts are part of the ground circuit.

Diagnostic evaluation of the supplemental restraints system can be made through the data link connector (DLC) and WDS to establish the nature of the concern. Once the diagnostic trouble code (DTC) is known the appropriate course of action can be selected from the Symptom Chart.

DIAGNOSIS AND TESTING

Diagnostic Instructions — Air Bag and Safety Belt Pretensioner Supplemental Restraint System (SRS)

Information not available at this time.

Pinpoint Tests — Air Bag and Safety Belt Pretensioner

Supplemental Restraint System (SRS)

Pinpoint Tests

PINPOINT TEST A: NO COMMUNICATION WITH THE MODULE
A1: CHECK THAT WDS IS COMMUNICATING THROUGH THE DATA LINK CONNECTOR (DLC) 501-20B-9
A2: CHECK THE AIR BAG WARNING INDICATOR 501-20B-9
A3: CHECK THE DLC CIRCUIT 501-20B-9/10
PINPOINT TEST B: DTC B1921: AIR BAG WARNING INDICATOR GROUND MONITORING CIRCUIT OPEN
B1: CHECK THE AIR BAG CONTROL MODULE MOUNTING 501-20B-10/11
B2: CHECK THE AIR BAG CONTROL MODULE GROUND CIRCUIT 501-20B-11
PINPOINT TEST C: DTC B1318: BATTERY VOLTAGE LOW
C1: CHECK THE BATTERY VOLTAGE 501-20B-12
C2: CHECK THE CONDITION OF THE FUSE 501-20B-12
C3: CHECK THE AIR BAG CONTROL MODULE SUPPLY CIRCUIT 501-20B-12/13
C4: CHECK THE AIR BAG CONTROL MODULE GROUND CIRCUIT 501-20B-13
PINPOINT TEST D: DTC B1869: AIR BAG WARNING INDICATOR OPEN CIRCUIT OR SHORT TO GROUND
D1: CHECK THE AIR BAG WARNING INDICATOR 501-20B-13/14
D2: CHECK THE AIR BAG WARNING INDICATOR CIRCUIT 501-20B-14
D3: CHECK THE AIR BA WARNING INDICATOR FUNCTION 501-20B-15
D4: CHECK THE AIR BAG WARNING INDICATOR FUNCTION 501-20B-16
D5: CHECK THE INSTRUMENT CLUSTER WARNING INDICATORS 501-20B-16
D6: CHECK THE AIR BAG WARNING INDICATOR CIRCUIT 501-20B-17
PINPOINT TEST E: DTC B1870: AIR BAG WARNING INDICATOR SHORT TO BATTERY
E1: CHECK THE AIR BAG WARNING INDICATOR 501-20B-17/18
E2: CHECK THE AIR BAG WARNING INDICATOR SUB-HARNESS 501-20B-18
PINPOINT TEST F: DTC B1887: DRIVER AIR BAG SHORT TO GROUND
F1: CHECK THE DRIVER AIR BAG CIRCUIT 501-20B-19
F2: CHECK THE DRIVER AIR BAG MODULE 501-20B-19
F3: CHECK THE AIR BAG WIRING SUB-HARNESS FOR A SHORT TO GROUND 501-20B-20
F4: CHECK THE DRIVER AIR BAG CIRCUIT 501-20B-20/21

Pinpoint Tests

PINPOINT TEST G: DTC B1916: DRIVER AIR BAG CIRCUIT SHORT TO BATTERY
G1: CHECK THE AIR BAG WIRING SUB - HARNESS FOR A SHORT TO BATTERY 501-20B-21/22
G2: CHECK THE AIR BAG WIRING HARNESS FOR A SHORT TO BATTERY 501-20B-22/23
PINPOINT TEST H: DTC B1932: DRIVER AIR BAG OPEN CIRCUIT OR HIGH RESISTANCE
H1: CHECK THE DRIVER AIR BAG MODULE CIRCUIT RESISTANCE..... 501-20B-23/24
H2: CHECK THE DRIVER AIR BAG MODULE SQUIB RESISTANCE..... 501-20B-24
H3: CHECK THE AIR BAG SLIDING CONTACT FOR OPEN CIRCUIT OR HIGH RESISTANCE 501-20B-24/25
PINPOINT TEST I: DTC B1934: DRIVER AIR BAG CIRCUIT LOW RESISTANCE
I1: CHECK THE DRIVER AIR BAG MODULE CIRCUIT RESISTANCE 501-20B-25
I2: CHECK THE DRIVER AIR BAG MODULE SQUIB RESISTANCE 501-20B-26
I3: CHECK THE AIR BAG SLIDING CONTACT FOR LOW RESISTANCE..... 501-20B-26
PINPOINT TEST J: DTC B1888: PASSENGER AIR BAG SHORT TO GROUND
J1: CHECK THE PASSENGER AIR BAG CIRCUIT 501-20B-27
J2: CHECK THE PASSENGER AIR BAG MODULE 501-20B-27
J3: CHECK THE PASSENGER AIR BAG CIRCUIT FOR A SHORT TO GROUND. 501-20B-28
PINPOINT TEST K: DTC: B1925: PASSENGER AIR BAG SHORT TO BATTERY
K1: CHECK THE PASSENGER AIR BAG CIRCUIT FOR A SHORT TO BATTERY 501-20B-28/29
PINPOINT TEST L: DTC: B1933: PASSENGER AIR BAG OPEN CIRCUIT OR HIGH RESISTANCE
L1: CHECK THE PASSENGER AIR BAG MODULE CIRCUIT RESISTANCE..... 501-20B-29/30
L2: THE PASSENGER AIR BAG MODULE SQUIB RESISTANCE 501-20B-30
PINPOINT TEST M: DTC B1935: PASSENGER AIR BAG CIRCUIT LOW RESISTANCE 501-20B-30
M1: CHECK THE PASSENGER AIR BAG MODULE CIRCUIT RESISTANCE..... 501-20B-31
M2: CHECK THE PASSENGER AIR BAG MODULE SQUIB RESISTANCE..... 501-20B-31
M3: CHECK THE PASSENGER AIR BAG CIRCUIT FOR LOW RESISTANCE..... 501-20B-32
PINPOINT TEST N: DTC B1876: DRIVER SAFETY BELT PRETENSIONER CIRCUIT CAPACITANCE OUT OF RANGE
N1: CHECK THE DRIVER SAFETY BELT PRETENSIONER CAPACITANCE. 501-20B-32/33

Pinpoint Tests

PINPOINT TEST O: DTC B1877: DRIVER SAFETY BELT PRETENSIONER OPEN CIRCUIT
O1: CHECK THE DRIVER SAFETY BELT PRETENSIONER CIRCUIT 501-20B-33
O2: CHECK THE DRIVER SAFETY BELT PRETENSIONER FOR OPEN CIRCUIT OR HIGH RESISTANCE..... 501-20B-34
PINPOINT TEST P: DTC B1878 DRIVER SAFETY BELT PRETENSIONER SHORT TO BATTERY
P1: CHECK THE DRIVER SAFETY BELT PRETENSIONER CIRCUIT 501-20B-34/35
P2: CHECK THE DRIVER SAFETY BELT PRETENSIONER FOR A SHORT TO BATTERY 501-20B-35/36
PINPOINT TEST Q: DTC B1879: DRIVER SAFETY BELT PRETENSIONER SHORT TO GROUND
Q1: CHECK THE DRIVER SAFETY BELT PRETENSIONER CIRCUIT 501-20B-36/37
Q2: CHECK THE DRIVE SAFETY BELT PRETENSIONER FOR A SHORT TO GROUND 501-20B-37/38
PINPOINT TEST R: DTC B1885: DRIVER SAFETY BELT PRETENSIONER LOW RESISTANCE
R1: CHECK THE DRIVER SAFETY BELT PRETENSIONER CIRCUIT 501-20B-38/39
R2: CHECK THE DRIVER SAFETY BELT PRETENSIONER FOR LOW RESISTANCE..... 501-20B-39
PINPOINT TEST S: DTC B1880: PASSENGER SAFETY BELT PRETENSIONER CIRCUIT CAPACITANCE OUT OF RANGE
S1: CHECK THE PASSENGER SAFETY BELT PRETENSIONER CAPACITANCE..501-20B-40
PINPOINT TEST T: DTC B1881: PASSENGER SAFETY BELT PRETENSIONER OPEN CIRCUIT
T1: CHECK THE PASSENGER SAFETY BELT PRETENSIONER CIRCUIT 501-20B-40/41
T2: CHECK THE PASSENGER SAFETY BELT PRETENSIONER FOR OPEN CIRCUIT OR HIGH RESISTANCE 501-20B-41/42

Pinpoint Tests

PINPOINT TEST U: DTC B1882: PASSENGER SAFETY BELT PRETENSIONER SHORT TO BATTERY

U1: CHECK THE PASSENGER SAFETY BELT PRETENSIONER CIRCUIT..... 501-20B-42/43

U2: CHECK THE PASSENGER S FETY BELT PRETENSIONER FOR A SHORT TO BATTERY 501-20B-43/44

PINPOINT TEST V: DTC B1883: PASSENGER SAFETY BELT PRETENSIONER SHORT TO GROUND

V1: CHECK THE PASSENGER SAFETY BELT PRETENSIONER CIRCUIT..... 501-20B-44/45

V2: CHECK THE PASSE GER SAFETY BELT PRETENSIONER FOR A SHORT TO GROUND..... 501-20B-45/46

PINPOINT TEST W: DTC B1886: PASSENGER SAFETY BELT PRETENSIONER LOW RESISTANCE

W1: CHECK THE PASSENGER SAFETY BELT PRETENSIONER CIRCUIT..... 501-20B-46/47

W2: CHECK THE PASSENGER SAFETY BELT PRETENSIONER FOR LOW RESISTANCE 501-20B-47

DIAGNOSIS AND TESTING

Pinpoint Tests — Air Bag and Safety Belt Pretensioner Supplemental Restraint System (SRS)

Pinpoint Tests

PINPOINT TEST A: NO COMMUNICATION WITH THE MODULE

CONDITIONS	DETAILS/RESULTS/ACTIONS
⚠ **WARNING: Wait at least one minute after disconnecting the battery ground cable before disconnecting any supplemental restraint system electrical connector. Failure to follow this instruction may result in personal injury**	
A1: CHECK THAT WDS IS COMMUNICATING THROUGH THE DATA LINK CONNECTOR (DLC)	
	1 Select an alternative system to check the DLC. • Is WDS able to communicate with the selected system? ☐ **Yes** GO TO **A2** ☐ **No** CHECK the DLC. For additional information, refer to the Wiring Diagrams, Petrol and Diesel
A2: CHECK THE AIR BAG WARNING INDICATOR	
1 	2 The air bag warning indicator should illuminate when the ignition is in the ON position for three seconds and then go out. If a fault is present, the air bag warning light will begin to flash after a further 5 seconds. • Is the warning indicator operating? ☐ **Yes** GO TO **A3** ☐ **No** CHECK the instrument cluster. For additional information, refer to the Wiring Diagrams,Petrol and Diesel
A3: CHECK THE DLC CIRCUIT	
	1 Deactivate the supplemental restraint system. REFER to Air Bag and Safety Belt Pretensioner Supplemental Restraint System (SRS) in this section.

DIAGNOSIS AND TESTING (CONTINUED)

CONDITIONS	DETAILS/RESULTS/ACTIONS
2 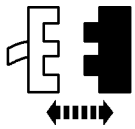 Air Bag Control Module C334 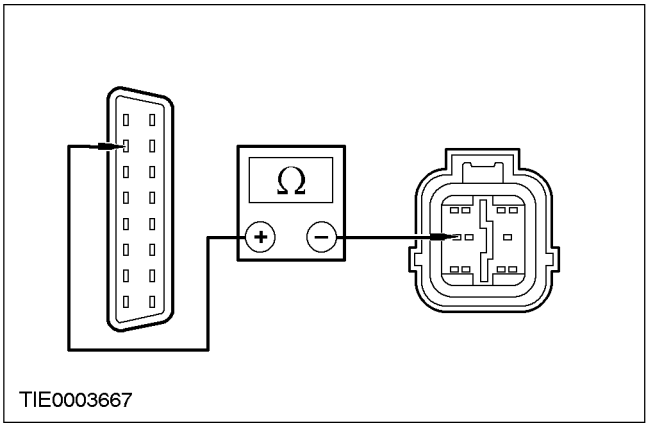 	3 Measure the resistance between the DLC C31 pin 7, circuit 4-AJ7 (GY/RD) and the air bag control module C334 pin 7, circuit 4-JA7 (GY/RD). • Is the resistance less than 5 ohms? ☐ **Yes** If the air bag warning indicator is flashing, count the lamp flash code and refer to the Symptom Chart in this section. INSTALL a new air bag control module. REFER to Air Bag Control Module in this section. REPEAT the self-test; CLEAR the DTCs. REACTIVATE the system. REFER to Air Bag and Safety Belt Pretensioner Supplemental Restraint System (SRS) in this section. ☐ **No** REPAIR circuit 4-JA7 (GY/RD). REPEAT the self-test; CLEAR the DTCs. REACTIVATE the system. REFER to Air Bag and Safety Belt Pretensioner Supplemental Restraint System (SRS) in this section.

PINPOINT TEST B: DTC B1921: AIR BAG WARNING INDICATOR GROUND MONITORING CIRCUIT OPEN

CONDITIONS	DETAILS/RESULTS/ACTIONS
⚠ **WARNING: Wait at least one minute after disconnecting the battery ground cable before disconnecting any supplemental restraint system electrical connector. Failure to follow this instruction may result in personal injury.**	
B1: CHECK THE AIR BAG CONTROL MODULE MOUNTING	
	1 Deactivate the supplemental restraint system. REFER to Air Bag and Safety Belt Pretensioner Supplemental Restraint System (SRS) in this section.

DIAGNOSIS AND TESTING (CONTINUED)

CONDITIONS	DETAILS/RESULTS/ACTIONS
	2 Check the security of the air bag control module. • Is the air bag control module correctly mounted and all bolts tightened to the correct torque? ☐ **Yes** GO TO **B2** ☐ **No** TIGHTEN the air bag control module. REFER to Specifications in this section. REPEAT the self-test; CLEAR the DTCs. REACTIVATE the system. REFER to Air Bag and Safety Belt Pretensioner Supplemental Restraint System (SRS) in this section.
B2: CHECK THE AIR BAG CONTROL MODULE GROUND CIRCUIT	
1 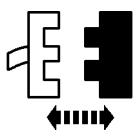 Air Bag Control Module C334 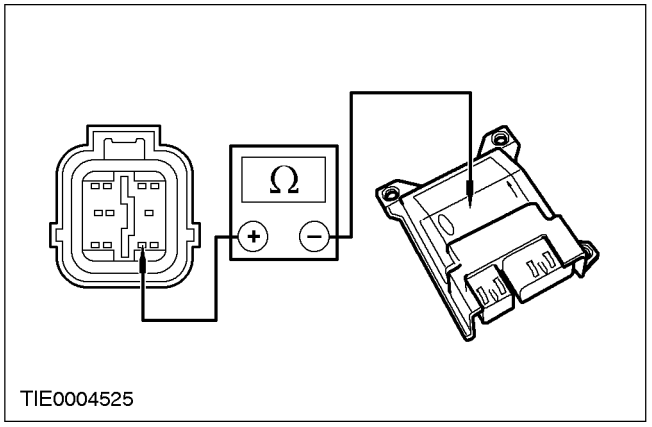 	**2** Measure the resistance between the air bag control module C334 pin 9, circuit 91-JA10 (BK/RD) and the air bag control module housing. • Is the resistance less than 5 ohms? ☐ **Yes** REPEAT the self-test; CLEAR the DTCs. REACTIVATE the system. REFER to Air Bag and Safety Belt Pretensioner Supplemental Restraint System (SRS) in this section. ☐ **No** REPAIR circuit 91-JA10 (BK/RD); REMOVE the air bag control module. REFER to Air Bag Control Module in this section. CLEAN the air bag control module mountings and bolts. INSTALL the air bag control module. REFER to Air Bag Control Module in this section REPEAT the self-test; CLEAR the DTCs. REACTIVATE the system. REFER to Air Bag and Safety Belt Pretensioner Supplemental Restraint System (SRS) in this section.

DIAGNOSIS AND TESTING (CONTINUED)

PINPOINT TEST C: DTC B1318: BATTERY VOLTAGE LOW

CONDITIONS	DETAILS/RESULTS/ACTIONS
C1: CHECK THE BATTERY VOLTAGE	
1	2 Check the battery voltage. • Is the battery voltage greater than 9 volts? ☐ **Yes** GO TO **C2** ☐ **No** CHECK the battery and charging system. For additional information, refer to the Wiring Diagrams, Petrol and Diesel REPEAT the self-test, CLEAR the DTCs.
C2: CHECK THE CONDITION OF THE FUSE	
1 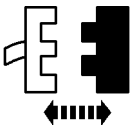 Fuse 60 (10A) 2 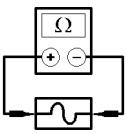 Fuse 60 (10A)	3 Check the condition of fuse 60 (10A). • Is any corrosion present on the fuse or the terminals? ☐ **Yes** CLEAN the terminals. INSTALL a new fuse 60 (10A). REPEAT the self-test, CLEAR the DTCs. ☐ **No** GO TO **C3**
C3: CHECK THE AIR BAG CONTROL MODULE SUPPLY CIRCUIT	
2 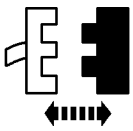 Air Bag Control Module C334	1 Deactivate the supplemental restraint system. REFER to Air Bag and Safety Belt Pretensioner Supplemental Restraint System (SRS) in this section.

DIAGNOSIS AND TESTING (CONTINUED)

CONDITIONS	DETAILS/RESULTS/ACTIONS
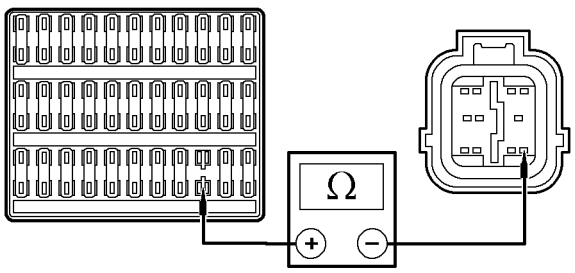 TIE0003669	**3** Measure the resistance between the output side of fuse 60 (10A) and the air bag control module C1511a pin 8, circuit 94-JA10 (VT/OG). • Is the resistance less than 5 ohms? ☐ **Yes** GO TO **C4** ☐ **No** CHECK the connector terminals for corrosion or dirt ingress. REPEAT the self-test; CLEAR the DTCs. REACTIVATE the system. REFER to Air Bag and Safety Belt Pretensioner Supplemental Restraint System (SRS) in this section.
C4: CHECK THE AIR BAG CONTROL MODULE GROUND CIRCUIT	
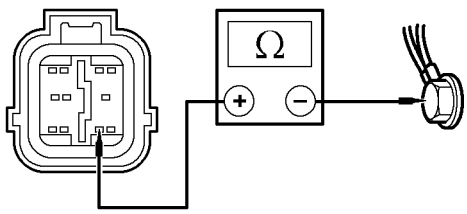 TIE0003662	**1** Measure the resistance between the air bag control module C334 pin 9, circuit 91-JA10 (BK/RD) and the air bag control module ground G4. • Is the resistance less than 2 ohms? ☐ **Yes** REPEAT the self-test; CLEAR the DTCs. REACTIVATE the system. REFER to Air Bag and Safety Belt Pretensioner Supplemental Restraint System (SRS) in this section. ☐ **No** CHECK the air bag control module ground G4 for security and corrosion. REPEAT the self-test, CLEAR the DTCs. REFER to Air Bag and Safety Belt Pretensioner Supplemental Restraint System (SRS) in this section.

PINPOINT TEST D: DTC B1869: AIR BAG WARNING INDICATOR OPEN CIRCUIT OR SHORT TO GROUND

CONDITIONS	DETAILS/RESULTS/ACTIONS
D1: CHECK THE AIR BAG WARNING INDICATOR	
1	

DIAGNOSIS AND TESTING (CONTINUED)

CONDITIONS	DETAILS/RESULTS/ACTIONS
	2 Check the air bag warning indicator. • Is the air bag warning indicator illuminated continuously? ☐ **Yes** GO TO **D2** ☐ **No** GO TO **D5**
D2: CHECK THE AIR BAG WARNING INDICATOR CIRCUIT	
⚠ **WARNING: Wait at least one minute after disconnecting the battery ground cable before disconnecting any supplemental restraint system electrical connector. Failure to follow this instruction may result in personal injury.**	
1 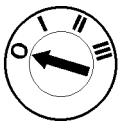 **3** **4** Air Bag Control Module C334 — Instrument Cluster C37 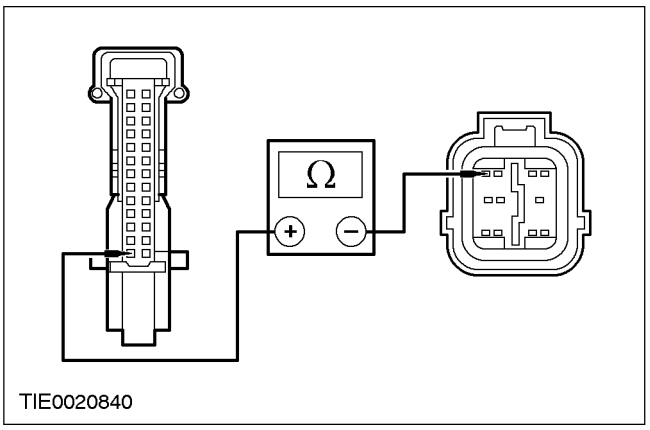 	**2** Deactivate the supplemental restraint system. REFER to Air Bag and Safety Belt Pretensioner Supplemental Restraint System (SRS) in this section. **5** Measure the resistance between the instrument cluster C37 pin 16, circuit 91S-JA14 (BK/GN) and the air bag control module C334 pin 4, circuit 91S-JA14 (BK/GN). • Is the resistance less than 5 ohms? ☐ **Yes** GO TO **D3** ☐ **No** INSTALL a new wiring harness. REPEAT the self-test; CLEAR the DTCs. REACTIVATE the system. REFER to Air Bag and Safety Belt Pretensioner Supplemental Restraint System (SRS) in this section.

DIAGNOSIS AND TESTING (CONTINUED)

CONDITIONS	DETAILS/RESULTS/ACTIONS
D3: CHECK THE AIR BAG WARNING INDICATOR FUNCTION	
1 Instrument Cluster C37 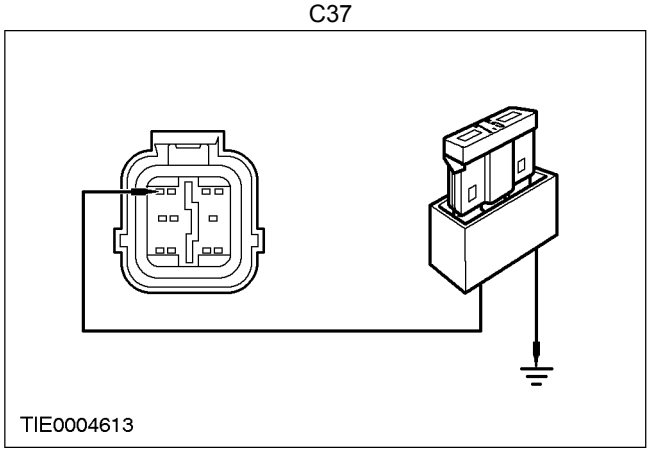	2 Install a fused (15A) jumper wire between the air bag control module C334 pin 4, circuit 91S-JA14 (BK/GN) harness side and ground.
3 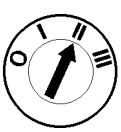	• Is the air bag warning indicator illuminated? ☐ **Yes** INSTALL a new automatic detach circuit/instrument cluster printed circuit. REPEAT the self-test; CLEAR the DTCs. REACTIVATE the system. REFER to Air Bag and Safety Belt Pretensioner Supplemental Restraint System (SRS) in this section. ☐ **No** GO TO **D4**

DIAGNOSIS AND TESTING (CONTINUED)

CONDITIONS	DETAILS/RESULTS/ACTIONS
D4: CHECK THE AIR BAG WARNING INDICATOR FUNCTION	
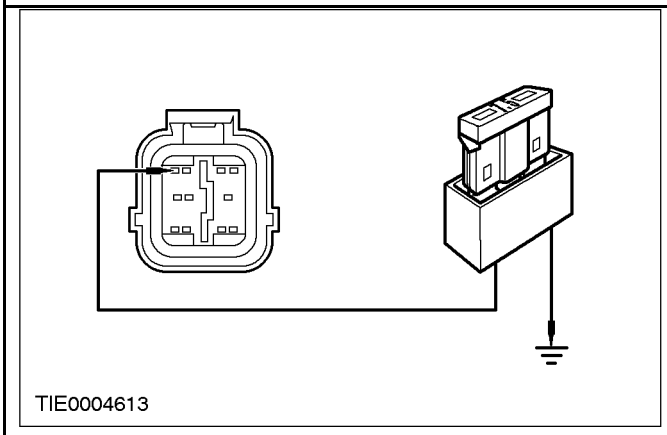 TIE0004613	1 With the fused (15A) jumper wire between the air bag control module C334 pin 4, circuit 91S-JA14 (BK/GN) and ground. - Disconnect the fused jumper wire from the ground. • Is the air bag warning indicator illuminated? ☐ **Yes** INSTALL a new air bag control module. REFER to Air Bag Control Module in this section. REPEAT the self-test; CLEAR the DTCs. REACTIVATE the system. REFER to Air Bag and Safety Belt Pretensioner Supplemental Restraint System (SRS) in this section. ☐ **No** REPEAT the self-test; CLEAR the DTCs. REACTIVATE the system. REFER to Air Bag and Safety Belt Pretensioner Supplemental Restraint System (SRS) in this section.
D5: CHECK THE INSTRUMENT CLUSTER WARNING INDICATORS	
⚠ **WARNING: Wait at least one minute after disconnecting the battery ground cable before disconnecting any supplemental restraint system electrical connector. Failure to follow this instruction may result in personal injury.**	
NOTE: The air bag control module will only activate the audible warning if there is an air bag warning fault AND an additional fault in the supplemental restraint system (for example an open circuit on the driver air bag module) in all cases REPAIR the air bag warning indicator first.	
2	1 Deactivate the supplemental restraint system. REFER to Air Bag and Safety Belt Pretensioner Supplemental Restraint System (SRS) in this section. 3 Check the instrument cluster warning indicators. • Are the warning indicators illuminated when the ignition is switched to the ON position? ☐ **Yes** GO TO **D6** ☐ **No** CHECK the instrument cluster. For additional information, refer to the Wiring Diagrams, Petrol and Diesel

DIAGNOSIS AND TESTING (CONTINUED)

CONDITIONS	DETAILS/RESULTS/ACTIONS
D6: CHECK THE AIR BAG WARNING INDICATOR CIRCUIT	
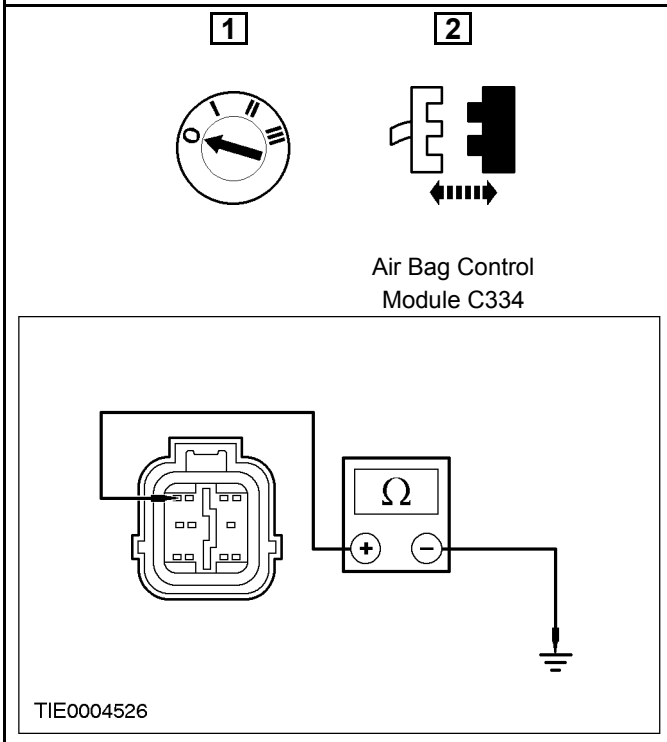	3 Measure the resistance between the air bag control module C334 pin 4, circuit 91S-JA14 (BK/GN) harness side and ground. • Is the resistance greater than 10,000 ohms? ☐ **Yes** CHECK the air bag warning indicator LED/bulb. REPEAT the self-test; CLEAR the DTCs. REACTIVATE the system. REFER to Air Bag and Safety Belt Pretensioner Supplemental Restraint System (SRS) in this section. ☐ **No** INSTALL a new air bag wiring harness. REPEAT the self-test; CLEAR the DTCs. REACTIVATE the system. REFER to Air Bag and Safety Belt Pretensioner Supplemental Restraint System (SRS) in this section.

PINPOINT TEST E: DTC B1870: AIR BAG WARNING INDICATOR SHORT TO BATTERY

CONDITIONS	DETAILS/RESULTS/ACTIONS
⚠ **WARNING: Wait at least one minute after disconnecting the battery ground cable before disconnecting any supplemental restraint system electrical connector. Failure to follow this instruction may result in personal injury.**	
E1: CHECK THE AIR BAG WARNING INDICATOR	
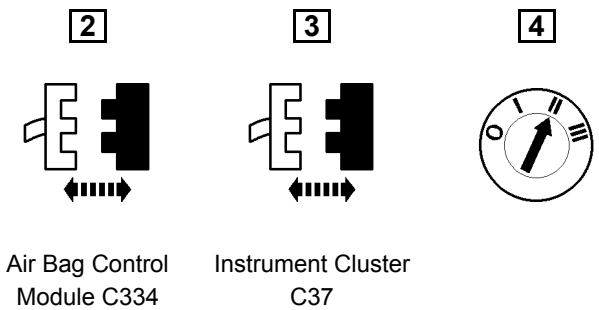	1 Deactivate the supplemental restraint system. REFER to Air Bag and Safety Belt Pretensioner Supplemental Restraint System (SRS) in this section.

DIAGNOSIS AND TESTING (CONTINUED)

CONDITIONS	DETAILS/RESULTS/ACTIONS
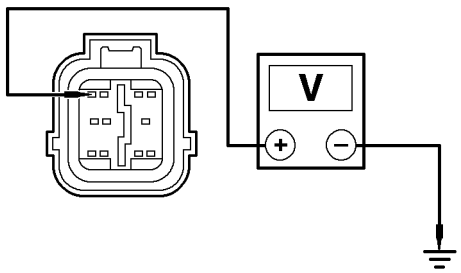 TIE0004527	**5** Measure the voltage between the air bag control module C334 pin 4, circuit 91S-JA14 (BK/GN) harness side and ground. • Is any voltage present? ☐ **Yes** GO TO **E2** ☐ **No** CHECK the instrument cluster. For additional information, refer to the Wiring Diagrams. Petrol and Diesel REPEAT the self-test; CLEAR the DTCs. REACTIVATE the system. REFER to Air Bag and Safety Belt Pretensioner Supplemental Restraint System (SRS) in this section.
E2: CHECK THE AIR BAG WARNING INDICATOR SUB-HARNESS	
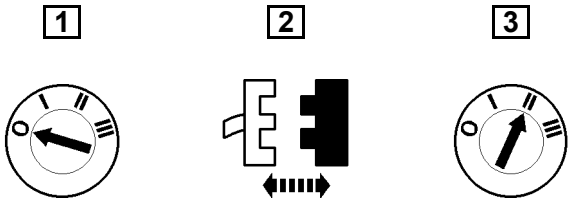 Instrument Cluster C333 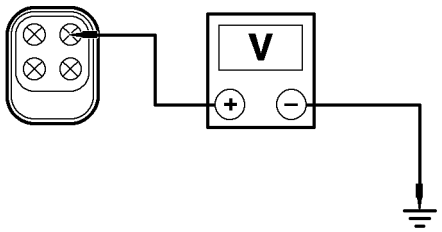 TIE0014600	**4** Measure the voltage between the instrument cluster C333 pin 3, circuit 91S-JA14 (BK/GN) harness side and ground. • Is any voltage present? ☐ **Yes** REPAIR circuit 91S-JA14 (BK/GN). REPEAT the self-test; CLEAR the DTCs. REACTIVATE the system. REFER to Air Bag and Safety Belt Pretensioner Supplemental Restraint System (SRS) in this section. ☐ **No** INSTALL a new air bag wiring harness. REPEAT the self-test; CLEAR the DTCs. REACTIVATE the system. REFER to Air Bag and Safety Belt Pretensioner Supplemental Restraint System (SRS) in this section.

DIAGNOSIS AND TESTING (CONTINUED)

PINPOINT TEST F: DTC B1887: DRIVER AIR BAG SHORT TO GROUND

CONDITIONS	DETAILS/RESULTS/ACTIONS
WARNING: Wait at least one minute after disconnecting the battery ground cable before disconnecting any supplemental restraint system electrical connector. Failure to follow this instruction may result in personal injury.	
F1: CHECK THE DRIVER AIR BAG CIRCUIT	
2	1 Deactivate the supplemental restraint system. REFER to Air Bag and Safety Belt Pretensioner Supplemental Restraint System (SRS) in this section. 3 Carry out the self-test with the simulators installed. • Does the system prove out correctly? ☐ **Yes** GO TO **F2** ☐ **No** GO TO **F3**
F2: CHECK THE DRIVER AIR BAG MODULE	
WARNING: Do not proceed with the test unless using WDS. Failure to follow this instruction may result in personal injury.	
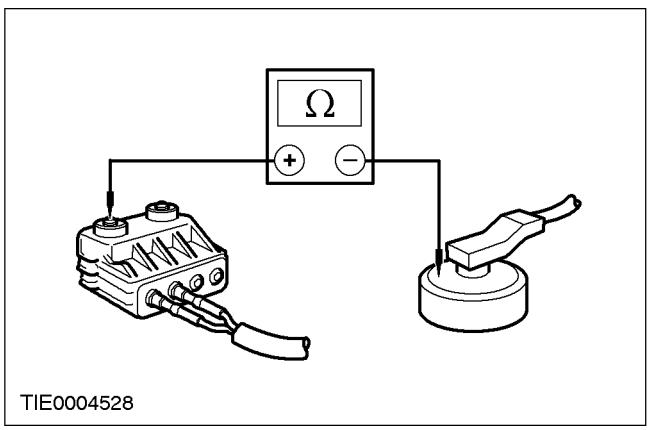	1 Connect the Test and Deployment lead to the driver air bag module. 2 Select DMM specific on WDS. 3 Connect the Test and Deployment lead to WDS. 4 Measure the resistance between each of the terminals and the air bag module casing. • Are the resistances greater than 10,000 ohms? ☐ **Yes** REPEAT the self-test; CLEAR the DTCs. REACTIVATE the system. REFER to Air Bag and Safety Belt Pretensioner Supplemental Restraint System (SRS) in this section. ☐ **No** INSTALL a new driver air bag module. REPEAT the self-test; CLEAR the DTCs. REACTIVATE the system. REFER to Air Bag and Safety Belt Pretensioner Supplemental Restraint System (SRS) in this section.

DIAGNOSIS AND TESTING (CONTINUED)

CONDITIONS	DETAILS/RESULTS/ACTIONS
F3: CHECK THE AIR BAG WIRING SUB-HARNESS FOR A SHORT TO GROUND	
1 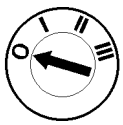 2 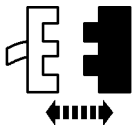 Air Bag Control Module C334 3 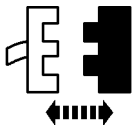 Driver Air Bag Module Simulator 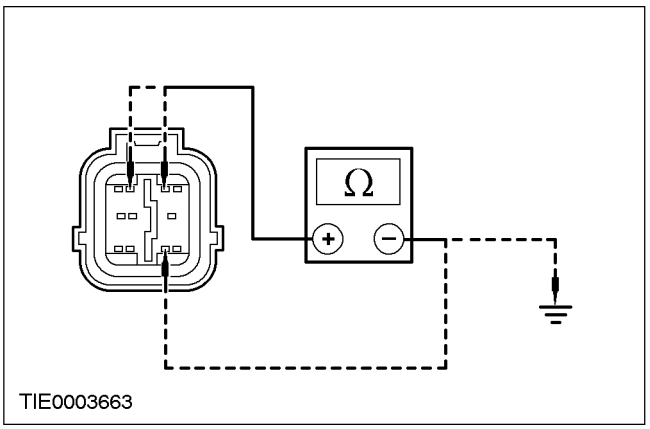	4 Measure the resistance between: - the air bag control module C334 pin 2, circuit 94S-JA8 (VT) and pin 9, circuit 91-JA10 (BK/RD) harness side; and - the air bag control module C334 pin 2, circuit 94S-JA8 (VT) harness side and ground; and - the air bag control module C334 pin 3, circuit 91S-JA8 (BK/OG) and pin 9, circuit 91-JA10 (BK/RD) harness side; and - the air bag control module C334 pin 3, circuit 91S-JA8 (BK/OG) harness side and ground. 5 Turn the steering wheel from lock to lock and note the resistance readings. • Are the resistances greater than 10,000 ohms? ☐ **Yes** REPEAT the self-test; CLEAR the DTCs. REACTIVATE the system. REFER to Air Bag and Safety Belt Pretensioner Supplemental Restraint System (SRS) in this section. ☐ **No** GO TO **F4**
F4: CHECK THE DRIVER AIR BAG CIRCUIT	
1 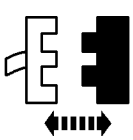 Air Bag Sliding Contact C349	

DIAGNOSIS AND TESTING (CONTINUED)

CONDITIONS	DETAILS/RESULTS/ACTIONS
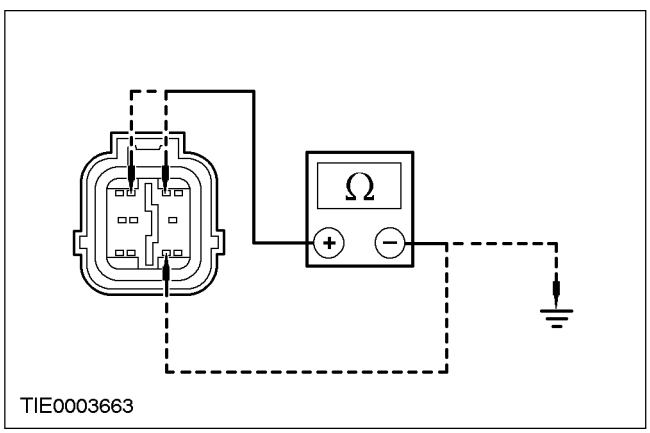	**2** Measure the resistance between: - the air bag control module C334 pin 2, circuit 94S-JA8 (VT) and pin 9, circuit 91-JA10 (BK/RD) harness side; and - the air bag control module C334 pin 2, circuit 94S-JA8 (VT) harness side and ground; and - the air bag control module C334 pin 3, circuit 91S-JA8 (BK/OG) and pin 9, circuit 91-JA10 (BK/RD) harness side; and - the air bag control module C334 pin 3, circuit 91S-JA8 (BK/OG) harness side and ground. **3** Turn the steering wheel from lock to lock and note the resistance readings. • Are the resistances greater than 10,000 ohms? ☐ **Yes** INSTALL a new air bag sliding contact. REFER to Air Bag Sliding Contact in this section. REPEAT the self-test; CLEAR the DTCs. REACTIVATE the system. REFER to Air Bag and Safety Belt Pretensioner Supplemental Restraint System (SRS) in this section. ☐ **No** INSTALL a new air bag wiring harness. REPEAT the self-test; CLEAR the DTCs. REACTIVATE the system. REFER to Air Bag and Safety Belt Pretensioner Supplemental Restraint System (SRS) in this section.

PINPOINT TEST G: DTC B1916: DRIVER AIR BAG CIRCUIT SHORT TO BATTERY

CONDITIONS	DETAILS/RESULTS/ACTIONS
⚠ **WARNING: Wait at least one minute after disconnecting the battery ground cable before disconnecting any supplemental restraint system electrical connector. Failure to follow this instruction may result in personal injury.**	
G1: CHECK THE AIR BAG WIRING SUB - HARNESS FOR A SHORT TO BATTERY	
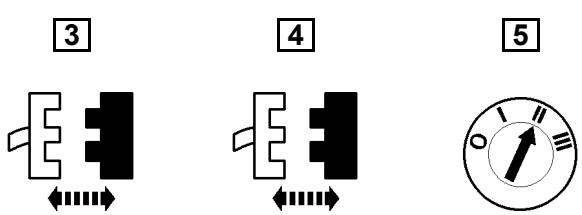 Driver Air Bag Module Simulator Air Bag Control Module C334	**1** Deactivate the supplemental restraint system. REFER to Air Bag and Safety Belt Pretensioner Supplemental Restraint System (SRS) in this section. **2** Visually check the driver air bag sub-harness for damage.

DIAGNOSIS AND TESTING (CONTINUED)

CONDITIONS	DETAILS/RESULTS/ACTIONS
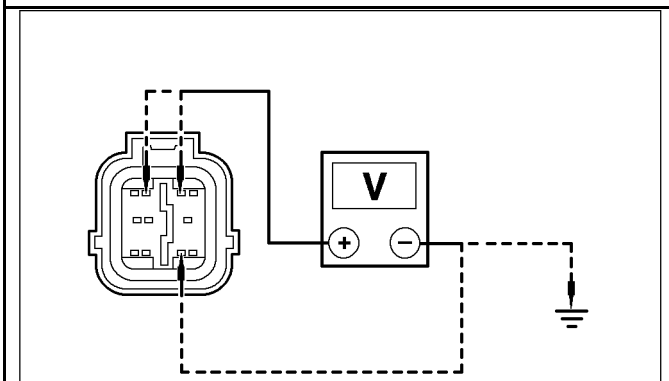	**6** Measure the voltage between: - the air bag control module C334 pin 2, circuit 94S-JA8 (VT) and pin 9, circuit 91-JA10 (BK/RD) harness side; and - the air bag control module C1511a pin 2, circuit 94S-JA8 (VT) harness side and ground; and - the air bag control module C1511a pin 3, circuit 91S-JA8 (BK/OG) and pin 9, circuit 91-JA10 (BK/RD) harness side; and - the air bag control module C1511a pin 3, circuit 91S-JA8 (BK/OG) harness side and ground. • Is any voltage present? ☐ **Yes** GO TO **G2** ☐ **No** CONNECT the driver air bag module simulator and the air bag control module. REPEAT the self-test; CLEAR the DTCs. REACTIVATE the system. REFER to Air Bag and Safety Belt Pretensioner Supplemental Restraint System (SRS) in this section.

G2: CHECK THE AIR BAG WIRING HARNESS FOR A SHORT TO BATTERY

1	**2**	**3**
	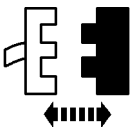	
	Air Bag Sliding Contact C349	

DIAGNOSIS AND TESTING (CONTINUED)

CONDITIONS	DETAILS/RESULTS/ACTIONS
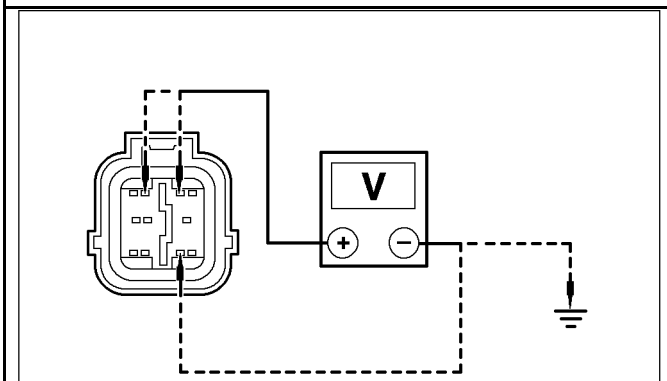	**4** Measure the voltage between: - the air bag control module C334 pin 2, circuit 94S-JA8 (VT) and pin 9, circuit 91-JA10 (BK/RD) harness side; and - the air bag control module C1511a pin 2, circuit 94S-JA8 (VT) harness side and ground; and - the air bag control module C1511a pin 3, circuit 91S-JA8 (BK/OG) and pin 9, circuit 91-JA10 (BK/RD) harness side; and - the air bag control module C1511a pin 3, circuit 91S-JA8 (BK/OG) harness side and ground. • Is any voltage present? ☐ **Yes** INSTALL a new air bag wiring harness. REPEAT the self-test; CLEAR the DTCs. REACTIVATE the system. REFER to Air Bag and Safety Belt Pretensioner Supplemental Restraint System (SRS) in this section. ☐ **No** INSTALL a new air bag sliding contact. REFER to Air Bag Sliding Contact in this section. REPEAT the self-test; CLEAR the DTCs. REACTIVATE the system. REFER to Air Bag and Safety Belt Pretensioner Supplemental Restraint System (SRS) in this section.

PINPOINT TEST H: DTC B1932: DRIVER AIR BAG OPEN CIRCUIT OR HIGH RESISTANCE

CONDITIONS	DETAILS/RESULTS/ACTIONS
⚠ **WARNING: Wait at least one minute after disconnecting the battery ground cable before disconnecting any supplemental restraint system electrical connector. Failure to follow this instruction may result in personal injury.**	
H1: CHECK THE DRIVER AIR BAG MODULE CIRCUIT RESISTANCE	
2 	**1** Deactivate the supplemental restraint system. REFER to Air Bag and Safety Belt Pretensioner Supplemental Restraint System (SRS) in this section.

DIAGNOSIS AND TESTING (CONTINUED)

CONDITIONS	DETAILS/RESULTS/ACTIONS
	3 Carry out the self-test with the simulators installed. • Does the system prove out correctly? ☐ **Yes** GO TO **H2** ☐ **No** GO TO **H3**
H2: CHECK THE DRIVER AIR BAG MODULE SQUIB RESISTANCE	
⚠ **WARNING: Do not proceed with this test unless using WDS. Failure to follow this instruction may result in personal injury.**	
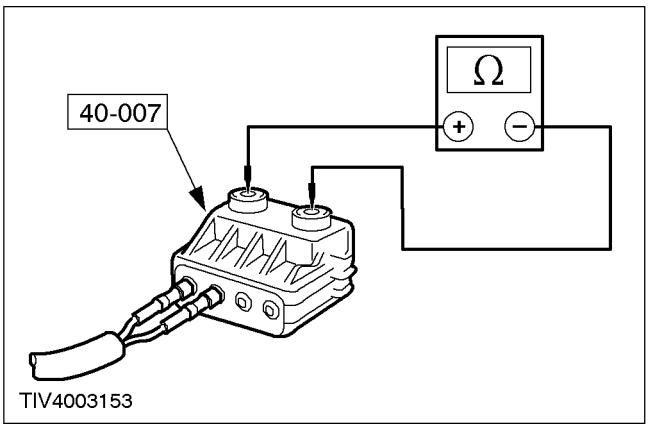	**1** Connect the Test and Deployment Lead to the driver air bag module. **2** Select DMM specific on WDS. **3** Connect the Test and Deployment Lead to WDS. **4** Measure the resistance of the air bag module squib. • Is the resistance between 2 and 3 ohms? ☐ **Yes** REPEAT the self-test; CLEAR the DTCs. REACTIVATE the system. REFER to Air Bag and Safety Belt Pretensioner Supplemental Restraint System (SRS) in this section. ☐ **No** INSTALL a new driver air bag module. REPEAT the self-test; CLEAR the DTCs. REACTIVATE the system. REFER to Air Bag and Safety Belt Pretensioner Supplemental Restraint System (SRS) in this section.
H3: CHECK THE AIR BAG SLIDING CONTACT FOR OPEN CIRCUIT OR HIGH RESISTANCE	
1 **2** Air Bag Sliding Contact C349	

DIAGNOSIS AND TESTING (CONTINUED)

CONDITIONS	DETAILS/RESULTS/ACTIONS
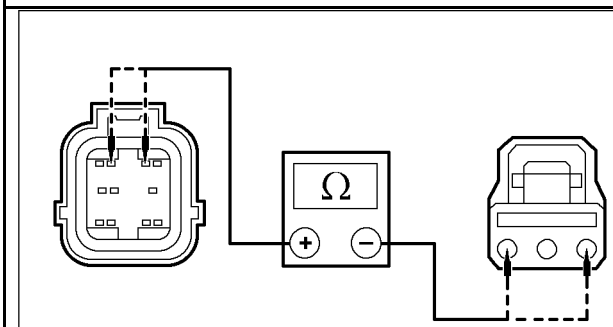 TIE0014601	**3** Measure the resistance between: - the air bag control module C334 pin 2, circuit 94S-JA8 (VT) and the air bag sliding contact C349 pin 3, circuit 94S-JA8 (VT) harness side; and - the air bag control module C334 pin 3, circuit 91S-JA8 (BK/OG) and the air bag sliding contact C349 pin 1, circuit 91S-JA8 (BK/OG) harness side. • Are the resistances less than 5 ohms? ☐ **Yes** INSTALL a new air bag sliding contact. REFER to Air Bag Sliding Contact in this section. REPEAT the self-test; CLEAR the DTCs. REACTIVATE the system. REFER to Air Bag and Safety Belt Pretensioner Supplemental Restraint System (SRS) in this section. ☐ **No** INSTALL a new air bag wiring harness. REPEAT the self-test; CLEAR the DTCs. REACTIVATE the system. REFER to Air Bag and Safety Belt Pretensioner Supplemental Restraint System (SRS) in this section.

PINPOINT TEST I: DTC B1934: DRIVER AIR BAG CIRCUIT LOW RESISTANCE

CONDITIONS	DETAILS/RESULTS/ACTIONS
⚠ **WARNING: Wait at least one minute after disconnecting the battery ground cable before disconnecting any supplemental restraint system electrical connector. Failure to follow this instruction may result in personal injury.**	
I1: CHECK THE DRIVER AIR BAG MODULE CIRCUIT RESISTANCE	
2 	**1** Deactivate the supplemental restraint system. REFER to Air Bag and Safety Belt Pretensioner Supplemental Restraint System (SRS) in this section. **3** Carry out the self-test with the simulators installed. • Does the system prove out correctly? ☐ **Yes** GO TO **I2** ☐ **No** GO TO **I3**

DIAGNOSIS AND TESTING (CONTINUED)

CONDITIONS	DETAILS/RESULTS/ACTIONS
I2: CHECK THE DRIVER AIR BAG MODULE SQUIB RESISTANCE	
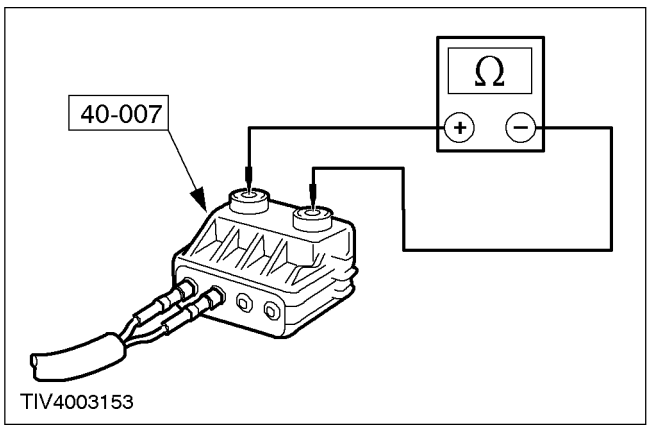	1 Connect the Test and Deployment Lead to the driver air bag module. 2 Select DMM specific on WDS. 3 Connect the Test and Deployment Lead WDS. 4 Measure the resistance of the driver air bag module squib. • Is the resistance between 2 and 3 ohms? ☐ **Yes** REPEAT the self-test; CLEAR the DTCs. REACTIVATE the system. REFER to Air Bag and Safety Belt Pretensioner Supplemental Restraint System (SRS) in this section. ☐ **No** INSTALL a new driver air bag module. REPEAT the self-test; CLEAR the DTCs. REACTIVATE the system. REFER to Air Bag and Safety Belt Pretensioner Supplemental Restraint System (SRS) in this section.
I3: CHECK THE AIR BAG SLIDING CONTACT FOR LOW RESISTANCE	
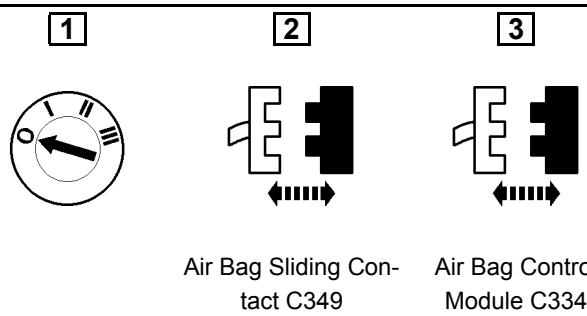 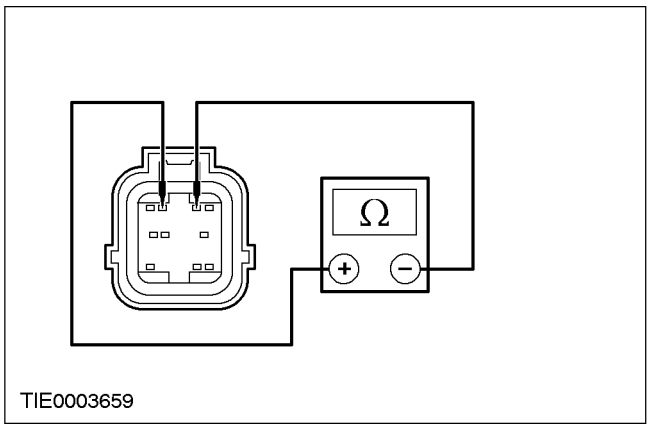	4 Measure the resistance between the air bag control module C334 pin 2, circuit 94S-JA8 (VT) and pin 3, circuit 91S-JA8 (BK/OG) harness side. • Is the resistance greater than 10,000 ohms? ☐ **Yes** INSTALL a new air bag sliding contact. REFER to Air Bag Sliding Contact in this section. REPEAT the self-test; CLEAR the DTCs. REACTIVATE the system. REFER to Air Bag and Safety Belt Pretensioner Supplemental Restraint System (SRS) in this section. ☐ **No** INSTALL a new air bag wiring harness. REPEAT the self-test; CLEAR the DTCs. REACTIVATE the system. REFER to Air Bag and Safety Belt Pretensioner Supplemental Restraint System (SRS) in this section.

DIAGNOSIS AND TESTING (CONTINUED)

PINPOINT TEST J: DTC B1888: PASSENGER AIR BAG SHORT TO GROUND

CONDITIONS	DETAILS/RESULTS/ACTIONS
WARNING: Wait at least one minute after disconnecting the battery ground cable before disconnecting any supplemental restraint system electrical connector. Failure to follow this instruction may result in personal injury.	
J1: CHECK THE PASSENGER AIR BAG CIRCUIT	
2	1 Deactivate the supplemental restraint system. REFER to Air Bag and Safety Belt Pretensioner Supplemental Restraint System (SRS) in this section. 3 Carry out the self-test with the simulators installed. • Does the system prove out correctly? ☐ **Yes** GO TO **J2** ☐ **No** GO TO **J3**
J2: CHECK THE PASSENGER AIR BAG MODULE	
WARNING: Do not proceed with this test unless using WDS. Failure to follow this instruction may result in personal injury.	
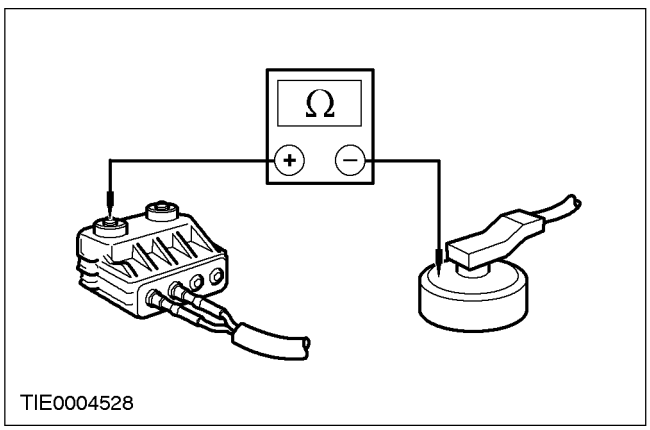	1 Connect the Test and Deployment Lead to the passenger air bag module. 2 Select DMM Specific on WDS. 3 Connect the Test and Deployment Lead to WDS. 4 Measure the resistance between each of the terminals and the air bag module casing. • Are the resistances greater than 10,000 ohms? ☐ **Yes** REPEAT the self-test; CLEAR the DTCs. REACTIVATE the system. REFER to Air Bag and Safety Belt Pretensioner Supplemental Restraint System (SRS) in this section. ☐ **No** INSTALL a new passenger air bag module. REPEAT the self-test; CLEAR the DTCs. REACTIVATE the system. REFER to Air Bag and Safety Belt Pretensioner Supplemental Restraint System (SRS) in this section.

DIAGNOSIS AND TESTING (CONTINUED)

CONDITIONS	DETAILS/RESULTS/ACTIONS
J3: CHECK THE PASSENGER AIR BAG CIRCUIT FOR A SHORT TO GROUND	
1 2 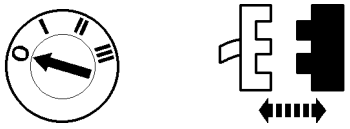 Air Bag Control Module C334 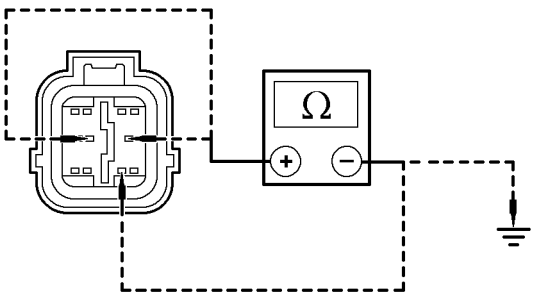 TIE0003656	3 Measure the resistance between: - - the air bag control module C334 pin 5, circuit 94S-JA11 (VT/WH) and pin 9, circuit 91-JA10 (BK/RD) harness side; and - the air bag control module C334 pin 5, circuit 94S-JA11 (VT/WH) and ground; and - - the air bag control module C334 pin 6, circuit 91S-JA11 (BK/WH) and pin 9, circuit 91-JA10 (BK/RD) harness side; and - the air bag control module C334 pin 6, circuit 91S-JA11 (BK/WH) and ground. • Are the resistances greater than 10,000 ohms? ☐ **Yes** REPEAT the self-test; CLEAR the DTCs. REACTIVATE the system. REFER to Air Bag and Safety Belt Pretensioner Supplemental Restraint System (SRS) in this section. ☐ **No** INSTALL a new air bag wiring harness. REPEAT the self-test; CLEAR the DTCs. REACTIVATE the system. REFER to Air Bag and Safety Belt Pretensioner Supplemental Restraint System (SRS) in this section.

PINPOINT TEST K: DTC:B1925: PASSENGER AIR BAG SHORT TO BATTERY

CONDITIONS	DETAILS/RESULTS/ACTIONS
K1: CHECK THE PASSENGER AIR BAG CIRCUIT FOR A SHORT TO BATTERY	
	1 Deactivate the supplemental restraint system. REFER to Air Bag and Safety Belt Pretensioner Supplemental Restraint System (SRS) in this section. 2 Visually check the passenger air bag harness for damage.

DIAGNOSIS AND TESTING (CONTINUED)

CONDITIONS	DETAILS/RESULTS/ACTIONS
3 4 5 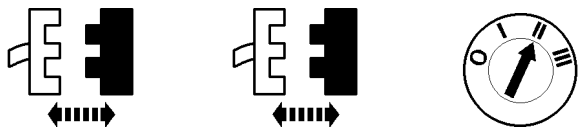 Passenger Air Bag Module Simulator Air Bag Control Module C334 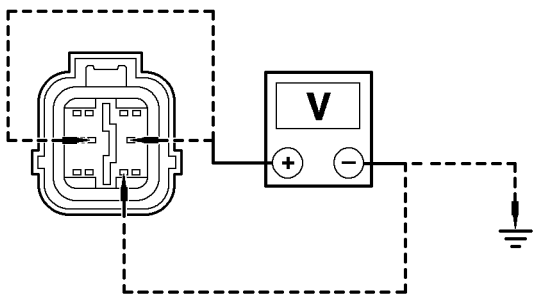 TIE0004616	6 Measure the voltage between: - the air bag control module C334 pin 5, circuit 94S-JA11 (VT/WH) and pin 9, circuit 91-JA10 (BK/RD) harness side; and - the air bag control module C334 pin 5, circuit 94S-JA11 (VT/WH) harness side and ground; and - the air bag control C334 pin 6, circuit 91S-JA11 (BK/WH) and pin 9, circuit 91-JA10 (BK/RD) harness side; and - the air bag control module C334 pin 6, circuit 91S-JA11 (BK/WH) harness side and ground. • Is any voltage present? ☐ **Yes** INSTALL a new air bag wiring harness. REPEAT the self-test; CLEAR the DTCs. REACTIVATE the system. REFER to Air Bag and Safety Belt Pretensioner Supplemental Restraint System (SRS) in this section. ☐ **No** CONNECT the passenger air bag module simulator and the air bag control module. REPEAT the self-test; CLEAR the DTCs. REACTIVATE the system. REFER to Air Bag and Safety Belt Pretensioner Supplemental Restraint System (SRS) in this section.

PINPOINT TEST L: DTC: B1933: PASSENGER AIR BAG OPEN CIRCUIT OR HIGH RESISTANCE

CONDITIONS	DETAILS/RESULTS/ACTIONS
⚠ **WARNING: Wait at least one minute after disconnecting the battery ground cable before disconnecting any supplemental restraint system electrical connector. Failure to follow this instruction may result in personal injury.**	
L1: CHECK THE PASSENGER AIR BAG MODULE CIRCUIT RESISTANCE	
	1 Deactivate the supplemental restraint system. REFER to Air Bag and Safety Belt Pretensioner Supplemental Restraint System (SRS) in this section.

DIAGNOSIS AND TESTING (CONTINUED)

CONDITIONS	DETAILS/RESULTS/ACTIONS
2	3 Carry out the self-test with the simulators installed. • Does the system prove out correctly? ☐ **Yes** GO TO **L2** ☐ **No** INSTALL a new air bag wiring harness. REPEAT the self-test; CLEAR the DTCs. REACTIVATE the system. REFER to Air Bag and Safety Belt Pretensioner Supplemental Restraint System (SRS) in this section.

L2: THE PASSENGER AIR BAG MODULE SQUIB RESISTANCE

WARNING: Do not proceed with this test unless using WDS. Failure to follow this instruction may result in personal injury.

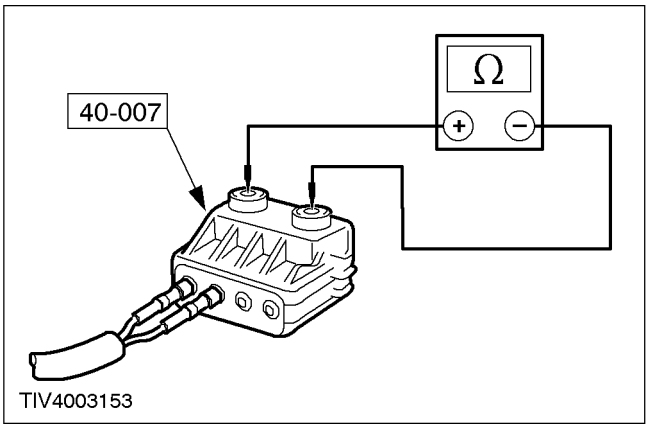	1 Connect the Test and Deployment Lead to the passenger air bag module. 2 Select DMM specific on WDS. 3 Connect the Test and Deployment lead to WDS. 4 Measure the resistance of the air bag module squib. • Is the resistance between 2 and 3 ohms? ☐ **Yes** REPEAT the self-test; CLEAR the DTCs. REACTIVATE the system. REFER to Air Bag and Safety Belt Pretensioner Supplemental Restraint System (SRS) in this section. ☐ **No** INSTALL a new passenger air bag module. REPEAT the self-test; CLEAR the DTCs. REACTIVATE the system. REFER to Air Bag and Safety Belt Pretensioner Supplemental Restraint System (SRS) in this section.

PINPOINT TEST M: DTC B1935: PASSENGER AIR BAG CIRCUIT LOW RESISTANCE

CONDITIONS	DETAILS/RESULTS/ACTIONS

WARNING: Wait at least one minute after disconnecting the battery ground cable before disconnecting any supplemental restraint system electrical connector. Failure to follow this instruction may result in personal injury.

DIAGNOSIS AND TESTING (CONTINUED)

CONDITIONS	DETAILS/RESULTS/ACTIONS
M1: CHECK THE PASSENGER AIR BAG MODULE CIRCUIT RESISTANCE	
2	1 Deactivate the supplemental restraint system. REFER to Air Bag and Safety Belt Pretensioner Supplemental Restraint System (SRS) in this section. 3 Carry out the self-test with the simulators installed. • Does the system prove out correctly? ☐ **Yes** GO TO **M2** ☐ **No** GO TO **M3**
M2: CHECK THE PASSENGER AIR BAG MODULE SQUIB RESISTANCE	
⚠ **WARNING: Do not proceed with this test unless using WDS. Failure to follow this instruction may result in personal injury.**	
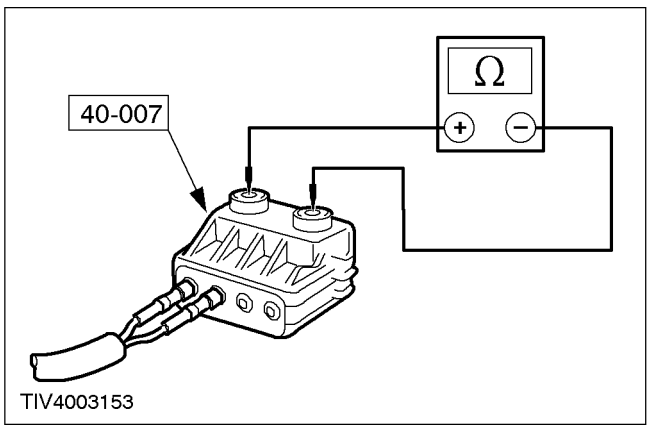	1 Connect the Test and Deployment Lead to the passenger air bag module. 2 Select DMM specific on WDS. 3 Connect the Test and Deployment Lead to WDS. 4 Measure the resistance of the air bag module squib. • Is the resistance between 2 and 3 ohms? ☐ **Yes** REPEAT the self-test; CLEAR the DTCs. REACTIVATE the system. REFER to Air Bag and Safety Belt Pretensioner Supplemental Restraint System (SRS) in this section. ☐ **No** INSTALL a new passenger air bag module. REPEAT the self-test; CLEAR the DTCs. REACTIVATE the system. REFER to Air Bag and Safety Belt Pretensioner Supplemental Restraint System (SRS) in this section.

DIAGNOSIS AND TESTING (CONTINUED)

CONDITIONS	DETAILS/RESULTS/ACTIONS
M3: CHECK THE PASSENGER AIR BAG CIRCUIT FOR LOW RESISTANCE	
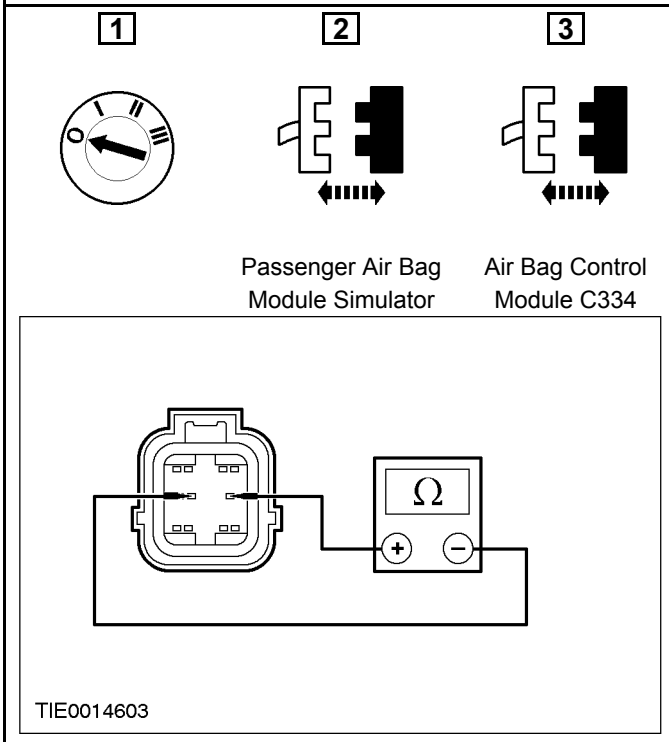	4 Measure the resistance between the air bag control module C334 pin 5, circuit 94S-JA11 (VT/WH) and pin 6, circuit 91S-JA11 (BK/WH) harness side. • Is the resistance greater than 10,000 ohms? ☐ **Yes** REPEAT the self-test; CLEAR the DTCs. REACTIVATE the system. REFER to Air Bag and Safety Belt Pretensioner Supplemental Restraint System (SRS) in this section. ☐ **No** INSTALL a new air bag wiring harness. REPEAT the self-test; CLEAR the DTCs. REACTIVATE the system. REFER to Air Bag and Safety Belt Pretensioner Supplemental Restraint System (SRS) in this section.

PINPOINT TEST N: DTC B1876: DRIVER SAFETY BELT PRETENSIONER CIRCUIT CAPACITANCE OUT OF RANGE

CONDITIONS	DETAILS/RESULTS/ACTIONS
⚠ **WARNING: Wait at least one minute after disconnecting the battery ground cable before disconnecting any supplemental restraint system electrical connector. Failure to follow this instruction may result in personal injury.**	
N1: CHECK THE DRIVER SAFETY BELT PRETENSIONER CAPACITANCE	
	1 Deactivate the supplemental restraint system. REFER to Air Bag and Safety Belt Pretensioner Supplemental Restraint System (SRS) in this section.

DIAGNOSIS AND TESTING (CONTINUED)

CONDITIONS	DETAILS/RESULTS/ACTIONS
	2 Carry out the self-test with the simulators installed. • Does the system prove out correctly? ☐ **Yes** INSTALL a new driver safety belt pretensioner. REFER to Section 501-20A. REPEAT the self-test; CLEAR the DTCs. REACTIVATE the system. REFER to Air Bag and Safety Belt Pretensioner Supplemental Restraint System (SRS) in this section. ☐ **No** CHECK the air bag simulator is installed correctly. REPEAT the self-test; CLEAR the DTCs. REACTIVATE the system. REFER to Air Bag and Safety Belt Pretensioner Supplemental Restraint System (SRS) in this section

PINPOINT TEST O: DTC B1877: DRIVER SAFETY BELT PRETENSIONER OPEN CIRCUIT

CONDITIONS	DETAILS/RESULTS/ACTIONS
⚠ **WARNING: Wait at least one minute after disconnecting the battery ground cable before disconnecting any supplemental restraint system electrical connector. Failure to follow this instruction may result in personal injury.**	
O1: CHECK THE DRIVER SAFETY BELT PRETENSIONER CIRCUIT	
2 	**1** Deactivate the supplemental restraint system. REFER to Air Bag and Safety Belt Pretensioner Supplemental Restraint System (SRS) in this section. **3** Carry out the self-test with the simulators installed. • Does the system prove out correctly? ☐ **Yes** INSTALL a new driver safety belt pretensioner. REFER to Section 501-20A. REPEAT the self-test; CLEAR the DTCs. REACTIVATE the system. REFER to Air Bag and Safety Belt Pretensioner Supplemental Restraint System (SRS) in this section. ☐ **No** GO TO **O2**

DIAGNOSIS AND TESTING (CONTINUED)

CONDITIONS	DETAILS/RESULTS/ACTIONS
O2: CHECK THE DRIVER SAFETY BELT PRETENSIONER FOR OPEN CIRCUIT OR HIGH RESISTANCE	
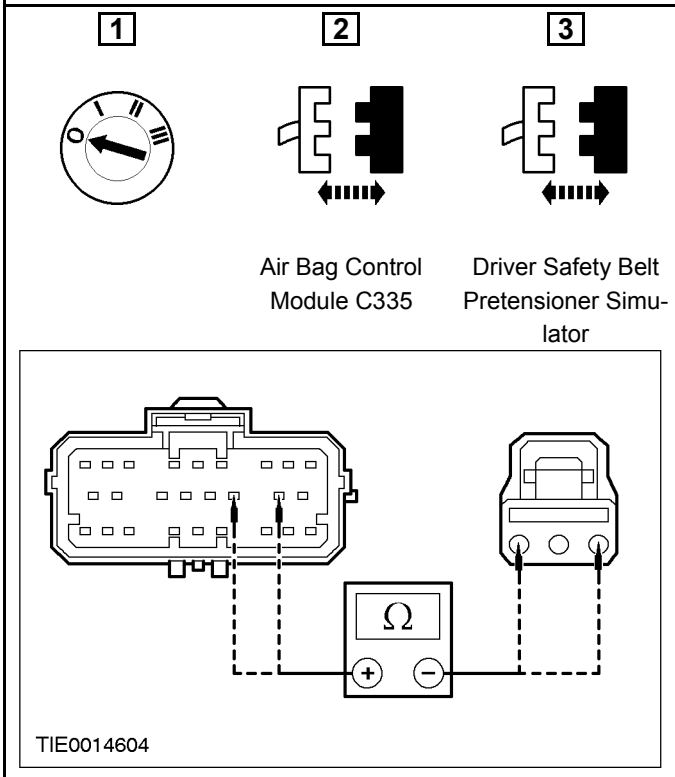	**4** Measure the resistance between: - the air bag control module C335 pin 11, circuit 94S-JA33 (VT/BU) and the driver safety belt pretensioner C348 pin 3, circuit 94S-JA33 (VT/BU) harness side; and - the air bag control module C335 pin 12, circuit 91S-JA33 (BK/BU) and the driver safety belt pretensioner C348 pin 1, circuit 91S-JA33 (BK/BU) harness side. • Are the resistances less than 5 ohms? ☐ **Yes** REPEAT the self-test; CLEAR the DTCs. REACTIVATE the system. REFER to Air Bag and Safety Belt Pretensioner Supplemental Restraint System (SRS) in this section. ☐ **No** INSTALL a new air bag wiring harness. REPEAT the self-test; CLEAR the DTCs. REACTIVATE the system. REFER to Air Bag and Safety Belt Pretensioner Supplemental Restraint System (SRS) in this section.

PINPOINT TEST P: DTC B1878 DRIVER SAFETY BELT PRETENSIONER SHORT TO BATTERY

CONDITIONS	DETAILS/RESULTS/ACTIONS
⚠ **WARNING: Wait at least one minute after disconnecting the battery ground cable before disconnecting any supplemental restraint system electrical connector. Failure to follow this instruction may result in personal injury.**	
P1: CHECK THE DRIVER SAFETY BELT PRETENSIONER CIRCUIT	
	1 Deactivate the supplemental restraint system. REFER to Air Bag and Safety Belt Pretensioner Supplemental Restraint System (SRS) in this section.

DIAGNOSIS AND TESTING (CONTINUED)

CONDITIONS	DETAILS/RESULTS/ACTIONS
2	3 Carry out the self-test with the simulators installed. • Does the system prove out correctly? ☐ **Yes** INSTALL a new driver safety belt pretensioner. REFER to Section 501-20A. REPEAT the self- test; CLEAR the DTCs. REACTIVATE the system. REFER to Air Bag and Safety Belt Pretensioner Supplemental Restraint System (SRS) in this section. ☐ **No** GO TO **P2**
P2: CHECK THE DRIVER SAFETY BELT PRETENSIONER FOR A SHORT TO BATTERY	
1 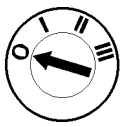 2 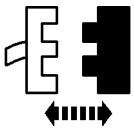 Air Bag Control Module C334/C335 3 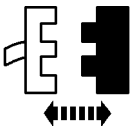 Driver Safety Belt Pretensioner Simulator 4	

DIAGNOSIS AND TESTING (CONTINUED)

CONDITIONS	DETAILS/RESULTS/ACTIONS
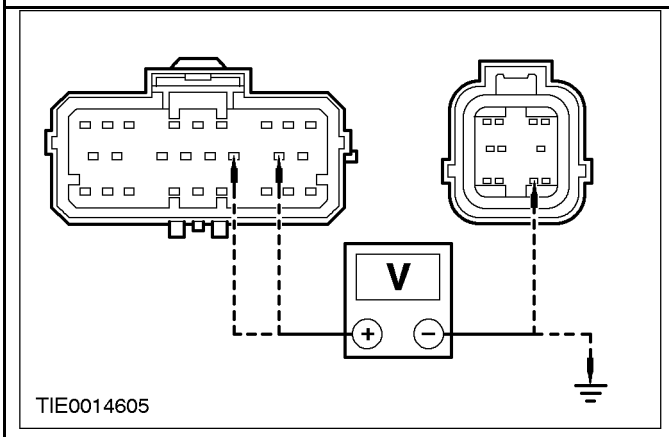	**5** Measure the voltage between: - the air bag control module C335 pin 11, circuit 94S-JA33 (VT/BU) and the air bag control module C334 pin 9, circuit 91-JA10 (BK/RD) harness side; and - the air bag control module C335 pin 11, circuit 94S-JA33 (VT/BU) harness side and ground; and - the air bag control module C335 pin 12, circuit 91-JA33 (BK/BU) and the air bag control module C334 pin 9, circuit 91-JA10 (BK/RD) harness side; and - the air bag control module C335 pin 12, circuit 91S-JA33 (BK/BU) harness side and ground. • Is any voltage present? ☐ **Yes** INSTALL a new air bag wiring harness. REPEAT the self-test; CLEAR the DTCs. REACTIVATE the system. REFER to Air Bag and Safety Belt Pretensioner Supplemental Restraint System (SRS) in this section. ☐ **No** REPEAT the self-test; CLEAR the DTCs. REACTIVATE the system. REFER to Air Bag and Safety Belt Pretensioner Supplemental Restraint System (SRS) in this section.

PINPOINT TEST Q: DTC B1879: DRIVER SAFETY BELT PRETENSIONER SHORT TO GROUND

CONDITIONS	DETAILS/RESULTS/ACTIONS
⚠ **WARNING: Wait at least one minute after disconnecting the battery ground cable before disconnecting any supplemental restraint system electrical connector. Failure to follow this instruction may result in personal injury.**	
Q1: CHECK THE DRIVER SAFETY BELT PRETENSIONER CIRCUIT	
2 	**1** Deactivate the supplemental restraint system. REFER to Air Bag and Safety Belt Pretensioner Supplemental Restraint System (SRS) in this section.

DIAGNOSIS AND TESTING (CONTINUED)

CONDITIONS	DETAILS/RESULTS/ACTIONS
	3 Carry out the self-test with the simulators installed. • Does the system prove out correctly? ☐ **Yes** INSTALL a new driver safety belt pretensioner. REFER to Section 501-20A. REPEAT the self-test; CLEAR the DTCs. REACTIVATE the system. REFER to Air Bag and Safety Belt Pretensioner Supplemental Restraint System (SRS) in this section. ☐ **No** GO TO **Q2**
Q2: CHECK THE DRIVER SAFETY BELT PRETENSIONER FOR A SHORT TO GROUND	
1 2 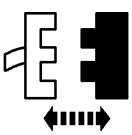 Air Bag Control Module C334/C335 3 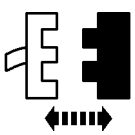 Driver Safety Belt Pretensioner Simulator	

DIAGNOSIS AND TESTING (CONTINUED)

CONDITIONS	DETAILS/RESULTS/ACTIONS
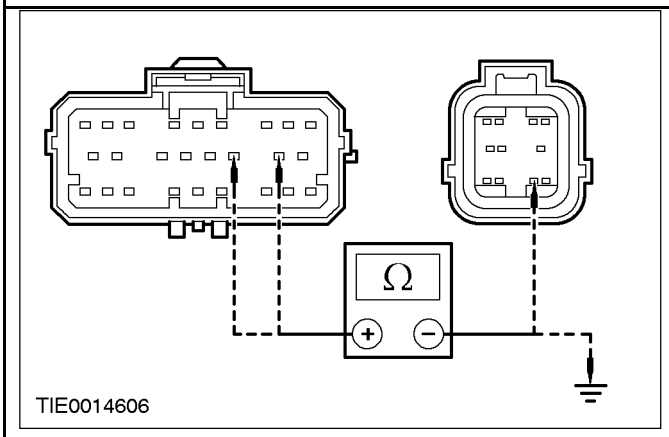	**4** Measure the resistance between: - the air bag control module C335 pin 11, circuit 94S-JA33 (VT/BU) and the air bag control module C334 pin 9, circuit 91-JA10 (BK/RD) harness side; and - the air bag control module C335 pin 11, circuit 94S-JA33 (VT/BU) harness side and ground; and - the air bag control module C335 pin 12, circuit 91S-JA33 (BK/BU) and the air bag control module C334 pin 9, circuit 91-JA10 (BK/RD) harness side; and - the air bag control module C335 pin 12, circuit 91S-JA33 (BK/BU) harness side and ground. • Are the resistances greater than 10,000 ohms? ☐ **Yes** REPEAT the self-test; CLEAR the DTCs. REACTIVATE the system. REFER to Air Bag and Safety Belt Pretensioner Supplemental Restraint System (SRS) in this section. ☐ **No** INSTALL a new air bag wiring harness. REPEAT the self-test; CLEAR the DTCs. REACTIVATE the system. REFER to Air Bag and Safety Belt Pretensioner Supplemental Restraint System (SRS) in this section.

PINPOINT TEST R: DTC B1885: DRIVER SAFETY BELT PRETENSIONER LOW RESISTANCE

CONDITIONS	DETAILS/RESULTS/ACTIONS
⚠ **WARNING: Wait at least one minute after disconnecting the battery ground cable before disconnecting any supplemental restraint system electrical connector. Failure to follow this instruction may result in personal injury.**	
R1: CHECK THE DRIVER SAFETY BELT PRETENSIONER CIRCUIT	
2 	**1** Deactivate the supplemental restraint system. REFER to Air Bag and Safety Belt Pretensioner Supplemental Restraint System (SRS) in this section.

DIAGNOSIS AND TESTING (CONTINUED)

CONDITIONS	DETAILS/RESULTS/ACTIONS
	3 Carry out the self-test with the simulators installed. • Does the system prove out correctly? ☐ **Yes** INSTALL a new driver safety belt pretensioner. REFER to Section 501-20A. REPEAT the self-test; CLEAR the DTCs. REACTIVATE the system. REFER to Air Bag and Safety Belt Pretensioner Supplemental Restraint System (SRS) in this section. ☐ **No** GO TO **R2**
R2: CHECK THE DRIVER SAFETY BELT PRETENSIONER FOR LOW RESISTANCE	
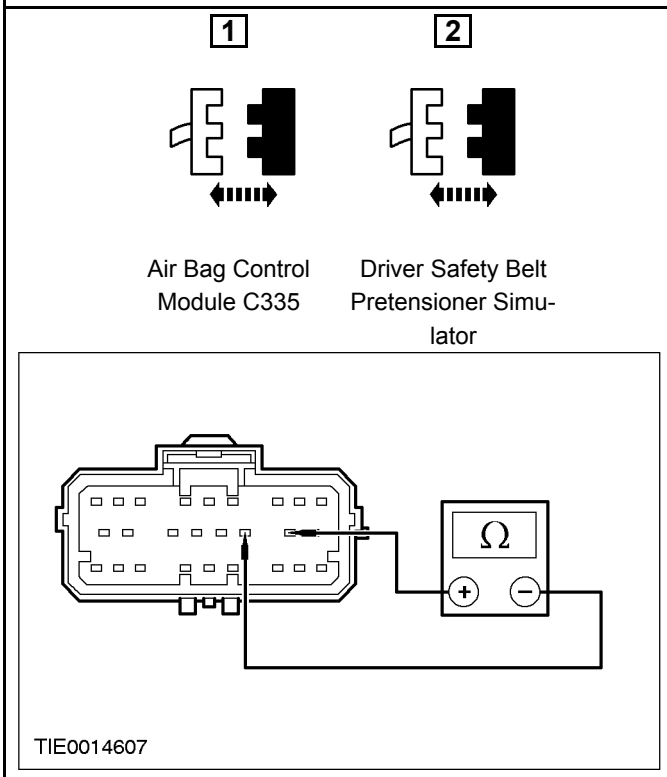	**3** Measure the resistance between the air bag control module C335 pin 11, circuit 94S-JA33 (VT/BU) and pin 12, circuit 91S-JA33 (BK/BU) harness side. • Is the resistance greater than 10,000 ohms? ☐ **Yes** REPEAT the self-test; CLEAR the DTCs. REACTIVATE the system. REFER to Air Bag and Safety Belt Pretensioner Supplemental Restraint System (SRS) in this section. ☐ **No** INSTALL a new air bag wiring harness. REPEAT the self-test; CLEAR the DTCs. REACTIVATE the system. REFER to Air Bag and Safety Belt Pretensioner Supplemental Restraint System (SRS) in this section.

DIAGNOSIS AND TESTING (CONTINUED)

PINPOINT TEST S: DTC B1880: PASSENGER SAFETY BELT PRETENSIONER CIRCUIT CAPACITANCE OUT OF RANGE

CONDITIONS	DETAILS/RESULTS/ACTIONS
WARNING: Wait at least one minute after disconnecting the battery ground cable before disconnecting any supplemental restraint system electrical connector. Failure to follow this instruction may result in personal injury.	
S1: CHECK THE PASSENGER SAFETY BELT PRETENSIONER CAPACITANCE	
2	1 Deactivate the supplemental restraint system. REFER to Air Bag and Safety Belt Pretensioner Supplemental Restraint System (SRS) in this section. 3 Carry out the self-test with the simulators installed. • Does the system prove out correctly? ☐ **Yes** INSTALL a new passenger safety belt pretensioner. REFER to Section 501-20A. REPEAT the self-test; CLEAR the DTCs. REACTIVATE the system. REFER to Air Bag and Safety Belt Pretensioner Supplemental Restraint System (SRS) in this section. ☐ **No** CHECK that the safety belt pretensioner simulator is installed correctly. REPEAT the self-test; CLEAR the DTCs. REACTIVATE the system. REFER to Air Bag and Safety Belt Pretensioner Supplemental Restraint System (SRS) in this section.

PINPOINT TEST T: DTC B1881: PASSENGER SAFETY BELT PRETENSIONER OPEN CIRCUIT

CONDITIONS	DETAILS/RESULTS/ACTIONS
WARNING: Wait at least one minute after disconnecting the battery ground cable before disconnecting any supplemental restraint system electrical connector. Failure to follow this instruction may result in personal injury.	
T1: CHECK THE PASSENGER SAFETY BELT PRETENSIONER CIRCUIT	
	1 Deactivate the supplemental restraint system. REFER to Air Bag and Safety Belt Pretensioner Supplemental Restraint System (SRS) in this section.

DIAGNOSIS AND TESTING (CONTINUED)

CONDITIONS	DETAILS/RESULTS/ACTIONS
2	
	3 Carry out the self-test with the simulators installed. • Does the system prove out correctly? ☐ **Yes** INSTALL a new passenger safety belt pretensioner. REFER to Section 501-20A. REPEAT the self-test; CLEAR the DTCs. REACTIVATE the system. REFER to Air Bag and Safety Belt Pretensioner Supplemental Restraint System (SRS) in this section. ☐ **No** GO TO **T2**
T2: CHECK THE PASSENGER SAFETY BELT PRETENSIONER FOR OPEN CIRCUIT OR HIGH RESISTANCE	
1 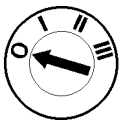 2 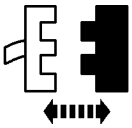 Air Bag Control Module C335 3 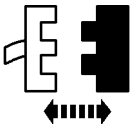 Passenger Safety Belt Pretensioner Simulator	

DIAGNOSIS AND TESTING (CONTINUED)

CONDITIONS	DETAILS/RESULTS/ACTIONS
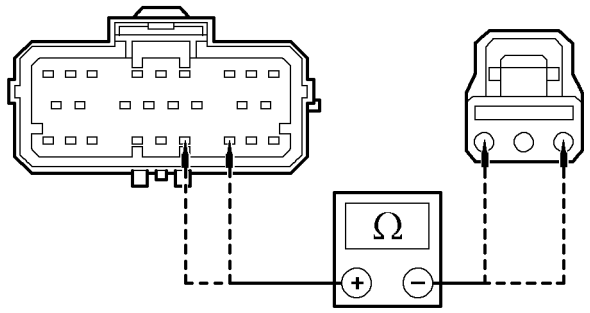 TIE0014614	**4** Measure the resistance between: - the air bag control module C335 pin 20, circuit 94S-JA34 (VT/OG) and the passenger safety belt pretensioner C347 pin 3, circuit 94S-JA34 (VT/OG) harness side; and - the air bag control module C335 pin 21, circuit 91S-JA34 (BK/RD) and the passenger safety belt pretensioner C347 pin 1, circuit 91S-JA43 (BK/RD) harness side. • Are the resistances less than 5 ohms? ☐ **Yes** REPEAT the self-test; CLEAR the DTCs. REACTIVATE the system. REFER to Air Bag and Safety Belt Pretensioner Supplemental Restraint System (SRS) in this section. ☐ **No** INSTALL a new air bag wiring harness. REPEAT the self-test; CLEAR the DTCs. REACTIVATE the system. REFER to Air Bag and Safety Belt Pretensioner Supplemental Restraint System (SRS) in this section.

PINPOINT TEST U: DTC B1882: PASSENGER SAFETY BELT PRETENSIONER SHORT TO BATTERY

CONDITIONS	DETAILS/RESULTS/ACTIONS
⚠ **WARNING: Wait at least one minute after disconnecting the battery ground cable before disconnecting any supplemental restraint system electrical connector. Failure to follow this instruction may result in personal injury.**	
U1: CHECK THE PASSENGER SAFETY BELT PRETENSIONER CIRCUIT	
2 	**1** Deactivate the supplemental restraint system. REFER to Air Bag and Safety Belt Pretensioner Supplemental Restraint System (SRS) in this section.

DIAGNOSIS AND TESTING (CONTINUED)

CONDITIONS	DETAILS/RESULTS/ACTIONS
	3 Carry out the self-test with the simulators installed. • Does the system prove out correctly? ☐ **Yes** INSTALL a new passenger safety belt pretensioner. REFER to Section 501-20A. REPEAT the self-test; CLEAR the DTCs. REACTIVATE the system. REFER to Air Bag and Safety Belt Pretensioner Supplemental Restraint System (SRS) in this section. ☐ **No** GO TO **U2**
U2: CHECK THE PASSENGER SAFETY BELT PRETENSIONER FOR A SHORT TO BATTERY	
1 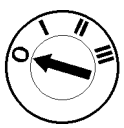 2 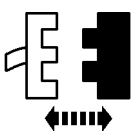 Air Bag Control Module C334/C335 3 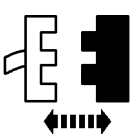 4 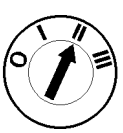 Passenger Safety Belt Pretensioner Simulator	

DIAGNOSIS AND TESTING (CONTINUED)

CONDITIONS	DETAILS/RESULTS/ACTIONS
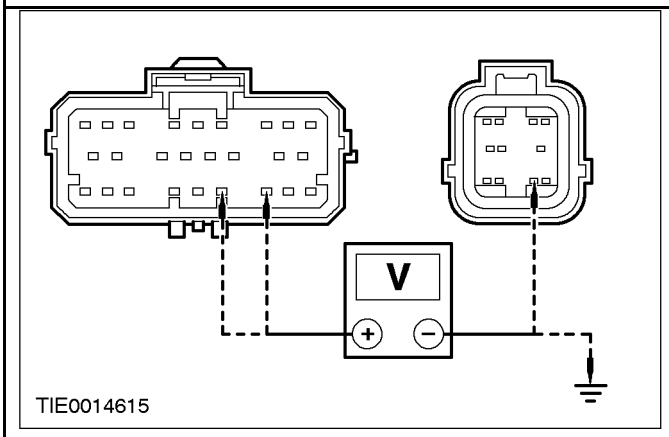	**5** Measure the voltage between: - the air bag control module C335 pin 20, circuit 94S-JA34 (VT/OG) and the air bag control module C334 pin 9, circuit 91-JA10 (BK/RD) harness side; and - the air bag control module C335 pin 20, circuit 94S-JA34 (VT/OG) harness side and ground; and - the air bag control module C335 pin 21, circuit 91S-JA34 (BK/RD) and the air bag control module C334 pin 9, circuit 91-JA10 (BK/RD) harness side; and - the air bag control module C335 pin 21, circuit 91S-JA34 (BK/RD) harness side and ground. • Is any voltage present? ☐ **Yes** INSTALL a new air bag wiring harness. REPEAT the self-test; CLEAR the DTCs. REACTIVATE the system. REFER to Air Bag and Safety Belt Pretensioner Supplemental Restraint System (SRS) in this section. ☐ **No** REPEAT the self-test; CLEAR the DTCs. REACTIVATE the system. REFER to Air Bag and Safety Belt Pretensioner Supplemental Restraint System (SRS) in this section.

PINPOINT TEST V: DTC B1883: PASSENGER SAFETY BELT PRETENSIONER SHORT TO GROUND

CONDITIONS	DETAILS/RESULTS/ACTIONS
⚠ **WARNING: Wait at least one minute after disconnecting the battery ground cable before disconnecting any supplemental restraint system electrical connector. Failure to follow this instruction may result in personal injury.**	
V1: CHECK THE PASSENGER SAFETY BELT PRETENSIONER CIRCUIT	
2 	**1** Deactivate the supplemental restraint system. REFER to Air Bag and Safety Belt Pretensioner Supplemental Restraint System (SRS) in this section.

DIAGNOSIS AND TESTING (CONTINUED)

CONDITIONS	DETAILS/RESULTS/ACTIONS
	3 Carry out the self-test with the simulators installed. • Does the system prove out correctly? ☐ **Yes** INSTALL a new passenger safety belt pretensioner. REFER to Section 501-20A. REPEAT the self-test; CLEAR the DTCs. REACTIVATE the system. REFER to Air Bag and Safety Belt Pretensioner Supplemental Restraint System (SRS) in this section. ☐ **No** GO TO **V2**
V2: CHECK THE PASSENGER SAFETY BELT PRETENSIONER FOR A SHORT TO GROUND	
1 2 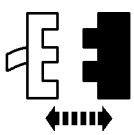 Air Bag Control Module C334/C335 3 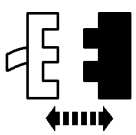 Passenger Safety Belt Pretensioner Simulator	

DIAGNOSIS AND TESTING (CONTINUED)

CONDITIONS	DETAILS/RESULTS/ACTIONS
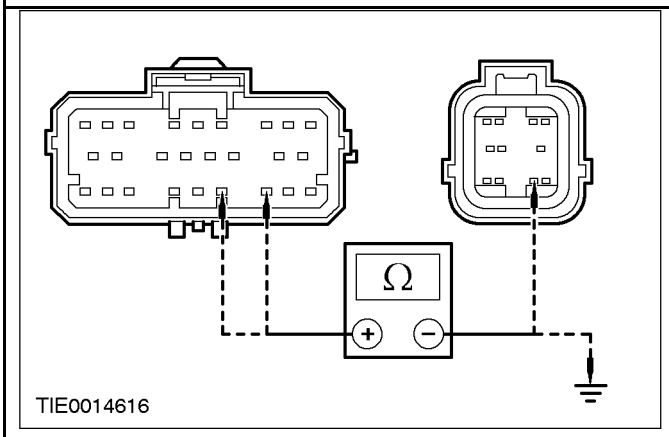	**4** Measure the resistance between: - the air bag control module C335 pin 20, circuit 94S-JA34 (VT/OG) and the air bag control module C334 pin 9, circuit 91-JA10 (BK/RD) harness side; and - the air bag control module C335 pin 20, circuit 94S-JA34 (VT/OG) harness side and ground; and - the air bag control module C335 pin 21, circuit 91S-JA34 (BK/RD) and the air bag control module C334 pin 9, circuit 91-JA10 (BK/RD) harness side; and - the air bag control module C335 pin 21, circuit 91S-JA34 (BK/RD) harness side and ground. • Are the resistances greater than 10,000 ohms? ☐ **Yes** REPEAT the self-test; CLEAR the DTCs. REACTIVATE the system. REFER to Air Bag and Safety Belt Pretensioner Supplemental Restraint System (SRS) in this section. ☐ **No** INSTALL a new air bag wiring harness. REPEAT the self-test; CLEAR the DTCs. REACTIVATE the system. REFER to Air Bag and Safety Belt Pretensioner Supplemental Restraint System (SRS) in this section.

PINPOINT TEST W: DTC B1886: PASSENGER SAFETY BELT PRETENSIONER LOW RESISTANCE

CONDITIONS	DETAILS/RESULTS/ACTIONS
⚠ **WARNING: Wait at least one minute after disconnecting the battery ground cable before disconnecting any supplemental restraint system electrical connector. Failure to follow this instruction may result in personal injury.**	
W1: CHECK THE PASSENGER SAFETY BELT PRETENSIONER CIRCUIT	
2 	**1** Deactivate the supplemental restraint system. REFER to Air Bag and Safety Belt Pretensioner Supplemental Restraint System (SRS) in this section.

DIAGNOSIS AND TESTING (CONTINUED)

CONDITIONS	DETAILS/RESULTS/ACTIONS
	3 Carry out the self-test with the simulators installed. • Does the system prove out correctly? ☐ **Yes** INSTALL a new passenger safety belt pretensioner. REFER to Section 501-20A. REPEAT the self-test; CLEAR the DTCs. REACTIVATE the system. REFER to Air Bag and Safety Belt Pretensioner Supplemental Restraint System (SRS) in this section. ☐ **No** GO TO **W2**
W2: CHECK THE PASSENGER SAFETY BELT PRETENSIONER FOR LOW RESISTANCE	
1 Air Bag Control Module C335 2 Passenger Safety Belt Pretensioner Simulator 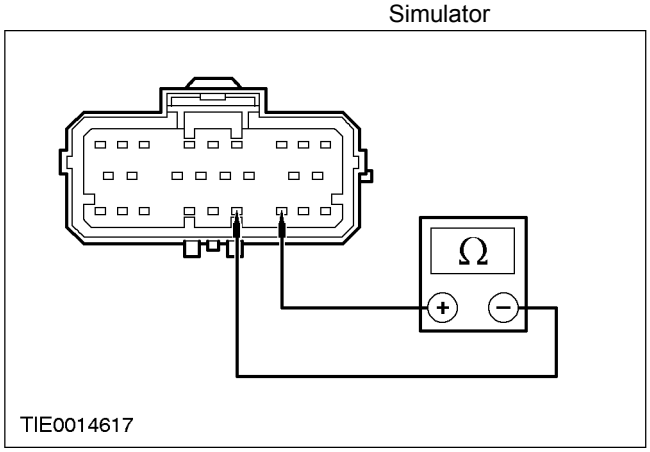 	3 Measure the resistance between the air bag control module C335 pin 20, circuit 94S-JA34 (VT/OG) and pin 21, circuit 91S-JA34 (BK/RD) harness side. • Is the resistance greater than 10,000 ohms ☐ **Yes** REPEAT the self-test; CLEAR the DTCs. REACTIVATE the system. REFER to Air Bag and Safety Belt Pretensioner Supplemental Restraint System (SRS) in this section. ☐ **No** INSTALL a new air bag wiring harness. REPEAT the self-test; CLEAR the DTCs. REACTIVATE the system. REFER to Air Bag and Safety Belt Pretensioner Supplemental Restraint System (SRS) in this section.

REMOVAL AND INSTALLATION

Driver Air Bag Module (40 700 0)

Removal

WARNING: Wait at least 15 minutes after disconnecting the battery before disconnecting the air bag control module electrical connector. For all other supplementary restraints system electrical connectors, wait two minutes. Failure to follow these procedures could increase the possibility of accidentally deploying the air bag(s) and pyrotechnic pretensioner's.

WARNING: Always carry the air bag module with the cover side away from the body and stand it with the cover uppermost. Do not attempt to repair, open or apply electrical power to the module. Never use modules that are visibly damaged. Do not expose the module to heat sources in excess of 100°C.

1. Disconnect the battery ground cable.
2. Remove the steering column upper and lower shrouds.

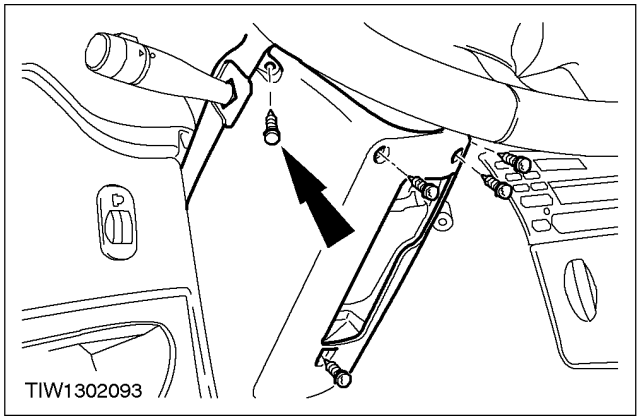

3. Detach the air bag module Torx retaining bolts.
   - Rotate the steering wheel 90 degrees from its central position to gain access to the first Torx screw. Rotate the steering wheel 180 degrees to access the second Torx screw.

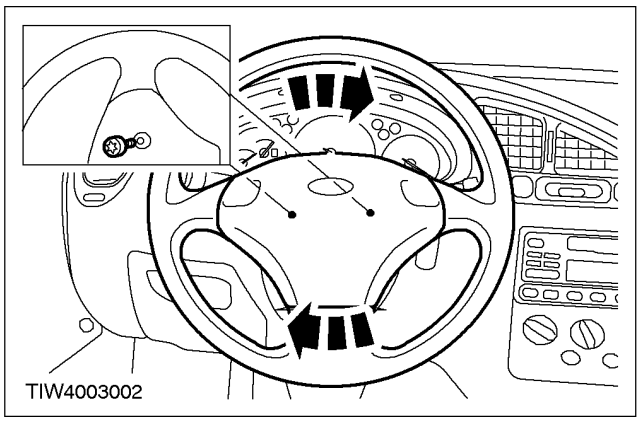

REMOVAL AND INSTALLATION (CONTINUED)

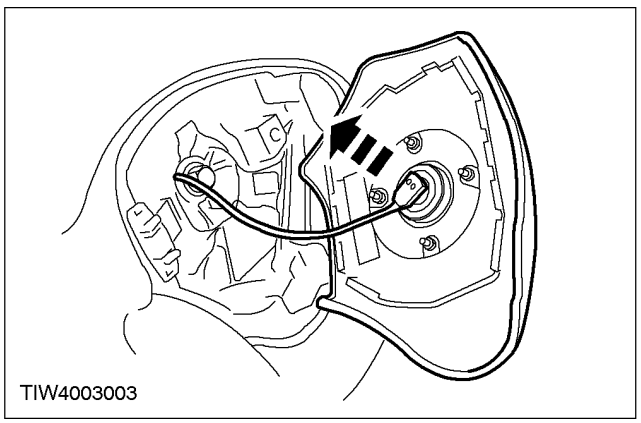

4. Remove the driver air bag module.
   - Disconnect the air bag module electrical connector.

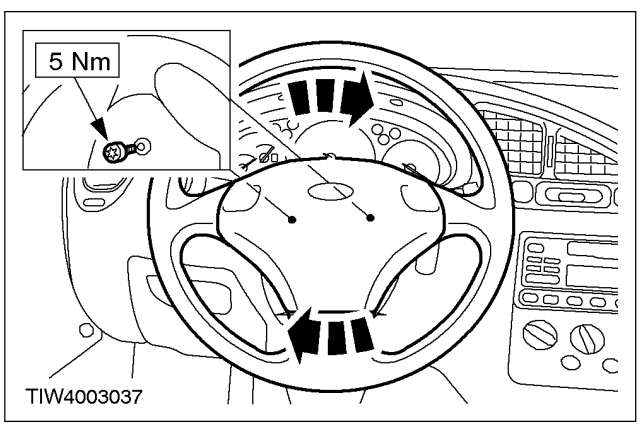

Installation

1. **CAUTION: When installing, make sure that the inflator wiring is correctly routed.**
   To install, reverse the removal procedure.

REMOVAL AND INSTALLATION

Passenger Air Bag Module (40 701 0)

Removal

WARNING: To minimize the possibility of premature deployment, wait at least one minute after disconnecting the battery ground cable before disconnecting any supplemental restraint system electrical connectors. Failure to follow this instruction may result in personal injury.

WARNING: Always wear safety glasses when working on an air bag equipped vehicle and when handling an air bag module. Failure to follow this instruction may result in personal injury.

WARNING: To minimize the possibility of premature deployment, do not use radio key code savers when working on the supplemental restraint system. Failure to follow this instruction may result in personal injury.

WARNING: To minimize the possibility of injury in the event of premature deployment, always carry a live air bag module with the bag and trim pointed away from the body. Failure to follow this instruction may result in personal injury.

WARNING: To minimize the possibility of premature deployment, live air bag modules must only be placed on workbenches, which have been ground, bonded. Failure to follow this instruction may result in personal injury.

WARNING: Never probe the electrical connectors of air bag modules or any other supplemental restraint system component. Failure to follow this instruction may result in personal injury.

REMOVAL AND INSTALLATION (CONTINUED)

WARNING: Painting air bag module trim covers could lead to deterioration of the trim cover and air bag. Do not for any reason attempt to paint discoloured or damaged air bag module trim covers. Install a new component. Failure to follow this instruction may result in personal injury.

1. Disconnect the battery ground cable. For additional information, refer to Section 414-01.

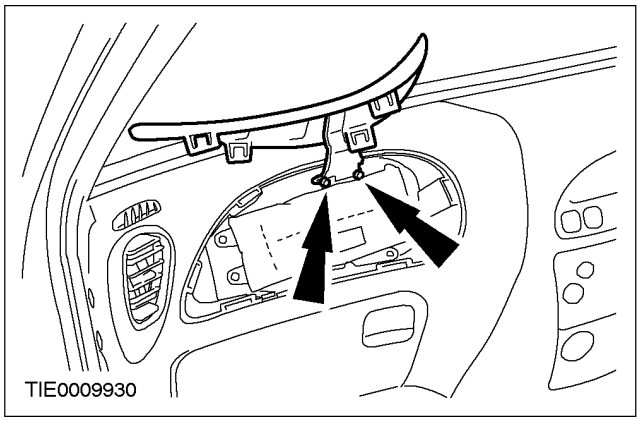

2. Remove the passenger air bag module trim cover.

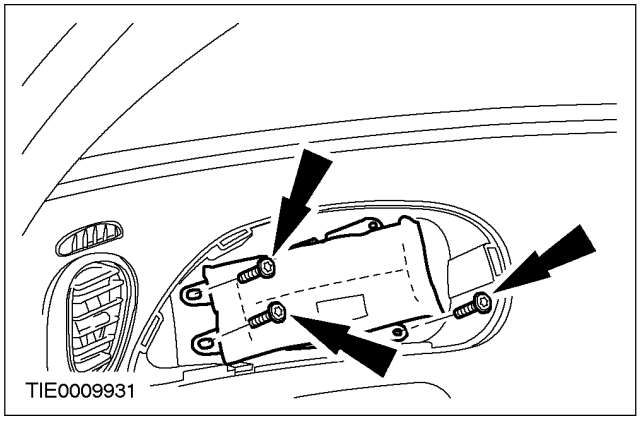

3. Detach the passenger air bag module from the instrument panel.

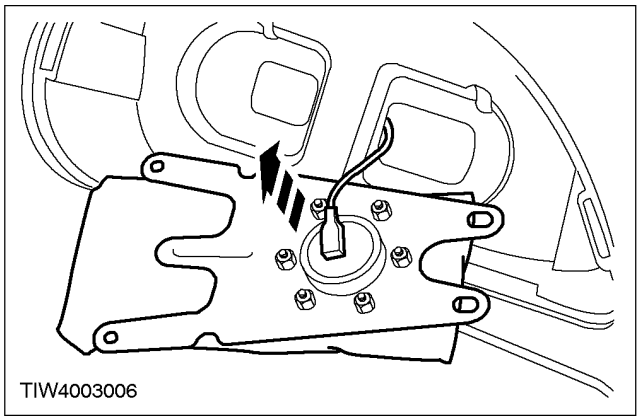

4. Remove the passenger air bag module.
   - Disconnect the electrical connector.

REMOVAL AND INSTALLATION (CONTINUED)

Installation

WARNING: Always wear safety glasses when working on an air bag equipped vehicle and when handling an air bag module. Failure to follow this instruction may result in personal injury.

WARNING: To minimize the possibility of injury in the event of premature deployment, always carry a live air bag module with the bag and trim pointed away from the body. Failure to follow this instruction may result in personal injury.

WARNING: To minimize the possibility of premature deployment, live air bag modules must only be placed on workbenches, which have been ground, bonded. Failure to follow this instruction may result in personal injury.

WARNING: Never probe the electrical connectors of air bag modules or any other supplemental restraint system component. Failure to follow this instruction may result in personal injury.

WARNING: Painting over air bag module trim covers could lead to deterioration of the trim covers and air bag. Do not for any reason attempt to paint discoloured or damaged air bag module trim covers. Install a new component. Failure to follow this instruction may result in personal injury.

1. To install, reverse the removal procedure.

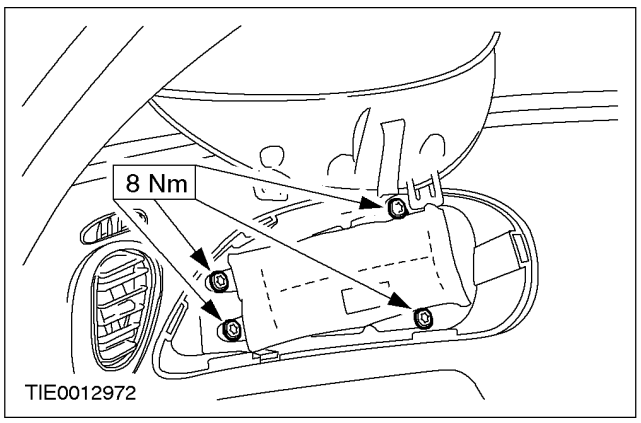

REMOVAL AND INSTALLATION

Air Bag Sliding Contact (33 392 0)

Removal

WARNING: Wait at least 15 minutes after disconnecting the battery before disconnecting the air bag control module electrical connector. For all other supplementary restraint system electrical connectors, wait two minutes. Failure to follow these procedures could increase the possibility of accidentally deploying the air bag(s) and pyrotechnic pretensioner's.

1. Disconnect the battery ground cable.
2. Remove the steering wheel. For additional information, refer to Section 211-04.
3. Centre the steering wheel. Remove the key to lock in position.

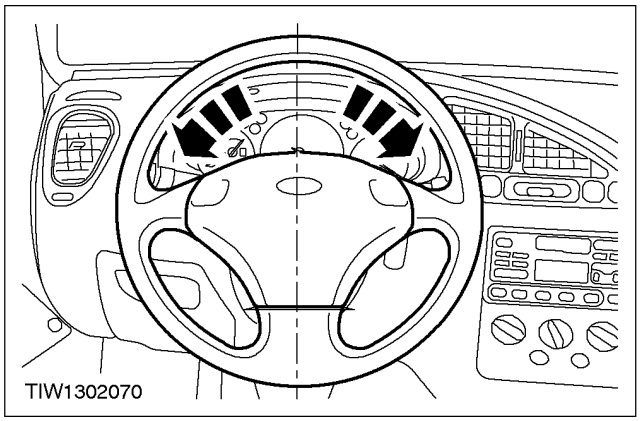

4. Detach the air bag sliding contact.
   1. Disconnect the electrical connectors.
   2. Release the retaining tangs.

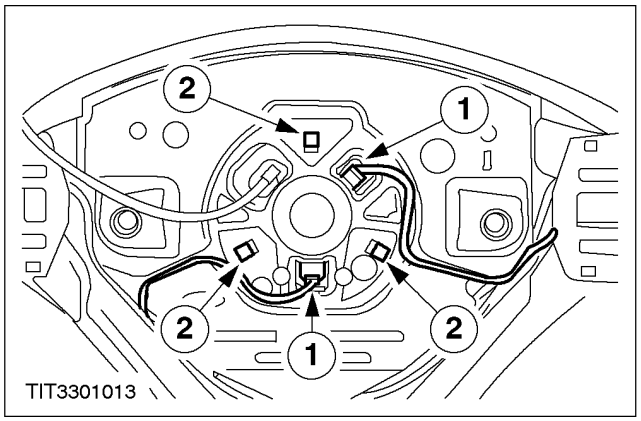

REMOVAL AND INSTALLATION (CONTINUED)

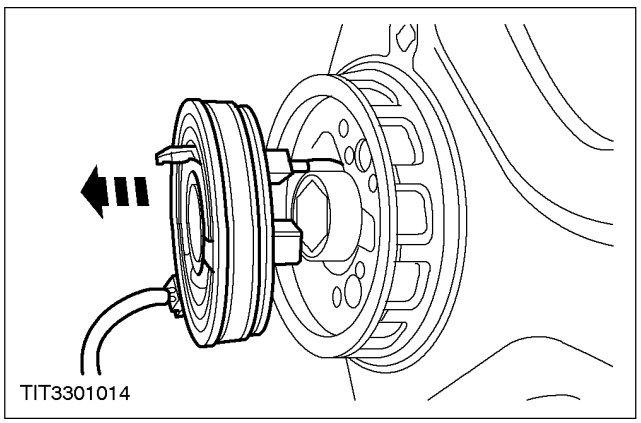

5. Remove the air bag sliding contact.

Installation

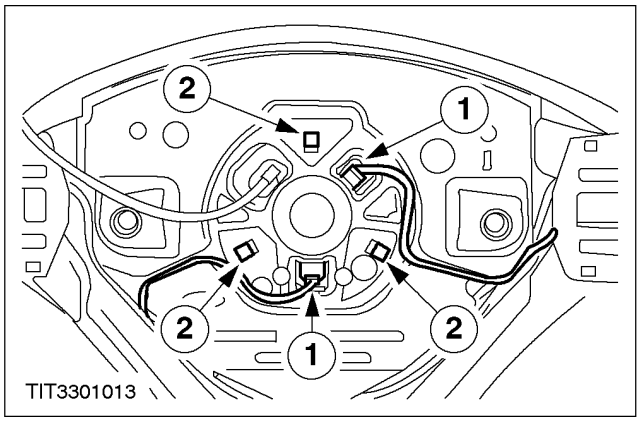

1. Install the air bag sliding contact.
   1. Connect the electrical connectors.
   2. Check the retaining tangs have engaged.

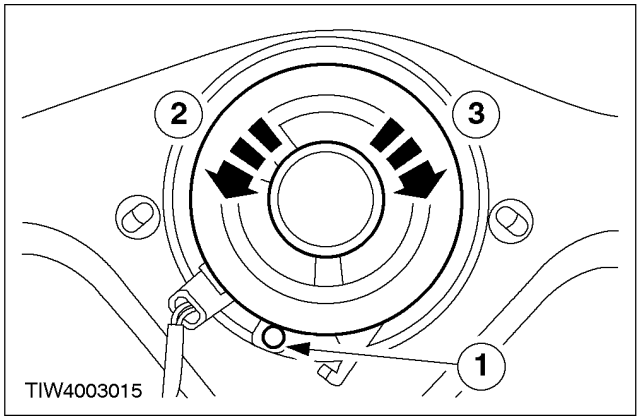

2. **WARNING: The sliding contact centralizing procedure MUST be carried out before installing the sliding contact.**

   WARNING: If there is any doubt about the centralization of the air bag sliding contact. The centralization procedure must be repeated.

   Centralize the clockspring.
   1. Depress the locking pin.
   2. Rotate the inner rotor against the outer rotor fully counter clockwise.
   3. Rotate the inner rotor clockwise approximately 3.75 turns. Release the locking pin. Make sure the inner rotor is locked in position.

3. Refit the steering wheel. For additional information, refer to Section 211-04.

REMOVAL AND INSTALLATION

Air Bag Control Module (33 650 0)

Removal

WARNING: To minimize the possibility of premature deployment, wait at least one minute after disconnecting the battery ground cable before disconnecting any supplemental restraint system electrical connectors. Failure to follow this instruction may result in personal injury.

WARNING: To minimize the possibility of premature deployment, do not use radio key code savers when working on the supplemental restraint system. Failure to follow this instruction may result in personal injury.

WARNING: To minimize the possibility of injury in the event of premature deployment, always carry a live air bag module with the bag and trim pointed away from the body. Failure to follow this instruction may result in personal injury.

WARNING: To minimize the possibility of premature deployment, live air bag modules must only be placed on workbenches, which have been ground, bonded. Failure to follow this instruction may result in personal injury.

WARNING: Never probe the electrical connectors of air bag modules or any other supplemental restraint system component. Failure to follow the instruction may result in personal injury.

WARNING: Painting air bag module trim covers could lead to deterioration of the trim cover and air bag. Do not for any reason attempt to paint discoloured or damaged air bag module trim covers. Install a new component. Failure to follow this instruction may result in personal injury.

1. Disconnect the battery. For additional information, refer to Section 414-01.

REMOVAL AND INSTALLATION (CONTINUED)

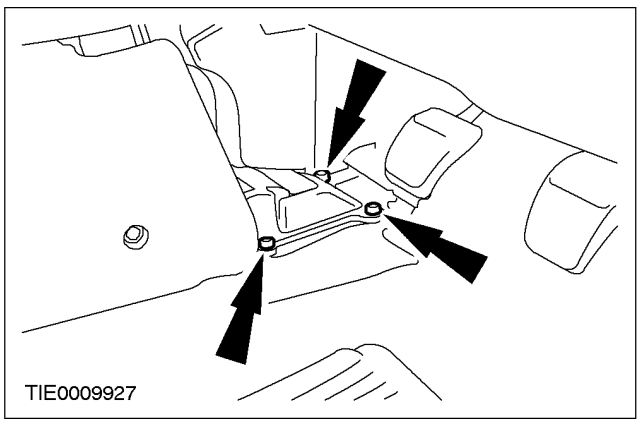

2. NOTE: Fold back the floor covering to gain access to the air bag control module.
Detach the air bag control module.

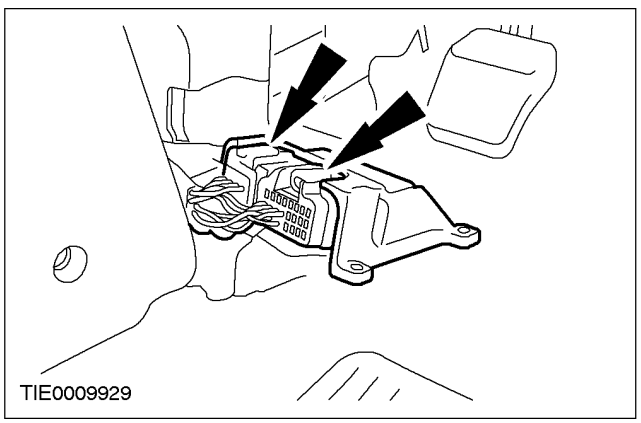

3. Disconnect the electrical connectors.

Installation

1. To install, reverse the removal procedure.

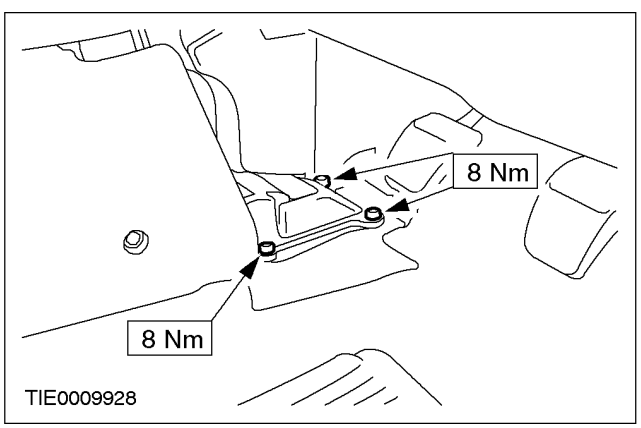

2. NOTE: New air bag control modules supplied in service require configuring following installation.
Configure the air bag control module. For additional information, refer to WDS.

GENERAL PROCEDURES

Unserviceable Air Bag Disposal

⚠WARNING: To minimize the possibility of injury in the event of premature deployment, always carry a live air bag module with the bag and trim cover pointed away from the body. Failure to follow this instruction may result in personal injury.

⚠WARNING: To prevent premature deployment, live air bag modules must only be placed on workbenches, which have been ground, bonded. Failure to follow this instruction may result in personal injury.

NOTE: All unserviceable air bag modules have been placed on the Mandatory Return List. All discoloured or damaged air bag modules should be treated the same as any unserviceable live air bag module being returned.

1. Remove the unserviceable air bag module. For additional information, refer to the relevant procedure in this section.

NOTE: A prepaid, return postcard is provided with the new air bag module. The new air bag module serial number and the vehicle identification number (VIN) must be recorded on the air bag module verification card.

2. Before installing the air bag module, record the necessary information. Return the air bag module verification card to Ford Motor Company (driver air bag module verification card shown).

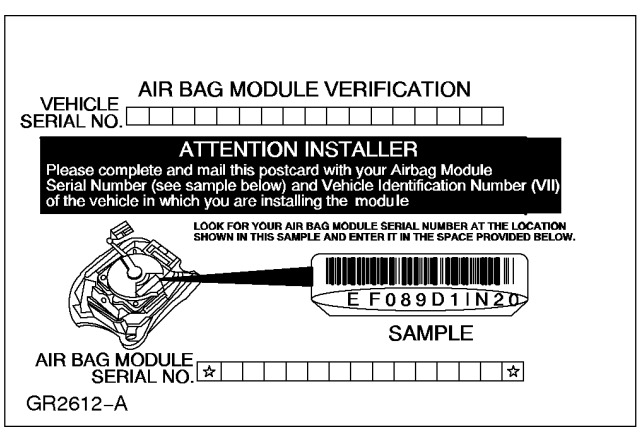

GENERAL PROCEDURES (CONTINUED)

3. ⚠ **WARNING: Under no circumstances is an unserviceable air bag module(s) to be returned through the local mailing system. Failure to follow this instruction may result in personal injury.**

   Seal the unserviceable air bag module(s) in the packaging from the new air bag module(s) and return to the Ford Motor Company Warranty Parts Return Centre.

GENERAL PROCEDURES

Scrapped Vehicle Air Bag Disposal

Special Tool(s)	
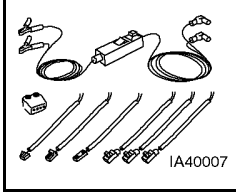 IA40007	Test and Deployment Lead, Air Bag/Pyrotechnic Safety Belt 418-S055 (40-007A)

General Equipment
12 volt battery

All vehicles

WARNING: To minimize the possibility of injury in the event of premature deployment, always carry a live air bag module with the bag and trim cover pointed away from the body. Failure to follow this instruction may result in personal injury.

WARNING: To minimize the possibility of premature deployment, live air bag modules must only be placed on workbenches, which have been ground, bonded. Failure to follow this instruction may result in personal injury.

1. Disconnect the battery ground cable. For additional information, refer to Section 414- 01.

2. Remove the air bag module(s) to be deployed. For additional information, refer to the relevant procedure(s) in this section.

Single stage air bag modules

3. Connect the test lead to the air bag module and the adapter (driver air bag module shown).

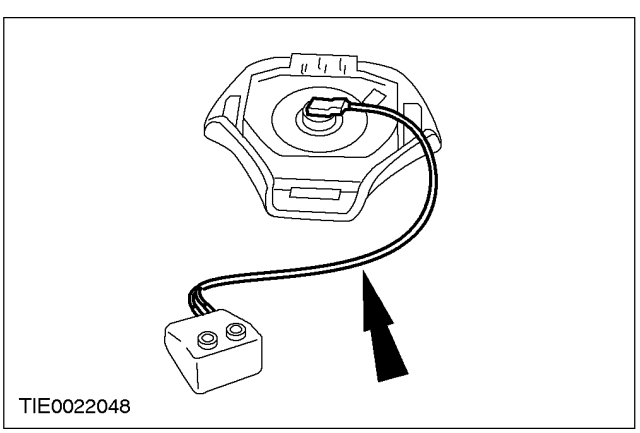

GENERAL PROCEDURES (CONTINUED)

Two stage air bag modules

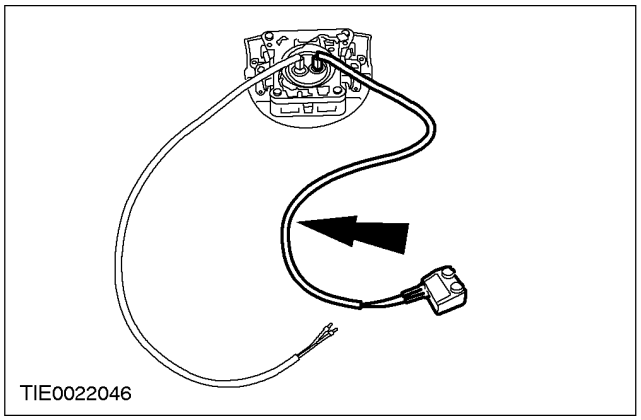
TIE0022046

4. **CAUTION: Do not connect both test leads to the adapter. Both air bag module inflators must be deployed separately.**
   Connect two test leads to the air bag module and the other end of one of the test leads to the adapter (driver air bag module shown).

All air bag modules

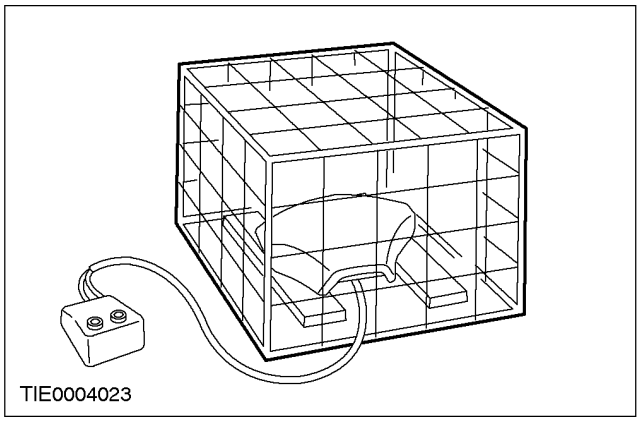
TIE0004023

5. **CAUTION: To protect the test lead electrical connector(s) from damage during deployment, raise the air bag module off the ground on two wooden blocks.**
   Place the air bag module inside a suitable rigid wire cage with the air bag module cover uppermost.

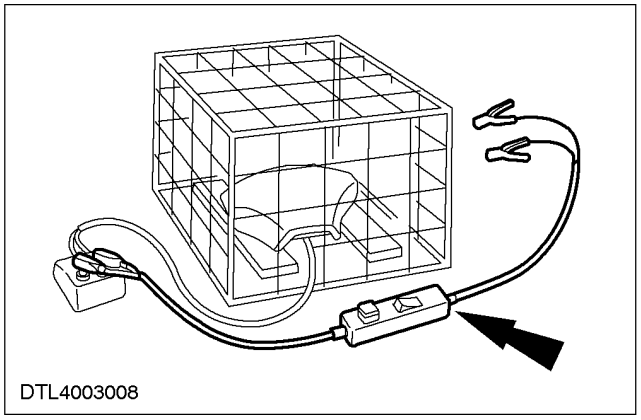
DTL4003008

6. Connect the deployment lead to the adapter.

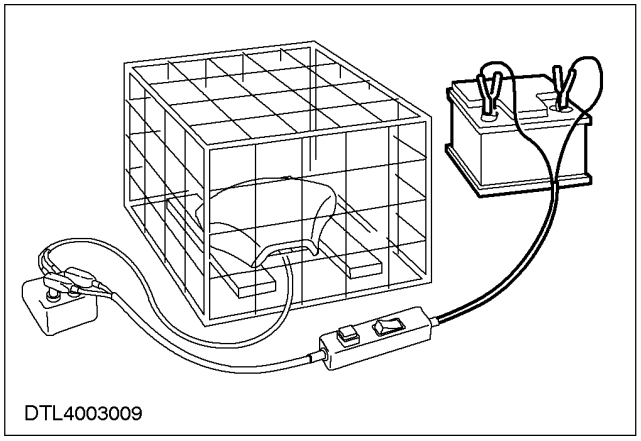
DTL4003009

7. **WARNING: Before proceeding make sure that all personnel in the vicinity are aware that a loud noise (bang) is about to occur. Do not let anybody approach closer than six meters. Failure to follow this instruction may result in personal injury.**
   Move as far away as possible from the air bag module and connect the deployment lead to the battery.

GENERAL PROCEDURES (CONTINUED)

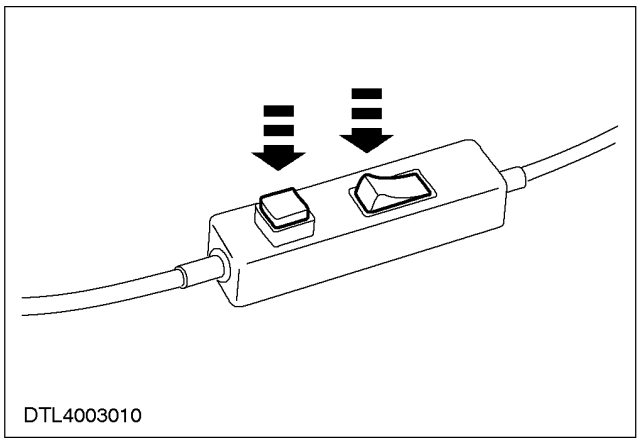

8. **CAUTION: The air bag module should not be handled immediately following deployment as the air bag module will be very hot.**

   CAUTION: After deployment, the air bag module surface may contain deposits of sodium hydroxide, a product of the gas generate combustion that is irritating to the skin. Use protective gloves when handling any deployed air bag module.
   Depress both switches to deploy the air bag.

Two stage air bag modules

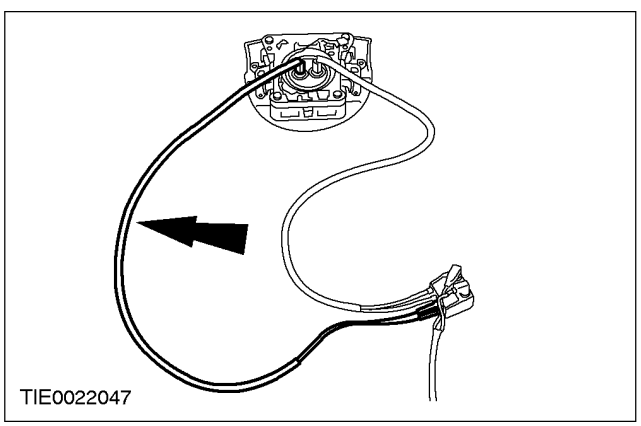

9. Connect the second test lead to the adapter.

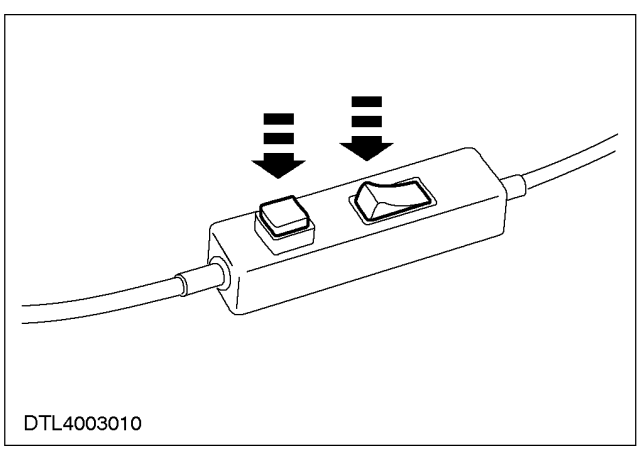

10. **WARNING: Before proceeding make sure that all personnel in the vicinity are aware that a loud noise (bang) is about to occur. Do not let anybody approach closer than six meters. Failure to follow this instruction may result in personal injury.**

    CAUTION: The air bag module should not be handled immediately following deployment, as the air bag module will be very hot.

    CAUTION: After deployment, the air bag module surface may contain deposits of sodium hydroxide, a product of the gas generate combustion, which is irritating to the skin. Use protective gloves when handling any deployed air bag module.
    Depress both switches to deploy the air bag.

All air bag modules

11. Deployed air bag module(s) should be sealed in a suitable bag and then disposed of in accordance with local contaminated waste regulations.

GENERAL PROCEDURES

Deployed Air Bag Disposal

WARNING: After deployment, the air bag module surface may contain deposits of sodium hydroxide, a product of the gas generate combustion, which is irritating to the skin. Use protective gloves when handling any deployed air bag module. Failure to follow this instruction may result in personal injury.

1. Remove the deployed air bag module(s). For additional information, refer to the relevant procedure in this section.
2. Seal the deployed air bag module(s) in the packaging from the new air bag module(s) or a suitable polythene bag, and then dispose of in accordance with local contaminated waste regulations.

SPECIFICATIONS

Torque Specifications

Description	Nm
Air bag control module screws	8
Driver air bag control module screws	5
Passenger air bag control module screws	6

SECTION 502-00 Uni-Body, Subframe and Mounting Frame — General Information

VEHICLE APPLICATION: 2002 Bantam

SUBJECT **PAGE**

REMOVAL AND INSTALLATION

Subframe 502-00-2/8

SPECIFICATIONS

Specifications 502-00-9
Lubricants, Fluids, Sealers and Adhesives 502-00-9
Torque Specifications 502-00-9

REMOVAL AND INSTALLATION

Subframe

Special Tool(s)	
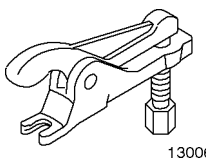 13006	Separator, ball joint 13-006

Special Tool(s)	
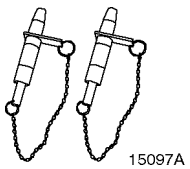 15097A	Guide pins, subframe 15-097A

Removal

1. Disconnect the battery ground cable.
2. From inside the passenger compartment, remove the flexible coupling to pinion shaft pinch bolt.

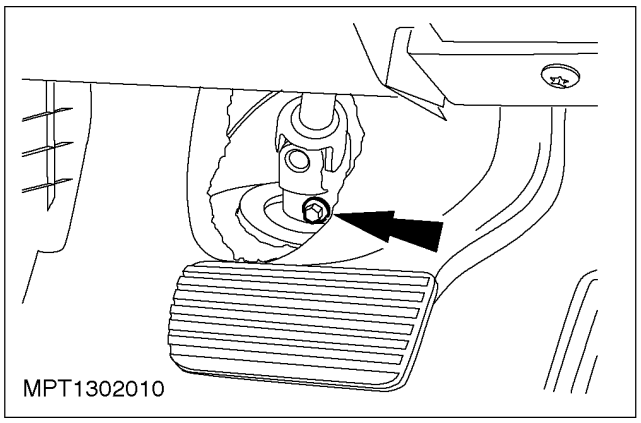

3. From inside the passenger compartment, slacken the flexible coupling to column shaft pinch bolt.

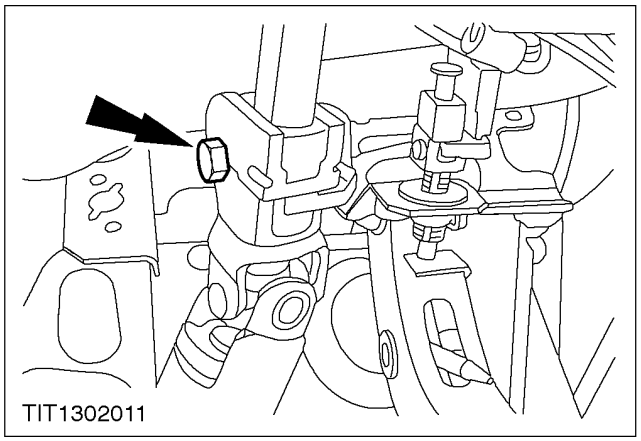

4. Remove the exhaust manifold upper heat shields and remove the exhaust system front pipe. For additional information, refer to Section 309-00.
5. Slacken the wheel nuts, raise the vehicle and remove the front road wheels.

REMOVAL AND INSTALLATION (CONTINUED)

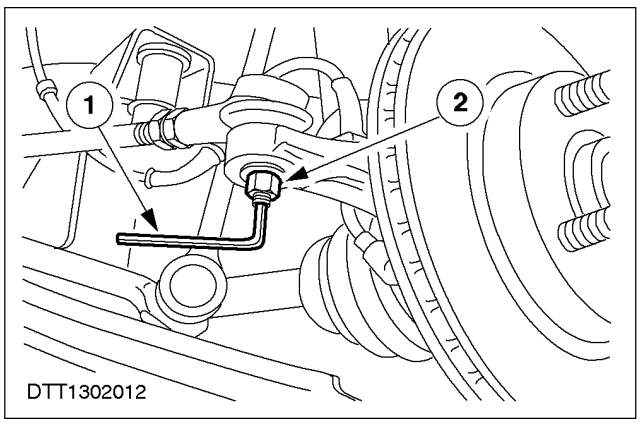

6. Remove the track rod end locknuts.
   1. Hold the ball joint studs with an Allen key.
   2. Remove the locknuts.

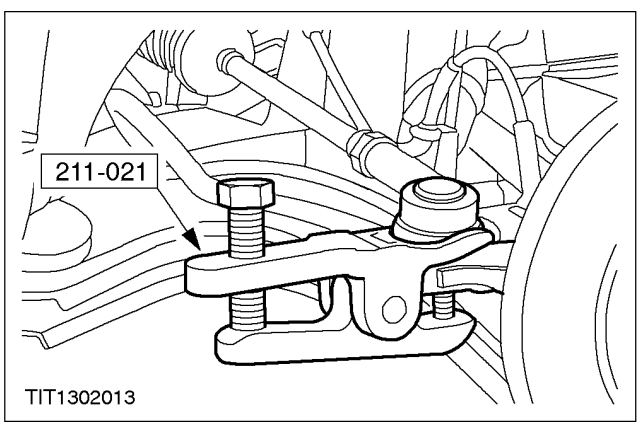

7. **NOTE:** When the track rod ends are separated from the spindle carriers the ball joint seals should be wrapped in cloth to protect them.
   Disconnect the track rod end ball joints from the spindle carriers.

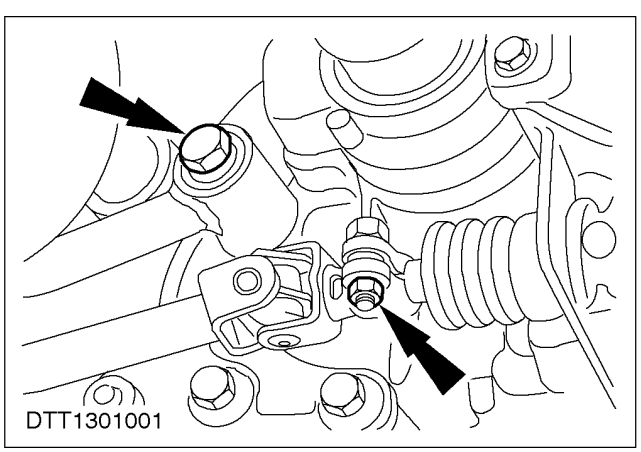

8. Disconnect the gearshift linkage.

REMOVAL AND INSTALLATION (CONTINUED)

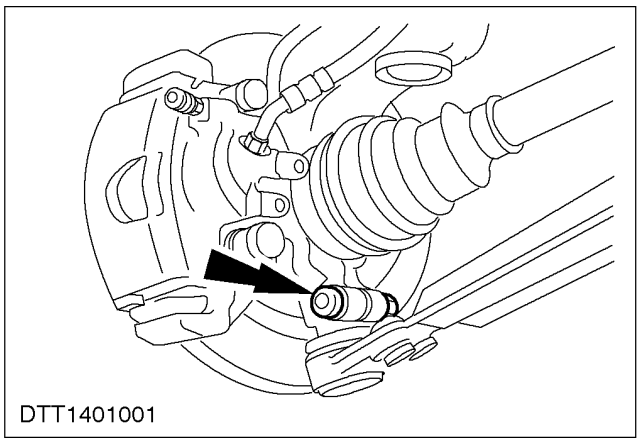
DTT1401001

9. Remove the lower arm to spindle carrier pinch bolts and nuts.

10. Disconnect the lower arms from the spindle carriers.

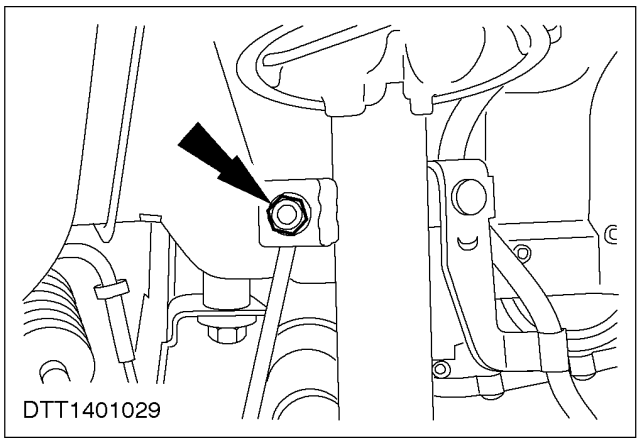
DTT1401029

11. Detach the connecting link from the suspension unit assembly.

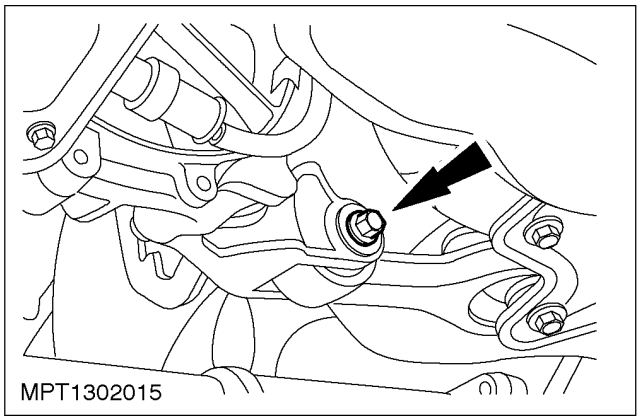
MPT1302015

12. Remove the roll restrictor to transmission retaining bolt.

All vehicles

13. Support the crossmember assembly.

REMOVAL AND INSTALLATION (CONTINUED)

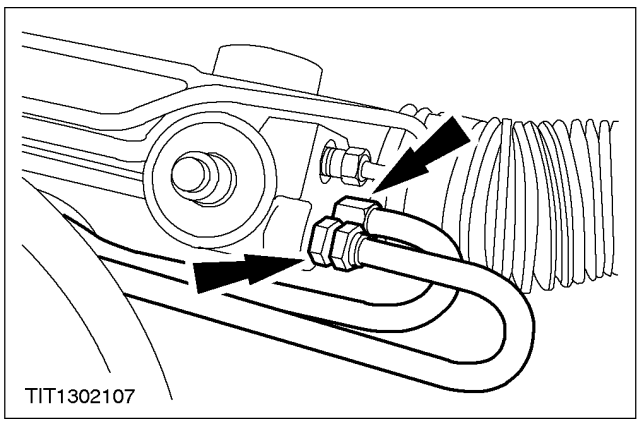

14. Remove the seven crossmember assembly retaining bolts. (Support removed for clarity).

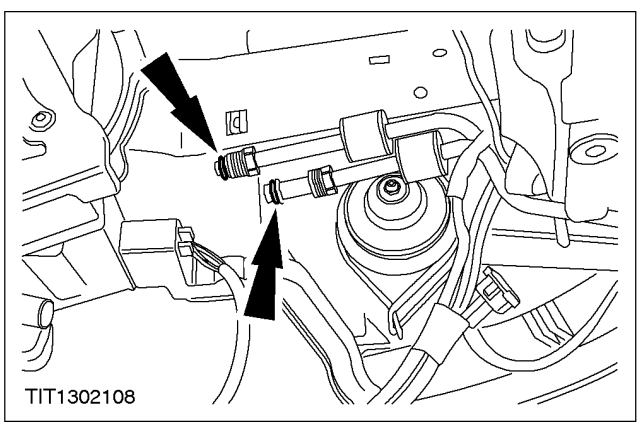

15. Lower the crossmember assembly enough to gain access to the power steering valve body pipes.

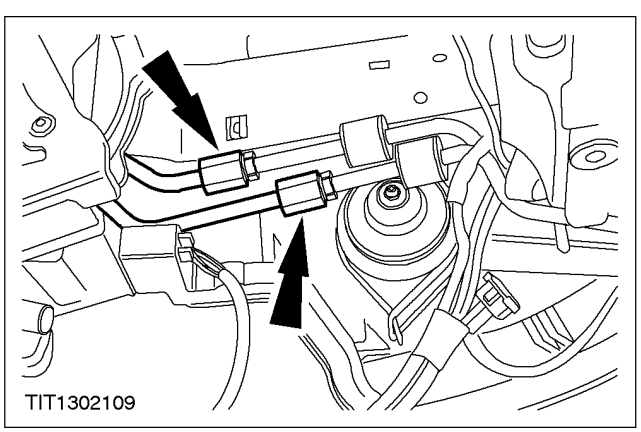

16. Remove the pinion shaft to body seal.

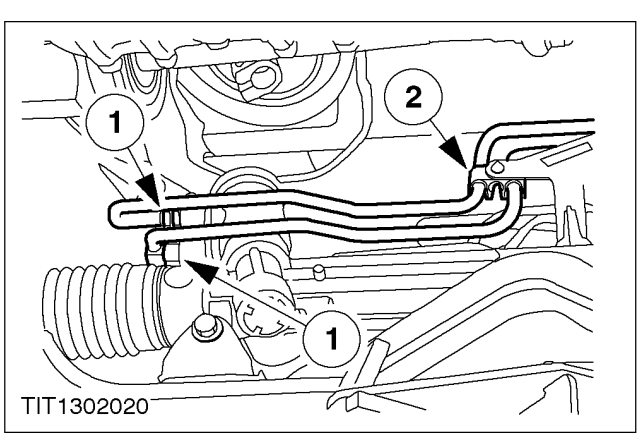

17. ⚠ **CAUTION: Whenever the steering gear unions are disconnected the steering gear must be plugged to prevent dirt ingress.**

    Disconnect the power steering pipes from the steering gear valve body.

    1. Disconnect the power steering pipes
    - Allow the fluid to drain into a suitable container.
    2. Detach the power steering pipes from the retaining bracket.

18. Remove the crossmember assembly.

REMOVAL AND INSTALLATION (CONTINUED)

Installation

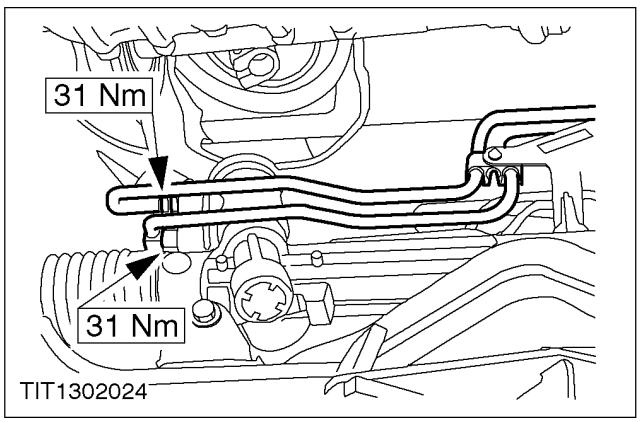

1. Refit the components in the reverse order.

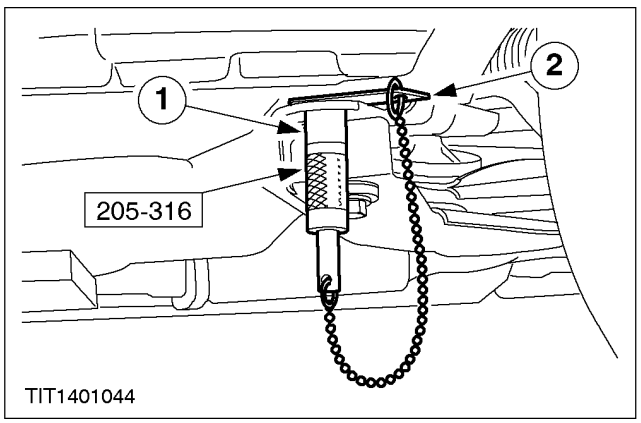

2. Align the crossmember.
   1. Push the guide pins through the crossmember aligning holes.
   2. Slide the locking plates into the locking grooves and tighten the guide pin sleeves.

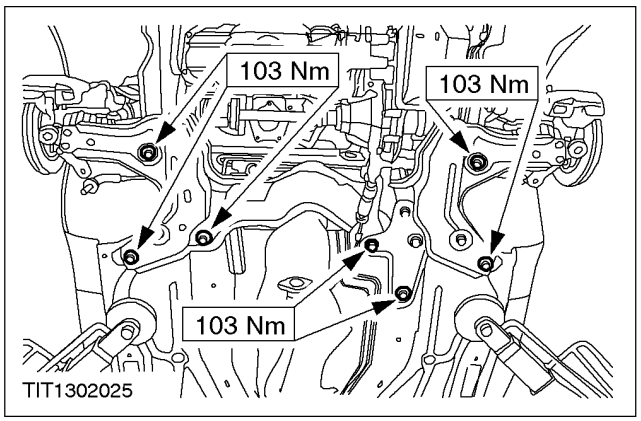

3. Raise the crossmember engaging the guide pins into the alignment holes.

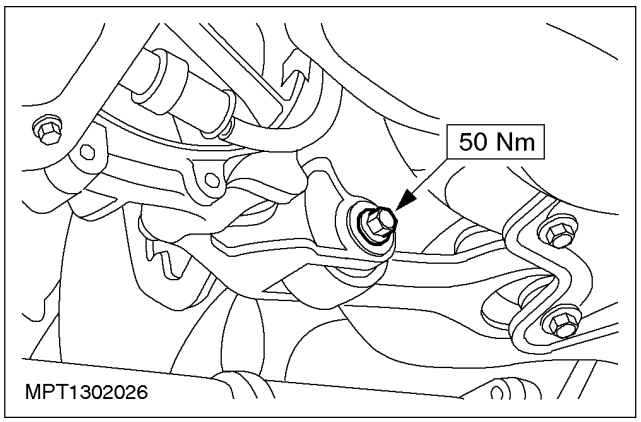

REMOVAL AND INSTALLATION (CONTINUED)

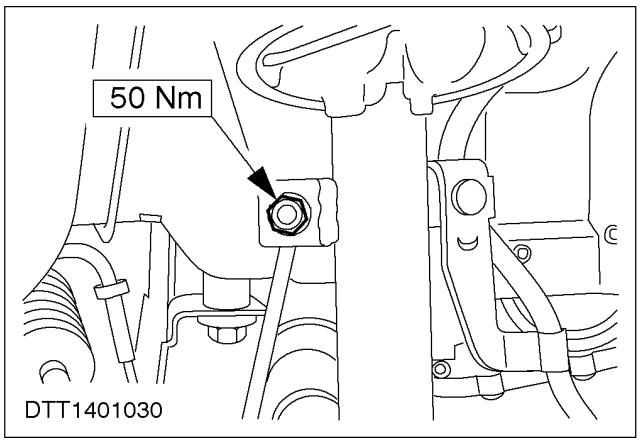

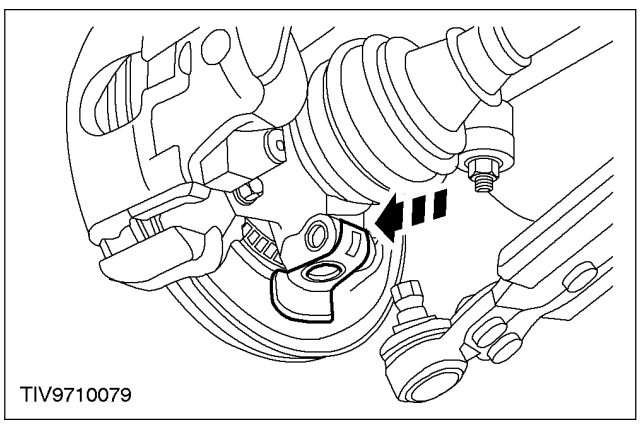

7. ⚠ **CAUTION: Make sure a heat shield is installed to prevent damage to the ball joint.**
   Install the heat shield.

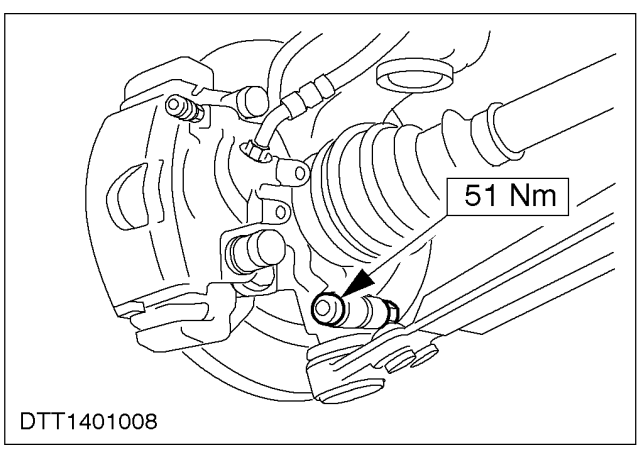

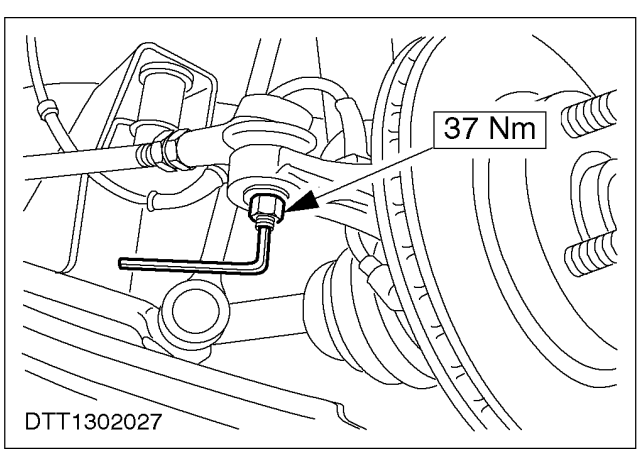

REMOVAL AND INSTALLATION (CONTINUED)

10. Install the gearshift linkage. For additional information, refer to Section 308-06.

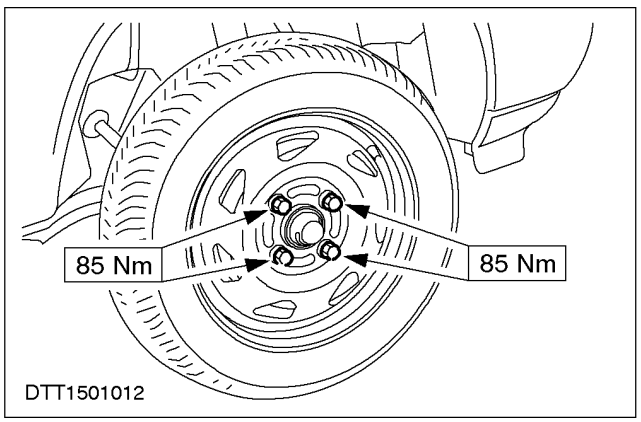

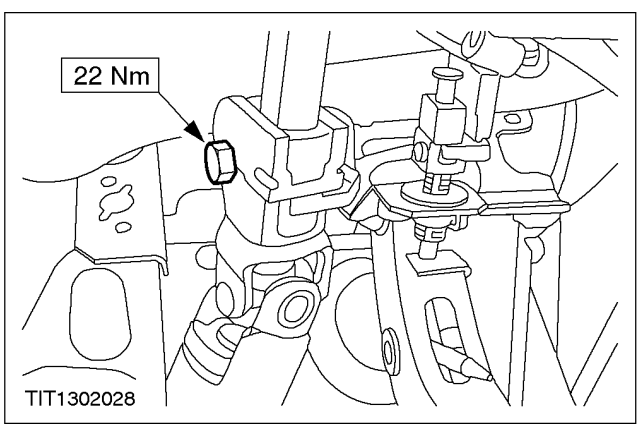

12. ⚠ **CAUTION: Make sure the steering is in the straight ahead position.**

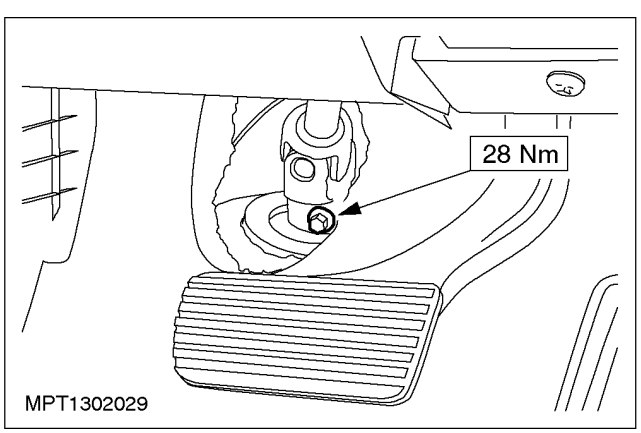

14. Bleed the power steering system. For additional information, refer to Section 211-02.

SPECIFICATIONS

Lubricants, Fluids, Sealers and Adhesives

Item	Specification
Power steering fluid	ESPM-2C166-H

Torque Specifications

Description	Nm
Steering gear pipe unions	31
Crossmember retaining bolts	103
Roll restrictor to transmission retaining bolt	50
Track rod end locknuts	37
Wheel nuts	85
Flexible coupling to steering column shaft pinch bolt	28
Flexible coupling to pinion shaft pinch bolt	26
Track rod locknuts	63
Exhaust front pipe flange	47
Manual transaxle gearshift linkage pinch bolt	23
Manual transaxle gearshift Stabilizer bar bolt	23
Lower arm to spindle carrier pinch bolt and nut	51