General Motors Corp. - Analog Instrument Panel

DESCRIPTION & OPERATION

WARNING: Deactivate air bag system before performing any service operation. See AIR BAG RESTRAINT SYSTEM article. DO NOT apply electrical power to any component on steering column without first deactivating air bag system. Air bag may deploy.

Instrument Panel Cluster (IPC) contains gauges for speedometer, fuel level, tachometer, coolant temperature oil pressure and voltage. Warning indicator lights are used for: turn signals, high beam, fasten seat belt, air bag, brake system, check gauges, ABS, Malfunction Indicator Light (MIL), SECURITY, MPH, traction system, and 1-4 SHIFT. IPC can also perform ambient light sensor processing, chime functions, warning/status message display and Driver Information Center (DIC) functions.

INSTRUMENT PANEL CLUSTER (IPC)

Some vehicle systems share data over a serial data line to execute various vehicle functions. Communication between each system is accomplished by sending digitally coded messages, which consist of specific information the system module must follow. Each system module is assigned its own recognition code, so that it can respond to appropriate messages.

Signals that activate the IPC are known as "wake-up" signals. IPC is asleep when it is not controlling or monitoring the following wake-up functions: any activity on serial data line, headlight switch on, courtesy lights on, power mode message received from Body Control Module (BCM), battery disconnection and reconnection, or ignition is turned on. The IPC will enter a sleep state (to reduce parasitic load) when all of the following conditions exist: no activity on serial data line for about 10 seconds, ignition is turned off, headlights are off, courtesy lights are off, power mode message was not received from BCM and SECURITY indicator is not illuminated.

DRIVER INFORMATION CENTER (DIC) SWITCHES

Driver Information Center (DIC) buttons allow driver to change display functions and customize electrical features. DIC also contains the ambient light sensor, which provides IPC and other systems with information needed for interior light dimming functions.

FUEL (Switch 1)

Allows fuel information to be displayed in average fuel economy mode (determined over last 20 gallons), instantaneous fuel economy mode (updated every one second), or fuel range mode (estimated distance vehicle can travel under current fuel economy and fuel level conditions).

GAGES (Switch 2)

Allows information to be displayed on oil pressure, oil temperature, coolant temperature, transmission fluid temperature (A/T models), battery voltage, and front and rear tire pressure.

TRIP (Switch 3)

Allows information to be displayed for odometer, TRIP A odometer, TRIP B odometer, elapsed time feature, average speed (since last ignition cycle or system was manually reset), or oil life remaining.

OPTIONS (Switch 4)

Allows the following vehicle options to be customized: lock and arm, alarm, passive unlock, approach lights, auto lock and unlock, easy entry, language, and a blank page (for FOB or tire training access).

E/M (Switch 5)

Allows IPC to change unit of measurement (from English to Metric).

RESET

Allows driver to perform the following functions: acknowledge IPC messages, reset trip odometer functions, start/stop elapsed time, reset average speed, reset oil life system, reset fuel economy functions, or customize vehicle electrical functions.

COMPONENT LOCATIONS

COMPONENT LOCATIONS

Component	Location
Body Control Module (BCM)	Behind Carpet In Right Footwell, Mounted To Toe Board
Brake Fluid Level	On Left Side Of Brake
Indicator Switch	Fluid Reservoir
Data Link Connector (DLC)	Behind Left Side Of Instrument Panel, Below Steering Column
Door Control Module (DCM)	Behind Bottom Center Of Door Trim Panel
Engine Coolant Level Indicator Switch	In Right Rear Corner Of Engine Compartment, In Bottom Of Coolant Reservoir
Engine Oil Temperature Sensor	Bottom Left Rear Of Engine
HVAC Control Head	Center Of Instrument Panel, Under Radio
Ignition Switch	Left Side Of Instrument Panel, Between Radio & Steering Column
Instrument Panel Electrical Center	Behind Carpet In Right Footwell, Mounted To Toe Board
Parking Brake Switch	In Center Console, Under Parking Brake
Powertrain Control Module (PCM)	Right Rear Corner Of Engine Compartment, Under Battery
Star Connectors No 1 & 2	In DLC Instrument Panel Haness
Underhood Electrical Center	Right Rear Corner Of Engine Compartment, Between Battery & Coolant Reservoir
Windshield Washer Solvent Level	Rear Of Washer Fluid Reservoir

Switch	

SYMPTOM TESTING

LOW ENGINE COOLANT INDICATOR INOPERATIVE

1. Disconnect engine coolant level indicator switch connector. See **COMPONENT LOCATIONS** table. Using DVOM, check resistance between engine coolant level indicator switch connector terminal "B" (Black wire) and ground. If resistance is less than 2 ohms, go to step 3). If resistance is not less than 2 ohms, go to next step.
2. Check for open or high resistance in circuit No. 150 (Black wire) between engine coolant level indicator switch and splice pack SP100 (located in forward lighting harness). Repair as necessary and recheck system operation. If circuit is okay, replace splice pack SP100.
3. Reconnect engine coolant level indicator switch connector. Disconnect underhood electrical center connector C3. See **Fig. 1** . Move engine coolant level indicator switch to CLOSED position. Using DVOM, check resistance between underhood electrical center connector C3, terminal D9 (Yellow/Black wire) and ground. If resistance is less than 2 ohms, go to step 5). If resistance is not less than 2 ohms, go to next step.
4. Check for open or high resistance in circuit No. 68 (Yellow/Black wire) between underhood electrical center connector C3 and engine coolant level indicator switch. Repair as necessary and recheck system operation. If circuit is okay, replace engine coolant level indicator switch. Recheck system operation.
5. Reconnect underhood electrical center connector C3. Disconnect instrument cluster connector. Using DVOM, check resistance between instrument cluster connector terminal A8 (Yellow/Black wire) and ground. If resistance is less than 2 ohms, go to step 7). If resistance is not less than 2 ohms, go to next step.
6. Check for open or high resistance in circuit No. 68 (Yellow/Black wire) between instrument cluster connector and underhood electrical center connector C2, terminal F7. Repair as necessary and recheck system operation. If circuit is okay, replace underhood electrical center. Recheck system operation.
7. Replace IPC. See **INSTRUMENT PANEL CLUSTER** under REMOVAL & INSTALLATION. Recheck system operation.

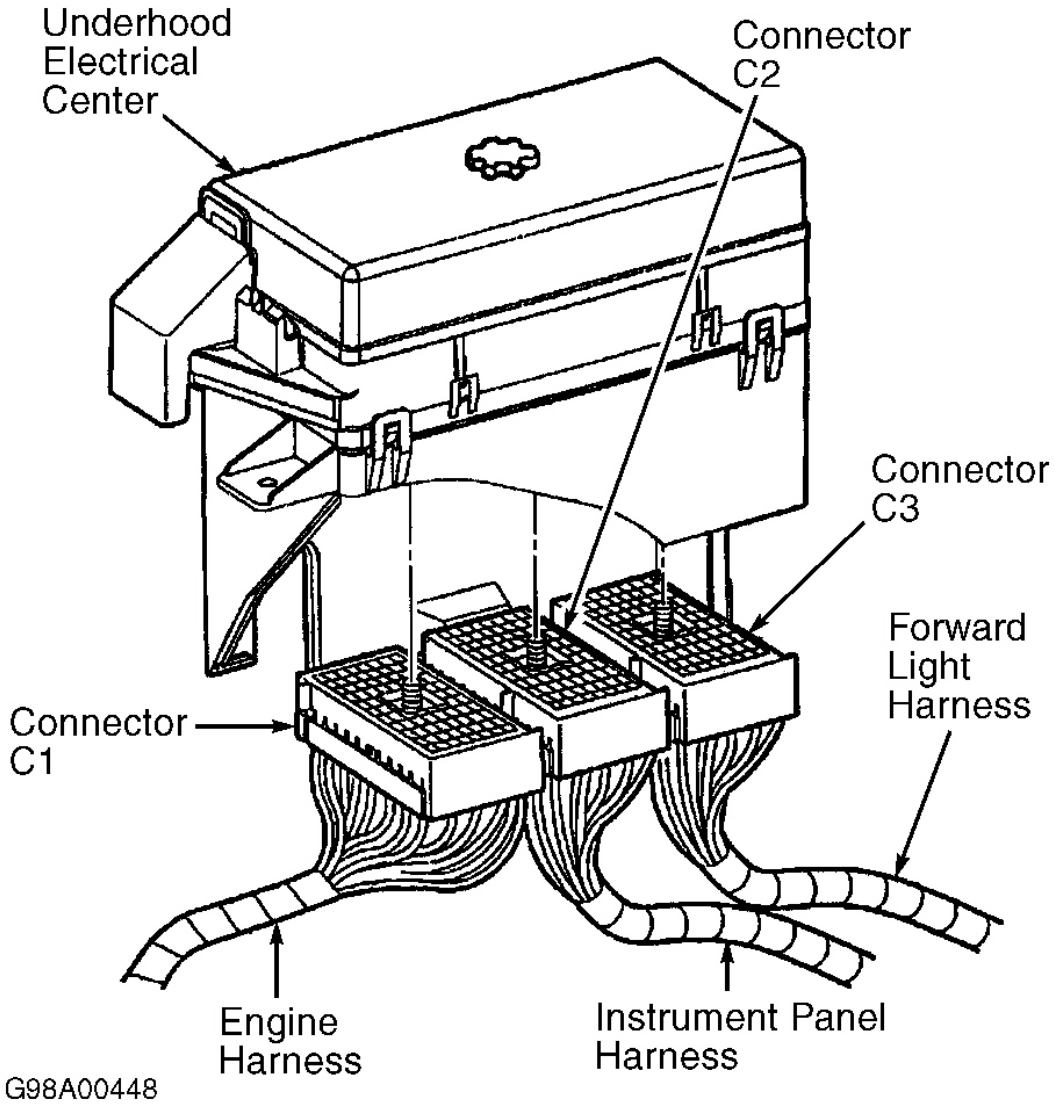

Fig. 1: Identifying Underhood Electrical Connectors
Courtesy of GENERAL MOTORS CORP.

LOW WASHER FLUID LEVEL INDICATOR INOPERATIVE

1. Disconnect windshield wiper solvent level indicator switch connector. See **COMPONENT LOCATIONS** table. Using DVOM, check resistance between windshield wiper solvent level indicator switch connector terminal "B" (Black wire) and ground. If resistance is less than 2 ohms, go to step 3). If resistance is not less than 2 ohms, go to next step.
2. Check for open or high resistance in circuit No. 150 (Black wire) between windshield wiper solvent level indicator switch and splice pack SP101 (located in forward lighting harness). Repair as necessary and

recheck system operation. If circuit is okay, replace splice pack SP101.

3. Reconnect windshield wiper solvent level indicator switch connector. Disconnect underhood electrical center connector C3. See **Fig. 1** . Move windshield wiper solvent level indicator switch to CLOSED position. Using DVOM, check resistance between underhood electrical center connector C3, terminal C9 (Black/White wire) and ground. If resistance is less than 2 ohms, go to step 5). If resistance is not less than 2 ohms, go to next step.
4. Check for open or high resistance in circuit No. 99 (Black/White wire) between underhood electrical center connector C3 and windshield wiper solvent level indicator switch. Repair as necessary and recheck system operation. If circuit is okay, replace windshield wiper solvent level indicator switch. Recheck system operation.
5. Reconnect underhood electrical center connector C3. Disconnect instrument cluster connector. Using DVOM, check resistance between instrument cluster connector terminal A4 (Black/White wire) and ground. If resistance is less than 2 ohms, go to step 7). If resistance is not less than 2 ohms, go to next step.
6. Check for open or high resistance in circuit No. 99 (Black/White wire) between instrument cluster and underhood electrical center connector C2, terminal E7. Repair as necessary and recheck system operation. If circuit is okay, replace underhood electrical center. Recheck system operation.
7. Replace IPC. See **INSTRUMENT PANEL CLUSTER** under REMOVAL & INSTALLATION. Recheck system operation.

SEAT BELT INDICATOR INOPERATIVE

1. Disconnect seat belt switch connector. See **COMPONENT LOCATIONS** table. Using DVOM, check resistance between seat belt switch connector terminal "B" (Black wire) and ground. If resistance is less than 2 ohms, go to step 3). If resistance is not less than 2 ohms, go to next step.
2. Repair open or high resistance in circuit No. 150 (Black wire) between seat belt switch and ground. Recheck system operation.
3. Connect a fused jumper wire between seat belt switch connector terminals "A" (Black/White wire) and "B" (Black wire). If seat belt indicator illuminates, go to next step. If seat belt indicator does not illuminate, go to step 5).
4. Replace seat belt switch. Recheck system operation.
5. Disconnect instrument cluster connector. Using DVOM, check resistance between instrument cluster connector terminal B2 (Black/White wire) and seat belt switch connector terminal "A" (Black/White wire). If resistance is less than 2 ohms, go to step 7). If resistance is not less than 2 ohms, go to next step.
6. Repair open or high resistance in circuit No. 238 (Black/White wire) between instrument cluster and seat belt switch. Recheck system operation.
7. Replace IPC. See **INSTRUMENT PANEL CLUSTER** under REMOVAL & INSTALLATION. Recheck system operation.

HIGH BEAM INDICATOR INOPERATIVE

1. Turn high beams on. If high beams illuminate, go to next step. If high beams do not illuminate, locate and repair problem in headlight system. See **WIRING DIAGRAMS** .
2. Disconnect instrument cluster connector. Using DVOM, check voltage between instrument cluster

connector terminal A2 (Light Green wire) and ground. If reading is 10-14 volts, go to step 4). If reading is not 10-14 volts, go to next step.

3. Repair open or high resistance in circuit No. 11 (Light Green wire). See **WIRING DIAGRAMS** . Recheck system operation.
4. Replace IPC. See **INSTRUMENT PANEL CLUSTER** under REMOVAL & INSTALLATION. Recheck system operation.

LEFT TURN INDICATOR INOPERATIVE

1. Activate left turn signal switch. If left turn signal light operates properly, go to next step. If left turn signal light does not operate properly, locate and repair problem in exterior lighting system. See **WIRING DIAGRAMS** .
2. Disconnect instrument cluster connector. Connect test light between instrument cluster connector terminal A15 (Light Blue wire) and ground. If test light pulses on and off, go to step 4). If test light does not pulse on and off, go to next step.
3. Repair open or high resistance in circuit No. 14 (Light Blue wire) between instrument cluster, instrument panel electrical center and turn signal switch. Recheck system operation.
4. Replace IPC. See **INSTRUMENT PANEL CLUSTER** under REMOVAL & INSTALLATION. Recheck system operation.

RIGHT TURN INDICATOR INOPERATIVE

1. Activate right turn signal switch. If right turn signal light operates properly, go to next step. If right turn signal light does not operate properly, locate and repair problem in exterior lighting system. See **WIRING DIAGRAMS** .
2. Disconnect instrument cluster connector. Connect test light between instrument cluster connector terminal A16 (Dark Blue wire) and ground. If test light pulses on and off, go to step 4). If test light does not pulse on and off, go to next step.
3. Repair open or high resistance in circuit No. 15 (Dark Blue wire) between instrument cluster, instrument panel electrical center and turn signal switch. Recheck system operation.
4. Replace IPC. See **INSTRUMENT PANEL CLUSTER** under REMOVAL & INSTALLATION. Recheck system operation.

SELF-DIAGNOSTIC - SYSTEM

Instrument Panel Cluster (IPC) is equipped with a self-diagnostic system, which detects system Diagnostic Trouble Codes (DTCs) or abnormalities. When a malfunction occurs, IPC will store a DTC. See **IPC DTC DEFINITIONS** table. Malfunctions are recorded as history/intermittent failures or as current failures. Current DTCs indicate IPC has detected a fault which is currently present. A history DTC indicates that BCM has previously detected a malfunction that is not currently present as it is either an intermittent condition or the system is not being currently operated.

Instrument Panel Cluster (IPC) can be used to retrieve and clear DTCs. See **ON-BOARD DIAGNOSTICS** . A scan tool can be used to retrieve and clear DTCs. The scan tool also has several features that can be used to help locate an intermittent condition. When scan tool is used for system tests, it will display values actually seen or

commanded by various systems (i.e., BCM, PCM). This will usually include the following types of information:

- Analog Data Input - Displays analog input seen by system.
- Inputs/Outputs - Displays digital values as seen by system, and provides indication of whether input or output has cycled.
- Special Functions (Output Controls) - Allows for outputs of system to be set at a desired value (ON or OFF). This will only indicate if IPC is sending the appropriate commands, not what action was actually taken.
- Clear Codes - Will erase DTCs for system currently selected (if problem still exists in system, DTC may immediately reset).

IPC is equipped with a 20-character vacuum fluorescent display feature that can display specific warning/status messages. See **WARNING/STATUS MESSAGE DISPLAY MESSAGES** table. These warning messages will be displayed in order of priority. If ignition is cycled, IPC will display last message before ignition was cycled. Many messages may coincide with warning indicator lights or DTCs. DTCs should always be diagnosed first before any warning message.

Warning messages will be displayed in all modes except configuration and diagnostic modes. Warning messages will overwrite any other messages that may be displayed. Message will be displayed until system sends a stop broadcasting signal to IPC over serial data line, or it is acknowledged/cleared by pressing RESET button (unless system requests a continuous message display).

ON-BOARD DIAGNOSTICS

Instrument Panel Cluster (IPC) is equipped with an on-board diagnostic display feature which can display and/or clear DTCs. When specific buttons on IPC are pressed, DTCs are displayed on IPC's 20-character display board. See **ENTERING ON-BOARD DIAGNOSTICS** and **OPERATING ON-BOARD DIAGNOSTICS** .

When diagnostic mode is first entered, IPC will enter an automatic display sequence of all systems that communicate on serial data line. After each system is displayed, IPC will display the number of DTCs (current or history) set in that system. At any time during this automatic display sequence, the manual diagnostic mode may be selected.

In manual diagnostic mode, a specific module can be manually selected for diagnosis by pressing specific buttons on Driver Information Center (DIC). Only DTCs for that particular module will be displayed until another system is requested.

In both diagnostic modes, systems will be displayed in the following order:

- Powertrain Control Module (PCM).
- Traction Control System (TCS).
- Real Time Damping (RTD).
- Body Control Module (BCM).
- Instrument Panel Cluster (IPC).

- Radio.
- Heater, Ventilation and Air Conditioning (HVAC).
- Left Door Control Module (LDCM).
- Right Door Control Module (RDCM).
- Seat Control Module (SCM).
- Remote Function Actuation (RFA).

If a DTC exists in any system, display will indicate whether DTC is current (with a "C") or history (with an "H"). When E/M button (switch 5) on DIC is pressed at any time, IPC will exit diagnostics mode. On-board diagnostics will also be exited automatically if no DIC buttons are pressed for longer than 60 seconds.

ENTERING ON-BOARD DIAGNOSTICS

Turn ignition on (engine off). Press RESET button to acknowledge any warning messages that may be present. Press OPTIONS button (switch 4) on Driver Information Center (DIC) and hold. While holding OPTIONS button, press FUEL button (switch 1) 4 times within 10 seconds. System will enter automatic display mode.

OPERATING ON-BOARD DIAGNOSTICS

In automatic display mode, each system module will be displayed on IPC followed by DTCs that exist in that system. If no DTCs exist, IPC will display NO CODES for that system. If DTCs exist, each DTC will be displayed for 3 seconds followed by a one second pause. If IPC cannot communicate with any system, IPC will display NO COMM for that system. At any time during automatic display mode, manual display feature can be activated by pressing any DIC button except E/M (switch 5). When all systems have been checked in automatic mode, IPC will display NO MORE CODES for 2 seconds, and will then enter manual mode.

When manual mode is entered, IPC will display MANUAL DIAGNOSTICS for 2 seconds or until any DIC button except E/M (switch 5) is pressed. IPC will then display first system and number of DTCs set in that system, and wait for further instructions. Using DIC buttons, move through system diagnostics as necessary. See **DIC BUTTON DIAGNOSTIC FUNCTIONS** table.

When E/M button (switch 5) on DIC is pressed at any time, IPC will exit diagnostics mode. On-board diagnostics will also be exited automatically if no DIC buttons are pressed for longer than 60 seconds.

DIC BUTTON DIAGNOSTIC FUNCTIONS

DIC Button	Function
FUEL (Switch 1)	Previous DTC
GAGES (Switch 2)	Next DTC
TRIP (Switch 3)	Previous System
OPTIONS (Switch 4)	Next System
E/M (Switch 5)	Exit Diagnostics
RESET	Clear DTCs

CLEARING DTCS

If conditions for malfunction no longer exist, history DTC will clear after 50 consecutive ignition cycles. To manually clear DTCs, use scan tool or press RESET button on IPC's Driver Information Center (DIC).

IPC DTC DEFINITIONS

IPC DTC DEFINITIONS

Code No. (1)	Circuit Affected
B0516	Speedometer Signal Circuit Malfunction
B0521	Tachometer Signal Circuit Malfunction
B1512	DIC Switch 1 Signal (Short To Ground)
B1517	DIC Switch 2 Signal (Short To Ground)
B1522	DIC Switch 3 Signal (Short To Ground)
B1527	DIC Switch 4 Signal (Short To Ground)
B1532	DIC Switch 5 Signal (Short To Ground)
B1537	DIC Switch 6 Signal (Short To Ground)
B1542	Oil Temperature Circuit (Short To Ground)
B1543	Oil Temperature Circuit (Open)
U1016	Loss Of Communication With PCM
U1040	Loss Of Communication With TCS
U1056	Loss Of Communication With RTD
U1064	Loss Of Communication With BCM
U1128	Loss Of Communication With Radio
U1153	Loss Of Communication With HVAC
U1160	Loss Of Communication With LDCM
U1161	Loss Of Communication With RDCM
U1166	Loss Of Communication With SCM
U1176	Loss Of Communication With RFA
U1255	Serial Data Line Malfunction
(1) Perform appropriate DTC test under **TESTING - DIAGNOSTIC** .	

WARNING/STATUS MESSAGE DISPLAY MESSAGES

WARNING/STATUS MESSAGE DISPLAY MESSAGES

Warning/Status Message	Source Of Message
LOW OIL PRESSURE	(1) PCM
HIGH OIL TEMPERATURE REDUCE ENGINE RPM	(2) IPC
ENGINE PROTECTION REDUCE ENGINE RPM	(1) PCM
UPSHIFT NOW!	(1) PCM
COOLANT OVER TEMP	(1) PCM
REDUCE ENGINE POWER	(1) PCM

SHOCKS INOPERATIVE	(3) RTD
MAXIMUM SPEED 129 KM/H (80 MPH)	(1) PCM
HIGH TRANS TEMP	(1) PCM
FLAT TIRE (4)	(5) RFA/TPM
HIGH TIRE PRESSURE (4)	(5) RFA/TPM
LOW TIRE PRESSURE (4)	(5) RFA/TPM
OVER SPEED WARNING	(1) PCM & (2) IPC
LOW OIL LEVEL	(1) PCM
LOW COOLANT	(2) IPC
LOW VOLTAGE	(2) IPC
HIGH VOLTAGE	(2) IPC
LOW BRAKE FLUID	(2) IPC
CHANGE OIL NOW	(1) PCM
TRACTION SYSTEM (ON Or OFF)	(6) ABS & (7) BCM
ABS ACTIVE	(6) ABS
TRACTION SYSTEM ACTIVE	(6) ABS
SERVICE TRACTION SYSTEM	(6) ABS
SERVICE COLUMN LOCK	(7) BCM
PULL KEY-WAIT 10 SEC	(7) BCM
SERVICE RIDE CONTROL	(3) RTD
SERVICE TIRE MONITOR	(5)(8) RFA/TPM
CHARGE SYSTEM FAULT	(1) PCM
SERVICE VEHICLE SOON	(1) PCM, (7) BCM, (6) ABS, (8) RFA & (3) RTD
LOW FUEL	(1) PCM
LOW WASHER FLUID	(2) IPC
HATCH AJAR	(7) BCM
DOOR AJAR	(7) BCM
RESERVE FUEL	(1) PCM
CHANGE OIL SOON	(1) PCM
CRUISE SET XX KM/H (XX MPH)	(9) PCM
CRUISE DISENGAGED	(9) PCM
BRAKE BEFORE SHIFT	(10) IPC

(1) See **TESTS W/CODES** article in ENGINE PERFORMANCE section.

(2) See **IPC DIAGNOSTIC SYSTEM CHECK** under DIAGNOSTIC TESTS.

(3) See SUSPENSION - ELECTRONIC article SUSPENSION section.

(4) Message will indicate appropriate tire.

(5) See Warning Systems in **WIRING DIAGRAMS** .

(6) See ANTI-LOCK/TCS article in BRAKES section

(7) See **BODY CONTROL MODULE** article.

(8) See **REMOTE KEYLESS ENTRY SYSTEM** article.

(9) See **CRUISE CONTROL SYSTEM** article.

(10) See Shift Interlock in **WIRING DIAGRAMS** .

TESTING - DIAGNOSTIC

NOTE: For wiring and connector terminal identification, see WIRING DIAGRAMS .

NOTE: When testing procedure indicates to probe or check a terminal, use adapters from Connector Test Adapter Kit (J-35616-A). This will ensure terminal will not be damaged, and that connection is okay.

SCAN TOOL DOES NOT COMMUNICATE WITH SERIAL DATA LINE

NOTE: To identify wire colors and modules on serial data line, see WIRING DIAGRAMS .

Testing

1. Turn ignition off. Connect scan tool. Disconnect bus bars from Black 12-pin star connectors No. 1 and 2. See **COMPONENT LOCATIONS** table. Connect Serial Data Link Tester (J-42236) to both star connectors. Ensure star connectors correctly correspond with serial data link testing connectors No. 1 and 2. Using serial data link tester, put switch in STAR CONNECTOR #1 position. Rotate rotary switch to "M" position. Turn ignition on. Using scan tool, attempt to establish communication with BCM. If scan tool communicates with BCM, go to next step. If scan tool does not communicate with BCM, go to step 4).
2. Ensure switch on serial data link tester is in STAR CONNECTOR #1 position. Using scan tool, attempt to establish communication with the following vehicle systems by rotating rotary switch on serial data link tester as specified:
   - "L" - Heating, Ventilation and A/C (HVAC) system.
   - "J" - Remote Function Actuator (RFA) system.
   - "H" - Real Time Damping (RTD) system (if equipped).
   - "G" - Instrument Panel Cluster (IPC).
   - "E" - Traction Control System (TCS).

- "D" - Radio system.
- "B" - Powertrain Control Module (PCM).

If scan tool communicates with each system, go to next step. If scan tool does not communicate with each system, go to step 7).

3. Turn switch on serial data link tester to STAR CONNECTOR #2 position. Using scan tool, attempt to establish communication with the following vehicle systems by rotating rotary switch on serial data link tester as specified:
   - "C" - Left Door Control Module (DCM) system.
   - "D" - Right Door Control Module (DCM) system.
   - "K" - Seat Control Module (SCM) system (if equipped).

   If scan tool communicates with each system, go to step 9). If scan tool does not communicate with each system, go to step 7).

4. Turn ignition off. Disconnect serial data link tester. Ensure bus bars are still disconnected from star connectors No. 1 and 2. Using DVOM, check continuity of Purple wire between DLC connector terminal No. 2 and star connector No. 1 terminal "A". If continuity exists, go to next step. If continuity does not exist, go to step 10).
5. Check continuity between DLC connector terminal No. 2 (Purple wire) and ground. If continuity exists, go to step 10). If continuity does not exist, go to next step.
6. Turn ignition on. Using DVOM, check voltage between DLC connector terminal No. 2 (Purple wire) and ground. If any voltage exists, go to step 10). If no voltage exists, go to next step.
7. Turn ignition off. Disconnect appropriate system module for system that did not communicate with scan tool. Using DVOM, check for continuity between appropriate terminal on appropriate star connector and ground. If continuity exists, go to step 11). If continuity does not exist, go to next step.
8. Turn ignition on. Using test light connected to ground, probe appropriate terminal on appropriate star connector for system that is not communicating. If test light illuminates, go to step 12). If test light does not illuminate, go to step 13).
9. Check for intermittent short to ground, short to voltage or open in serial data line circuits. If no problem is found, system is operating properly. If problem is found, repair as necessary. Go to step 14).
10. Repair short to ground, short to voltage or open in Purple wire between DLC and star connector No. 1. Go to step 14).
11. Repair short to ground in appropriate wire between unresponsive module and appropriate star connector. Go to step 14).
12. Repair short to voltage in appropriate wire between unresponsive module and appropriate star connector. Go to step 14).
13. Replace appropriate module. Go to next step.
14. Turn ignition off. Reinstall all components or connectors. Clear DTCs. Ensure system is operating properly.

IPC DIAGNOSTIC SYSTEM CHECK

CAUTION: Unless scan tool directions indicate otherwise, always exit all scan tool test before cycling ignition switch from OFF to ON position. Follow all scan tool manufacturer's instructions. If scan tool instructions are not followed, vehicle may set DTCs (may be false codes), vehicle systems may malfunction or scan tool may malfunction.

NOTE: Use this check as the starting point for any IPC complaint. IPC is a very reliable component, and is not likely the cause of malfunction. Most malfunctions are caused by faulty wiring, connectors or components.

Testing

1. Turn ignition off. Connect scan tool. Turn ignition on. Attempt to establish communication with IPC. If scan tool communicates with IPC, go to next step. If scan tool does not communicate with IPC, go to step 3).
2. Using scan tool, select IPC DTC function. Check for IPC DTCs. If any DTC exists, go to appropriate DTC test. If no DTCs exist, go to step 4).
3. Attempt to establish communication with other systems connected to same serial data line (PCM, RFA, BCM, etc.). If scan tool communicates with other systems, go to step 6). If scan tool does not communicate with other systems, go to **SCAN TOOL DOES NOT COMMUNICATE WITH SERIAL DATA LINE** .
4. Check for any warning messages displayed on IPC. If any warning messages are displayed, go to **WARNING/STATUS MESSAGE DISPLAY MESSAGES** under SELF-DIAGNOSTIC - SYSTEM. If no warning messages are displayed, go to next step.
5. Ensure indicators are operating properly. If indicators are operating properly, system is operating properly. If indicators are not operating properly, go to **SYMPTOM TESTING** .
6. Ensure ignition is on. Using a test light connected to ground, probe each IPC fuse. See **WIRING DIAGRAMS** . If test light illuminates at all circuits, go to next step. If test light does not illuminate at all circuits, go to step 11).
7. Turn ignition off. Disconnect IPC connector. Turn ignition on. Using a test light connected to ground, probe each IPC power circuit. See **WIRING DIAGRAMS** . If test light illuminates at all circuits, go to next step. If test light does not illuminate at all circuits, go to step 13).
8. Using a test light connected to battery, probe each IPC ground circuit. See **WIRING DIAGRAMS** . If test light illuminates at all circuits, go to next step. If test light does not illuminate at all circuits, go to step 14).
9. Using DVOM, check for continuity between IPC connector (harness side), terminal A11 (Gray wire) and Data Link Connector (DLC) terminal No. 2 (Purple wire). If continuity exists, go to next step. If continuity does not exist, go to step 12).
10. Replace IPC. See **INSTRUMENT PANEL CLUSTER** under REMOVAL & INSTALLATION. Go to step 15).
11. Repair open in ignition feed to IPC fuse. If any fuse is open, locate and repair short in associated circuit. See **WIRING DIAGRAMS** . Go to step 15).
12. Locate and repair open in Gray or Purple wire between IPC connector, star connector No. 1 and DLC. Go to step 13).

13. Locate and repair open in IPC power circuit. Go to step 15).
14. Locate and repair open in IPC ground circuit. Go to next step.
15. Turn ignition off. Reinstall all components or connectors. Clear DTCs. Ensure system is operating properly.

Diagnostic Aids

1. The following conditions may result in intermittent operation of IPC with no DTC stored:
    - Any condition which results in interruption of power to IPC.
    - Out of range battery or ignition voltage (normal IPC operating voltage is 9-16 volts).
    - Loose or damaged ground(s).
    - Open or shorted serial data line.
2. IPC tests for different malfunctions during different vehicle conditions. A thorough test drive may be necessary to repeat malfunction. Most intermittent problems are caused by faulty electrical connections or wiring. Check for: poor connections, backed-out terminals, dirty or corroded terminals, chafed wires, or damaged connectors.
3. If IPC loses battery power when ignition is on, IPC will display "AAAAAAA" in message display center. To prevent or clear this message, disconnect battery with ignition off.
4. If IPC displays any history communication DTCs (letter "U" as a prefix), clear these DTCs first and recheck for codes before performing any further diagnosis of IPC. These DTCs may set under various conditions, and do not necessarily indicate a problem in IPC. If IPC cannot communicate properly on serial data line, IPC will display a combination of the following messages:
    - SERVICE VEHICLE SOON
    - SERVICE TIRE MONITOR
    - ENGINE PROTECTED REDUCE ENGINE RPM
    - LOW FUEL
    - LOW TIRE PRESSURE

DTC B0516: SPEEDOMETER SIGNAL CIRCUIT MALFUNCTION

Description

Powertrain Control Module (PCM) supplies Instrument Panel Cluster (IPC) with information on vehicle speed. PCM processes information from Vehicle Speed Sensor (VSS), and sends a 4000 pulse-per-mile input to IPC.

DTC B0516 will set when IPC detects vehicle speed information over 200 MPH (322 KM/H) for one second. IPC will display vehicle speed at 200 MPH (322 KM/H). No driver warning message will be displayed.

If conditions for malfunction no longer exist, history DTC will clear after 50 consecutive ignition cycles. DTC B0516 will also clear when conditions no longer exist, or when IPC or scan tool is used to clear codes.

NOTE: **If DTC B0516 is a history code, problem may be intermittent. Wiggle wires while performing the following test.**

Testing

1. If IPC diagnostic system check was performed, go to next step. If IPC diagnostic system check was not performed, go to procedures in **IPC DIAGNOSTIC SYSTEM CHECK** .
2. Using scan tool, check if any VSS DTCs are stored in PCM memory. If no VSS DTCs exist, go to next step. If any VSS DTCs exist, locate and repair problem in VSS system. See **TESTS W/CODES** article in ENGINE PERFORMANCE section.
3. Test drive vehicle and check for proper speedometer operation. If speedometer operates properly, go to next step. If speedometer does not operate properly, locate and repair problem in speedometer system.
4. Check for intermittent malfunction in speedometer circuit. See DIAGNOSTIC AIDS. If no problem is found, go to next step. If problem is found, repair as necessary. Go to step 7).
5. Turn ignition off. Reinstall all components and connectors. Turn ignition on. Clear DTCs. Wait 5 seconds and check for DTCs. If DTC B0516 is current, go to next step. If DTC B0516 is not current, system is operating properly.
6. Replace IPC. See **INSTRUMENT PANEL CLUSTER** under REMOVAL & INSTALLATION. Go to next step.
7. Turn ignition off. Reinstall all components and reconnect all connectors. Turn ignition on. Clear DTCs. Perform procedures in **IPC DIAGNOSTIC SYSTEM CHECK** .

Diagnostic Aids

1. The following conditions may cause an intermittent: PCM is unable to process correct vehicle speed data sent from VSS or erratic VSS operation.
2. Test drive vehicle and check for proper speedometer operation. If IPC cannot display proper vehicle speed information, use scan tool to display PCM VSS data. If PCM is not receiving proper input from VSS, PCM and VSS circuits must be diagnosed first before diagnosing DTC B0516. See **TESTS W/CODES** article in ENGINE PERFORMANCE section.
3. Before diagnosing DTC B0516, always check for proper speedometer operation by using scan tool to display PCM vehicle speed data and check for VSS DTCs.

DTC B0521: TACHOMETER SIGNAL CIRCUIT MALFUNCTION

Description

Powertrain Control Module (PCM) supplies Instrument Panel Cluster (IPC) with information on engine RPM. IPC receives engine RPM data from PCM and serial data line, but will only display data received from PCM.

DTC B0521 will set when IPC detects that PCM has sent engine RPM information of 7400 RPM for one second. IPC will display engine RPM at 7400 RPM. No driver warning message will be displayed.

If conditions for malfunction no longer exist, history DTC will clear after 50 consecutive ignition cycles. DTC B0521 will also clear when conditions no longer exist, or when IPC or scan tool is used to clear codes.

NOTE: If DTC B0521 is a history code, problem may be intermittent. Wiggle wires while performing the following test.

Testing

1. If IPC diagnostic system check was performed, go to next step. If IPC diagnostic system check was not performed, go to procedures in **IPC DIAGNOSTIC SYSTEM CHECK** .
2. Using scan tool, check if DTC P0654 is stored in PCM memory. If DTC P0654 exists, go to **TESTS W/CODES** article in ENGINE PERFORMANCE section. If DTC P0654 does not exist, go to next step.
3. Test drive vehicle and check for proper tachometer operation. If tachometer operates properly, go to next step. If tachometer does not operate properly, locate and repair problem in tachometer system.
4. Check for intermittent malfunction in tachometer circuit. See DIAGNOSTIC AIDS. If no problem is found, go to next step. If problem is found, repair as necessary. Go to step 7).
5. Turn ignition off. Reinstall all components and connectors. Turn ignition on. Clear DTCs. Wait 5 seconds and check for DTCs. If DTC B0521 is current, go to next step. If DTC B0521 is not current, system is operating properly.
6. Replace IPC. See **INSTRUMENT PANEL CLUSTER** under REMOVAL & INSTALLATION. Go to next step.
7. Turn ignition off. Reinstall all components and reconnect all connectors. Turn ignition on. Clear DTCs. Perform procedures in **IPC DIAGNOSTIC SYSTEM CHECK** .

Diagnostic Aids

1. The following conditions may cause an intermittent: PCM is unable to process correct RPM data or erratic RPM signal sent from PCM.
2. Test drive vehicle and check for proper tachometer operation. If IPC cannot display proper engine RPM information, use scan tool to display PCM engine RPM data. If PCM is not sending proper engine RPM data to IPC, PCM and engine RPM circuits must be diagnosed first before diagnosing DTC B0521. See **TESTS W/CODES** article in ENGINE PERFORMANCE section.
3. Before diagnosing DTC B0521, always check for proper tachometer operation by using scan tool to display PCM engine RPM data and check for VSS DTCs.

DTC B1512: DIC SWITCH 1 SIGNAL (SHORT TO GROUND)

Description

Driver Information Center (DIC) contains 6 switch circuits that allow IPC functions to be performed. IPC supplies a 5-volt reference voltage signal to each switch circuit. When any DIC switch is pressed, voltage will be pulled low when circuit is grounded through DIC switch. IPC monitors DIC switch circuits and determines how long any circuit experiences voltage changes.

DTC B1512 will set when IPC detects a low voltage level (short to ground) in DIC switch 1 (FUEL) circuit for 60 seconds. No driver warning message will be displayed.

If conditions for malfunction no longer exist, history DTC will clear after 50 consecutive ignition cycles. DTC B1512 will also clear when conditions no longer exist, or when IPC or scan tool is used to clear codes.

NOTE: If DTC B1512 is a history code, problem may be intermittent. Wiggle wires while

performing the following test.

NOTE: **If DIC switch 1 (FUEL) is pressed for longer than 60 seconds, DTC B1512 may set with no existing malfunctions. Always verify that this condition does not exist before diagnosing DTC B1512.**

Testing

1. If IPC diagnostic system check was performed, go to next step. If IPC diagnostic system check was not performed, go to procedures in **IPC DIAGNOSTIC SYSTEM CHECK** .
2. Using scan tool, select IPC data display. Monitor DIC switch 1 (FUEL) data. If scan tool displays DIC switch 1 (FUEL) data as ACTIVE, go to next step. If scan tool does not display DIC switch 1 (FUEL) data as ACTIVE, go to step 7).
3. Disconnect DIC switch connector. See **COMPONENT LOCATIONS** . Using scan tool, select IPC data display. Monitor DIC switch 1 (FUEL) data. If scan tool displays DIC switch 1 (FUEL) data as ACTIVE, go to next step. If scan tool does not display DIC switch 1 (FUEL) data as ACTIVE, go to step 5).
4. Check for short to ground in DIC switch harness between DIC switch and IPC. If no problem is found, go to step 6). If problem is found, repair as necessary. Go to step 9).
5. Replace DIC switch assembly. See **DRIVER INFORMATION CENTER (DIC) SWITCHES R & I** . Go to step 9).
6. Replace IPC. See **INSTRUMENT PANEL CLUSTER** under REMOVAL & INSTALLATION. Go to step 9).
7. Check for intermittent malfunction in DIC switch circuit. See DIAGNOSTIC AIDS. If no problem is found, go to next step. If problem is found, repair as necessary. Go to step 9).
8. Turn ignition off. Reinstall all components and connectors. Turn ignition on. Clear DTCs. Wait 5 seconds and check for DTCs. If DTC B1512 is current, go to next step. If DTC B1512 is not current, system is operating properly.
9. Turn ignition off. Reinstall all components and reconnect all connectors. Turn ignition on. Clear DTCs. Perform procedures in **IPC DIAGNOSTIC SYSTEM CHECK** .

Diagnostic Aids

1. The following conditions may cause an intermittent: Intermittent short to ground in DIC switch harness, internal short to ground in DIC switch 1 (FUEL), or DIC switch 1 (FUEL) is pressed for longer than 60 seconds.
2. Use scan tool to verify proper DIC switch 1 (FUEL) operation. When button is pressed, scan tool should display DIC switch 1 (FUEL) status as ACTIVE. When button is released, scan tool should display DIC switch 1 (FUEL) status as INACTIVE.

DTC B1517: DIC SWITCH 2 SIGNAL (SHORT TO GROUND)

Description

Driver Information Center (DIC) contains 6 switch circuits that allow IPC functions to be performed. IPC

supplies a 5-volt reference voltage signal to each switch circuit. When any DIC switch is pressed, voltage will be pulled low when circuit is grounded through DIC switch. IPC monitors DIC switch circuits and determines how long any circuit experiences voltage changes.

DTC B1517 will set when IPC detects a low voltage level (short to ground) in DIC switch 2 (GAGES) circuit for 60 seconds. No driver warning message will be displayed.

If conditions for malfunction no longer exist, history DTC will clear after 50 consecutive ignition cycles. DTC B1517 will also clear when conditions no longer exist, or when IPC or scan tool is used to clear codes.

NOTE: **If DTC B1517 is a history code, problem may be intermittent. Wiggle wires while performing the following test.**

NOTE: **If DIC switch 2 (GAGES) is pressed for longer than 60 seconds, DTC B1517 may set with no existing malfunctions. Always verify that this condition does not exist before diagnosing DTC B1517.**

Testing

1. If IPC diagnostic system check was performed, go to next step. If IPC diagnostic system check was not performed, go to procedures in **IPC DIAGNOSTIC SYSTEM CHECK** .
2. Using scan tool, select IPC data display. Monitor DIC switch 2 (GAGES) data. If scan tool displays DIC switch 2 (GAGES) data as ACTIVE, go to next step. If scan tool does not display DIC switch 2 (GAGES) data as ACTIVE, go to step 7).
3. Disconnect DIC switch connector. See **COMPONENT LOCATIONS** . Using scan tool, select IPC data display. Monitor DIC switch 2 (GAGES) data. If scan tool displays DIC switch 2 (GAGES) data as ACTIVE, go to next step. If scan tool does not display DIC switch 2 (GAGES) data as ACTIVE, go to step 5).
4. Check for short to ground in DIC switch harness between DIC switch and IPC. If no problem is found, go to step 6). If problem is found, repair as necessary. Go to step 9).
5. Replace DIC switch assembly. See **DRIVER INFORMATION CENTER (DIC) SWITCHES R & I** . Go to step 9).
6. Replace IPC. See **INSTRUMENT PANEL CLUSTER** under REMOVAL & INSTALLATION. Go to step 9).
7. Check for intermittent malfunction in DIC switch circuit. See DIAGNOSTIC AIDS. If no problem is found, go to next step. If problem is found, repair as necessary. Go to step 9).
8. Turn ignition off. Reinstall all components and connectors. Turn ignition on. Clear DTCs. Wait 5 seconds and check for DTCs. If DTC B1517 is current, go to next step. If DTC B1517 is not current, system is operating properly.
9. Turn ignition off. Reinstall all components and reconnect all connectors. Turn ignition on. Clear DTCs. Perform procedures in **IPC DIAGNOSTIC SYSTEM CHECK** .

Diagnostic Aids

1. The following conditions may cause an intermittent: Intermittent short to ground in DIC switch harness, internal short to ground in DIC switch 2 (GAGES), or DIC switch 2 (GAGES) is pressed for longer than 60 seconds.
2. Use scan tool to verify proper DIC switch 2 (GAGES) operation. When button is pressed, scan tool should display DIC switch 2 (GAGES) status as ACTIVE. When button is released, scan tool should display DIC switch 2 (GAGES) status as INACTIVE.

DTC B1522: DIC SWITCH 3 SIGNAL (SHORT TO GROUND)

Description

Driver Information Center (DIC) contains 6 switch circuits that allow IPC functions to be performed. IPC supplies a 5-volt reference voltage signal to each switch circuit. When any DIC switch is pressed, voltage will be pulled low when circuit is grounded through DIC switch. IPC monitors DIC switch circuits and determines how long any circuit experiences voltage changes.

DTC B1522 will set when IPC detects a low voltage level (short to ground) in DIC switch 3 (TRIP) circuit for 60 seconds. No driver warning message will be displayed.

If conditions for malfunction no longer exist, history DTC will clear after 50 consecutive ignition cycles. DTC B1522 will also clear when conditions no longer exist, or when IPC or scan tool is used to clear codes.

NOTE: **If DTC B1522 is a history code, problem may be intermittent. Wiggle wires while performing the following test.**

NOTE: **If DIC switch 3 (TRIP) is pressed for longer than 60 seconds, DTC B1522 may set with no existing malfunctions. Always verify that this condition does not exist before diagnosing DTC B1522.**

Testing

1. If IPC diagnostic system check was performed, go to next step. If IPC diagnostic system check was not performed, go to procedures in **IPC DIAGNOSTIC SYSTEM CHECK** .
2. Using scan tool, select IPC data display. Monitor DIC switch 3 (TRIP) data. If scan tool displays DIC switch 3 (TRIP) data as ACTIVE, go to next step. If scan tool does not display DIC switch 3 (TRIP) data as ACTIVE, go to step 7).
3. Disconnect DIC switch connector. See **COMPONENT LOCATIONS** . Using scan tool, select IPC data display. Monitor DIC switch 3 (TRIP) data. If scan tool displays DIC switch 3 (TRIP) data as ACTIVE, go to next step. If scan tool does not display DIC switch 3 (TRIP) data as ACTIVE, go to step 5).
4. Check for short to ground in DIC switch harness between DIC switch and IPC. If no problem is found, go to step 6). If problem is found, repair as necessary. Go to step 9).
5. Replace DIC switch assembly. See **DRIVER INFORMATION CENTER (DIC) SWITCHES R & I** . Go to step 9).
6. Replace IPC. See **INSTRUMENT PANEL CLUSTER** under REMOVAL & INSTALLATION. Go to step 9).

7. Check for intermittent malfunction in DIC switch circuit. See DIAGNOSTIC AIDS. If no problem is found, go to next step. If problem is found, repair as necessary. Go to step 9).
8. Turn ignition off. Reinstall all components and connectors. Turn ignition on. Clear DTCs. Wait 5 seconds and check for DTCs. If DTC B1522 is current, go to next step. If DTC B1522 is not current, system is operating properly.
9. Turn ignition off. Reinstall all components and reconnect all connectors. Turn ignition on. Clear DTCs. Perform procedures in **IPC DIAGNOSTIC SYSTEM CHECK** .

Diagnostic Aids

1. The following conditions may cause an intermittent: Intermittent short to ground in DIC switch harness, internal short to ground in DIC switch 3 (TRIP), or DIC switch 3 (TRIP) is pressed for longer than 60 seconds.
2. Use scan tool to verify proper DIC switch 3 (TRIP) operation. When button is pressed, scan tool should display DIC switch 3 (TRIP) status as ACTIVE. When button is released, scan tool should display DIC switch 3 (TRIP) status as INACTIVE.

DTC B1527: DIC SWITCH 4 SIGNAL (SHORT TO GROUND)

Description

Driver Information Center (DIC) contains 6 switch circuits that allow IPC functions to be performed. IPC supplies a 5-volt reference voltage signal to each switch circuit. When any DIC switch is pressed, voltage will be pulled low when circuit is grounded through DIC switch. IPC monitors DIC switch circuits and determines how long any circuit experiences voltage changes.

DTC B1527 will set when IPC detects a low voltage level (short to ground) in DIC switch 4 (OPTIONS) circuit for 60 seconds. No driver warning message will be displayed.

If conditions for malfunction no longer exist, history DTC will clear after 50 consecutive ignition cycles. DTC B1527 will also clear when conditions no longer exist, or when IPC or scan tool is used to clear codes.

NOTE: **If DTC B1527 is a history code, problem may be intermittent. Wiggle wires while performing the following test.**

NOTE: **If DIC switch 4 (OPTIONS) is pressed for longer than 60 seconds, DTC B1527 may set with no existing malfunctions. Always verify that this condition does not exist before diagnosing DTC B1527.**

Testing

1. If IPC diagnostic system check was performed, go to next step. If IPC diagnostic system check was not performed, go to procedures in **IPC DIAGNOSTIC SYSTEM CHECK** .
2. Using scan tool, select IPC data display. Monitor DIC switch 4 (OPTIONS) data. If scan tool displays DIC switch 4 (OPTIONS) data as ACTIVE, go to next step. If scan tool does not display DIC switch 4

(OPTIONS) data as ACTIVE, go to step 7).

3. Disconnect DIC switch connector. See **COMPONENT LOCATIONS** . Using scan tool, select IPC data display. Monitor DIC switch 4 (OPTIONS) data. If scan tool displays DIC switch 4 (OPTIONS) data as ACTIVE, go to next step. If scan tool does not display DIC switch 4 (OPTIONS) data as ACTIVE, go to step 5).
4. Check for short to ground in DIC switch harness between DIC switch and IPC. If no problem is found, go to step 6). If problem is found, repair as necessary. Go to step 9).
5. Replace DIC switch assembly. See **DRIVER INFORMATION CENTER (DIC) SWITCHES** . Go to step 9).
6. Replace IPC. See **INSTRUMENT PANEL CLUSTER** under REMOVAL & INSTALLATION. Go to step 9).
7. Check for intermittent malfunction in DIC switch circuit. See **DIAGNOSTIC AIDS** . If no problem is found, go to next step. If problem is found, repair as necessary. Go to step 9).
8. Turn ignition off. Reinstall all components and connectors. Turn ignition on. Clear DTCs. Wait 5 seconds and check for DTCs. If DTC B1527 is current, go to next step. If DTC B1527 is not current, system is operating properly.
9. Turn ignition off. Reinstall all components and reconnect all connectors. Turn ignition on. Clear DTCs. Perform procedures in **IPC DIAGNOSTIC SYSTEM CHECK** .

Diagnostic Aids

1. The following conditions may cause an intermittent: Intermittent short to ground in DIC switch harness, internal short to ground in DIC switch 4 (OPTIONS), or DIC switch 4 (OPTIONS) is pressed for longer than 60 seconds.
2. Use scan tool to verify proper DIC switch 4 (OPTIONS) operation. When button is pressed, scan tool should display DIC switch 4 (OPTIONS) status as ACTIVE. When button is released, scan tool should display DIC switch 4 (OPTIONS) status as INACTIVE.

DTC B1532: DIC SWITCH 5 SIGNAL (SHORT TO GROUND)

Description

Driver Information Center (DIC) contains 6 switch circuits that allow IPC functions to be performed. IPC supplies a 5-volt reference voltage signal to each switch circuit. When any DIC switch is pressed, voltage will be pulled low when circuit is grounded through DIC switch. IPC monitors DIC switch circuits and determines how long any circuit experiences voltage changes.

DTC B1532 will set when IPC detects a low voltage level (short to ground) in DIC switch 5 (E/M) circuit for 60 seconds. No driver warning message will be displayed.

If conditions for malfunction no longer exist, history DTC will clear after 50 consecutive ignition cycles. DTC B1532 will also clear when conditions no longer exist, or when IPC or scan tool is used to clear codes.

NOTE: **If DTC B1532 is a history code, problem may be intermittent. Wiggle wires while performing the following test.**

NOTE: **If DIC switch 5 (E/M) is pressed for longer than 60 seconds, DTC B1532 may set with no existing malfunctions. Always verify that this condition does not exist before diagnosing DTC B1532.**

Testing

1. If IPC diagnostic system check was performed, go to next step. If IPC diagnostic system check was not performed, go to procedures in **IPC DIAGNOSTIC SYSTEM CHECK** .
2. Using scan tool, select IPC data display. Monitor DIC switch 5(E/M) data. If scan tool displays DIC switch 5 (E/M) data as ACTIVE, go to next step. If scan tool does not display DIC switch 5 (E/M) data as ACTIVE, go to step 7).
3. Disconnect DIC switch connector. See **COMPONENT LOCATIONS** . Using scan tool, select IPC data display. Monitor DIC switch 5 (E/M) data. If scan tool displays DIC switch 5 (E/M) data as ACTIVE, go to next step. If scan tool does not display DIC switch 5 (E/M) data as ACTIVE, go to step 5).
4. Check for short to ground in DIC switch harness between DIC switch and IPC. If no problem is found, go to step 6). If problem is found, repair as necessary. Go to step 9).
5. Replace DIC switch assembly. See **DRIVER INFORMATION CENTER (DIC) SWITCHES** . Go to step 9).
6. Replace IPC. See **INSTRUMENT PANEL CLUSTER** under REMOVAL & INSTALLATION. Go to step 9).
7. Check for intermittent malfunction in DIC switch circuit. See **DIAGNOSTIC AIDS** . If no problem is found, go to next step. If problem is found, repair as necessary. Go to step 9).
8. Turn ignition off. Reinstall all components and connectors. Turn ignition on. Clear DTCs. Wait 5 seconds and check for DTCs. If DTC B1532 is current, go to next step. If DTC B1532 is not current, system is operating properly.
9. Turn ignition off. Reinstall all components and reconnect all connectors. Turn ignition on. Clear DTCs. Perform procedures in **IPC DIAGNOSTIC SYSTEM CHECK** .

Diagnostic Aids

1. The following conditions may cause an intermittent: Intermittent short to ground in DIC switch harness, internal short to ground in DIC switch 5 (E/M), or DIC switch 5 (E/M) is pressed for longer than 60 seconds.
2. Use scan tool to verify proper DIC switch 5 (E/M) operation. When button is pressed, scan tool should display DIC switch 5 (E/M) status as ACTIVE. When button is released, scan tool should display DIC switch 5 (E/M) status as INACTIVE.

DTC B1537: DIC SWITCH 6 SIGNAL (SHORT TO GROUND)

Description

Driver Information Center (DIC) contains 6 switch circuits that allow IPC functions to be performed. IPC supplies a 5-volt reference voltage signal to each switch circuit. When any DIC switch is pressed, voltage will be pulled low when circuit is grounded through DIC switch. IPC monitors DIC switch circuits and determines how long any circuit experiences voltage changes.

DTC B1537 will set when IPC detects a low voltage level (short to ground) in DIC switch 6 (RESET) circuit for 60 seconds. No driver warning message will be displayed.

If conditions for malfunction no longer exist, history DTC will clear after 50 consecutive ignition cycles. DTC B1537 will also clear when conditions no longer exist, or when IPC or scan tool is used to clear codes.

NOTE: **If DTC B1537 is a history code, problem may be intermittent. Wiggle wires while performing the following test.**

NOTE: **If DIC switch 6 (RESET) is pressed for longer than 60 seconds, DTC B1537 may set with no existing malfunctions. Always verify that this condition does not exist before diagnosing DTC B1537.**

Testing

1. If IPC diagnostic system check was performed, go to next step. If IPC diagnostic system check was not performed, go to procedures in **IPC DIAGNOSTIC SYSTEM CHECK** .
2. Using scan tool, select IPC data display. Monitor DIC switch 6 (RESET) data. If scan tool displays DIC switch 6 (RESET) data as ACTIVE, go to next step. If scan tool does not display DIC switch 6 (RESET) data as ACTIVE, go to step 7).
3. Disconnect DIC switch connector. See **COMPONENT LOCATIONS** . Using scan tool, select IPC data display. Monitor DIC switch 6 (RESET) data. If scan tool displays DIC switch 6 (RESET) data as ACTIVE, go to next step. If scan tool does not display DIC switch 6 (RESET) data as ACTIVE, go to step 5).
4. Check for short to ground in DIC switch harness between DIC switch and IPC. If no problem is found, go to step 6). If problem is found, repair as necessary. Go to step 9).
5. Replace DIC switch assembly. **DRIVER INFORMATION CENTER (DIC) SWITCHES** . Go to step 9).
6. Replace IPC. See **INSTRUMENT PANEL CLUSTER** under REMOVAL & INSTALLATION. Go to step 9).
7. Check for intermittent malfunction in DIC switch circuit. See DIAGNOSTIC AIDS. If no problem is found, go to next step. If problem is found, repair as necessary. Go to step 9).
8. Turn ignition off. Reinstall all components and connectors. Turn ignition on. Clear DTCs. Wait 5 seconds and check for DTCs. If DTC B1537 is current, go to next step. If DTC B1537 is not current, system is operating properly.
9. Turn ignition off. Reinstall all components and reconnect all connectors. Turn ignition on. Clear DTCs. Perform procedures in **IPC DIAGNOSTIC SYSTEM CHECK** .

Diagnostic Aids

1. The following conditions may cause an intermittent: Intermittent short to ground in DIC switch harness, internal short to ground in DIC switch 6 (RESET), or DIC switch 6 (RESET) is pressed for longer than 60 seconds.
2. Use scan tool to verify proper DIC switch 6 (RESET) operation. When button is pressed, scan tool should

display DIC switch 6 (RESET) status as ACTIVE. When button is released, scan tool should display DIC switch 6 (RESET) status as INACTIVE.

DTC B1542: OIL TEMPERATURE CIRCUIT (SHORT TO GROUND)

Description

Instrument Panel Cluster (IPC) receives oil temperature information from oil temperature sensor. Oil temperature sensor will produce high resistance when engine oil temperature is low, and low resistance when engine oil temperature is high. IPC supplies a 5-volt reference signal to oil temperature sensor. When engine oil is cold, sensor resistance will decrease, and IPC reference voltage level will drop. IPC checks reference voltage change and displays calculated value on gauge.

DTC B1542 will set when IPC detects oil temperature greater than 374°F (190°C) or IPC detects a low voltage level (short to ground) in oil temperature circuit No. 357 (Dark Green/White wire) for one second. When DTC B1542 is set, IPC will display oil temperature at greater than 374°F (190°C). If circuit No. 357 (Dark Green/White wire) or oil temperature sensor is shorted to ground, IPC will display a constant oil temperature of 392°F (200°C). IPC will also display HIGH OIL TEMPERATURE REDUCE ENGINE RPM message.

If conditions for malfunction no longer exist, history DTC will clear after 50 consecutive ignition cycles. DTC B1542 will also clear when conditions no longer exist, or when IPC or scan tool is used to clear codes.

Testing

1. If IPC diagnostic system check was performed, go to next step. If IPC diagnostic system check was not performed, go to procedures in **IPC DIAGNOSTIC SYSTEM CHECK** .
2. Using scan tool, select IPC data display. Monitor oil temperature data. If scan tool displays a value greater than 374°F (190°C), go to next step. If scan tool does not display a value greater than 374°F (190°C), go to step 7).
3. Disconnect oil temperature sensor connector. Refer to **COMPONENT LOCATIONS** table. Using scan tool, select IPC data display. Monitor oil temperature data. If scan tool displays a value less than 14°F (-10°C), go to step 6). If scan tool does not display a value less than 14°F (-10°C), go to next step.
4. Using DVOM, check voltage between oil temperature sensor connector (harness side) terminal "B" (Dark Green/White wire) and ground. If reading is 4.5-5.5 volts, go to step 7). If reading is not 4.5-5.5 volts, go to next step.
5. Check for short to ground in circuit No. 357 (Dark Green/White wire) between IPC terminal A10 and oil temperature sensor terminal "B". If no problem is found, go to step 9). If problem is found, repair as necessary. Go to step 10).
6. Replace oil temperature sensor. Go to step 10).
7. Check for intermittent malfunction in DIC switch circuit. See DIAGNOSTIC AIDS. If no problem is found, go to next step. If problem is found, repair as necessary. Go to step 10).
8. Turn ignition off. Reinstall all components and connectors. Turn ignition on. Clear DTCs. Wait 5 seconds and check for DTCs. If DTC B1542 is current, go to next step. If DTC B1542 is not current, system is operating properly.
9. Replace IPC. See **INSTRUMENT PANEL CLUSTER** under REMOVAL & INSTALLATION. Go to

next step.

10. Turn ignition off. Reinstall all components and reconnect all connectors. Turn ignition on. Clear DTCs. Perform procedures in **IPC DIAGNOSTIC SYSTEM CHECK** .

Diagnostic Aids

1. The following conditions may cause an intermittent: Intermittent short to ground in oil temperature circuit No. 357 (Dark Green/White wire) or an internal short to ground in oil temperature sensor. If circuit No. 357 (Dark Green/White wire) or oil temperature sensor is shorted to ground, IPC will display a constant oil temperature of 392°F (200°C).
2. To verify if IPC can recognize a change in resistance from oil temperature sensor, disconnect oil temperature sensor. If IPC displays oil temperature as LOW, circuit No. 357 (Dark Green/White wire) and IPC are operating properly. Check oil temperature sensor.

DTC B1543: OIL TEMPERATURE CIRCUIT (OPEN)

Description

Instrument Panel Cluster (IPC) receives oil temperature information from oil temperature sensor. Oil temperature sensor will produce high resistance when engine oil temperature is low, and low resistance when engine oil temperature is high. IPC supplies a 5-volt reference signal to oil temperature sensor. When engine oil is cold, sensor resistance will decrease, and IPC reference voltage level will drop. IPC checks reference voltage change and displays calculated value on gauge.

DTC B1543 will set when IPC detects oil temperature less than 14°F (-10°C) or IPC detects a high voltage level (open) in oil temperature circuit No. 357 (Dark Green/White wire). This DTC will set only after engine is run for longer than 5 minutes. When DTC B1543 is set, IPC will display oil temperature as LOW. No driver warning message will be displayed.

If conditions for malfunction no longer exist, history DTC will clear after 50 consecutive ignition cycles. DTC B1543 will also clear when conditions no longer exist, or when IPC or scan tool is used to clear codes.

Testing

1. If IPC diagnostic system check was performed, go to next step. If IPC diagnostic system check was not performed, go to procedures in **IPC DIAGNOSTIC SYSTEM CHECK** .
2. Using scan tool, select IPC data display. Monitor oil temperature data. If scan tool displays a value less than 14°F (-10°C), go to next step. If scan tool does not display a value less than 14°F (-10°C), go to step 6).
3. Disconnect oil temperature sensor connector. Refer to **COMPONENT LOCATIONS** table. Connect a jumper wire between oil temperature sensor (harness side) connector terminals "A" (Black wire) and "B" (Dark Green/White wire). Using scan tool, select IPC data display. Monitor oil temperature data. If scan tool displays a value greater than 374°F (190°C), go to step 8). If scan tool does not display a value greater than 374°F (190°C), go to next step.
4. Remove jumper wire. Using DVOM, check voltage between oil temperature sensor connector (harness side) terminal "B" (Dark Green/White wire) and ground. If reading is 4.5-5.5 volts, go to next step. If

reading is not 4.5-5.5 volts, go to step 9).

5. Using DVOM, check continuity between oil temperature sensor connector (harness side) terminal "A" (Black wire) and ground. If continuity exists, go to step 7). If continuity does not exist, go to step 10).
6. Check for intermittent malfunction in oil temperature sensor circuit. See DIAGNOSTIC AIDS. If no problem is found, go to next step. If problem is found, repair as necessary. Go to step 12).
7. Turn ignition off. Reinstall all components and connectors. Turn ignition on. Clear DTCs. Wait 5 seconds and check for DTCs. If DTC B1543 is current, go to step 11). If DTC B1543 is not current, system is operating properly.
8. Replace oil temperature sensor. Go to step 12).
9. Check for open or short in circuit No. 357 (Dark Green/White wire) between IPC terminal A10 and oil temperature sensor terminal "B". If no problem is found, go to step 11). If problem is found, repair as necessary. Go to step 12).
10. Check for open or short in circuit No. 470 (Black wire) between IPC terminal B8 and oil temperature sensor terminal "A". If no problem is found, go to next step. If problem is found, repair as necessary. Go to step 12).
11. Replace IPC. See **INSTRUMENT PANEL CLUSTER** under REMOVAL & INSTALLATION. Go to next step.
12. Turn ignition off. Reinstall all components and reconnect all connectors. Turn ignition on. Clear DTCs. Perform procedures in **IPC DIAGNOSTIC SYSTEM CHECK** .

Diagnostic Aids

1. The following conditions may cause an intermittent: Intermittent open or high resistance in oil temperature circuit No. 357 (Dark Green/White wire) or No. 470 (Black wire), or an internal open in oil temperature sensor. If oil temperature sensor or related wiring is open, IPC will display oil temperature as LOW.
2. To verify if IPC can recognize a change in resistance from oil temperature sensor, ground circuit No. 357 (Dark Green/White wire). If IPC displays oil temperature as 392°F (200°C), circuit No. 357 and IPC are operating properly. Check oil temperature sensor and ground circuit.

DTC U1016: LOSS OF COMMUNICATION WITH PCM

Description

Serial data circuit is used to communicate information between systems. Each system on the serial data line is assigned its own recognition code, which is used to identify which system is communicating. Systems periodically send a State of Health (SOH) message to other systems. If those systems fail to send an SOH message back, a corresponding DTC will be set. Also, any system that cannot communicate properly will set the corresponding DTC.

DTC U1016 will set when IPC has sent an SOH message to Powertrain Control Module (PCM), and no SOH message response was sent back for 5 seconds. No driver warning message will be displayed.

DTC U1016 requires an ignition cycle to change from current to his-tory. If conditions for malfunction no

longer exist, history DTC will clear after 50 consecutive ignition cycles. DTC U1016 will also clear when conditions no longer exist, or when IPC or scan tool is used to clear codes.

NOTE: **If DTC U1016 is a history code, problem may be intermittent. Wiggle wires while performing the following test.**

Testing

1. If IPC diagnostic system check was performed, go to next step. If IPC diagnostic system check was not performed, go to procedures in **IPC DIAGNOSTIC SYSTEM CHECK** .
2. Turn ignition off. Connect scan tool. Turn ignition on. Using scan tool, attempt to establish communication with PCM. If communication can be established, go to next step. If communication cannot be established, locate and repair problem in PCM system. See procedures in **TESTS W/CODES** article in ENGINE PERFORMANCE section.
3. Using scan tool, select IPC DTCs function. Check for DTC U1255. If DTC U1255 exists, go to **DTC U1255: SERIAL DATA LINE MALFUNCTION** . If DTC U1255 does not exist, go to next step.
4. Check serial data line for following intermittent conditions:
   - An open in serial data line between IPC and PCM.
   - Short to ground.
   - Short to voltage.
   - Check star connector No. 1 (ensure bus bar is properly inserted).
   - Loose or damaged terminals.

   If no problem is found, go to next step. If problem is found, repair as necessary. Go to step 6).

5. Turn ignition off. Reinstall all components and connectors. Turn ignition on. Clear DTCs. Check for DTCs. If DTC U1016 is current, see **TESTS W/CODES** article in ENGINE PERFORMANCE section. If DTC U1016 is not current, system is operating properly.
6. Turn ignition off. Reinstall all components and reconnect all connectors. Turn ignition on. Clear DTCs. Perform procedures in **IPC DIAGNOSTIC SYSTEM CHECK** .

Diagnostic Aids

1. The following conditions may cause an intermittent: Intermittent open or short in serial data line, intermittent loss of communication with PCM, or damaged or loose star connector terminals.
2. If serial data line is shorted to ground or voltage, all systems connected to same serial data line will not be capable of communicating properly. Systems capable of storing loss of communication DTCs will store these codes in their memory. After DTC U1016 is repaired, clear all DTCs from each system capable of storing this DTC.
3. If DTC U1016 is set in IPC memory, use a scan tool to monitor communications with PCM. If IPC loses communication with PCM at any time, DTC U1016 is stored in IPC. Test drive vehicle to aid in diagnosing an intermittent condition. Check for open in serial data line between only IPC and PCM. Also check IPC and PCM for intermittent operation due to a loss of power or ground.

DTC U1040: LOSS OF COMMUNICATION WITH TCS

Description

Serial data circuit is used to communicate information between systems. Each system on the serial data line is assigned its own recognition code, which is used to identify which system is communicating. Systems periodically send a State of Health (SOH) message to other systems. If those systems fail to send an SOH message back, a corresponding DTC will be set. Also, any system that cannot communicate properly will set the corresponding DTC.

DTC U1040 will set when IPC has sent an SOH message to Traction Control System (TCS), and no SOH message response was sent back for 5 seconds. No driver warning message will be displayed.

DTC U1040 requires an ignition cycle to change from current to his-tory. If conditions for malfunction no longer exist, history DTC will clear after 50 consecutive ignition cycles. DTC U1040 will also clear when conditions no longer exist, or when IPC or scan tool is used to clear codes.

NOTE: **If DTC U1040 is a history code, problem may be intermittent. Wiggle wires while performing the following test.**

Testing

1. If IPC diagnostic system check was performed, go to next step. If IPC diagnostic system check was not performed, go to procedures in **IPC DIAGNOSTIC SYSTEM CHECK** .
2. Turn ignition off. Connect scan tool. Turn ignition on. Using scan tool, attempt to establish communication with TCS. If communication can be established, go to next step. If communication cannot be established, see **ANTI-LOCK BRAKE SYSTEM** article in BRAKES section.
3. Using scan tool, select IPC DTCs function. Check for DTC U1255. If DTC U1255 exists, go to **DTC U1255: SERIAL DATA LINE MALFUNCTION** . If DTC U1255 does not exist, go to next step.
4. Check serial data line for following intermittent conditions:
   - An open in serial data line between IPC and TCS.
   - Short to ground.
   - Short to voltage.
   - Check star connector No. 1 (ensure bus bar is properly inserted).
   - Loose or damaged terminals.

   If no problem is found, go to next step. If problem is found, repair as necessary. Go to step 6).

5. Turn ignition off. Reinstall all components and connectors. Turn ignition on. Clear DTCs. Check for DTCs. If DTC U1040 is current, see **ANTI-LOCK BRAKE SYSTEM** article in BRAKES section. If DTC U1040 is not current, system is operating properly.
6. Turn ignition off. Reinstall all components and reconnect all connectors. Turn ignition on. Clear DTCs. Perform procedures in **IPC DIAGNOSTIC SYSTEM CHECK** .

Diagnostic Aids

1. The following conditions may cause an intermittent: Intermittent open or short in serial data line, intermittent loss of communication with TCS, or damaged or loose star connector terminals.
2. If serial data line is shorted to ground or voltage, all systems connected to same serial data line will not be capable of communicating properly. Systems capable of storing loss of communication DTCs will store these codes in their memory. After DTC U1040 is repaired, clear all DTCs from each system capable of storing this DTC.
3. If DTC U1040 is set in IPC memory, use a scan tool to monitor communications with TCS. If IPC loses communication with TCS at any time, DTC U1040 is stored in IPC. Test drive vehicle to aid in diagnosing an intermittent condition. Check for open in serial data line between only IPC and TCS. Also check IPC and TCS for intermittent operation due to a loss of power or ground.

DTC U1056: LOSS OF COMMUNICATION WITH RTD

Description

Serial data circuit is used to communicate information between systems. Each system on the serial data line is assigned its own recognition code, which is used to identify which system is communicating. Systems periodically send a State of Health (SOH) message to other systems. If those systems fail to send an SOH message back, a corresponding DTC will be set. Also, any system that cannot communicate properly will set the corresponding DTC.

DTC U1056 will set when IPC has sent an SOH message to Real Time Damping (RTD) system, and no SOH message response was sent back for 5 seconds. No driver warning message will be displayed.

DTC U1056 requires an ignition cycle to change from current to his-tory. If conditions for malfunction no longer exist, history DTC will clear after 50 consecutive ignition cycles. DTC U1056 will also clear when conditions no longer exist, or when IPC or scan tool is used to clear codes.

NOTE: **If DTC U1056 is a history code, problem may be intermittent. Wiggle wires while performing the following test.**

Testing

1. If IPC diagnostic system check was performed, go to next step. If IPC diagnostic system check was not performed, go to procedures in **IPC DIAGNOSTIC SYSTEM CHECK** .
2. Turn ignition off. Connect scan tool. Turn ignition on. Using scan tool, attempt to establish communication with RTD system. If communication can be established, go to next step. If communication cannot be established, see **SUSPENSION - ELECTRONIC REAL TIME DAMPING** article in SUSPENSION section.
3. Using scan tool, select IPC DTCs function. Check for DTC U1255. If DTC U1255 exists, go to **DTC U1255: SERIAL DATA LINE MALFUNCTION** . If DTC U1255 does not exist, go to next step.
4. Check serial data line for following intermittent conditions:
   - An open in serial data line between IPC and RTD system.

- Short to ground.
- Short to voltage.
- Check star connector No. 1 (ensure bus bar is properly inserted).
- Loose or damaged terminals.

If no problem is found, go to next step. If problem is found, repair as necessary. Go to step 6).

5. Turn ignition off. Reinstall all components and connectors. Turn ignition on. Clear DTCs. Check for DTCs. If DTC U1056 is current, see **SUSPENSION - ELECTRONIC REAL TIME DAMPING** article in SUSPENSION section. If DTC U1056 is not current, system is operating properly.
6. Turn ignition off. Reinstall all components and reconnect all connectors. Turn ignition on. Clear DTCs. Perform procedures in **IPC DIAGNOSTIC SYSTEM CHECK** .

Diagnostic Aids

1. The following conditions may cause an intermittent: Intermittent open or short in serial data line, intermittent loss of communication with RTD system, or damaged or loose star connector terminals.
2. If serial data line is shorted to ground or voltage, all systems connected to same serial data line will not be capable of communicating properly. Systems capable of storing loss of communication DTCs will store these codes in their memory. After DTC U1056 is repaired, clear all DTCs from each system capable of storing this DTC.
3. If DTC U1056 is set in IPC memory, use a scan tool to monitor communications with RTD system. If IPC loses communication with RTD system at any time, DTC U1056 is stored in IPC. Test drive vehicle to aid in diagnosing an intermittent condition. Check for open in serial data line between only IPC and RTD system. Also check IPC and RTD system for intermittent operation due to a loss of power or ground.

DTC U1064: LOSS OF COMMUNICATION WITH BCM

Description

Serial data circuit is used to communicate information between systems. Each system on the serial data line is assigned its own recognition code, which is used to identify which system is communicating. Systems periodically send a State of Health (SOH) message to other systems. If those systems fail to send an SOH message back, a corresponding DTC will be set. Also, any system that cannot communicate properly will set the corresponding DTC.

DTC U1064 will set when IPC has sent an SOH message to Body Control Module (BCM), and no SOH message response was sent back for 5 seconds. No driver warning message will be displayed.

DTC U1064 requires an ignition cycle to change from current to his-tory. If conditions for malfunction no longer exist, history DTC will clear after 50 consecutive ignition cycles. DTC U1064 will also clear when conditions no longer exist, or when IPC or scan tool is used to clear codes.

NOTE: If DTC U1064 is a history code, problem may be intermittent. Wiggle wires while

performing the following test.

Testing

1. If IPC diagnostic system check was performed, go to next step. If IPC diagnostic system check was not performed, go to procedures in **IPC DIAGNOSTIC SYSTEM CHECK** .
2. Turn ignition off. Connect scan tool. Turn ignition on. Using scan tool, attempt to establish communication with BCM. If communication can be established, go to next step. If communication cannot be established, see **BODY CONTROL MODULE** article.
3. Using scan tool, select IPC DTCs function. Check for DTC U1255. If DTC U1255 exists, go to **DTC U1255: SERIAL DATA LINE MALFUNCTION** . If DTC U1255 does not exist, go to next step.
4. Check serial data line for following intermittent conditions:
   - An open in serial data line between IPC and BCM.
   - Short to ground.
   - Short to voltage.
   - Check star connector No. 1 (ensure bus bar is properly inserted).
   - Loose or damaged terminals.

   If no problem is found, go to next step. If problem is found, repair as necessary. Go to step 6).

5. Turn ignition off. Reinstall all components and connectors. Turn ignition on. Clear DTCs. Check for DTCs. If DTC U1064 is current, see **BODY CONTROL MODULE** article. If DTC U1064 is not current, system is operating properly.
6. Turn ignition off. Reinstall all components and reconnect all connectors. Turn ignition on. Clear DTCs. Perform procedures in **IPC DIAGNOSTIC SYSTEM CHECK** .

Diagnostic Aids

1. The following conditions may cause an intermittent: Intermittent open or short in serial data line, intermittent loss of communication with BCM, or damaged or loose star connector terminals.
2. If serial data line is shorted to ground or voltage, all systems connected to same serial data line will not be capable of communicating properly. Systems capable of storing loss of communication DTCs will store these codes in their memory. After DTC U1064 is repaired, clear all DTCs from each system capable of storing this DTC.
3. If DTC U1064 is set in IPC memory, use a scan tool to monitor communications with BCM. If IPC loses communication with BCM at any time, DTC U1064 is stored in IPC. Test drive vehicle to aid in diagnosing an intermittent condition. Check for open in serial data line between only IPC and BCM. Also check IPC and BCM for intermittent operation due to a loss of power or ground.

DTC U1128: LOSS OF COMMUNICATION WITH RADIO

Description

Serial data circuit is used to communicate information between systems. Each system on the serial data line is

assigned its own recognition code, which is used to identify which system is communicating. Systems periodically send a State of Health (SOH) message to other systems. If those systems fail to send an SOH message back, a corresponding DTC will be set. Also, any system that cannot communicate properly will set the corresponding DTC.

DTC U1128 will set when IPC has sent an SOH message to radio, and no SOH message response was sent back for 5 seconds. No driver warning message will be displayed.

DTC U1128 requires an ignition cycle to change from current to his-tory. If conditions for malfunction no longer exist, history DTC will clear after 50 consecutive ignition cycles. DTC U1128 will also clear when conditions no longer exist, or when IPC or scan tool is used to clear codes.

NOTE: If DTC U1128 is a history code, problem may be intermittent. Wiggle wires while performing the following test.

Testing

1. If IPC diagnostic system check was performed, go to next step. If IPC diagnostic system check was not performed, go to procedures in **IPC DIAGNOSTIC SYSTEM CHECK** .
2. Turn ignition off. Connect scan tool. Turn ignition on. Using scan tool, attempt to establish communication with radio. If communication can be established, go to next step. If communication cannot be established, locate and repair problem in data link connector system. See **WIRING DIAGRAMS** .
3. Using scan tool, select IPC DTCs function. Check for DTC U1255. If DTC U1255 exists, go to **DTC U1255: SERIAL DATA LINE MALFUNCTION** . If DTC U1255 does not exist, go to next step.
4. Check serial data line for following intermittent conditions:
   - An open in serial data line between IPC and radio.
   - Short to ground.
   - Short to voltage.
   - Check star connector No. 1 (ensure bus bar is properly inserted).
   - Loose or damaged terminals.

   If no problem is found, go to next step. If problem is found, repair as necessary. Go to step 6).

5. Turn ignition off. Reinstall all components and connectors. Turn ignition on. Clear DTCs. Check for DTCs. If DTC U1128 is current, locate and repair problem in data link connector system. See **WIRING DIAGRAMS** . If DTC U1128 is not current, system is operating properly.
6. Turn ignition off. Reinstall all components and reconnect all connectors. Turn ignition on. Clear DTCs. Perform procedures in **IPC DIAGNOSTIC SYSTEM CHECK** .

Diagnostic Aids

1. The following conditions may cause an intermittent: Intermittent open or short in serial data line, intermittent loss of communication with radio, or damaged or loose star connector terminals.

2. If serial data line is shorted to ground or voltage, all systems connected to same serial data line will not be capable of communicating properly. Systems capable of storing loss of communication DTCs will store these codes in their memory. After DTC U1128 is repaired, clear all DTCs from each system capable of storing this DTC.
3. If DTC U1128 is set in IPC memory, use a scan tool to monitor communications with radio. If IPC loses communication with radio at any time, DTC U1128 is stored in IPC. Test drive vehicle to aid in diagnosing an intermittent condition. Check for open in serial data line between only IPC and radio. Also check IPC and radio for intermittent operation due to a loss of power or ground.

DTC U1153: LOSS OF COMMUNICATION WITH HVAC

Description

Serial data circuit is used to communicate information between systems. Each system on the serial data line is assigned its own recognition code, which is used to identify which system is communicating. Systems periodically send a State of Health (SOH) message to other systems. If those systems fail to send an SOH message back, a corresponding DTC will be set. Also, any system that cannot communicate properly will set the corresponding DTC.

DTC U1153 will set when IPC has sent an SOH message to Heating, Ventilation and Air Conditioning (HVAC) system, and no SOH message response was sent back for 5 seconds. No driver warning message will be displayed.

DTC U1153 requires an ignition cycle to change from current to his-tory. If conditions for malfunction no longer exist, history DTC will clear after 50 consecutive ignition cycles. DTC U1153 will also clear when conditions no longer exist, or when IPC or scan tool is used to clear codes.

NOTE: **If DTC U1153 is a history code, problem may be intermittent. Wiggle wires while performing the following test.**

Testing

1. If IPC diagnostic system check was performed, go to next step. If IPC diagnostic system check was not performed, go to procedures in **IPC DIAGNOSTIC SYSTEM CHECK** .
2. Turn ignition off. Connect scan tool. Turn ignition on. Using scan tool, attempt to establish communication with HVAC system. If communication can be established, go to next step. If communication cannot be established, check serial data line. See **WIRING DIAGRAMS** . If serial data line is okay, locate and repair problem in HVAC system. See procedures in **A/C-HEATER SYSTEM** article in AIR CONDITIONING & HEAT section
3. Using scan tool, select IPC DTCs function. Check for DTC U1255. If DTC U1255 exists, go to **DTC U1255: SERIAL DATA LINE MALFUNCTION** . If DTC U1255 does not exist, go to next step.
4. Check serial data line for following intermittent conditions:
   - An open in serial data line between IPC and HVAC system.
   - Short to ground.
   - Short to voltage.

- Check star connector No. 1 (ensure bus bar is properly inserted).
- Loose or damaged terminals.

If no problem is found, go to next step. If problem is found, repair as necessary. Go to step 6).

5. Turn ignition off. Reinstall all components and connectors. Turn ignition on. Clear DTCs. Check for DTCs. If DTC U1153 is current, check serial data line. See **WIRING DIAGRAMS** . If serial data line is okay, locate and repair problem in HVAC system. See procedures in **A/C-HEATER SYSTEM** article in AIR CONDITIONING & HEAT section. If DTC U1153 is not current, system is operating properly.
6. Turn ignition off. Reinstall all components and reconnect all connectors. Turn ignition on. Clear DTCs. Perform procedures in **IPC DIAGNOSTIC SYSTEM CHECK** .

Diagnostic Aids

1. The following conditions may cause an intermittent: Intermittent open or short in serial data line, intermittent loss of communication with HVAC system, or damaged or loose star connector terminals.
2. If serial data line is shorted to ground or voltage, all systems connected to same serial data line will not be capable of communicating properly. Systems capable of storing loss of communication DTCs will store these codes in their memory. After DTC U1153 is repaired, clear all DTCs from each system capable of storing this DTC.
3. If DTC U1153 is set in IPC memory, use a scan tool to monitor communications with HVAC system. If IPC loses communication with HVAC system at any time, DTC U1153 is stored in IPC. Test drive vehicle to aid in diagnosing an intermittent condition. Check for open in serial data line between only IPC and HVAC system. Also check IPC and HVAC system for intermittent operation due to a loss of power or ground.

DTC U1160: LOSS OF COMMUNICATION WITH LDCM

Description

Serial data circuit is used to communicate information between systems. Each system on the serial data line is assigned its own recognition code, which is used to identify which system is communicating. Systems periodically send a State of Health (SOH) message to other systems. If those systems fail to send an SOH message back, a corresponding DTC will be set. Also, any system that cannot communicate properly will set the corresponding DTC.

DTC U1160 will set when IPC has sent an SOH message to Left Door Control Module (LDCM), and no SOH message response was sent back for 5 seconds. No driver warning message will be displayed.

DTC U1160 requires an ignition cycle to change from current to his-tory. If conditions for malfunction no longer exist, history DTC will clear after 50 consecutive ignition cycles. DTC U1160 will also clear when conditions no longer exist, or when IPC or scan tool is used to clear codes.

NOTE: **If DTC U1160 is a history code, problem may be intermittent. Wiggle wires while performing the following test.**

Testing

1. If IPC diagnostic system check was performed, go to next step. If IPC diagnostic system check was not performed, go to procedures in **IPC DIAGNOSTIC SYSTEM CHECK** .
2. Turn ignition off. Connect scan tool. Turn ignition on. Using scan tool, attempt to establish communication with LDCM. If communication can be established, go to next step. If communication cannot be established, check serial data line. See **WIRING DIAGRAMS** . If serial data line is okay, locate and repair problem in door control module system. See **REMOTE KEYLESS ENTRY** article.
3. Using scan tool, select IPC DTCs function. Check for DTC U1255. If DTC U1255 exists, go to DTC U1255: SERIAL DATA LINE MALFUNCTION. If DTC U1255 does not exist, go to next step.
4. Check serial data line for following intermittent conditions:
   - An open in serial data line between IPC and LDCM.
   - Short to ground.
   - Short to voltage.
   - Check star connector No. 1 (ensure bus bar is properly inserted).
   - Loose or damaged terminals.

   If no problem is found, go to next step. If problem is found, repair as necessary. Go to step 6).

5. Turn ignition off. Reinstall all components and connectors. Turn ignition on. Clear DTCs. Check for DTCs. If DTC U1160 is current, check serial data line. See **WIRING DIAGRAMS** . If serial data line is okay, locate and repair problem in door control module system. See **REMOTE KEYLESS ENTRY** article. If DTC U1160 is not current, system is operating properly.
6. Turn ignition off. Reinstall all components and reconnect all connectors. Turn ignition on. Clear DTCs. Perform procedures in **IPC DIAGNOSTIC SYSTEM CHECK** .

Diagnostic Aids

1. The following conditions may cause an intermittent: Intermittent open or short in serial data line, intermittent loss of communication with LDCM, or damaged or loose star connector terminals.
2. If serial data line is shorted to ground or voltage, all systems connected to same serial data line will not be capable of communicating properly. Systems capable of storing loss of communication DTCs will store these codes in their memory. After DTC U1160 is repaired, clear all DTCs from each system capable of storing this DTC.
3. If DTC U1160 is set in IPC memory, use a scan tool to monitor communications with LDCM. If IPC loses communication with LDCM at any time, DTC U1160 is stored in IPC. Test drive vehicle to aid in diagnosing an intermittent condition. Check for open in serial data line between only IPC and LDCM. Also check IPC and LDCM for intermittent operation due to a loss of power or ground.

DTC U1161: LOSS OF COMMUNICATION WITH RDCM

Description

Serial data circuit is used to communicate information between systems. Each system on the serial data line is

assigned its own recognition code, which is used to identify which system is communicating. Systems periodically send a State of Health (SOH) message to other systems. If those systems fail to send an SOH message back, a corresponding DTC will be set. Also, any system that cannot communicate properly will set the corresponding DTC.

DTC U1161 will set when IPC has sent an SOH message to Right Door Control Module (RDCM), and no SOH message response was sent back for 5 seconds. No driver warning message will be displayed.

DTC U1161 requires an ignition cycle to change from current to his-tory. If conditions for malfunction no longer exist, history DTC will clear after 50 consecutive ignition cycles. DTC U1161 will also clear when conditions no longer exist, or when IPC or scan tool is used to clear codes.

NOTE: If DTC U1161 is a history code, problem may be intermittent. Wiggle wires while performing the following test.

Testing

1. If IPC diagnostic system check was performed, go to next step. If IPC diagnostic system check was not performed, go to procedures in **IPC DIAGNOSTIC SYSTEM CHECK** .
2. Turn ignition off. Connect scan tool. Turn ignition on. Using scan tool, attempt to establish communication with RDCM. If communication can be established, go to next step. If communication cannot be established, check serial data line. See **WIRING DIAGRAMS** . If serial data line is okay, locate and repair problem in door control module system. See **REMOTE KEYLESS ENTRY** article.
3. Using scan tool, select IPC DTCs function. Check for DTC U1255. If DTC U1255 exists, go to DTC U1255: SERIAL DATA LINE MALFUNCTION. If DTC U1255 does not exist, go to next step.
4. Check serial data line for following intermittent conditions:
   - An open in serial data line between IPC and RDCM.
   - Short to ground.
   - Short to voltage.
   - Check star connector No. 1 (ensure bus bar is properly inserted).
   - Loose or damaged terminals.

   If no problem is found, go to next step. If problem is found, repair as necessary. Go to step 6).

5. Turn ignition off. Reinstall all components and connectors. Turn ignition on. Clear DTCs. Check for DTCs. If DTC U1161 is current, check serial data line. See **WIRING DIAGRAMS** . If serial data line is okay, locate and repair problem in door control module system. See **REMOTE KEYLESS ENTRY** article. If DTC U1161 is not current, system is operating properly.
6. Turn ignition off. Reinstall all components and reconnect all connectors. Turn ignition on. Clear DTCs. Perform procedures in **IPC DIAGNOSTIC SYSTEM CHECK** .

Diagnostic Aids

1. The following conditions may cause an intermittent: Intermittent open or short in serial data line,

intermittent loss of communication with RDCM, or damaged or loose star connector terminals.

2. If serial data line is shorted to ground or voltage, all systems connected to same serial data line will not be capable of communicating properly. Systems capable of storing loss of communication DTCs will store these codes in their memory. After DTC U1161 is repaired, clear all DTCs from each system capable of storing this DTC.
3. If DTC U1161 is set in IPC memory, use a scan tool to monitor communications with RDCM. If IPC loses communication with RDCM at any time, DTC U1161 is stored in IPC. Test drive vehicle to aid in diagnosing an intermittent condition. Check for open in serial data line between only IPC and RDCM. Also check IPC and RDCM for intermittent operation due to a loss of power or ground.

DTC U1166: LOSS OF COMMUNICATION WITH SCM

Description

Serial data circuit is used to communicate information between systems. Each system on the serial data line is assigned its own recognition code, which is used to identify which system is communicating. Systems periodically send a State of Health (SOH) message to other systems. If those systems fail to send an SOH message back, a corresponding DTC will be set. Also, any system that cannot communicate properly will set the corresponding DTC.

DTC U1166 will set when IPC has sent an SOH message to Seat Control Module (SCM), and no SOH message response was sent back for 5 seconds. No driver warning message will be displayed.

DTC U1166 requires an ignition cycle to change from current to his-tory. If conditions for malfunction no longer exist, history DTC will clear after 50 consecutive ignition cycles. DTC U1166 will also clear when conditions no longer exist, or when IPC or scan tool is used to clear codes.

NOTE: If DTC U1166 is a history code, problem may be intermittent. Wiggle wires while performing the following test.

Testing

1. If IPC diagnostic system check was performed, go to next step. If IPC diagnostic system check was not performed, go to procedures in **IPC DIAGNOSTIC SYSTEM CHECK** .
2. Turn ignition off. Connect scan tool. Turn ignition on. Using scan tool, attempt to establish communication with SCM. If communication can be established, go to next step. If communication cannot be established, check serial data line. See **WIRING DIAGRAMS** . If serial data line is okay, locate and repair problem in seat control module system. See **POWER SEATS** article.
3. Using scan tool, select IPC DTCs function. Check for DTC U1255. If DTC U1255 exists, go to **DTC U1255: SERIAL DATA LINE MALFUNCTION** . If DTC U1255 does not exist, go to next step.
4. Check serial data line for following intermittent conditions:
   - An open in serial data line between IPC and SCM.
   - Short to ground.
   - Short to voltage.

- Check star connector No. 1 (ensure bus bar is properly inserted).
- Loose or damaged terminals.

If no problem is found, go to next step. If problem is found, repair as necessary. Go to step 6).

5. Turn ignition off. Reinstall all components and connectors. Turn ignition on. Clear DTCs. Check for DTCs. If DTC U1166 is current, check serial data line. See **WIRING DIAGRAMS** . If serial data line is okay, locate and repair problem in seat control module system. See **POWER SEATS** article. If DTC U1166 is not current, system is operating properly.
6. Turn ignition off. Reinstall all components and reconnect all connectors. Turn ignition on. Clear DTCs. Perform procedures in **IPC DIAGNOSTIC SYSTEM CHECK** .

Diagnostic Aids

1. The following conditions may cause an intermittent: Intermittent open or short in serial data line, intermittent loss of communication with SCM, or damaged or loose star connector terminals.
2. If serial data line is shorted to ground or voltage, all systems connected to same serial data line will not be capable of communicating properly. Systems capable of storing loss of communication DTCs will store these codes in their memory. After DTC U1166 is repaired, clear all DTCs from each system capable of storing this DTC.
3. If DTC U1166 is set in IPC memory, use a scan tool to monitor communications with SCM. If IPC loses communication with SCM at any time, DTC U1166 is stored in IPC. Test drive vehicle to aid in diagnosing an intermittent condition. Check for open in serial data line between only IPC and SCM. Also check IPC and SCM for intermittent operation due to a loss of power or ground.

DTC U1176: LOSS OF COMMUNICATION WITH RFA

Description

Serial data circuit is used to communicate information between systems. Each system on the serial data line is assigned its own recognition code, which is used to identify which system is communicating. Systems periodically send a State of Health (SOH) message to other systems. If those systems fail to send an SOH message back, a corresponding DTC will be set. Also, any system that cannot communicate properly will set the corresponding DTC.

DTC U1176 will set when IPC has sent an SOH message to Remote Function Actuation (RFA) system, and no SOH message response was sent back for 5 seconds. No driver warning message will be displayed.

DTC U1176 requires an ignition cycle to change from current to his-tory. If conditions for malfunction no longer exist, history DTC will clear after 50 consecutive ignition cycles. DTC U1176 will also clear when conditions no longer exist, or when IPC or scan tool is used to clear codes.

NOTE: If DTC U1176 is a history code, problem may be intermittent. Wiggle wires while performing the following test.

Testing

1. If IPC diagnostic system check was performed, go to next step. If IPC diagnostic system check was not performed, go to procedures in **IPC DIAGNOSTIC SYSTEM CHECK** .
2. Turn ignition off. Connect scan tool. Turn ignition on. Using scan tool, attempt to establish communication with RFA system. If communication can be established, go to next step. If communication cannot be established, see **REMOTE KEYLESS ENTRY SYSTEM** article.
3. Using scan tool, select IPC DTCs function. Check for DTC U1255. If DTC U1255 exists, go to **DTC U1255: SERIAL DATA LINE MALFUNCTION** . If DTC U1255 does not exist, go to next step.
4. Check serial data line for following intermittent conditions:
   - An open in serial data line between IPC and RFA system.
   - Short to ground.
   - Short to voltage.
   - Check star connector No. 1 (ensure bus bar is properly inserted).
   - Loose or damaged terminals.

   If no problem is found, go to next step. If problem is found, repair as necessary. Go to step 6).

5. Turn ignition off. Reinstall all components and connectors. Turn ignition on. Clear DTCs. Check for DTCs. If DTC U1176 is current, see **REMOTE KEYLESS ENTRY SYSTEM** article. If DTC U1176 is not current, system is operating properly.
6. Turn ignition off. Reinstall all components and reconnect all connectors. Turn ignition on. Clear DTCs. Perform procedures in **IPC DIAGNOSTIC SYSTEM CHECK** .

Diagnostic Aids

1. The following conditions may cause an intermittent: Intermittent open or short in serial data line, intermittent loss of communication with RFA system, or damaged or loose star connector terminals.
2. If serial data line is shorted to ground or voltage, all systems connected to same serial data line will not be capable of communicating properly. Systems capable of storing loss of communication DTCs will store these codes in their memory. After DTC U1176 is repaired, clear all DTCs from each system capable of storing this DTC.
3. If DTC U1176 is set in IPC memory, use a scan tool to monitor communications with RFA. If IPC loses communication with RFA system at any time, DTC U1176 is stored in IPC. Test drive vehicle to aid in diagnosing an intermittent condition. Check for open in serial data line between only IPC and RFA system. Also check IPC and RFA system for intermittent operation due to a loss of power or ground.

DTC U1255: SERIAL DATA LINE MALFUNCTION

Description

Serial data circuit is used to communicate information between systems. Each system on the serial data line is assigned its own recognition code, which is used to identify which system is communicating. Systems periodically send a State of Health (SOH) message to other systems. If those systems fail to send an SOH

message back, a corresponding DTC will be set. Also, any system that cannot communicate properly will set the corresponding DTC.

DTC U1255 will set when IPC detects an open or short in serial data line circuit for one second. No driver warning message will be displayed.

DTC U1255 requires an ignition cycle to change from current to his-tory. If conditions for malfunction no longer exist, history DTC will clear after 50 consecutive ignition cycles. DTC U1255 will also clear when conditions no longer exist, or when IPC or scan tool is used to clear codes.

NOTE: **If DTC U1255 is a history code, problem may be intermittent. Wiggle wires while performing the following test.**

Testing

1. If IPC diagnostic system check was performed, go to next step. If IPC diagnostic system check was not performed, go to procedures in **IPC DIAGNOSTIC SYSTEM CHECK** .
2. Turn ignition off. Install scan tool. Turn ignition on. Using scan tool, attempt to establish communication with other systems connected to data line (i.e., PCM, BCM, RFA) If scan tool communicates with other systems, go to next step. If scan tool does not communicate with other systems, locate and repair problem in data link connector system. See **WIRING DIAGRAMS** .
3. Check serial data line for following intermittent conditions:
   - Short to ground.
   - Short to voltage.
   - Check star connector No. 1 (ensure bus bar is properly inserted).
   - Loose or damaged terminals.

   If no problem is found, go to next step. If problem is found, repair as necessary. Go to step 6).

4. Turn ignition off. Reinstall all components and connectors. Turn ignition on. Clear DTCs. Check for DTCs. If DTC U1255 is current, go to next step. If DTC U1255 is not current, system is operating properly.
5. Replace IPC. See **INSTRUMENT PANEL CLUSTER** under REMOVAL & INSTALLATION. Go to next step.
6. Turn ignition off. Reinstall all components and reconnect all connectors. Turn ignition on. Clear DTCs. Perform procedures in **IPC DIAGNOSTIC SYSTEM CHECK** .

Diagnostic Aids

1. The following conditions may cause an intermittent: Intermittent open or short in serial data line, or damaged or loose star connector terminals.
2. If serial data line is shorted to ground or voltage, all systems connected to same serial data line will not be capable of communicating properly. Systems capable of storing loss of communication DTCs will store these codes in their memory. After DTC U1255 is repaired, clear all DTCs from each system capable of

storing this DTC.

3. If DTC U1255 is set in IPC memory, check for the same DTC stored in other systems. If DTC U1255 is stored in other systems, check for open or short in serial data line circuit.

REMOVAL & INSTALLATION

WARNING: Deactivate air bag system before performing any service operation. See AIR BAG RESTRAINT SYSTEM article. DO NOT apply electrical power to any component on steering column without first deactivating air bag system. Air bag may deploy.

CONSOLE

Removal & Installation

1. Open console door. Pull up on rear of TCS switch to release it from retaining clips (if switch does not release from trip plate, use screwdriver in recess at rear of switch). Disconnect TCS connector. Remove TCS switch.
2. Using small flat-blade screwdriver, carefully remove console retaining nut covers. Remove front and rear console nuts. Remove instrument panel accessory trim plate nuts. Lift rear of console slightly and pull rearward to release front of console.
3. Disconnect electrical accessory plug connector. Unscrew electrical accessory plug retainer from housing. Remove electrical accessory plug housing from console. Disconnect fuel door release switch connector. Remove fuel door release switch. Turn console over. Using small flat-blade screwdriver, carefully release switch tabs. Remove console from vehicle.
4. To install, reverse removal procedure. Tighten console retaining nuts to 89 INCH lbs. (10 N.m).

INSTRUMENT PANEL ACCESSORY TRIM PLATE & KNEE BOLSTER PANEL

Removal & Installation

1. Remove console. See CONSOLE. Set parking brake. Shift transmission into 2nd gear (A/T models) or 4th gear (M/T models). On M/T models, grasp shift control boot, apply light pressure in toward shift control lever, and release shift boot retaining tabs from instrument panel accessory trim plate.
2. On all models, remove ashtray. Remove instrument panel accessory trim plate grille. Remove trim plate screws next to cigarette lighter and behind ashtray. Remove trim plate screw in grille opening. Holding sides of trim plate near curve at base, pull trim plate rearward to release locking tabs. Disconnect electrical connector.
3. On M/T models, rotate shift control boot until one end is down in shifter opening in trim plate. On all models, remove instrument panel accessory trim plate.
4. Prying at lower edge of switch, release locking tab and remove foglight/rear compartment lid release switch. Disconnect electrical connector. Remove driver's knee bolster trim panel screws. Holding trim panel at sides, pull rearward firmly to release locking tabs. Remove knee bolster trim panel. To install, reverse removal procedure.

INSTRUMENT PANEL CLUSTER (IPC)

CAUTION: When IPC is removed from vehicle, DO NOT set IPC on its face for more than 15 minutes, or fluid-filled air core gauges may be damaged.

Removal & Installation

1. Disconnect negative battery cable. Remove instrument panel upper trim pad. See **INSTRUMENT PANEL UPPER TRIM PAD** . Remove IPC-to-steering column bracket retaining screws.
2. Lift rear of IPC slightly to release locator tab. Lift IPC and disconnect electrical connector. Remove IPC. See **Fig. 2** . To install, reverse removal procedure. Tighten IPC-to-steering column bracket screws to 31 INCH lbs. (3.5 N.m).

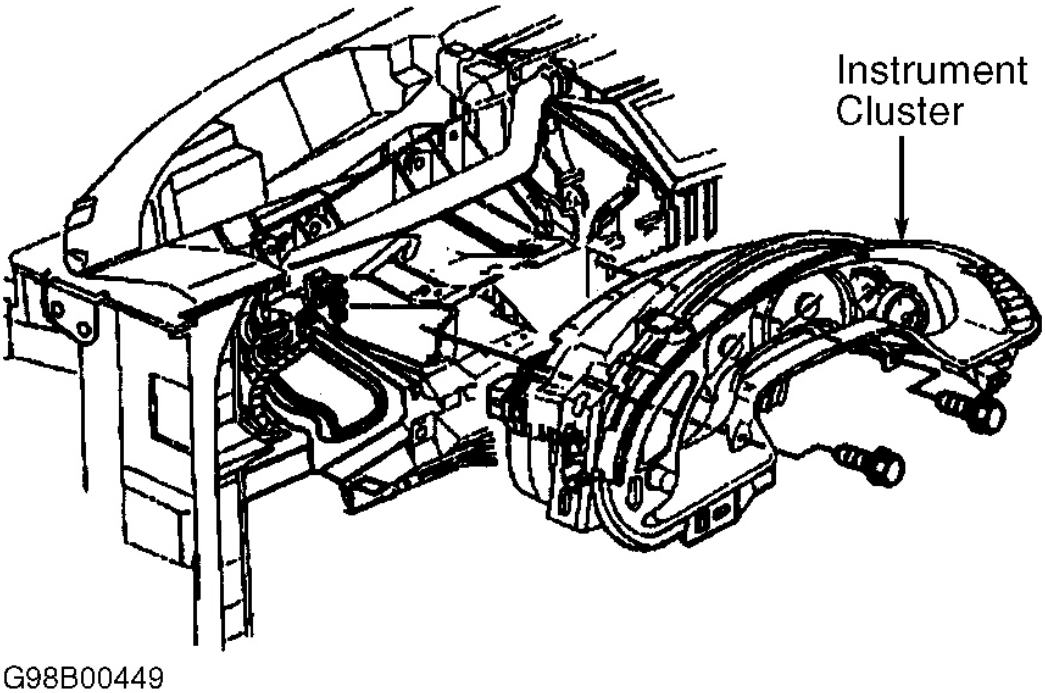

Fig. 2: Exploded View of Instrument Cluster
Courtesy of GENERAL MOTORS CORP.

INSTRUMENT PANEL UPPER TRIM PAD

Removal

1. Remove instrument panel accessory trim plate and knee bolster panel. See **INSTRUMENT PANEL ACCESSORY TRIM PLATE & KNEE BOLSTER PANEL** . Open glove box door, and disconnect

glove box light switch connector. Reach behind glove box door, and push out trim plugs. Remove lower glove box bolts. Remove side and upper glove box screws. Remove glove box.

2. Remove windshield defroster grille. Move Daytime Running Lights (DRL) sensor and sunload sensor (if equipped) into defroster duct to provide additional clearance. Remove windshield side garnish moldings. Remove upper trim pad-to-defroster duct screws. Remove screws retaining upper trim pad to left and right hinge pillars.
3. Remove IPC bezel to upper trim pad. Remove screws retaining upper trim pad to driver's knee bolster outer bracket and center support bracket. Remove upper trim pad-to-passenger's air bag bracket.
4. Tilt steering wheel to lowest position. Lift rear edge of upper trim pad about 2" to clear air distribution duct. Slowly pull upper trim pad out while guiding tabs on sides of trim pad past hinge pillars. Disconnect hazard warning switch connector. Remove upper trim pad.

Installation

To install, reverse removal procedure. Tighten lower glove box bolts and upper trim pad-to-hinge pillar screws to 22 INCH lbs. (2.5 N.m). Tighten all other screws to 17 INCH lbs. (1.9 N.m).

IGNITION SWITCH

Removal & Installation

1. Disconnect negative battery cable. Set parking brake. Remove instrument panel accessory trim plate and knee bolster panel. See **INSTRUMENT PANEL ACCESSORY TRIM PLATE & KNEE BOLSTER PANEL** . Remove lock cylinder connector from retaining tab on ignition switch. Disconnect lock cylinder connector.

NOTE: Note how ignition switch lock cylinder wiring is wrapped around base of ignition switch bezel for installation reference.

2. Remove ignition switch bezel. Disconnect hazard warning switch wiring harness from ignition switch retainer. Disconnect ignition switch connectors.
3. On A/T models, insert key into ignition switch. Turn ignition switch to RUN position. Using flat-blade screwdriver, depress park/lock cable retaining tab (located on bottom of switch near base of cable). Disconnect park/lock cable from ignition switch.
4. On all models, remove bolts and remove ignition switch. To install, reverse removal procedure. Tighten ignition switch retaining bolts to 49 INCH lbs. (5.5 N.m).

IGNITION LOCK CYLINDER

Removal

1. Disconnect negative battery cable. Set parking brake. Remove instrument panel accessory trim plate and knee bolster panel. See **INSTRUMENT PANEL ACCESSORY TRIM PLATE & KNEE BOLSTER PANEL** . Remove lock cylinder connector from retaining tab on ignition switch. Disconnect lock cylinder connector.

2. Insert key into ignition switch. Turn ignition switch to RUN position. Using a flat-blade screwdriver, depress and hold ignition lock cylinder retaining tab located on lower right side of ignition switch. Remove ignition lock cylinder. Note how ignition switch lock cylinder wiring is wrapped around base of ignition switch bezel for installation reference. Remove ignition switch bezel.

Installation

1. Install ignition switch bezel to lock cylinder. Insert ignition lock cylinder with key into ignition switch, and press into position until retaining tab produces an audible click. Pull on lock cylinder to ensure it is fully engaged. Turn ignition switch to LOCK position, and remove key.
2. To complete installation, reverse removal procedure. Insert key into ignition switch and check freedom of movement in various positions. Attempt to remove key with ignition switch in each position. Key should only be removable when ignition switch is in LOCK position.

DRIVER INFORMATION CENTER (DIC) SWITCHES

CAUTION: When IPC is removed from vehicle, DO NOT set IPC on its face for more than 15 minutes, or fluid-filled air core gauges may be damaged.

Removal & Installation

1. Remove IPC. See **INSTRUMENT PANEL CLUSTER** (IPC). Disconnect instrument panel dimmer switch connector. Disconnect DIC switch connector. Remove IPC bezel retaining screws, and remove bezel. Remove screws and DIC switch.
2. To install, reverse removal procedure. Tighten DIC switch screws to 13 INCH lbs. (1.5 N.m). Tighten IPC bezel retaining screws to 13 INCH lbs. (1.5 N.m).

WIRING DIAGRAMS

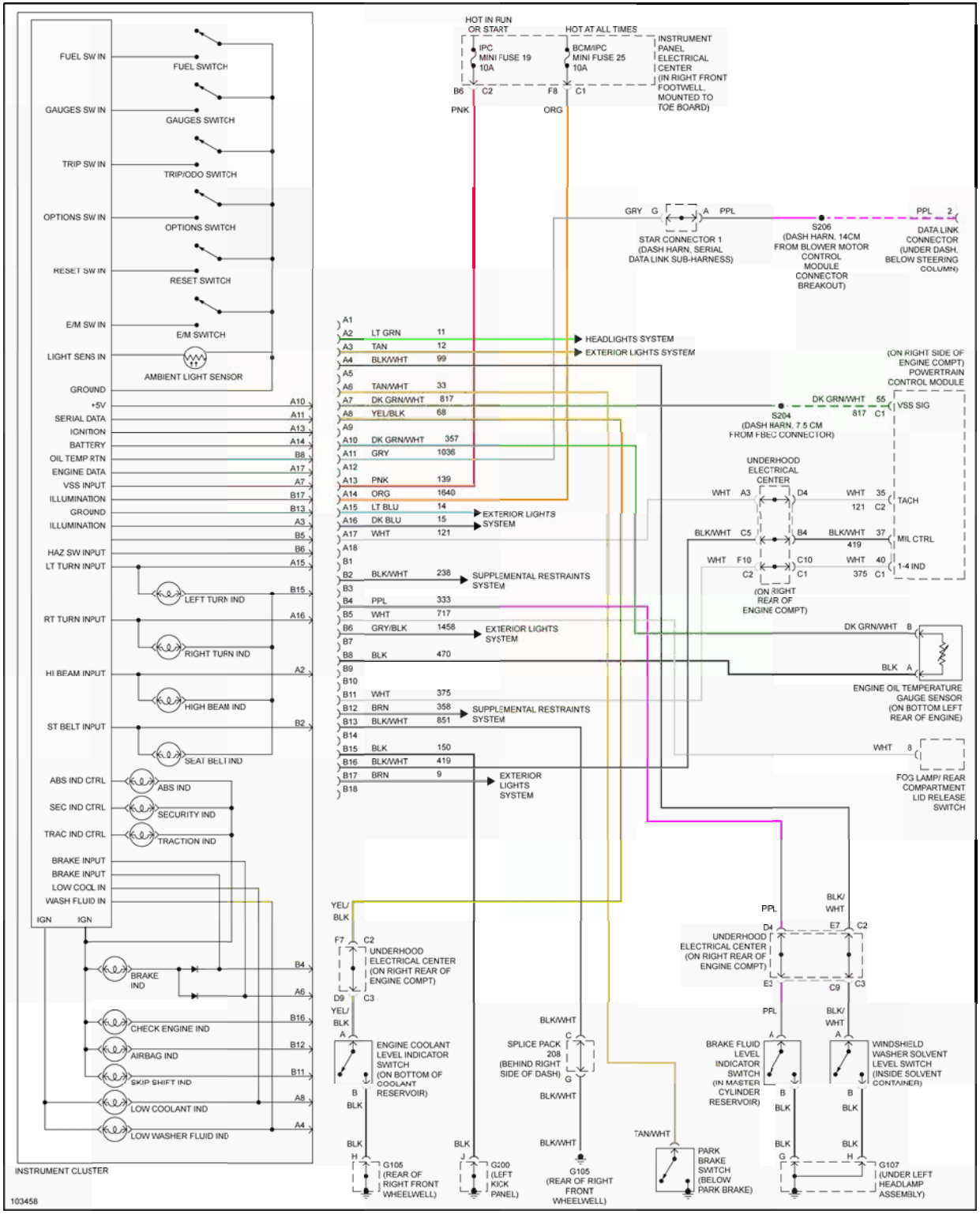
HOT IN RUN OR START
HOT AT ALL TIMES
IPC MINI FUSE 19 10A
BCM/IPC MINI FUSE 25 10A
INSTRUMENT PANEL ELECTRICAL CENTER (IN RIGHT FRONT FOOTWELL, MOUNTED TO TOE BOARD)
B6 C2 F8 C1
PNK
ORG
FUEL SW IN
FUEL SWITCH
GAUGES SW IN
GAUGES SWITCH
TRIP SW IN
TRIP/ODO SWITCH
OPTIONS SW IN
OPTIONS SWITCH
RESET SW IN
RESET SWITCH
E/M SW IN
E/M SWITCH
LIGHT SENS IN
AMBIENT LIGHT SENSOR
GROUND
+5V
SERIAL DATA
IGNITION
BATTERY
OIL TEMP RTN
ENGINE DATA
VSS INPUT
ILLUMINATION
GROUND
ILLUMINATION
HAZ SW INPUT
LT TURN INPUT
LEFT TURN IND
RT TURN INPUT
RIGHT TURN IND
HI BEAM INPUT
HIGH BEAM IND
ST BELT INPUT
SEAT BELT IND
ABS IND CTRL
ABS IND
SEC IND CTRL
SECURITY IND
TRAC IND CTRL
TRACTION IND
BRAKE INPUT
BRAKE INPUT
LOW COOL IN
WASH FLUID IN
IGN
IGN
BRAKE IND
CHECK ENGINE IND
AIRBAG IND
SKIP SHIFT IND
LOW COOLANT IND
LOW WASHER FLUID IND
INSTRUMENT CLUSTER
A1
A2 LT GRN 11
A3 TAN 12
A4 BLK/WHT 99
A5
A6 TAN/WHT 33
A7 DK GRN/WHT 817
A8 YEL/BLK 68
A9
A10 DK GRN/WHT 357
A11 GRY 1036
A12
A13 PNK 139
A14 ORG 1640
A15 LT BLU 14
A16 DK BLU 15
A17 WHT 121
A18
B1
B2 BLK/WHT 238
B3
B4 PPL 333
B5 WHT 717
B6 GRY/BLK 1458
B7
B8 BLK 470
B9
B10
B11 WHT 375
B12 BRN 358
B13 BLK/WHT 851
B14
B15 BLK 150
B16 BLK/WHT 419
B17 BRN 9
B18
HEADLIGHTS SYSTEM
EXTERIOR LIGHTS SYSTEM
EXTERIOR LIGHTS SYSTEM
SUPPLEMENTAL RESTRAINTS SYSTEM
EXTERIOR LIGHTS SYSTEM
SUPPLEMENTAL RESTRAINTS SYSTEM
EXTERIOR LIGHTS SYSTEM
GRY G A PPL
STAR CONNECTOR 1 (DASH HARN, SERIAL DATA LINK SUB-HARNESS)
S206 (DASH HARN, 14CM FROM BLOWER MOTOR CONTROL MODULE CONNECTOR BREAKOUT)
PPL 2
DATA LINK CONNECTOR (UNDER DASH, BELOW STEERING COLUMN)
(ON RIGHT SIDE OF ENGINE COMPT) POWERTRAIN CONTROL MODULE
DK GRN/WHT 55
817 C1
VSS SIG
S204 (DASH HARN, 7.5 CM FROM FBEC CONNECTOR)
UNDERHOOD ELECTRICAL CENTER
WHT A3 D4 WHT 35
121 C2 TACH
BLK/WHT C5 B4 BLK/WHT 37
419 MIL CTRL
WHT F10 C10 WHT 40
C2 C1 375 C1 1-4 IND
(ON RIGHT REAR OF ENGINE COMPT)
DK GRN/WHT B
BLK A
ENGINE OIL TEMPERATURE GAUGE SENSOR (ON BOTTOM LEFT REAR OF ENGINE)
WHT 8
FOG LAMP/ REAR COMPARTMENT LID RELEASE SWITCH
YEL/BLK
F7 C2
UNDERHOOD ELECTRICAL CENTER (ON RIGHT REAR OF ENGINE COMPT)
D9 C3
PPL
BLK/WHT
D4 E7 C2
UNDERHOOD ELECTRICAL CENTER (ON RIGHT REAR OF ENGINE COMPT)
E3 C9 C3
YEL/BLK
A
ENGINE COOLANT LEVEL INDICATOR SWITCH (ON BOTTOM OF COOLANT RESERVOIR)
B
BLK
BLK/WHT
C
SPLICE PACK 208 (BEHIND RIGHT SIDE OF DASH)
G
BLK/WHT
PPL
A
BRAKE FLUID LEVEL INDICATOR SWITCH (IN MASTER CYLINDER RESERVOIR)
B
BLK
BLK/WHT
A
WINDSHIELD WASHER SOLVENT LEVEL SWITCH (INSIDE SOLVENT CONTAINER)
B
BLK
BLK
H
G105 (REAR OF RIGHT FRONT WHEELWELL)
BLK
J
G200 (LEFT KICK PANEL)
BLK/WHT
G105 (REAR OF RIGHT FRONT WHEELWELL)
TAN/WHT
PARK BRAKE SWITCH (BELOW PARK BRAKE)
BLK
G
BLK
H
G107 (UNDER LEFT HEADLAMP ASSEMBLY)
103458

Fig. 3: Analog Instrument Panel Wiring Diagram

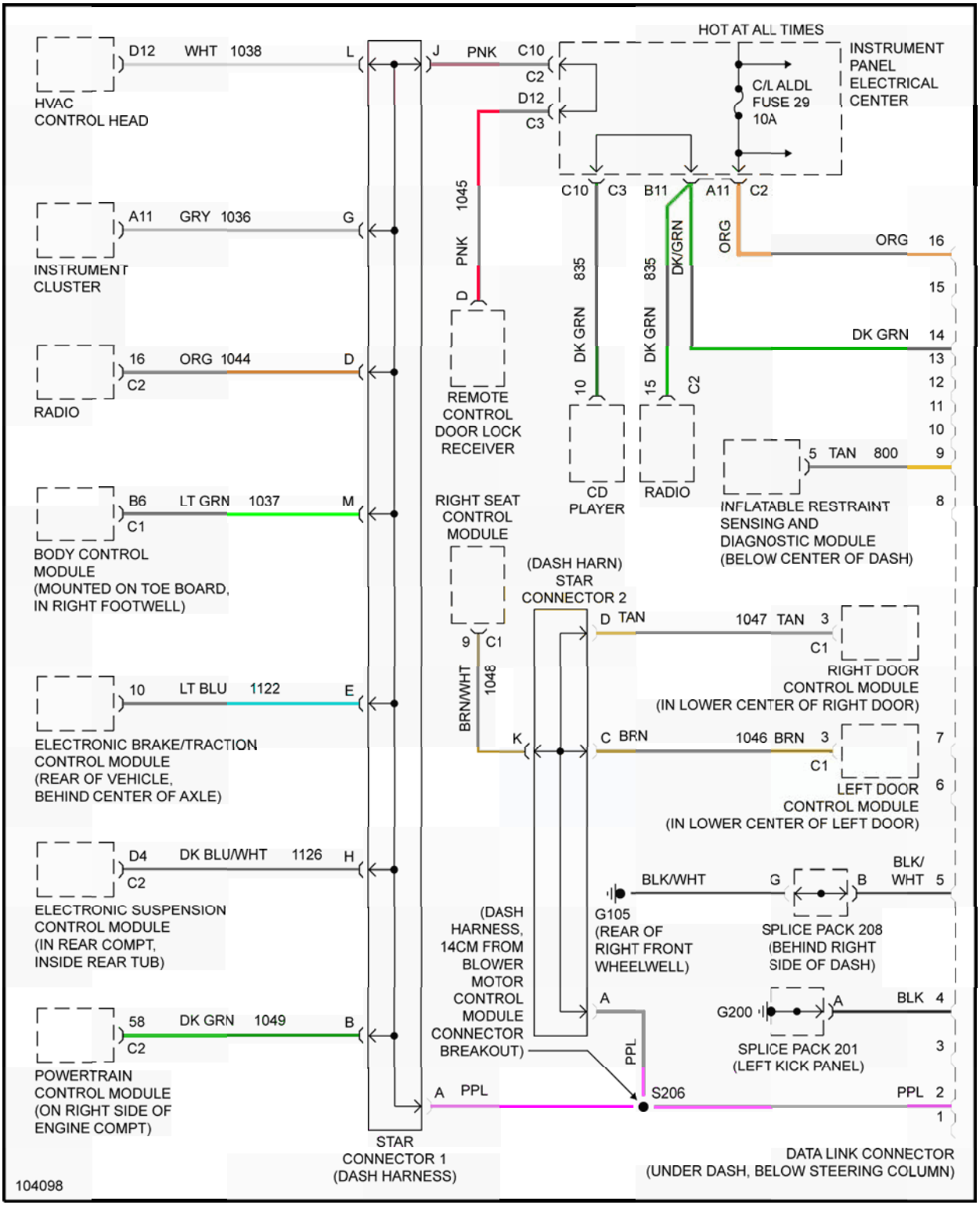
HVAC CONTROL HEAD
D12 WHT 1038 L
INSTRUMENT CLUSTER
A11 GRY 1036 G
RADIO
16 C2 ORG 1044 D
BODY CONTROL MODULE (MOUNTED ON TOE BOARD, IN RIGHT FOOTWELL)
B6 C1 LT GRN 1037 M
ELECTRONIC BRAKE/TRACTION CONTROL MODULE (REAR OF VEHICLE, BEHIND CENTER OF AXLE)
10 LT BLU 1122 E
ELECTRONIC SUSPENSION CONTROL MODULE (IN REAR COMPT, INSIDE REAR TUB)
D4 C2 DK BLU/WHT 1126 H
POWERTRAIN CONTROL MODULE (ON RIGHT SIDE OF ENGINE COMPT)
58 C2 DK GRN 1049 B
STAR CONNECTOR 1 (DASH HARNESS)
J PNK C10
C2
D12
C3
HOT AT ALL TIMES
INSTRUMENT PANEL ELECTRICAL CENTER
C/L ALDL FUSE 29 10A
1045 PNK D
REMOTE CONTROL DOOR LOCK RECEIVER
C10 C3 B11 A11 C2
835 DK GRN 10
835 DK GRN 15
DK/GRN
ORG
CD PLAYER
RADIO
ORG 16
15
DK GRN 14
13
12
11
10
5 TAN 800 9
8
INFLATABLE RESTRAINT SENSING AND DIAGNOSTIC MODULE (BELOW CENTER OF DASH)
RIGHT SEAT CONTROL MODULE
9 C1
BRN/WHT 1046
K
(DASH HARN) STAR CONNECTOR 2
D TAN 1047 TAN 3
C1
RIGHT DOOR CONTROL MODULE (IN LOWER CENTER OF RIGHT DOOR)
C BRN 1046 BRN 3
C1
7
6
LEFT DOOR CONTROL MODULE (IN LOWER CENTER OF LEFT DOOR)
BLK/WHT G B BLK/ WHT 5
G105 (REAR OF RIGHT FRONT WHEELWELL)
SPLICE PACK 208 (BEHIND RIGHT SIDE OF DASH)
(DASH HARNESS, 14CM FROM BLOWER MOTOR CONTROL MODULE CONNECTOR BREAKOUT)
A
PPL
G200 A BLK 4
SPLICE PACK 201 (LEFT KICK PANEL)
3
A PPL
S206
PPL 2
1
DATA LINK CONNECTOR (UNDER DASH, BELOW STEERING COLUMN)
104098

Fig. 4: Data Link Connector Wiring Diagram

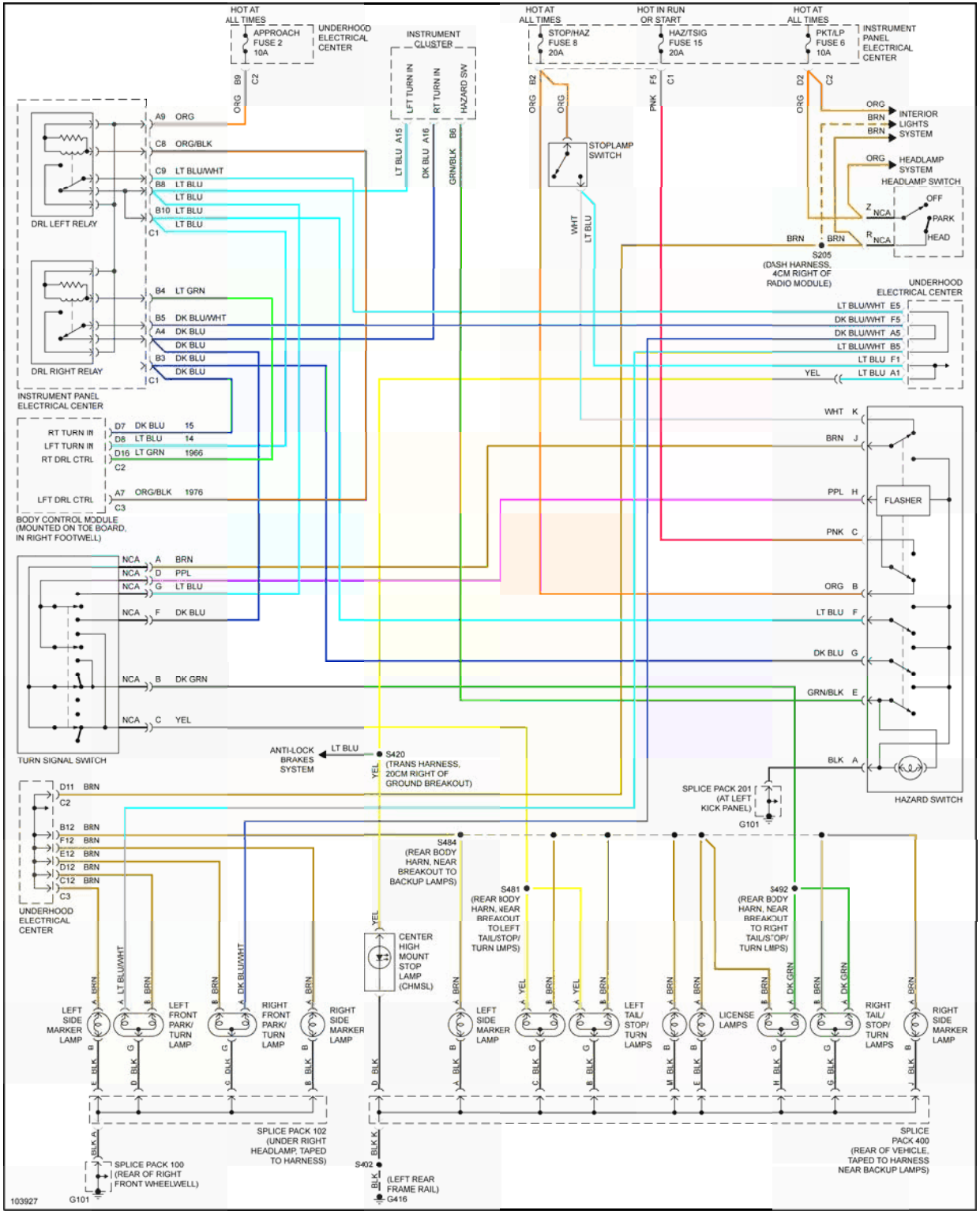
HOT AT ALL TIMES
APPROACH FUSE 2 10A
UNDERHOOD ELECTRICAL CENTER
INSTRUMENT CLUSTER
LFT TURN IN
RT TURN IN
HAZARD SW
HOT AT ALL TIMES
STOP/HAZ FUSE 8 20A
HOT IN RUN OR START
HAZ/TSIG FUSE 15 20A
HOT AT ALL TIMES
PKT/LP FUSE 6 10A
INSTRUMENT PANEL ELECTRICAL CENTER
INTERIOR LIGHTS SYSTEM
HEADLAMP SYSTEM
HEADLAMP SWITCH
OFF
PARK
HEAD
STOPLAMP SWITCH
S205 (DASH HARNESS, 4CM RIGHT OF RADIO MODULE)
UNDERHOOD ELECTRICAL CENTER
DRL LEFT RELAY
DRL RIGHT RELAY
INSTRUMENT PANEL ELECTRICAL CENTER
RT TURN IN
LFT TURN IN
RT DRL CTRL
LFT DRL CTRL
BODY CONTROL MODULE (MOUNTED ON TOE BOARD, IN RIGHT FOOTWELL)
FLASHER
HAZARD SWITCH
TURN SIGNAL SWITCH
ANTI-LOCK BRAKES SYSTEM
S420 (TRANS HARNESS, 20CM RIGHT OF GROUND BREAKOUT)
SPLICE PACK 201 (AT LEFT KICK PANEL)
G101
UNDERHOOD ELECTRICAL CENTER
S484 (REAR BODY HARN, NEAR BREAKOUT TO BACKUP LAMPS)
S481 (REAR BODY HARN, NEAR BREAKOUT TO LEFT TAIL/STOP/ TURN LMPS)
S492 (REAR BODY HARN, NEAR BREAKOUT TO RIGHT TAIL/STOP/ TURN LMPS)
CENTER HIGH MOUNT STOP LAMP (CHMSL)
LEFT SIDE MARKER LAMP
LEFT FRONT PARK/ TURN LAMP
RIGHT FRONT PARK/ TURN LAMP
RIGHT SIDE MARKER LAMP
LEFT SIDE MARKER LAMP
LEFT TAIL/ STOP/ TURN LAMPS
LICENSE LAMPS
RIGHT TAIL/ STOP/ TURN LAMPS
RIGHT SIDE MARKER LAMP
SPLICE PACK 102 (UNDER RIGHT HEADLAMP, TAPED TO HARNESS)
SPLICE PACK 400 (REAR OF VEHICLE, TAPED TO HARNESS NEAR BACKUP LAMPS)
SPLICE PACK 100 (REAR OF RIGHT FRONT WHEELWELL)
G101
S402
(LEFT REAR FRAME RAIL)
G416
103927

Fig. 5: Exterior Lights Wiring Diagram

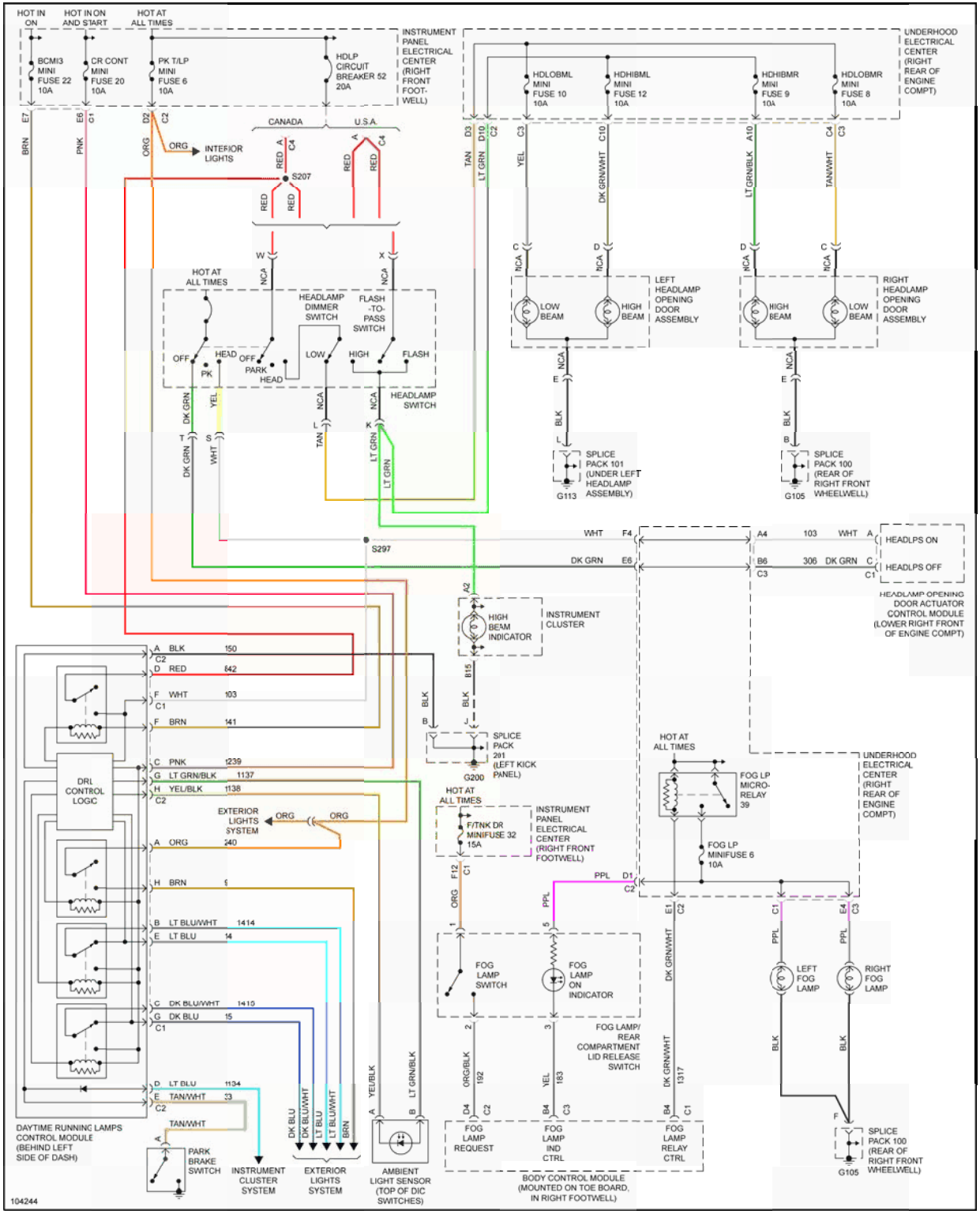
HOT IN ON
HOT IN ON AND START
HOT AT ALL TIMES
BCMI3 MINI FUSE 22 10A
CR CONT MINI FUSE 20 10A
PK T/LP MINI FUSE 6 10A
HDLP CIRCUIT BREAKER 52 20A
INSTRUMENT PANEL ELECTRICAL CENTER (RIGHT FRONT FOOT-WELL)
HDLOBML MINI FUSE 10 10A
HDHIBML MINI FUSE 12 10A
HDHIBMR MINI FUSE 9 10A
HDLOBMR MINI FUSE 8 10A
UNDERHOOD ELECTRICAL CENTER (RIGHT REAR OF ENGINE COMPT)
CANADA
U.S.A.
INTERIOR LIGHTS
S207
HOT AT ALL TIMES
HEADLAMP DIMMER SWITCH
FLASH -TO- PASS SWITCH
OFF
HEAD
PARK
LOW
HIGH
FLASH
HEADLAMP SWITCH
LOW BEAM
HIGH BEAM
LEFT HEADLAMP OPENING DOOR ASSEMBLY
RIGHT HEADLAMP OPENING DOOR ASSEMBLY
SPLICE PACK 101 (UNDER LEFT HEADLAMP ASSEMBLY)
G113
SPLICE PACK 100 (REAR OF RIGHT FRONT WHEELWELL)
G105
S297
HEADLPS ON
HEADLPS OFF
HEADLAMP OPENING DOOR ACTUATOR CONTROL MODULE (LOWER RIGHT FRONT OF ENGINE COMPT)
HIGH BEAM INDICATOR
INSTRUMENT CLUSTER
SPLICE PACK 201 (LEFT KICK PANEL)
G200
DRL CONTROL LOGC
EXTERIOR LIGHTS SYSTEM
HOT AT ALL TIMES
F/TNK DR MINIFUSE 32 15A
INSTRUMENT PANEL ELECTRICAL CENTER (RIGHT FRONT FOOTWELL)
FOG LP MICRO-RELAY 39
FOG LP MINIFUSE 6 10A
UNDERHOOD ELECTRICAL CENTER (RIGHT REAR OF ENGINE COMPT)
FOG LAMP SWITCH
FOG LAMP ON INDICATOR
FOG LAMP/ REAR COMPARTMENT LID RELEASE SWITCH
LEFT FOG LAMP
RIGHT FOG LAMP
FOG LAMP REQUEST
FOG LAMP IND CTRL
FOG LAMP RELAY CTRL
BODY CONTROL MODULE (MOUNTED ON TOE BOARD, IN RIGHT FOOTWELL)
SPLICE PACK 100 (REAR OF RIGHT FRONT WHEELWELL)
G105
DAYTIME RUNNING LAMPS CONTROL MODULE (BEHIND LEFT SIDE OF DASH)
PARK BRAKE SWITCH
INSTRUMENT CLUSTER SYSTEM
EXTERIOR LIGHTS SYSTEM
AMBIENT LIGHT SENSOR (TOP OF DIC SWITCHES)
104244

Fig. 6: Headlight System Wiring Diagram

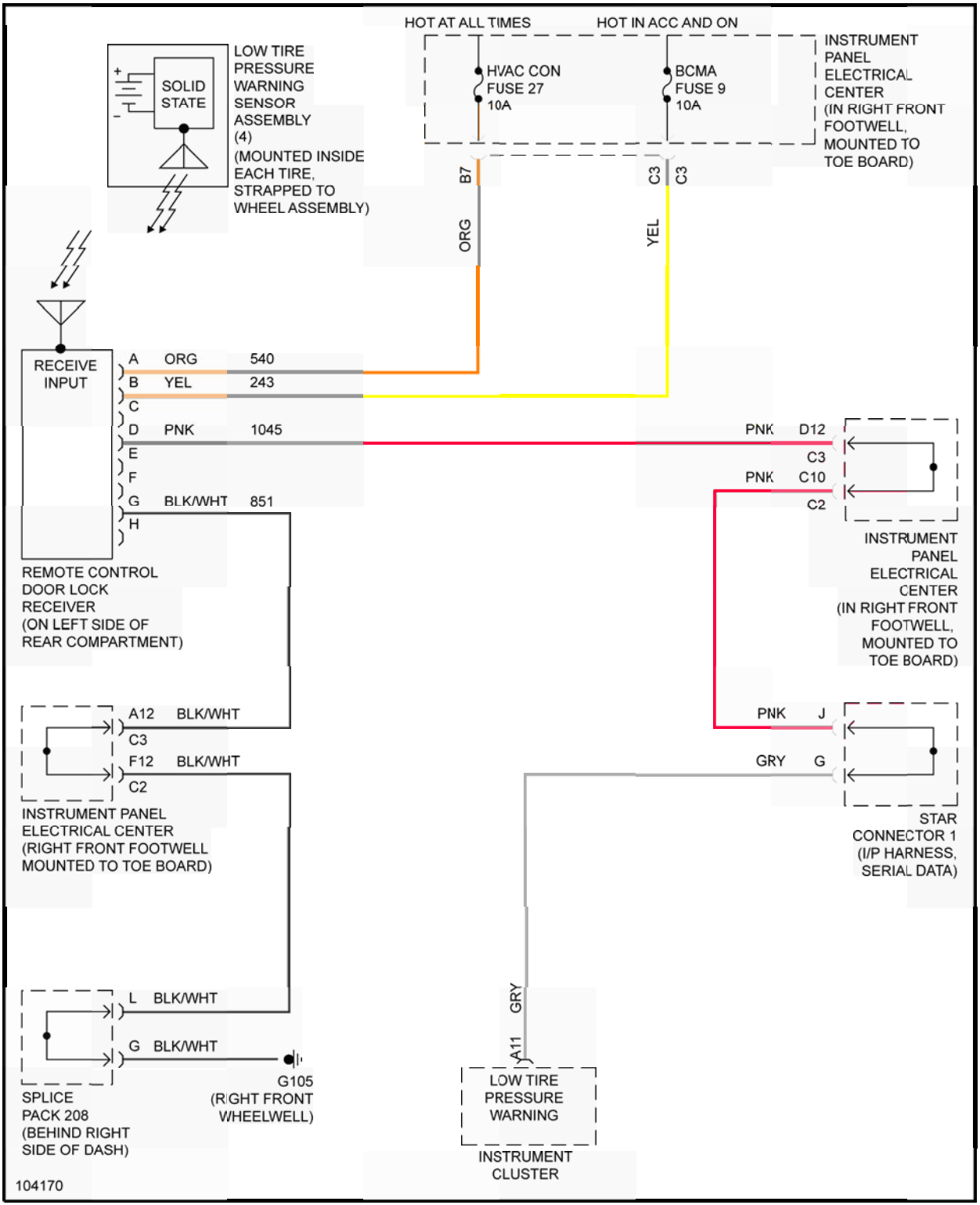
HOT AT ALL TIMES
HOT IN ACC AND ON
INSTRUMENT PANEL ELECTRICAL CENTER (IN RIGHT FRONT FOOTWELL, MOUNTED TO TOE BOARD)
HVAC CON FUSE 27 10A
BCMA FUSE 9 10A
SOLID STATE
LOW TIRE PRESSURE WARNING SENSOR ASSEMBLY (4) (MOUNTED INSIDE EACH TIRE, STRAPPED TO WHEEL ASSEMBLY)
B7
ORG
C3
C3
YEL
RECEIVE INPUT
A ORG 540
B YEL 243
C
D PNK 1045
E
F
G BLK/WHT 851
H
REMOTE CONTROL DOOR LOCK RECEIVER (ON LEFT SIDE OF REAR COMPARTMENT)
PNK D12
C3
PNK C10
C2
INSTRUMENT PANEL ELECTRICAL CENTER (IN RIGHT FRONT FOOTWELL, MOUNTED TO TOE BOARD)
A12 BLK/WHT
C3
F12 BLK/WHT
C2
INSTRUMENT PANEL ELECTRICAL CENTER (RIGHT FRONT FOOTWELL MOUNTED TO TOE BOARD)
PNK J
GRY G
STAR CONNECTOR 1 (I/P HARNESS, SERIAL DATA)
L BLK/WHT
G BLK/WHT
SPLICE PACK 208 (BEHIND RIGHT SIDE OF DASH)
G105 (RIGHT FRONT WHEELWELL)
GRY
A11
LOW TIRE PRESSURE WARNING
INSTRUMENT CLUSTER
104170

Fig. 7: Warning System Wiring Diagram

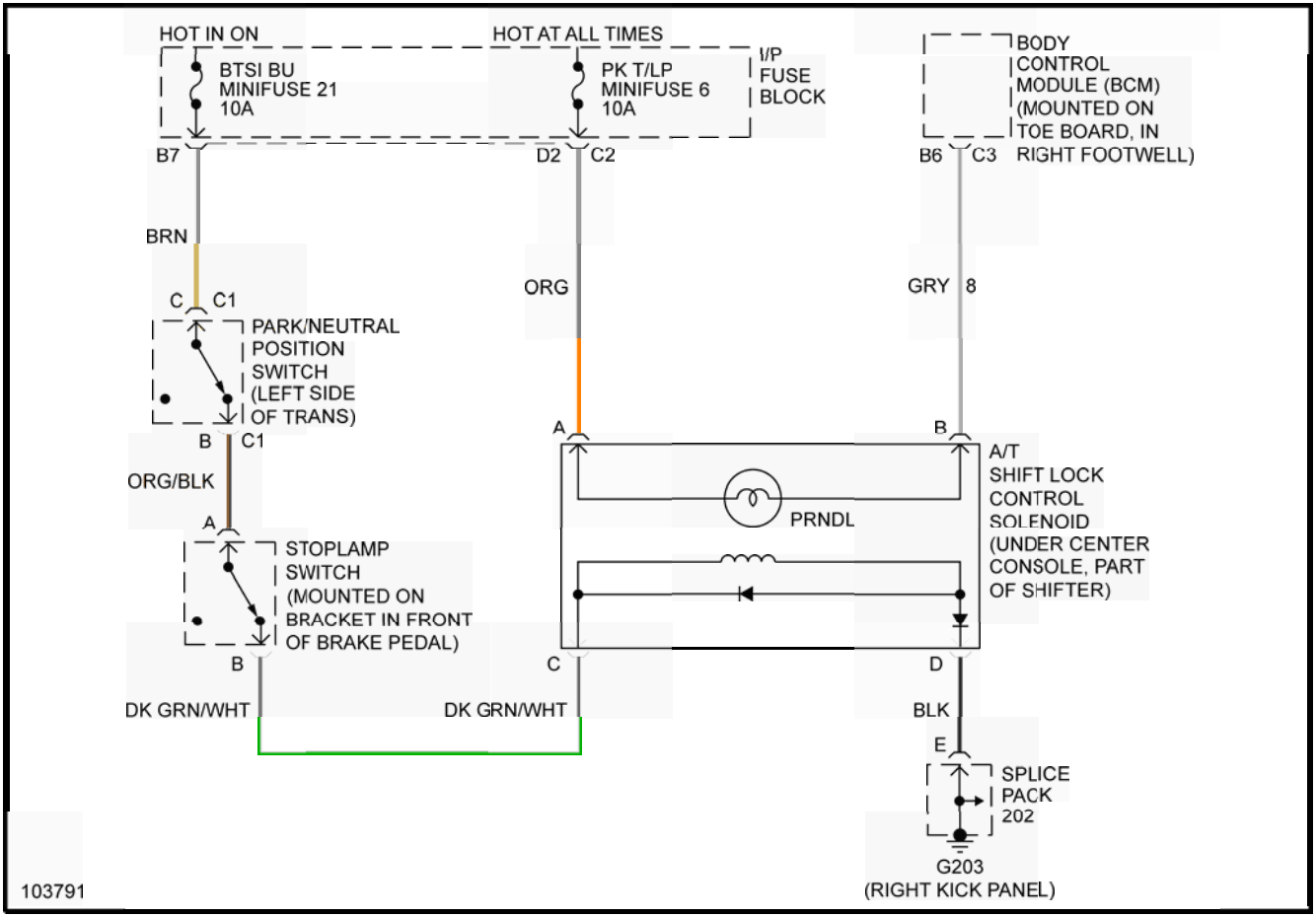
HOT IN ON
HOT AT ALL TIMES
BTSI BU
MINIFUSE 21
10A
PK T/LP
MINIFUSE 6
10A
I/P
FUSE
BLOCK
BODY
CONTROL
MODULE (BCM)
(MOUNTED ON
TOE BOARD, IN
RIGHT FOOTWELL)
B7
D2
C2
B6
C3
BRN
ORG
GRY
8
C
C1
PARK/NEUTRAL
POSITION
SWITCH
(LEFT SIDE
OF TRANS)
B
C1
A
B
A/T
SHIFT LOCK
CONTROL
SOLENOID
(UNDER CENTER
CONSOLE, PART
OF SHIFTER)
PRNDL
ORG/BLK
A
STOPLAMP
SWITCH
(MOUNTED ON
BRACKET IN FRONT
OF BRAKE PEDAL)
B
C
D
DK GRN/WHT
DK GRN/WHT
BLK
E
SPLICE
PACK
202
G203
(RIGHT KICK PANEL)
103791

Fig. 8: Shift Interlock System Wiring Diagram