Alfa Romeo
1972-73 2000 Berlina
USA Version

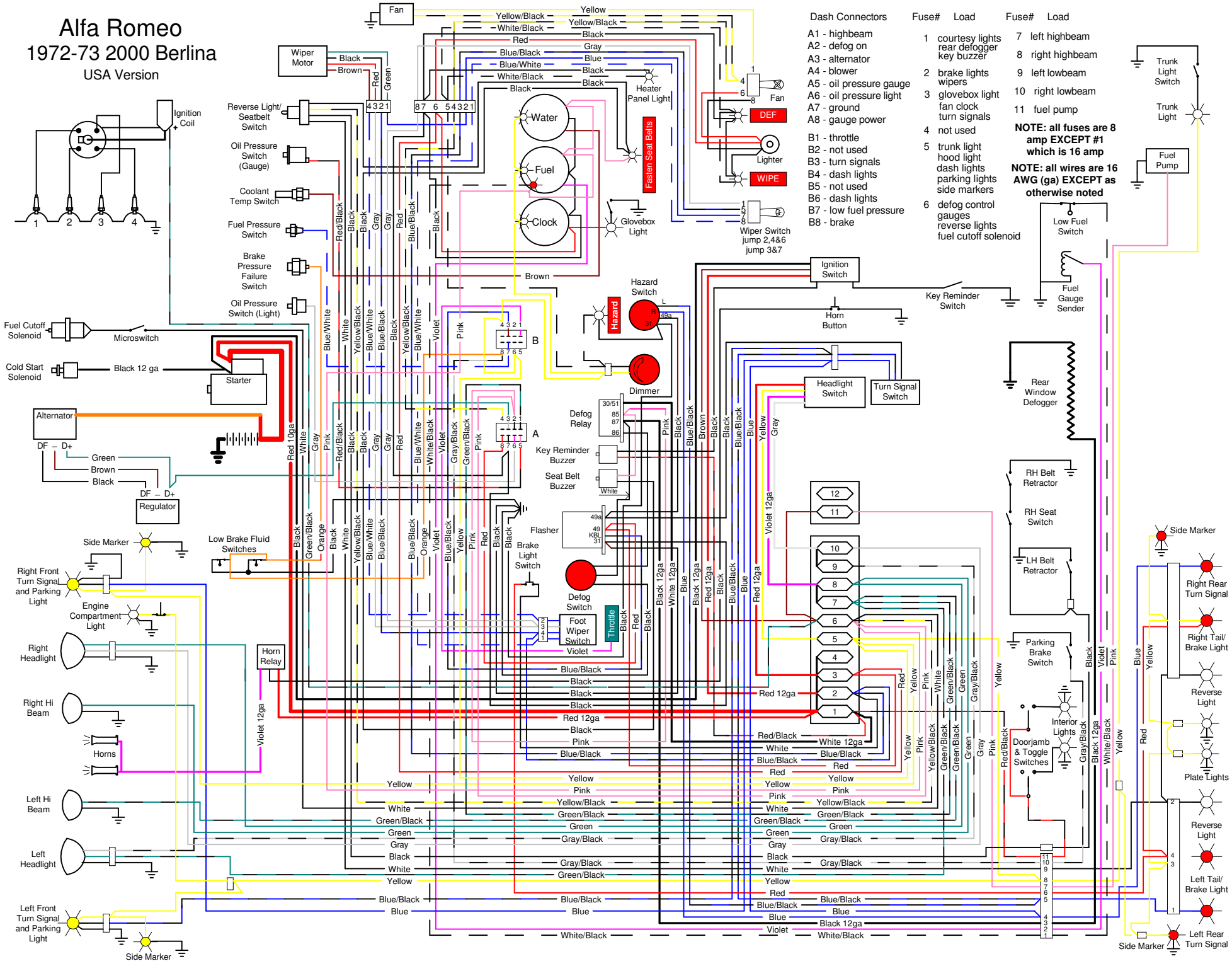

Dash Connectors	Fuse#	Load	Fuse#	Load
A1 - highbeam	1	courtesy lights rear defogger key buzzer	7	left highbeam
A2 - defog on	2	brake lights wipers	8	right highbeam
A3 - alternator	3	glovebox light fan clock turn signals	9	left lowbeam
A4 - blower	4	not used	10	right lowbeam
A5 - oil pressure gauge	5	trunk light hood light dash lights parking lights side markers	11	fuel pump
A6 - oil pressure light	6	defog control gauges reverse lights fuel cutoff solenoid		
A7 - ground				
A8 - gauge power				
B1 - throttle				
B2 - not used				
B3 - turn signals				
B4 - dash lights				
B5 - not used				
B6 - dash lights				
B7 - low fuel pressure				
B8 - brake				

NOTE: all fuses are 8 amp EXCEPT #1 which is 16 amp

NOTE: all wires are 16 AWG (ga) EXCEPT as otherwise noted