2007 Cadillac Escalade/Escalade ESV Owner Manual

Seats and Restraint Systems 7
- Front Seats 9
- Rear Seats 18
- Safety Belts 38
- Child Restraints 60
- Airbag System 89
- Restraint System Check 106

Features and Controls 109
- Keys 111
- Doors and Locks 120
- Windows 131
- Theft-Deterrent Systems 133
- Starting and Operating Your Vehicle 137
- Mirrors 155
- OnStar® System 163
- Universal Home Remote System 165
- Storage Areas 170
- Sunroof 179

Instrument Panel 181
- Instrument Panel Overview 184
- Climate Controls 212
- Warning Lights, Gages, and Indicators 220
- Driver Information Center (DIC) 239
- Audio System(s) 265

Driving Your Vehicle 317
- Your Driving, the Road, and Your Vehicle 318
- Towing 372

Service and Appearance Care 389
- Service 392
- Fuel 395
- Checking Things Under the Hood 400
- All-Wheel Drive 438
- Rear Axle 439
- Front Axle 440
- Headlamp Aiming 441

Bulb Replacement 445
Windshield Wiper Blade Replacement ... 448
Tires 450
Appearance Care 492
Vehicle Identification 502
Electrical System 502
Capacities and Specifications 512

Maintenance Schedule 513
Maintenance Schedule 514

Customer Assistance Information 535
Customer Assistance and Information ... 536
Reporting Safety Defects 552

Index 555

GENERAL MOTORS, GM, the GM Emblem, CADILLAC, the CADILLAC Crest & Wreath, and the names ESCALADE and ESV are registered trademarks of General Motors Corporation.

This manual includes the latest information at the time it was printed. We reserve the right to make changes after that time without notice. For vehicles first sold in Canada, substitute the name “General Motors of Canada Limited” for Cadillac Motor Car Division whenever it appears in this manual.

Keep this manual in the vehicle, so it will be there if it is ever needed while you are on the road. If the vehicle is sold, leave the manual in the vehicle.

Canadian Owners

A French language copy of this manual can be obtained from your dealer or from:

Helm, Incorporated
P.O. Box 07130
Detroit, MI 48207

How to Use This Manual

Many people read the owner manual from beginning to end when they first receive their new vehicle. If this is done, it can help you learn about the features and controls for the vehicle. Pictures and words work together in the owner manual to explain things.

Index

A good place to quickly locate information about the vehicle is the Index in the back of the manual. It is an alphabetical list of what is in the manual and the page number where it can be found.

Litho in U.S.A.
Part No. 15854796 A First Printing

©2005 General Motors Corporation. All Rights Reserved.

Safety Warnings and Symbols

There are a number of safety cautions in this book. We use a box and the word CAUTION to tell about things that could hurt you if you were to ignore the warning.

⚠ CAUTION:

These mean there is something that could hurt you or other people.

In the caution area, we tell you what the hazard is. Then we tell you what to do to help avoid or reduce the hazard. Please read these cautions. If you do not, you or others could be hurt.

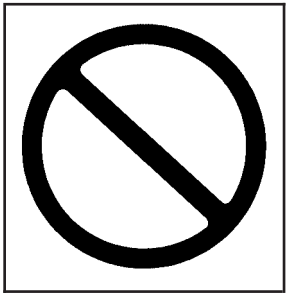

You will also find a circle with a slash through it in this book. This safety symbol means “Do Not,” “Do Not do this” or “Do Not let this happen.”

Vehicle Damage Warnings

Also, in this manual you will find these notices:

Notice: **These mean there is something that could damage your vehicle.**

A notice tells about something that can damage the vehicle. Many times, this damage would not be covered by your vehicle's warranty, and it could be costly. But the notice will tell what to do to help avoid the damage.

When you read other manuals, you might see CAUTION and NOTICE warnings in different colors or in different words.

There are also warning labels on the vehicle. They use the same words, CAUTION or NOTICE.

Vehicle Symbols

The vehicle has components and labels that use symbols instead of text. Symbols are shown along with the text describing the operation or information relating to a specific component, control, message, gage, or indicator.

If you need help figuring out a specific name of a component, gage, or indicator, reference the following topics:

- Seats and Restraint Systems in Section 1
- Features and Controls in Section 2
- Instrument Panel Overview in Section 3
- Climate Controls in Section 3
- Warning Lights, Gages, and Indicators in Section 3
- Audio System(s) in Section 3
- Engine Compartment Overview in Section 5

These are some examples of symbols that may be found on the vehicle:

CAUTION POSSIBLE INJURY	LATCH BOTH LAP AND SHOULDER BELTS TO PROTECT OCCUPANT DO NOT TWIST SAFETY BELT WHEN ATTACHING		MASTER LIGHTING SWITCH	ENGINE COOLANT TEMP	TIRE PRESSURE
PROTECT EYES BY SHIELDING	FASTEN SEAT BELTS	AIRBAG	TURN SIGNALS	BATTERY CHARGING SYSTEM	FUSE BOX ACCESS
CAUSTIC BATTERY ACID COULD CAUSE BURNS	MOVE SEAT FULLY REARWARD SECURE CHILD SEAT	DO NOT INSTALL A REAR-FACING CHILD RESTRAINT IN THIS SEATING POSITION	PARKING LAMPS	BRAKE	ENGINE COOLANT FAN
AVOID SPARKS OR FLAMES	PULL BELT OUT COMPLETELY THEN SECURE CHILD SEAT	DO NOT INSTALL A FORWARD-FACING CHILD RESTRAINT IN THIS SEATING POSITION	HAZARD WARNING FLASHER	COOLANT	FUEL
SPARK OR FLAME COULD EXPLODE BATTERY	POWER WINDOW	DOOR LOCK UNLOCK	DAYTIME RUNNING LAMPS	ENGINE OIL PRESSURE	OWNER'S MANUAL
			FOG LAMPS	ANTI-LOCK BRAKES	SERVICE MANUAL

Section 1 Seats and Restraint Systems

Front Seats 9
Power Seats 9
Power Lumbar 10
Heated Seats 11
Heated and Cooled Seats 12
Memory Seat, Mirrors, and Pedals 13
Power Reclining Seatbacks 15
Head Restraints 17
Center Seat 18

Rear Seats 18
Heated Seats 18
60/40 Split Bench Seat (Second Row) 19
Bucket Seats (Second Row) 26
Third Row Seat 33

Safety Belts 38
Safety Belts: They Are for Everyone 38
Questions and Answers About Safety Belts 42
How to Wear Safety Belts Properly 43
Driver Position 43
Shoulder Belt Height Adjustment 50
Safety Belt Use During Pregnancy 51
Right Front Passenger Position 51
Center Front Passenger Position 52
Rear Seat Passengers 53
Rear Safety Belt Comfort Guides 56
Safety Belt Pretensioners 59
Safety Belt Extender 59

Child Restraints 60
Older Children 60
Infants and Young Children 63
Child Restraint Systems 67
Where to Put the Restraint 72
Lower Anchors and Tethers for Children (LATCH) 73
Securing a Child Restraint in a Rear Seat Position 82
Securing a Child Restraint in the Center Front Seat Position 84
Securing a Child Restraint in the Right Front Seat Position 85

Section 1 Seats and Restraint Systems

Airbag System 89
Where Are the Airbags? 92
When Should an Airbag Inflate? 95
What Makes an Airbag Inflate? 97
How Does an Airbag Restrain? 98
What Will You See After an Airbag Inflates? 98
Passenger Sensing System 100
Servicing Your Airbag-Equipped Vehicle 104
Adding Equipment to Your Airbag-Equipped Vehicle 105
Restraint System Check 106
Checking the Restraint Systems 106
Replacing Restraint System Parts After a Crash 107

Front Seats

Power Seats

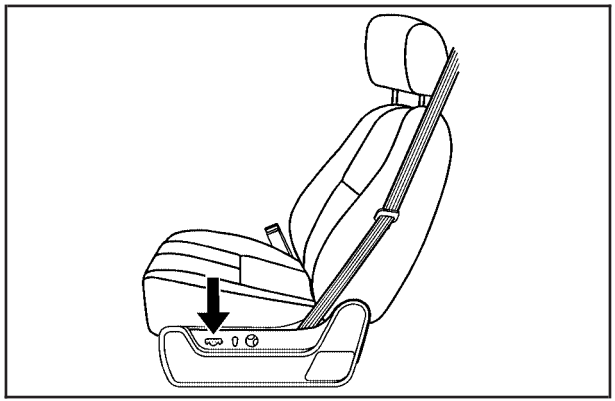

Driver's Seat with Power Seat Control, Power Recline, and Power Lumbar shown

The power seat controls are located on the outboard side of the front seats.

- Move the seat forward or rearward by sliding the control forward or rearward.
- Raise or lower the front part of the seat cushion by moving the front of the control up or down.
- Raise or lower the rear part of the seat cushion by moving the rear of the control up or down.
- Raise or lower the entire seat by moving the entire control up or down.

The power reclining seatback control is located behind the power seat control on the outboard side of the seats. See *Power Reclining Seatbacks on page 15*.

Your vehicle has a memory function which allows seat settings to be saved and recalled. See *Memory Seat, Mirrors, and Pedals on page 13*.

Power Lumbar

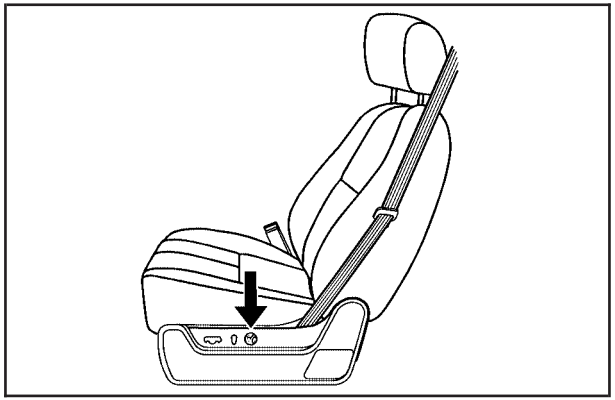

The controls used to operate the power lumbar feature are located on the outboard side of the seats.

- To increase lumbar support, press and hold the front of the control.
- To decrease lumbar support, press and hold the rear of the control.
- To raise the height of the support, press and hold the top of the control.
- To lower the height of the support, press and hold the bottom of the control.

Let go of the control when the lower seatback reaches the desired level of support.

Your vehicle has a memory function which allows seat settings to be saved and recalled. See *Memory Seat, Mirrors, and Pedals on page 13* for more information.

Keep in mind that as your seating position changes, as it may during long trips, so should the position of your lumbar support. Adjust the seat as needed.

Heated Seats

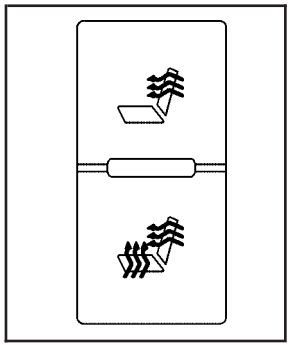

If the front seats have the heated seat feature, the buttons used to control this feature are located on the climate control panel.

(Heated Seatback): To heat only the seatback, press the top button with the heated seatback symbol.

This symbol will appear on the climate control display to indicate that the feature is on. Press the button to cycle through the temperature settings of high, medium and low and to turn the heated seatback off. Indicator bars next to the symbol designate the level of heat selected: three for high, two for medium, and one for low.

(Heated Seat and Seatback): To heat the entire seat, press the bottom button with the heated seat and seatback symbol.

This symbol will appear on the climate control display to indicate that the feature is on. Press the button to cycle through the temperature settings of high, medium and low and to turn the heated seat off. Indicator bars next to the symbol designate the level of heat selected: three for high, two for medium, and one for low.

The heated seats will be canceled ten seconds after the ignition is turned off. If you want to use the heated seat feature after you restart the vehicle, you will need to press the appropriate heated seat button again.

If your vehicle has heated and cooled seats, see *Heated and Cooled Seats on page 12*.

Heated and Cooled Seats

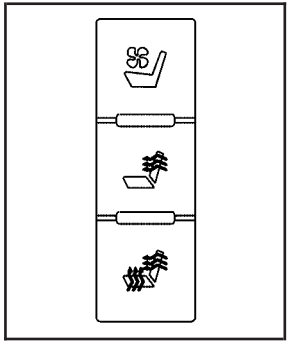

If the front seats have the heated and cooled seat feature, the buttons used to control this feature are located on the climate control panel.

(Cooled Seat): To cool the entire seat, press the button with the cooled seat symbol.

This symbol will appear on the climate control display to indicate that the feature is on. Press the button to cycle through the temperature settings of high, medium and low and to turn the cooled seat off. Indicator bars next to the symbol designate the level of cooling selected: three for high, two for medium, and one for low.

(Heated Seatback): To heat only the seatback, press the button with the heated seatback symbol.

This symbol will appear on the climate control display to indicate that the feature is on. Press the button to cycle through the temperature settings of high, medium and low and to turn the heated seatback off. Indicator bars next to the symbol designate the level of heat selected: three for high, two for medium, and one for low.

(Heated Seat and Seatback): To heat the entire seat, press the button with the heated seat and seatback symbol.

This symbol will appear on the climate control display to indicate that the feature is on. Press the button to cycle through the temperature settings of high, medium and low and to turn the heated seat off. Indicator bars next to the symbol designate the level of heat selected: three for high, two for medium, and one for low.

The heated and cooled seats will be canceled after the ignition is turned off. If you want to use the heated and cooled seat feature after you restart your vehicle, you will need to press the appropriate seat button again.

Memory Seat, Mirrors, and Pedals

Your vehicle has the memory package.

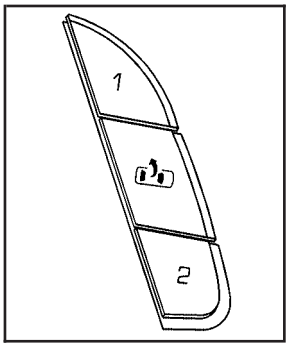

The controls for this feature are located on the driver's door panel, and are used to program and recall memory settings for the driver's seat, outside mirrors, and the adjustable throttle and brake pedal feature if your vehicle has it.

To save your positions in memory, do the following:

1. Adjust the driver's seat, including the seatback recliner and lumbar, both outside mirrors, and the throttle and brake pedals to a comfortable position.

   See *Outside Power Foldaway Mirrors on page 160* and *Adjustable Throttle and Brake Pedal on page 141* for more information.

   Some mirrors might not function with the memory feature.

2. Press and hold button 1 until two beeps sound through the driver's front speaker to let you know that the position has been stored.

A second seating, mirror, and throttle and brake pedal position can be programmed by repeating the above steps and pressing button 2.

To recall the memory positions, the vehicle must be in PARK (P). Press and release either button 1 or button 2 corresponding to the desired driving position. The seat, outside mirrors, and adjustable throttle and brake pedals will move to the position previously stored. You will hear a single beep.

If you use the remote keyless entry transmitter to enter your vehicle and the remote recall memory feature is on, automatic seat, mirror, and adjustable pedal movement will occur. See “MEMORY SEAT RECALL” under *DIC Vehicle Customization on page 254* for more information.

To stop recall movement of the memory feature at any time, press one of the power seat controls, memory buttons, power mirror buttons, or adjustable pedal switch.

If something has blocked the driver’s seat and/or the adjustable pedals while recalling a memory position, the driver’s seat and/or the adjustable pedals recall may stop working. If this happens, press the appropriate control for the area that is not recalling for two seconds, after the obstruction is removed. Then try recalling the memory position again by pressing the appropriate memory button. If the memory position is still not recalling, see your GM dealer for service.

Easy Exit Seat

The control for this feature is located on the driver’s door panel between buttons 1 and 2.

With the vehicle in PARK (P), the exit position can be recalled by pressing the exit button. You will hear a single beep. The driver’s seat will move back.

If the easy exit seat feature is on in the Driver Information Center (DIC), automatic seat movement will occur when the key is removed from the ignition. See “EASY EXIT SEAT” under *DIC Vehicle Customization on page 254* for more information.

Further programming for the memory seat feature can be done using the DIC. You can select or not select the following:

- The automatic easy exit seat feature
- The remote memory seat recall feature

For programming information, see *DIC Vehicle Customization on page 254*.

Power Reclining Seatbacks

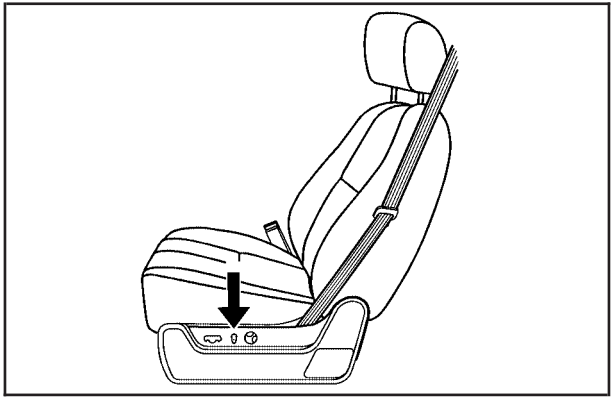

Driver's Seat with Power Seat Control, Power Recline, and Power Lumbar shown

The controls for the power reclining seatback are located on the outboard side of the front seats behind the power seat control.

- To recline the seatback, tilt the top of the control rearward.
- To bring the seatback forward, tilt the top of the control forward.

⚠ CAUTION:

Sitting in a reclined position when your vehicle is in motion can be dangerous. Even if you buckle up, your safety belts cannot do their job when you are reclined like this.

CAUTION: (Continued)

CAUTION: (Continued)

The shoulder belt cannot do its job. In a crash, you could go into it, receiving neck or other injuries.

The lap belt cannot do its job either. In a crash the belt could go up over your abdomen. The belt forces would be there, not at your pelvic bones. This could cause serious internal injuries.

For proper protection when the vehicle is in motion, have the seatback upright. Then sit well back in the seat and wear your safety belt properly.

Do not have a seatback reclined if your vehicle is moving.

Your vehicle has a memory function which allows seat settings to be saved and recalled. See *Memory Seat, Mirrors, and Pedals on page 13*.

Head Restraints

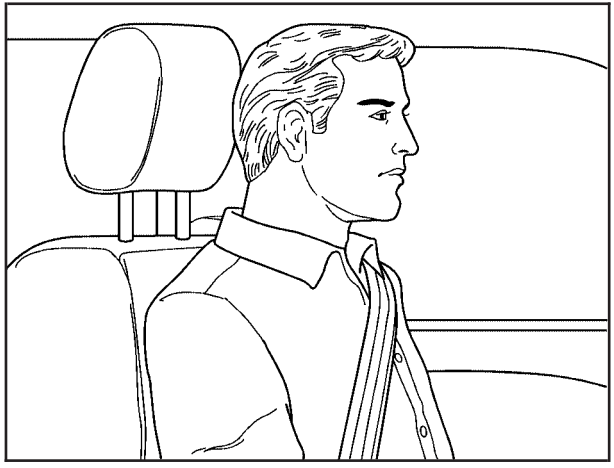

Adjust the head restraint so that the top of the restraint is at the same height as the top of the occupant's head. This position reduces the chance of a neck injury in a crash.

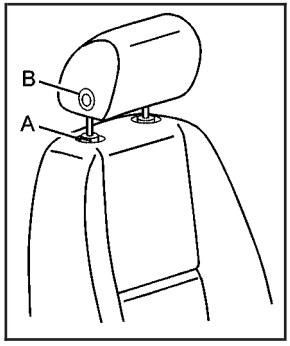

Pull the head restraint up to raise it. To lower the head restraint, press the release button (A), located on the top of the seatback, while you push the head restraint down.

The front seats may have head restraints that also tilt forward and rearward.

To tilt the head restraint, grasp the top of the restraint while pressing the button (B), located on the right hand side of the head restraint, and move it forward or rearward until the desired locking position is reached. Try to move the head restraint after the button is released to make sure that it is locked in place.

The second row seats may have head restraints that can be adjusted up and down, but they do not tilt.

Center Seat

Your vehicle may have a front center seat. The seatback doubles as an armrest and cupholder/storage area for the driver and passenger when the center seat is not used. Do not use it as a seating position when the seatback is folded down.

For information on safety belts for this position, see *Center Front Passenger Position on page 52*.

Rear Seats

Heated Seats

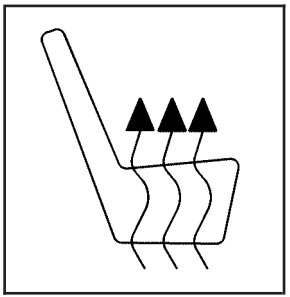

Driver's Side RSA Heated Seat Button Only shown

The rear seats have the heated seat feature, the buttons used to control this feature are located on the Rear Seat Audio (RSA) panel.

(Heated Seat): To heat the seat cushion, press the button with the heated seat symbol.

A heated seat symbol will be shown in the RSA display to indicate that the feature is on. Press the button to cycle through the temperature settings of high, medium, and low, and to turn it off.

Indicator bars next to the symbol will designate the level of heat selected: three for high, two for medium, and one for low.

The heated seats will be canceled ten seconds after the ignition is turned off. If the vehicle is restarted, the heated seat button will need to be pressed again to restart the feature.

60/40 Split Bench Seat (Second Row)

If your vehicle has a 60/40 split bench, the seat(s) can be folded for additional cargo space or folded and tumbled for easy entry and exit to the third row seats, if your vehicle has them. These seats will have either the manual fold and tumble feature or the automatic seat release fold and tumble feature.

Manual Fold and Tumble Feature

Folding and Tumbling the Seat(s)

To fold and tumble the seat, do the following:

1. Make sure that there is nothing under, in front of, or on the seat.

Notice: **Folding a rear seat with the safety belts still fastened may cause damage to the seat or the safety belts. Always unbuckle the safety belts and return them to their normal stowed position before folding a rear seat.**

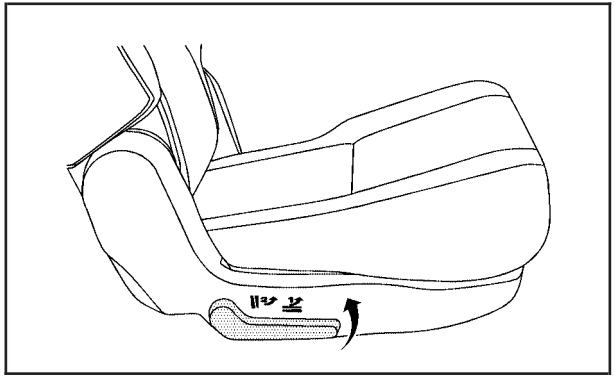

2. Lift the lever, located on the outboard side of the seat, to release the seatback.

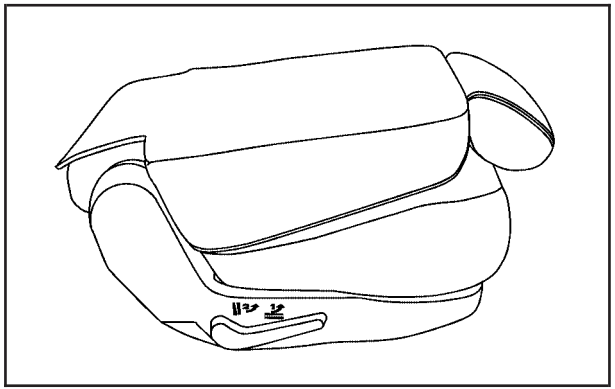

The seatback will fold forward automatically. Leaving the seatback in this position creates a flat load floor.

If the seatback cannot fold flat, try moving the front seat forward and/or put the front seatback in the upright position.

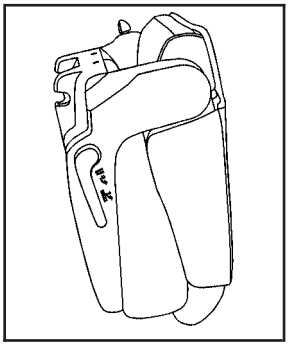

3. Lift the same lever again to release the rear of the seat from the floor. The seat will tumble forward.

Returning the Seat(s) to the Sitting Position

To return the seat to the sitting position, do the following:

1. Pull the seat down until it latches to the floor. The seatback cannot be raised if the seat is not latched to the floor.

⚠ CAUTION:

If the seatback is not locked, it could move forward in a sudden stop or crash. That could cause injury to the person sitting there. Always push and pull on the seatback to be sure it is locked.

2. Lift the seatback and push it rearward. Push and pull on the seatback to make sure it is locked.

⚠ CAUTION:

A safety belt that is improperly routed, not properly attached, or twisted will not provide the protection needed in a crash. The person wearing the belt could be seriously injured. After raising the rear seatback, always check to be sure that the safety belts are properly routed and attached, and are not twisted.

3. Make sure the safety belt in the center seating position is not caught between the two seats and is not twisted.

Folding and Tumbling the Seat(s) from the Third Row Seats

⚠ CAUTION:

Using the third row seating position while the second row is folded, or folded and tumbled, could cause injury in a sudden stop or crash. Be sure to return the seat to the passenger seating position. Push and pull on the seat to make sure it is locked into place.

To fold and tumble the seat from the third rows, if your vehicle has them, do the following:

1. Make sure that there is nothing under, in front of, or on the seat.

Notice: **Folding a rear seat with the safety belts still fastened may cause damage to the seat or the safety belts. Always unbuckle the safety belts and return them to their normal stowed position before folding a rear seat.**

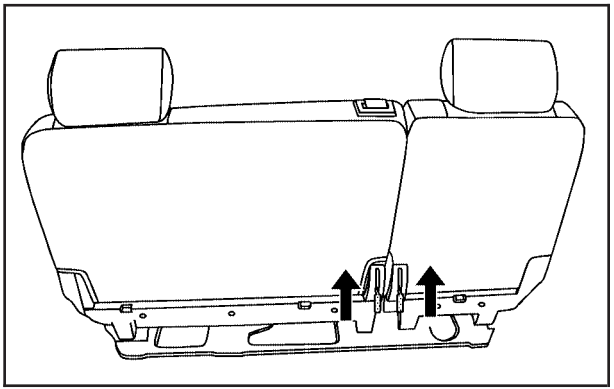

2. Lift the lever(s), located on the bottom rear of the second row seat(s) on the inboard side, to release the seatback. The seatback will fold forward.
3. Lift the same lever again to release the rear of the seat from the floor. The seat will tumble forward automatically.

Automatic Release Fold and Tumble Feature

The transmission must be in PARK (P) for this feature to work.

Folding and Tumbling the Seat(s)

⚠ CAUTION:

Automatically folding and tumbling the seat when someone is sitting in the seat, could cause injury to the person sitting there. Always make sure there is no one sitting in the seat before pressing the automatic seat release button.

To fold and tumble the seat, do the following:

1. Make sure that there is nothing under, in front of, or on the seat.

Notice: **Folding a rear seat with the safety belts still fastened may cause damage to the seat or the safety belts. Always unbuckle the safety belts and return them to their normal stowed position before folding a rear seat.**

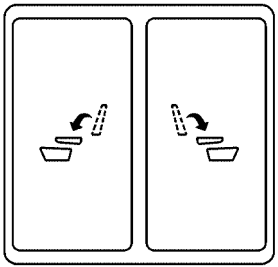

Overhead Console Buttons shown, Panel Button similar

2. From the front seats, press one of the automatic seat release buttons located on the overhead console.

When accessing the third row seats, if your vehicle has them, from the outside of the vehicle, press the button on the panel behind either rear door.

One press of the button automatically folds the seatback flat and tumbles the seat forward. There will be a slight delay between the folding of the seatback and the tumbling of the seat.

Returning the Seat(s) to the Sitting Position

To return the seat to the sitting position, do the following:

1. Pull the seat down until it latches to the floor. The seatback cannot be raised if the seat is not latched to the floor.

⚠ CAUTION:

If the seatback is not locked, it could move forward in a sudden stop or crash. That could cause injury to the person sitting there. Always push and pull on the seatback to be sure it is locked.

2. Lift the seatback and push it rearward. Push and pull on the seatback to make sure it is locked.

⚠ CAUTION:

A safety belt that is improperly routed, not properly attached, or twisted will not provide the protection needed in a crash. The person wearing the belt could be seriously injured. After raising the rear seatback, always check to be sure that the safety belts are properly routed and attached, and are not twisted.

3. Make sure that the safety belt in the center seating position is not caught between the two seats and is not twisted.

Folding and Tumbling the Second Row Seat(s) from the Third Row Seats or Outside

⚠ CAUTION:

Using the third row seating position while the second row is folded, or folded and tumbled, could cause injury in a sudden stop or crash. Be sure to return the seat to the passenger seating position. Push and pull on the seat to make sure it is locked into place.

To fold and tumble the seat from the third row seats, if your vehicle has them, do the following:

1. Make sure that there is nothing under, in front of, or on the seat.

Notice: **Folding a rear seat with the safety belts still fastened may cause damage to the seat or the safety belts. Always unbuckle the safety belts and return them to their normal stowed position before folding a rear seat.**

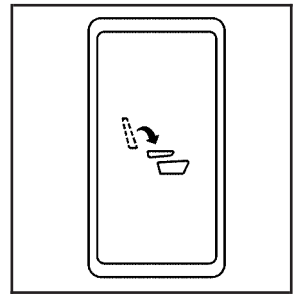

Driver's Side Rear Panel Button shown

2. Press the automatic seat release button located on the panel behind the rear doors.

One press of the button automatically folds the seatback flat and tumbles the seat forward. There will be a slight delay between the folding of the seatback and the tumbling of the seat.

Bucket Seats (Second Row)

If your vehicle has bucket seats, the seatbacks can be reclined, the seats can be folded for additional cargo space, or folded and tumbled for easy entry and exit to the third row seats, if your vehicle has them. These seats will have either the manual fold and tumble feature or the automatic seat release fold and tumble feature.

Reclining Seatbacks

To recline the seatback, do the following:

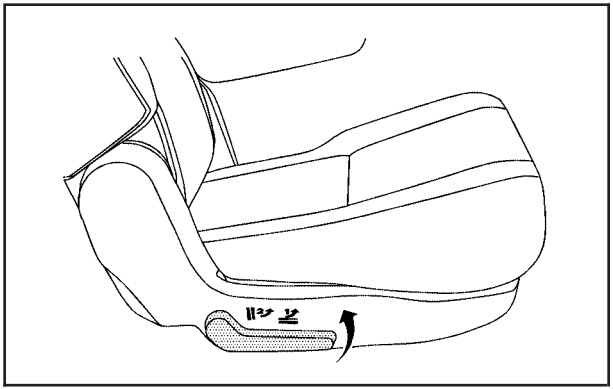

1. Lift the lever located on the outboard side of the seat.
2. Move the seatback to the desired position, then release the lever to lock the seatback in place.
3. Push and pull on the seatback to make sure it is locked.

To return the seatback to an upright position, do the following:

1. Lift the lever fully without applying pressure to the seatback and the seatback will return to the upright position.

⚠ CAUTION:

If the seatback is not locked, it could move forward in a sudden stop or crash. That could cause injury to the person sitting there. Always push and pull on the seatback to be sure it is locked.

2. Push and pull on the seatback to make sure it is locked.

Manual Fold and Tumble Feature

Folding and Tumbling the Seat(s)

To fold and tumble the seat, do the following:

1. Make sure that there is nothing under, in front of, or on the seat.

Notice: **Folding a rear seat with the safety belts still fastened may cause damage to the seat or the safety belts. Always unbuckle the safety belts and return them to their normal stowed position before folding a rear seat.**

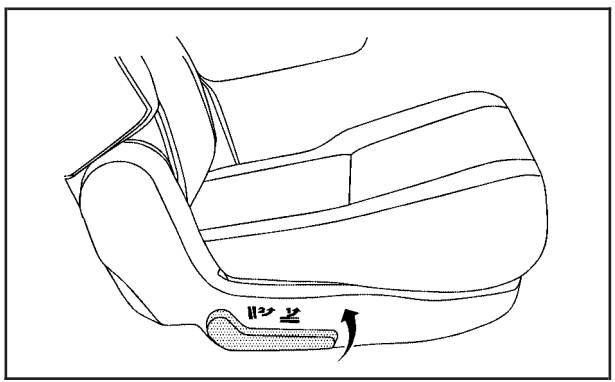

2. Lift the lever, located on the outboard side of the seat, to release the seatback.

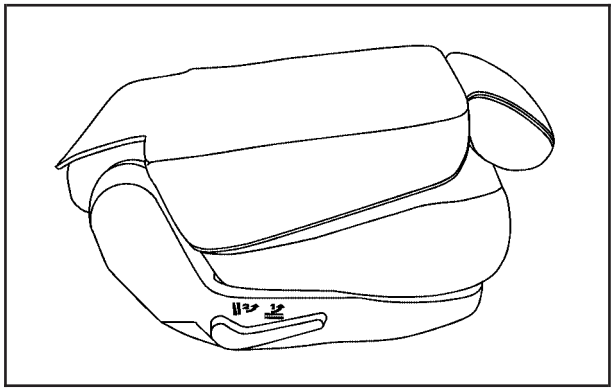

The seatback will fold forward. Leaving the seatback in this position creates a flat load floor.

If the seatback cannot fold flat, try moving the front seat forward and/or put the front seatback in the upright position.

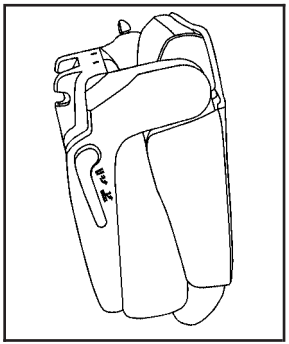

3. Lift the lever again to release the rear of the seat from the floor. The seat will tumble forward.

Returning the Seat(s) to the Sitting Position

To return the seat to the sitting position, do the following:

1. Pull the seat down until it latches to the floor. The seatback cannot be raised if the seat is not latched to the floor.

> **⚠ CAUTION:**
>
> **If the seatback is not locked, it could move forward in a sudden stop or crash. That could cause injury to the person sitting there. Always push and pull on the seatback to be sure it is locked.**

2. Lift the seatback and push it rearward. Push and pull on the seatback to make sure it is locked.

Folding and Tumbling the Seat(s) from the Third Row Seats

> **⚠ CAUTION:**
>
> **Using the third row seating position while the second row is folded, or folded and tumbled, could cause injury in a sudden stop or crash. Be sure to return the seat to the passenger seating position. Push and pull on the seat to make sure it is locked into place.**

To fold and tumble the seat from the third row seats, if your vehicle has them, do the following:

1. Make sure that there is nothing under, in front of, or on the seat.

Notice: **Folding a rear seat with the safety belts still fastened may cause damage to the seat or the safety belts. Always unbuckle the safety belts and return them to their normal stowed position before folding a rear seat.**

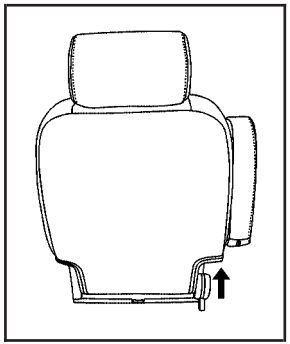

2. Lift the lever, located on the bottom rear of the second row seat on the inboard side, to release the seatback. The seatback will fold forward.

3. Lift the lever again to release the rear of the seat from the floor. The seat will tumble forward.

Automatic Release Fold and Tumble Feature

The transmission must be in PARK (P) for this feature to work.

Folding and Tumbling the Seat(s)

⚠ CAUTION:

Automatically folding and tumbling the seat when someone is sitting in the seat, could cause injury to the person sitting there. Always make sure there is no one sitting in the seat before pressing the automatic seat release button.

To fold and tumble the seat, do the following:

1. Make sure that there is nothing under, in front of, or on the seat.

Notice: **Folding a rear seat with the safety belts still fastened may cause damage to the seat or the safety belts. Always unbuckle the safety belts and return them to their normal stowed position before folding a rear seat.**

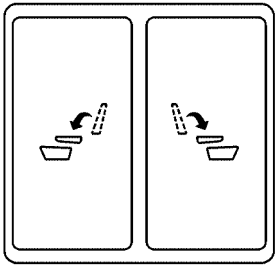

Overhead Console Buttons shown

2. From the front seats, press one of the automatic seat release buttons located on the overhead console.

When accessing the third row seats, if your vehicle has them, from the outside of the vehicle, press the button on the panel behind either rear door.

One press of the button automatically folds the seatback flat and tumbles the seat forward. There will be a slight delay between the folding of the seatback and the tumbling of the seat.

Returning the Seat(s) to the Sitting Position

To return the seat to the sitting position, do the following:

1. Pull the seat down until it latches to the floor. The seatback cannot be raised if the seat is not latched to the floor.

⚠ CAUTION:

If the seatback is not locked, it could move forward in a sudden stop or crash. That could cause injury to the person sitting there. Always push and pull on the seatback to be sure it is locked.

2. Lift the seatback and push it rearward. Push and pull on the seatback to make sure it is locked.

Folding and Tumbling the Second Row Seat(s) from the Third Row Seats or Outside

⚠ CAUTION:

Using the third row seating position while the second row is folded, or folded and tumbled, could cause injury in a sudden stop or crash. Be sure to return the seat to the passenger seating position. Push and pull on the seat to make sure it is locked into place.

To fold and tumble the seat from the third row seats, if your vehicle has them, do the following:

1. Make sure that there is nothing under, in front of, or on the seat.

Notice: **Folding a rear seat with the safety belts still fastened may cause damage to the seat or the safety belts. Always unbuckle the safety belts and return them to their normal stowed position before folding a rear seat.**

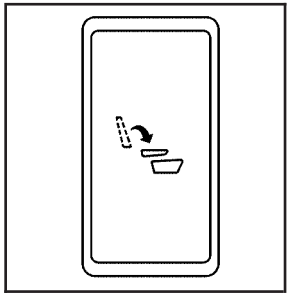

Driver's Side Rear Panel Button shown

2. Press the automatic seat release button located on the panel behind the rear doors.

One press of the button automatically folds the seatback flat and tumbles the seat forward. There will be a slight delay between the folding of the seatback and the tumbling of the seat.

Third Row Seat

If the vehicle has a third row seat, the seatback(s) can be folded and the entire seat can be tumbled, or removed from the vehicle.

Folding the Seatback(s)

To fold the seatback, do the following:

1. Open the liftgate to access the controls for the seat.
2. Remove all items on the seat cushion.

Notice: **Folding a rear seat with the safety belts still fastened may cause damage to the seat or the safety belts. Always unbuckle the safety belts and return them to their normal stowed position before folding a rear seat.**

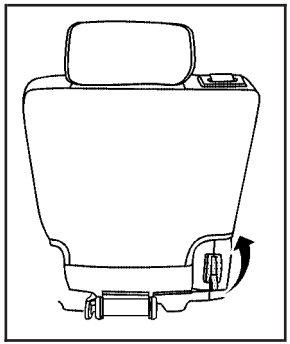

3. Lift the release lever, located on the bottom rear of the seatback on the outboard side of the seat, and the seatback will fold forward.

Unfolding the Seatback(s)

To return the seatback to the upright position, do the following:

1. Open the liftgate to access the controls for the seat.
2. Pull up on the seatback until it locks into the upright position.

⚠ CAUTION:

If the seatback is not locked, it could move forward in a sudden stop or crash. That could cause injury to the person sitting there. Always push and pull on the seatback to be sure it is locked.

3. Push and pull on the seatback to make sure it is locked.

Tumbling the Third Row Seat

The seat can be tumbled forward for additional cargo space.

To tumble the seat, do the following:

1. Open the liftgate to access the controls for the seat.
2. Make sure the head rests are completely lowered, there is nothing under, in front of, or on the seat, and all items are removed from the cupholder and storage bin, if the seat is a two-passenger seat.
3. Fold the seatbacks forward using the instructions listed under “Folding the Seatbacks” previously. You will not be able to unlatch the seat from the floor unless the seatback is folded down.

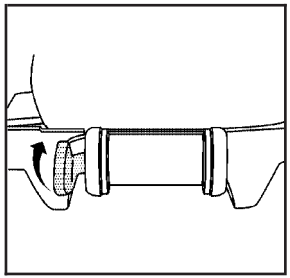

4. Unlatch the seat from the floor by lifting the lever located next to the carrying handle on the rear of the seat near the bottom.
5. Lift the rear of the seat up from the floor.
6. Tilt the seat fully forward to lock it into place.
7. Push and pull on the seat to make sure it is locked.

Put the seat in this position only when necessary for additional cargo space.

Returning the Third Row Seat from a Tumbled Position

To return the seat to the normal seating position, do the following:

1. Open the liftgate to access the controls for the seat.
2. Make sure there is nothing that could become trapped under the seat.
3. Release the seat from the tumbled position by lifting the lever located next to the carrying handle at the bottom rear of the seat.
4. Pull the seat down until it latches to the floor. The seatback cannot be raised if the seat is not latched to the floor.
5. Pull up on the seatback until it locks into the upright position.

⚠ CAUTION:

If the seatback is not locked, it could move forward in a sudden stop or crash. That could cause injury to the person sitting there. Always push and pull on the seatback to be sure it is locked.

6. Push and pull on the seatback to make sure it is locked.

Removing the Third Row Seat

To remove the seat, do the following:

1. Open the liftgate to access the controls for the seat.
2. Fold the seatback forward using the instructions listed under “Folding the Seatbacks” previously. The seat cannot be removed unless the seatback is folded.

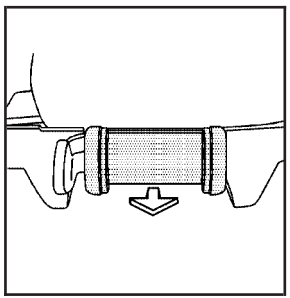

3. Unlatch the seat from the floor by pulling the carrying handle, located at the rear of the seat, rearward.
4. Roll the seat out of the vehicle. There is a track in the floor to guide the seat wheels out of the vehicle.

Installing the Third Row Seat

To install the seat, do the following:

1. Open the liftgate to access the rear of the vehicle.
2. Slide the front outboard seat wheels into the track on the floor and roll the seat forward. The front latches should lock into place. If the latches do not lock, try tilting the rear of the seat upward slightly.
3. Lower the rear of the seat and push down on the seat to engage the rear floor latches.

⚠ CAUTION:

A seat that is not locked into place properly can move around in a collision or sudden stop. People in the vehicle could be injured. Be sure to lock the seat into place properly when installing it.

4. Push and pull on the seat to make sure it is locked into place. The seatback cannot be raised to the upright position unless the seat is secured to the floor.
5. Pull up on the seatback until it locks into the upright position.

⚠ CAUTION:

If the seatback is not locked, it could move forward in a sudden stop or crash. That could cause injury to the person sitting there. Always push and pull on the seatback to be sure it is locked.

6. Push and pull on the seatback to make sure it is locked.

⚠ CAUTION:

A safety belt that is improperly routed, not properly attached, or twisted will not provide the protection needed in a crash. The person wearing the belt could be seriously injured. After raising the rear seatback, always check to be sure that the safety belts are properly routed and attached, and are not twisted.

7. Make sure the safety belts are returned to the original position over the seatbacks.

Safety Belts

Safety Belts: They Are for Everyone

This part of the manual tells you how to use safety belts properly. It also tells you some things you should not do with safety belts.

⚠ CAUTION:

Do not let anyone ride where he or she cannot wear a safety belt properly. If you are in a crash and you are not wearing a safety belt, your injuries can be much worse. You can hit things inside the vehicle or be ejected from it. You can be seriously injured or killed. In the same crash, you might not be, if you are buckled up. Always fasten your safety belt, and check that your passengers' belts are fastened properly too.

⚠ CAUTION:

It is extremely dangerous to ride in a cargo area, inside or outside of a vehicle. In a collision, people riding in these areas are more likely to be seriously injured or killed. Do not allow people to ride in any area of your vehicle that is not equipped with seats and safety belts. Be sure everyone in your vehicle is in a seat and using a safety belt properly.

Your vehicle has a light that comes on as a reminder to buckle up. See *Safety Belt Reminder Light on page 223*.

In most states and in all Canadian provinces, the law says to wear safety belts. Here is why: *They work*.

You never know if you will be in a crash. If you do have a crash, you do not know if it will be a bad one.

A few crashes are mild, and some crashes can be so serious that even buckled up, a person would not survive. But most crashes are in between. In many of them, people who buckle up can survive and sometimes walk away. Without belts they could have been badly hurt or killed.

After more than 30 years of safety belts in vehicles, the facts are clear. In most crashes buckling up does matter... a lot!

Why Safety Belts Work

When you ride in or on anything, you go as fast as it goes.

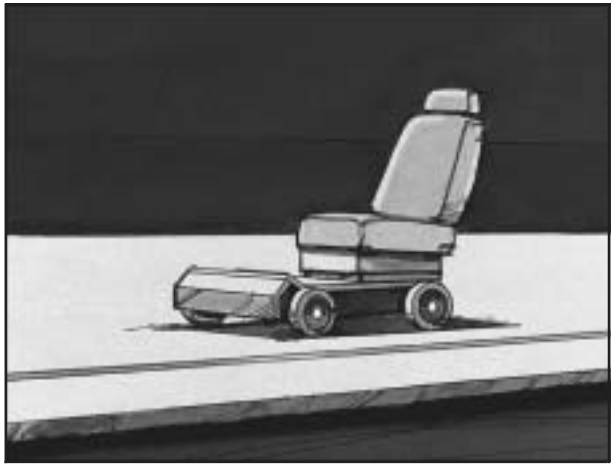

Take the simplest vehicle. Suppose it is just a seat on wheels.

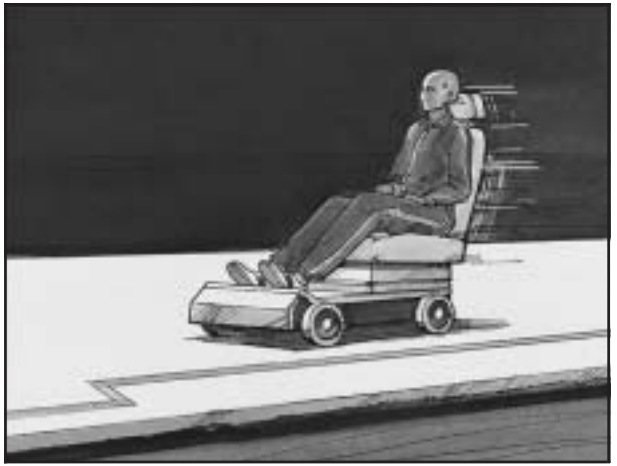

Put someone on it.

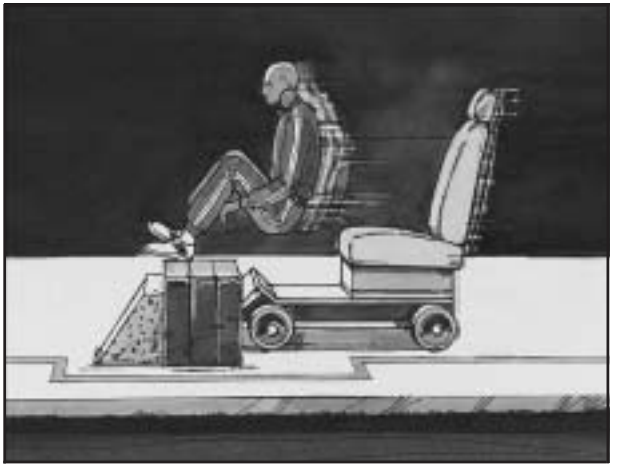

Get it up to speed. Then stop the vehicle.
The rider does not stop.

The person keeps going until stopped by something. In a real vehicle, it could be the windshield...

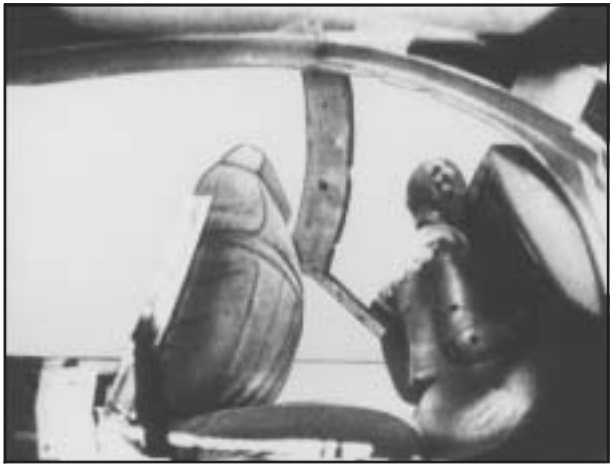

or the instrument panel...

or the safety belts!

With safety belts, you slow down as the vehicle does. You get more time to stop. You stop over more distance, and your strongest bones take the forces. That is why safety belts make such good sense.

Questions and Answers About Safety Belts

Q: Will I be trapped in the vehicle after an accident if I am wearing a safety belt?

A: You *could* be — whether you are wearing a safety belt or not. But you can unbuckle a safety belt, even if you are upside down. And your chance of being conscious during and after an accident, so you *can* unbuckle and get out, is *much* greater if you are belted.

Q: If my vehicle has airbags, why should I have to wear safety belts?

A: Airbags are in many vehicles today and will be in most of them in the future. But they are supplemental systems only; so they work *with* safety belts — not instead of them. Every airbag system ever offered for sale has required the use of safety belts. Even if you are in a vehicle that has airbags, you still have to buckle up to get the most protection. That is true not only in frontal collisions, but especially in side and other collisions.

Q: If I am a good driver, and I never drive far from home, why should I wear safety belts?

A: You may be an excellent driver, but if you are in an accident — even one that is not your fault — you and your passengers can be hurt. Being a good driver does not protect you from things beyond your control, such as bad drivers.

Most accidents occur within 25 miles (40 km) of home. And the greatest number of serious injuries and deaths occur at speeds of less than 40 mph (65 km/h).

Safety belts are for everyone.

How to Wear Safety Belts Properly

This part is only for people of adult size.

Be aware that there are special things to know about safety belts and children. And there are different rules for smaller children and babies. If a child will be riding in your vehicle, see *Older Children on page 60* or *Infants and Young Children on page 63*. Follow those rules for everyone's protection.

First, you will want to know which restraint systems your vehicle has.

We will start with the driver position.

Driver Position

Lap-Shoulder Belt

The driver has a lap-shoulder belt. Here is how to wear it properly.

1. Close and lock the door.
2. Adjust the seat so you can sit up straight. To see how, see "Seats" in the Index.

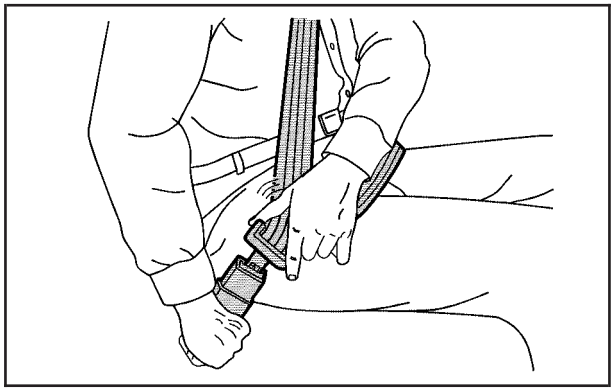

3. Pick up the latch plate and pull the belt across you. Do not let it get twisted.

   The shoulder belt may lock if you pull the belt across you very quickly. If this happens, let the belt go back slightly to unlock it. Then pull the belt across you more slowly.

4. Push the latch plate into the buckle until it clicks.

   Pull up on the latch plate to make sure it is secure. If the belt is not long enough, see *Safety Belt Extender on page 59*.

   Make sure the release button on the buckle is positioned so you would be able to unbuckle the safety belt quickly if you ever had to.

5. Move the shoulder belt height adjuster to the height that is right for you. Improper shoulder belt height adjustment could reduce the effectiveness of the safety belt in a crash. See *Shoulder Belt Height Adjustment on page 50*.

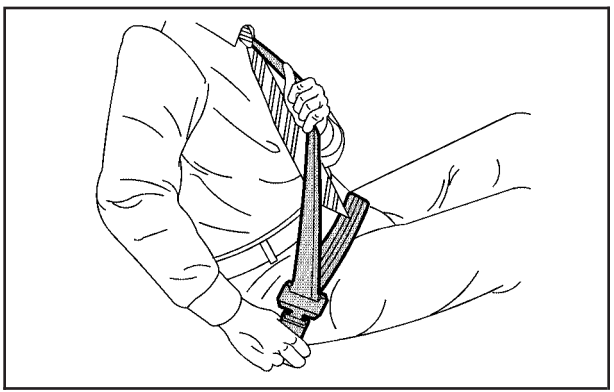

6. To make the lap part tight, pull up on the shoulder belt.

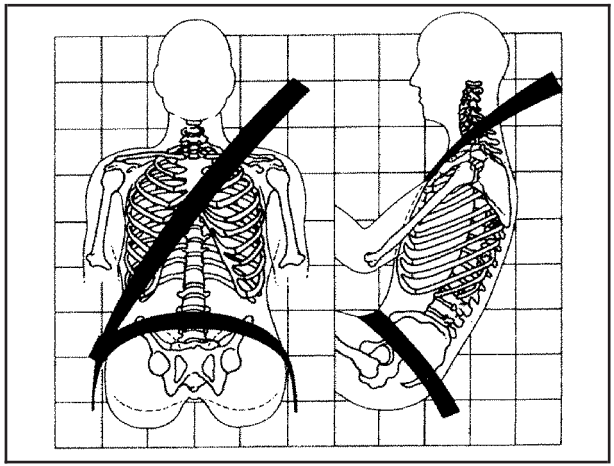

The lap part of the belt should be worn low and snug on the hips, just touching the thighs. In a crash, this applies force to the strong pelvic bones. And you would be less likely to slide under the lap belt. If you slid under it, the belt would apply force at your abdomen. This could cause serious or even fatal injuries.

The shoulder belt should go over the shoulder and across the chest. These parts of the body are best able to take belt restraining forces.

The safety belt locks if there is a sudden stop or crash, or if you pull the belt very quickly out of the retractor.

Q: What is wrong with this?

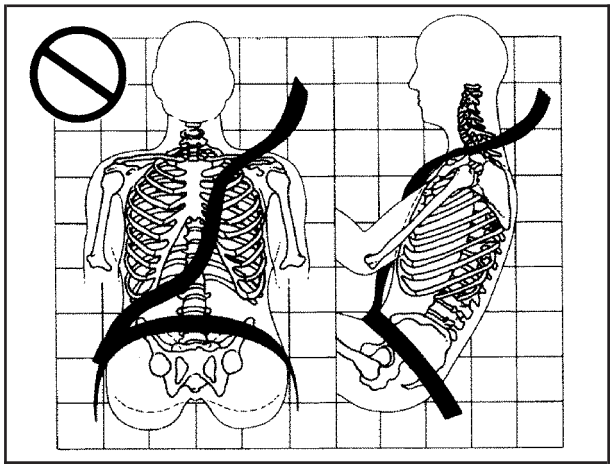

A: The shoulder belt is too loose. It will not give nearly as much protection this way.

⚠ CAUTION:

You can be seriously hurt if your shoulder belt is too loose. In a crash, you would move forward too much, which could increase injury. The shoulder belt should fit against your body.

Q: What is wrong with this?

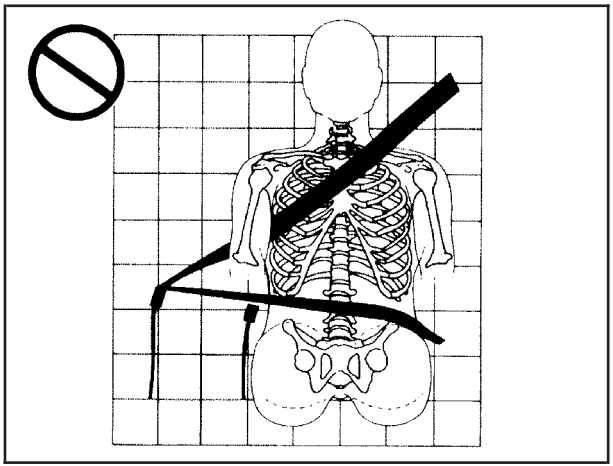

A: The belt is buckled in the wrong place.

⚠ CAUTION:

You can be seriously injured if your belt is buckled in the wrong place like this. In a crash, the belt would go up over your abdomen. The belt forces would be there, not at the pelvic bones. This could cause serious internal injuries. Always buckle your belt into the buckle nearest you.

Q: What is wrong with this?

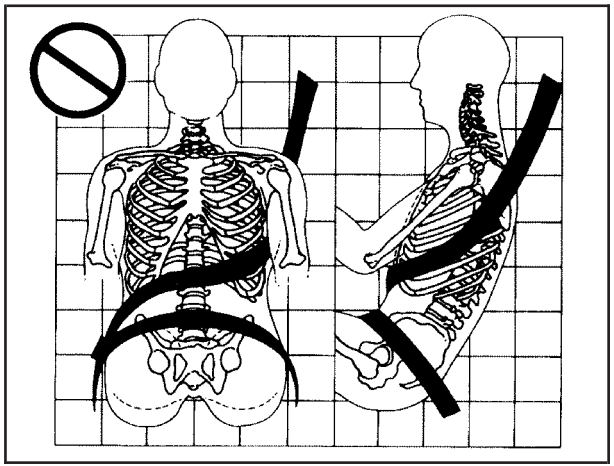

A: The shoulder belt is worn under the arm. It should be worn over the shoulder at all times.

⚠ CAUTION:

You can be seriously injured if you wear the shoulder belt under your arm. In a crash, your body would move too far forward, which would increase the chance of head and neck injury. Also, the belt would apply too much force to the ribs, which are not as strong as shoulder bones. You could also severely injure internal organs like your liver or spleen.

Q: What is wrong with this?

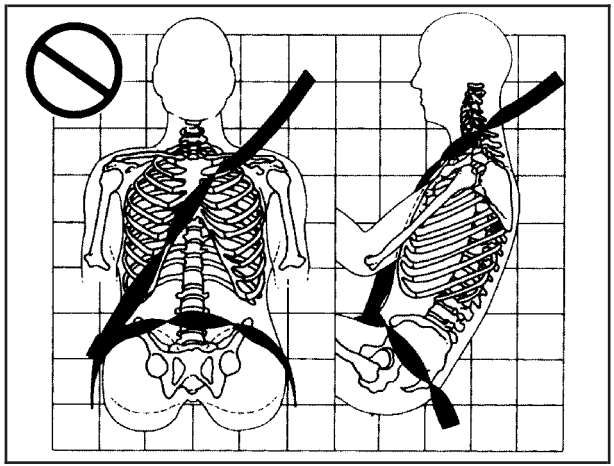

A: The belt is twisted across the body.

⚠ CAUTION:

You can be seriously injured by a twisted belt. In a crash, you would not have the full width of the belt to spread impact forces. If a belt is twisted, make it straight so it can work properly, or ask your dealer to fix it.

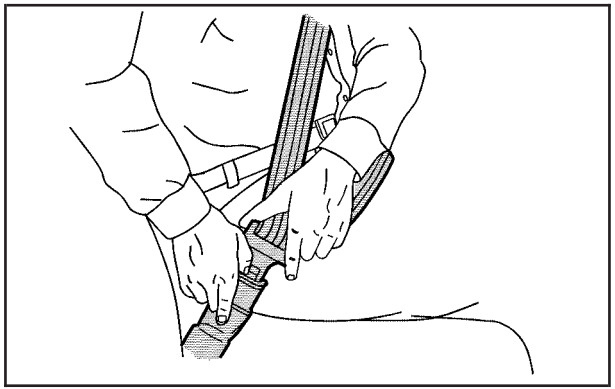

To unlatch the belt, just push the button on the buckle. The belt should go back out of the way.

Before you close the door, be sure the belt is out of the way. If you slam the door on it, you can damage both the belt and your vehicle.

Shoulder Belt Height Adjustment

Before you begin to drive, move the shoulder belt adjuster to the height that is right for you.

Adjust the height so that the shoulder portion of the belt is centered on your shoulder. The belt should be away from your face and neck, but not falling off your shoulder. Improper shoulder belt height adjustment could reduce the effectiveness of the safety belt in a crash.

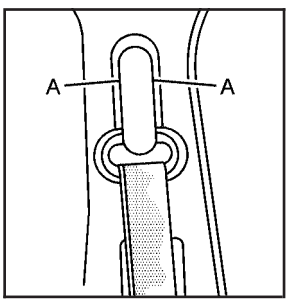

To move it down, squeeze the buttons (A) on the sides of the height adjuster and move the height adjuster to the desired position.

You can move the adjuster up just by pushing up on the shoulder belt guide.

After you move the adjuster to where you want it, try to move it down without squeezing the buttons to make sure it has locked into position.

Safety Belt Use During Pregnancy

Safety belts work for everyone, including pregnant women. Like all occupants, they are more likely to be seriously injured if they do not wear safety belts.

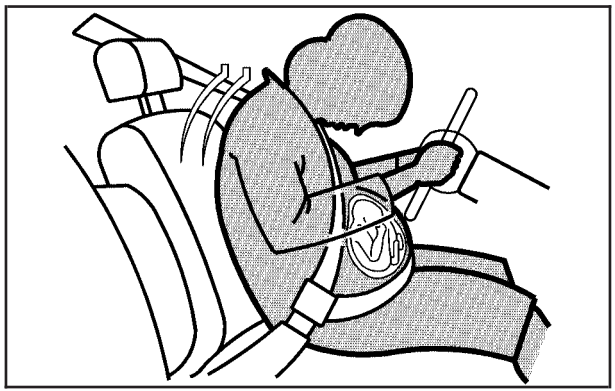

A pregnant woman should wear a lap-shoulder belt, and the lap portion should be worn as low as possible, below the rounding, throughout the pregnancy.

The best way to protect the fetus is to protect the mother. When a safety belt is worn properly, it is more likely that the fetus will not be hurt in a crash. For pregnant women, as for anyone, the key to making safety belts effective is wearing them properly.

Right Front Passenger Position

To learn how to wear the right front passenger's safety belt properly, see *Driver Position on page 43*.

The right front passenger's safety belt works the same way as the driver's safety belt — except for one thing. If you ever pull the shoulder portion of the belt out all the way, you will engage the child restraint locking feature which may turn off the passenger's frontal airbag. If this happens, just let the belt go back all the way and start again.

Center Front Passenger Position

Lap Belt

If your vehicle has a front bench seat, someone can sit in the center position.

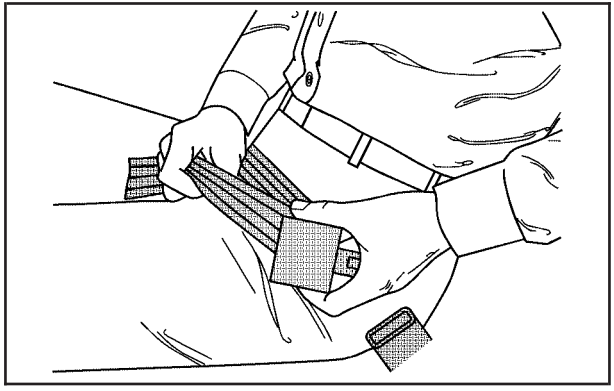

When you sit in the center front seating position, you have a lap safety belt, which has no retractor. To make the belt longer, tilt the latch plate and pull it along the belt.

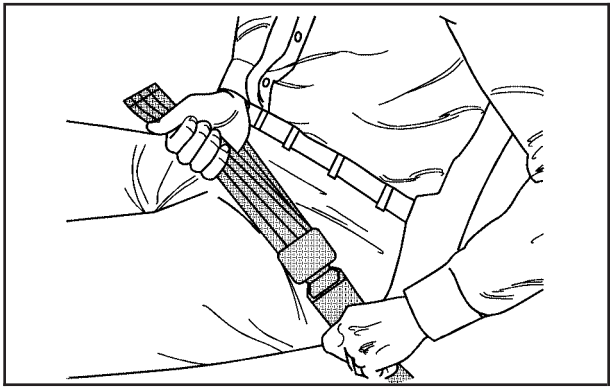

To make the belt shorter, pull its free end as shown until the belt is snug.

Buckle, position and release it the same way as the lap part of a lap-shoulder belt. If the belt is not long enough, see *Safety Belt Extender on page 59*.

Make sure the release button on the buckle is positioned so you would be able to unbuckle the safety belt quickly if you ever had to.

Rear Seat Passengers

It is very important for rear seat passengers to buckle up! Accident statistics show that unbelted people in the rear seat are hurt more often in crashes than those who are wearing safety belts.

Rear passengers who are not safety belted can be thrown out of the vehicle in a crash. And they can strike others in the vehicle who are wearing safety belts.

Lap-Shoulder Belt

All rear seat positions have lap-shoulder belts. Here is how to wear one properly.

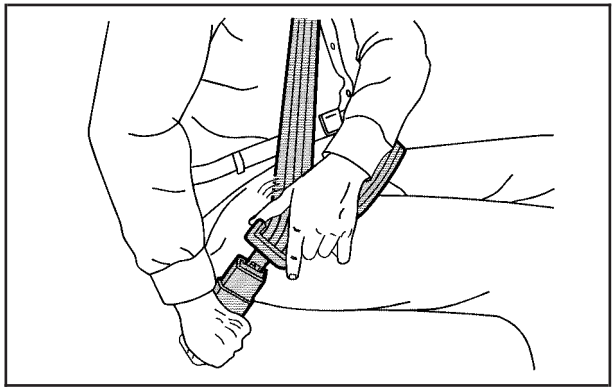

1. Pick up the latch plate and pull the belt across you. Do not let it get twisted.

   The shoulder belt may lock if you pull the belt across you very quickly. If this happens, let the belt go back slightly to unlock it. Then pull the belt across you more slowly.

2. Push the latch plate into the buckle until it clicks.

   Pull up on the latch plate to make sure it is secure.

   When the shoulder belt is pulled out all the way, it will lock. If it does, let it go back all the way and start again.

   If the belt is not long enough, see *Safety Belt Extender on page 59*.

   Make sure the release button on the buckle is positioned so you would be able to unbuckle the safety belt quickly if you ever had to.

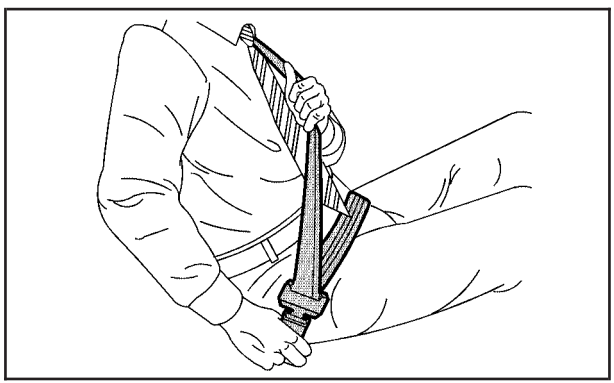

3. To make the lap part tight, pull up on the shoulder part.

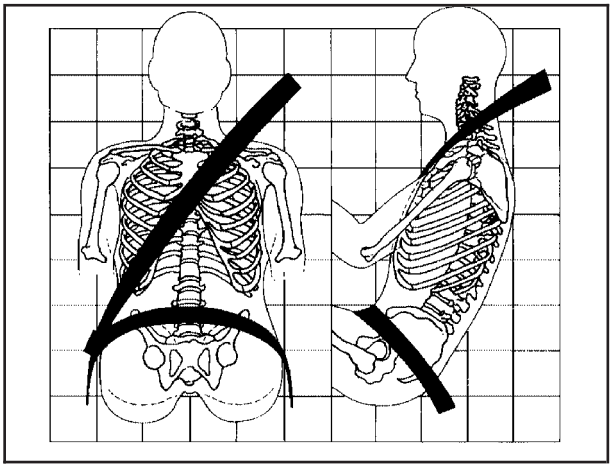

The lap part of the belt should be worn low and snug on the hips, just touching the thighs. In a crash, this applies force to the strong pelvic bones. And you would be less likely to slide under the lap belt. If you slid under it, the belt would apply force at your abdomen. This could cause serious or even fatal injuries.

The shoulder belt should go over the shoulder and across the chest. These parts of the body are best able to take belt restraining forces.

The safety belt locks if there is a sudden stop or a crash, or if you pull the belt very quickly out of the retractor.

⚠ CAUTION:

You can be seriously hurt if your shoulder belt is too loose. In a crash, you would move forward too much, which could increase injury. The shoulder belt should fit against your body.

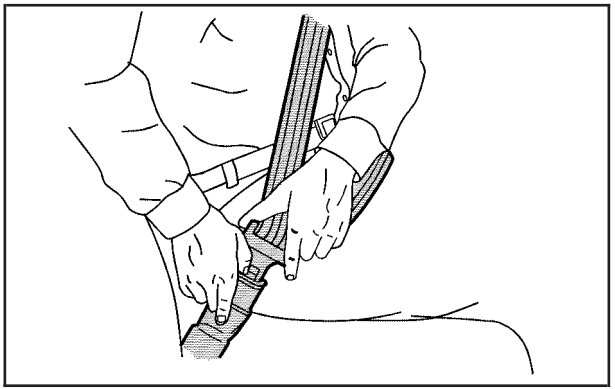

To unlatch the belt, push the button on the buckle.

Rear Safety Belt Comfort Guides

Rear shoulder belt comfort guides may provide added safety belt comfort for older children who have outgrown booster seats and for some adults. When installed on a shoulder belt, the comfort guide positions the belt away from the neck and head.

There is one guide for each outside passenger position in the second row seat and the third row, if your vehicle has one. Here is how to install a comfort guide and use the safety belt:

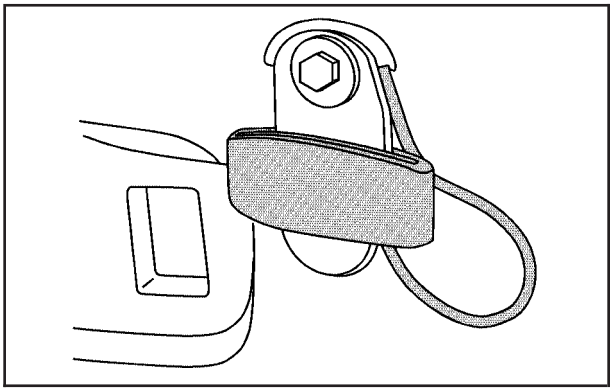

Second Row

1. For the second row, remove the guide from its storage clip on the interior body.

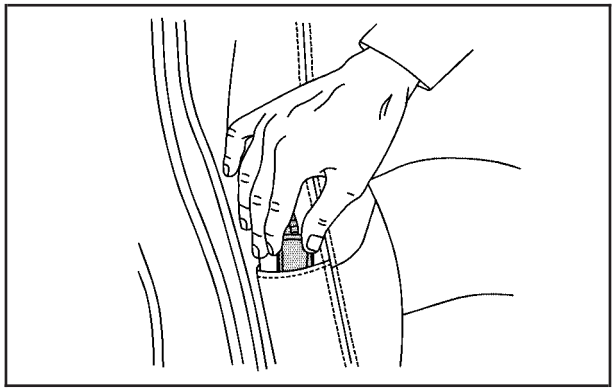

Third Row

If your vehicle has a third row, remove the guide from its storage pocket on the side of the seat.

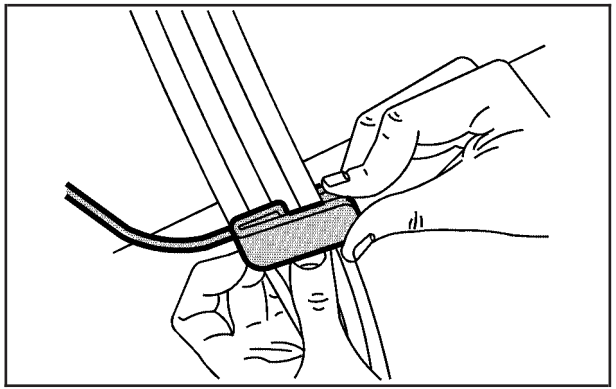

2. Slide the guide under and past the belt. The elastic cord must be under the belt. Then, place the guide over the belt, and insert the two edges of the belt into the slots of the guide.

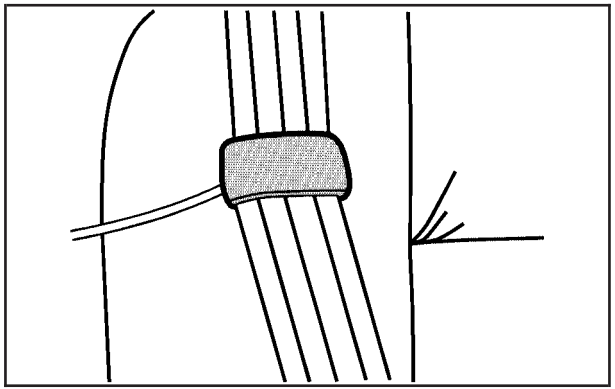

3. Be sure that the belt is not twisted and it lies flat. The elastic cord must be under the belt and the guide on top.

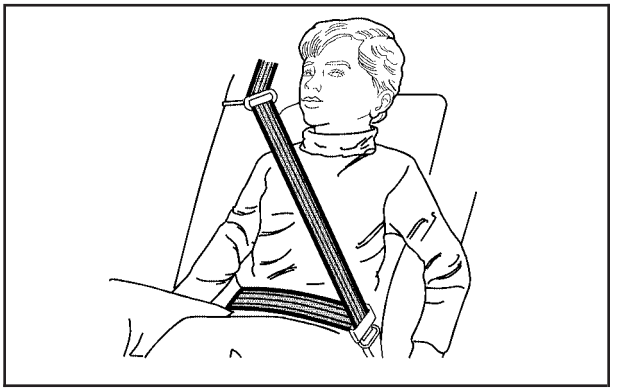

⚠ CAUTION:

A safety belt that is not properly worn may not provide the protection needed in a crash. The person wearing the belt could be seriously injured. The shoulder belt should go over the shoulder and across the chest. These parts of the body are best able to take belt restraining forces.

4. Buckle, position, and release the safety belt as described in *Rear Seat Passengers on page 53*. Make sure that the shoulder belt crosses the shoulder.

To remove and store the comfort guides, squeeze the belt edges together so that you can take them out of the guides. Slide the guide into its storage pocket.

Safety Belt Pretensioners

Your vehicle has safety belt pretensioners for the driver and right front passenger. Although you cannot see them, they are located on the retractor part of the safety belts. They help the safety belts reduce a person's forward movement in a moderate to severe frontal, near frontal, rear or side crash, or a rollover.

Pretensioners work only once. If they activate in a crash, you will need to get new ones, and probably other new parts for your safety belt system. See *Replacing Restraint System Parts After a Crash on page 107*.

Safety Belt Extender

If the vehicle's safety belt will fasten around you, you should use it.

But if a safety belt is not long enough, your dealer will order you an extender. It is free. When you go in to order it, take the heaviest coat you will wear, so the extender will be long enough for you. To help avoid personal injury, do not let someone else use it, and use it only for the seat it is made to fit. The extender has been designed for adults. Never use it for securing child seats. To wear it, just attach it to the regular safety belt. For more information, see the instruction sheet that comes with the extender.

Child Restraints

Older Children

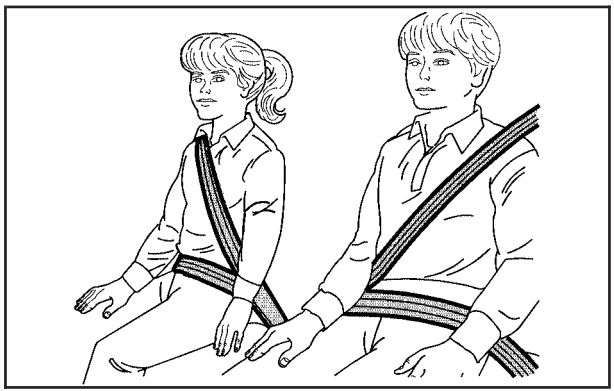

Older children who have outgrown booster seats should wear the vehicle's safety belts.

If you have the choice, a child should sit in a seat that has a lap-shoulder belt and get the additional restraint a shoulder belt can provide.

Q: What is the proper way to wear safety belts?

A: If possible, an older child should wear a lap-shoulder belt and get the additional restraint a shoulder belt can provide. The shoulder belt should not cross the face or neck. The lap belt should fit snugly below the hips, just touching the top of the thighs. It should never be worn over the abdomen, which could cause severe or even fatal internal injuries in a crash.

Accident statistics show that children are safer if they are restrained in the rear seat.

In a crash, children who are not buckled up can strike other people who are buckled up, or can be thrown out of the vehicle. Older children need to use safety belts properly.

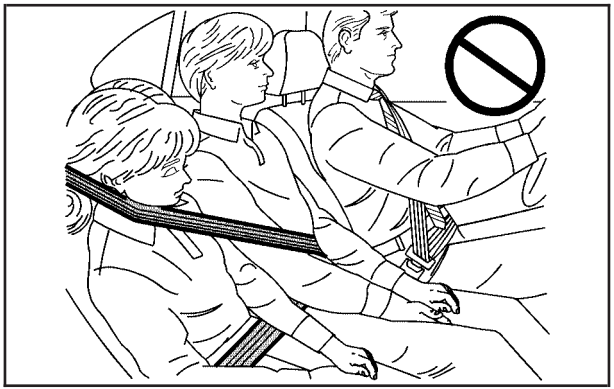

⚠ CAUTION:

Never do this.

Here two children are wearing the same belt. The belt can not properly spread the impact forces. In a crash, the two children can be crushed together and seriously injured. A belt must be used by only one person at a time.

Q: What if a child is wearing a lap-shoulder belt, but the child is so small that the shoulder belt is very close to the child's face or neck?

A: If the child is sitting in a rear seat outside position, move the child toward the center of the vehicle. If the child is sitting in the second row center position, move the child toward the safety belt buckle. In either case, be sure that the shoulder belt still is on the child's shoulder, so that in a crash the child's upper body would have the restraint that belts provide. See *Rear Safety Belt Comfort Guides on page 56*. If the child is so small that the shoulder belt is still very close to the child's face or neck, you might want to place the child in a rear seat that has a lap belt, if your vehicle has one.

⚠ CAUTION:

Never do this.

Here a child is sitting in a seat that has a lap-shoulder belt, but the shoulder part is behind the child. If the child wears the belt in this way, in a crash the child might slide under the belt. The belt's force would then be applied right on the child's abdomen. That could cause serious or fatal injuries.

Wherever the child sits, the lap portion of the belt should be worn low and snug on the hips, just touching the child's thighs. This applies belt force to the child's pelvic bones in a crash.

Infants and Young Children

Everyone in a vehicle needs protection! This includes infants and all other children. Neither the distance traveled nor the age and size of the traveler changes the need, for everyone, to use safety restraints. In fact, the law in every state in the United States and in every Canadian province says children up to some age must be restrained while in a vehicle.

⚠ CAUTION:

Children can be seriously injured or strangled if a shoulder belt is wrapped around their neck and the safety belt continues to tighten. Never leave children unattended in a vehicle and never allow children to play with the safety belts.

Every time infants and young children ride in vehicles, they should have the protection provided by appropriate restraints. Young children should not use the vehicle's adult safety belts alone, unless there is no other choice. Instead, they need to use a child restraint.

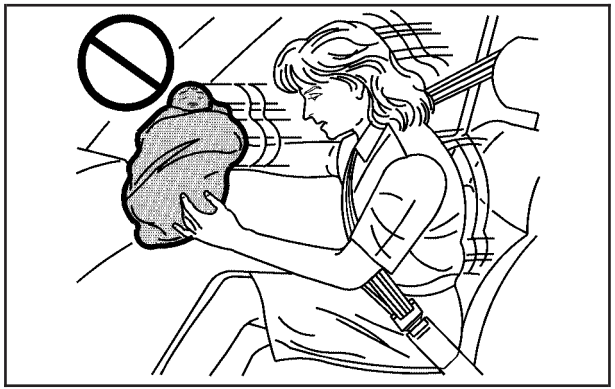

⚠ CAUTION:

People should never hold a baby in their arms while riding in a vehicle. A baby does not weigh much — until a crash. During a crash a baby will become so heavy it is not possible to hold it. For example, in a crash at only 25 mph (40 km/h), a 12 lb (5.5 kg) baby will suddenly become a 240 lb (110 kg) force on a person's arms. A baby should be secured in an appropriate restraint.

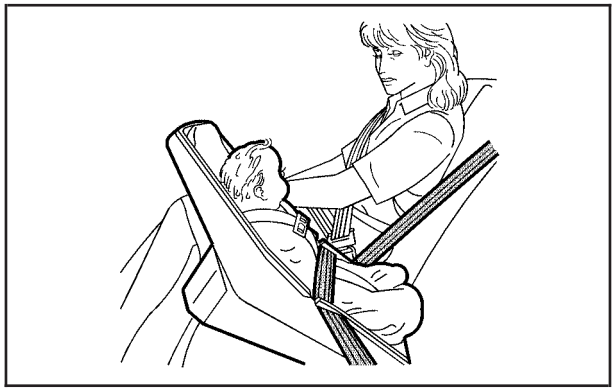

⚠ CAUTION:

Children who are up against, or very close to, any airbag when it inflates can be seriously injured or killed. Airbags plus lap-shoulder belts offer protection for adults and older children, but not for young children and infants. Neither the vehicle's safety belt system nor its airbag system is designed for them. Young children and infants need the protection that a child restraint system can provide.

Q: What are the different types of add-on child restraints?

A: Add-on child restraints, which are purchased by the vehicle's owner, are available in four basic types. Selection of a particular restraint should take into consideration not only the child's weight, height and age but also whether or not the restraint will be compatible with the motor vehicle in which it will be used.

For most basic types of child restraints, there are many different models available. When purchasing a child restraint, be sure it is designed to be used in a motor vehicle. If it is, the restraint will have a label saying that it meets federal motor vehicle safety standards.

The restraint manufacturer's instructions that come with the restraint, state the weight and height limitations for a particular child restraint. In addition, there are many kinds of restraints available for children with special needs.

⚠ CAUTION:

Newborn infants need complete support, including support for the head and neck. This is necessary because a newborn infant's neck is weak and its head weighs so much compared with the rest of its body. In a crash, an infant in a rear-facing seat settles into the restraint, so the crash forces can be distributed across the strongest part of an infant's body, the back and shoulders. Infants always should be secured in appropriate infant restraints.

⚠ CAUTION:

The body structure of a young child is quite unlike that of an adult or older child, for whom the safety belts are designed. A young child's hip bones are still so small that the vehicle's regular safety belt may not remain low on the hip bones, as it should. Instead, it may settle up around the child's abdomen. In a crash, the belt would apply force on a body area that is unprotected by any bony structure. This alone could cause serious or fatal injuries. Young children always should be secured in appropriate child restraints.

Child Restraint Systems

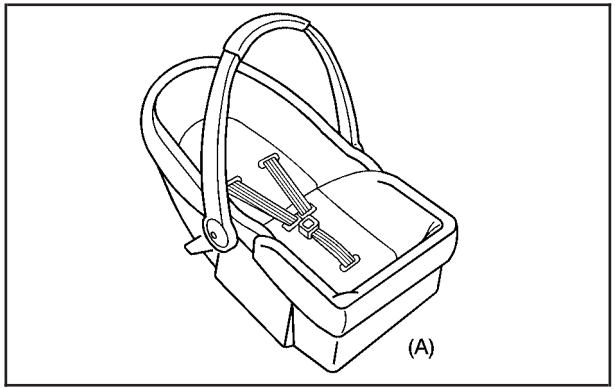

An infant car bed (A), a special bed made for use in a motor vehicle, is an infant restraint system designed to restrain or position a child on a continuous flat surface. Make sure that the infant's head rests toward the center of the vehicle.

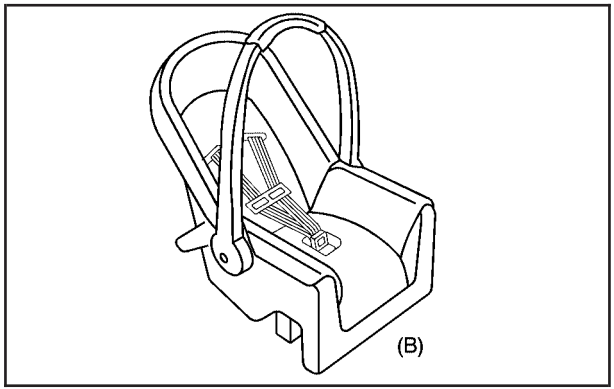

A rear-facing infant seat (B) provides restraint with the seating surface against the back of the infant. The harness system holds the infant in place and, in a crash, acts to keep the infant positioned in the restraint.

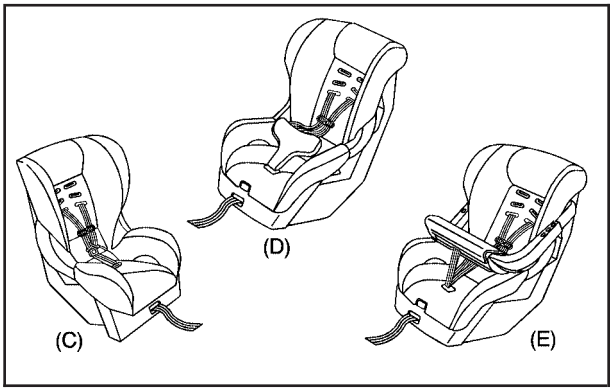

A forward-facing child seat (C-E) provides restraint for the child's body with the harness and also sometimes with surfaces such as T-shaped or shelf-like shields.

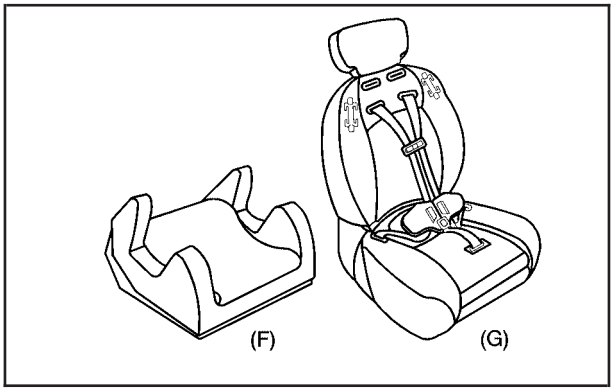

A booster seat (F-G) is a child restraint designed to improve the fit of the vehicle's safety belt system. Some booster seats have a shoulder belt positioner, and some high-back booster seats have a five-point harness. A booster seat can also help a child to see out the window.

Q: How Should I Use a Child Restraint?

A: A child restraint system is any device designed for use in a motor vehicle to restrain, seat, or position children. A built-in child restraint system is a permanent part of the motor vehicle. An add-on child restraint system is a portable one, which is purchased by the vehicle's owner. To help reduce injuries, an add-on child restraint must be secured in the vehicle. With built-in or add-on child restraints, the child has to be secured within the child restraint.

When choosing an add-on child restraint, be sure the child restraint is designed to be used in a vehicle. If it is, it will have a label saying that it meets federal motor vehicle safety standards. Then follow the instructions for the restraint. You may find these instructions on the restraint itself or in a booklet, or both.

Securing an Add-on Child Restraint in the Vehicle

⚠ CAUTION:

A child can be seriously injured or killed in a crash if the child restraint is not properly secured in the vehicle. Make sure the child restraint is properly installed in the vehicle using the vehicle's safety belt or LATCH system, following the instructions that came with that restraint, and also the instructions in this manual.

To help reduce the chance of injury, the child restraint must be secured in the vehicle. Child restraint systems must be secured in vehicle seats by lap belts or the lap belt portion of a lap-shoulder belt, or by the LATCH system. See *Lower Anchors and Tethers for Children (LATCH) on page 73* for more information. A child can be endangered in a crash if the child restraint is not properly secured in the vehicle.

When securing an add-on child restraint, refer to the instructions that come with the restraint which may be on the restraint itself or in a booklet, or both, and to this manual. The child restraint instructions are important, so if they are not available, obtain a replacement copy from the manufacturer.

Keep in mind that an unsecured child restraint can move around in a collision or sudden stop and injure people in the vehicle. Be sure to properly secure any child restraint in your vehicle — even when no child is in it.

Securing the Child Within the Child Restraint

There are several systems for securing the child within the child restraint. One system, the three-point harness, has straps that come down over each of the infant's shoulders and buckle together at the crotch. The five-point harness system has two shoulder straps, two hip straps, and a crotch strap. A shield may take the place of hip straps. A T-shaped shield has shoulder straps that are attached to a flat pad which rests low against the child's body. A shelf- or armrest-type shield has straps that are attached to a wide, shelf-like shield that swings up or to the side.

⚠ CAUTION:

A child can be seriously injured or killed in a crash if the child is not properly secured in the child restraint. Make sure the child is properly secured, following the instructions that came with that restraint.

Because there are different systems, it is important to refer to the instructions that come with the restraint. A child can be endangered in a crash if the child is not properly secured in the child restraint.

Where to Put the Restraint

Accident statistics show that children are safer if they are restrained in the rear rather than the front seat. General Motors recommends that child restraints be secured in a rear seat, including an infant riding in a rear-facing infant seat, a child riding in a forward-facing child seat and an older child riding in a booster seat.

Your vehicle has a rear seat that will accommodate a rear-facing child restraint. A label on your sun visor says, “Never put a rear-facing child seat in the front.” This is because the risk to the rear-facing child is so great, if the airbag deploys.

⚠ CAUTION:

A child in a rear-facing child restraint can be seriously injured or killed if the right front passenger’s airbag inflates. This is because the back of the rear-facing child restraint would be very close to the inflating airbag.

CAUTION: (Continued)

CAUTION: (Continued)

Even though the passenger sensing system is designed to turn off the passenger’s frontal airbag if the system detects a rear-facing child restraint, no system is fail-safe, and no one can guarantee that an airbag will not deploy under some unusual circumstance, even though it is turned off. We recommend that rear-facing child restraints be secured in the rear seat, even if the airbag is off.

If you need to secure a forward-facing child restraint in the right front seat, always move the front passenger seat as far back as it will go. It is better to secure the child restraint in a rear seat.

Do not use child restraints in the center front seat position. The restraints will not work properly.

Wherever you install it, be sure to secure the child restraint properly.

Keep in mind that an unsecured child restraint can move around in a collision or sudden stop and injure people in the vehicle. Be sure to properly secure any child restraint in your vehicle — even when no child is in it.

Lower Anchors and Tethers for Children (LATCH)

Your vehicle has the LATCH system. The LATCH system holds a child restraint during driving or in a crash. This system is designed to make installation of a child restraint easier. The LATCH system uses anchors in the vehicle and attachments on the child restraint that are made for use with the LATCH system.

Make sure that a LATCH-compatible child restraint is properly installed using the anchors, or use the vehicle's safety belts to secure the restraint, following the instructions that came with that restraint, and also the instructions in this manual.

When installing a child restraint with a top tether, you must also use either the lower anchors or the safety belts to properly secure the child restraint. A child restraint must never be attached using only the top tether and anchor.

In order to use the LATCH system in your vehicle, you need a child restraint that has LATCH attachments. The child restraint manufacturer will provide you with instructions on how to use the child restraint and its attachments. The following explains how to attach a child restraint with these attachments in your vehicle.

Your vehicle has lower anchors and top tether anchors. Your child restraint may have lower attachments and a top tether.

Not all vehicle seating positions or child restraints have lower anchors and attachments or top tether anchors and attachments.

Lower Anchors

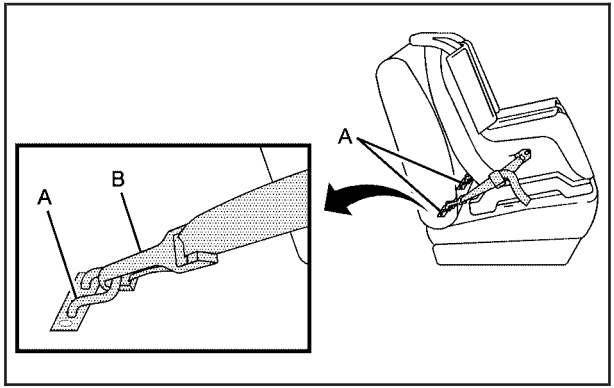

Lower anchors (A) are metal bars built into the vehicle. There are two lower anchors for each LATCH seating position that will accommodate a child restraint with lower attachments (B).

Top Tether Anchor

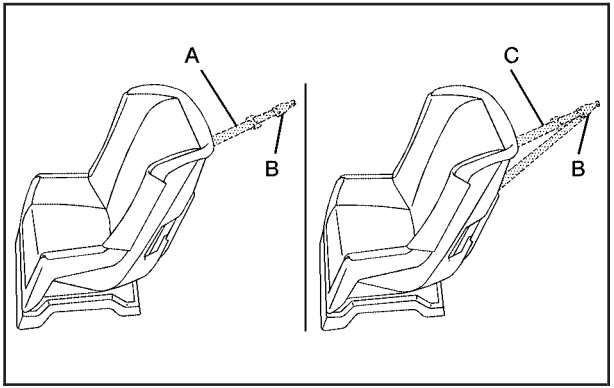

A top tether (A, C) anchors the top of the child restraint to the vehicle. A top tether anchor is built into the vehicle. The top tether attachment (B) on the child restraint connects to the top tether anchor in the vehicle in order to reduce the forward movement and rotation of the child restraint during driving or in a crash.

Your child restraint may have a single tether (A) or a dual tether (C). Either will have a single attachment (B) to secure the top tether to the anchor.

Some child restraints with top tethers are designed for use with or without the top tether being attached. Others require the top tether always to be attached. In Canada, the law requires that forward-facing child restraints have a top tether, and that the tether be attached. In the United States, some child restraints also have a top tether. Be sure to read and follow the instructions for your child restraint.

If the child restraint does not have a top tether, one can be obtained, in kit form, for many child restraints. Ask the child restraint manufacturer whether or not a kit is available.

Lower Anchor and Top Tether Anchor Locations

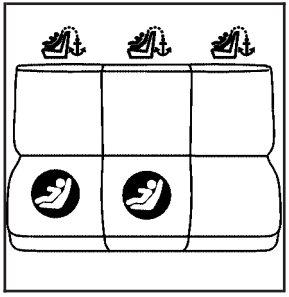

Second Row — 60/40

(Lower Anchor): Seating positions with two lower anchors.

(Top Tether Anchor): Seating positions with top tether anchors.

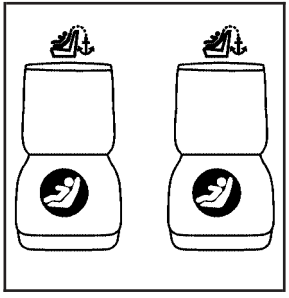

Second Row — Bucket

(Lower Anchor): Seating positions with two lower anchors.

(Top Tether Anchor): Seating positions with top tether anchors.

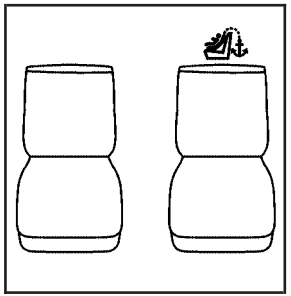

Third Row — Two Passenger

(Top Tether Anchor): Seating positions with top tether anchors.

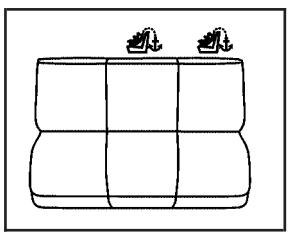

Third Row — Three Passenger

(Top Tether Anchor): Seating positions with top tether anchors.

For models with a three passenger third row seat, see the information following for installing a child restraint with a top tether in the third row, if your vehicle has one. Never install two top tethers using the same top tether anchor.

For models with 60/40 second row seating, the rear right side passenger and center seating positions have exposed metal anchors located in the crease between the seatback and the seat cushion.

For models with second row bucket seats, both rear seating positions have exposed metal anchors located in the crease between the seatback and the seat cushion.

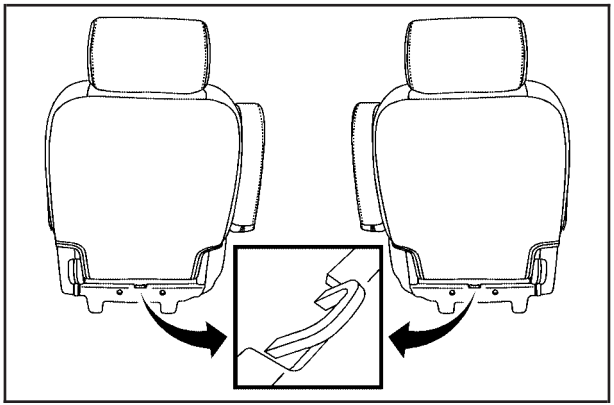

Second Row Seat — Bucket

For models with bucket second row seating, the top tether anchors are located at the bottom rear of the seat cushion for each seating position in the second row. Be sure to use an anchor located on the same side of the vehicle as the seating position where the child restraint will be placed.

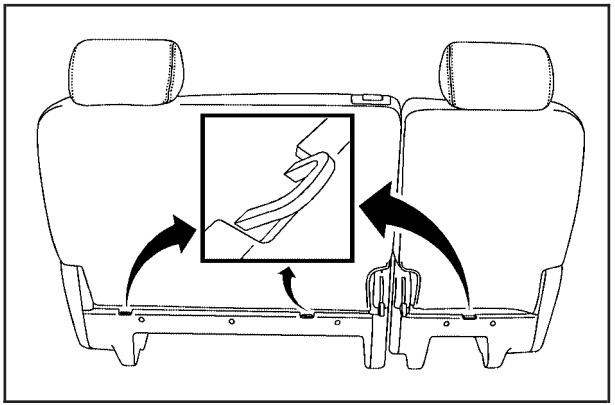

Second Row Seat — 60/40

For models with 60/40 second row seating, the top tether anchors are located at the bottom rear of the seat cushion for each seating position in the second row. Be sure to use an anchor located on the same side of the vehicle as the seating position where the child restraint will be placed.

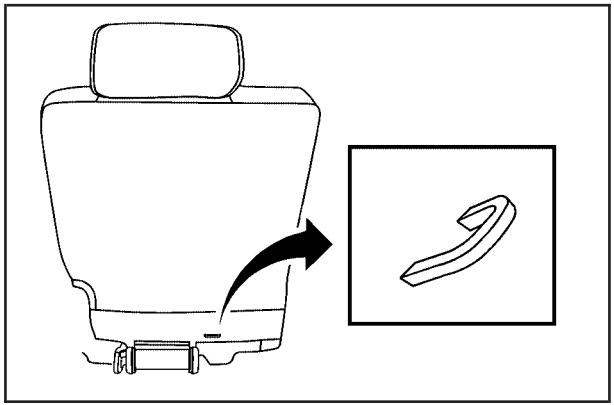

Third Row Seat — Two or Three Passenger

For vehicles with a two passenger third row seat, there is one top tether anchor located at the bottom rear of the seat cushion that can be used for the rear driver side seating position in the third row. Never install two top tethers using the same top tether anchor.

For vehicles with a three passenger third row seat, there is one top tether anchor located at the bottom rear of the seat cushion that can be used for either the third row center or driver side seating position. Never install two top tethers using the same top tether anchor.

Do not secure a child restraint in the right front passenger position or the third row passenger side seating position if your vehicle has a third row seat, if a national or local law requires that the top tether be attached, or if the instructions that come with the child restraint say that the top tether must be attached. There is no place to attach the top tether in these positions.

Accident statistics show that children are safer if they are restrained in the rear rather than the front seat. See *Where to Put the Restraint on page 72* for additional information.

Securing a Child Restraint Designed for the LATCH System

⚠ CAUTION:

If a LATCH-type child restraint is not attached to anchors, the restraint will not be able to protect the child correctly. In a crash, the child could be seriously injured or killed. Make sure that a LATCH-type child restraint is properly installed using the anchors, or use the vehicle's safety belts to secure the restraint, following the instructions that came with that restraint, and also the instructions in this manual.

⚠ CAUTION:

Each top tether anchor and lower anchor in the vehicle is designed to hold only one child restraint. Attaching more than one child restraint to a single anchor could cause the anchor or attachment to come loose or even break during a crash. A child or others could be injured if this happens. To help prevent injury to people and damage to your vehicle, attach only one child restraint per anchor.

⚠ CAUTION:

Children can be seriously injured or strangled if a shoulder belt is wrapped around their neck and the safety belt continues to tighten. Secure any unused safety belts behind the child restraint so children cannot reach them. Pull the shoulder belt all the way out of the retractor to set the lock, if your vehicle has one, after the child restraint has been installed. Be sure to follow the instructions of the child restraint manufacturer.

Notice: **Contact between the child restraint or the LATCH attachment parts and the vehicle's safety belt assembly may cause damage to these parts. Make sure when securing unused safety belts behind the child restraint that there is no contact between the child restraint or the LATCH attachment parts and the vehicle's safety belt assembly.**

Folding an empty rear seat with the safety belts secured, may cause damage to the safety belt or the seat. When removing the child restraint, always remember to return the safety belts to their normal, stowed position before folding the rear seat.

1. Attach and tighten the lower attachments to the lower anchors. If the child restraint does not have lower attachments or the desired seating position does not have lower anchors, secure the child restraint with the top tether and the safety belts. Refer to your child restraint manufacturer instructions and the instructions in this manual.
   1.1. Find the lower anchors for the desired seating position.
   1.2. Put the child restraint on the seat.
   1.3. Attach and tighten the lower attachments on the child restraint to the lower anchors.

2. If the child restraint manufacturer recommends that the top tether be attached, attach and tighten the top tether to the top tether anchor, if the vehicle has one. Refer to the child restraint instructions and the following steps:
   2.1. Find the top tether anchor.
   2.2. Route, attach and tighten the top tether according to your child restraint instructions and the following instructions:

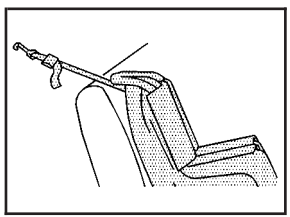

If the position you are using does not have a head rest/restraint and you are using a single tether, route the tether over the seatback.

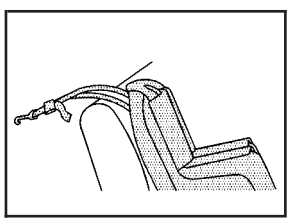

If the position you are using does not have a head rest/restraint and you are using a dual tether, route the tether over the seatback.

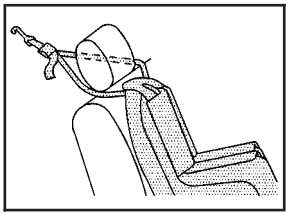

If the position you are using has an adjustable head rest/restraint and you are using a dual tether, route the tether around the head rest/restraint.

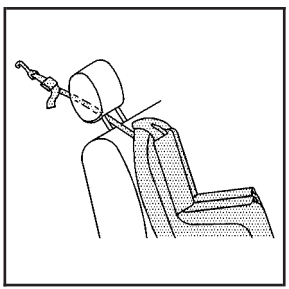

If the position you are using has an adjustable head rest/restraint and you are using a single tether, raise the head rest/restraint and route the tether under the head rest/restraint and in between the head rest/restraint posts.

3. Push and pull the child restraint in different directions to be sure it is secure.

Securing a Child Restraint in a Rear Seat Position

If your child restraint has the LATCH system, see *Lower Anchors and Tethers for Children (LATCH) on page 73*.

If your vehicle has a third row, there is no top tether anchor in the passenger-side seating position. Do not secure a child restraint in this position if a national or local law requires that the top tether be anchored or if the instructions that come with the child restraint say that the top tether must be anchored.

If your child restraint does not have the LATCH system, you will be using the lap-shoulder belt to secure the child restraint in this position. Be sure to follow the instructions that came with the child restraint. Secure the child in the child restraint when and as the instructions say.

1. Put the child restraint on the seat.
2. Pick up the latch plate, and run the lap and shoulder portions of the vehicle's safety belt through or around the restraint. The child restraint instructions will show you how.

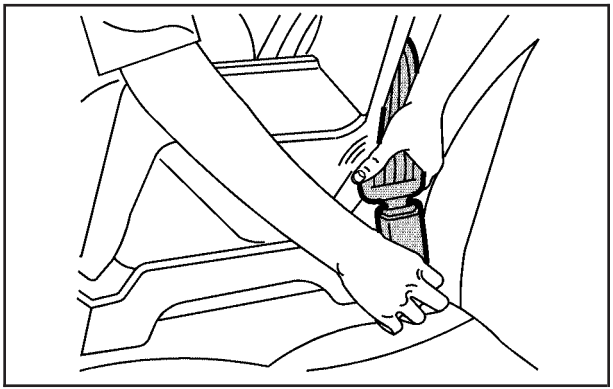

3. Buckle the belt. Make sure the release button is positioned so you would be able to unbuckle the safety belt quickly if you ever had to.

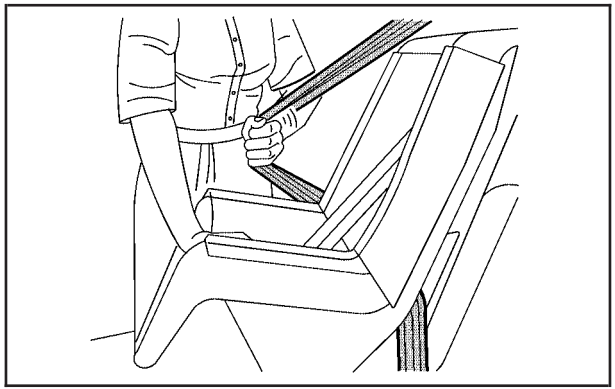

4. Pull the rest of the shoulder belt all the way out of the retractor to set the lock.

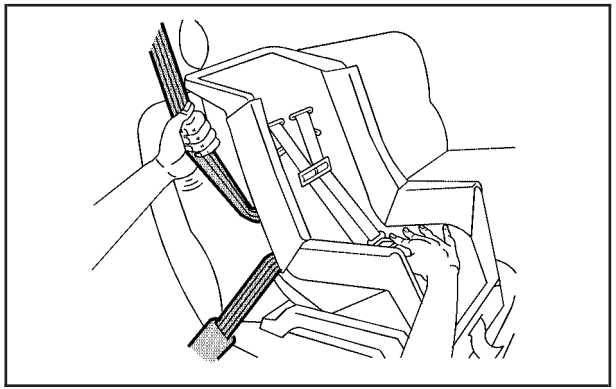

5. To tighten the belt, push down on the child restraint, pull the shoulder portion of the belt to tighten the lap portion of the belt and feed the shoulder belt back into the retractor. If you are using a forward-facing child restraint, you may find it helpful to use your knee to push down on the child restraint as you tighten the belt.

6. If your child restraint manufacturer recommends using a top tether, and the position that you are using has a top tether anchor, attach and tighten the top tether to the top tether anchor. Refer to the instructions that came with the child restraint and to *Lower Anchors and Tethers for Children (LATCH) on page 73*.
7. Push and pull the child restraint in different directions to be sure it is secure.

To remove the child restraint, if the top tether is attached to the top tether anchor, disconnect it. Unbuckle the vehicle's safety belt and let it go back all the way. The safety belt will move freely again and be ready to work for an adult or larger child passenger.

Securing a Child Restraint in the Center Front Seat Position

⚠ CAUTION:

A child in a child restraint in the center front seat can be badly injured or killed by the right front passenger's airbag if it inflates. Never secure a child restraint in the center front seat. It is always better to secure a child restraint in the rear seat.

Do not use child restraints in this position. The restraints will not work properly.

Securing a Child Restraint in the Right Front Seat Position

Your vehicle has a right front passenger's airbag. A rear seat is a safer place to secure a forward-facing child restraint. See *Where to Put the Restraint on page 72*.

In addition, your vehicle has a passenger sensing system. The passenger sensing system is designed to turn off the right front passenger's frontal airbag when an infant in a rear-facing infant seat or a small child in a forward-facing child restraint or booster seat is detected. See *Passenger Sensing System on page 100* and *Passenger Airbag Status Indicator on page 225* for more information on this including important safety information.

A label on your sun visor says, "Never put a rear-facing child seat in the front." This is because the risk to the rear-facing child is so great, if the airbag deploys.

⚠ CAUTION:

A child in a rear-facing child restraint can be seriously injured or killed if the right front passenger's airbag inflates. This is because the back of the rear-facing child restraint would be very close to the inflating airbag.

Even though the passenger sensing system is designed to turn off the passenger's frontal airbag if the system detects a rear-facing child restraint, no system is fail-safe, and no one can guarantee that an airbag will not deploy under some unusual circumstance, even though it is turned off. We recommend that rear-facing child restraints be secured in the rear seat, even if the airbag is off.

If you need to secure a forward-facing child restraint in the right front seat position, move the seat as far back as it will go before securing the forward-facing child restraint. See *Power Seats on page 9*.

If your child restraint has the LATCH system, see *Lower Anchors and Tethers for Children (LATCH) on page 73*.

There is no top tether anchor at the right front seating position. Do not secure a child seat in this position if a national or local law requires that the top tether be anchored or if the instructions that come with the child restraint say that the top tether must be anchored. See *Lower Anchors and Tethers for Children (LATCH) on page 73* if the child restraint has a top tether.

You will be using the lap-shoulder belt to secure the child restraint in this position. Be sure to follow the instructions that came with the child restraint. Secure the child in the child restraint when and as the instructions say.

1. Your vehicle has a right front passenger's frontal airbag. See *Passenger Sensing System on page 100*. We recommend that rear-facing child restraints be secured in a rear seat, even if the airbag is off. If your child restraint is forward-facing, move the seat as far back as it will go before securing the child restraint in this seat. See *Power Seats on page 9*.

   When the passenger sensing system has turned off the right front passenger's frontal airbag, the off indicator on the passenger airbag status indicator should light and stay lit when you turn the ignition to RUN or START. See *Passenger Airbag Status Indicator on page 225*.

2. Put the child restraint on the seat.

3. Pick up the latch plate, and run the lap and shoulder portions of the vehicle's safety belt through or around the restraint. The child restraint instructions will show you how.

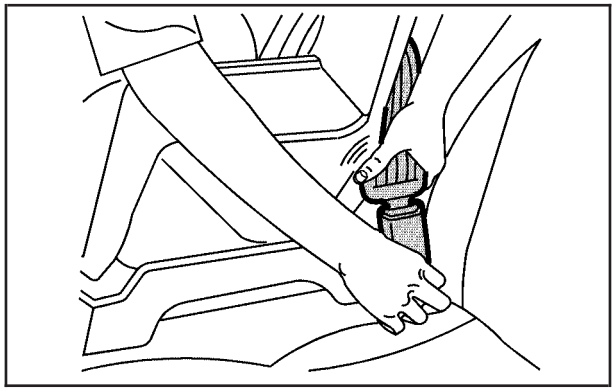

4. Buckle the belt. Make sure the release button is positioned so you would be able to unbuckle the safety belt quickly if you ever had to.

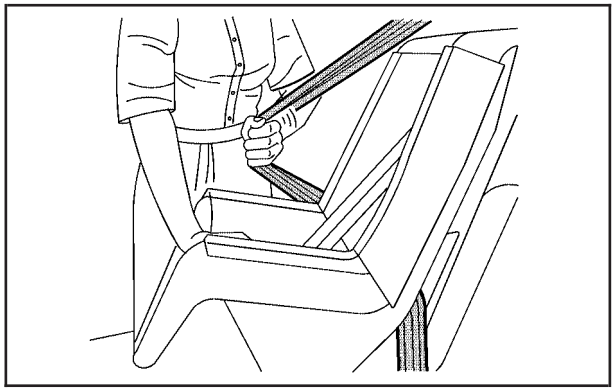

5. Pull the rest of the shoulder belt all the way out of the retractor to set the lock.

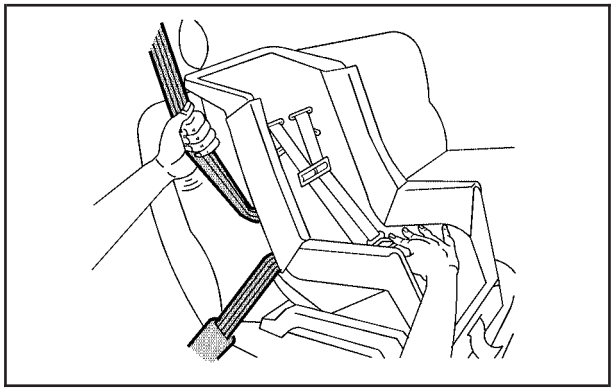

6. To tighten the belt, push down on the child restraint, pull the shoulder portion of the belt to tighten the lap portion of the belt and feed the shoulder belt back into the retractor.

   If you are using a forward-facing child restraint, you may find it helpful to use your knee to push down on the child restraint as you tighten the belt. You should not be able to pull more of the belt from the retractor once the lock has been set.

7. Push and pull the child restraint in different directions to be sure it is secure.
8. If the airbag is off, the off indicator will be lit and stay lit when the key is turned to RUN or START.

If a child restraint has been installed and the on indicator is lit, turn the vehicle off. Remove the child restraint from the vehicle and reinstall the child restraint.

If after reinstalling the child restraint and restarting the vehicle, the on indicator is still lit, check to make sure that the vehicle's seatback is not pressing the child restraint into the seat cushion. If this happens, slightly recline the vehicle's seatback and adjust the seat cushion if possible. Also make sure the child restraint is not trapped under the vehicle head restraint. If this happens, adjust the head restraint.

If the on indicator is still lit, secure the child in the child restraint in a rear seat position in the vehicle and check with your dealer.

To remove the child restraint, just unbuckle the vehicle's safety belt and let it go back all the way. The safety belt will move freely again and be ready to work for an adult or larger child passenger.

Airbag System

Your vehicle has a frontal airbag for the driver and a frontal airbag for the right front passenger. Your vehicle also has roof-mounted rollover airbags designed for either side impact or rollover deployment. Roof-mounted rollover airbags are available for the driver and the passenger seated directly behind the driver and for the right front passenger and the passenger seated directly behind that passenger.

For roof-mounted rollover airbags, the word AIRBAG will appear on the airbag covering on the ceiling above the sidewall trim near the driver's and right front passenger's window and the second row outside seating positions.

Also, if your vehicle has a third row passenger seat, you may have third row roof-mounted rollover airbags.

Frontal airbags are designed to help reduce the risk of injury from the force of an inflating frontal airbag. But these airbags must inflate very quickly to do their job and comply with federal regulations.

Here are the most important things to know about the airbag system:

⚠ CAUTION:

You can be severely injured or killed in a crash if you are not wearing your safety belt — even if you have airbags. Wearing your safety belt during a crash helps reduce your chance of hitting things inside the vehicle or being ejected from it. Airbags are "supplemental restraints" to the safety belts. All airbags are designed to work with safety belts but do not replace them.

Frontal airbags for the driver and right front passenger are designed to deploy in moderate to severe frontal and near frontal crashes. They are not designed to inflate in rollover, rear crashes, or in many side crashes.

CAUTION: (Continued)

CAUTION: (Continued)

And, for some unrestrained occupants, frontal airbags may provide less protection in frontal crashes than more forceful airbags have provided in the past.

Roof-mounted rollover airbags are designed to inflate in moderate to severe crashes where something hits the side of your vehicle, during a vehicle rollover, or in a severe frontal impact. They are not designed to inflate in rear crashes. If your vehicle has roof rail airbags, they are designed to provide both side impact protection and rollover protection. Everyone in your vehicle should wear a safety belt properly — whether or not there is an airbag for that person.

⚠ CAUTION:

Both frontal and roof-mounted rollover airbags inflate with great force, faster than the blink of an eye. If you are too close to an inflating airbag, as you would be if you were leaning forward, it could seriously injure you. Safety belts help keep you in position for airbag inflation before and during a crash. Always wear your safety belt even with frontal airbags. The driver should sit as far back as possible while still maintaining control of the vehicle. Occupants should not lean on or sleep against the door in the first or second row seats, or the rear windows in the third row seat, if your vehicle has roof- mounted rollover airbags.

⚠ CAUTION:

Anyone who is up against, or very close to, any airbag when it inflates can be seriously injured or killed. Airbags plus lap-shoulder belts offer the best protection for adults, but not for young children and infants. Neither the vehicle's safety belt system nor its airbag system is designed for them. Young children and infants need the protection that a child restraint system can provide. Always secure children properly in your vehicle. To read how, see *Older Children on page 60* or *Infants and Young Children on page 63*.

Occupants should not lean on or sleep against the door in the first or second row seats, or the rear windows in the third row seat, if your vehicle has roof-mounted rollover airbags.

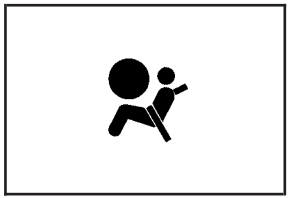

There is an airbag readiness light on the instrument panel cluster, which shows the airbag symbol.

The system checks the airbag electrical system for malfunctions. The light tells you if there is an electrical problem. See *Airbag Readiness Light on page 224* for more information.

Where Are the Airbags?

The driver's airbag is in the middle of the steering wheel.

The right front passenger's airbag is in the instrument panel on the passenger's side.

The roof-mounted rollover airbag for the driver and the person seated directly behind the driver is located in the ceiling above the side windows.

The roof-mounted rollover airbag for the right front passenger and the person directly behind that passenger is located in the ceiling above the side windows.

If your vehicle has a third row seat, the roof-mounted rollover airbag is located in the ceiling above the rear windows for the outside passenger positions.

⚠ CAUTION:

If something is between an occupant and an airbag, the bag might not inflate properly or it might force the object into that person causing severe injury or even death. The path of an inflating airbag must be kept clear. Do not put anything between an occupant and an airbag, and do not attach or put anything on the steering wheel hub or on or near any other airbag covering. And, if your vehicle has roof-mounted rollover airbags, never secure anything to the roof of your vehicle by routing the rope or tiedown through any door or window opening. If you do, the path of an inflating side impact airbag will be blocked. The path of an inflating airbag must be kept clear.

When Should an Airbag Inflate?

The driver's and right front passenger's frontal airbags are designed to inflate in moderate to severe frontal or near-frontal crashes. But they are designed to inflate only if the impact exceeds a predetermined deployment threshold. Deployment thresholds take into account a variety of desired deployment and non-deployment events and are used to predict how severe a crash is likely to be in time for the airbags to inflate and help restrain the occupants. Whether your frontal airbags will or should deploy is not based on how fast your vehicle is traveling. It depends largely on what you hit, the direction of the impact and how quickly your vehicle slows down.

In addition, your vehicle has "dual stage" frontal airbags, which adjust the restraint according to crash severity. Your vehicle is equipped with electronic frontal sensors, which help the sensing system distinguish between a moderate frontal impact and a more severe frontal impact. For moderate frontal impacts, these airbags inflate at a level less than full deployment. For more severe frontal impacts, full deployment occurs.

If the front of your vehicle goes straight into a wall that does not move or deform, the threshold level for the reduced deployment is about 9 to 16 mph (14 to 26 km/h), and the threshold level for a full deployment is about 18 to 25 mph (29 to 40 km/h). (The threshold level can vary, however, with specific vehicle design, so that it can be somewhat above or below this range.)

Frontal airbags may inflate at different crash speeds. For example:

- If the vehicle hits a stationary object, the airbags could inflate at a different crash speed than if the vehicle hits a moving object.
- If the vehicle hits an object that deforms, the airbags could inflate at a different crash speed than if the vehicle hits an object that does not deform.
- If the vehicle hits a narrow object (like a pole) the airbags could inflate at a different crash speed than if the vehicle hits a wide object (like a wall).
- If the vehicle goes into an object at an angle the airbags could inflate at a different crash speed than if the vehicle goes straight into the object.

The frontal airbags (driver and right front passenger) are not intended to inflate during vehicle rollovers, rear impacts, or in many side impacts.

Your vehicle has a seat position sensor which enables the sensing system to monitor the fore and aft position of the driver's seat. Seat position sensors provide information that is used to determine if the airbags should deploy at a reduced level or at full deployment.

Your vehicle has roof-mounted rollover airbags and a rollover sensor. See *Airbag System on page 89*. These "rollover capable" airbags are intended to inflate in moderate to severe side crashes, during a rollover or in a severe frontal impact. A roof-mounted rollover airbag will inflate if the crash severity is above the system's designed "threshold level." The threshold level can vary with specific vehicle design. Roof-mounted rollover airbags are not intended to inflate in rear impacts. Both roof-mounted rollover airbags will deploy when either side of the vehicle is struck or during a rollover, or in a severe frontal impact.

In any particular crash, no one can say whether an airbag should have inflated simply because of the damage to a vehicle or because of what the repair costs were. For frontal airbags, inflation is determined by what the vehicle hits, the angle of the impact, and how quickly the vehicle slows down. For roof-mounted rollover airbags, inflation is determined by the location and severity of the impact or a rollover event.

The airbag system is designed to work properly under a wide range of conditions, including off-road usage. Observe safe driving speeds, especially on rough terrain. As always, wear your safety belt. See *Off-Road Driving on page 334* for tips on off-road driving.

What Makes an Airbag Inflate?

In an impact of sufficient severity, the airbag sensing system detects that the vehicle is in a crash. In the case of a roof-mounted rollover airbag, the sensing system detects that the vehicle is about to roll over or has been in a severe frontal impact. The sensing system triggers a release of gas from the inflator, which inflates the airbag. The inflator, airbag, and related hardware are all part of the airbag modules inside the steering wheel and in the instrument panel in front of the right front passenger. For vehicles with roof-mounted rollover airbags, the airbag modules are located in the ceiling of the vehicle, near the side windows.

If your vehicle has a third row seat with roof-mounted rollover airbags, the airbag modules are located inside the rear-most pillar trim and above in the ceiling above the fixed rear glass.

How Does an Airbag Restrain?

In moderate to severe frontal or near frontal collisions, even belted occupants can contact the steering wheel or the instrument panel.
In moderate to severe side collisions, even belted occupants can contact the inside of the vehicle.
The airbag supplements the protection provided by safety belts. Airbags distribute the force of the impact more evenly over the occupant's upper body, stopping the occupant more gradually.
But the frontal airbags would not help you in many types of collisions, including rollovers, rear impacts, and many side impacts, primarily because an occupant's motion is not toward the airbag.
Roof-mounted rollover airbags would not help you in many types of collisions, including many frontal or near frontal collisions, and rear impacts, primarily because an occupant's motion is not toward the airbag. Airbags should never be regarded as anything more than a supplement to safety belts, and then only in moderate to severe frontal or near-frontal collisions for the driver's and right front passenger's frontal airbags, and only in moderate to severe side collisions for roof-mounted rollover airbags.

What Will You See After an Airbag Inflates?

After a frontal airbag inflates, it quickly deflates, so quickly that some people may not even realize the airbag inflated. Roof-mounted rollover airbags deflate more slowly and may still be at least partially inflated minutes after the vehicle comes to rest. Some components of the airbag module may be hot for a short time. These components include the steering wheel hub for the driver's frontal airbag and the instrument panel for the right front passenger's frontal airbag.
For vehicles with roof-mounted rollover airbags, the ceiling of your vehicle near the side windows may be hot. The parts of the bag that come into contact with you may be warm, but not too hot to touch. There will be some smoke and dust coming from the vents in the deflated airbags.
Airbag inflation does not prevent the driver from seeing out of the windshield or being able to steer the vehicle, nor does it stop people from leaving the vehicle.

⚠ CAUTION:

When an airbag inflates, there is dust in the air. This dust could cause breathing problems for people with a history of asthma or other breathing trouble. To avoid this, everyone in the vehicle should get out as soon as it is safe to do so. If you have breathing problems but cannot get out of the vehicle after an airbag inflates, then get fresh air by opening a window or a door. If you experience breathing problems following an airbag deployment, you should seek medical attention.

Your vehicle has a feature that may automatically unlock the doors and turn the interior lamps on when the airbags inflate. You can lock the doors again and turn the interior lamps off by using the door lock and interior lamp controls.

In many crashes severe enough to inflate an airbag, windshields are broken by vehicle deformation. Additional windshield breakage may also occur from the right front passenger airbag.

- Airbags are designed to inflate only once. After an airbag inflates, you will need some new parts for your airbag system. If you do not get them, the airbag system will not be there to help protect you in another crash. A new system will include airbag modules and possibly other parts. The service manual for your vehicle covers the need to replace other parts.
- Your vehicle has a crash sensing and diagnostic module which records information after a crash. See *Vehicle Data Collection and Event Data Recorders on page 547*.
- Let only qualified technicians work on your airbag system. Improper service can mean that your airbag system will not work properly. See your dealer for service.

Passenger Sensing System

Your vehicle has a passenger sensing system. The passenger airbag status indicator on the overhead console will be visible when you turn your ignition key to RUN or START. The words ON and OFF or the symbol for on and off, will be visible during the system check. When the system check is complete, either the word ON or the word OFF, or the symbol for on or the symbol for off will be visible. See *Passenger Airbag Status Indicator on page 225*.

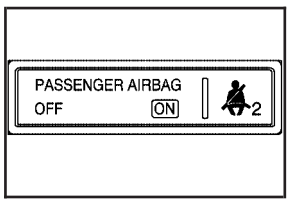

United States

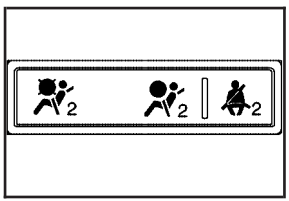

Canada

The passenger sensing system will turn off the right front passenger's frontal airbag under certain conditions. The driver's airbags are not part of the passenger sensing system.

The passenger sensing system works with sensors that are part of the right front passenger's seat and safety belt. The sensors are designed to detect the presence of a properly-seated occupant and determine if the passenger's airbag should be enabled (may inflate) or not.

Accident statistics show that children are safer if they are restrained in the rear rather than the front seat. General Motors recommends that child restraints be secured in a rear seat, including an infant riding in a rear-facing infant seat, a child riding in a forward-facing child seat and an older child riding in a booster seat.

Your vehicle has a rear seat that will accommodate a rear-facing child restraint. A label on your sun visor says, "Never put a rear-facing child seat in the front." This is because the risk to the rear-facing child is so great, if the airbag deploys.

⚠ CAUTION:

A child in a rear-facing child restraint can be seriously injured or killed if the right front passenger's airbag inflates. This is because the back of the rear-facing child restraint would be very close to the inflating airbag.

Even though the passenger sensing system is designed to turn off the passenger's frontal airbag if the system detects a rear-facing child restraint, no system is fail-safe, and no one can guarantee that an airbag will not deploy under some unusual circumstance, even though it is turned off. We recommend that rear-facing child restraints be secured in the rear seat, even if the airbag is off.

If you need to secure a forward-facing child restraint in the right front seat, always move the front passenger seat as far back as it will go. It is better to secure the child restraint in a rear seat.

The passenger sensing system is designed to turn off the right front passenger's airbag if:

- the right front passenger seat is unoccupied
- the system determines that an infant is present in a rear-facing infant seat
- the system determines that a small child is present in a forward-facing child restraint
- the system determines that a small child is present in a booster seat
- a right front passenger takes his/her weight off of the seat for a period of time
- the right front passenger seat is occupied by a smaller person, such as a child who has outgrown child restraints
- or if there is a critical problem with the airbag system or the passenger sensing system.

When the passenger sensing system has turned off the passenger's airbag, the off indicator will light and stay lit to remind you that the airbag is off.

If a child restraint has been installed and the on indicator is lit, turn the vehicle off. Remove the child restraint from the vehicle and reinstall the child restraint following the child restraint manufacturer's directions and refer to *Securing a Child Restraint in the Right Front Seat Position on page 85*.

If after reinstalling the child restraint and restarting the vehicle, the on indicator is still lit, check to make sure that the vehicle's seatback is not pressing the child restraint into the seat cushion. If this happens, slightly recline the vehicle's seatback and adjust the seat cushion if possible. Also make sure the child restraint is not trapped under the vehicle head restraint. If this happens, adjust the head restraint.

If the on indicator is still lit, secure the child in the child restraint in a rear seat position in the vehicle and check with your dealer.

The passenger sensing system is designed to enable (may inflate) the right front passenger's airbag anytime the system senses that a person of adult size is sitting properly in the right front passenger's seat. When the passenger sensing system has allowed the airbag to be enabled, the on indicator will light and stay lit to remind you that the airbag is active.

For some children who have outgrown child restraints and for very small adults, the passenger sensing system may or may not turn off the right front passenger's airbag, depending upon the person's seating posture and body build. Everyone in your vehicle who has outgrown child restraints should wear a safety belt properly — whether or not there is an airbag for that person.

If a person of adult-size is sitting in the right front passenger's seat, but the off indicator is lit, it could be because that person is not sitting properly in the seat. If this happens, turn the vehicle off and ask the person to place the seatback in the fully upright position, then sit upright in the seat, centered on the seat cushion, with the person's legs comfortably extended. Restart the vehicle and have the person remain in this position for about two minutes. This will allow the system to detect that person and then enable the passenger's airbag.

⚠ CAUTION:

If the airbag readiness light in the instrument panel cluster ever comes on and stays on, it means that something may be wrong with the airbag system. If this ever happens, have the vehicle serviced promptly, because an adult-size person sitting in the right front passenger's seat may not have the protection of the frontal airbag. See *Airbag Readiness Light on page 224* for more on this, including important safety information.

Aftermarket equipment, such as seat covers, can affect how well the passenger sensing system operates. You may want to consider not using seat covers or other aftermarket equipment if your vehicle has the passenger sensing system. See *Adding Equipment to Your Airbag-Equipped Vehicle on page 105* for more information about modifications that can affect how the system operates.

⚠ CAUTION:

Stowing of articles under the passenger's seat or between the passenger's seat cushion and seatback may interfere with the proper operation of the passenger sensing system.

Servicing Your Airbag-Equipped Vehicle

Airbags affect how your vehicle should be serviced. There are parts of the airbag system in several places around your vehicle. You do not want the system to inflate while someone is working on your vehicle. Your dealer and the service manual have information about servicing your vehicle and the airbag system. To purchase a service manual, see *Service Publications Ordering Information on page 553*.

⚠ CAUTION:

For up to 10 seconds after the ignition key is turned off and the battery is disconnected, an airbag can still inflate during improper service. You can be injured if you are close to an airbag when it inflates. Avoid yellow connectors.

CAUTION: (Continued)

CAUTION: (Continued)

They are probably part of the airbag system. Be sure to follow proper service procedures, and make sure the person performing work for you is qualified to do so.

The airbag system does not need regular maintenance.

Adding Equipment to Your Airbag-Equipped Vehicle

Q: Is there anything I might add to the front or sides of the vehicle that could keep the airbags from working properly?

A: Yes. If you add things that change your vehicle's frame, bumper system, height, front end or side sheet metal, they may keep the airbag system from working properly. Also, the airbag system may not work properly if you relocate any of the airbag sensors. If you have any questions about this, you should contact Customer Assistance before you modify your vehicle. The phone numbers and addresses for Customer Assistance are in Step Two of the Customer Satisfaction Procedure in this manual. See *Customer Satisfaction Procedure on page 536*.

Q: Because I have a disability, I have to get my vehicle modified. How can I find out whether this will affect my airbag system?

A: Changing or moving any parts of the front seats, safety belts, the airbag sensing and diagnostic module, rollover sensor module, instrument panel, steering wheel, ceiling headliner, ceiling and pillar garnish trim, roof-mounted rollover airbag modules, or airbag wiring can affect the operation of the airbag system. If you have questions, call Customer Assistance. The phone numbers and addresses for Customer Assistance are in Step Two of the Customer Satisfaction Procedure in this manual. See *Customer Satisfaction Procedure on page 536*.

Restraint System Check

Checking the Restraint Systems

Now and then, make sure the safety belt reminder light and all your belts, buckles, latch plates, retractors and anchorages are working properly. Look for any other loose or damaged safety belt system parts. If you see anything that might keep a safety belt system from doing its job, have it repaired. Keep safety belts clean and dry. See *Care of Safety Belts on page 496* for more information.

Torn or frayed safety belts may not protect you in a crash. They can rip apart under impact forces. If a belt is torn or frayed, get a new one right away.

Also look for any opened or broken airbag covers, and have them repaired or replaced. (The airbag system does not need regular maintenance.)

Notice: **If you damage the covering for the driver's or the right front passenger's airbag, or the side impact airbag covering on the ceiling near the side windows, the airbag may not work properly. You may have to replace the airbag module in the steering wheel, both the airbag module and the instrument panel for the right front passenger's airbag, or side impact airbag module and ceiling covering for roof-mounted rollover airbags. Do not open or break the airbag coverings.**

Replacing Restraint System Parts After a Crash

⚠ CAUTION:

A crash can damage the restraint systems in your vehicle. A damaged restraint system may not properly protect the person using it, resulting in serious injury or even death in a crash. To help make sure your restraint systems are working properly after a crash, have them inspected and any necessary replacements made as soon as possible.

If you have had a crash, do you need new belts or LATCH system parts?

After a very minor collision, nothing may be necessary. But if the belts were stretched, as they would be if worn during a more severe crash, then you need new parts.

If the LATCH system was being used during a more severe crash, you may need new LATCH system parts.

If belts are cut or damaged, replace them. Collision damage also may mean you will need to have LATCH system, safety belt or seat parts repaired or replaced. New parts and repairs may be necessary even if the belt or LATCH system was not being used at the time of the collision.

If an airbag inflates, you will need to replace airbag system parts. See the part on the airbag system earlier in this section.

If the airbags inflate you will also need to replace the driver and front passenger's safety belt retractor assembly. Be sure to do so. Then the new retractor assembly will be there to help protect you in a collision.

After a crash you may need to replace the driver and front passenger's safety belt retractor assemblies, even if the airbags have not deployed. The driver and front passenger's safety belt retractor assemblies contain the safety belt pretensioners. Have your safety belt pretensioners checked if your vehicle has been in a collision, or if your airbag readiness light stays on after you start your vehicle or while you are driving. See *Airbag Readiness Light on page 224*.

NOTES

Section 2 Features and Controls

Keys 111
Remote Keyless Entry System 112
Remote Keyless Entry System Operation 113

Doors and Locks 120
Door Locks 120
Power Door Locks 121
Delayed Locking 122
Programmable Automatic Door Locks 122
Rear Door Security Locks 122
Lockout Protection 123
Liftgate/Liftglass 124
Power Liftgate 126
Power Running Boards 130

Windows 131
Power Windows 132
Sun Visors 133

Theft-Deterrent Systems 133
Content Theft-Deterrent 133
PASS-Key® III+ 135
PASS-Key® III+ Operation 135

Starting and Operating Your Vehicle 137
New Vehicle Break-In 137
Ignition Positions 138
Retained Accessory Power (RAP) 139
Starting the Engine 139
Adjustable Throttle and Brake Pedal 141
Engine Coolant Heater 141
Automatic Transmission Operation 142
Tow/Haul Mode 148
Parking Brake 149
Shifting Into Park (P) 150
Shifting Out of Park (P) 151
Parking Over Things That Burn 152
Engine Exhaust 153
Running the Engine While Parked 154

Mirrors 155
Automatic Dimming Rearview Mirror with Intellibeam™, OnStar®, Compass, and Temperature Display 155
Automatic Dimming Rearview Mirror with OnStar®, Compass and Temperature Display 157
Outside Power Foldaway Mirrors 160

OnStar® System 163
Universal Home Remote System 165
Universal Home Remote System Operation 166
Storage Areas 170
Glove Box 170
Cupholder(s) 170
Center Console Storage Area 171
Assist Handles 171
Garment Hooks 171
Luggage Carrier 172
Rear Storage Area 173
Rear Seat Armrest 173
Convenience Net 173
Cargo Cover 174
Cargo Management System 176
Sunroof 179

Keys

⚠ CAUTION:

Leaving children in a vehicle with the ignition key is dangerous for many reasons. They could operate the power windows or other controls or even make the vehicle move. The children or others could be badly injured or even killed. Do not leave the keys in a vehicle with children.

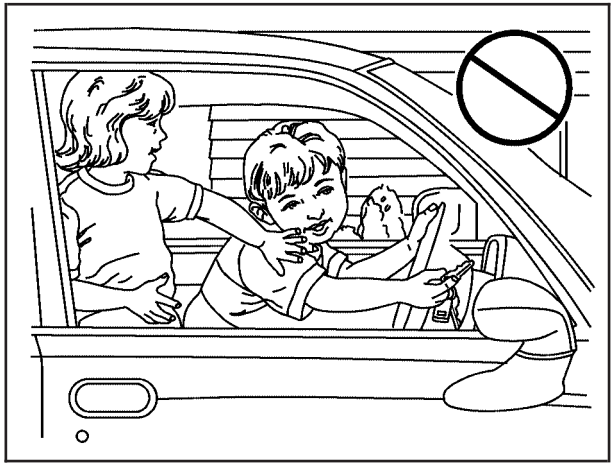

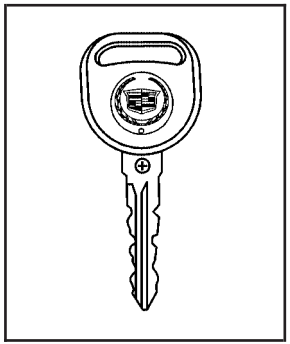

Your vehicle has a double-sided key that can be used for the ignition and door locks.

If you ever lose your keys, your dealer will be able to assist you with obtaining replacements.

In an emergency contact Cadillac Roadside Service®. See *Roadside Service on page 541* for more information.

Remote Keyless Entry System

Your keyless entry system operates on a radio frequency subject to Federal Communications Commission (FCC) Rules and with Industry Canada.

This device complies with Part 15 of the FCC Rules. Operation is subject to the following two conditions:

1. This device may not cause interference.
2. This device must accept any interference received, including interference that may cause undesired operation of the device.

This device complies with RSS-210 of Industry Canada. Operation is subject to the following two conditions:

1. This device may not cause interference.
2. This device must accept any interference received, including interference that may cause undesired operation of the device.

Changes or modifications to this system by other than an authorized service facility could void authorization to use this equipment.

At times you may notice a decrease in operating range. This is normal for any remote keyless entry system. If the transmitter does not work or if you have to stand closer to your vehicle for the transmitter to work, try this:

- Check the distance. You may be too far from your vehicle. You may need to stand closer during rainy or snowy weather.
- Check the location. Other vehicles or objects may be blocking the signal. Take a few steps to the left or right, hold the transmitter higher, and try again.
- Check to determine if battery replacement is necessary. See “Battery Replacement” under *Remote Keyless Entry System Operation on page 113*.
- If you are still having trouble, see your dealer or a qualified technician for service.

Remote Keyless Entry System Operation

The vehicle’s doors can be locked and unlocked from about 3 feet (1 m) up to 65 feet (20 m) away with the Remote Keyless Entry (RKE) transmitter.

If your vehicle has the remote start feature you can also start your vehicle with the RKE transmitter. The RKE transmitter, with the remote start button, provides an increased operating range of 195 feet (60 m) away. However, the operating range may be less while the vehicle is running. As a result, you may need to be closer to your vehicle to turn it off than you were to start it.

There are other conditions which can affect the performance of the transmitter. See *Remote Keyless Entry System on page 112*.

You will have one of the RKE transmitters below.

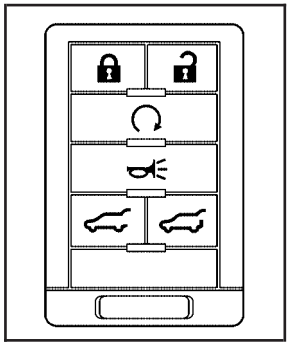

With Remote Start and Power Liftgate and Liftglass (Without Remote Start Similar)

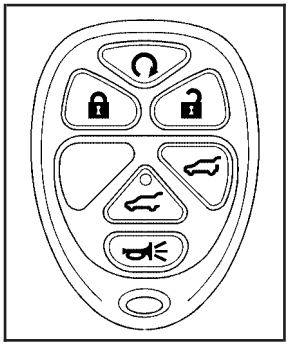

With Remote Start and Power Liftgate and Liftglass (Without Remote Start Similar)

The following functions may be available if your vehicle has the RKE system:

(Remote Vehicle Start): If your vehicle has this feature, it may be started from outside the vehicle using the RKE transmitter. See “Remote Vehicle Start” following for more detailed information.

(Lock): Press the lock button to lock all the doors. If enabled through the Driver Information Center (DIC), the parking lamps will flash once to indicate locking has occurred. If enabled through the DIC, the horn will chirp when the lock button is pressed again within five seconds of the previous press of the lock button. See *DIC Vehicle Customization on page 254* for additional information. Pressing the lock button may arm the content theft-deterrent system. See *Content Theft-Deterrent on page 133*.

(Unlock): Press the unlock button to unlock the driver’s door. If the button is pressed again within five seconds, all remaining doors will unlock. The interior lamps will come on and stay on for 20 seconds or until the ignition is turned on. If enabled through the DIC, the parking lamps will flash once to indicate unlocking has occurred. See *DIC Vehicle Customization on page 254*. Pressing the unlock button on the RKE transmitter will disarm the content theft-deterrent system. See *Content Theft-Deterrent on page 133*.

(Liftglass): Press and hold this button on the RKE transmitter to open the liftglass.

(Power Liftgate): Press and hold this button on the RKE transmitter to open and close the liftgate. The taillamps will flash and a chime will sound to indicate when the liftgate is opening and closing.

(Vehicle Locator/Panic Alarm): Press and release this button to locate your vehicle. The turn signal lamps will flash and the horn will sound three times. Press and hold this button for more than two seconds to activate the panic alarm. The turn signal lamps will flash and the horn will sound repeatedly for 30 seconds. The alarm will turn off when the ignition is moved to RUN or the alarm button is pressed again. The ignition must be in OFF for the panic alarm to work.

Matching Transmitter(s) to Your Vehicle

Each RKE transmitter is coded to prevent another transmitter from unlocking your vehicle. If a transmitter is lost or stolen, a replacement can be purchased through your GM dealer. Remember to bring any additional transmitters so they can also be re-coded to match the new transmitter. Once your dealer has coded the new transmitter, the lost transmitter will not unlock your vehicle. The vehicle can have a maximum of eight transmitters matched to it.

Battery Replacement

Under normal use, the battery in your RKE transmitter should last about four years.

The battery is weak if the transmitter will not work at the normal range in any location. If you have to get close to your vehicle before the transmitter works, it is probably time to change the battery.

The REPLACE BATTERY IN REMOTE KEY message in the vehicle's DIC will display if the RKE transmitter battery is low. See "REPLACE BATTERY IN REMOTE KEY" under *DIC Warnings and Messages on page 245* for additional information.

Notice: **When replacing the battery, use care not to touch any of the circuitry. Static from your body transferred to these surfaces may damage the transmitter.**

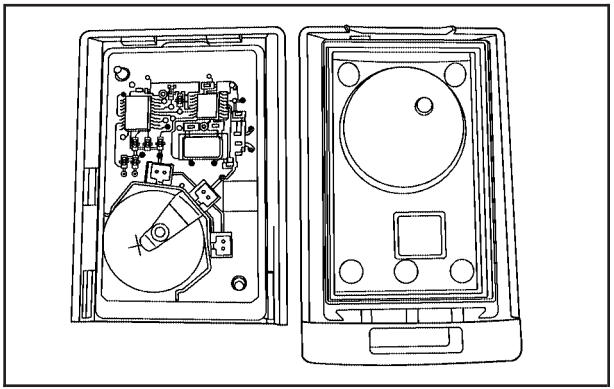

To replace the battery in this type of RKE transmitter do the following:

1. Use a flat object with a thin edge into the notch, located above the metal base, and separate the bottom half from the top half of the transmitter.
2. Remove the old battery, but do not use a metal object to do this.
3. Slide the new battery into the transmitter with the positive side of the battery facing up. Use a type CR2032 battery, or equivalent type. Make sure the cover is on tightly, so water will not get in.

4. Snap the front and the back of the transmitter together.
5. Test the operation of the transmitter with the vehicle.

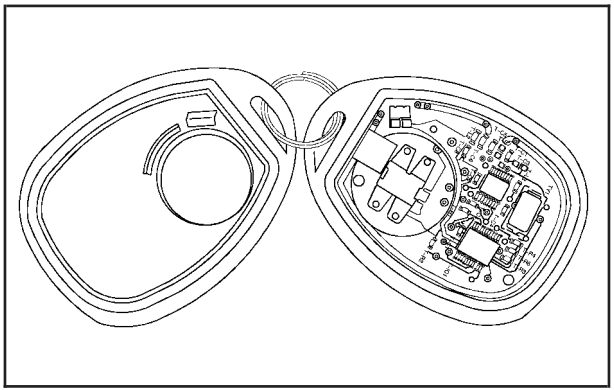

To replace the battery in this type of RKE transmitter do the following:

1. Use a flat object with a thin edge into the notch, located below the trunk release button, and separate the bottom half from the top half of the transmitter.
2. Remove the old battery, but do not use a metal object to do this.
3. Slide the new battery into the transmitter with the positive side of the battery facing down. Use a type CR2032 battery, or equivalent type. Make sure the cover is on tightly, so water will not get in.
4. Snap the front and the back of the transmitter together tightly so moisture does not get in.
5. Test the operation of the transmitter with the vehicle.

Remote Vehicle Start

Your vehicle may have a remote starting feature. This feature allows you to start the engine from outside of the vehicle. It may also start up the vehicle's heating or air conditioning systems and rear window defogger. Normal operation of the system will return after the key is turned to the RUN position.

If your vehicle has an automatic climate control system, during remote start, the climate control system will default to a heating mode during colder outside temperatures and a cooling mode during warmer outside temperatures.

If your vehicle does not have an automatic climate control system, during remote start the climate control system will turn on at the setting the vehicle was set to when the vehicle was last turned off.

Laws in some communities may restrict the use of remote starters. For example, some laws may require a person using the remote start to have the vehicle in view when doing so. Check local regulations for any requirements on remote starting of vehicles.

Do not use the remote start feature if your vehicle is low on fuel. Your vehicle may run out of fuel.

The RKE transmitter with the remote start button, provides an increased range of operation. However, the range may be less while the vehicle is running. As a result, you may need to be closer to your vehicle to turn it off, than you were to turn it on.

There are other conditions which can affect the performance of the transmitter, see *Remote Keyless Entry System on page 112* for additional information.

(Remote Start): Press and release the lock button and then press and hold the remote start button to start the vehicle.

To start the vehicle using the remote start feature, do the following:

1. Aim the transmitter at the vehicle.
2. Press and release the transmitter's lock button, then immediately press and hold the transmitter's remote start button until the turn signal lights flash. If you can not see the vehicle's lights, press and hold the remote start button for at least four seconds. The vehicle's doors will lock. Pressing the remote start button again after the vehicle has started will turn off the ignition.

   When the vehicle starts, the parking lamps will turn on and remain on while the vehicle is running.
3. If it is your first remote start since last driving, repeat these steps while the engine is still running for a 10 minute time extension. Remote start can be extended one time.

When you enter the vehicle during a remote start, and the engine is still running, turn the key to the RUN position to drive the vehicle.

If the vehicle is left running it will automatically shut off after 10 minutes unless a time extension has been done.

To manually shut off a remote start, do any of the following:

- Aim the RKE transmitter at the vehicle and press the remote start button until the parking lamps turn off.
- Turn on the hazards warning flashers.
- Turn the ignition switch on and then off.

The vehicle can be remote started two separate times between driving sequences. The engine will run for 10 minutes after each remote start.

Or, you can extend the engine run time by another 10 minutes within the first 10 minute remote start time frame, and before the engine stops.

For example, if the lock button and then the remote start buttons are pressed again after the vehicle has been running for five minutes, 10 minutes are added, allowing the engine to run for 15 minutes.

The additional ten minutes are considered a second remote vehicle start.

Once two remote starts, or a single remote start with one time extension has been done, the vehicle must be started with the key.

After the key is removed from the ignition, the vehicle can be remote started again.

The vehicle cannot be remote started if the key is in the ignition, the hood is not closed, or if there is an emission control system malfunction.

Also, the engine will turn off during a remote vehicle start if the coolant temperature gets too high or if the oil pressure gets low.

Vehicles that have the remote vehicle start feature are shipped from the factory with the remote vehicle start system enabled. The system may be enabled or disabled through the DIC. See “REMOTE START” under *DIC Vehicle Customization on page 254* for additional information.

Remote Start Ready

If your vehicle does not have the remote vehicle start feature, it may have the remote start ready feature. This feature allows your dealer to add the manufacturer's remote vehicle start feature.

If your vehicle has the remote start ready feature, your RKE transmitter will have extended range that will allow you to lock or unlock your vehicle from approximately 197 feet (60 m) away.

See your dealer if you would like to add the manufacturer's remote vehicle start feature to your vehicle.

Doors and Locks

Door Locks

⚠ CAUTION:

Unlocked doors can be dangerous.

- **Passengers, especially children, can easily open the doors and fall out of a moving vehicle. When a door is locked, the handle will not open it. You increase the chance of being thrown out of the vehicle in a crash if the doors are not locked. So, wear safety belts properly and lock the doors whenever you drive.**

CAUTION: (Continued)

CAUTION: (Continued)

- **Young children who get into unlocked vehicles may be unable to get out. A child can be overcome by extreme heat and can suffer permanent injuries or even death from heat stroke. Always lock your vehicle whenever you leave it.**
- **Outsiders can easily enter through an unlocked door when you slow down or stop your vehicle. Locking your doors can help prevent this from happening.**

There are several ways to lock and unlock your vehicle.

From the outside, use the remote keyless entry (RKE) transmitter or the key in the driver's door.

From the inside, use the power door locks or manual door locks. To lock or unlock the door with the manual locks, push down or pull up on the manual lock knob.

Power Door Locks

The power door lock switches are located on the armrest on the front doors.

(Unlock): Press the side of the switch with the unlock symbol to unlock the doors.

(Lock): Press the side of the switch with the lock symbol to lock the doors.

Delayed Locking

When locking the doors with the power lock switch or the remote keyless entry (RKE) transmitter and a door or the liftgate is open, the doors will lock five seconds after the last door is closed. You will hear three chimes to signal that the delayed locking feature is in use.

Pressing the power lock switch or the lock button on the RKE transmitter twice will override the delayed locking feature and immediately lock all the doors.

This feature will not operate if the key is in the ignition.

You can program this feature using the Driver Information Center (DIC). See DELAY DOOR LOCK under *DIC Vehicle Customization on page 254*.

Programmable Automatic Door Locks

Your vehicle has an automatic lock/unlock feature which enables you to program the vehicle's power door locks. You can program this feature through the Driver Information Center (DIC). See *DIC Vehicle Customization on page 254* for more information on DIC programming.

Rear Door Security Locks

Your vehicle has rear door security locks. These prevent passengers from opening the rear doors from the inside.

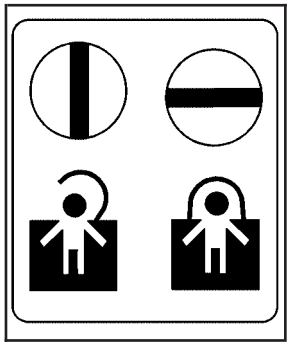

Security Lock Label shown

The rear door security locks are located on the inside edge of each rear door. You must open the rear doors to access them. The label depicting lock and unlock positions is located near the lock.

To set the locks, do the following:

1. Insert the key into the security lock slot and turn it so the slot is in the horizontal position.
2. Close the door.

When you want to open a rear door when the security lock is on, do the following:

1. Unlock the door using the remote keyless entry transmitter, if the vehicle has one, the power door lock switch, or by lifting the rear door manual lock.
2. Open the door from the outside.

To cancel the rear door security lock, do the following:

1. Unlock the door and open it from the outside.
2. Insert the key into the security lock slot and turn it so the slot is in the vertical position.

Lockout Protection

This feature protects you from locking the key in the vehicle when the key is in the ignition and a front door is open.

If the driver's side power door lock switch is pressed when the driver's door is open and the key is in the ignition, all of the doors will lock and then the driver's door will unlock.

If the passenger's side power door lock switch is pressed when the front passenger's door is open and the key is in the ignition, all of the doors will lock and then the front passenger's door will unlock.

Liftgate/Liftglass

⚠ CAUTION:

It can be dangerous to drive with the liftglass or liftgate open because carbon monoxide (CO) gas can come into your vehicle. You cannot see or smell CO. It can cause unconsciousness and even death.

If you must drive with the liftglass or liftgate open, or if electrical wiring or other cable connections must pass through the seal between the body and the liftglass or liftgate:

- **Make sure all other windows are shut.**
- **Turn the fan on your heating or cooling system to its highest speed with the recirculation mode off. That will force outside air into your vehicle. See *Dual Automatic Climate Control System on page 212*.**

CAUTION: (Continued)

CAUTION: (Continued)

- **If you have air outlets on or under the instrument panel, open them all the way.**
- **If your vehicle is equipped with a power liftgate, disable the power liftgate function.**

See *Engine Exhaust on page 153*.

See *Power Liftgate on page 126* for more information on how to use the power liftgate.

To unlock the liftgate, use the power door lock switch or press the door unlock button on the Remote Keyless Entry (RKE) transmitter twice. See *Remote Keyless Entry System Operation on page 113*.

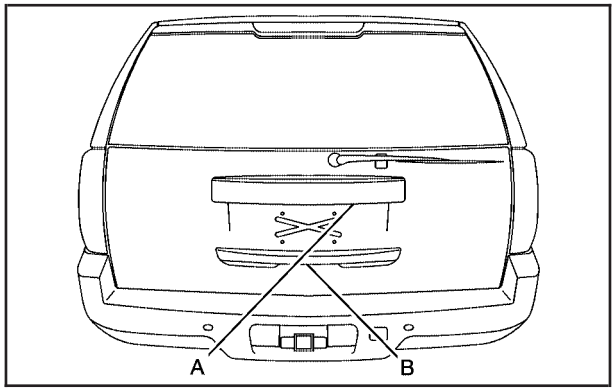

To open the liftglass, press the button on the underside of the license pocket applique (A). The liftglass can also be opened by pressing the liftglass release button on the RKE.

To open the entire liftgate, press the power liftgate release button on the RKE or in the vehicle. See *Power Liftgate on page 126*. You can also press the touchpad on the underside of the liftgate handle (B). The liftgate will open after a slight delay. The vehicle must be in PARK (P) to open the liftgate. To close the liftgate, use the pull cup or pull strap as an aid.

The liftgate or liftglass cannot be opened if the rear wipers are in motion. Attempting to open the liftgate or liftglass while the rear wipers are in motion will cause the release of the liftglass or liftgate to delay until the wipers are parked off the liftglass.

Both the liftglass and liftgate have an electric latch. If the battery is disconnected or has low voltage, the liftglass and liftgate will not open. The liftglass and liftgate will resume operation when the battery is reconnected and charged.

If the battery is properly connected and has adequate voltage, and the liftgate or liftglass still will not function, your vehicle should be taken to a dealership for service.

Power Liftgate

Your vehicle has a power liftgate. The vehicle must be in PARK (P) to power open or close the liftgate.

The liftgate must be completely closed to power open or completely open to power close.

The taillamps will flash and a chime will sound at the beginning of each power operation cycle.

⚠ CAUTION:

You or others could be injured if caught in the path of the power liftgate. Make sure there is no one in the way of the liftgate as it is closing.

Notice: **If you open the liftgate without checking for overhead obstructions such as a garage door, you could break the liftgate glass. Always check to make sure the area above the liftgate is clear before opening it.**

To open and close the liftgate, press and hold the power liftgate button on the Remote Keyless Entry (RKE) transmitter until the liftgate starts moving. Press the RKE button a second time during liftgate operation to reverse that operation. See *Remote Keyless Entry System Operation on page 113* for more information.

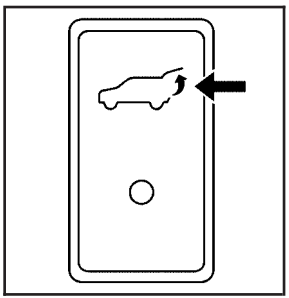

Power Liftgate Button on Overhead Console

The liftgate can also be opened and closed by pressing the power liftgate button on the overhead console. Press the button a second time during liftgate operation to reverse that operation.

The liftgate can be power opened by pressing the touchpad switch on the liftgate handle. Press the button a second time during liftgate operation to reverse that operation.

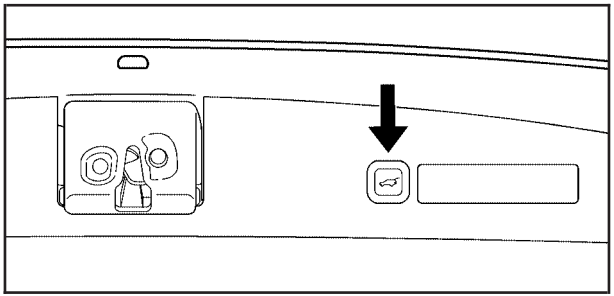

Power Liftgate Button Near Liftgate Latch

The liftgate can be power closed by pressing the power liftgate button next to the liftgate latch. Press the button a second time during liftgate operation to reverse that operation.

The power liftgate my be temporarily disabled under extreme high or low temperatures. If this occurs, the liftgate can still be operated manually. The power liftgate may not operate under low battery conditions.

If you shift the transmission out of PARK (P) while the power function is in progress, the liftgate power function will continue to completion. If you shift the transmission out of PARK (P) and accelerate before the power liftgate latches closed, the liftgate may reverse to the open position. Cargo could fall out of the vehicle. Always make sure the power liftgate is closed and latched before you drive away.

If you power open the liftgate and the liftgate support struts have lost pressure, the lights will flash and a chime will sound. The liftgate will hold open temporarily, then slowly close. See your dealer for service before using the liftgate.

Obstacle Detection Features

If the liftgate encounters an obstacle during a power open or close cycle, a warning chime will sound and the liftgate will automatically reverse direction to the full closed or open position. After removing the obstruction, the liftgate may be power opened or closed normally. If the liftgate encounters multiple obstacles on the same power cycle, the power function will deactivate, and the liftgate will switch to manual operation. The REAR ACCESS OPEN warning message in the Driver Information Center (DIC) will indicate that the liftgate is open. After removing the obstructions, manually open the liftgate to the full open position or close the liftgate to the fully closed and latched position. The liftgate will now resume normal power operation.

Your vehicle has pinch sensors located on the side edges of the liftgate. If an object is caught between the liftgate and the vehicle body and presses against this sensor, the liftgate will reverse direction and open fully. The liftgate will remain open until it is activated again or closed manually.

Manual Operation of Power Liftgate

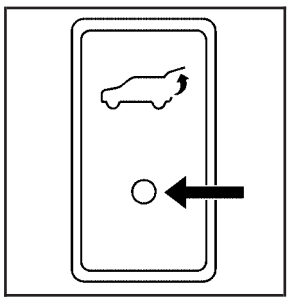

To change the liftgate to manual operation, toggle the switch on the overhead console to the “Disable” position indicated by a circle.

With the power liftgate disabled and the door unlocked, the power liftgate can be manually opened and closed.

To open the liftgate, press the touchpad on the handle on the outside of the liftgate, and lift the gate open. To close the liftgate, use the pull cup or pull strap to lower the liftgate and close. The liftgate latch will power cinch to closed position. Always close the liftgate before driving.

If the RKE button or the power close button on the liftgate is pressed while power operation is disabled, the lights will flash three times, but the liftgate will not move.

When driving with the liftgate open, the power liftgate should be switched to manual liftgate operation — the overhead console switch set to the “Disable” position.

Both the liftglass and liftgate have an electric latch. If the battery is disconnected or has low voltage, the liftglass and liftgate will not open. The liftglass and liftgate will resume operation when the battery is reconnected and charged.

If the battery is properly connected and has adequate voltage, and the liftgate or liftglass still will not function, your vehicle should be taken to a dealership for service.

⚠ CAUTION:

It can be dangerous to drive with the liftglass or liftgate open because carbon monoxide (CO) gas can come into your vehicle. You cannot see or smell CO. It can cause unconsciousness and even death.

If you must drive with the liftglass or liftgate open, or if electrical wiring or other cable connections must pass through the seal between the body and the liftglass or liftgate:

- **Make sure all other windows are shut.**
- **Turn the fan on your heating or cooling system to its highest speed with the recirculation mode off. That will force outside air into your vehicle. See *Dual Automatic Climate Control System on page 212*.**

CAUTION: (Continued)

CAUTION: (Continued)

- **If you have air outlets on or under the instrument panel, open them all the way.**
- **If your vehicle is equipped with a power liftgate, disable the power liftgate function.**

See *Engine Exhaust on page 153*.

Do not drive with the liftgate open if at all possible.

Power Running Boards

Your vehicle may have power running boards. These make getting into and out of the vehicle easier.

The power running boards activate when either door on the driver's or passenger's side is opened or closed. They automatically extend from beneath the vehicle on the side in which the door has been opened. Once the door is closed, the running boards will automatically move back under the vehicle. The vehicle must be stationary for the running boards to extend or retract.

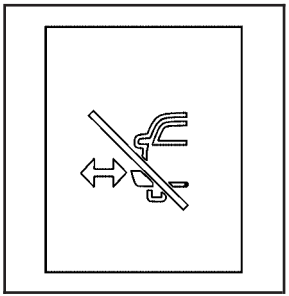

The switch used to disable the power running boards is located on the center console below the climate control system.

The running boards cannot be disabled in the extended position.

Windows

⚠ CAUTION:

Leaving children, helpless adults, or pets in a vehicle with the windows closed is dangerous. They can be overcome by the extreme heat and suffer permanent injuries or even death from heat stroke. Never leave a child, a helpless adult, or a pet alone in a vehicle, especially with the windows closed in warm or hot weather.

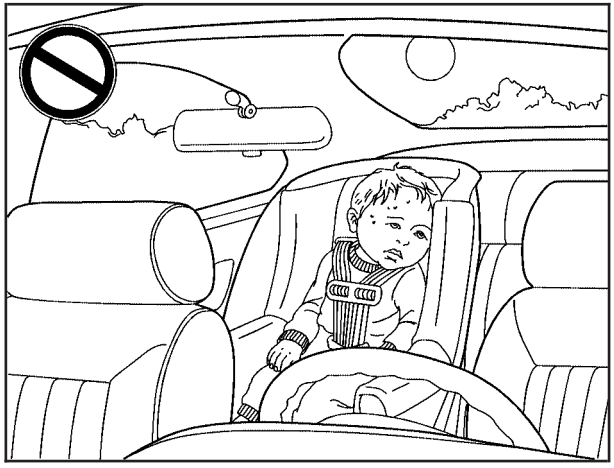

Power Windows

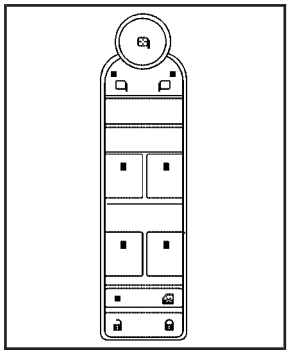

Driver's Side shown

The power window controls are located on each of the side doors.

The driver's door has a switch for the passenger and rear windows also. The power windows work when the ignition has been turned to ACCESSORY or RUN or when Retained Accessory Power (RAP) is active. See *Retained Accessory Power (RAP) on page 139*.

Press the switch to lower the window.

Pull up on the front edge of the switch to raise the window.

Express-Down Windows

The driver and front passenger windows have an express-down feature that allows the windows to be lowered without holding the switch. Press down fully on the window switch, then release, to activate the express-down mode. The express-down mode can be canceled at any time by pulling up on the switch.

Window Lockout

(Window Lockout): The window lockout switch is located with the power window switches on the driver's door armrest. This feature prevents the passenger windows from operating, except from the driver's position. Press the switch to turn on the lockout feature. An indicator light will come on to show the lockout feature is on. To turn the feature off, press the switch again and the indicator light will go off.

Sun Visors

Pull the sun visor down to block glare. Detach the sun visor from the center mount and slide it along the rod from side-to-side to cover the driver or passenger side of the front window. Swing the sun visor to the side to cover the side window. It can be moved along the rod from side-to-side in this position also.

Lighted Visor Vanity Mirror

Your vehicle has lighted visor vanity mirrors on both the driver's and passenger's sun visors. Pull the sun visor down and lift the mirror cover to turn the lamps on.

Theft-Deterrent Systems

Vehicle theft is big business, especially in some cities. Although your vehicle has a number of theft-deterrent features, we know that nothing we put on it can make it impossible to steal.

Content Theft-Deterrent

Your vehicle has a content theft-deterrent alarm system.

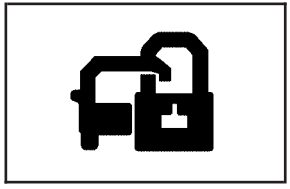

This is the security light.

To activate the theft-deterrent system, do the following:

1. Open the door.
2. Lock the door with the remote keyless entry (RKE) transmitter. The security light should come on and stay on.
3. Close all doors. The security light should go off after about 30 seconds. The alarm is not armed until the security light goes off.

If a locked door is opened without using the RKE transmitter, a ten second pre-alarm will occur. The horn will chirp and the lights will flash. If the door is not unlocked by pressing the unlock button on the remote keyless entry transmitter during the ten second pre-alarm, the alarm will go off. The headlamps and parking lamps will flash for two minutes, and the horn will sound for 30 seconds, then will turn off to save the battery power. You can choose different feedback options for the alarm. See *Driver Information Center (DIC) on page 239* Driver Information Center (DIC).

Remember, the theft-deterrent system will not activate if you lock the doors with a key, the manual door lock, or the power door lock switch. It activates only if you use the RKE transmitter. You should also remember that you can start your vehicle with the correct ignition key if the alarm has been set off.

Here is how to avoid setting off the alarm by accident:

- If you do not want to activate the theft-deterrent system, the vehicle should be locked with the door key after the doors are closed.
- Always unlock a door with the RKE transmitter. Unlocking a door any other way will set off the alarm.

If you set off the alarm by accident, turn off the alarm by pressing the unlock button on the RKE transmitter. The alarm will not stop if you try to unlock a door any other way.

Testing the Alarm

The alarm can be tested by following these steps:

1. From inside the vehicle, lower the driver's window and open the driver's door.
2. Activate the system by locking the doors with the RKE transmitter.
3. Get out of the vehicle, close the door and wait for the security light to go out.
4. Then reach in through the window, unlock the door with the manual door lock and open the door. This should set off the alarm.

While the alarm is set, the power door unlock switch will not work.

If the alarm does not sound when it should but the headlamps flash, check to see if the horn works. The horn fuse may be blown. To replace the fuse, see *Fuses and Circuit Breakers on page 503*.

If the alarm does not sound or the headlamps do not flash, the vehicle should be serviced by your dealer.

PASS-Key® III+

The PASS-Key® III+ system operates on a radio frequency subject to Federal Communications Commission (FCC) Rules and with Industry Canada.

This device complies with Part 15 of the FCC Rules. Operation is subject to the following two conditions:

1. This device may not cause harmful interference.
2. This device must accept any interference received, including interference that may cause undesired operation.

This device complies with RSS-210 of Industry Canada. Operation is subject to the following two conditions:

1. This device may not cause interference.
2. This device must accept any interference received, including interference that may cause undesired operation of the device.

Changes or modifications to this system by other than an authorized service facility could void authorization to use this equipment.

PASS-Key® III+ uses a radio frequency transponder in the key that matches a decoder in your vehicle.

PASS-Key® III+ Operation

Your vehicle has PASS-Key® III+ (Personalized Automotive Security System) theft-deterrent system. PASS-Key® III+ is a passive theft-deterrent system. This means you do not have to do anything special to arm or disarm the system. It works when you transition the key to RUN, ACCESSORY or START from the OFF position.

When the PASS-Key® III+ system senses that someone is using the wrong key, it prevents the vehicle from starting. Anyone using a trial-and-error method to start the vehicle will be discouraged because of the high number of electrical key codes.

If the engine does not start and the security light on the instrument panel comes on when trying to start the vehicle, the key may have a damaged transponder. Turn the ignition off and try again.

If the engine still does not start, and the key appears to be undamaged, try another ignition key. At this time, you may also want to check the fuse, see *Fuses and Circuit Breakers on page 503*.

If the engine still does not start with the other key, your vehicle needs service. If your vehicle does start, the first key may be faulty. See your dealer who can service the PASS-Key® III+ to have a new key made. In an emergency, contact Roadside Assistance.

It is possible for the PASS-Key® III+ decoder to "learn" the transponder value of a new or replacement key. Up to nine additional keys may be programmed for the vehicle. The following procedure is for programming additional keys only. If all the currently programmed keys are lost or do not operate, you must see your dealer or a locksmith who can service PASS-Key® III+ to have keys made and programmed to the system.

See your dealer or a locksmith who can service PASS-Key® III+ to get a new key blank that is cut exactly as the ignition key that operates the system.

To program the new additional key do the following:

1. Verify that the new key has a ⊕ stamped on it.
2. Insert the original, already programmed, key in the ignition and start the engine. If the engine will not start, see your dealer for service.
3. After the engine has started, turn the key to OFF, and remove the key.
4. Insert the new key to be programmed and turn it to the RUN position within five seconds of removing the original key.
5. The security light will turn off once the key has been programmed.
6. Repeat Steps 1 through 5 if additional keys are to be programmed.

If you are driving and the security light comes on and stays on, you may be able to restart your engine. Your PASS-Key® III+ system, however, may not be working properly and must be serviced by your dealer.

If you lose or damage your PASS-Key® III+ key, see your dealer or a locksmith who can service PASS-Key® III+ to have a new key made.

Starting and Operating Your Vehicle

New Vehicle Break-In

Notice: **Your vehicle does not need an elaborate break-in. But it will perform better in the long run if you follow these guidelines:**

- **Keep your speed at 55 mph (88 km/h) or less for the first 500 miles (805 km).**
- **Do not drive at any one constant speed, fast or slow, for the first 500 miles (805 km). Do not make full-throttle starts. Avoid downshifting to brake, or slow, the vehicle.**
- **Avoid making hard stops for the first 200 miles (322 km) or so. During this time your new brake linings are not yet broken in. Hard stops with new linings can mean premature wear and earlier replacement. Follow this breaking-in guideline every time you get new brake linings.**
- **Do not tow a trailer during break-in. See *Towing a Trailer on page 375* for the trailer towing capabilities of your vehicle and more information.**

Following break-in, engine speed and load can be gradually increased.

Ignition Positions

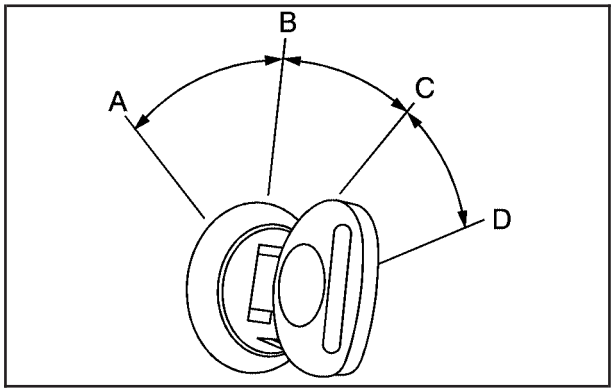

Use the key to turn the ignition switch to four different positions.

A (LOCK): This position locks the ignition and transmission. It is a theft-deterrent feature. You will only be able to remove the key when the ignition is turned to LOCK.

Notice: **Using a tool to force the key from the ignition switch could cause damage or break the key. Use the correct key and turn the key only with your hand. Make sure the key is all the way in. If it is, turn the steering wheel left and right while you turn the key hard. If none of this works, then your vehicle needs service.**

B (ACCESSORY): This position lets you use things like the radio and the windshield wipers when the engine is off.

Notice: **Lengthy operation of features such as the radio in the accessory ignition position and the RUN position may drain the battery and prevent your vehicle from starting. Do not operate your vehicle in the accessory ignition position for a long period of time.**

C (RUN): This is the position for driving. It is the position the switch returns to after the engine starts, and you release the key.

D (START): This position starts the engine.

Retained Accessory Power (RAP)

Your vehicle has a Retained Accessory Power (RAP) feature which will allow certain features on your vehicle to continue to work up to 10 minutes after the ignition key is turned to LOCK.

The radio, power windows, and if equipped, the sunroof and OnStar® System, will work when the ignition key is in RUN or ACCESSORY. Once the key is turned from RUN to LOCK, these features will continue to work for up to 10 minutes or until a door is opened.

Starting the Engine

Move your shift lever to PARK (P) or NEUTRAL (N). Your engine will not start in any other position — that is a safety feature. To restart when you are already moving, use NEUTRAL (N) only.

Notice: **Do not try to shift to PARK (P) if your vehicle is moving. If you do, you could damage the transmission. Shift to PARK (P) only when your vehicle is stopped.**

1. With your foot off the accelerator pedal, turn the ignition key to START. When the engine starts, let go of the key. The idle speed will go down as your engine gets warm.

   Your vehicle has a Computer-Controlled Cranking System. This feature assists in starting the engine and protects the electrical system. If the ignition key is turned to the START, and then released when the engine begins cranking, the engine will continue cranking until the vehicle starts or until it exceeds the maximum cranking time allowed, approximately 15 seconds to prevent cranking motor damage. To prevent gear damage, this system also prevents cranking if the engine is already running. The engine cranking can be stopped by turning the ignition switch to the ACCESSORY or LOCK.

Notice: **Cranking the engine for long periods of time, by returning the key to the START position immediately after cranking has ended, can overheat and damage the cranking motor and drain the battery. Waiting about 15 seconds between each try, to allow the cranking motor to cool down, will prevent damage due to overheating.**

2. If the engine does not start within 10 seconds, push the accelerator pedal all the way to the floor, while you hold the ignition key in START. When the engine starts, let go of the key and let up on the accelerator pedal. Wait about 15 seconds between each try.

When starting your engine in very cold weather (below 0°F or –18°C), do this:

1. With your foot off the accelerator pedal, turn the ignition key to START and hold it there up to 15 seconds. When the engine starts, let go of the key.
2. If your engine still will not start, or starts but then stops, it could be flooded with too much gasoline. Try pushing your accelerator pedal all the way to the floor and holding it there as you hold the key in START for about three seconds. When the engine starts, let go of the key and accelerator. If the vehicle starts briefly but then stops again, do the same thing, but this time keep the pedal down for five or six seconds. This clears the extra gasoline from the engine.

Notice: **Your engine is designed to work with the electronics in your vehicle. If you add electrical parts or accessories, you could change the way the engine operates. Before adding electrical equipment, check with your dealer. If you do not, your engine might not perform properly. Any resulting damage would not be covered by your vehicle's warranty.**

Adjustable Throttle and Brake Pedal

If your vehicle has this feature, you can change the position of the throttle and brake pedals. This feature is designed for shorter drivers, since the pedals can not move farther away from the standard position, but can move toward the driver for better pedal reach.

The feature will not operate when the vehicle is in REVERSE (R) or while using the cruise control.

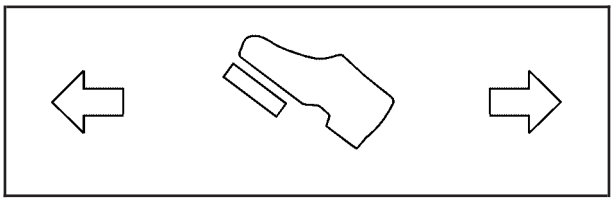

The switch used to adjust the pedals is located on the center console below the climate control system.

Press the right and left arrows to move the pedals either closer or further from your body.

Your vehicle has a memory function which allows seat settings to be saved and recalled. See *Memory Seat, Mirrors, and Pedals on page 13* for more information.

Engine Coolant Heater

Your vehicle may have an engine coolant heater.

In very cold weather, 0°F (–18°C) or colder, the engine coolant heater can help. You will get easier starting and better fuel economy during engine warm-up.

Usually, the coolant heater should be plugged in a minimum of four hours prior to starting your vehicle. At temperatures above 32°F (0°C), use of the coolant heater is not required. Your vehicle may also have an internal thermostat in the plug end of the cord. This will prevent operation of the engine coolant heater when the temperature is at or above 0°F (–18°C) as noted on the cord.

To Use the Engine Coolant Heater

1. Turn off the engine.
2. Open the hood and unwrap the electrical cord. The cord is located on the driver's side of the engine compartment, near the power steering fluid reservoir.
3. Plug the cord into a normal, grounded 110-volt AC outlet.

⚠ CAUTION:

Plugging the cord into an ungrounded outlet could cause an electrical shock. Also, the wrong kind of extension cord could overheat and cause a fire. You could be seriously injured. Plug the cord into a properly grounded three-prong 110-volt AC outlet. If the cord will not reach, use a heavy-duty three-prong extension cord rated for at least 15 amps.

4. Before starting the engine, be sure to unplug and store the cord as it was before to keep it away from moving engine parts. If you do not, it could be damaged.

How long should you keep the coolant heater plugged in? The answer depends on the outside temperature, the kind of oil you have, and some other things. Instead of trying to list everything here, we ask that you contact your dealer in the area where you will be parking your vehicle. The dealer can give you the best advice for that particular area.

Automatic Transmission Operation

Your vehicle has a Hydra-Matic® 6L80 automatic transmission, and has an electronic shift position indicator within the instrument panel cluster. The electronic shift position indicator displays when the shift lever is moved out of PARK (P). See *Fuses and Circuit Breakers on page 503*.

There are several different positions for the shift lever.

P R N D M

PARK (P): This position locks your rear wheels. It is the best position to use when you start your engine because your vehicle cannot move easily.

When parked on a hill, especially when the vehicle has a heavy load, you may notice an increase in the effort to shift out of PARK (P). See Torque Lock (Automatic Transmission) under *Shifting Into Park (P) on page 150* for more information.

⚠ CAUTION:

It is dangerous to get out of your vehicle if the shift lever is not fully in PARK (P) with the parking brake firmly set. Your vehicle can roll.

Do not leave your vehicle when the engine is running unless you have to. If you have left the engine running, the vehicle can move suddenly. You or others could be injured. To be sure your vehicle will not move, even when you are on fairly level ground, always set your parking brake and move the shift lever to PARK (P). See *Shifting Into Park (P) on page 150*. If you are pulling a trailer, see *Towing a Trailer on page 375*.

REVERSE (R): Use this gear to back up.

Notice: **Shifting to REVERSE (R) while your vehicle is moving forward could damage the transmission. The repairs would not be covered by your warranty. Shift to REVERSE (R) only after your vehicle is stopped.**

To rock your vehicle back and forth to get out of snow, ice, or sand without damaging your transmission, see *If Your Vehicle is Stuck in Sand, Mud, Ice, or Snow on page 364*.

NEUTRAL (N): In this position, your engine does not connect with the wheels. To restart when you are already moving, use NEUTRAL (N) only. Also, use NEUTRAL (N) when your vehicle is being towed.

⚠ CAUTION:

Shifting into a drive gear while your engine is running at high speed is dangerous. Unless your foot is firmly on the brake pedal, your vehicle could move very rapidly. You could lose control and hit people or objects. Do not shift into a drive gear while your engine is running at high speed.

Notice: **Shifting out of PARK (P) or NEUTRAL (N) with the engine running at high speed may damage the transmission. The repairs would not be covered by your warranty. Be sure the engine is not running at high speed when shifting your vehicle.**

DRIVE (D): This position is for normal driving. It provides the best fuel economy for your vehicle. If you need more power for passing, and you are:

- Going less than about 35 mph (55 km/h), push your accelerator pedal about halfway down.
- Going about 35 mph (55 km/h) or more, push the accelerator all the way down.

By doing this, the vehicle shifts down to the next gear and has more power.

DRIVE (D) can be used when towing a trailer, carrying a heavy load, driving on steep hills, or for off-road driving. You may want to shift the transmission to a lower gear selection if the transmission shifts too often.

Downshifting the transmission in slippery road conditions could result in skidding, see Skidding under *Loss of Control on page 333.*

MANUAL MODE (M): This position lets drivers select the range of gears appropriate for current driving conditions. If your vehicle has this feature, see Driver Shift Control (DSC) later in this section.

Notice: **Spinning the tires or holding the vehicle in one place on a hill using only the accelerator pedal may damage the transmission. If you are stuck, do not spin the tires. When stopping on a hill, use the brakes to hold the vehicle in place.**

Your vehicle has a shift stabilization feature that adjusts the transmission shifting to the current driving conditions in order to reduce rapid upshifts and downshifts. This shift stabilization feature is designed to determine, before making an upshift, if the engine will be able to maintain vehicle speed by analyzing things such as vehicle speed, throttle position and vehicle load. If the shift stabilization feature determines that a current vehicle speed cannot be maintained, the tranmission does not upshift and instead holds the current gear. In some cases, this may appear to be a delayed shift, however the tranmission is operating normally.

Your vehicle's transmission uses adaptive shift controls. Adaptive shift controls continually compares key shift parameters to pre-programmed ideal shifts stored in the transmissions computer. The transmission constantly makes adjustments to improve vehicle performance according to how the vehicle is being used, such as with a heavy load or when temperature changes. During this adaptive shift controls process, shifting may feel different as the transmission determines the best settings.

When temperatures are very cold, the Hydra-Matic® 6L80 automatic transmission's gear shifting may be delayed providing more stable shifts until the engine warms up. Shifts may be more noticeable with a cold transmission. This difference in shifting is normal.

Driver Shift Control (DSC)

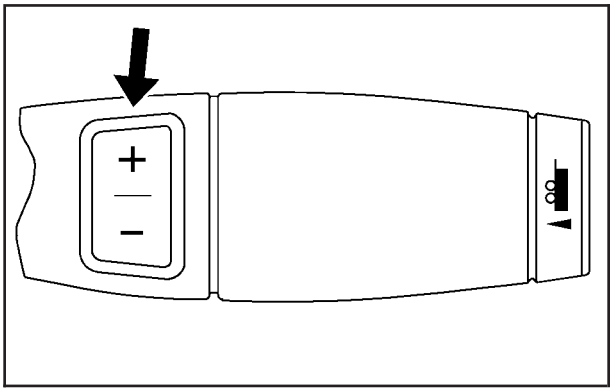

Your vehicle has a Driver Shift Control (DSC). The DSC controls the vehicle's transmission and vehicle speed while driving down hill or towing a trailer by allowing you to select a desired range of gears.

To use this feature, do the following:

1. Move the shift lever to the MANUAL MODE (M).
2. Press the plus/minus button, to upshift or downshift selecting the desired range of gears for your current driving conditions.

When in the MANUAL MODE (M) a number will display next to the M, indicating the current gear that has been selected. The DIC display will show the message MANUAL SHIFT on the first line and the current gear will be displayed on the second line. See *Driver Information Center (DIC) on page 239* and *DIC Operation and Displays on page 240* for more information. The number displayed in the DIC is the highest gear that can be used. However, your vehicle can automatically shift to lower gears as it adjusts to driving conditions. This means that all gears below that number are available. When FIFTH (5) is selected, FIRST (1) through FIFTH (5) gears are automatically shifted by the vehicle, but SIXTH (6) cannot be used until the plus/minus button located on the steering column lever is used to change to the gear.

The transmission will prevent a gear range until a speed that is appropriate for current driving conditions is achieved. If shifting is prevented for any reason, the current selected gear will flash multiple times in the DIC.

Grade Braking is not available when the Driver Shift Control is active. See *Tow/Haul Mode on page 148* for more information.

While using the DSC, cruise control and the tow/haul mode can be used.

Tow/Haul Mode

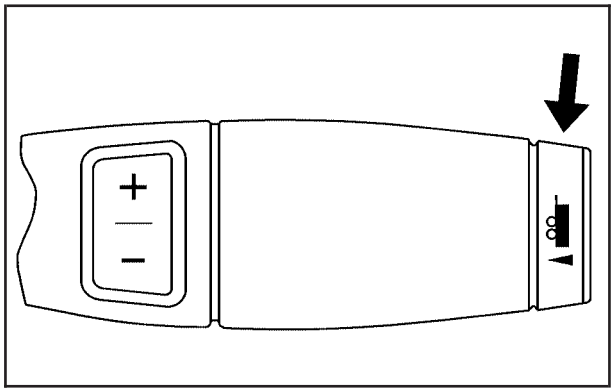

Your vehicle has a tow/haul mode. The tow/haul mode adjusts the transmission shift pattern to reduce shift cycling, providing increased performance, vehicle control, and transmission cooling when towing or hauling heavy loads.

Press the button located on the end of the shift lever to turn the tow/haul on or off. When the tow/haul is on, a light on the instrument panel cluster will come on.

See *Tow/Haul Mode Light on page 238* for more information.

Also see “Tow Haul Mode” under *Towing a Trailer on page 375* for more information.

The tow/haul mode works with the Autoride® feature, if the vehicle has this, to enhance the ride when trailering or with a loaded vehicle. See *Autoride® on page 374*.

Grade Braking

Grade Braking assists when driving on a downhill grade. It maintains the vehicle’s speed by automatically implementing a shift schedule that uses the engine and the transmission to slow the vehicle. This reduces wear on the brakes system and increases control of the vehicle. The system constantly monitors the vehicle’s speed, acceleration, throttle position, and whether the brake pedal is being pressed, and determines when to keep the current vehicle speed or to slow down. The system will then automatically command downshifts that reduces the vehicles speed, until the brake pedal is no longer being pressed. This indicates the desired vehicle speed has been reached.

The tow/haul mode and grade braking shift modes can be activated by pressing the button on the end of the shift control stalk. While in the DSC mode, grade braking is deactivated, allowing the driver to select a gear.

See *Automatic Transmission Operation on page 142* for more information.

Parking Brake

To set the parking brake, hold the regular brake pedal down with your right foot. Push down the parking brake pedal with your left foot.

A chime will activate and the warning light will flash when the parking brake is applied and the vehicle is moving at least 3 mph (5 km/h) for at least three seconds.

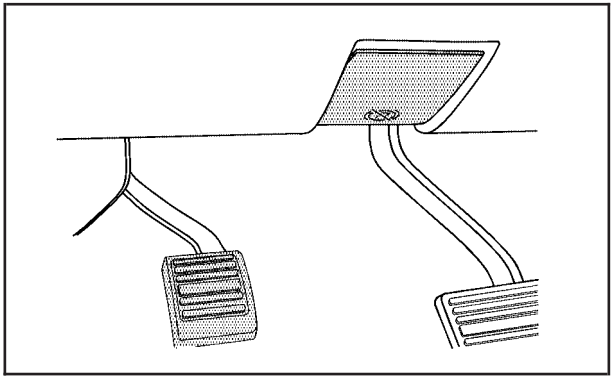

To release the parking brake, hold the regular brake pedal down. Pull the bottom edge of the lever, located above the parking brake pedal, with the parking brake symbol, to release the parking brake.

If the ignition is on when the parking brake is released, the brake system warning light will go off.

Notice: **Driving with the parking brake on can overheat the brake system and cause premature wear or damage to brake system parts. Verify that the parking brake is fully released and the brake warning light is off before driving.**

If you are towing a trailer and are parking on any hill, see *Towing a Trailer on page 375*.

Shifting Into Park (P)

⚠ CAUTION:

It can be dangerous to get out of your vehicle if the shift lever is not fully in PARK (P) with the parking brake firmly set. Your vehicle can roll. If you have left the engine running, the vehicle can move suddenly. You or others could be injured. To be sure your vehicle will not move, even when you are on fairly level ground, use the steps that follow. If you are pulling a trailer, see *Towing a Trailer on page 375*.

1. Hold the brake pedal down with your right foot and set the parking brake.
2. Move the shift lever into the PARK (P) position by pulling the shift lever toward you and moving it up as far as it will go.
3. Turn the ignition key to LOCK.
4. Remove the key and take it with you. If you can leave your vehicle with the ignition key in your hand, your vehicle is in PARK (P).

Leaving Your Vehicle With the Engine Running

⚠ CAUTION:

It can be dangerous to leave your vehicle with the engine running. Your vehicle could move suddenly if the shift lever is not fully in PARK (P) with the parking brake firmly set. And, if you leave the vehicle with the engine running, it could overheat and even catch fire. You or others could be injured. Do not leave your vehicle with the engine running.

If you have to leave your vehicle with the engine running, be sure your vehicle is in PARK (P) and the parking brake is firmly set before you leave it. After you move the shift lever into PARK (P), hold the regular brake pedal down. Then, see if you can move the shift lever away from PARK (P) without first pulling it toward you. If you can, it means that the shift lever was not fully locked into PARK (P).

Torque Lock

If you are parking on a hill and you do not shift your transmission into PARK (P) properly, the weight of the vehicle may put too much force on the parking pawl in the transmission. You may find it difficult to pull the shift lever out of PARK (P). This is called torque lock. To prevent torque lock, set the parking brake and then shift into PARK (P) properly before you leave the driver's seat. To find out how, see *Shifting Into Park (P) on page 150*.

When you are ready to drive, move the shift lever out of PARK (P) before you release the parking brake.

If torque lock does occur, you may need to have another vehicle push yours a little uphill to take some of the pressure from the parking pawl in the transmission, then you will be able to pull the shift lever out of PARK (P).

Shifting Out of Park (P)

Your vehicle has an automatic transmission shift lock control system which locks the shift lever in PARK (P) when the ignition is in the LOCK. You have to fully apply your regular brakes before you can shift from PARK (P) when the ignition is in RUN. See *Automatic Transmission Operation on page 142*.

If you cannot shift out of PARK (P), ease pressure on the shift lever and push the shift lever all the way up into PARK (P) as you maintain brake application. Then, move the shift lever into the gear desired.

Parking Over Things That Burn

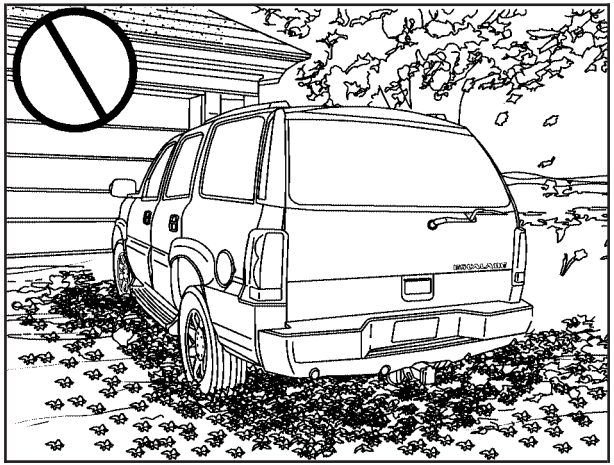

⚠ CAUTION:

Things that can burn could touch hot exhaust parts under your vehicle and ignite. Do not park over papers, leaves, dry grass, or other things that can burn.

Engine Exhaust

⚠ CAUTION:

Engine exhaust can kill. It contains the gas carbon monoxide (CO), which you cannot see or smell. It can cause unconsciousness and death.

You might have exhaust coming in if:

- **Your exhaust system sounds strange or different.**
- **Your vehicle gets rusty underneath.**
- **Your vehicle was damaged in a collision.**
- **Your vehicle was damaged when driving over high points on the road or over road debris.**

CAUTION: (Continued)

CAUTION: (Continued)

- **Repairs were not done correctly.**
- **Your vehicle or exhaust system has been modified improperly.**

If you ever suspect exhaust is coming into your vehicle:

- **Drive it only with all the windows down to blow out any CO; and**
- **Have your vehicle fixed immediately.**

Running the Engine While Parked

It is better not to park with the engine running. But if you ever have to, here are some things to know.

⚠ CAUTION:

Idling the engine with the climate control system off could allow dangerous exhaust into your vehicle. See the earlier caution under *Engine Exhaust on page 153*.

Also, idling in a closed-in place can let deadly carbon monoxide (CO) into your vehicle even if the climate control fan is at the highest setting. One place this can happen is a garage. Exhaust — with CO — can come in easily. NEVER park in a garage with the engine running.

Another closed-in place can be a blizzard. See *Winter Driving on page 360*.

⚠ CAUTION:

It can be dangerous to get out of your vehicle if the shift lever is not fully in PARK (P) with the parking brake firmly set. Your vehicle can roll. Do not leave your vehicle when the engine is running unless you have to. If you have left the engine running, the vehicle can move suddenly. You or others could be injured. To be sure your vehicle will not move, even when you are on fairly level ground, always set your parking brake and move the shift lever to PARK (P).

Follow the proper steps to be sure your vehicle will not move. See *Shifting Into Park (P) on page 150*.

If you are pulling a trailer, see *Towing a Trailer on page 375*.

Mirrors

Automatic Dimming Rearview Mirror with Intellibeam™, OnStar®, Compass, and Temperature Display

Your vehicle may have an automatic dimming rearview mirror with Intellibeam, OnStar®, compass and temperature display. For more information on OnStar®, see *OnStar® System on page 163*. For more information on Intellibeam™, see "Intellibeam Intelligent High-Beam Headlamp Control System" under *Exterior Lamps on page 197*.

The mirror includes an eight-point compass display in the upper right corner of the mirror face. When on, the compass automatically calibrates as the vehicle is driven. Outside temperature is also shown in the display.

Automatic Dimming

Your vehicle is equipped with an inside automatic dimming rearview mirror. The automatic dimming feature is activated whenever the vehicle is turned on and dims only during nighttime driving.

Compass Operation

AUTO : Press and hold the "auto highbeam" button for approximately three seconds to turn the compass/temperature display on or off.

When the ignition and the display features are on, the display will show two character boxes for about two seconds. After two seconds, the mirror will display the compass heading and temperature.

Compass Calibration

If after two seconds the display does not show the correct direction, (N for North for example), there may be a strong magnetic field interfering with the compass. Such interference may be caused by a magnetic antenna mount, magnetic note pad holder, or a similar magnetic item.

The compass can be placed in calibration mode manually by pressing and holding the "auto highbeam" button for approximately nine seconds until CAL is shown in the compass display.

The mirror can then be calibrated by driving the vehicle in circles at 5 mph (8 km/h) or less until the display reads the correct direction.

Compass Variance

The mirror is set to zone eight upon leaving the factory. It will be necessary to adjust the compass to compensate for compass variance if the vehicle is driven outside zone eight. Under certain circumstances, such as a long distance, cross-country trip, it will be necessary to adjust the compass variance.

Compass variance is the difference between earth's magnetic north and true geographic north. If the mirror is not adjusted to account for zone changes, the compass could give false readings.

To adjust for zone changes, do the following:

1. Find your current location and variance zone number on the zone map that follows.

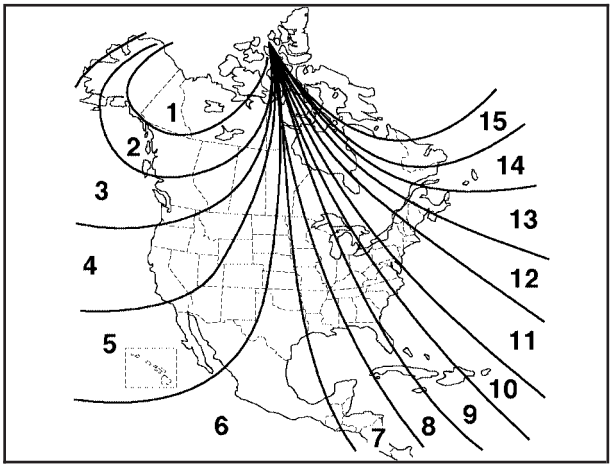

2. Press and hold the "auto highbeam" button approximately six seconds until a zone number appears in the display.
3. Once the zone number appears in the display, press the "auto highbeam" button quickly until you reach the correct zone number. Stop pressing the button and the mirror will return to normal operation. If C appears in the compass window, the compass needs calibration. See "Compass Calibration" listed previously.

Outside Temperature

Outside temperature is shown in the mirror display. Temperature will be displayed in Fahrenheit or Celsius based on the choice of English or metric in the vehicle's configuration menu.

If an abnormal temperature reading is displayed for an extended period of time, please consult your dealer. Under certain circumstances, a delay in updating the temperature is normal.

Cleaning the Mirror

When cleaning the mirror, use a paper towel or similar material dampened with glass cleaner. Do not spray glass cleaner directly on the mirror as that may cause the liquid cleaner to enter the mirror housing.

Automatic Dimming Rearview Mirror with OnStar®, Compass and Temperature Display

Your vehicle has this feature. When on, the automatic dimming mirror dims to the proper level to minimize glare from lights behind you after dark.

The mirror has a dual display in the upper right corner of the mirror face that shows the compass reading and the outside temperature.

Control buttons for the OnStar® system are at the bottom of the mirror. See *OnStar® System on page 163* for more information about the services OnStar® provides.

⏻ **(On/Off):** This is the on/off button.

Temperature and Compass Display

Press the on/off button, located to the far left, briefly to turn the compass/temperature display on or off.

If the display reads CAL, the compass needs to be calibrated. For more information, see “Compass Calibration” following.

To adjust between Fahrenheit and Celsius, do the following:

1. Press and hold the on/off button for approximately four seconds until either a flashing F or C appears.
2. Press the button again to change the display to the desired unit of measurement. After approximately four seconds of inactivity, the new unit will be locked in and the compass/temperature display will return.

If an abnormal temperature reading is displayed for an extended period of time, please see your GM dealer. Under certain circumstances, a delay in updating the temperature is normal.

Automatic Dimming Mirror Operation

The automatic dimming mirror function is turned on automatically each time the ignition is started. To operate the automatic dimming mirror, do the following:

1. Make sure the green indicator light, located to the left of the on/off button, is lit. If it is not, press and hold the on/off button for approximately six seconds until the green light comes on, indicating that the mirror is in automatic dimming mode.
2. Turn off the automatic dimming mirror function by pressing and holding the on/off button for approximately six seconds, until the green indicator light turns off.

Compass Variance

The mirror is set in zone eight upon leaving the factory. It will be necessary to adjust the compass to compensate for compass variance if the vehicle is outside of zone eight. Under certain circumstances, as during a long distance cross-country trip, it will be necessary to adjust for compass variance. Compass variance is the difference between earth's magnetic north and true geographic north. If not adjusted to account for compass variance, the compass could give false readings.

To adjust for compass variance, do the following:

1. Find your current location and variance zone number on the following zone map.

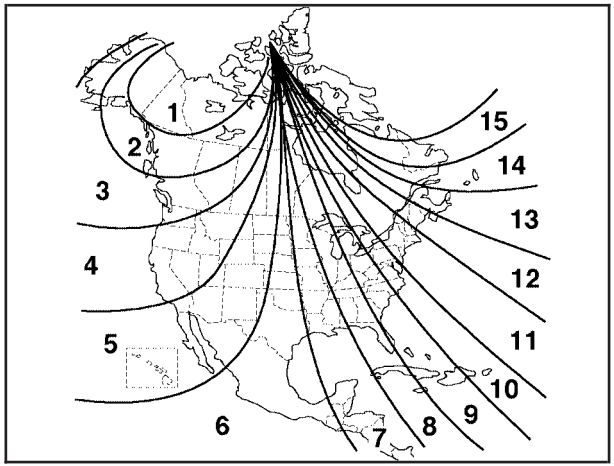

2. Press and hold the on/off button until a Z and a zone number appears in the display. The compass is now in zone mode.
3. Keep pressing the on/off button until the desired zone number appears in the display. Release the button. After approximately four seconds of inactivity, the new zone number will be locked in and the compass/temperature display will return.
4. Calibrate the compass as described next.

Compass Calibration

The compass may need calibration if one of the following occurs:

- After approximately five seconds, the display does not show a compass heading, N for North, for example, there may be a strong magnetic field interfering with the compass. Such interference may be caused by a magnetic antenna mount, magnetic note pad holder, or a similar magnetic item.
- The compass does not display the correct heading and the compass zone variance is set correctly.

In order to calibrate, CAL must be displayed in the mirror compass windows. If CAL is not displayed, push the on/off button for approximately 12 seconds or until CAL is displayed.

The compass can be calibrated by driving the vehicle in circles at 5 mph (8 km/h) or less until the display reads a direction.

Cleaning the Mirror

When cleaning the mirror, use a paper towel or similar material dampened with glass cleaner. Do not spray glass cleaner directly on the mirror as that may cause the liquid cleaner to enter the mirror housing.

Outside Power Foldaway Mirrors

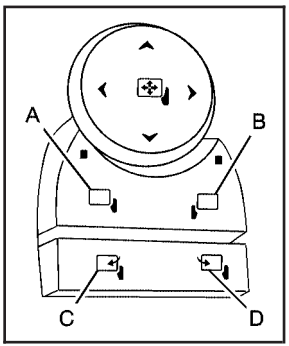

If your vehicle is equipped with outside power foldaway mirrors, the controls are located on the driver's door armrest.

- Press (A) to select the driver's side mirror. Then press the arrows located on the four-way control pad to adjust the mirror. Press (A) again to deselect the mirror.

- Press (B) to select the passenger's side mirror. Then press the arrows located on the four-way control pad to adjust the mirror. Press (B) again to deselect the mirror.
- Press (C), to fold the mirrors out to the driving position.
- Press (D) to fold the mirrors in to the folded position.

If the mirrors are accidentally folded/unfolded manually, they may shake or flutter at normal driving speeds and may not stay in the unfolded position. If this happens, you will need to reset the mirrors. See "Resetting the Power Foldaway Mirrors" next.

Resetting the Power Foldaway Mirrors

You will need to reset the power foldaway mirrors if the following occurs:

- The mirrors are accidentally obstructed while folding.
- They are accidentally manually folded/unfolded.
- The mirrors will not stay in the unfolded position.
- The mirrors shake and flutter at normal driving speeds.

To reset the power foldaway mirrors, fold and unfold them one time using the mirror controls. This will reset them to their normal position.

This mirror has the following features.

Automatic Dimming

The driver's outside mirror will adjust for the glare of the headlamps behind you. See *Automatic Dimming Rearview Mirror with OnStar®, Compass and Temperature Display on page 157*.

Curb View Assist

If your vehicle has the memory package, the outside mirrors are able to perform the curb view assist mirror function. This feature may be useful in allowing the driver to view the curb when parallel parking. This feature will cause the passenger's and/or driver's mirror to tilt to a preselected position when the vehicle is in REVERSE (R).

The passenger's and/or driver's mirror will return to its original position when the vehicle is shifted out of REVERSE (R), or the ignition is turned off or to LOCK.

This feature can be turned on or off through the Driver Information Center (DIC). See *Driver Information Center (DIC) on page 239*.

Heated Mirrors

The button to turn the heated mirrors on or off is located on the climate control panel. Press this button to warm the driver's and passenger's outside rearview mirrors to help clear them of ice, snow, and condensation.

See "Rear Window Defogger" under *Dual Automatic Climate Control System on page 212* for more information.

Convex Mirror

The passenger's side mirror may have convex glass. A convex mirror's surface is curved so more can be seen from the driver's seat.

⚠ CAUTION:

A convex mirror can make things (like other vehicles) look farther away than they really are. If you cut too sharply into the right lane, you could hit a vehicle on your right. Check your inside mirror or glance over your shoulder before changing lanes.

Your vehicle may also have a turn signal indicator on the mirror. An arrow on the mirror will flash in the direction of the turn or lane change.

OnStar® System

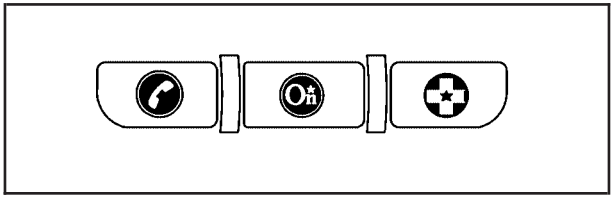

OnStar® uses several innovative technologies and live advisors to provide you with a wide range of safety, security, information, and convenience services. If your airbags deploy, the system is designed to make an automatic call to OnStar® Emergency where we can request emergency services be sent to your location. If you lock your keys in the car, call OnStar® at 1-888-4-ONSTAR and they can send a signal to unlock your doors. If you need roadside assistance, press the OnStar® button and they can contact Roadside Service for you.

A complete OnStar® Owner's Guide and the Terms and Conditions of the OnStar® Subscription Service Agreement are included in the vehicle's OnStar® Subscriber Information packet located in your vehicle. For more information, visit www.onstar.com or www.onstar.ca, contact OnStar® at 1-888-4-ONSTAR (1-888-466-7827), or press the OnStar® button to speak with an OnStar® advisor 24 hours a day, 7 days a week.

OnStar® Services

For new vehicles equipped with OnStar®, the Directions & Connections Plan is included for one year from the date of purchase. You can extend this plan beyond the first year to meet your needs. For more information, press the OnStar® button to speak with an advisor.

Directions & Connections Plan

- Advanced Automatic Crash Notification
- Automatic Notification of Airbag Deployment
- Emergency Services
- Roadside Assistance
- Stolen Vehicle Location Assistance
- AccidentAssist
- Remote Door Unlock/Vehicle Alert
- OnStar® Vehicle Diagnostics
- OnStar® Hands-Free Calling
- OnStar® Virtual Advisor
- Driving Directions
- RideAssist
- Information and Convenience Services

OnStar® Hands-Free Calling

OnStar® Hands-Free Calling allows OnStar® subscribers to make and receive calls using voice commands at the touch of a button. Hands-Free Calling is fully integrated into the vehicle, and may be used with Pre-Paid Minute Packages or linked to a cell phone through OnStar® Shared Minutes Plan. To find out more, refer to the OnStar® Owner's Guide, visit www.onstar.com or www.onstar.ca, or speak with an OnStar® advisor by pressing the OnStar® button or calling 1-888-4-ONSTAR (1-888-466-7827).

OnStar® Virtual Advisor

Your vehicle may have Virtual Advisor. It is a feature of OnStar® Hands-Free Calling that uses your minutes to access weather, local traffic reports and stock quotes. By pressing the phone button and giving a few simple voice commands, you can browse through the various topics. Customize your information profile at www.myonstar.com. See the OnStar® Owner's guide for more information.

OnStar® Steering Wheel Controls

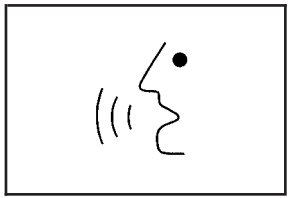

Your vehicle may be equipped with a Talk/Mute button that can be used to interact with OnStar®.

See *Audio Steering Wheel Controls on page 313* for more information.

When calling into voice mail systems or to dial directory numbers, press the control, wait for the "number please" response, say the number(s) to be dialed, wait for the number(s) to be repeated and then say "dial." See the OnStar® Owner's Guide for more information.

Universal Home Remote System

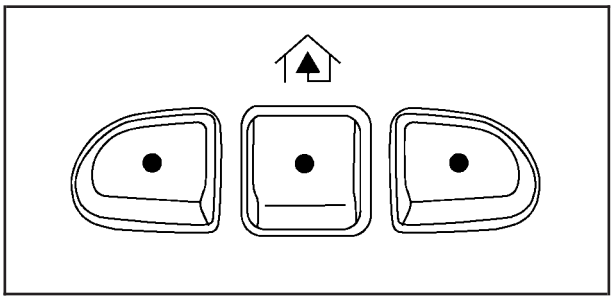

The Universal Home Remote System, a combined universal transmitter and receiver, provides a way to replace up to three hand-held transmitters used to activate devices such as gate operators, garage door openers, entry door locks, security systems, and home lighting.

If your vehicle has the Universal Home Remote Transmitter, it complies with Part 15 of the FCC Rules. Operation is subject to the following two conditions:

1. This device may not cause harmful interference.
2. This device must accept any interference received, including interference that may cause undesired operation.

This device complies with RSS-210 of Industry Canada. Operation is subject to the following two conditions:

1. This device may not cause interference.
2. This device must accept any interference received, including interference that may cause undesired operation of the device.

Changes and modifications to this system by other than an authorized service facility could void authorization to use this equipment.

Universal Home Remote System Operation

Do not use the Universal Home Remote with any garage door opener that does not have the stop and reverse feature. This includes any garage door opener model manufactured before April 1, 1982. If you have a newer garage door opener with rolling codes, please be sure to follow Steps 6 through 8 to complete the programming of your Universal Home Remote Transmitter.

Read the instructions completely before attempting to program the Universal Home Remote. Because of the steps involved, it may be helpful to have another person available to assist you in the programming steps.

Keep the original hand-held transmitter for use in other vehicles as well as for future Universal Home Remote programming. It is also recommended that upon the sale of the vehicle, the programmed Universal Home Remote buttons should be erased for security purposes. See “Erasing Universal Home Remote Buttons” later in this section or, for assistance, see *Customer Assistance Offices on page 540*.

Be sure that people and objects are clear of the garage door or gate operator you are programming. When programming a garage door, it is advised to park outside of the garage.

It is recommended that a new battery be installed in your hand-held transmitter for quicker and more accurate transmission of the radio-frequency signal.

Programming Universal Home Remote

Follow these steps to program up to three channels:

1. Press and hold down the two outside Universal Home Remote buttons, releasing only when the Universal Home Remote indicator light begins to flash, after 20 seconds. Do not hold down the buttons for longer than 30 seconds and do not repeat this step to program a second and/or third hand-held transmitter to the remaining two Universal Home Remote buttons.
2. Position the end of your hand-held transmitter about 1 to 3 inches (3 to 8 cm) away from the Universal Home Remote buttons while keeping the indicator light in view.
3. Simultaneously press and hold both the desired Universal Home Remote button and the hand-held transmitter button. Do not release the buttons until Step 4 has been completed.

   Some entry gates and garage door openers may require you to substitute Step 3 with the procedure noted in “Gate Operator and Canadian Programming” later in this section.
4. The indicator light will flash slowly at first and then rapidly after Universal Home Remote successfully receives the frequency signal from the hand-held transmitter. Release both buttons.

5. Press and hold the newly-trained Universal Home Remote button and observe the indicator light.

   If the indicator light stays on constantly, programming is complete and your device should activate when the Universal Home Remote button is pressed and released.

   To program the remaining two Universal Home Remote buttons, begin with Step 2 under "Programming Universal Home Remote." Do not repeat Step 1 as this will erase all of the programmed channels.

   If the indicator light blinks rapidly for two seconds and then turns to a constant light, continue with Steps 6 through 8 following to complete the programming of a rolling-code equipped device, most commonly, a garage door opener.

6. Locate in the garage, the garage door opener receiver (motor-head unit). Locate the "Learn" or "Smart" button. This can usually be found where the hanging antenna wire is attached to the motor-head unit.

7. Firmly press and release the "Learn" or "Smart" button. The name and color of the button may vary by manufacturer.

   You will have 30 seconds to start Step 8.

8. Return to the vehicle. Firmly press and hold the programmed Universal Home Remote button for two seconds, then release. Repeat the press/hold/release sequence a second time, and depending on the brand of the garage door opener, or other rolling code device, repeat this sequence a third time to complete the programming.

   The Universal Home Remote should now activate your rolling-code equipped device.

To program the remaining two Universal Home Remote buttons, begin with Step 2 of "Programming Universal Home Remote." You do not want to repeat Step 1, as this will erase all previous programming from the Universal Home Remote buttons.

Gate Operator and Canadian Programming

Canadian radio-frequency laws require transmitter signals to time out or quit after several seconds of transmission. This may not be long enough for Universal Home Remote to pick up the signal during programming. Similarly, some U.S. gate operators are manufactured to time out in the same manner.

If you live in Canada, or you are having difficulty programming a gate operator or garage door opener by using the “Programming Universal Home Remote” procedures, regardless of where you live, replace Step 3 under “Programming Universal Home Remote” with the following:

Continue to press and hold the Universal Home Remote button while you press and release every two seconds (cycle) the hand-held transmitter button until the frequency signal has been successfully accepted by the Universal Home Remote. The Universal Home Remote indicator light will flash slowly at first and then rapidly. Proceed with Step 4 under “Programming Universal Home Remote” to complete.

Using Universal Home Remote

Press and hold the appropriate Universal Home Remote button for at least half of a second. The indicator light will come on while the signal is being transmitted.

Erasing Universal Home Remote Buttons

To erase programming from the three Universal Home Remote buttons do the following:

1. Press and hold down the two outside buttons until the indicator light begins to flash, after 20 seconds. Do not hold the two outside buttons for longer than 30 seconds.
2. Release both buttons.

The Universal Home Remote is now in the training (learning) mode and can be programmed at any time beginning with Step 2 under “Programming Universal Home Remote” shown earlier in this section.

Individual buttons cannot be erased, but they can be reprogrammed. See “Reprogramming a Single Universal Home Remote Button” following this section.

Reprogramming a Single Universal Home Remote Button

To program a device to Universal Home Remote using a Universal Home Remote button previously trained, follow these steps:

1. Press and hold the desired Universal Home Remote button. Do not release the button.
2. The indicator light will begin to flash after 20 seconds. While still holding the Universal Home Remote button, proceed with Step 2 under “Programming Universal Home Remote” shown earlier in this section.

For additional information on Universal Home Remote, see *Customer Assistance Offices on page 540*.

Storage Areas

Glove Box

Open the glove box by pulling the bottom of the handle upward. Use the key to lock and unlock.

Cupholder(s)

Your vehicle is equipped with cupholders for the front and rear passengers. The cupholders are located in the center console for the front passengers and on the rear of the center console for the rear passengers. To use the front cupholders, press down on the access door release. The door will then open. Push the door pack down to close it. The front cupholder may be removed for cleaning by pushing down and then back on the cupholder.

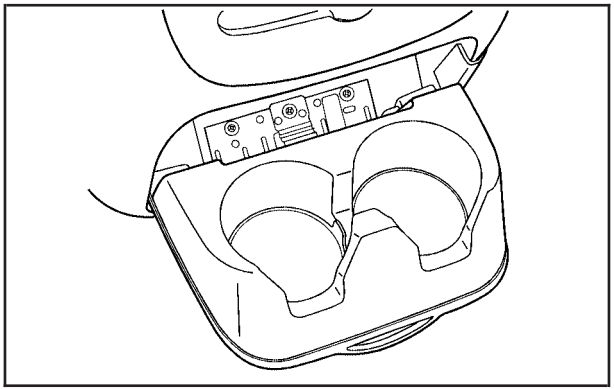

To access the cupholders in the rear floor console, pull downward on the lid.

Center Console Storage Area

Your vehicle has a console compartment between the bucket seats.

The console has both an upper and lower storage bin accessed by lifting up on the latches located at the front of the console lid.

The console may be equipped with an accessory power outlet inside. See *Accessory Power Outlet(s) on page 210*.

The rear of the console also has a cupholder that swings down for the rear seat passengers to use.

Assist Handles

Your vehicle is equipped with assist handles to be used when getting out of the vehicle. They are located above the rear passenger doors. Pull down to use.

Garment Hooks

There are garment hooks located on the assist handles.

Luggage Carrier

If you have the luggage carrier, you can load things on top of your vehicle.

The luggage carrier has siderails attached to the roof and crossrails, if equipped, which can be moved back and forth to help secure cargo. To adjust, turn the knob located at each end of the crossrail counter clockwise until the crossrail can move freely. To secure the crossrail, turn the knob located at the end of the crossrail clockwise until tightened. Tie the load to the siderails or siderail supports.

Notice: **Loading cargo on the luggage carrier that weighs more than 200 lbs (91 kg) or hangs over the rear or sides of the vehicle may damage your vehicle. Load cargo so that it rests as far forward as possible and against the side rails, making sure to fasten it securely.**

Do not exceed the maximum vehicle capacity when loading your vehicle. For more information on vehicle capacity and loading, see *Loading Your Vehicle on page 366*.

To prevent damage or loss of cargo as you are leaving, check now and then to make sure the luggage and cargo are still securely fastened.

Be sure the cargo is properly loaded.

- If small heavy objects are placed on the roof, place the load in the area over the rear wheels (behind the rear side door on extended models). If you need to, cut a piece of 3/8 inch plywood to fit inside the crossrails and siderails to spread the load. If plywood is used, tie it to the siderail supports.
- Tie the load to the crossrails or the siderail supports. Use the crossrails only to keep the load from sliding. To move the crossrails, pull out on the latch release handle at each end. Slide the crossrail to the desired position balancing the force side to side. Push the release handle back into the latched position and slide the crossrail back and forth slightly to be sure the latch snaps securely into place.
- If you need to carry long items, move the crossrails as far apart as they will go. Tie the load to the crossrails and the siderails or siderail supports. Also tie the load to the bumpers. Do not tie the load so tightly that the crossrails or siderails are damaged.
- After moving a crossrail, be sure it is securely locked into the siderail.

Your vehicle has a Center High-Mounted Stoplamp (CHMSL) located above the glass or above the rear load doors.

If items are loaded on the roof of the vehicle, care should be taken not to block or damage the CHMSL unit.

Rear Storage Area

Your vehicle may have a storage compartment located in the rear cargo area of the vehicle in the driver's side trim panel.

To open the utility compartment, turn the knobs and swing the compartment door open. The compartment door can be removed.

Rear Seat Armrest

Your vehicle's second row seat may have an armrest/storage compartment.

Pull the loop at the top of the armrest out to lower the armrest.

To open the compartment, if equipped, push the button on the front of the armrest and pull the top open.

Convenience Net

The convenience net (if equipped) in the rear of your vehicle helps to keep small loads in place during sharp turns or quick stops and starts.

The net is not designed for larger, heavier items.

To install the net, attach the hooks to the raised cargo tie downs. Then, attach the cord loops to the button retainers in the side trim.

You can unhook the net so that it will lie flat when you're not using it.

Cargo Cover

⚠ CAUTION:

An improperly stored cargo cover could be thrown about the vehicle during a collision or sudden maneuver. You or others could be injured. If you remove the cover, always store it in the proper storage location. When you put it back, always be sure that it is securely reattached.

If you have a cargo cover, you can use it to cover items in the cargo area of your vehicle.

To use the cover, do the following:

1. Pull the cover handle toward the rear of the vehicle.
2. Latch the cover posts into the retaining sockets on the cargo area trim panels.

To return the cover to the retracted position, do the following:

1. Pull up on the cover handle to release the cover posts from the retaining sockets.
2. Let the cover move forward to the full retracted position.

To remove the cover, from a regular wheelbase model, do the following:

1. Let the cover go all the way into the holder.
2. Then, grasping the driver's side cover endcap, push the cover endcap toward the passenger's side of the vehicle.
3. Swing the cover rearward and take it out of the vehicle.

To put the cover in the vehicle, do the following:

1. Make sure the cover slot in the holder faces rearward with the round surface facing down.
2. Then, hold the cover at an angle and place the cover endcap into the slot in the passenger's side trim panel.
3. Move the other end of the cover forward and hold it next to the driver's side trim panel slot.
4. Press the endcaps in, this will allow the cover to fit into the trim slot.
5. Lightly pull on the cover holder to make sure it is secure.

   On the extended wheelbase models there are two cover positions. The slots furthest forward allow the cover to be used if the third seat is removed or folded down. The cover can be installed and removed from either side.

Cargo Tie Downs

Your vehicle may be equipped with cargo tie downs in the rear cargo area that allow you to strap cargo in and keep it from moving inside the vehicle.

When not using the tie downs, flip them down out of the way.

Cargo Management System

Your vehicle may be equipped with a cargo management system. It can be used for storing and separating cargo and as a table. The maximum load is 200 lbs. (91 kg) distributed. It is located in the rear of the vehicle on upper or lower horizontal guides. There are two vertical curved guides that connect the upper and lower horizontal guides together. The system has three rollers on each side. The system will be equipped with either a release lever, located in the middle handle, or a tab located on the side. These engage and disengage a locator pin. These are used in adjusting and positioning the system.

The cargo management system can be positioned on the upper or lower horizontal guides.

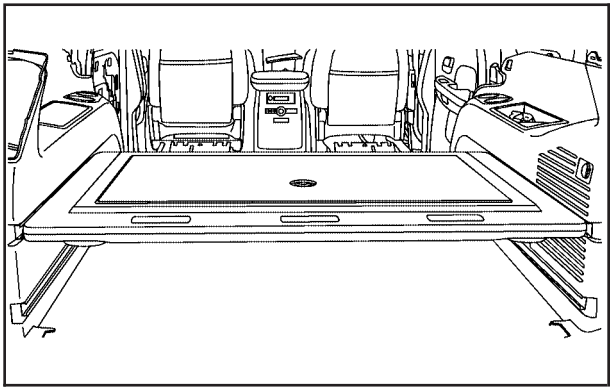

To adjust the system from the upper guide to the lower guide, do the following:

1. Squeeze and hold the release lever, or slide the tab towards the inside of the vehicle, to retract the locator pin.
2. Pull the system back until the front rollers reach the vertical curved guides.

3. Lower the front rollers to the lower guides and pull the system back until the middle set of rollers clear the upper guides.
4. Lower the system until the middle rollers are lined up with lower guides. While holding in the release lever or tab, push the system forward until all three sets of rollers are on the guides.
5. Release the lever or tab and push the system until the locator pin reaches the locator hole.

To adjust the system from the lower guide to the upper guide, do the following:

1. Squeeze and hold the release lever, or slide the tab towards the inside of the vehicle, to retract the locator pin.
2. Pull the system back until the middle rollers can be raised and placed into the upper guides.
3. Push the system forward until the front rollers are lined up with the vertical curved guides.
4. Push down on the rear of the system and raise the front rollers up the vertical curved guides.
5. Push the system forward until all three sets of rollers are resting on the guides and release the lever or tab.
6. Push the system forward until the locator pin reaches the locator hole.

The cargo management system can be pulled out and used as a table on both the upper and lower guide. To use a table, squeeze the release lever and pull the system towards you. Release the lever and pull the system until the locator pin reaches the next hole. The system will extend out of the vehicle. The liftgate can not be closed in this position. Do not the operate the vehicle with liftgate open.

The cargo management system can be removed from the vehicle. This procedure should be completed by two people. While squeezing the release lever, pull the system back until the rollers clear the guides.

On one side of the system is a retractable storage area.

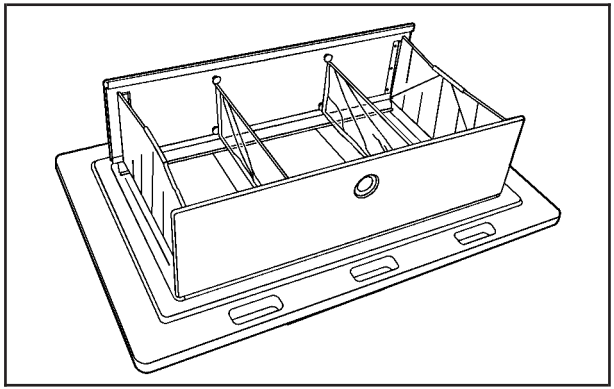

To access, pull the handle in the center of the system up.

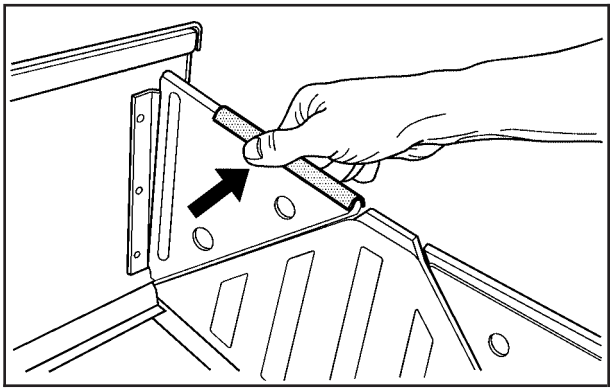

Slide the hinge covers to the center of each side. This will keep the sides of the storage system stationary allowing it to stay upright. Inside the system are two removable dividers. To remove, unhook the loops at the ends of each divider. When not in use, slide the hinge covers back and the storage system will fold back down. Press down on the storage cover to lock it into place.

On the opposite side of the system are two cupholders.

Sunroof

Your vehicle may be equipped with a power sliding sunroof. To open or close the sunroof, the ignition needs to be turned to ON, or Retained Accessory Power (RAP) must be active. When RAP is active, the sunroof will work for 10 minutes after the ignition is turned off, or until a front door is opened. See *Retained Accessory Power (RAP) on page 139* for more information.

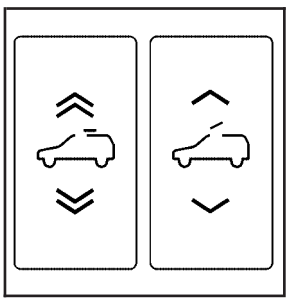

There are two switches in the overhead console that operate the sunroof.

Manual-Open/Manual-Close: To open the sunroof press and hold the rear of the driver's side switch until the sunroof reaches the desired position. To close the sunroof, press and hold the front of the driver's side switch until the sunroof reaches the desired position. The sunshade will open automatically with the sunroof, but can also be opened manually.

When the sunroof is opened, an air deflector will automatically raise. The air deflector will retract when the sunroof is closed.

Express-Open/Express-Close: To express-open the sunroof, fully press and release the rear of the driver's side switch. The sunroof will open automatically. To stop the sunroof partway, press the switch a second time. To express-close the sunroof, fully press and release the front of the driver's side switch. The sunroof will close automatically. To stop the sunroof partway, press the switch a second time. The sunshade will open automatically with the sunroof, but can also be opened manually.

When the sunroof is opened, an air deflector will automatically raise. The air deflector will retract when the sunroof is closed.

Vent: From the closed position, press the rear of the passenger's side switch to vent the sunroof. To stop the sunroof partway, press the switch a second time. To close the sunroof, press and hold the front of the passenger's side switch. To stop the sunroof partway, release the switch.

Anti-Pinch Feature: If an object is in the path of the sunroof while it is closing, the anti-pinch feature will detect the object and stop the sunroof from closing at the point of the obstruction. The sunroof will then open halfway, and the air deflector will raise. To close the sunroof once it has re-opened, refer to the "Express-Close" or "Manual-Close" functions described previously. If the sunroof is in the vent position, and there is an object in the path of the sunroof when it closing, the anti-pinch feature will detect the object and stop the sunroof. To close the sunroof once it has re-opened, refer to the "Manual-Close" or "Express-Close" functions described previously.

Section 3 Instrument Panel

Instrument Panel Overview 184
Hazard Warning Flashers 186
Other Warning Devices 186
Horn 186
Tilt Wheel 187
Heated Steering Wheel 187
Turn Signal/Multifunction Lever 188
Turn and Lane-Change Signals 188
Headlamp High/Low-Beam Changer 189
Windshield Wipers 190
Rainsense™ II Wipers 191
Windshield Washer 192
Rear Window Wiper/Washer 193
Cruise Control 194
Exterior Lamps 197
Headlamps on Reminder 202
Daytime Running Lamps (DRL) 202
Automatic Headlamp System 203
Fog Lamps 204
Instrument Panel Brightness 204
Dome Lamps 204
Dome Lamp Override 205
Entry Lighting 205
Exit Lighting 205
Reading Lamps 205
Battery Run-Down Protection 205
Ultrasonic Rear Parking Assist (URPA) 206
Accessory Power Outlet(s) 210
Ashtray(s) and Cigarette Lighter 211
Analog Clock 211

Climate Controls 212
Dual Automatic Climate Control System 212
Outlet Adjustment 217
Rear Air Conditioning and Heating System and Electronic Climate Controls 218

Warning Lights, Gages, and Indicators 220
Instrument Panel Cluster 221
Speedometer and Odometer 222
Trip Odometer 222
Tachometer 222
Safety Belt Reminder Light 223

Passenger Safety Belt Reminder Light 223
Airbag Readiness Light 224
Passenger Airbag Status Indicator 225
Charging System Light 227
Brake System Warning Light 228
Anti-Lock Brake System Warning Light 229
StabiliTrak® Indicator Light 230
Engine Coolant Temperature Gage 230
Tire Pressure Light 231
Malfunction Indicator Lamp 232
Oil Pressure Light 236
Security Light 236
Fog Lamp Light 237
Lights On Reminder 237
Cruise Control Light 237
Highbeam On Light 237
Tow/Haul Mode Light 238
Fuel Gage 238
Low Fuel Warning Light 239

Driver Information Center (DIC) 239
DIC Operation and Displays 240
DIC Warnings and Messages 245
DIC Vehicle Customization 254

Audio System(s) 265
Setting the Time 267
Radio with CD and DVD 268
XM Radio Messages 297
Navigation/Radio System 299
Rear Seat Entertainment System 299
Rear Seat Audio (RSA) 310
Theft-Deterrent Feature 312
Audio Steering Wheel Controls 313
Radio Reception 314
Care of Your CDs and DVDs 315
Care of the CD and DVD Player 315
Rear Side Window Antenna 315
XM™ Satellite Radio Antenna System 316
Chime Level Adjustment 316

NOTES

Instrument Panel Overview

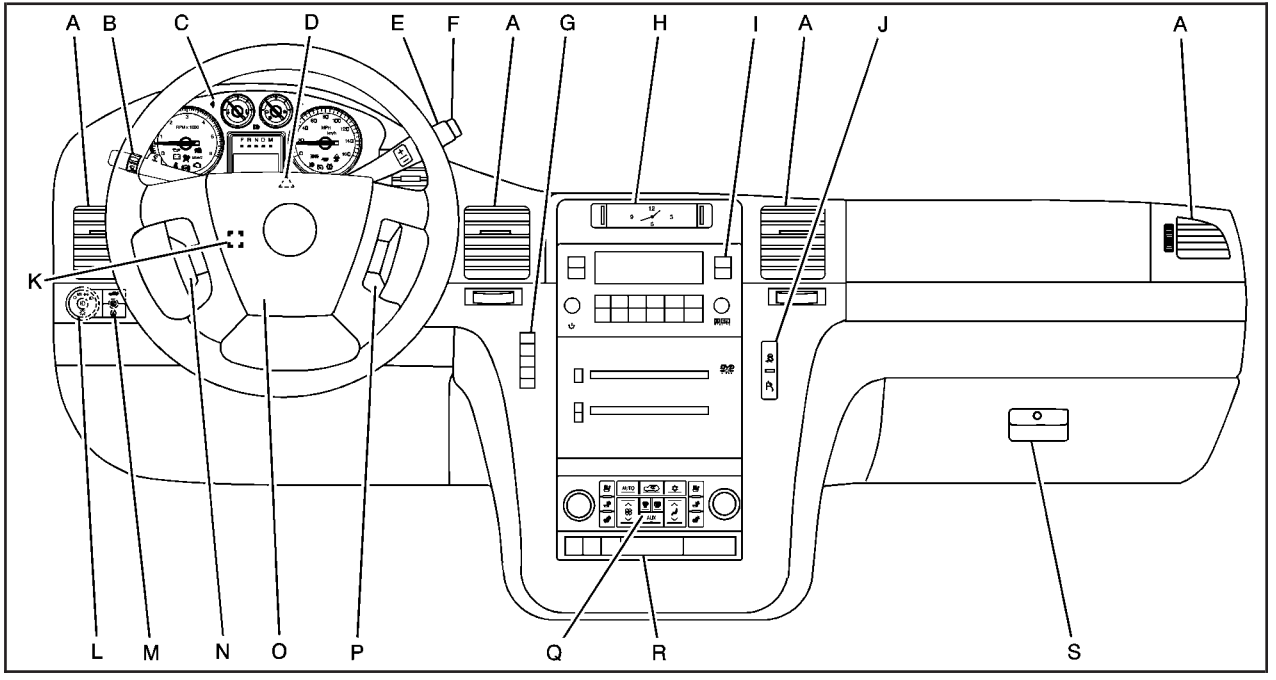

United States version shown; Canada similar.

A. Air Outlets. See *Outlet Adjustment on page 217*.

B. Turn Signal/Multifunction Lever. See *Turn Signal/Multifunction Lever on page 188*.

C. Instrument Panel Cluster. See *Instrument Panel Cluster on page 221*.

D. Hazard Warning Flasher Button. See *Hazard Warning Flashers on page 186*.

E. Shift Lever and Range Selection Mode. See *Automatic Transmission Operation on page 142*.

F. Tow/Haul Selector Button. See *Tow/Haul Mode on page 148*.

G. Driver Information Center Controls. See *Driver Information Center (DIC) on page 239*.

H. Analog Clock. See *Analog Clock on page 211*.

I. Audio System. See *Audio System(s) on page 265*.

J. StabiliTrak® Button. See *StabiliTrak® System on page 326*. Rear Park Aid Disable Button. See *Ultrasonic Rear Parking Assist (URPA) on page 206*.

K. Tilt Wheel Lever. See *Tilt Wheel on page 187*.

L. Exterior Lamps Control. See *Exterior Lamps on page 197*.

M. Dome Lamp Override Button. See *Dome Lamp Override on page 205*.

N. Cruise Control Buttons. See *Audio Steering Wheel Controls on page 313*.

O. Horn. See *Horn on page 186*.

P. Audio Steering Wheel Controls. See *Audio Steering Wheel Controls on page 313*.

Q. Dual Automatic Climate Controls. See *Dual Automatic Climate Control System on page 212*.

R. Pedal Adjust Button. See *Adjustable Throttle and Brake Pedal on page 141*. Heated Windshield Washer Fluid Button. See *Windshield Washer on page 192*. Power Running Boards Disable Button (If Equipped). See *Power Running Boards on page 130*.

S. Glove box. See *Glove Box on page 170*.

Hazard Warning Flashers

The hazard warning flashers warn others. They also let police know you have a problem. Your front and rear turn signal lamps will flash on and off.

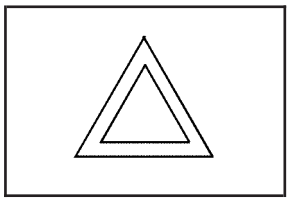

The hazard warning flasher button is located on top of the steering column.

The hazard warning flashers work no matter what ignition position the key is in, and even if the key is not in the ignition.

Press the button to make the front and rear turn signal lamps flash on and off. Press the button again to turn the flashers off.

When the hazard warning flashers are on, your turn signals will not work.

Other Warning Devices

If you carry reflective triangles, you can set them up at the side of the road about 300 feet (100 m) behind your vehicle.

Horn

To sound the horn, press the center pad on the steering wheel.

Tilt Wheel

Your vehicle has a tilt wheel, that lets you adjust the steering wheel before driving. Raising it to the highest level gives more room to exit and enter your vehicle.

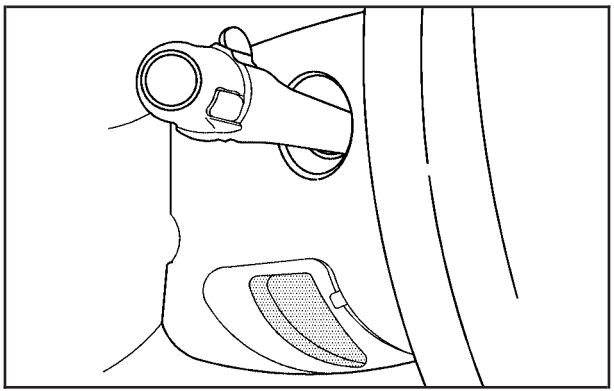

The tilt steering wheel lever is located on the lower left side of the column.

To tilt the wheel, hold the steering wheel and pull the lever. Then move the steering wheel to a comfortable position and release the lever to lock the wheel in place.

Heated Steering Wheel

Your vehicle may have a heated steering wheel.

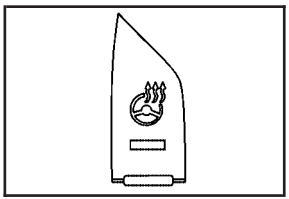

The button for this feature is located on the left side of the steering wheel.

Press the button to turn the heated steering wheel on or off. A light on the button will display while the feature is on.

The steering wheel will take about three minutes to start heating.

Turn Signal/Multifunction Lever

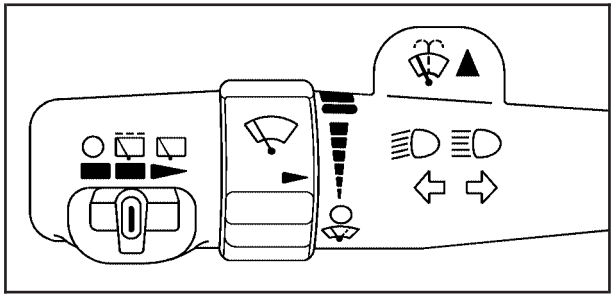

The lever on the left side of the steering column includes the following:

- Turn and Lane Change Signals. See *Turn and Lane-Change Signals on page 188*.
- Headlamp High/Low-Beam Changer. See *Headlamp High/Low-Beam Changer on page 189*.
- Windshield Wipers. See *Windshield Wipers on page 190*.
- Windshield Washer. See *Windshield Washer on page 192*.
- Rear Wiper Delay. See *Rear Window Wiper/Washer on page 193*.
- Rear Wiper. See *Rear Window Wiper/Washer on page 193*.
- Rear Wiper Wash. See *Rear Window Wiper/Washer on page 193*.

Turn and Lane-Change Signals

The turn signal has two upward (for right) and two downward (for left) positions. These positions allow you to signal a turn or a lane change.

To signal a turn, move the lever all the way up or down. When the turn is finished, the lever will return automatically.

To signal a lane change, raise or lower the lever for less than one second until the arrow starts to flash. This will cause the turn signals to automatically flash three times. It will flash six times if tow-haul mode is active.

Holding the turn signal lever for more than one second will cause the turn signals to flash until you release the lever. The lever will return by itself when it is released.

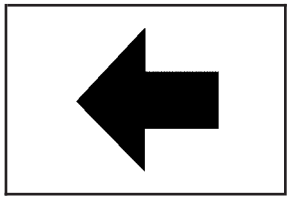

An arrow on the instrument panel cluster will flash in the direction of the turn or lane change.

As you signal a turn or a lane change, if the arrows flash more quickly than normal, a signal bulb may be burned out and other drivers will not see your turn signal.

If a bulb is burned out, replace it to help avoid an accident. If the arrows do not go on at all when you signal a turn, check for burned-out bulbs and a blown fuse. See *Fuses and Circuit Breakers on page 503*.

Turn Signal On Chime

If your turn signal is left on for more than 3/4 of a mile (1.2 km), a chime will sound at each flash of the turn signal and the message TURN SIGNAL ON will also appear in the DIC. To turn the chime and message off, move the turn signal lever to the off position.

Headlamp High/Low-Beam Changer

(Headlamp High/Low Beam Changer): To change the headlamps from low to high beam, push the lever toward the instrument panel. To return to low-beam headlamps, pull the multifunction lever toward you. Then release it.

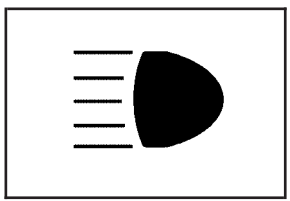

When the high beams are on, this indicator light on the instrument panel cluster will also be on.

Windshield Wipers

Be sure to clear ice and snow from the wiper blades before using them. If they are frozen to the windshield, gently loosen or thaw them. Damaged wiper blades may not clear the windshield well, making it harder to see and drive safely. If the blades do become damaged, install new blades or blade inserts. For more information, see *Windshield Wiper Blade Replacement on page 448*.

Heavy snow or ice can overload the wiper motor. A circuit breaker will stop the motor until it cools down. Clear away snow or ice to prevent an overload.

You control the windshield wipers by turning the band with the wiper symbol on it.

(Mist): For a single wiping cycle, turn the band to mist. Hold it there until the wipers start. Then let go. The wipers will stop after one wipe. If you want more wipe cycles, hold the band on mist longer.

(Delay): You can set the wiper speed for a long or short delay between wiping cycles. This can be very useful in light rain or snow. Turn the band to choose the delay time. The closer to the top of the lever, the shorter the delay.

(Low Speed): For steady wiping at low speed, turn the band away from you to the first solid band past the delay settings.

(High Speed): For high-speed wiping, turn the band further, to the second solid band past the delay settings.

(Off): To stop the wipers, move the band to off.

Rainsense™ II Wipers

Your vehicle has Rainsense™ II windshield wipers. These wipers automatically turn on when a sensor, mounted next to the inside rearview mirror, detects moisture on the windshield. When active, these wipers are able to detect moisture on the windshield and automatically turn on the wipers.

To turn on the Rainsense™ feature, the wipers must be set to one of the five delay settings. Each of the five settings adjusts the sensitivity of the rainsensor.

Since different drivers have different setting preferences, it is recommended that the mid-range setting, position three, be used initially. For more wipes, select the higher settings; for fewer wipes, select the lower settings located closer to the off position on the multifunction lever.

The rainsensor will automatically control the frequency of the wipes from off to high speed according to the weather conditions. The wipers can be left in a Rainsense™ mode even when it is not raining.

When Rainsense™ II is active, the headlamps will turn on automatically after approximately eight wipes. The headlamps will turn off if the wiper switch is set to a delay position, and there have been no wipes for approximately three minutes, or if the wiper switch is turned to the off position. If it is dark outside, the headlamps will remain on.

Notice: **Going through an automatic car wash with the wipers on can damage them. Turn the wipers off when going through an automatic car wash.**

Windshield Washer

⚠ CAUTION:

In freezing weather, do not use your washer until the windshield is warmed. Otherwise the washer fluid can form ice on the windshield, blocking your vision.

(Washer Fluid): There is a paddle marked with the windshield washer symbol at the top of the multifunction lever. To spray washer fluid on the windshield, push the paddle. The wipers will clear the window and then either stop or return to your preset speed.

Heated Windshield Washer

The heated windshield washer fluid system may be used to help clear ice, snow, tree sap, or bugs from your windshield.

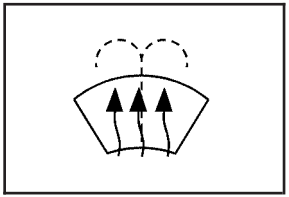

The button is located in the switchbank under the climate controls.

Push the heated washer fluid button while the ignition is turned on to activate the heated windshield washer fluid system. The indicator light will flash. This activation will initiate four heated wash/wipe cycles. The first heated wash/wipe cycle may take up to 40 seconds to occur, depending on outside temperature. After the first wash/wipe cycle, it may take up to 20 seconds for each of the remaining cycles to begin. Press the button again to turn off the heated windshield washer fluid system or it will automatically turn off after four wash/wipe cycles have been completed.

When the heated windshield washer fluid system is activated under certain outside temperature conditions, steam may flow out of the washer nozzles for a short period of time before washer fluid is sprayed. This is a normal condition.

Rear Window Wiper/Washer

⚠ CAUTION:

In freezing weather, do not use your washer until the windshield is warmed. Otherwise the washer fluid can form ice on the windshield, blocking your vision.

The rear wiper control is located on the turn signal/multifunction lever.

To turn the rear wiper on, slide the lever to a wiper position.

○ **(Off):** To turn the wiper off, slide the lever to this setting.

(Rear Wiper Delay): To turn on the rear wiper delay, slide the lever to this setting.

(Rear Wiper): To turn on the rear wiper, slide the lever to this setting.

(Rear Wiper Wash): To turn on the rear wiper wash, push the button on the end of the turn signal/multifunction lever to spray washer fluid on the rear window. The wipers will clear the rear window and either stop or return to your preset speed. For more washer cycles, press and hold the button.

The rear window wiper/washer will not operate if the liftgate or liftglass is open or ajar. If the liftgate or liftglass is opened while the rear wiper is on, the wiper will return to the parked position and stop.

Cruise Control

⚠ CAUTION:

Cruise control can be dangerous where you cannot drive safely at a steady speed. So, do not use your cruise control on winding roads or in heavy traffic.

Cruise control can be dangerous on slippery roads. On such roads, fast changes in tire traction can cause excessive wheel slip, and you could lose control. Do not use cruise control on slippery roads.

With cruise control, you can maintain a speed of about 25 mph (40 km/h) or more without keeping your foot on the accelerator. This can really help on long trips. Cruise control does not work at speeds below about 25 mph (40 km/h).

When you apply your brakes, cruise control is turned off.

If your vehicle has the StabiliTrak® system and begins to limit wheel spin while you are using cruise control, the cruise control will automatically disengage. See *StabiliTrak® System on page 326*. When road conditions allow you to safely use it again, you may turn the cruise control back on.

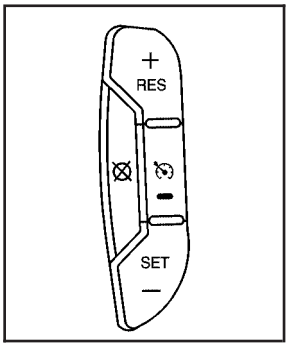

The cruise control buttons are located on left side of the steering wheel.

(On/Off): This button can both activate and turn off the system. The indicator light is on when cruise control is on and turns off when cruise control is off.

+ RES (Resume/Accelerate): Press this button to make the vehicle accelerate or resume to a previously set speed.

SET – (Set): Press this button to set the speed or make the vehicle decelerate.

⊗ **(Cancel):** Press this button to cancel cruise control without erasing the set speed from memory.

Setting Cruise Control

Cruise control will not work if your parking brake is set, or if the master cylinder brake fluid level is low.

The cruise control light on the instrument panel cluster will come on after the cruise control has been set to the desired speed.

⚠ CAUTION:

If you leave your cruise control on when you are not using cruise, you might hit a button and go into cruise when you do not want to. You could be startled and even lose control. Keep the cruise control switch off until you want to use cruise control.

1. Press the cruise control On/Off button.
2. Get up to the desired speed you want.
3. Press the SET– button located on the steering wheel and release it.
4. Take your foot off the accelerator.

Resuming a Set Speed

Suppose you set your cruise control at a desired speed and then you apply the brake. This shuts off the cruise control. But you do not need to reset it.

Once you are driving about 25 mph (40 km/h) or more, press the +RES button on your steering wheel. The vehicle will go back to the previous set speed and stay there.

Increasing Speed While Using Cruise Control

To increase the cruise speed while using cruise control:

- Press and hold the +RES button on the steering wheel until you reach your new desired speed, then release it.
- To increase vehicle speed in small increments, press the +RES button. Each time you do this, you will go about 1 mph (1.6 km/h) faster.

Reducing Speed While Using Cruise Control

To reduce your speed while using cruise control:

- Press and hold the SET– button on the steering wheel until the desired lower speed is reached, then release it.
- To slow down in very small amounts, press the SET– button on the steering wheel briefly. Each time you do this, the vehicle will go about 1 mph (1.6 km/h) slower.

Passing Another Vehicle While Using Cruise Control

Use the accelerator pedal to increase your speed. When you take your foot off the pedal, your vehicle will slow down to the previous set cruise speed.

Using Cruise Control on Hills

How well your cruise control will work on hills depends upon your speed, load, and the steepness of the hills. When going up steep hills, you may have to step on the accelerator pedal to maintain the vehicle's speed. When going downhill, you may have to brake or shift to a lower gear to keep the vehicle's speed down. Of course, applying the brake takes you out of cruise control. Many drivers find this to be too much trouble and do not use cruise control on steep hills.

Ending Cruise Control

There are three ways to end cruise control:

- Step lightly on the brake pedal.
- Press the cancel button on the steering wheel.
- Press the On/Off button on the steering wheel.

Erasing Speed Memory

When you turn off the cruise control or the ignition, your cruise control set speed memory is erased.

Exterior Lamps

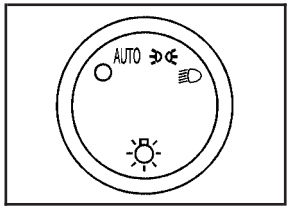

The exterior lamps control is located on the instrument panel to the left of the steering wheel.

It controls the following systems:

- Headlamps
- Taillamps
- Parking Lamps
- License Plate Lamps
- Instrument Panel Lights

The exterior lamps control has four positions:

◯ **(Off):** Turn the control to this position to turn off the automatic headlamps and daytime running lamps (DRL). Turning the headlamp control to the off position again will turn the automatic headlamps or DRL back on.

For vehicles first sold in Canada, the off position will only work when the vehicle is shifted into the PARK (P) position.

AUTO (Automatic): Turn the control to this position to set the headlamps to automatically turn on at normal brightness, together with the following:

- Parking Lamps
- Instrument Panel Lights
- Taillamps
- License Plate Lamps

(Parking Lamps): Turn the control to this position to turn on the parking lamps together with the following:

- Instrument Panel Lights
- Taillamps
- License Plate Lamps

(Headlamps): Turn the control to this position to turn on the headlamps together with the following lamps listed below.

- Parking Lamps
- Instrument Panel Lights
- Taillamps
- License Plate Lamps

IntellliBeam™ Intelligent High-Beam Headlamp Control System

If your vehicle has this feature, be sure to read this entire section before using it.

IntellliBeam™ is an enhancement to your vehicle's headlamp system. Using a digital light sensor on your rearview mirror, this system will turn the vehicle's high-beam headlamps on and off according to surrounding traffic conditions.

The IntellliBeam™ system will turn your high-beam headlamps on when it is dark enough, there is no other traffic present, and the IntellliBeam system is enabled.

Turning On and Enabling IntellliBeam™

Press and release the IntellliBeam™ button on the inside rear view mirror. The IntellliBeam™ indicator on the mirror will turn on to let you know the system has been turned on. Once the system has been turned on, it will remain on each time the vehicle is started. Additionally, the IntellliBeam system must be enabled.

To enable the IntellliBeam™ system, turn the exterior lamp control to AUTO, with the turn signal/multifunction lever in its neutral position. The High-Beam On Light will appear on the instrument panel cluster when the high-beams are on. See *Highbeam On Light on page 237*.

Driving with IntellliBeam™

IntellliBeam™ will only activate your high-beams when driving over 20 mph (32 km/h).

The high-beam headlamps will remain on, under the automatic control of IntellliBeam™, until any of the following situations occur:

- The system detects an approaching vehicle's headlamps.
- The system detects a preceding vehicle's taillamps.
- The outside light is bright enough that high-beam headlamps are not required.
- The vehicle's speed drops below 15 mph (24 km/h).

- The headlamp stalk is moved forward to the high-beam position. See *Headlamp High/Low-Beam Changer on page 189*.

  When either of these conditions occur, the IntellliBeam™ feature will be disabled and the IntellliBeam™ light in the mirror will turn off until the high-beam stalk is returned to the neutral position.
- If IntellliBeam™ was using low-beams prior to this action, the IntellliBeam™ feature will be temporarily disabled until the stalk is returned to the neutral position.
- The exterior lamp control is turned to any setting except AUTO.

  When this occurs, IntellliBeam™ will be disabled until the control is turned back to the AUTO position.
- The IntellliBeam™ system is turned off at the inside rearview mirror.

IntellliBeam™ may not turn off the high-beams if the system cannot detect other vehicle's lamps because of any of the following:

- The others vehicle's lamp(s) are missing, damaged, obstructed from view or otherwise undetected.
- The other vehicle's lamp(s) are covered with dirt, snow and/or road spray.
- The other vehicle's lamp(s) cannot be detected due to dense exhaust, smoke, fog, snow, road spray, mist or other airborne obstructions.
- Your vehicle's windshield is dirty, cracked or obstructed by something that blocks the view of the IntellliBeam light sensor.
- Your vehicle's windshield is covered with ice, dirt, haze or other obstructions.
- Your vehicle is loaded such that the front end of the vehicle points upward, causing the IntellliBeam sensor to aim high and not detect headlamps and taillamps.
- You are driving on winding or hilly roads.

You may need to manually disable or cancel the high-beam headlamps by turning the low-beam headlamps on, if any of the above conditions exist.

Disabling and Resetting IntellliBeam™ at the Rearview Mirror

IntellliBeam™ can be disabled by using the controls on the inside rearview mirror.

AUTO (On/Off): To disable the system, press this button on the inside rearview mirror. The IntellliBeam™ indicator will turn off and will not come back on until the IntellliBeam™ button is pressed again.

Stalk Disable: When IntellliBeam™ has turned on the high-beams, pull or push the high-beam stalk. This will disable IntellliBeam™. The IntellliBeam™ indicator on the mirror will turn off. To re-enable IntellliBeam™, press the IntellliBeam™ button on the mirror.

A different sensitivity setting is available for dealer diagnostics. This is done by pushing and holding this button for 20 seconds until the IntellliBeam™ indicator light flashes three times. If you accidentally activate this, the vehicle's setting will automatically be reset each time the ignition is turned off and then on again.

Cleaning the IntellliBeam™ Light Sensor

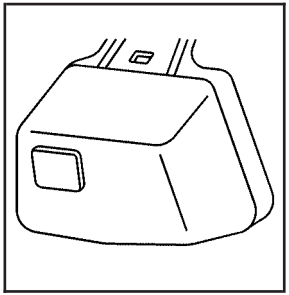

The light sensor is located on the inside of the vehicle in front of the inside rearview mirror.

Clean the light sensor window, periodically, using glass cleaner on a soft cloth. Gently wipe the sensor window. Do not spray glass cleaner directly on the surface of the sensor window.

Headlamps on Reminder

If a door is open, a reminder chime will sound when your headlamps or parking lamps are manually turned on and your key is out of the ignition. To turn off the chime, turn the headlamp switch to off or AUTO and then back on, or close and re-open the door. In the AUTO mode, the headlamps turn off once the ignition is in LOCK or may remain on until the headlamp delay ends (if enabled in the DIC). See “Exit Lighting” under *DIC Vehicle Customization on page 254*.

Daytime Running Lamps (DRL)

Daytime Running Lamps (DRL) can make it easier for others to see the front of your vehicle during the day. DRL can be helpful in many different driving conditions, but they can be especially helpful in the short periods after dawn and before sunset. Fully functional DRL are required on all vehicles first sold in Canada.

The DRL system will come on when the following conditions are met:

- The ignition is on
- The exterior lamps control is in AUTO
- The light sensor determines it is daytime

When the DRL are on, only your DRL lamps will be on. The taillamps, sidemarker and other lamps will not be on. The instrument panel back lighting will not be on either.

When it begins to get dark, the automatic headlamp system will switch from DRL to the headlamps.

When you turn the headlamp switch off, the headlamps will go off.

Automatic Headlamp System

When it is dark enough outside, your automatic headlamp system will turn on the headlamps at the normal brightness, along with the taillamps, sidemarker, parking lamps, and the instrument panel lights. The radio back lighting will also be dimly lit.

To turn off the automatic headlamp system, turn the exterior lamps switch to the off position. Turning off the automatic headlamp system with the headlamp switch is not available for vehicles first sold in Canada.

Your vehicle has a light sensor located on the top of the instrument panel in the defroster grille that regulates when the automatic headlamps turn on. Be sure it is not covered, or the system will come on whenever the ignition is on.

The system may also turn on your headlamps when driving through a parking garage, heavy overcast weather, or a tunnel. This is normal.

There is a delay in the transition between the daytime and nighttime operation of the Daytime Running Lamps (DRL) and the automatic headlamp systems so that driving under bridges or bright overhead street lights does not affect the system.

The DRL and automatic headlamp system will only be affected when the light sensor sees a change in lighting lasting longer than the delay.

If you start your vehicle in a dark garage, the automatic headlamp system will come on immediately. Once you leave the garage, it will take approximately one minute for the automatic headlamp system to change to DRL if it is bright enough outside. During that delay, your instrument panel cluster may not be as bright as usual. Make sure your instrument panel brightness control is in the full bright position. See *Instrument Panel Brightness on page 204*.

To idle your vehicle with the automatic headlamp system off, turn the control to the off position.

You may be able to turn off your Automatic Headlamp System. See *Daytime Running Lamps (DRL) on page 202* for more information.

Your headlamps will also stay on after you exit the vehicle. You can program this feature using the Driver Information Center (DIC). See *DIC Vehicle Customization on page 254*.

As with any vehicle, you should turn on the regular headlamp system when needed.

Fog Lamps

(Fog Lamps): If your vehicle has fog lamps, the control is located on the exterior lamps control. The exterior lamps control is located on the instrument panel to the left of the steering column.

Your ignition must be in the RUN position for the fog lamps to come on.

To turn the fog lamps on, press the exterior lamps button. A light will come on in the instrument panel cluster to let you know that the fog lamps are on. Press the exterior lamps button again to turn the fog lamps off.

When the headlamps are changed to high-beam, the fog lamps also go off.

Some localities have laws that require the headlamps to be on along with the fog lamps.

Instrument Panel Brightness

(Instrument Panel Brightness): This feature controls the brightness of the instrument panel lights.

The knob for this feature is located next to the headlamp control.

Turn the knob clockwise or counterclockwise to adjust the brightness of the instrument panel lights. Turn the knob clockwise to return the instrument panel cluster or radio display to full brightness when the headlamps or parking lamps are on. To turn on the dome lamps, turn the knob to the farthest clockwise position.

Dome Lamps

The dome lamps come on when a door is opened.

The dome lamps can also be turned on by turning the knob, located next to the exterior lamps control, clockwise to the farthest position. In this position, the dome lamps will remain on whether a door is opened or closed.

Dome Lamp Override

(Dome Lamp Override): Press the dome override button, located next to the exterior lamps control, to keep the dome lamps off when a door is open. To set the lamps to the automatic operation, press the button again so that it is extended. With the button in this position, the dome lamps will come on when a door is opened.

Entry Lighting

Your vehicle has an illuminated entry feature.

When the doors are opened, the dome lamps will come on if the dome override button is in the extended position. If the dome override button is pressed in, the lamps will not come on.

Exit Lighting

With exit lighting, the interior lamps will come on when you remove the key from the ignition. They will turn off automatically in 20 seconds. The lights will not come on if the dome override button is pressed in.

Reading Lamps

If your vehicle has reading lamps, press the button located next to the lamp to turn it on or off.

Your vehicle may also have reading lamps in other locations. To turn each one on or off, press the button located next to the lamp. The lamps cannot be adjusted.

Battery Run-Down Protection

This feature shuts off the dome lamps if they are left on for more than 10 minutes when the ignition is in LOCK. This will help prevent the battery from running down.

Ultrasonic Rear Parking Assist (URPA)

The Ultrasonic Rear Parking Assist (URPA) system is designed to help you park while in Reverse (R). It operates only at speeds less than 5 mph (8 km/h). URPA helps make parking easier and helps you avoid colliding with objects such as parked vehicles. The URPA system detects objects that are close to the rear of the vehicle which are at least 10 inches (25.4 cm) off the ground and below hood or trunk level. The system detects objects up to 8 feet (2.5 m) behind your vehicle. URPA determines how close these objects are from your bumper within this area. Ultrasonic sensors on the rear bumper are used to detect the distance to the object.

⚠ CAUTION:

Even with the Ultrasonic Rear Park Assist system, the driver must check carefully before backing up. The system does not operate above speeds of 5 mph (8 km/h). The system does not detect objects more than 8 feet (2.5 meters) behind the vehicle. This detection distance limit may be reduced during warm weather or high humidity. Also, the system does not detect objects that are below your bumper, underneath your vehicle, or some objects very close to the vehicle. The system is not designed to detect children, pedestrians, bicyclists, or pets.

So, unless you check carefully behind your vehicle while you are backing up, they could be injured or killed.

Whether or not you are using rear park assist, always check carefully behind your vehicle before backing up and then watch closely as you do.

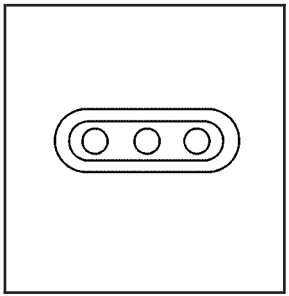

The display is located near the passenger side rear window and can be seen by looking over your right shoulder.

The display has three color-coded lights. The URPA lights are used to provide distance and system information, along with beeps that will be heard through the speakers.

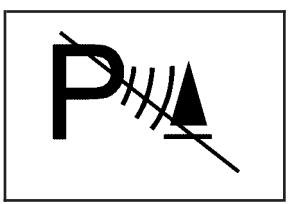

URPA can be turned off by pressing the rear park aid disable button located next to the radio. The indicator will illuminate to indicate that URPA is off.

The red light in the URPA display will also be lit if the vehicle is in REVERSE (R). If the vehicle has a DIC, PARKING ASSIST OFF will display. URPA automatically turns back on each time the vehicle is started.

How the System Works

When the shift lever is moved into REVERSE (R), the rear display will briefly come on to let you know the display is operating correctly. URPA comes on automatically when the shift lever is moved into REVERSE (R). The system also does not work at a reverse speed greater than 5 mph (8 km/h). To remind you of this, the red light on the rear display will flash.

The system can be disabled using the Driver Information Center (DIC). See *DIC Operation and Displays on page 240*.

How the System Works when Backing

If the shift lever is in REVERSE (R), URPA detects objects close to the rear bumper. The first time an object is detected a single beep will sound. If an object is detected at a REVERSE (R) speed between 0 mph (0 km/h) and 5 mph (8 km/h), the following describes what will occur based on your distance to a detected object located behind the vehicle:

- At distances between 40 inches (1 m) and 8 ft (2.5 m), a single amber light will come on.
- At distances between 23 inches (0.6 m) and 40 inches (1 m), both amber lights will be on.
- At distances between 12 inches (0.3 m) and 23 inches (0.6 m), all three lights (amber/amber/red) will be on.
- At distances less than 12 inches (0.3 m), a beeping sound will repeat for a short time and all three lights (amber/amber/red) will be on and flashing.

When the System Does Not Seem to Work Properly

If the URPA system will not activate due to a temporary condition, the message PARKING ASSIST OFF will be displayed on the DIC and a red light will be shown on the rear URPA display when the shift lever is moved into REVERSE (R). This occurs under the following conditions:

- The driver disables the system. See *DIC Operation and Displays on page 240*.
- The parking brake pedal is depressed.
- A trailer was attached to your vehicle, or a bicycle or an object was hanging out of your trunk during your last drive when you turned off the vehicle. If the attached objects are removed from your vehicle before the start of your next drive, the system will return to normal operation unless an object is detected when the vehicle is shifted into REVERSE (R). If this occurs, URPA assumes the object is still attached, so you will have to wait until the vehicle is driven forward above 15 mph (25 km/h) before URPA will return to normal operation.

- The ultrasonic sensors are not kept clean. So, be sure to keep your vehicle's rear bumper free of mud, dirt, snow, ice, and slush. For cleaning instructions, see *Washing Your Vehicle on page 496*. If the DIC still displays the PARKING ASSIST OFF message after cleaning the bumper and driving forward at a speed of at least 15 mph (25 km/h), see your dealer.
- Other conditions that may affect system performance include vibrations from a jackhammer or the compression of air brakes on a very large truck or other mechanical devices that interfere with URPA performance.
- When URPA is disabled without driver action and the driver attempts to turn URPA back on using the Driver Information Center (DIC), the PARKING ASSIST ON option will not be selectable if the necessary conditions stated above for normal system operation are not met.

As always, drivers should use care when backing up a vehicle. Always look behind you, being sure to check for other vehicles, obstructions and blind spots.

For Driver Information Center messages related to URPA, see *DIC Warnings and Messages on page 245*.

If the bumper is damaged, your URPA system may not work properly. Take the vehicle to your dealer to repair the system.

Accessory Power Outlet(s)

With accessory power outlets you can plug in auxiliary electrical equipment, such as a cellular telephone or CB radio. The maximum capability of the power outlet is 20 amps.

Your vehicle will have one accessory power outlet inside the floor console storage bin, one on the back of the floor console, and an additional power outlet in the rear cargo area on the passenger side.

To use the power outlet, lift the spring cap and insert electrical 12V device plug. To close the power outlet, remove 12V electrical device plug and the spring cap will close.

Certain power accessory plugs may not be compatible to the accessory power outlet and could result in blown adapter or vehicle fuses. If you experience a problem, see your dealer for additional information on the accessory power plugs.

The accessory power outlets are powered, even with the ignition off. Continuing to use power outlets while the ignition is off may cause the vehicle's battery to run down.

Notice: **Adding any electrical equipment to your vehicle may damage it or keep other components from working as they should. The repairs would not be covered by your warranty. Do not use equipment exceeding maximum amperage rating of 20 amperes. Check with your retailer before adding electrical equipment.**

When adding electrical equipment, be sure to follow the proper installation instructions included with the equipment. Do not use equipment exceeding the maximum amperage rating of 20 amperes.

Notice: **Improper use of the power outlet can cause damage not covered by your warranty. Do not hang any type of accessory or accessory bracket from the plug because the power outlets are designed for accessory power plugs only.**

Ashtray(s) and Cigarette Lighter

The front ashtray and lighter are located in the center console near the cupholders, if equipped. Press on the access door to open it and use the ashtray and lighter.

Notice: **If you put papers, pins, or other flammable items in the ashtray, hot cigarettes or other smoking materials could ignite them and possibly damage your vehicle. Never put flammable items in the ashtray.**

To remove the ashtray, pull it from the center console. Slide it back in and push down to be sure it is secure.

To use the cigarette lighter, push it in all the way, and let go. When it's ready, it will pop back out by itself.

Notice: **Holding a cigarette lighter in while it is heating will not allow the lighter to back away from the heating element when it is hot. Damage from overheating may occur to the lighter or heating element, or a fuse could be blown. Do not hold a cigarette lighter in while it is heating.**

Analog Clock

The analog clock is located on the instrument panel above the radio. The clock is not connected with any other vehicle system and runs by itself. To adjust the clock, do the following:

1. Locate the adjustment button directly below the clock face.
2. Push and hold the adjustment button to advance the clock hands. Holding the button down will cause the clock to advance faster. Release the button *before* you get to the desired time.
3. Push and release the button to increase the time by one minute increments until the desired time is reached.

Climate Controls

Dual Automatic Climate Control System

With this system, you can control the heating, cooling, and ventilation in your vehicle.
Your vehicle also has a flow-through ventilation system described later in this section.

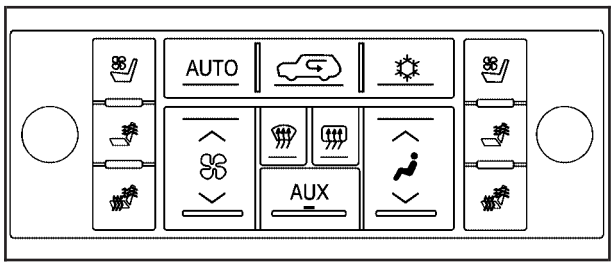

Climate Control with Cooled and Heated Seats shown

You can select different climate control settings for the driver and passengers.

Driver's Side Temperature Knob

The driver's side knob is used to adjust the temperature of the air coming through the system on the driver's side. The temperature can be adjusted even if the system is turned off.
This is possible since outside air will always flow through the system as the vehicle is moving forward unless it is set to recirculation mode.
See "Recirculation" later in this section.

Turn the knob counterclockwise or clockwise to lower or increase the cabin temperature.
The display will show the temperature setting decreasing or increasing.

Passenger's Side Temperature Knob

The passenger's side knob can be used to change the temperature of the air coming through the system on the passenger's side of the vehicle.
The temperature can be adjusted even if the system is turned off. This is possible since outside air will always flow through the system as the vehicle is moving forward unless it is set to recirculation mode. See "Recirculation" later in this section.

Turn the knob counterclockwise or clockwise to lower or increase the cabin temperature. The display will show the temperature setting decreasing or increasing.

The passenger's temperature setting can be set to match the driver's temperature setting by pressing the passenger power knob.

Automatic Operation

AUTO (Automatic): When automatic operation is active the system will control the inside temperature, the air delivery, and the fan speed.

Use the steps below to place the entire system in automatic mode:

1. Press the AUTO button.

   When AUTO is selected, the display will change to show the current temperature(s) and AUTO will be lit on the display. The current delivery mode and fan speed will also be displayed for approximately 5 seconds.

   When AUTO is selected, the air conditioning operation and air inlet will be automatically controlled. The air conditioning compressor will run when the outside temperature is over about 40°F (4°C). The air inlet will normally be set to outside air. If it is hot outside, the air inlet may automatically switch to recirculate inside air to help quickly cool down your vehicle. The light on the button will come on in recirculation.

2. Set the driver's and passenger's temperature.

   To find your comfort setting, start with a 74°F (23°C) temperature setting and allow about 20 minutes for the system to regulate. Use the driver's or passenger's temperature buttons to adjust the temperature setting as necessary. If you choose the temperature setting of 60°F (15°C), the system will remain at the maximum cooling setting. If you choose the temperature setting of 90°F (32°C), the system will remain at the maximum heat setting. Choosing either maximum setting will not cause the vehicle to heat or cool any faster.

Be careful not to cover the sensor located on the top of the instrument panel near the windshield. This sensor regulates air temperature based on sun load and also turns on your headlamps.

To avoid blowing cold air in cold weather, the system will delay turning on the fan until warm air is available. The length of delay depends on the engine coolant temperature. Pressing the fan switch will override this delay and change the fan to a selected speed.

⏻ **(Off):** Press the driver's side temperature knob to turn off the climate control system. Outside air will still enter the vehicle, and will be directed to the floor. This direction can be changed by pressing the mode button. The temperature can also be adjusted using either temperature knob. Press the up or down arrows on the fan switch, the defrost button, the AUTO button, driver's side temperature knob, or the air conditioning button to turn the system on when it is off.

Manual Operation

You may manually adjust the air delivery mode or fan speed.

∧ ✇ ∨ **(Fan):** The switch with the fan symbol allows you to manually adjust the fan speed. Press the up arrow to increase fan speed and the down arrow to decrease fan speed.

Pressing this button when the system is off will turn the system on.

Pressing either arrow while using automatic operation will place the fan in manual operation. The fan setting will display and the AUTO light will turn off. The air delivery will remain in automatic operation.

(Mode): Press this button to manually change the direction of the airflow in your vehicle. Repeatedly press the button until the desired mode appears on the display.

When the system is turned off, the display will go blank after displaying the current status of the system.

(Vent): This setting will deliver air to the instrument panel outlets.

(Bi-Level): This mode allows for split air to the instrument panel outlets and to the floor outlets. The flow can be divided between vent and floor outlets depending upon where the knob is placed between the settings. A little air is directed towards the windshield and side window vents. Cooler air is directed to the upper vents and warmer air to the floor vents.

(Floor): This mode directs most of the air to the floor outlets, with some of the air directed to the windshield, side window outlets, and second row floor outlets. In this mode, the system will automatically select Outside Air.

(Defog): See “Defogging and Defrosting” later in this section.

(Recirculation): Press this button to turn the recirculation mode on. When the button is pressed, an indicator light will come on.

This mode keeps outside air from entering the vehicle. It can be used to reduce outside air and odors from entering your vehicle. Recirculation may also help cool the air inside your vehicle more quickly once the temperature inside the vehicle is less than the outside temperature. The recirculation mode cannot be used with floor, defrost, or defogging modes.

If you try to select recirculation in one of those modes, the indicator will flash three times and turn off. The air conditioning compressor will also come on when this mode is activated. While in recirculation mode the windows may fog when the weather is cold and damp. To clear the fog, select either the blend or defrost mode and increase the fan speed. Recirculation mode can be turned off by pressing the button again, or turning off the engine.

Air Conditioning

(Air Conditioning): Press this button to turn the air conditioning (A/C) compressor on and off. When air conditioning is selected, an indicator light will come on to let you know that the air conditioning has been activated.

Pressing this button when the outside temperature is too cool for air conditioning will make the air conditioning indicator flash three times and then turn off to indicate the air conditioning mode is not available. If the air conditioning is on and the outside temperature drops below a temperature which is too cool for air conditioning to be effective, the air conditioning light will turn off to let you know the air conditioning mode has been canceled.

On hot days, open the windows long enough to let hot inside air escape. This helps to reduce the time it takes for your vehicle to cool down. It also helps the system to operate more efficiently.

The air conditioning system removes moisture from the air, so you may sometimes notice a small amount of water dripping underneath your vehicle while idling or after turning off the engine. This is normal.

Defogging and Defrosting

Fog on the inside of the windows is a result of high humidity (moisture) condensing on the cool window glass. This can be minimized if the climate control system is used properly. There are two modes to clear fog or frost from your windshield. Use the defog mode to clear the windows of fog or moisture and warm the passengers. Use the defrost mode to remove fog or frost from the windshield more quickly.

Use the mode up and down arrows to select the defog or defrost modes.

(Defog): This mode directs air to the windshield, floor outlets, and side window vents. When you select this mode, the system turns off recirculation and runs the air conditioning compressor unless the outside temperature is close to freezing. The recirculation mode cannot be selected while in the defog mode. Do not drive the vehicle until all the windows are clear.

(Defrost): This mode directs a portion of the air to the windshield and side window vents and some to the floor vents. In this mode, the system will automatically force outside air into your vehicle.

The recirculation mode cannot be selected while in the defrost mode. The air conditioning compressor will run automatically in this setting, unless the outside temperature is close to freezing. Do not drive the vehicle until all the windows are clear.

Rear Window Defogger

The rear window defogger uses a warming grid to remove fog from the rear window.

(Rear Window Defogger): The rear window defogger will turn off automatically after it has been activated. The defogger can also be turned off by pressing the button again or by turning off the engine. Do not drive the vehicle until all the windows are clear.

If your vehicle has heated outside rearview mirrors, the mirrors will heat to help clear fog or frost from the surface of the mirror when the rear window defog button is pressed.

Notice: **Do not use a razor blade or sharp object to clear the inside rear window. Do not adhere anything to the defogger grid lines in the rear glass. These actions may damage the rear defogger. Repairs would not be covered by your warranty.**

Outlet Adjustment

Use the air outlets located in the center and on the side of your instrument panel to direct the airflow.

Operation Tips

- Keep the hood and front air inlets free of ice, snow, or any other obstruction (such as leaves). The heater and defroster will work far better, reducing the chance of fogging the inside of your windows.
- When you enter a vehicle in cold weather, press the fan up button to the maximum fan level before driving. This helps clear the intake ducts of snow and moisture, and reduces the chance of fogging the inside of your window.
- Keep the air path under the front seats clear of objects. This helps air to circulate throughout your vehicle.
- Adding outside equipment to the front of your vehicle, such as hood-air deflectors, may affect the performance of the heating and air conditioning system. Check with your dealer before adding equipment to the outside of your vehicle.

Rear Air Conditioning and Heating System and Electronic Climate Controls

The rear heat and air conditioning controls are part of the rear seat audio controls located in the center console. The system can be controlled from the front controls as well as the rear controls.

To turn the system on, press the AUX button on the front climate control system, an indicator will be lit. Pressing the AUX button the first time will turn the rear system on in a mimic mode. In this mode, the airflow in the rear will be approximately the same direction, temperature, and fan speed as the front. Pressing the AUX button again will turn the rear system and the indicator off.

If the rear controls are adjusted, the system will enter a rear independent mode. Airflow in the rear will then be directed according to the settings of rear controls. The rear system can be turned off by pressing the AUX button on the front climate control system and the indicator will turn off.

If the indicator in the front AUX button is off, the rear system is off.

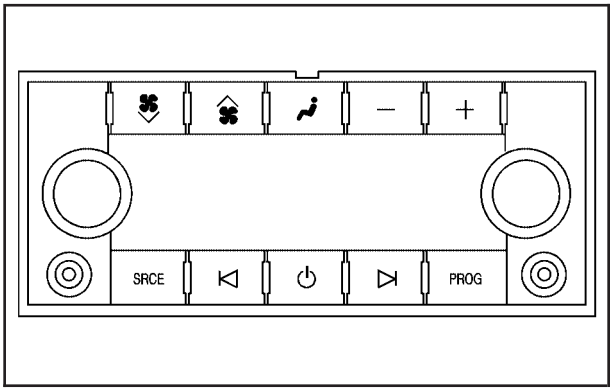

Rear Climate Controls with Rear Seat Audio Controls

Automatic Operation

(Mode): Press the mode button until the AUTO setting is selected to control the inside temperature, the air delivery, and the fan speed. AUTO will illuminate in the display when automatic operation is active.

+/– (Increase/Decrease Temperature): Press the + or – buttons to increase or decrease the cabin temperature. The rear control temperature display will show the temperature setting decreasing or increasing.

The display will only indicate climate control functions when the system is in rear independent mode.

Manual Operation

(Fan): The fan buttons on the rear seat audio control panel allows you to manually adjust the fan speed. To decrease airflow, press the button with the fan and down arrow symbol. Pressing the fan up button when the system is off will turn the system on. The air delivery mode will remain under automatic control. To turn the rear system off, keep pressing the button with the fan and down arrow symbol.

+/– (Increase/Decrease Temperature): These buttons select the temperature of the air flowing into the passenger area. Press the + button for warmer air and press the – button for cooler air.

(Mode): Press the mode button to manually change the direction of the airflow in your vehicle. Repeatedly press the button until the desired mode appears on the display. Multiple presses will cycle through the delivery selections.

Warning Lights, Gages, and Indicators

This part describes the warning lights and gages on your vehicle. The pictures will help you locate them.

Warning lights and gages can signal that something is wrong before it becomes serious enough to cause an expensive repair or replacement. Paying attention to your warning lights and gages could also save you or others from injury.

Warning lights come on when there may be or is a problem with one of your vehicle's functions. As you will see in the details on the next few pages, some warning lights come on briefly when you start the engine just to let you know they're working. If you are familiar with this section, you should not be alarmed when this happens.

Gages can indicate when there may be or is a problem with one of your vehicle's functions. Often gages and warning lights work together to let you know when there's a problem with your vehicle.

When one of the warning lights comes on and stays on when you are driving, or when one of the gages shows there may be a problem, check the section that tells you what to do about it. Please follow this manual's advice. Waiting to do repairs can be costly — and even dangerous. So please get to know your warning lights and gages. They're a big help.

Your vehicle also has a Driver Information Center (DIC) that works along with the warning lights and gages. See *Driver Information Center (DIC) on page 239*.

Instrument Panel Cluster

Your instrument panel cluster is designed to let you know at a glance how your vehicle is running. You will know how fast you are going, about how much fuel you have and many other things you will need to know to drive safely and economically.

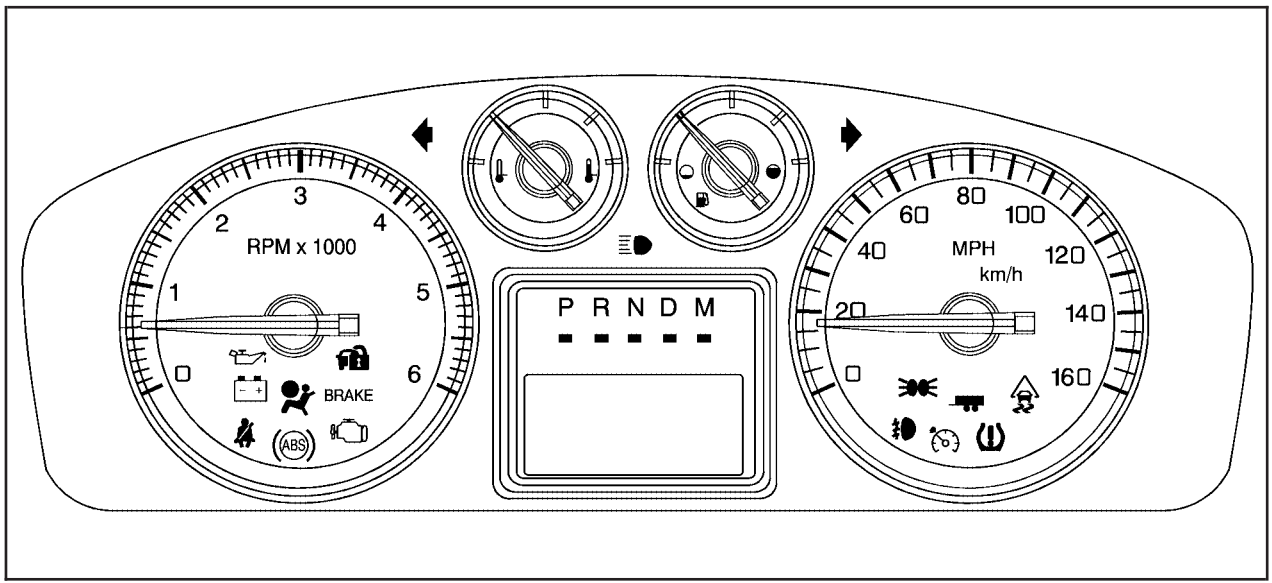

United States version shown, Canada similar.

Speedometer and Odometer

Your speedometer lets you see your speed in both miles per hour (mph) and kilometers per hour (km/h).

Your vehicle's odometer works together with the driver information center. You can set a Trip odometer. See "Trip Odometer" under *DIC Operation and Displays on page 240* for more information.

The odometer mileage can be checked without the vehicle running. Simply press the trip stem on the instrument panel cluster.

If your vehicle ever needs a new odometer installed, the new one will be set to the correct mileage total of the old odometer.

Trip Odometer

The trip odometer can tell you how far your vehicle has been driven since you last set the trip odometer to zero.

For more information see "Trip Odometer" under *DIC Operation and Displays on page 240*.

Tachometer

Your tachometer displays the engine speed in revolutions per minute (rpm).

Safety Belt Reminder Light

When the key is turned to RUN or START, a chime will be provided for several seconds to remind people to buckle their safety belts. The driver safety belt light will also be provided and stay on for several seconds, then it will flash for several more. You should buckle your seat belt.

This chime and light will be repeated if the driver remains unbuckled and the vehicle is in motion.

If the driver's belt is buckled, neither the chime nor the light will come on.

See *Passenger Sensing System on page 100* for more information.

Passenger Safety Belt Reminder Light

Several seconds after the key is turned to RUN or START, a chime will sound for several seconds to remind the front passenger to buckle their safety belt. This would only occur if the passenger airbag is enabled. See *Passenger Sensing System on page 100* for more information. The passenger safety belt light will also come on and stay on for several seconds, then it will flash for several more.

This chime and light will be repeated if the passenger remains unbuckled and the vehicle is in motion.

If the passenger's safety belt is buckled, neither the chime nor the light will come on.

Airbag Readiness Light

There is an airbag readiness light on the instrument panel, which shows the airbag symbol. The system checks the airbag's electrical system for malfunctions. The light tells you if there is an electrical problem. The system check includes the airbag sensors, the airbag modules, the wiring and the crash sensing and diagnostic module. For more information on the airbag system, see *Airbag System on page 89*.

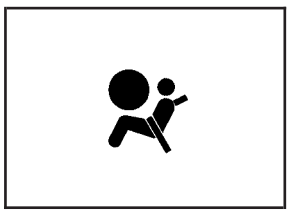

This light will come on when you start your vehicle, and it will flash for a few seconds. Then the light should go out. This means the system is ready.

If the airbag readiness light stays on after you start the vehicle or comes on when you are driving, your airbag system may not work properly. Have your vehicle serviced right away.

⚠ CAUTION:

If the airbag readiness light stays on after you start your vehicle, it means the airbag system may not be working properly. The airbags in your vehicle may not inflate in a crash, or they could even inflate without a crash. To help avoid injury to yourself or others, have your vehicle serviced right away if the airbag readiness light stays on after you start your vehicle.

The airbag readiness light should flash for a few seconds when you turn the ignition key to RUN. If the light doesn't come on then, have it fixed so it will be ready to warn you if there is a problem.

Passenger Airbag Status Indicator

Your vehicle has the passenger sensing system. Your overhead console has a passenger airbag status indicator.

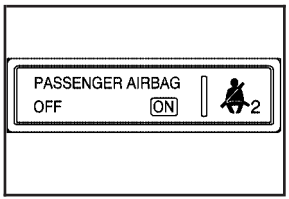

Passenger Airbag Status Indicator – United States

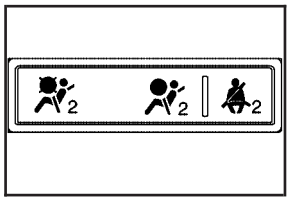

Passenger Airbag Status Indicator – Canada

When the ignition key is turned to RUN or START, the passenger airbag status indicator will light ON and OFF, or the symbol for on and off, for several seconds as a system check. Then, after several more seconds, the status indicator will light either ON or OFF, or either the on or off symbol to let you know the status of the right front passenger's frontal airbag.

If the word ON or the on symbol is lit on the passenger airbag status indicator, it means that the right front passenger's frontal airbag is enabled (may inflate).

⚠ CAUTION:

If the on indicator comes on when you have a rear-facing child restraint installed in the right front passenger's seat, it means that the passenger sensing system has not turned off the passenger's frontal airbag. A child in a rear-facing child restraint can be seriously injured or killed if the right front passenger's airbag inflates. This is because the back of the rear-facing child restraint would be very close to the inflating airbag. Do not use a rear-facing child restraint in the right front passenger's seat if the airbag is turned on.

Your vehicle has a rear seat that will accommodate a rear-facing child restraint. A label on your sun visor says, “Never put a rear-facing child seat in the front.” This is because the risk to the rear-facing child is so great, if the airbag deploys.

⚠ CAUTION:

Even though the passenger sensing system is designed to turn off the passenger’s frontal airbag if the system detects a rear-facing child restraint, no system is failsafe, and no one can guarantee that an airbag will not deploy under some unusual circumstance, even though it is turned off. We recommend that rear-facing child restraints be secured in the rear seat, even if the airbag is off.

If the word OFF or the off symbol is lit on the airbag status indicator, it means that the passenger sensing system has turned off the right front passenger’s frontal airbag. See *Passenger Sensing System on page 100* for more on this, including important safety information.

If, after several seconds, all status indicator lights remain on, or if there are no lights at all, there may be a problem with the lights or the passenger sensing system. See your dealer for service.

⚠ CAUTION:

If the off indicator and the airbag readiness light ever come on together, it means that something may be wrong with the airbag system. If this ever happens, have the vehicle serviced promptly, because an adult-size person sitting in the right front passenger seat may not have the protection of the frontal airbag. See *Airbag Readiness Light on page 224*.

Charging System Light

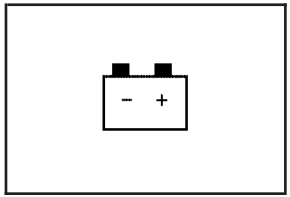

The charging system light will come on briefly when you turn on the ignition, but the engine is not running, as a check to show you it is working.

It should go out once the engine is running. If it stays on, or comes on while you are driving, you may have a problem with the charging system. It could indicate that you have problems with the generator, the generator drive belt, or another electrical problem. Have it checked right away. Driving while this light is on could drain your battery.

When this light comes on, the DIC will also display the SERVICE BATTERY NOT CHARGING SYSTEM message. See *DIC Warnings and Messages on page 245* for more information.

If you must drive a short distance with the light on, be certain to turn off all your accessories, such as the radio and air conditioner, to reduce the drain on your battery.

Brake System Warning Light

With the ignition on, the brake system warning light will come on when you set the parking brake. If you try to drive with the parking brake engaged, a chime will sound when the vehicle speed is greater than 3 mph (5 km/h).

Your vehicle's hydraulic brake system is divided into two parts. If one part is not working, the other part can still work and stop you. For good braking, though, you need both parts working well.

If the warning light comes on and a chime sounds there could be a brake problem. Have your brake system inspected right away.

This light may also come on due to low brake fluid. See *Brakes on page 429* for more information.

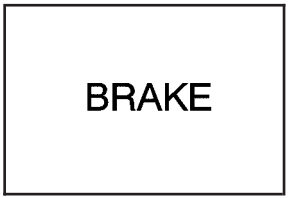

United States

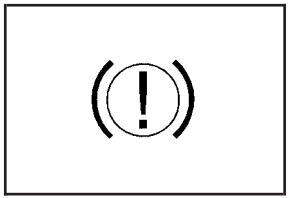

Canada

This light should come on briefly when you turn the ignition key to RUN. If it does not come on then, have it fixed so it will be ready to warn you if there's a problem.

If the light comes on while you are driving, pull off the road and stop carefully. You may notice that the pedal is harder to push or may go closer to the floor. It may take longer to stop. If the light is still on, have the vehicle towed for service. See *Towing Your Vehicle on page 372*.

⚠ CAUTION:

Your brake system may not be working properly if the brake system warning light is on. Driving with the brake system warning light on can lead to an accident. If the light is still on after you have pulled off the road and stopped carefully, have the vehicle towed for service.

Anti-Lock Brake System Warning Light

With the anti-lock brake system, this light will come on when you start your engine and may stay on for several seconds. That's normal. If the light does not come on then, have it fixed so it will be ready to warn you if there is a problem.

If the light stays on, or comes on when you are driving, your vehicle needs service. You will also hear a chime sound when the light is on steady. If the regular brake system warning light is not on, you still have brakes, but you do not have anti-lock brakes. If the regular brake system warning light is also on you do not have anti-lock brakes and there is a problem with your regular brakes. In addition to both lights, you will also hear a chime sound on the first occurrence of a problem and each time the vehicle is shut off and then restarted. See *Brake System Warning Light on page 228*.

The anti-lock brake system warning light should come on briefly when you turn the ignition key to RUN. If the light does not come on then, have it fixed so it will be ready to warn you if there is a problem.

StabiliTrak® Indicator Light

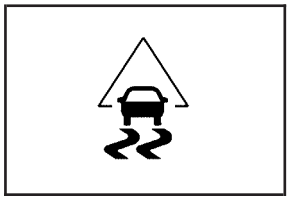

This warning light should come on briefly when the engine is started.

If the warning light does not come on then, have it fixed so it will be ready to warn you if there is a problem. If it stays on, or comes on when you are driving, there may be a problem with your StabiliTrak® system and your vehicle may need service. When this warning light is on, the system is off and will not limit wheel spin. Adjust your driving accordingly.

This light will also flash when the StabiliTrak® system is active.

If the StabiliTrak® system warning light comes on and stays on for an extended period of time when the system is turned on, your vehicle needs service. See *StabiliTrak® System on page 326* for more information.

Engine Coolant Temperature Gage

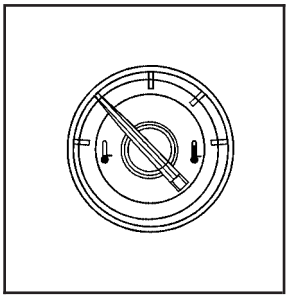

This gage shows the engine coolant temperature.

If the gage pointer moves towards the shaded in thermostat, it means that your engine coolant has overheated. If you have been operating your vehicle under normal driving conditions, you should pull off the road, stop your vehicle and turn off the engine as soon as possible.

See *Engine Overheating on page 418*.

Tire Pressure Light

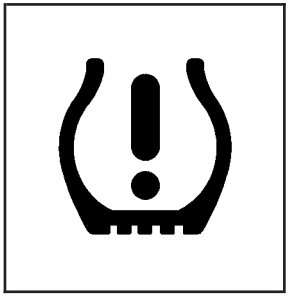

This light will come on briefly when you turn the ignition to RUN.

This light will also come on when one or more of your tires are significantly underinflated.

If equipped, a CHECK TIRE PRESSURE DIC message will accompany the light.

Stop and check your tires as soon as it is safe to do so. If underinflated, inflate to the proper pressure. See *Tires on page 450* for more information.

This light will flash for 60 seconds and then turn on solid if a problem is detected with the Tire Pressure Monitor system.

See *Tire Pressure Monitor System on page 458* for more information.

Malfunction Indicator Lamp

Check Engine Light

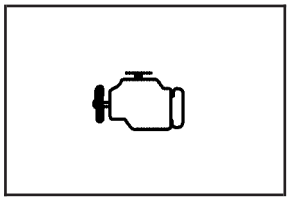

Your vehicle has a computer which monitors operation of the fuel, ignition, and emission control systems.

This system is called OBD II (On-Board Diagnostics-Second Generation) and is intended to assure that emissions are at acceptable levels for the life of the vehicle, helping to produce a cleaner environment. The check engine light comes on to indicate that there is a problem and service is required. Malfunctions often will be indicated by the system before any problem is apparent. This may prevent more serious damage to your vehicle. This system is also designed to assist your service technician in correctly diagnosing any malfunction.

Notice: **If you keep driving your vehicle with this light on, after awhile, your emission controls may not work as well, your fuel economy may not be as good, and your engine may not run as smoothly. This could lead to costly repairs that may not be covered by your warranty.**

Notice: **Modifications made to the engine, transmission, exhaust, intake, or fuel system of your vehicle or the replacement of the original tires with other than those of the same Tire Performance Criteria (TPC) can affect your vehicle's emission controls and may cause this light to come on. Modifications to these systems could lead to costly repairs not covered by your warranty. This may also result in a failure to pass a required Emission Inspection/Maintenance test. See *Accessories and Modifications on page 393*.**

This light should come on, as a check to show you it is working, when the ignition is on and the engine is not running. If the light does not come on, have it repaired. This light will also come on during a malfunction in one of two ways:

- **Light Flashing** — A misfire condition has been detected. A misfire increases vehicle emissions and may damage the emission control system on your vehicle. Diagnosis and service may be required.
- **Light On Steady** — An emission control system malfunction has been detected on your vehicle. Diagnosis and service may be required.

If the Light is Flashing

The following may prevent more serious damage to your vehicle:

- Reducing vehicle speed
- Avoiding hard accelerations
- Avoiding steep uphill grades
- If you are towing a trailer, reduce the amount of cargo being hauled as soon as it is possible

If the light stops flashing and remains on steady, see “If the Light Is On Steady” following.

If the light continues to flash, when it is safe to do so, stop the vehicle. Find a safe place to park your vehicle. Turn the key off, wait at least 10 seconds and restart the engine. If the light remains on steady, see “If the Light Is On Steady” following. If the light is still flashing, follow the previous steps, and see your dealer for service as soon as possible.

If the Light Is On Steady

You may be able to correct the emission system malfunction by considering the following:

Did you recently put fuel into your vehicle?

If so, reinstall the fuel cap, making sure to fully install the cap. See *Filling the Tank on page 398*. The diagnostic system can determine if the fuel cap has been left off or improperly installed. A loose or missing fuel cap will allow fuel to evaporate into the atmosphere. A few driving trips with the cap properly installed should turn the light off.

Did you just drive through a deep puddle of water?

If so, your electrical system may be wet. The condition will usually be corrected when the electrical system dries out. A few driving trips should turn the light off.

Have you recently changed brands of fuel?

If so, be sure to fuel your vehicle with quality fuel. See *Gasoline Octane on page 395*. Poor fuel quality will cause your engine not to run as efficiently as designed. You may notice this as stalling after start-up, stalling when you put the vehicle into gear, misfiring, hesitation on acceleration, or stumbling on acceleration. (These conditions may go away once the engine is warmed up.) This will be detected by the system and cause the light to turn on.

If you experience one or more of these conditions, change the fuel brand you use. It will require at least one full tank of the proper fuel to turn the light off.

If none of the above steps have made the light turn off, your dealer can check the vehicle. Your dealer has the proper test equipment and diagnostic tools to fix any mechanical or electrical problems that may have developed.

Emissions Inspection and Maintenance Programs

Some state/provincial and local governments have or may begin programs to inspect the emission control equipment on your vehicle. Failure to pass this inspection could prevent you from getting a vehicle registration.

Here are some things you need to know to help your vehicle pass an inspection:

Your vehicle will not pass this inspection if the check engine light is on or not working properly.

Your vehicle will not pass this inspection if the OBD (on-board diagnostic) system determines that critical emission control systems have not been completely diagnosed by the system.

The vehicle would be considered not ready for inspection. This can happen if you have recently replaced your battery or if your battery has run down. The diagnostic system is designed to evaluate critical emission control systems during normal driving. This may take several days of routine driving. If you have done this and your vehicle still does not pass the inspection for lack of OBD system readiness, your GM dealer can prepare the vehicle for inspection.

Oil Pressure Light

⚠ CAUTION:

Do not keep driving if the oil pressure is low. If you do, your engine can become so hot that it catches fire. You or others could be burned. Check your oil as soon as possible and have your vehicle serviced.

Notice: **Lack of proper engine oil maintenance may damage the engine. The repairs would not be covered by your warranty. Always follow the maintenance schedule in this manual for changing engine oil.**

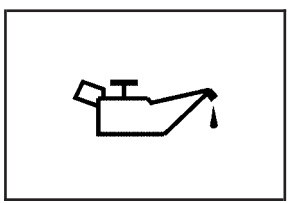

This light tells you if there could be a problem with your engine oil pressure.

This light will come on briefly when you start your engine. That is a check to be sure the light works. If it does not come on, be sure to have it fixed so it will be there to warn you if something goes wrong.

When the light comes on and stays on, it means that oil is not flowing through your engine properly. You could be low on oil and you might have some other system problem.

Security Light

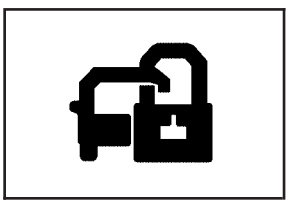

This light will come on briefly when you turn the key toward START. The light will stay on until the engine starts.

See *PASS-Key® III+ Operation on page 135* for more information.

Fog Lamp Light

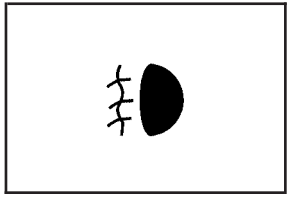

The fog lamps light will come on when the fog lamps are in use.

The light will go out when the fog lamps are turned off. See *Fog Lamps on page 204* for more information.

Lights On Reminder

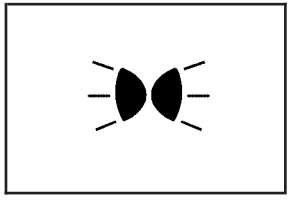

This light comes on whenever the parking lamps are on.

See *Exterior Lamps on page 197* for more information.

Cruise Control Light

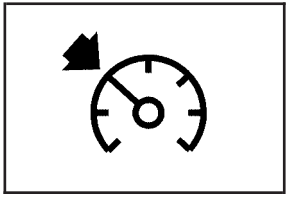

This light comes on whenever you set your cruise control.

The light will go out when the cruise control is disengaged. See *Cruise Control on page 194* for more information.

Highbeam On Light

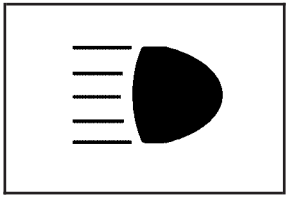

This light will come on when the high-beam headlamps are in use.

See *Headlamp High/Low-Beam Changer on page 189*.

Tow/Haul Mode Light

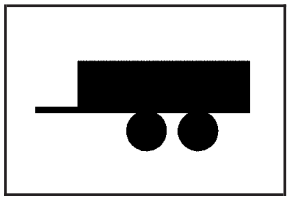

This light is displayed when the Tow/Haul mode has been activated.

For more information, see *Towing a Trailer on page 375* and *Tow/Haul Mode on page 148*.

Fuel Gage

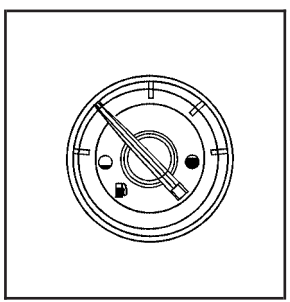

When the ignition is on, the fuel gage tells you about how much fuel you have left in your tank.

The gage will first indicate empty before you are out of fuel, and you should get more fuel as soon as possible.

Here are some situations you may experience with your fuel gage. None of these indicate a problem with the fuel gage.

- At the gas station, the fuel pump shuts off before the gage reads full.
- It takes a little more or less fuel to fill up than the fuel gage indicated. For example, the gage may have indicated the tank was half full, but it actually took a little more or less than half the tank's capacity to fill the tank.
- The gage goes back to empty when you turn off the ignition.

Low Fuel Warning Light

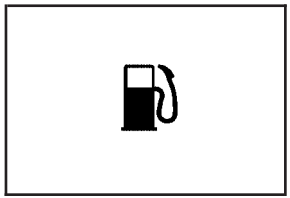

This light, under the fuel gage, will come on briefly when you are starting the engine.

This light and a chime will come on when the fuel tank is low on fuel. There will also be a "FUEL LEVEL LOW" message on the Driver Information Center, see *DIC Warnings and Messages on page 245* for more information. When you add fuel this light and message should go off. If it does not, have your vehicle serviced.

Driver Information Center (DIC)

Your vehicle has a Driver Information Center (DIC).

The DIC displays information about your vehicle. It also displays warning messages if a system problem is detected. The DIC also allows some features to be customized. See *DIC Vehicle Customization on page 254* for more information.

All messages will appear in the DIC display located in the center of the instrument panel cluster.

The DIC comes on when the ignition is on. After a short delay, the DIC will display the information that was last displayed before the engine was turned off.

See *DIC Operation and Displays on page 240* and *DIC Vehicle Customization on page 254* for the displays available.

DIC Operation and Displays

The DIC has different displays which can be accessed by pressing the DIC buttons located on the instrument panel, to the right of the steering wheel.

The DIC displays trip, fuel, and vehicle system information, and warning messages if a system problem is detected. A digital speedometer also appears at the bottom of the DIC display. The digital speedometer can be enabled or disabled. See “DISPLAY DIGITAL SPEED” under *DIC Vehicle Customization on page 254* for more information.

DIC Buttons

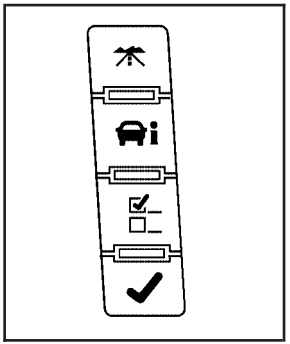

The buttons are the trip/fuel, vehicle information, customization, and set/reset buttons. The button functions are detailed in the following pages.

(Trip/Fuel): Press this button to display the odometer, trip odometer, fuel range, average economy, fuel used, timer, and transmission temperature.

(Vehicle Information): Press this button to display the oil life, units, tire pressure readings for vehicles with a Tire Pressure Monitor (TPM) system, Tire Pressure Monitor (TPM) system programming for vehicles with a TPM system, and remote keyless entry transmitter programming.

(Customization): Press this button to customize the feature settings on your vehicle. See *DIC Vehicle Customization on page 254* for more information.

(Set/Reset): Press this button to set or reset certain functions and to turn off or acknowledge messages on the DIC.

Trip/Fuel Menu Items

(Trip/Fuel): Press this button to scroll through the following menu items:

Odometer

Press the trip/fuel button until ODOMETER displays. This display shows the distance the vehicle has been driven in either miles (mi) or kilometers (km).

To switch between English and metric measurements, see “Units” later in this section.

Trip Odometer

Press the trip/fuel button until TRIP displays. This display shows the current distance traveled in either miles (mi) or kilometers (km) since the last reset for the trip odometer.

The trip odometer can be reset to zero by pressing the set/reset button while the trip odometer is displayed.

Fuel Range

Press the trip/fuel button until FUEL RANGE displays. This display shows the approximate number of remaining miles (mi) or kilometers (km) the vehicle can be driven without refueling. The display will show LOW if the fuel level is low.

The fuel range estimate is based on an average of the vehicle’s fuel economy over recent driving history and the amount of fuel remaining in the fuel tank. This estimate will change if driving conditions change. For example, if driving in traffic and making frequent stops, this display may read one number, but if the vehicle is driven on a freeway, the number may change even though the same amount of fuel is in the fuel tank. This is because different driving conditions produce different fuel economies. Generally, freeway driving produces better fuel economy than city driving. Fuel range cannot be reset.

Average Economy

Press the trip/fuel button until AVERAGE ECONOMY displays. This display shows the approximate average miles per gallon (mpg) or liters per 100 kilometers (L/100 km). This number is calculated based on the number of mpg (L/100 km) recorded since the last time this menu item was reset. To reset AVERAGE ECONOMY, press and hold the set/reset button.

Fuel Used

Press the trip/fuel button until FUEL USED displays. This display shows the number of gallons (gal) or liters (L) of fuel used since the last reset of this menu item. To reset the fuel used information, press and hold the set/reset button while FUEL USED is displayed.

Timer

Press the trip/fuel button until TIMER displays. This display can be used as a timer.

To start the timer, press the set/reset button while TIMER is displayed. The display will show the amount of time that has passed since the timer was last reset, not including time the ignition is off. Time will continue to be counted as long as the ignition is on, even if another display is being shown on the DIC. The timer will record up to 99 hours, 59 minutes and 59 seconds (99:59:59) after which the display will return to zero.

To stop the timer, press the set/reset button briefly while TIMER is displayed.

To reset the timer to zero, press and hold the set/reset button while TIMER is displayed.

Transmission Temperature

Press the trip/fuel button until TRANS TEMP displays. This display shows the temperature of the automatic transmission fluid in either degrees Fahrenheit (°F) or degrees Celsius (°C).

Blank Display

This display shows no information.

Vehicle Information Menu Items

(Vehicle Information): Press this button to scroll through the following menu items:

Oil Life

Press the vehicle information button until OIL LIFE REMAINING displays. This display shows an estimate of the oil's remaining useful life. If you see 99% OIL LIFE REMAINING on the display, that means 99% of the current oil life remains. The engine oil life system will alert you to change your oil on a schedule consistent with your driving conditions.

When the remaining oil life is low, the CHANGE ENGINE OIL SOON message will appear on the display. See "CHANGE ENGINE OIL SOON" under *DIC Warnings and Messages on page 245*. You should change your oil as soon as you can. See *Engine Oil on page 403*. In addition to the engine oil life system monitoring the oil life, additional maintenance is recommended in the Maintenance Schedule in this manual. See *Scheduled Maintenance on page 517* for more information.

Remember, you must reset the OIL LIFE display yourself after each oil change. It will not reset itself. Also, be careful not to reset the OIL LIFE display accidentally at any time other than when the oil has just been changed. It cannot be reset accurately until the next oil change. To reset the engine oil life system, see *Engine Oil Life System on page 406*.

Units

Press the vehicle information button until UNITS displays. This display allows you to select between English or Metric units of measurement. Once in this display, press the set/reset button to select between ENGLISH or METRIC units. All of the vehicle information will then be displayed in the unit of measurement selected.

Tire Pressure

If your vehicle has a Tire Pressure Monitor (TPM) system, the pressure for each tire can be viewed in the DIC. The tire pressure will be shown in either pounds per square inch (psi) or kilopascals (kPa).

Press the vehicle information button until the DIC displays FRONT TIRES PSI (kPa) LEFT ## RIGHT ##. Press the vehicle information button again until the DIC displays REAR TIRES PSI (kPa) LEFT ## RIGHT ##.

If a low or high tire pressure condition is detected by the system while driving, a message advising you to check the pressure in a specific tire will appear in the display. See *Inflation - Tire Pressure on page 456* and *DIC Warnings and Messages on page 245* for more information.

If the tire pressure display shows dashes instead of a value, there may be a problem with your vehicle. If this consistently occurs, see your GM dealer for service.

Relearn Tire Positions

If your vehicle has a Tire Pressure Monitor (TPM) system, after rotating the tires or after replacing a tire or sensor, the system must re-learn the tire positions. To re-learn the tire positions, see *Tire Pressure Monitor System on page 458*. See *Tire Inspection and Rotation on page 463* and *DIC Warnings and Messages on page 245* for more information.

Relearn Remote Key

This display allows you to match remote keyless entry transmitters to your vehicle. To match a remote keyless entry transmitter to your vehicle, do the following:

1. Press the vehicle information button until PRESS ✓ TO RELEARN REMOTE KEY displays.
2. Press the set/reset button until REMOTE KEY LEARNING ACTIVE is displayed.
3. Press and hold the lock and unlock buttons on the first transmitter at the same time for approximately 15 seconds.

   A chime will sound indicating that the transmitter is matched.
4. To match additional transmitters at this time, repeat Step 3.

   Each vehicle can have a maximum of eight transmitters matched to it.
5. To exit the programming mode, you must cycle the key to LOCK.

Blank Display

This display shows no information.

DIC Warnings and Messages

Messages are displayed on the DIC to notify the driver that the status of the vehicle has changed and that some action may be needed by the driver to correct the condition. Multiple messages may appear one after another.

Some messages may not require immediate action, but you can press any of the DIC buttons on the instrument panel to acknowledge that you received the messages and to clear them from the display.

Some messages cannot be cleared from the DIC display because they are more urgent. These messages require action before they can be cleared. You should take any messages that appear on the display seriously and remember that clearing the messages will only make the messages disappear, not correct the problem.

The following are the possible messages that can be displayed and some information about them.

CHANGE ENGINE OIL SOON

This message will display when the engine oil needs to be changed. When you change the engine oil, be sure to reset the CHANGE ENGINE OIL SOON message. See *Engine Oil Life System on page 406* for information on how to reset the message. This message will clear itself after 10 seconds until the next ignition cycle or until the message is reset. See *Engine Oil on page 403* and *Scheduled Maintenance on page 517* for more information.

CHECK TIRE PRESSURE

If your vehicle has a Tire Pressure Monitor (TPM) system, this message will display when the pressure in one or more of the vehicle's tires need to be checked. This message will also display LEFT FRONT, RIGHT FRONT, LEFT REAR, or RIGHT REAR to indicate which tire needs to be checked. You can receive more than one tire pressure message at a time. To read the other messages that may have been sent at the same time, press the set/reset button.

If a tire pressure message appears on the DIC, stop as soon as you can. Have the tire pressures checked and set to those shown on your Tire Loading Information Label. See *Tires on page 450*,*Loading Your Vehicle on page 366*, and *Inflation - Tire Pressure on page 456*. The DIC display also shows the tire pressure values for the front and rear tires by pressing the vehicle information button. See *DIC Operation and Displays on page 240*. If the tire pressure is low, the low tire pressure warning light will come on. See *Tire Pressure Light on page 231*.

DRIVER DOOR OPEN

If the driver's door is not fully closed and the vehicle is in a drive gear, this message will display and a chime will sound. Stop and turn off the vehicle, check the door for obstructions, and close the door again. Check to see if the message still appears on the DIC.

ENGINE HOT A/C (Air Conditioning) TURNED OFF

This message will display when the engine coolant becomes hotter than the normal operating temperature. See *Engine Coolant Temperature Gage on page 230*. To avoid added strain on a hot engine, the air conditioning compressor automatically turns off. When the coolant temperature returns to normal, the air conditioning compressor will turn back on. You can continue to drive your vehicle.

If this message continues to appear, have the system repaired by your GM dealer as soon as possible to avoid damage to your engine.

ENGINE OIL LOW ADD OIL

If your vehicle has an oil level sensor and the oil level in the vehicle is low, this message will display. Check the oil level and correct it as necessary. You may need to let the vehicle cool or warm up and cycle the ignition to be sure this message will clear.

This message will clear itself after 10 seconds, until the next ignition cycle. See *Engine Oil on page 403* for additional information.

ENGINE OVERHEATED IDLE ENGINE

Notice: **If you drive your vehicle while the engine is overheating, severe engine damage may occur. If an overheat warning appears on the instrument panel cluster and/or DIC, stop the vehicle as soon as possible. See *Engine Overheating on page 418* for more information.**

This message will display when the engine coolant temperature is too hot. Stop and allow the vehicle to idle until it cools down. See *Engine Coolant Temperature Gage on page 230*.

See *Overheated Engine Protection Operating Mode on page 421* for information on driving to a safe place in an emergency.

ENGINE OVERHEATED STOP ENGINE

Notice: **If you drive your vehicle while the engine is overheating, severe engine damage may occur. If an overheat warning appears on the instrument panel cluster and/or DIC, stop the vehicle as soon as possible. See *Engine Overheating on page 418* for more information.**

If the engine cooling system reaches unsafe temperatures for operation, this message will display and a chime will sound. Stop and turn off the vehicle as soon as it is safe to do so to avoid severe damage. This message will clear when the engine has cooled to a safe operating temperature.

ENGINE POWER IS REDUCED

This message will display and a chime will sound when the cooling system temperature gets too hot and the engine further enters the engine coolant protection mode. See *Engine Overheating on page 418* for further information.

This message will also display when the vehicle's engine power is reduced. Reduced engine power can affect the vehicle's ability to accelerate. If this message is on, but there is no reduction in performance, proceed to your destination. The performance may be reduced the next time the vehicle is driven. The vehicle may be driven at a reduced speed while this message is on, but acceleration and speed may be reduced. Anytime this message stays on, the vehicle should be taken to your GM dealer for service as soon as possible.

FUEL LEVEL LOW

If the fuel level is low, this message will display and a chime will sound. Refuel as soon as possible. See *Fuel Gage on page 238* and *Fuel on page 395* for more information.

HOOD OPEN

If the hood is not fully closed, this message will display and a chime will sound. Stop and turn off the vehicle, check the hood for obstructions, and close the hood again. Check to see if the message still appears on the DIC.

LEFT REAR DOOR OPEN

If the driver's side rear door is not fully closed and the vehicle is in a drive gear, this message will display and a chime will sound. Stop and turn off the vehicle, check the door for obstructions, and close the door again. Check to see if the message still appears on the DIC.

MANUAL SHIFT X

If your vehicle has the Range Selection Mode and the shift lever is in the MANUAL MODE (M) position, the DIC will display this message along with the current gear. If shifting is prevented for any reason, the currently selected gear will flash multiple times, indicating that the transmission has not shifted gears. See *Automatic Transmission Operation on page 142* for more information.

OIL PRESSURE LOW STOP ENGINE

Notice: **If you drive your vehicle while the engine oil pressure is low, severe engine damage may occur. If a low oil pressure warning appears on the Driver Information Center (DIC), stop the vehicle as soon as possible. Do not drive the vehicle until the cause of the low oil pressure is corrected. See *Engine Oil on page 403* for more information.**

If low oil pressure levels occur, this message will display. Stop the vehicle as soon as safely possible and do not operate it until the cause of the low oil pressure has been corrected. Check your oil as soon as possible and have your vehicle serviced by your GM dealer. See *Engine Oil on page 403*.

PARKING ASSIST OFF

After the vehicle has been started, this message will display to remind the driver that the Ultrasonic Rear Parking Assist (URPA) system has been turned off. Press the set/reset button to acknowledge this message and clear it from the DIC display. To turn the URPA system back on, see *Ultrasonic Rear Parking Assist (URPA) on page 206*.

PASSENGER DOOR OPEN

If the passenger's door is not fully closed and the vehicle is in a drive gear, this message will display and a chime will sound. Stop and turn off the vehicle, check the door for obstructions, and close the door again. Check to see if the message still appears on the DIC.

REAR ACCESS OPEN

If the liftgate or liftglass is open while the ignition is in RUN, this message will display and a chime will sound. Turn off the vehicle and check the liftgate and liftglass. Restart the vehicle and check for the message on the DIC display.

REMOTE KEY LEARNING ACTIVE

This message will display while you are matching a remote keyless entry transmitter to your vehicle. See "Matching Transmitter(s) to Your Vehicle" under *Remote Keyless Entry System Operation on page 113* and *DIC Operation and Displays on page 240* for more information.

REPLACE BATTERY IN REMOTE KEY

If a remote keyless entry transmitter battery is low, this message will display. The battery needs to be replaced in the transmitter. See “Battery Replacement” under *Remote Keyless Entry System Operation on page 113*.

RIGHT REAR DOOR OPEN

If the passenger’s side rear door is not fully closed and the vehicle is in a drive gear, this message will display and a chime will sound. Stop and turn off the vehicle, check the door for obstructions, and close the door again. Check to see if the message still appears on the DIC.

SERVICE AIR BAG

If there is a problem with the airbag system, this message will display. Have your GM dealer inspect the system for problems. See *Airbag Readiness Light on page 224* and *Airbag System on page 89* for more information.

SERVICE BATTERY CHARGING SYSTEM

On some vehicles, if there is a problem with the battery charging system, this message will display. Under certain conditions, the battery warning light may also turn on in the instrument panel cluster. See *Charging System Light on page 227*. Driving with this problem could drain the battery. Turn off all unnecessary accessories. Have the electrical system checked as soon as possible. See your GM dealer.

SERVICE BRAKE SYSTEM

If there is a problem with the brake system, this message will display along with the brake system warning light. See *Brake System Warning Light on page 228*. If this message appears, stop as soon as possible and turn off the vehicle. Restart the vehicle and check for the message on the DIC display. If the message is still displayed or appears again when you begin driving, the brake system needs service as soon as possible. See your GM dealer.

SERVICE BRAKES SOON

If there is a problem with the brake system, this message will display. If this message appears, stop as soon as possible and turn off the vehicle. Restart the vehicle and check for the message on the DIC display. If the message is still displayed or appears again when you begin driving, the brake system needs service. See your GM dealer.

SERVICE PARKING ASSIST

This message will display if there is a problem with the Ultrasonic Rear Parking Assist (URPA) system. Do not use this system to help you park. See *Ultrasonic Rear Parking Assist (URPA) on page 206* for more information. See your GM dealer for service.

SERVICE STABILITRAK

If your vehicle has StabiliTrak® and this message displays, it means there may be a problem with the StabiliTrak® system. If you see this message, try to reset the system. Stop; turn off the engine for at least 15 seconds; then start the engine again. If this message still comes on, it means there is a problem. You should see your GM dealer for service. The vehicle is safe to drive, however, you do not have the benefit of StabiliTrak®, so reduce your speed and drive accordingly.

SERVICE SUSPENSION SYSTEM

This message will display when the Road Sensing Suspension (RSS) system is not operating properly. Have your vehicle serviced by your GM dealer.

SERVICE THEFT DETERRENT SYSTEM

This message will display when there is a problem with the theft-deterrent system. The vehicle may or may not restart so you may want to take the vehicle to your GM dealer before turning off the engine. See *PASS-Key® III+ Operation on page 135* for more information.

SERVICE TIRE MONITOR SYSTEM

If your vehicle has the Tire Pressure Monitor (TPM) system, this message will display if a part on the system is not working properly. If you drive your vehicle while any of the four sensors are missing or inoperable, the warning will come on in about 20 minutes. A sensor would be missing, for example, if you put different wheels on your vehicle without transferring the sensors. If the warning comes on and stays on, there may be a problem with the TPM. See your GM dealer.

SERVICE TRACTION CONTROL

If your vehicle has StabiliTrak®, this message will display when there is a problem with the traction control system. When this message is displayed, the system will not limit wheel spin. Adjust your driving accordingly. See your GM dealer for service. See *StabiliTrak® System on page 326* for more information.

STABILITRAK OFF

If your vehicle has StabiliTrak®, this message will display when you turn off StabiliTrak®, or when the stability control has been automatically disabled. To limit wheel spin and realize the full benefits of the stability enhancement system, you should normally leave StabiliTrak® on. However, you should turn StabiliTrak® off if your vehicle gets stuck in sand, mud, ice, or snow and you want to rock your vehicle to attempt to free it, or if you are driving in extreme off-road conditions and require more wheel spin. See *If Your Vehicle is Stuck in Sand, Mud, Ice, or Snow on page 364*. To turn the StabiliTrak® system on or off, see *StabiliTrak® System on page 326*.

There are several conditions that can cause this message to appear.

- One condition is overheating, which could occur if StabiliTrak® activates continuously for an extended period of time.
- The message will also be displayed if the brake system warning light is on. See *Brake System Warning Light on page 228*.
- The message could be displayed if the stability system takes longer than usual to complete its diagnostic checks due to driving conditions.
- If an engine or vehicle related problem has been detected and the vehicle needs service, the message will appear. See your GM dealer.
- The message will also appear if the vehicle is shifted into 4LO.

The message will turn off as soon as the conditions that caused the message to be displayed are no longer present.

TIGHTEN GAS CAP

If the vehicle's fuel cap is not tightened properly, this message may display along with the check engine light on the instrument panel cluster. See *Malfunction Indicator Lamp on page 232*. Reinstall the fuel cap fully. See *Filling the Tank on page 398*. The diagnostic system can determine if the fuel cap has been left off or improperly installed. A loose or missing fuel cap will allow fuel to evaporate into the atmosphere. A few driving trips with the cap properly installed should turn this light and message off.

TIRE LEARNING ACTIVE

If your vehicle has a Tire Pressure Monitor (TPM) system, this message will display when the system is re-learning the tire positions on your vehicle. See *DIC Operation and Displays on page 240* for more information. The tire positions must be re-learned after rotating the tires or after replacing a tire or sensor. See *Tire Inspection and Rotation on page 463*,*Tire Pressure Monitor System on page 458*, and *Inflation - Tire Pressure on page 456* for more information.

TRACTION CONTROL OFF

If your vehicle has StabiliTrak®, this message will display when the traction control system is turned off. Adjust your driving accordingly. See *StabiliTrak® System on page 326* for more information.

TRANSMISSION HOT IDLE ENGINE

Notice: **If you drive your vehicle while the transmission fluid is overheating and the transmission temperature warning is displayed on the instrument panel cluster and/or DIC, you can damage the transmission. This could lead to costly repairs that would not be covered by your warranty. Do not drive your vehicle with overheated transmission fluid or while the transmission temperature warning is displayed.**

If the transmission fluid in the vehicle gets hot, this message will display along with a continuous chime. Driving with the transmission fluid temperature high can cause damage to the vehicle. Stop the vehicle and let it idle to allow the transmission to cool. This message will clear and the chime will stop when the fluid temperature reaches a safe level.

TURN SIGNAL ON

If a turn signal is left on for 3/4 of a mile (1.2 km), this message will display and a chime will sound. Move the turn signal/multifunction lever to the off position.

WASHER FLUID LOW ADD FLUID

If the washer fluid level is low, this message will display. Adding washer fluid to the windshield washer reservoir will clear the message. See *Windshield Washer Fluid on page 428*.

This message will clear itself after 10 seconds, until the next ignition cycle.

DIC Vehicle Customization

Your vehicle may have customization capabilities that allow you to program certain features to one preferred setting. Customization features can only be programmed to one setting on the vehicle and cannot be programmed to a preferred setting for two different drivers.

All of the customization options may not be available on your vehicle. Only the options available will be displayed on your DIC.

The default settings for the customization features were set when your vehicle left the factory, but may have been changed from their default state since then.

The customization preferences are automatically recalled.

To change customization preferences, use the following procedure.

Entering the Feature Settings Menu

1. Turn the ignition on and place the vehicle in PARK (P).
2. Press the customization button to scroll through the available customizable options.

Feature Settings Menu Items

The following are customization features that allow you to program settings to the vehicle:

DISPLAY IN ENGLISH

This feature will only display if a language other than English has been set. This feature allows you to change the language in which the DIC messages appear to English.

Press the customization button until the PRESS ✓ TO DISPLAY IN ENGLISH screen appears on the DIC display. Press the set/reset button once to display all DIC messages in English.

DISPLAY LANGUAGE

This feature allows you to select the language in which the DIC messages will appear.

Press the customization button until the DISPLAY LANGUAGE screen appears on the DIC display. Press the set/reset button once to access the settings for this feature. Then press the customization button to scroll through the following settings:

ENGLISH (default): All messages will appear in English.

DEUTSCH (German): All messages will appear in German.

ITALIANO (Italian): All messages will appear in Italian.

FRANCAIS (French): All messages will appear in French.

ESPANOL (Spanish): All messages will appear in Spanish.

ARABIC: All messages will appear in Arabic.

NO CHANGE: No change will be made to this feature. The current setting will remain.

Choose one of the available settings and press the set/reset button while it is displayed on the DIC to select it.

AUTO DOOR LOCK

This feature allows you to select when the vehicle's doors will automatically lock. See *Programmable Automatic Door Locks on page 122* for more information.

Press the customization button until AUTO DOOR LOCK appears on the DIC display. Press the set/reset button once to access the settings for this feature. Then press the customization button to scroll through the following settings:

SHIFT OUT OF PARK (default): The doors will automatically lock when the vehicle is shifted out of PARK (P).

AT VEHICLE SPEED: The doors will automatically lock when the vehicle speed is above 8 mph (13 km/h) for three seconds.

NO CHANGE: No change will be made to this feature. The current setting will remain.

Choose one of the available settings and press the set/reset button while it is displayed on the DIC to select it.

AUTO DOOR UNLOCK

This feature allows you to select whether or not to turn off the automatic door unlocking feature. It also allows you to select which doors and when the doors will automatically unlock. See *Programmable Automatic Door Locks on page 122* for more information.

Press the customization button until AUTO DOOR UNLOCK appears on the DIC display. Press the set/reset button once to access the settings for this feature. Then press the customization button to scroll through the following settings:

OFF: None of the doors will automatically unlock.

DRIVER AT KEY OUT: Only the driver's door will unlock when the key is taken out of the ignition.

DRIVER IN PARK: Only the driver's door will unlock when the vehicle is shifted into PARK (P).

ALL AT KEY OUT: All of the doors will unlock when the key is taken out of the ignition.

ALL IN PARK (default): All of the doors will unlock when the vehicle is shifted into PARK (P).

NO CHANGE: No change will be made to this feature. The current setting will remain.

Choose one of the available settings and press the set/reset button while it is displayed on the DIC to select it.

REMOTE DOOR LOCK

This feature allows you to select the type of feedback you will receive when locking the vehicle with the remote keyless entry transmitter. You will not receive feedback when locking the vehicle with the remote keyless entry transmitter if the doors are open. See *Remote Keyless Entry System Operation on page 113* for more information.

Press the customization button until REMOTE DOOR LOCK appears on the DIC display. Press the set/reset button once to access the settings for this feature. Then press the customization button to scroll through the following settings:

OFF: There will be no feedback when you press the lock button on the remote keyless entry transmitter.

LIGHTS ONLY: The exterior lamps will flash when you press the lock button on the remote keyless entry transmitter.

HORN ONLY: The horn will sound on the second press of the lock button on the remote keyless entry transmitter.

HORN & LIGHTS (default): The exterior lamps will flash when you press the lock button on the remote keyless entry transmitter, and the horn will sound when the lock button is pressed again within five seconds of the previous command.

NO CHANGE: No change will be made to this feature. The current setting will remain.

Choose one of the available settings and press the set/reset button while it is displayed on the DIC to select it.

REMOTE DOOR UNLOCK

This feature allows you to select the type of feedback you will receive when unlocking the vehicle with the remote keyless entry transmitter. You will not receive feedback when unlocking the vehicle with the remote keyless entry transmitter if the doors are open. See *Remote Keyless Entry System Operation on page 113* for more information.

Press the customization button until REMOTE DOOR UNLOCK appears on the DIC display. Press the set/reset button once to access the settings for this feature. Then press the customization button to scroll through the following settings:

LIGHTS OFF: The exterior lamps will not flash when you press the unlock button on the remote keyless entry transmitter.

LIGHTS ON (default): The exterior lamps will flash when you press the unlock button on the remote keyless entry transmitter.

NO CHANGE: No change will be made to this feature. The current setting will remain.

Choose one of the available settings and press the set/reset button while it is displayed on the DIC to select it.

DELAY DOOR LOCK

This feature allows you to select whether or not the locking of the vehicle's doors and liftgate will be delayed. When locking the doors and liftgate with the power door lock switch or the remote keyless entry transmitter and a door or the liftgate is open, this feature will delay locking the doors and liftgate until five seconds after the last door is closed. You will hear three chimes to signal that the delayed locking feature is in use. The key must be out of the ignition for this feature to work. You can temporarily override delayed locking by pressing the power door lock switch or the remote keyless entry transmitter a second time. See *Delayed Locking on page 122* for more information.

Press the customization button until DELAY DOOR LOCK appears on the DIC display. Press the set/reset button once to access the settings for this feature. Then press the customization button to scroll through the following settings:

OFF: There will be no delayed locking of the vehicle's doors.

ON (default): The doors will not lock until five seconds after the last door or the liftgate is closed.

NO CHANGE: No change will be made to this feature. The current setting will remain.

Choose one of the available settings and press the set/reset button while it is displayed on the DIC to select it.

EXIT LIGHTING

If it is dark enough outside, this feature allows you to select the amount of time you want the exterior lamps to remain on. This happens after the vehicle is unlocked using the remote keyless entry transmitter or if the vehicle key is turned to LOCK from RUN.

Press the customization button until EXIT LIGHTING appears on the DIC display. Press the set/reset button once to access the settings for this feature. Then press the customization button to scroll through the following settings:

OFF: The exterior lamps will not turn on.

30 SECONDS (default): The exterior lamps will stay on for 30 seconds.

1 MINUTE: The exterior lamps will stay on for one minute.

2 MINUTES: The exterior lamps will stay on for two minutes.

NO CHANGE: No change will be made to this feature. The current setting will remain.

Choose one of the available settings and press the set/reset button while it is displayed on the DIC to select it.

APPROACH LIGHTING

This feature allows you to select whether or not to have the exterior lights turn on briefly during low light periods after unlocking the vehicle using the remote keyless entry transmitter.

Press the customization button until APPROACH LIGHTING appears on the DIC display. Press the set/reset button once to access the settings for this feature. Then press the customization button to scroll through the following settings:

OFF: The exterior lights will not turn on when you unlock the vehicle with the remote keyless entry transmitter.

ON (default): If it is dark enough outside, the exterior lights will turn on briefly when you unlock the vehicle with the remote keyless entry transmitter.

The lights will remain on for 20 seconds or until the lock button on the remote keyless entry transmitter is pressed, or the vehicle is no longer off. See *Remote Keyless Entry System Operation on page 113* for more information.

NO CHANGE: No change will be made to this feature. The current setting will remain.

Choose one of the available settings and press the set/reset button while it is displayed on the DIC to select it.

AUTO HIGH BEAMS

If your vehicle has this feature, it allows you to select to have the Intellibeam™ system turned off or on. See *Exterior Lamps on page 197* for more information.

Press the customization button until AUTO HIGH BEAMS appears on the DIC display. Press the set/reset button once to access the settings for this feature. Then press the customization button to scroll through the following settings:

OFF (default): The Intellibeam™ system will be turned off.

ON: The Intellibeam™ system will be turned on.

NO CHANGE: No change will be made to this feature. The current setting will remain.

Choose one of the available settings and press the set/reset button while it is displayed on the DIC to select it.

CHIME VOLUME

This feature allows you to select the volume level of the chime.

Press the customization button until CHIME VOLUME appears on the DIC display. Press the set/reset button once to access the settings for this feature. Then press the customization button to scroll through the following settings:

NORMAL (default): The chime volume will be set to a normal level.

LOUD: The chime volume will be set to a loud level.

NO CHANGE: No change will be made to this feature. The current setting will remain.

Choose one of the available settings and press the set/reset button while it is displayed on the DIC to select it.

PARK TILT MIRRORS

This feature allows you to select whether or not the outside mirror(s) will automatically tilt down when the vehicle is shifted into REVERSE (R). See *Outside Power Foldaway Mirrors on page 160* for more information.

Press the customization button until PARK TILT MIRRORS appears on the DIC display. Press the set/reset button once to access the settings for this feature. Then press the customization button to scroll through the following settings:

OFF (default): Neither outside mirror will be tilted down when the vehicle is shifted into REVERSE (R).

DRIVER MIRROR: The driver's outside mirror will be tilted down when the vehicle is shifted into REVERSE (R).

PASSENGER MIRROR: The passenger's outside mirror will be tilted down when the vehicle is shifted into REVERSE (R).

BOTH MIRRORS: The driver's and passenger's outside mirrors will be tilted down when the vehicle is shifted into REVERSE (R).

NO CHANGE: No change will be made to this feature. The current setting will remain.

Choose one of the available settings and press the set/reset button while it is displayed on the DIC to select it.

EASY EXIT SEAT

This feature allows you to select your preference for the automatic easy exit seat feature. See *Memory Seat, Mirrors, and Pedals on page 13* for more information.

Press the customization button until EASY EXIT SEAT appears on the DIC display. Press the set/reset button once to access the settings for this feature. Then press the customization button to scroll through the following settings:

OFF (default): No automatic seat exit recall will occur.

ON: The driver's seat will move back when the key is removed from the ignition.

The automatic easy exit seat movement will only occur one time after the key is removed from the ignition. If the automatic movement has already occurred, and you put the key back in the ignition and remove it again, the seat will stay in the original exit position, unless a memory recall took place prior to removing the key again.

NO CHANGE: No change will be made to this feature. The current setting will remain.

Choose one of the available settings and press the set/reset button while it is displayed on the DIC to select it.

MEMORY SEAT RECALL

This feature allows you to select your preference for the remote memory seat recall feature. See *Memory Seat, Mirrors, and Pedals on page 13* for more information.

Press the customization button until MEMORY SEAT RECALL appears on the DIC display. Press the set/reset button once to access the settings for this feature. Then press the customization button to scroll through the following settings:

OFF (default): No remote memory seat recall will occur.

ON: The driver's seat will automatically move to the stored driving position when the unlock button on the remote keyless entry transmitter is pressed.

NO CHANGE: No change will be made to this feature. The current setting will remain.

Choose one of the available settings and press the set/reset button while it is displayed on the DIC to select it.

REMOTE START

If your vehicle has this feature, it allows you to turn the remote start off or on. The remote start feature allows you to start the engine from outside of the vehicle using your remote keyless entry transmitter. See “Remote Vehicle Start” under *Remote Keyless Entry System Operation on page 113* for more information.

Press the customization button until REMOTE START appears on the DIC display. Press the set/reset button once to access the settings for this feature. Then press the customization button to scroll through the following settings:

OFF: The remote start feature will be disabled.

ON (default): The remote start feature will be enabled.

NO CHANGE: No change will be made to this feature. The current setting will remain.

Choose one of the available settings and press the set/reset button while it is displayed on the DIC to select it.

DISPLAY DIGITAL SPEED

This feature allows you to enable or disable the digital speedometer on the DIC.

Press the customization button until DISPLAY DIGITAL SPEED appears on the DIC display. Press the set/reset button once to access the settings for this feature. Then press the customization button to scroll through the following settings:

OFF: The digital speedometer will be disabled.

ON (default): The digital speedometer will be enabled.

NO CHANGE: No change will be made to this feature. The current setting will remain.

Choose one of the available settings and press the set/reset button while it is displayed on the DIC to select it.

FACTORY SETTINGS

This feature allows you to set all of the customization features back to their factory default settings.

Press the customization button until FACTORY SETTINGS appears on the DIC display. Press the set/reset button once to access the settings for this feature. Then press the customization button to scroll through the following settings:

RESTORE ALL (default): The customization features will be set to their factory default settings.

DO NOT RESTORE: The customization features will not be set to their factory default settings.

Choose one of the available settings and press the set/reset button while it is displayed on the DIC to select it.

EXIT FEATURE SETTINGS

This feature allows you to exit the feature settings menu.

Press the customization button until PRESS ✓ TO EXIT FEATURE SETTINGS appears in the DIC display. Press the set/reset button once to exit the menu.

If you do not exit, pressing the customization button again will return you to the beginning of the feature settings menu.

Exiting the Feature Settings Menu

The feature settings menu will be exited when any of the following occurs:

- The vehicle is no longer in RUN.
- The trip/fuel or vehicle information DIC buttons are pressed.
- The end of the feature settings menu is reached and exited.
- A 40 second time period has elapsed with no selection made.

Audio System(s)

Determine which radio your vehicle has and then read the pages following to familiarize yourself with its features.

Driving without distraction is a necessity for a safer driving experience. See *Defensive Driving on page 318*. By taking a few moments to read this manual and get familiar with your vehicle's audio system, you can use it with less effort, as well as take advantage of its features. While your vehicle is parked, set up your audio system by presetting your favorite radio stations, setting the tone, and adjusting the speakers. Then, when driving conditions permit, you can tune to your favorite stations using the presets and steering wheel controls if the vehicle has them.

⚠ CAUTION:

This system provides you with a far greater access to audio stations and song listings. Giving extended attention to entertainment tasks while driving can cause a crash and you or others can be injured or killed. Always keep your eyes on the road and your mind on the drive — avoid engaging in extended searching while driving.

Keeping your mind on the drive is important for safe driving. For more information, see *Defensive Driving on page 318*.

Here are some ways in which you can help avoid distraction while driving.

While your vehicle is parked:

- Familiarize yourself with all of its controls.
- Familiarize yourself with its operation.
- Set up your audio system by presetting your favorite radio stations, setting the tone, and adjusting the speakers. Then, when driving conditions permit, you can tune to your favorite radio stations using the presets and steering wheel controls if the vehicle has them.

Notice: **Before adding any sound equipment to your vehicle, such as an audio system, CD player, CB radio, mobile telephone, or two-way radio, make sure that it can be added by checking with your dealer. Also, check federal rules covering mobile radio and telephone units. If sound equipment can be added, it is very important to do it properly. Added sound equipment may interfere with the operation of your vehicle's engine, radio, or other systems, and even damage them. Your vehicle's systems may interfere with the operation of sound equipment that has been added.**

Notice: **The chime signals related to safety belts, parking brake, and other functions of your vehicle operate through the radio/entertainment system. If that equipment is replaced or additional equipment is added to your vehicle, the chimes may not work. Make sure that replacement or additional equipment is compatible with your vehicle before installing it. See *Accessories and Modifications on page 393*.**

Your vehicle has a feature called Retained Accessory Power (RAP). With RAP, the audio system can be played even after the ignition is turned off. See *Retained Accessory Power (RAP) on page 139* for more information.

Setting the Time

1. Press the tune/select knob (the right knob) to enter the main menu.
2. Turn the tune/select knob until SET CLOCK appears on the display.
3. Press the tune/select knob to select SET CLOCK.
4. Turn the tune/select knob to adjust the time.
5. Press the tune/select knob to update the time. VEHICLE TIME UPDATED will appear on the display.

If the CLOCK/RADIO DISP is configured into one of the configurable keys, pressing the key will switch the display back to the clock set function. The time and date will always appear on the radio display. See “Configurable Radio Display Keys” under *Radio with CD and DVD on page 268* for more information on configuring the keys.

Setting the Date

1. Press the tune/select knob (the right knob) to enter the main menu.
2. Turn the tune/select knob until SET DATE appears on the display.
3. Press the tune/select knob to select SET DATE.
4. Turn the tune/select knob to adjust the date.
5. Press the tune/select knob to update the time. VEHICLE DATE UPDATED will appear on the display.

If the DATE is configured into one of the configurable keys, pressing the key will switch the display back to the date set function. The time and date will always appear on the radio display. See “Configurable Radio Display Keys” under *Radio with CD and DVD on page 268* for more information on configuring the keys.

Radio with CD and DVD

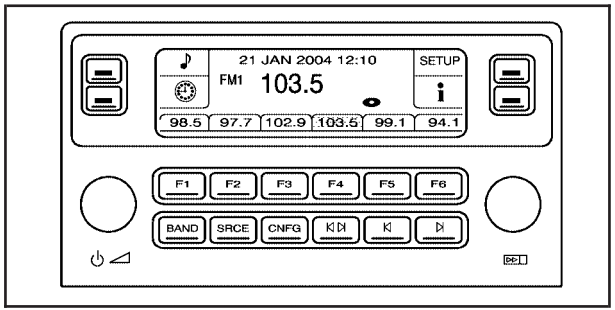

Playing the Radio

⏻ **(Power):** Press this knob to turn the radio on and off.

Press and hold this knob for more than two seconds to turn off the radio, RSE video screen, and RSA.

◿ **(Volume):** Turn this knob to increase or to decrease the volume.

SRCE (Source): Press this button to select a source, either radio, CD, DVD, or auxiliary, if your vehicle has this feature. The CD or DVD must be loaded to select the source and to play. CD or DVD will appear on the display if a disc is loaded. If a CD or DVD is not loaded, the display will change to the auxiliary source, if your vehicle has this feature, or stay on the radio.

Vehicle Noise Compensation: Your vehicle has a Bose® audio system. It includes Bose AudioPilot® noise compensation technology. When turned on, AudioPilot® continuously adjusts the audio system equalization, to compensate for background noise, so that your music always sounds the same at the set volume level.

This feature is most effective at lower radio volume settings where background noise can affect how well you hear the music being played through your vehicle's audio system. At higher volume settings, where the music is much louder than the background noise, there may be little or no adjustments by AudioPilot®.

To use AudioPilot®, set the radio volume at a low to moderate listening level. Begin listening while the vehicle is stopped with the motor running. Turn the AudioPilot® on by pressing the tune/sel knob to enter the main menu. Then turn the tune/sel knob until VNC:AUDIOPILOT appears on the display. Press the tune/sel knob to turn AudioPilot® on and off. An X will appear in the box when it is turned on. Then, resume driving, gradually increasing the vehicle speed. You will notice that your music sounds the same regardless of background noises; such as road noise, tire hum, or wind. With the AudioPilot® turned off, repeat this process again without adjusting the volume or tone controls. You will notice that background noise is now audible, and will prevent you from hearing softer passages of the music. To turn AudioPilot® off, press the tune/sel knob to enter the main menu, turn the tune/sel knob until VNC:AUDIOPILOT appears, and press the tune/sel knob. The X in the box will disappear when it is turned off.
For additional information on AudioPilot®, please visit www.bose.com.

Finding a Station

BAND: Press this button to select AM, FM1, FM2, or XM1 or XM2 (if equipped).

(Tune): Turn this knob to select radio stations.

(Seek): Press the left single arrow button to go to the previous station and stay there. Press the right single arrow button to go to the next station and stay there. The sound will mute while seeking.

The radio will only seek stations with a strong signal that are in the selected band.

(Scan): Press the double arrow scan button to enter scan mode. SCAN will appear on the display. Press this button to scan to the next station. The radio will go to a station, play for five seconds, and then go on to the next station. Press this button again to stop scanning.

To scan preset stations, press and hold the double arrow scan button for more than two seconds until you hear a beep and PSCAN appears on the display. The radio will go to the first preset station, play for five seconds, and then go on to the next preset station. Press this button again to stop scanning presets.

The radio will only scan stations with a strong signal that are in the selected band.

LOCAL/DISTANT Selection: With this feature you can set the radio to search for local stations or stations that are further away for a larger selection. To set this feature to LOCAL or DISTANT, perform the following steps:

1. Press the tune/sel knob to enter the main menu.
2. Turn the tune/sel knob until SEEK LOCAL or SEEK DISTANT appears on the display.
3. Press the tune/sel knob to select either LOCAL or DISTANT.
4. Press the BACK (F6) button to exit the display. To return to the original display, repeatedly press the BACK (F6) button or wait for the display to time out.

To search for stations, press the single arrow buttons. If the system is set to LOCAL, SEEK will appear on the display and seek to stations with strong signals only. If the system is set to DISTANT, D-SEEK will appear on the display and seek to stations with weak and strong signals.

Setting Preset Stations

Up to 30 stations (six AM, six FM1, six FM2, and six XM1 and six XM2 (if equipped)), can be programmed on the six numbered pushbuttons, by performing the following steps:

1. Turn the radio on.
2. Press BAND to select AM, FM1, FM2, or XM1 or XM2 (if equipped).

3. Tune in the desired station.
4. Press and hold one of the six numbered pushbuttons for two seconds until you hear a beep. The set preset station number will appear on the display above the pushbutton that it is set to. Whenever that numbered pushbutton is pressed for less than two seconds, the station that was set will return.
5. Repeat the steps for each pushbutton.

To set the preset stations with an equalization setting, DSP setting, or a PTY setting, see each of these features later in this section. When a preset station is selected, once one of these additional settings is selected, the preset station will remember each setting and it will remain active, until the setting is selected off for that preset station.

AUTOSTORE PRESETS: To set the preset stations automatically, perform the following steps:

1. Turn the radio on.
2. Press BAND to select AM, FM1, or FM2.
3. Press the tune/sel knob to enter the main menu.
4. Turn the tune/sel knob until AUTOSTORE PRESETS appears on the display.
5. Press the tune/sel knob to select. AUTOSTORE will appear on the display. The radio will automatically search the band and select and store the six radio stations with the strongest signal. The stations will be stored by signal strength, not sequential order. The set preset station number will appear on the display above the pushbutton that it is set to.
6. Press the BACK (F6) button to exit the display. To return to the original display, repeatedly press the BACK (F6) button or wait for the display to time out.

When battery power is removed and later applied, you will not have to reset your radio presets.

PRESETS HOME/AWAY: This feature gives you the ability to store two different kinds of station presets. HOME can be used for stations available where you live and AWAY can be for stations available outside of your local broadcasting area. To set preset stations for home and away perform the following steps:

1. Press the tune/sel knob to enter the main menu.
2. Turn the tune/sel knob until PRESETS HOME/AWAY appears on the display.
3. Press the tune/sel knob to select. HOME or AWAY will appear on the display.
4. Press the BACK (F6) button to exit the display. To return to the original display, repeatedly press the BACK (F6) button or wait for the display to time out.

Follow the manual or automatic steps previously listed for setting the preset pushbuttons for both home and away.

Setting the Tone (Bass/Midrange/Treble)

To adjust the bass, midrange, and treble, perform the following steps:

1. Press the tune/sel knob to enter the main menu.
2. Turn the tune/sel know until BASS – MID – TREBLE appears on the display.
3. Press the tune/sel knob to scroll through the settings.
4. Turn the tune/sel knob to increase or to decrease the bass, midrange, or treble. If a station is weak or noisy, decrease the treble.
5. Press the tune/sel knob to set the adjustment.
6. Press the BACK (F6) button to exit the display. To return to the original display repeatedly press the BACK (F6) button or wait for the display to time out.

AUDIO EQUALIZER: This feature allows you to select customized equalization settings. To choose an equalization setting (EQ0 through EQ5), perform the following steps:

1. Press the tune/sel knob to enter the main menu.
2. Turn the tune/sel knob until EQUALIZER appears on the display.
3. Press the tune/sel knob to set the equalization setting. The equalization setting will appear on the display.
4. Press the BACK (F6) button to exit the display. To return to the original display, repeatedly press the BACK (F6) button or wait for the display to time out.

The equalization settings are preset to EQ0 (Normal), EQ1 (Pop), EQ2 (Rock), EQ3 (Jazz), EQ4 (Talk), and EQ5 (Country).

Adjusting the Speakers (Balance/Fade)

To adjust the balance or fade, perform the following steps:

1. Press the tune/sel knob to enter the main menu.
2. Turn the tune/sel knob until BALANCE – FADER appears on the display.
3. Press the tune/sel knob to enter the tone settings.
4. Press the tune/sel knob to scroll to BALANCE or FADER.
5. Turn the tune/sel knob to adjust the BALANCE to the right or the left speakers and the FADER to the front or the rear speakers.
6. Press the tune/sel knob to set the adjustment.
7. Press the BACK (F6) button to exit the display. To return to the original display, repeatedly press the BACK (F6) button or wait for the display to time out.

EQ0 will not appear on the display when in this mode.

Digital Signal Processing (DSP): This feature is used to provide a choice of different listening experiences. To choose a DSP setting, perform the following steps:

1. Press the tune/sel knob to enter the main menu.
2. Turn the tune/sel knob until DSP appears on the display.
3. Press the tune/sel knob to set the DSP setting. The DSP setting will appear on the display.
4. Press the BACK (F6) button to exit the display. To return to the original display, repeatedly press the BACK (F6) button or wait for the display to time out.

The DSP settings available are:

- **Normal**: Select this setting for normal mode, this provides the best sound quality for all seating positions.
- **Centerpoint™**: Select this setting to enable Bose Centerpoint™. Centerpoint™ signal processing gives surround sound listening for a CD, MP3, or a DVD stereo audio source. Centerpoint™ delivers five independent audio channels from conventional stereo recordings.
- **Rear**: Select this setting to adjust the audio for the rear seat passengers to receive the best possible sound quality.
- **Driver**: Select this setting to adjust the audio for the driver to receive the best possible sound quality.
- **5.1 Surround**: Select this setting to turn on true 5.1 surround sound processing, available for DVD-A or DVD-V sources that were recorded in 5.1 Surround.
  - **5.1 Surround + Normal** — this mode is optimized for all seating positions.
  - **5.1 Surround + Rear** — this mode is optimized for rear seat occupants.

XM™ Satellite Radio Service

XM™ is a satellite radio service that is based in the 48 contiguous United States and in Canada. XM™ offers over 100 coast to coast channels including music, news, sports, talk, and children's programming. XM™ provides digital quality audio and text information, including song title and artist name. A service fee is required in order to receive the XM™ service. For more information, contact XM™ at www.xmradio.com or call 1-800-852-XMXM (9696).

i (Information): Press this button while in XM™ mode to retrieve three different categories of information related to the current song or channel: Artist, Song Title, Category or PTY. To view this information, perform the following:

1. Press the tune/sel knob to enter the main menu.
2. Turn the tune/sel knob until INFO appears on the display.
3. Press the tune/sel knob to select INFO. The display will change to show the additional XM™ information.
4. Press the BACK (F6) button to exit the display. To return to the original display, repeatedly press the BACK (F6) button or wait for the display to time out.

Radio Data System (RDS)

The audio system has a Radio Data System (RDS). RDS features are available for use only on FM stations that broadcast RDS information.

With RDS, the radio can do the following:

- Seek to stations broadcasting the selected type of programming
- Receive announcements concerning local and national emergencies
- Display messages from radio stations
- Seek to stations with traffic announcements

This system relies upon receiving specific information from these stations and will only work when the information is available. In rare cases, a radio station may broadcast incorrect information that will cause the radio features to work improperly. If this happens, contact the radio station.

While the radio is tuned to an RDS station, the station name or call letters will appear on the display instead of the frequency. RDS stations may also provide the time of day, a program type (PTY) for current programming, and the name of the program being broadcast.

RDS Messages

ALERT: Alert warns of local and national emergencies. When, an alert announcement comes on the current radio station or a related network station, ALERT will appear on the display. You will hear the announcement, even if the volume is low or a CD or DVD is playing. If a CD or DVD is playing, play will stop during the announcement. Alert announcements cannot be turned off. If the radio tunes to a related network station for the announcement, it will return to the original station when the announcement is finished.

ALERT will not be affected by tests of the emergency broadcast system. This feature is not supported by all RDS stations.

MSG (Message): If the current RDS station has a message, MSG will appear on the display. The message may display the artist, song title, call in phone numbers, etc. If the entire message does not appear on the display, parts of the message will appear every three seconds until the message is completed. Once the completed message has been displayed, MSG will disappear from the display until another new message is received.

To display the last message, perform the following steps:

1. Press the tune/sel knob to enter the main menu.
2. Turn the tune/sel knob until RECALL RDS MESSAGE appears on the display.
3. Press the tune/sel knob. The message will appear on the display.

Once the message has been displayed, MSG will disappear from the display until another new message is received.

TP (Traffic Program): TP will appear on the display when the radio detects a signal from an RDS station that has traffic announcement broadcast capability.

TA (Traffic Announcement): If TA appears on the display, the tuned radio station broadcasts traffic announcements and when a traffic announcement comes on the tuned station you will hear it.

If the station does not broadcast traffic announcements, when TA is turned on it will seek to a station that does. When a station that broadcasts traffic announcements is found, the radio will stop seeking and TA will appear on the display. If no station is found that broadcasts traffic announcements, No Traffic will appear on the display.

The radio will play traffic announcements if the volume is low. The radio will interrupt the play of a CD or DVD if the last tuned station broadcasts traffic announcements.

To turn TA on or off, perform the following steps:

1. Press the tune/sel knob to enter the main menu.
2. Turn the tune/sel knob until TRAFFIC ANNOUNCE appears on the display.
3. Press the tune/sel knob to select ON or OFF. An X will appear in the box when TA is selected on.
4. Press the BACK (F6) button to exit the display. To return to the original display, repeatedly press the BACK (F6) button or wait for the display to time out.

Activating Program Type (PTY) Stations (RDS and XM™)

PTY allows you to search for stations with specific types of music. The selectable PTYs are POP, EASY, TALK, CNTRY (Country), CLASS (Classical), and JAZZ.

To activate program types, perform the following steps:

1. Press the tune/sel knob to enter the main menu.
2. Turn the tune/sel knob until PROGRAM TYPE MODE appears on the display.
3. Press the tune/sel knob to select ON or OFF. When PTY is selected, an X wil appear in the ON box.
4. Press the BACK (F6) button to exit the display. To return to the original display, repeatedly press the BACK (F6) button or wait for the display to time out.

Once program type is activated the PTYs will appear on the display above the pushbuttons, in place of the preset stations (if programmed). Press the pushbutton for the desired PTY. The radio may not go to all of the stations with that music type when pressing the pushbutton, as not all stations support PTYs.

AF (Alternate Frequency): Alternate frequency allows the radio to switch to a stronger station with the same program type.

To turn AF on or off, perform the following steps:

1. Press the tune/sel knob to enter the main menu.
2. Turn the tune/sel knob until ALTERNATE FREQ. appear on the display.
3. Press the tune/sel knob to select AF OFF, AF ON, or AF REG. When AF is selected an X will appear in that box.
4. Press the BACK (F6) button to exit the display. To return to the original display, repeatedly press the BACK (F6) button or wait for the display to time out.

Radio Message

THEFTLOCK: This message is displayed when the THEFTLOCK® system has been activated. Take the vehicle to the dealer for service.

Radio Messages for XM™ Only

See *XM Radio Messages on page 297* later in this section for further detail.

Using the Six-Disc CD Changer

The CD player can play the smaller 3 inch (8 cm) single CDs with an adapter ring. Full-size CDs and the smaller CDs are loaded in the same manner.

If playing a CD-R, the sound quality may be reduced due to CD-R quality, the method of recording, the quality of the music that has been recorded, and the way the CD-R has been handled. There may be an increase in skipping, difficulty in finding tracks, and/or difficulty in loading and ejecting. If these problems occur, check the bottom surface of the CD. If the surface of the CD is damaged, such as cracked, broken, or scratched, the CD will not play properly.

If the surface of the CD is soiled, see *Care of Your CDs and DVDs on page 315* for more information.

If there is no apparent damage, try a known good CD.

Notice: **If you add any label to a CD, insert more than one CD into the slot at a time, or attempt to play scratched or damaged CDs, you could damage the CD player. When using the CD player, use only CDs in good condition without any label, load one CD at a time, and keep the CD player and the loading slot free of foreign materials, liquids, and debris.**

Do not add any label to a CD; it could get caught in the CD player. If a CD is recorded on a personal computer and a description label is needed, try labeling the top of the recorded CD with a marking pen instead.

If an error appears on the display, see “CD Messages” later in this section.

When a CD is inserted, the CD functions will appear on the display above the pushbuttons, in place of the preset stations, if programmed.

(Load): Press this button to load CDs into the CD player. This CD player will hold up to six CDs.

To insert one CD, do the following:

1. The ignition and the radio can be on or off.
2. Press and release the load button. Please Wait will appear on the display.
3. When INSERT appears on the display, insert a CD partway into the slot, label side up. The player will pull the CD in.

When a CD is inserted, CD will appear on the display, the number of the CD and the track number will appear on the display if the radio is on.

If the radio is on, the CD will begin to play automatically.

To insert multiple CDs, do the following:

1. The ignition and the radio can be on or off.
2. Press and hold the load button for two seconds. Please Wait will appear on the display and you will hear a beep.
3. When INSERT appears on the display, insert a CD partway into the slot, label side up. The player will pull the CD in.

   Do not load a CD until INSERT appears on the display. The CD player will take up to six CDs. Do not try to load more than six. If you want to load less than six CDs, load the desired amount. The CD player will time out when it does not receive any more CDs and the last CD loaded will begin to play.

If the radio is on, the last CD loaded will begin to play automatically.

F1 DISC↓ (Down): Press this pushbutton to go to the previous CD.

F2 DISC↑ (Up): Press this pushbutton to go to the next CD.

F3 CD REV ≪ (Reverse): Press and hold this pushbutton to reverse quickly within the track. Holding the pushbutton will play in reverse at 10 times the normal speed. After holding it for more than four seconds it will play in reverse at 20 times the normal speed. Release this pushbutton to play the passage. The elapsed time of the track will appear on the display.

F4 CD FWD ≫ (Forward): Press and hold this pushbutton to advance quickly within the track. Holding the pushbutton will play at 10 times the normal speed. After holding it for more than four seconds it will play at 20 times the normal speed. Release this pushbutton to play the passage. The elapsed time of the track will appear on the display.

F5 MODE: Press this pushbutton to select from NORMAL, RPT TRCK (Repeat Track), RPT DISC (Repeat CD), RDM TRCK (Random Track), and RDM ALL (Random All CDs).

- **Normal:** Sets the system for normal play of the CD(s).
- **RPT TRCK (Repeat Track):** Repeats the track over again. RPT TRCK will appear on the display. Press the MODE pushbutton again to turn off repeat play and advance to the next mode.
- **RPT DISC (Repeat CD):** Repeats the CD over again. RPT DISC will appear on the display. Press the MODE pushbutton again to turn off repeat play and advance to the next mode.
- **RDM TRCK (Random Track):** Plays the tracks on the current CD in random, rather than sequential order. RDM TRCK will appear on the display. Press the MODE pushbutton again to turn off random play and advance to the next mode.
- **RDM ALL (Random All CDs):** Plays all of the CDs loaded in random, rather than sequential order. RDM ALL will appear on the display. Press the MODE pushbutton again to turn off random play and advance to the next mode.

F6 DISP (Display): Press this pushbutton to display the time of the track. Press this pushbutton again to display CD PLAY MODE.

⊲ or ⊳ (Seek): Press the left single arrow to go to the start of the current track. Press it again to go to the previous track, or press the right single arrow to go to the start of the next track. Pressing either arrow for more than 2 seconds will search the previous or next tracks at two tracks per second. Release the button to stop searching and to play the track.

⏮ ⏭ **(Scan):** Press this double arrow button to listen to each track for 10 seconds. The CD will go to a track, play for 10 seconds, and then go on to the next track. Press this button again to stop scanning.

SRCE (Source): Press this button to select a source, either radio, CD, DVD or AUX, if your vehicle has this feature. The CD must be loaded to select the source and to play. CD will appear on the display if a CD is loaded. If a CD is not loaded, the display will change to the next available source, either DVD, AUX, if your vehicle has this feature, or radio.

⏏ **(Eject):** Press this button to eject the CD that is currently playing, or press and hold this button to eject all of the CDs loaded. You will hear a beep. Eject may be activated with the ignition or radio off. If the CD is not removed after a short time, the CD will be brought back into the CD player for storage.

Using an MP3 CD

MP3 Format

If you burn your own MP3 disc on a personal computer:

- Make sure the MP3 files are recorded on a CD-R disc.
- Do not mix standard audio and MP3 files on one disc.
- Make sure playlists have a.m3u or.wpl extension, other file extensions may not work.
- Files can be recorded with a variety of fixed or variable bit rates. Song title, artist name, and album will be available for display by the radio when recorded using ID3 tags version 1 and 2.
- Create a folder structure that makes it easy to find songs while driving. Organize songs by albums using one folder for each album. Each folder or album should contain 18 songs or less.
- Make sure to finalize the disc when burning an MP3 disc, using multiple sessions. It is usually better to burn the disc all at once.

The player will be able to read and play a maximum of 50 folders, 50 playlists, 10 sessions, and 255 files. Long file names, folder names, or playlist names may use more disc memory space than necessary. To conserve space on the disc, minimize the length of the file, folder or playlist names. You can also play an MP3 CD that was recorded using no file folders. The system can support up to 11 folders in depth, though, keep the depth of the folders to a minimum in order to keep down the complexity and confusion in trying to locate a particular folder during playback. If a CD contains more than the maximum of 50 folders, 50 playlists, 10 sessions, and 255 files the player will let you access and navigate up to the maximum, but all items over the maximum will be ignored.

Root Directory

The root directory will be treated as a folder. If the root directory has compressed audio files, the directory will be displayed as F1 ROOT. All files contained directly under the root directory will be accessed prior to any root directory folders. However, playlists (Px) will always be accessed before root folders or files.

Empty Directory or Folder

If a root directory or a folder exists somewhere in the file structure that contains only folders/subfolders and no compressed files directly beneath them, the player will advance to the next folder in the file structure that contains compressed audio files and the empty folder will not be displayed or numbered.

No Folder

When the CD contains only compressed files, the files will be located under the root folder. The next and previous folder functions will have no function on a CD that was recorded without folders or playlists. When displaying the name of the folder the radio will display ROOT.

When the CD contains only playlists and compressed audio files, but no folders, all files will be located under the root folder. The folder down and the folder up buttons will search playlists (Px) first and then go to the root folder. When the radio displays the name of the folder the radio will display ROOT.

Order of Play

Tracks will be played in the following order:

- Play will begin from the first track in the first playlist and will continue sequentially through all tracks in each playlist. When the last track of the last playlist has been played, play will continue from the first track of the first playlist.
- If the CD does not contain any playlists, and then play will begin from the first track under the root directory. When all tracks from the root directory have been played, play will continue from files according to their numerical listing. After playing the last track from the last folder, play will begin again at the first track of the first folder or root directory.

When play enters a new folder, the display will not automatically show the new folder name. The new track name will appear on the display.

File System and Naming

The song name that will be displayed will be the song name that is contained in the ID3 tag. If the song name is not present in the ID3 tag, and then the radio will display the file name without the extension (such as .mp3) as the track name.

Track names longer than 32 characters or four pages will be shortened. The display will not show parts of words on the last page of text and the extension of the filename will not be displayed.

Preprogrammed Playlists

You can access preprogrammed playlists which were created by WinAmp™, MusicMatch™, or Real Jukebox™ software, however, you will not have editing capability. These playlists will be treated as special folders containing compressed audio song files.

Playing an MP3

(Load): Press this button to load CDs into the CD player. This CD player will hold up to six CDs.

To insert one CD, do the following:

1. The ignition and the radio can be on or off.
2. Press and release the load button. Please Wait will appear on the display.
3. When INSERT appears on the display, insert a CD partway into the slot, label side up. The player will pull the CD in.

When a CD is inserted, CD will appear on the display, the number of the CD and the track number will appear on the display if the radio is on.

If the radio is on, the CD will begin to play automatically.

If the ignition or radio is turned off with a CD in the player it will stay in the player. When the ignition or radio is turned on, the CD will start to play where it stopped, if it was the last selected audio source.

As each new track starts to play, the track number will appear on the display.

The CD player can play the smaller 3 inch (8 cm) single CDs with an adapter ring. Full-size CDs and the smaller CDs are loaded in the same manner.

If playing a CD-R, the sound quality may be reduced due to CD-R quality, the method of recording, the quality of the music that has been recorded, and the way the CD-R has been handled. There may be an increase in skipping, difficulty in finding tracks, and/or difficulty in loading and ejecting. If these problems occur, check the bottom surface of the CD. If the surface of the CD is damaged, such as cracked, broken, or scratched, the CD will not play properly. If the surface of the CD is soiled, see *Care of Your CDs and DVDs on page 315* for more information.

If there is no apparent damage, try a known good CD.

Notice: **If you add any label to a CD, insert more than one CD into the slot at a time, or attempt to play scratched or damaged CDs, you could damage the CD player. When using the CD player, use only CDs in good condition without any label, load one CD at a time, and keep the CD player and the loading slot free of foreign materials, liquids, and debris.**

Do not add any label to a CD; it could get caught in the CD player. If a CD is recorded on a personal computer and a description label is needed, try labeling the top of the recorded CD with a marking pen instead.

If an error appears on the display, see "CD Messages" later in this section.

F3 (Reverse): Press and hold this pushbutton to enter fast reverse mode. Holding the pushbutton will play in reverse at 10 times the normal speed. After holding it for more than four seconds it will play in reverse at 20 times the normal speed. Release the pushbutton to return to normal play mode. The radio will be muted during the reverse mode.

A quick press of this pushbutton will go to the beginning of the previous folder.

F4 (Forward): Press and hold this pushbutton to enter fast forward mode. Holding the pushbutton will play at 10 times the normal speed. After holding it for more than four seconds it will play at 20 times the normal speed. Release the pushbutton to return to normal play mode.

A quick press of this pushbutton will go to the beginning of the next folder.

F5 MODE: Press this pushbutton to select from NORMAL, RPT TRCK, and RDM TRCK.

- **Normal:** Sets the system for normal play of the DVD.
- **RPT TRCK (Repeat Track):** Repeats the track over again. RPT TRCK will appear on the display. Press the MODE pushbutton again to turn off repeat play and advance to the next mode.
- **RDM TRCK (Random Track):** Plays the tracks on the current DVD in random, rather than sequential order. RDM TRCK will appear on the display. Press the MODE pushbutton again to turn off random play and advance to the next mode.

F6 DISP (Display): Press this pushbutton to display the time of the track. Press this pushbutton again to display CD PLAY MODE.

⏮ **or** ⏭ **(Seek):** Press the left single arrow button to go to the start of the current track. Press it again to go to the previous track, or press the right single arrow button to go to the next track. Press the right arrow to go to the start of the next track. Pressing either arrow for more than two seconds will search the previous or next tracks at two tracks per second. Release the button to stop searching and to play the track.

⏮ ⏭ **(Scan):** Press the double arrow button to scan the tracks in each folder. The radio will go to the next track, play for 10 seconds, and then go on to the next track. Press this button again to stop scanning.

▷▷ **(Tune):** Turning the tune knob will fast track reverse or advance through the tracks in all folders or playlists. The track number and file name will appear on the display for each track. Turning this knob while in random will fast track reverse or advance the tracks in sequential order.

i (Information): Press this button, while an MP3 CD is loaded, to view the Title, Artist, Album, or Folder names. To view this information, perform the following:

1. Press the tune/sel knob to enter the main menu.
2. Turn the tune/sel knob until INFO appears on the display.
3. Press the tune/sel knob to select INFO. The display will change to show the additional MP3 information.
4. Press one of the following pushbuttons to view that specific information.
   - **F1 TTLE (Title):** To display the title name.
   - **F2 ATST (Artist):** To display the artist name.
   - **F3 ALBM (Album):** To display the album name.
   - **F4 FLDR (Folder):** To display the folder name.
5. Press the BACK (F6) button to exit the display. To return to the original display, repeatedly press the BACK (F6) button or wait for the display to time out.

SRCE (Source): Press this button to select a source, either radio, CD, DVD, or AUX, if your vehicle has this feature. The CD must be loaded to select the source and to play. CD will appear on the display if a CD is loaded. If a CD is not loaded, the display will change to the next available source, either DVD, AUX, if your vehicle has this feature, or radio.

⏏ **(Eject):** Press this button to eject a CD. Eject may be activated with the ignition and the radio off. If the CD is not removed after a short time, the CD will be brought back into the CD player for storage.

CD Messages

If the CD comes out, it could be for one of the following reasons:

- It is very hot. When the temperature returns to normal, the CD should play.
- You are driving on a very rough road. When the road becomes smoother, the CD should play.
- The CD is dirty, scratched, wet, or upside down.
- The air is very humid. If so, wait about an hour and try again.
- The format of the CD may not be compatible. See “MP3 Format” earlier in this section.
- There may have been a problem while burning the CD.
- The label may be caught in the CD player.

If the CD is not playing correctly, for any other reason, try a known good CD.

If any error occurs repeatedly or if an error cannot be corrected, contact your GM dealer. If the radio displays an error message, write it down and provide it to your GM dealer when reporting the problem.

Using the DVD Player

Insert a disc partway into the slot, label side up. The player will pull it in. If the ignition and the radio are on, the CD or DVD will begin playing. A DVD may be loaded with the radio off, but it will not start playing until the radio is on, and sourced to DVD. The DVD player can be controlled by the buttons on the radio, the rear seat audio system, and the remote control, if your vehicle has this feature. See the *Rear Seat Entertainment System on page 299* for more information. A DVD icon will display whenever a disc is loaded. The DVD player can also be run for passengers in the rear seat with the radio off. The rear seat passenger can power on the video screen and use the remote control to navigate the disc. See *Rear Seat Entertainment System on page 299* for more information.

⏏ **(Eject):** Press this button to eject the DVD or CD. Eject may be activated with the ignition or radio off. If the disc is not removed after a short time, the disc will be pulled back into the DVD player for storage.

The DVD player is only compatible with DVDs of the appropriate region code. The region code is printed on the jacket of most DVDs.

DVD video, DVD audio, DVD-R/RW, and DVD + R/RW are fully supported by this DVD player. In addition, standard audio CDs, CD-R, CD-RW, video CD, SACD, MP3, and WMA formatted discs are fully supported. If a disc is inserted that is not supported, an error message will display and the disc will be ejected.

When a DVD is inserted, the DVD functions will appear on the display above the pushbuttons, in place of the preset stations. These functions vary based on the type of disc that is inserted. Loading the disc can take some time as the DVD player reads the disc and determines the type.

DVD Messages

If the disc comes out, it could be for one of the following reasons:

- It is very hot. When the temperature returns to normal, the disc should play.
- You are driving on a very rough road. When the road becomes smoother, the disc should play.
- The disc is dirty, scratched, wet, or upside down.
- The air is very humid. If so, wait about an hour and try again.
- The region code on your DVD may not be correct for your region.
- The format of the disc may not be compatible. See “MP3 Format” earlier in this section.
- There may have been a problem while burning the disc.
- The label may be caught in the DVD player.

If the disc is not playing correctly, for any other reason, try a known good disc.

If any error occurs repeatedly or if an error cannot be corrected, contact your GM dealer. If the radio displays an error message, write it down and provide it to your GM dealer when reporting the problem.

Playing a DVD Video

F1 (Play/Pause): Press this pushbutton to turn on the video screen, if your vehicle has this feature, and begin playing the DVD. Press this pushbutton to pause the DVD if it is playing. Press Play (F1) to restart the DVD if it is paused.

F2 (Stop): Press this pushbutton once to stop the DVD and retain your current position. Press it again from the stopped state to return to the beginning of the disc.

F3 (Reverse): Press and hold this pushbutton, if the DVD is playing, to enter fast reverse mode. Holding the pushbutton will play in reverse at four times the normal speed. After holding it for more than four seconds it will play in reverse at 32 times the normal speed. Release the pushbutton to return to normal play mode.

F4 (Forward): If the DVD player is playing, press and hold this pushbutton to enter fast forward mode. Holding the pushbutton will play at four times the normal speed. After holding it for more than four seconds it will play at 32 times the normal speed. Release the pushbutton to return to normal play mode.

Press and hold this pushbutton, if the DVD is playing, to enter slow forward mode. Holding the pushbutton will play at half the normal speed. After holding it for more than four seconds it will play at an eighth the normal speed. Release the pushbutton to return to the pause state.

F6 (Menu): Press this pushbutton to go to the DVD root menu and to bring up the menu navigation arrows. Pressing keys F1 through F4 will move the cursor to navigate the DVD menu. Press F6 to enter your selection.

⏮ or ⏭ (Seek): Press the left single arrow button to go to the start of the current chapter. Press it again to go to the previous chapter, or press the right single arrow button to go to the next chapter. Press and hold these buttons to change chapter at a rate of one per second.

TUNE/SEL knob: Turn to the left one notch to go to the start of the current chapter. Turn it again to go to the previous chapter, or turn to the right one notch to go to the next chapter.

INFO: Press the programmed INFO soft key, or press the TUNE/SEL knob and rotate until INFO is shown, and then press the TUNE/SEL knob. Pressing INFO brings up the Information display. It shows the current Title number, Chapter number and elapsed time of the DVD, and additional menu items.

- **F1 SUB:** Press this pushbutton to view the Subtitle Language Menu.
- **F2 ANGLE:** Press this pushbutton to view the Angle Menu.
- **F6 BACK:** Press this pushbutton to return to the previous screen.

Playing a DVD Audio Disc

Not all DVD audio discs are recorded to industry standards and for this reason may not play properly in your vehicle.

F1 (Play/Pause): Press this pushbutton to pause the DVD if it is playing. Press Play (F1) to restart the DVD if it is paused.

F2 (Stop): Press this pushbutton once to stop the DVD and retain your current position. Press it again from the stopped state to return to the beginning of the disc.

F3 (Reverse): Press and hold this pushbutton, if the DVD player is playing, to enter fast reverse mode. Holding the pushbutton will play in reverse at four times the normal speed. After holding it for more than four seconds it will play in reverse at 32 times the normal speed. Release the pushbutton to return to normal play mode.

F4 (Forward): Press and hold this pushbutton, if the DVD player is playing, to enter fast forward mode. Holding the pushbutton will play at four times the normal speed. After holding it for more than four seconds it will play in reverse at 32 times the normal speed. Release the pushbutton to return to normal play mode.

F5 MODE: Press this pushbutton to select from NORMAL, and RPT TRCK.

- **Normal:** Sets the system for normal play of the DVD.
- **RPT TRCK (Repeat Track):** Repeats the track over again. RPT TRCK will appear on the display. Press the MODE pushbutton again to turn off repeat play and advance to the next mode.

F6 DISP (Display): Press this pushbutton to display the time of the track. Press this pushbutton again to display DVD PLAY MODE.

⏮ or ⏭ (Seek): Press the left single arrow button to go to the start of the current track. Press it again to go to the previous track, or press the right single arrow button to go to the next track. Press and hold these buttons to change tracks at a rate of one per second.

TUNE/SEL knob: Turn to the left one notch to go to the start of the current track. Turn it again to go to the previous track, or turn to the right one notch to go to the next track.

If your vehicle has rear seat entertainment, you can view the menu and playlist from your DVD audio disc on the video screen. Turn on the video screen with the power button on the remote control to view and navigate the menu and playlists. See *Rear Seat Entertainment System on page 299* for more information.

Playing a CD in the DVD Drive

F3 (Reverse): Press and hold this pushbutton to enter fast reverse mode. Holding the pushbutton will play in reverse at four times the normal speed. After holding it for more than four seconds it will play in reverse at 32 times the normal speed. Release the pushbutton to return to normal play mode.

F4 (Forward): Press and hold this pushbutton to enter fast forward mode. Holding the pushbutton will play at four times the normal speed. After holding it for more than four seconds it will play at 32 times the normal speed. Release the pushbutton to return to normal play mode.

F5 MODE: Press this pushbutton to select from NORMAL, RPT TRCK, and RDM TRCK.

- **Normal:** Sets the system for normal play of the DVD.
- **RPT TRCK (Repeat Track):** Repeats the track over again. RPT TRCK will appear on the display. Press the MODE pushbutton again to turn off repeat play and advance to the next mode.
- **RDM TRCK (Random Track):** Plays the tracks on the current DVD in random, rather than sequential order. RDM TRCK will appear on the display. Press the MODE pushbutton again to turn off random play and advance to the next mode.

F6 DISP (Display): Press this pushbutton to display the time of the track. Press this pushbutton again to display CD PLAY MODE.

⏮ **or** ⏭ **(Seek):** Press the left single arrow button to go to the start of the current track. Press it again to go to the previous track, or press the right single arrow button to go to the next track. Press and hold these buttons to change tracks at a rate of one per second.

TUNE/SEL knob: Turn to the left one notch to go to the start of the current track. Turn it again to go to the previous track, or turn to the right one notch to go to the next track.

⏮ ⏭ **(Scan):** Press this double arrow button to listen to each track for 10 seconds. The CD will go to a track, play for 10 seconds, and then go on to the next track. Press this button again to stop scanning.

If your vehicle has rear seat entertainment, you can view the track details from your CD on the video screen. Turn on the video screen with the power button on the remote control to view and navigate the tracks. See *Rear Seat Entertainment System on page 299* for more information.

Playing an MP3 Formatted Disc

See “Using an MP3 CD” earlier in this section for additional information.

F3 (Reverse): Press and hold this pushbutton to enter fast reverse mode. Holding the pushbutton will play in reverse at four times the normal speed. After holding it for more than four seconds it will play in reverse at 32 times the normal speed. Release the pushbutton to return to normal play mode.

A quick press of this pushbutton will go to the beginning of the previous folder.

F4 (Forward): Press and hold this pushbutton to enter fast forward mode. Holding the pushbutton will play at four times the normal speed. After holding it for more than four seconds it will play at 32 times the normal speed. Release the pushbutton to return to normal play mode.

A quick press of this pushbutton will advance to the next folder.

F5 MODE: Press this pushbutton to select from NORMAL, RPT TRCK, and RDM TRCK.

- **Normal:** Sets the system for normal play of the DVD.
- **RPT TRCK (Repeat Track):** Repeats the track over again. RPT TRCK will appear on the display. Press the MODE pushbutton again to turn off repeat play and advance to the next mode.
- **RDM TRCK (Random Track):** Plays the tracks on the current DVD in random, rather than sequential order. RDM TRCK will appear on the display. Press the MODE pushbutton again to turn off random play and advance to the next mode.

F6 DISP (Display): Press this pushbutton to display the time of the track. Press this pushbutton again to display CD PLAY MODE.

⊲ or ⊳ (Seek): Press the left single arrow button to go to the start of the current track. Press it again to go to the previous track, or press the right single arrow button to go to the next track. Press and hold these buttons to change tracks at a rate of one per second.

TUNE/SEL knob: Turn to the left one notch to go to the start of the current track. Turn it again to go to the previous track, or turn to the right one notch to go to the next track.

⊲ ⊳ (Scan): Press this double arrow button to listen to each track for 10 seconds. The CD will go to a track, play for 10 seconds, and then go on to the next track. Press this button again to stop scanning.

If your vehicle is equipped with rear seat entertainment, you can view the menu and playlist from your CD on the video screen. Turn on the video screen with the power button on the remote control to view and navigate the menu and playlists. See *Rear Seat Entertainment System on page 299* for more information.

Using the AUX Display (If Equipped)

If your vehicle has rear seat entertainment, you will see an AUX screen as you press through the SRCE key. When AUX is selected in the front, the audio from the device plugged into the auxiliary jacks in the rear will be played over the vehicle speakers.

You have the ability to select between AUX and DVD video on the video screen while listening to AUX audio. See *Rear Seat Entertainment System on page 299* for more information on the auxiliary jacks.

SRCE (Source): Press this pushbutton to select the AUX display.

F2 (DVD): Press this pushbutton to select DVD video on the video screen in the rear, with AUX audio on the vehicle speakers.

F5 (AUX): Press his pushbutton to select AUX video on the video screen in the rear, with AUX audio on the vehicle speakers.

Configurable Radio Display Keys

This feature allows you to customize the four keys that are located on each side of the radio display to make it easier to adjust the radio features.

To program the configurable radio display keys, perform the following steps:

1. Press the tune/sel knob to enter the main menu.
2. Turn the tune/sel knob until SETUP appears on the display.
3. Press the tune/sel knob to enter into SETUP.
4. Turn the tune/sel knob until CONFIGURE DISPLAY KEYS appears on the display.
5. Press the tune/sel knob to enter into CONFIGURE DISPLAY KEYS.
6. Turn the tune/sel knob to select which of the four configurable keys you would like to change. The currently assigned feature will be shown.
7. Press the tune/sel knob to select the configurable key to change.
8. Turn the tune/sel knob to find the feature that you would like to store to the key.
9. Press the tune/sel knob when you have found the feature to be stored. The display will update, by showing the symbol of the feature that you selected next to the configurable key.
10. Repeat the previous steps for each configurable key.

Once a feature is programmed to a key, the feature will not appear on the display when programming the remaining configurable keys. The configurable keys can be changed at any time.

XM Radio Messages

Radio Display Message	Condition	Action Required
XL (Explicit Language Channels)	XL on the radio display, after the channel name, indicates content with explicit language.	These channels, or any others, can be blocked at a customer's request, by calling 1-800-852-XMXM (9696).
XM Updating	Updating encryption code	The encryption code in the receiver is being updated, and no action is required. This process should take no longer than 30 seconds.
No Signl	Loss of signal	The system is functioning correctly, but the vehicle is in a location that is blocking the XM signal. When the vehicle is moved into an open area, the signal should return.
Loading	Acquiring channel audio (after 4 second delay)	The audio system is acquiring and processing audio and text data. No action is needed. This message should disappear shortly.
Off Air	Channel not in service	This channel is not currently in service. Tune in to another channel.
CH Unavail	Channel no longer available	This previously assigned channel is no longer assigned. Tune to another station. If this station was one of the presets, choose another station for that preset button.
No Info	Artist Name/Feature not available	No artist information is available at this time on this channel. The system is working properly.

Radio Display Message	Condition	Action Required
No Info	Song/Program Title not available	No song title information is available at this time on this channel. The system is working properly.
No Info	Category Name not available	No category information is available at this time on this channel. The system is working properly.
Not Found	No channel available for the chosen category	There are no channels available for the selected category. The system is working properly.
No Info	No Text/Informational message available	No text or informational messages are available at this time on this channel. The system is working properly.
XM Lock	Theft lock active	The XM™ receiver in your vehicle may have previously been in another vehicle. For security purposes, XM™ receivers cannot be swapped between vehicles. If this message is received after having your vehicle serviced, check with your GM dealer.
Radio ID	Radio ID label (channel 0)	If tuned to channel 0, this message will alternate with the XM™ Radio 8 digit radio ID label. This label is needed to activate the service.
Unknown	Radio ID not known (should only occur with hardware failure)	If this message is received when tuned to channel 0, there may be a receiver fault. Consult with your GM dealer.
Check XM	Hardware failure	If this message does not clear within a short period of time, the receiver may have a fault. Consult with your GM dealer.

Navigation/Radio System

Your vehicle may have a navigation radio system.

The navigation system has built-in features intended to minimize driver distraction. Technology alone, no matter how advanced, can never replace your own judgment. See the Navigation System manual for some tips to help you reduce distractions while driving.

Rear Seat Entertainment System

Your vehicle may have a DVD Rear Seat Entertainment (RSE) system. The RSE system works with the vehicle's audio system. The DVD player is part of the front radio. The RSE system includes a radio with a DVD player, a video display screen, two wireless headphones, and a remote control. See *Radio with CD and DVD on page 268* for more information on the vehicle's audio/DVD system.

Driver Control of the Audio System

The driver has basic control of the whole audio system. If the driver decides to globally turn the audio system off, the driver can press and hold the power knob for more than two seconds to turn off the radio, rear seat entertainment (RSE), and the rear seat audio (RSA). See *Radio with CD and DVD on page 268* for more information.

If your vehicle has the navigation system, see the Navigation System manual for more information.

Before You Drive

The RSE is designed for rear seat passengers only. The driver cannot safely view the video screen while driving and should not try to do so.

In severe or extreme weather conditions the RSE system may or may not work until the temperature is within the operating range. The operating range for the RSE system is above –4°F (–20°C) or below 140°F (60°C). If the temperature of your vehicle is outside of this range, heat or cool the vehicle until the temperature is within the operating range of the RSE system.

Headphones

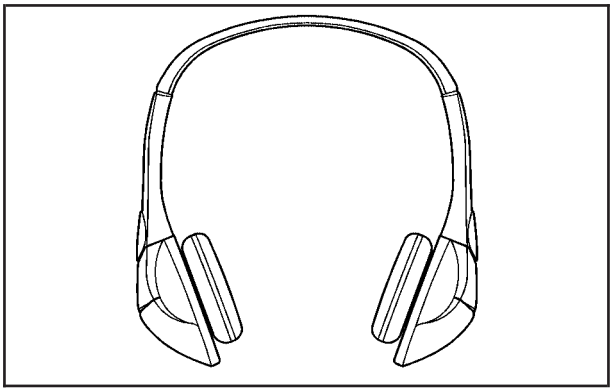

The RSE includes two 2-channel wireless headphones that are dedicated to this system. These headphones are used to listen to media such as CDs, DVDs, MP3s, DVDAs, radio, or any auxiliary source connected to the auxiliary input jack, if your vehicle has this feature or A/V jacks. The wireless headphones have a power On/Off button, channel selector switch (1 or 2), and a volume control.

If your vehicle has a third row video screen display, it will have two additional headphones.

Push the power button to turn on the headphones. An indicator light located on the headphones will illuminate. If the light does not illuminate, the batteries may need to be replaced. See “Battery Replacement” later in this section for more information. Switch the headphones to Off when not in use. Channel 1 is dedicated to the video screen, while Channel 2 is dedicated to RSA selections.

The infrared transmitters are located at the rear of the RSE overhead console. The headphones will shut off automatically to save the battery power if the DVD system is shut off or if the headphones are out of range of the transmitters for more than 3 minutes. If you move too far forward or step out of the vehicle, the headphones will lose the audio signal.

The headphones will automatically turn off after 4 hours of continuous use.

To adjust the volume on the headphones, use the volume control located on the right side.

For optimal audio performance, the headphones must be worn correctly. The symbol L (Left) will appear on the upper left side, above the ear pad and should be positioned on the left ear. The symbol R (Right) will appear on the upper right side, above the ear pad and should be positioned on the right ear.

Notice: **Do not store the headphones in heat or direct sunlight. This could damage the headphones and repairs will not be covered by your warranty. Keep the headphones stored in a cool, dry place.**

The foam ear pads attached to the headphones may become worn or damaged if they are not handled or stored properly. If the foam ear pads do become damaged or worn out, the pads can be replaced separately from the headphone set. It is not necessary to replace the complete headphone set. The headphone replacement foam ear pads can be ordered in pairs. See your dealer for more information.

Battery Replacement

To change the batteries, do the following:

1. Turn the screw with a coin or screw driver to loosen, then slide open the battery door located on the left side of the headphones.
2. Replace the two AAA batteries in the compartment. Make sure that they are installed correctly, using the diagram on the inside of the battery compartment.
3. Replace the battery door and tighten the door screw.

If the headphones are to be stored for a long period of time, remove the batteries and keep them in a cool, dry place.

Audio/Video (A/V) Jacks

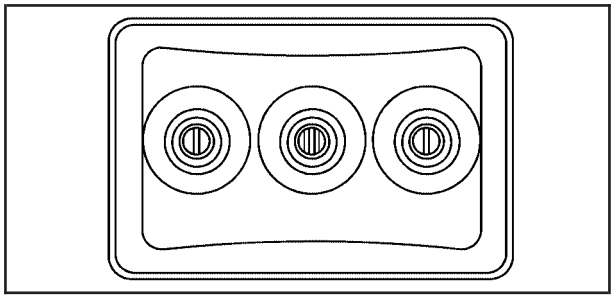

The A/V jacks are located on the rear of the floor console. The A/V jacks allow audio or video signals to be connected from an auxiliary device such as a camcorder or a video game unit to the RSE system. Adapter connectors or cables may be required to connect the auxiliary device to the A/V jacks. Refer to the manufacturer's instructions for proper usage.

The A/V jacks are color coded to match typical home entertainment system equipment. The yellow jack is for the video input. The white jack is for the left audio input. The red jack is for the right audio input.

Power for auxiliary devices is not supplied by the radio system.

To use the auxiliary inputs of the RSE system, connect an external auxiliary device to the color-coded A/V jacks and turn both the auxiliary device and the video screen power on. If the video screen is in the DVD player mode, pressing the AUX button on the remote control will switch the video screen from the DVD player mode to the auxiliary device. The radio can listen to the audio of the connected auxiliary device by sourcing to auxiliary. See *Radio with CD and DVD on page 268* for more information.

How to Change the Video Format When in the Auxiliary Mode

The auxiliary input video format is preset to NTSC. In some countries, the video format may be PAL. To change the video format, perform the following:

1. Press the display menu button on the remote control.
2. Select screen option and press enter to select.
3. Press the up or down arrow buttons to select the video format option and press enter to set the format.

Audio Output

Audio from the DVD player or auxiliary inputs may be heard through the following possible sources:

- Wireless Headphones
- Vehicle Speakers
- Vehicle wired headphone jacks on the rear seat audio system, if your vehicle has this feature.

The RSE system will always transmit the audio signal to the wireless headphones, if there is audio available. See “Headphones” earlier in this section for more information.

The DVD player is capable of outputting audio to the wired headphone jacks on the RSA system, if your vehicle has this feature. The DVD player may be selected as an audio source on the RSA system. See *Rear Seat Audio (RSA) on page 310* for more information.

When a device is connected to the A/V jacks, the rear seat passengers will be able to hear audio from the auxiliary device through the wireless or wired headphones. The front seat passenges will be able to listen to playback from this device through the vehicle speakers by selecting AUX as the source on the radio.

If a playback device is plugged into the radio’s auxiliary input jack, the front seat passengers will be able to listen to playback from this device through the vehicle speakers by selecting AUX as the source on the radio.

Video Screen

The video screen is located in the RSE overhead console.

To use the video screen, do the following:

1. Push the release button located on the RSE overhead console.
2. Rotate the screen to the desired position.

When the video screen is not in use, push it up into its locked position.

If a DVD is playing and the screen is raised to its locked position, the screen will remain on, this is normal, and the DVD will continue to play through the previous audio source.

The RSE overhead console contains the IR transmitters for the wireless headphones and the IR receivers for the remote control. They are located at the rear of the console.

Notice: **Avoid directly touching the video screen, as damage may occur. See "Cleaning the Video Screen" later in this section for more information.**

Remote Control

To use the remote control, aim it at the transmitter window at the rear of the RSE overhead console and press the desired button. Direct sunlight or very bright light may affect the ability of the RSE transmitter to receive signals from the remote control. If the remote control does not seem to be working, the batteries may need to be replaced. See "Battery Replacement" later in this section. Objects blocking the line of sight may also affect the function of the remote control.

If a CD or DVD is in the Radio DVD slot, the remote control power button can be used to turn on the video screen display and start the disc. The radio can also turn on the video screen display. See *Radio with CD and DVD on page 268* for more information.

Notice: **Storing the remote control in a hot area or in direct sunlight may damage it, and the repairs will not be covered by your warranty. Keep the remote control stored in a cool, dry place.**

Remote Control Buttons

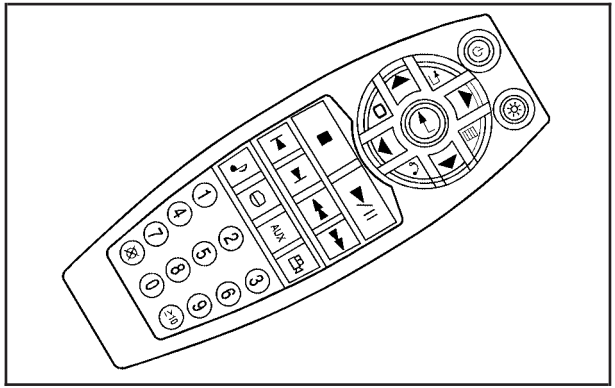

⏻ **(Power):** Press this button to turn the video screen on and off.

☼ **(Illumination):** Press this button to turn the remote control backlight on. The backlight will automatically time out after 7 to 10 seconds if no other button is pressed while the backlight is on.

(Title): Press this button to return the DVD to the main menu of the DVD. This function may vary for each disc.

(Main Menu): Press this button to access the DVD menu. The DVD menu is different on every DVD. Use the up, down, left, and right arrow buttons to move the cursor around the DVD menu. After making a selection press the enter button. This button only operates when using a DVD.

▲, ▼, ◀, ▶ **(Menu Navigation Arrows):** Use the arrow buttons to navigate through a menu.

(Enter): Press this button to select the choice that is highlighted in any menu.

(Display Menu): Press this button to adjust the brightness, screen display mode (normal, full, or zoom), and display the language menu.

(Return): Press this button to exit the current active menu and return to the previous menu. This button will operate only when the display menu or a DVD menu is active.

■ **(Stop):** Press this button to stop playing, rewinding, or fast forwarding a DVD. Press this button twice to return to the beginning of the DVD.

►‖ **(Play/Pause):** Press this button to start playing a DVD. Press this button while a DVD is playing to pause it. Press it again to continue playing the DVD.

When the DVD is playing, depending on the radio, you may be able to do slow play by pressing the pause button then pressing the fast forward button. The DVD will continue playing in a slow play mode. You may also, depending on the radio, perform reverse slow play by pressing the pause button and then pressing the fast reverse button. To cancel slow play mode, press the play/pause button.

|◄ **(Previous Track/Chapter):** Press this button to return to the start of the current track or chapter. Press this button again to go to the previous track or chapter. This button may not work when the DVD is playing the copyright information or the previews.

►| **(Next Track/Chapter):** Press this button to go to the beginning of the next chapter or track. This button may not work when the DVD is playing the copyright information or the previews.

◄◄ **(Fast Reverse):** Press this button to fast reverse the DVD or CD. To stop fast reversing a DVD video, press the play button. To stop fast reversing a DVD audio or CD, release the fast reverse button. This button may not work when the DVD is playing the copyright information or the previews.

►► **(Fast Forward):** Press this button to fast forward the DVD or CD. To stop fast forwarding a DVD video, press the play button. To stop fast forwarding a DVD audio or CD, release the fast forward button. This button may not work when the DVD is playing the copyright information or the previews.

♪ **(Audio):** Press this button to change audio tracks on DVDs that have this feature when the DVD is playing. The format and content of this function will vary for each disc.

(Subtitles): Press this button to turn ON/OFF subtitles and to move through subtitle options when a DVD is playing. The format and content of this function will vary for each disc.

AUX (Auxiliary): Press this button to switch the system between the DVD player and an auxiliary source.

If your vehicle has a third row video screen, the AUX button will control the source display on the second row video screen, and the third row video screen as described in the table below:

Aux Button Press	Second Row Screen	Third Row Screen
Default State (No Press)	DVD Media	DVD Media
First Press	Aux Video Source	Aux Video Source
Second Press	DVD Media	Aux Video Source
Third Press	Aux Video Source	DVD Media
Fourth Press	Return to Default State	Return to Default State

(Camera): Press this button to change camera angles on DVDs that have this feature when a DVD is playing. The format and content of this function will vary for each disc.

1 through 0 (Numeric Keypad): The numeric keypad provides the capability of direct chapter or track number selection.

(Clear): Press this button within three seconds after entering a numeric selection, to clear all numeric inputs.

≧ 10 (Double Digit Entries): Press this button to select chapter or track numbers greater than 9. Press this button before entering the number.

Battery Replacement

To change the remote control batteries, do the following:

1. Remove the battery compartment door located on the bottom of the remote control.
2. Replace the two AA batteries in the compartment. Make sure that they are installed correctly, using the diagram on the inside of the battery compartment.
3. Close the battery door securely.

If the remote control is to be stored for a long period of time, remove the batteries and keep them in a cool, dry place.

Problem	Recommended Action
No power.	The ignition might not be turned on or in accessory.
The picture does not fill the screen. There are black borders on the top and bottom or on both sides or it looks stretched out.	Check the display mode settings in the display menu.
In auxiliary mode, the picture moves or scrolls.	Check the auxiliary input connections at both devices.
The remote control does not work.	Check to make sure there is no obstruction between the remote control and the transmitter window. Check the batteries to make sure they are not dead or installed incorrectly.
After stopping the player, I push Play but sometimes the DVD starts where I left off and sometimes at the beginning.	If the stop button was pressed one time, the DVD player will resume playing where the DVD was stopped. If the stop button was pressed two times the DVD player will begin to play from the beginning of the DVD.

Problem	Recommended Action
The auxiliary source is running but there is no picture or sound.	Check that the RSE video screen is in the auxiliary source mode. Check the auxiliary input connections at both devices.
Sometimes the wireless headphone audio cuts out or buzzes.	Check for obstructions, low batteries, reception range, and interference from cellular telephone towers or by using your cellular telephone in the vehicle. Check that the headphones are facing the front of the vehicle.
I lost the remote and/or the headphones.	See your dealer for assistance.
The DVD is playing, but there is no picture or sound.	Check that the RSE video screen is sourced to the DVD player.

DVD Display Error Messages

The DVD display error message depends on which radio you have. The video screen may display one of the following:

Disc Load/Eject Error: This message is displayed when there are disc load or eject problems.

Disc Format Error: This message will be displayed, if the disc is inserted with the disc label wrong side up, or if the disc is damaged.

Disc Region Error: This message will be displayed, if the disc is not from a correct region.

No Disc Inserted: This message will be displayed, if no disc is present when the EJECT or DVD/AUX button is pressed on the radio.

DVD Distortion

Video distortion may occur when operating cellular phones, scanners, CB radios, Global Position Systems (GPS)*, two-way radios, mobile fax, or walkie talkies.

It may be necessary to turn off the DVD player when operating one of these devices in or near the vehicle.

*Excludes the OnStar® System.

Cleaning the RSE Overhead Console

When cleaning the RSE overhead console surface, use only a clean cloth dampened with clean water.

Cleaning the Video Screen

When cleaning the video screen, use only a clean cloth dampened with clean water. Use care when directly touching or cleaning the screen, as damage may result.

Rear Seat Audio (RSA)

This feature allows rear seat passengers to listen to and control any of the music sources: radio, CDs, DVDs, or other auxiliary sources. The rear seat passengers can control the same music sources the front seat passengers are listening to (dual control) or a different source. For example, rear seat passengers can listen to and control a CD through the headphones, while the driver listens to the radio through the speakers. The rear seat passengers have control of the volume for each set of headphones.

You can operate the RSA functions even when the main radio is off.

Audio can be heard through wired headphones (not included) plugged into the jacks on the RSA. If your vehicle has this feature, audio can also be heard on Channel 2 of the wireless headphones.

The audio system allows the rear speakers to continue playing even when the RSA audio is active through the headphones.

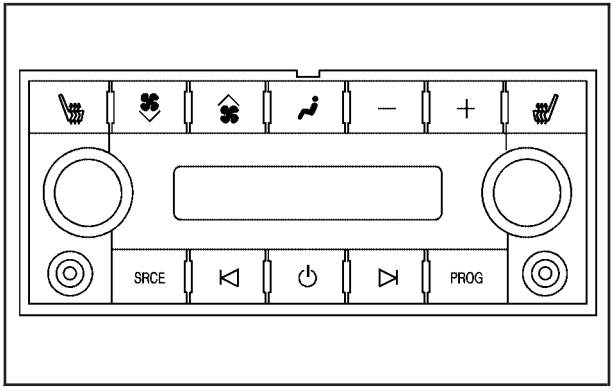

⏻ **(Power):** Press this button to turn RSA on and off.

Volume: Turn this knob to increase or to decrease the volume of the wired headphones. The left knob controls the left headphones and the right knob controls the right headphones.

SRCE (Source): Press this button to switch between the radio (AM/FM), XM (if equipped), CD, and if your vehicle has these features, DVD, front auxiliary, and rear auxiliary.

⏮ ⏭ **(Seek):** When listening to FM, AM, or XM (if equipped), press the seek up or the seek down arrow to go to the next or the previous station or channels and stay there. This function is inactive, with some radios, if the front seat passengers are listening to the radio.

Press and hold the seek up or seek down arrow until the display flashes, to tune to an individual station. The display will stop flashing after the buttons have not been pushed for more than two seconds. This function is inactive, with some radios, if the front seat passengers are listening to the radio.

While listening to a CD, press the seek up arrow to hear the next track on the CD. Press the seek down arrow to go back to the start of the current track (if more than ten seconds have played). This function is inactive, with some radios, if the front seat passengers are listening to the radio.

When a DVD video menu is being displayed, press the seek up arrow or seek down arrow to perform a cursor up or down on the menu. Hold the seek up or seek down arrow to perform a cursor right or left on the menu.

PROG (Program): Press this button to go to the next preset radio station or channel set on the main radio. This function is inactive, with some radios, if the front seat passengers are listening to the radio.

When a CD or DVD audio is playing, press this button to go to the beginning of the CD or DVD audio. This function is inactive, with some radios, if the front seat passengers are listening to the disc.

When a disc is playing in the CD or DVD changer, press this button to select the next disc, if multiple discs are loaded. This function is inactive, with some radios, if the front seat passengers are listening to the CD/DVD audio.

When a DVD video menu is being displayed, press the PROG button to perform the menu function, enter.

Theft-Deterrent Feature

THEFTLOCK® is designed to discourage theft of your vehicle's radio. The feature works automatically by learning a portion of the Vehicle Identification Number (VIN). If the radio is moved to a different vehicle, it will not operate. If the radio is removed from your vehicle, the original VIN in the radio can be used to trace the radio back to your vehicle.

With THEFTLOCK® activated, the radio will not operate if stolen.

Audio Steering Wheel Controls

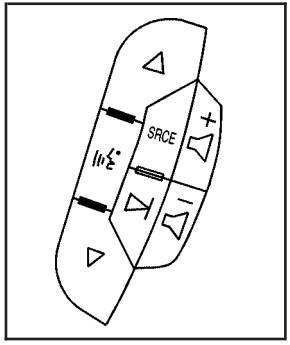

If your vehicle has audio steering wheel controls, they may differ depending on your vehicle's options. Some audio controls can be adjusted at the steering wheel. They include the following:

▽△ **(Next/Previous):** Press the up or the down arrow to go to the next or to the previous radio station stored as a favorite.

When a CD/DVD is playing, press the up or the down arrow to go to the next or previous track or chapter.

(Mute/Voice Recognition): Press and release this button to silence the vehicle speakers only. The audio of the wireless and wired headphones, if your vehicle has these features, will not be muted. Press and release this button again, to turn the sound on.

If your vehicle has the navigation system, press and hold this button for longer than one second to initiate voice recognition. See "Voice Recognition" in the Navigation System manual for more information.

If your vehicle has OnStar®, press and hold this button for longer than one second to interact with the OnStar system. If your vehicle also has the navigation system, press and hold this button for longer than one second to initiate voice recognition and say "OnStar" to enter OnStar® mode. See the *OnStar® System on page 163* in this manual for more information.

SRCE (Source): Press this button to switch between the radio (AM, FM), XM™ (if equipped), CD, and if your vehicle has these features, DVD, front auxiliary, and rear auxiliary.

+ ◁ – ◁ (Volume): Press the plus or minus button to increase or to decrease the radio volume.

▷| (Seek): Press the seek arrow to go to the next radio station while in AM, FM, or XM™ (if equipped). Press this button to go to the next track or chapter while sourced to the DVD slot. Press the button to go to the next disc while sourced to a CD or DVD changer, if multiple discs are loaded.

Radio Reception

You may experience frequency interference and static during normal radio reception if items such as cellphone chargers, vehicle convenience accessories, and external electronic devices are plugged into the accessory power outlet. If there is interference or static, unplug the item from the accessory power outlet.

AM

The range for most AM stations is greater than for FM, especially at night. The longer range can cause station frequencies to interfere with each other. For better radio reception, most AM radio stations will boost the power levels during the day, and then reduce these levels during the night. Static can also occur when things like storms and power lines interfere with radio reception. When this happens, try reducing the treble on your radio.

FM Stereo

FM stereo will give the best sound, but FM signals will reach only about 10 to 40 miles (16 to 65 km). Tall buildings or hills can interfere with FM signals, causing the sound to fade in and out.

XM™ Satellite Radio Service

XM™ Satellite Radio Service gives digital radio reception from coast-to-coast in the 48 contiguous United States, and in Canada. Just as with FM, tall buildings or hills can interfere with satellite radio signals, causing the sound to fade in and out. In addition, traveling or standing under heavy foliage, bridges, garages, or tunnels may cause loss of the XM™ signal for a period of time. The radio may display No Signl to indicate interference.

Care of Your CDs and DVDs

Handle CDs carefully. Store them in their original cases or other protective cases and away from direct sunlight and dust. The CD player scans the bottom surface of the disc. If the surface of a CD is damaged, such as cracked, broken, or scratched, the CD will not play properly or not at all. If the surface of a CD is soiled, take a soft, lint free cloth or dampen a clean, soft cloth in a mild, neutral detergent solution mixed with water, and clean it. Make sure the wiping process starts from the center to the edge.

Do not touch the bottom side of a CD while handling it; this could damage the surface. Pick up CDs by grasping the outer edges or the edge of the hole and the outer edge.

Care of the CD and DVD Player

The use of CD lens cleaners for CDs is not advised, due to the risk of contaminating the lens of the CD optics with lubricants internal to the CD mechanism.

Rear Side Window Antenna

Your AM-FM antenna is located in the passenger rear side window. Be sure that the inside surfaces of the rear side window is not scratched and that the lines on the glass are not damaged. If the inside surfaces are damaged, they could interfere with radio reception.

Notice: **Using a razor blade or sharp object to clear the inside of the rear side windows may affect radio reception or damage the antenna. Repairs would not be covered by your warranty. Do not clear the inside of the rear side windows with sharp objects.**

Notice: **Do not apply aftermarket glass tinting with metallic film. The metallic film in some tinting materials will interfere with or distort the incoming radio reception. Any damage caused to your antenna due to metallic tinting materials will not be covered by your warranty.**

Because this antenna is built into your rear side window, there is a reduced risk of damage caused by car washes and vandals.

If you choose to add an aftermarket cellular telephone to your vehicle, and the antenna needs to be attached to the glass, be sure that you do not damage the grid lines for the AM-FM antennas or place the cellular telephone antenna over the grid lines.

XM™ Satellite Radio Antenna System

The XM™ Satellite Radio antenna is located on the roof of your vehicle. Keep this antenna clear of snow and ice build up for clear radio reception.

If your vehicle has a sunroof, the performance of the XM™ system may be affected if the sunroof is open.

Loading items onto the roof of your vehicle can interfere with the performance of the XM™ system. Make sure the XM™ Satellite Radio antenna is not obstructed.

Chime Level Adjustment

The radio is used to adjust the vehicle's chime level. To change the volume level of the chime, press and hold pushbutton 6 with the ignition on and the radio power off. The volume level will change from the normal level to loud, and LOUD will appear on the radio display. To change back to the default or normal setting, press and hold pushbutton 6 again. The volume level will change from the loud level to normal, and NORMAL will appear on the radio display. Each time the chime volume is changed, three chimes will sound as an example of the new volume selected. Removing the radio and not replacing it with a factory radio or chime module will disable vehicle chimes.

Section 4 Driving Your Vehicle

Your Driving, the Road, and Your Vehicle 318
Defensive Driving 318
Drunken Driving 319
Control of a Vehicle 322
Braking 322
Anti-Lock Brake System (ABS) 323
Braking in Emergencies 325
Locking Differential 325
Road Sensing Suspension 325
StabiliTrak® System 326
All-Wheel Drive (AWD) System 328
Steering 329
Off-Road Recovery 331
Passing 331
Loss of Control 333
Off-Road Driving 334
Driving at Night 350
Driving in Rain and on Wet Roads 351
City Driving 354
Freeway Driving 355
Before Leaving on a Long Trip 356
Highway Hypnosis 357
Hill and Mountain Roads 358
Winter Driving 360
If Your Vehicle is Stuck in Sand, Mud, Ice, or Snow 364
Rocking Your Vehicle to Get It Out 364
Recovery Hooks 365
Loading Your Vehicle 366

Towing 372
Towing Your Vehicle 372
Recreational Vehicle Towing 372
Autoride® 374
Towing a Trailer 375
Trailer Recommendations 388

Your Driving, the Road, and Your Vehicle

Defensive Driving

The best advice anyone can give about driving is: Drive defensively.

Please start with a very important safety device in your vehicle: Buckle up. See *Safety Belts: They Are for Everyone on page 38*.

⚠ CAUTION:

Defensive driving really means "Be ready for anything." On city streets, rural roads, or expressways, it means "Always expect the unexpected." Assume that pedestrians or other drivers are going to be careless and make mistakes. Anticipate what they might do and be ready. Rear-end collisions are about the most preventable of accidents. Yet they are common. Allow enough following distance. Defensive driving requires that a driver concentrate on the driving task. Anything that distracts from the driving task makes proper defensive driving more difficult and can even cause a collision, with resulting injury. Ask a passenger to help do these things, or pull off the road in a safe place to do them. These simple defensive driving techniques could save your life.

Drunken Driving

Death and injury associated with drinking and driving is a national tragedy. It is the number one contributor to the highway death toll, claiming thousands of victims every year.

Alcohol affects four things that anyone needs to drive a vehicle:

- Judgment
- Muscular Coordination
- Vision
- Attentiveness

Police records show that almost half of all motor vehicle-related deaths involve alcohol. In most cases, these deaths are the result of someone who was drinking and driving. In recent years, more than 16,000 annual motor vehicle-related deaths have been associated with the use of alcohol, with more than 300,000 people injured.

Many adults — by some estimates, nearly half the adult population — choose never to drink alcohol, so they never drive after drinking. For persons under 21, it is against the law in every U.S. state to drink alcohol. There are good medical, psychological, and developmental reasons for these laws.

The obvious way to eliminate the leading highway safety problem is for people never to drink alcohol and then drive. But what if people do? How much is “too much” if someone plans to drive? It is a lot less than many might think. Although it depends on each person and situation, here is some general information on the problem.

The Blood Alcohol Concentration (BAC) of someone who is drinking depends upon four things:

- The amount of alcohol consumed
- The drinker’s body weight
- The amount of food that is consumed before and during drinking
- The length of time it has taken the drinker to consume the alcohol

According to the American Medical Association, a 180 lb (82 kg) person who drinks three 12 ounce (355 ml) bottles of beer in an hour will end up with a BAC of about 0.06 percent. The person would reach the same BAC by drinking three 4 ounce (120 ml) glasses of wine or three mixed drinks if each had 1-1/2 ounces (45 ml) of liquors like whiskey, gin, or vodka.

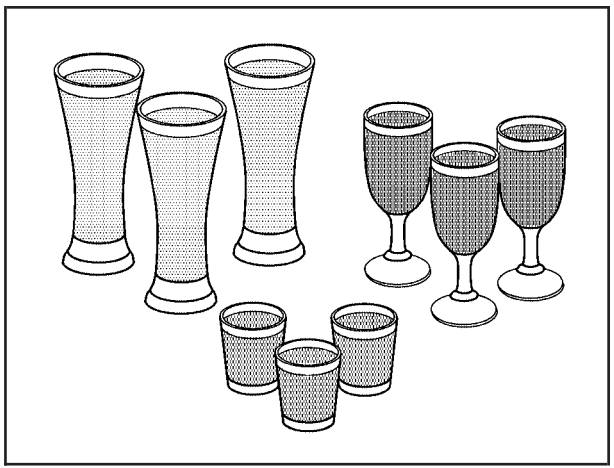

It is the amount of alcohol that counts. For example, if the same person drank three double martinis (3 ounces or 90 ml of liquor each) within an hour, the person's BAC would be close to 0.12 percent. A person who consumes food just before or during drinking will have a somewhat lower BAC level.

There is a gender difference, too. Women generally have a lower relative percentage of body water than men. Since alcohol is carried in body water, this means that a woman generally will reach a higher BAC level than a man of her same body weight will when each has the same number of drinks.

The law in most U.S. states, and throughout Canada, sets the legal limit at 0.08 percent. In some other countries, the limit is even lower. For example, it is 0.05 percent in both France and Germany. The BAC limit for all commercial drivers in the United States is 0.04 percent.

The BAC will be over 0.10 percent after three to six drinks (in one hour). Of course, as we have seen, it depends on how much alcohol is in the drinks, and how quickly the person drinks them.

But the ability to drive is affected well below a BAC of 0.10 percent. Research shows that the driving skills of many people are impaired at a BAC approaching 0.05 percent, and that the effects are worse at night. All drivers are impaired at BAC levels above 0.05 percent. Statistics show that the chance of being in a collision increases sharply for drivers who have a BAC of 0.05 percent or above. A driver with a BAC level of 0.06 percent has doubled his or her chance of having a collision. At a BAC level of 0.10 percent, the chance of this driver having a collision is 12 times greater; at a level of 0.15 percent, the chance is 25 times greater!

The body takes about an hour to rid itself of the alcohol in one drink. No amount of coffee or number of cold showers will speed that up. “I will be careful” is not the right answer. What if there is an emergency, a need to take sudden action, as when a child darts into the street? A person with even a moderate BAC might not be able to react quickly enough to avoid the collision.

There is something else about drinking and driving that many people do not know. Medical research shows that alcohol in a person’s system can make crash injuries worse, especially injuries to the brain, spinal cord, or heart. This means that when anyone who has been drinking — driver or passenger — is in a crash, that person’s chance of being killed or permanently disabled is higher than if the person had not been drinking.

⚠ CAUTION:

Drinking and then driving is very dangerous. Your reflexes, perceptions, attentiveness, and judgment can be affected by even a small amount of alcohol. You can have a serious — or even fatal — collision if you drive after drinking. Please do not drink and drive or ride with a driver who has been drinking. Ride home in a cab; or if you are with a group, designate a driver who will not drink.

Control of a Vehicle

You have three systems that make your vehicle go where you want it to go. They are the brakes, the steering, and the accelerator. All three systems have to do their work at the places where the tires meet the road.

Sometimes, as when you are driving on snow or ice, it is easy to ask more of those control systems than the tires and road can provide. That means you can lose control of your vehicle. See *StabiliTrak® System on page 326*.

Adding non-GM accessories can affect your vehicle's performance. See *Accessories and Modifications on page 393*.

Braking

See *Brake System Warning Light on page 228*.

Braking action involves perception time and reaction time.

First, you have to decide to push on the brake pedal. That is perception time. Then you have to bring up your foot and do it. That is reaction time.

Average reaction time is about three-fourths of a second. But that is only an average. It might be less with one driver and as long as two or three seconds or more with another. Age, physical condition, alertness, coordination, and eyesight all play a part. So do alcohol, drugs, and frustration. But even in three-fourths of a second, a vehicle moving at 60 mph (100 km/h) travels 66 feet (20 m). That could be a lot of distance in an emergency, so keeping enough space between your vehicle and others is important.

And, of course, actual stopping distances vary greatly with the surface of the road, whether it is pavement or gravel; the condition of the road, whether it is wet, dry, or icy; tire tread; the condition of your brakes; the weight of the vehicle; and the amount of brake force applied.

Avoid needless heavy braking. Some people drive in spurts — heavy acceleration followed by heavy braking — rather than keeping pace with traffic. This is a mistake. Your brakes may not have time to cool between hard stops. Your brakes will wear out much faster if you do a lot of heavy braking. If you keep pace with the traffic and allow realistic following distances, you will eliminate a lot of unnecessary braking. That means better braking and longer brake life.

If your engine ever stops while you are driving, brake normally but do not pump your brakes. If you do, the pedal may get harder to push down. If your engine stops, you will still have some power brake assist. But you will use it when you brake. Once the power assist is used up, it may take longer to stop and the brake pedal will be harder to push.

Adding non-GM accessories can affect your vehicle's performance. See *Accessories and Modifications on page 393*.

Anti-Lock Brake System (ABS)

Your vehicle has the Anti-Lock Brake System (ABS), an advanced electronic braking system that will help prevent a braking skid.

When you start your engine and begin to drive away, ABS will check itself. You may hear a momentary motor or clicking noise while this test is going on. This is normal.

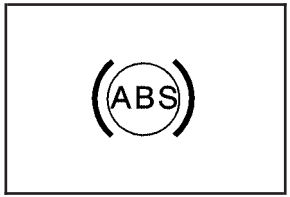

If there is a problem with ABS, this warning light will stay on. See *Anti-Lock Brake System Warning Light on page 229*.

Along with ABS, your vehicle has a Dynamic Rear Proportioning (DRP) system. If there is a DRP problem, both the brake and ABS warning lights will come on accompanied by a 10-second chime. The lights and chime will come on each time the ignition is turned on until the problem is repaired. See your dealer for service.

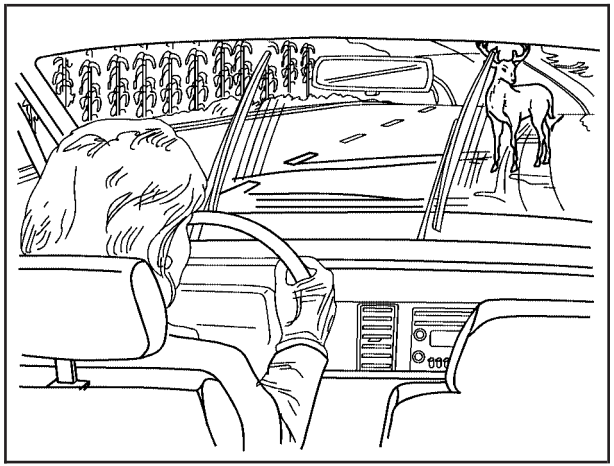

Let us say the road is wet and you are driving safely. Suddenly, an animal jumps out in front of you. You slam on the brakes and continue braking. Here is what happens with ABS:

A computer senses that wheels are slowing down. If one of the wheels is about to stop rolling, the computer will separately work the brakes at each front wheel and at both rear wheels.

ABS can change the brake pressure faster than any driver could. The computer is programmed to make the most of available tire and road conditions. This can help you steer around the obstacle while braking hard.

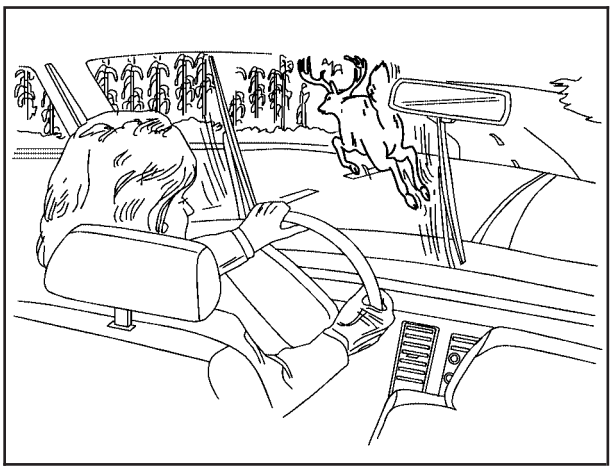

As you brake, your computer keeps receiving updates on wheel speed and controls braking pressure accordingly.

Remember: ABS does not change the time you need to get your foot up to the brake pedal or always decrease stopping distance. If you get too close to the vehicle in front of you, you will not have time to apply your brakes if that vehicle suddenly slows or stops. Always leave enough room up ahead to stop, even though you have ABS.

Using ABS

Do not pump the brakes. Just hold the brake pedal down firmly and let anti-lock work for you. You may feel the brakes vibrate, or you may notice some noise, but this is normal.

Braking in Emergencies

With ABS, you can steer and brake at the same time. In many emergencies, steering can help you more than even the very best braking.

Locking Differential

If your vehicle has this feature, your locking differential can give you additional traction on snow, mud, ice, sand or gravel. It works like a standard axle most of the time, but when one of the wheels has no traction and the other does, this feature will allow the wheel with traction to move the vehicle.

Road Sensing Suspension

The Road Sensing Suspension (RSS) feature provides superior vehicle ride and handling under a variety of passenger and loading conditions.

The system is fully automatic and uses a computer controller to continuously monitor vehicle speed, wheel to body position, lift/dive and steering position of the vehicle. The controller then sends signals to each shock absorber to independently adjust the damping level to provide the optimum vehicle ride.

RSS also interacts with the tow/haul mode that, when engaged, will provide additional control of the shock absorbers. This additional control results in better ride and handling characteristics when the vehicle is loaded or towing a trailer. See “Tow/Haul Mode” under *Towing a Trailer on page 375*.

StabiliTrak® System

Your vehicle is equipped with StabiliTrak®, which combines antilock brake, traction and stability control systems and helps the driver maintain directional control of the vehicle in most driving conditions.

When you first start your vehicle and begin to drive away, the system performs several diagnostic checks to insure there are no problems. You may hear or feel the system working. This is normal and does not mean there is a problem with your vehicle. The system should initialize before the vehicle reaches 20 mph (32 km/h). In some cases, it may take approximately two miles of driving before the system initializes.

If the system fails to turn on or activate, the STABILITRAK OFF or SERVICE STABILITRAK message will be displayed. If the vehicle has gone through heavy acceleration or braking or multiple turns during the first two miles of driving after starting your vehicle, these messages may also appear. If this is the case, your vehicle does not need servicing. You will need to turn the vehicle off and then restart it to initialize StabiliTrak®. If either message appears on the Driver Information Center (DIC), and your vehicle hasn’t gone through hard acceleration, braking or multiple turns in the first two miles of driving, your vehicle should be taken in for service. For more information on the stability messages, see *Driver Information Center (DIC) on page 239*.

StabiliTrak® activates when the computer senses that your vehicle is just starting to spin, as it might if you hit a patch of ice or other slippery spot on the road. When the system activates, you may hear a noise or feel a vibration in the brake pedal. This is normal. The system is designed to help you in bad weather or other difficult driving situations by making the most of whatever road conditions will permit.

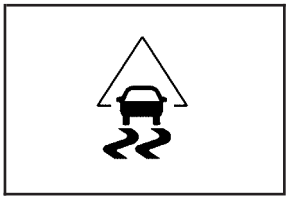

The StabiliTrak® light will flash on the instrument panel cluster when the system is both on and activated.

StabiliTrak® and part of the traction control system can be turned off or back on by pressing the StabiliTrak® button located on the instrument panel.

When the system is turned off, the StabiliTrak® light will flash, and the STABILITRAK OFF message will appear on the DIC to warn the driver that both the stability system and part of the traction control system are disabled. Your vehicle will still have brake-traction control when StabiliTrak® is off, but will not be able to use the engine speed management system. See “Traction Control Operation” next for more information.

When the StabiliTrak® system has been turned off, you may still hear system noises as a result of the brake-traction control coming on.

To limit wheel spin and realize the full benefits of the stability enhancement system, you should normally leave StabiliTrak® on, but it may be necessary to turn the system off if your vehicle is stuck in sand, mud, ice or snow, and you want to “rock” your vehicle to attempt to free it. It may also be necessary to turn off the system when driving in extreme off-road conditions where high wheel spin is required. See *If Your Vehicle is Stuck in Sand, Mud, Ice, or Snow on page 364*.

Traction Control Operation

The traction control system is part of the StabiliTrak® system. Traction control limits wheel spin by reducing engine power to the wheels (engine speed management) and by applying brakes to each individual wheel (brake-traction control) as necessary.

The traction control system is enabled automatically when you start your vehicle, and it will activate and display the StabiliTrak® light if it senses that any of the wheels are spinning or beginning to lose traction while driving.

If you turn off StabiliTrak®, only the brake-traction control portion of traction control will work. The engine speed management will be disabled. In this state, engine power is not reduced automatically and the driven wheels can spin more freely. This can cause the brake-traction control to activate constantly.

Notice: **If you allow the wheel(s) of one axle to spin excessively while the StabiliTrak®, ABS and brake warning lights and the SERVICE STABILITRAK message are displayed, you could damage the transfer case. The repairs would not be covered by your warranty. Reduce engine power and do not spin the wheel(s) excessively while these lights and this message are displayed.**

The traction control system may activate on dry or rough roads or under conditions such as heavy acceleration while turning or abrupt upshifts/downshifts of the transmission. When this happens you may notice a reduction in acceleration, or may hear a noise or vibration. This is normal.

If your vehicle is in cruise control when the system activates, the StabiliTrak® light will flash and the cruise control will automatically disengage. When road conditions allow you to use cruise again, you may re-engage the cruise control. See *Cruise Control on page 194*.

StabiliTrak® may also turn off automatically if it determines that a problem exists with the system. If the problem does not clear itself after restarting the vehicle, you should see your dealer for service.

Adding non-GM accessories can affect your vehicle's performance. See *Accessories and Modifications on page 393* for more information.

All-Wheel Drive (AWD) System

If your vehicle is equipped with this feature, engine power is sent to all four wheels when extra traction is needed. This is like four-wheel drive, but there is no separate lever or switch to engage or disengage the front axle. It is fully automatic, and adjusts itself as needed for road conditions.

Steering

Power Steering

If you lose power steering assist because the engine stops or the system is not functioning, you can steer but it will take much more effort.

Steering Tips

It is important to take curves at a reasonable speed.

A lot of the “driver lost control” accidents mentioned on the news happen on curves. Here is why:

Experienced driver or beginner, each of us is subject to the same laws of physics when driving on curves. The traction of the tires against the road surface makes it possible for the vehicle to change its path when you turn the front wheels. If there is no traction, inertia will keep the vehicle going in the same direction. If you have ever tried to steer a vehicle on wet ice, you will understand this.

The traction you can get in a curve depends on the condition of your tires and the road surface, the angle at which the curve is banked, and your speed. While you are in a curve, speed is the one factor you can control.

Suppose you are steering through a sharp curve. Then you suddenly accelerate. Both control systems — steering and acceleration — have to do their work where the tires meet the road. Adding the sudden acceleration can demand too much of those places. You can lose control. See *StabiliTrak® System on page 326*.

What should you do if this ever happens? Ease up on the accelerator pedal, steer the vehicle the way you want it to go, and slow down.

If you have StabiliTrak®, you may see the STABILITY SYSTEM ACTIVE message on the message center. See “Stability System Active Message” under *DIC Warnings and Messages on page 245*.

Speed limit signs near curves warn that you should adjust your speed. Of course, the posted speeds are based on good weather and road conditions. Under less favorable conditions you will want to go slower.

If you need to reduce your speed as you approach a curve, do it before you enter the curve, while your front wheels are straight ahead.

Try to adjust your speed so you can “drive” through the curve. Maintain a reasonable, steady speed. Wait to accelerate until you are out of the curve, and then accelerate gently into the straightaway.

Adding non-GM accessories can affect your vehicle’s performance. See *Accessories and Modifications on page 393*.

Steering in Emergencies

There are times when steering can be more effective than braking. For example, you come over a hill and find a truck stopped in your lane, or a car suddenly pulls out from nowhere, or a child darts out from between parked cars and stops right in front of you. You can avoid these problems by braking — if you can stop in time. But sometimes you cannot; there is not room. That is the time for evasive action — steering around the problem.

Your vehicle can perform very well in emergencies like these. First apply your brakes. See *Braking on page 322*. It is better to remove as much speed as you can from a possible collision. Then steer around the problem, to the left or right depending on the space available.

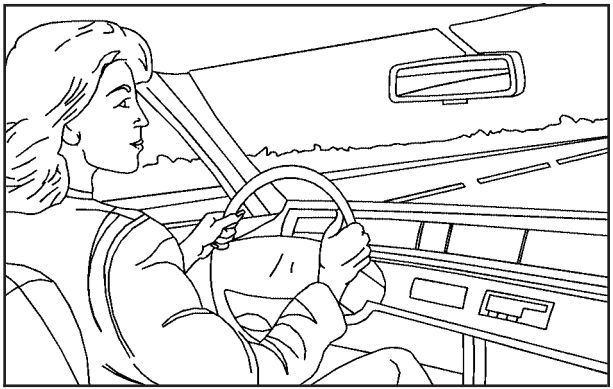

An emergency like this requires close attention and a quick decision. If you are holding the steering wheel at the recommended 9 and 3 o’clock positions, you can turn it a full 180 degrees very quickly without removing either hand. But you have to act fast, steer quickly, and just as quickly straighten the wheel once you have avoided the object.

The fact that such emergency situations are always possible is a good reason to practice defensive driving at all times and wear safety belts properly.

Off-Road Recovery

You may find that your right wheels have dropped off the edge of a road onto the shoulder while you are driving.

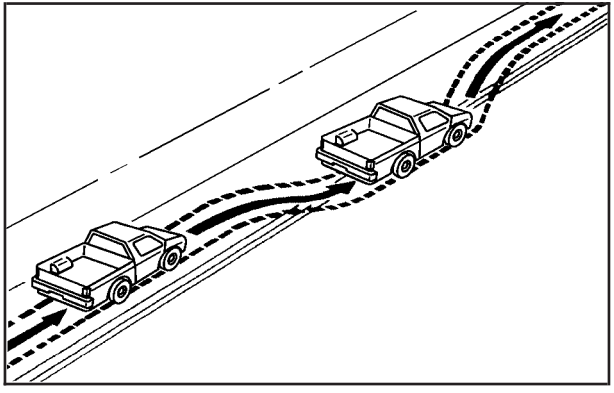

If the level of the shoulder is only slightly below the pavement, recovery should be fairly easy. Ease off the accelerator and then, if there is nothing in the way, steer so that your vehicle straddles the edge of the pavement. You can turn the steering wheel up to one-quarter turn until the right front tire contacts the pavement edge. Then turn your steering wheel to go straight down the roadway.

Passing

The driver of a vehicle about to pass another on a two-lane highway waits for just the right moment, accelerates, moves around the vehicle ahead, then goes back into the right lane again. A simple maneuver?

Not necessarily! Passing another vehicle on a two-lane highway is a potentially dangerous move, since the passing vehicle occupies the same lane as oncoming traffic for several seconds. A miscalculation, an error in judgment, or a brief surrender to frustration or anger can suddenly put the passing driver face to face with the worst of all traffic accidents — the head-on collision.

So here are some tips for passing:

- Drive ahead. Look down the road, to the sides and to crossroads for situations that might affect your passing patterns. If you have any doubt whatsoever about making a successful pass, wait for a better time.
- Watch for traffic signs, pavement markings and lines. If you can see a sign up ahead that might indicate a turn or an intersection, delay your pass. A broken center line usually indicates it is all right to pass, providing the road ahead is clear. Never cross a solid line on your side of the lane or a double solid line, even if the road seems empty of approaching traffic.
- Do not get too close to the vehicle you want to pass while you are awaiting an opportunity. For one thing, following too closely reduces your area of vision, especially if you are following a larger vehicle. Also, you will not have adequate space if the vehicle ahead suddenly slows or stops. Keep back a reasonable distance.
- When it looks like a chance to pass is coming up, start to accelerate but stay in the right lane and do not get too close. Time your move so you will be increasing speed as the time comes to move into the other lane. If the way is clear to pass, you will have a running start that more than makes up for the distance you would lose by dropping back. And if something happens to cause you to cancel your pass, you need only slow down and drop back again and wait for another opportunity.
- If other vehicles are lined up to pass a slow vehicle, wait your turn. But take care that someone is not trying to pass you as you pull out to pass the slow vehicle. Remember to glance over your shoulder and check the blind spot.
- Check your mirrors, glance over your shoulder and start your left lane change signal before moving out of the right lane to pass. When you are far enough ahead of the passed vehicle to see its front in your inside mirror, activate your right lane change signal and move back into the right lane. Remember that if your passenger side outside mirror is convex, the vehicle you just passed may seem to be farther away from you than it really is.

- Try not to pass more than one vehicle at a time on two-lane roads. Reconsider before passing the next vehicle.
- Do not overtake a slowly moving vehicle too rapidly. Even though the brake lamps are not flashing, it may be slowing down or starting to turn.
- If you are being passed, make it easy for the following driver to get ahead of you. Perhaps you can ease a little to the right.

Loss of Control

Let us review what driving experts say about what happens when the three control systems — brakes, steering, and acceleration — do not have enough friction where the tires meet the road to do what the driver has asked.

In any emergency, do not give up. Keep trying to steer and constantly seek an escape route or area of less danger.

Skidding

In a skid, a driver can lose control of the vehicle. Defensive drivers avoid most skids by taking reasonable care suited to existing conditions, and by not overdriving those conditions. But skids are always possible.

The three types of skids correspond to your vehicle's three control systems. In the braking skid, your wheels are not rolling. In the steering or cornering skid, too much speed or steering in a curve causes tires to slip and lose cornering force. And in the acceleration skid, too much throttle causes the driving wheels to spin.

A cornering skid is best handled by easing your foot off the accelerator pedal.

Remember: Any traction control system helps avoid only the acceleration skid. If your traction control system is off, then an acceleration skid is also best handled by easing your foot off the accelerator pedal.

If your vehicle starts to slide, ease your foot off the accelerator pedal and quickly steer the way you want the vehicle to go. If you start steering quickly enough, your vehicle may straighten out. Always be ready for a second skid if it occurs.

Of course, traction is reduced when water, snow, ice, gravel, or other material is on the road. For safety, you will want to slow down and adjust your driving to these conditions. It is important to slow down on slippery surfaces because stopping distance will be longer and vehicle control more limited.

While driving on a surface with reduced traction, try your best to avoid sudden steering, acceleration, or braking, including reducing vehicle speed by shifting to a lower gear. Any sudden changes could cause the tires to slide. You may not realize the surface is slippery until your vehicle is skidding. Learn to recognize warning clues — such as enough water, ice, or packed snow on the road to make a mirrored surface — and slow down when you have any doubt.

Remember: Any Anti-Lock Brake System (ABS) helps avoid only the braking skid.

Off-Road Driving

This off-road guide is for vehicles that have all-wheel drive. If your vehicle does not have all-wheel drive or if it has 20-inch tire/wheel assemblies, you should not drive off-road unless you are on a level, solid surface. See *Tires on page 450*.

Many of the same design features that help make your vehicle responsive on paved roads during poor weather conditions — features like all-wheel drive — help make it much better suited for off-road use. Its higher ground clearance also helps your vehicle step over some off-road obstacles. But your vehicle does not have features like special underbody shielding and a transfer case low gear range, things that are usually thought necessary for extended or severe off-road service.

Also, see *Braking on page 322*.

Off-road driving can be great fun. But it does have some definite hazards. The greatest of these is the terrain itself.

“Off-roading” means you have left the North American road system behind. Traffic lanes are not marked. Curves are not banked. There are no road signs. Surfaces can be slippery, rough, uphill, or downhill. In short, you have gone right back to nature.

Off-road driving involves some new skills. And that is why it is very important that you read this guide. You will find many driving tips and suggestions. These will help make your off-road driving safer and more enjoyable.

If you think you will need some more ground clearance at the front of your vehicle, you can remove the front fascia lower air dam.

The front fascia lower air dam is held in place by two bolts and 10 snap features. The bolts and snap features are accessible from underneath the front fascia.

The following steps must be performed on the bolts and snap features to remove the air dam:

1. Remove the two outboard air dam bolts.
2. With a flat-blade screwdriver, push down on the snap features and disengage the snaps.
3. After the bolts are removed and the snaps are disengaged, push forward on the air dam until it is free.

When you are back on roads, though, be sure to replace the air dam.

Notice: **Operating your vehicle for extended periods without the front fascia lower air dam installed can cause improper air flow to the engine. Always be sure to replace the front fascia air dam when you are finished off-road driving.**

To reinstall the lower air dam do the following:

1. Line up the snap features and push the air dam rearward to engage the snaps.
2. Install the two outboard bolts.

Before You Go Off-Roading

There are some things to do before you go out. For example, be sure to have all necessary maintenance and service work done. Check to make sure all underbody shields, if the vehicle has them, are properly attached. Is there enough fuel? Is the spare tire fully inflated? Are the fluid levels up where they should be? What are the local laws that apply to off-roading where you will be driving? If you do not know, you should check with law enforcement people in the area. Will you be on someone's private land? If so, be sure to get the necessary permission.

Loading Your Vehicle for Off-Road Driving

⚠ CAUTION:

- **Cargo on the load floor piled higher than the seatbacks can be thrown forward during a sudden stop. You or your passengers could be injured. Keep cargo below the top of the seatbacks.**
- **Unsecured cargo on the load floor can be tossed about when driving over rough terrain. You or your passengers can be struck by flying objects. Secure the cargo properly.**
- **Heavy loads on the roof raise the vehicle's center of gravity, making it more likely to roll over. You can be seriously or fatally injured if the vehicle rolls over. Put heavy loads inside the cargo area, not on the roof. Keep cargo in the cargo area as far forward and low as possible.**

There are some important things to remember about how to load your vehicle.

- The heaviest things should be on the load floor and forward of the rear axle. Put heavier items as far forward as you can.
- Be sure the load is secured properly, so driving on the off-road terrain does not toss things around.

You will find other important information in this manual. See *Loading Your Vehicle on page 366*, *Luggage Carrier on page 172*, and *Tires on page 450*.

Environmental Concerns

Off-road driving can provide wholesome and satisfying recreation. However, it also raises environmental concerns. We recognize these concerns and urge every off-roader to follow these basic rules for protecting the environment:

- Always use established trails, roads, and areas that have been specially set aside for public off-road recreational driving; obey all posted regulations.
- Avoid any driving practice that could damage the environment — shrubs, flowers, trees, grasses — or disturb wildlife. This includes wheel-spinning, breaking down trees, or unnecessary driving through streams or over soft ground.
- Always carry a litter bag — make sure all refuse is removed from any campsite before leaving.
- Take extreme care with open fires where permitted, camp stoves, and lanterns.
- Never park your vehicle over dry grass or other combustible materials that could catch fire from the heat of the vehicle's exhaust system.

Traveling to Remote Areas

It makes sense to plan your trip, especially when going to a remote area. Know the terrain and plan your route. You are much less likely to get bad surprises. Get accurate maps of trails and terrain. Try to learn of any blocked or closed roads.

It is also a good idea to travel with at least one other vehicle. If something happens to one of them, the other can help quickly.

Getting Familiar with Off-Road Driving

It is a good idea to practice in an area that is safe and close to home before you go into the wilderness. Off-road driving does require some new and different driving skills. Here is what we mean.

Tune your senses to different kinds of signals. Your eyes, for example, need to constantly sweep the terrain for unexpected obstacles. Your ears need to listen for unusual tire or engine sounds. With your arms, hands, feet, and body, you will need to respond to vibrations and vehicle bounce.

Controlling your vehicle is the key to successful off-road driving. One of the best ways to control your vehicle is to control your speed. Here are some things to keep in mind. At higher speeds:

- You approach things faster and you have less time to scan the terrain for obstacles.
- You have less time to react.
- You have more vehicle bounce when you drive over obstacles.
- You will need more distance for braking, especially since you are on an unpaved surface.

⚠ CAUTION:

When you are driving off-road, bouncing and quick changes in direction can easily throw you out of position. This could cause you to lose control and crash. So, whether you are driving on or off the road, you and your passengers should wear safety belts.

Scanning the Terrain

Off-road driving can take you over many different kinds of terrain. You need to be familiar with the terrain and its many different features. Here are some things to consider.

Surface Conditions: Off-roading can take you over hard-packed dirt, gravel, rocks, grass, sand, mud, snow, or ice. Each of these surfaces affects the steering, acceleration, and braking of your vehicle in different ways. Depending upon the kind of surface you are on, you may experience slipping, sliding, wheel spinning, delayed acceleration, poor traction, and longer braking distances.

Surface Obstacles: Unseen or hidden obstacles can be hazardous. A rock, log, hole, rut, or bump can startle you if you are not prepared for them. Often these obstacles are hidden by grass, bushes, snow, or even the rise and fall of the terrain itself. Here are some things to consider:

- Is the path ahead clear?
- Will the surface texture change abruptly up ahead?
- Does the travel take you uphill or downhill? There is more discussion of these subjects later.
- Will you have to stop suddenly or change direction quickly?

When you drive over obstacles or rough terrain, keep a firm grip on the steering wheel. Ruts, troughs, or other surface features can jerk the wheel out of your hands if you are not prepared.

When you drive over bumps, rocks, or other obstacles, the wheels can leave the ground. If this happens, even with one or two wheels, you cannot control the vehicle as well or at all.

Because you will be on an unpaved surface, it is especially important to avoid sudden acceleration, sudden turns, or sudden braking.

In a way, off-road driving requires a different kind of alertness from driving on paved roads and highways. There are no road signs, posted speed limits, or signal lights. You have to use your own good judgment about what is safe and what is not.

Drinking and driving can be very dangerous on any road. And this is certainly true for off-road driving. At the very time you need special alertness and driving skills, your reflexes, perceptions, and judgment can be affected by even a small amount of alcohol. You could have a serious — or even fatal — accident if you drink and drive or ride with a driver who has been drinking. See *Drunken Driving on page 319*.

Driving on Off-Road Hills

Off-road driving often takes you up, down, or across a hill. Driving safely on hills requires good judgment and understanding of what your vehicle can and cannot do. There are some hills that simply cannot be driven, no matter how well built the vehicle.

⚠ CAUTION:

Many hills are simply too steep for any vehicle. If you drive up them, you will stall. If you drive down them, you cannot control your speed. If you drive across them, you will roll over. You could be seriously injured or killed. If you have any doubt about the steepness, do not drive the hill.

Approaching a Hill

When you approach a hill, you need to decide if it is one of those hills that is just too steep to climb, descend, or cross. Steepness can be hard to judge. On a very small hill, for example, there may be a smooth, constant incline with only a small change in elevation where you can easily see all the way to the top. On a large hill, the incline may get steeper as you near the top, but you may not see this because the crest of the hill is hidden by bushes, grass or shrubs.

Here are some other things to consider as you approach a hill.

- Is there a constant incline, or does the hill get sharply steeper in places?
- Is there good traction on the hillside, or will the surface cause tire slipping?
- Is there a straight path up or down the hill so you will not have to make turning maneuvers?

- Are there obstructions on the hill that can block your path, such as boulders, trees, logs, or ruts?
- What is beyond the hill? Is there a cliff, an embankment, a drop-off, a fence? Get out and walk the hill if you do not know. It is the smart way to find out.
- Is the hill simply too rough? Steep hills often have ruts, gullies, troughs, and exposed rocks because they are more susceptible to the effects of erosion.

Driving Uphill

Once you decide you can safely drive up the hill, you need to take some special steps.

- Use a low gear and get a firm grip on the steering wheel.
- Get a smooth start up the hill and try to maintain your speed. Do not use more power than you need, because you do not want the wheels to start spinning or sliding.
- Try to drive straight up the hill if at all possible. If the path twists and turns, you might want to find another route.

⚠ CAUTION:

Turning or driving across steep hills can be dangerous. You could lose traction, slide sideways, and possibly roll over. You could be seriously injured or killed. When driving up hills, always try to go straight up.

- Ease up on your speed as you approach the top of the hill.
- Attach a flag to the vehicle to make you more visible to approaching traffic on trails or hills.

- Sound the horn as you approach the top of the hill to let opposing traffic know you are there.
- Use the headlamps even during the day. They make you more visible to oncoming traffic.

⚠ CAUTION:

Driving to the top (crest) of a hill at full speed can cause an accident. There could be a drop-off, embankment, cliff, or even another vehicle. You could be seriously injured or killed. As you near the top of a hill, slow down and stay alert.

Q: What should I do if my vehicle stalls, or is about to stall, and I cannot make it up the hill?

A: If this happens, there are some things you should do, and there are some things you must not do? First, here is what you *should* do:

- Push the brake pedal to stop the vehicle and keep it from rolling backwards. Also, apply the parking brake.
- If the engine is still running, shift the transmission to REVERSE (R), release the parking brake, and slowly back down the hill in REVERSE (R).
- If the engine has stopped running, you will need to restart it. With the brake pedal pressed and the parking brake still applied, shift the transmission to PARK (P) and restart the engine. Then shift to REVERSE (R), release the parking brake, and slowly back down the hill as straight as possible in REVERSE (R).
- As you are backing down the hill, put your left hand on the steering wheel at the 12 o'clock position. This way you will be able to tell if the wheels are straight and maneuver as you back down. It is best that you back down the hill with the wheels straight rather than in the left or right direction. Turning the wheel too far to the left or right will increase the possibility of a rollover.

Here are some things you *must not* do if you stall, or are about to stall, when going up a hill.

- Never attempt to prevent a stall by shifting into NEUTRAL (N) to rev-up the engine and regain forward momentum. This will not work. Your vehicle will roll backwards very quickly and you could go out of control.

  Instead, apply the regular brake to stop the vehicle. Then apply the parking brake. Shift to REVERSE (R), release the parking brake, and slowly back straight down.
- Never attempt to turn around if you are about to stall when going up a hill. If the hill is steep enough to stall your vehicle, it is steep enough to cause you to roll over if you turn around. If you cannot make it up the hill you must back straight down the hill.

Q: Suppose, after stalling, I try to back down the hill and decide I just cannot do it. What should I do?

A: Set the parking brake, put the transmission in PARK (P) and turn off the engine. Leave the vehicle and go get some help. Exit on the uphill side and stay clear of the path the vehicle would take if it rolled downhill.

Driving Downhill

When off-roading takes you downhill, you will want to consider a number of things:

- How steep is the downhill? Will I be able to maintain vehicle control?
- What's the surface like? Smooth? Rough? Slippery? Hard-packed dirt? Gravel?
- Are there hidden surface obstacles? Ruts? Logs? Boulders?
- What is at the bottom of the hill? Is there a hidden creek bank or even a river bottom with large rocks?

If you decide you can go down a hill safely, then try to keep your vehicle headed straight down, and use a low gear. This way, engine drag can help the brakes and they will not have to do all the work. Descend slowly, keeping your vehicle under control at all times.

⚠ CAUTION:

Heavy braking when going down a hill can cause your brakes to overheat and fade. This could cause loss of control and a serious accident. Apply the brakes lightly when descending a hill and use a low gear to keep vehicle speed under control.

Q: Are there some things I should not do when driving down a hill?

A: Yes! These are important because if you ignore them you could lose control and have a serious accident.

- When driving downhill, avoid turns that take you across the incline of the hill. A hill that is not too steep to drive down may be too steep to drive across. You could roll over if you do not drive straight down.
- Never go downhill with the transmission in NEUTRAL (N). This is called “free wheeling.” The brakes will have to do all the work and could overheat and fade.

Q: Am I likely to stall when going downhill?

A: It is much more likely to happen going uphill. But if it happens going downhill, here is what to do.

1. Stop your vehicle by applying the regular brakes. Apply the parking brake.
2. Shift to PARK (P) and, while still braking, restart the engine.
3. Shift back to a low gear, release the parking brake, and drive straight down.
4. If the engine will not start, get out and get help.

Driving Across an Incline

Sooner or later, an off-road trail will probably go across the incline of a hill. If this happens, you have to decide whether to try to drive across the incline. Here are some things to consider:

- A hill that can be driven straight up or down may be too steep to drive across. When you go straight up or down a hill, the length of the wheel base — the distance from the front wheels to the rear wheels — reduces the likelihood the vehicle will tumble end over end. But when you drive across an incline, the much more narrow track width — the distance between the left and right wheels — may not prevent the vehicle from tilting and rolling over. Also, driving across an incline puts more weight on the downhill wheels. This could cause a downhill slide or a rollover.
- Surface conditions can be a problem when you drive across a hill. Loose gravel, muddy spots, or even wet grass can cause the tires to slip sideways, downhill. If the vehicle slips sideways, it can hit something that will trip it — a rock, a rut, etc. — and roll over.
- Hidden obstacles can make the steepness of the incline even worse. If you drive across a rock with the uphill wheels, or if the downhill wheels drop into a rut or depression, your vehicle can tilt even more.

For reasons like these, you need to decide carefully whether to try to drive across an incline. Just because the trail goes across the incline does not mean you have to drive it. The last vehicle to try it might have rolled over.

⚠ CAUTION:

Driving across an incline that is too steep will make your vehicle roll over. You could be seriously injured or killed. If you have any doubt about the steepness of the incline, do not drive across it. Find another route instead.

Q: What if I am driving across an incline that is not too steep, but I hit some loose gravel and start to slide downhill. What should I do?

A: If you feel your vehicle starting to slide sideways, turn downhill. This should help straighten out the vehicle and prevent the side slipping. However, a much better way to prevent this is to get out and “walk the course” so you know what the surface is like before you drive it.

Stalling on an Incline

If your vehicle stalls when you are crossing an incline, be sure you, and any passengers, get out on the uphill side, even if the door there is harder to open. If you get out on the downhill side and the vehicle starts to roll over, you will be right in its path.

If you have to walk down the slope, stay out of the path the vehicle will take if it does roll over.

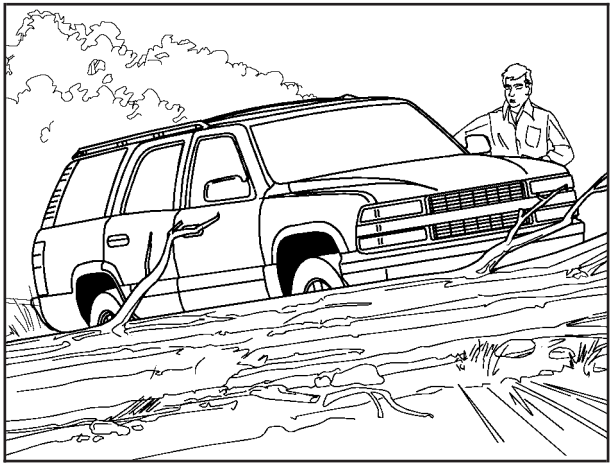

⚠ CAUTION:

Getting out on the downhill (low) side of a vehicle stopped across an incline is dangerous. If the vehicle rolls over, you could be crushed or killed. Always get out on the uphill (high) side of the vehicle and stay well clear of the rollover path.

Driving in Mud, Sand, Snow, or Ice

When you drive in mud, snow, or sand, the wheels will not get good traction. You cannot accelerate as quickly, turning is more difficult, and you will need longer braking distances.

It is best to use a low gear when you are in mud — the deeper the mud, the lower the gear. In really deep mud, the idea is to keep your vehicle moving so you do not get stuck.

When you drive on sand, you will sense a change in wheel traction. But it will depend upon how loosely packed the sand is. On loosely packed sand, such as on beaches or sand dunes, the tires will tend to sink into the sand. This has an effect on steering, accelerating, and braking. Drive at a reduced speed and avoid sharp turns or abrupt maneuvers.

Hard packed snow and ice offer the worst tire traction. On these surfaces, it is very easy to lose control. On wet ice, for example, the traction is so poor that you will have difficulty accelerating. And, if you do get moving, poor steering and difficult braking can cause you to slide out of control.

⚠ CAUTION:

Driving on frozen lakes, ponds, or rivers can be dangerous. Underwater springs, currents under the ice, or sudden thaws can weaken the ice. Your vehicle could fall through the ice and you and your passengers could drown. Drive your vehicle on safe surfaces only.

Driving in Water

Heavy rain can mean flash flooding, and flood waters demand extreme caution.

Find out how deep the water is before you drive through it. If it is deep enough to cover the wheel hubs, axles, or exhaust pipe, do not try it — you probably will not get through. Also, water that deep can damage the axle and other vehicle parts.

If the water is not too deep, drive slowly through it. At faster speeds, water splashes on the ignition system and your vehicle can stall. Stalling can also occur if you get the tailpipe under water. And, as long as the tailpipe is under water, you will never be able to start the engine. When you go through water, remember that when the brakes get wet, it may take you longer to stop.

⚠ CAUTION:

Driving through rushing water can be dangerous. Deep water can sweep your vehicle downstream and you and your passengers could drown. If it is only shallow water, it can still wash away the ground from under your tires, and you could lose traction and roll the vehicle over. Do not drive through rushing water.

See *Driving in Rain and on Wet Roads on page 351* for more information on driving through water.

After Off-Road Driving

Remove any brush or debris that has collected on the underbody, chassis, or under the hood. These accumulations can be a fire hazard.

After operation in mud or sand, have the brake linings cleaned and checked. These substances can cause glazing and uneven braking. Check the body structure, steering, suspension, wheels, tires, and exhaust system for damage. Also, check the fuel lines and cooling system for any leakage.

Your vehicle will require more frequent service due to off-road use. Refer to the Maintenance Schedule for additional information.

Driving at Night

Night driving is more dangerous than day driving. One reason is that some drivers are likely to be impaired — by alcohol or drugs, with night vision problems, or by fatigue.

Here are some tips on night driving.

- Drive defensively.
- Do not drink and drive.
- Adjust the inside rearview mirror to reduce the glare from headlamps behind you.
- Since you cannot see as well, you may need to slow down and keep more space between you and other vehicles.
- Slow down, especially on higher speed roads. Your vehicle's headlamps can light up only so much road ahead.
- In remote areas, watch for animals.
- If you are tired, pull off the road in a safe place and rest.

No one can see as well at night as in the daytime. But as we get older these differences increase. A 50-year-old driver may require at least twice as much light to see the same thing at night as a 20-year-old.

What you do in the daytime can also affect your night vision. For example, if you spend the day in bright sunshine you are wise to wear sunglasses. Your eyes will have less trouble adjusting to night. But if you are driving, do not wear sunglasses at night. They may cut down on glare from headlamps, but they also make a lot of things invisible.

You can be temporarily blinded by approaching headlamps. It can take a second or two, or even several seconds, for your eyes to re-adjust to the dark. When you are faced with severe glare, as from a driver who does not lower the high beams, or a vehicle with misaimed headlamps, slow down a little. Avoid staring directly into the approaching headlamps.

Keep the windshield and all the glass on your vehicle clean — inside and out. Glare at night is made much worse by dirt on the glass. Even the inside of the glass can build up a film caused by dust. Dirty glass makes lights dazzle and flash more than clean glass would, making the pupils of your eyes contract repeatedly.

Remember that the headlamps light up far less of a roadway when you are in a turn or curve. Keep your eyes moving; that way, it is easier to pick out dimly lighted objects. Just as the headlamps should be checked regularly for proper aim, so should your eyes be examined regularly. Some drivers suffer from night blindness — the inability to see in dim light — and are not even aware of it.

Driving in Rain and on Wet Roads

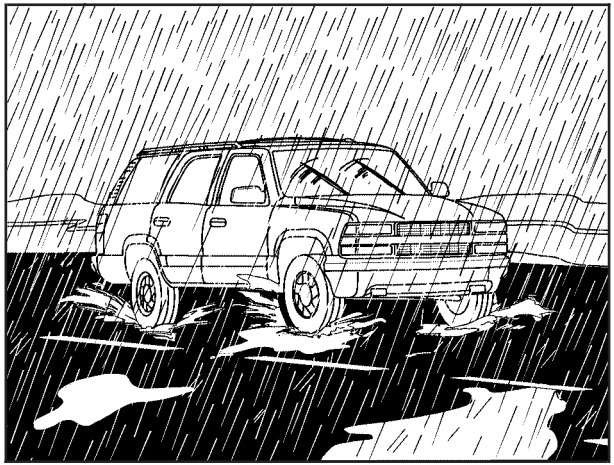

Rain and wet roads can mean driving trouble. On a wet road, you cannot stop, accelerate, or turn as well because your tire-to-road traction is not as good as on dry roads. And, if your tires do not have much tread left, you will get even less traction. It is always wise to go slower and be cautious if rain starts to fall while you are driving. The surface may get wet suddenly when your reflexes are tuned for driving on dry pavement.

The heavier the rain, the harder it is to see. Even if your windshield wiper blades are in good shape, a heavy rain can make it harder to see road signs and traffic signals, pavement markings, the edge of the road, and even people walking.

It is wise to keep your wiping equipment in good shape and keep your windshield washer fluid reservoir filled with washer fluid. Replace your windshield wiper inserts when they show signs of streaking or missing areas on the windshield, or when strips of rubber start to separate from the inserts.

⚠ CAUTION:

Wet brakes can cause accidents. They will not work as well in a quick stop and may cause pulling to one side. You could lose control of the vehicle.

After driving through a large puddle of water or a car wash, apply your brake pedal lightly until your brakes work normally.

Driving too fast through large water puddles or even going through some car washes can cause problems, too. The water may affect your brakes. Try to avoid puddles. But if you cannot, try to slow down before you hit them.

Hydroplaning

Hydroplaning is dangerous. So much water can build up under your tires that they can actually ride on the water. This can happen if the road is wet enough and you are going fast enough. When your vehicle is hydroplaning, it has little or no contact with the road.

Hydroplaning does not happen often. But it can if your tires do not have much tread or if the pressure in one or more is low. It can happen if a lot of water is standing on the road. If you can see reflections from trees, telephone poles, or other vehicles, and raindrops dimple the water's surface, there could be hydroplaning.

Hydroplaning usually happens at higher speeds. There just is not a hard and fast rule about hydroplaning. The best advice is to slow down when it is raining.

Driving Through Deep Standing Water

Notice: **If you drive too quickly through deep puddles or standing water, water can come in through your engine's air intake and badly damage your engine. Never drive through water that is slightly lower than the underbody of your vehicle. If you cannot avoid deep puddles or standing water, drive through them very slowly.**

Driving Through Flowing Water

⚠ CAUTION:

Flowing or rushing water creates strong forces. If you try to drive through flowing water, as you might at a low water crossing, your vehicle can be carried away. As little as six inches of flowing water can carry away a smaller vehicle.

CAUTION: (Continued)

CAUTION: (Continued)

If this happens, you and other vehicle occupants could drown. Do not ignore police warning signs, and otherwise be very cautious about trying to drive through flowing water.

Some Other Rainy Weather Tips

- Turn on your low-beam headlamps — not just your parking lamps — to help make you more visible to others.
- Besides slowing down, allow some extra following distance. And be especially careful when you pass another vehicle. Allow yourself more clear room ahead, and be prepared to have your view restricted by road spray.
- Have good tires with proper tread depth. See *Tires on page 450*.

City Driving

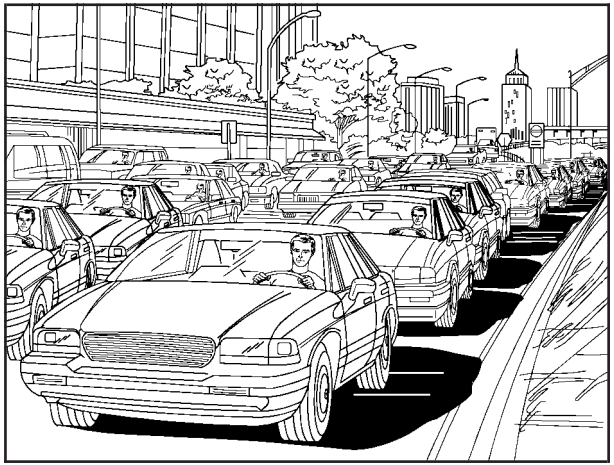

One of the biggest problems with city streets is the amount of traffic on them. You will want to watch out for what the other drivers are doing and pay attention to traffic signals.

Here are ways to increase your safety in city driving:

- Know the best way to get to where you are going. Get a city map and plan your trip into an unknown part of the city just as you would for a cross-country trip.
- Try to use the freeways that rim and crisscross most large cities. You will save time and energy. See *Freeway Driving on page 355*.
- Treat a green light as a warning signal. A traffic light is there because the corner is busy enough to need it. When a light turns green, and just before you start to move, check both ways for vehicles that have not cleared the intersection or may be running the red light.

Freeway Driving

Mile for mile, freeways — also called thruways, parkways, expressways, turnpikes, or superhighways — are the safest of all roads. But they have their own special rules.

The most important advice on freeway driving is: Keep up with traffic and keep to the right. Drive at the same speed most of the other drivers are driving.

Too-fast or too-slow driving breaks a smooth traffic flow. Treat the left lane on a freeway as a passing lane.

At the entrance, there is usually a ramp that leads to the freeway. If you have a clear view of the freeway as you drive along the entrance ramp, you should begin to check traffic. Try to determine where you expect to blend with the flow. Try to merge into the gap at close to the prevailing speed. Switch on your turn signal, check your mirrors, and glance over your shoulder as often as necessary. Try to blend smoothly with the traffic flow.

Once you are on the freeway, adjust your speed to the posted limit or to the prevailing rate if it is slower. Stay in the right lane unless you want to pass.

Before changing lanes, check your mirrors. Then use your turn signal.

Just before you leave the lane, glance quickly over your shoulder to make sure there is not another vehicle in your blind spot.

Once you are moving on the freeway, make certain you allow a reasonable following distance. Expect to move slightly slower at night.

When you want to leave the freeway, move to the proper lane well in advance. If you miss your exit, do not, under any circumstances, stop and back up. Drive on to the next exit.

The exit ramp can be curved, sometimes quite sharply. The exit speed is usually posted.

Reduce your speed according to your speedometer, not to your sense of motion. After driving for any distance at higher speeds, you may tend to think you are going slower than you actually are.

Before Leaving on a Long Trip

Make sure you are ready. Try to be well rested. If you must start when you are not fresh — such as after a day's work — do not plan to make too many miles that first part of the journey. Wear comfortable clothing and shoes you can easily drive in.

Is your vehicle ready for a long trip? If you keep it serviced and maintained, it is ready to go. If it needs service, have it done before starting out.

Of course, you will find experienced and able service experts in GM dealerships all across North America. They will be ready and willing to help if you need it.

Here are some things you can check before a trip:

- *Windshield Washer Fluid:* Is the reservoir full? Are all windows clean inside and outside?
- *Wiper Blades:* Are they in good shape?
- *Fuel, Engine Oil, Other Fluids:* Have you checked all levels?
- *Lamps:* Are they all working? Are the lenses clean?
- *Tires:* They are vitally important to a safe, trouble-free trip. Is the tread good enough for long-distance driving? Are the tires all inflated to the recommended pressure?
- *Weather Forecasts:* What is the weather outlook along your route? Should you delay your trip a short time to avoid a major storm system?
- *Maps:* Do you have up-to-date maps?

Highway Hypnosis

Is there actually such a condition as highway hypnosis? Or is it just plain falling asleep at the wheel? Call it highway hypnosis, lack of awareness, or whatever.

There is something about an easy stretch of road with the same scenery, along with the hum of the tires on the road, the drone of the engine, and the rush of the wind against the vehicle that can make you sleepy. Do not let it happen to you! If it does, your vehicle can leave the road in less than a second, and you could crash and be injured.

What can you do about highway hypnosis? First, be aware that it can happen.

Then here are some tips:

- Make sure your vehicle is well ventilated, with a comfortably cool interior.
- Keep your eyes moving. Scan the road ahead and to the sides. Check your mirrors and your instruments frequently.
- If you get sleepy, pull off the road into a rest, service, or parking area and take a nap, get some exercise, or both. For safety, treat drowsiness on the highway as an emergency.

Hill and Mountain Roads

Driving on steep hills or mountains is different from driving in flat or rolling terrain.

If you drive regularly in steep country, or if you are planning to visit there, here are some tips that can make your trips safer and more enjoyable. See *Off-Road Driving on page 334* for information about driving off-road.

- Keep your vehicle in good shape. Check all fluid levels and also the brakes, tires, cooling system, and transmission. These parts can work hard on mountain roads.

⚠ CAUTION:

If you do not shift down, your brakes could get so hot that they would not work well. You would then have poor braking or even none going down a hill. You could crash. Shift down to let your engine assist your brakes on a steep downhill slope.

⚠ CAUTION:

Coasting downhill in NEUTRAL (N) or with the ignition off is dangerous. Your brakes will have to do all the work of slowing down. They could get so hot that they would not work well. You would then have poor braking or even none going down a hill. You could crash. Always have your engine running and your vehicle in gear when you go downhill.

- Know how to go down hills. The most important thing to know is this: let your engine do some of the slowing down. Shift to a lower gear when you go down a steep or long hill.
- Know how to go uphill. You may want to shift down to a lower gear. The lower gears help cool your engine and transmission, and you can climb the hill better.
- Stay in your own lane when driving on two-lane roads in hills or mountains. Do not swing wide or cut across the center of the road. Drive at speeds that let you stay in your own lane.
- As you go over the top of a hill, be alert. There could be something in your lane, like a stalled car or an accident.
- You may see highway signs on mountains that warn of special problems. Examples are long grades, passing or no-passing zones, a falling rocks area, or winding roads. Be alert to these and take appropriate action.

Winter Driving

Here are some tips for winter driving:

- Have your vehicle in good shape for winter.
- You may want to put winter emergency supplies in your vehicle.

Also see *Tires on page 450*.

Include an ice scraper, a small brush or broom, a supply of windshield washer fluid, a rag, some winter outer clothing, a small shovel, a flashlight, a red cloth, and a couple of reflective warning triangles. And, if you will be driving under severe conditions, include a small bag of sand, a piece of old carpet, or a couple of burlap bags to help provide traction. Be sure you properly secure these items in your vehicle.

Driving on Snow or Ice

Most of the time, those places where the tires meet the road probably have good traction.

However, if there is snow or ice between the tires and the road, you can have a very slippery situation. You will have a lot less traction, or grip, and will need to be very careful.

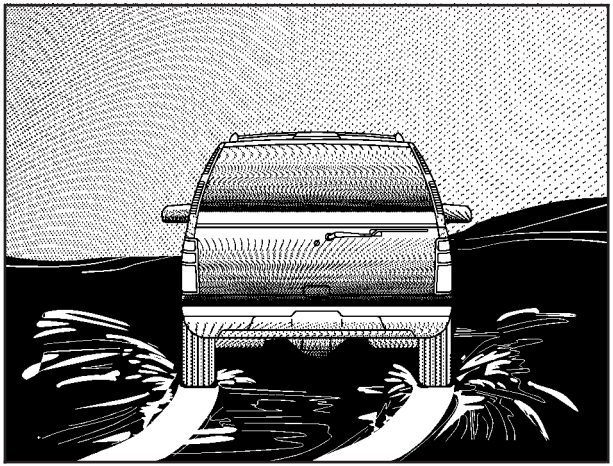

What is the worst time for this? Wet ice. Very cold snow or ice can be slick and hard to drive on. But wet ice can be even more trouble because it may offer the least traction of all. You can get wet ice when it is about freezing, 32°F (0°C), and freezing rain begins to fall. Try to avoid driving on wet ice until salt and sand crews can get there.

Whatever the condition — smooth ice, packed, blowing, or loose snow — drive with caution.

Accelerate gently. Try not to break the fragile traction. If you accelerate too fast, the drive wheels will spin and polish the surface under the tires even more. See *StabiliTrak® System on page 326*, *If Your Vehicle is Stuck in Sand, Mud, Ice, or Snow on page 364*, and *Rocking Your Vehicle to Get It Out on page 364*.

Your Anti-Lock Brake System (ABS) improves your vehicle's stability when you make a hard stop on a slippery road. Even though you have ABS, you will want to begin stopping sooner than you would on dry pavement. See *Anti-Lock Brake System (ABS) on page 323*.

- Allow greater following distance on any slippery road.
- Watch for slippery spots. The road might be fine until you hit a spot that is covered with ice. On an otherwise clear road, ice patches may appear in shaded areas where the sun cannot reach, such as around clumps of trees, behind buildings, or under bridges. Sometimes the surface of a curve or an overpass may remain icy when the surrounding roads are clear. If you see a patch of ice ahead of you, brake before you are on it. Try not to brake while you are actually on the ice, and avoid sudden steering maneuvers.

If You Are Caught in a Blizzard

If you are stopped by heavy snow, you could be in a serious situation. You should probably stay with your vehicle unless you know for sure that you are near help and you can hike through the snow. Here are some things to do to summon help and keep yourself and your passengers safe:

- Turn on your hazard flashers.
- Tie a red cloth to your vehicle to alert police that you have been stopped by the snow.
- Put on extra clothing or wrap a blanket around you. If you do not have blankets or extra clothing, make body insulators from newspapers, burlap bags, rags, floor mats — anything you can wrap around yourself or tuck under your clothing to keep warm.

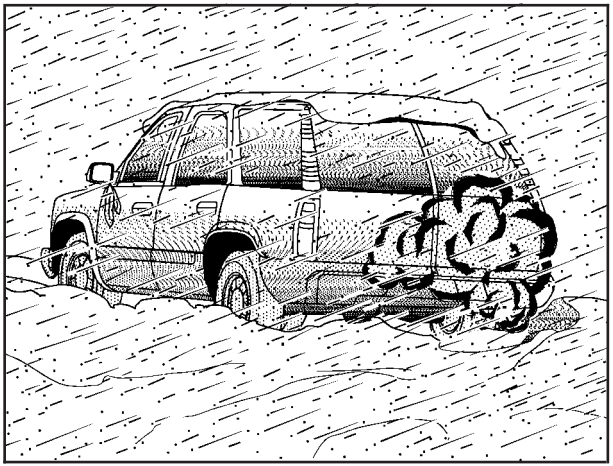

You can run the engine to keep warm, but be careful.

⚠ CAUTION:

Snow can trap exhaust gases under your vehicle. This can cause deadly CO (carbon monoxide) gas to get inside. CO could overcome you and kill you. You cannot see it or smell it, so you might not know it is in your vehicle. Clear away snow from around the base of your vehicle, especially any that is blocking your exhaust pipe. And check around again from time to time to be sure snow does not collect there.

Open a window just a little on the side of the vehicle that is away from the wind. This will help keep CO out.

Run your engine only as long as you must. This saves fuel. When you run the engine, make it go a little faster than just idle. That is, push the accelerator slightly. This uses less fuel for the heat that you get and it keeps the battery charged. You will need a well-charged battery to restart the vehicle, and possibly for signaling later on with your headlamps. Let the heater run for a while.

Then, shut the engine off and close the window almost all the way to preserve the heat. Start the engine again and repeat this only when you feel really uncomfortable from the cold. But do it as little as possible. Preserve the fuel as long as you can. To help keep warm, you can get out of the vehicle and do some fairly vigorous exercises every half hour or so until help comes.

If Your Vehicle is Stuck in Sand, Mud, Ice, or Snow

In order to free your vehicle when it is stuck, you will need to spin the wheels, but you do not want to spin your wheels too fast. The method known as rocking can help you get out when you are stuck, but you must use caution.

⚠ CAUTION:

If you let your tires spin at high speed, they can explode, and you or others could be injured. And, the transmission or other parts of the vehicle can overheat. That could cause an engine compartment fire or other damage. When you are stuck, spin the wheels as little as possible. Do not spin the wheels above 35 mph (55 km/h) as shown on the speedometer.

Notice: **Spinning your wheels can destroy parts of your vehicle as well as the tires. If you spin the wheels too fast while shifting your transmission back and forth, you can destroy your transmission.**

For more information about using tire chains on your vehicle, see *Tire Chains on page 471*.

Rocking Your Vehicle to Get It Out

First, turn your steering wheel left and right. That will clear the area around your front wheels. If your vehicle has the StabiliTrak® System, turn the system off by pressing the StabiliTrak® button so that the STABILITY SYS DISABLED message and the traction off light are illuminated on the instrument panel cluster. Then shift back and forth between REVERSE (R) and a forward gear, spinning the wheels as little as possible. Release the accelerator pedal while you shift, and press lightly on the accelerator pedal when the transmission is in gear.

By slowly spinning your wheels in the forward and reverse directions, you will cause a rocking motion that may free your vehicle. If that does not get you out after a few tries, you may need to be towed out. Or, you can use your recovery hooks if your vehicle has them. If you do need to be towed out, see *Towing Your Vehicle on page 372*.

Recovery Hooks

⚠ CAUTION:

These hooks, when used, are under a lot of force. Always pull the vehicle straight out. Never pull on the hooks at a sideways angle. The hooks could break off and you or others could be injured from the chain or cable snapping back.

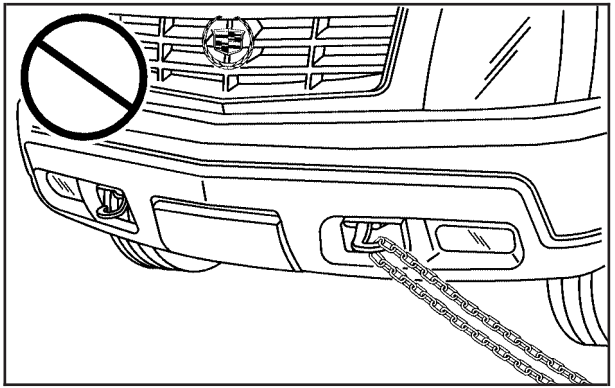

Notice: **Never use recovery hooks to tow the vehicle. Your vehicle could be damaged and it would not be covered by warranty.**

Your vehicle may have recovery hooks at the front of the vehicle. You may need to use them if you are stuck off-road and need to be pulled to some place where you can continue driving.

Loading Your Vehicle

It is very important to know how much weight your vehicle can carry. This weight is called the vehicle capacity weight and includes the weight of all occupants, cargo, and all nonfactory-installed options. Two labels on your vehicle show how much weight it was designed to carry, the Tire and Loading Information label and the Certification/ Tire label.

⚠ CAUTION:

Do not load your vehicle any heavier than the Gross Vehicle Weight Rating (GVWR), or either the maximum front or rear Gross Axle Weight Rating (GAWR). If you do, parts on your vehicle can break, and it can change the way your vehicle handles. These could cause you to lose control and crash. Also, overloading can shorten the life of your vehicle.

Tire and Loading Information Label

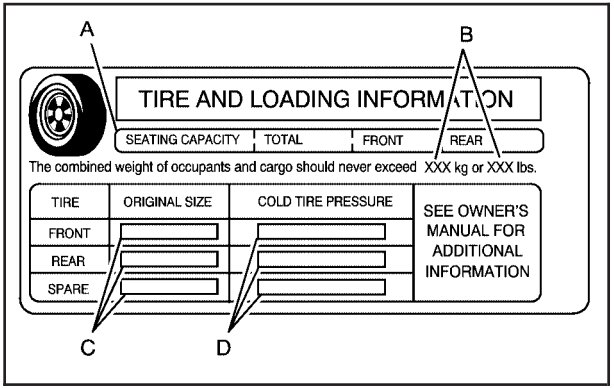

Label Example

A vehicle specific Tire and Loading Information label is attached to the center pillar (B-pillar). With the driver's door open, you will find the label attached below the door lock post (striker). The tire and loading information label shows the number of occupant seating positions (A), and the maximum vehicle capacity weight (B) in kilograms and pounds.

The Tire and Loading Information label also shows the size of the original equipment tires (C) and the recommended cold tire inflation pressures (D). For more information on tires and inflation see *Tires on page 450* and *Inflation - Tire Pressure on page 456*.

There is also important loading information on the vehicle Certification/Tire label. It tells you the Gross Vehicle Weight Rating (GVWR) and the Gross Axle Weight Rating (GAWR) for the front and rear axles. See “Certification/Tire Label” later in this section.

Steps for Determining Correct Load Limit

1. Locate the statement “The combined weight of occupants and cargo should never exceed XXX kg or XXX lbs” on your vehicle’s placard.
2. Determine the combined weight of the driver and passengers that will be riding in your vehicle.
3. Subtract the combined weight of the driver and passengers from XXX kg or XXX lbs.
4. The resulting figure equals the available amount of cargo and luggage load capacity. For example, if the “XXX” amount equals 1400 lbs and there will be five 150 lb passengers in your vehicle, the amount of available cargo and luggage load capacity is 650 lbs (1400 – 750 (5 x 150) = 650 lbs).
5. Determine the combined weight of luggage and cargo being loaded on the vehicle. That weight may not safely exceed the available cargo and luggage load capacity calculated in Step 4.
6. If your vehicle will be towing a trailer, the load from your trailer will be transferred to your vehicle. Consult this manual to determine how this reduces the available cargo and luggage load capacity of your vehicle. See *Towing a Trailer on page 375* for important information on towing a trailer, towing safety rules and trailering tips.

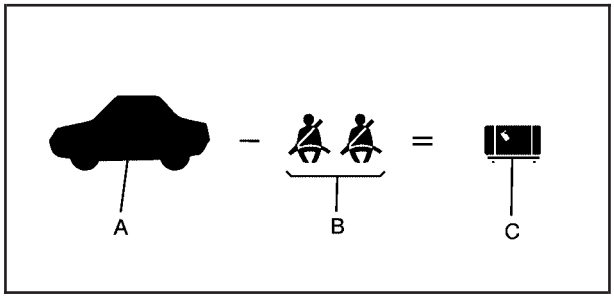

Example 1

Item	Description	Total
A	Vehicle Capacity Weight for Example 1 =	1,000 lbs (453 kg)
B	Subtract Occupant Weight 150 lbs (68 kg) × 2 =	300 lbs (136 kg)
C	Available Occupant and Cargo Weight =	700 lbs (317 kg)

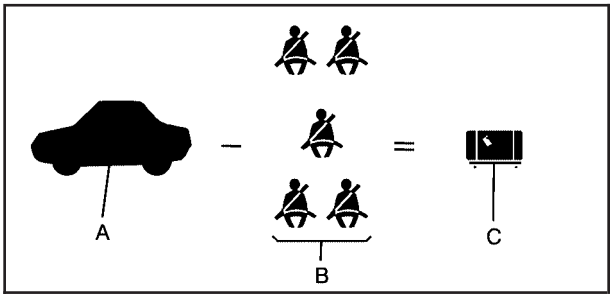

Example 2

Item	Description	Total
A	Vehicle Capacity Weight for Example 2 =	1,000 lbs (453 kg)
B	Subtract Occupant Weight 150 lbs (68 kg) × 5 =	750 lbs (136 kg)
C	Available Cargo Weight =	250 lbs (113 kg)

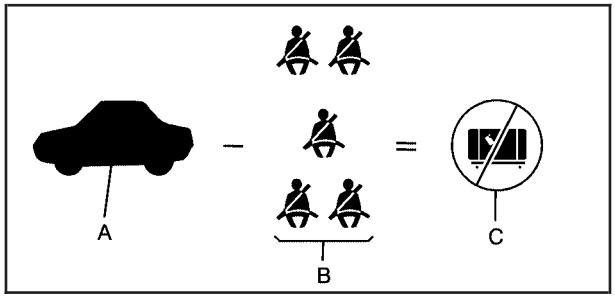

Example 3

Item	Description	Total
A	Vehicle Capacity Weight for Example 3 =	1,000 lbs (453 kg)
B	Subtract Occupant Weight 200 lbs (91 kg) × 5 =	1,000 lbs (453 kg)
C	Available Cargo Weight =	0 lbs (0 kg)

Refer to your vehicle's tire and loading information label for specific information about your vehicle's capacity weight and seating positions. The combined weight of the driver, passengers, and cargo should never exceed your vehicle's capacity weight.

Certification/Tire Label

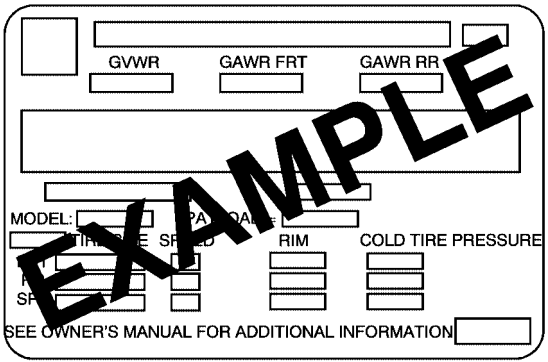

A vehicle specific Certification/Tire label is attached to the rear edge of the driver's door. The label shows the size of your vehicle's original tires and the inflation pressures needed to obtain the gross weight capacity of your vehicle. This is called Gross Vehicle Weight Rating (GVWR). The GVWR includes the weight of the vehicle, all occupants, fuel, and cargo.

The Certification/Tire label also tells you the maximum weights for the front and rear axles, called Gross Axle Weight Rating (GAWR).

To find out the actual loads on your front and rear axles, you need to go to a weigh station and weigh your vehicle. Your dealer can help you with this. Be sure to spread out your load equally on both sides of the center line.

Never exceed the GVWR for your vehicle, or the GAWR for either the front or rear axle.

And, if you do have a heavy load, you should spread it out.

⚠ CAUTION:

Do not load your vehicle any heavier than the Gross Vehicle Weight Rating (GVWR), or either the maximum front or rear Gross Axle Weight Rating (GAWR). If you do, parts on your vehicle can break, and it can change the way your vehicle handles. These could cause you to lose control and crash. Also, overloading can shorten the life of your vehicle.

Your warranty does not cover parts or components that fail because of overloading.

The label will help you decide how much cargo and installed equipment your truck can carry.

Using heavier suspension components to get added durability might not change your weight ratings. Ask your dealer to help you load your vehicle the right way.

If you put things inside your vehicle — like suitcases, tools, packages, or anything else — they will go as fast as the vehicle goes. If you have to stop or turn quickly, or if there is a crash, they will keep going.

⚠ CAUTION:

Things you put inside your vehicle can strike and injure people in a sudden stop or turn, or in a crash.

- **Put things in the cargo area of your vehicle. Try to spread the weight evenly.**
- **Never stack heavier things, like suitcases, inside the vehicle so that some of them are above the tops of the seats.**
- **Do not leave an unsecured child restraint in your vehicle.**
- **When you carry something inside the vehicle, secure it whenever you can.**
- **Do not leave a seat folded down unless you need to.**

There is also important loading information for off-road driving in this manual. See “Loading Your Vehicle for Off-Road Driving” under *Off-Road Driving on page 334*.

Add-On Equipment

When you carry removable items, you may need to put a limit on how many people you can carry inside your vehicle. Be sure to weigh your vehicle before you buy and install the new equipment.

Notice: **Overloading your vehicle may cause damage. Repairs would not be covered by your warranty. Do not overload your vehicle.**

Remember not to exceed the Gross Axle Weight Rating (GAWR) of the front or rear axle.

Automatic Level Control

The automatic level control rear suspension comes as a part of the Road Sensing Suspension. See *Road Sensing Suspension on page 325*.

This type of level control is fully automatic and will provide a better leveled riding position as well as better handling under a variety of passenger and loading conditions. An air compressor connected to the rear shocks will raise or lower the rear of the vehicle to maintain proper vehicle height. The system is activated when the ignition key is turned to RUN and will automatically adjust vehicle height thereafter.

The system may exhaust (lower vehicle height) for up to 10 minutes after the ignition key has been turned to LOCK. You may hear the air compressor operating when the height is being adjusted.

If a weight-distributing hitch is being used, it is recommended to allow the shocks to inflate, thereby leveling the vehicle prior to adjusting the height. See “Weight distributing Hitches and Weight Carrying Hitches” under *Towing a Trailer on page 375*.

Towing

Towing Your Vehicle

Consult your dealer or a professional towing service if you need to have your disabled vehicle towed. See *Roadside Service on page 541*.

If you want to tow your vehicle behind another vehicle for recreational purposes (such as behind a motorhome), see Recreational Vehicle Towing following.

Recreational Vehicle Towing

Recreational vehicle towing means towing your vehicle behind another vehicle — such as behind a motorhome. The two most common types of recreational vehicle towing are known as “dinghy towing” (towing your vehicle with all four wheels on the ground) and “dolly towing” (towing your vehicle with two wheels on the ground and two wheels up on a device known as a “dolly”).

With the proper preparation and equipment, many vehicles can be towed in these ways. See “Dinghy Towing” and “Dolly Towing”, following.

Here are some important things to consider before you do recreational vehicle towing:

- What’s the towing capacity of the towing vehicle? Be sure you read the tow vehicle manufacturer’s recommendations.
- How far will you tow? Some vehicles have restrictions on how far and how long they can tow.

- Do you have the proper towing equipment? See your dealer or trailering professional for additional advice and equipment recommendations.
- Is your vehicle ready to be towed? Just as you would prepare your vehicle for a long trip, you'll want to make sure your vehicle is prepared to be towed. See *Before Leaving on a Long Trip on page 356*.

Dinghy Towing and Dolly Towing

All-Wheel Drive Vehicles

Notice: **Towing an all-wheel-drive vehicle with all four wheels on the ground, or even with only two of its wheels on the ground, will damage drivetrain components. Do not tow an all-wheel-drive vehicle if any of its wheels will be on the ground.**

Your vehicle is not designed to be towed with any of the wheels on the ground. If your vehicle must be towed, see *Towing Your Vehicle on page 372*.

Dinghy Towing

Two-Wheel-Drive Vehicles

Notice: **If you tow a two-wheel-drive vehicle with all four wheels on the ground, the transmission could be damaged. The repairs would not be covered by your warranty. Do not tow a two-wheel-drive vehicle with all four wheels on the ground.**

Two-wheel-drive vehicles should not be towed with all four wheels on the ground.
Two-wheel-drive transmissions have no provisions for internal lubrication while being towed.

Dolly Towing

Two-Wheel-Drive Vehicles (Rear Wheels Off the Ground)

Notice: **If you tow a two-wheel-drive vehicle with the rear wheels on the ground, the transmission could be damaged. The repairs would not be covered by your warranty. Never tow your vehicle with the rear wheels on the ground.**

Two-wheel-drive vehicles should not be towed with the rear wheels on the ground. Two-wheel-drive transmissions have no provisions for internal lubrication while being towed.

Two-wheel-drive vehicles can be towed on a dolly with the front wheels on the ground provided that the wheels are straight.

Use the following procedure to dolly tow your vehicle:

1. Drive the vehicle up onto the tow dolly.
2. Shift the transmission to PARK (P).
3. Turn the engine off, but leave the ignition on.
4. Firmly set the parking brake.
5. Securely attach the vehicle being towed to the tow dolly.
6. Release the parking brake only after the vehicle being towed is firmly attached to the towing vehicle.

Autoride®

The Autoride® feature provides improved vehicle ride and handling under a variety of passenger and loading conditions.

The system is fully automatic and uses a computer controller to continuously monitor vehicle speed, wheel to body position, lift/dive and steering position of the vehicle. The controller then sends signals to each shock absorber to independently adjust the damping level to provide the optimum vehicle ride.

Autoride® also interacts with the tow/haul mode that, when activated, will provide additional control of the shock absorbers. This additional control results in better ride and handling characteristics when the vehicle is loaded or towing a trailer. See “Tow/Haul Mode” under *Towing a Trailer on page 375* for more information.

Towing a Trailer

Do not tow a trailer during break-in. See *New Vehicle Break-In on page 137* for more information.

⚠ CAUTION:

If you do not use the correct equipment and drive properly, you can lose control when you pull a trailer. For example, if the trailer is too heavy, the brakes may not work well — or even at all. You and your passengers could be seriously injured. You may also damage your vehicle; the resulting repairs would not be covered by your warranty. Pull a trailer only if you have followed all the steps in this section. Ask your dealer for advice and information about towing a trailer with your vehicle.

Notice: **Pulling a trailer improperly can damage your vehicle and result in costly repairs not covered by your warranty. To pull a trailer correctly, follow the advice in this part, and see your dealer for important information about towing a trailer with your vehicle.**

To identify the trailering capacity of your vehicle, you should read the information in “Weight of the Trailer” that appears later in this section.

Trailering is different than just driving your vehicle by itself. Trailering means changes in handling, acceleration, braking, durability and fuel economy. Successful, safe trailering takes correct equipment, and it has to be used properly.

That’s the reason for this part. In it are many time-tested, important trailering tips and safety rules. Many of these are important for your safety and that of your passengers. So please read this section carefully before you pull a trailer.

If You Do Decide To Pull A Trailer

If you do, here are some important points:

- There are many different laws, including speed limit restrictions, having to do with trailering. Make sure your rig will be legal, not only where you live but also where you'll be driving. A good source for this information can be state or provincial police.
- Consider using a sway control. See "Hitches" later in this section.
- Don't tow a trailer at all during the first 500 miles (800 km) your new vehicle is driven. Your engine, axle or other parts could be damaged.
- Then, during the first 500 miles (800 km) that you tow a trailer, don't drive over 50 mph (80 km/h) and don't make starts at full throttle. This helps your engine and other parts of your vehicle wear in at the heavier loads.
- You can tow in DRIVE (D). You may want to shift the transmission to THIRD (3) or, if necessary, a lower gear selection if the transmission shifts too often (e.g., under heavy loads and/or hilly conditions). See "Tow/Haul Mode" next.

Three important considerations have to do with weight:

- the weight of the trailer
- the weight of the trailer tongue
- and the weight on your vehicle's tires

Tow/Haul Mode

Tow/haul is designed to assist while your vehicle is pulling a large or heavy load or trailer. Tow/haul is most useful while pulling such a load in rolling terrain, in stop-and-go traffic, or when you need improved low-speed control, such as when parking. The purpose of the tow/haul mode is to do the following:

- Reduce the frequency and improve the predictability of transmission shifts when pulling a heavy trailer or a large or heavy load.
- Provide the same solid shift feel when pulling a heavy trailer or a large or heavy load as when the vehicle is unloaded.
- Improve control of vehicle speed while requiring less throttle pedal activity when pulling a heavy trailer or a large or heavy load.

Tow/haul is designed to be most effective when the vehicle and trailer combined weight is at least 75 percent of the vehicle's Gross Combination Weight Rating (GCWR). See "Weight of the Trailer" later in this section.

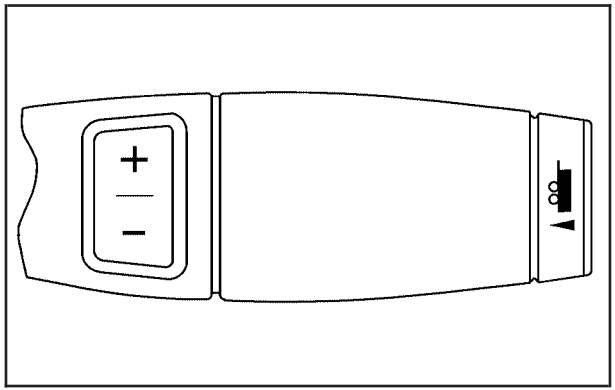

Press this button at the end of the shift lever to enable/disable the tow/haul mode.

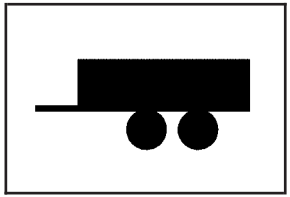

A light on the instrument panel will illuminate to indicate that tow/haul mode has been selected.

The vehicle will automatically turn off tow/haul every time it is started.

Driving with tow/haul activated without a heavy load or with no trailer will cause reduced fuel economy and unpleasant engine and transmission driving characteristics, but will not cause damage.

Operating the vehicle in tow/haul when lightly loaded or with no trailer at all will not cause damage. However, there is no benefit to the selection of tow/haul when the vehicle is unloaded. Such a selection when unloaded may result in unpleasant engine and transmission driving characteristics and reduced fuel economy. Tow/haul is recommended only when pulling a heavy trailer or a large or heavy load.

Weight of the Trailer

How heavy can a trailer safely be?

It depends on how you plan to use your rig. For example, speed, altitude, road grades, outside temperature and how much your vehicle is used to pull a trailer are all important. It can also depend on any special equipment that you have on your vehicle, and the amount of tongue weight the vehicle can carry. See “Weight of the Trailer Tongue” later in this section for more information.

Maximum trailer weight is calculated assuming only the driver is in the tow vehicle and it has all the required trailering equipment. The weight of additional optional equipment, passengers and cargo in the tow vehicle must be subtracted from the maximum trailer weight.

Use the following chart to determine how much your vehicle can weigh, based upon your vehicle model and options.

Vehicle	Axle Ratio	Max. Trailer Wt.	**GCWR
Escalade 2WD 6.2L	3.42	7,400 lbs (3 356 kg)	13,000 lbs (5 897 kg)
Escalade AWD 6.2L	3.42	8,100 lbs (3 674 kg)	14,000 lbs (6 350 kg)
Escalade ESV AWD 6.2L	3.42	7,800 lbs (3 538 kg)	14,000 lbs (6 350 kg)
**The Gross Combination Weight Rating (GCWR) is the total allowable weight of the completely loaded vehicle and trailer including any passengers, cargo, equipment and conversions. The GCWR for your vehicle should not be exceeded.			

You can ask your dealer for our trailering information or advice, or you can write us at the address listed in your Warranty and Owner Assistance Information Booklet.

In Canada, write to:

General Motors of Canada Limited
Customer Communication Centre, 163-005
1908 Colonel Sam Drive
Oshawa, Ontario L1H 8P7

Weight of the Trailer Tongue

The tongue load (A) of any trailer is an important weight to measure because it affects the total or gross weight of your vehicle. The Gross Vehicle Weight (GVW) includes the curb weight of the vehicle, any cargo you may carry in it, and the people who will be riding in the vehicle. If you have a lot of options, equipment, passengers or cargo in your vehicle, it will reduce the tongue weight your vehicle can carry, which will also reduce the trailer weight your vehicle can tow. And if you will tow a trailer, you must add the tongue load to the GVW because your vehicle will be carrying that weight, too. See *Loading Your Vehicle on page 366* for more information about your vehicle's maximum load capacity.

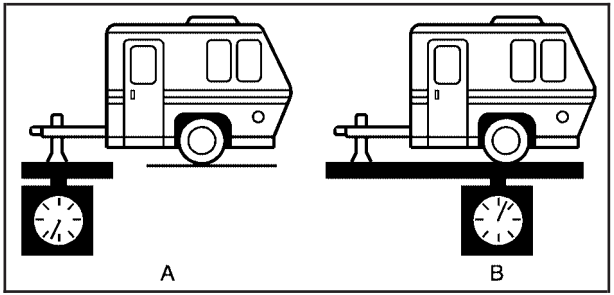

The trailer tongue weight (A) should be 10 percent to 15 percent of the total loaded trailer weight (B), up to a maximum of 600 lbs (272 kg) with a weight carrying hitch. The trailer tongue weight (A) should be 10 percent to 15 percent of the total loaded trailer weight (B), up to the maximum of 1,000 lbs (454 kg) with a weight distributing hitch.

Do not exceed the maximum allowable tongue weight for your vehicle. Choose the shortest hitch extension that will position the hitch ball closest to the vehicle. This will help reduce the effect of trailer tongue weight on the rear axle.

After you've loaded your trailer, weigh the trailer and then the tongue, separately, to see if the weights are proper. If they aren't, you may be able to get them right simply by moving some items around in the trailer.

Trailering may be limited by the vehicle's ability to carry tongue weight. Tongue weight cannot cause the vehicle to exceed the GVWR (Gross Vehicle Weight Rating) or the RGAWR (Rear Gross Axle Weight Rating). The effect of additional weight may reduce your trailering capacity more than the total of the additional weight.

Consider the following example:

A vehicle model base weight is 5,500 lbs (2 495 kg); 2,800 lbs (1 270 kg) at the front axle and 2,700 lbs (1 225 kg) at the rear axle. It has a GVWR of 7,200 lbs (3 266 kg), a RGAWR of 4,000 lbs (1 814 kg) and a GCWR (Gross Combination Weight Rating) of 14,000 lbs (6 350 kg). The trailer rating should be:

14,000 lbs (6350 kg)	GCWR
–5,500 lbs (2495 kg)	Vehicle Weight
8,500 lbs (3855 kg)	Trailer Rating

You can expect tongue weight to be at least 10 percent of trailer weight (850 lbs (386 kg)) and because the weight is applied well behind the rear axle, the effect on the rear axle will be greater than just the weight itself, as much as 1.5 times as much. The weight at the rear axle could be 850 lbs (386 kg) X 1.5 = 1,275 lbs (578 kg). Since the rear axle already weighs 2,700 lbs (1 225 kg), adding 1,275 lbs (578 kg) brings the total to 3,975 lbs (1 803 kg). This is very close to, but within the limit for RGAWR as well. The vehicle is set to trailer up to 8,500 lbs (3 856 kg).

But let's say your specific vehicle is equipped with some of the latest options and you have a front seat passenger and two rear seat passengers with some luggage and gear in the vehicle as well. You may add 300 lbs (136 kg) to the front axle weight and 400 lbs (181 kg) to the rear axle weight.

Your vehicle now weighs:

2,800 lbs (1270 kg)	+	300 lbs (136 kg)	Front
2,700 lbs (1225 kg)	+	400 lbs (181 kg)	Rear
6,200 lbs (2812 kg)			Total

Weight is still below 7,200 lbs (3 266 kg) and you may think that you should subtract 700 additional pounds (318 kg) from your trailering capacity to stay within GCWR limits. Your maximum trailer would only be 7,800 lbs (3 538 kg). You may go further and think you must limit tongue weight to less than 1,000 lbs (454 kg) to avoid exceeding GVWR. But, you must still consider the effect on the rear axle. Because your rear axle now weighs 3,100 lbs (1 406 kg), you can only put 900 lbs (408 kg) on the rear axle without exceeding RGAWR. The effect of tongue weight is about 1.5 times the actual weight. Dividing the 900 lbs (408 kg) by 1.5 leaves you with being able to handle only 600 lbs (272 kg) of tongue weight. Since tongue weight is usually at least 10 percent of total loaded trailer weight, you can expect that the largest trailer your vehicle can properly handle is 6,000 lbs (2 721 kg).

It is important that you make sure your vehicle does not exceed any of its ratings — GCWR, GVWR, RGAWR, Maximum Trailer Rating or Tongue Weight. The only way to be sure you are not exceeding any of these ratings is to weigh your vehicle and trailer.

Total Weight on Your Vehicle's Tires

Be sure your vehicle's tires are inflated to the upper limit for cold tires. You'll find these numbers on the Certification label at the rear edge of the driver's door or see *Loading Your Vehicle on page 366*. Then be sure you don't go over the GVW limit for your vehicle, or the GAWR, including the weight of the trailer tongue. If you use a weight distributing hitch, make sure you don't go over the rear axle limit before you apply the weight distribution spring bars.

Hitches

It's important to have the correct hitch equipment. Crosswinds, large trucks going by and rough roads are a few reasons why you'll need the right hitch.

Weight-Distributing Hitches and Weight Carrying Hitches

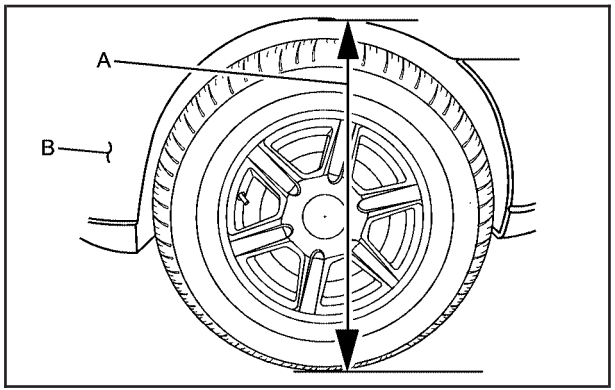

(A) Body-to-Ground Distance (B) Front of Vehicle

When using a weight-distributing hitch, the hitch must be adjusted so that the distance (A) remains the same both before and after coupling the trailer to the tow vehicle.

If you use a step-bumper hitch, the bumper could be damaged in sharp turns. Make sure there is ample room when turning to avoid contact between the trailer and the bumper.

If you'll be pulling a trailer that, when loaded, will weigh more than 5,000 lbs (2 270 kg) be sure to use a properly mounted weight-distributing hitch and sway control of the proper size. This equipment is very important for proper vehicle loading and good handling when driving. You should always use a sway control if your trailer will weigh more than these limits. You can ask a hitch dealer about sway controls.

Safety Chains

You should always attach chains between your vehicle and your trailer. Cross the safety chains under the tongue of the trailer to help prevent the tongue from contacting the road if it becomes separated from the hitch. Always leave just enough slack so you can turn with your rig. Never allow safety chains to drag on the ground.

If you are towing a trailer up to 5,000 lbs (900 kg) with a factory-installed step bumper, you may attach the safety chains to the attaching points on the bumper. If you are towing a trailer up to your vehicle's trailer rating limit, you may attach the safety chains to the attaching point on the hitch platform. If you are towing with an aftermarket hitch, follow the trailer or hitch manufacturer's recommendation for attaching safety chains.

Always leave just enough slack so you can turn with your rig. Never allow safety chains to drag on the ground.

Trailer Brakes

If your trailer weighs more than 2,000 lbs (900 kg) loaded, then it needs its own brakes — and they must be adequate. Be sure to read and follow the instructions for the trailer brakes so you'll be able to install, adjust and maintain them properly.

Since your vehicle is equipped with StabiliTrak®, your trailer brake system cannot tap into the vehicle's hydraulic brake system.

Driving with a Trailer

⚠ CAUTION:

If you have a rear-most window open and you pull a trailer with your vehicle, carbon monoxide (CO) could come into your vehicle. You can not see or smell CO. It can cause unconsciousness or death. See *Engine Exhaust on page 153*.

CAUTION: (Continued)

CAUTION: (Continued)

To maximize your safety when towing a trailer:

- **Have your exhaust system inspected for leaks, and make necessary repairs before starting on your trip.**
- **Keep the rear-most windows closed.**
- **If exhaust does come into your vehicle through a window in the rear or another opening, drive with your front, main heating or cooling system on and with the fan on any speed. This will bring fresh, outside air into your vehicle. Do not use the climate control setting for maximum air because it only recirculates the air inside your vehicle. See *Dual Automatic Climate Control System on page 212*.**

Towing a trailer requires a certain amount of experience. Before setting out for the open road, you'll want to get to know your rig.

Acquaint yourself with the feel of handling and braking with the added weight of the trailer. And always keep in mind that the vehicle you are driving is now a good deal longer and not nearly as responsive as your vehicle is by itself.

Before you start, check all trailer hitch parts and attachments, safety chains, electrical connector, lamps, tires and mirror adjustment. If the trailer has electric brakes, start your vehicle and trailer moving and then apply the trailer brake controller by hand to be sure the brakes are working. This lets you check your electrical connection at the same time.

During your trip, check occasionally to be sure that the load is secure, and that the lamps and any trailer brakes are still working.

Following Distance

Stay at least twice as far behind the vehicle ahead as you would when driving your vehicle without a trailer. This can help you avoid situations that require heavy braking and sudden turns.

Passing

You'll need more passing distance up ahead when you're towing a trailer. And, because you're a good deal longer, you'll need to go much farther beyond the passed vehicle before you can return to your lane.

Backing Up

Hold the bottom of the steering wheel with one hand. Then, to move the trailer to the left, just move that hand to the left. To move the trailer to the right, move your hand to the right. Always back up slowly and, if possible, have someone guide you.

Making Turns

Notice: **Making very sharp turns while trailering could cause the trailer to come in contact with the vehicle. Your vehicle could be damaged. Avoid making very sharp turns while trailering.**

When you're turning with a trailer, make wider turns than normal. Do this so your trailer won't strike soft shoulders, curbs, road signs, trees or other objects. Avoid jerky or sudden maneuvers. Signal well in advance.

Turn Signals When Towing a Trailer

The arrows on your instrument panel will flash whenever you signal a turn or lane change. Properly hooked up, the trailer lamps will also flash, telling other drivers you're about to turn, change lanes or stop.

When towing a trailer, the arrows on your instrument panel will flash for turns even if the bulbs on the trailer are burned out. Thus, you may think drivers behind you are seeing your signal when they are not. It's important to check occasionally to be sure the trailer bulbs are still working.

Driving On Grades

Reduce speed and shift to a lower gear *before* you start down a long or steep downgrade. If you don't shift down, you might have to use your brakes so much that they would get hot and no longer work well.

You can tow in DRIVE (D). You may want to shift the transmission to THIRD (3) or, if necessary, a lower gear selection if the transmission shifts too often (e.g., under heavy loads and/or hilly conditions).

You may also want to activate the tow/haul mode if the transmission shifts too often. See "Tow/Haul Mode" earlier.

When towing at high altitude on steep uphill grades, consider the following: Engine coolant at or near sea level will boil at a lower temperature than at higher altitudes. If you turn your engine off immediately after towing at high altitude on steep uphill grades, your vehicle may show signs similar to engine overheating. To avoid this, let the engine run while parked (preferably on level ground) with the automatic transmission in PARK (P) for at least five minutes before turning the engine off. If you do get the overheat warning, see *Engine Overheating on page 418*.

Parking on Hills

⚠ CAUTION:

You really should not park your vehicle, with a trailer attached, on a hill. If something goes wrong, your rig could start to move. People can be injured, and both your vehicle and the trailer can be damaged.

But if you ever have to park your rig on a hill, here's how to do it:

1. Apply your regular brakes, but don't shift into PARK (P) yet.
2. Have someone place chocks under the trailer wheels.
3. When the wheel chocks are in place, release the regular brakes until the chocks absorb the load.
4. Reapply the regular brakes. Then apply your parking brake and shift into PARK (P).
5. Release the regular brakes.

When You Are Ready to Leave After Parking on a Hill

1. Apply your regular brakes and hold the pedal down while you:
   - start your engine,
   - shift into a gear, and
   - release the parking brake.
2. Let up on the brake pedal.
3. Drive slowly until the trailer is clear of the chocks.
4. Stop and have someone pick up and store the chocks.

Maintenance When Trailer Towing

Your vehicle will need service more often when you're pulling a trailer. See the Maintenance Schedule for more on this. Things that are especially important in trailer operation are automatic transmission fluid (don't overfill), engine oil, axle lubricant, belts, cooling system and brake system. Each of these is covered in this manual, and the Index will help you find them quickly.
If you're trailering, it's a good idea to review these sections before you start your trip.

Check periodically to see that all hitch nuts and bolts are tight.

Trailer Wiring Harness

Heavy-Duty Trailer Wiring Package

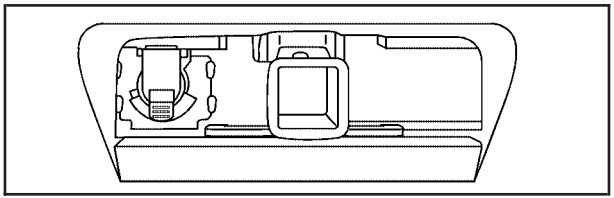

Your vehicle is equipped with the seven-wire trailer towing harness. This harness with a seven-pin universal heavy-duty trailer connector is attached to the rear bumper beam. It is located next to the integrated trailer hitch.

The seven-wire harness contains the following trailer circuits:

- Yellow: Left Stop/Turn Signal
- Dark Green: Right Stop/Turn Signal
- Brown: Taillamps
- White: Ground
- Light Green: Back-up Lamps
- Red w/ Black Stripe: Battery Feed*
- Dark Blue: Trailer Brake*

*The fuses for these two circuits are installed in the underhood electrical center, but the circuits are not connected. They should be installed by your dealer or a qualified service center.

If you are charging a remote (non-vehicle) battery, press the tow/haul mode button located at the end of the shift lever. This will boost the vehicle system voltage and properly charge the battery. If the trailer is too light for tow/haul mode, you can turn on the headlamps as a second way to boost the vehicle system and charge the battery.

Electric Brake Control Wiring Provisions

These wiring provisions are included with your vehicle as part of the heavy-duty trailer wiring package. These provisions are for an electric brake controller. The red/black stripe power feed will not be connected to the battery until the ring terminal is unstowed and connected to the underhood electrical center. The instrument panel contains blunt cut wires near the data link connector for the trailer brake controller. The harness contains the following wires:

- Dark Blue: Auxiliary
- Red/Black: Battery
- Light Blue/White: Brake Switch
- White: Ground

It should be installed by your dealer or a qualfiied service center.

Trailer Recommendations

You must subtract your hitch loads from the Cargo Weight Rating (CWR). CWR is the maximum weight of the load your vehicle can carry. It doesn't include the weight of the people inside. But you can figure about 150 lbs. (68 kg) for each seat. The total cargo load must not be more than your vehicle's CWR.

Weigh your vehicle with the trailer attached, so that you won't go over the GVWR or GAWR. If you are using a weight-distributing hitch, weigh the vehicle without the spring bars in place.

You'll get the best performance if you spread out the weight of your load the right way, and if you choose the correct hitch and trailer brakes.

For more information, see *Towing a Trailer on page 375*.

Section 5 Service and Appearance Care

Service 392
Accessories and Modifications 393
California Proposition 65 Warning 393
Doing Your Own Service Work 394
Adding Equipment to the Outside of Your Vehicle 395

Fuel 395
Gasoline Octane 395
Gasoline Specifications 395
California Fuel 396
Additives 396
Fuels in Foreign Countries 397
Filling the Tank 398
Filling a Portable Fuel Container 400

Checking Things Under the Hood 400
Hood Release 401
Engine Compartment Overview 402
Engine Oil 403
Engine Oil Life System 406
Engine Air Cleaner/Filter 408
Automatic Transmission Fluid 411
Engine Coolant 415
Coolant Surge Tank Pressure Cap 418
Engine Overheating 418
Overheated Engine Protection Operating Mode 421
Cooling System 422
Engine Fan Noise 427
Power Steering Fluid 427
Windshield Washer Fluid 428
Brakes 429
Battery 433
Jump Starting 434

All-Wheel Drive 438

Rear Axle 439

Front Axle 440

Headlamp Aiming 441

Bulb Replacement 445
High Intensity Discharge (HID) Lighting 445
Back-Up Lamps 445
License Plate Lamp 447
Replacement Bulbs 447

Windshield Wiper Blade Replacement 448

Section 5 Service and Appearance Care

Tires 450
Tire Sidewall Labeling 451
Tire Terminology and Definitions 453
Inflation - Tire Pressure 456
High-Speed Operation 458
Tire Pressure Monitor System 458
Tire Inspection and Rotation 463
When It Is Time for New Tires 465
Buying New Tires 465
Different Size Tires and Wheels 467
Uniform Tire Quality Grading 468
Wheel Alignment and Tire Balance 469
Wheel Replacement 470
Tire Chains 471
If a Tire Goes Flat 472
Changing a Flat Tire 473
Removing the Spare Tire and Tools 474
Removing the Flat Tire and Installing the Spare Tire 478
Secondary Latch System 484
Storing a Flat or Spare Tire and Tools 488
Spare Tire 492

Appearance Care 492
Cleaning the Inside of Your Vehicle 492
Fabric/Carpet 494
Leather 495
Instrument Panel, Vinyl, and Other Plastic Surfaces 495
Wood Panels 496
Speaker Covers 496
Care of Safety Belts 496
Weatherstrips 496
Washing Your Vehicle 496
Cleaning Exterior Lamps/Lenses 497
Finish Care 497
Windshield, Backglass, and Wiper Blades 498
Aluminum or Chrome-Plated Wheels 498
Tires 499
Sheet Metal Damage 499
Finish Damage 500
Underbody Maintenance 500
Chemical Paint Spotting 500
Vehicle Care/Appearance Materials 501

Section 5 Service and Appearance Care

Vehicle Identification 502
Vehicle Identification Number (VIN) 502
Service Parts Identification Label 502
Electrical System 502
Add-On Electrical Equipment 502
Windshield Wiper Fuses 503
Power Windows and Other Power Options 503
Fuses and Circuit Breakers 503
Instrument Panel Fuse Block 504
Center Instrument Panel Fuse Block 506
Underhood Fuse Block 507
Capacities and Specifications 512

Service

Your dealer knows your vehicle best and wants you to be happy with it. We hope you will go to your dealer for all your service needs.
You will get genuine GM parts and GM-trained and supported service people.

We hope you will want to keep your GM vehicle all GM. Genuine GM parts have one of these marks:

ACDelco®

GM Parts®

GM® Goodwrench

GM® Accessories

Accessories and Modifications

When you add non-GM accessories to your vehicle they can affect your vehicle's performance and safety, including such things as, airbags, braking, stability, ride and handling, emissions systems, aerodynamics, durability, and electronic systems like anti-lock brakes, traction control and stability control. Some of these accessories may even cause malfunction or damage not covered by warranty.

GM Accessories are designed to complement and function with other systems on your vehicle. Your GM dealer can accessorize your vehicle using genuine GM Accessories. When you go to your GM dealer and ask for GM Accessories, you will know that GM-trained and supported service technicians will perform the work using genuine GM Accessories.

California Proposition 65 Warning

Most motor vehicles, including this one, contain and/or emit chemicals known to the State of California to cause cancer and birth defects or other reproductive harm. Engine exhaust, many parts and systems (including some inside the vehicle), many fluids, and some component wear by-products contain and/or emit these chemicals.

Doing Your Own Service Work

⚠ CAUTION:

You can be injured and your vehicle could be damaged if you try to do service work on a vehicle without knowing enough about it.

- **Be sure you have sufficient knowledge, experience, the proper replacement parts, and tools before you attempt any vehicle maintenance task.**
- **Be sure to use the proper nuts, bolts, and other fasteners. English and metric fasteners can be easily confused. If you use the wrong fasteners, parts can later break or fall off. You could be hurt.**

If you want to do some of your own service work, you will want to use the proper service manual. It tells you much more about how to service your vehicle than this manual can. To order the proper service manual, see *Service Publications Ordering Information on page 553*.

Your vehicle has an airbag system. Before attempting to do your own service work, see *Servicing Your Airbag-Equipped Vehicle on page 104*.

You should keep a record with all parts receipts and list the mileage and the date of any service work you perform. See *Maintenance Record on page 531*.

Adding Equipment to the Outside of Your Vehicle

Things you might add to the outside of your vehicle can affect the airflow around it. This may cause wind noise and affect windshield washer performance. Check with your dealer before adding equipment to the outside of your vehicle.

Fuel

Use of the recommended fuel is an important part of the proper maintenance of your vehicle. To help keep your engine clean and maintain optimum vehicle performance, GM recommends the use of gasoline advertised as TOP TIER Detergent Gasoline.

Gasoline Octane

Use premium unleaded gasoline with a posted octane rating of 91 or higher. You may also use regular unleaded gasoline rated at 87 octane or higher, but your vehicle's acceleration may be slightly reduced, and you may notice a slight audible knocking noise, commonly referred to as spark knock. If the octane is less than 87, you may notice a heavy knocking noise when you drive. If this occurs, use a gasoline rated at 87 octane or higher as soon as possible. Otherwise, you might damage your engine. If you are using gasoline rated at 87 octane or higher and you hear heavy knocking, your engine needs service.

Gasoline Specifications

At a minimum, gasoline should meet ASTM specification D 4814 in the United States or CAN/CGSB-3.5 in Canada. Some gasolines may contain an octane-enhancing additive called methylcyclopentadienyl manganese tricarbonyl (MMT). General Motors recommends against the use of gasolines containing MMT. See *Additives on page 396* for additional information.

California Fuel

If your vehicle is certified to meet California Emissions Standards, it is designed to operate on fuels that meet California specifications. See the underhood emission control label. If this fuel is not available in states adopting California emissions standards, your vehicle will operate satisfactorily on fuels meeting federal specifications, but emission control system performance may be affected. The malfunction indicator lamp may turn on and your vehicle may fail a smog-check test. See *Malfunction Indicator Lamp on page 232*. If this occurs, return to your authorized GM dealer for diagnosis. If it is determined that the condition is caused by the type of fuel used, repairs may not be covered by your warranty.

Additives

To provide cleaner air, all gasolines in the United States are now required to contain additives that will help prevent engine and fuel system deposits from forming, allowing your emission control system to work properly. In most cases, you should not have to add anything to your fuel. However, some gasolines contain only the minimum amount of additive required to meet U.S. Environmental Protection Agency regulations. To help keep fuel injectors and intake valves clean, or if your vehicle experiences problems due to dirty injectors or valves, look for gasoline that is advertised as TOP TIER Detergent Gasoline. Also, your GM dealer has additives that will help correct and prevent most deposit-related problems.

Gasolines containing oxygenates, such as ethers and ethanol, and reformulated gasolines may be available in your area. General Motors recommends that you use these gasolines if they comply with the specifications described earlier. However, E85 (85% ethanol) and other fuels containing more than 10% ethanol must not be used in vehicles that were not designed for those fuels.

Notice: **Your vehicle was not designed for fuel that contains methanol. Do not use fuel containing methanol. It can corrode metal parts in your fuel system and also damage the plastic and rubber parts. That damage would not be covered under your warranty.**

Some gasolines that are not reformulated for low emissions may contain an octane-enhancing additive called methylcyclopentadienyl manganese tricarbonyl (MMT); ask the attendant where you buy gasoline whether the fuel contains MMT. General Motors recommends against the use of such gasolines. Fuels containing MMT can reduce the life of spark plugs and the performance of the emission control system may be affected. The malfunction indicator lamp may turn on. If this occurs, return to your authorized GM dealer for service.

Fuels in Foreign Countries

If you plan on driving in another country outside the United States or Canada, the proper fuel may be hard to find. Never use leaded gasoline or any other fuel not recommended in the previous text on fuel. Costly repairs caused by use of improper fuel would not be covered by your warranty.

To check the fuel availability, ask an auto club, or contact a major oil company that does business in the country where you will be driving.

Filling the Tank

⚠ CAUTION:

Fuel vapor burns violently and a fuel fire can cause bad injuries. To help avoid injuries to you and others, read and follow all the instructions on the pump island. Turn off your engine when you are refueling. Do not smoke if you are near fuel or refueling your vehicle. Keep sparks, flames, and smoking materials away from fuel. Do not leave the fuel pump unattended when refueling your vehicle — this is against the law in some places. Keep children away from the fuel pump; never let children pump fuel.

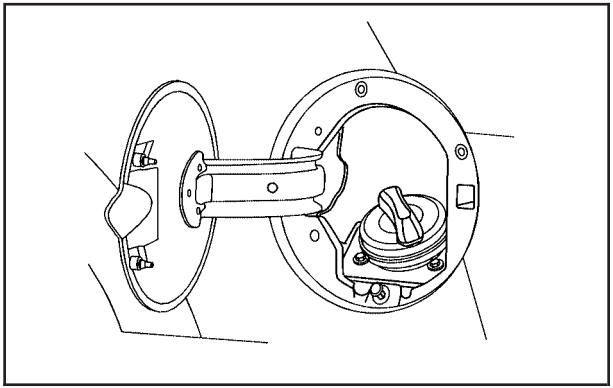

The tethered fuel cap is located behind a hinged fuel door on the driver's side of the vehicle.

To open the fuel door, apply pressure in the center of the rear edge of the fuel door and it will pop open.

To remove the fuel cap, turn it slowly to the left (counterclockwise). The fuel cap has a spring in it; if the cap is released too soon, it will spring back to the right.

While refueling, hang the tethered fuel cap from the hook on the fuel door.

⚠ CAUTION:

If you spill fuel and then something ignites it, you could be badly burned. Fuel can spray out on you if you open the fuel cap too quickly. This spray can happen if your tank is nearly full, and is more likely in hot weather. Open the fuel cap slowly and wait for any hiss noise to stop. Then unscrew the cap all the way.

Be careful not to spill fuel. Do not top off or overfill the tank and wait a few seconds after you have finished pumping before removing the nozzle. Clean fuel from painted surfaces as soon as possible. See *Washing Your Vehicle on page 496*.

When replacing the fuel cap, turn it to the right (clockwise) until it clicks. Make sure the cap is fully installed. The diagnostic system can determine if the fuel cap has been left off or improperly installed. This would allow fuel to evaporate into the atmosphere. See *Malfunction Indicator Lamp on page 232*.

If your vehicle has a Driver Information Center (DIC), the TIGHTEN GAS CAP message will be displayed if the fuel cap is not properly installed.

⚠ CAUTION:

If a fire starts while you are refueling, do not remove the nozzle. Shut off the flow of fuel by shutting off the pump or by notifying the station attendant. Leave the area immediately.

Notice: **If you need a new fuel cap, be sure to get the right type. Your dealer can get one for you. If you get the wrong type, it may not fit properly. This may cause your malfunction indicator lamp to light and may damage your fuel tank and emissions system. See *Malfunction Indicator Lamp on page 232*.**

Filling a Portable Fuel Container

⚠ CAUTION:

Never fill a portable fuel container while it is in your vehicle. Static electricity discharge from the container can ignite the gasoline vapor. You can be badly burned and your vehicle damaged if this occurs. To help avoid injury to you and others:

- **Dispense gasoline only into approved containers.**
- **Do not fill a container while it is inside a vehicle, in a vehicle's trunk, pickup bed, or on any surface other than the ground.**
- **Bring the fill nozzle in contact with the inside of the fill opening before operating the nozzle. Contact should be maintained until the filling is complete.**
- **Do not smoke while pumping gasoline.**

Checking Things Under the Hood

⚠ CAUTION:

An electric fan under the hood can start up and injure you even when the engine is not running. Keep hands, clothing, and tools away from any underhood electric fan.

⚠ CAUTION:

Things that burn can get on hot engine parts and start a fire. These include liquids like fuel, oil, coolant, brake fluid, windshield washer and other fluids, and plastic or rubber. You or others could be burned. Be careful not to drop or spill things that will burn onto a hot engine.

Hood Release

To open the hood do the following:

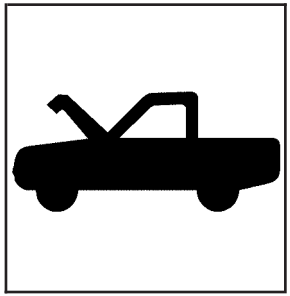

1. Pull the handle with this symbol on it. It is located inside the vehicle to the lower left of the steering wheel.

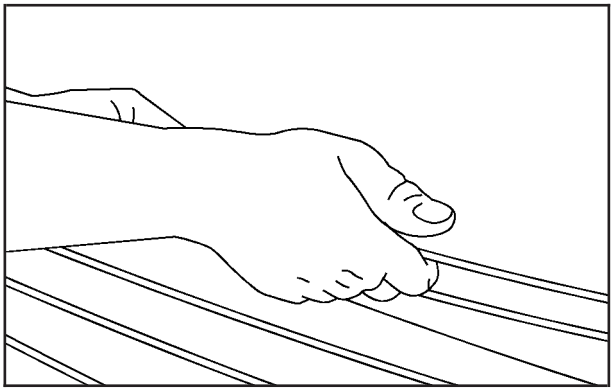

2. Then go to the front of the vehicle and locate the secondary hood release, near the center of the grille.
3. Push the secondary hood release to the right.
4. Lift the hood.

   Before closing the hood, be sure all the filler caps are on properly. Then pull down the hood and close it firmly.

Engine Compartment Overview

When you open the hood on the 6.2L engine here is what you will see:

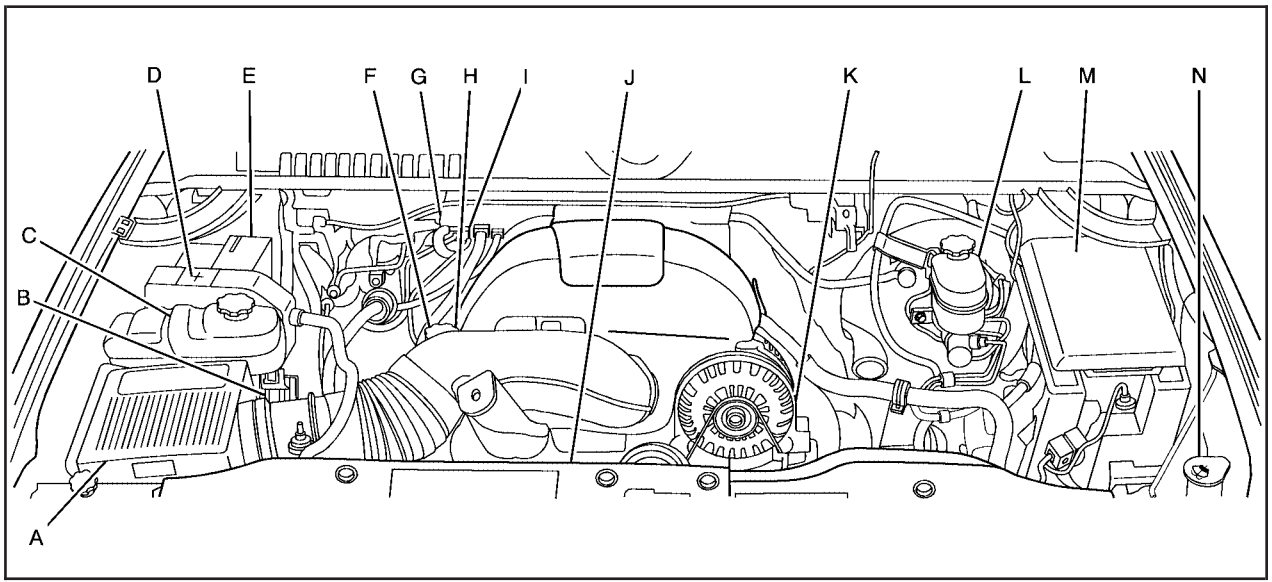

A. Engine Air Cleaner/Filter. See *Engine Air Cleaner/Filter on page 408*.

B. Air Filter Restriction Indicator (If Equipped). See *Engine Air Cleaner/Filter on page 408*.

C. Coolant Surge Tank and Pressure Cap. See *Cooling System on page 422* and *Coolant Surge Tank Pressure Cap on page 418*.

D. Remote Positive (+) Terminal. See *Jump Starting on page 434*.

E. Battery. See *Battery on page 433*.

F. Engine Oil Fill Cap. See "When to Add Engine Oil" under *Engine Oil on page 403*.

G. Automatic Transmission Dipstick (Out of View). See "Checking the Fluid Level" under *Automatic Transmission Fluid on page 411*.

H. Remote Negative (–) Terminal (GND) (Out of View). See *Jump Starting on page 434*.

I. Engine Oil Dipstick (Out of View). See "Checking Engine Oil" under *Engine Oil on page 403*.

J. Engine Cooling Fan (Out of View). See *Cooling System on page 422*.

K. Power Steering Fluid Reservoir (Out of View). See *Power Steering Fluid on page 427*.

L. Brake Master Cylinder Reservoir. See "Brake Fluid" under *Brakes on page 429*.

M. Underhood Fuse Block. See *Underhood Fuse Block on page 507*.

N. Windshield Washer Fluid Reservoir. See "Adding Washer Fluid" under *Windshield Washer Fluid on page 428*.

Engine Oil

If the ENGINE OIL LOW ADD OIL message appears on the Driver Information Center (DIC), it means you need to check your engine oil level right away. For more information, see ENGINE OIL LOW ADD OIL under *DIC Warnings and Messages on page 245*.

You should check your engine oil level regularly; this is an added reminder.

Checking Engine Oil

It is a good idea to check your engine oil every time you get fuel. In order to get an accurate reading, the oil must be warm and the vehicle must be on level ground.

The engine oil dipstick handle is a yellow loop. See *Engine Compartment Overview on page 402* for the location of the engine oil dipstick.

1. Turn off the engine and give the oil several minutes to drain back into the oil pan. If you do not do this, the oil dipstick might not show the actual level.
2. Pull out the dipstick and clean it with a paper towel or cloth, then push it back in all the way. Remove it again, keeping the tip down, and check the level.

When to Add Engine Oil

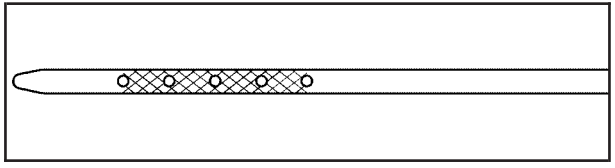

If the oil is below the cross-hatched area at the tip of the dipstick, you will need to add at least one quart/liter of oil. But you must use the right kind. This section explains what kind of oil to use. For engine oil crankcase capacity, see *Capacities and Specifications on page 512*.

Notice: **Do not add too much oil. If the engine has so much oil that the oil level gets above the cross-hatched area that shows the proper operating range, the engine could be damaged.**

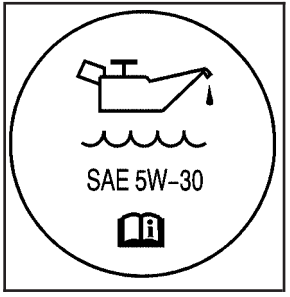

See *Engine Compartment Overview on page 402* for the location of the engine oil fill cap.

Be sure to add enough oil to put the level somewhere in the proper operating range. Push the dipstick all the way back in when you are through.

What Kind of Engine Oil to Use

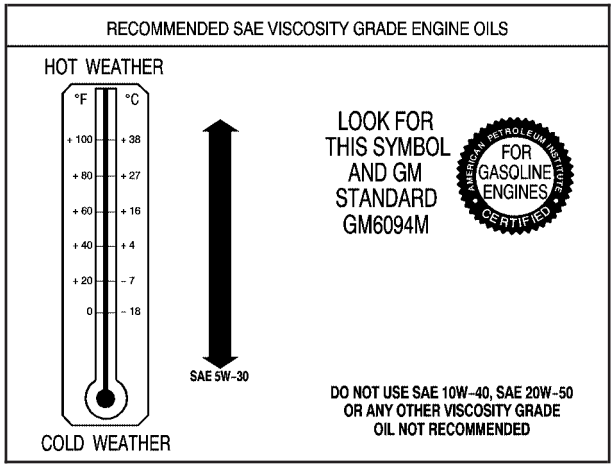

Look for two things:

- GM6094M

  Your vehicle's engine requires oil meeting GM Standard GM6094M. You should look for and use only an oil that meets GM Standard GM6094M.

- SAE 5W-30

  As shown in the viscosity chart, SAE 5W-30 is best for your vehicle.

  These numbers on an oil container show its viscosity, or thickness. Do not use other viscosity oils such as SAE 20W-50.

Oils meeting these requirements should also have the starburst symbol on the container. This symbol indicates that the oil has been certified by the American Petroleum Institute (API).

You should look for this information on the oil container, and use *only* those oils that are identified as meeting GM Standard GM6094M and have the starburst symbol on the front of the oil container.

Notice: **Use only engine oil identified as meeting GM Standard GM6094M and showing the American Petroleum Institute Certified For Gasoline Engines starburst symbol. Failure to use the recommended oil can result in engine damage not covered by your warranty.**

GM Goodwrench® oil meets all the requirements for your vehicle.

If you are in an area of extreme cold, where the temperature falls below –20°F (–29°C), it is recommended that you use either an SAE 5W-30 synthetic oil or an SAE 0W-30 oil. Both will provide easier cold starting and better protection for your engine at extremely low temperatures.

Engine Oil Additives

Do not add anything to your oil. The recommended oils with the starburst symbol that meet GM Standard GM6094M are all you will need for good performance and engine protection.

Engine Oil Life System

When to Change Engine Oil

Your vehicle has a computer system that lets you know when to change the engine oil and filter. This is based on engine revolutions and engine temperature, and not on mileage. Based on driving conditions, the mileage at which an oil change will be indicated can vary considerably. For the oil life system to work properly, you must reset the system every time the oil is changed.

When the system has calculated that oil life has been diminished, it will indicate that an oil change is necessary. A CHANGE ENGINE OIL SOON message will come on. See *DIC Warnings and Messages on page 245*. Change your oil as soon as possible within the next 600 miles (1 000 km). It is possible that, if you are driving under the best conditions, the oil life system may not indicate that an oil change is necessary for over a year. However, your engine oil and filter must be changed at least once a year and at this time the system must be reset. Your dealer has GM-trained service people who will perform this work using genuine GM parts and reset the system. It is also important to check your oil regularly and keep it at the proper level.

If the system is ever reset accidentally, you must change your oil at 3,000 miles (5 000 km) since your last oil change. Remember to reset the oil life system whenever the oil is changed.

How to Reset the Engine Oil Life System

The Engine Oil Life System calculates when to change your engine oil and filter based on vehicle use. Anytime your oil is changed, reset the system so it can calculate when the next oil change is required. If a situation occurs where you change your oil prior to a CHANGE ENGINE OIL SOON message being turned on, reset the system.

Always reset the engine oil life to 100% after every oil change. It will not reset itself. To reset the Engine Oil Life System, do the following:

1. Display the OIL LIFE REMAINING on the DIC.
2. Press and hold the SET/RESET button on the DIC for more than five seconds. The oil life will change to 100%.

If the CHANGE ENGINE OIL SOON message comes back on when you start your vehicle, the Engine Oil Life System has not reset. Repeat the procedure.

What to Do with Used Oil

Used engine oil contains certain elements that may be unhealthy for your skin and could even cause cancer. Do not let used oil stay on your skin for very long. Clean your skin and nails with soap and water, or a good hand cleaner. Wash or properly dispose of clothing or rags containing used engine oil. See the manufacturer's warnings about the use and disposal of oil products.

Used oil can be a threat to the environment. If you change your own oil, be sure to drain all the oil from the filter before disposal. Never dispose of oil by putting it in the trash, pouring it on the ground, into sewers, or into streams or bodies of water. Instead, recycle it by taking it to a place that collects used oil. If you have a problem properly disposing of used oil, ask your dealer, a service station, or a local recycling center for help.

Engine Air Cleaner/Filter

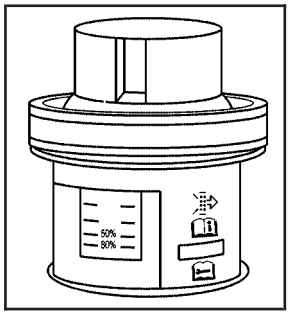

See *Engine Compartment Overview on page 402* for the location of the engine air cleaner/filter and the air filter restriction indicator, if the vehicle has one.

When to Inspect the Engine Air Cleaner/Filter

If your vehicle has an air filter restriction indicator, it lets you know when the engine air cleaner/filter needs to be replaced. On vehicles with a restriction indicator, you should inspect the air filter restriction indicator at every oil change and replace the engine air cleaner/filter when the indicator tells you to.

On vehicles without an air filter restriction indicator, inspect the air cleaner/filter at the Maintenance II intervals and replace it at the first oil change after each 50,000 mile (83 000 km) interval. See *Scheduled Maintenance on page 517* for more information. If you are driving in dusty/dirty conditions, inspect the filter at each engine oil change.

How to Inspect the Engine Air Cleaner/Filter

Vehicles With an Air Filter Restriction Indicator

Locate the air filter restriction indicator on the engine air cleaner/filter cover. When the indicator turns black or is in the red/orange “change” zone, replace the filter and reset the indicator. See the steps following to replace the engine air cleaner/filter and to reset the air filter restriction indicator.

Vehicles Without an Air Filter Restriction Indicator

To inspect the air cleaner/filter, remove the engine air cleaner/filter from the vehicle by following step 1 through 6. When you have the engine air cleaner/filter removed, lightly shake it to release loose dust and dirt. If the engine air cleaner/filter remains caked with dirt, a new filter is required.

Replacing the Engine Air Cleaner/Filter and Resetting the Air Filter Restriction Indicator

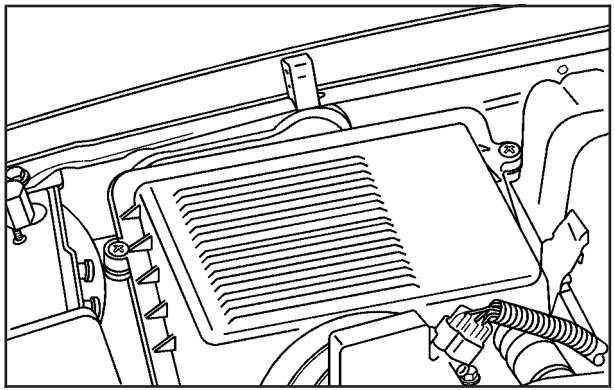

1. Locate the air cleaner/filter assembly. See *Engine Compartment Overview on page 402*.
2. Loosen the four screws on the cover of the housing and lift up the cover.

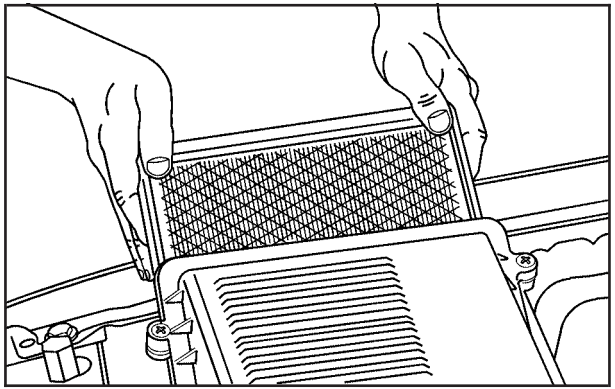

3. Remove the engine air cleaner/filter from the housing. Care should be taken to dislodge as little dirt as possible.
4. Clean the engine air cleaner/filter sealing surfaces and the housing.
5. Inspect or replace the engine air cleaner/filter.
6. Reinstall the cover and tighten the screws.
7. Reset the air filter restriction indicator, if the vehicle has one, by pressing the top button on the indicator.

⚠ CAUTION:

Operating the engine with the air cleaner/filter off can cause you or others to be burned. The air cleaner not only cleans the air; it helps to stop flames if the engine backfires. If it is not there and the engine backfires, you could be burned. Do not drive with it off, and be careful working on the engine with the air cleaner/filter off.

Automatic Transmission Fluid

When to Check and Change Automatic Transmission Fluid

It is usually not necessary to check the transmission fluid level. A transmission fluid leak is the only reason for fluid loss. If you suspect a small leak, then use the following checking procedures to check the fluid level. However, if there is a large leak, then it may be necessary to have the vehicle towed to a dealership service department and have it repaired before driving the vehicle further.

Notice: **Use of the incorrect automatic transmission fluid may damage your vehicle, and the damages may not be covered by your warranty. Always use the automatic transmission fluid listed in *Recommended Fluids and Lubricants on page 527*.**

Change the fluid and filter at the intervals listed in the Maintenance Schedule. See *Scheduled Maintenance on page 517*. Be sure to use the transmission fluid listed in *Recommended Fluids and Lubricants on page 527*.

How to Check Automatic Transmission Fluid

Notice: **Too much or too little fluid can damage your transmission. Too much can mean that some of the fluid could come out and fall on hot engine part or exhaust system parts, starting a fire. Too little fluid could cause the transmission to overheat. Be sure to get an accurate reading if you check your transmission fluid.**

Before checking the fluid level, prepare your vehicle as follows:

1. Start the engine and park your vehicle on a level surface. Keep the engine running.
2. Apply the parking brake and place the shift lever in PARK (P).
3. With your foot on the brake pedal, move the shift lever through each gear range, pausing for about three seconds in each range. Then, move the shift lever back to PARK (P).

4. Allow the engine to idle (500 – 800 rpm) for at least one minute. Slowly release the brake pedal.
5. Keep the engine running and press the Trip/Fuel button until TRANS TEMP (Transmission Temperature) displays on the Driver Information Center (DIC).
6. Using the TRANS TEMP reading, determine and perform the appropriate check procedure. If the TRANS TEMP reading is not within the required temperature ranges, allow the vehicle to cool, or operate the vehicle until the appropriate transmission fluid temperature is reached.

Cold Check Procedure

Use this procedure only as a reference to determine if the transmission has enough fluid to be operated safely until a hot check procedure can be made. The hot check procedure is the most accurate method to check the fluid level. Perform the hot check procedure at the first opportunity.

Use this cold check procedure to check fluid level when the transmission temperature is between 80°F and 90°F (27°C and 32°C).

1. Locate the transmission dipstick at the rear of the engine compartment, on the passenger's side of the vehicle.

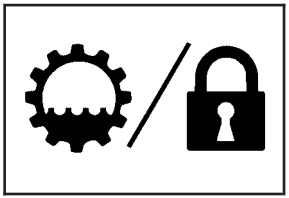

The dipstick handle has this graphic. See *Engine Compartment Overview on page 402* for more information.

2. Flip the handle up, and then pull out the dipstick and wipe it with a clean rag or paper towel.
3. Install the dipstick by pushing it back in all the way, wait three seconds, and then pull it back out again.
4. Check both sides of the dipstick, and read the lower level. Repeat the check procedure to verify the reading.

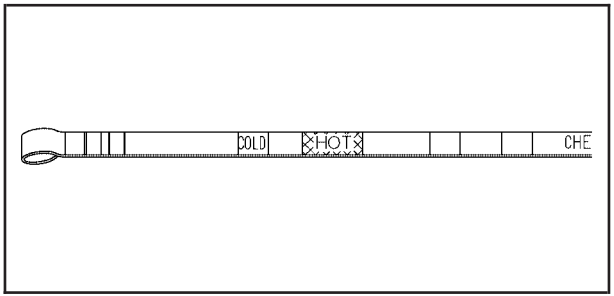

5. If the fluid level is below the COLD check band, add only enough fluid as necessary to bring the level into the COLD band. It does not take much fluid, generally less than one pint (0.5L). Do not overfill.
6. Perform a hot check at the first opportunity after the transmission reaches a normal operating temperature between 160°F to 200°F (71°C to 93°C).
7. If the fluid level is in the acceptable range, push the dipstick back in all the way, then flip the handle down to lock the dipstick in place.

Hot Check Procedure

Use this procedure to check the transmission fluid level when the transmission fluid temperature is between 160°F and 200°F (71°C and 93°C).

The hot check is the most accurate method to check the fluid level. The hot check should be performed at the first opportunity in order to verify the cold check. The fluid level rises as fluid temperature increases, so it is important to ensure the transmission temperature is within range.

1. Locate the transmission dipstick at the rear of the engine compartment, on the passenger's side of the vehicle.

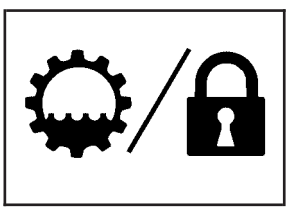

The dipstick handle has this graphic. See *Engine Compartment Overview on page 402* for more information.

2. Flip the handle up, and then pull out the dipstick and wipe it with a clean rag or paper towel.
3. Install the dipstick by pushing it back in all the way, wait three seconds, and then pull it back out again.
4. Check both sides of the dipstick, and read the lower level. Repeat the check procedure to verify the reading.

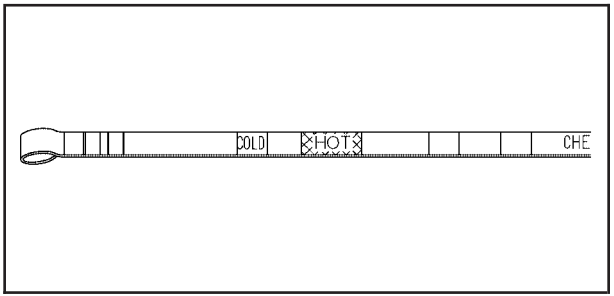

5. Safe operating level is within the HOT crosshatch band on the dipstick. If the fluid level is not within the HOT band, and the transmission temperature is between 160°F and 200°F (71°C and 93°C), add or drain fluid as necessary to bring the level into the HOT band. If the fluid level is low, add only enough fluid to bring the level into the HOT band. It does not take much fluid, generally less than one pint (0.5L). Do not overfill.
6. If the fluid level is in the acceptable range, push the dipstick back in all the way, then flip the handle down to lock the dipstick in place.

Consistency of Readings

Always check the fluid level at least twice using the procedures described. Consistency (repeatable readings) is important to maintaining proper fluid level. If fluid is added, it may take 15 minutes or longer to obtain an accurate reading because of residual fluid draining down the dipstick tube. If inconsistent readings persist, check the transmission breather to be sure it is clean and not clogged. If readings are still inconsistent, contact your dealer.

Engine Coolant

The cooling system in your vehicle is filled with DEX-COOL® engine coolant. This coolant is designed to remain in your vehicle for five years or 150,000 miles (240 000 km), whichever occurs first, if you add only DEX-COOL® extended life coolant.

The following explains your cooling system and how to add coolant when it is low. If you have a problem with engine overheating, see *Engine Overheating on page 418*.

A 50/50 mixture of clean, drinkable water and DEX-COOL® coolant will:

- Give freezing protection down to –34°F (–37°C).
- Give boiling protection up to 265°F (129°C).
- Protect against rust and corrosion.
- Help keep the proper engine temperature.
- Let the warning lights and gages work as they should.

Notice: **Using coolant other than DEX-COOL® may cause premature engine, heater core, or radiator corrosion. In addition, the engine coolant may require changing sooner, at the first maintenance service after each 30,000 miles (50 000 km) or 24 months, whichever occurs first. Any repairs would not be covered by your warranty. Always use DEX-COOL® (silicate-free) coolant in your vehicle.**

What to Use

Use a mixture of one-half clean, drinkable water and one-half DEX-COOL® coolant which will not damage aluminum parts. If you use this coolant mixture, you do not need to add anything else.

⚠ CAUTION:

Adding only plain water to your cooling system can be dangerous. Plain water, or some other liquid such as alcohol, can boil before the proper coolant mixture will. Your vehicle's coolant warning system is set for the proper coolant mixture. With plain water or the wrong mixture, your engine could get too hot but you would not get the overheat warning. Your engine could catch fire and you or others could be burned. Use a 50/50 mixture of clean, drinkable water and DEX-COOL® coolant.

Notice: **If you use an improper coolant mixture, your engine could overheat and be badly damaged. The repair cost would not be covered by your warranty. Too much water in the mixture can freeze and crack the engine, radiator, heater core, and other parts.**

If you have to add coolant more than four times a year, have your dealer check your cooling system.

Notice: **If you use extra inhibitors and/or additives in your vehicle's cooling system, you could damage your vehicle. Use only the proper mixture of the engine coolant listed in this manual for the cooling system. See** ***Recommended Fluids and Lubricants on page 527*** **for more information.**

Checking Coolant

The coolant surge tank is located in the engine compartment on the passenger's side of the vehicle. See *Engine Compartment Overview on page 402* for more information on location.

⚠ CAUTION:

Turning the surge tank pressure cap when the engine and radiator are hot can allow steam and scalding liquids to blow out and burn you badly. Never turn the surge tank pressure cap — even a little — when the engine and radiator are hot.

The vehicle must be on a level surface. When your engine is cold, the coolant level should be at the FULL COLD mark.

Adding Coolant

If you need more coolant, add the proper DEX-COOL® coolant mixture at the surge tank, but only when the engine is cool.

⚠ CAUTION:

You can be burned if you spill coolant on hot engine parts. Coolant contains ethylene glycol, and it will burn if the engine parts are hot enough. Do not spill coolant on a hot engine.

When replacing the pressure cap, make sure it is hand-tight and fully seated.

Coolant Surge Tank Pressure Cap

Notice: **If the pressure cap is not tightly installed, coolant loss and possible engine damage may occur. Be sure the cap is properly and tightly secured.**

The coolant surge tank pressure cap must be fully installed on the coolant surge tank. See *Engine Compartment Overview on page 402* for more information on location.

Engine Overheating

You will find a coolant temperature gage on your vehicle's instrument panel. See *Engine Coolant Temperature Gage on page 230*.

In addition, the messages ENGINE OVERHEATED STOP ENGINE, ENGINE OVERHEATED IDLE ENGINE, or ENGINE POWER IS REDUCED could appear in the Driver Information Center (DIC) on the instrument panel. See *DIC Warnings and Messages on page 245*.

If Steam Is Coming From Your Engine

⚠ CAUTION:

Steam from an overheated engine can burn you badly, even if you just open the hood. Stay away from the engine if you see or hear steam coming from it. Just turn it off and get everyone away from the vehicle until it cools down. Wait until there is no sign of steam or coolant before you open the hood.

If you keep driving when your engine is overheated, the liquids in it can catch fire. You or others could be badly burned. Stop your engine if it overheats, and get out of the vehicle until the engine is cool.

CAUTION: (Continued)

CAUTION: (Continued)

See *Overheated Engine Protection Operating Mode on page 421* for information on driving to a safe place in an emergency.

Notice: **If your engine catches fire because you keep driving with no coolant, your vehicle can be badly damaged. The costly repairs would not be covered by your warranty. See *Overheated Engine Protection Operating Mode on page 421* for information on driving to a safe place in an emergency.**

If No Steam Is Coming From Your Engine

The ENGINE OVERHEATED STOP ENGINE or the ENGINE OVERHEATED IDLE ENGINE message, along with a low coolant condition, can indicate a serious problem.

If you get an engine overheat warning, but see or hear no steam, the problem may not be too serious. Sometimes the engine can get a little too hot when you:

- Climb a long hill on a hot day.
- Stop after high-speed driving.
- Idle for long periods in traffic.
- Tow a trailer. See *Towing a Trailer on page 375*.

If you get the ENGINE OVERHEATED STOP ENGINE or the ENGINE OVERHEATED IDLE ENGINE message with no sign of steam, try this for a minute or so:

1. If you have an air conditioner and it is on, turn it off.
2. Turn on your heater to full hot at the highest fan speed and open the windows as necessary.
3. In heavy traffic, let the engine idle in NEUTRAL (N) while stopped. If it is safe to do so, pull off the road, shift to PARK (P) or NEUTRAL (N) and let the engine idle.

If you no longer have the overheat warning, you can drive. Just to be safe, drive slower for about 10 minutes. If the warning does not come back on, you can drive normally.

If the warning continues, pull over, stop, and park your vehicle right away.

If there is still no sign of steam and your vehicle has an engine-driven cooling fan, push down the accelerator until the engine speed is about twice as fast as normal idle speed for at least five minutes while you are parked.

If there is still no sign of steam and your vehicle has an electric cooling fan, idle the engine for at least five minutes while you are parked.

If you still have the warning, turn off the engine and get everyone out of the vehicle until it cools down. Also, see “Overheated Engine Protection Operating Mode” later in this section.

You may decide not to lift the hood but to get service help right away.

Overheated Engine Protection Operating Mode

If an overheated engine condition exists and the REDUCED ENGINE POWER message is displayed, an overheat protection mode which alternates firing groups of cylinders helps prevent engine damage. In this mode, you will notice a loss in power and engine performance. This operating mode allows your vehicle to be driven to a safe place in an emergency. Driving extended miles (km) and/or towing a trailer in the overheat protection mode should be avoided.

Notice: **After driving in the overheated engine protection operating mode, to avoid engine damage, allow the engine to cool before attempting any repair. The engine oil will be severely degraded. Repair the cause of coolant loss, change the oil and reset the oil life system. See *Engine Oil on page 403*.**

Cooling System

When you decide it is safe to lift the hood, here is what you will see:

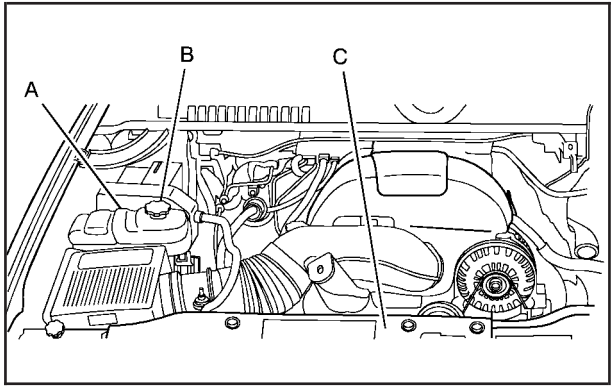

A. Coolant Surge Tank
B. Coolant Surge Tank Pressure Cap
C. Engine Cooling Fan

⚠ CAUTION:

An electric engine cooling fan under the hood can start up even when the engine is not running and can injure you. Keep hands, clothing and tools away from any underhood electric fan.

If the coolant inside the coolant surge tank is boiling, do not do anything else until it cools down. The vehicle should be parked on a level surface. Check the coolant level after the system cools down. Some amount of coolant may be lost due to overheating.

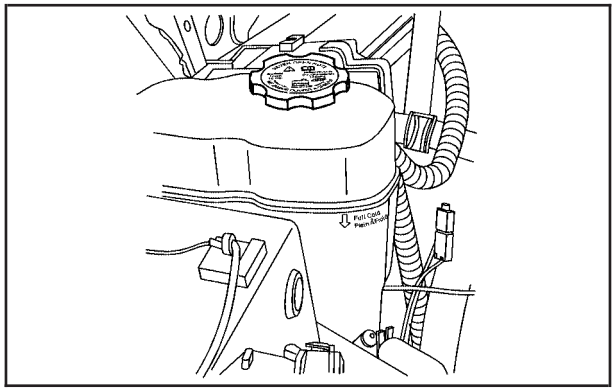

The coolant level should be at or above the FULL COLD mark. If it is not, you may have a leak at the pressure cap or in the radiator hoses, heater hoses, radiator, water pump, or somewhere else in the cooling system.

⚠ CAUTION:

Heater and radiator hoses, and other engine parts, can be very hot. Do not touch them. If you do, you can be burned. Do not run the engine if there is a leak.

If you run the engine, it could lose all coolant. That could cause an engine fire, and you could be burned. Get any leak fixed before you drive the vehicle.

Notice: **Engine damage from running your engine without coolant is not covered by your warranty. See *Overheated Engine Protection Operating Mode on page 421* for information on driving to a safe place in an emergency.**

Notice: **Using coolant other than DEX-COOL® may cause premature engine, heater core or radiator corrosion. In addition, the engine coolant may require changing sooner, at 30,000 miles (50 000 km) or 24 months, whichever occurs first. Any repairs would not be covered by your warranty. Always use DEX-COOL® (silicate-free) coolant in your vehicle.**

How to Add Coolant to the Coolant Surge Tank

If you have not found a problem yet, check to see if coolant is visible in the surge tank. If coolant is visible but the coolant level is not at or above the FULL COLD mark, add a 50/50 mixture of clean, drinkable water and DEX-COOL® coolant at the coolant surge tank, but be sure the cooling system, including the coolant surge tank pressure cap, is cool before you do it. See *Engine Coolant on page 415* for more information.

If no coolant is visible in the surge tank, add coolant as follows:

⚠ CAUTION:

Steam and scalding liquids from a hot cooling system can blow out and burn you badly. They are under pressure, and if you turn the radiator pressure cap — even a little — they can come out at high speed. Never turn the cap when the cooling system, including the radiator pressure cap, is hot. Wait for the cooling system and radiator pressure cap to cool if you ever have to turn the pressure cap.

⚠ CAUTION:

Adding only plain water to your cooling system can be dangerous. Plain water, or some other liquid such as alcohol, can boil before the proper coolant mixture will. Your vehicle's coolant warning system is set for the proper coolant mixture. With plain water or the wrong mixture, your engine could get too hot but you would not get the overheat warning. Your engine could catch fire and you or others could be burned. Use a 50/50 mixture of clean, drinkable water and DEX-COOL® coolant.

Notice: **In cold weather, water can freeze and crack the engine, radiator, heater core and other parts. Use the recommended coolant and the proper coolant mixture.**

⚠ CAUTION:

You can be burned if you spill coolant on hot engine parts. Coolant contains ethylene glycol and it will burn if the engine parts are hot enough. Do not spill coolant on a hot engine.

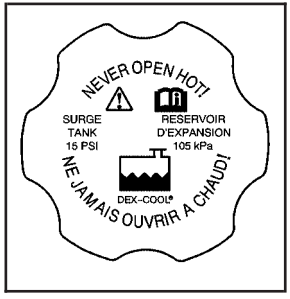

1. You can remove the coolant surge tank pressure cap when the cooling system, including the coolant surge tank pressure cap and upper radiator hose, is no longer hot.

Remove the coolant surge tank pressure cap by slowly turning the pressure cap counterclockwise about one full turn. If you hear a hiss, wait for that to stop. A hiss means there is still some pressure left.

2. Then keep turning the pressure cap slowly, and remove it.

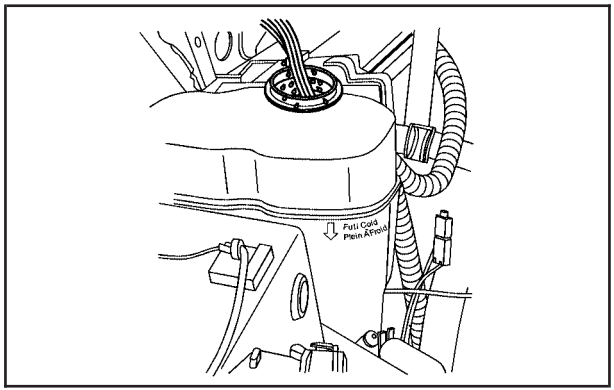

3. Fill the coolant surge tank with the proper mixture, to the FULL COLD mark.

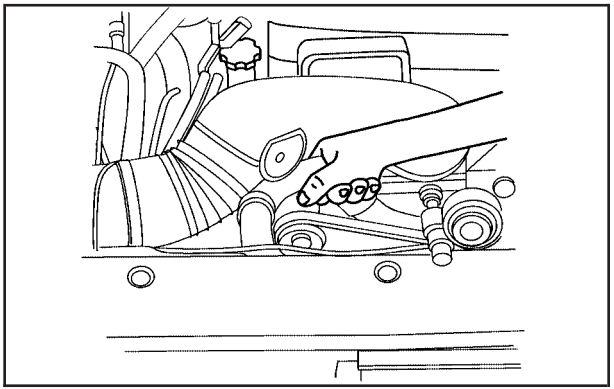

4. With the coolant surge tank pressure cap off, start the engine and let it run until you can feel the upper radiator hose getting hot. Watch out for the engine cooling fan.

   By this time, the coolant level inside the coolant surge tank may be lower. If the level is lower, add more of the proper mixture to the coolant surge tank until the level reaches the FULL COLD mark.

5. Then replace the pressure cap. Be sure the pressure cap is hand-tight and fully seated.
6. Verify coolant level after engine is shut off and the coolant is cold. If necessary, repeat coolant fill procedure steps 1 through 6.

Engine Fan Noise

Your vehicle has electric cooling fans, you may hear the fans spinning at low speed during most everyday driving. The fans may turn off if no cooling is required. Under heavy vehicle loading, trailer towing, and/or high outside temperatures, or if you are operating your air conditioning system, the fans may change to high speed and you may hear an increase in fan noise. This is normal and indicates that the cooling system is functioning properly. The fans will change to low speed when additional cooling is no longer required.

Power Steering Fluid

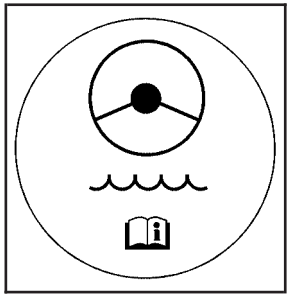

See *Engine Compartment Overview on page 402* for reservoir location.

When to Check Power Steering Fluid

It is not necessary to regularly check power steering fluid unless you suspect there is a leak in the system or you hear an unusual noise. A fluid loss in this system could indicate a problem. Have the system inspected and repaired.

How to Check Power Steering Fluid

To check the power steering fluid, do the following:

1. Turn the key off and let the engine compartment cool down.
2. Wipe the cap and the top of the reservoir clean.
3. Unscrew the cap and wipe the dipstick with a clean rag.
4. Replace the cap and completely tighten it.
5. Remove the cap again and look at the fluid level on the dipstick.

The level should be at the FULL COLD mark. If necessary, add only enough fluid to bring the level up to the mark.

What to Use

To determine what kind of fluid to use, see *Recommended Fluids and Lubricants on page 527*. Always use the proper fluid. Failure to use the proper fluid can cause leaks and damage hoses and seals.

Windshield Washer Fluid

What to Use

When you need windshield washer fluid, be sure to read the manufacturer's instructions before use. If you will be operating your vehicle in an area where the temperature may fall below freezing, use a fluid that has sufficient protection against freezing.

Adding Washer Fluid

Your vehicle has a low washer fluid message that comes on when the washer fluid is low. The message is displayed for 15 seconds at the start of each ignition cycle. When the WASHER FLUID LOW ADD FLUID message is displayed, you will need to add washer fluid to the windshield washer fluid reservoir.

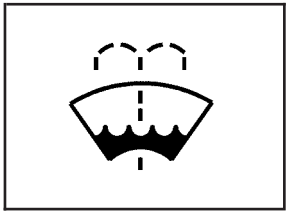

Open the cap with the washer symbol on it. Add washer fluid until the tank is full. See *Engine Compartment Overview on page 402* for reservoir location.

Notice:

- **When using concentrated washer fluid, follow the manufacturer's instructions for adding water.**
- **Do not mix water with ready-to-use washer fluid. Water can cause the solution to freeze and damage your washer fluid tank and other parts of the washer system. Also, water does not clean as well as washer fluid.**
- **Fill your washer fluid tank only three-quarters full when it is very cold. This allows for expansion if freezing occurs, which could damage the tank if it is completely full.**
- **Do not use engine coolant (antifreeze) in your windshield washer. It can damage your washer system and paint.**

Brakes

Brake Fluid

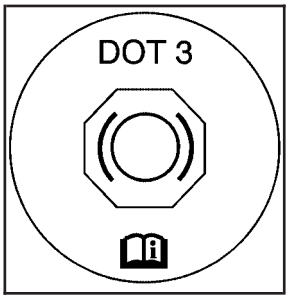

Your brake master cylinder reservoir is filled with DOT-3 brake fluid. See *Engine Compartment Overview on page 402* for the location of the reservoir.

There are only two reasons why the brake fluid level in the reservoir might go down. The first is that the brake fluid goes down to an acceptable level during normal brake lining wear. When new linings are put in, the fluid level goes back up. The other reason is that fluid is leaking out of the brake system. If it is, you should have your brake system fixed, since a leak means that sooner or later your brakes will not work well, or will not work at all.

So, it is not a good idea to top off your brake fluid. Adding brake fluid will not correct a leak. If you add fluid when your linings are worn, then you will have too much fluid when you get new brake linings. You should add or remove brake fluid, as necessary, only when work is done on the brake hydraulic system.

⚠ CAUTION:

If you have too much brake fluid, it can spill on the engine. The fluid will burn if the engine is hot enough. You or others could be burned, and your vehicle could be damaged. Add brake fluid only when work is done on the brake hydraulic system. See "Checking Brake Fluid" in this section.

When the brake fluid falls to a low level, the brake warning light will come on. See *Brake System Warning Light on page 228*.

Refer to the Maintenance Schedule to determine when to check your brake fluid. See *Scheduled Maintenance on page 517*.

Checking Brake Fluid

You can check the brake fluid without taking off the cap.

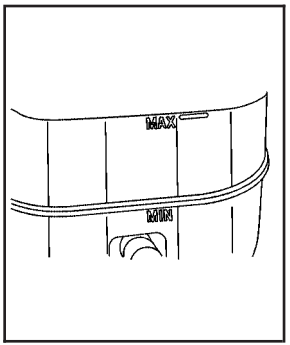

Look at the brake fluid reservoir. The fluid level should be above MIN. If it is not, have your brake system checked to see if there is a leak.

After work is done on the brake hydraulic system, make sure the level is above the MIN but not over the MAX mark.

What to Add

When you do need brake fluid, use only DOT-3 brake fluid. Use new brake fluid from a sealed container only. See *Recommended Fluids and Lubricants on page 527*.

Always clean the brake fluid reservoir cap and the area around the cap before removing it. This will help keep dirt from entering the reservoir.

⚠ CAUTION:

With the wrong kind of fluid in your brake system, your brakes may not work well, or they may not even work at all. This could cause a crash. Always use the proper brake fluid.

Notice:

- **Using the wrong fluid can badly damage brake system parts. For example, just a few drops of mineral-based oil, such as engine oil, in your brake system can damage brake system parts so badly that they will have to be replaced. Do not let someone put in the wrong kind of fluid.**
- **If you spill brake fluid on your vehicle's painted surfaces, the paint finish can be damaged. Be careful not to spill brake fluid on your vehicle. If you do, wash it off immediately. See *Washing Your Vehicle on page 496*.**

Brake Wear

Your vehicle has four-wheel disc brakes.

Disc brake pads have built-in wear indicators that make a high-pitched warning sound when the brake pads are worn and new pads are needed. The sound may come and go or be heard all the time your vehicle is moving, except when you are pushing on the brake pedal firmly.

⚠ CAUTION:

The brake wear warning sound means that soon your brakes will not work well. That could lead to an accident. When you hear the brake wear warning sound, have your vehicle serviced.

Notice: **Continuing to drive with worn-out brake pads could result in costly brake repair.**

Some driving conditions or climates may cause a brake squeal when the brakes are first applied or lightly applied. This does not mean something is wrong with your brakes.

Properly torqued wheel nuts are necessary to help prevent brake pulsation. When tires are rotated, inspect brake pads for wear and evenly tighten wheel nuts in the proper sequence to GM torque specifications.

Brake linings should always be replaced as complete axle sets.

Brake Pedal Travel

See your dealer if the brake pedal does not return to normal height, or if there is a rapid increase in pedal travel. This could be a sign of brake trouble.

Brake Adjustment

Every time you make a brake stop, your disc brakes adjust for wear.

Replacing Brake System Parts

The braking system on a vehicle is complex. Its many parts have to be of top quality and work well together if the vehicle is to have really good braking. Your vehicle was designed and tested with top-quality GM brake parts.

When you replace parts of your braking system — for example, when your brake linings wear down and you need new ones put in — be sure you get new approved GM replacement parts. If you do not, your brakes may no longer work properly. For example, if someone puts in brake linings that are wrong for your vehicle, the balance between your front and rear brakes can change — for the worse. The braking performance you have come to expect can change in many other ways if someone puts in the wrong replacement brake parts.

Battery

Your vehicle has a maintenance free battery. When it is time for a new battery, get one that has the replacement number shown on the original battery's label. We recommend an ACDelco® replacement battery. See *Engine Compartment Overview on page 402* for battery location.

Warning: Battery posts, terminals, and related accessories contain lead and lead compounds, chemicals known to the State of California to cause cancer and reproductive harm. Wash hands after handling.

Vehicle Storage

If you are not going to drive your vehicle for 25 days or more, remove the black, negative (–) cable from the battery. This will help keep your battery from running down.

⚠ CAUTION:

Batteries have acid that can burn you and gas that can explode. You can be badly hurt if you are not careful. See *Jump Starting on page 434* for tips on working around a battery without getting hurt.

Jump Starting

If your vehicle's battery (or batteries) has run down, you may want to use another vehicle and some jumper cables to start your vehicle. Be sure to use the following steps to do it safely.

⚠ CAUTION:

Batteries can hurt you. They can be dangerous because:

- **They contain acid that can burn you.**
- **They contain gas that can explode or ignite.**
- **They contain enough electricity to burn you.**

If you do not follow these steps exactly, some or all of these things can hurt you.

Notice: **Ignoring these steps could result in costly damage to your vehicle that would not be covered by your warranty.**

Trying to start your vehicle by pushing or pulling it will not work, and it could damage your vehicle.

1. Check the other vehicle. It must have a 12-volt battery with a negative ground system.

Notice: **If the other vehicle's system is not a 12-volt system with a negative ground, both vehicles can be damaged. Only use vehicles with 12-volt systems with negative grounds to jump start your vehicle.**

2. Get the vehicles close enough so the jumper cables can reach, but be sure the vehicles are not touching each other. If they are, it could cause a ground connection you do not want. You would not be able to start your vehicle, and the bad grounding could damage the electrical systems.

   To avoid the possibility of the vehicles rolling, set the parking brake firmly on both vehicles involved in the jump start procedure.
   Put the automatic transmission in PARK (P) or a manual transmission in NEUTRAL before setting the parking brake. If you have a four-wheel-drive vehicle, be sure the transfer case is in a drive gear, not in NEUTRAL.

Notice: **If you leave your radio or other accessories on during the jump starting procedure, they could be damaged. The repairs would not be covered by your warranty. Always turn off your radio and other accessories when jump starting your vehicle.**

3. Turn off the ignition on both vehicles. Unplug unnecessary accessories plugged into the cigarette lighter or the accessory power outlets. Turn off the radio and all the lamps that are not needed. This will avoid sparks and help save both batteries. And it could save the radio!
4. Open the hood on the other vehicle and locate the positive (+) and negative (–) terminal locations on that vehicle.

   Your vehicle has a remote positive (+) jump starting terminal and a remote negative (–) jump starting terminal. You should always use these remote terminals instead of the terminals on the battery.

   The remote positive (+) terminal, if equipped, is located under a red plastic cover at the positive battery post. To uncover the remote positive (+) terminal, open the red plastic cover.

   The remote negative (–) terminal is a stud located on the right front of the engine, where the negative battery cable attaches.

   See *Engine Compartment Overview on page 402* for more information on the location of the remote positive (+) and remote negative (–) terminals.

⚠ CAUTION:

An electric fan can start up even when the engine is not running and can injure you. Keep hands, clothing and tools away from any underhood electric fan.

⚠ CAUTION:

Using a match near a battery can cause battery gas to explode. People have been hurt doing this, and some have been blinded. Use a flashlight if you need more light.

Be sure the battery has enough water. You do not need to add water to the battery installed in your new vehicle. But if a battery has filler caps, be sure the right amount of fluid is there. If it is low, add water to take care of that first. If you do not, explosive gas could be present.

Battery fluid contains acid that can burn you. Do not get it on you. If you accidentally get it in your eyes or on your skin, flush the place with water and get medical help immediately.

⚠ CAUTION:

Fans or other moving engine parts can injure you badly. Keep your hands away from moving parts once the engine is running.

5. Check that the jumper cables do not have loose or missing insulation. If they do, you could get a shock. The vehicles could be damaged too.

   Before you connect the cables, here are some basic things you should know. Positive (+) will go to positive (+) or to a remote positive (+) terminal if the vehicle has one. Negative (–) will go to a heavy, unpainted metal engine part or to a remote negative (–) terminal if the vehicle has one.

   Do not connect positive (+) to negative (–) or you will get a short that would damage the battery and maybe other parts too. And do not connect the negative (–) cable to the negative (–) terminal on the dead battery because this can cause sparks.

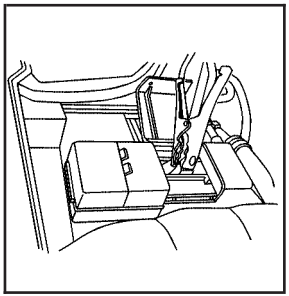

6. Connect the red positive (+) cable to the positive (+) terminal of the vehicle with the dead battery. Use a remote positive (+) terminal if the vehicle has one.

7. Do not let the other end touch metal. Connect it to the positive (+) terminal of the good battery. Use a remote positive (+) terminal if the vehicle has one.

8. Now connect the black negative (–) cable to the negative (–) terminal of the good battery. Use a remote negative (–) terminal if the vehicle has one.

   Do not let the other end touch anything until the next step. The other end of the negative (–) cable does not go to the dead battery. It goes to a heavy, unpainted metal engine part or to the remote negative (–) terminal on the vehicle with the dead battery.

9. Connect the other end of the negative (–) cable to the remote negative (–) terminal, on the vehicle with the dead battery.

10. Now start the vehicle with the good battery and run the engine for a while.

11. Try to start the vehicle that had the dead battery. If it will not start after a few tries, it probably needs service.

Notice: **If the jumper cables are connected or removed in the wrong order, electrical shorting may occur and damage the vehicle. The repairs would not be covered by your warranty. Always connect and remove the jumper cables in the correct order, making sure that the cables do not touch each other or other metal.**

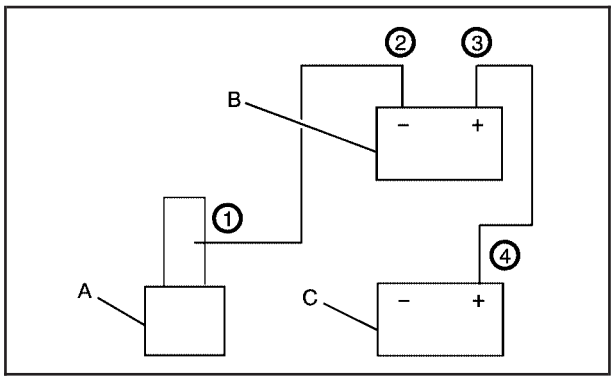

Jumper Cable Removal

A. Heavy, Unpainted Metal Engine Part or Remote Negative (–) Terminal
B. Good Battery or Remote Positive (+) and Remote Negative (–) Terminals
C. Dead Battery or Remote Positive (+) Terminal

To disconnect the jumper cables from both vehicles do the following:

1. Disconnect the black negative (–) cable from the vehicle that had the bad battery.
2. Disconnect the black negative (–) cable from the vehicle with the good battery.
3. Disconnect the red positive (+) cable from the vehicle with the good battery.
4. Disconnect the red positive (+) cable from the other vehicle.
5. Return the remote positive (+) terminal cover, if equipped, to its original position.

All-Wheel Drive

Transfer Case

If your vehicle is equipped with All-Wheel Drive, be sure to perform the lubricant checks described in this section. There are two additional systems that need lubrication.

When to Check Lubricant

Refer to the Maintenance Schedule to determine how often to check the lubricant. See *Scheduled Maintenance on page 517*.

How to Check Lubricant

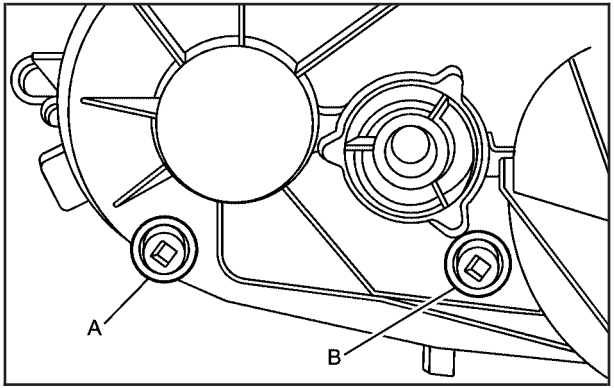

(A) Drain Plug (B) Filler Plug

To get an accurate reading, the vehicle should be on a level surface.

If the level is below the bottom of the filler plug hole, located on the transfer case, you'll need to add some lubricant. Add enough lubricant to raise the level to the bottom of the filler plug hole. Use care not to overtighten the plug.

What to Use

Refer to the Maintenance Schedule to determine what kind of lubricant to use. See *Recommended Fluids and Lubricants on page 527*.

Rear Axle

When to Check Lubricant

It is not necessary to regularly check rear axle fluid unless you suspect there is a leak or you hear an unusual noise. A fluid loss could indicate a problem. Have it inspected and repaired.

All axle assemblies are filled by volume of fluid during production. They are not filled to reach a certain level. When checking the fluid level on any axle, variations in the readings can be caused by factory fill differences between the minimum and the maximum fluid volume. Also, if a vehicle has just been driven before checking the fluid level, it may appear lower than normal because fluid has traveled out along the axle tubes and has not drained back to the sump area.

Therefore, a reading taken five minutes after the vehicle has been driven will appear to have a lower fluid level than a vehicle that has been stationary for an hour or two. Remember that the rear axle assembly must be supported to get a true reading.

How to Check Lubricant

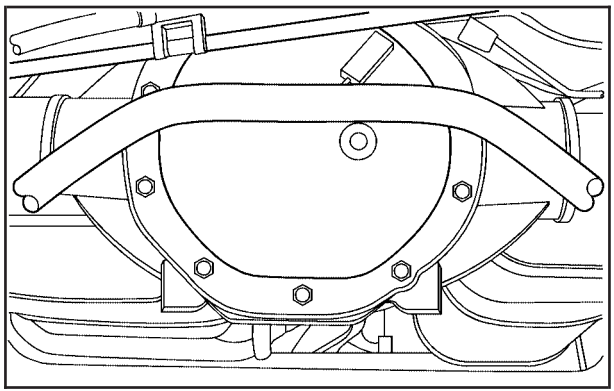

To get an accurate reading, the vehicle should be on a level surface.

The proper level is from 0.04 inch to 0.75 inch (1.0 mm to 19.0 mm) below the bottom of the filler plug hole, located on the rear axle. Add only enough fluid to reach the proper level.

What to Use

Refer to the Maintenance Schedule to determine what kind of lubricant to use. See *Recommended Fluids and Lubricants on page 527*.

Front Axle

When to Check and Change Lubricant

It is not necessary to regularly check front axle fluid unless you suspect there is a leak or you hear an unusual noise. A fluid loss could indicate a problem. Have it inspected and repaired.

How to Check Lubricant

To get an accurate reading, the vehicle should be on a level surface.

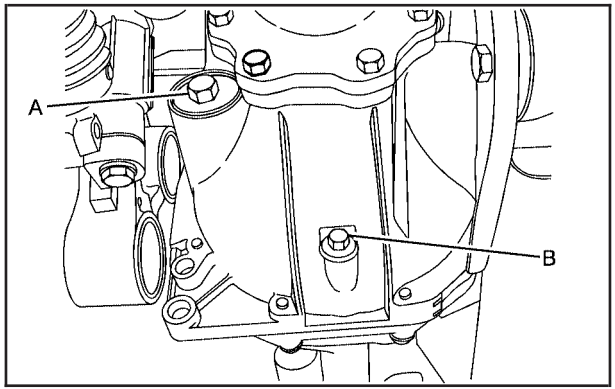

A. Fill Plug B. Drain Plug

If the level is below the bottom of the filler plug hole, located on the front axle, you may need to add some lubricant:

- When the differential is cold, add enough lubricant to raise the level from 0 (0 mm) to 1/8 inch (3.2 mm) below the filler plug hole.
- When the differential is at operating temperature (warm), add enough lubricant to raise the level to the bottom of the filler plug hole.

What to Use

Refer to the Maintenance Schedule to determine what kind of lubricant to use. See *Recommended Fluids and Lubricants on page 527*.

Headlamp Aiming

The vehicle has a visual optical headlamp aiming system. The aim of the headlamps have been preset at the factory and should need no further adjustment.

However, if the vehicle is damaged in an accident, the aim of the headlamps may be affected and adjustment may be necessary.

If oncoming vehicles flash their high beams at you, this may mean the vertical aim of your headlamps needs to be adjusted.

It is recommended that the vehicle is taken to your dealer for service if the headlamps need to be adjusted. It is possible however, to re-aim the headlamps as described in the following procedure.

The vehicle should be properly prepared as follows:

- The vehicle should be placed so the headlamps are 25 ft. (7.6 m) from a light colored wall or other flat surface.
- The vehicle must have all four tires on a level surface which is level all the way to the wall or other flat surface.
- The vehicle should be placed so it is perpendicular to the wall or other flat surface.
- The vehicle should not have any snow, ice, or mud on it.
- The vehicle should be fully assembled and all other work stopped while headlamp aiming is being performed.
- The vehicle should be normally loaded with a full tank of fuel and one person or 160 lbs (75 kg) sitting on the driver's seat.
- Tires should be properly inflated.
- The spare tire is in its proper location in the vehicle.

Headlamp aiming is done with the vehicle's low-beam headlamps. The high-beam headlamps will be correctly aimed if the low-beam headlamps are aimed properly.

To adjust the vertical aim, do the following:

1. Open the hood. See *Hood Release on page 401* for more information.

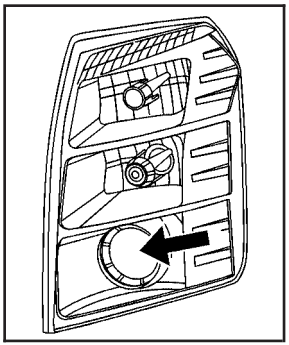

2. Locate the center of the projector lens of the low-beam headlamp.

3. Measure the distance from the ground to the center of the projector lens of the low-beam headlamp. Record the distance.

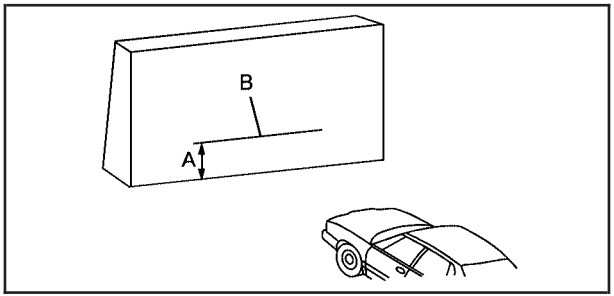

4. At the wall or other flat surface, measure from the ground upward (A) to the recorded distance from Step 3 and mark it.
5. Draw or tape a horizontal line (B) on the wall or flat surface the width of the vehicle at the height of the mark in Step 4.

Notice: **Do not cover a headlamp to improve beam cut-off when aiming. Covering a headlamp may cause excessive heat build-up which may cause damage to the headlamp.**

6. Turn on the low-beam headlamps and place a piece of cardboard or equivalent in front of the headlamp not being adjusted. This allows only the beam of light from the headlamp being adjusted to be seen on the flat surface.

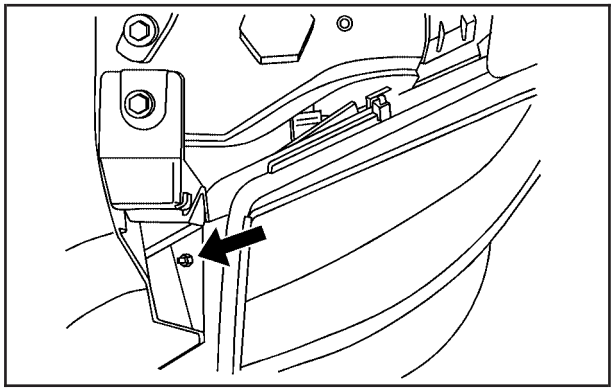

7. Locate the vertical headlamp aiming screws, which are under the hood near each headlamp assembly.

   The adjustment screw can be turned with a E8 Torx® socket.

8. Turn the vertical aiming screw until the headlamp beam is aimed to the horizontal tape line. Turn it clockwise or counterclockwise to raise or lower the angle of the beam.

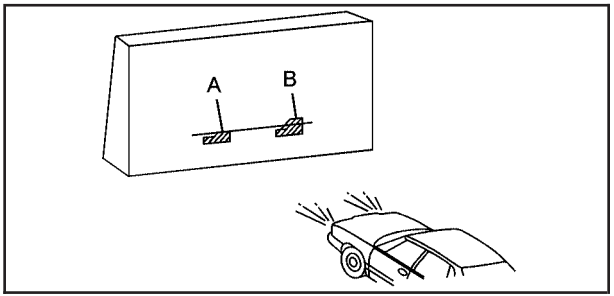

9. Make sure that the light from the headlamp is positioned at the bottom edge of the horizontal tape line. The lamp on the left (A) shows the correct headlamp aim. The lamp on the right (B) shows the incorrect headlamp aim.

10. Repeat Steps 7 through 9 for the opposite headlamp.

Bulb Replacement

For the proper type of replacement bulbs, see *Replacement Bulbs on page 447*.

For any bulb changing procedure not listed in this section, contact your dealer.

High Intensity Discharge (HID) Lighting

⚠ CAUTION:

The low beam high intensity discharge lighting system operates at a very high voltage. If you try to service any of the system components, you could be seriously injured. Have your dealer or a qualified technician service them.

Your vehicle has HID headlamps. After your vehicle's HID headlamp bulb has been replaced, you may notice that the beam is a slightly different shade than it was originally. This is normal.

Back-Up Lamps

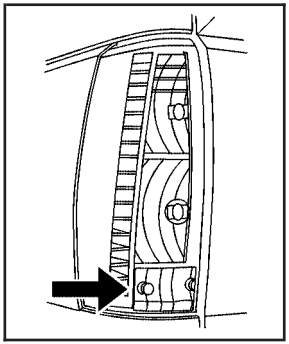

To replace this bulb, do the following:

1. Open the liftgate. See *Power Liftgate on page 126* for more information.

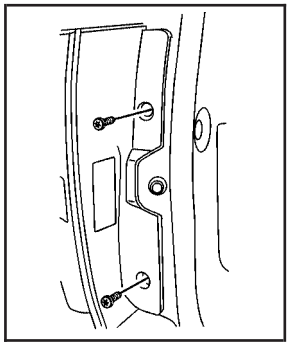

2. Remove the two screws from the taillamp assembly.

3. Pull the taillamp assembly rearward until you disengage the inner pins on the taillamp assembly from the vehicle.
4. Press the release tab, if the bulb socket has one, and turn the socket counterclockwise to remove it from the taillamp assembly.
5. Pull the old bulb straight out from the socket.
6. Press a new bulb into the socket, insert the socket into the taillamp assembly and turn the socket clockwise into the taillamp assembly until it clicks.
7. Reinstall the taillamp assembly. When reinstalling, make sure to line up the pins on the taillamp assembly with the vehicle. If you do not line up the pins correctly, you will not be able install the taillamp assembly properly.

If you need to replace the taillamp, stoplamp, or turn signal, you will need to see your dealer for service.

License Plate Lamp

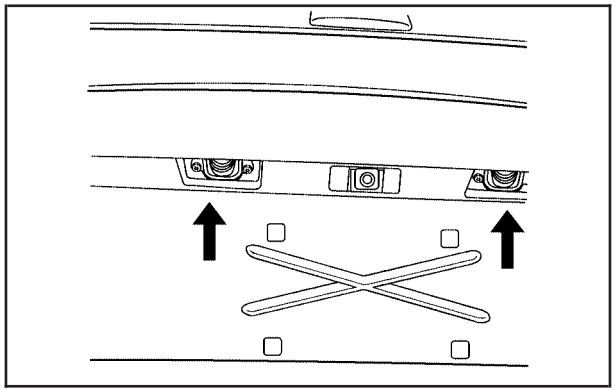

1. Remove the two screws holding each of the license plate lamps to the molding that is part of the liftgate.
2. Twist and pull the license plate lamp forward through the molding opening.
3. Turn the bulb socket counterclockwise and pull the bulb straight out of the socket.
4. Install the new bulb.
5. Reverse steps 1 – 3 to reinstall the license plate lamp.

Replacement Bulbs

Exterior Lamp	Bulb Number
Back-up Lamp	7440
License Plate Lamp	W5W

For replacement bulbs not listed here, contact your dealer.

Windshield Wiper Blade Replacement

Windshield wiper blades should be inspected for wear or cracking. See *Scheduled Maintenance on page 517*.

Replacement blades come in different types and are removed in different ways. To replace the wiper blade assembly, do the following:

1. Pull the windshield wiper arm connector away from the windshield.

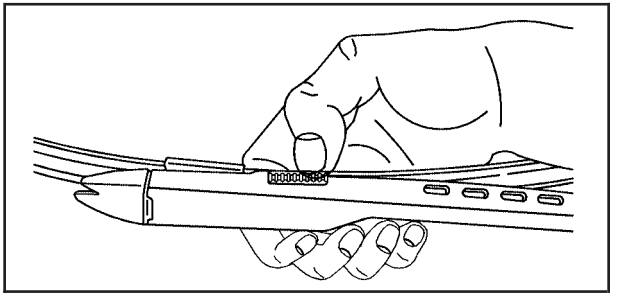

2. Squeeze the grooved areas on each side of the blade, and rotate the blade assembly away from the arm connector.

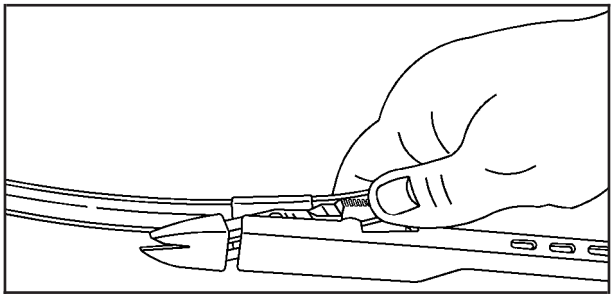

3. Install the new blade onto the arm connector and make sure the grooved areas are fully set in the locked position.

For the proper type and size, see *Normal Maintenance Replacement Parts on page 529*.

Backglass Wiper Blade Replacement

1. Lift the wiper blade assembly up and out of the park rest position.
2. Pull the wiper blade assembly away from the backglass. The backglass wiper blade will not lock in a vertical position, so care should be used when pulling it away from the vehicle.
3. Rotate the wiper blade assembly, and pull it off of the wiper arm. Hold the wiper arm in position and push the blade away from the wiper arm.
4. Replace the wiper blade.
5. Return the wiper blade assembly to the park rest position.

Tires

Your new vehicle comes with high-quality tires made by a leading tire manufacturer. If you ever have questions about your tire warranty and where to obtain service, see your GM Warranty booklet for details. For additional information refer to the tire manufacturer's booklet included with your vehicle.

⚠ CAUTION:

- **Poorly maintained and improperly used tires are dangerous.**
- **Overloading your tires can cause overheating as a result of too much friction. You could have an air-out and a serious accident. See *Loading Your Vehicle on page 366*.**

CAUTION: (Continued)

CAUTION: (Continued)

- **Underinflated tires pose the same danger as overloaded tires. The resulting accident could cause serious injury. Check all tires frequently to maintain the recommended pressure. Tire pressure should be checked when your tires are cold.**
- **Overinflated tires are more likely to be cut, punctured, or broken by a sudden impact — such as when you hit a pothole. Keep tires at the recommended pressure.**
- **Worn, old tires can cause accidents. If your tread is badly worn, or if your tires have been damaged, replace them.**

See *High-Speed Operation on page 458* for inflation pressure adjustment for high speed driving.

22-Inch Tires

If your vehicle has the optional 22-inch P285/45R22 size tires, they are classified as touring tires and are designed for on road use. The low-profile, wide tread design is not recommended for off-road driving. See *Off-Road Driving on page 334*, for additional information.

Tire Sidewall Labeling

Useful information about a tire is molded into the sidewall. The following illustration is an example of a typical P-Metric tire sidewall.

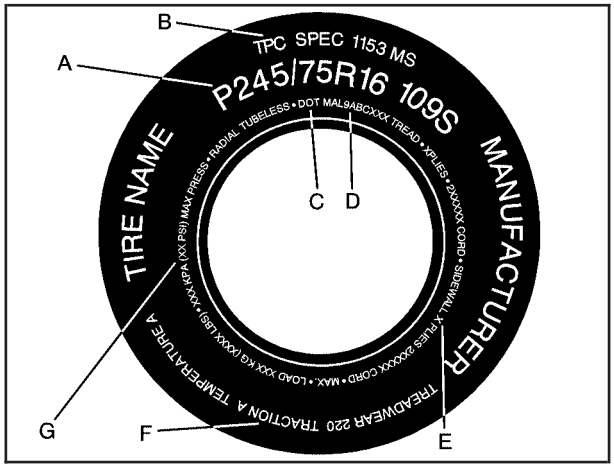

Passenger (P-Metric) Tire

(A) Tire Size: The tire size code is a combination of letters and numbers used to define a particular tire's width, height, aspect ratio, construction type, and service description. See the "Tire Size" illustration later in this section for more detail.

(B) TPC Spec (Tire Performance Criteria Specification): Original equipment tires designed to GM's specific tire performance criteria have a TPC specification code molded onto the sidewall. GM's TPC specifications meet or exceed all federal safety guidelines.

(C) DOT (Department of Transportation): The Department of Transportation (DOT) code indicates that the tire is in compliance with the U.S. Department of Transportation Motor Vehicle Safety Standards.

(D) Tire Identification Number (TIN): The letters and numbers following DOT code are the Tire Identification Number (TIN). The TIN shows the manufacturer and plant code, tire size, and date the tire was manufactured. The TIN is molded onto both sides of the tire, although only one side may have the date of manufacture.

(E) Tire Ply Material: The type of cord and number of plies in the sidewall and under the tread.

(F) Uniform Tire Quality Grading (UTQG): Tire manufacturers are required to grade tires based on three performance factors: treadwear, traction, and temperature resistance. For more information, see *Uniform Tire Quality Grading on page 468*.

(G) Maximum Cold Inflation Load Limit: Maximum load that can be carried and the maximum pressure needed to support that load. For information on recommended tire pressure see *Inflation - Tire Pressure on page 456* and *Loading Your Vehicle on page 366*.

Tire Size

The following examples show the different parts of a tire size.

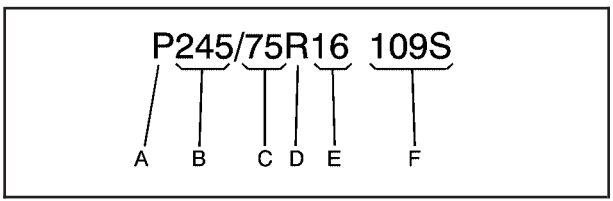

Passenger (P-Metric) Tire

(A) Passenger (P-Metric) Tire: The United States version of a metric tire sizing system. The letter P as the first character in the tire size means a passenger vehicle tire engineered to standards set by the U.S. Tire and Rim Association.

(B) Tire Width: The three-digit number indicates the tire section width in millimeters from sidewall to sidewall.

(C) Aspect Ratio: A two-digit number that indicates the tire height-to-width measurements. For example, if the tire size aspect ratio is 75, as shown in item C of the light truck (LT-Metric) tire illustration, it would mean that the tire's sidewall is 75% as high as it is wide.

(D) Construction Code: A letter code is used to indicate the type of ply construction in the tire. The letter R means radial ply construction; the letter D means diagonal or bias ply construction; and the letter B means belted-bias ply construction.

(E) Rim Diameter: Diameter of the wheel in inches.

(F) Service Description: The service description indicates the load range and speed rating of a tire. The load index can range from 1 to 279. Speed ratings range from A to Z.

Tire Terminology and Definitions

Air Pressure: The amount of air inside the tire pressing outward on each square inch of the tire. Air pressure is expressed in pounds per square inch (psi) or kilopascal (kPa).

Accessory Weight: This means the combined weight of optional accessories. Some examples of optional accessories are, automatic transmission, power steering, power brakes, power windows, power seats, and air conditioning.

Aspect Ratio: The relationship of a tire's height to its width.

Belt: A rubber coated layer of cords that is located between the plies and the tread. Cords may be made from steel or other reinforcing materials.

Bead: The tire bead contains steel wires wrapped by steel cords that hold the tire onto the rim.

Bias Ply Tire: A pneumatic tire in which the plies are laid at alternate angles less than 90 degrees to the centerline of the tread.

Cold Tire Pressure: The amount of air pressure in a tire, measured in pounds per square inch (psi) or kilopascals (kPa) before a tire has built up heat from driving. See *Inflation - Tire Pressure on page 456*.

Curb Weight: This means the weight of a motor vehicle with standard and optional equipment including the maximum capacity of fuel, oil, and coolant, but without passengers and cargo.

DOT Markings: A code molded into the sidewall of a tire signifying that the tire is in compliance with the U.S. Department of Transportation (DOT) motor vehicle safety standards. The DOT code includes the Tire Identification Number (TIN), an alphanumeric designator which can also identify the tire manufacturer, production plant, brand, and date of production.

GVWR: Gross Vehicle Weight Rating. See *Loading Your Vehicle on page 366*.

GAWR FRT: Gross Axle Weight Rating for the front axle. See *Loading Your Vehicle on page 366*.

GAWR RR: Gross Axle Weight Rating for the rear axle. See *Loading Your Vehicle on page 366*.

Intended Outboard Sidewall: The side of an asymmetrical tire, that must always face outward when mounted on a vehicle.

Kilopascal (kPa): The metric unit for air pressure.

Light Truck (LT-Metric) Tire: A tire used on light duty trucks and some multipurpose passenger vehicles.

Load Index: An assigned number ranging from 1 to 279 that corresponds to the load carrying capacity of a tire.

Maximum Inflation Pressure: The maximum air pressure to which a cold tire may be inflated. The maximum air pressure is molded onto the sidewall.

Maximum Load Rating: The load rating for a tire at the maximum permissible inflation pressure for that tire.

Maximum Loaded Vehicle Weight: The sum of curb weight, accessory weight, vehicle capacity weight, and production options weight.

Normal Occupant Weight: The number of occupants a vehicle is designed to seat multiplied by 150 lbs (68 kg). See *Loading Your Vehicle on page 366*.

Occupant Distribution: Designated seating positions.

Outward Facing Sidewall: The side of an asymmetrical tire that has a particular side that faces outward when mounted on a vehicle. The side of the tire that contains a whitewall, bears white lettering, or bears manufacturer, brand, and/or model name molding that is higher or deeper than the same moldings on the other sidewall of the tire.

Passenger (P-Metric) Tire: A tire used on passenger cars and some light duty trucks and multipurpose vehicles.

Recommended Inflation Pressure: Vehicle manufacturer's recommended tire inflation pressure as shown on the tire placard. See *Inflation - Tire Pressure on page 456* and *Loading Your Vehicle on page 366*.

Radial Ply Tire: A pneumatic tire in which the ply cords that extend to the beads are laid at 90 degrees to the centerline of the tread.

Rim: A metal support for a tire and upon which the tire beads are seated.

Sidewall: The portion of a tire between the tread and the bead.

Speed Rating: An alphanumeric code assigned to a tire indicating the maximum speed at which a tire can operate.

Traction: The friction between the tire and the road surface. The amount of grip provided.

Tread: The portion of a tire that comes into contact with the road.

Treadwear Indicators: Narrow bands, sometimes called wear bars, that show across the tread of a tire when only 1/16 inch (1.6 mm) of tread remains. See *When It Is Time for New Tires on page 465*.

UTQGS (Uniform Tire Quality Grading Standards): A tire information system that provides consumers with ratings for a tire's traction, temperature, and treadwear. Ratings are determined by tire manufacturers using government testing procedures. The ratings are molded into the sidewall of the tire. See *Uniform Tire Quality Grading on page 468*.

Vehicle Capacity Weight: The number of designated seating positions multiplied by 150 lbs (68 kg) plus the rated cargo load. See *Loading Your Vehicle on page 366*.

Vehicle Maximum Load on the Tire: Load on an individual tire due to curb weight, accessory weight, occupant weight, and cargo weight.

Vehicle Placard: A label permanently attached to a vehicle showing the vehicle's capacity weight and the original equipment tire size and recommended inflation pressure. See "Tire and Loading Information Label" under *Loading Your Vehicle on page 366*.

Inflation - Tire Pressure

Tires need the correct amount of air pressure to operate effectively.

Notice: **Do not let anyone tell you that under-inflation or over-inflation is all right. It is not. If your tires do not have enough air (under-inflation), you can get the following:**

- **Too much flexing**
- **Too much heat**
- **Tire overloading**
- **Premature or irregular wear**
- **Poor handling**
- **Reduced fuel economy**

If your tires have too much air (over-inflation), you can get the following:

- **Unusual wear**
- **Poor handling**
- **Rough ride**
- **Needless damage from road hazards**

A Tire and Loading Information label is attached to the vehicle's center pillar (B-pillar), below the driver's door lock post (striker). This label lists your vehicle's original equipment tires and their recommended cold tire inflation pressures. The recommended cold tire inflation pressure, shown on the label, is the minimum amount of air pressure needed to support your vehicle's maximum load carrying capacity.

For additional information regarding how much weight your vehicle can carry, and an example of the tire and loading information label, see *Loading Your Vehicle on page 366*.

When to Check

Check your tires once a month or more. Do not forget to check the spare tire. For additional information regarding the spare tire, see *Spare Tire on page 492*.

How to Check

Use a good quality pocket-type gage to check tire pressure. You cannot tell if your tires are properly inflated simply by looking at them. Radial tires may look properly inflated even when they're underinflated. Check the tire's inflation pressure when the tires are cold. Cold means your vehicle has been sitting for at least three hours or driven no more than 1 mile (1.6 km).

Remove the valve cap from the tire valve stem. Press the tire gage firmly onto the valve to get a pressure measurement. If the cold tire inflation pressure matches the recommended pressure on the Tire and Loading Information label, no further adjustment is necessary. If the inflation pressure is low, add air until you reach the recommended amount.

If you overfill the tire, release air by pushing on the metal stem in the center of the tire valve. Recheck the tire pressure with the tire gage.

Be sure to put the valve caps back on the valve stems. They help prevent leaks by keeping out dirt and moisture.

High-Speed Operation

⚠ CAUTION:

Driving at high speeds, 100 mph (160 km/h) or higher, puts an additional strain on tires. Sustained high-speed driving causes excessive heat build up and can cause sudden tire failure. You could have a crash and you or others could be killed. Some high-speed rated tires require inflation pressure adjustment for high speed operation. When speed limits and road conditions are such that a vehicle can be driven at high speeds, make sure the tires are rated for high speed operation, in excellent condition, and set to the correct cold tire inflation pressure for the vehicle load.

If your vehicle has P265/65R18 or P285/45R22 size tires and you will be driving at high speeds, speeds of 100 mph (160 km/h) or higher, set the cold inflation pressure to 3 psi (20 kPa) above the recommended tire pressure shown on the Tire and Loading Information Label. When you end this high-speed driving, return the tires to the cold inflation pressure shown on the Tire and Loading Information label. See *Loading Your Vehicle on page 366* and *Inflation - Tire Pressure on page 456*.

Tire Pressure Monitor System

The Tire Pressure Monitor System (TPMS) uses radio and sensor technology to check tire pressure levels. If your vehicle has this feature, sensors are mounted on each tire and wheel assembly, except the spare tire. The TPMS sensors monitor the air pressure in your vehicle's tires and transmit tire pressure readings to a receiver located in the vehicle.

The TPMS is designed to alert the driver, if a low tire pressure condition exists. If your vehicle has the Driver Information Center (DIC), the driver may also check tire pressure levels using the DIC.

When a low tire pressure condition is detected, the TPMS will illuminate the low tire pressure warning symbol located on the instrument panel cluster. If your vehicle has the DIC feature, a message to check the pressure in a specific tire will also appear on the DIC display. The low tire pressure warning symbol on the instrument panel cluster and the CHECK TIRE PRESSURE warning message on the DIC display will appear at each ignition cycle until the tires are inflated to the correct inflation pressure. For additional information and details about the DIC operation and displays see *DIC Operation and Displays on page 240* and *DIC Warnings and Messages on page 245*.

You may notice, during cooler weather conditions, that the tire pressure monitor light, located on the instrument panel cluster, and the CHECK TIRE PRESSURE message will appear when the vehicle is first started and then turn off as you start to drive the vehicle. This could be an early indicator that the tire pressures are getting low and need to be inflated to the proper pressure.

Each tire, including the spare (if provided), should be checked monthly when cold and inflated to the inflation pressure recommended by the vehicle manufacturer on the vehicle placard or tire inflation pressure label. (If your vehicle has tires of a different size than the size indicated on the vehicle placard or tire inflation pressure label, you should determine the proper tire inflation pressure for those tires.)

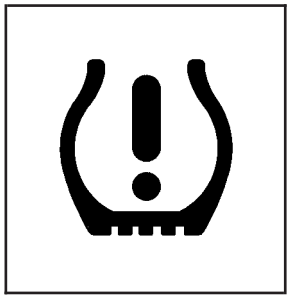

As an added safety feature, your vehicle has been equipped with a tire pressure monitoring system (TPMS) that illuminates a low tire pressure telltale when one or more of your tires is significantly under-inflated.

Accordingly, when the low tire pressure telltale illuminates, you should stop and check your tires as soon as possible, and inflate them to the proper pressure. Driving on a significantly under-inflated tire causes the tire to overheat and can lead to tire failure.

Under-inflation also reduces fuel efficiency and tire tread life, and may affect the vehicle's handling and stopping ability.

Please note that the TPMS is not a substitute for proper tire maintenance, and it is the driver's responsibility to maintain correct tire pressure, even if under-inflation has not reached the level to trigger illumination of the TPMS low tire pressure telltale.

Your vehicle has also been equipped with a TPMS malfunction indicator to indicate when the system is not operating properly. The TPMS malfunction indicator is combined with the low tire pressure telltale. When the system detects a malfunction, the telltale will flash for approximately one minute and then remain continuously illuminated. This sequence will continue upon subsequent vehicle start-ups as long as the malfunction exists.

When the malfunction indicator is illuminated, the system may not be able to detect or signal low tire pressure as intended. TPMS malfunctions may occur for a variety of reasons, including the installation of replacement or alternate tires or wheels on the vehicle that prevent the TPMS from functioning properly.

Always check the TPMS malfunction telltale after replacing one or more tires or wheels on your vehicle to ensure that the replacement or alternate tires and wheels allow the TPMS to continue to function properly.

The CHECK TIRE PRESSURE warning message and low tire pressure light (telltale) will come on each time the vehicle is started until the tires are inflated to the correct inflation pressure.

The Tire and Loading Information label (tire information placard) shows the size of your vehicle's original tires and the correct inflation pressure for your vehicle's tires when they are cold. See *Inflation - Tire Pressure on page 456*. For the location of the tire and loading information label, see *Loading Your Vehicle on page 366*.

Your vehicle's TPMS can alert you about a low tire pressure condition but it does not replace normal tire maintenance. See *Tire Inspection and Rotation on page 463* and *Tires on page 450*.

Notice: **Do not use a tire sealant if your vehicle has Tire Pressure Monitors. The liquid sealant can damage the tire pressure monitor sensors.**

Resetting the TPMS Identification Codes

Each TPMS sensor has a unique identification code. Any time you rotate your vehicle's tires or replace one or more of the TPMS sensors, the identification codes will need to be matched to the new tire/wheel position. The sensors are matched to the tire/wheel positions in the following order: driver's side front tire, passengers side front tire, passengers side rear tire, and driver's side rear tire using a TPMS diagnostic tool. See your GM dealer for service.

The TPMS sensors may also be matched to each tire/wheel position by increasing or decreasing the tire's air pressure. If increasing the tire's air pressure, do not exceed the maximum inflation pressure indicated on the tire's sidewall.

You will have two minutes to match the first tire/wheel position, and five minutes overall to match all four tire/wheel positions. If it takes longer than two minutes, to match the first tire and wheel, or more than five minutes to match all four tire and wheel positions the matching process stops and you will need to start over.

The TPMS sensor matching process is outlined below:

1. Set the parking brake.
2. Turn the ignition switch to RUN with the engine off.
3. Using the DIC, press the vehicle information button until the PRESS ✓ TO RELEARN TIRE POSITIONS message displays.
4. Press the set/reset button. The horn will sound twice to indicate the TPMS receiver is ready, and the TIRE LEARNING ACTIVE message will display.
5. Start with the driver's side front tire.
6. Remove the valve cap from the valve cap stem. Activate the TPMS sensor by increasing or decreasing the tire's air pressure for five seconds, or until a horn chirp sounds. The horn chirp, which make take up to 30 seconds to sound, confirms that the sensor identification code has been matched to this tire and wheel position. To decrease air-pressure out of a tire you can use the pointed end of the valve cap, a pencil-style air pressure gage, or a key.

7. Proceed to the passenger's side front tire, and repeat the procedure in Step 6.
8. Proceed to the passenger's side rear tire, and repeat the procedure in Step 6.
9. Proceed to the driver's side rear tire, and repeat the procedure in Step 6.
10. After hearing the confirming horn chirp for the driver's side rear tire, the horn chirp will sound two more times to signal the tire learning mode is no longer active. Turn the ignition switch to LOCK.
11. Set all four tires to the recommended air pressure level as indicated on the Tire and Loading Information label.
12. Put the valve caps back on the valve stems

The spare tire does not have a TPMS sensor. If you replace one of the road tires with the spare, the SERVICE TIRE MONITOR message will be displayed on the DIC screen. This message should go off once you re-install the road tire containing the TPMS sensor.

Federal Communications Commission (FCC) and Industry and Science Canada

The Tire Pressure Monitor System (TPMS) operates on a radio frequency and complies with Part 15 of the FCC Rules. Operation is subject to the following two conditions:

1. This device may not cause harmful interference.
2. This device must accept any interference received, including interference that may cause undesired operation.

The Tire Pressure Monitor System (TPMS) operates on a radio frequency and complies with RSS-210 of Industry and Science Canada. Operation is subject to the following two conditions:

1. This device may not cause interference.
2. This device must accept any interference received, including interference that may cause undesired operation of the device.

Changes or modifications to this system by other than an authorized service facility could void authorization to use this equipment.

Tire Inspection and Rotation

Tires should be rotated every 5,000 to 8,000 miles (8 000 to 13 000 km).

Any time you notice unusual wear, rotate your tires as soon as possible and check wheel alignment. Also check for damaged tires or wheels. See *When It Is Time for New Tires on page 465* and *Wheel Replacement on page 470* for more information.

Make sure the spare tire is stored securely. Push, pull, and then try to rotate or turn the tire. If it moves, use the ratchet/wheel wrench to tighten the cable. See *Changing a Flat Tire on page 473*.

The purpose of regular rotation is to achieve more uniform wear for all tires on the vehicle. The first rotation is the most important. See *Scheduled Maintenance on page 517*.

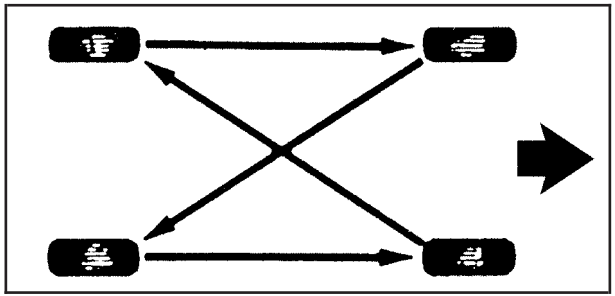

When rotating your vehicle's tires, always use the correct rotation pattern shown here.

Do not include the spare tire in the tire rotation.

After the tires have been rotated, adjust the front and rear inflation pressures as shown on the tire and loading information label. See *Loading Your Vehicle on page 366* and *Inflation - Tire Pressure on page 456*, for more information.

Vehicles that have the Tire Pressure Monitor System (TPMS) will need to have the TPMS sensors reset after a tire rotation. See “TPMS Sensor Identification Codes” under *Tire Pressure Monitor System on page 458*.

Make certain that all wheel nuts are properly tightened. See “Wheel Nut Torque” under *Capacities and Specifications on page 512*.

⚠ CAUTION:

Rust or dirt on a wheel, or on the parts to which it is fastened, can make wheel nuts become loose after a time. The wheel could come off and cause an accident. When you change a wheel, remove any rust or dirt from places where the wheel attaches to the vehicle. In an emergency, you can use a cloth or a paper towel to do this; but be sure to use a scraper or wire brush later, if needed, to get all the rust or dirt off. See *Changing a Flat Tire on page 473*.

When It Is Time for New Tires

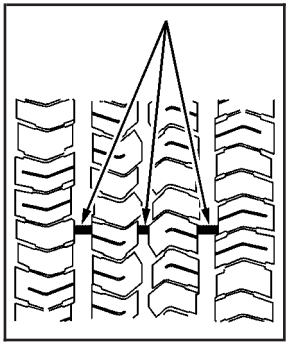

One way to tell when it is time for new tires is to check the treadwear indicators, which will appear when your tires have only 1/16 inch (1.6 mm) or less of tread remaining. Some commercial truck tires may not have treadwear indicators.

You need a new tire if any of the following statements are true:

- You can see the indicators at three or more places around the tire.
- You can see cord or fabric showing through the tire's rubber.
- The tread or sidewall is cracked, cut or snagged deep enough to show cord or fabric.
- The tire has a bump, bulge, or split.
- The tire has a puncture, cut, or other damage that cannot be repaired well because of the size or location of the damage.

Buying New Tires

GM has developed and matched specific tires for your vehicle. The original equipment tires installed on your vehicle, when it was new, were designed to meet General Motors Tire Performance Criteria Specification (TPC spec) system rating. If you need replacement tires, GM strongly recommends that you get tires with the same TPC Spec rating. This way, your vehicle will continue to have tires that are designed to give the same performance and vehicle safety, during normal use, as the original tires.

GM's exclusive TPC Spec system considers over a dozen critical specifications that impact the overall performance of your vehicle, including brake system performance, ride and handling, traction control, and tire pressure monitoring performance. GM's TPC Spec number is molded onto the tire's sidewall by the tire manufacturer.

If the tires have an all-season tread design, the TPC spec number will be followed by an MS for mud and snow. See *Tire Sidewall Labeling on page 451* for additional information.

⚠ CAUTION:

Mixing tires could cause you to lose control while driving. If you mix tires of different sizes, brands, or types (radial and bias-belted tires), the vehicle may not handle properly, and you could have a crash. Using tires of different sizes, brands or types may also cause damage to your vehicle. Be sure to use the same size, brand, and type tires on all wheels.

CAUTION: (Continued)

CAUTION: (Continued)

Your vehicle may have a different size spare than the road tires (those originally installed on your vehicle). When new, your vehicle included a spare tire and wheel assembly with a similar overall diameter as your vehicle's road tires and wheels, so it is all right to drive on it. Because this spare was developed for use on your vehicle, it will not affect vehicle handling.

⚠ CAUTION:

If you use bias-ply tires on your vehicle, the wheel rim flanges could develop cracks after many miles of driving.
A tire and/or wheel could fail suddenly, causing a crash. Use only radial-ply tires with the wheels on your vehicle.

If you must replace your vehicle's tires with those that do not have a TPC Spec number, make sure they are the same size, load range, speed rating, and construction type (radial and bias-belted tires) as your vehicle's original tires.

Vehicles that have a tire pressure monitoring system may give an inaccurate low-pressure warning if non-TPC spec rated tires are installed on your vehicle. Non-TPC Spec rated tires may give a low-pressure warning that is higher or lower than the proper warning level you would get with TPC Spec rated tires. See *Tire Pressure Monitor System on page 458*.

Your vehicle's original equipment tires are listed on the Tire and Loading Information Label. This label is attached to the vehicle's center pillar (B-pillar). See *Loading Your Vehicle on page 366*, for more information about the Tire and Loading Information Label and its location on your vehicle.

Different Size Tires and Wheels

If you add wheels or tires that are a different size than your original equipment wheels and tires, this may affect the way your vehicle performs, including its braking, ride and handling characteristics, stability, and resistance to rollover.

Additionally, if your vehicle has electronic systems such as, anti-lock brakes, traction control, and electronic stability control, the performance of these systems can be affected.

⚠ CAUTION:

If you add different sized wheels, your vehicle may not provide an acceptable level of performance and safety if tires not recommended for those wheels are selected. You may increase the chance that you will crash and suffer serious injury. Only use GM specific wheel and tire systems developed for your vehicle, and have them properly installed by a GM certified technician.

See *Buying New Tires on page 465* and *Accessories and Modifications on page 393* for additional information.

Uniform Tire Quality Grading

Quality grades can be found where applicable on the tire sidewall between tread shoulder and maximum section width. For example:

Treadwear 200 Traction AA Temperature A

The following information relates to the system developed by the United States National Highway Traffic Safety Administration (NHTSA), which grades tires by treadwear, traction, and temperature performance. This applies only to vehicles sold in the United States. The grades are molded on the sidewalls of most passenger car tires. The Uniform Tire Quality Grading (UTQG) system does not apply to deep tread, winter-type snow tires, space-saver, or temporary use spare tires, tires with nominal rim diameters of 10 to 12 inches (25 to 30 cm), or to some limited-production tires.

While the tires available on General Motors passenger cars and light trucks may vary with respect to these grades, they must also conform to federal safety requirements and additional General Motors Tire Performance Criteria (TPC) standards.

Treadwear

The treadwear grade is a comparative rating based on the wear rate of the tire when tested under controlled conditions on a specified government test course. For example, a tire graded 150 would wear one and a half (1.5) times as well on the government course as a tire graded 100. The relative performance of tires depends upon the actual conditions of their use, however, and may depart significantly from the norm due to variations in driving habits, service practices, and differences in road characteristics and climate.

Traction – AA, A, B, C

The traction grades, from highest to lowest, are AA, A, B, and C. Those grades represent the tire's ability to stop on wet pavement as measured under controlled conditions on specified government test surfaces of asphalt and concrete. A tire marked C may have poor traction performance.

Warning: The traction grade assigned to this tire is based on straight-ahead braking traction tests, and does not include acceleration, cornering, hydroplaning, or peak traction characteristics.

Temperature – A, B, C

The temperature grades are A (the highest), B, and C, representing the tire's resistance to the generation of heat and its ability to dissipate heat when tested under controlled conditions on a specified indoor laboratory test wheel. Sustained high temperature can cause the material of the tire to degenerate and reduce tire life, and excessive temperature can lead to sudden tire failure. The grade C corresponds to a level of performance which all passenger car tires must meet under the Federal Motor Vehicle Safety Standard No. 109. Grades B and A represent higher levels of performance on the laboratory test wheel than the minimum required by law.

Warning: The temperature grade for this tire is established for a tire that is properly inflated and not overloaded. Excessive speed, underinflation, or excessive loading, either separately or in combination, can cause heat buildup and possible tire failure.

Wheel Alignment and Tire Balance

The tires and wheels on your vehicle were aligned and balanced carefully at the factory to give you the longest tire life and best overall performance. Adjustments to wheel alignment and tire balancing will not be necessary on a regular basis. However, if you notice unusual tire wear or your vehicle pulling to one side or the other, the alignment may need to be checked. If you notice your vehicle vibrating when driving on a smooth road, your tires and wheels may need to be rebalanced. See your dealer for proper diagnosis.

Wheel Replacement

Replace any wheel that is bent, cracked, or badly rusted or corroded. If wheel nuts keep coming loose, the wheel, wheel bolts, and wheel nuts should be replaced. If the wheel leaks air, replace it (except some aluminum wheels, which can sometimes be repaired). See your dealer if any of these conditions exist.

Your dealer will know the kind of wheel you need.

Each new wheel should have the same load-carrying capacity, diameter, width, offset and be mounted the same way as the one it replaces.

If you need to replace any of your wheels, wheel bolts, or wheel nuts, replace them only with new GM original equipment parts. This way, you will be sure to have the right wheel, wheel bolts, and wheel nuts for your vehicle.

⚠ CAUTION:

Using the wrong replacement wheels, wheel bolts, or wheel nuts on your vehicle can be dangerous. It could affect the braking and handling of your vehicle, make your tires lose air and make you lose control. You could have a collision in which you or others could be injured. Always use the correct wheel, wheel bolts, and wheel nuts for replacement.

Notice: **The wrong wheel can also cause problems with bearing life, brake cooling, speedometer or odometer calibration, headlamp aim, bumper height, vehicle ground clearance, and tire or tire chain clearance to the body and chassis.**

See *Changing a Flat Tire on page 473* for more information.

Used Replacement Wheels

⚠ CAUTION:

Putting a used wheel on your vehicle is dangerous. You cannot know how it has been used or how far it has been driven. It could fail suddenly and cause a crash. If you have to replace a wheel, use a new GM original equipment wheel.

Tire Chains

⚠ CAUTION:

Do not use tire chains. There is not enough clearance. Tire chains used on a vehicle without the proper amount of clearance can cause damage to the brakes, suspension, or other vehicle parts. The area damaged by the tire chains could cause you to lose control of your vehicle and you or others may be injured in a crash. Use another type of traction device only if its manufacturer recommends it for use on your vehicle and tire size combination and road conditions. Follow that manufacturer's instructions. To help avoid damage to your vehicle, drive slowly, re-adjust or remove the device if it is contacting your vehicle, and do not spin your wheels. If you do find traction devices that will fit, install them on the rear tires.

If a Tire Goes Flat

It is unusual for a tire to blowout while you are driving, especially if you maintain your vehicle's tires properly. If air goes out of a tire, it is much more likely to leak out slowly. But if you should ever have a blowout, here are a few tips about what to expect and what to do:

If a front tire fails, the flat tire will create a drag that pulls the vehicle toward that side. Take your foot off the accelerator pedal and grip the steering wheel firmly. Steer to maintain lane position, and then gently brake to a stop well out of the traffic lane.

A rear blowout, particularly on a curve, acts much like a skid and may require the same correction you would use in a skid. In any rear blowout remove your foot from the accelerator pedal. Get the vehicle under control by steering the way you want the vehicle to go. It may be very bumpy and noisy, but you can still steer. Gently brake to a stop, well off the road if possible.

⚠ CAUTION:

Lifting a vehicle and getting under it to do maintenance or repairs is dangerous without the appropriate safety equipment and training. The jack provided with your vehicle is designed only for changing a flat tire. If it is used for anything else, you or others could be badly injured or killed if the vehicle slips off the jack. Use the jack provided with your vehicle only for changing a flat tire.

If a tire goes flat, the next part shows how to use the jacking equipment to change a flat tire safely.

Changing a Flat Tire

If a tire goes flat, avoid further tire and wheel damage by driving slowly to a level place.
Turn on your vehicle's hazard warning flashers. See *Hazard Warning Flashers on page 186* for more information.

⚠ CAUTION:

Changing a tire can be dangerous. The vehicle can slip off the jack and roll over or fall on you or other people. You and they could be badly injured or even killed. Find a level place to change your tire.
To help prevent the vehicle from moving:

1. **Set the parking brake firmly.**
2. **Put the shift lever in PARK (P).**
3. **Turn off the engine and do not restart while the vehicle is raised.**
4. **Do not allow passengers to remain in the vehicle.**

To be even more certain the vehicle will not move, you should put blocks at the front and rear of the tire farthest away from the one being changed. That would be the tire, on the other side, at the opposite end of the vehicle.

When your vehicle has a flat tire, use the following example as a guide to assist you in the placement of wheel blocks.

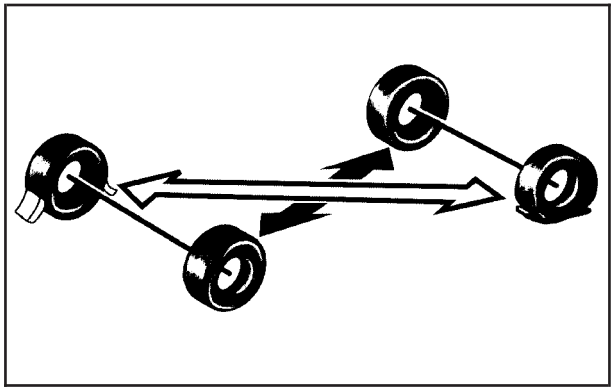

The following information will tell you next how to use the jack and change a tire.

Removing the Spare Tire and Tools

The equipment you will need to change a flat tire is stored under the storage tray, which is located on the driver's side trim panel (over the rear wheelhouse).

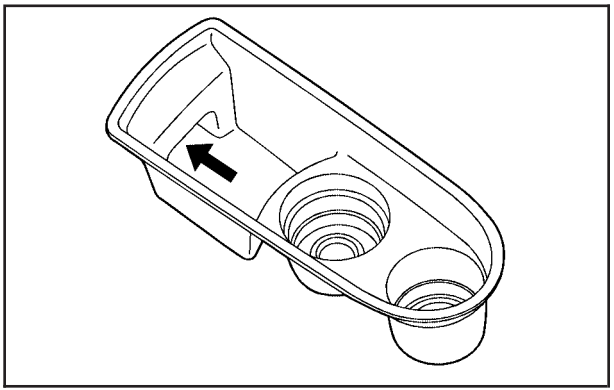

Regular Wheelbase shown, Extended Wheelbase similar.

1. Remove the tray to access the tools by pulling up on the finger depression under the jack symbol.

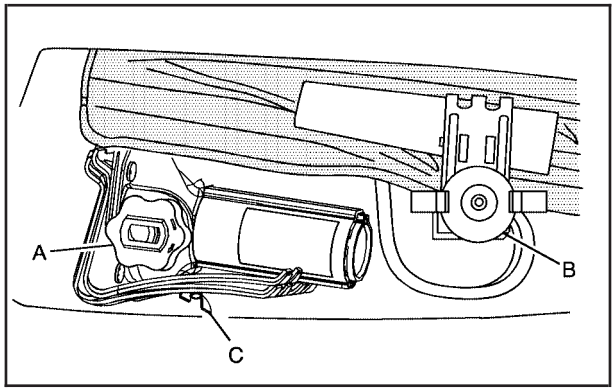

2. Remove the wing nut (B) used to retain the tool bag by turning it counterclockwise.
3. Turn the knob (A) on the jack counterclockwise to release the jack and wheel blocks from the bracket.
4. Remove the wheel blocks and the wheel block retainer by turning the wing nut (C) counterclockwise.

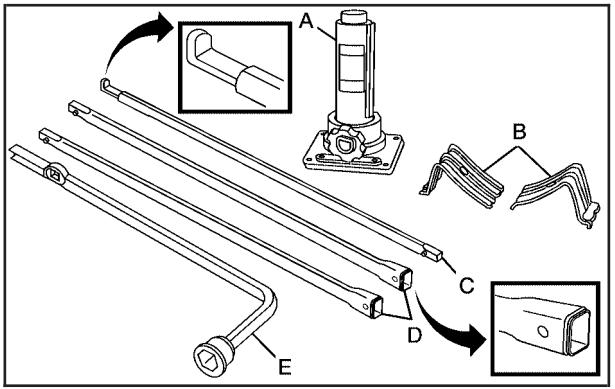

The tools you will be using include the following:

A. Jack
B. Wheel Blocks
C. Jack Handle
D. Jack Handle Extensions
E. Wheel Wrench

To access the spare tire, refer to the following graphics and instructions:

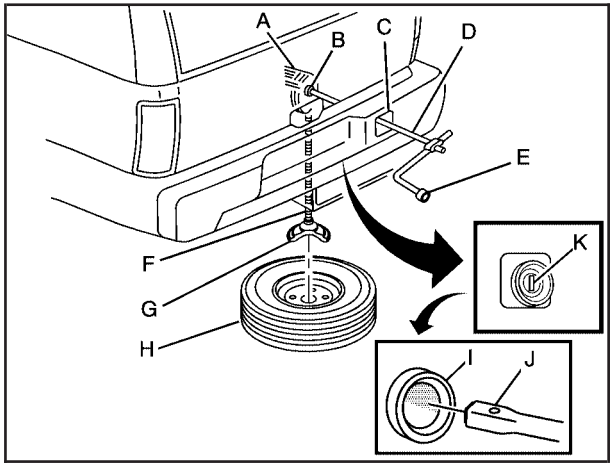

A. Hoist Assembly
B. Hoist Shaft
C. Hoist Shaft Access Cover/Hole
D. Jack Handle Extensions
E. Wheel Wrench
F. Hoist Cable
G. Tire Retainer
H. Spare Tire (Valve Stem Pointed Down)
I. Hoist Shaft Access Hole
J. Hoist End of Extension Tool
K. Spare Tire Lock

1. To access the spare tire hoist cover, you will first need to remove the hitch cover. Remove it by turning the two fasteners located at the bottom of the cover counterclockwise and then pull the cover down and rotate towards you.
2. Open the hoist shaft access cover (C) on the bumper to access the spare tire lock (K).

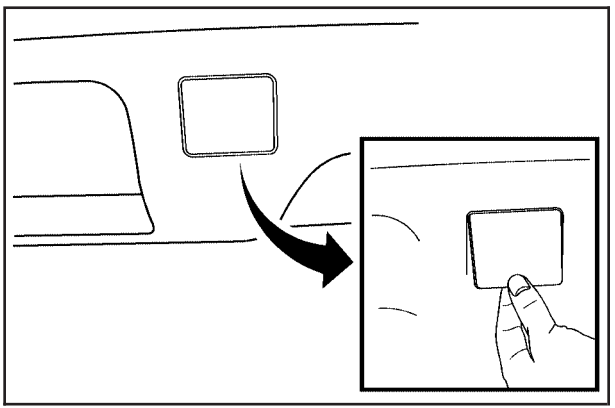

3. Insert the ignition key, turn it clockwise and then pull it to remove the spare tire lock.
4. Assemble the two jack handle extensions (D) and wheel wrench (E) as shown.

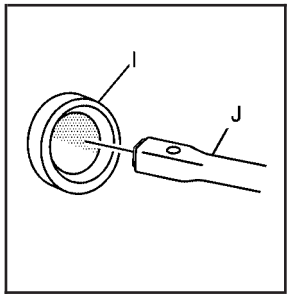

5. Insert the open end of the extension (J) through the hole in the rear bumper (I) (hoist shaft access hole).

Be sure the hoist end (J) of the extension (D) connects to the hoist shaft (B). The ribbed square end of the extension is used to lower the spare tire.

6. Turn the wheel wrench (E) counterclockwise to lower the spare tire (H) to the ground. Continue to turn the wheel wrench until the spare tire can be pulled out from under the vehicle.

If the spare tire does not lower to the ground, the secondary latch is engaged causing the tire not to lower. See *Secondary Latch System on page 484* for more information.

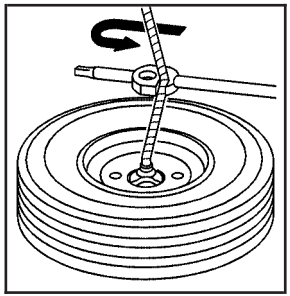

7. Use the wheel wrench hook that allows you to pull the hoist cable towards you, to assist in reaching the spare tire.

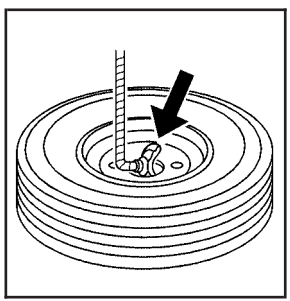

8. Tilt the tire retainer (G) at the end of the cable when the tire has been lowered, so it can be pulled up through the wheel opening.

9. Put the spare tire near the flat tire.

Removing the Flat Tire and Installing the Spare Tire

Use the following pictures and instructions to remove the flat tire and raise the vehicle.

1. Loosen the plastic nut caps on the bolt-on wheel cover by turning the wheel wrench counterclockwise. If needed, finish loosening them by hand. The nut caps will not come off.
2. Using the flat end of the wheel wrench, pry along the edge of the cover until it comes off.

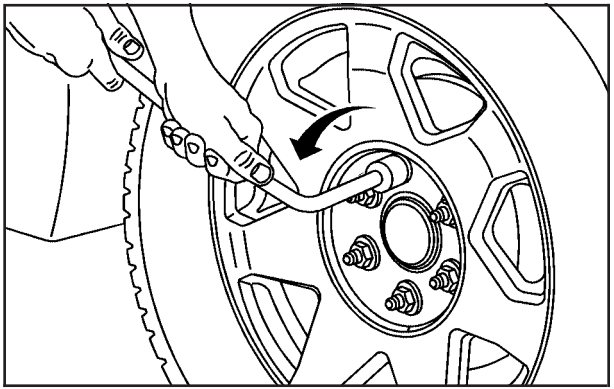

3. Use the wheel wrench to loosen all the wheel nuts. Turn the wheel wrench counterclockwise to loosen the wheel nuts. Do not remove the wheel nuts yet.

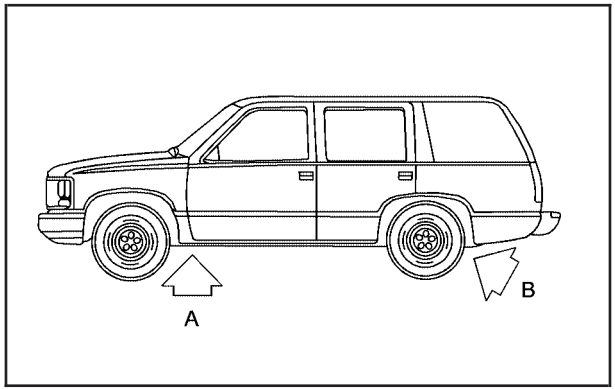

Jacking Locations (Overall View)

A. Front Position
B. Rear Position

⚠ CAUTION:

Getting under a vehicle when it is jacked up is dangerous. If the vehicle slips off the jack you could be badly injured or killed. Never get under a vehicle when it is supported only by a jack.

⚠ CAUTION:

Raising your vehicle with the jack improperly positioned can damage the vehicle and even make the vehicle fall. To help avoid personal injury and vehicle damage, be sure to fit the jack lift head into the proper location before raising the vehicle.

4. Position the jack under the vehicle as shown.

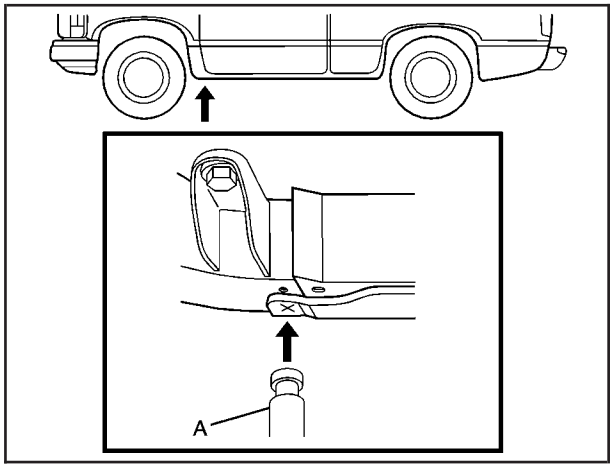

Front Position

Front Tire Flat: If the flat tire is on a front tire of the vehicle, you will need to use the jack handle and only one jack handle extension. Attach the wheel wrench to the jack handle extension. Attach the jack handle to the jack. Position the jack (A) on the frame behind the flat tire where the frame sections overlap. Turn the wheel wrench clockwise to raise the vehicle. Raise the vehicle far enough off the ground so there is enough room for the spare tire to clear the ground.

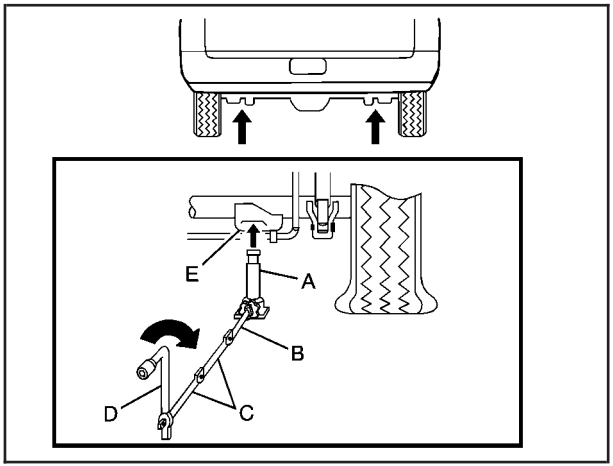

Rear Position

Rear Tire Flat: If the flat tire is on a rear tire of the vehicle, you will need to use the jack handle (B) and both jack handle extensions (C). Attach the wheel wrench (D) to the jack handle extensions (C). Attach the jack handle (B) to the jack (A). Use the jacking pad provided on the rear axle. Turn the wheel wrench (D) clockwise to raise the vehicle. Raise the vehicle far enough off the ground so there is enough room for the spare tire to clear the ground.

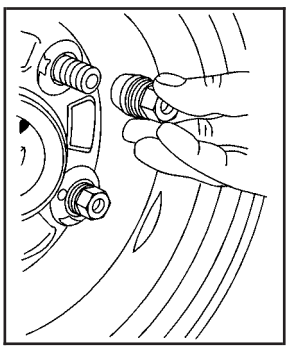

5. Remove all of the wheel nuts.

6. Take off the flat tire.

⚠ CAUTION:

Rust or dirt on the wheel, or on the parts to which it is fastened, can make the wheel nuts become loose after a time. The wheel could come off and cause an accident. When you change a wheel, remove any rust or dirt from the places where the wheel attaches to the vehicle. In an emergency, you can use a cloth or a paper towel to do this; but be sure to use a scraper or wire brush later, if needed, to get all the rust or dirt off.

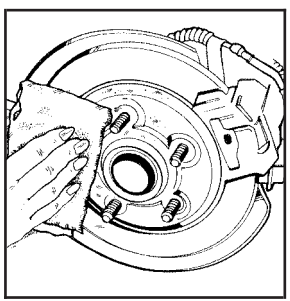

7. Remove any rust or dirt from the wheel bolts, mounting surfaces, and spare wheel.

⚠ CAUTION:

Never use oil or grease on studs or nuts. If you do, the nuts might come loose. Your wheel could fall off, causing a serious accident.

8. Put the wheel nuts back on with the rounded end of the nuts toward the wheel after mounting the spare tire.
9. Tighten each wheel nut by hand. Then use the wheel wrench to tighten the nuts until the wheel is held against the hub.
10. Turn the wheel wrench counterclockwise to lower the vehicle. Lower the jack completely.

⚠ CAUTION:

Incorrect wheel nuts or improperly tightened wheel nuts can cause the wheel to come loose and even come off. This could lead to an accident. Be sure to use the correct wheel nuts. If you have to replace them, be sure to get new GM original equipment wheel nuts. Stop somewhere as soon as you can and have the nuts tightened with a torque wrench to the proper torque specification. See *Capacities and Specifications on page 512* for wheel nut torque specification.

Notice: **Improperly tightened wheel nuts can lead to brake pulsation and rotor damage. To avoid expensive brake repairs, evenly tighten the wheel nuts in the proper sequence and to the proper torque specification. See *Capacities and Specifications on page 512* for the wheel nut torque specification.**

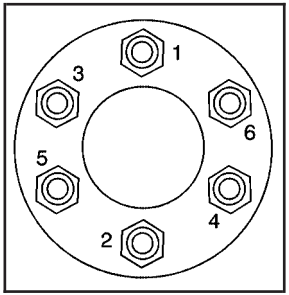

11. Tighten the nuts firmly in a crisscross sequence as shown by turning the wheel wrench clockwise.

When you reinstall the regular wheel and tire, you must also reinstall the bolt-on hub cap. Align the plastic nut caps with the wheel nuts and then tighten by hand. Then use the wheel wrench to tighten.

Secondary Latch System

Your vehicle has an underbody-mounted tire hoist assembly which has a secondary latch system. It is designed to stop the spare tire from suddenly falling off your vehicle. For the secondary latch to work, the spare tire must be installed with the valve stem pointing down. See *Storing a Flat or Spare Tire and Tools on page 488*.

⚠ CAUTION:

Before beginning this procedure read all the instructions. Failure to read and follow the instructions could damage the hoist assembly and you and others could get hurt. Read and follow the instructions listed below.

To release the spare tire from the secondary latch, do the following:

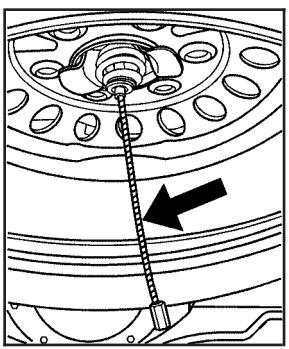

1. Check under the vehicle to see if the cable end is visible. If the cable is not visible, proceed to Step 6.

2. If it is visible, first try to tighten the cable by turning the wheel wrench clockwise until you hear two clicks or feel it skip twice. You cannot overtighten the cable.
3. Loosen the cable by turning the wheel wrench counterclockwise three or four turns.
4. Repeat this procedure at least two times. If the spare tire lowers to the ground, continue with Step 5 of *Removing the Spare Tire and Tools on page 474*.
5. If the spare tire does not lower, turn the wheel wrench counterclockwise until approximately 6 inches (15 cm) of cable is exposed.
6. Stand the wheel blocks on their shortest ends, with the backs facing each other.

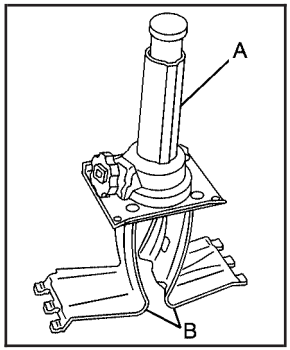

7. Place the bottom edge of the jack (A) on the wheel blocks (B), separating them so that the jack is balanced securely.

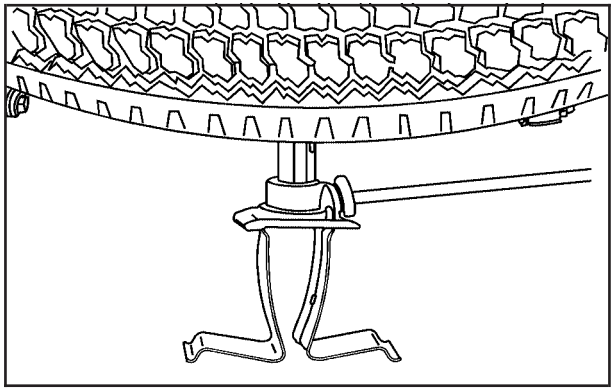

8. Attach the jack handle, extension, and wheel wrench to the jack and place it (with the wheel blocks) under the vehicle toward the front of the rear bumper.

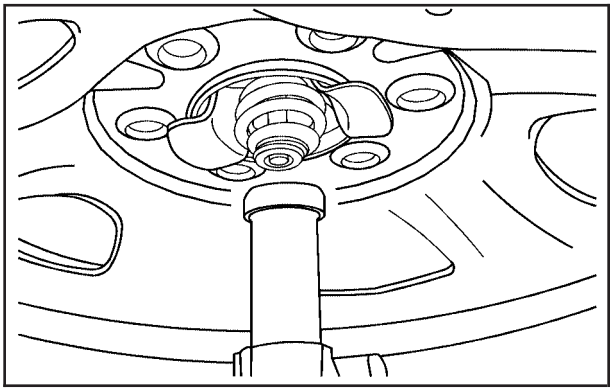

9. Position the center lift point of the jack under the center of the spare tire.
10. Turn the wheel wrench clockwise to raise the jack until it lifts the end fitting.
11. Continue raising the jack until the spare tire stops moving upward and is held firmly in place so that the secondary latch has released and the spare tire is balancing on the jack.

12. Lower the jack by turning the wheel wrench counterclockwise. Keep lowering the jack until the spare tire slides off the jack or is hanging by the cable.

⚠ CAUTION:

Someone standing too close during the procedure could be injured by the jack. If the spare tire does not slide off the jack completely, make sure no one is behind you or on either side of you as you pull the jack out from under the spare.

13. Disconnect the jack handle from the jack and carefully remove the jack with the other hand.
14. Use one hand to push against the spare while firmly pulling the jack out from under the spare tire with the other hand. If the spare tire is hanging from the cable, insert the hoist end of the extension and wheel wrench into the hoist shaft hole in the bumper and turn the wheel wrench counterclockwise to lower the spare tire the rest of the way.

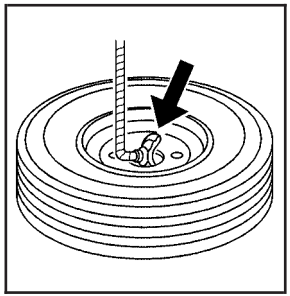

15. Tilt the tire retainer at the end of the cable and pull it through the wheel opening. Pull the tire out from under the vehicle.
16. Turn the wheel wrench in the hoist shaft hole in the bumper clockwise to raise the cable back up if the cable is hanging under the vehicle.

Have the hoist assembly inspected as soon as you can. You will not be able to store a spare or flat tire using the hoist assembly until it has been replaced.

To continue changing the flat tire, see *Removing the Flat Tire and Installing the Spare Tire on page 478*.

Storing a Flat or Spare Tire and Tools

⚠ CAUTION:

Storing a jack, a tire, or other equipment in the passenger compartment of the vehicle could cause injury. In a sudden stop or collision, loose equipment could strike someone. Store all these in the proper place.

Notice: **Storing an aluminum wheel with a flat tire under your vehicle for an extended period of time or with the valve stem pointing up may damage the wheel. Always stow the wheel with the valve stem pointing down and have the wheel/tire repaired as soon as possible.**

Store the tire under the rear of the vehicle in the spare tire carrier. Refer to the following graphics and instructions to help you:

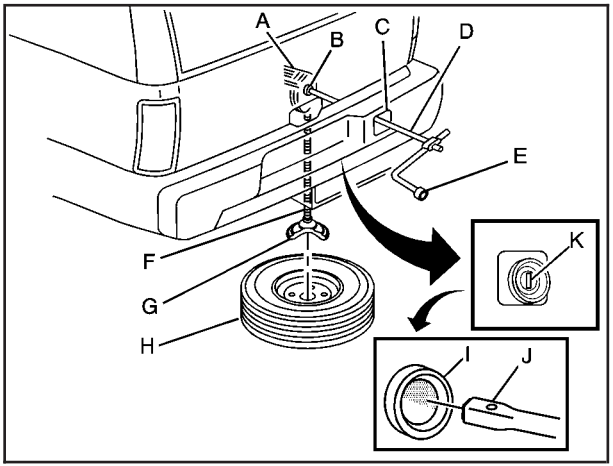

A. Hoist Assembly
B. Hoist Shaft
C. Hoist Shaft Access Cover/Hole
D. Jack Handle Extensions
E. Wheel Wrench
F. Hoist Cable
G. Tire Retainer
H. Spare Tire/Flat Tire (Valve Stem Pointed Down)
I. Hoist Shaft Access Hole
J. Hoist End of Extension Tool
K. Spare Tire Lock

1. Put the tire (H) on the ground at the rear of the vehicle with the valve stem pointed down and to the rear.

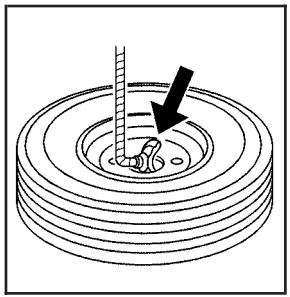

2. Tilt the tire retainer (G) downward and through the wheel opening. Make sure the retainer is fully seated across the underside of the wheel.

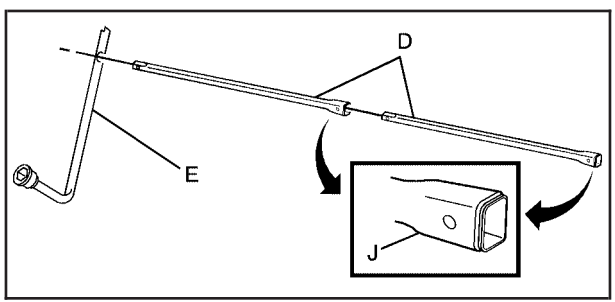

3. Assemble the two jack handle extensions (D) and wheel wrench (E) as shown.

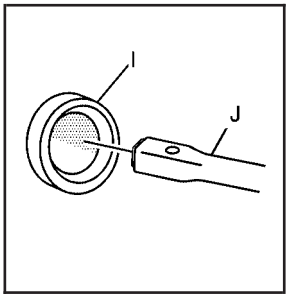

4. Insert the open end of the extension (J) through the hole in the rear bumper (I) (hoist shaft access hole).

5. Raise the tire part way upward. Make sure the retainer is seated in the wheel opening.

6. Raise the tire fully against the underside of the vehicle by turning the wheel wrench clockwise until you hear two clicks or feel it skip twice. You cannot overtighten the cable.

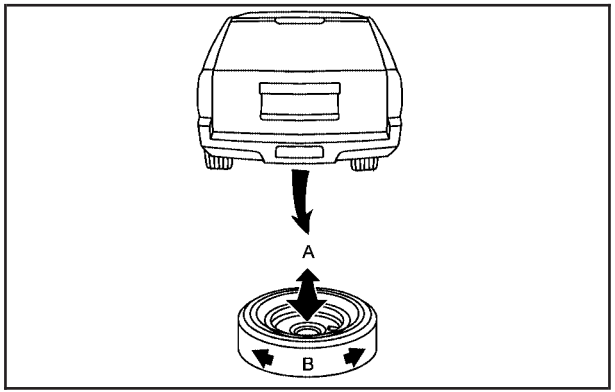

7. Make sure the tire is stored securely. Push, pull (A), and then try to turn (B) the tire. If the tire moves, use the wheel wrench to tighten the cable.
8. Reinstall the spare tire lock.
9. Reinstall the hoist shaft access cover.
10. Reinstall the hitch cover.

To store the tools, do the following.

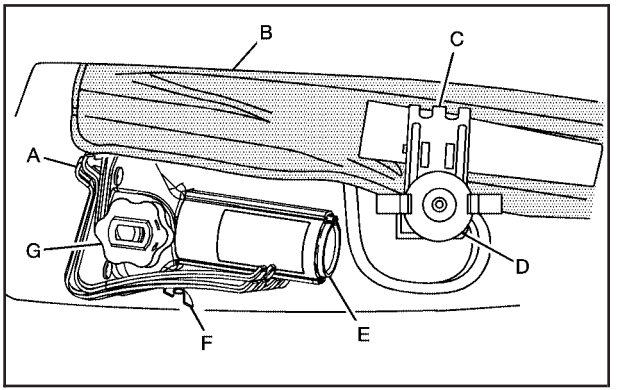

A. Wheel Blocks
B. Tool Bag with Jack Tools
C. Retaining Bracket
D. Wing Nut Retaining Tool Bag
E. Jack
F. Wing Nut Retaining Wheel Blocks
G. Wing Nut on Jack

1. Return the tools (wheel wrench, jack handle, and jack handle extensions) to the tool bag (B).

2. Assemble wheel blocks (A) and jack (E) together with the wing nut (F).
3. Position the jack (E) and wheel blocks (A) in the driver's side trim panel over the wheelhouse.
4. Turn the wing nut (G) clockwise until the jack is secured tight in the mounting bracket. Be sure to position the holes in the base of the jack onto the pin in the mounting bracket.
5. Use the retaining bracket (C) to fasten the tool bag (B) on the stud and turn the wing nut (D) clockwise to secure.

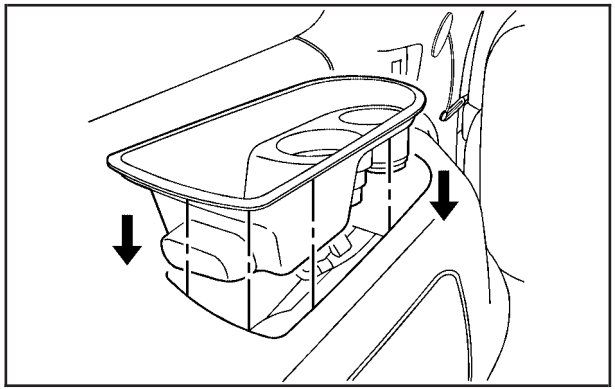

Regular Wheelbase shown, Extended Wheelbase similar.

6. Return the storage tray to its original stored position.

Spare Tire

Your vehicle, when new, had a fully-inflated spare tire. A spare tire may lose air over time, so check its inflation pressure regularly. See *Inflation - Tire Pressure on page 456* and *Loading Your Vehicle on page 366* for information regarding proper tire inflation and loading your vehicle. For instruction on how to remove, install, or store a spare tire, see *Removing the Flat Tire and Installing the Spare Tire on page 478* and *Storing a Flat or Spare Tire and Tools on page 488*.

After installing the spare tire on your vehicle, you should stop as soon as possible and make sure the spare is correctly inflated. Have the damaged or flat road tire repaired or replaced as soon as you can and installed back onto your vehicle. This way, a spare tire will be available in case you need it again.

Your vehicle may have a different size spare tire than the road tires, those originally installed on your vehicle. This spare tire was developed for use on your vehicle, so it is all right to drive on it.

Appearance Care

Cleaning the Inside of Your Vehicle

Your vehicle's interior will continue to look its best if it is cleaned often. Although not always visible, dust and dirt can accumulate on your upholstery. Dirt can damage carpet, fabric, leather, and plastic surfaces. Regular vacuuming is recommended to remove particles from your upholstery. It is important to keep your upholstery from becoming and remaining heavily soiled. Soils should be removed as quickly as possible. Your vehicle's interior may experience extremes of heat that could cause stains to set rapidly.

Lighter colored interiors may require more frequent cleaning. Use care because newspapers and garments that transfer color to your home furnishings may also transfer color to your vehicle's interior.

When cleaning your vehicle's interior, only use cleaners specifically designed for the surfaces being cleaned. Permanent damage may result from using cleaners on surfaces for which they were not intended. Use glass cleaner only on glass.

Remove any accidental over-spray from other surfaces immediately. To prevent over-spray, apply cleaner directly to the cleaning cloth.

Notice: **If you use abrasive cleaners when cleaning glass surfaces on your vehicle, you could scratch the glass and/or cause damage to the integrated radio antenna and the rear window defogger. When cleaning the glass on your vehicle, use only a soft cloth and glass cleaner.**

Many cleaners contain solvents that may become concentrated in your vehicle's breathing space. Before using cleaners, read and adhere to all safety instructions on the label. While cleaning your vehicle's interior, maintain adequate ventilation by opening your vehicle's doors and windows.

Dust may be removed from small buttons and knobs using a small brush with soft bristles.

Your GM dealer has a product for cleaning your vehicle's glass. Should it become necessary, you can also obtain a product from your GM dealer to remove odors from your vehicle's upholstery.

Do not clean your vehicle using the following cleaners or techniques:

- Never use a knife or any other sharp object to remove a soil from any interior surface.
- Never use a stiff brush. It can cause damage to your vehicle's interior surfaces.
- Never apply heavy pressure or rub aggressively with a cleaning cloth. Use of heavy pressure can damage your interior and does not improve the effectiveness of soil removal.
- Use only mild, neutral-pH soaps. Avoid laundry detergents or dishwashing soaps with degreasers. Using too much soap will leave a residue that leaves streaks and attracts dirt. For liquid cleaners, about 20 drops per gallon (3.78 L) of water is a good guide.
- Do not heavily saturate your upholstery while cleaning.
- Damage to your vehicle's interior may result from the use of many organic solvents such as naptha, alcohol, etc.

Fabric/Carpet

Use a vacuum cleaner with a soft brush attachment frequently to remove dust and loose dirt. A canister vacuum with a beater bar in the nozzle may only be used on floor carpet and carpeted floor mats. For soils, always try to remove them first with plain water or club soda. Before cleaning, gently remove as much of the soil as possible using one of the following techniques:

- For liquids: gently blot the remaining soil with a paper towel. Allow the soil to absorb into the paper towel until no more can be removed.
- For solid dry soils: remove as much as possible and then vacuum.

To clean, use the following instructions:

1. Saturate a lint-free, clean white cloth with water or club soda.
2. Wring the cloth to remove excess moisture.
3. Start on the outside edge of the soil and gently rub toward the center. Continue cleaning, using a clean area of the cloth each time it becomes soiled.
4. Continue to gently rub the soiled area until the cleaning cloth remains clean.
5. If the soil is not completely removed, use a mild soap solution and repeat the cleaning process that was used with plain water.

If any of the soil remains, a commercial fabric cleaner or spot lifter may be necessary. When a commercial upholstery cleaner or spot lifter is to be used, test a small hidden area for colorfastness first. If the locally cleaned area gives any impression that a ring formation may result, clean the entire surface.

After the cleaning process has been completed, a paper towel can be used to blot excess moisture from the fabric or carpet.

Leather

A soft cloth dampened with water may be used to remove dust. If a more thorough cleaning is necessary, a soft cloth dampened with a mild soap solution can be used. Allow the leather to dry naturally. Do not use heat to dry. Never use steam to clean leather. Never use spot lifters or spot removers on leather. Many commercial leather cleaners and coatings that are sold to preserve and protect leather may permanently change the appearance and feel of your leather and are not recommended. Do not use silicone or wax-based products, or those containing organic solvents to clean your vehicle's interior because they can alter the appearance by increasing the gloss in a non-uniform manner. Never use shoe polish on your leather.

Instrument Panel, Vinyl, and Other Plastic Surfaces

A soft cloth dampened with water may be used to remove dust. If a more thorough cleaning is necessary, a clean soft cloth dampened with a mild soap solution can be used to gently remove dust and dirt. Never use spot lifters or removers on plastic surfaces. Many commercial cleaners and coatings that are sold to preserve and protect soft plastic surfaces may permanently change the appearance and feel of your interior and are not recommended. Do not use silicone or wax-based products, or those containing organic solvents to clean your vehicle's interior because they can alter the appearance by increasing the gloss in a non-uniform manner.

Some commercial products may increase gloss on your instrument panel. The increase in gloss may cause annoying reflections in the windshield and even make it difficult to see through the windshield under certain conditions.

Wood Panels

Use a clean cloth moistened in warm, soapy water (use mild dish washing soap). Dry the wood immediately with a clean cloth.

Speaker Covers

Vacuum around a speaker cover gently, so that the speaker will not be damaged. Clean spots with just water and mild soap.

Care of Safety Belts

Keep belts clean and dry.

⚠ CAUTION:

Do not bleach or dye safety belts. If you do, it may severely weaken them. In a crash, they might not be able to provide adequate protection. Clean safety belts only with mild soap and lukewarm water.

Weatherstrips

Silicone grease on weatherstrips will make them last longer, seal better, and not stick or squeak. Apply silicone grease with a clean cloth. During very cold, damp weather frequent application may be required. See *Recommended Fluids and Lubricants on page 527*.

Washing Your Vehicle

The paint finish on the vehicle provides beauty, depth of color, gloss retention, and durability.

The best way to preserve the vehicle's finish is to keep it clean by washing it often with lukewarm or cold water.

Do not wash the vehicle in the direct rays of the sun. Use a car washing soap. Do not use strong soaps or chemical detergents. Be sure to rinse the vehicle well, removing all soap residue completely. GM-approved cleaning products can be obtained from your dealer. See *Vehicle Care/Appearance Materials on page 501*.

Do not use cleaning agents that are petroleum based, or that contain acid or abrasives.
All cleaning agents should be flushed promptly and not allowed to dry on the surface, or they could stain. Dry the finish with a soft, clean chamois or an all-cotton towel to avoid surface scratches and water spotting.

High pressure car washes may cause water to enter the vehicle.

Cleaning Exterior Lamps/Lenses

Use only lukewarm or cold water, a soft cloth and a car washing soap to clean exterior lamps and lenses. Follow instructions under *Washing Your Vehicle on page 496*.

Finish Care

Occasional waxing or mild polishing of the vehicle by hand may be necessary to remove residue from the paint finish. GM-approved cleaning products can be obtained from your dealer. See *Vehicle Care/Appearance Materials on page 501*.

Notice: **Machine compounding or aggressive polishing on a basecoat/clearcoat paint finish may damage it. Use only non-abrasive waxes and polishes that are made for a basecoat/clearcoat paint finish on your vehicle.**

The vehicle has a “basecoat/clearcoat” paint finish. The clearcoat gives more depth and gloss to the colored basecoat. Always use waxes and polishes that are non-abrasive and made for a basecoat/clearcoat paint finish.

Foreign materials such as calcium chloride and other salts, ice melting agents, road oil and tar, tree sap, bird droppings, chemicals from industrial chimneys, etc., can damage the vehicle’s finish if they remain on painted surfaces. Wash the vehicle as soon as possible. If necessary, use non-abrasive cleaners that are marked safe for painted surfaces to remove foreign matter.

Exterior painted surfaces are subject to aging, weather, and chemical fallout that can take their toll over a period of years. To help keep the paint finish looking new, keep the vehicle in a garage or covered whenever possible.

Windshield, Backglass, and Wiper Blades

If the windshield is not clear after using the windshield washer, or if the wiper blade chatters when running, wax, sap or other material may be on the blade or windshield.

Clean the outside of the windshield with a full-strength glass cleaning liquid. The windshield is clean if beads do not form when you rinse it with water.

Grime from the windshield will stick to the wiper blades and affect their performance. Clean the blade by wiping vigorously with a cloth soaked in full-strength windshield washer solvent. Then rinse the blade with water.

Check the wiper blades and clean them as necessary; replace blades that look worn.

Aluminum or Chrome-Plated Wheels

Your vehicle may be equipped with either aluminum or chrome-plated wheels.

Keep the wheels clean using a soft clean cloth with mild soap and water. Rinse with clean water. After rinsing thoroughly, dry with a soft clean towel. A wax may then be applied.

Notice: **If you use strong soaps, chemicals, abrasive polishes, cleaners, brushes, or cleaners that contain acid on aluminum or chrome-plated wheels, you could damage the surface of the wheel(s). The repairs would not be covered by your warranty. Use only GM-approved cleaners on aluminum or chrome-plated wheels.**

The surface of these wheels is similar to the painted surface of your vehicle. Do not use strong soaps, chemicals, abrasive polishes, abrasive cleaners, cleaners with acid, or abrasive cleaning brushes on them because you could damage the surface. Do not use chrome polish on aluminum wheels.

Notice: **Using chrome polish on aluminum wheels could damage the wheels. The repairs would not be covered by your warranty. Use chrome polish on chrome wheels only.**

Use chrome polish only on chrome-plated wheels, but avoid any painted surface of the wheel, and buff off immediately after application.

Notice: **If you drive your vehicle through an automatic car wash that has silicone carbide tire cleaning brushes, you could damage the aluminum or chrome-plated wheels. The repairs would not be covered by your warranty. Never drive a vehicle equipped with aluminum or chrome-plated wheels through an automatic car wash that uses silicone carbide tire cleaning brushes.**

Do not take your vehicle through an automatic car wash that has silicone carbide tire cleaning brushes. These brushes can also damage the surface of these wheels.

Tires

To clean the tires, use a stiff brush with tire cleaner.

Notice: **Using petroleum-based tire dressing products on your vehicle may damage the paint finish and/or tires. When applying a tire dressing, always wipe off any overspray from all painted surfaces on your vehicle.**

Sheet Metal Damage

If the vehicle is damaged and requires sheet metal repair or replacement, make sure the body repair shop applies anti-corrosion material to parts repaired or replaced to restore corrosion protection.

Original manufacturer replacement parts will provide the corrosion protection while maintaining the warranty.

Finish Damage

Any stone chips, fractures or deep scratches in the finish should be repaired right away. Bare metal will corrode quickly and may develop into major repair expense.

Minor chips and scratches can be repaired with touch-up materials available from your GM dealer. Larger areas of finish damage can be corrected in your GM dealer's body and paint shop.

Underbody Maintenance

Chemicals used for ice and snow removal and dust control can collect on the underbody. If these are not removed, corrosion and rust can develop on the underbody parts such as fuel lines, frame, floor pan, and exhaust system even though they have corrosion protection.

At least every spring, flush these materials from the underbody with plain water. Clean any areas where mud and debris can collect. Dirt packed in close areas of the frame should be loosened before being flushed. Your dealer or an underbody car washing system can do this for you.

Chemical Paint Spotting

Some weather and atmospheric conditions can create a chemical fallout. Airborne pollutants can fall upon and attack painted surfaces on the vehicle. This damage can take two forms: blotchy, ring-shaped discolorations, and small, irregular dark spots etched into the paint surface.

Although no defect in the paint job causes this, GM will repair, at no charge to the owner, the surfaces of new vehicles damaged by this fallout condition within 12 months or 12,000 miles (20 000 km) of purchase, whichever occurs first.

Vehicle Care/Appearance Materials

Description	Usage
Polishing Cloth Wax-Treated	Interior and exterior polishing cloth.
Tar and Road Oil Remover	Removes tar, road oil, and asphalt.
Chrome Cleaner and Polish	Use on chrome or stainless steel.
White Sidewall Tire Cleaner	Removes soil and black marks from whitewalls.
Vinyl Cleaner	Cleans vinyl.
Glass Cleaner	Removes dirt, grime, smoke and fingerprints.
Chrome and Wire Wheel Cleaner	Removes dirt and grime from chrome wheels and wire wheel covers.
Finish Enhancer	Removes dust, fingerprints, and surface contaminants. Spray on and wipe off.

Description	Usage
Swirl Remover Polish	Removes swirl marks, fine scratches, and other light surface contamination.
Cleaner Wax	Removes light scratches and protects finish.
Foaming Tire Shine Low Gloss	Cleans, shines, and protects in one step. No wiping necessary.
Wash Wax Concentrate	Medium foaming shampoo. Cleans and lightly waxes. Biodegradable and phosphate free.
Spot Lifter	Quickly removes spots and stains from carpets, vinyl, and cloth upholstery.
Odor Eliminator	Odorless spray odor eliminator used on fabrics, vinyl, leather and carpet.

Vehicle Identification

Vehicle Identification Number (VIN)

This is the legal identifier for your vehicle. It appears on a plate in the front corner of the instrument panel, on the driver's side. You can see it if you look through the windshield from outside your vehicle. The VIN also appears on the Certification/Tire and Service Parts labels and the certificates of title and registration.

Engine Identification

The eighth character in the VIN is the engine code. This code will help you identify your vehicle's engine, specifications, and replacement parts.

Service Parts Identification Label

You will find this label on the inside of the glove box. It is very helpful if you ever need to order parts. On this label, you will find the following:

- VIN
- Model designation
- Paint information
- Production options and special equipment

Do not remove this label from the vehicle.

Electrical System

Add-On Electrical Equipment

Notice: **Don't add anything electrical to your vehicle unless you check with your dealer first. Some electrical equipment can damage your vehicle and the damage wouldn't be covered by your warranty. Some add-on electrical equipment can keep other components from working as they should.**

Your vehicle has an airbag system. Before attempting to add anything electrical to your vehicle, see *Servicing Your Airbag-Equipped Vehicle on page 104*.

Windshield Wiper Fuses

The windshield wiper motor is protected by an internal circuit breaker and a fuse. If the motor overheats due to heavy snow, etc., the wiper will stop until the motor cools. If the overload is caused by some electrical problem and not snow, etc., be sure to get it fixed.

Power Windows and Other Power Options

Circuit breakers protect the power windows and other power accessories. If the current load is too heavy, the circuit breaker opens and then closes after a cool down period, protecting the circuit until the problem is fixed or goes away.

Fuses and Circuit Breakers

The wiring circuits in your vehicle are protected from short circuits by a combination of fuses, circuit breakers and fusible thermal links. This greatly reduces the chance of fires caused by electrical problems.

Look at the silver-colored band inside the fuse. If the band is broken or melted, replace the fuse. Be sure you replace a bad fuse with a new one of the identical size and rating.

If you ever have a problem on the road and don't have a spare fuse, you can borrow one that has the same amperage. Just pick some feature of your vehicle that you can get along without — like the radio or cigarette lighter — and use its fuse, if it is the correct amperage. Replace it as soon as you can.

Instrument Panel Fuse Block

The instrument panel fuse block access door is located on the driver's outside edge of the instrument panel.

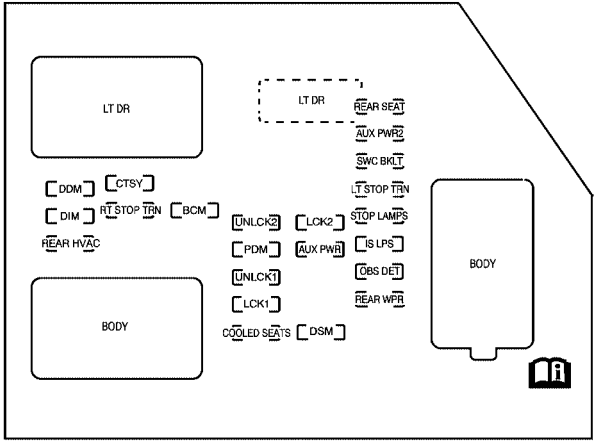

Fuses	Usage
LT DR	Driver's Side Power Window Circuit Breaker
REAR SEAT	Rear Seats
AUX PWR2	Rear Cargo Area Power Outlets
SWC BKLT	Steering Wheel Controls Backlight
DDM	Driver Door Module
CTSY	Dome Lamps, Driver's Side Turn Signal
LT STOP TRN	Driver's Side Turn Signal, Stoplamp
DIM	Instrument Panel Back Lighting
RT STOP TRN	Passenger's Side Turn Signal, Stoplamp
BCM	Body Control Module
UNLCK2	Power Door Lock 2 (Unlock Feature)
LCK2	Power Door Lock 2 (Lock Feature)

Fuses	Usage
STOP LAMPS	Stoplamps, Center-High Mounted Stoplamp
REAR HVAC	Rear Climate Controls
PDM	Passenger Door Module, Universal Home Remote System
AUX PWR	Accessory Power Outlets
IS LPS	Interior Lamps
UNLCK1	Power Door Lock 1 (Unlock Feature)
OBS DET	Ultrasonic Rear Parking Assist, Power Liftgate
LCK1	Power Door Lock 1 (Lock Feature)

Fuses	Usage
REAR WPR	Rear Wiper
COOLED SEATS	Cooled Seats
DSM	Driver Seat Module, Remote Keyless Entry System

Harness Connector	Usage
LT DR	Driver's Door Harness Connection
BODY	Harness Connector
BODY	Harness Connector

Center Instrument Panel Fuse Block

The center instrument panel fuse block is located underneath the instrument panel, to the left of the steering column.

Top View

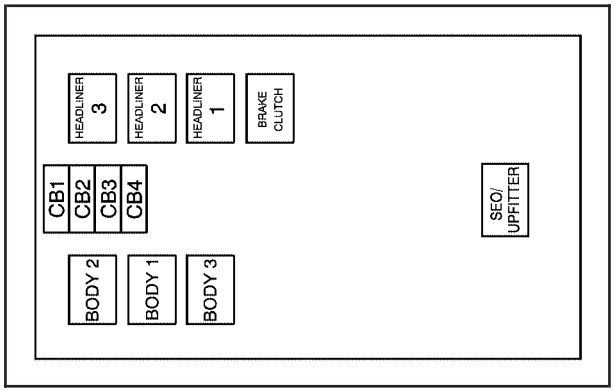

Harness Connector	Usage
BODY 2	Body Harness Connector 2
BODY 1	Body Harness Connector 1
BODY 3	Body Harness Connector 3
HEADLINER 3	Headliner Harness Connector 3
HEADLINER 2	Headliner Harness Connector 2
HEADLINER 1	Headliner Harness Connector 1
BRAKE CLUTCH	Brake Clutch Harness Connector
SEO/UPFITTER	Special Equipment Option Upfitter Harness Connector

Circuit Breaker	Usage
CB1	Passenger's Side Power Window Circuit Breaker
CB2	Passenger's Seat Circuit Breaker
CB3	Driver's Seat Circuit Breaker
CB4	Not Used

Underhood Fuse Block

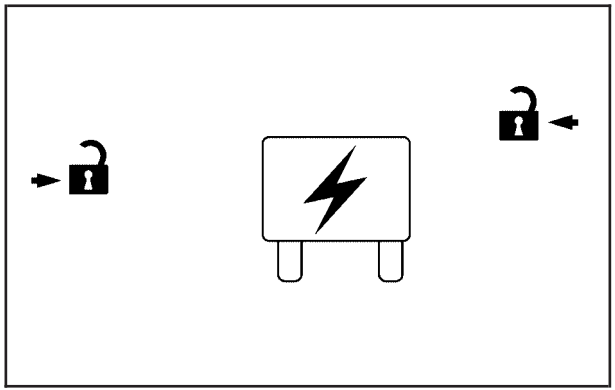

The underhood fuse block is located in the engine compartment, on the driver's side of the vehicle. To access the fuse/relay block, push in on the tabs on the end of the fuse/relay block cover and lift.

To remove fuses, hold the end of the fuse between your thumb and index finger and pull straight out.

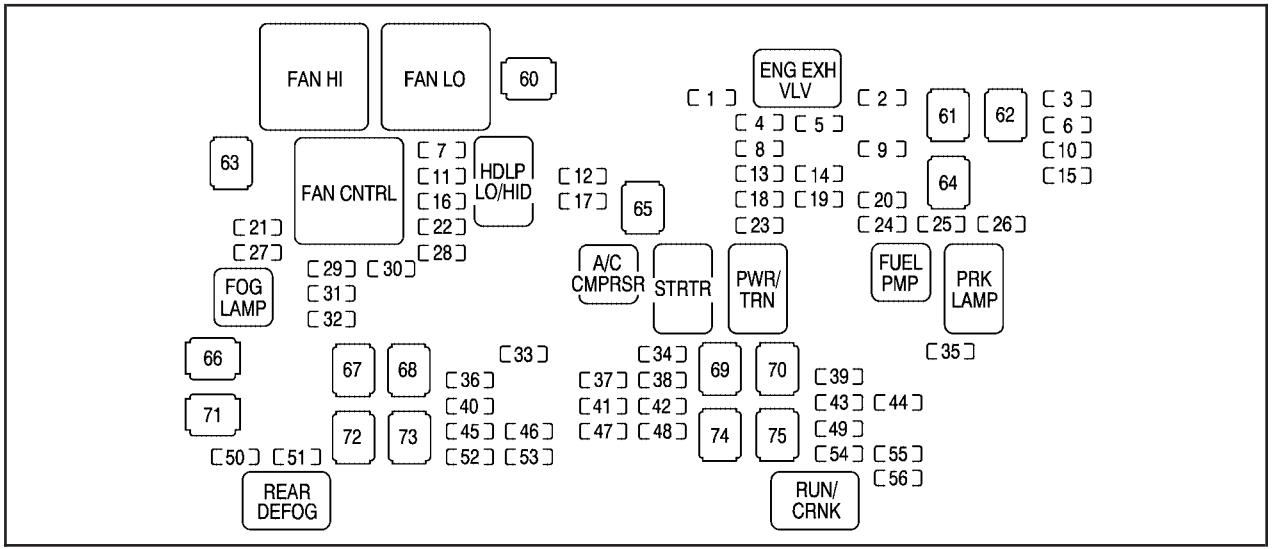

Fuses	Usage
1	Not Used
2	Electronic Stability Suspension Control, Automatic Level Control Exhaust

Fuses	Usage
3	Left Trailer Stop/Turn Lamp
4	Engine Controls

Fuses	Usage
5	Engine Control Module, Throttle Control
6	Right Trailer Stop/Turn Lamp
7	Front Washer
8	Oxygen Sensors
9	Anti-lock Brakes System 2
10	Trailer Back-up Lamps
11	Driver's High Intensity Discharge Lamp
12	Engine Control Module (Battery)
13	Fuel Injectors, Ignition Coils (Right Side)
14	Transmission Control Module (Battery)
15	Vehicle Back-up Lamps
16	Passenger's Side High Intensity Discharge Lamp
17	Air Conditioning Compressor
18	Oxygen Sensors

Fuses	Usage
19	Transmission Controls (Ignition)
20	Fuel Pump
21	Not Used
22	Rear Washer
23	Fuel Injectors, Ignition Coils (Left Side)
24	Trailer Park Lamps
25	Driver's Side Park Lamps
26	Passenger's Side Park Lamps
27	Fog Lamps
28	Horn
29	Passenger's Side High-Beam Headlamp Solenoid
30	Daytime Running Lamps
31	Driver's Side High-Beam Headlamp Solenoid
32	Not Used
33	Sunroof

Fuses	Usage
34	Key Ignition System, Theft Deterrent System
35	Windshield Wiper
36	SEO B2 Upfitter Usage (Battery)
37	Electric Adjustable Pedals
38	Climate Controls (Battery)
39	Airbag System (Ignition)
40	Amplifier
41	Audio System
42	Not Used
43	Miscellaneous (Ignition), Rear Vision Camera (If Equipped), Cooled Seats, Cruise Control
44	Liftgate Release
45	OnStar®, Rear Seat Entertainment Display

Fuses	Usage
46	Instrument Panel Cluster
47	Not Used
48	Heated Steering Wheel
49	Auxiliary Climate Control (Ignition), Compass-Temperature Mirror
50	Rear Defogger
51	Airbag System (Battery)
52	SEO B1 Upfitter Usage (Battery)
53	Cigarette Lighter, Auxiliary Power Outlet
54	Automatic Level Control Compressor Relay, SEO Upfitter Usage
55	Climate Controls (Ignition)
56	Engine Control Module, Secondary Fuel Pump (Ignition)

J-Case Fuses	Usage
60	Cooling Fan 1
61	Automatic Level Control Compressor
62	Not Used
63	Cooling Fan 2
64	Anti-lock Brake System 1
65	Starter
66	Stud 2 (Trailer Brakes)
67	Left Bussed Electrical Center 1
68	Electric Running Boards
69	Heated Windshield Washer System
70	Not Used
71	Stud 1 (Trailer Connector Battery Power)
72	Mid-Bussed Electrical Center 1
73	Climate Control Blower
74	Power Liftgate Module
75	Left Bussed Electrical Center 2

Relays	Usage
FAN HI	Cooling Fan High Speed
FAN LO	Cooling Fan Low Speed
ENG EXH VLV	Not Used
FAN CNTRL	Cooling Fan Control
HDLP LO/HID	Hi Intensity Discharge Headlamp
FOG LAMP	Front Fog Lamps
A/C CMPRSR	Air Conditioning Compressor
STRTR	Starter
PWR/TRN	Powertrain
FUEL PMP	Fuel Pump
PRK LAMP	Parking Lamps
REAR DEFOG	Rear Defogger
RUN/CRANK	Switched Power

Capacities and Specifications

The following approximate capacities are given in English and metric conversions. See *Recommended Fluids and Lubricants on page 527* for more information.

Application	Capacities	
	English	Metric
Air Conditioning Refrigerant		
Regular	2.5 lbs	1.13 kg
Extended	2.8 lbs	1.3 kg
Cooling System	17.6 qt	16.7 L
Engine Oil with Filter	6.0 qt†	5.7 L†
Fuel Tank		
Regular	26.0 gal	98.4 L
Extended	31.5 gal	119.2 L
Transmission Fluid (Pan Removal and Replacement)	6.0 qt	5.7 L
Transfer Case Fluid	1.5 qt	1.4 L
Wheel Nut Torque	140 lb ft	190 N•m
† Oil filter should be changed at every oil change. After refill, the level must be rechecked. Add enough engine coolant so that the fluid is within the proper operating range.		

Engine Specifications

Engine	VIN Code	Transmission	Spark Plug Gap
6.2L V8	8	Automatic	0.040 in (1.01 mm)

Section 6 Maintenance Schedule

Maintenance Schedule 514
Introduction 514
Maintenance Requirements 514
Your Vehicle and the Environment 514
Using the Maintenance Schedule 515
Scheduled Maintenance 517
Additional Required Services 519
Maintenance Footnotes 521
Owner Checks and Services 523
At Each Fuel Fill 523
At Least Once a Month 524
At Least Once a Year 524
Recommended Fluids and Lubricants 527
Normal Maintenance
Replacement Parts 529
Engine Drive Belt Routing 530
Maintenance Record 531

Maintenance Schedule

Introduction

Important: Keep engine oil at the proper level and change as recommended.

Have you purchased the GM Protection Plan? The Plan supplements your new vehicle warranties. See your Warranty and Owner Assistance booklet or your dealer for details.

Maintenance Requirements

Notice: **Maintenance intervals, checks, inspections, replacement parts, and recommended fluids and lubricants as prescribed in this manual are necessary to keep your vehicle in good working condition. Any damage caused by failure to follow scheduled maintenance may not be covered by warranty.**

Your Vehicle and the Environment

Proper vehicle maintenance not only helps to keep your vehicle in good working condition, but also helps the environment. All recommended maintenance is important. Improper vehicle maintenance can even affect the quality of the air we breathe. Improper fluid levels or the wrong tire inflation can increase the level of emissions from your vehicle. To help protect our environment, and to keep your vehicle in good condition, be sure to maintain your vehicle properly.

Using the Maintenance Schedule

We at General Motors want to help you keep your vehicle in good working condition. But we do not know exactly how you will drive it. You may drive very short distances only a few times a week. Or you may drive long distances all the time in very hot, dusty weather. You may use your vehicle in making deliveries. Or you may drive it to work, to do errands, or in many other ways.

Because of all the different ways people use their vehicles, maintenance needs vary. You may need more frequent checks and replacements. So please read the following and note how you drive. If you have any questions on how to keep your vehicle in good condition, see your GM Goodwrench® dealer.

This schedule is for vehicles that:

- carry passengers and cargo within recommended limits. You will find these limits on the Tire and Loading Information label. See *Loading Your Vehicle on page 366*.
- are driven on reasonable road surfaces within legal driving limits.
- are driven off-road in the recommended manner. See *Off-Road Driving on page 334*.
- use the recommended fuel. See *Gasoline Octane on page 395*.

The services in *Scheduled Maintenance on page 517* should be performed when indicated. See *Additional Required Services on page 519* and *Maintenance Footnotes on page 521* for further information.

⚠ CAUTION:

Performing maintenance work on a vehicle can be dangerous. In trying to do some jobs, you can be seriously injured. Do your own maintenance work only if you have the required know-how and the proper tools and equipment for the job. If you have any doubt, see your GM Goodwrench® dealer to have a qualified technician do the work. See *Doing Your Own Service Work on page 394*.

Some maintenance services can be complex. So, unless you are technically qualified and have the necessary equipment, you should have your GM Goodwrench® dealer do these jobs.

When you go to your GM Goodwrench® dealer for your service needs, you will know that GM-trained and supported service technicians will perform the work using genuine GM parts.

If you want to purchase service information, see *Service Publications Ordering Information on page 553*.

Owner Checks and Services on page 523 tells you what should be checked, when to check it, and what you can easily do to help keep your vehicle in good condition.

The proper replacement parts, fluids, and lubricants to use are listed in *Recommended Fluids and Lubricants on page 527* and *Normal Maintenance Replacement Parts on page 529*. When your vehicle is serviced, make sure these are used. All parts should be replaced and all necessary repairs done before you or anyone else drives the vehicle. We recommend the use of genuine GM parts.

Scheduled Maintenance

When the CHANGE ENGINE OIL SOON message comes on, it means that service is required for your vehicle. Have your vehicle serviced as soon as possible within the next 600 miles (1 000 km). It is possible that, if you are driving under the best conditions, the engine oil life system may not indicate that vehicle service is necessary for over a year. However, your engine oil and filter must be changed at least once a year and at this time the system must be reset. Your GM Goodwrench® dealer has GM-trained service technicians who will perform this work using genuine GM parts and reset the system.

If the engine oil life system is ever reset accidentally, you must service your vehicle within 3,000 miles (5 000 km) since your last service. Remember to reset the oil life system whenever the oil is changed. See *Engine Oil Life System on page 406* for information on the Engine Oil Life System and resetting the system.

When the CHANGE ENGINE OIL SOON message appears, certain services, checks, and inspections are required. Required services are described in the following for “Maintenance I” and “Maintenance II.” Generally, it is recommended that your first service be Maintenance I, your second service be Maintenance II, and that you alternate Maintenance I and Maintenance II thereafter. However, in some cases, Maintenance II may be required more often.

Maintenance I — Use Maintenance I if the CHANGE ENGINE OIL SOON message comes on within 10 months since the vehicle was purchased or Maintenance II was performed.

Maintenance II — Use Maintenance II if the previous service performed was Maintenance I. Always use Maintenance II whenever the message comes on 10 months or more since the last service or if the message has not come on at all for one year.

Scheduled Maintenance

Service	Maintenance I	Maintenance II
Change engine oil and filter. See *Engine Oil on page 403*. Reset oil life system. See *Engine Oil Life System on page 406. An Emission Control Service.*	•	•
Lubricate chassis components. *See footnote #.*	•	•
Visually check for any leaks or damage. *See footnote (j).*	•	•
Inspect engine air cleaner filter or change indicator (if equipped). If necessary, replace filter. See *Engine Air Cleaner/Filter on page 408*. *See footnote (k).*		•
Rotate tires and check inflation pressures and wear. See *Tire Inspection and Rotation on page 463* and “Tire Wear Inspection” in *At Least Once a Month on page 524*.	•	•
Inspect brake system. *See footnote (a).*	•	•
Check engine coolant and windshield washer fluid levels and add fluid as needed.	•	•
Perform any needed additional services. See *Additional Required Services on page 519*.	•	•
Inspect suspension and steering components. *See footnote (b).*		•
Inspect engine cooling system. *See footnote (c).*		•
Inspect wiper blades. *See footnote (d).*		•
Inspect restraint system components. *See footnote (e).*		•
Lubricate body components. *See footnote (f).*		•
Check transmission fluid level and add fluid as needed.		•
Check transfer case fluid level and add fluid as needed.		•

Additional Required Services

The following services should be performed at the first maintenance service (I or II) after the indicated miles (kilometers) shown for each item.

Additional Required Services

Service and Miles (Kilometers)	25,000 (40 000)	50,000 (80 000)	75,000 (120 000)	100,000 (160 000)	125,000 (200 000)	150,000 (240 000)
Inspect fuel system for damage or leaks.	•	•	•	•	•	•
Inspect exhaust system for loose or damaged components.	•	•	•	•	•	•
Vehicles without a filter restriction indicator: Replace engine air cleaner filter. See *Engine Air Cleaner/Filter on page 408*.		•		•		•
Change automatic transmission fluid and filter (severe service). *See footnote (h).*		•		•		•
Change automatic transmission fluid and filter (normal service).				•		
Change transfer case fluid. *See footnote (m).*		•		•		•

Additional Required Services (cont'd)

Service and Miles (Kilometers)	25,000 (40 000)	50,000 (80 000)	75,000 (120 000)	100,000 (160 000)	125,000 (200 000)	150,000 (240 000)
Inspect evaporative control system. *An Emission Control Service. See footnotes † and (g).*		•		•		•
Replace spark plugs and inspect spark plug wires. *An Emission Control Service.*				•		
Engine cooling system service (or every five years, whichever occurs first). *An Emission Control Service. See footnote (i).*						•
Inspect engine accessory drive belt. *An Emission Control Service. See footnote (l).*						•

Maintenance Footnotes

† *The U.S. Environmental Protection Agency or the California Air Resources Board has determined that the failure to perform this maintenance item will not nullify the emission warranty or limit recall liability prior to the completion of the vehicle's useful life. We, however, urge that all recommended maintenance services be performed at the indicated intervals and the maintenance be recorded.*

Lubricate the front suspension, steering linkage, transmission shift linkage, and parking brake cable guides. Control arm ball joints are maintenance-free.

(a) *Visually inspect brake lines and hoses for proper hook-up, binding, leaks, cracks, chafing, etc. Inspect disc brake pads for wear and rotors for surface condition. Inspect other brake parts, including calipers, parking brake, etc.*

(b) *Visually inspect front and rear suspension and steering system for damaged, loose, or missing parts, signs of wear or lack of lubrication. Inspect power steering lines and hoses for proper hook-up, binding, leaks, cracks, chafing, etc. Visually check constant velocity joints, rubber boots, and axle seals for leaks.*

(c) *Visually inspect hoses and have them replaced if they are cracked, swollen, or deteriorated. Inspect all pipes, fittings, and clamps; replace with genuine GM parts as needed. To help ensure proper operation, a pressure test of the cooling system and pressure cap and cleaning the outside of the radiator and air conditioning condenser is recommended at least once a year.*

(d) *Visually inspect wiper blades for wear or cracking. Replace wiper blades that appear worn or damaged or that streak or miss areas of the windshield.*

(e) *Make sure the safety belt reminder light and all your belts, buckles, latch plates, retractors, and anchorages are working properly. Look for any other loose or damaged safety belt system parts. If you see anything that might keep a safety belt system from doing its job, have it repaired. Have any torn or frayed safety belts replaced. Also look for any opened or broken airbag coverings, and have them repaired or replaced. The airbag system does not need regular maintenance.*

(f) *Lubricate all key lock cylinders, hood latch assembly, secondary latch, pivots, spring anchor, release pawl, rear compartment hinges, outer tailgate handle pivot points, latch bolt, fuel door hinge, and folding seat hardware. More frequent lubrication may be required when exposed to a corrosive environment. Applying silicone grease on weatherstrips with a clean cloth will make them last longer, seal better, and not stick or squeak.*

(g) *Inspect system. Check all fuel and vapor lines and hoses for proper hook-up, routing, and condition. Check that the purge valve works properly, if equipped. Replace as needed.*

(h) *Change automatic transmission fluid and filter if the vehicle is mainly driven under one or more of these conditions:*

- *In heavy city traffic where the outside temperature regularly reaches 90°F (32°C) or higher.*
- *In hilly or mountainous terrain.*
- *When doing frequent trailer towing.*
- *Uses such as found in taxi, police, or delivery service.*

(i) *Drain, flush, and refill cooling system. This service can be complex; you should have your dealer perform this service. See Engine Coolant on page 415 for what to use. Inspect hoses. Clean radiator, condenser, pressure cap, and filler neck. Pressure test the cooling system and pressure cap.*

(j) *A fluid loss in any vehicle system could indicate a problem. Have the system inspected and repaired and the fluid level checked. Add fluid if needed.*

(k) *If you drive regularly under dusty conditions, inspect the filter at each engine oil change.*

(l) *Visually inspect belt for fraying, excessive cracks, or obvious damage. Replace belt if necessary.*

(m) *Check vent hose at transfer case for kinks and proper installation.*

Owner Checks and Services

These owner checks and services should be performed at the intervals specified to help ensure the safety, dependability, and emission control performance of your vehicle. Your GM Goodwrench® dealer can assist you with these checks and services.

Be sure any necessary repairs are completed at once. Whenever any fluids or lubricants are added to your vehicle, make sure they are the proper ones, as shown in *Recommended Fluids and Lubricants on page 527*.

At Each Fuel Fill

It is important to perform these underhood checks at each fuel fill.

Engine Oil Level Check

Check the engine oil level and add the proper oil if necessary. See *Engine Oil on page 403* for further details.

Notice: **It is important to check your oil regularly and keep it at the proper level. Failure to keep your engine oil at the proper level can cause damage to your engine not covered by your warranty.**

Engine Coolant Level Check

Check the engine coolant level and add DEX-COOL® coolant mixture if necessary. See *Engine Coolant on page 415* for further details.

Windshield Washer Fluid Level Check

Check the windshield washer fluid level in the windshield washer fluid reservoir and add the proper fluid if necessary.

At Least Once a Month

Tire Inflation Check

Visually inspect your vehicle's tires and make sure they are inflated to the correct pressures. Do not forget to check the spare tire. See *Tires on page 450* for further details. Check to make sure the spare tire is stored securely. See *Changing a Flat Tire on page 473*.

Tire Wear Inspection

Tire rotation may be required for high mileage highway drivers prior to the Engine Oil Life System service notification. Check the tires for wear and, if necessary, rotate the tires. See *Tire Inspection and Rotation on page 463*.

At Least Once a Year

Starter Switch Check

⚠ CAUTION:

When you are doing this inspection, the vehicle could move suddenly. If the vehicle moves, you or others could be injured.

1. Before you start, be sure you have enough room around the vehicle.
2. Firmly apply both the parking brake and the regular brake. See *Parking Brake on page 149*.

   Do not use the accelerator pedal, and be ready to turn off the engine immediately if it starts.
3. Try to start the engine in each gear. The vehicle should start only in PARK (P) or NEUTRAL (N). If the vehicle starts in any other position, contact your GM Goodwrench® dealer for service.

Automatic Transmission Shift Lock Control System Check

⚠ CAUTION:

When you are doing this inspection, the vehicle could move suddenly. If the vehicle moves, you or others could be injured.

1. Before you start, be sure you have enough room around the vehicle. It should be parked on a level surface.
2. Firmly apply the parking brake. See *Parking Brake on page 149*.

   Be ready to apply the regular brake immediately if the vehicle begins to move.
3. With the engine off, turn the ignition to RUN, but do not start the engine. Without applying the regular brake, try to move the shift lever out of PARK (P) with normal effort. If the shift lever moves out of PARK (P), contact your GM Goodwrench® dealer for service.

Ignition Transmission Lock Check

While parked, and with the parking brake set, try to turn the ignition to LOCK in each shift lever position.

- The ignition should turn to LOCK only when the shift lever is in PARK (P).
- The key should come out only in LOCK.

Contact your GM Goodwrench® dealer if service is required.

Parking Brake and Automatic Transmission Park (P) Mechanism Check

⚠ CAUTION:

When you are doing this check, your vehicle could begin to move. You or others could be injured and property could be damaged. Make sure there is room in front of your vehicle in case it begins to roll. Be ready to apply the regular brake at once should the vehicle begin to move.

Park on a fairly steep hill, with the vehicle facing downhill. Keeping your foot on the regular brake, set the parking brake.

- To check the parking brake's holding ability: With the engine running and transmission in NEUTRAL (N), slowly remove foot pressure from the regular brake pedal. Do this until the vehicle is held by the parking brake only.
- To check the PARK (P) mechanism's holding ability: With the engine running, shift to PARK (P). Then release the parking brake followed by the regular brake.

Contact your GM Goodwrench® dealer if service is required.

Underbody Flushing Service

At least every spring, use plain water to flush any corrosive materials from the underbody. Take care to clean thoroughly any areas where mud and other debris can collect.

Recommended Fluids and Lubricants

Fluids and lubricants identified below by name, part number, or specification may be obtained from your dealer.

Usage	Fluid/Lubricant
Engine Oil	Engine oil which meets GM Standard GM6094M and displays the American Petroleum Institute Certified for Gasoline Engines starburst symbol. GM Goodwrench® oil meets all the requirements for your vehicle. To determine the proper viscosity for your vehicle's engine, see *Engine Oil on page 403*.
Engine Coolant	50/50 mixture of clean, drinkable water and use only DEX-COOL® Coolant. See *Engine Coolant on page 415*.
Hydraulic Brake System	Delco® Supreme 11 Brake Fluid or equivalent DOT-3 brake fluid.
Windshield Washer	GM Optikleen® Washer Solvent.
Power Steering System	GM Power Steering Fluid (GM Part No. U.S. 89021184, in Canada 89021186).
Automatic Transmission	DEXRON®-VI Automatic Transmission Fluid.
Key Lock Cylinders	Multi-Purpose Lubricant, Superlube (GM Part No. U.S. 12346241, in Canada 10953474).
Chassis Lubrication	Chassis Lubricant (GM Part No. U.S. 12377985, in Canada 88901242) or lubricant meeting requirements of NLGI #2, Category LB or GC-LB.

Usage	Fluid/Lubricant
Front and Rear Axle	SAE 75W-90 Synthetic Axle Lubricant (GM Part No. U.S. 12378261, in Canada 10953455) meeting GM Specification 9986115.
Transfer Case	DEXRON®-III Automatic Transmission Fluid. Look for “Approved for the H-Specification” on the label.
Front Axle Propshaft Spline or One-Piece Propshaft Spline (Two-Wheel Drive)	Spline Lubricant, Special Lubricant (GM Part No. U.S. 12345879, in Canada 10953511) or lubricant meeting requirements of GM 9985830.
Hood Hinges	Multi-Purpose Lubricant, Superlube (GM Part No. U.S. 12346241, in Canada 10953474).

Usage	Fluid/Lubricant
Body Door Hinge Pins, Tailgate Hinge and Linkage, Folding Seats, and Fuel Door Hinge	Multi-Purpose Lubricant, Superlube (GM Part No. U.S. 12346241, in Canada 10953474).
Outer Tailgate Handle Pivot Points	Multi-Purpose Lubricant, Superlube (GM Part No. U.S. 12346241, in Canada 10953474).
Weatherstrip Conditioning	Weatherstrip Lubricant (GM Part No. U.S. 3634770, in Canada 10953518) or Dielectric Silicone Grease (GM Part No. U.S. 12345579, in Canada 992887).
Weatherstrip Squeaks	Synthetic Grease with Teflon, Superlube (GM Part No. U.S. 12371287, in Canada 10953437).

Normal Maintenance Replacement Parts

Replacement parts identified below by name, part number, or specification can be obtained from your GM dealer.

Normal Maintenance Replacement Parts

Part	GM Part Number	ACDelco® Part Number
Engine Air Cleaner/Filter	25313348	A1519C
Oil Filter	89017524	PF48
Spark Plugs	12571164	41-985
Wiper Blades (ITTA Type)		
Front – 21.6 inches (55.0 cm)	15284095	—
Rear – 11.8 inches (30.0 cm)	15173728	—

Engine Drive Belt Routing

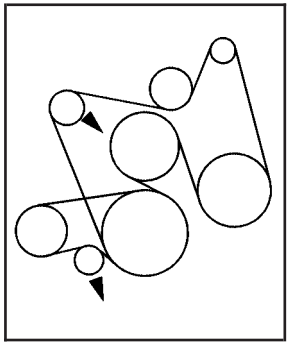

Maintenance Record

After the scheduled services are performed, record the date, odometer reading, who performed the service, and the type of services performed in the boxes provided. See *Maintenance Requirements on page 514*. Any additional information from *Owner Checks and Services on page 523* can be added on the following record pages. You should retain all maintenance receipts.

Maintenance Record

Date	Odometer Reading	Serviced By	Maintenance I or Maintenance II	Services Performed

Maintenance Record (cont'd)

Date	Odometer Reading	Serviced By	Maintenance I or Maintenance II	Services Performed

Maintenance Record (cont'd)

Date	Odometer Reading	Serviced By	Maintenance I or Maintenance II	Services Performed

Maintenance Record (cont'd)

Date	Odometer Reading	Serviced By	Maintenance I or Maintenance II	Services Performed

Section 7 Customer Assistance Information

Customer Assistance and Information 536
Customer Satisfaction Procedure 536
Online Owner Center 539
Customer Assistance for Text Telephone (TTY) Users 539
Customer Assistance Offices 540
GM Mobility Reimbursement Program 541
Roadside Service 541
Courtesy Transportation 545
Vehicle Data Collection and Event Data Recorders 547
Collision Damage Repair 548
Reporting Safety Defects 552
Reporting Safety Defects to the United States Government 552
Reporting Safety Defects to the Canadian Government 552
Reporting Safety Defects to General Motors 553
Service Publications Ordering Information 553

Customer Assistance and Information

Customer Satisfaction Procedure

Your satisfaction and goodwill are important to your dealer and to Cadillac. Normally, any concerns with the sales transaction or the operation of your vehicle will be resolved by your dealer's sales or service departments. Sometimes, however, despite the best intentions of all concerned, misunderstandings can occur. If your concern has not been resolved to your satisfaction, the following steps should be taken:

STEP ONE: Discuss your concern with a member of dealership management. Normally, concerns can be quickly resolved at that level. If the matter has already been reviewed with the sales, service or parts manager, contact the owner of the dealership or the general manager.

STEP TWO: If after contacting a member of dealership management, it appears your concern cannot be resolved by the dealership without further help, in the U.S., contact the Cadillac Customer Assistance Center, 24 hours a day, by calling 1-800-458-8006. In Canada, contact the Canadian Cadillac Customer Communication Centre by calling 1-888-446-2000.

We encourage you to call the toll-free number in order to give your inquiry prompt attention. Please have the following information available to give the Customer Assistance Representative:

- Vehicle Identification Number (VIN). This is available from the vehicle registration or title, or the plate at the top left of the instrument panel and visible through the windshield.
- Dealership name and location.
- Vehicle delivery date and present mileage.

When contacting Cadillac, please remember that your concern will likely be resolved at a dealer's facility. That is why we suggest you follow Step One first if you have a concern.

STEP THREE (US Owners): Both General Motors and your dealer are committed to making sure you are completely satisfied with your new vehicle. However, if you continue to remain unsatisfied after following the procedure outlined in Steps One and Two, you should file with the BBB Auto Line Program to enforce your rights.

The BBB Auto Line Program is an out of court program administered by the Council of Better Business Bureaus to settle automotive disputes regarding vehicle repairs or the interpretation of the New Vehicle Limited Warranty. Although you may be required to resort to this informal dispute resolution program prior to filing a court action, use of the program is free of charge and your case will generally be heard within 40 days. If you do not agree with the decision given in your case, you may reject it and proceed with any other venue for relief available to you.

You may contact the BBB Auto Line Program using the toll-free telephone number or write them at the following address:

BBB Auto Line Program
Council of Better Business Bureaus, Inc.
4200 Wilson Boulevard
Suite 800
Arlington, VA 22203-1838

Telephone: 1-800-955-5100

This program is available in all 50 states and the District of Columbia. Eligibility is limited by vehicle age, mileage and other factors. General Motors reserves the right to change eligibility limitations and/or discontinue its participation in this program.

STEP THREE (Canadian Owners):

General Motors Participation in the Mediation/Arbitration Program

In the event that you do not feel your concerns have been addressed after the following the procedure outlined in Steps One and Two. General Motors of Canada Limited wants you to be aware of its participation in a no-charge mediation/Arbitration program. General Motors of Canada Limited has committed to binding arbitration of owner disputes involving factory-related vehicle service claims. The program provides for the review of the facts involved by an impartial third party arbiter, and may include an informal hearing before the arbiter. The program is designed so that the entire dispute settlement process, from the time you file your complaint to the final decision, should be completed in approximately 70 days. We believe our impartial program offers advantages over courts in most jurisdictions because it is informal, quick, and free of charge.

For further information concerning eligibility in the Canadian Motor Vehicle Arbitration Plan (CAMVAP), call toll-free 1-800-207-0685. Alternatively you may call the General Motors Customer Communication Centre, 1-800-263-3777 (English), 1-800-263-7854 (French), or you may write to the Mediation/Arbitration Program at the following address. Your inquiry should be accompanied by your Vehicle Identification Number (VIN).

Mediation/Arbitration Program
c/o Customer Communication Centre
General Motors of Canada Limited
Mail Code: CA1–163–005
1908 Colonel Sam Drive
Oshawa, Ontario L1H 8P7

Online Owner Center

The Owner Center is a resource for your GM ownership needs. Specific vehicle information can be found in one place.

The Online Owner Center allows you to:

- Get e-mail service reminders.
- Access information about your specific vehicle, including tips and videos and an electronic version of this owner's manual (United States only).
- Keep track of your vehicle's service history and maintenance schedule.
- Find GM dealers for service nationwide.
- Receive special promotions and privileges only available to members (United States only).

Refer to the web for updated information.

To register your vehicle, visit www.MyGMLink.com (United States) or My GM Canada within www.gmcanada.com (Canada).

Customer Assistance for Text Telephone (TTY) Users

To assist customers who are deaf, hard of hearing, or speech-impaired and who use Text Telephones (TTYs), Cadillac has TTY equipment available at its Customer Assistance Center. Any TTY user can communicate with Cadillac by dialing: 1-800-833-CMCC (2622). (TTY users in Canada can dial 1-800-263-3830.)

Customer Assistance Offices

Cadillac encourages customers to call the toll-free number for assistance. However, if a customer wishes to write or e-mail Cadillac, the letter should be addressed to:

United States — Customer Assistance

Cadillac Customer Assistance Center
Cadillac Motor Car Division
P.O. Box 33169
Detroit, MI 48232-5169

www.Cadillac.com
1-800-458-8006
1-800-833-2622 (For Text Telephone devices (TTYs))
Roadside Assistance: 1-800-882-1112
Fax Number: 313-381-0022

From Puerto Rico:
1-800-496-9992 (English)
1-800-496-9993 (Spanish)
Fax Number: 313-381-0022

From U.S. Virgin Islands:
1-800-496-9994
Fax Number: 313-381-0022

Canada — Customer Assistance

General Motors of Canada Limited
Canadian Cadillac Customer Communication Centre, CA1-163-005
1908 Colonel Sam Drive
Oshawa, Ontario L1H 8P7

www.gmcanada.com
1-888-446-2000
1-800-263-3830 (For Text Telephone devices (TTYs))
Roadside Assistance: 1-800-882-1112

Overseas — Customer Assistance

Please contact the local General Motors Business Unit.

Mexico, Central America and Caribbean Islands/Countries (Except Puerto Rico and U.S. Virgin Islands) — Customer Assistance

General Motors de Mexico, S. de R.L. de C.V.
Customer Assistance Center
Paseo de la Reforma # 2740
Col. Lomas de Bezares
C.P. 11910, Mexico, D.F.
01-800-508-0000
Long Distance: 011-52-53 29 0 800

GM Mobility Reimbursement Program

This program, available to qualified applicants, can reimburse you up to $1,000 of the cost of eligible aftermarket adaptive equipment required for your vehicle, such as hand controls or a wheelchair/scooter lift.

The offer is available for a very limited period of time from the date of vehicle purchase/lease. For more details, or to determine your vehicle's eligibility, visit gmmobility.com or call the GM Mobility Assistance Center at 1-800-323-9935. Text telephone (TTY) users, call 1-800-833-9935.

General Motors of Canada also has a Mobility Program. Call 1-800-GM-DRIVE (463-7483) for details. TTY users call 1-800-263-3830.

Roadside Service

In the U.S. or Canada, call **1-800-882-1112**

Service available 24 hours a day, 365 days a year

Cadillac's exceptional Roadside Service is more than an auto club or towing service. It provides every Cadillac owner with the advantage of contacting a Cadillac advisor and, in the U.S., where available, a Cadillac trained dealer technician who can provide on-site service.

Each U.S. technician travels with a specially equipped service vehicle complete with the necessary Cadillac parts and tools required to handle most roadside repairs.

Who Is Covered?

Roadside Assistance coverage is for the vehicle operator, regardless of ownership. A person driving this vehicle without the consent of the owner is not eligible for coverage.

The following services are provided in the U.S. during the Bumper-to-Bumper warranty period and in Canada, during the Base Warranty coverage period of the New Vehicle Limited Warranty, up to a maximum coverage of $100. These services are provided at a nominal charge if the Cadillac is no longer covered by the warranties listed previously. Roadside Service is available only in the United States and Canada.

Cadillac Owner Privileges™

Roadside Service provides several Cadillac Owner Privileges™ at “no charge,” throughout your *Cadillac Warranty Period — 48 months/ 50,000 miles (80 000 km).*

Emergency Road Service is performed on site for the following situations:

- **Towing Service:** Emergency towing from a public roadway or highway to the nearest dealership for warranty service or in the event of a vehicle-disabling accident. Winch-out assistance when the vehicle is mired in sand, mud or snow.
- **Battery Jump Starting:** No-start occurrences which require a battery jump start will be covered at no charge.
- **Lock Out Assistance:** To ensure security, the driver must present the vehicle registration and personal ID before lock-out service is provided. Lock-out service will be covered at no charge if you are unable to gain entry into your vehicle. If your vehicle will not start, Roadside Service will arrange to have your vehicle towed to the nearest authorized dealership. In the US, replacement keys made at the customer’s expense will be delivered within 10 miles.

- **Fuel Delivery:** Delivery of enough fuel for the customer to get to the nearest service station (approximately $5 in the US and 10 litres in Canada). Service to provide diesel may be restricted. For safety reasons, propane and other alternative fuels will not be provided through this service.
- **Flat Tire Change (Covers change only):** Installation of your spare tire, in good condition, will be covered at no charge. The customer is responsible for the repair or replacement of the tire if not covered by a warrantable failure.
- **Trip Interruption:** If your trip is interrupted due to a warranty failure, incidental expenses may be reimbursed during the 48 months/ 50,000 miles (80 000 km) warranty period. Items covered are hotel, meals, and rental car.

Additional Services for Canadian Customers

- **Trip Routing Service:** Upon request, Cadillac Roadside Service will send you detailed, computer-personalized maps, highlighting your choice of either the most direct route or the most scenic route to your destination, anywhere in North America, along with any helpful travel information we may have pertaining to your trip. To request this service, please call us toll-free at 1-800-268-6800. We will make every attempt to send your personalized trip routing as quickly as possible, but it is best to allow three weeks before your planned departure date. Trip routing requests will be limited to six per calendar year.
- **Alternative Service:** There may be times when Roadside Service cannot provide timely assistance. Your advisor may authorize you to secure local emergency road service, and you will be reimbursed up to $100 upon submission of the original receipt to Cadillac Roadside Service®.

Roadside Service Availability

Wherever you drive in the United States or Canada, an advisor is available to assist you over the phone. A dealer technician, if available, can travel to your location within a 30 mile (50 km) radius of a participating Cadillac dealership. If beyond this radius, we will arrange to have your car towed to the nearest Cadillac dealership.

For prompt and efficient assistance when calling, please provide the following to the Roadside Service Representative:

- A description of the problem
- Name, home address, home telephone number
- Location of your Cadillac and number you are calling from
- The model year, Vehicle Identification Number (VIN), odometer reading, and date of delivery

While we hope you never have the occasion to use our service, it is added security while traveling for you and your family. Remember, we are only a phone call away. In the US or Canada, customers call Roadside Service: **1-800-882-1112**.

Any customer who has access to a (TTY) or a conventional teletypewriter can communicate with Cadillac by dialing from the United States or Canada **1-888-889-2438** — daily, 24 hours.

Cadillac and General Motors of Canada Limited reserve the right to limit services or reimbursement to an owner or driver when, in their sole discretion, the claims become excessive in frequency or type of occurrence.

Roadside Service is not part of or included in the coverage provided by the New Vehicle Limited Warranty. Cadillac and General Motors of Canada Limited reserve the right to make any changes or discontinue the Roadside Service program at any time without notification.

Towing and Road Service Exclusions

Specifically excluded from Roadside Service coverage are towing or services for vehicles operated on a non-public roadway or highway, fines, impound towing caused by a violation of local, Municipal, State, Provincial or Federal law, and mounting, dismounting or changing of snow tires, chains or other traction devices.

Courtesy Transportation

To enhance your ownership experience, we and our participating dealers are proud to offer Courtesy Transportation, a customer support program for new vehicles.

For warranty repairs during the Bumper-to-Bumper (US) or Base Warranty Coverage period (Canada), provided by the New Vehicle Limited Warranty, interim transportation may be available under the courtesy transportation program. Several courtesy transportation options are available when warranty repairs are required to assist in reducing your inconvenience.

Courtesy Transportation is not part of the new Vehicle Limited Warranty and is available only at participating dealers. A separate booklet entitled “Warranty and Owner Assistance Information” furnished with each new vehicle provides detailed warranty coverage information.

Scheduling Service Appointments

When your vehicle requires warranty service, you should contact your dealer and request an appointment. By scheduling a service appointment and advising your service consultant of your transportation needs, your dealer can help minimize your inconvenience.

If your vehicle cannot be scheduled into the service department immediately, keep driving it until it can be scheduled for service, unless, of course, the problem is safety-related. If it is, please call your dealership, let them know this, and ask for instructions.

If the dealer requests that you simply drop the vehicle off for service, you are urged to do so as early in the work day as possible to allow for the same day repair.

Transportation Options

Warranty service can generally be completed while you wait. However, if you are unable to wait, GM helps to minimize your inconvenience by providing several transportation options. Depending on the circumstances, your dealer can offer you one of the following:

Shuttle Service

Shuttle Service is the preferred means of offering Courtesy Transportation and participating dealers can provide you with shuttle service to get you to your destination with minimal interruption of your daily schedule. This includes one-way or round trip shuttle service within reasonable time and distance parameters for the dealer's area.

Public Transportation or Fuel Reimbursement

If your vehicle requires warranty repairs, and public transportation is used as "shuttle service," the reimbursement is limited to the associated shuttle allowance (contact your dealer) and must be supported by original receipts.

In addition, in the U.S., should you arrange transportation through a friend or relative, limited reimbursement for reasonable fuel expenses may be available. Claim amounts should reflect actual costs and be supported by original receipts.

Courtesy Rental Vehicle

Your dealer may arrange to provide you with a courtesy rental vehicle or reimburse you for a rental vehicle that you obtain if your vehicle is kept for a warranty repair. Taxi reimbursement may also be available if you meet the eligibility for a courtesy rental and a rental vehicle is not practical for your requirements. Rental and taxi reimbursement will be limited (contact your dealer) and must be supported by original receipts. This requires that you sign and complete a rental agreement and meet state/provincial, local and rental vehicle provider requirements. Requirements vary and may include minimum age requirements, insurance coverage, credit card, etc. You are responsible for fuel usage charges and may also be responsible for taxes, levies, usage fees, excessive mileage or rental usage beyond the completion of the repair.

Generally it is not possible to provide a like-vehicle as a courtesy rental.

Additional Program Information

All program options, such as shuttle service, may not be available at every dealer. Please contact your dealer for specific information about availability. All Courtesy Transportation arrangements will be administered by appropriate dealer personnel.

Cadillac and General Motors of Canada reserve the right to unilaterally modify, change or discontinue Courtesy Transportation at any time and to resolve all questions of claim eligibility pursuant to the terms and conditions described herein at their sole discretion.

Vehicle Data Collection and Event Data Recorders

Your vehicle, like other modern motor vehicles, has a number of sophisticated computer systems that monitor and control several aspects of the vehicle's performance. Your vehicle uses on-board vehicle computers to monitor emission control components to optimize fuel economy, to monitor conditions for airbag deployment and, if so equipped, to provide anti-lock braking and to help the driver control the vehicle in difficult driving situations.

Some information may be stored during regular operations to facilitate repair of detected malfunctions; other information is stored only in a crash event by computer systems, such as those commonly called event data recorders (EDR).

In a crash event, computer systems, such as the Airbag Sensing and Diagnostic Module (SDM) in your vehicle may record information about the condition of the vehicle and how it was operated, such as data related to engine speed, brake application, throttle position, vehicle speed, safety belt usage, airbag readiness, airbag performance, and the severity of a collision. If your vehicle is equipped with StabiliTrak®, steering performance, including yaw rate, steering wheel angle, and lateral acceleration, is also recorded. This information has been used to improve vehicle crash performance and may be used to improve crash performance of future vehicles and driving safety. Unlike the data recorders on many airplanes, these on-board systems do not record sounds, such as conversation of vehicle occupants.

To read this information, special equipment is needed and access to the vehicle or the device that stores the data is required. GM will not access information about a crash event or share it with others other than:

- with the consent of the vehicle owner or, if the vehicle is leased, with the consent of the lessee,
- in response to an official request of police or similar government office,
- as part of GM's defense of litigation through the discovery process, or
- as required by law.

In addition, once GM collects or receives data, GM may:

- use the data for GM research needs,
- make it available for research where appropriate confidentiality is to be maintained and need is shown, or
- share summary data which is not tied to a specific vehicle with non-GM organizations for research purposes.

Others, such as law enforcement, may have access to the special equipment that can read the information if they have access to the vehicle or the device that stores the data.

If your vehicle is equipped with OnStar®, please check the OnStar® subscription service agreement or manual for information on its operations and data collection.

Collision Damage Repair

If your vehicle is involved in a collision and it is damaged, have the damage repaired by a qualified technician using the proper equipment and quality replacement parts. Poorly performed collision repairs will diminish your vehicle's resale value, and safety performance can be compromised in subsequent collisions.

Collision Parts

Genuine GM Collision parts are new parts made with the same materials and construction methods as the parts with which your vehicle was originally built. Genuine GM Collision parts are your best choice to assure that your vehicle's designed appearance, durability and safety are preserved. The use of Genuine GM parts can help maintain your GM New Vehicle Warranty.

Recycled original equipment parts may also be used for repair. These parts are typically removed from vehicles that were total losses in prior accidents. In most cases, the parts being recycled are from undamaged sections of the vehicle. A recycled original equipment GM part, may be an acceptable choice to maintain your vehicle's originally designed appearance and safety performance, however, the history of these parts is not known. Such parts are not covered by your GM New Vehicle Limited Warranty, and any related failures are not covered by that warranty.

Aftermarket collision parts are also available. These are made by companies other than GM and may not have been tested for your vehicle. As a result, these parts may fit poorly, exhibit premature durability/corrosion problems, and may not perform properly in subsequent collisions. Aftermarket parts are not covered by your GM New Vehicle Limited Warranty, and any vehicle failure related to such parts are not covered by that warranty.

Repair Facility

GM also recommends that you choose a collision repair facility that meets your needs before you ever need collision repairs. Your GM dealer may have a collision repair center with GM-trained technicians and state of the art equipment, or be able to recommend a collision repair center that has GM-trained technicians and comparable equipment.

Insuring Your Vehicle

Protect your investment in your GM vehicle with comprehensive and collision insurance coverage. There are significant differences in the quality of coverage afforded by various insurance policy terms. Many insurance policies provide reduced protection to your GM vehicle by limiting compensation for damage repairs by using aftermarket collision parts. Some insurance companies will not specify aftermarket collision parts. When purchasing insurance, we recommend that you assure your vehicle will be repaired with GM original equipment collision parts.
If such insurance coverage is not available from your current insurance carrier, consider switching to another insurance carrier.

If your vehicle is leased, the leasing company may require you to have insurance that assures repairs with Genuine GM Original Equipment Manufacturer (OEM) parts or Genuine Manufacturer replacement parts. Read your lease carefully, as you may be charged at the end of your lease for poor quality repairs.

If an Accident Occurs

Here is what to do if you are involved in an accident.

- Try to relax and then check to make sure you are all right. If you are uninjured, make sure that no one else in your vehicle, or the other vehicle, is injured.
- If there has been an injury, call 911 for help. Do not leave the scene of an accident until all matters have been taken care of. Move your vehicle only if its position puts you in danger or you are instructed to move it by a police officer.
- Give only the necessary and requested information to police and other parties involved in the accident. Do not discuss your personal condition, mental frame of mind, or anything unrelated to the accident. This will help guard against post-accident legal action.
- If you need roadside assistance, call GM Roadside Assistance. See *Roadside Service on page 541* for more information.
- If your vehicle cannot be driven, know where the towing service will be taking it. Get a card from the tow truck operator or write down the driver's name, the service's name, and the phone number.
- Remove any valuables from your vehicle before it is towed away. Make sure this includes your insurance information and registration if you keep these items in your vehicle.
- Gather the important information you will need from the other driver. Things like name, address, phone number, driver's license number, vehicle license plate, vehicle make, model and model year, Vehicle Identification Number (VIN), insurance company and policy number, and a general description of the damage to the other vehicle.

- If possible, call your insurance company from the scene of the accident. They will walk you through the information they will need. If they ask for a police report, phone or go to the police department headquarters the next day and you can get a copy of the report for a nominal fee. In some states with “no fault” insurance laws, a report may not be necessary. This is especially true if there are no injuries and both vehicles are driveable.
- Choose a reputable collision repair facility for your vehicle. Whether you select a GM dealer or a private collision repair facility to fix the damage, make sure you are comfortable with them. Remember, you will have to feel comfortable with their work for a long time.
- Once you have an estimate, read it carefully and make sure you understand what work will be performed on your vehicle. If you have a question, ask for an explanation. Reputable shops welcome this opportunity.

Managing the Vehicle Damage Repair Process

In the event that your vehicle requires damage repairs, GM recommends that you take an active role in its repair. If you have a pre-determined repair facility of choice, take your vehicle there, or have it towed there. Specify to the facility that any required replacement collision parts be original equipment parts, either new Genuine GM parts or recycled original GM parts. Remember, recycled parts will not be covered by your GM vehicle warranty.

Insurance pays the bill for the repair, but you must live with the repair. Depending on your policy limits, your insurance company may initially value the repair using aftermarket parts. Discuss this with your repair professional, and insist on Genuine GM parts. Remember if your vehicle is leased you may be obligated to have the vehicle repaired with Genuine GM parts, even if your insurance coverage does not pay the full cost.

If another party's insurance company is paying for the repairs, you are not obligated to accept a repair valuation based on that insurance company's collision policy repair limits, as you have no contractual limits with that company. In such cases, you can have control of the repair and parts choices as long as cost stays within reasonable limits.

Reporting Safety Defects

Reporting Safety Defects to the United States Government

If you believe that your vehicle has a defect which could cause a crash or could cause injury or death, you should immediately inform the National Highway Traffic Safety Administration (NHTSA), in addition to notifying General Motors.

If NHTSA receives similar complaints, it may open an investigation, and if it finds that a safety defect exists in a group of vehicles, it may order a recall and remedy campaign. However, NHTSA cannot become involved in individual problems between you, your dealer, or General Motors.

To contact NHTSA, you may call the Vehicle Safety Hotline toll-free at 1-888-327-4236 (TTY: 1-800-424-9153); go to http://www.safercar.gov; or write to:

Administrator, NHTSA
400 Seventh Street, SW.
Washington, D.C. 20590

You can also obtain other information about motor vehicle safety from http://www.safercar.gov.

Reporting Safety Defects to the Canadian Government

If you live in Canada, and you believe that your vehicle has a safety defect, you should immediately notify Transport Canada, in addition to notifying General Motors of Canada Limited. You may call them at 1-800-333-0510 or write to:

Transport Canada
Place de Ville Tower C
330 Sparks Street
Ottawa, Ontario K1A 0N5

Reporting Safety Defects to General Motors

In addition to notifying NHTSA (or Transport Canada) in a situation like this, we certainly hope you will notify us. Please call us at 1-800-458-8006, or write:

Cadillac Customer Assistance Center
Cadillac Motor Car Division
P.O. Box 33169
Detroit, MI 48232-5169

In Canada, please call us at 1-888-446-2000. Or, write:

Canadian Cadillac Customer Communication Centre, 163-005
General Motors of Canada Limited
1908 Colonel Sam Drive
Oshawa, Ontario L1H 8P7

Service Publications Ordering Information

Service Manuals

Service Manuals have the diagnosis and repair information on engines, transmission, axle suspension, brakes, electrical, steering, body, etc.

Transmission, Transaxle, Transfer Case Unit Repair Manual

This manual provides information on unit repair service procedures, adjustments, and specifications for GM transmissions, transaxles, and transfer cases.

Service Bulletins

Service Bulletins give technical service information needed to knowledgeably service General Motors cars and trucks. Each bulletin contains instructions to assist in the diagnosis and service of your vehicle.

In Canada, the service bulletin reference number can be obtained by contacting your GM dealer or by calling 1-800-GMDRIVE (1-800-463-7483). This reference number is needed to order the service bulletin from Helm, Inc.

RETAIL SELL PRICE: $6.00 US + Processing Fee

Owner's Information

Owner publications are written specifically for owners and intended to provide basic operational information about the vehicle. The owner's manual will include the Maintenance Schedule for all models.

In-Portfolio: Includes a Portfolio, Owner's Manual, and Warranty Booklet.

RETAIL SELL PRICE: $35.00 US + Processing Fee

Without Portfolio: Owner's Manual only.

RETAIL SELL PRICE: $25.00 US + Processing Fee

Current and Past Model Order Forms

Service Publications are available for current and past model GM vehicles. To request an order form, please specify year and model name of the vehicle.

ORDER TOLL FREE: 1-800-551-4123
Monday-Friday 8:00 AM - 6:00 PM Eastern Time

For Credit Card Orders Only (VISA-MasterCard-Discover), visit Helm, Inc. on the World Wide Web at: www.helminc.com

Or you can write to:

Helm, Incorporated
P.O. Box 07130
Detroit, MI 48207

Prices are subject to change without notice and without incurring obligation. Allow ample time for delivery.

Note to Canadian Customers: All listed prices are quoted in U.S. funds. Canadian residents are to make checks payable in U.S. funds.

A

Accessories and Modifications 393
Accessory Power Outlet(s) 210
Adding Equipment to Your Airbag-Equipped
  Vehicle 105
Additives, Fuel 396
Add-On Electrical Equipment 502
Adjustable Throttle and Brake Pedal 141
Air Cleaner/Filter, Engine 408
Air Conditioning 212
Airbag
  Passenger Status Indicator 225
  Readiness Light 224
Airbag Sensing and Diagnostic
  Module (SDM) 547
Airbag System 89
  Adding Equipment to Your
    Airbag-Equipped Vehicle 105
  How Does an Airbag Restrain? 98
  Passenger Sensing System 100
  Servicing Your Airbag-Equipped Vehicle 104
  What Makes an Airbag Inflate? 97
  What Will You See After an Airbag
    Inflates? 98
Airbag System (cont.)
  When Should an Airbag Inflate? 95
  Where Are the Airbags? 92
All-Wheel Drive 438
All-Wheel-Drive (AWD) System 328
Analog Clock 211
Antenna, Rear Side Window 315
Antenna, XM™ Satellite Radio Antenna
  System 316
Anti-Lock Brake System (ABS) 323
Anti-Lock Brake, System Warning Light 229
Appearance Care
  Aluminum or Chrome-Plated Wheels 498
  Care of Safety Belts 496
  Chemical Paint Spotting 500
  Cleaning Exterior Lamps/Lenses 497
  Cleaning the Inside of Your Vehicle 492
  Fabric/Carpet 494
  Finish Care 497
  Finish Damage 500
  Instrument Panel, Vinyl, and Other Plastic
    Surfaces 495
  Leather 495
  Sheet Metal Damage 499
  Speaker Covers 496

Appearance Care (cont.)
Tires 499
Underbody Maintenance 500
Vehicle Care/Appearance Materials 501
Washing Your Vehicle 496
Weatherstrips 496
Windshield, Backglass, and
Wiper Blades 498
Wood Panels 496
Ashtray(s) 211
Assist Handles 171
Audio System(s) 265
Audio Steering Wheel Controls 313
Care of Your CD and DVD Player 315
Care of Your CDs and DVDs 315
Chime Level Adjustment 316
Navigation/Radio System, see Navigation
Manual 299
Radio with CD and DVD 268
Rear Seat Audio (RSA) 310
Rear Side Window Antenna 315
Setting the Time 267
Theft-Deterrent Feature 312
Understanding Radio Reception 314
XM™ Satellite Radio Antenna System 316
Automatic Headlamp System 203
Automatic Transmission
Fluid 411
Operation 142
Autoride® 374

B

Battery 433
Run-Down Protection 205
Before Leaving on a Long Trip 356
Bench Seat, Split (60/40) 19
Brake
Anti-Lock Brake System (ABS) 323
Emergencies 325
Parking 149
System Warning Light 228
Brake Pedal, Throttle 141
Brakes 429
Braking 322
Braking in Emergencies 325
Break-In, New Vehicle 137
Bucket Seats, Rear 26

Bulb Replacement 445
Back-Up Lamps 445
Headlamp Aiming 441
High Intensity Discharge (HID) Lighting 445
License Plate Lamps 447
Replacement Bulbs 447
Buying New Tires 465

C

Calibration 155, 157
California Fuel 396
California Proposition 65 Warning 393
Canadian Owners 3
Capacities and Specifications 512
Carbon Monoxide 124, 126, 153, 375
Care of
Safety Belts 496
Your CD and DVD Player 315
Your CDs and DVDs 315
Cargo Cover 174
Cargo Management System 176
Center Console Storage Area 171
Center Front Passenger Position,
Safety Belts 52
Center Seat 18
Chains, Tire 471
Charging System Light 227
Check
Engine Light 232
Checking Things Under the Hood 400
Chemical Paint Spotting 500
Child Restraints
Child Restraint Systems 67
Infants and Young Children 63
Lower Anchors and Tethers for Children 73
Older Children 60
Securing a Child Restraint in a Rear
Seat Position 82
Securing a Child Restraint in the Center
Front Seat Position 84
Securing a Child Restraint in the Right
Front Seat Position 85
Where to Put the Restraint 72
Chime Level Adjustment 316
Cigarette Lighter 211
Cleaning
Aluminum or Chrome-Plated Wheels 498
Exterior Lamps/Lenses 497
Fabric/Carpet 494
Finish Care 497
Inside of Your Vehicle 492

Cleaning (cont.)
Instrument Panel, Vinyl, and Other Plastic Surfaces 495
Leather 495
Speaker Covers 496
Tires 499
Underbody Maintenance 500
Washing Your Vehicle 496
Weatherstrips 496
Windshield, Backglass, and Wiper Blades 498
Wood Panels 496
Climate Control System
Dual Automatic 212
Outlet Adjustment 217
Rear Air Conditioning and Heating System, Electronic 218
Clock 211
Collision Damage Repair 548
Comfort Guides, Rear Safety Belt 56
Compass 155, 157
Content Theft-Deterrent 133
Control of a Vehicle 322
Convenience Net 173
Coolant
Engine Temperature Gage 230
Heater, Engine 141
Surge Tank Pressure Cap 418
Cooled Seats 12
Cooling System 422
Cruise Control 194
Cruise Control Light 237
Cupholder(s) 170
Customer Assistance Information
Courtesy Transportation 545
Customer Assistance for Text Telephone (TTY) Users 539
Customer Assistance Offices 540
Customer Satisfaction Procedure 536
GM Mobility Reimbursement Program 541
Reporting Safety Defects to General Motors 553
Reporting Safety Defects to the Canadian Government 552
Reporting Safety Defects to the United States Government 552
Roadside Service 541
Service Publications Ordering Information 553

D

Daytime Running Lamps 202
Defensive Driving 318
Delayed Locking 122
Differential, Locking 325
Doing Your Own Service Work 394
Dome Lamp Override 205
Dome Lamps 204
Door
  Delayed Locking 122
  Locks 120
  Power Door Locks 121
  Programmable Automatic Door Locks 122
  Rear Door Security Locks 122
Driver
  Position, Safety Belt 43
Driver Information Center (DIC) 239
  DIC Operation and Displays 240
  DIC Vehicle Customization 254
  DIC Warnings and Messages 245
Driving
  At Night 350
  City 354
  Defensive 318
Driving (cont.)
  Drunken 319
  Freeway 355
  Hill and Mountain Roads 358
  In Rain and on Wet Roads 351
  Off-Road 334
  Recovery Hooks 365
  Rocking Your Vehicle to Get it Out 364
  Winter 360
Dual Automatic Climate Control System 212
DVD
  Rear Seat Entertainment System 299

E

Electrical System
  Add-On Equipment 502
  Center Instrument Panel Fuse Block 506
  Fuses and Circuit Breakers 503
  Instrument Panel Fuse Block 504
  Power Windows and Other Power
    Options 503
  Underhood Fuse Block 507
  Windshield Wiper Fuses 503

Engine
Air Cleaner/Filter 408
Battery 433
Check and Service Engine Soon Light 232
Coolant 415
Coolant Heater 141
Coolant Temperature Gage 230
Drive Belt Routing 530
Engine Compartment Overview 402
Exhaust 153
Fan Noise 427
Oil 403
Oil Life System 406
Overheated Protection Operating Mode 421
Overheating 418
Starting 139
Entry Lighting 205
Event Data Recorders (EDR) 547
Exit Lighting 205
Extender, Safety Belt 59
Exterior Lamps 197

F

Filter
Engine Air Cleaner 408
Finish Damage 500
Flashers, Hazard Warning 186
Flat Tire 472
Flat Tire, Changing 473
Flat Tire, Storing 488
Fluid
Automatic Transmission 411
Power Steering 427
Windshield Washer 428
Fog Lamp Light 237
Fog Lamps 204
Front Axle 440
Fuel 395
Additives 396
California Fuel 396
Filling a Portable Fuel Container 400
Filling Your Tank 398
Fuels in Foreign Countries 397
Gage 238
Gasoline Octane 395
Gasoline Specifications 395
Low Warning Light 239

Fuses
Center Instrument Panel Fuse Block 506
Fuses and Circuit Breakers 503
Instrument Panel Fuse Block 504
Underhood Fuse Block 507
Windshield Wiper 503

G

Gage
Engine Coolant Temperature 230
Fuel 238
Speedometer 222
Tachometer 222
Garage Door Opener 165
Garment Hooks 171
Gasoline
Octane 395
Specifications 395
Glove Box 170
GM Mobility Reimbursement Program 541

H

Hazard Warning Flashers 186
Head Restraints 17
Headlamp
Aiming 441
Headlamps
Automatic Headlamp System 203
Bulb Replacement 445
Daytime Running Lamps 202
High Intensity Discharge (HID) Lighting 445
High/Low Beam Changer 189
On Reminder 202
Heated Seats 11, 12
Heated Steering Wheel 187
Heater 212
Highbeam On Light 237
High-Speed Operation, Tires 458
Highway Hypnosis 357
Hill and Mountain Roads 358
Hood
Checking Things Under 400
Release 401
Horn 186
How to Use This Manual 3
How to Wear Safety Belts Properly 43

I

Ignition Positions 138
Infants and Young Children, Restraints 63
Inflation - Tire Pressure 456
Instrument Panel
  Overview 184
Instrument Panel (I/P)
  Brightness 204
  Cluster 221

J

Jump Starting 434

K

Keyless Entry System 112
Keys 111

L

Labeling, Tire Sidewall 451
Lamps
  Battery Run-Down Protection 205
  Dome 204
  Dome Lamp Override 205
Lamps (cont.)
  Exterior 197
  Fog 204
  Reading 205
LATCH System
  Child Restraints 73
License Plate Lamps 447
Liftgate, Power 126
Liftgate/Liftglass 124
Liftglass/Liftgate 124
Light
  Airbag Readiness 224
  Anti-Lock Brake System Warning 229
  Brake System Warning 228
  Charging System 227
  Cruise Control 237
  Fog Lamp 237
  Highbeam On 237
  Lights On Reminder 237
  Low Fuel Warning 239
  Malfunction Indicator 232
  Oil Pressure 236
  Passenger Airbag Status Indicator 225
  Passenger Safety Belt Reminder 223
  Safety Belt Reminder 223
  Security 236
  StabiliTrak® Indicator 230

Light (cont.)
Tire Pressure 231
Tow/Haul Mode 238
Lighting
Entry 205
Exit 205
Loading Your Vehicle 366
Locking Differential 325
Lockout Protection 123
Locks
Delayed Locking 122
Door 120
Lockout Protection 123
Power Door 121
Programmable Automatic Door Locks 122
Rear Door Security Locks 122
Loss of Control 333
Low Fuel Warning Light 239
Luggage Carrier 172
Lumbar
Power Controls 10

M

Maintenance Schedule
Additional Required Services 519
At Each Fuel Fill 523
At Least Once a Month 524
At Least Once a Year 524
Introduction 514
Maintenance Footnotes 521
Maintenance Record 531
Maintenance Requirements 514
Normal Maintenance Replacement Parts ... 529
Owner Checks and Services 523
Recommended Fluids and Lubricants 527
Scheduled Maintenance 517
Using 515
Your Vehicle and the Environment 514
Malfunction Indicator Light 232
Memory Seat, Mirrors, and Pedals 13
Message
DIC Warnings and Messages 245

Mirrors
Automatic Dimming Mirror with Intellibeam™, OnStar®, Compass, and Temperature Display 155
Automatic Dimming Rearview with OnStar®, Compass and Temperature Display 157
Outside Power Foldaway Mirrors 160
MyGMLink.com 539

N

Navigation/Radio System, see Navigation Manual 299
New Vehicle Break-In 137
Normal Maintenance Replacement Parts 529

O

Odometer 222
Odometer, Trip 222
Off-Road Driving 334
Off-Road Recovery 331
Oil
Engine 403
Pressure Light 236
Oil, Engine Oil Life System 406
Older Children, Restraints 60
Online Owner Center 539
OnStar® System, see OnStar® Manual 163
Other Warning Devices 186
Outlet Adjustment 217
Outlet(s), Accessory Power 210
Outside
Power Foldaway Mirrors 160
Overheated Engine Protection
Operating Mode 421
Owner Checks and Services 523
Owners, Canadian 3

P

Paint, Damage 500
Park Aid 206
Park (P)
Shifting Into 150
Shifting Out of 151
Parking
Assist 206
Brake 149
Over Things That Burn 152
Passenger Airbag Status Indicator 225

Passenger Sensing System 100
Passing 331
PASS-Key® III+ 135
PASS-Key® III+ Operation 135
Power
  Accessory Outlet(s) 210
  Door Locks 121
  Electrical System 503
  Liftgate 126
  Lumbar Controls 10
  Reclining Seatbacks 15
  Retained Accessory (RAP) 139
  Running Boards 130
  Seat 9
  Steering Fluid 427
  Windows 132
Pretensioners, Safety Belt 59
Programmable Automatic Door Locks 122

Q

Questions and Answers About Safety Belts 42

R

Radios 265
  Care of Your CD and DVD Player 315
  Care of Your CDs and DVDs 315
  Navigation/Radio System, see Navigation Manual 299
  Radio with CD and DVD 268
  Rear Seat Audio 310
  Setting the Time 267
  Theft-Deterrent 312
  Understanding Reception 314
Rainsense™ II Wipers 191
Reading Lamps 205
Rear Air Conditioning and Heating System and Electronic Climate Controls 218
Rear Axle 439
Rear Door Security Locks 122
Rear Heated Seats 18
Rear Safety Belt Comfort Guides 56
Rear Seat Armrest 173
Rear Seat Audio (RSA) 310
Rear Seat Entertainment System 299

Rear Seat Passengers, Safety Belts 53
Rear Side Window Antenna 315
Rear Storage Area 173
Rear Windshield Washer/Wiper 193
Rearview Mirror, Automatic Dimming with OnStar®, Compass and Temperature Display 157
Reclining Seatbacks, Power 15
Recommended Fluids and Lubricants 527
Recovery Hooks 365
Recreational Vehicle Towing 372
Remote Keyless Entry System 112
Remote Keyless Entry System, Operation 113
Removing the Flat Tire and Installing the Spare Tire 478
Removing the Spare Tire and Tools 474
Replacement Bulbs 447
Reporting Safety Defects
  Canadian Government 552
  General Motors 553
  United States Government 552
Restraint System Check
  Checking the Restraint Systems 106
  Replacing Restraint System Parts After a Crash 107
Retained Accessory Power (RAP) 139
Right Front Passenger Position, Safety Belts 51
Road Sensing Suspension 325
Roadside Service 541
Rocking Your Vehicle to Get it Out 364
Routing, Engine Drive Belt 530
Running Boards, Power 130
Running the Engine While Parked 154

S

Safety Belt
  Passenger Reminder Light 223
  Pretensioners 59
  Reminder Light 223
Safety Belts
  Care of 496
  Center Front Passenger Position 52
  Driver Position 43
  How to Wear Safety Belts Properly 43
  Questions and Answers About Safety Belts 42
  Rear Safety Belt Comfort Guides 56
  Rear Seat Passengers 53
  Right Front Passenger Position 51

Safety Belts (cont.)
Safety Belt Extender 59
Safety Belt Use During Pregnancy 51
Safety Belts Are for Everyone 38
Shoulder Belt Height Adjuster 50
Safety Warnings and Symbols 4
Scheduled Maintenance 517
Seats
60/40 Split Bench Seat 19
Bucket Seats, Rear 26
Center Seat 18
Head Restraints 17
Heated and Cooled Seats 12
Heated Seats 11
Heated Seats - Rear 18
Memory, Mirrors and Pedals 13
Power Lumbar 10
Power Reclining Seatbacks 15
Power Seats 9
Third Row Seat 33
Secondary Latch System 484
Securing a Child Restraint
Center Front Seat Position 84
Rear Seat Position 82
Right Front Seat Position 85
Security Light 236
Service 392
Accessories and Modifications 393
Adding Equipment to the Outside of Your Vehicle 395
California Proposition 65 Warning 393
Doing Your Own Work 394
Engine Soon Light 232
Publications Ordering Information 553
Servicing Your Airbag-Equipped Vehicle 104
Setting the Time 267
Sheet Metal Damage 499
Shifting Into Park (P) 150
Shifting Out of Park (P) 151
Shoulder Belt Height Adjuster 50
Signals, Turn and Lane-Change 188
Spare Tire 492
Installing 478
Removing 474
Storing 488
Specifications, Capacities 512
Speedometer 222
Split Bench Seat (60/40) 19
StabiliTrak® System 326
StabiliTrak® Indicator Light 230
Starting Your Engine 139
Steering 329

Steering Wheel Controls, Audio 313
Steering Wheel, Heated 187
Steering Wheel, Tilt Wheel 187
Storage
  Garment Hooks 171
Storage Areas
  Cargo Management System 176
  Center Console Storage Area 171
  Convenience Net 173
  Cupholder(s) 170
  Glove Box 170
  Luggage Carrier 172
  Rear Seat Armrest 173
  Rear Storage Area 173
Stuck in Sand, Mud, Ice, or Snow 364
Sun Visors 133
Sunroof 179

T

Tachometer 222
Theft-Deterrent, Radio 312
Theft-Deterrent Systems 133
  Content Theft-Deterrent 133
  PASS-Key® III+ 135
  PASS-Key® III+ Operation 135
Third Row Seat 33
Throttle, Adjustable 141
Tilt Wheel 187
Tire
  Pressure Light 231
Tires 450
  Aluminum or Chrome-Plated Wheels,
    Cleaning 498
  Buying New Tires 465
  Chains 471
  Changing a Flat Tire 473
  Cleaning 499
  Different Size 467
  High-Speed Operation 458
  If a Tire Goes Flat 472
  Inflation - Tire Pressure 456
  Inspection and Rotation 463
  Installing the Spare Tire 478
  Pressure Monitor System 458
  Removing the Flat Tire 478
  Removing the Spare Tire and Tools 474
  Secondary Latch System 484
  Spare Tire 492
  Storing a Flat or Spare Tire and Tools 488
  Tire Sidewall Labeling 451
  Tire Terminology and Definitions 453

Tires (cont.)
Uniform Tire Quality Grading 468
Wheel Alignment and Tire Balance 469
Wheel Replacement 470
When It Is Time for New Tires 465
Tow/Haul Mode 148
Tow/Haul Mode Light 238
Towing
Recreational Vehicle 372
Towing a Trailer 375
Your Vehicle 372
Traction
Locking Differential 325
Road Sensing Suspension 325
StabiliTrak® System 326
Trailer
Recommendations 388
Transmission
Fluid, Automatic 411
Transmission Operation, Automatic 142
Trip Odometer 222
Turn and Lane-Change Signals 188
Turn Signal/Multifunction Lever 188

U

Ultrasonic Rear Parking Assist (URPA) 206
Understanding Radio Reception 314
Uniform Tire Quality Grading 468
Universal Home Remote System 165
Operation 166

V

Vehicle
Control 322
Damage Warnings 5
Loading 366
Symbols 5
Vehicle Customization, DIC 254
Vehicle Data Collection and Event Data
Recorders 547
Vehicle Identification
Number (VIN) 502
Service Parts Identification Label 502
Ventilation Adjustment 217
Visors 133

W

Warning Lights, Gages and Indicators 220
Warnings
DIC Warnings and Messages 245
Hazard Warning Flashers 186
Other Warning Devices 186
Safety and Symbols 4
Vehicle Damage 5
Wheels
Alignment and Tire Balance 469
Different Size 467
Replacement 470
Where to Put the Restraint 72
Windows 131
Power 132
Windshield
Backglass, and Wiper Blades, Cleaning 498
Rainsense™ II Wipers 191
Washer 192
Washer Fluid 428
Wiper Blade Replacement 448
Wiper Fuses 503
Wipers 190
Windshield, Rear Washer/Wiper 193
Winter Driving 360

X

XM Radio Messages 297
XM™ Satellite Radio Antenna System 316

Y

Your Vehicle and the Environment 514