Intake Manifold Cover Replacement

Removal Procedure

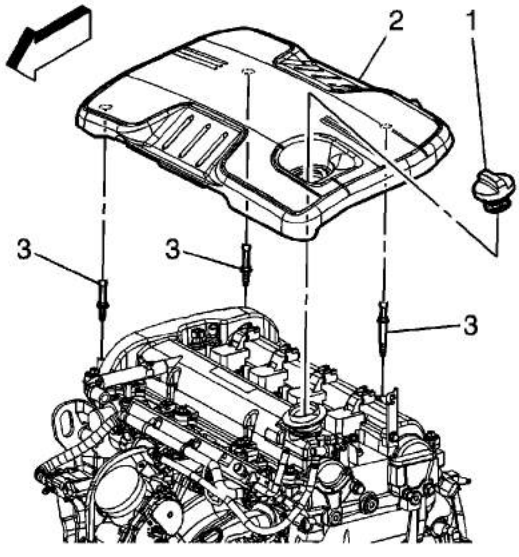

1. Remove the engine oil fill cap (1).
2. Pull up on the cover (2) in order to disengage the cover from the studs (3).

Installation Procedure

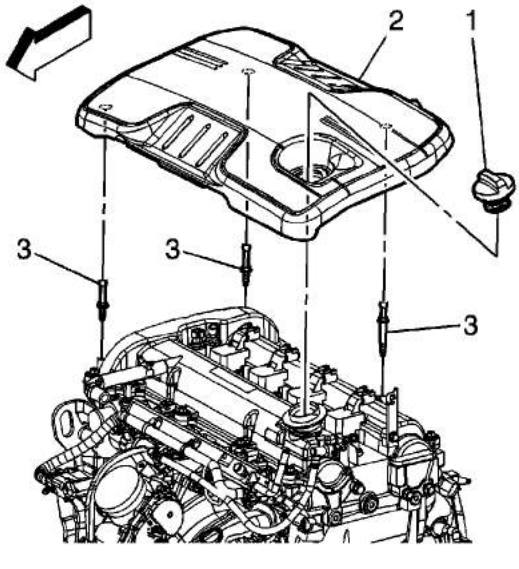

cardiagn.com

1. Align the cover (2) to the studs (3) on the engine, push down on the cover above the studs in order to engage the cover to the studs.
2. Install the engine oil fill cap (1).

cardiagn.com

Drive Belt Replacement (LE5)

Tools Required

J 44811 Accessory Belt Tensioner Unloader

Removal Procedure

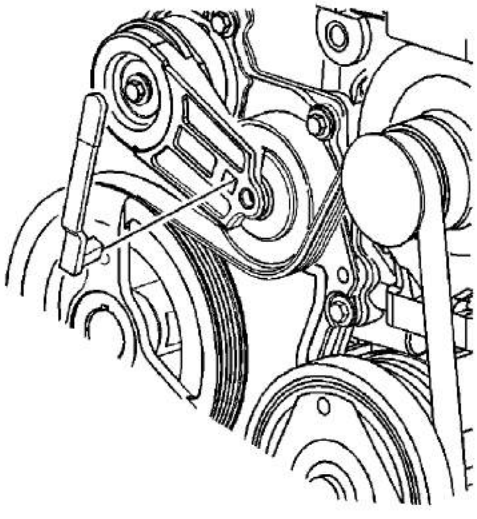

1. Remove the engine splash shield. Refer to Engine Splash Shield Replacement .
2. Install the J 44811 to the drive belt tensioner.
3. Using the J 44811 , rotate the tensioner counterclockwise in order to release the tensioner from the drive belt.

cardiagn.com

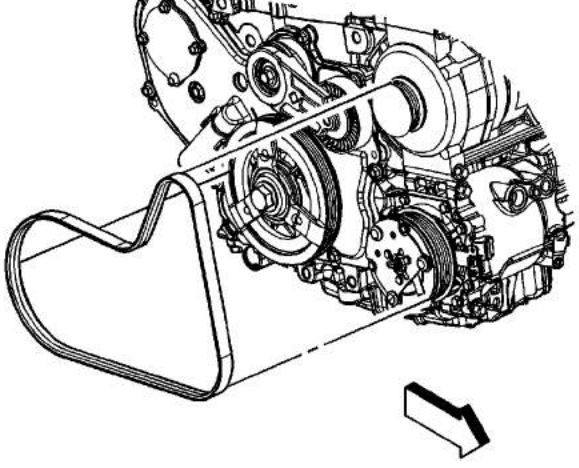

4. Remove the drive belt.
5. Slowly rotate the J 44811 and the tensioner clockwise in order to allow the tensioner to rest.
6. Remove the J 44811 from the drive belt tensioner.

Installation Procedure

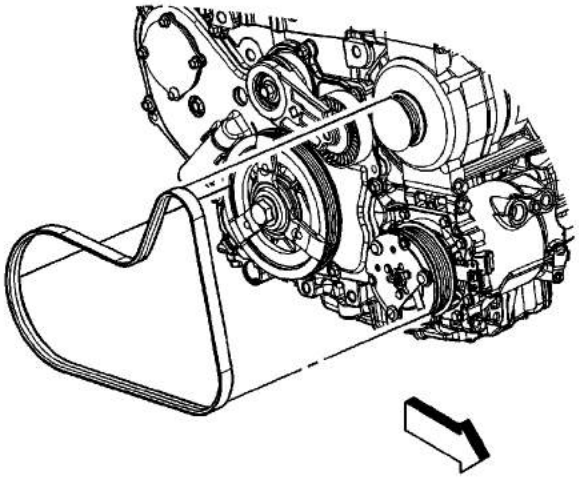

1. Install and position the drive belt around all of the pulleys except for the drive belt tensioner.
2. Install the J 44811 to the drive belt tensioner.
3. Using the J 44811 , rotate the tensioner counterclockwise.
4. Position the drive belt under the tensioner pulley.

cardiagn.com

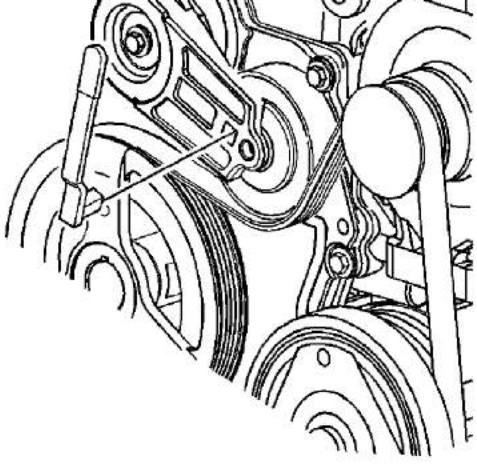

5. Using the J 44811 , rotate the tensioner clockwise in order to seat the tensioner pulley onto the drive belt.
6. Install the engine splash shield. Refer to Engine Splash Shield Replacement .

cardiagn.com

Drive Belt Replacement (LAT)

Special Tools

EN-48932 Hydraulic Belt Tensioner Compressor

Removal Procedure

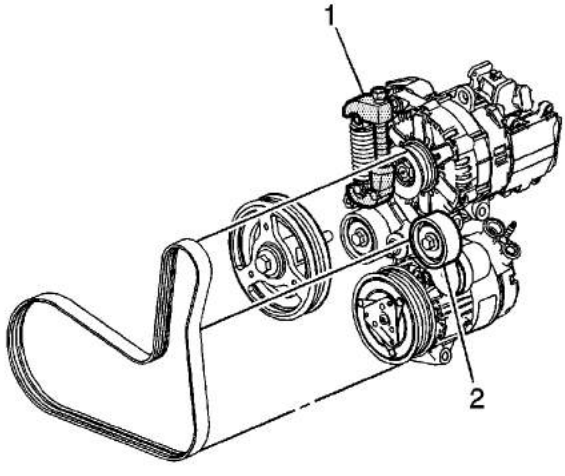

1. Remove the air cleaner assembly. Refer to Air Cleaner Assembly Replacement.
2. Install the EN-48932 (1) to the drive belt tensioner spring.
3. Compress the drive belt tensioner spring fully using the EN-48932 (1).

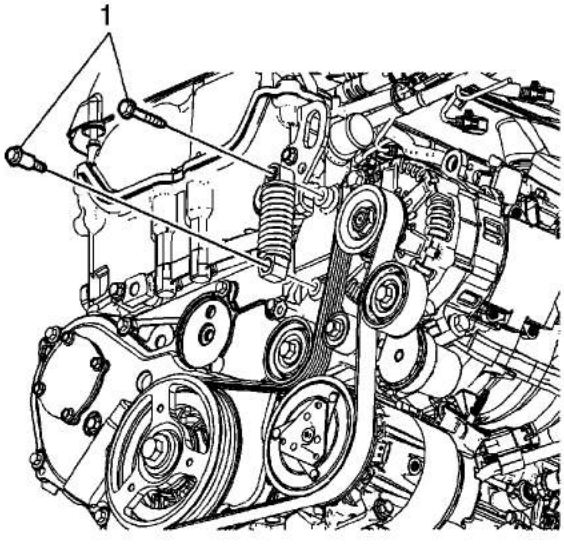

cardiagn.com

4. Remove the tensioner spring bolts (1) from the tensioner.
5. Remove the tensioner spring from the tensioner.
6. Rotate the tensioner, then remove the drive belt from under the middle idler pulley.
7. Remove the drive belt from the vehicle.

Installation Procedure

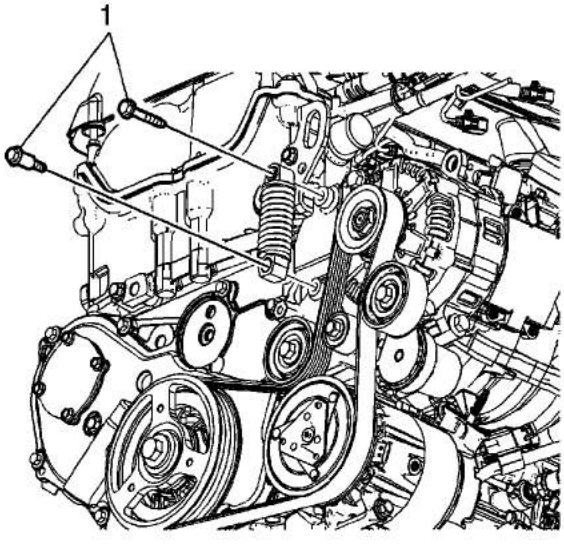

1. Install and position the drive belt around all of the pulleys except for the middle idler pulley.
2. Install the tensioner spring on the tensioner.

   Caution: Refer to Fastener Caution in the Preface section.

3. Install the tensioner spring bolts (1) to the tensioner and tighten to **22 N·m (16 lb ft)**.

cardiagn.com

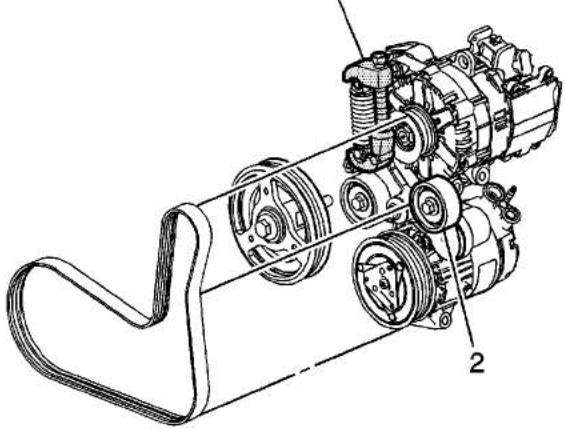

4. Install the drive belt under the middle idler pulley.
5. Loosen the forcing bolt on the EN-48932 (1) and remove from the drive belt tensioner spring.
6. Install and position the drive belt around all of the pulleys except for the middle idler pulley.
7. Ensure that the drive belt tensioner idler is fully seated against the drive belt.
8. Install the air cleaner assembly. Refer to Air Cleaner Assembly Replacement.

cardiagn.com

Drive Belt Tensioner Replacement (LE5)

Removal Procedure

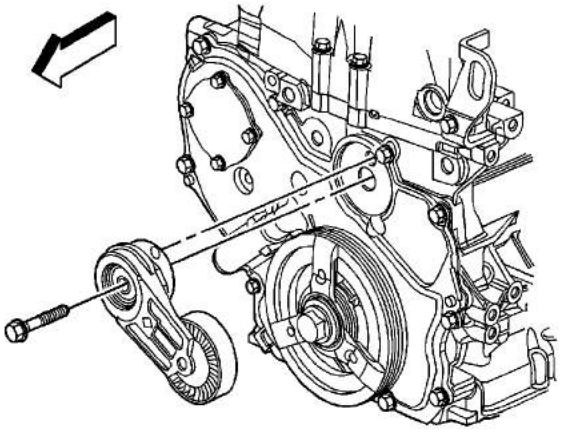

1. Remove the drive belt. Refer to Drive Belt Replacement.
2. Remove the drive belt tensioner bolt.
3. Remove the drive belt tensioner.

Installation Procedure

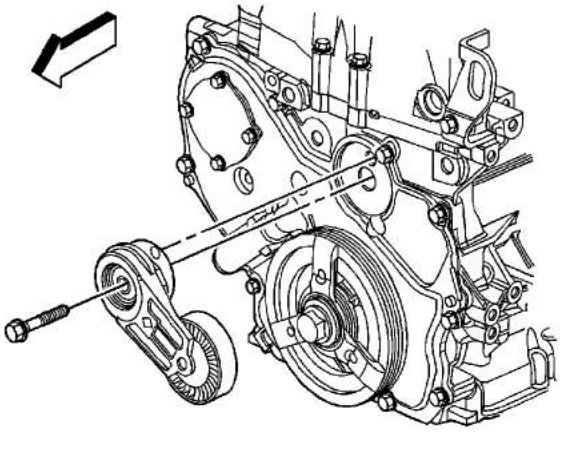

cardiagn.com

1. Position the drive belt tensioner.

   Caution: Refer to Fastener Caution in the Preface section.

2. Install the drive belt tensioner bolt and tighten to **45 N·m (33 lb ft)**.
3. Install the drive belt. Refer to Drive Belt Replacement.

cardiagn.com

Drive Belt Tensioner Replacement (LAT)

Removal Procedure

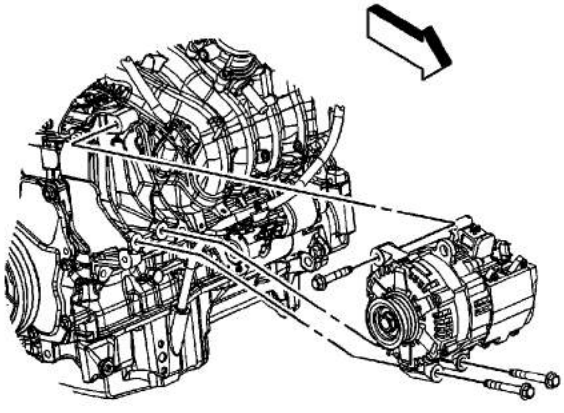

1. Remove the drive belt. Refer to Drive Belt Replacement.
2. Remove the generator starter bolts and position generator starter aside.

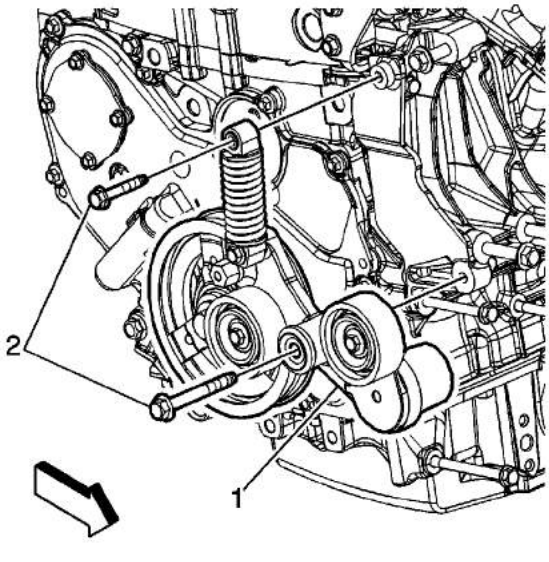

3. Remove the drive belt tensioner bolts (2).
4. Remove the drive belt tensioner (1).

cardiagn.com

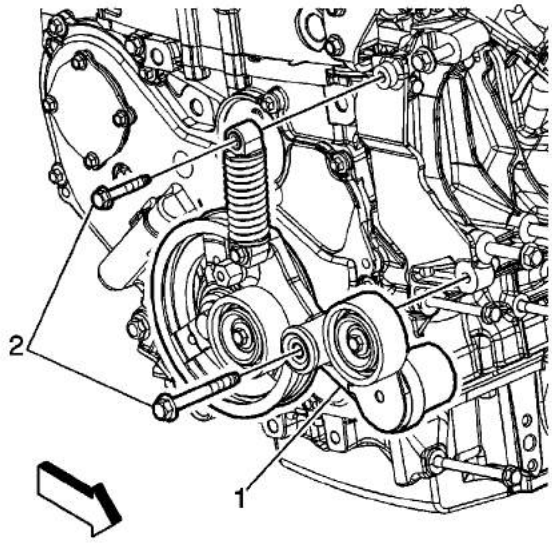

Warning: To avoid personal injury, only remove the tensioner shipping clip when the tensioner is properly mounted to the engine and the accessory drive belt is in place and properly routed.

1. Position the drive belt tensioner (1).

   Caution: Refer to Fastener Caution in the Preface section.

2. Install the drive belt tensioner bolts (2).
   - Tighten the top bolt to **22 N·m (16 lb ft)**.
   - Tighten the lower bolt to **58 N·m (43 lb ft)**.

cardiagn.com

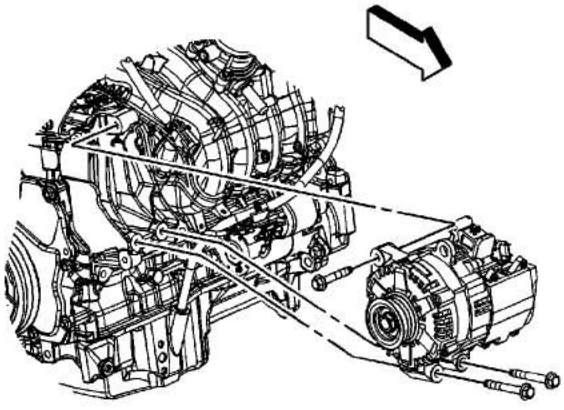

3. Position the generator starter to the vehicle and install the bolts.
4. Tighten the generator starter bolts in the following sequence.
   4.1. Front
   4.2. Bottom

   Tighten the bolts to **58 N·m (43 lb ft)**.

5. Install the drive belt. Refer to Drive Belt Replacement.
6. Using a 6 point socket on the hex boss on the drive belt tensioner, release the tension and remove the shipping clip by hand. Discard the clip.

cardiagn.com

Engine Oil Pressure Switch Replacement

Removal Procedure

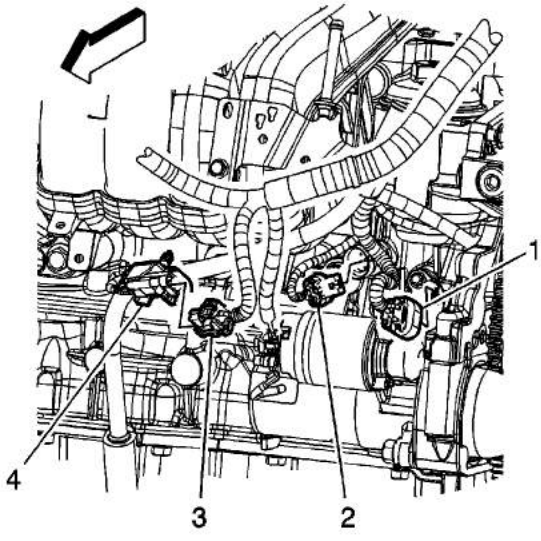

1. Remove the starter. Refer to Starter Motor Replacement.
2. Disconnect the engine wiring harness electrical connector (2) from the oil pressure switch.

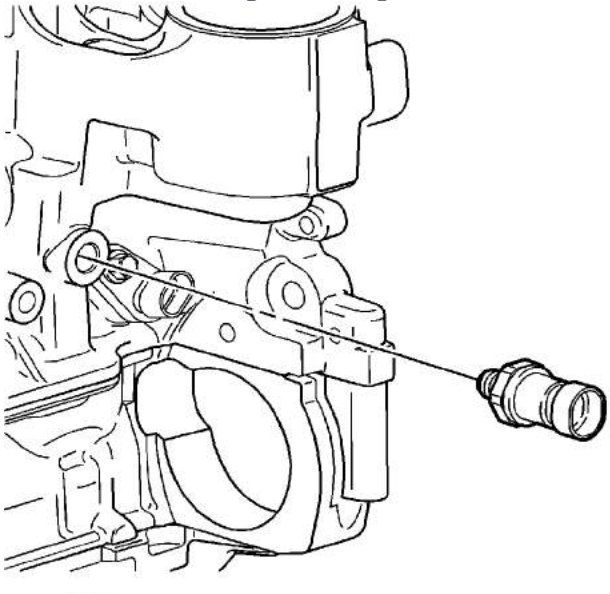

3. Remove the engine oil pressure switch.

cardiagn.com

Caution: Refer to Fastener Caution in the Preface section.

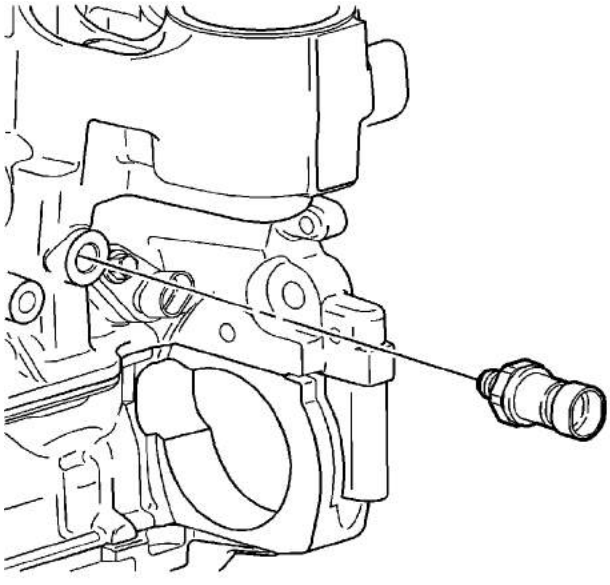

1. Install the engine oil pressure switch. Tighten the switch to **22 N·m (16 lb ft)**.

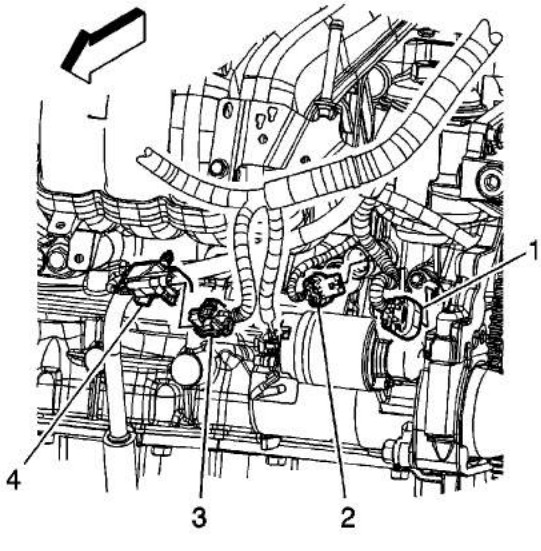

2. Connect the engine wiring harness electrical connector (2) to the oil pressure switch.
3. Install the starter. Refer to Starter Motor Replacement.

cardiagn.com

Engine Mount Inspection

Important: Before replacing any engine mount due to suspected fluid loss, verify that the source of the fluid is the engine mount, not the engine or accessories.

1. Install the engine support fixture. Refer to Engine Support Fixture .
2. Raise the engine slightly and observe the engine mount. Refer to Lifting and Jacking the Vehicle.

   Raising the engine removes the weight from the engine mount and creates a slight tension on the rubber portion.

3. Replace the engine mount if the engine mount exhibits any of the following conditions:
   - The hard rubber is covered with heat check cracks.
   - The rubber is separated from the metal plate of the engine mount.
   - The rubber is split through the center of the engine mount.
   - The engine mount itself is leaking fluid.
4. For engine mount replacement, refer to Engine Mount Replacement .

cardiagn.com

Engine Mount Bracket Replacement

Removal Procedure

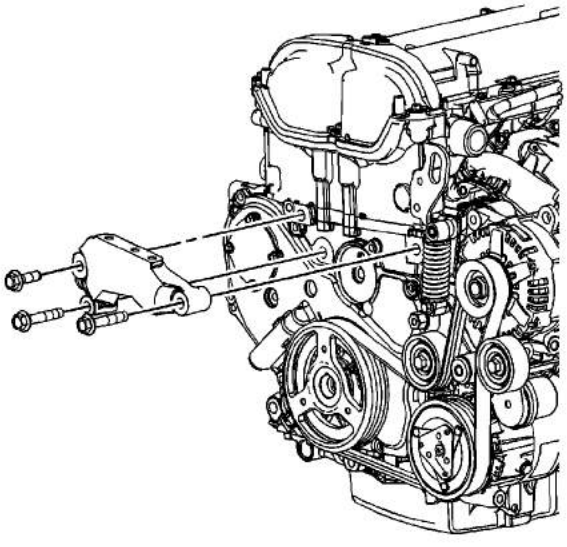

1. Remove the engine mount. Refer to Engine Mount Replacement.
2. Remove the engine mount bracket to engine bolts.
3. Remove the engine mount bracket.

Installation Procedure

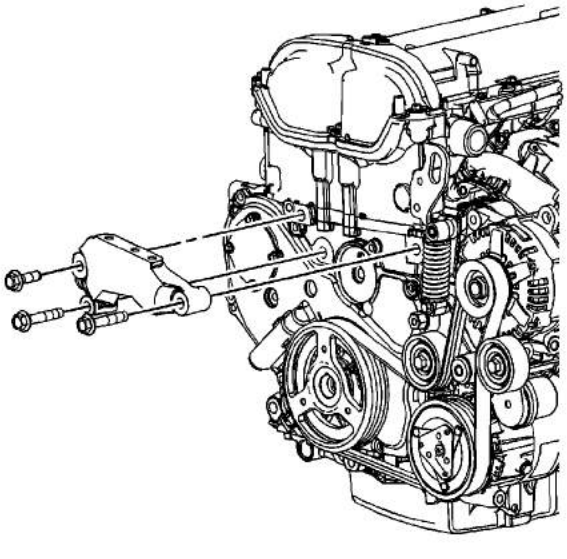

cardiagn.com

1. Position the engine mount bracket to the engine.
2. Install the engine mount bracket bolts in the following locations:
   - The long bolts in the forward and lower front holes
   - The short bolt in the upper rear hole

   Caution: Refer to Fastener Caution in the Preface section.

3. Tighten the engine mount bracket bolts in the following sequence:
   3.1. Upper Left
   3.2. Lower Left
   3.3. Right

   Tighten the bolts to **100 N·m (74 lb ft)**.

4. Install the engine mount. Refer to Engine Mount Replacement.

cardiagn.com

Engine and Transmission Mount Balancing - All Mounts

Note: Follow the balance procedure steps listed below. Powertrain mounts must be tightened in sequence.

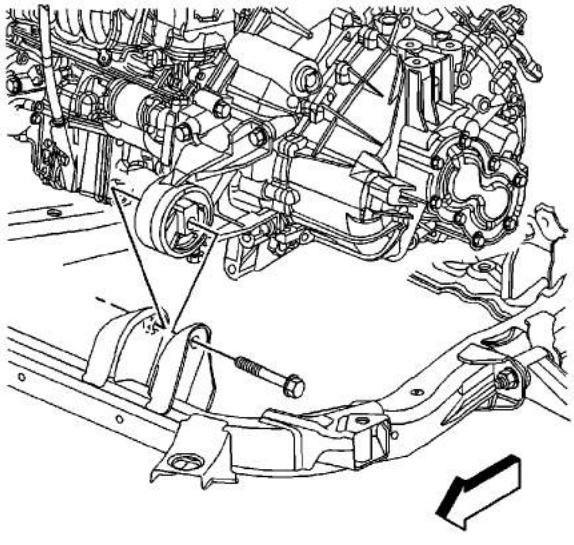

1. Remove the air cleaner assembly. Refer to Air Cleaner Assembly Replacement.
2. If equiped with LFA, remove the battery tray. Refer to Battery Tray Replacement.
3. If equiped with LE5, remove the battery box. Refer to Battery Box Replacement
4. Raise and support the vehicle. Refer to Lifting and Jacking the Vehicle.
5. Loosen the front transaxle mount through bolt.

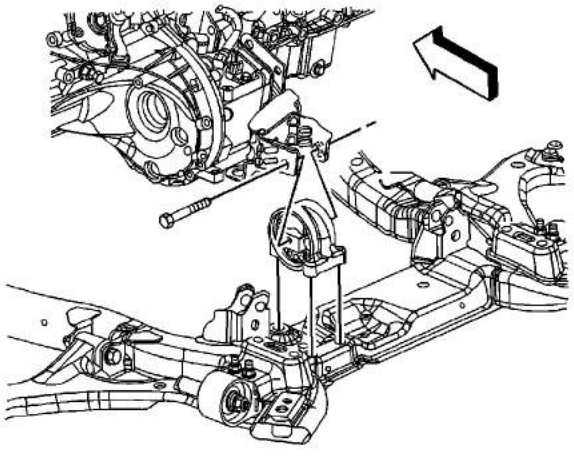

cardiagn.com

6. Loosen the rear transaxle mount through bolt.
7. Lower the vehicle.
8. Position two floor jacks with wood blocks under the engine and transaxle in order to support the powertrain assembly.

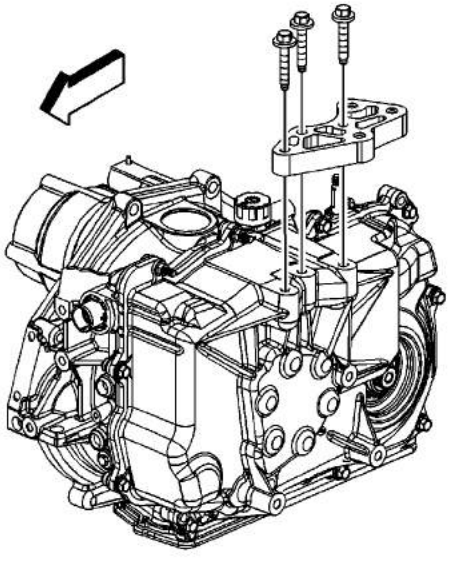

9. Loosen the transaxle adapter to transaxle bolts.

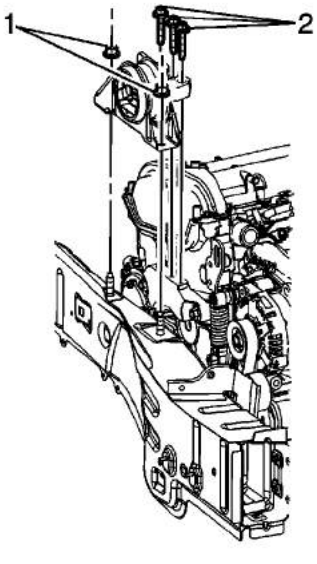

10. Loosen the engine mount to bracket bolts (2).
11. Reposition both floor jacks in order to allow a 1/8 inch gap between the mount and bracket.

Caution: Refer to Fastener Caution in the Preface section.

cardiagn.com

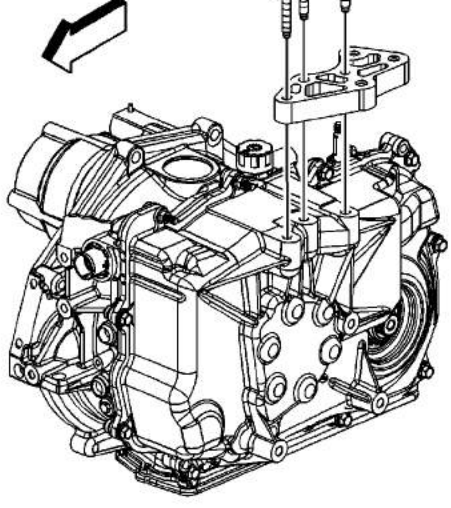

12. Tighten the transaxle adapter to transaxle bolts in the following sequence to **45 N·m (33 lb ft)**.
    12.1. Rear
    12.2. Front
    12.3. Middle

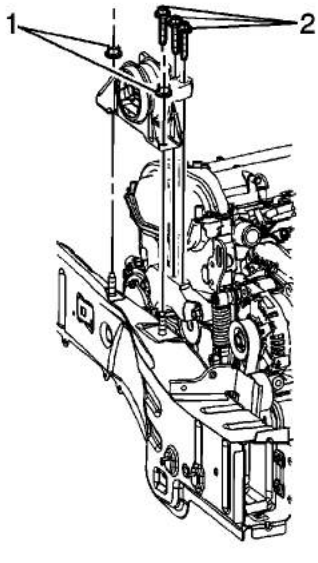

13. Tighten the engine mount to bracket bolts in the following sequence to **50 N·m (37 lb ft)**.
    13.1. Middle
    13.2. Rear
    13.3. Front
14. Remove the floor jacks from under the oil pan.

cardiagn.com

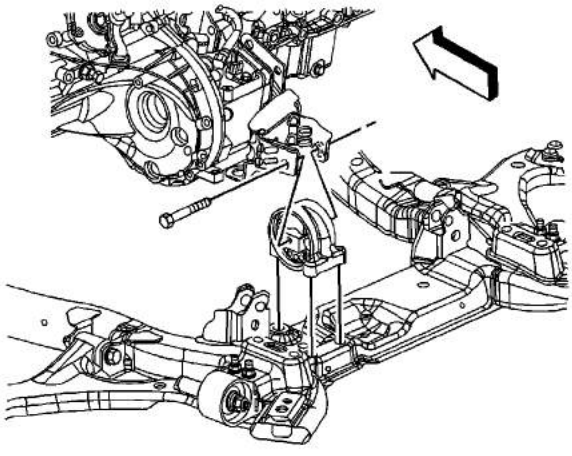

17. Tighten the rear transaxle mount through bolt to **100 N·m (74 lb ft)**.

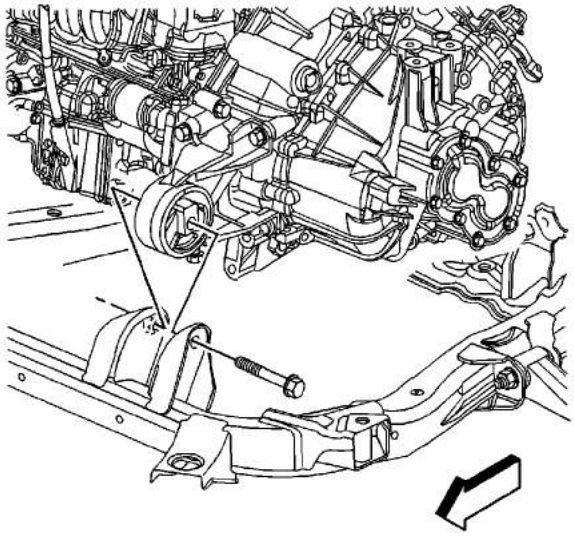

18. Tighten the front transaxle mount through bolt to **100 N·m (74 lb ft)**.
19. Lower the vehicle.
20. If equiped with LFA, install the battery tray. Refer to Battery Tray Replacement.
21. If equiped with LE5, install the battery box. Refer to Battery Box Replacement
22. Install the air cleaner assembly. Refer to Air Cleaner Assembly Replacement.

cardiagn.com

Powertrain Mount Balance - Lower Mount

Note: Follow the balance procedure steps listed below. Powertrain mounts must be tightened in sequence.

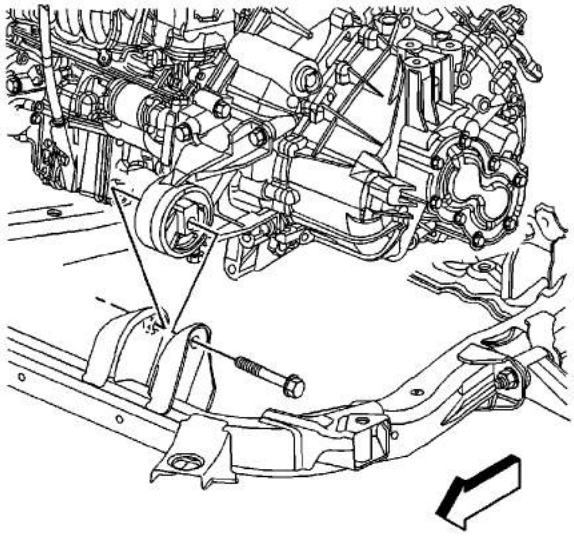

1. Raise and support the vehicle. Refer to Lifting and Jacking the Vehicle.
2. Loosen the front transaxle mount through bolt.

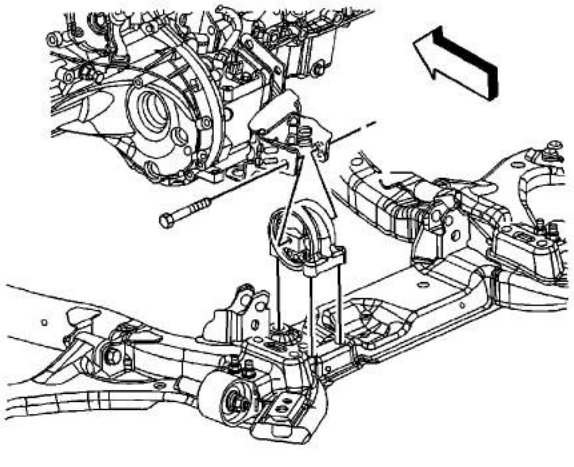

3. Loosen the rear transaxle mount through bolt.
4. Shake the powertrain vigorously from front to rear and allow the powertrain to settle.

cardiagn.com

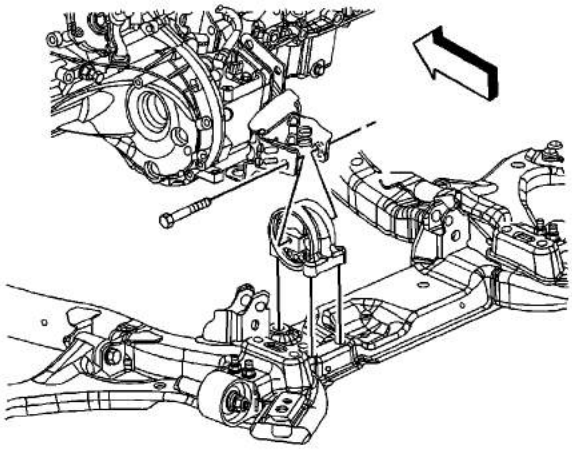

5. Tighten the rear transaxle mount through bolt to **100 N·m (74 lb ft)**.

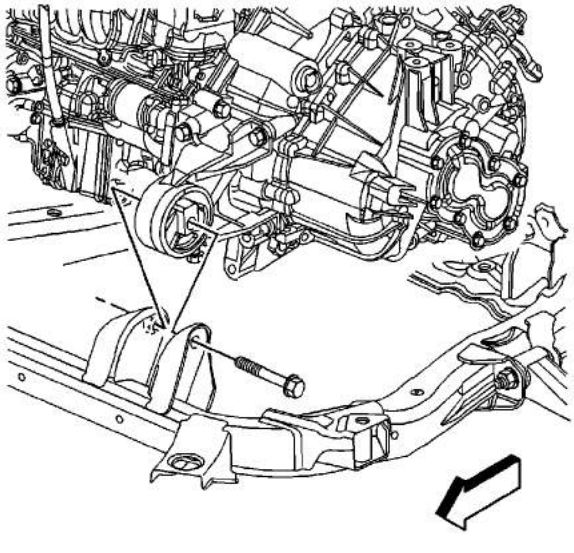

6. Tighten the front transaxle mount through bolt to **100 N·m (74 lb ft)**.
7. Lower the vehicle.

cardiagn.com

Engine Mount Replacement

Removal Procedure

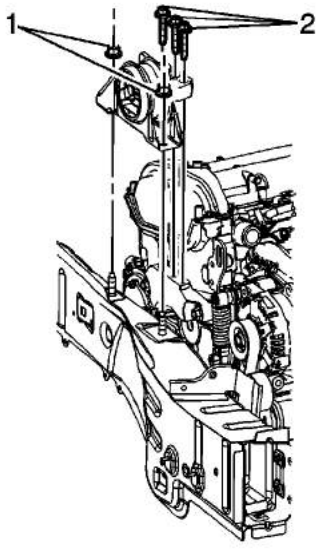

1. Remove the air cleaner assembly. Refer to Air Cleaner Assembly Replacement.
2. Support the engine with a hydraulic floor jack.

   Use a piece of wood between the floor jack and the oil pan.

3. Remove the engine mount to bracket bolts (2).
4. Remove the engine mount to side rail nuts (1).
5. Remove the engine mount from the engine compartment.

Installation Procedure

cardiagn.com

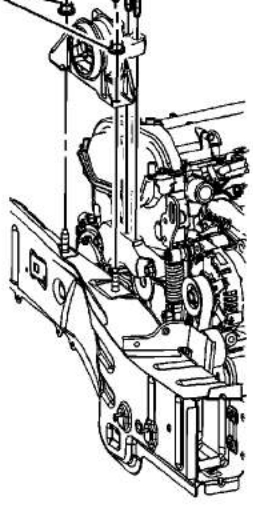

1. Place the engine mount onto the side rail studs.

   Caution: Refer to Fastener Caution in the Preface section.

2. Install the engine mount to side rail nuts (1) and tighten to **85 N·m (63 lb ft)**.

   Note: The engine mount to bracket bolts must be hand started. Do not pry the engine mount to align the holes.

3. Install the engine mount to bracket bolts (2).
4. Tighten the engine mount to bracket bolts in the following sequence:
   - Middle
   - Rear
   - Front

   Tighten the bolts to **50 N·m (37 lb ft)**.
5. Remove the hydraulic floor jack from under the oil pan.
6. Install the air cleaner assembly. Refer to Air Cleaner Assembly Replacement.

cardiagn.com

Engine Support Fixture

Tools Required

- J 28467-B Universal Engine Support Fixture
- J 28467-7A Bolt Hook
- J 28467-34 Lift Hook Wing Nut & Washer
- J-28467-13 Engine Support Fixture Adapters
- J 36462-A Engine Support Adapter Leg Set

Installation Procedure

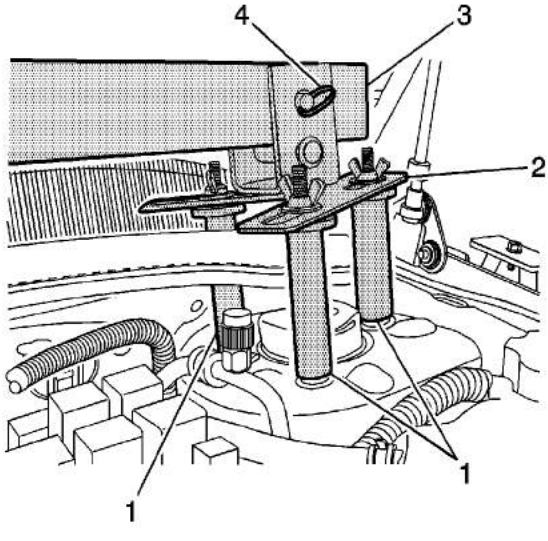

1. Pull each end of the hood rear seal away from the cowl panel flange near both strut towers.
2. Install three J-28467-13 (1) and two J 28467-5 strut tower adapters (2) to the top of the left and right strut tower.
3. Install a 127 cm (50 in) engine support fixture cross bar J 28467-B (3) transversely across the vehicle between both J 28467-5 strut tower adapters (2).
4. Insert safety pins J-28467-10 (4) through the J 28467-5 strut tower adapters (2) and the cross bar (3) to prevent movement.

cardiagn.com

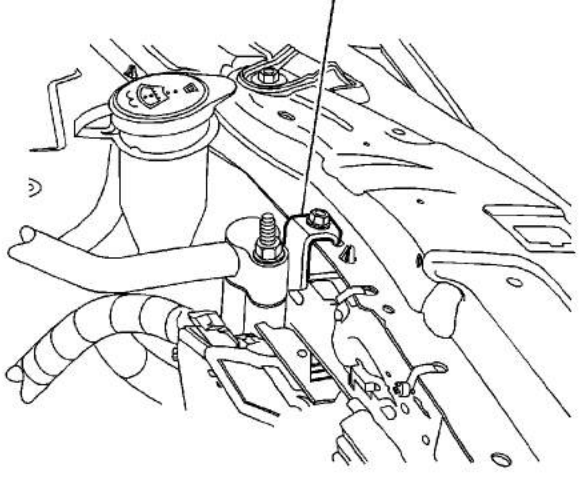

5. Remove air conditioning line bracket (1) from cross bar beam.

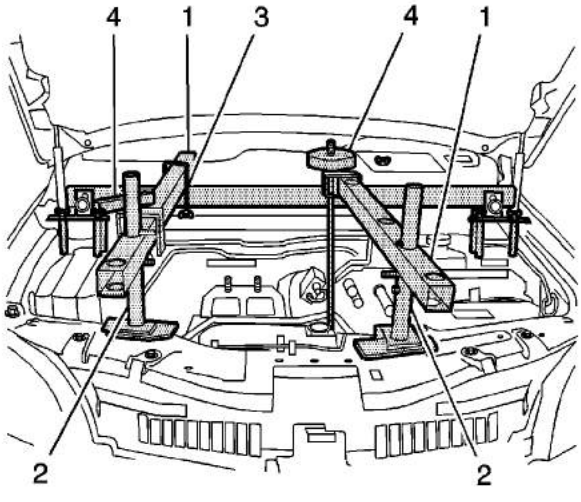

6. Position two 58 cm (23 in) engine support fixture cross bars (1) longitudinally with two J 36462-A leg assembly (2).
7. Install two J 28467-1A clamp (3) to secure the longitudinal mounted cross bar to the transverse mounted cross bar.

cardiagn.com

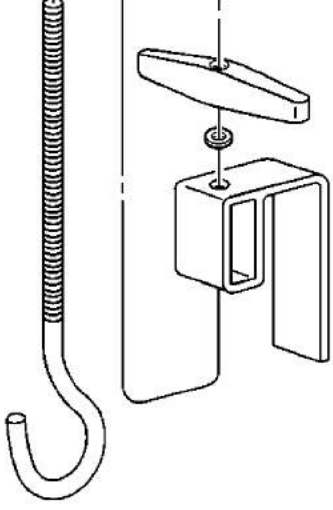

8. Assemble the lift hook wing nut J 28467-34 , lift hook bracket J-28467-6A and lift hook J 28467-7A to the engine lift bracket on the engine.

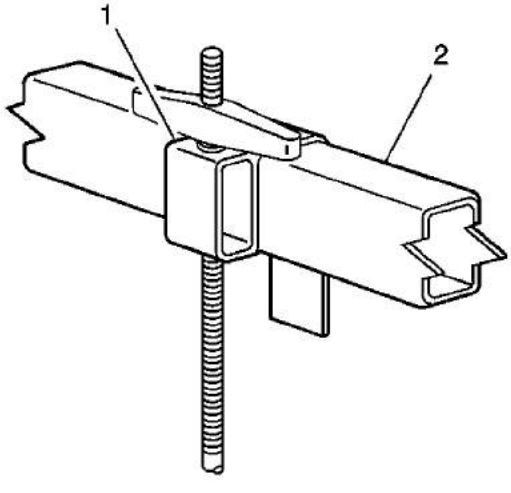

9. Install the lift hook and bracket assembly (1) to the longitudinal mounted cross bar (2).

cardiagn.com

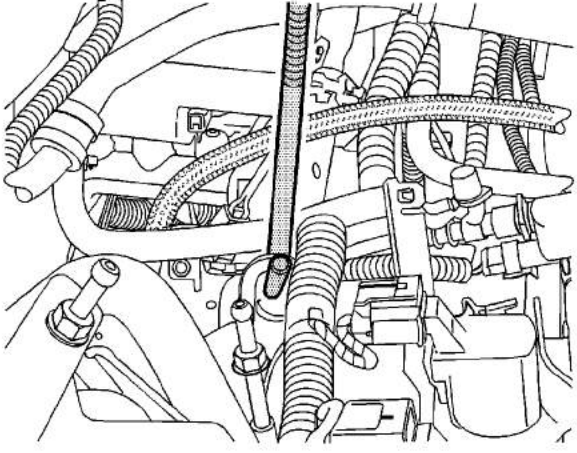

10. Position the J 28467-7A lift hook to the rear engine lift bracket.

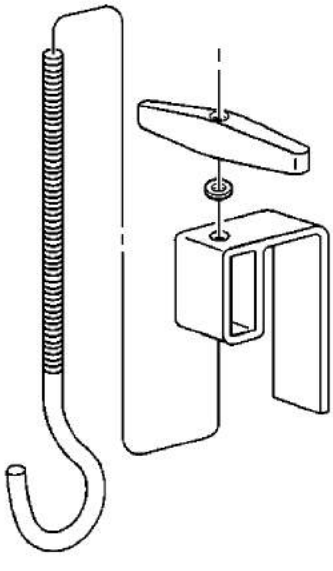

11. Assemble the lift hook wing nut J 28467-34 and the lift hook bracket J-28467-6A to the lift hook J 28467-7A .

cardiagn.com

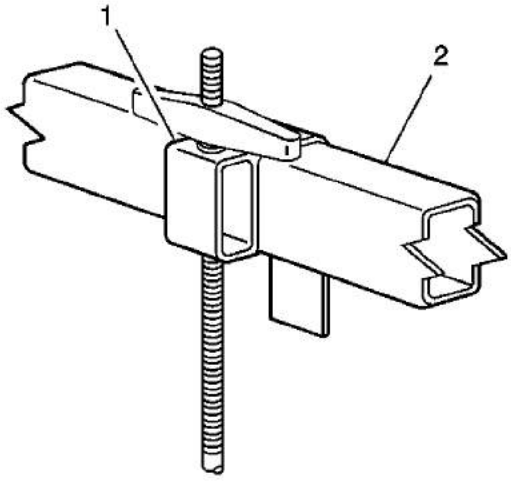

12. Install the lift hook and bracket assembly (1) to the longitudinal mounted cross bar (2).

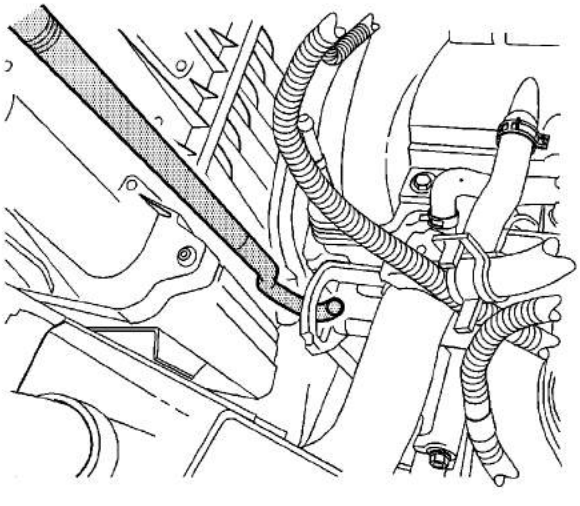

13. Position the J 28467-7A bolt hook (1) to the front engine lift bracket.

cardiagn.com

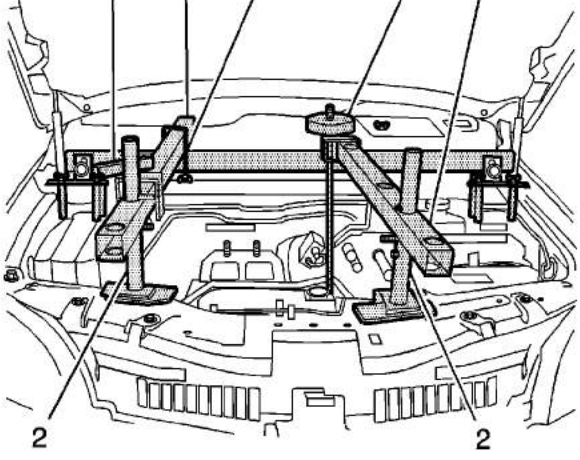

14. Evenly tighten both wing nuts J 28467-34 (1) until the engine weight is supported by the engine support fixture and no longer carried by the engine mounts.

cardiagn.com

Oil Level Indicator Tube Replacement (LE5)

Removal Procedure

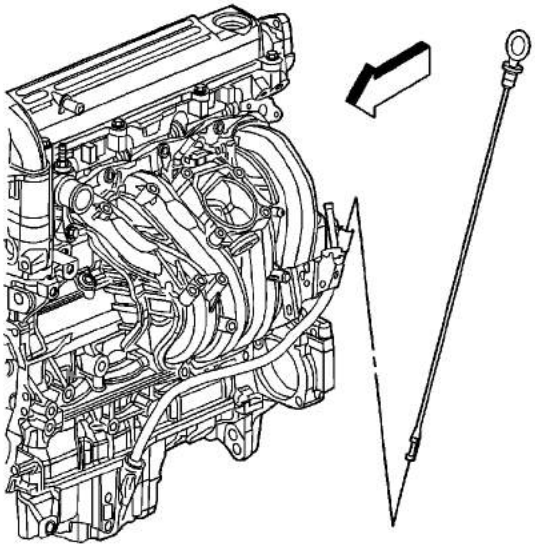

1. Remove the intake manifold cover. Refer to Intake Manifold Cover Replacement.
2. Remove the oil level indicator.

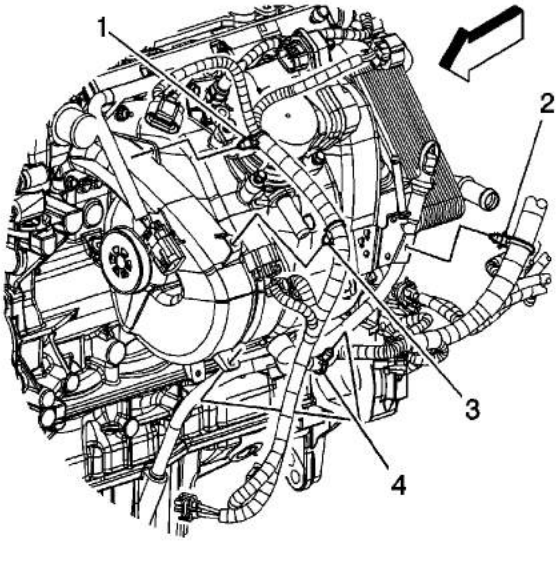

3. Remove the engine harness clip (2) from the oil level indicator tube bracket.

cardiagn.com

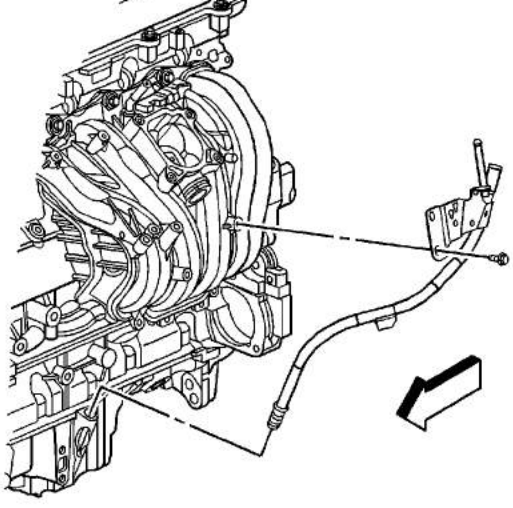

4. Remove the oil level indicator tube bolt.
5. Remove the oil level indicator tube.
6. Remove the oil level indicator tube O-ring seals, if necessary.

Installation Procedure

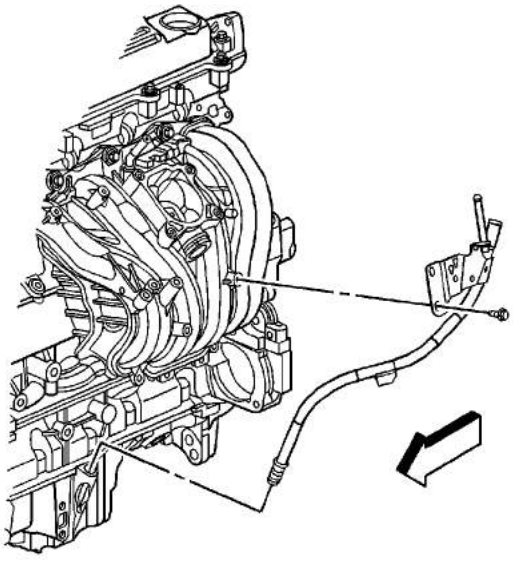

1. Install NEW oil level indicator tube O-ring seals, if necessary.
2. Install the oil level indicator tube.

Caution: Refer to Fastener Caution in the Preface section.

cardiagn.com

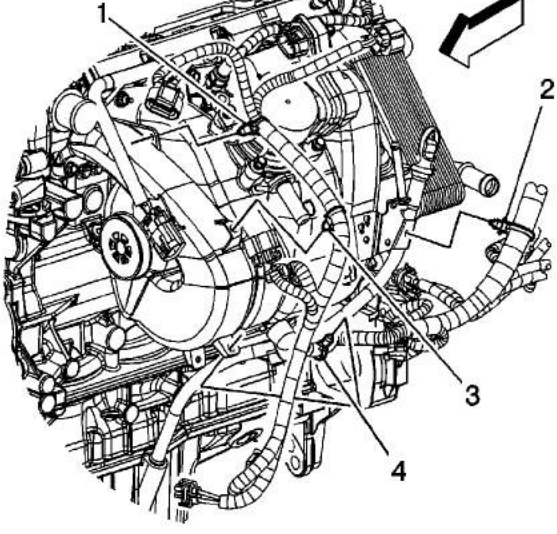

4. Install the engine harness clip (1) to the oil level indicator tube bracket.

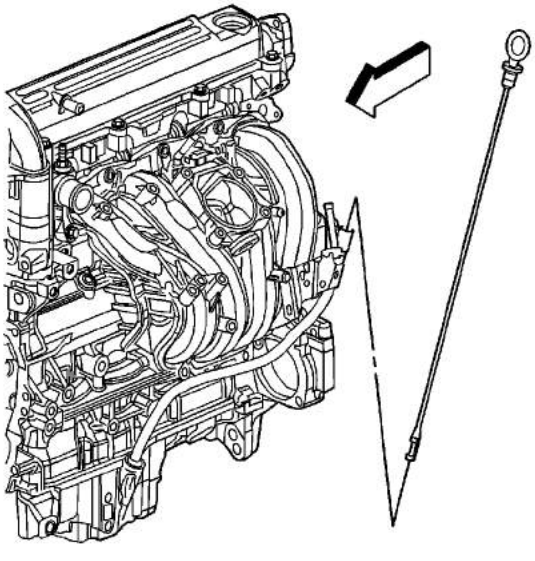

5. Install the oil level indicator.
6. Install the intake manifold cover. Refer to Intake Manifold Cover Replacement.

cardiagn.com

Oil Level Indicator Tube Replacement (LAT)

Removal Procedure

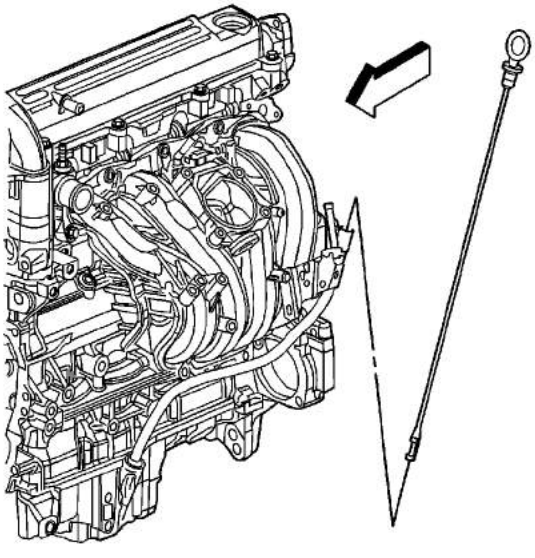

1. Remove the air cleaner outlet duct. Refer to Air Cleaner Outlet Duct Replacement.
2. Remove the oil level indicator.
3. Raise and support the vehicle. Refer to Lifting and Jacking the Vehicle.

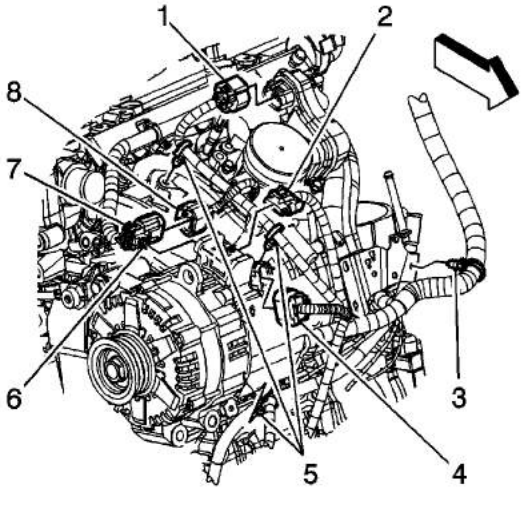

4. Remove the engine wiring harness clip (3) from the oil level indicator tube bracket.

cardiagn.com

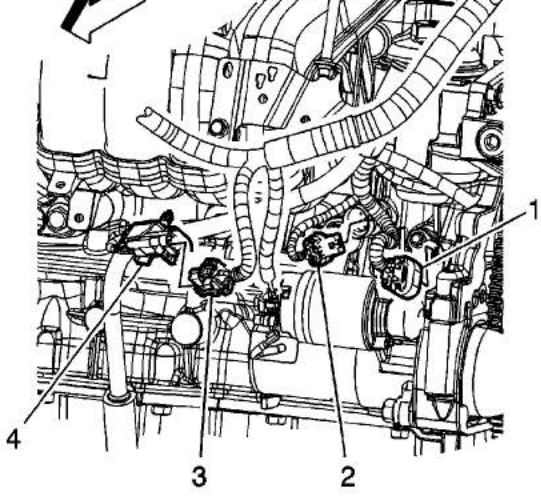

5. Remove the knock sensor electrical connector lead (4) from the oil level indicator tube bracket.
6. Lower the vehicle.

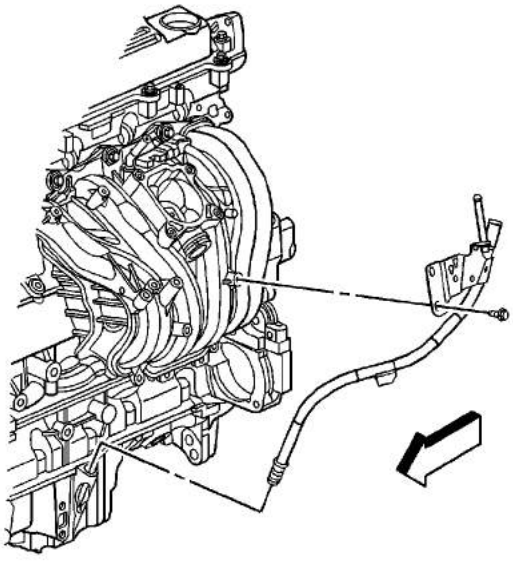

7. Remove the oil level indicator tube bolt.
8. Remove the oil level indicator tube.
9. Remove the oil level indicator tube O-ring seals, if necessary.

Installation Procedure

cardiagn.com

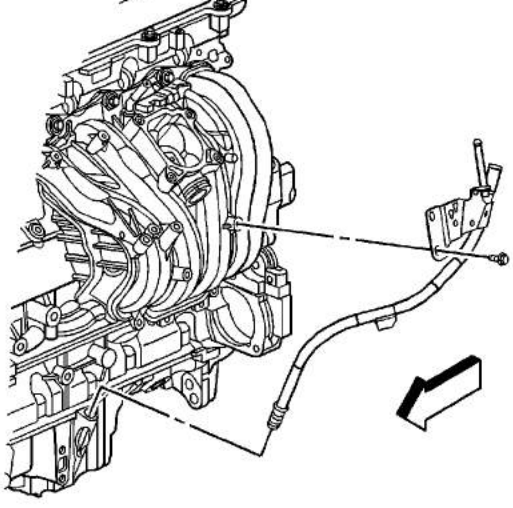

1. Install NEW oil level indicator tube O-ring seals, if necessary.
2. Install the oil level indicator tube.

   Caution: Refer to Fastener Caution in the Preface section.

3. Install the oil level indicator tube bolt and tighten to **10 N·m (89 lb in)**.
4. Raise and support the vehicle.

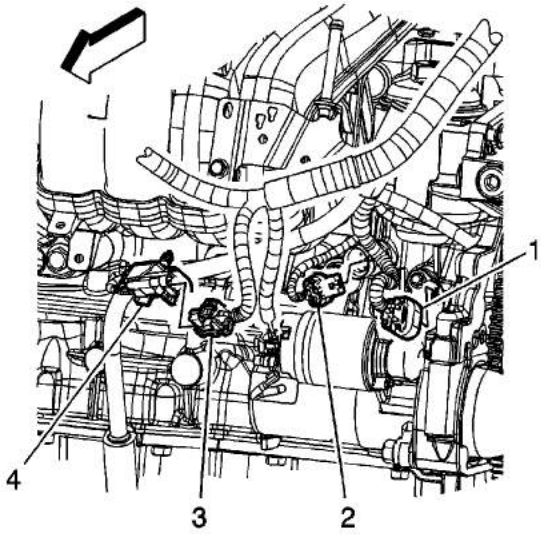

5. Install the knock sensor electrical connector lead (4) to the oil level indicator tube bracket.

cardiagn.com

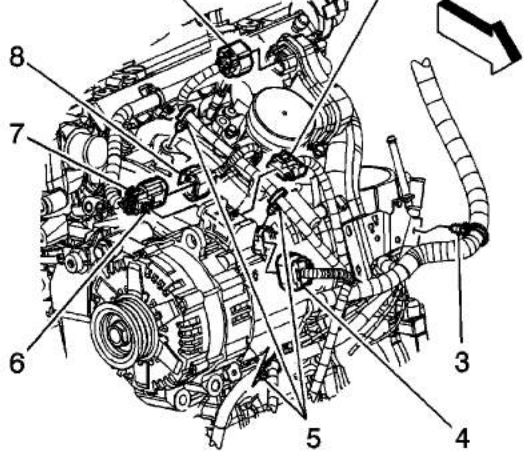

6. Install the engine wiring harness clip (3) to the oil level indicator tube bracket.
7. Lower the vehicle.

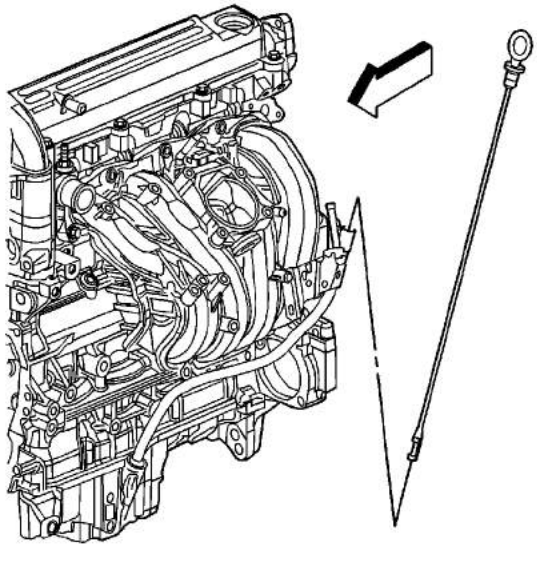

8. Install the oil level indicator.
9. Install the air cleaner outlet duct. Refer to Air Cleaner Outlet Duct Replacement.

cardiagn.com

Positive Crankcase Ventilation Hose / Pipe / Tube Replacement (LAT)

Removal Procedure

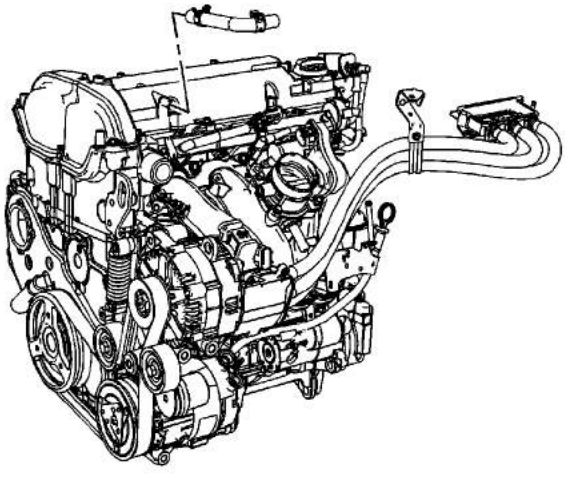

1. Remove the air cleaner outlet duct. Refer to Air Cleaner Outlet Duct Replacement.
2. Reposition the positive crankcase ventilation (PCV) hose clamp at the camshaft cover.
3. Remove the PCV hose from the camshaft cover.

Installation Procedure

cardiagn.com

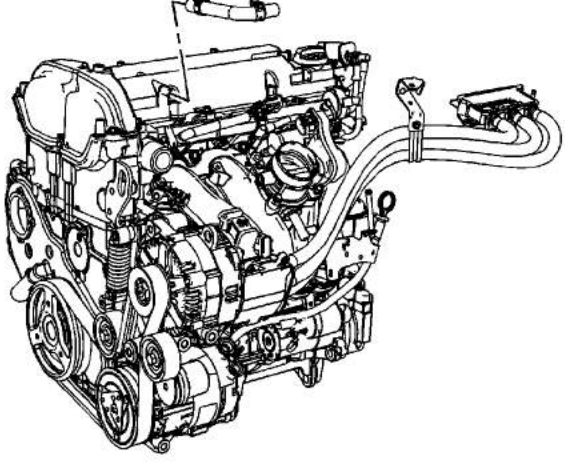

1. Install the PCV hose to the camshaft cover.
2. Position the PCV hose clamp at the camshaft cover.
3. Install the air cleaner outlet duct. Refer to Air Cleaner Outlet Duct Replacement.

cardiagn.com

Positive Crankcase Ventilation Hose / Pipe / Tube Replacement (LE5)

Removal Procedure

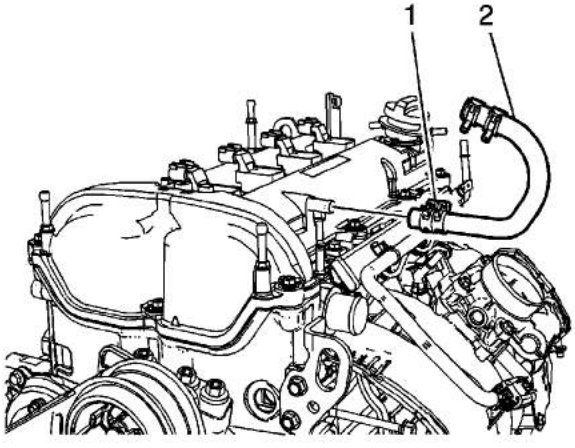

1. Remove the intake manifold cover. Refer to Intake Manifold Cover Replacement .
2. Reposition the positive crankcase ventilation (PCV) hose clamp (1) at the camshaft cover.
3. Remove the PCV hose (2) from the camshaft cover.

Installation Procedure

cardiagn.com

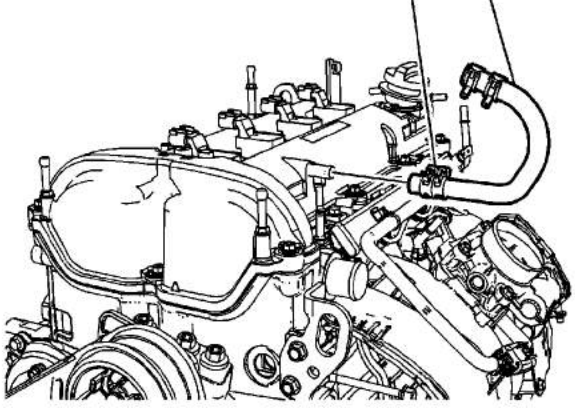

1. Install the PCV hose (2) to the camshaft cover.
2. Position the PCV hose clamp (1) at the camshaft cover.
3. Install the intake manifold cover. Refer to Intake Manifold Cover Replacement .

cardiagn.com

Intake Manifold Replacement (LAT)

Removal Procedure

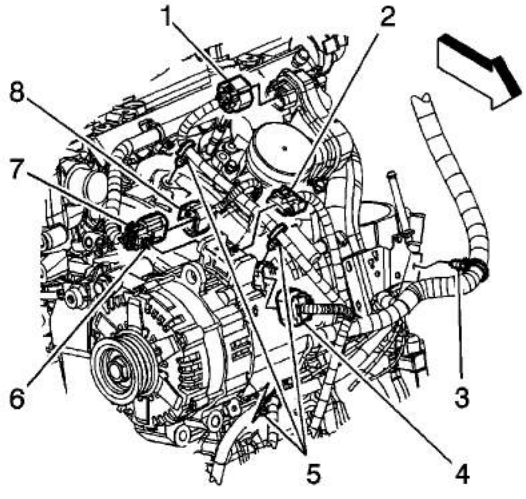

1. Remove the air cleaner outlet duct. Refer to Air Cleaner Outlet Duct Replacement.
2. Remove the radiator inlet hose. Refer to Radiator Inlet Hose Replacement.
3. Disconnect the engine wiring harness electrical connector (1) from the throttle actuator control (TAC).
4. Disconnect the engine wiring harness electrical connector (2) from the generator starter.
5. Disconnect the engine wiring harness electrical connector (4) from the generator starter.
6. Remove the fuel injector wiring harness electrical connector retainer (6) from the generator starter.
7. Disconnect the fuel injector wiring harness electrical connector (7) from the engine wiring harness electrical connector (8).
8. Remove the engine wiring harness clips (5) from the intake manifold.

cardiagn.com

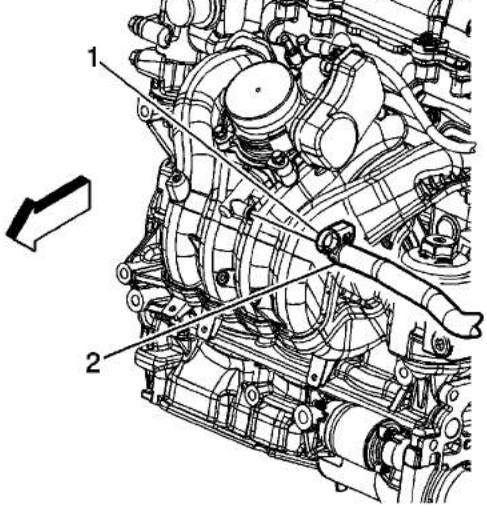

9. Reposition the vacuum brake booster hose clamp (1) at the intake manifold.
10. Remove the vacuum brake booster hose (2) from the intake manifold.

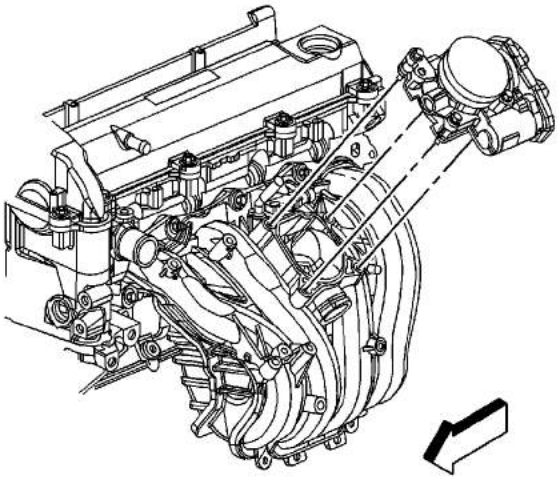

11. Remove the throttle body bolts.

Note: The throttle body seal is reusable, only replace the seal if damaged.

12. Remove the throttle body and seal.
13. Remove and inspect the throttle body seal.
14. Disconnect the engine wiring harness electrical connector from the manifold absolute pressure (MAP) sensor.

cardiagn.com

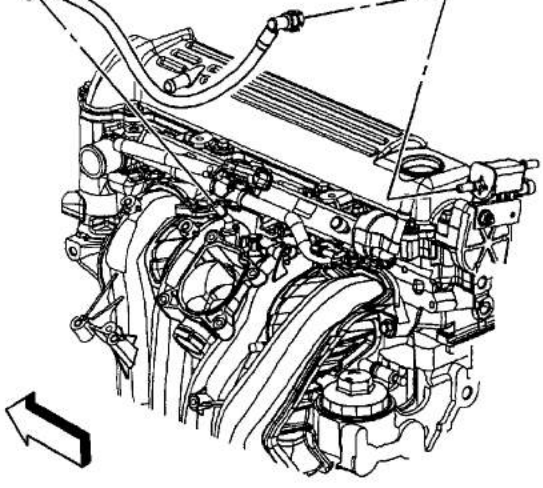

15. Disconnect the evaporative emission (EVAP) canister purge tube from the intake manifold and the EVAP solenoid. Refer to Plastic Collar Quick Connect Fitting Service.
16. Remove the oil level indicator tube. Refer to Oil Level Indicator and Tube Replacement.
17. Remove the fuel rail. Refer to Fuel Injection Fuel Rail Assembly Replacement.

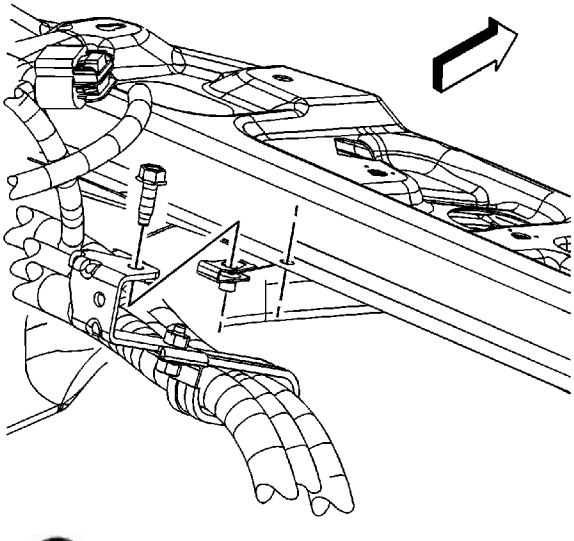

18. Remove the 3-phase voltage cable bracket bolt at the tie bar.

cardiagn.com

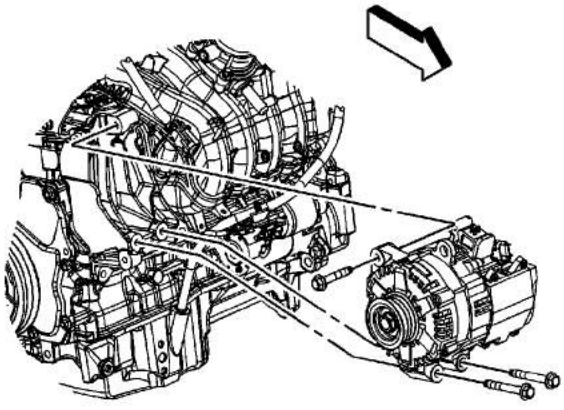

19. Remove the generator starter bolts.
20. Reposition and secure the generator starter out of the way.

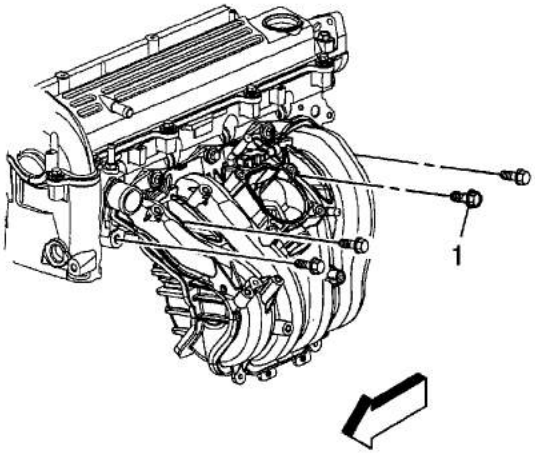

21. Remove the intake manifold lower bolts.

cardiagn.com

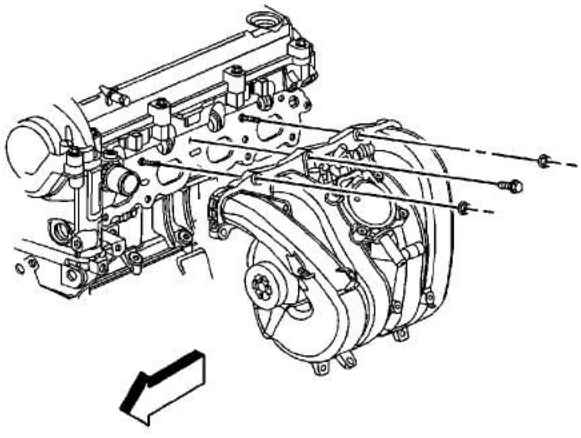

22. Remove the intake manifold upper bolt and nuts.
23. Remove the intake manifold.

    Note: The intake manifold gasket is reusable, only replace the gasket if damage has occurred.

24. Remove and inspect the intake manifold gasket.

Installation Procedure

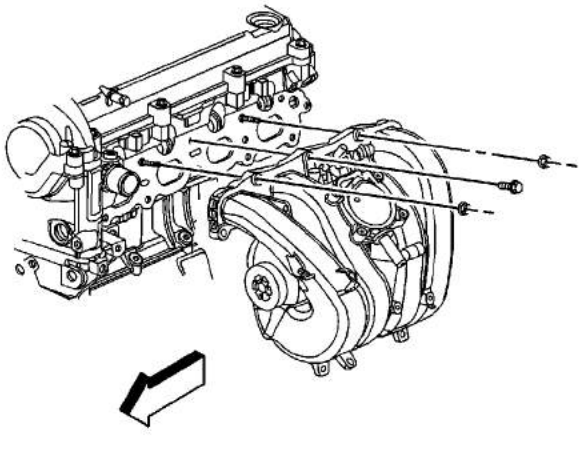

1. Install a NEW intake manifold gasket if necessary, otherwise install the old gasket.

cardiagn.com

Caution: Refer to Fastener Caution in the Preface section.

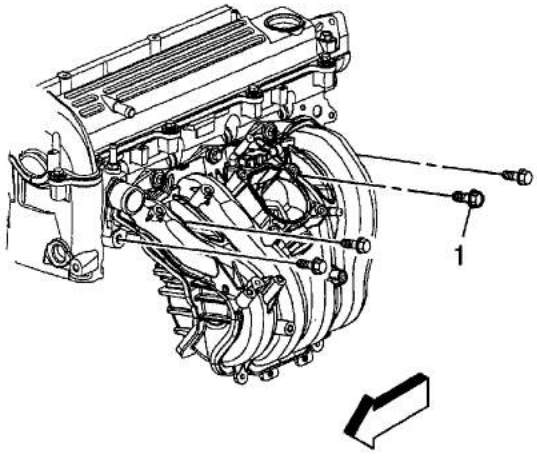

4. Install the intake manifold lower bolts and tighten to **10 N·m (89 lb in)**.

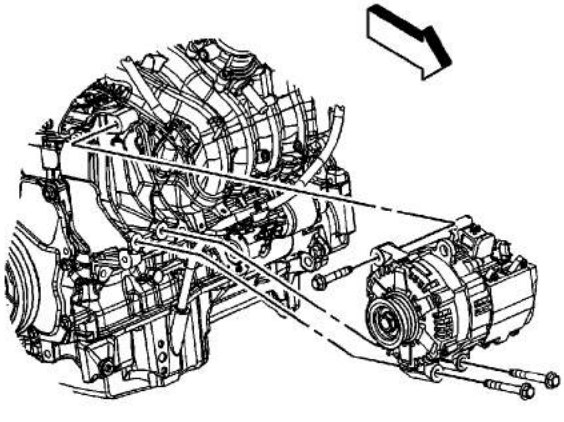

5. Position the starter/generator to the bracket.
6. Install the starter/generator bolts until snug.
7. Tighten the starter generator bolts in the following sequence:
   7.1. Front
   7.2. Bottom

cardiagn.com

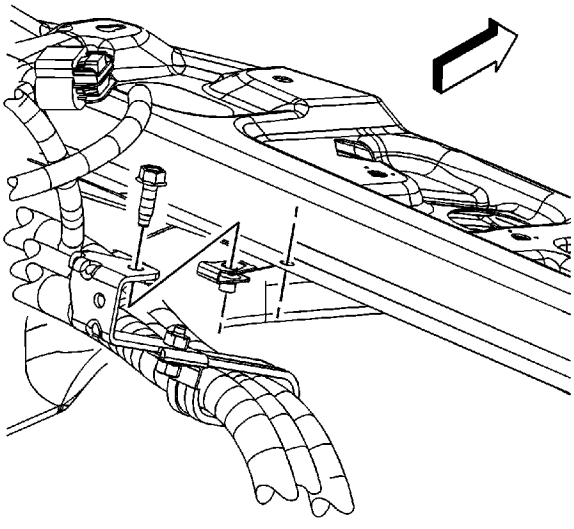

8. Install the 3-phase voltage cable bracket to the tie bar.
9. Install the 3-phase voltage cable bracket bolt at the tie bar and tighten to **10 N·m (89 lb in)**.

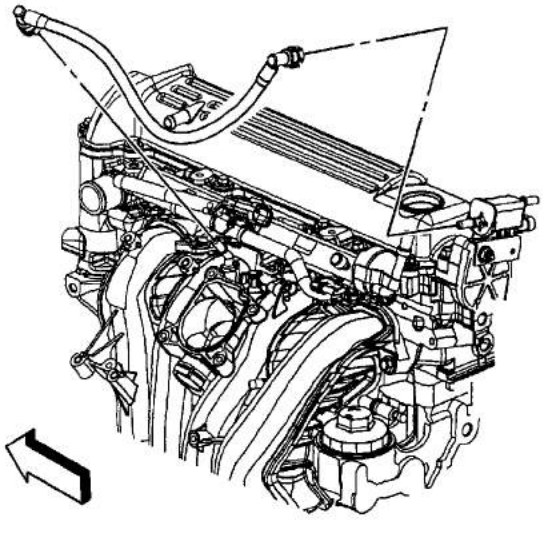

10. Install the fuel rail. Refer to Fuel Injection Fuel Rail Assembly Replacement.
11. Install the oil level indicator tube. Refer to Oil Level Indicator and Tube Replacement.
12. Connect the EVAP canister purge tube to the intake manifold and the EVAP solenoid. Refer to Plastic Collar Quick Connect Fitting Service.

cardiagn.com

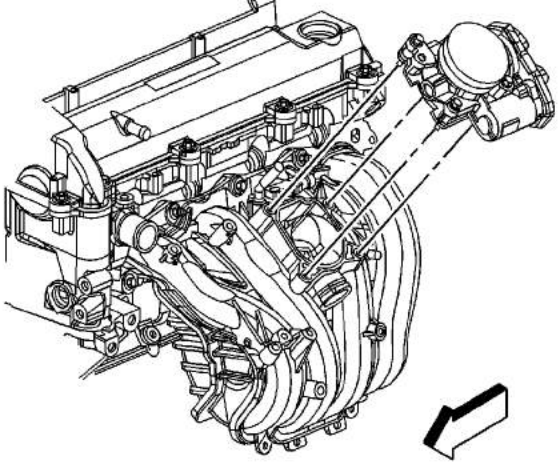

13. Connect the engine wiring harness electrical connector to the MAP sensor.
14. Install a NEW throttle body seal if necessary, otherwise install the old seal.
15. Position the throttle body.
16. Install the throttle body bolts and tighten to **10 N·m (89 lb in)**.

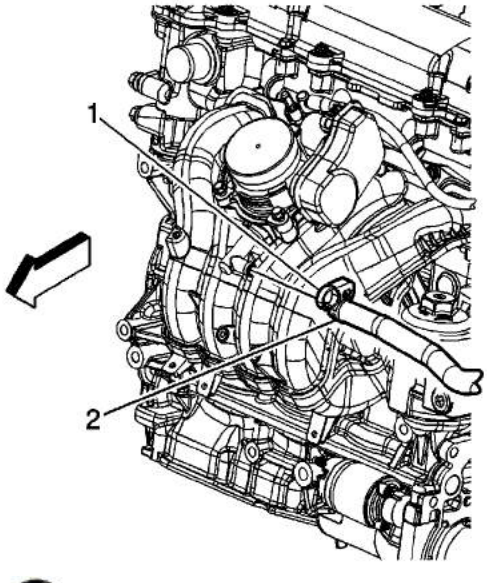

17. Install the vacuum brake booster hose (2) to the intake manifold.
18. Position the vacuum brake booster hose clamp (1) at the intake manifold.

cardiagn.com

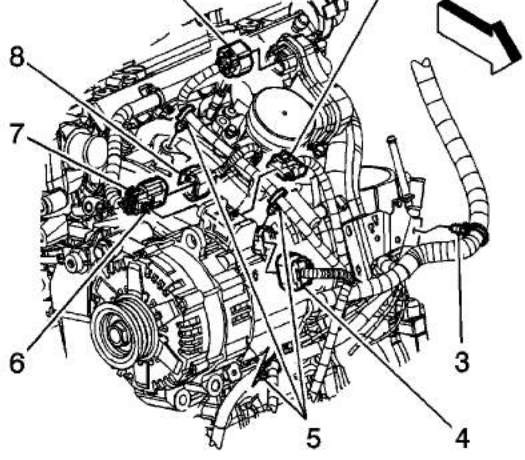

19. Install the engine wiring harness clips (5) to the intake manifold.
20. Connect the fuel injector wiring harness electrical connector (7) to the engine wiring harness electrical connector (8).
21. Install the fuel injector wiring harness electrical connector retainer (6) to the generator starter.
22. Connect the engine wiring harness electrical connector (4) to the generator starter.
23. Connect the engine wiring harness electrical connector (2) to the generator starter.
24. Connect the engine wiring harness electrical connector (1) to the TAC.
25. Install the radiator inlet hose. Refer to Radiator Inlet Hose Replacement.
26. Install the air cleaner outlet duct. Refer to Air Cleaner Outlet Duct Replacement.

cardiagn.com

Intake Manifold Replacement (LE5)

Removal Procedure

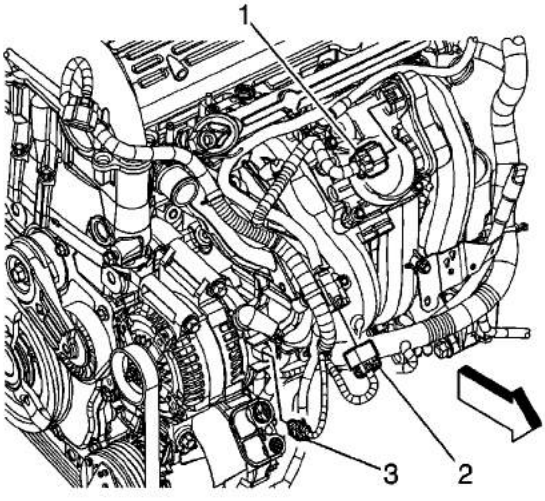

1. Remove the intake manifold cover. Refer to Intake Manifold Cover Replacement.
2. Remove the air cleaner outlet duct. Refer to Air Cleaner Outlet Duct Replacement.
3. Disconnect the engine harness electrical connector (1) from the throttle actuator control (TAC).
4. Disconnect the engine harness electrical connector (2) from the fuel injector harness.
5. Disconnect the engine harness electrical connector from the manifold absolute pressure (MAP) sensor.

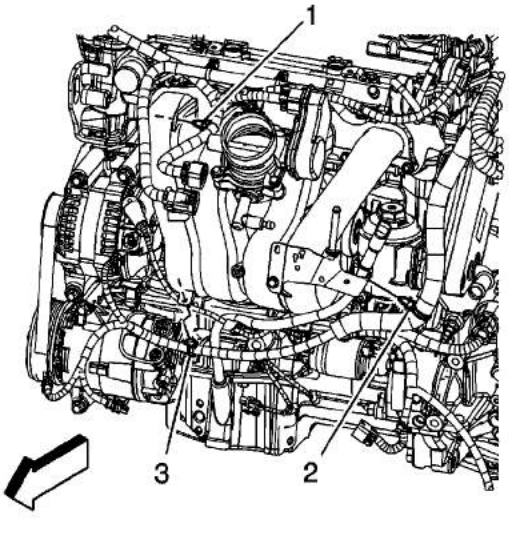

cardiagn.com

6. Disconnect the engine harness clips (1 and 3) from the intake manifold.
7. Disconnect the engine harness clip (2) from the oil level indicator tube.
8. Disconnect the fuel injector electrical connector clip from the intake manifold.

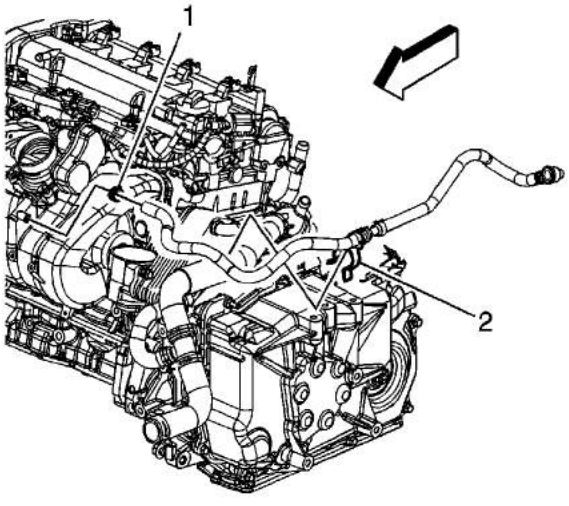

9. Reposition the vacuum brake booster hose clamp (1) at the intake manifold.
10. Remove the vacuum brake booster hose from the intake manifold.

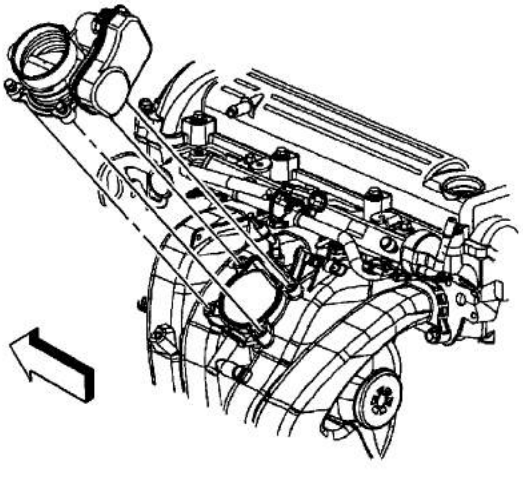

11. Remove the throttle body bolts.

Note: The throttle body seal is reusable, only replace the seal if damaged.

12. Remove the throttle body and seal.
13. Remove and inspect the throttle body seal.

cardiagn.com

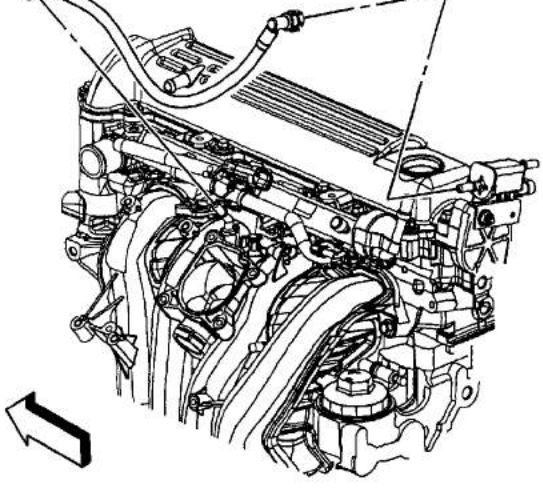

14. Disconnect the evaporative emission (EVAP) canister purge tube from the intake manifold and the EVAP solenoid. Refer to Plastic Collar Quick Connect Fitting Service.
15. Remove the oil level indicator tube. Refer to Oil Level Indicator and Tube Replacement.
16. Remove the fuel rail. Refer to Fuel Injection Fuel Rail Assembly Replacement.

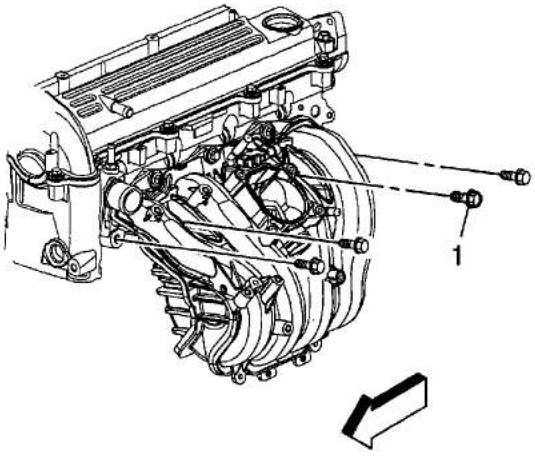

17. Remove the intake manifold lower bolts.

cardiagn.com

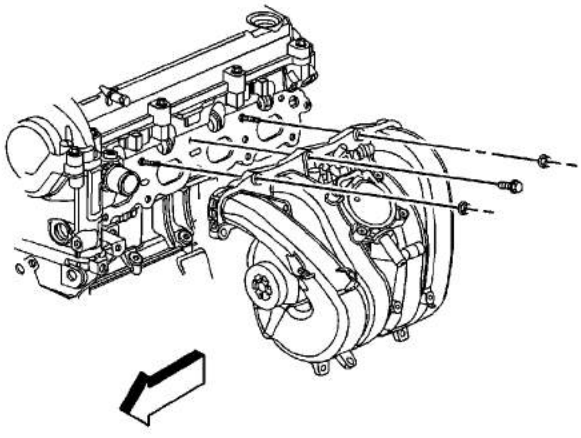

18. Remove the intake manifold upper bolt and nuts.
19. Remove the intake manifold.

    Note: The intake manifold gasket is reusable, only replace the gasket if damage has occurred.

20. Remove and inspect the intake manifold gasket.

Installation Procedure

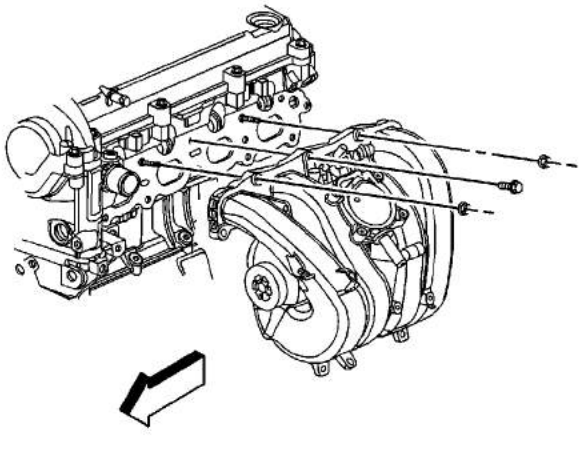

1. Install a NEW intake manifold gasket if necessary, otherwise install the old gasket.

cardiagn.com

Caution: Refer to Fastener Caution in the Preface section.

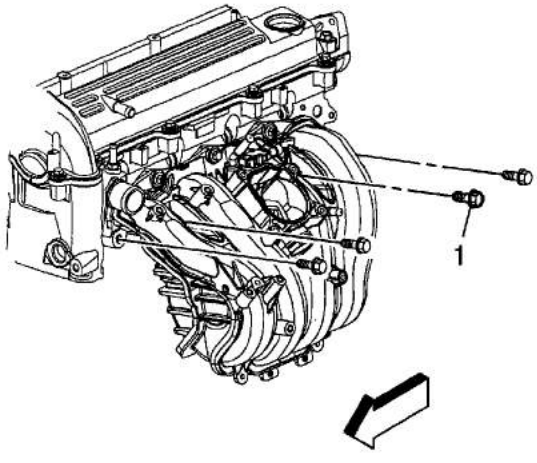

4. Install the intake manifold lower bolts and tighten to **10 N·m (89 lb in)**.

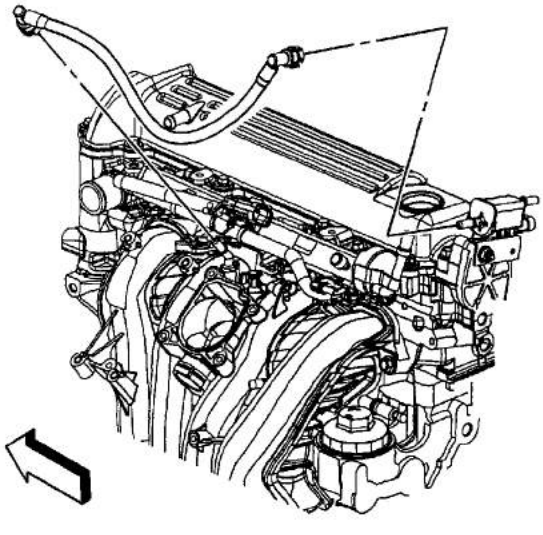

5. Install the fuel rail. Refer to Fuel Injection Fuel Rail Assembly Replacement.
6. Install the oil level indicator tube. Refer to Oil Level Indicator and Tube Replacement.
7. Connect the EVAP canister purge tube to the intake manifold and the EVAP solenoid. Refer to Plastic Collar Quick Connect Fitting Service.

cardiagn.com

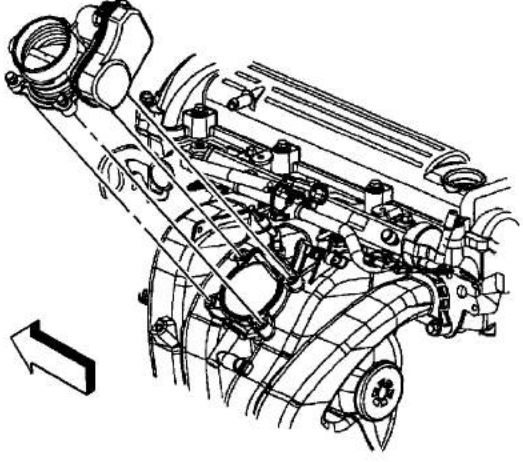

8. Install a NEW throttle body seal if necessary, otherwise install the old seal.
9. Position the throttle body.
10. Install the throttle body bolts and tighten to **10 N·m (89 lb in)**.

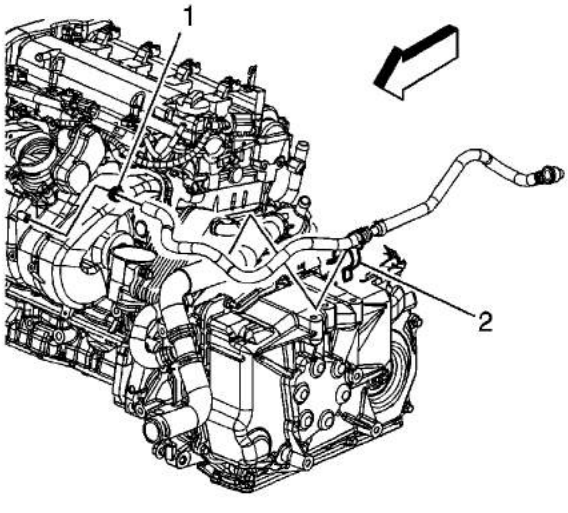

11. Install the vacuum brake booster hose to the intake manifold.
12. Position the vacuum brake booster hose clamp (2) at the intake manifold.

cardiagn.com

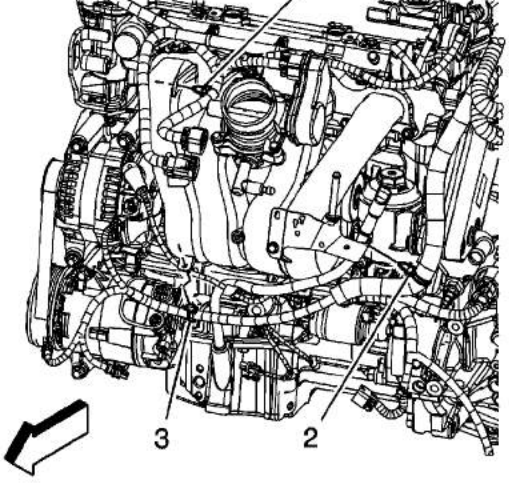

13. Connect the engine harness clips (1 and 3) to the intake manifold.
14. Connect the engine harness clip (2) to the oil level indicator tube.
15. Connect the fuel injector electrical connector clip to the intake manifold.

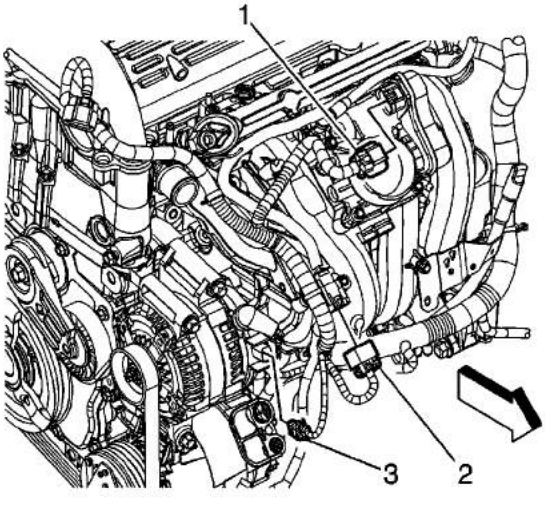

16. Connect the engine harness electrical connector (2) to the fuel injector harness.
17. Connect the engine harness electrical connector to the MAP sensor.
18. Connect the engine harness electrical connector (1) to the TAC.
19. Install the air cleaner outlet duct. Refer to Air Cleaner Outlet Duct Replacement.
20. Install the intake manifold cover. Refer to Intake Manifold Cover Replacement.

cardiagn.com

Crankshaft Balancer Replacement (LE5)

Special Tools

- J 38122-A Harmonic Balancer Holder
- J 45059 Angle Meter

Removal Procedure

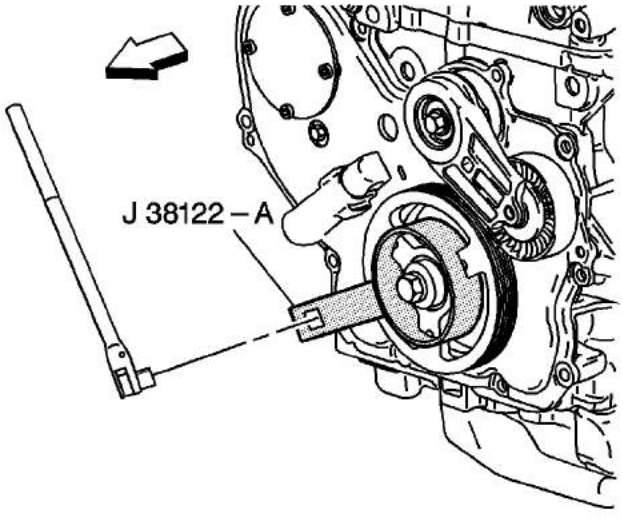

1. Remove the drive belt. Refer to Drive Belt Replacement.
2. Use J 38122-A to prevent the crankshaft from rotating while loosening the crankshaft balancer bolt.
3. Remove and discard the crankshaft balancer bolt.

cardiagn.com

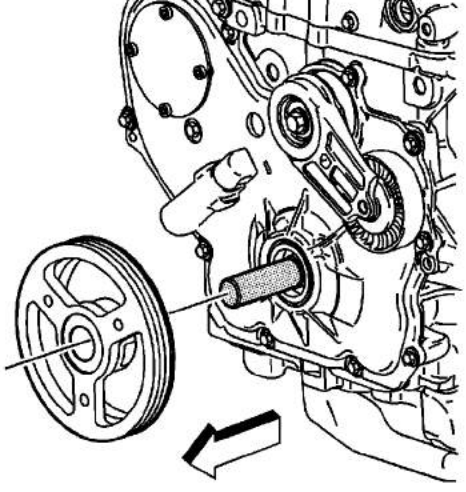

4. Remove the crankshaft balancer.

Installation Procedure

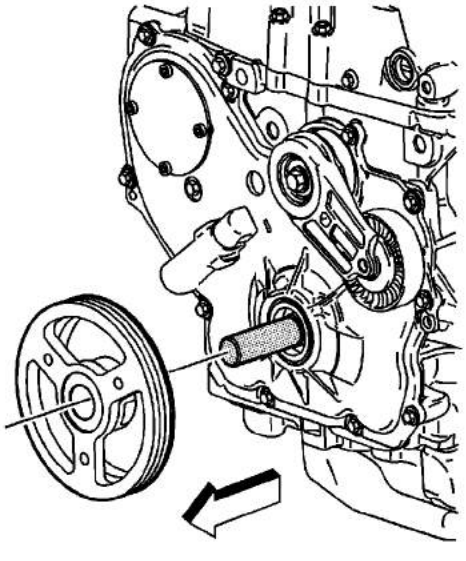

1. Position the crankshaft balancer.
2. Install a NEW crankshaft balancer bolt.

cardiagn.com

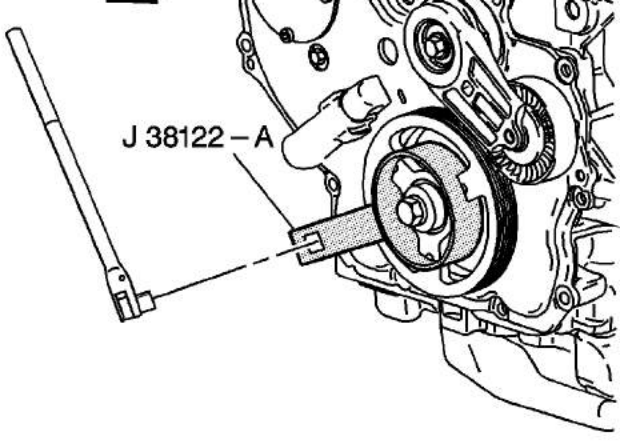

3. Use the J 38122-A to hold the crankshaft balancer in order to prevent the balancer from rotating while tightening the bolt.

   Caution: Refer to Fastener Caution in the Preface section.

4. Tighten the crankshaft balancer bolt to **100 N·m (74 lb ft) plus an additional 125 degrees** using the J 45059 .
5. Install the drive belt. Refer to Drive Belt Replacement.

cardiagn.com

Crankshaft Balancer Replacement (LAT)

Special Tools

- J 38122-A Harmonic Balancer Holder
- J 45059 Angle Meter

Removal Procedure

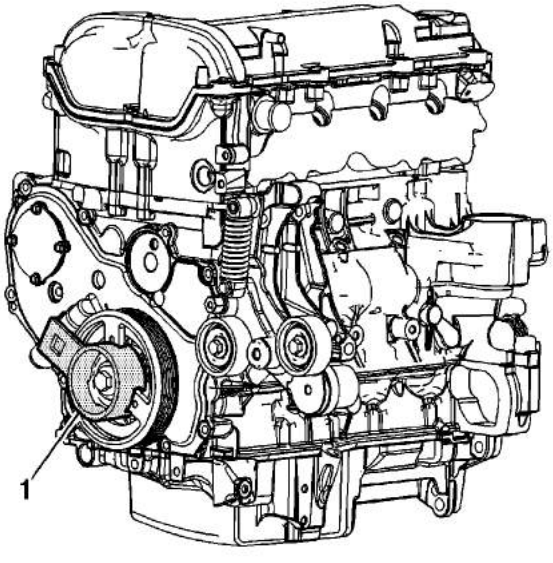

1. Remove the drive belt. Refer to Drive Belt Replacement.
2. Remove the engine splash shield.
3. Install the J 38122-A (1), and a breaker bar to the balancer in order to prevent the balancer from rotating when loosening the balancer bolt.
4. Remove the J 38122-A (1) and breaker bar.

cardiagn.com

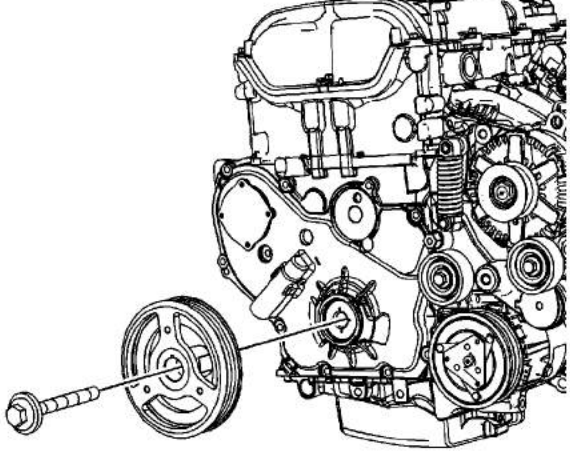

5. Remove and discard the crankshaft balancer bolt.
6. Remove the crankshaft balancer.

Installation Procedure

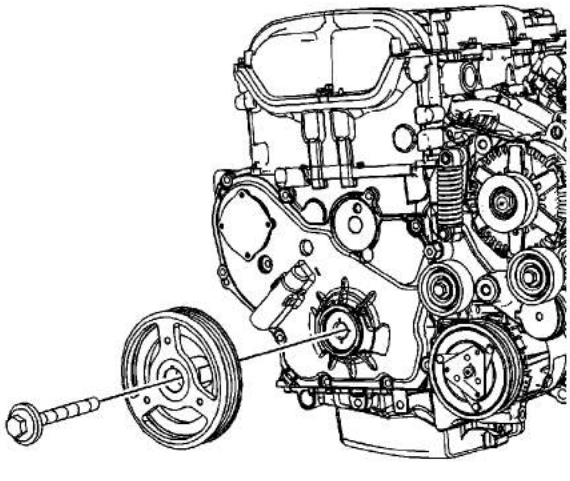

1. Position the crankshaft balancer.
2. Install a NEW crankshaft balancer bolt.

cardiagn.com

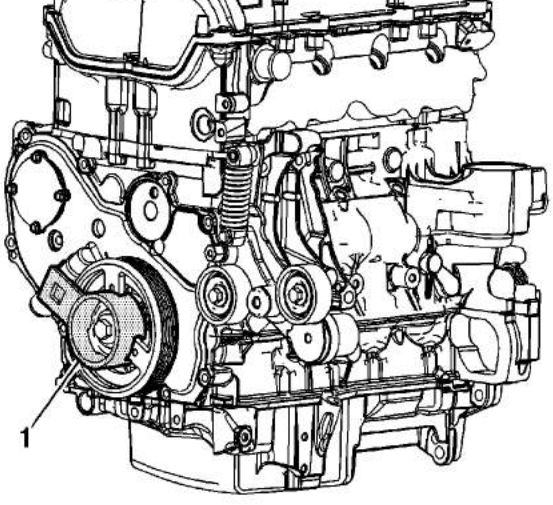

3. Install the J 38122-A (1), and a breaker bar to the balancer in order to prevent the balancer from rotating while tightening the bolt.

   Caution: Refer to Fastener Caution in the Preface section.

4. Tighten the crankshaft balancer bolt. Tighten the bolt to **100 N·m (74 lb ft) plus an additional 125 degrees** using the J 45059 .
5. Install the engine splash shield.
6. Install the drive belt. Refer to Drive Belt Replacement.

cardiagn.com

Crankshaft Front Oil Seal Replacement

Tools Required

J 35268-A Camshaft/Front Main Seal Installer

Removal Procedure

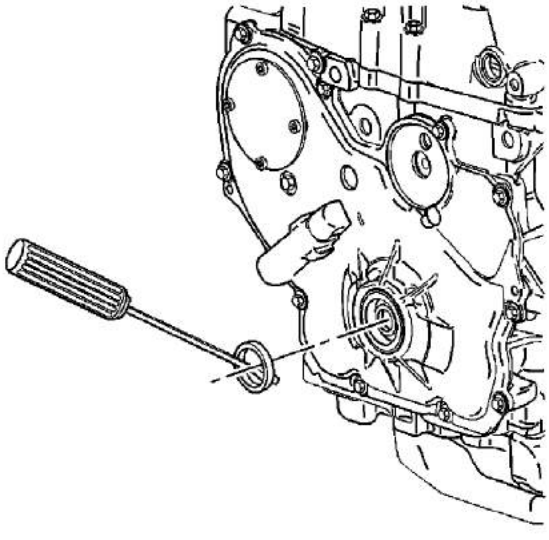

1. Remove the crankshaft balancer. Refer to Crankshaft Balancer Replacement .
2. Use a flat-bladed tool to remove the seal from the front cover.

Installation Procedure

cardiagn.com

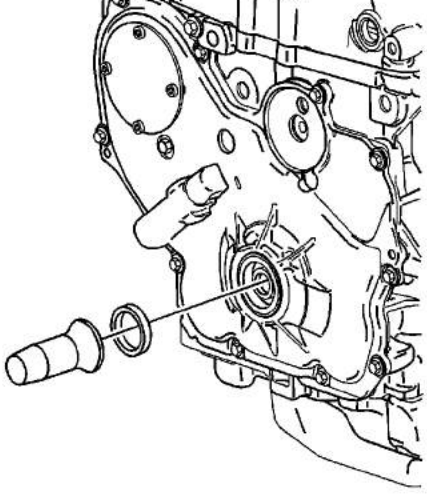

1. Use the J 35268-A in order to install the crankshaft front oil seal to the engine front cover.
2. Install the crankshaft balancer. Refer to Crankshaft Balancer Replacement .

cardiagn.com

Engine Front Cover Replacement (LAT)

Removal Procedure

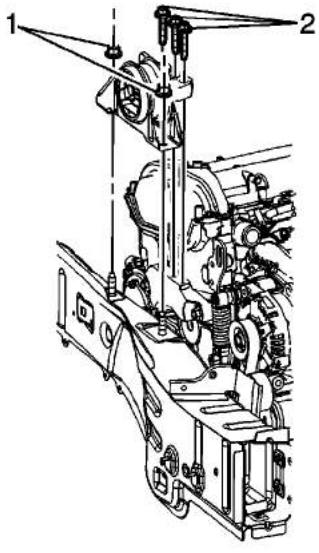

1. Remove the drive belt tensioner. Refer to Drive Belt Tensioner Replacement.
2. Remove the crankshaft balancer. Refer to Crankshaft Balancer Replacement.
3. Install the engine support fixture. Refer to Engine Support Fixture.
4. Remove the engine mount to bracket bolts (2).
5. Remove the engine mount to side rail nuts (1).
6. Remove the engine mount from the engine compartment.

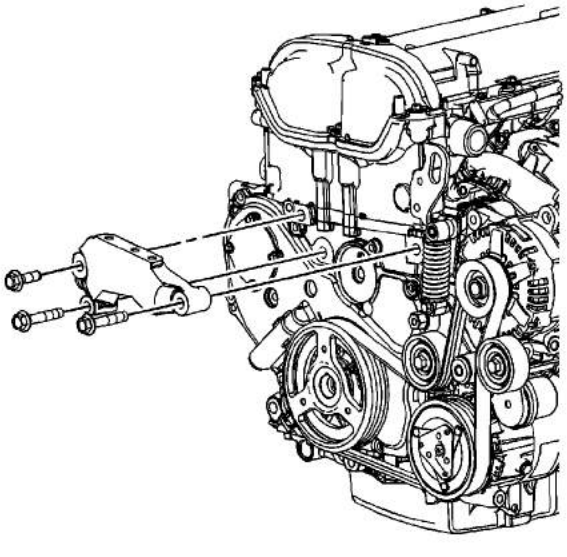

cardiagn.com

7. Remove the engine mount bracket to engine bolts.
8. Remove the engine mount bracket.

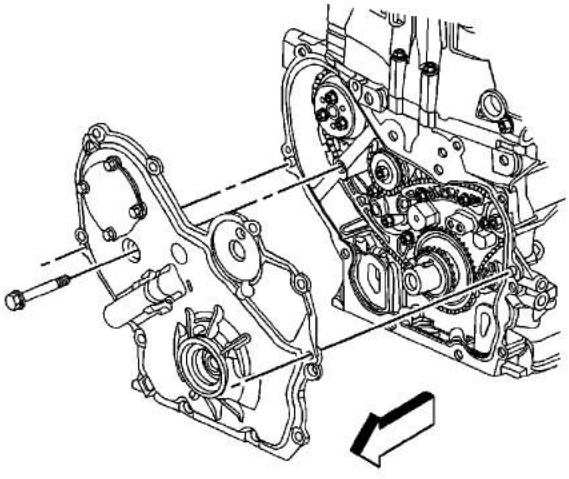

9. Remove the engine front cover to water pump bolt.

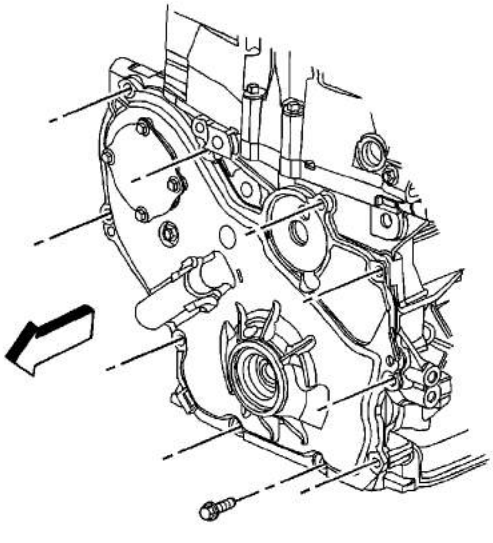

10. Raise and suitably support the vehicle. Refer to Lifting and Jacking the Vehicle.
11. Remove the engine front cover bolts.
12. Remove the engine front cover.

cardiagn.com

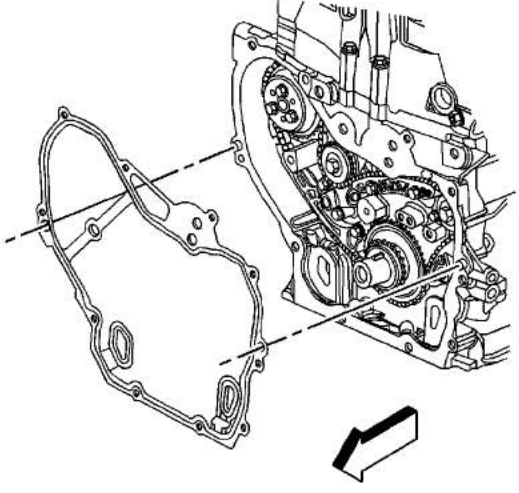

13. Remove and discard the engine front cover gasket.

Installation Procedure

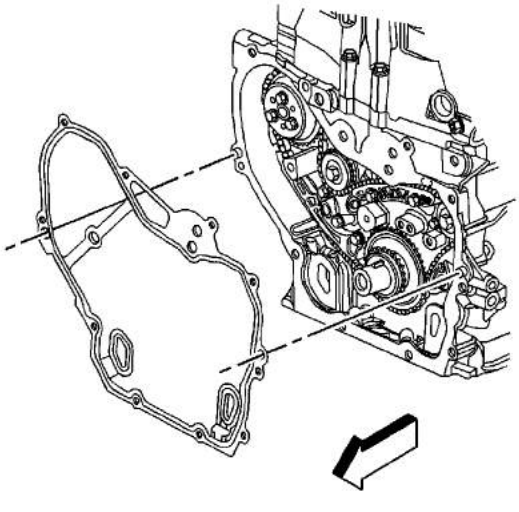

1. Install a NEW engine front cover gasket to the dowel pins.
2. Install the engine front cover.

Caution: Refer to Fastener Caution in the Preface section.

cardiagn.com

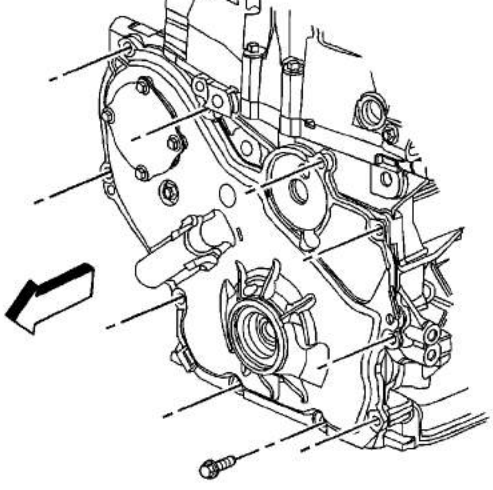

3. Install the engine front cover bolts and tighten to **25 N·m (18 lb ft)**.
4. Lower the vehicle.

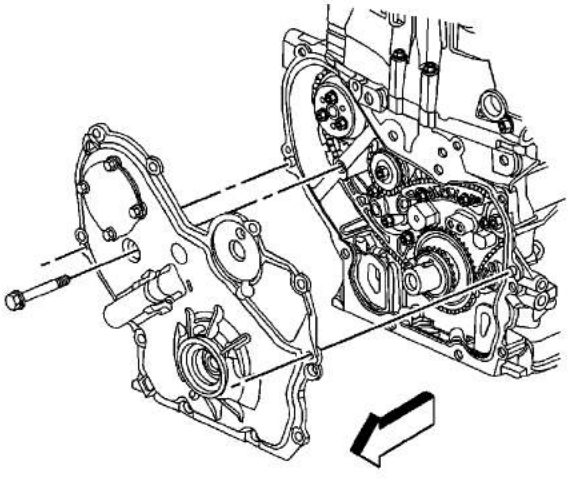

5. Install the engine front cover to water pump bolt and tighten to **25 N·m (18 lb ft)**.

cardiagn.com

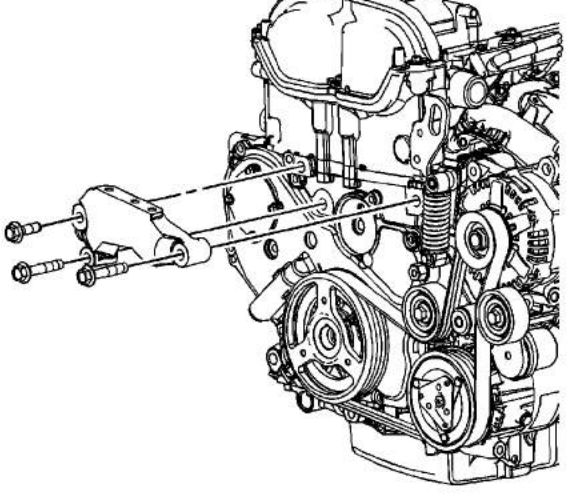

6. Position the engine mount bracket to the engine.
7. Install the engine mount bracket bolts in the following locations:
   - The long bolts in the forward and lower rear holes
   - The short bolt in the upper rear hole
8. Tighten the engine mount bracket bolts in the following sequence:
   8.1. Upper left
   8.2. Lower left
   8.3. Right

   Tighten the bolts to **100 N·m (74 lb ft)**.

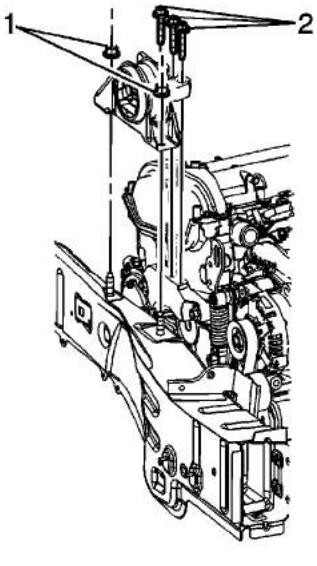

cardiagn.com

9. Install the engine mount to the engine compartment.
10. Install the engine mount to side rail nuts (1) and tighten to **100 N·m (74 lb ft)**.
11. Install the engine mount to bracket bolts (2).
12. Tighten the engine mount to bracket bolts in the following sequence:
    12.1. Middle
    12.2. Rear
    12.3. Front

    Tighten the bolts to **50 N·m (37 lb ft)**.

13. Remove the engine support fixture. Refer to Engine Support Fixture.
14. Install the crankshaft balancer. Refer to Crankshaft Balancer Replacement.
15. Install the drive belt tensioner. Refer to Drive Belt Tensioner Replacement.

cardiagn.com

Engine Front Cover Replacement (LE5)

Removal Procedure

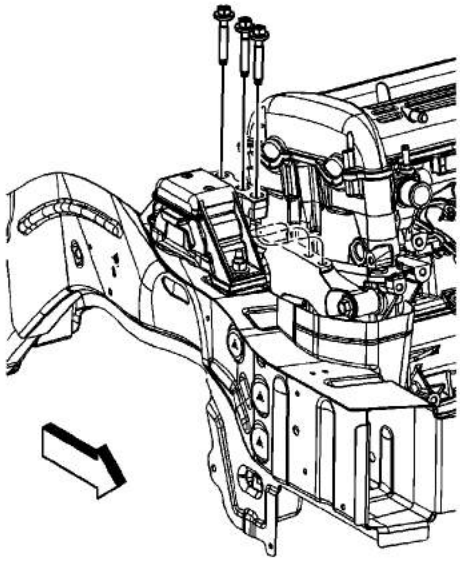

1. Remove the drive belt tensioner. Refer to Drive Belt Tensioner Replacement.
2. Remove the crankshaft balancer. Refer to Crankshaft Balancer Replacement.
3. Remove the air cleaner assembly. Refer to Air Cleaner Assembly Replacement.
4. Install the engine support fixture. Refer to Engine Support Fixture.
5. Remove the engine mount to bracket bolts.

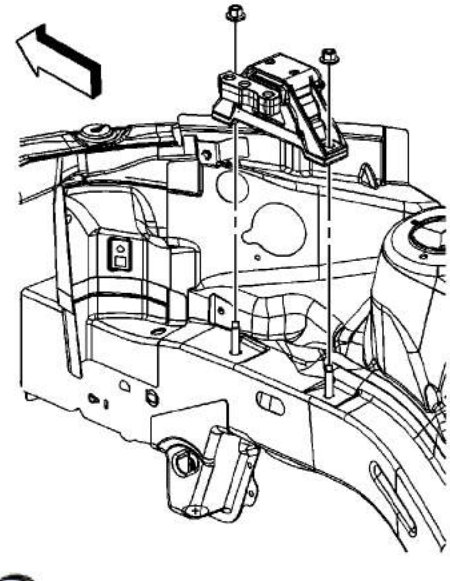

cardiagn.com

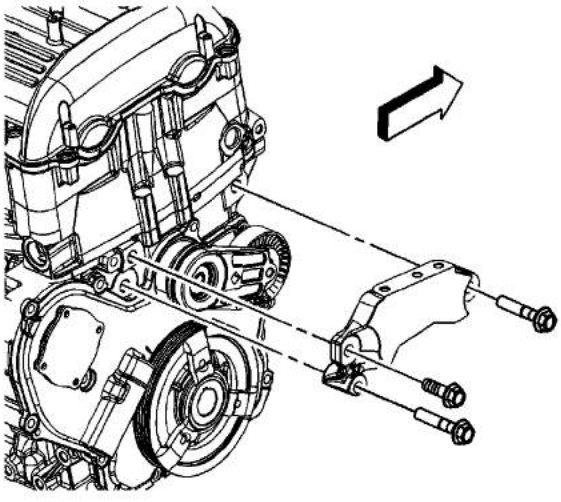

8. Remove the engine mount bracket to engine bolts.
9. Remove the engine mount bracket.

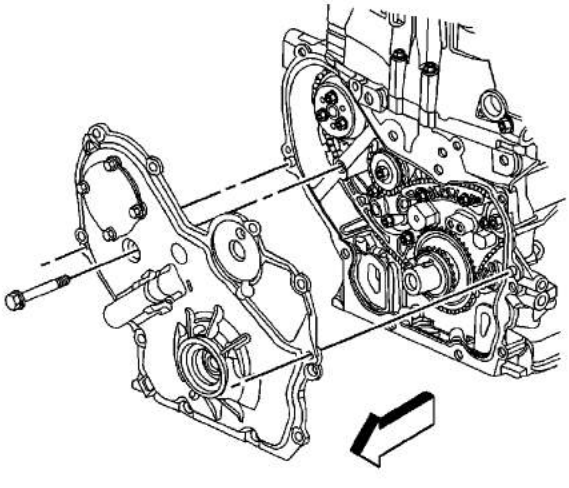

10. Remove the engine front cover to water pump bolt.

cardiagn.com

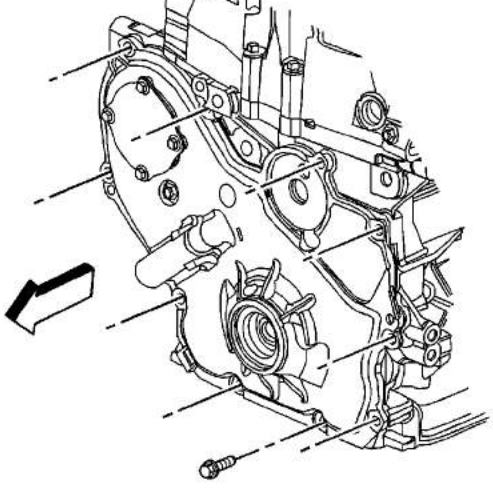

11. Raise and suitably support the vehicle. Refer to Lifting and Jacking the Vehicle.
12. Remove the engine front cover bolts.
13. Remove the engine front cover.

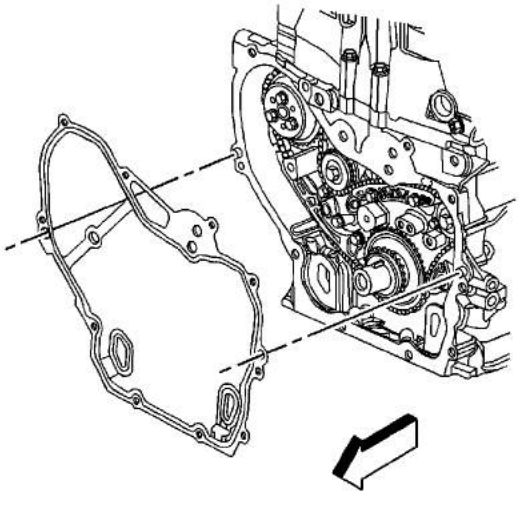

14. Remove and discard the engine front cover gasket.

Installation Procedure

cardiagn.com

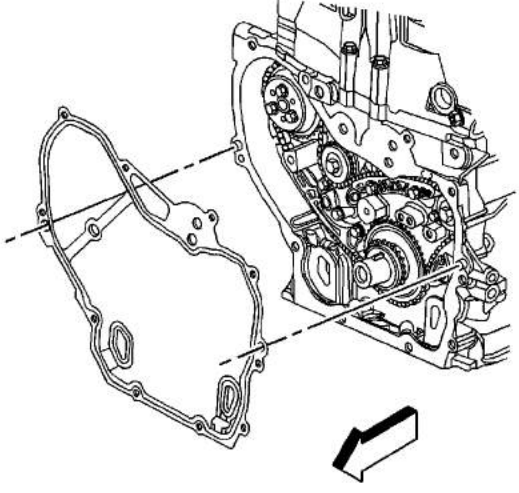

1. Install a NEW engine front cover gasket to the dowel pins.
2. Install the engine front cover.

Caution: Refer to Fastener Caution in the Preface section.

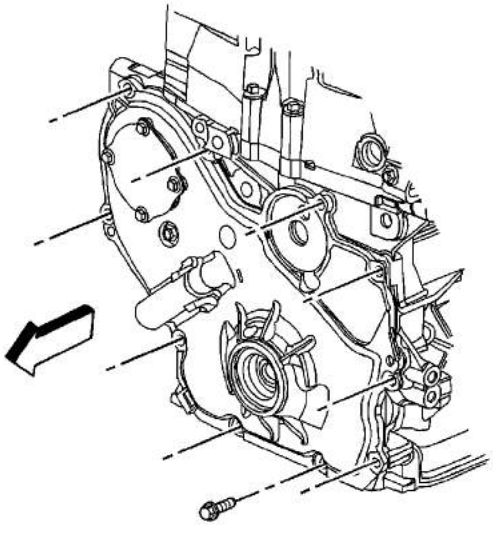

3. Install the engine front cover bolts and tighten to **25 N·m (18 lb ft)**.
4. Lower the vehicle.

cardiagn.com

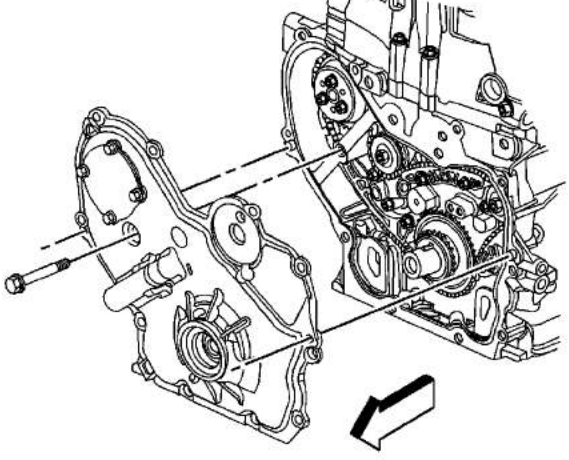

5. Install the engine front cover to water pump bolt and tighten the bolt to **25 N·m (18 lb ft)**.

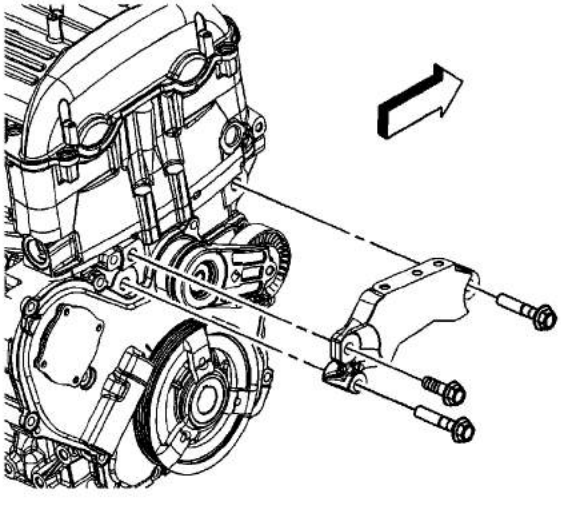

6. Position the engine mount bracket to the engine.
7. Install the engine mount bracket bolts in the following locations:
   - The long bolts in the forward and lower rear holes
   - The short bolt in the upper rear hole
8. Tighten the engine mount bracket bolts in the following sequence:
   8.1. Upper rear
   8.2. Lower rear
   8.3. Forward

   Tighten the bolts to **50 N·m (37 lb ft)**.

cardiagn.com

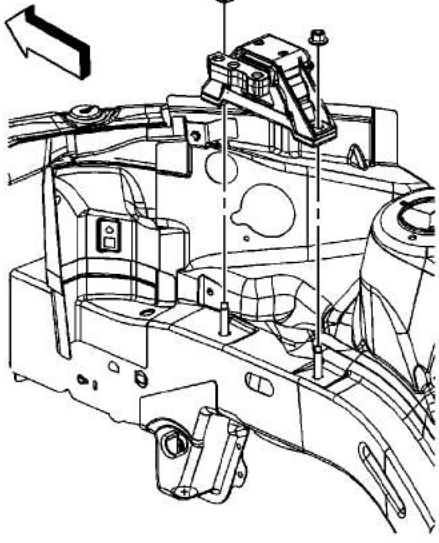

9. Install the engine mount to the engine compartment.
10. Install the engine mount to side rail nuts and tighten to **100 N·m (74 lb ft)**.

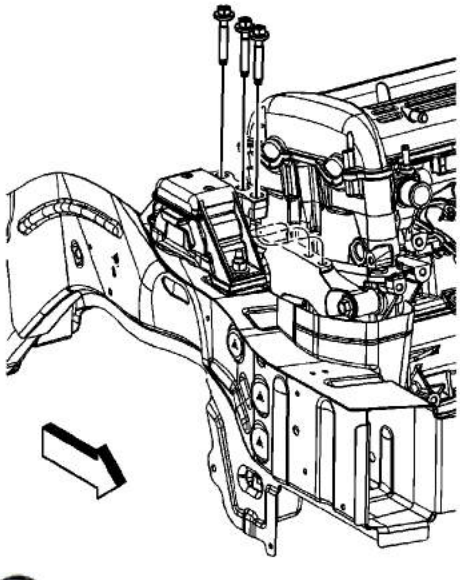

11. Install the engine mount to bracket bolts.
12. Tighten the engine mount to bracket bolts in the following sequence:
    12.1. Middle
    12.2. Rear
    12.3. Front

    Tighten the bolts to **50 N·m (37 lb ft)**.

13. Remove the engine support fixture. Refer to Engine Support Fixture.

cardiagn.com

16. Install the drive belt tensioner. Refer to Drive Belt Tensioner Replacement.

cardiagn.com

Camshaft Timing Chain, Sprocket, and Tensioner Replacement

Special Tools

- J 45027 Tensioner Tool
- J 45059 Angle Meter

Removal Procedure

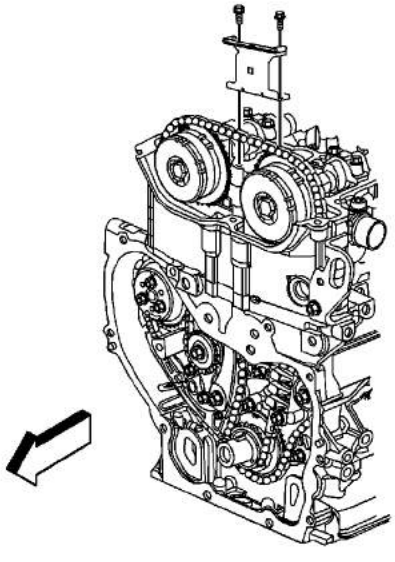

1. Remove the number 1 cylinder spark plug. Refer to Spark Plug Replacement.
2. Rotate the crankshaft in the engine rotational direction clockwise, until the number 1 piston is at top dead center (TDC) on the exhaust stroke.
3. Remove the camshaft cover. Refer to Camshaft Cover Replacement.
4. Remove the engine front cover. Refer to Engine Front Cover Replacement.
5. Remove the upper timing chain guide bolts and guide.

cardiagn.com

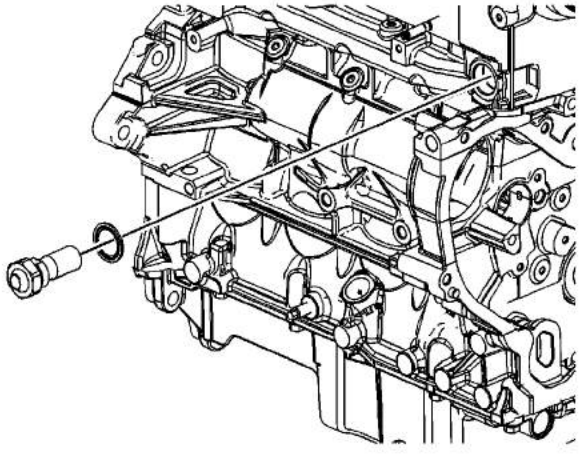

Note: The timing chain tensioner must be removed to unload chain tension before the timing chain is removed. If it is not, the timing chain will become cocked and it will be difficult to remove.

6. Remove the timing chain tensioner.

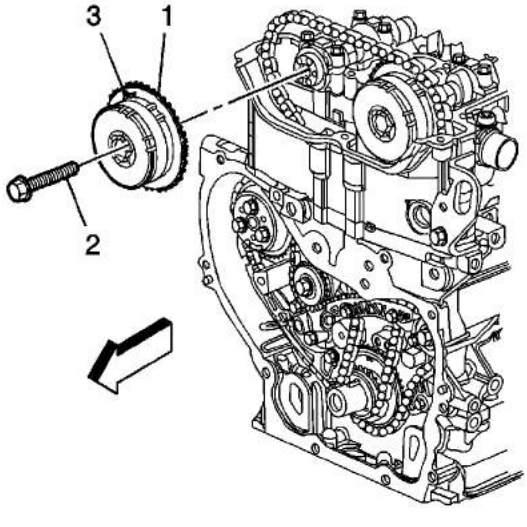

7. Install a 24 mm wrench on the hex on the exhaust camshaft in order to hold the camshaft.
8. Remove and discard the exhaust camshaft actuator bolt (2).
9. Remove the exhaust camshaft actuator (1, 3) from the camshaft and timing chain.

cardiagn.com

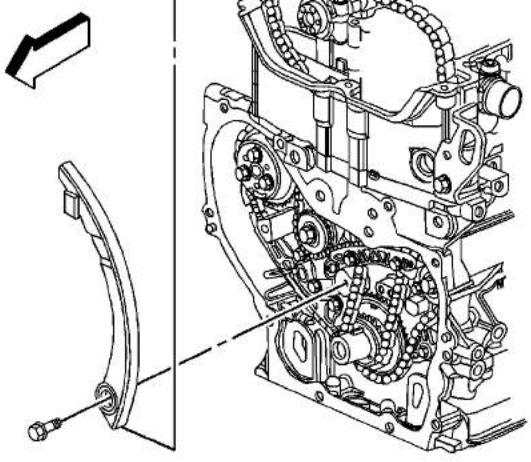

10. Remove the timing chain tensioner guide bolt and guide.

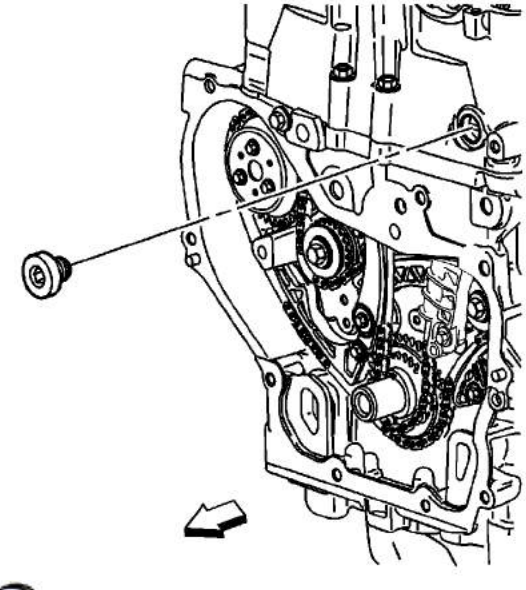

11. Remove the fixed timing chain guide access plug.

cardiagn.com

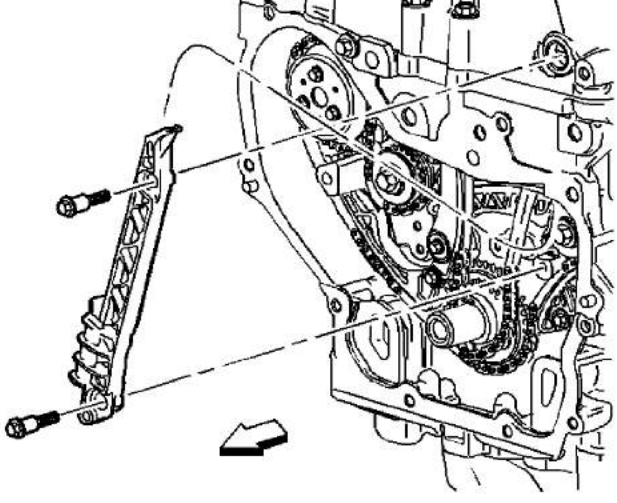

12. Remove the fixed timing chain guide bolts and guide.

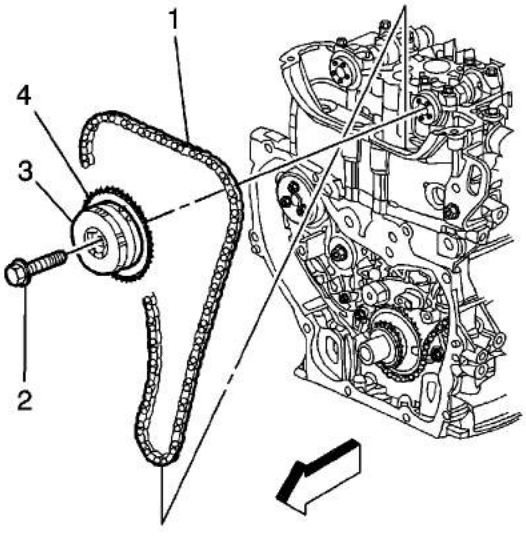

13. Install a 24 mm wrench on the hex on the intake camshaft in order to hold the camshaft.
14. Remove and discard the intake camshaft actuator bolt (2).
15. Remove the intake camshaft actuator (3), and the timing chain through the top of the cylinder head.

cardiagn.com

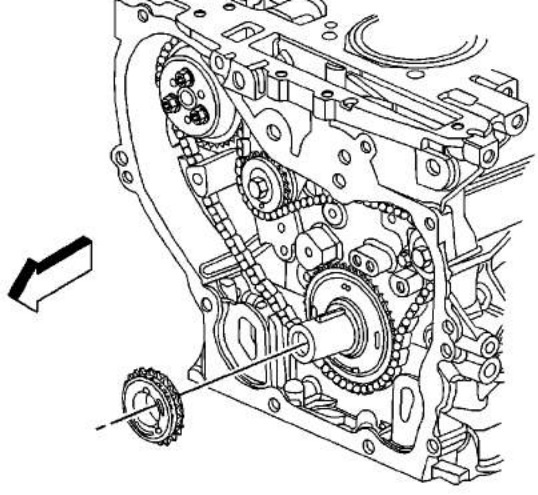

16. Remove the timing chain crankshaft sprocket.

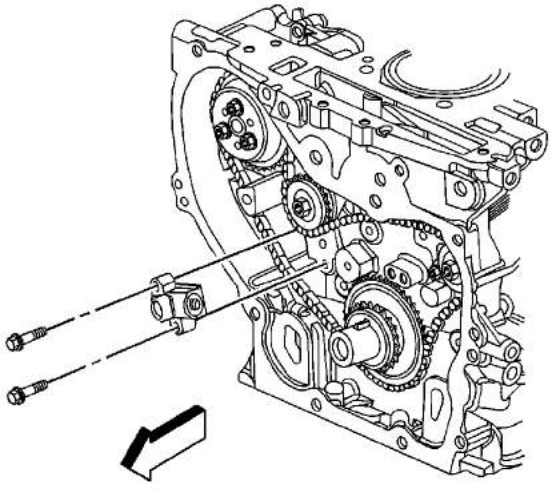

17. If replacing the balance shaft timing chain and sprocket, perform the following steps, if not proceed to step 10 in the installation procedure.
18. Remove the balance shaft drive chain tensioner bolts and tensioner.

cardiagn.com

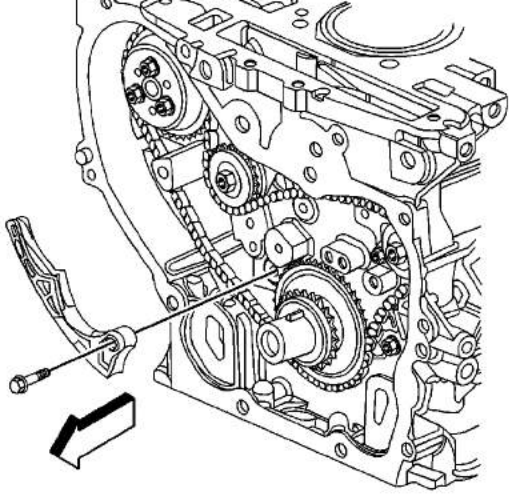

19. Remove the adjustable balance shaft chain guide bolt and guide.

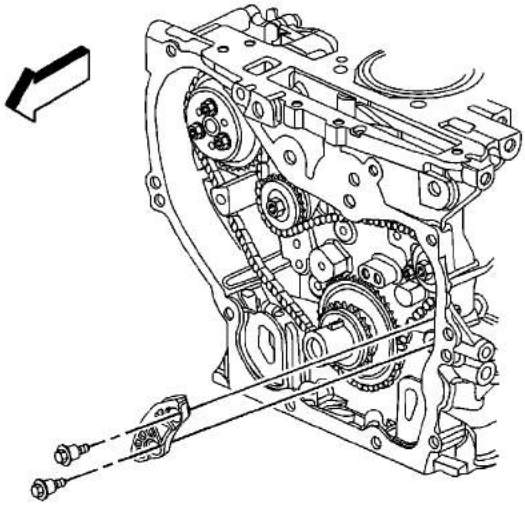

20. Remove the small balance shaft drive chain guide bolts and guide.

cardiagn.com

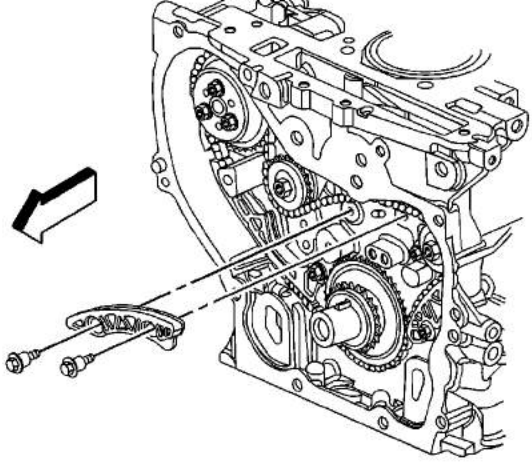

21. Remove the upper balance shaft drive chain guide bolts and guide.

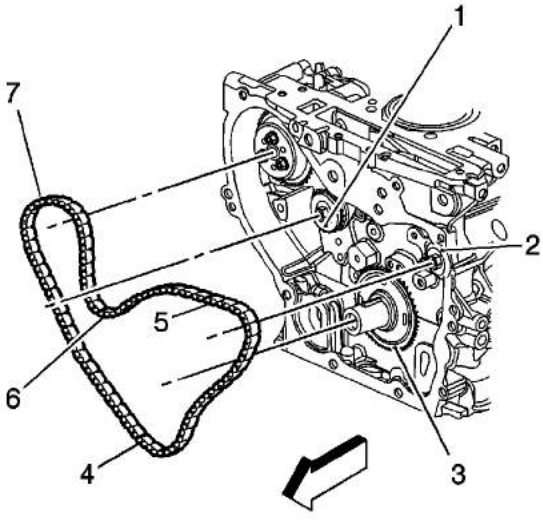

Note: It may ease removal of the balance shaft drive chain to get all the slack in the chain between the crankshaft and water pump sprockets.

22. Remove the balance shaft drive chain (7).
23. Remove the balance shaft drive sprocket.

Installation Procedure

cardiagn.com

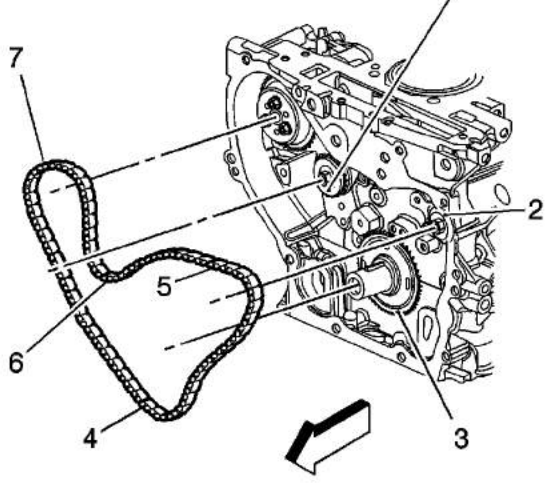

1. If replacing the balance shaft timing chain, perform the following steps, if not proceed to step 10.
2. Install the balance shaft drive sprocket.

   Note: If the balance shafts are not properly timed to the engine, the engine may vibrate or make noise.

3. Install the balance shaft drive chain (1) with the colored link lined up with the marks on the balance shaft sprockets and the balance shaft drive sprocket.

   There are three colored links on the chain. Two are chrome and one is copper. Use the following steps in order to line up the links with the sprockets.

   3.1. Place the copper link (5) so that it lines up with the timing mark (2) on the intake side balance shaft sprocket.
   3.2. Working clockwise around the chain, place the chrome link (4) in line with the timing mark (3) on the balance shaft drive sprocket. (Approximately 6 o'clock position on the sprocket).
   3.3. Place the chain (7) on the water pump drive sprocket. The alignment is not critical.
   3.4. Align the last chrome link (6) with the timing mark (1) on the exhaust side balance shaft drive sprocket.

   Caution: Refer to Fastener Caution in the Preface section.

cardiagn.com

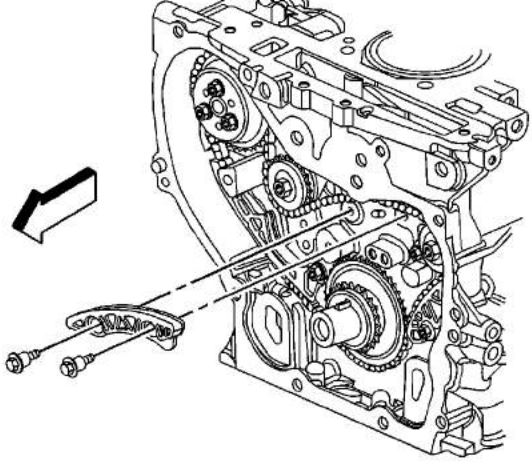

4. Install the upper balance shaft drive chain guide and bolt and tighten to **15 N·m (11 lb ft)**.

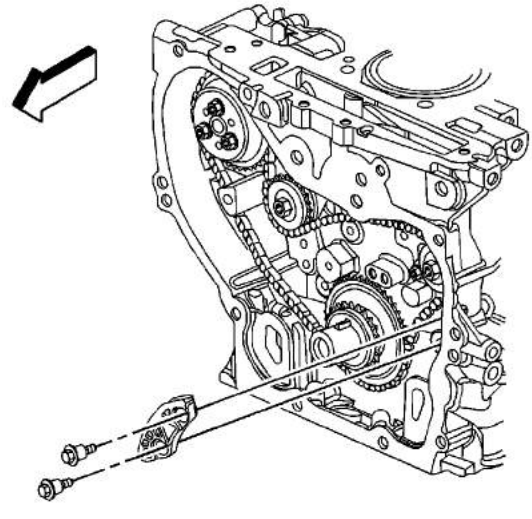

5. Install the small balance shaft drive chain guide and bolts and tighten to **15 N·m (11 lb ft)**.

cardiagn.com

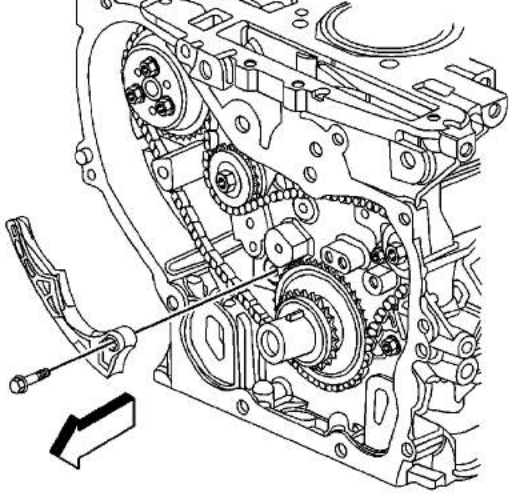

6. Install the adjustable balance shaft chain guide and bolt and tighten to **10 N·m (89 lb in)**.

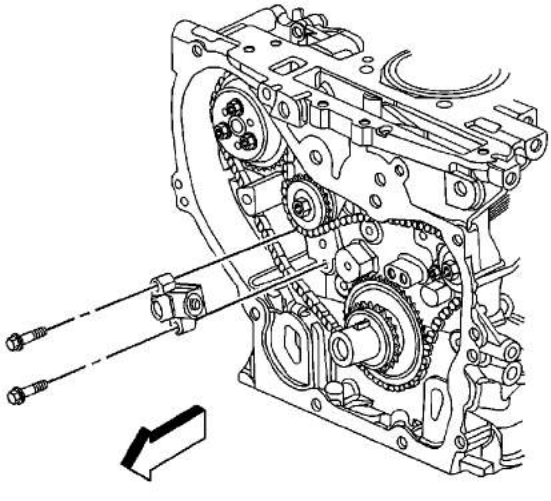

7. Reset the timing chain tensioner by performing the following steps:
   7.1. Rotate the tensioner plunger 90 degrees in its bore and compress the plunger.
   7.2. Rotate the tensioner back to the original 12 o'clock position and insert a paper clip through the hole in the plunger body and into the hose in the tensioner plunger.
8. Install the balance shaft drive chain tensioner and bolts and tighten to **10 N·m (89 lb in)**.
9. Remove the paper clip from the balance shaft drive chain tensioner.

cardiagn.com

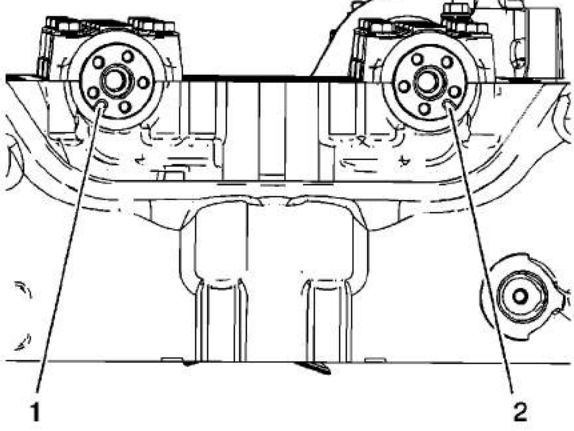

10. Ensure the intake camshaft notch is in the 5 o'clock position (2) and the exhaust camshaft notch is in the 7 o'clock position (1). The number 1 piston should be at top dead center (TDC), crankshaft key at 12 o'clock.

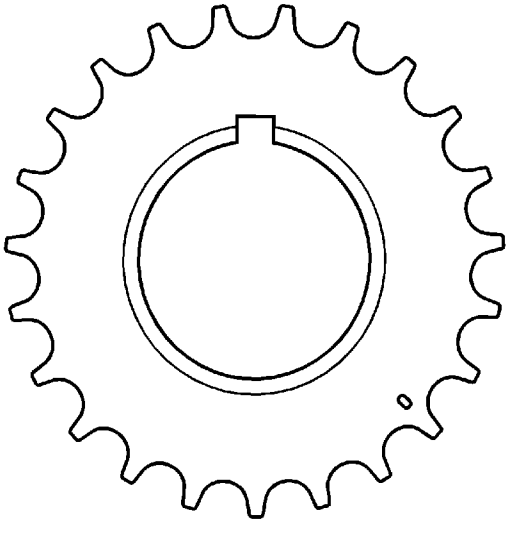

11. Install the timing chain drive sprocket to the crankshaft with the timing mark in the 5 o'clock position and the front of the sprocket facing out.

cardiagn.com

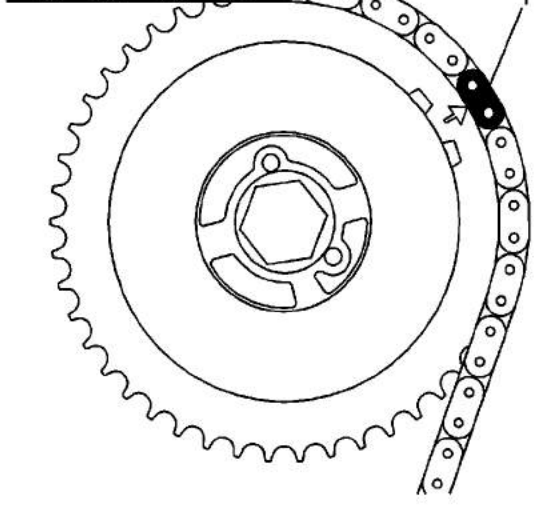

Note:

- There are 3 colored links on the timing chain. 2 links are of matching color, and 1 link is of a unique color. Use the following procedure to line up the links with the actuators. Orient the chain so that the colored links are visible.
- Always use new actuator bolts.

12. Assemble the intake camshaft actuator into the timing chain with the timing mark lined up with the uniquely colored link (1).

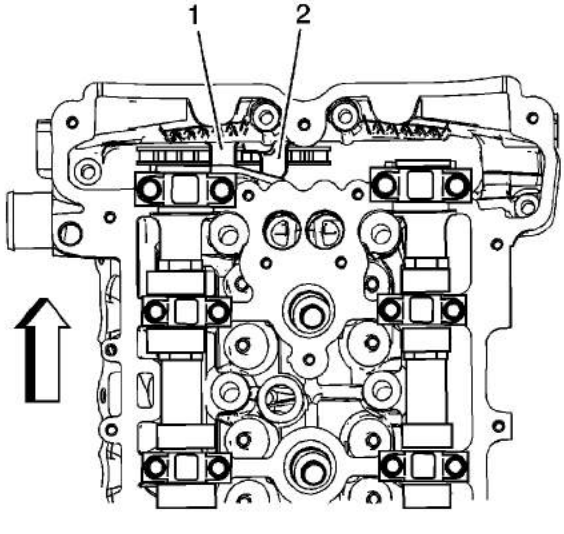

13. Lower the timing chain through the opening in the cylinder head. Use care to ensure that the chain goes around both sides of the cylinder block bosses (1, 2).
14. Install the intake camshaft actuator onto the intake camshaft while aligning the dowel pin into the camshaft slot.

cardiagn.com

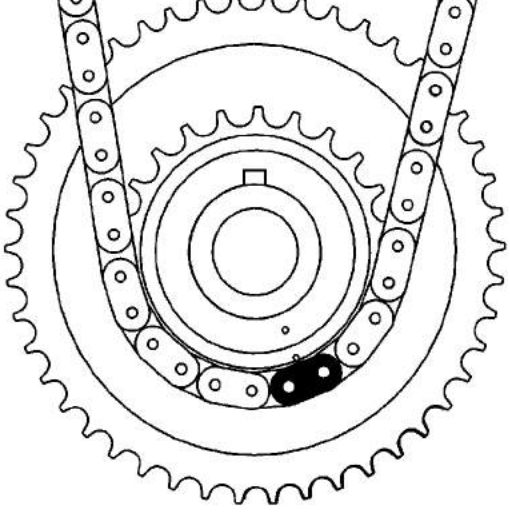

16. Route the timing chain around the crankshaft sprocket and line up the first matching colored link (2) with the timing mark on the crankshaft sprocket, in approximately the 5 o'clock position.

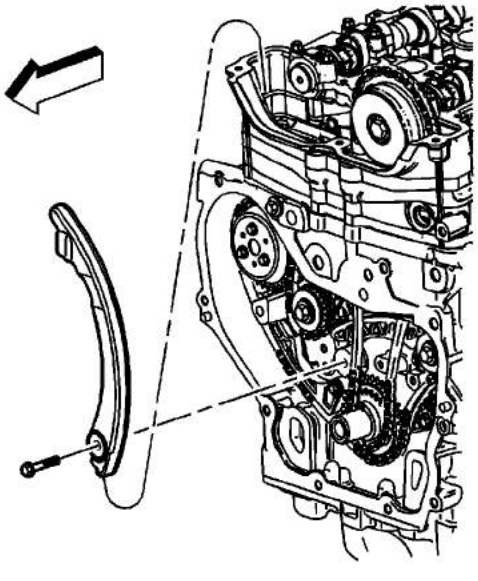

17. Rotate the crankshaft clockwise to remove all chain slack. Do not rotate the intake camshaft.
18. Install the adjustable timing chain guide down through the opening in the cylinder head and install the adjustable timing chain bolt.

    Tighten the adjustable timing chain guide bolt to **10 N·m (89 lb in)**.

cardiagn.com

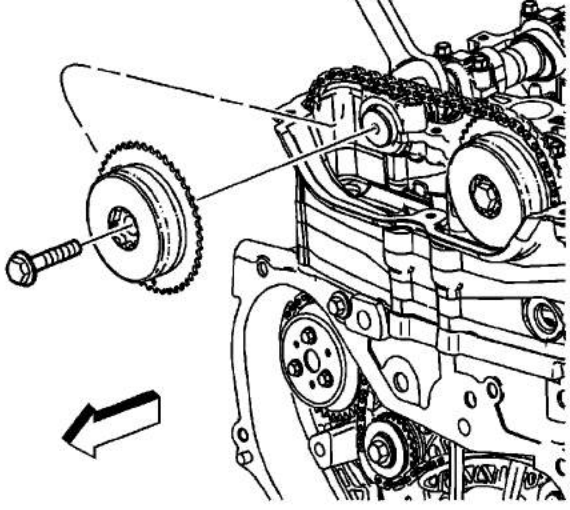

Note: Always install NEW actuator bolts.

19. Install the exhaust camshaft actuator into the timing chain with the timing mark lined up with the second matching colored link.

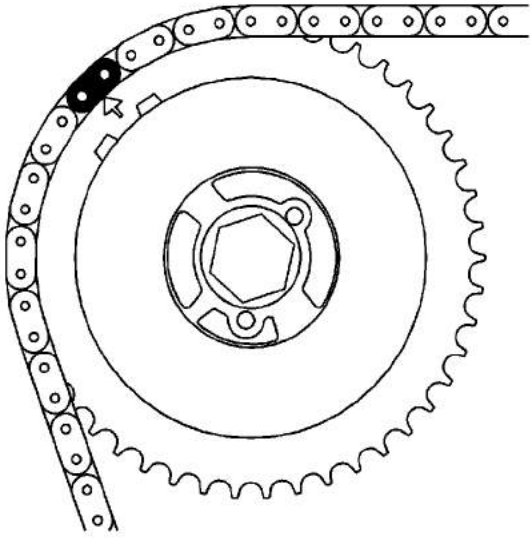

20. Install the exhaust camshaft actuator onto the exhaust camshaft, aligning the dowel pin into the camshaft slot.
21. Using a 23 mm open end wrench, rotate the exhaust camshaft approximately 45 degrees until the dowel pin in the camshaft actuator goes into the camshaft slot.

cardiagn.com

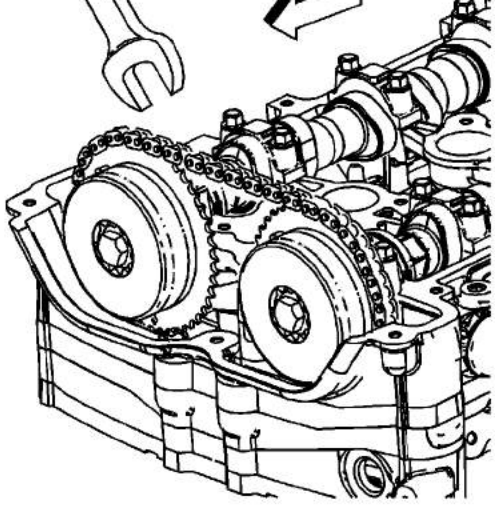

22. When the actuator seats on the cam, tighten the new exhaust camshaft actuator bolt hand tight.

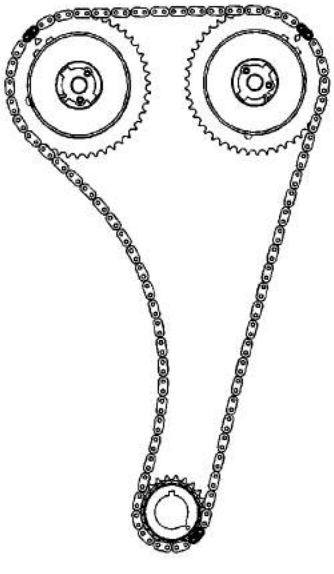

23. Verify that all of the colored links and the appropriate timing marks are still aligned. If they are not aligned, repeat the portion of the procedure necessary to align the timing marks.

cardiagn.com

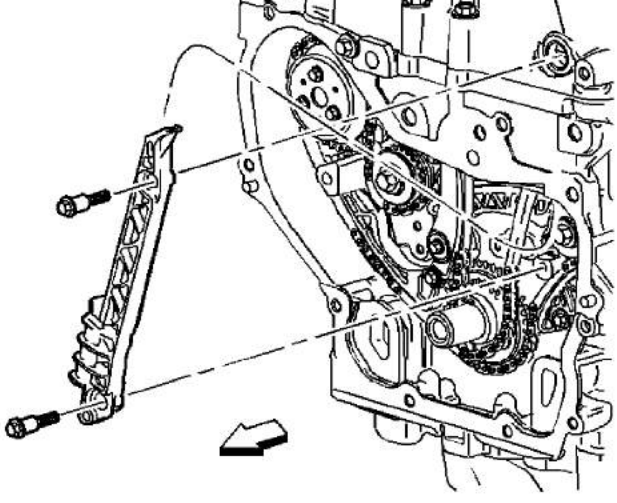

24. Install the fixed timing chain guide and bolts and tighten to **12 N·m (106 lb in)**.

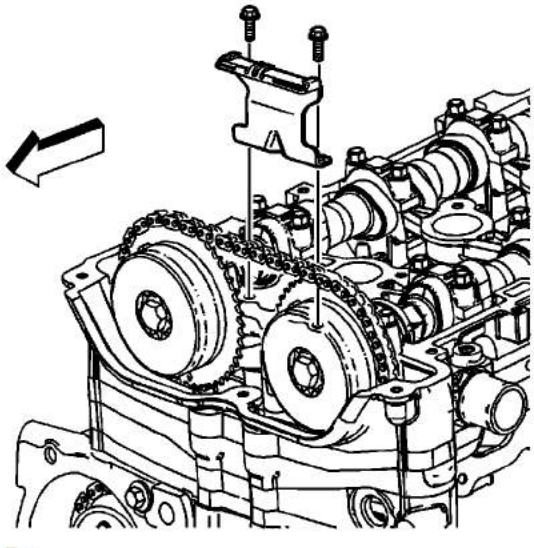

25. Install the upper timing chain guide and bolts and tighten to **10 N·m (89 lb in)**.

cardiagn.com

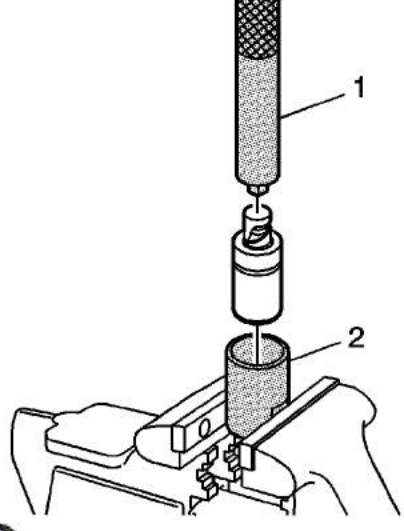

26. Reset the timing chain tensioner by performing the following steps:
    26.1. Remove the snap ring.
    26.2. Remove the piston assembly from the body of the timing chain tensioner.
    26.3. Install the J 45027-2 (2) into a vise.
    26.4. Install the notch end of the piston assembly into the J 45027-2 (2).
    26.5. Using the J 45027-1 (1), turn the ratchet cylinder into the piston.
    26.6. Reinstall the piston assembly into the body of the tensioner.
    26.7. Install the snap ring.

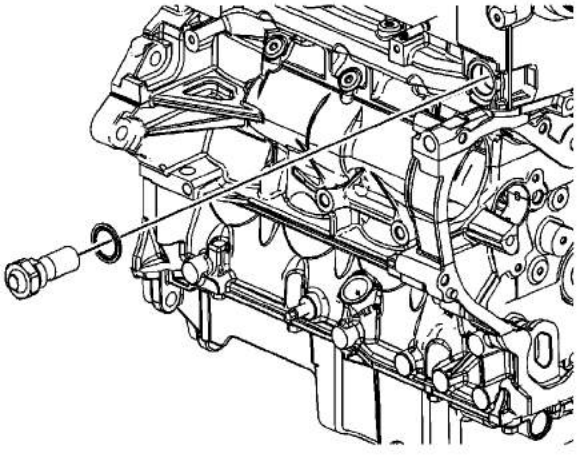

27. Inspect the timing chain tensioner seal for damage. If damaged, replace the seal.
28. Inspect to ensure all dirt and debris is removed from the timing chain tensioner threaded

cardiagn.com

Note: Ensure the timing chain tensioner seal is centered throughout the torque procedure to eliminate the possibility of an oil leak.

29. Install the timing chain tensioner assembly and tighten to tensioner to **75 N·m (55 lb ft)**.
30. The timing chain tensioner is released by compressing it 2 mm (0.079 in), which will release the locking mechanism in the ratchet. To release the timing chain tensioner, use a suitable tool with a rubber tip on the end. Feed the tool down through the cam drive chest to rest on the cam chain. Then give a sharp jolt diagonally downwards to release the tensioner.

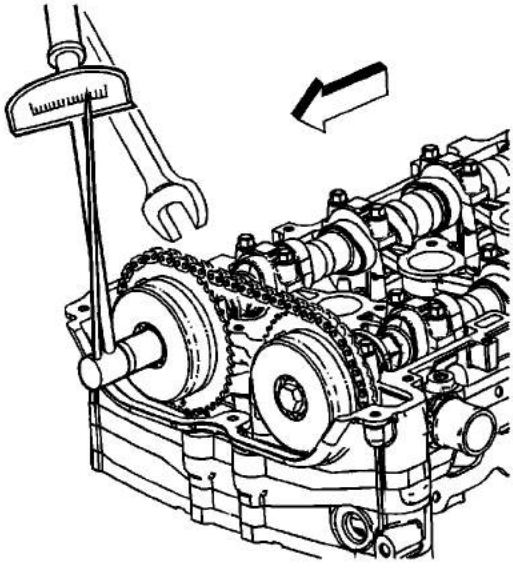

31. Using a 23 mm wrench, engage the hex on the intake camshaft, and using a torque wrench, tighten the camshaft actuator bolt to **30 N·m (22 lb ft), plus 100 degrees** using the J 45059 .
32. Using a 23 mm wrench, engage the hex on the exhaust camshaft, and using a torque wrench, tighten the camshaft actuator bolt to **30 N·m (22 lb ft), plus 100 degrees** using the J 45059 .

Object Number: 412200 Size: SH

cardiagn.com

33. Install the timing chain oiling nozzle and tighten the bolt to **10 N·m (89 lb in)**.

Object Number: 1769728 Size: SH

34. Apply sealant compound GM P/N 12345382 (Canadian P/N 10953489) to the thread of the timing chain guide bolt access hole plug.
35. Install the timing chain guide bolt access hole plug and tighten to **90 N·m (66 lb ft)**.
36. Install the engine front cover. Refer to Engine Front Cover Replacement.
37. Install the camshaft cover. Refer to Camshaft Cover Replacement.
38. Install the number 1 cylinder spark plug. Refer to Spark Plug Replacement.

cardiagn.com

Camshaft Cover Replacement (LE5)

Removal Procedure

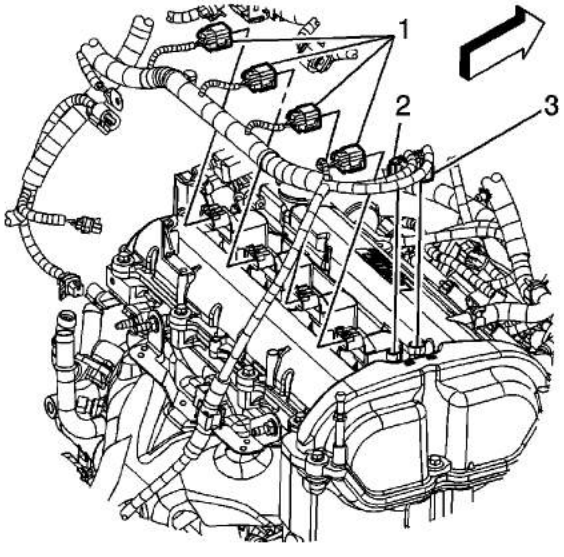

1. Remove the intake manifold cover. Refer to Intake Manifold Cover Replacement.
2. Remove the air cleaner outlet duct. Refer to Air Cleaner Outlet Duct Replacement.
3. Disconnect the intake (3) and exhaust (2) camshaft position actuator solenoid valve electrical connectors.

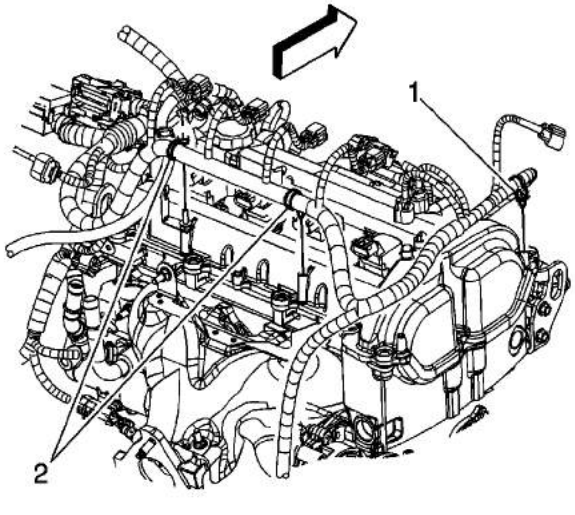

4. Remove the ignition coils. Refer to Ignition Coil Replacement.

© 2010 General Motors Corporation. All rights reserved.

cardiagn.com

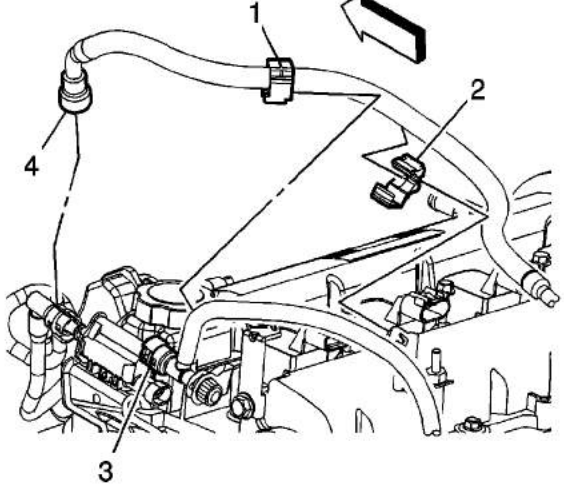

6. Remove the fuel feed line retainers (1, 2) from the engine brackets.

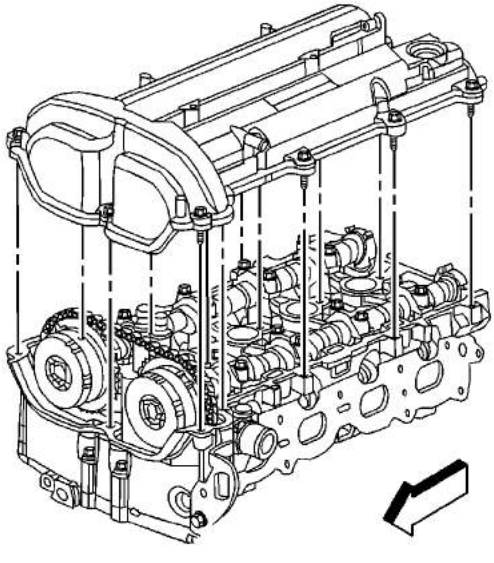

7. Remove the camshaft cover bolts.
8. Remove the camshaft cover.

Installation Procedure

Caution: Refer to Fastener Caution in the Preface section.

cardiagn.com

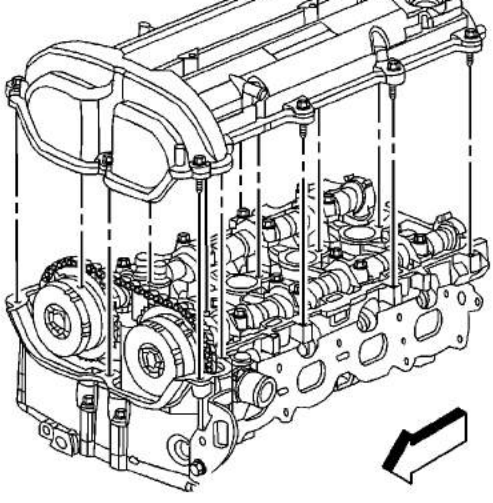

1. Install the camshaft cover and bolts and tighten to **10 N·m (89 lb in)**.

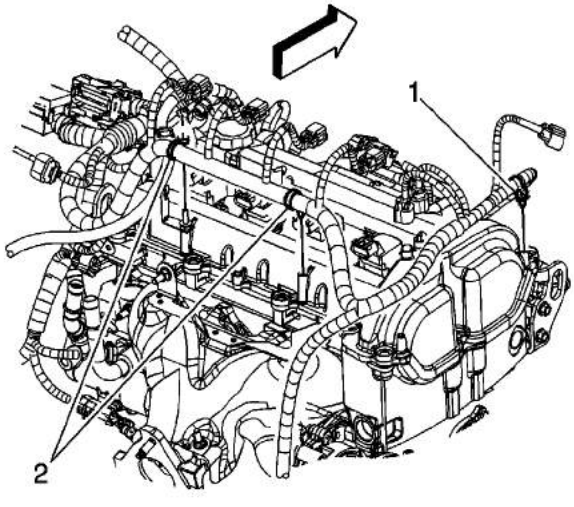

2. Install the ignition coils. Refer to Ignition Coil Replacement.
3. Install the engine harness clips (1, 2) to the cover.

cardiagn.com

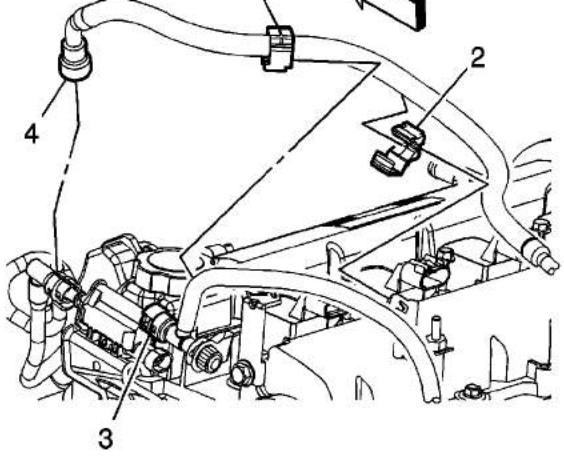

4. Install the feed line retainers (1, 2) to the engine brackets.

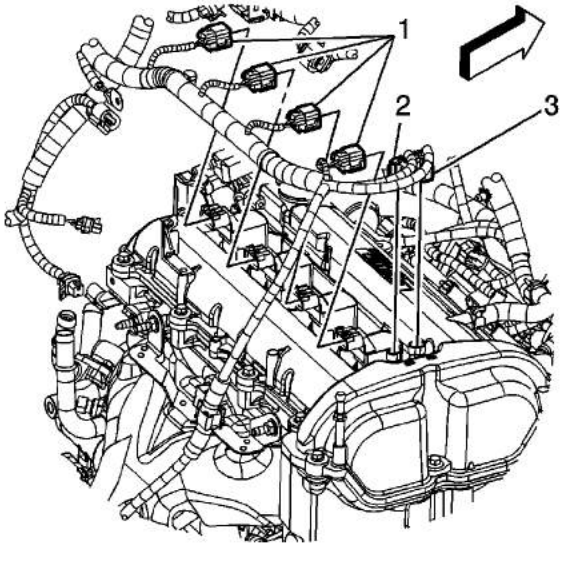

5. Connect the intake (2) and exhaust (2) camshaft position actuator solenoid valve electrical connectors.
6. Install the air cleaner outlet duct. Refer to Air Cleaner Outlet Duct Replacement.
7. Install the intake manifold cover. Refer to Intake Manifold Cover Replacement.

cardiagn.com

Camshaft Cover Replacement (LAT)

Removal Procedure

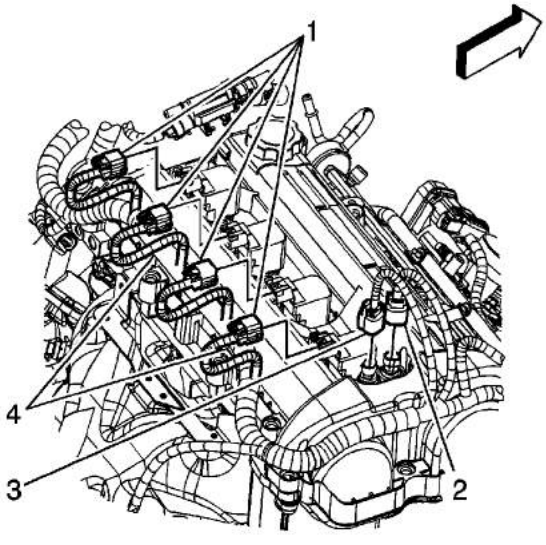

1. Remove the air cleaner outlet duct. Refer to Air Cleaner Outlet Duct Replacement.
2. Disconnect the engine wiring harness electrical connectors (2, 3) from the intake and exhaust camshaft position actuator solenoid valves.
3. Remove the ignition coils. Refer to Ignition Coil Replacement.
4. Remove the engine harness clips (4) from the cover.
5. Reposition the engine wiring harness out of the way.

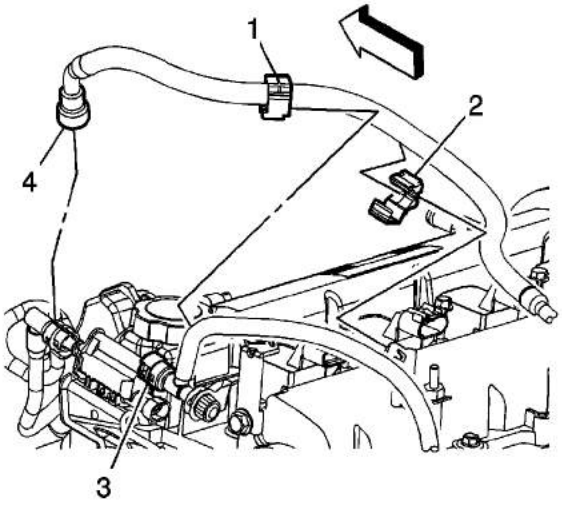

cardiagn.com

6. Remove the fuel feed line retainers (1, 2) from the engine brackets.

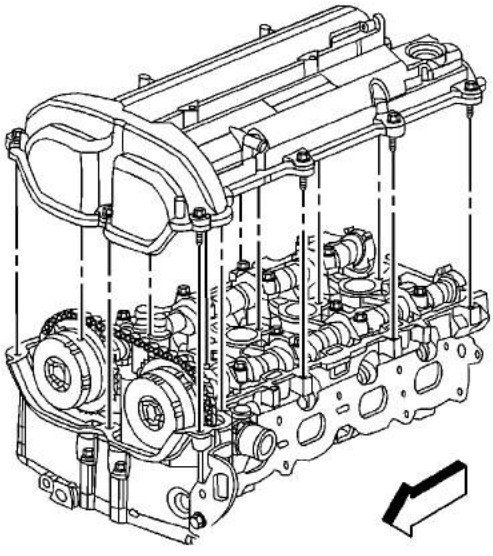

7. Remove the camshaft cover bolts.
8. Remove the camshaft cover.

Installation Procedure

Caution: Refer to Fastener Caution in the Preface section.

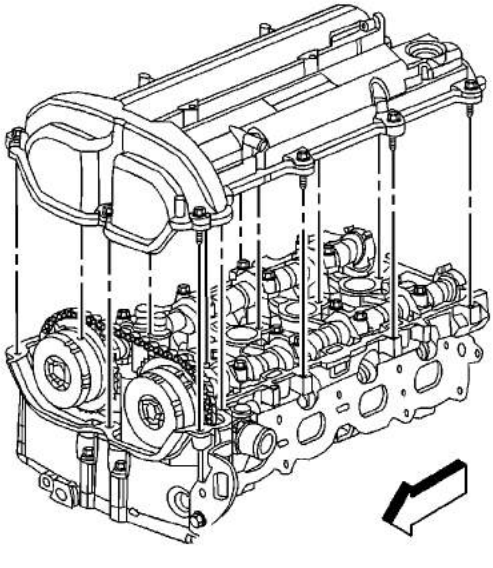

1. Install the camshaft cover and bolts and tighten to **10 N·m (89 lb in)**.

cardiagn.com

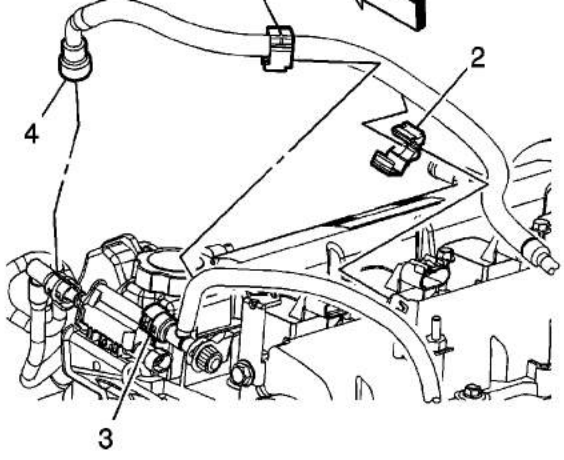

2. Install the feed line retainers (1, 2) to the engine brackets.

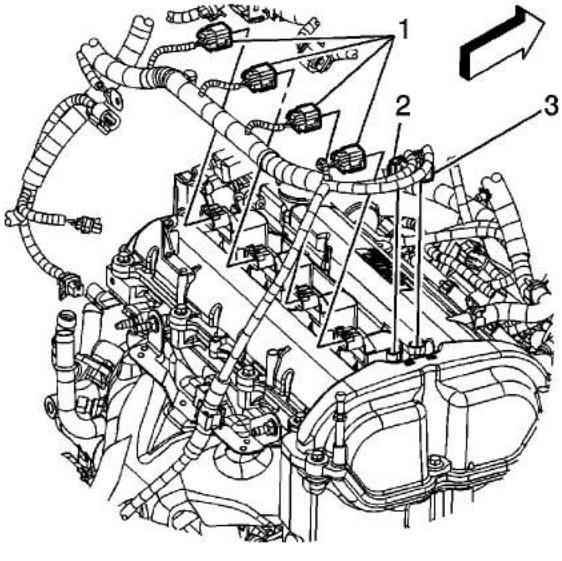

3. Install the ignition coils. Refer to Ignition Coil Replacement.
4. Position the engine wiring harness and install the clips (4) to the cover.
5. Connect the engine wiring harness electrical connectors (2, 3) to the intake and exhaust camshaft position actuator solenoid valves.
6. Install the air cleaner outlet duct. Refer to Air Cleaner Outlet Duct Replacement.

cardiagn.com

Timing Chain Tensioner Replacement

Special Tools

J 45027 Tensioner Tool

Removal Procedure

1. Disconnect the negative battery cable. Refer to Battery Negative Cable Disconnection and Connection.
2. Remove the camshaft cover. Refer to Camshaft Cover Replacement.

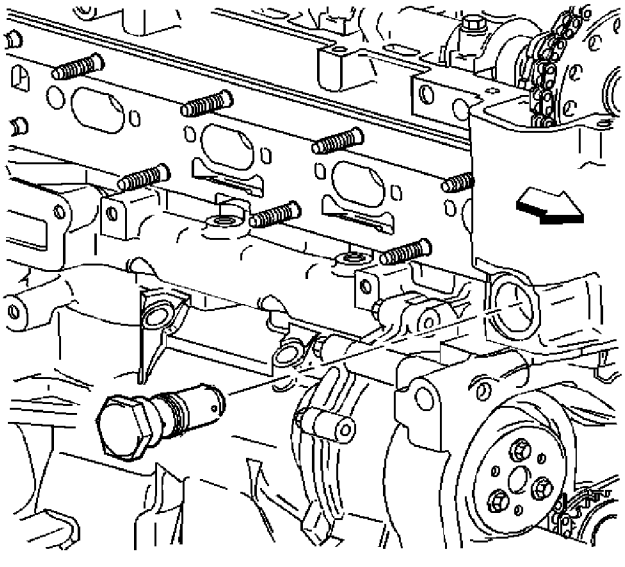

3. Remove the timing chain tensioner.
4. Remove the seal from the tensioner.

Installation Procedure

cardiagn.com

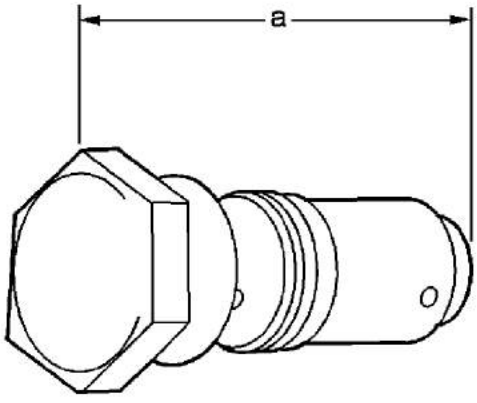

1. Inspect the timing chain tensioner. If the timing chain tensioner, O-ring seal, or washer is damaged, replace the timing chain tensioner or O-ring seal as applicable.
2. Measure the timing chain tensioner assembly from end to end. If the timing chain tensioner is to be replaced, a new tensioner should be supplied in the fully compressed non-active state.

   A tensioner in the compressed state will measure 72 mm (2.83 in) (a) from end to end. A tensioner in the active state will measure 85 mm (3.35 in) (a) from end to end.

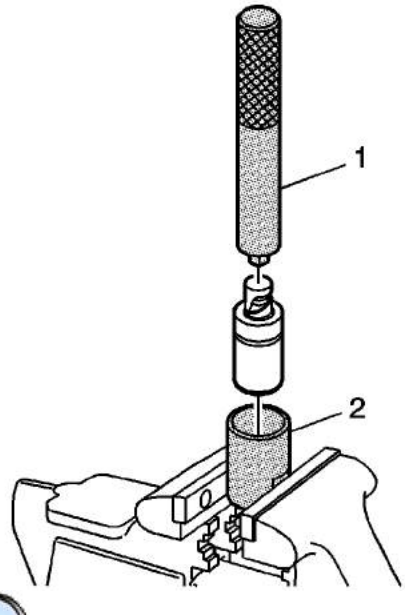

3. If the timing chain tensioner is not in the compressed state, perform the following steps:
   3.1. Remove the piston assembly from the body of the timing chain tensioner by pulling it out.

cardiagn.com

3.3. Install the notch end of the piston assembly into the J 45027-2 (2).

3.4. Using the J 45027-1 (1), turn the ratchet cylinder into the piston.

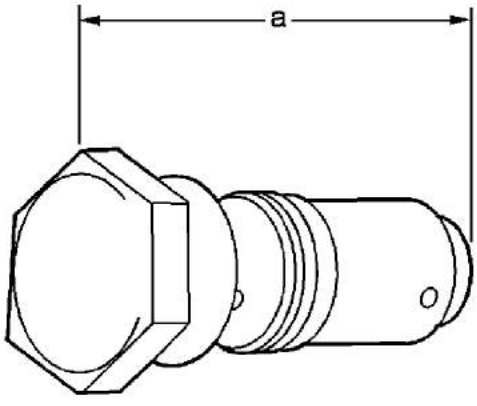

4. Inspect the bore of the tensioner body for dirt, debris, and damage. If any damage appears, replace the tensioner. Clean dirt or debris out with a lint-free cloth.
5. Install the compressed piston assembly back into the timing chain tensioner body until it stops at the bottom of the bore.

   Do not compress the piston assembly against the bottom of the bore. If the piston assembly is compressed against the bottom of the bore, it will activate the tensioner, which will then need to be reset again.

6. At this point the tensioner should measure approximately 72 mm (2.83 in) (a) from end to end. If the tensioner does not read 72 mm (2.83 in) (a) from end to end, repeat steps 3-5.

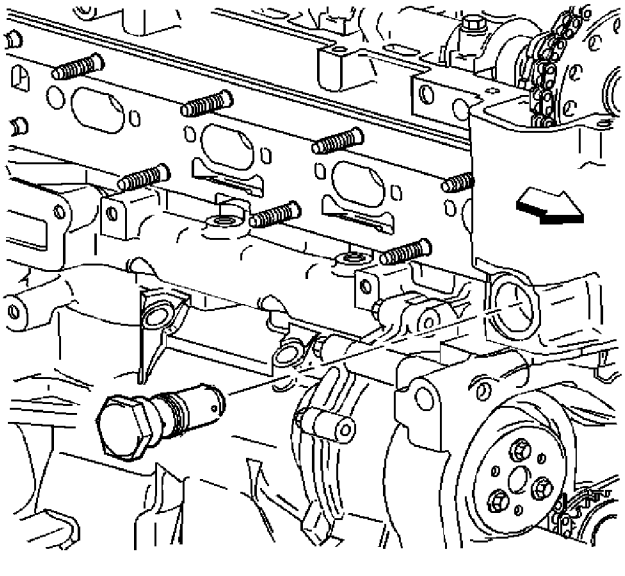

cardiagn.com

7. Inspect to ensure all dirt and debris is removed from the timing chain tensioner threaded hole in the cylinder head.

   Caution: Refer to Fastener Caution in the Preface section.

   Note: Ensure the timing chain tensioner seal is centered throughout the torque procedure to eliminate the possibility of an oil leak.

8. Install the timing chain tensioner assembly and tighten the tensioner to **75 N·m (55 lb ft)**.
9. The timing chain tensioner is released by compressing the tensioner 2 mm (0.079 in) which will release the locking mechanism in the ratchet.

   To release the timing chain tensioner, use a suitable tool with a rubber tip on the end. Feed the tool down through the cam drive chest to rest on the cam chain. Then give a sharp jolt diagonally downwards to release the tensioner.

10. Install the camshaft cover. Refer to Camshaft Cover Replacement.
11. Connect the negative battery cable. Refer to Battery Negative Cable Disconnection and Connection.

cardiagn.com

Intake Camshaft and Valve Lifter Replacement

Removal Procedure

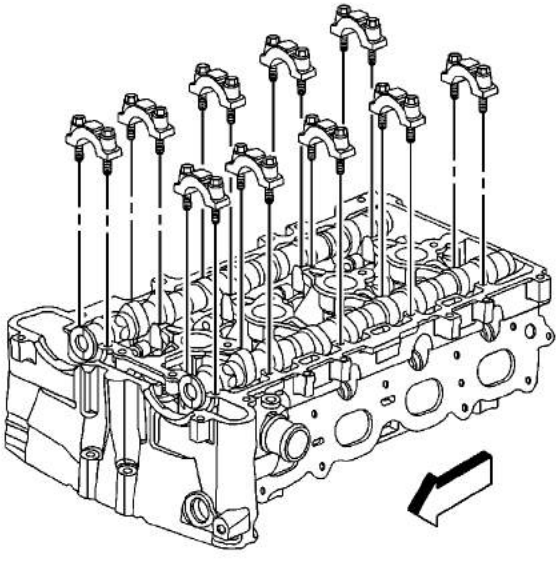

1. Remove the intake camshaft position actuator. Refer to Camshaft Position Intake Actuator Replacement.

   Note: Remove each bolt on each cap one turn at a time until there is no spring tension pushing on the camshaft.

2. Mark the bearing caps to ensure they are installed in the original position.
3. Remove the bearing cap bolts.
4. Remove the bearing caps.

cardiagn.com

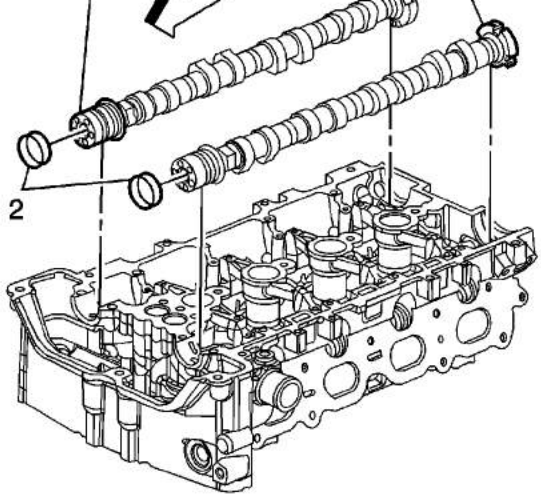

5. Remove the intake camshaft (1).

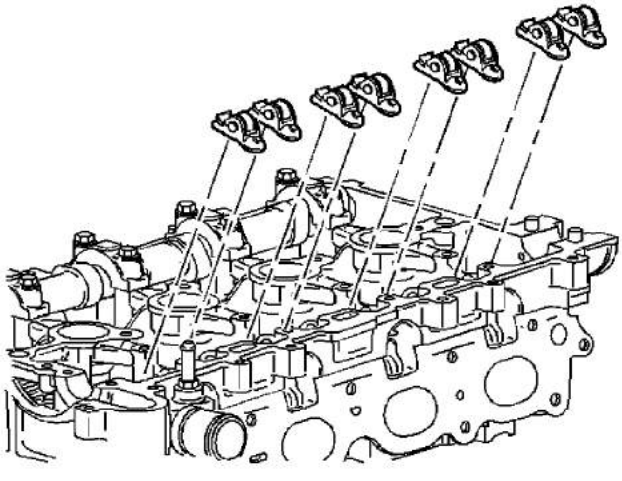

Note: Keep all of the roller followers and hydraulic adjusters in order so that they can be reinstalled in their respective locations.

6. Remove the camshaft roller followers.

cardiagn.com

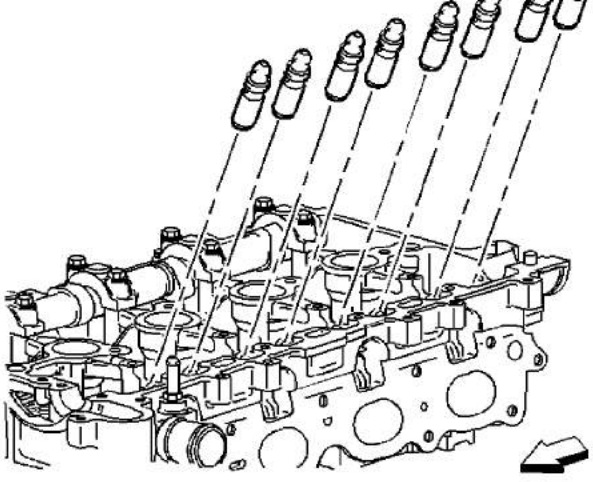

7. Remove the hydraulic element lash adjusters.

Installation Procedure

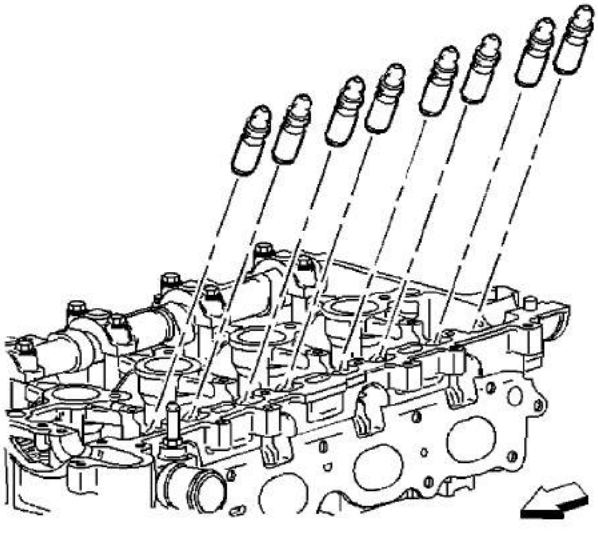

1. Install the hydraulic element lash adjusters into their bores in the cylinder head.
2. Lubricate the hydraulic lash adjusters with GM P/N 12345501 (Canadian P/N 992704) or equivalent.

cardiagn.com

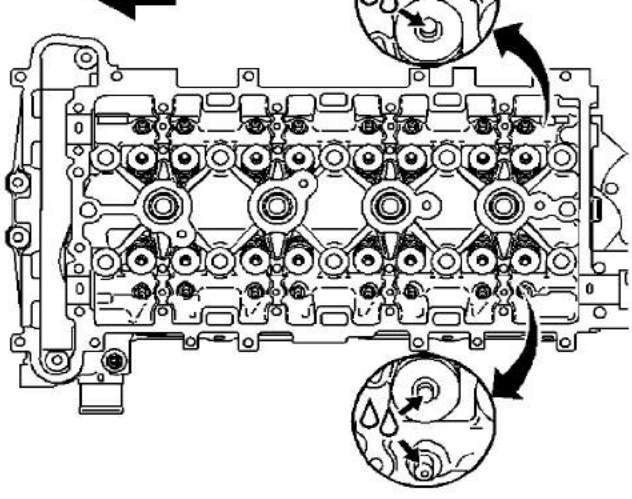

3. Lubricate the valve tips with GM P/N 12345501 (Canadian P/N 992704) or equivalent.

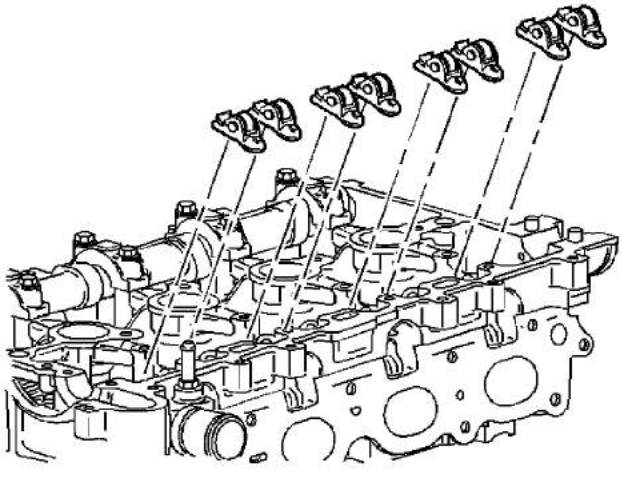

Note: Used roller followers MUST be returned to their original position on the camshaft. If the camshaft is being replaced, the roller followers actuated by the camshaft must also be replaced.

4. Position the camshaft roller followers on the tip of the valve stem and on the lash adjuster. Lubricate the roller followers with GM P/N 12345501 (Canadian P/N 992704) or equivalent.

cardiagn.com

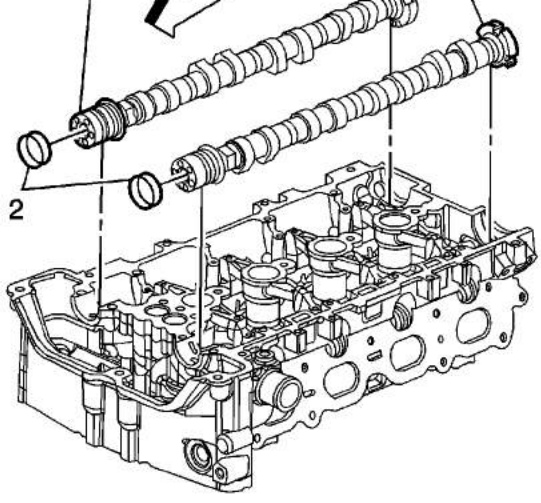

5. Install the intake camshaft (1). Lubricate with GM P/N 12345501 (Canadian P/N 992704) or equivalent.

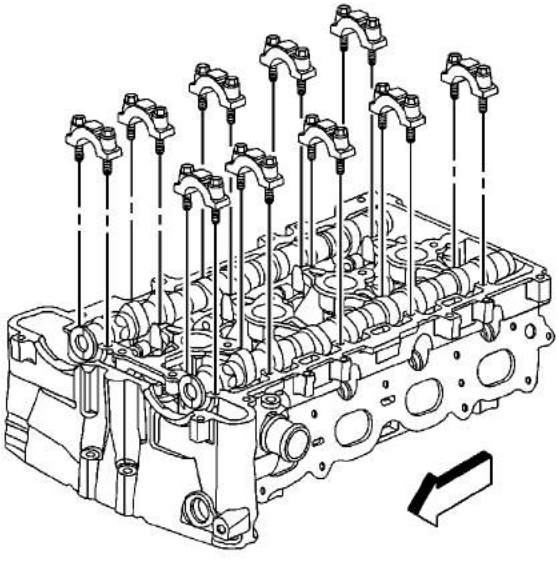

6. Install the camshaft bearing caps. Hand tighten the cap bolts.

   Caution: Refer to Fastener Caution in the Preface section.

7. Tighten the bearing cap bolts in increments of 3 turns until they are seated. Tighten the bolts to **10 N·m (89 lb in)**.
8. Install the intake camshaft position actuator. Refer to Camshaft Position Intake Actuator Replacement.

cardiagn.com

Exhaust Camshaft and Valve Lifter Replacement

Removal Procedure

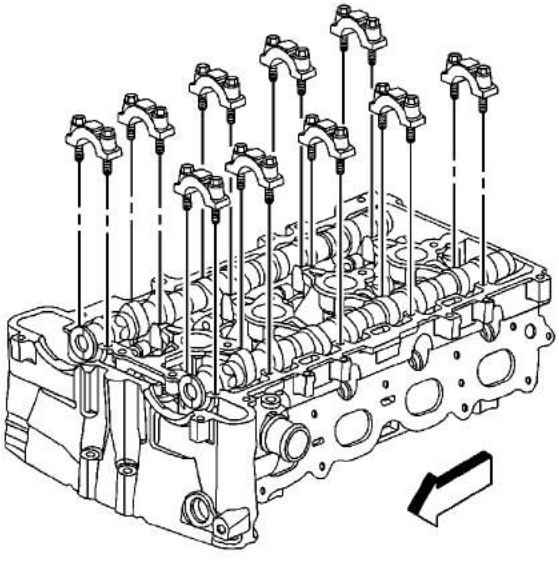

1. Remove the exhaust camshaft position actuator. Refer to Camshaft Position Exhaust Actuator Replacement.

   Note: Remove each bolt on each cap one turn at a time until there is no spring tension pushing on the camshaft.

2. Mark the bearing caps to ensure they are installed in the original position.
3. Remove the bearing cap bolts.
4. Remove the bearing caps.

cardiagn.com

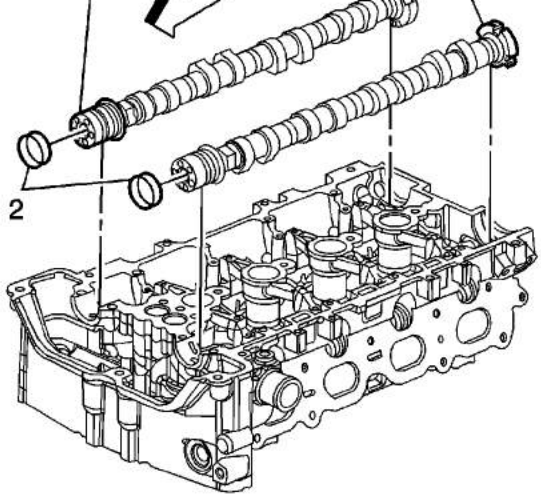

5. Remove the exhaust camshaft (3).

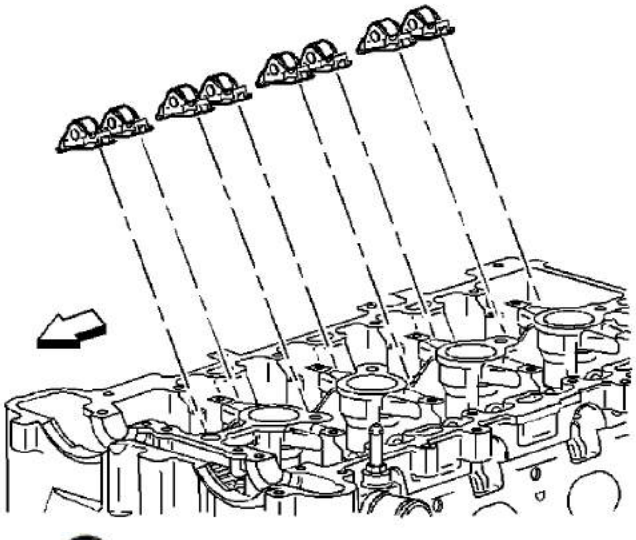

Note: Keep all of the roller followers and hydraulic adjusters in order so that they can be reinstalled in their respective locations.

6. Remove the camshaft roller followers.

cardiagn.com

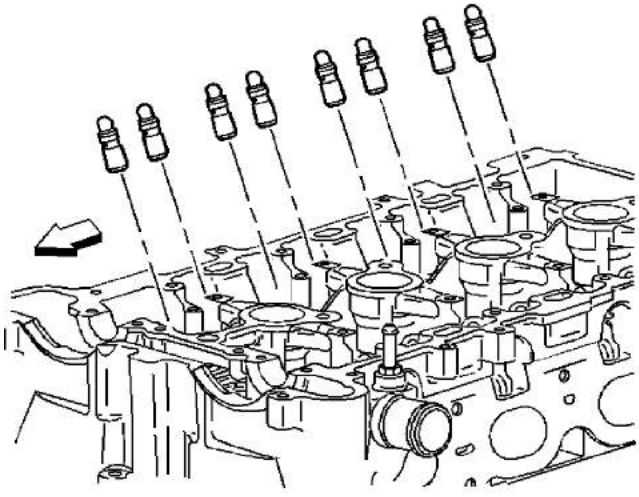

7. Remove the hydraulic element lash adjusters.

Installation Procedure

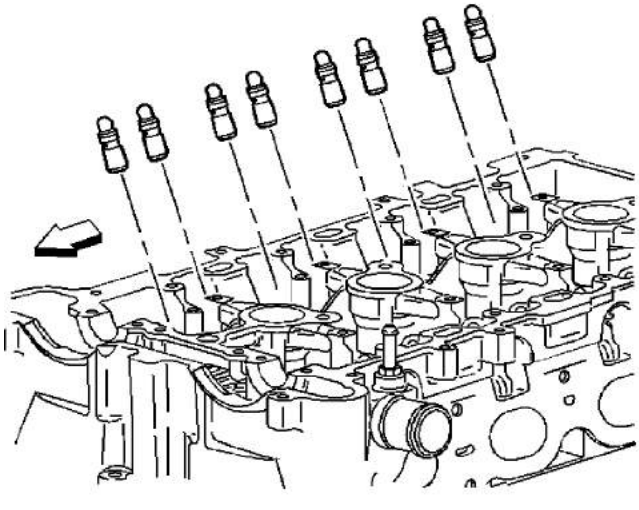

1. Install the hydraulic element lash adjusters into their bores in the cylinder head.
2. Lubricate the hydraulic lash adjusters with GM P/N 12345501 (Canadian P/N 992704) or equivalent.

cardiagn.com

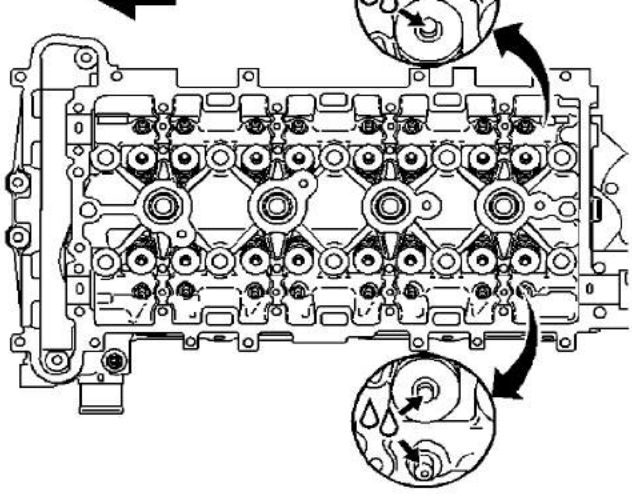

3. Lubricate the valve tips with GM P/N 12345501 (Canadian P/N 992704) or equivalent.

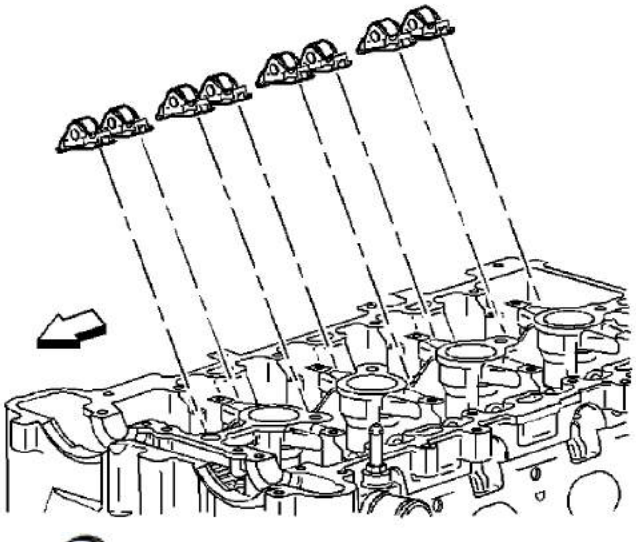

Note: Used roller followers MUST be returned to the original position on the camshaft. If the camshaft is being replaced, the roller followers actuated by the camshaft must also be replaced.

4. Position the roller followers on the tip of the valve stem and on the lash adjuster. Apply lubricate GM P/N 12345501 (Canadian P/N 992704) or equivalent.

cardiagn.com

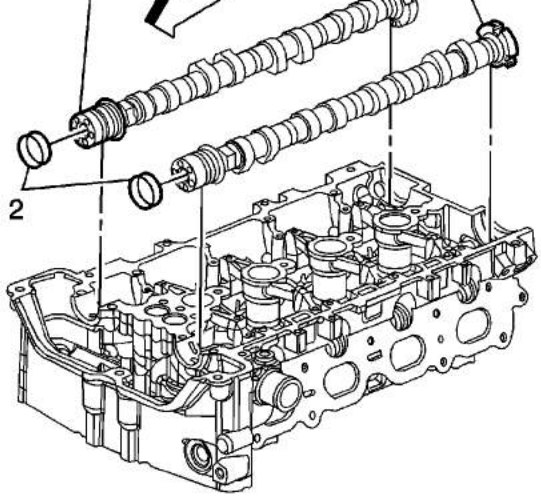

5. Install the exhaust camshaft (3). Lubricate with GM P/N 12345501 (Canadian P/N 992704) or equivalent.

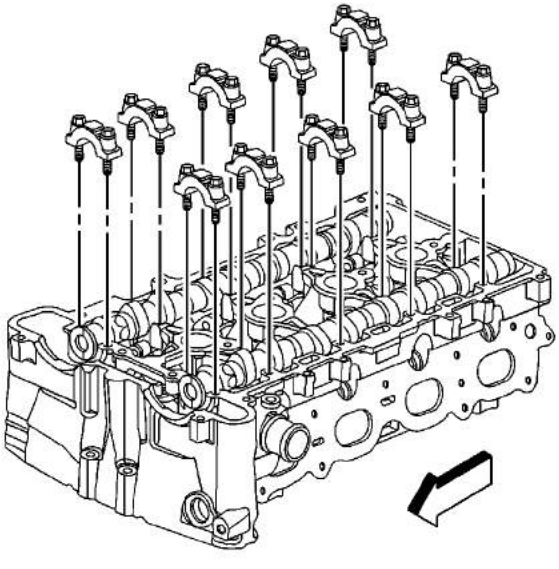

6. Install the camshaft bearing caps. Hand tighten the cap bolts.

   Caution: Refer to Fastener Caution in the Preface section.

7. Tighten the bearing cap bolts in increments of 3 turns until they are seated. Tighten the bolts to **10 N·m (89 lb in)**.
8. Install the exhaust camshaft position actuator. Refer to Camshaft Position Exhaust Actuator Replacement.

cardiagn.com

Camshaft Position Intake Actuator Replacement

Special Tools

- EN-48749 Timing Chain Retention Tool Kit
- EN-48953 Camshaft Actuator Locking Tool
- J 45059 Angle Meter

Removal Procedure

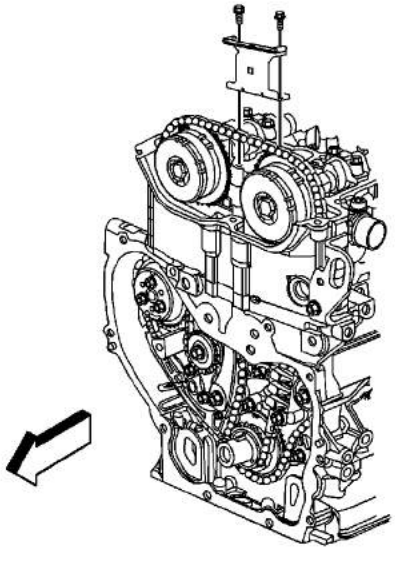

1. Remove the camshaft cover. Refer to Camshaft Cover Replacement.
2. Remove the spark plugs. Refer to Spark Plug Replacement.
3. Remove the upper timing chain guide bolts and guide.

cardiagn.com

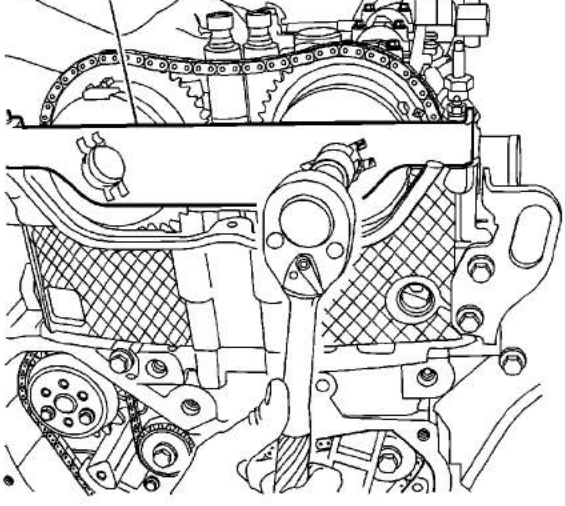

4. Rotate the crankshaft clockwise and install the camshaft actuator retainer EN-48953 (1).

   Caution: Refer to Fastener Caution in the Preface section.

5. Install the camshaft actuator retainer bolts and tighten to **10 N·m (89 lb in)** .
6. Loosen, but DO NOT remove the intake camshaft actuator bolt.
7. Remove the camshaft actuator locking tool, EN-48953 (1).

   Note: Ensure the timing chain and the camshaft position actuators are marked for proper assembly.

8. Mark the intake and exhaust camshaft actuators and the respective locations on the timing chain.

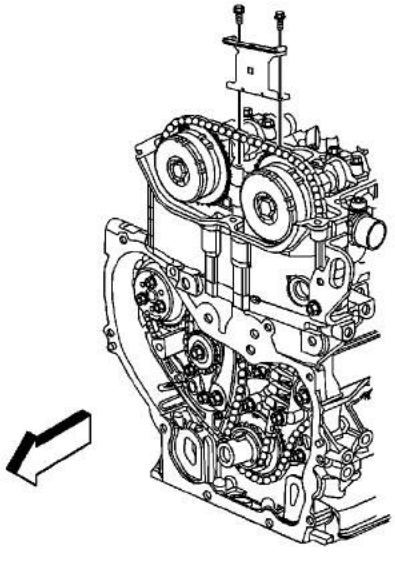

cardiagn.com

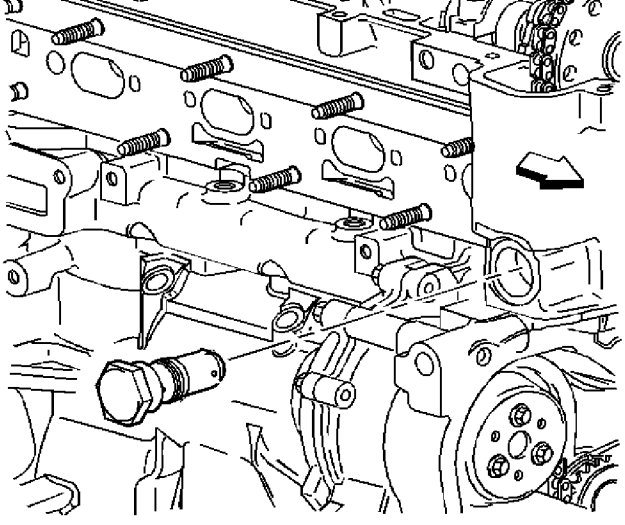

10. Remove the timing chain tensioner.

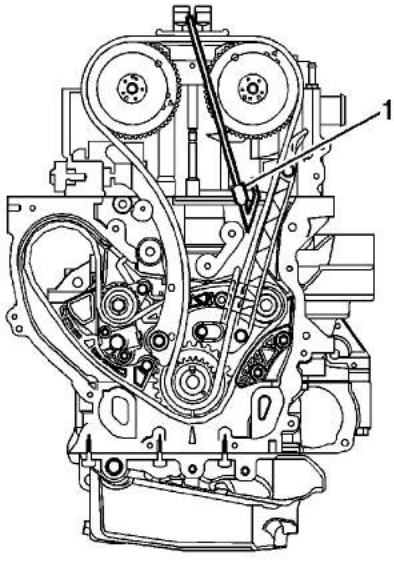

Note:

- The camshaft actuators should not rotate during the removal or installation.
- Ensure the tips of the are fully engaged into the timing chain. The retention tool rod can be used on the back side of the chain to ensure the teeth from the retention tool are engaged.

11. Install the timing chain retention tool EN-48749 (1) to the intake side of the timing chain.

cardiagn.com

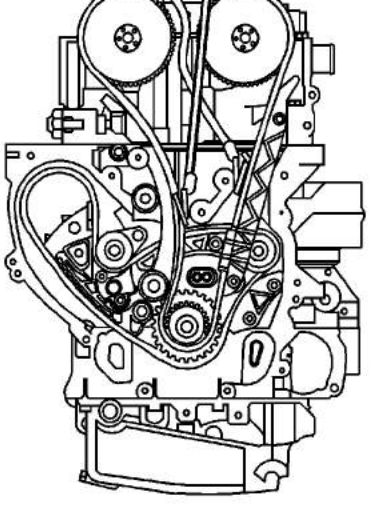

12. Install the timing chain retention tool EN-48749 (2) to the exhaust side of the timing chain.

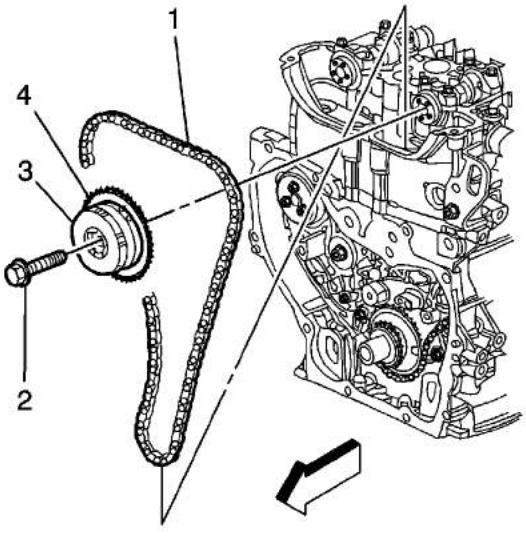

13. Remove and discard the intake camshaft actuator bolt (2).
14. Rotate the exhaust camshaft clockwise slightly to take the tension off of the timing chain on the intake actuator.
15. Remove the intake camshaft actuator (3) from the camshaft while also removing the actuator from the timing chain.

Installation Procedure

cardiagn.com

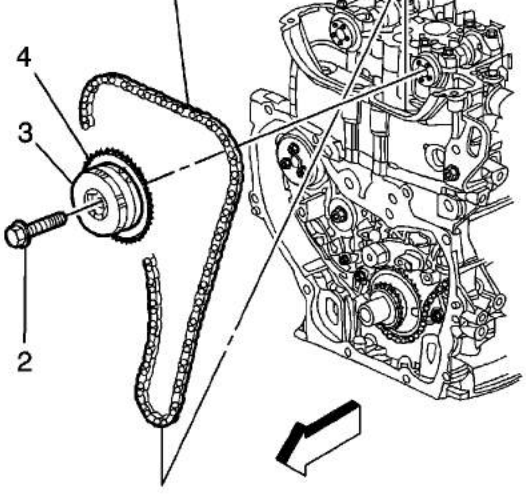

Note: Ensure that the alignment mark made previously on the exhaust camshaft actuator is still aligned properly with the mark on the timing chain.

1. Install the timing chain onto the intake camshaft actuator.
2. Align the intake camshaft actuator alignment mark made previously with the timing chain mark and install the actuator onto the camshaft rotating the exhaust camshaft clockwise, if required.
3. Install a NEW intake camshaft actuator bolt (2) until snug.

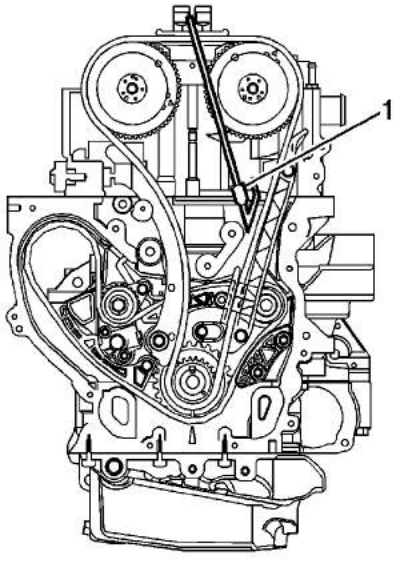

4. Remove the timing chain retention tool (1) from the intake side of the timing chain.

cardiagn.com

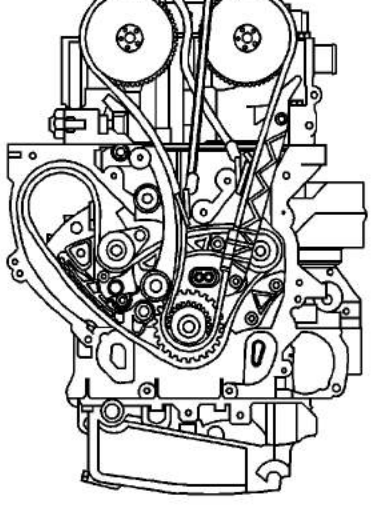

5. Remove the timing chain retention tool (2) from the exhaust side of the timing chain.
6. Reset and install the timing chain tensioner. Refer to Timing Chain Tensioner Replacement

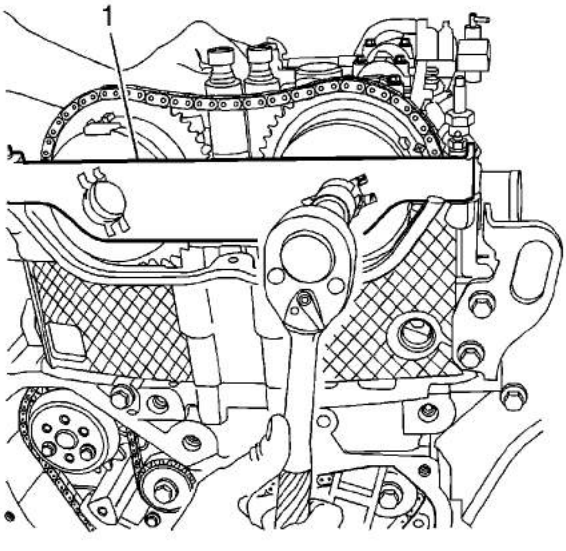

7. Install the camshaft actuator retainer (1).
8. Install the camshaft actuator retainer bolts and tighten to **10 N·m (89 lb in)**.
9. Tighten the NEW camshaft actuator bolt to **30 N·m (22 lb ft) plus an additional 100 degrees** using the J 45059 .

   Note: You must have the EN-48953 installed to perform this procedure.

10. Release the tensioner by rotating the crankshaft balancer counterclockwise then tighten the bolt to **45 N·m (33 lb ft).**.
11. Remove the camshaft actuator retainer EN-48953 (1).

cardiagn.com

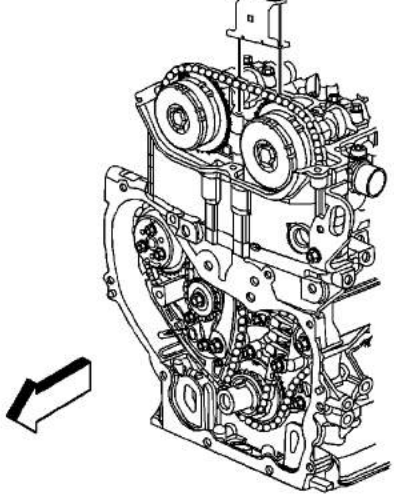

12. Install the upper timing chain guide and bolts and tighten to **10 N·m (89 lb in)**.
13. Install the spark plugs. Refer to Spark Plug Replacement.
14. Install the camshaft cover. Refer to Camshaft Cover Replacement.

cardiagn.com

Camshaft Position Exhaust Actuator Replacement

Special Tools

- EN-48749 Timing Chain Retention Tool Kit
- EN-48953 Camshaft Actuator Locking Tool
- J 45059 Angle Meter

Removal Procedure

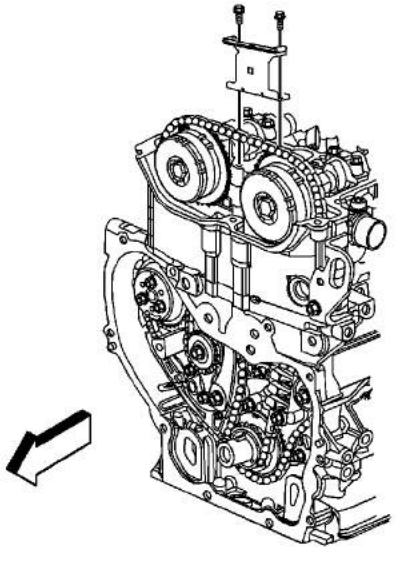

1. Remove the camshaft cover. Refer to Camshaft Cover Replacement.
2. Remove the spark plugs. Refer to Spark Plug Replacement.

cardiagn.com

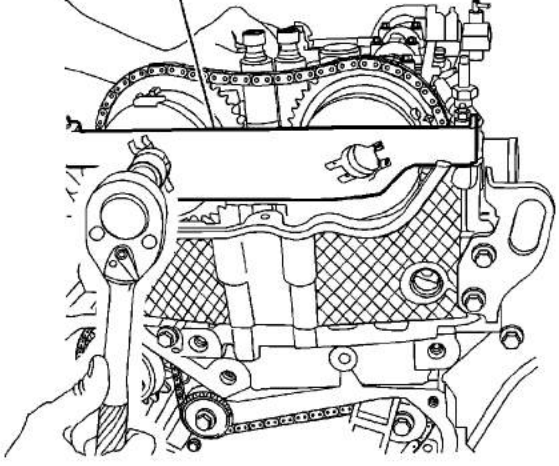

3. Rotate the crankshaft clockwise and install the camshaft actuator retainer EN-48953 (1).

   Caution: Refer to Fastener Caution in the Preface section.

4. Install the camshaft actuator retainer bolts and tighten to **10 N·m (89 lb in)**.
5. Loosen, but do not remove the exhaust camshaft actuator bolt.

   Note: Ensure the timing chain and the camshaft position actuators are marked for proper assembly.

6. Mark the intake and exhaust camshaft actuators and the respective locations on the timing chain.

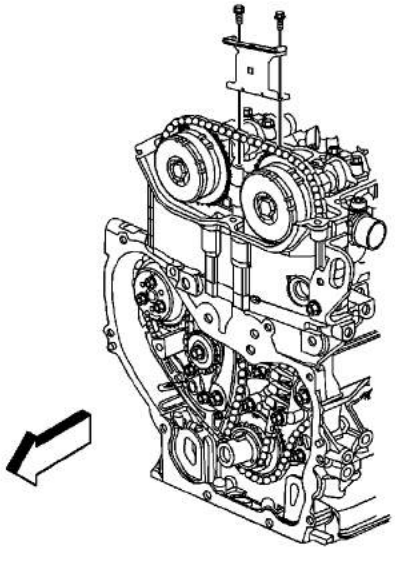

7. Remove the upper timing chain guide bolts and guide.

cardiagn.com

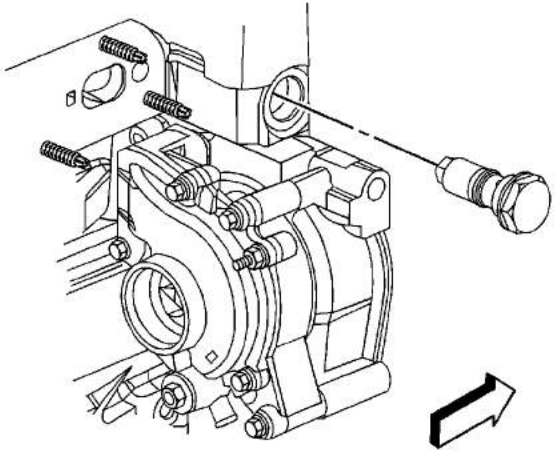

8. Remove the timing chain tensioner.

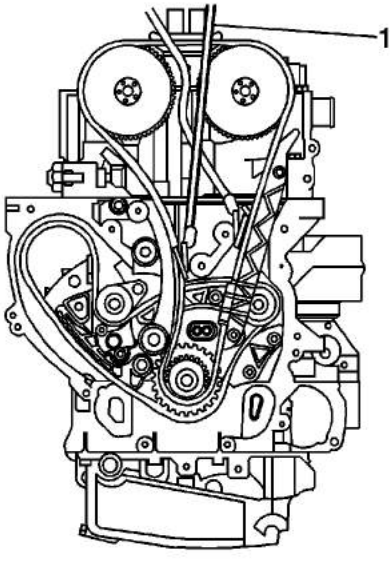

Note:

- The camshaft actuators should not rotate during the removal or installation.
- Ensure the tips of the EN-48749 are fully engaged into the timing chain. The retention tool rod can be used on the back side of the chain to ensure the teeth from the retention tool are engaged.

9. Install the timing chain retention tool EN-48749 (1) to the exhaust side of the timing chain.

cardiagn.com

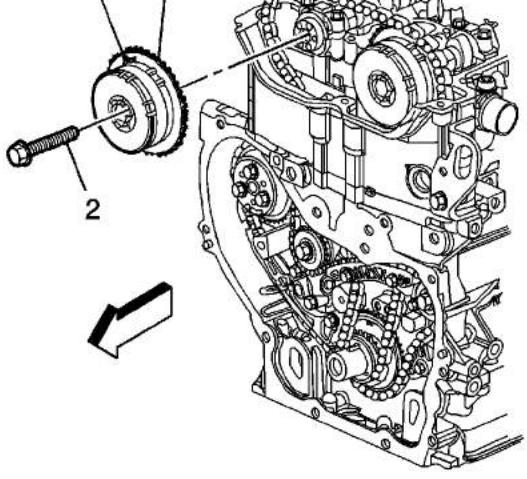

10. Remove and discard the exhaust camshaft actuator bolt (2).
11. Remove the exhaust camshaft actuator (3) from the camshaft while also removing the actuator from the timing chain.

Installation Procedure

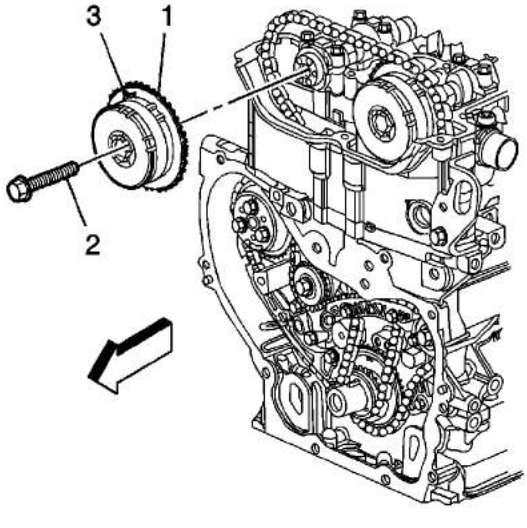

Note:

- Ensure that the alignment mark made previously on the intake camshaft actuator is still aligned properly with the mark on the timing chain.
- The exhaust camshaft may need to be rotated clockwise to fully set the camshaft

cardiagn.com

1. Install the timing chain onto the exhaust camshaft actuator.
2. Align the exhaust camshaft actuator alignment mark made previously with the timing chain mark and install the actuator onto the camshaft.
3. Install a NEW exhaust camshaft actuator bolt (2) until snug.

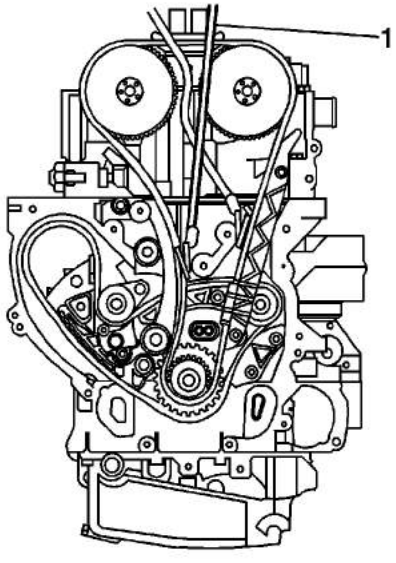

4. Remove the timing chain retention tool EN-48749 (1) from the exhaust side of the timing chain.
5. Reset and install the timing chain tensioner. Refer to Timing Chain Tensioner Replacement.

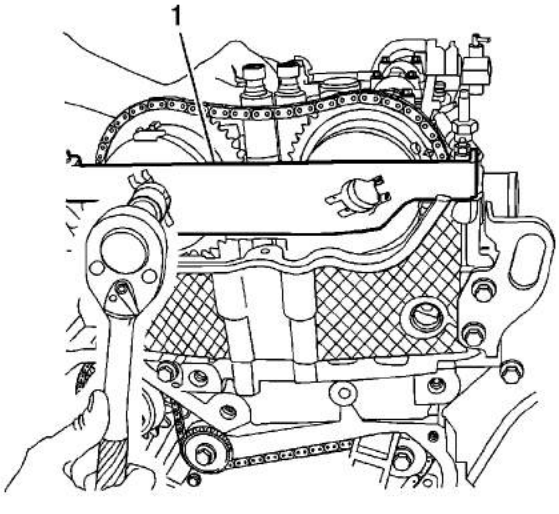

6. Install the camshaft actuator retainer (1).
7. Install the camshaft actuator retainer bolts and tighten **10 N·m (89 lb in)**.
8. Tighten the NEW camshaft actuator bolt to **30 N·m (22 lb ft) plus an additional 100 degrees** using the J 45059 .

cardiagn.com

9. Release the tensioner by rotating the crankshaft balancer counterclockwise then tighten the bolt to **45 N·m (33 lb ft)**..

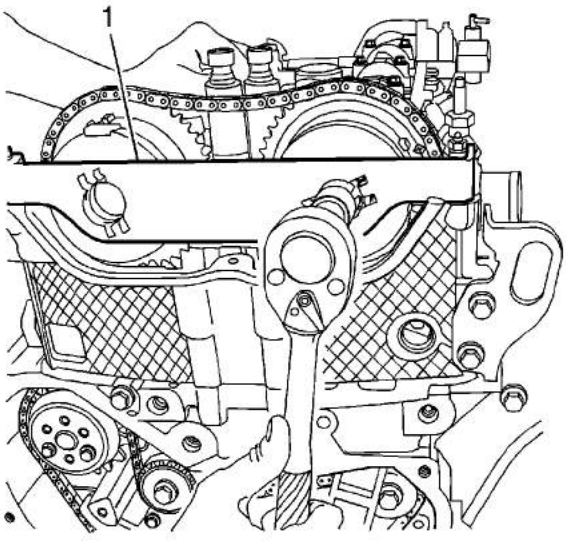

10. Remove the camshaft actuator retainer EN-48953 (1).

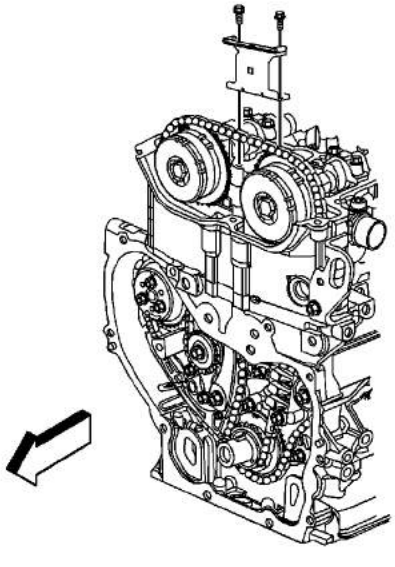

11. Install the upper timing chain guide and bolts and tighten to **10 N·m (89 lb in)**.
12. Install the camshaft cover. Refer to Camshaft Cover Replacement.
13. Install the spark plugs. Refer to Spark Plug Replacement.

cardiagn.com

Valve Stem Oil Seal and Valve Spring Replacement

Tools Required

- J 43649 Valve Spring Compressor
- J 36017 Valve Guide Seal Remover
- J 43653 Flywheel Holding Tool
- J 43655 Sprocket Holding Tool

Removal Procedure

Important: Prevent the crankshaft from rotating clockwise or counter-clockwise before using compressed air in the cylinder. Rotation of the crankshaft may cause damage to J 43655 .

1. If equipped with a manual transmission leave the transmission in first gear with the vehicle on the ground and the parking brake set.
2. If equipped with an automatic transmission, remove the starter. Refer to Starter Motor Replacement .
3. Install J 43653 .

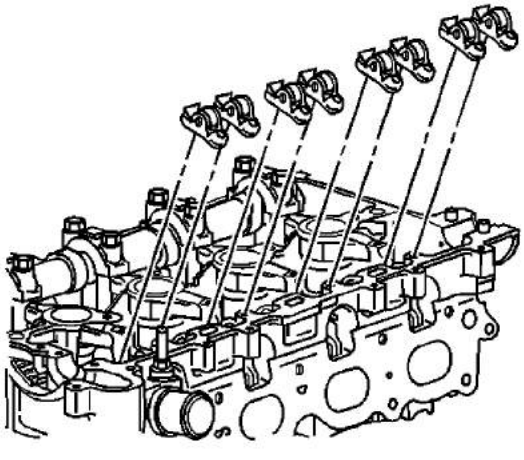

4. Remove the camshaft. Refer to Intake Camshaft and Valve Lifter Replacement or Exhaust Camshaft and Valve Lifter Replacement .
5. Remove the camshaft roller followers.

cardiagn.com

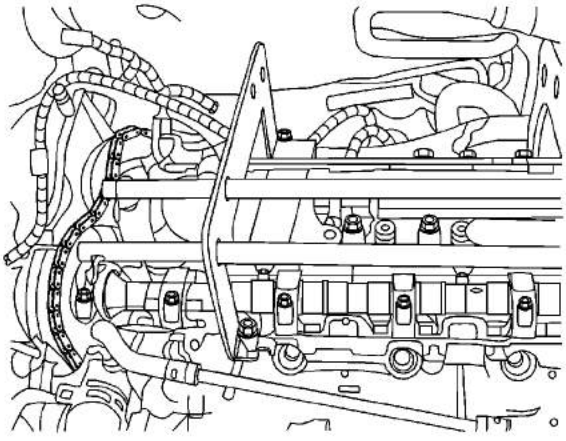

6. Install the front section of the J 43649 to the second camshaft cover bolt hole.

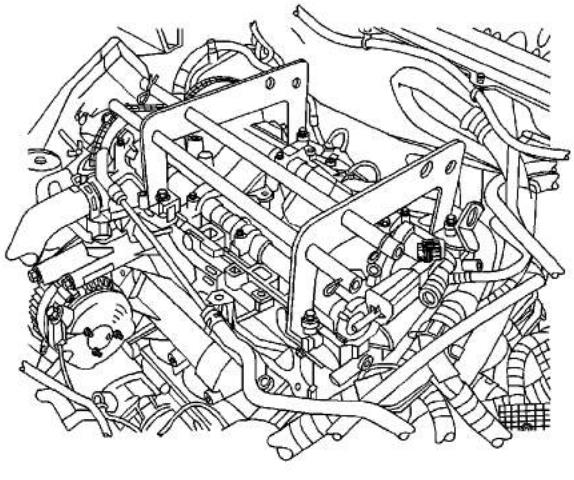

7. Install the remaining parts of the J 43649 to the cylinder head.
8. Remove the spark plugs. Refer to Spark Plug Replacement .

cardiagn.com

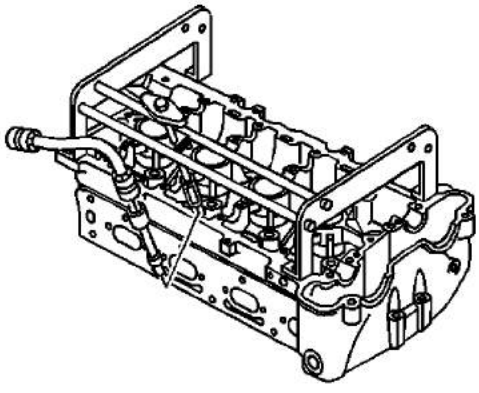

9. Install an air hose adapter into the spark plug hole.
10. Attach an air hose to the adapter
11. Using the compressed air, pressurize the cylinder to 690 kPa (100 psi).
12. Compress the valve spring using the J 43649 .

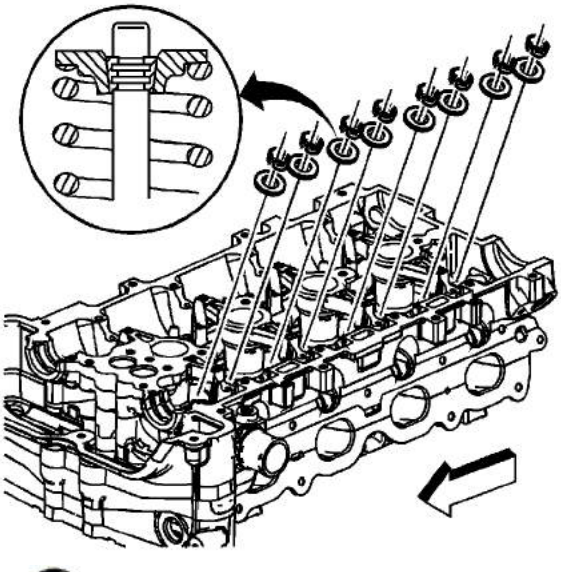

13. Remove the valve spring keepers.
14. Remove the valve spring retainer.

cardiagn.com

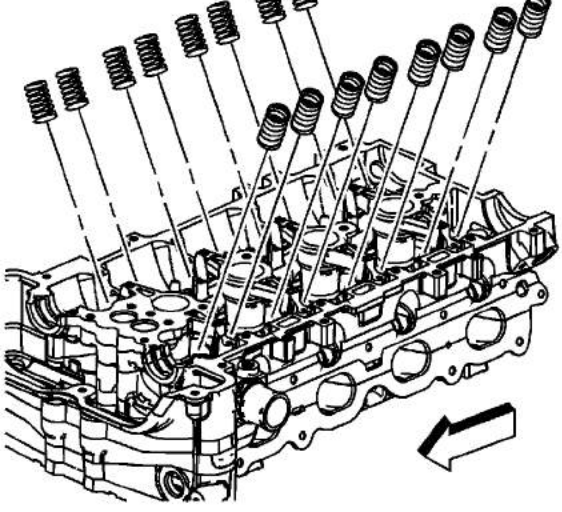

15. Remove the valve spring.

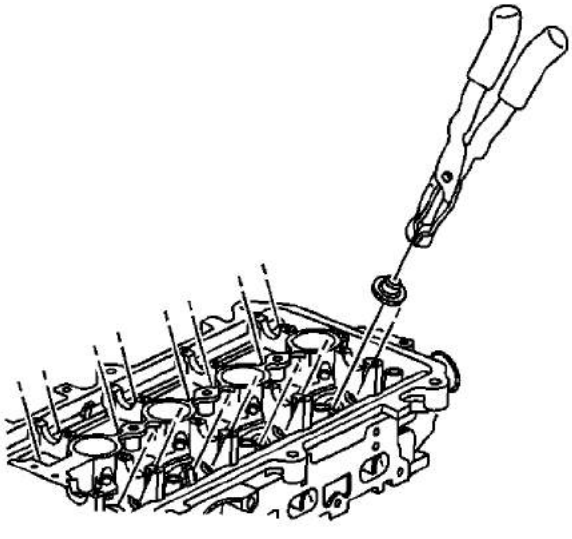

16. Using the J 36017 remove the valve seal.

Installation Procedure

cardiagn.com

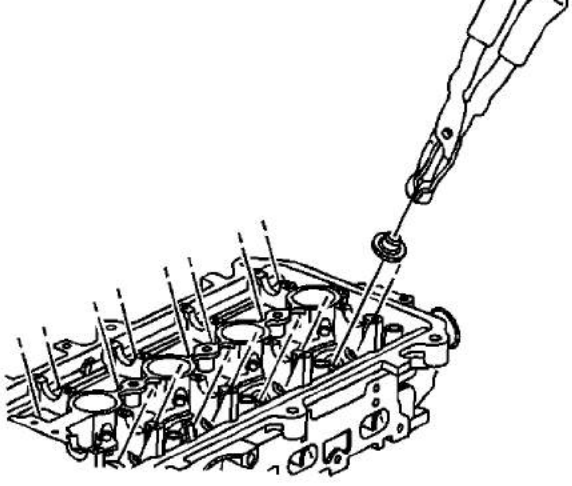

1. Using the J 36017 install the NEW valve seal. Fully seat the seal onto the valve guide.

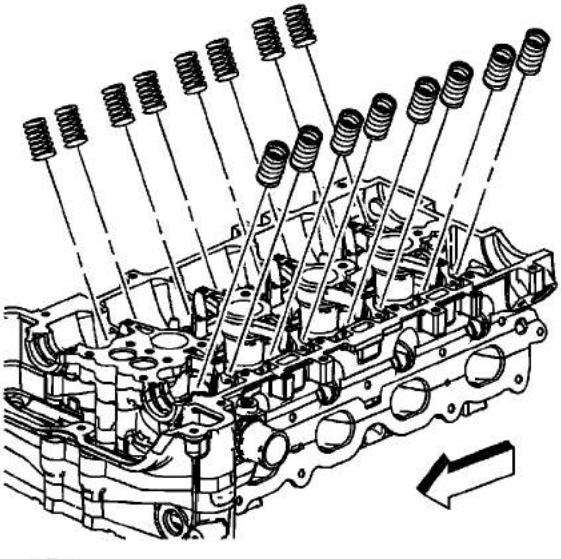

2. Install the valve spring.

cardiagn.com

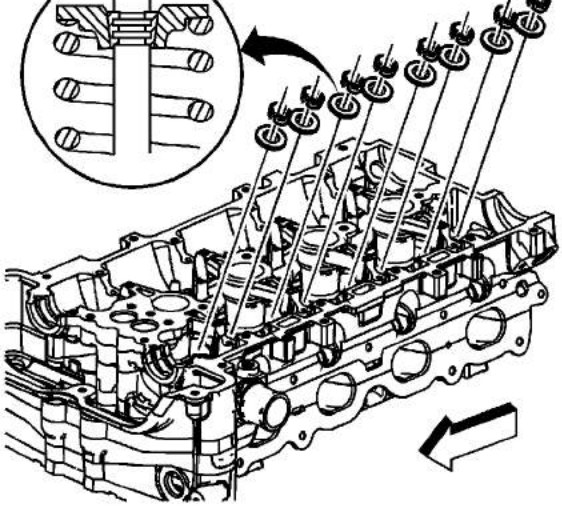

3. Install the valve spring retainer.
4. Compress the valve spring using the J 43649 .
5. Install the valve spring keepers.

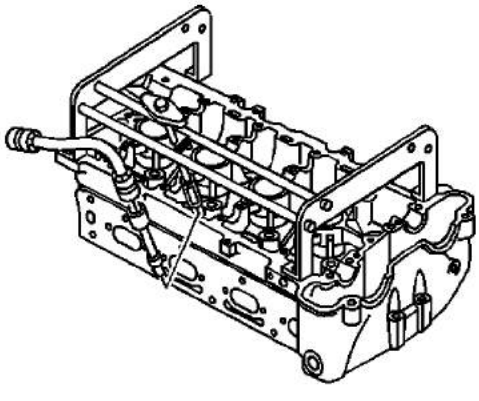

6. Disconnect the air hose from the adapter.
7. Remove the air hose adapter from the spark plug hole.

cardiagn.com

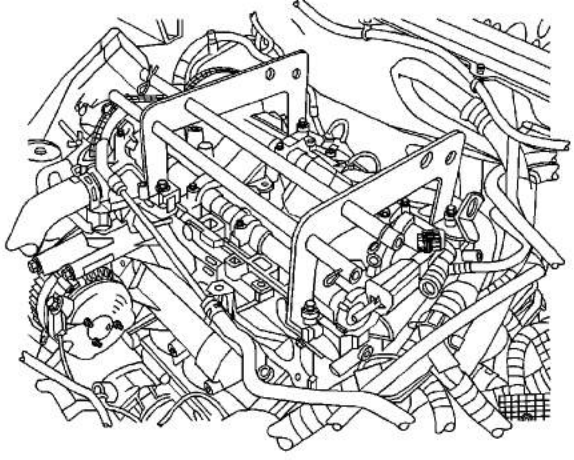

8. Remove the J 43649 from the cylinder head.
9. Install the spark plugs. Refer to Spark Plug Replacement .

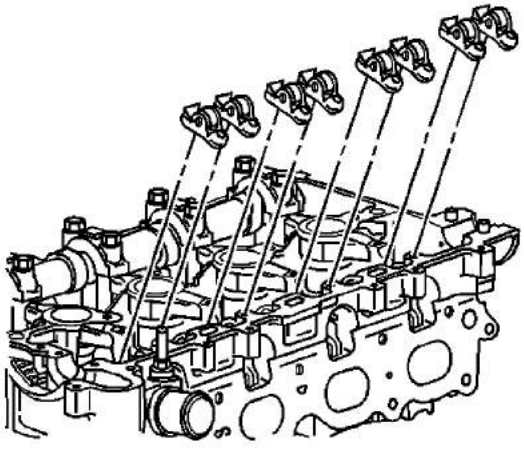

10. Install the camshaft roller followers.
11. Install the camshaft. Refer to Intake Camshaft and Valve Lifter Replacement or Exhaust Camshaft and Valve Lifter Replacement .
12. If used, remove the J 43653 .
13. If removed, install the starter. Refer to Starter Motor Replacement .

cardiagn.com

Cylinder Head Replacement

Special Tools

- J 38185 Hose Clamp Pliers
- J 45059 Angle Meter
- EN-48749 Timing Chain Retention Tool Kit
- EN-48953 Camshaft Actuator Locking Tool

Removal Procedure

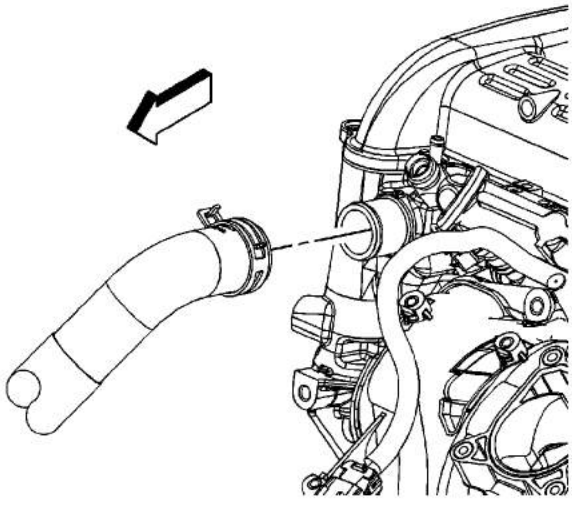

1. Drain the cooling system. Refer to Cooling System Draining and Filling.
2. Remove the exhaust manifold. Refer to Exhaust Manifold Replacement.
3. Remove the intake manifold. Refer to Intake Manifold Replacement.
4. Reposition the radiator surge tank air bleed hose clamp.
5. Remove the radiator surge tank air bleed hose from the cylinder head.
6. Reposition the radiator inlet hose clamp using the J 38185 .
7. Remove the radiator inlet hose from the cylinder head.
8. Disconnect all electrical connectors as necessary.
9. Remove the camshaft cover. Refer to Camshaft Cover Replacement.

cardiagn.com

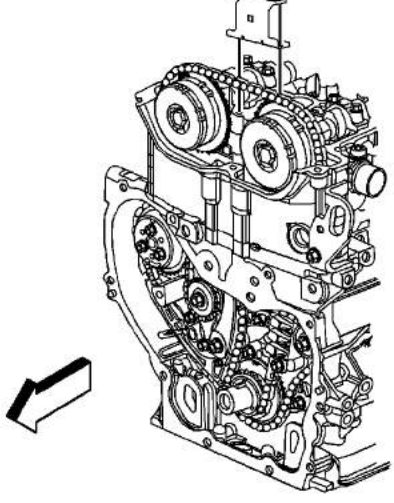

10. Remove the upper timing chain guide bolts and guide.

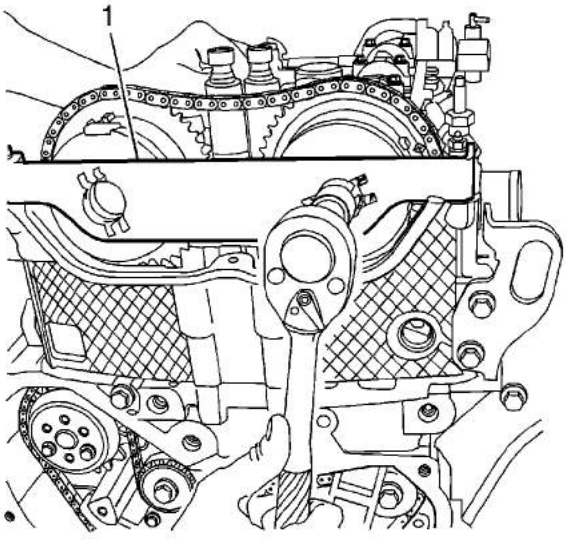

Note:

- If the intake camshaft actuator is moving independently of the camshaft, this means the camshaft is not locked to the actuator. Rotate the camshaft counter-clockwise while the holding tool is installed and this will lock the camshaft to the actuator.
- Ensure the timing chain and the camshaft position actuators are marked for proper assembly.

11. Rotate the intake camshaft clockwise and install the EN-48953 (1) to the actuators.

Caution: Refer to Fastener Caution in the Preface section.

cardiagn.com

14. Mark the timing gear sprockets and the timing chain. It is recommended that the paint marks are located in the 12 o'clock position.
15. Loosen, but do not remove the intake and exhaust camshaft actuator bolts.
16. Remove the camshaft actuator locking tool, EN-48953 .

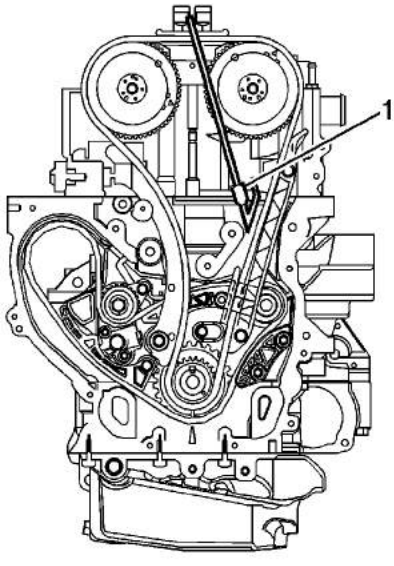

Note: Ensure the tips of the EN-48749 are fully engaged into the timing chain. The retention tool rod can be used on the back side of the chain to ensure the teeth from the retention tool are engaged.

17. Install the timing chain retention tool EN-48749 (1) to the intake side of the timing chain.

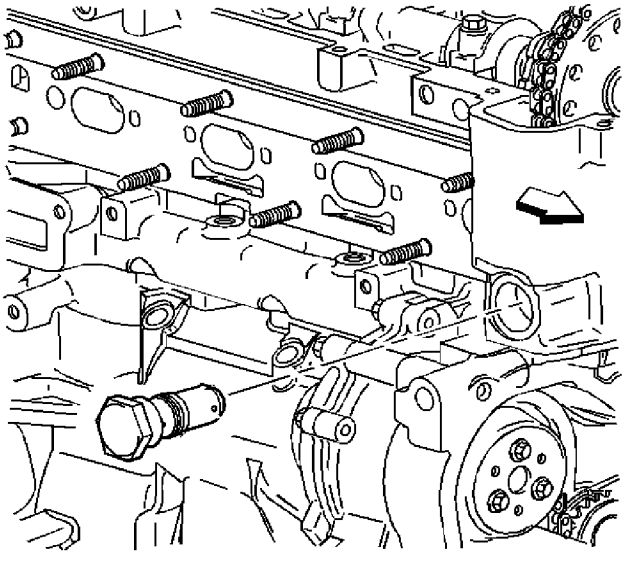

18. Remove the timing chain tensioner.

cardiagn.com

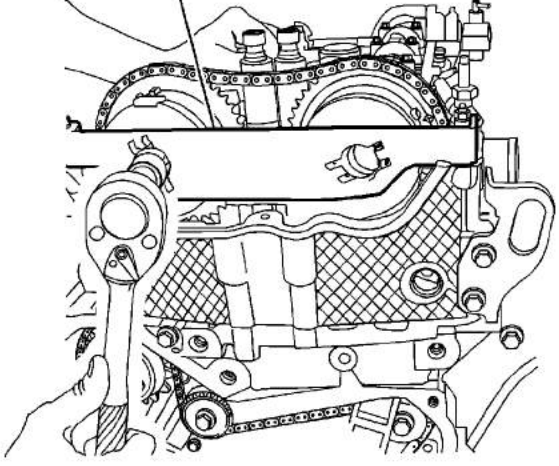

Note: The camshaft actuators should not rotate during the removal of installation.

19. Install the timing chain retention tool EN-48749 (1) to the exhaust side of the timing chain.

Object Number: 1578298 Size: SH

20. Remove and discard the exhaust camshaft actuator bolt (2).

cardiagn.com

21. Remove and discard the intake camshaft actuator bolt (2).
22. Remove the intake camshaft actuator (3) from the camshaft while also removing the actuator from the timing chain.

Object Number: 2066509 Size: SH

23. Mark the cylinder head (1) in relationship to the camshaft actuator notch is on the camshaft (2).

cardiagn.com

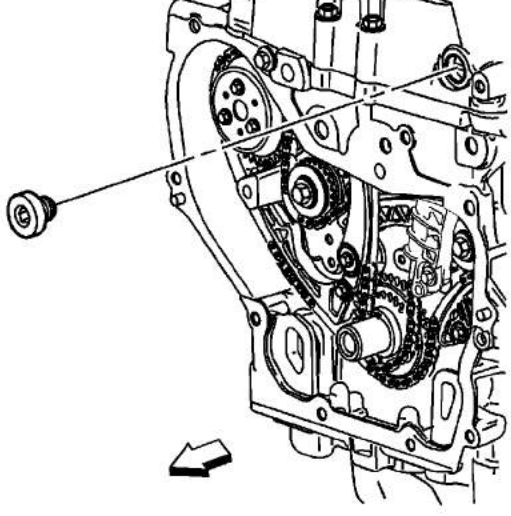

24. Remove the fixed timing chain guide access plug.

Object Number: 2066512 Size: SH

Note: The threaded rod from the timing chain retention tool can be used to help feed the rubber band around the chain guides.

25. Install a rubber band (1) around the top of the upper timing chain guides (2) in order to pull the guides together.

cardiagn.com

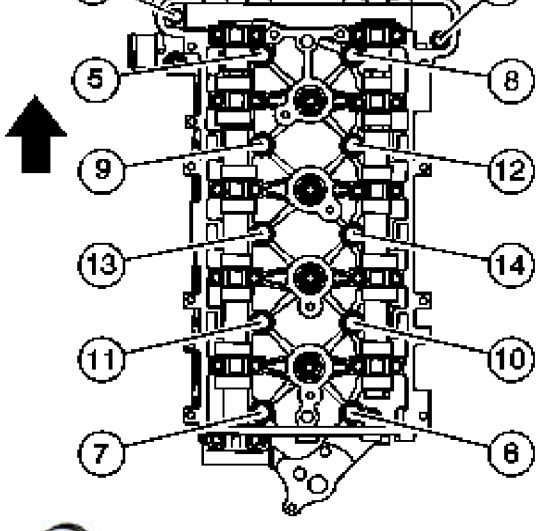

26. Remove the cylinder head bolts in the sequence shown. Discard the bolts.

Object Number: 412427 Size: SH

27. Remove the cylinder head.
28. Remove the cylinder head gasket.
29. Clean all of the gasket surfaces.
30. Use the following steps when cleaning the cylinder head and cylinder block surfaces:
    - Use a razor blade gasket scraper to clean the cylinder head and cylinder block gasket surfaces. Do not scratch or gouge either surface.

Note: DO NOT use any other method or technique to clean these gasket surfaces.

    - Use a NEW razor blade on the cylinder head and a NEW blade on the cylinder block.

cardiagn.com

appearance. There will be indentations from the gasket left in the cylinder head after all of the gasket material is removed. These small indentations will be filled in by the NEW gasket.

- Hold the razor blade as parallel to the gasket surface as possible.

31. Clean the old sealer/lube and any dirt from around the bolt holes.

    Note: DO NOT use a tap to clean the cylinder head bolt holes.

32. Clean the bolts holes with a nylon bristle brush.
33. When cleaning the cylinder head bolt holes use suitable commercial spray liquid solvent and compressed air from an extended-tip blow gun in order to reach the bottom of the holes.
34. If replacing the cylinder head, transfer all parts as necessary.

Installation Procedure

Object Number: 412427 Size: SH

Note: DO NOT use any sealing material.

1. Install the cylinder head gasket.
2. Install the cylinder head.
3. Install NEW cylinder head bolts.

cardiagn.com

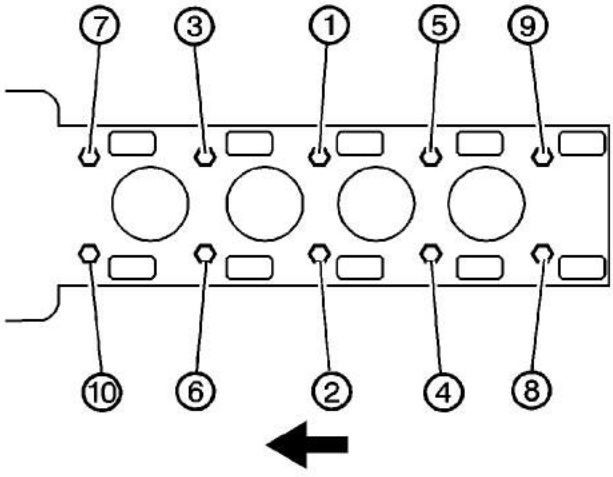

4. Install and tighten the cylinder head bolts in the sequence shown. Tighten the bolts to **30 N·m (22 lb ft) plus an additional 155 degrees** using the J 45059 .

Object Number: 412425 Size: SH

5. Install the NEW front cylinder head bolts and tighten to **35 N·m (26 lb ft)**.

cardiagn.com

6. Ensure the cylinder head (1) and the camshaft (2) are correctly aligned.

Object Number: 2066512 Size: SH

7. Remove the rubber band (1) from around the top of the upper timing chain guides (2).
8. Install the fixed guide bolt into the cylinder bolt and tighten to **12 N·m (106 lb in).**

cardiagn.com

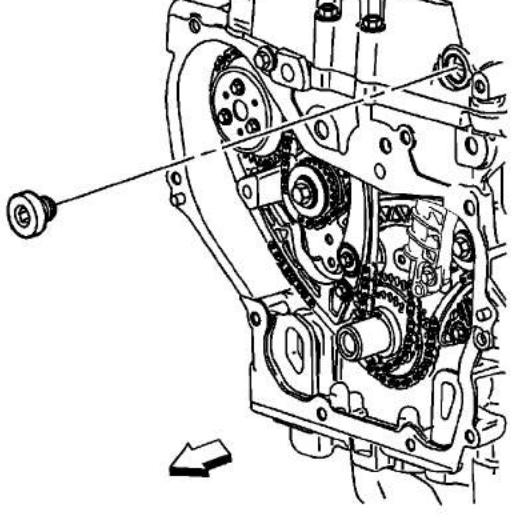

9. Apply sealant compound to thread and install the timing chain guide bolt access hole plug. Refer to Adhesives, Fluids, Lubricants, and Sealers for the correct part number.
10. Install the fixed timing chain guide access plug. Tighten the chain guide plug to **90 N·m (59 lb ft)**.

Object Number: 1578297 Size: SH

Note: Ensure that the alignment mark made previously on the exhaust camshaft actuator is still aligned properly with the mark on the timing chain.

11. Install the timing chain onto the intake camshaft actuator.
12. Align the intake camshaft actuator alignment mark made previously with the timing chain mark and install the actuator onto the camshaft.
13. Install a NEW intake camshaft actuator bolt (2) until snug.

cardiagn.com

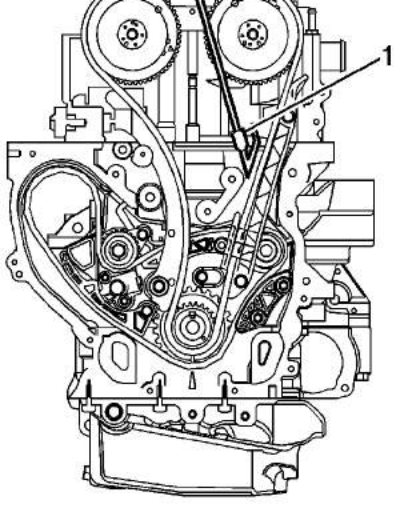

14. Remove the timing chain retention tool EN-48749 (1) from the intake side of the timing chain.

Object Number: 1578298 Size: SH

Note: Ensure that the alignment mark made previously on the intake camshaft actuator is still aligned properly with the mark on the timing chain.

15. Install the timing chain onto the exhaust camshaft actuator.
16. Align the exhaust camshaft actuator alignment mark made previously with the timing chain mark and install the actuator onto the camshaft.
17. Install a NEW exhaust camshaft actuator bolt (2) until snug.

cardiagn.com

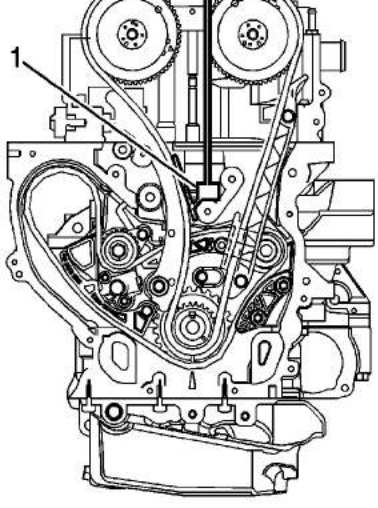

18. Remove the timing chain retention tool EN-48749 (1) from the exhaust side of the timing chain.
19. Reset and install the timing chain tensioner. Refer to Timing Chain Tensioner Replacement.

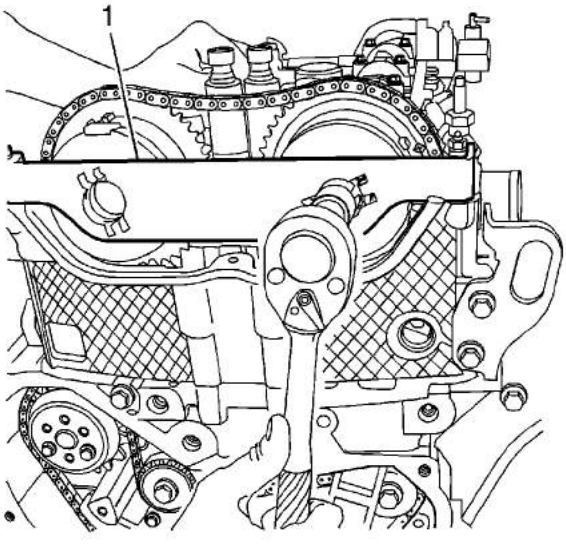

20. Install the EN-48953 (1) to the actuators.
21. Install the camshaft actuator locking tool bolts and tighten to **10 N·m (89 lb in)**.
22. Release the tensioner by applying a counterclockwise torque on the harmonic balancer bolt and tighten the bolt to **45 N·m (33 lb ft).**
23. Tighten the NEW camshaft actuator bolt to **85 N·m (63 lb ft), plus an additional 30 degrees** using the J 45059 .
24. Remove the camshaft actuator locking tool, EN-48953 .

cardiagn.com

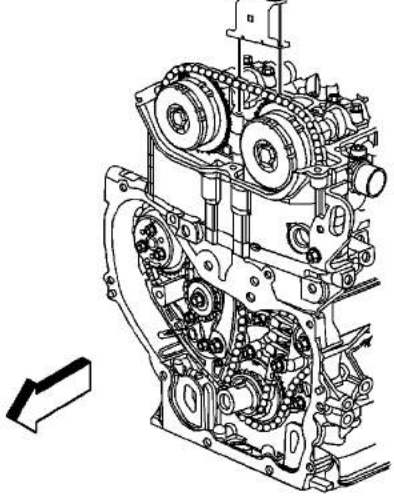

25. Install the upper timing chain guide bolts and guide. Tighten the bolts to **10 N·m (89 lb in)**.
26. Install the camshaft cover. Refer to Camshaft Cover Replacement.

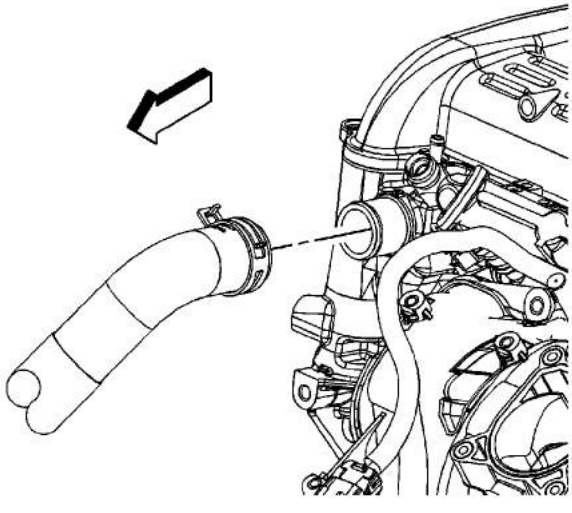

27. Connect all electrical connectors as necessary.
28. Install the radiator inlet hose to the cylinder head.
29. Position the radiator inlet hose clamp using the J 38185 .
30. Install the radiator surge tank air bleed hose to the cylinder head.
31. Position the radiator surge tank air bleed hose clamp.
32. Install the exhaust manifold. Refer to Exhaust Manifold Replacement.
33. Install the intake manifold. Refer to Intake Manifold Replacement.
34. Fill the cooling system. Refer to Cooling System Draining and Filling.

cardiagn.com

Oil Pan Replacement (LAT)

Removal Procedure

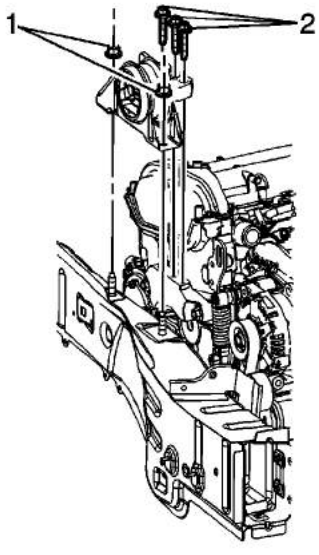

1. Remove the drive belt. Refer to Drive Belt Replacement.
2. Remove the oil level indicator tube. Refer to Oil Level Indicator and Tube Replacement.

   Note: The support fixture bar must be installed to provide enough access to remove and properly tighten the oil pan bolts.

3. Install the engine support fixture. Refer to Engine Support Fixture.
4. Remove engine mount to bracket bolts (2).
5. Remove the engine mount to side rail nuts (1).
6. Remove the engine mount from the engine compartment.
7. Using the engine support fixture, raise the engine approximately 3 inches.
8. Raise and support the vehicle. Refer to Lifting and Jacking the Vehicle.

cardiagn.com

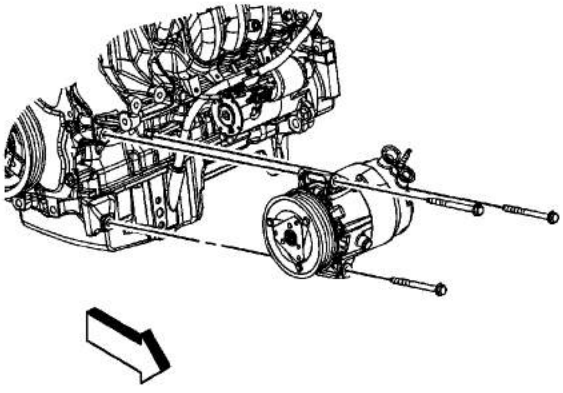

9. Loosen the upper air conditioning (A/C) compressor bolts.
10. Remove the lower A/C compressor bolt.

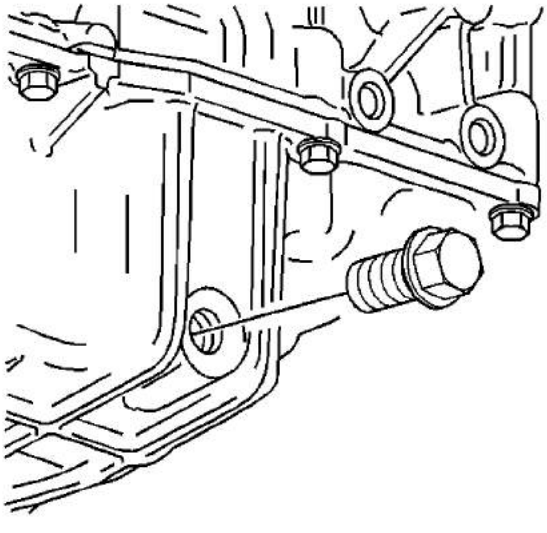

11. Place a suitable drain pan under the oil pan drain plug.
12. Remove the oil pan drain plug.
13. Drain the engine oil.
14. Reinstall the oil pan drain plug until snug.

cardiagn.com

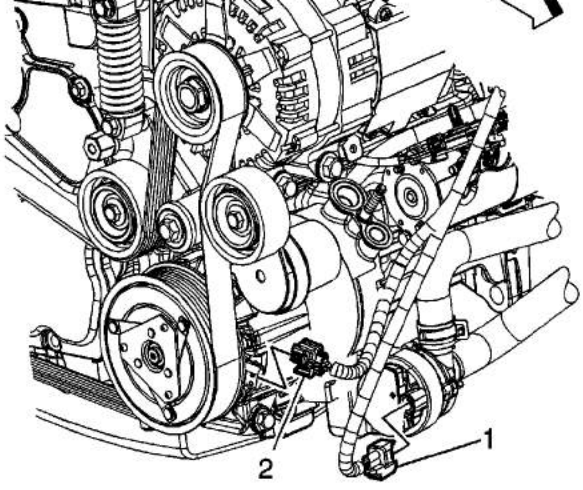

15. Disconnect the engine wiring harness electrical connector (1) from the generator control module coolant pump.

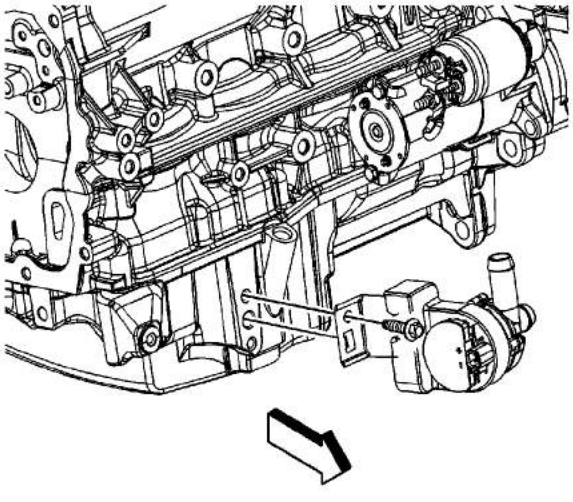

16. Remove the generator control module coolant pump bolt.
17. Remove the generator control module coolant pump from the oil pan.

cardiagn.com

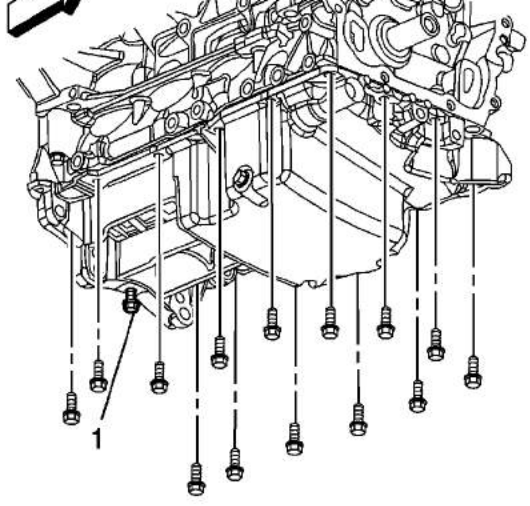

18. Remove the 4 oil pan to transaxle bolts.
19. Remove the oil pan bolts.

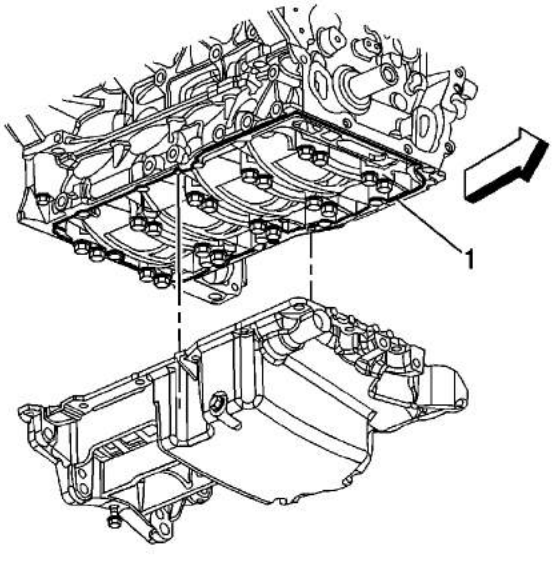

20. Remove the oil pan
21. Remove any old oil pan sealant (1).

Installation Procedure

cardiagn.com

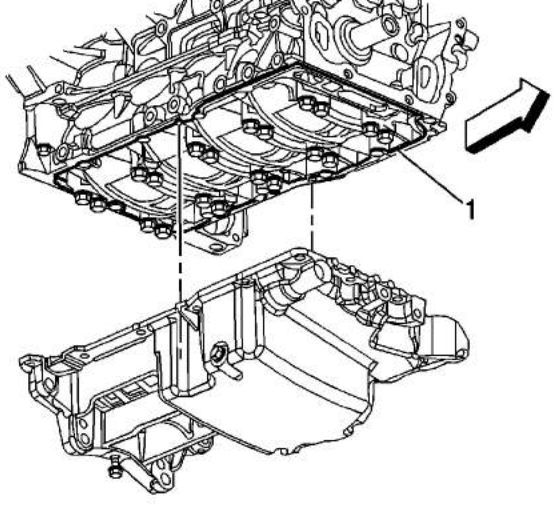

1. Ensure that the oil pan and the sealing surface on the lower crankcase are free of all oil and debris.
2. Apply a 2 mm bead of sealant (1) around the perimeter of the oil pan and the oil suction port opening. DO NOT over apply the sealant. More than a 2 mm bead is not required. Refer to Adhesives, Fluids, Lubricants, and Sealers.
3. Install the oil pan.

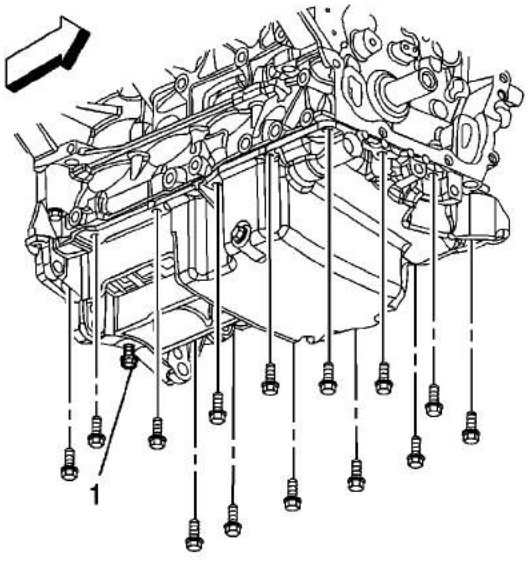

4. Install the oil pan bolts.

   Caution: Refer to Fastener Caution in the Preface section.

5. Install the 4 oil pan to transaxle bolts and tighten to **75 N·m (55 lb ft)**.

cardiagn.com

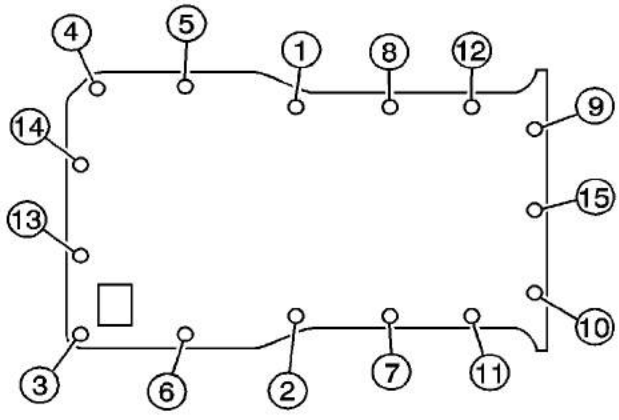

6. Tighten the oil pan bolts in the sequence shown to **25 N·m (18 lb ft)**.

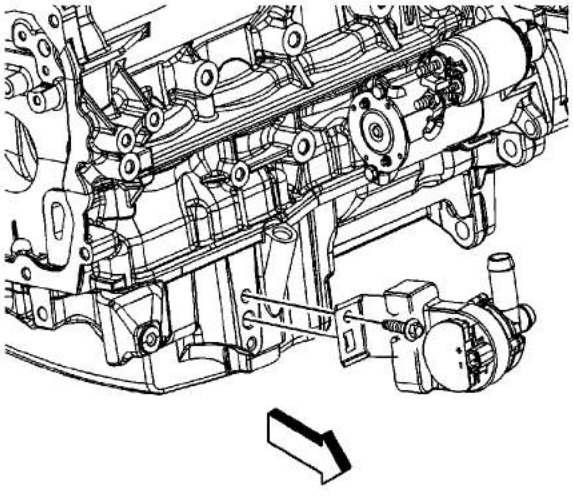

7. Install the generator control module coolant pump to the oil pan. Ensure that the anti-rotation tab is inserted into the hole in the oil pan.
8. Install the generator control module coolant pump bolt and tighten to **25 N·m (18 lb ft)**.

cardiagn.com

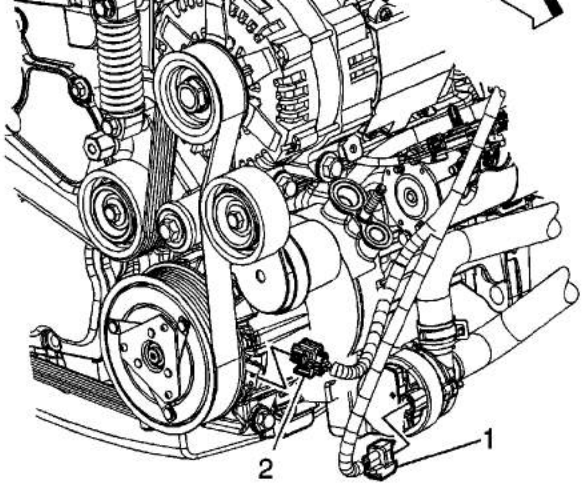

9. Connect the engine wiring harness electrical connector (1) to the generator control module coolant pump.
10. Lower the vehicle.

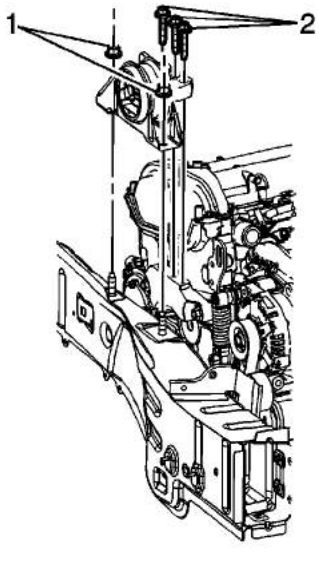

11. Using the engine support fixture, lower the engine.
12. Place the engine mount onto the side rail studs.
13. Install the engine mount to side rail nuts (1) and tighten to **100 N·m (74 lb ft)**.
14. Install engine mount to bracket bolts (2).
15. Tighten the engine mount to bracket bolts in the following sequence.
    15.1. Middle
    15.2. Rear
    15.3. Front

cardiagn.com

16. Remove the engine support fixture.
17. Install the oil level indicator tube. Refer to Oil Level Indicator and Tube Replacement.
18. Install the drive belt. Refer to Drive Belt Replacement.
19. Fill the engine oil to the proper level.

cardiagn.com

Oil Pan Replacement (LE5)

Removal Procedure

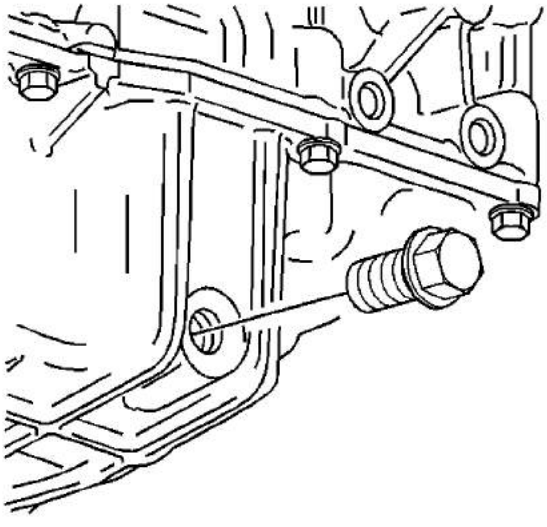

1. Raise and support the vehicle. Refer to Lifting and Jacking the Vehicle.
2. Place a drain pan under the oil pan drain plug.
3. Remove the oil pan drain plug.
4. Drain the engine oil.
5. Remove the engine drive belt. Refer to Drive Belt Replacement.
6. Remove the lower AC compressor bolt.

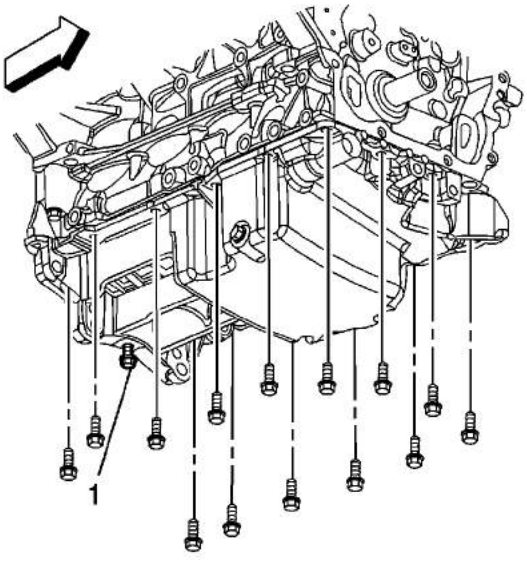

cardiagn.com

7. Remove the 4 oil pan to transaxle bolts (1).
8. Remove the oil pan bolts.

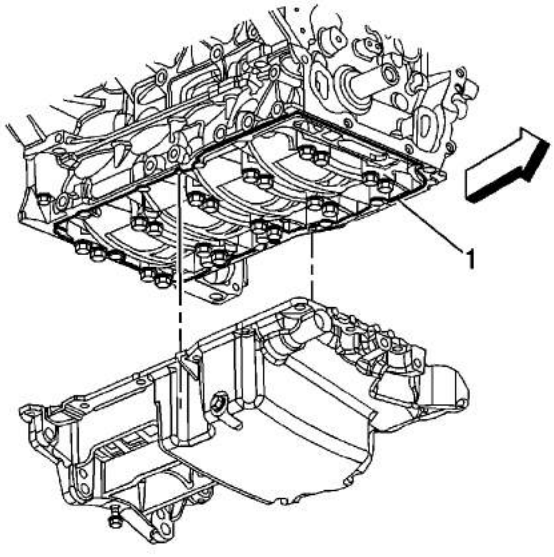

9. Remove the oil pan
10. Remove any old oil pan sealant (1).

Installation Procedure

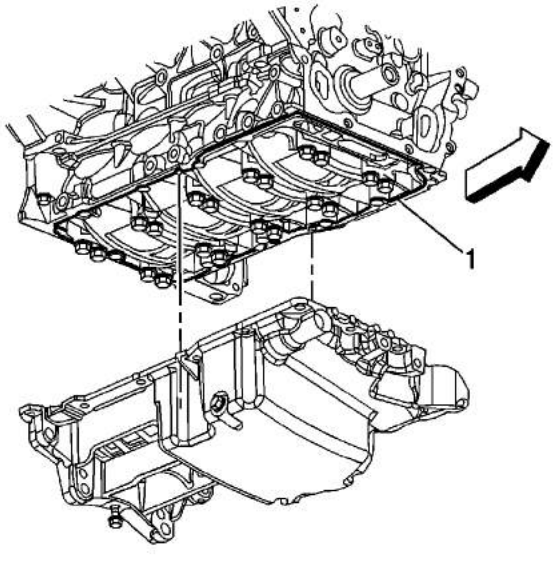

1. Ensure that the oil pan and the sealing surface on the lower crankcase are free of all oil and debris.

cardiagn.com

Adhesives, Fluids, Lubricants, and Sealers for the correct part number.

3. Install the oil pan.

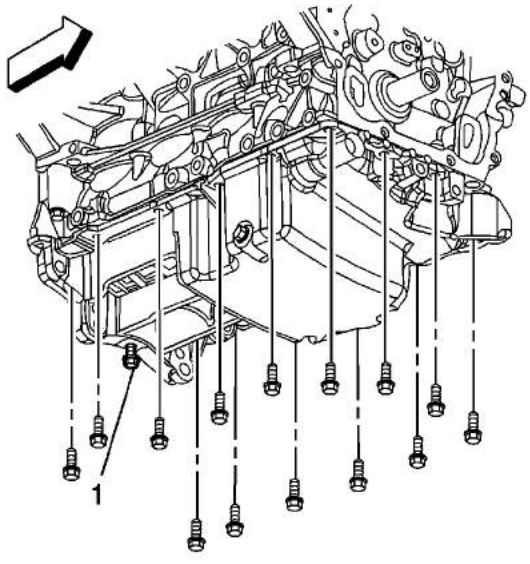

4. Install the oil pan bolts.

Caution: Refer to Fastener Caution in the Preface section.

5. Install the 4 oil pan to transaxle bolts (1) and tighten to **75 N·m (55 lb ft)**.

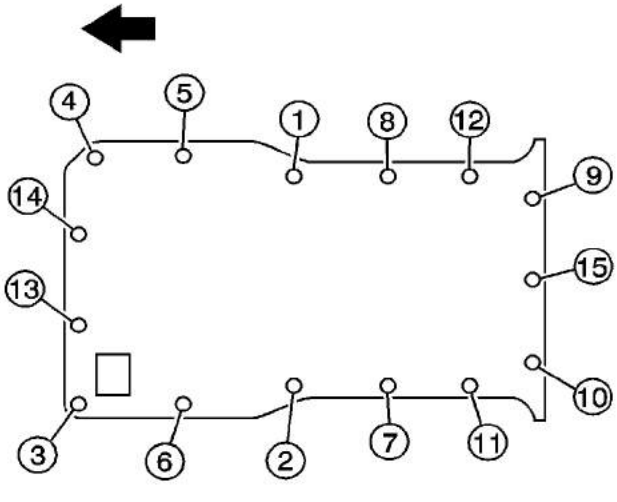

6. Tighten the oil pan bolts in the sequence shown to **25 N·m (18 lb ft)**.
7. Install the lower AC compressor bolt.
8. Install the engine drive belt. Refer to Drive Belt Replacement.
9. Lower the vehicle.

cardiagn.com

cardiagn.com

Piston, Connecting Rod, and Bearing Replacement

Special Tools

- EN-47836 Piston Ring Compressor
- J-43966-1 Connecting Rod Guides
- J 45059 Angle Meter

Removal Procedure

1. Remove the oil pan. Refer to Oil Pan Replacement.
2. Remove the cylinder head. Refer to Cylinder Head Replacement.

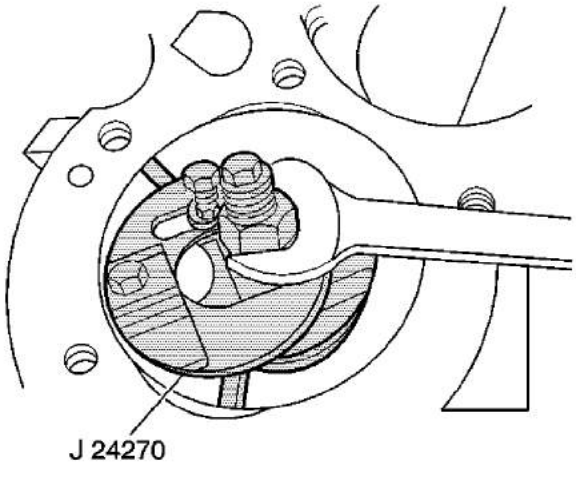

3. If a ring ridge is present, remove the ring ridge as follows:
   3.1. Turn the crankshaft until the piston is at the bottom of the stroke.
   3.2. Place a cloth on top of the piston.
   3.3. Use a ridge reamer to remove the ring ridge.
   3.4. Turn the crankshaft so the piston is at top of the stroke.
   3.5. Remove the cloth and cutting debris.

cardiagn.com

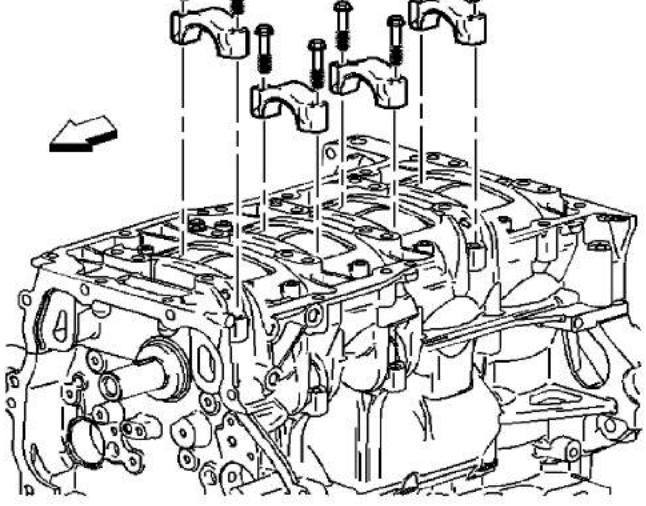

Note: Place the numbers on connecting rods and the connecting rod caps. The connecting rod caps must be assembled to their original connecting rods.

4. Remove the connecting rod nuts and the connecting rod cap.

   Discard the bolts and nuts.

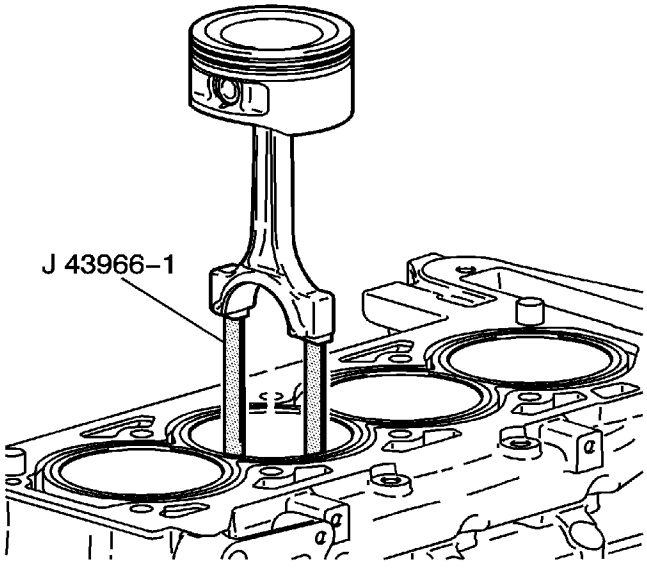

5. Remove the connecting rod and the piston out of the top of the engine block using the J-43966-1 .
6. Clean the cylinder bores with hot water and detergent or with a light honing.
7. Swab the bores with the engine oil and a clean, dry cloth.

cardiagn.com

1. Coat the following parts with engine oil:
   - The piston
   - The piston rings
   - The cylinder bore
   - The bearing surfaces

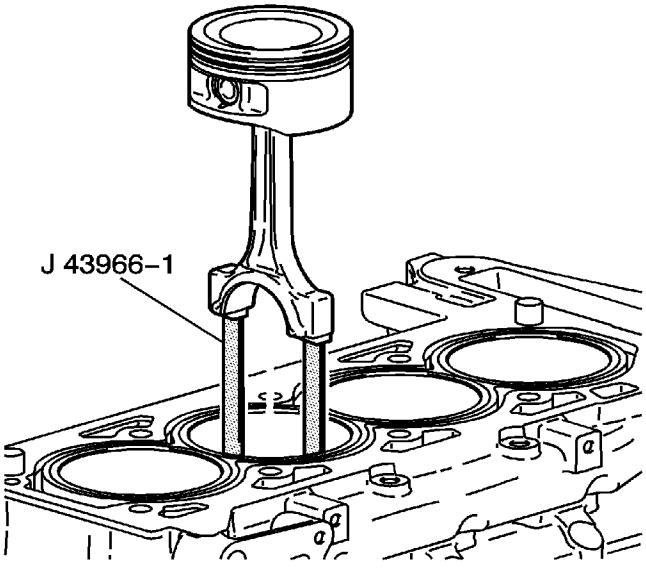

2. Install the piston into its original bore using the J-43966-1 .

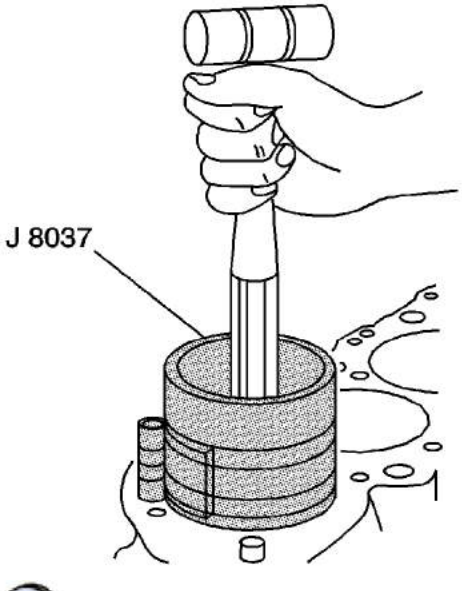

3. Lightly tap the top of the piston with a wooden hammer handle.
4. When installing the piston and the connecting rod, the stamped mark on the piston must

cardiagn.com

cylinder bore.

6. Install the connecting rod caps onto their original connecting rods.
7. Align the numbers placed on the connecting rod and the connecting rod cap during removal.

   Caution: Refer to Fastener Caution in the Preface section.

8. Install the new connecting rod bolts and nuts.
   - On the first pass, tighten the nuts evenly to **25 N·m (18 lb ft)**.
   - On the final pass, use the J 45059 in order to tighten the nuts **an additional 100 degrees**.

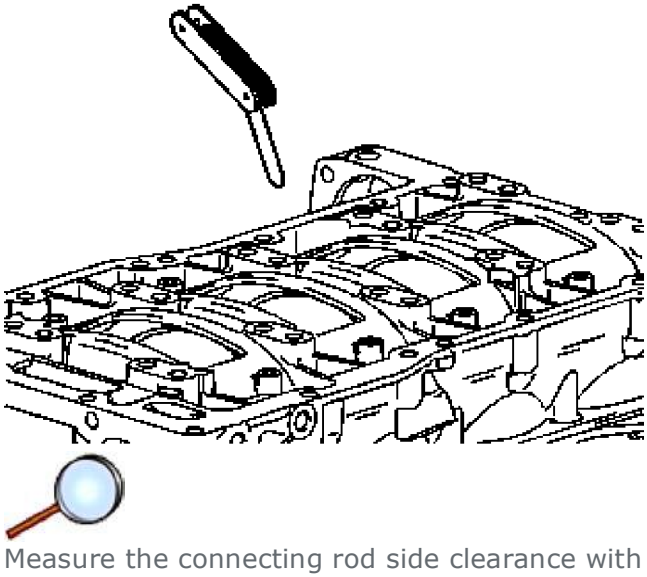

9. Measure the connecting rod side clearance with a feeler gage.

   The correct clearance is 0.070-0.370 mm (0.0027-0.0145 in).

10. Install the cylinder head. Refer to Cylinder Head Replacement.
11. Install the oil pan. Refer to Oil Pan Replacement.

cardiagn.com

Engine Flywheel Replacement

Special Tools

- J 38122-A Crankshaft Balancer Holder
- J 45059 Angle Meter

Removal Procedure

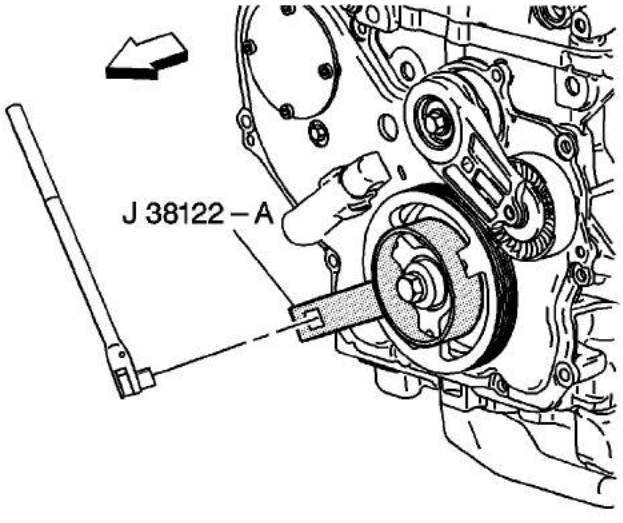

1. Remove the transaxle. Refer to Transmission Replacement.
2. Using the J 38122-A , hold the crankshaft balancer.

cardiagn.com

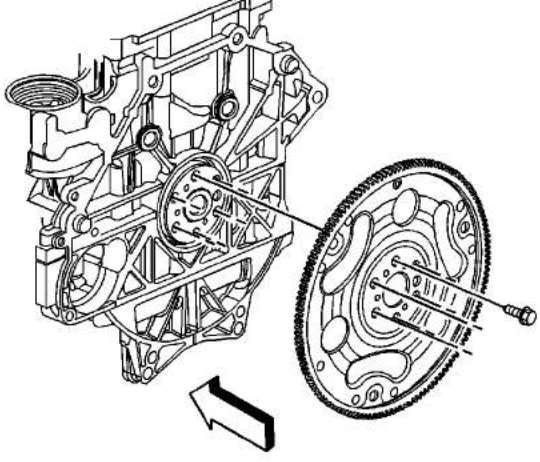

Note: It may be necessary to remove the chamfer (bevel) from the edge of an 18 mm socket in order to get full engagement on the thin-headed flywheel bolts.

3. Remove and discard the automatic transaxle flywheel bolts, if equipped.

   Note: Do not orientate the flywheel to the crankshaft. It is balanced separately from the engine.

4. Remove the automatic transaxle flywheel.
5. Clean the thread adhesive from the flywheel bolt holes. Use a nylon bristle brush to clean the holes in the crankshaft.

Installation Procedure

cardiagn.com

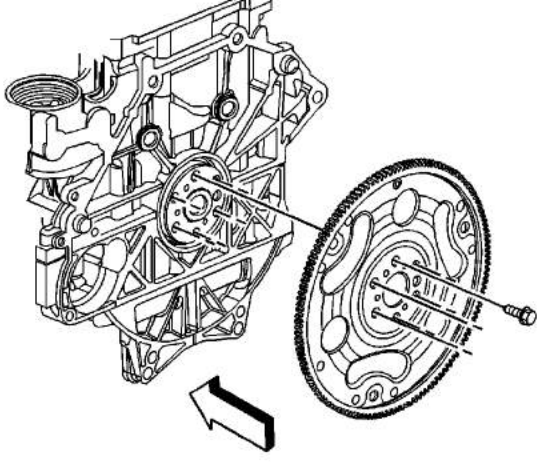

1. Install the automatic transaxle flywheel, if equipped.

   Caution: Refer to Fastener Caution in the Preface section.

2. Install the NEW automatic transaxle flywheel bolts, if equipped and tighten to **53 N·m (39 lb ft) plus an additional 25 degrees** using the J 45059 .
3. Remove the J 38122-A .
4. Install the transaxle. Refer to Transmission Replacement.

cardiagn.com

Crankshaft Rear Oil Seal Replacement

Tools Required

J 42067 Rear Main Seal Installer

Removal Procedure

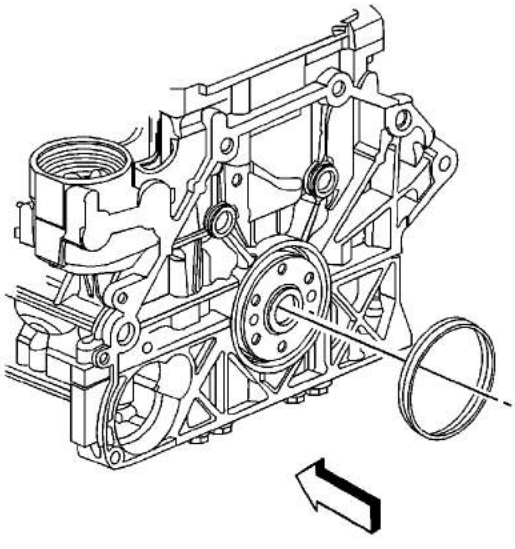

1. Remove the flywheel. Refer to Engine Flywheel Replacement .

   Important: Do not damage the outside diameter of the crankshaft or chamber with any tool.

2. Pry out the crankshaft rear oil seal using a flat-bladed tool.

Installation Procedure

cardiagn.com

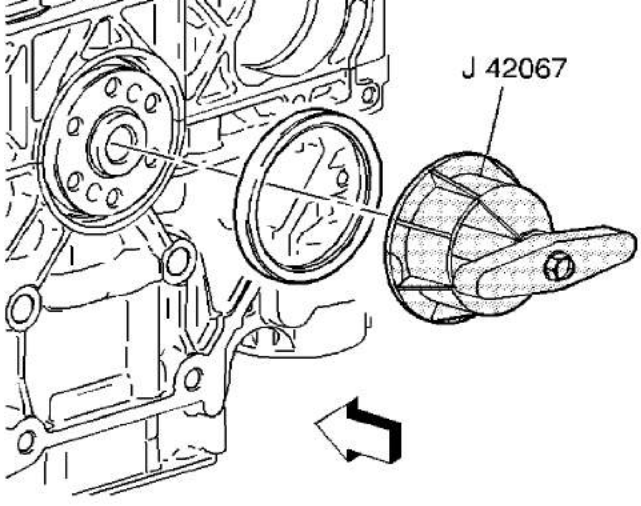

1. Using the J 42067 , install a NEW crankshaft real oil seal.
2. Install the flywheel. Refer to Engine Flywheel Replacement .

cardiagn.com

Engine Replacement

Special Tools

- J 38185
- J 43828
- J 44015
- J 44015
- SA91100C

Removal Procedure

1. Disconnect the negative battery cable. Refer to Battery Negative Cable Disconnection and Connection
2. For the LAT engine, disconnect the hybrid battery. Refer to Hybrid Battery Service Disconnect/Connect
3. Remove the hood. Refer to Hood Replacement
4. Recover the refrigerant. Refer to Refrigerant Recovery and Recharging

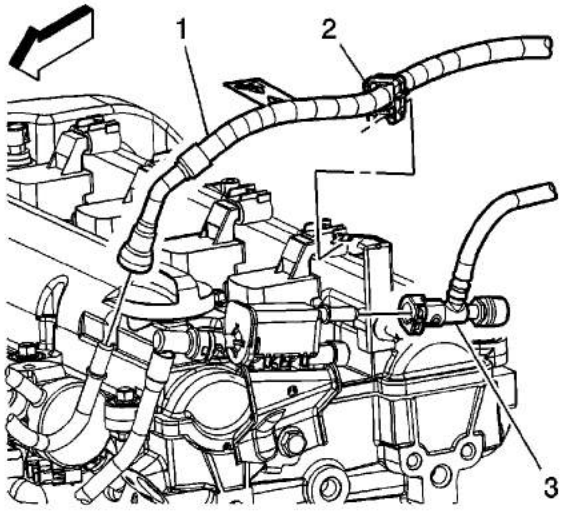

5. Relieve the fuel system pressure. Refer to Fuel Pressure Relief
6. Remove the air cleaner outlet duct. Refer to Air Cleaner Outlet Duct Replacement
7. Remove the air cleaner assembly. Refer to Air Cleaner Assembly Replacement
8. Disconnect the fuel feed pipe (1) quick connect fitting at the fuel rail. Refer to Metal Collar Quick Connect Fitting Service
9. Disconnect the evaporative emission (EVAP) line (3) quick connect fitting from the EVAP purge solenoid. Refer to Plastic Collar Quick Connect Fitting Service
10. Remove the fuel feed pipe clip (2) from the fuel line bracket.

cardiagn.com

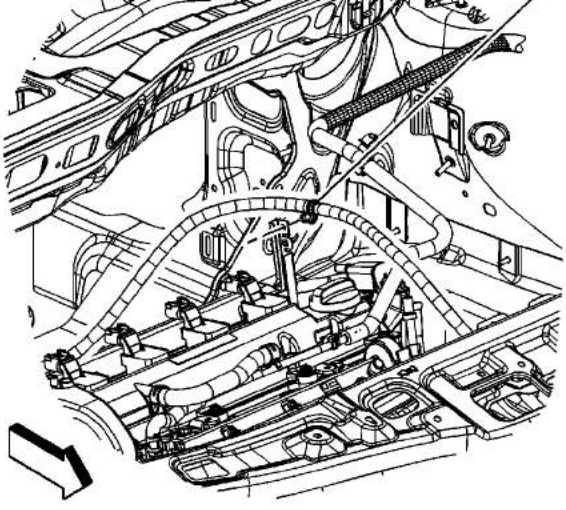

11. Remove the transaxle shift cable clip (1) from the fuel line bracket.
12. Remove the bolts from the engine control module and position aside. Refer to Engine Control Module Replacement
13. For the LE5, remove the battery box. Refer to Battery Box Replacement
14. For the LAT, remove the battery tray. Refer to Battery Tray Replacement
15. On the LAT engine, remove the generator starter. Refer to Generator with Starter Replacement
16. Remove the exhaust manifold heat shield. Refer to Exhaust Manifold Heat Shield Replacement
17. Remove the oxygen sensors. Refer to Heated Oxygen Sensor 1 Replacement and Heated Oxygen Sensor 2 Replacement
18. Remove the throttle body. Refer to Throttle Body Assembly Replacement.
19. Remove the engine oil level indicator.
20. Raise and support the vehicle. Refer to Lifting and Jacking the Vehicle.
21. Remove the front wheels and tires. Refer to Tire and Wheel Removal and Installation.
22. Drain the cooling system. Refer to Cooling System Draining and Filling.
23. Drain the engine oil. Refer to Engine Oil and Oil Filter Replacement.
24. Lower the vehicle.

cardiagn.com

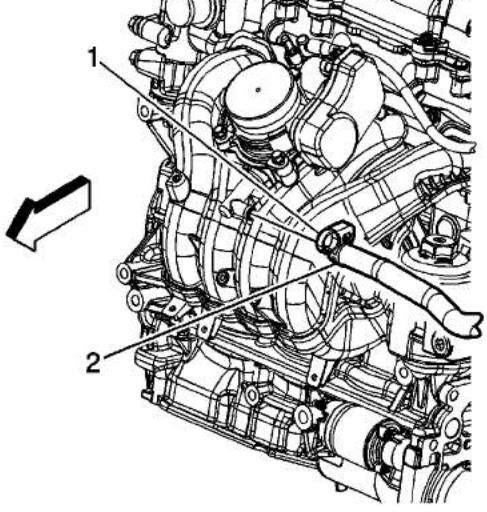

25. On all engines, reposition the vacuum brake booster hose clamp (1) at the intake manifold.
26. Remove the vacuum brake booster hose (2) from the intake manifold. Reposition the brake booster hose out of the way.

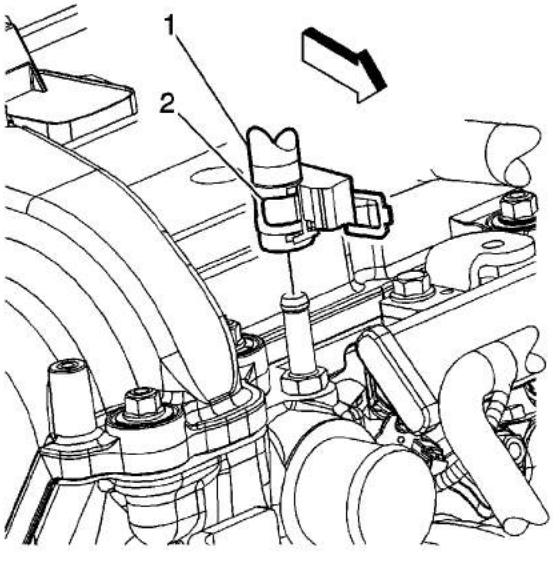

27. Remove the coolant recovery inlet hose clamp (2) at the cylinder head.
28. Remove the coolant recovery inlet pipe clip from the fuel rail.
29. Remove the coolant recovery inlet hose (1) from the cylinder head. Reposition the hose/pipe out of the way.

cardiagn.com

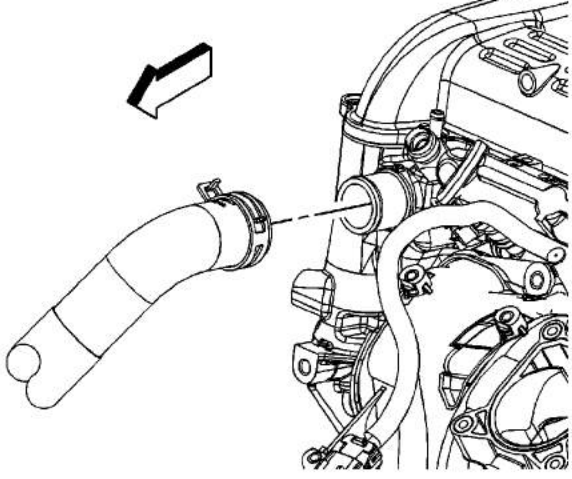

30. Reposition the radiator inlet hose clamp using the J 38185
31. Remove the radiator inlet hose from the cylinder head.
32. Remove the radiator outlet hose. Refer to Radiator Outlet Hose Replacement

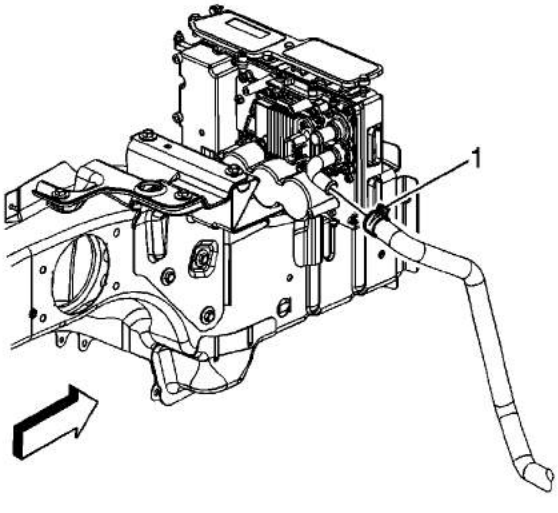

33. On LAT engine, reposition the generator control module coolant hose clamp (1) at the generator control module.
34. Remove the generator control module coolant hose from the generator control module.

cardiagn.com

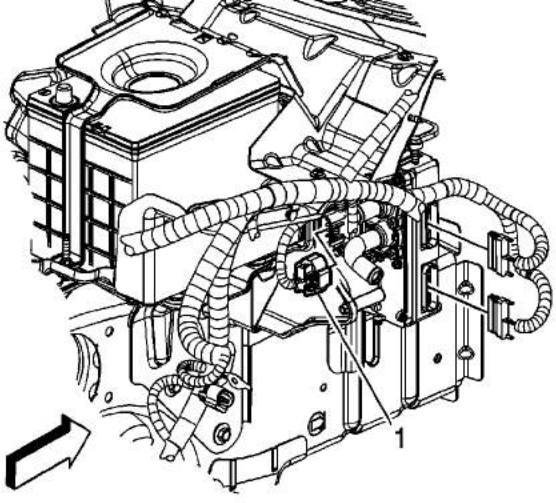

35. Disconnect the engine wiring harness electrical connector (1) from the transaxle auxiliary pump module.

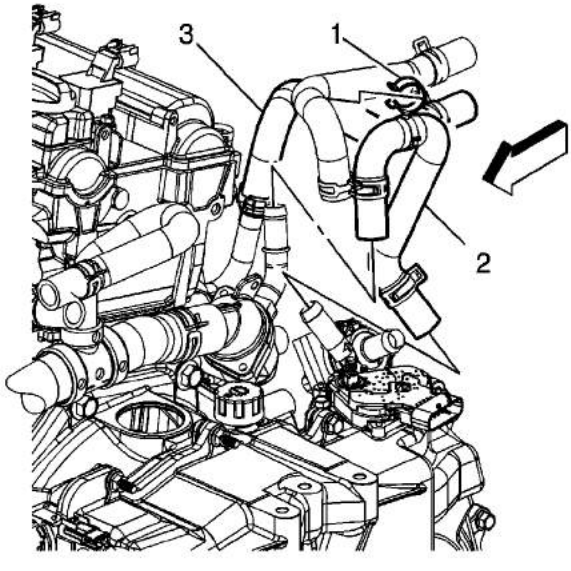

36. Remove the auxiliary heater water pump hose clip (1) from the heater outlet hose.
37. On all engines, reposition the heater inlet hose clamp at the thermostat housing.
38. Remove the heater inlet hose (3) from the thermostat housing.
39. Reposition the coolant recovery reservoir/heater inlet hose (2) clamp at the thermostat housing.
40. Remove the coolant recovery reservoir/heater inlet hose (2) from the thermostat housing.
41. Raise and support the vehicle. Refer to Lifting and Jacking the Vehicle

cardiagn.com

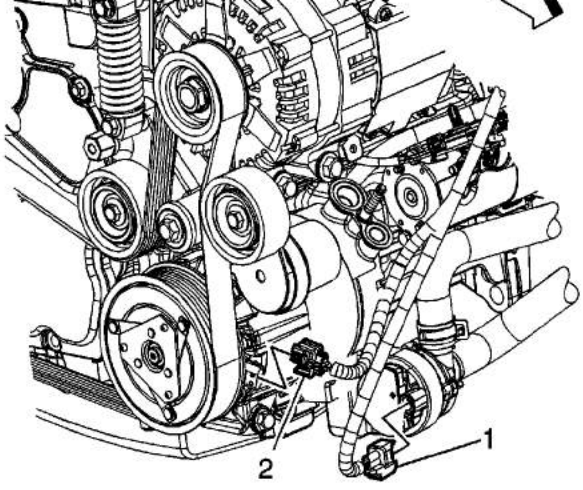

42. On LAT engine, disconnect the engine wiring harness electrical connector (1) from the generator control module coolant pump.
43. On all engines, disconnect the engine wiring harness electrical connector (2) from the air conditioning (A/C) compressor.

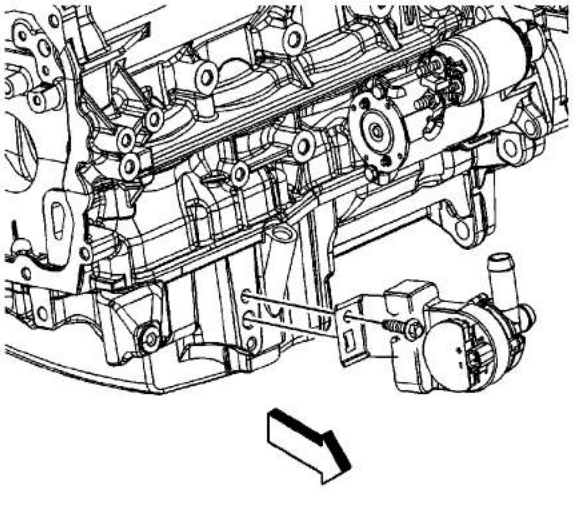

44. On LAT engine, remove the generator control module coolant pump bolt and pump.

cardiagn.com

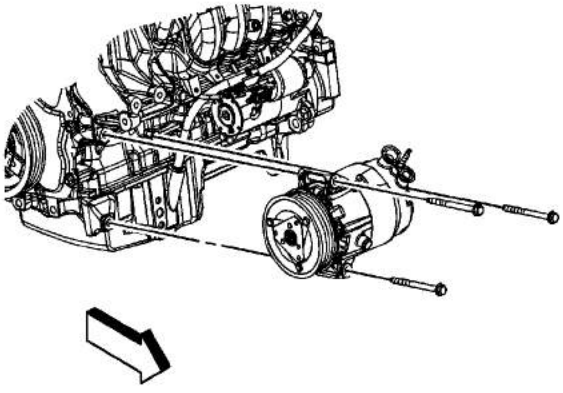

45. On all engines, unbolt the A/C compressor and reposition out of the way.

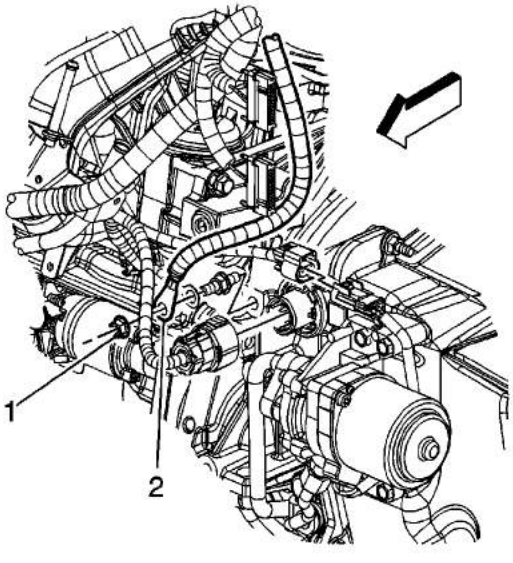

46. Remove the engine wiring harness ground lead nut (1) from the transaxle stud.
47. Remove the negative battery cable lead (2) from the transaxle stud. Reposition the negative battery cable out of the way.

cardiagn.com

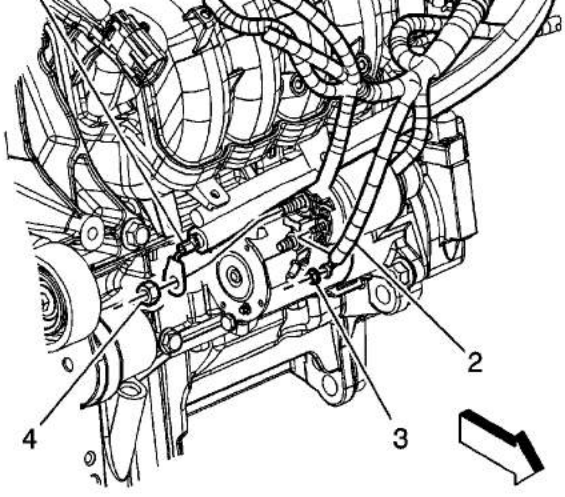

48. Remove the positive battery cable to starter motor nut (4).
49. Remove the positive battery cable lead (1) from the starter motor.
50. Remove the positive battery cable from in between the starter and the engine. Reposition the positive battery cable out of the way.

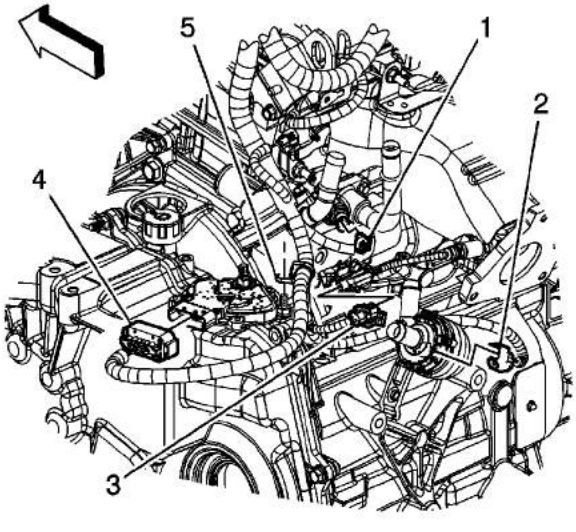

51. On LAT engine, disconnect the engine wiring harness electrical connector (2) from the auxiliary heater water pump.

cardiagn.com

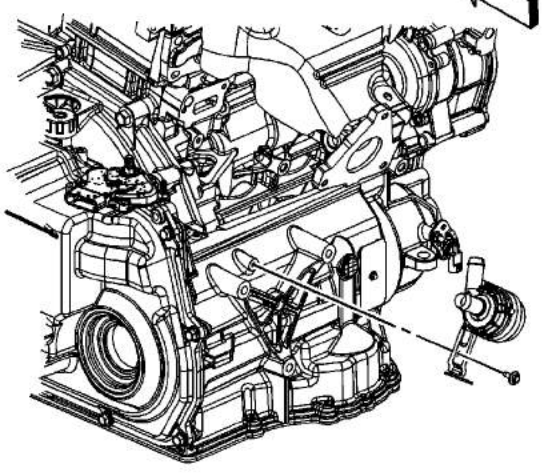

52. Remove the auxiliary heater water pump bolt and pump.
53. On all engines, lower the vehicle.

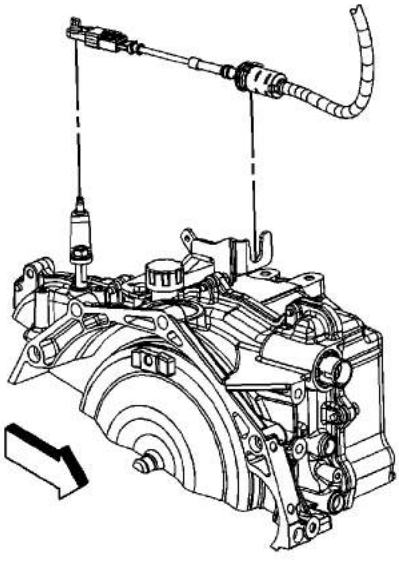

54. Remove the transaxle shift cable from the range select lever.
55. Release the shift control cable retaining clip and remove the cable from the shift control cable bracket.

cardiagn.com

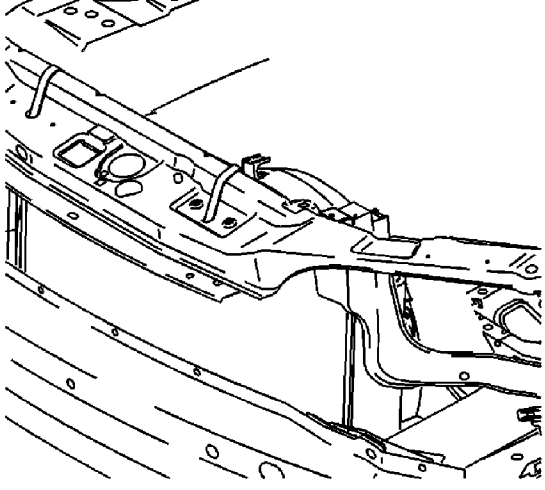

Note: The radiator/condenser/fan assembly will stay in the vehicle during engine removal.

56. Using long tie straps, secure the radiator/condenser/fan assembly to the radiator support.
57. Raise the vehicle.
58. Remove the front wheelhouse liners. Refer to Front Wheelhouse Liner Replacement

Note: A piece of hardwood should be used between the transaxle and the engine cradle. This wood will support the engine when the left side engine mounts bolts are removed.

59. Install a piece of hardwood 1 x 2 x 4 between the transaxle and the engine cradle.

Note: A piece of hardwood should be used between the oil pan and the engine cradle. This wood will support the engine when the right side engine mounts are removed.

60. Install a piece of hardwood 1 x 2 x 4 between the oil pan and the engine frame.

cardiagn.com

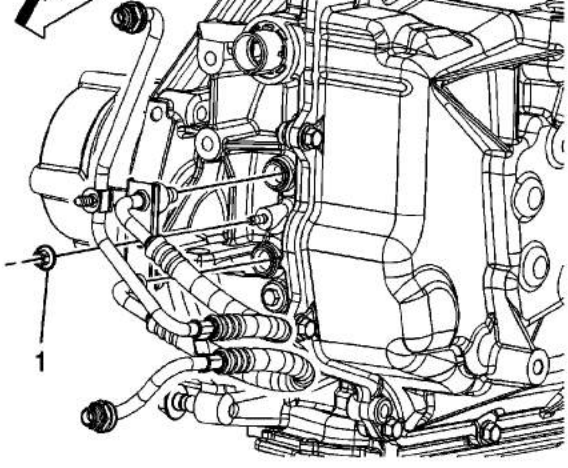

61. Drain the transaxle fluid.
62. Remove the transaxle oil cooler line to transaxle nut (1).
63. Remove the transaxle oil cooler lines from the transaxle.
64. Remove the catalytic converter. Refer to [Catalytic Converter Replacement]

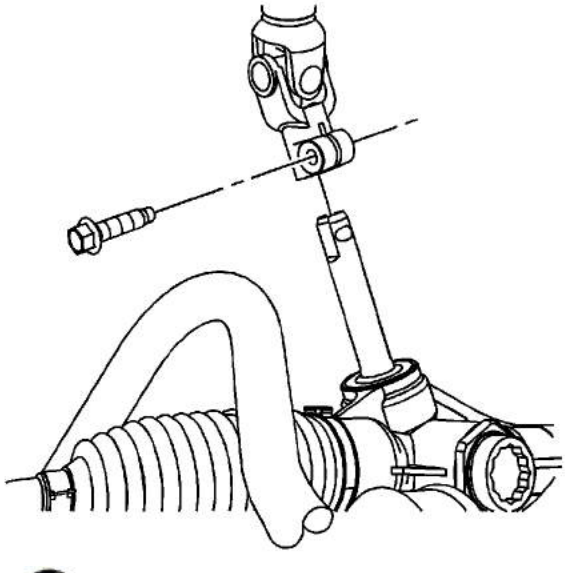

Note: Secure the steering wheel in the straight forward position before separating the intermediate shaft from the steering gear, or damage to the SIR coil will occur.

65. Remove the intermediate to steering gear pinch bolt and disconnect the intermediate shaft from the steering gear. Discard the pinch bolt.

cardiagn.com

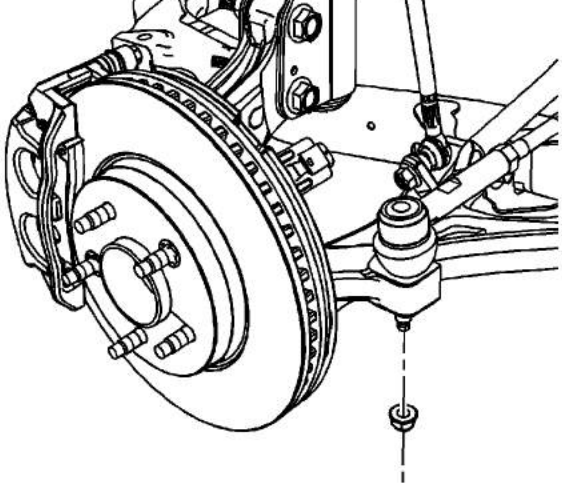

66. Remove and discard both outer tie rod to steering knuckle nuts.

    Note: Hold the ball stud to prevent turning during removal of the nut.

67. Using the SA91100C

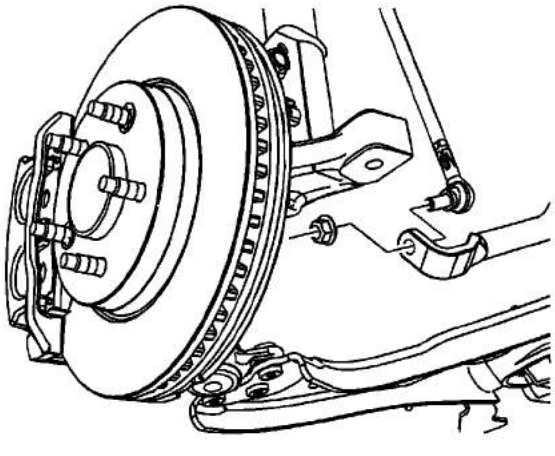

68. Remove the stabilizer link to stabilizer shaft nuts and disconnect the stabilizer links from the stabilizer shaft.

cardiagn.com

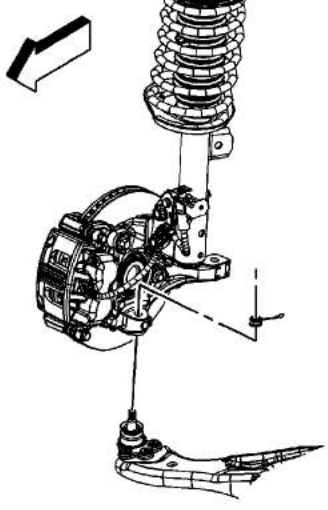

69. Remove and discard both of the lower control arm ball stud cotter pins.
70. Loosen the ball stud nuts until the nuts are level with the top of the ball stud.

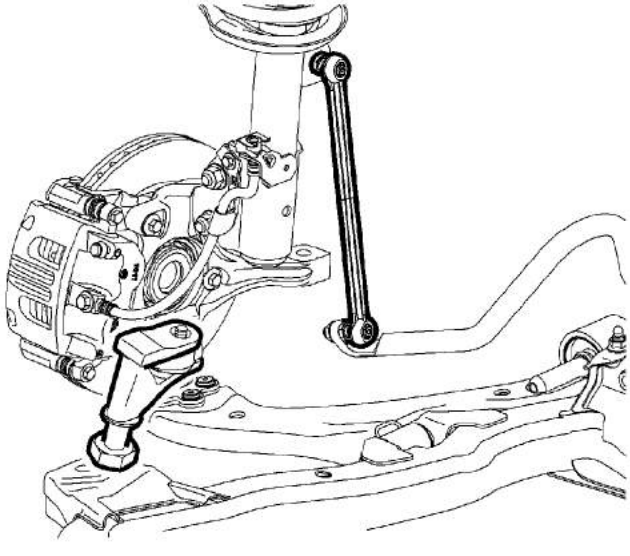

71. Using the J 43828
72. Remove the ball stud nuts.
73. Remove the wheel drive shafts. Refer to Front Wheel Drive Shaft Replacement
74. Lower the vehicle.

cardiagn.com

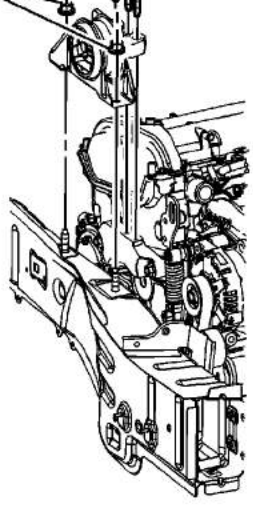

75. Remove the engine mount to engine mount bracket bolts (2).

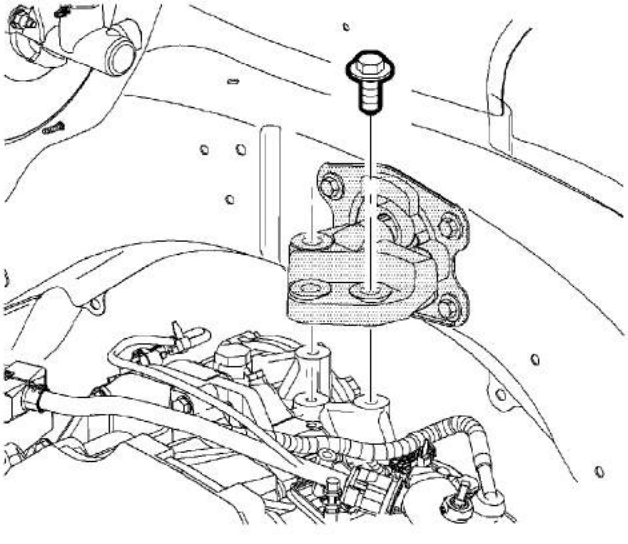

76. Remove the transaxle mount to transaxle adapter bolts.
77. Raise the vehicle.

cardiagn.com

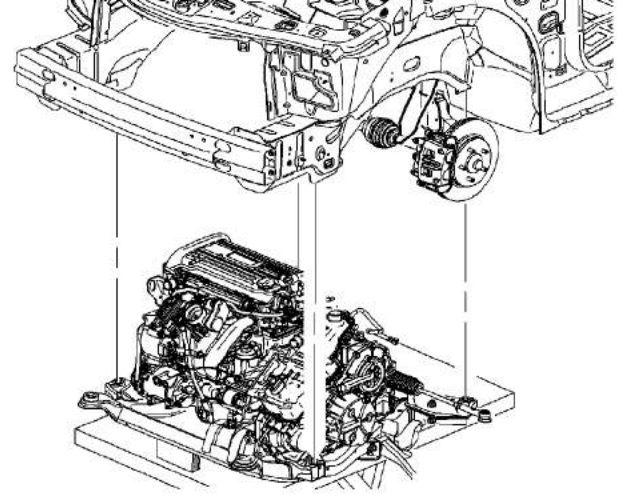

Note: During the powertrain removal support the vehicle body by placing a jack at the rear of the vehicle.

78. Position a engine support table under the powertrain assembly.

Note: Blocks of wood can be used between the front of the frame and the oil pan to table in order to level the powertrain during the removal.

79. With the table positioned, fully raise the table to contact with the powertrain assembly.
80. Remove the frame to body bolts. Discard the bolts.

Note: When lowering the engine/transaxle assembly, verify all brake lines, shifter cables and other components are free during removal.

81. Lower the engine table and raise the body on the hoist until the engine/transaxle and cradle are free from the vehicle.

cardiagn.com

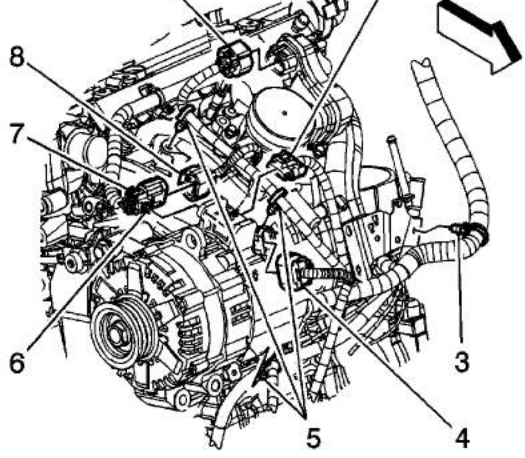

82. Disconnect the engine wiring harness electrical connector (1) from the throttle actuator.
83. Disconnect the engine wiring harness electrical connector (8) from the fuel injector wiring harness electrical connector (7).
84. Remove the engine wiring harness clip (3) from the oil level indicator tube bracket.

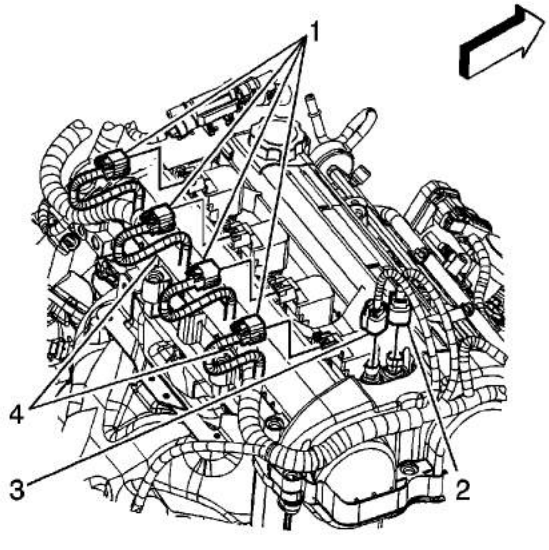

85. Disconnect the engine wiring harness electrical connectors (1) from the ignition coils.
86. Disconnect the engine wiring harness electrical connectors (2, 3) from the camshaft actuators.

cardiagn.com

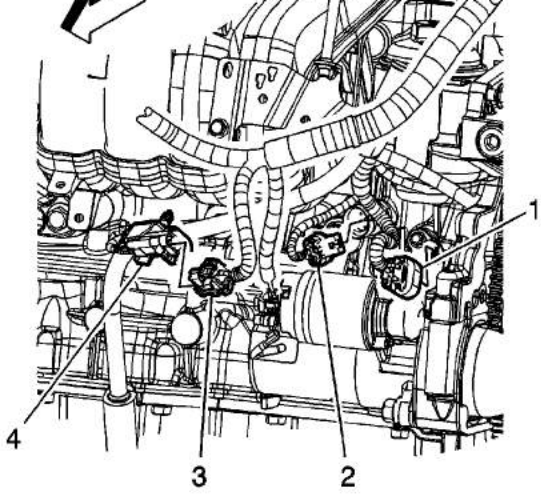

87. Disconnect the engine wiring harness electrical connector (1) from the crankshaft position (CKP) sensor.
88. Disconnect the engine wiring harness electrical connector (2) from the oil pressure sensor.
89. Disconnect the engine wiring harness electrical connector (3) from the knock sensor.

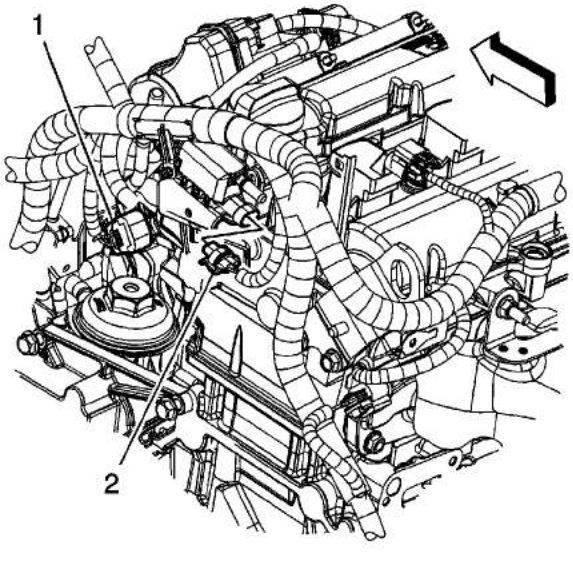

90. Disconnect the engine wiring harness electrical connector (1) from the intake camshaft position (CMP) sensor.
91. Disconnect the engine wiring harness electrical connector (2) from the EVAP emission canister purge solenoid valve.

cardiagn.com

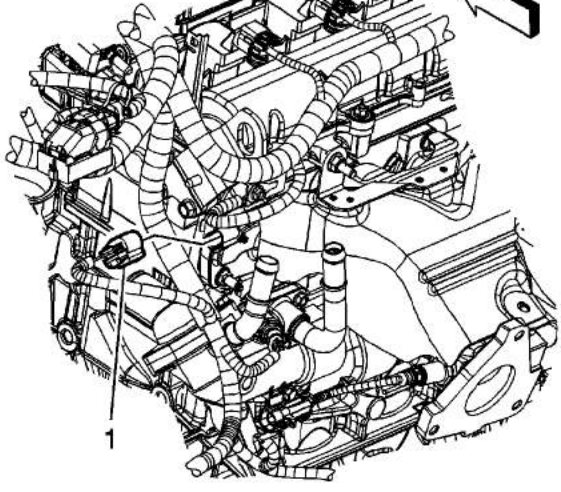

92. Disconnect the engine wiring harness electrical connector (1) from the exhaust CMP sensor.

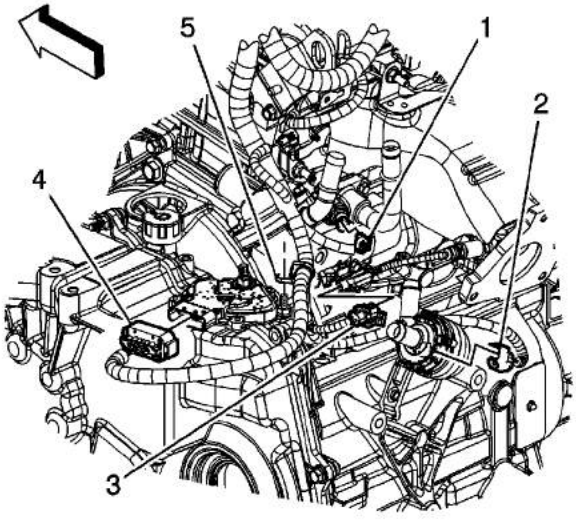

93. Disconnect the engine wiring harness electrical connector (1) from the engine coolant temperature (ECT) sensor.
94. Disconnect the engine wiring harness electrical connector (3) from the heated oxygen sensor (HO2S) electrical connector.
95. Remove the engine wiring harness clip (5) from the stud.

cardiagn.com

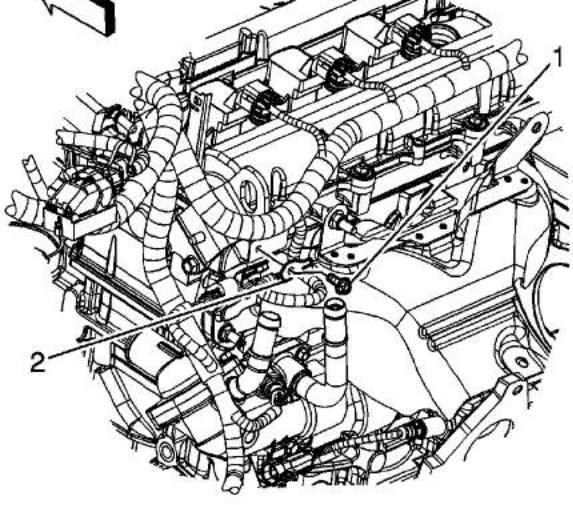

96. Remove the engine wiring harness ground bolt (1) and reposition the ground terminal from the engine.
97. Gather all branches of the engine wiring harness and reposition the harness out of the way.

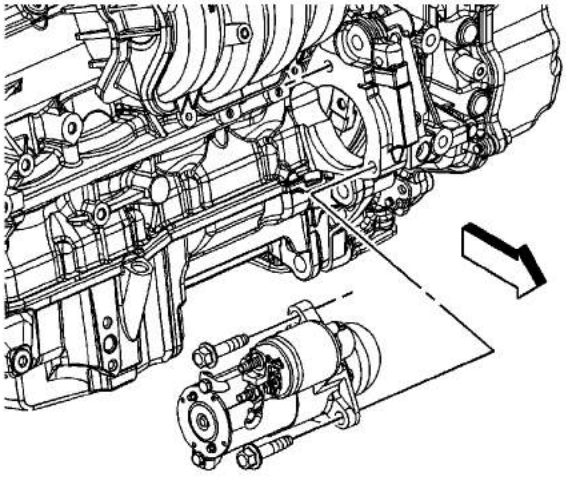

98. Remove the starter motor bolts and starter.

cardiagn.com

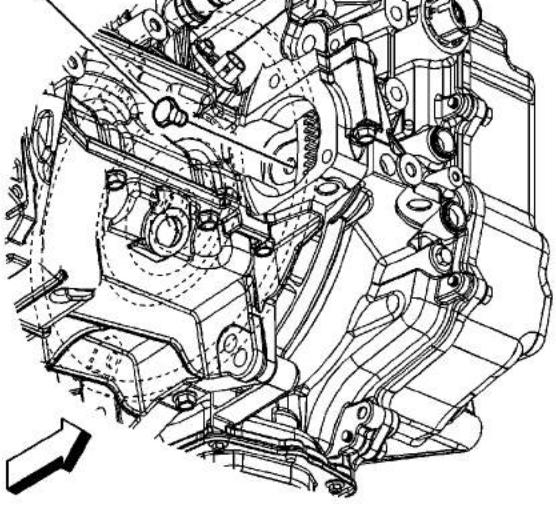

99. Remove the torque converter to flexplate bolts (1).
100. Install a suitable lifting devise to the engine.

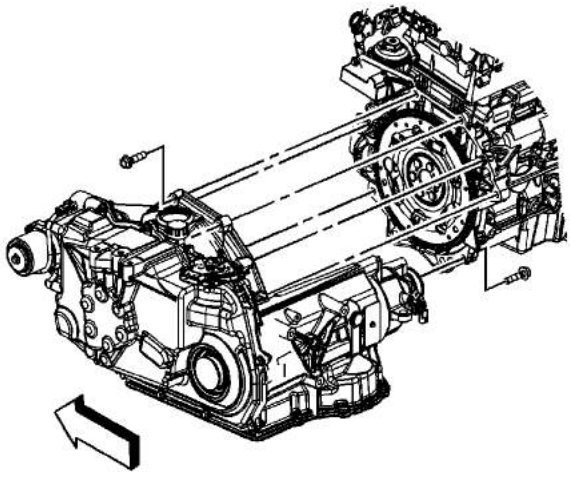

101. Remove the transaxle bolts from the engine.
102. Separate the engine from the transaxle.
103. Install the engine to a suitable engine stand.

Installation Procedure

cardiagn.com

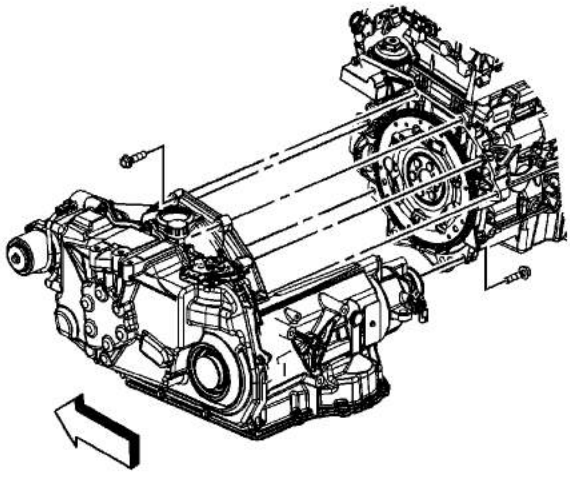

1. Install a suitable lifting devise to the engine.
2. Using the lifting devise, position and install the engine to the transaxle.

   Caution: Refer to Fastener Caution in the Preface section.

3. Install the transaxle bolts to the engine and tighten the bolts to **75 N·m (55 lb ft)**.

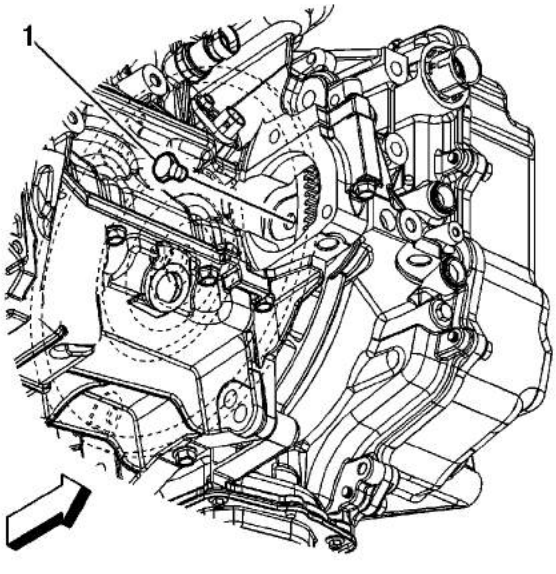

4. Install the torque converter to flexplate bolts (1) and tighten to **60 N·m (44 lb ft)**.
5. Remove the engine lifting devise.

cardiagn.com

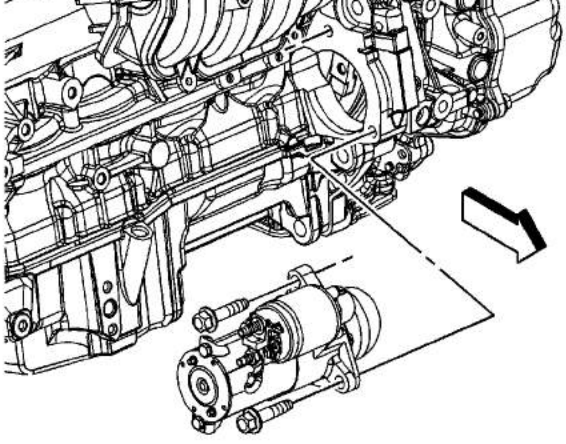

6. Install the starter motor and bolts and tighten the bolts to **53 N·m (39 lb ft)**.

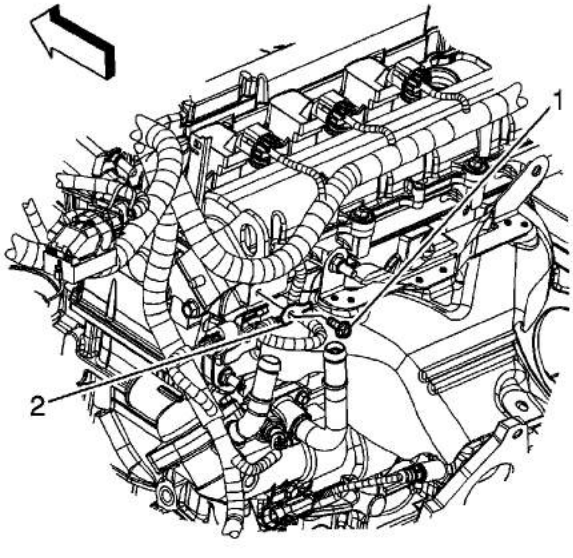

7. Gather all branches of the engine wiring harness and position the harness to the engine.
8. Position the engine wiring harness ground terminal to the engine and install the engine wiring harness ground bolt (1).

   Tighten the bolt to **20 N·m (15 lb ft)**.

cardiagn.com

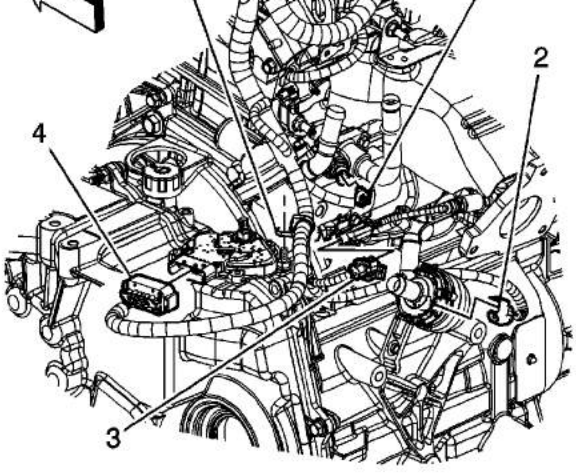

9. Connect the engine wiring harness electrical connector (1) to the ECT sensor.
10. Connect the engine wiring harness electrical connector (3) to the HO2S electrical connector.
11. Install the engine wiring harness clip (5) to the stud.

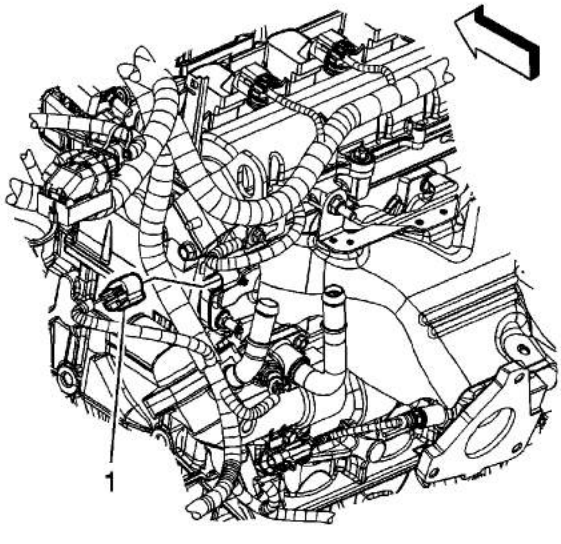

12. Connect the engine wiring harness electrical connector (1) to the exhaust CMP sensor.

cardiagn.com

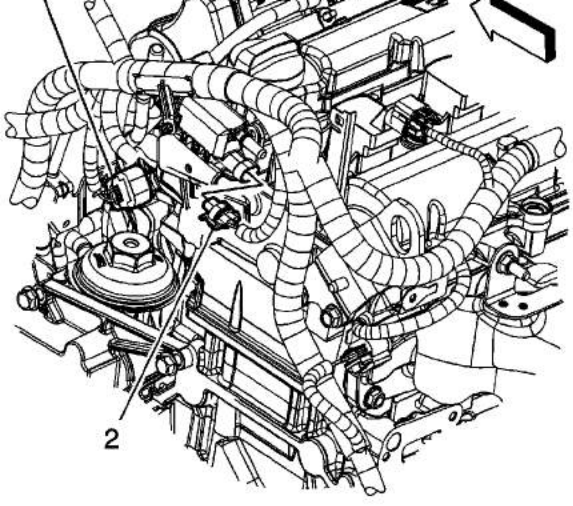

13. Connect the engine wiring harness electrical connector (1) to the intake CMP sensor.
14. Connect the engine wiring harness electrical connector (2) to the EVAP emission canister purge solenoid valve.

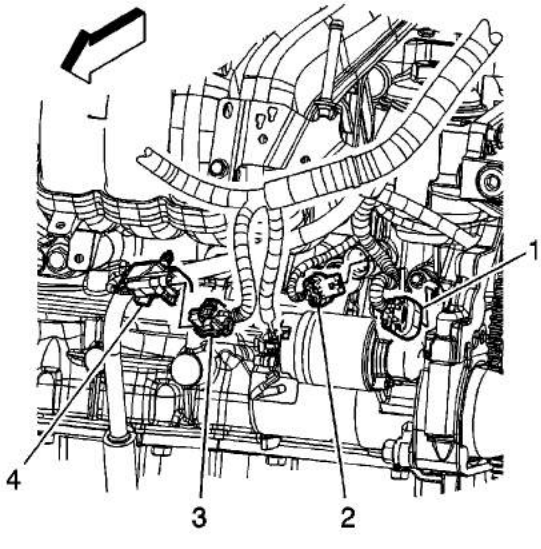

15. Connect the engine wiring harness electrical connector (1) to the CKP sensor.
16. Connect the engine wiring harness electrical connector (2) to the oil pressure sensor.
17. Connect the engine wiring harness electrical connector (3) to the knock sensor.

cardiagn.com

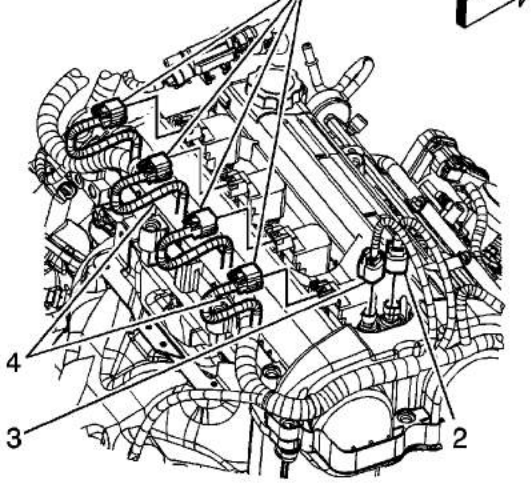

18. Connect the engine wiring harness electrical connectors (1) to the ignition coils.
19. Connect the engine wiring harness electrical connectors (2, 3) to the camshaft actuators.

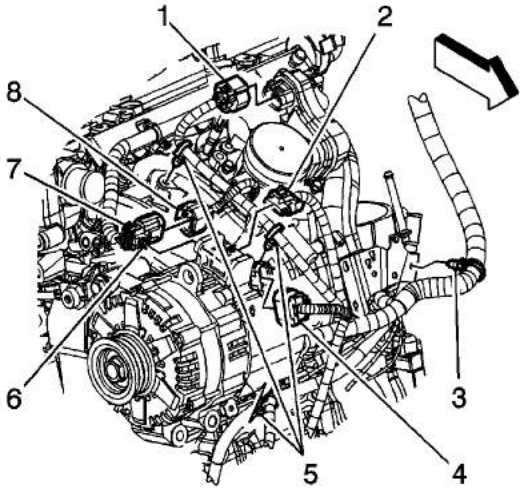

20. Connect the engine wiring harness electrical connector (1) to the throttle actuator.
21. Connect the engine wiring harness electrical connector (8) to the fuel injector wiring harness electrical connector (7).
22. Install the engine wiring harness clip (3) to the oil level indicator tube bracket.

cardiagn.com

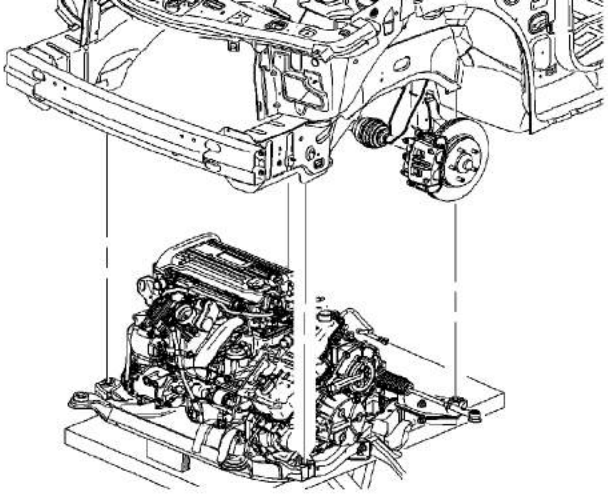

23. Position the powertrain and support table under the vehicle.
24. Raise the powertrain into position under the vehicle.
25. With the table positioned, if required, lower the vehicle over the powertrain.
26. Align the lower radiator pins with the frame. Ensure all hoses and electrical harnesses are correctly routed and free from the loading path of the powertrain.
27. Install the NEW frame to body bolts and tighten to **155 N·m (114 lb ft)**.
28. Lower the vehicle.

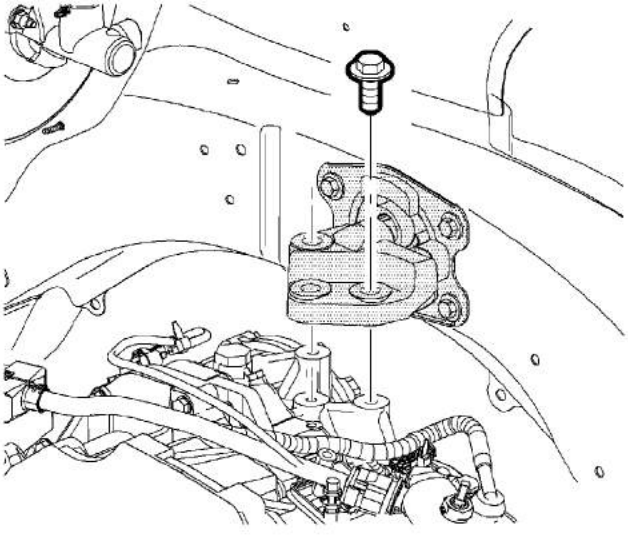

29. Install the transaxle mount to transaxle adapter bolts and tighten to **55 N·m (41 lb ft)**.

cardiagn.com

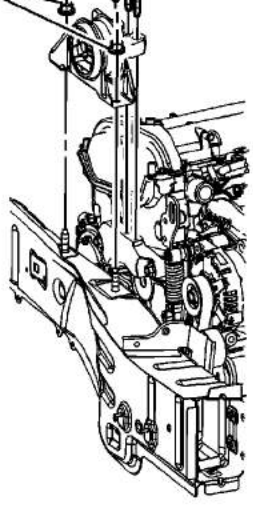

30. Install the engine mount to engine mount bracket bolts (2):
31. Tighten the engine mount to bracket bolts in the following sequence.
    31.1. Middle
    31.2. Rear
    31.3. Front

    Tighten the bolts to **50 N·m (37 lb ft)**.

32. Raise and support the vehicle.
33. Install the wheel drive shafts. Refer to Front Wheel Drive Shaft Replacement

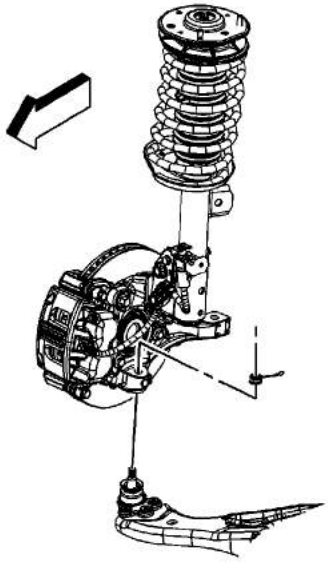

34. Install the control arm ball studs into the steering knuckles.
35. Install the ball stud nuts and tighten to **40 N·m (30 lb ft)**

cardiagn.com

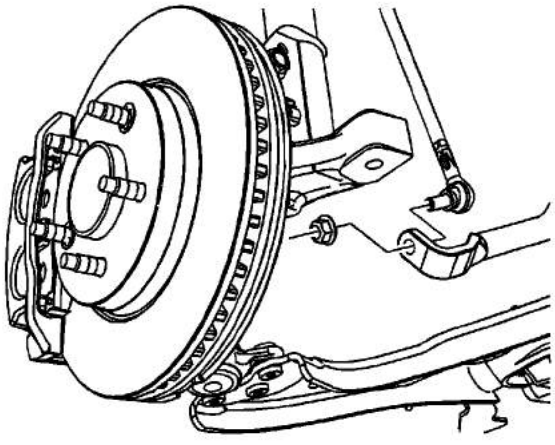

37. Connect the stabilizer links to the stabilizer shaft and install the stabilizer link to stabilizer shaft nuts.

    Tighten the nuts to **65 N·m (48 lb ft)**.

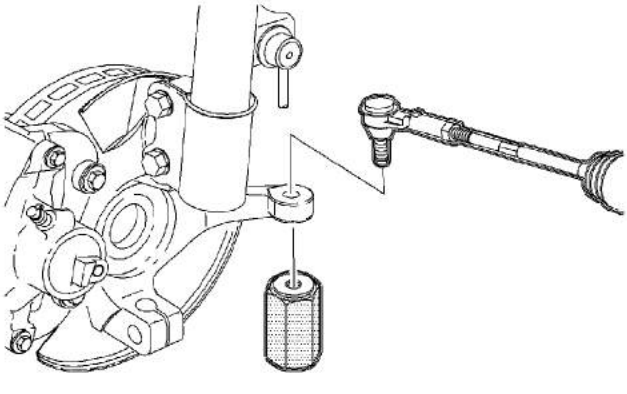

38. Connect the outer tie rods to the steering knuckles.
39. Use the J 44015
40. Remove the J 44015

cardiagn.com

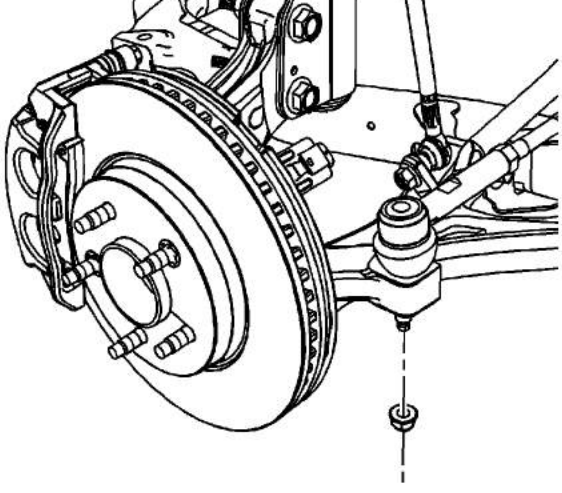

41. Install NEW outer tie rod to steering knuckle nuts and tighten to **25 N·m (48 lb ft) plus 90 degrees**.

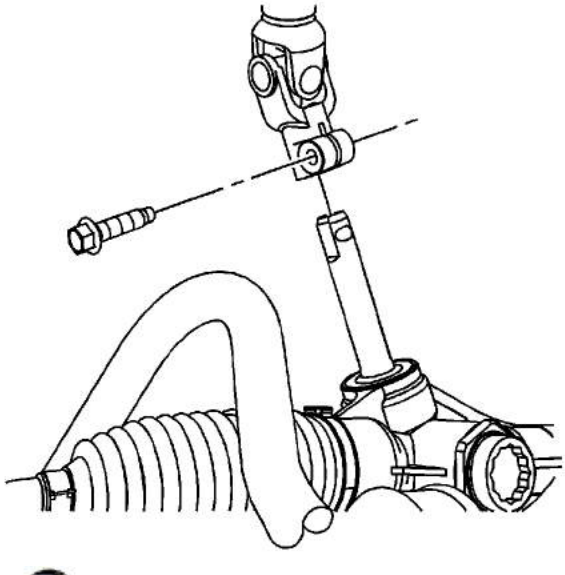

42. Position the intermediate shaft to the steering gear and install a NEW pinch bolt.

    Tighten the bolt to **34 N·m (25 lb ft)**.

43. Install the catalytic converter. Refer to [Catalytic Converter Replacement]

cardiagn.com

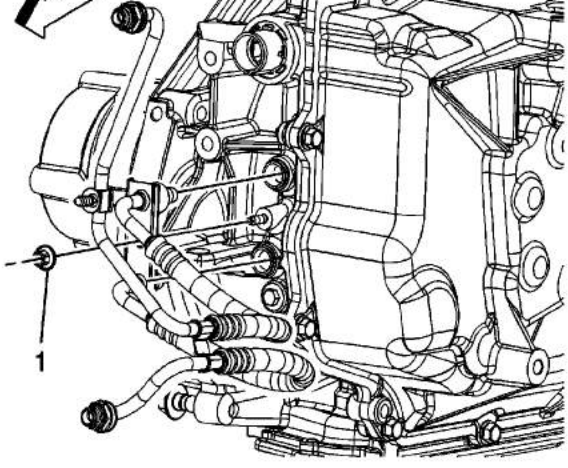

44. Install the transaxle oil cooler lines to the transaxle.
45. Install the transaxle oil cooler line to transaxle nut (1) and tighten to **4 N·m (27 lb in)**.

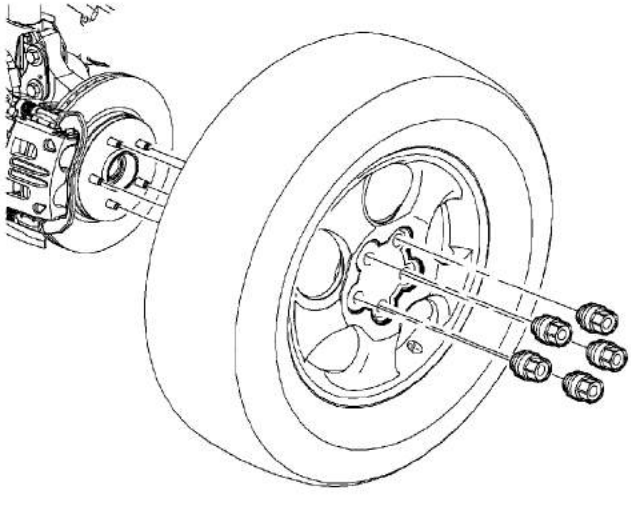

46. Remove the wood from between the oil pan and the engine cradle.
47. Remove the wood from between the transaxle and the engine cradle.
48. Install the front wheelhouse liners. Refer to Front Wheelhouse Liner Replacement
49. Install the front wheels and tires. Refer to Tire and Wheel Removal and Installation
50. Lower the vehicle.

cardiagn.com

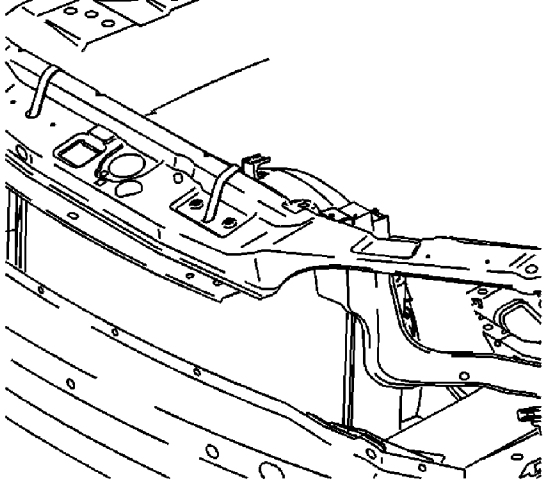

51. Unsecure and position the radiator/condenser/fan assembly.

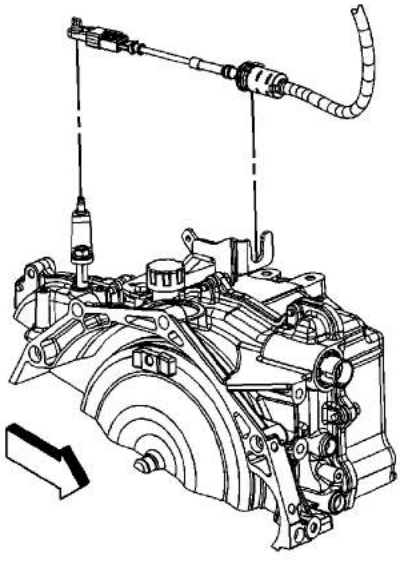

52. Install the shift control cable to the shift control cable bracket and engage the shift control cable retaining clip.
53. Install the transaxle shift cable to the range select lever.
54. Raise and support the vehicle.
55. Install the oxygen sensors. Refer to Heated Oxygen Sensor 1 Replacement and Heated Oxygen Sensor 2 Replacement
56. Instal the exhaust manifold heat shield. Refer to Exhaust Manifold Heat Shield Replacement

cardiagn.com

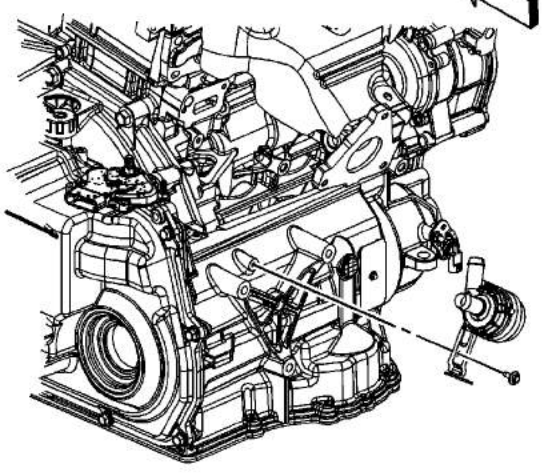

57. On LAT engine, install the auxiliary heater water pump and bolt and tighten the bolt to **9 N·m (80 lb in)**.

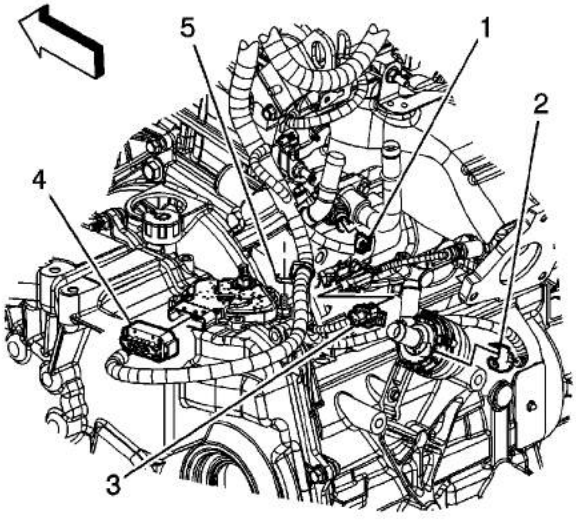

58. Connect the engine wiring harness electrical connector (2) to the auxiliary heater water pump.
59. Install the engine control module. Refer to Engine Control Module Replacement

cardiagn.com

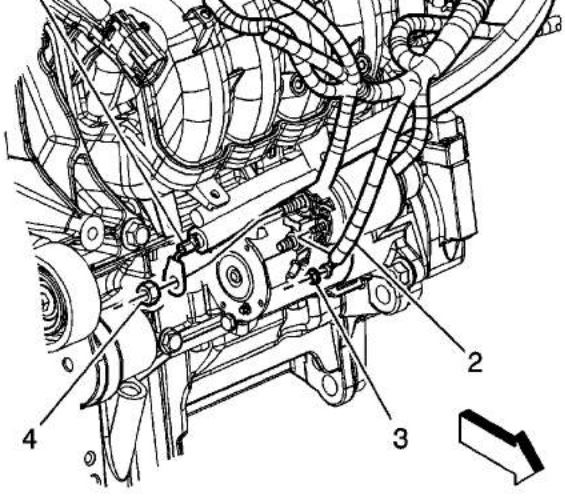

60. On all engines, position and install the positive battery cable between the starter and the engine.
61. Install the positive battery cable lead (1) to the starter motor.
62. Install the positive battery cable to starter motor nut (4) and tighten the nut to **9 N·m (80 lb in)**.

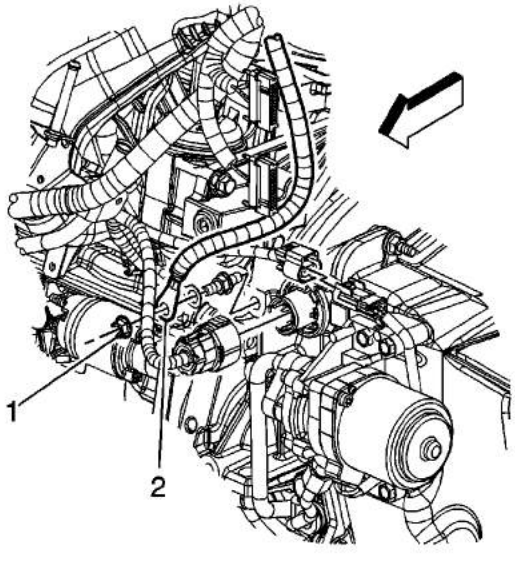

63. Position the negative battery cable and install the negative battery cable lead (2) to the transaxle stud.
64. Install the engine wiring harness ground lead nut (1) to the transaxle stud and tighten the nut to **50 N·m (37 lb ft)**.

cardiagn.com

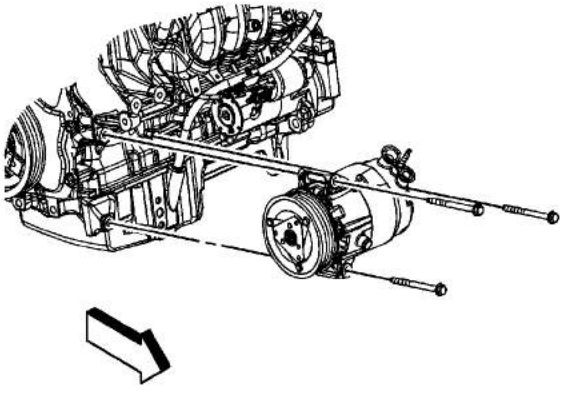

65. Position the A/C compressor and install the bolts and tighten to **50 N·m (37 lb ft)**.

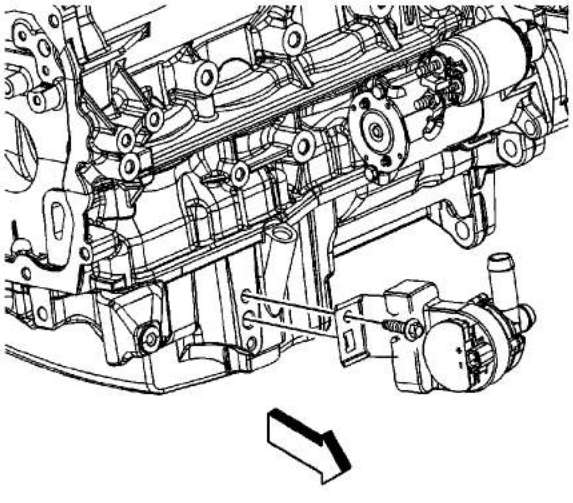

66. On LAT engine, install the generator control module coolant pump and bolt and tighten the bolt to **25 N·m (18 lb ft)**.

cardiagn.com

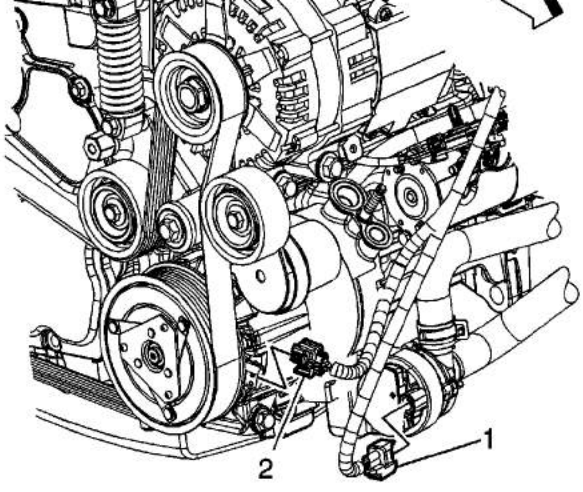

67. Connect the engine wiring harness electrical connector (1) to the generator control module coolant pump.
68. On all engines, connect the engine wiring harness electrical connector (2) to the A/C compressor.
69. Lower the vehicle.

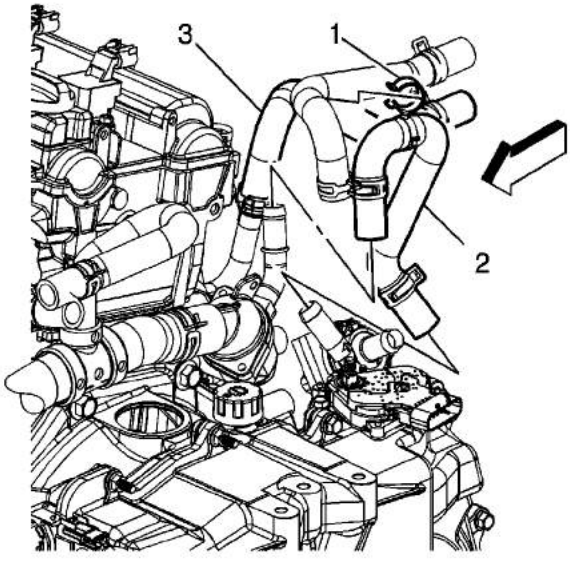

70. Install the coolant recovery reservoir/heater inlet hose (2) to the thermostat housing.
71. Position the coolant recovery reservoir/heater inlet hose (2) clamp at the thermostat housing.
72. Install the heater inlet hose (3) to the thermostat housing.
73. Position the heater inlet hose clamp at the thermostat housing.
74. Install the auxiliary heater water pump hose clip (1) to the heater outlet hose.

cardiagn.com

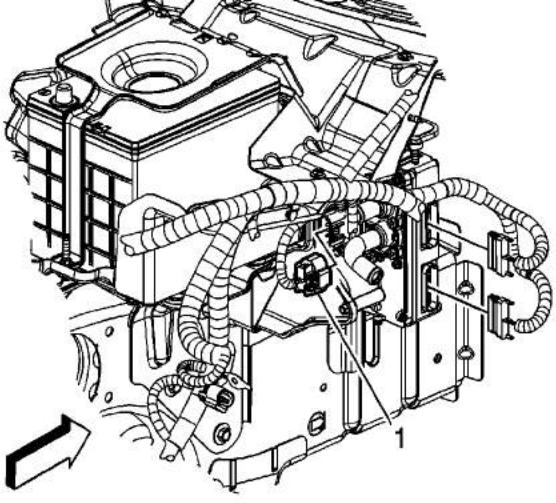

75. On LAT engine, connect the engine wiring harness electrical connector (1) to the transaxle auxiliary pump module.

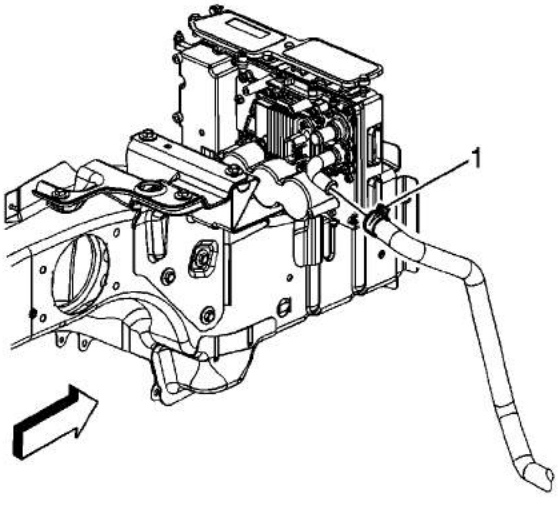

76. Install the generator control module coolant hose to the generator control module.
77. Position the generator control module coolant hose clamp (1) at the generator control module.

cardiagn.com

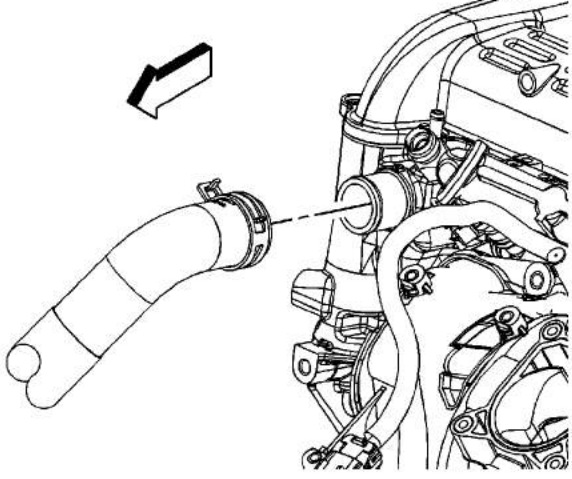

78. On all engines, reposition the radiator inlet hose clamp using the J 38185
79. Remove the radiator inlet hose from the cylinder head.
80. Remove the radiator outlet hose. Refer to Radiator Outlet Hose Replacement

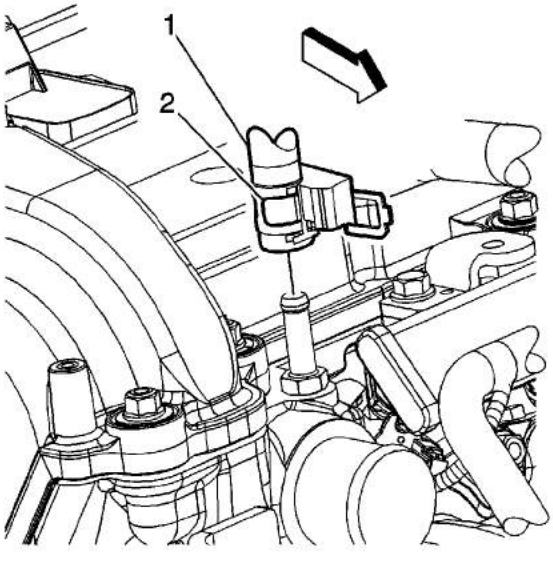

81. Position and install the coolant recovery inlet hose (1) to the cylinder head.
82. Install the coolant recovery inlet pipe clip to the fuel rail.
83. Install the coolant recovery inlet hose clamp (2) at the cylinder head.

cardiagn.com

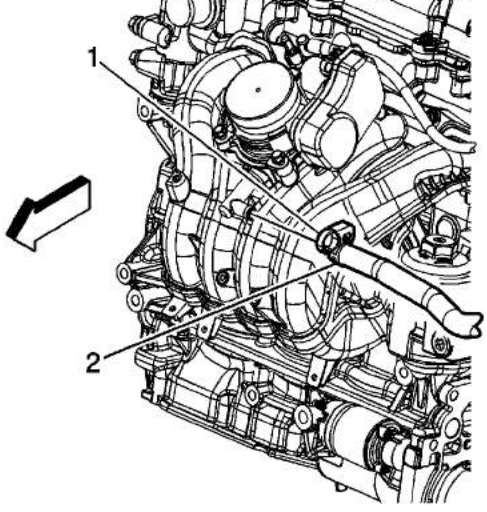

84. Position and install the vacuum brake booster hose (2) to the intake manifold.
85. Position the vacuum brake booster hose clamp (1) at the intake manifold.
86. Install the generator starter. Refer to Generator with Starter Replacement
87. For the LAT, install the battery tray. Refer to Battery Tray Replacement
88. For the LE5, install the battery box. Refer to Battery Box Replacement

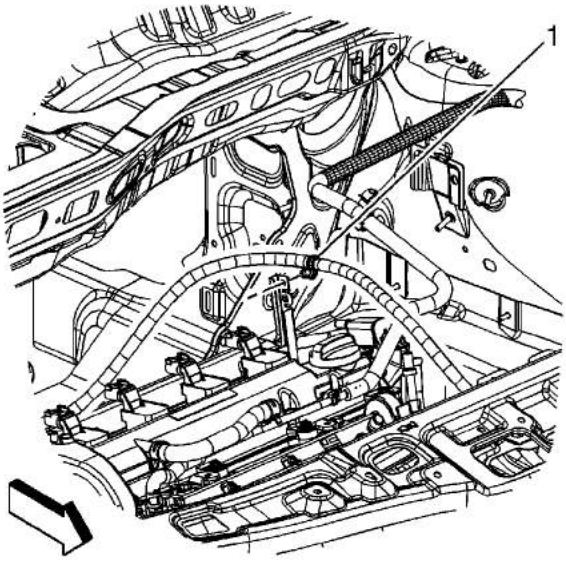

89. Install the transaxle shift cable clip (1) to the fuel line bracket.

cardiagn.com

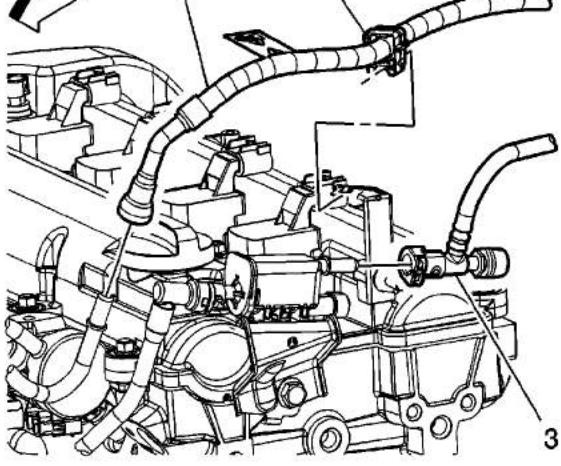

90. Install the throttle body. Refer to Throttle Body Assembly Replacement
91. Install the fuel feed pipe clip (2) to the fuel line bracket.
92. Connect the EVAP line (3) quick connect fitting to the EVAP purge solenoid. Refer to Plastic Collar Quick Connect Fitting Service
93. Connect the fuel feed pipe (1) quick connect fitting at the fuel rail. Refer to Metal Collar Quick Connect Fitting Service
94. Install the air cleaner outlet duct. Refer to Air Cleaner Outlet Duct Replacement
95. Install the air cleaner assembly. Refer to Air Cleaner Assembly Replacement
96. Fill the cooling system. Refer to Cooling System Draining and Filling
97. For the LAT engine, reconnect the hybrid battery. Refer to Hybrid Battery Service Disconnect/Connect
98. Fill the transaxle with fluid. Refer to Transmission Fluid Check
99. Refill the engine with oil. Refer to Engine Oil and Oil Filter Replacement
100. Recharge the A/C system with refrigerant. Refer to Refrigerant Recovery and Recharging
101. Perform the CKP system variation learn procedure. Refer to Crankshaft Position System Variation Learn
102. Start the engine and allow the engine to run, inspect for leaks. Correct as necessary.
103. Install the hood. Refer to Hood Replacement

cardiagn.com

Engine Oil and Oil Filter Replacement

Removal Procedure

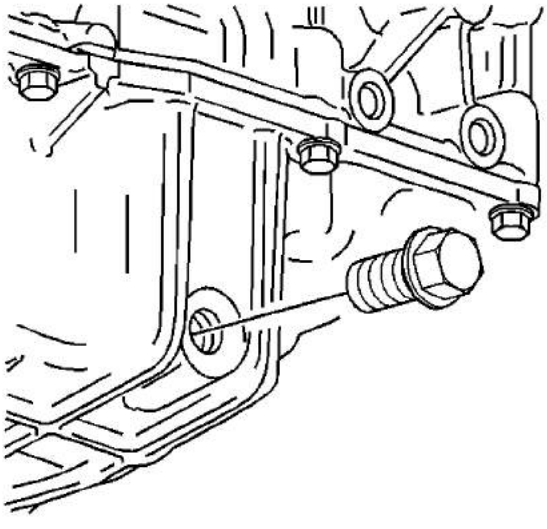

1. Raise and support the vehicle. Refer to Lifting and Jacking the Vehicle.
2. Place a drain pan under the oil drain plug.
3. Remove the oil pan drain plug.
4. Allow the oil to drain completely.

   Caution: Refer to Fastener Caution in the Preface section.

5. Install the oil pan drain plug and tighten to **25 N·m (18 lb ft)**.
6. Lower the vehicle.

cardiagn.com

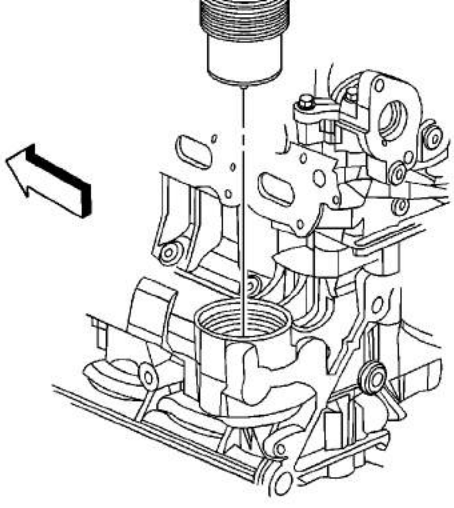

Note: DO NOT use an open end wrench on the hex on top of the oil filter cap.

7. Use a 32 mm (1 1/4 in) socket on the hex on top of the oil filter cap, or an oil filter wrench on the outside diameter of the oil filter cap.
8. Remove the oil filter cap and filter.
9. Remove the filter from the cap.

Installation Procedure

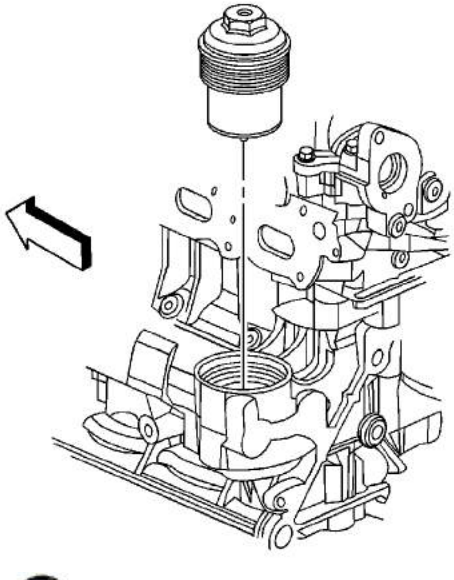

1. Install the NEW oil filter to the cap.

cardiagn.com

Caution: Over torquing the oil filter cap may cause damage to the oil filter cap resulting in an oil leak.

Note: DO NOT use an open end wrench on the hex on top of the oil filter cap.

3. Use a 32 mm (1 1/4 in) socket on the hex on the top of the oil filter cap, or an oil filter wrench on the outside diameter of the oil filter cap.

   Tighten the oil filter cap until fully seated. DO NOT exceed **25 N·m (18 lb ft)**.

4. Fill the engine with oil. Refer to Fluid and Lubricant Recommendations.

cardiagn.com