SPECIFICATIONS

FASTENER TIGHTENING SPECIFICATIONS

Fastener Tightening Specifications

Application	Specification	
	Metric	English
BPMV Brake Pipe Fittings	16 N.m	12 lb ft
Brake Fluid Pressure Sensor	22 N.m	16 lb ft
EBCM/BPMV Bracket Bolts	27 N.m	20 lb ft
EBCM/BPMV Insulator Nuts	12 N.m	106 lb in
EBCM/ BPMV Insulator Bolt	14 N.m	10 lb ft
EBCM to BPMV Bolts in Sequence	• First Pass 3 N.m • Second Pass 6 N.m	• First Pass 27 lb in Second Pass 53 lb in
Lateral Accelerometer Nuts	3 N.m	24 lb in
Steering Gear Nut	100 N.m	74 lb ft
Yaw Rate Sensor Nuts	7 N.m	62 lb in

SCHEMATIC AND ROUTING DIAGRAMS

ABS SCHEMATIC ICONS

ABS Schematic Icons

Icon	Icon Definition
	IMPORTANT: **Twisted-pair wires provide an effective shield that helps protect sensitive electronic components from electrical interference. If the wires were covered with shielding, install new shielding.** **In order to prevent electrical interference from degrading the performance of the connected components, you must maintain the proper specification when making any repairs to the twisted-pair wires shown :** • **The wires must be twisted a**

minimum of 9 turns per 31 cm (12 in) as measured anywhere along the length of the wires.

- **The outside diameter of the twisted wires must not exceed 6.0 mm (0.25 in).**

ABS SCHEMATICS

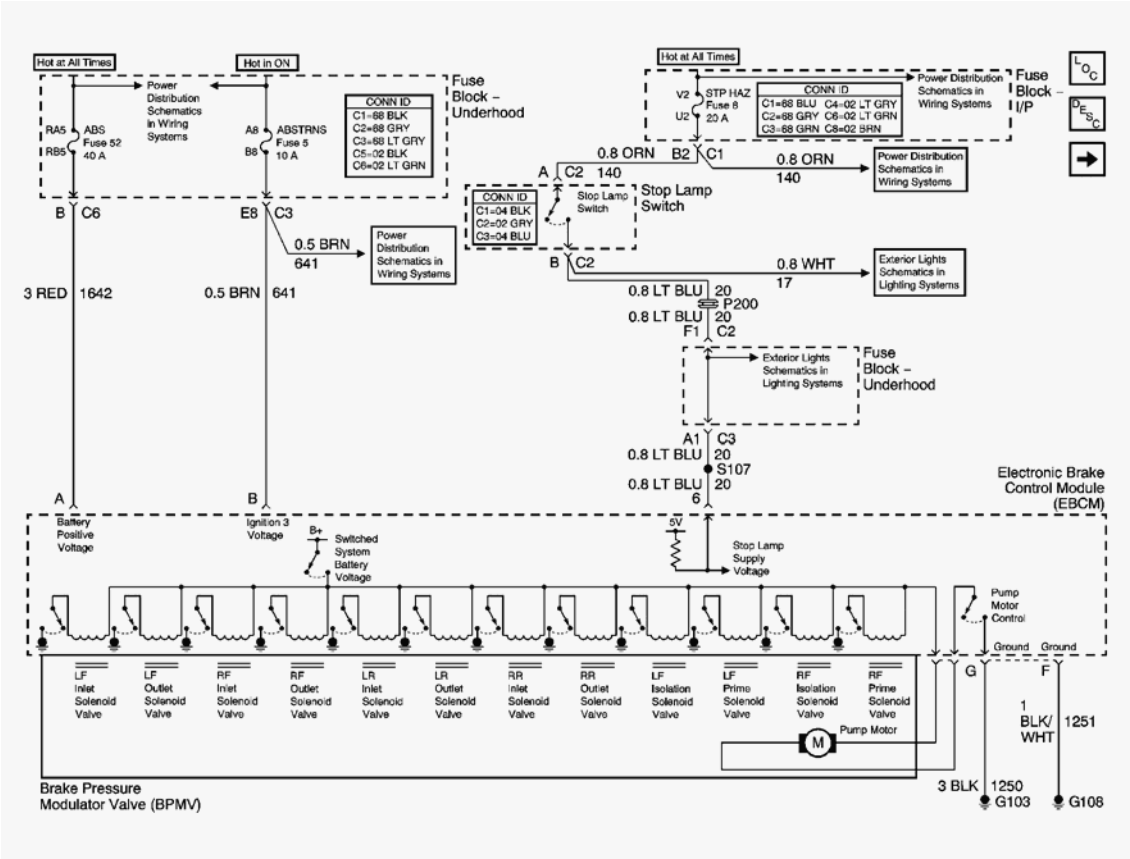

Fig. 1: Power, Ground, And Stoplamp Switch Signal Schematics
Courtesy of GENERAL MOTORS CORP.

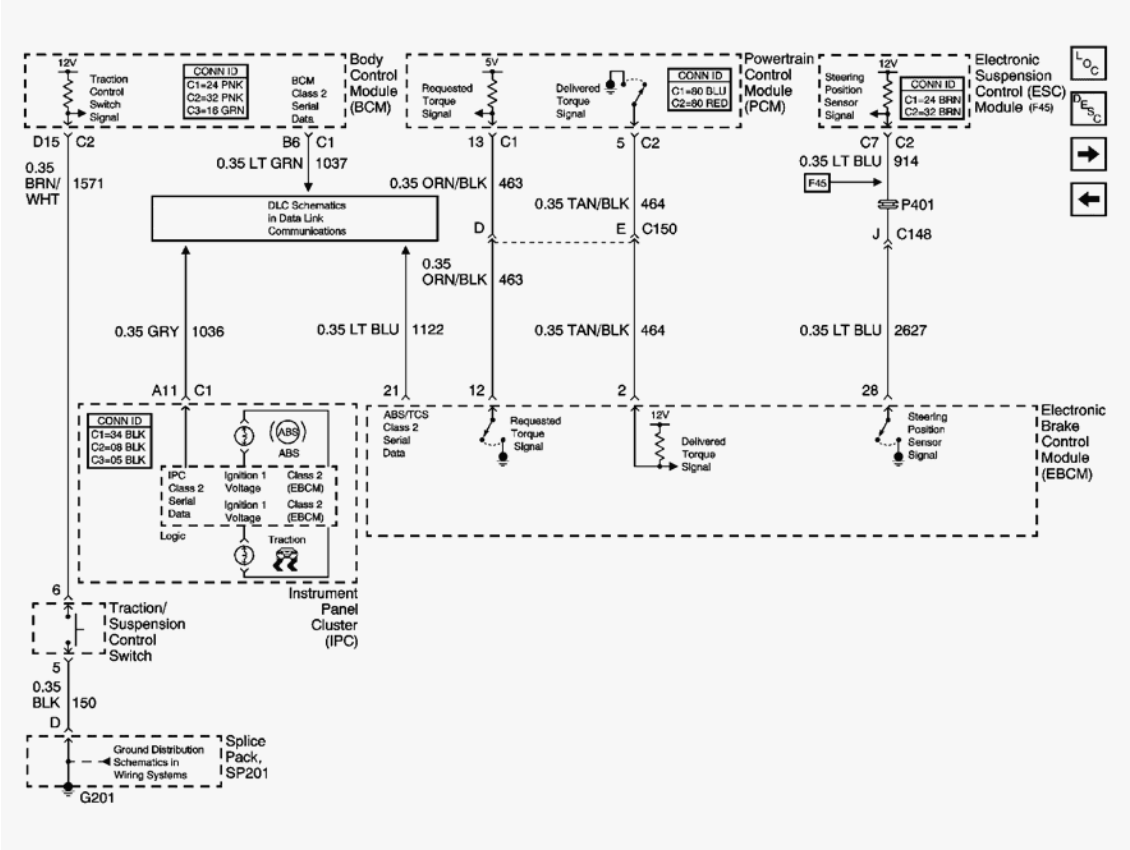

Fig. 2: Traction Control Request, DLC, Torque And Steering Position Signals Schematics
Courtesy of GENERAL MOTORS CORP.

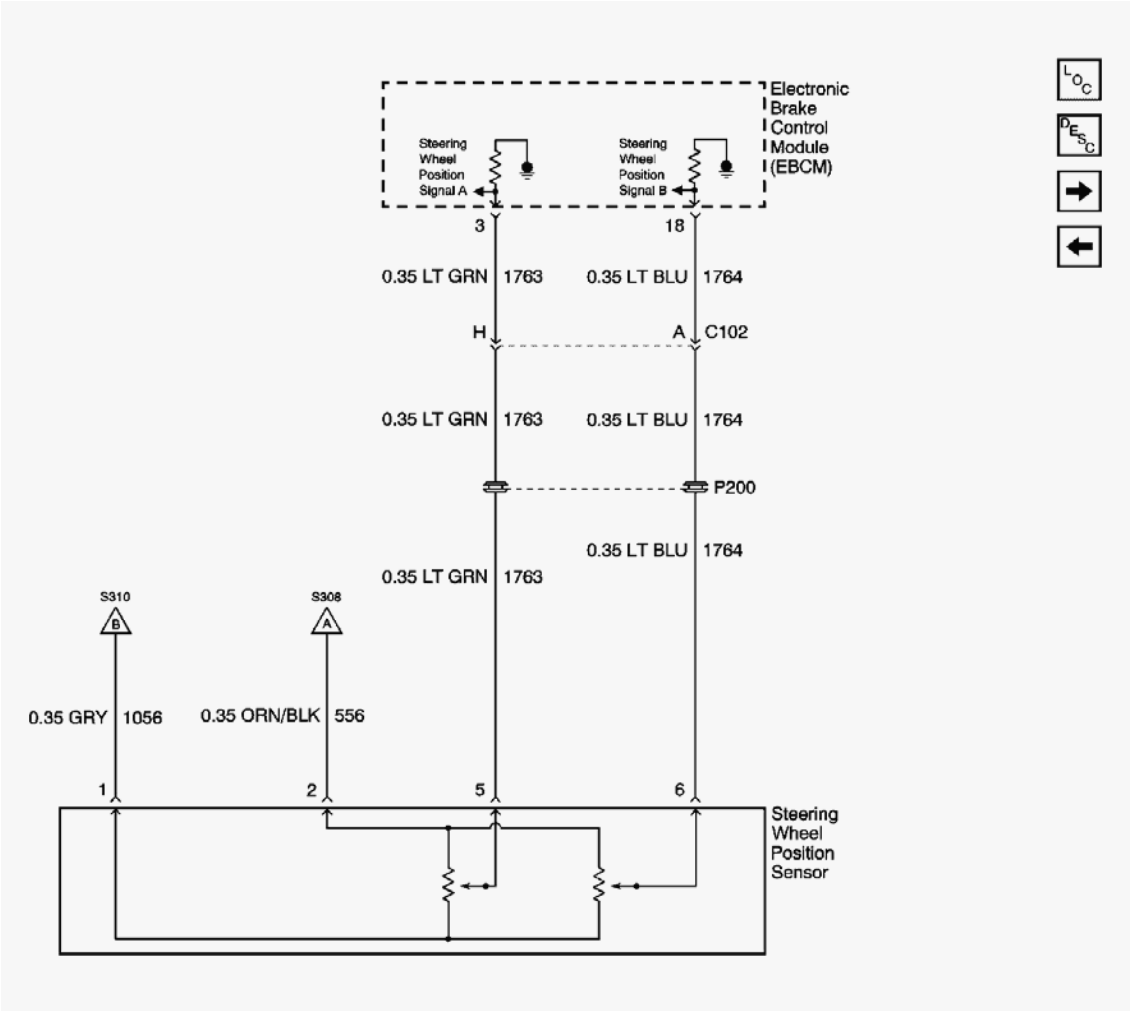

Fig. 3: Steering Wheel Position Sensor Schematics
Courtesy of GENERAL MOTORS CORP.

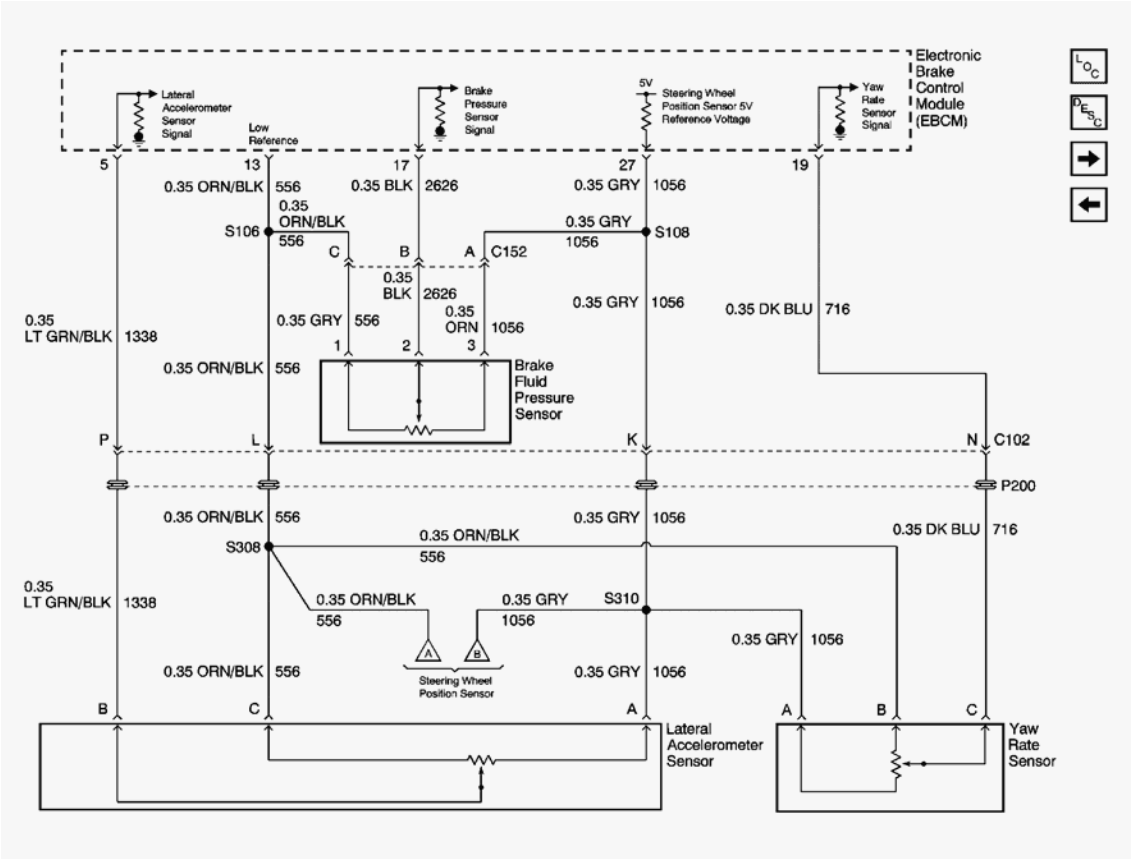

Fig. 4: Brake Fluid Pressure Sensor, Lateral Accelerometer And Yaw Rate Sensor Schematics (JL4)
Courtesy of GENERAL MOTORS CORP.

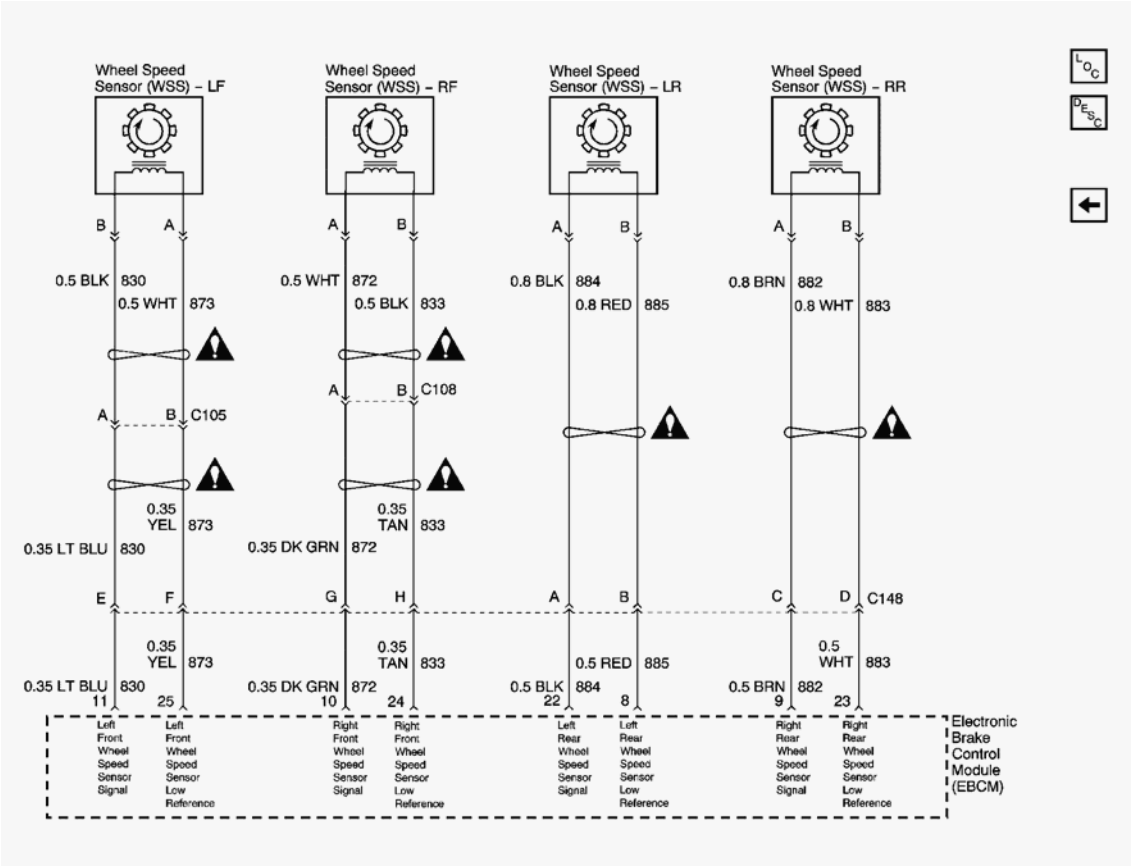

Fig. 5: Wheel Speed Sensors Schematics
Courtesy of GENERAL MOTORS CORP.

COMPONENT LOCATOR

ABS COMPONENT VIEWS

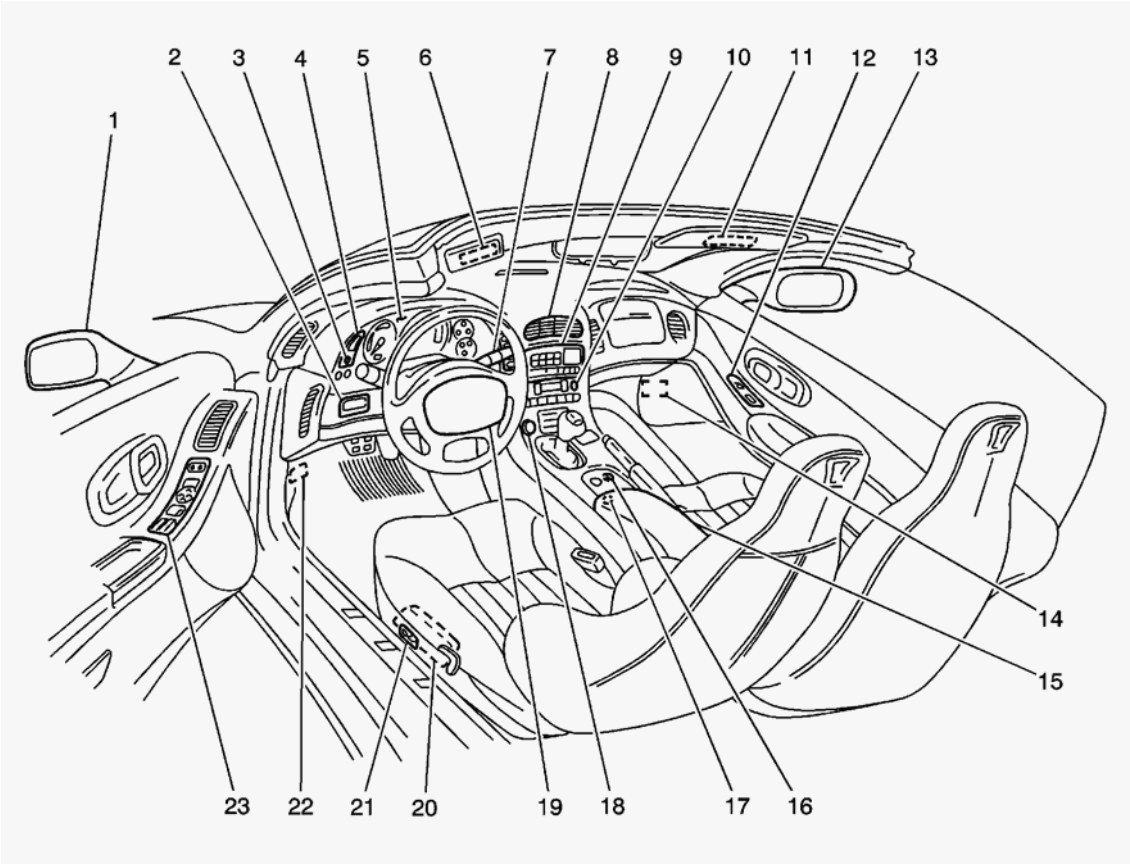

Fig. 6: Cockpit Component View
Courtesy of GENERAL MOTORS CORP.

Callouts For Fig. 6

Callout	Component Name
1	Outside Rearview Mirror-Driver
2	Fog Lamp/Rear Compartment Lid Release Switch (Domestic), Fog Lamp Switch (Export)
3	Dimmer Switch
4	Dimmer/Head Up Display (HUD) Switch
5	Instrument Panel Cluster (IPC)
6	Vanity Mirror Lamp-Left
7	Driver Information Center (DIC) Switch-Right
8	Hazard Switch
9	Radio
10	HVAC Control Module
11	Vanity Mirror Lamp-Right
12	Door Switch-Passenger
13	Outside Rearview Mirror-Passenger
14	Footwell Courtesy Lamp-Right
15	Fuel Door Lock Release Switch (Domestic), Rear Compartment Lid/Fuel Door Lock Release

	Switch (Export)
16	Traction/Suspension Control Switch
17	Auxiliary Power Outlet Connector
18	Cigar Lighter
19	Horn Switch
20	Seat Control Module (SCM)-Driver (W/Memory Seats), Seat Relay Center-Driver (W/O Memory Seats)
21	Seat Adjuster Switch-Driver
22	Footwell Courtesy Lamp-Left
23	Door Switch-Driver

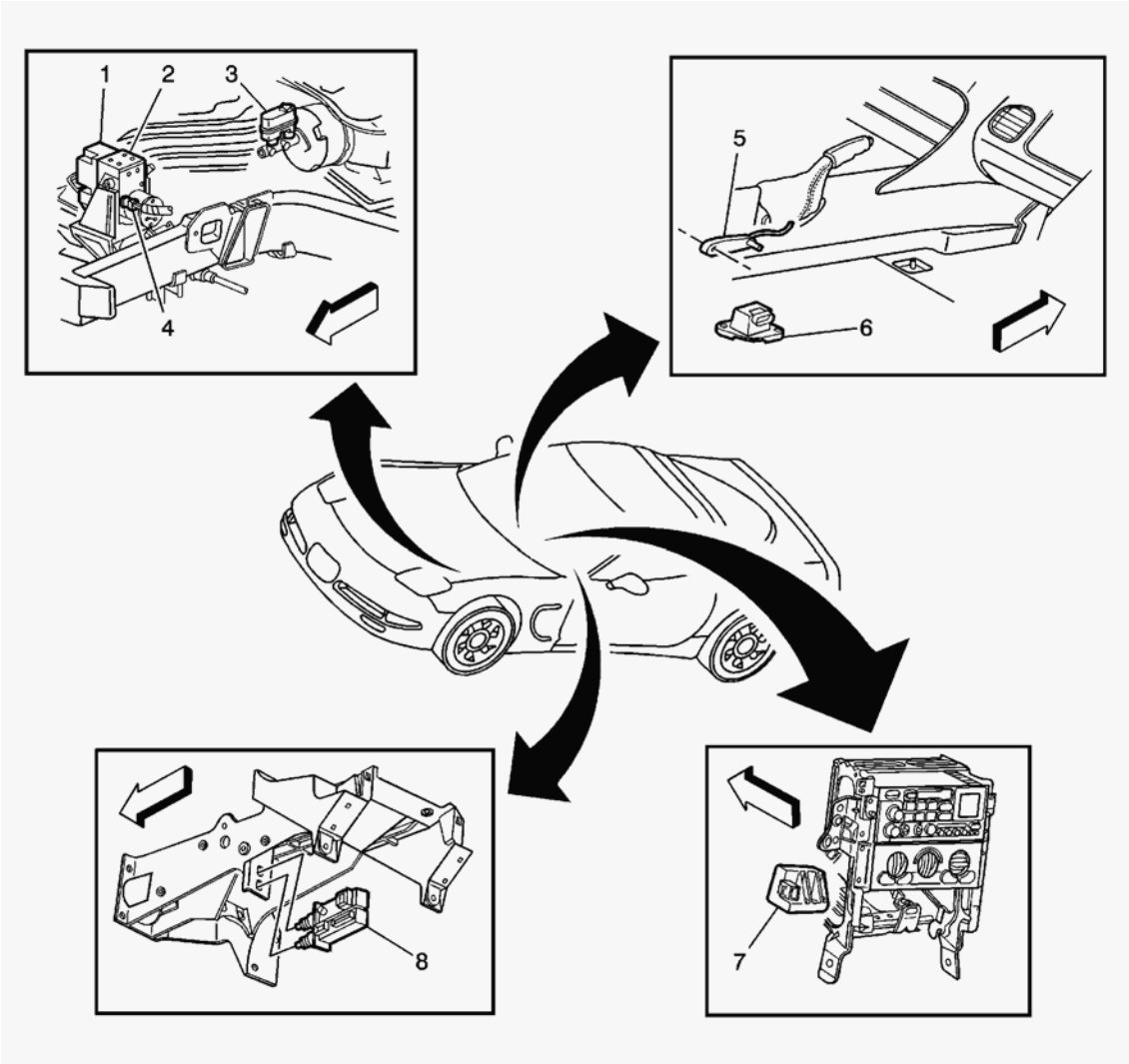

Fig. 7: ABS Components View - Switches, Sensors And Modules
Courtesy of GENERAL MOTORS CORP.

Callouts For Fig. 7

Callout	Component Name
1	Electronic Brake Control Module (EBCM)
2	Brake Pressure Modular Valve (BPMV)
3	Brake Fluid Level Switch
4	Brake Fluid Pressure Sensor
5	Park Brake Switch
6	Lateral Accelerometer Sensor
7	Yaw Rate Sensor
8	Stoplamp Switch

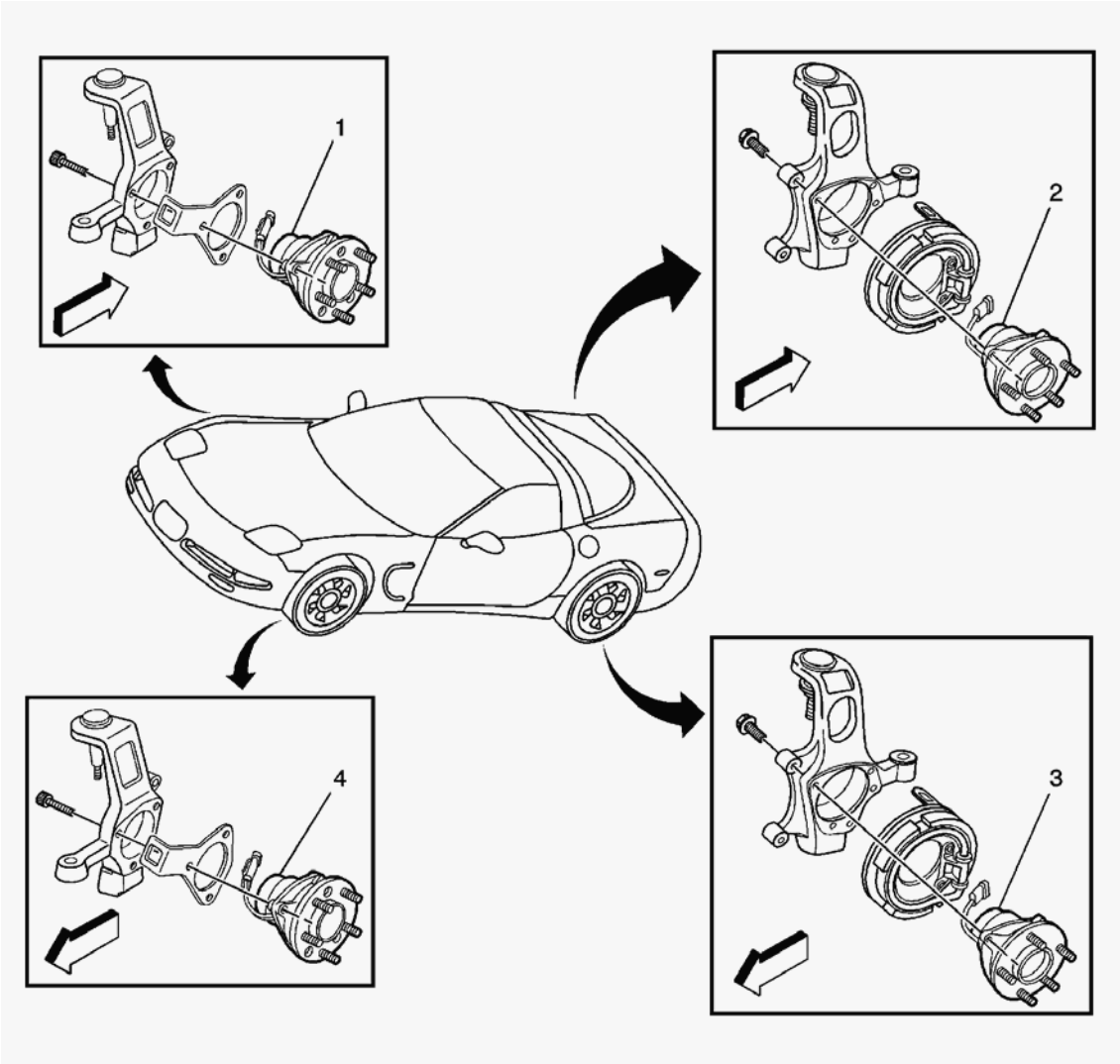

Fig. 8: ABS Components View - Wheel Speed Sensors
Courtesy of GENERAL MOTORS CORP.

Callouts For Fig. 8

Callout	Component Name

1	Wheel Speed Sensor (WSS) - RF
2	Wheel Speed Sensor (WSS) - RR
3	Wheel Speed Sensor (WSS) - LR
4	Wheel Speed Sensor (WSS) - LF

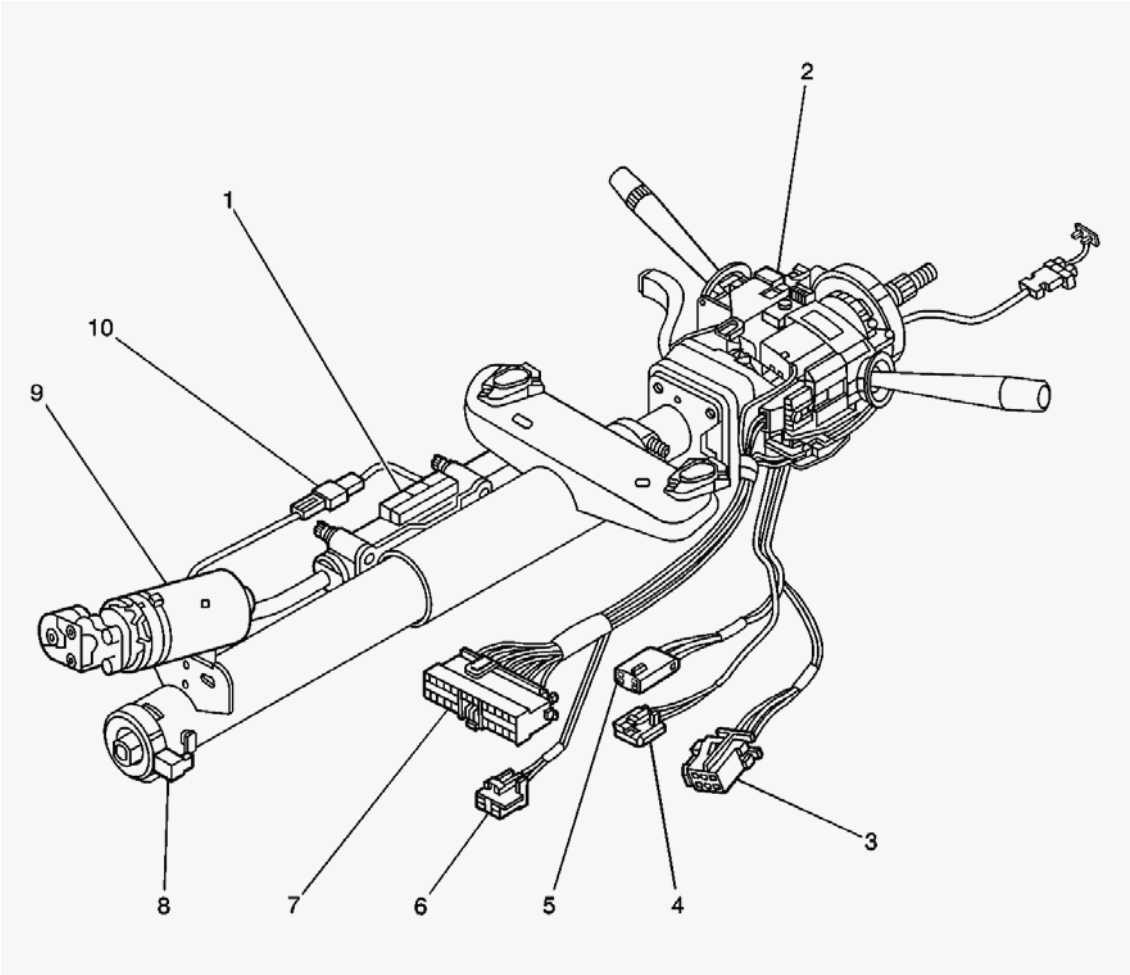

Fig. 9: Steering Column Component View
Courtesy of GENERAL MOTORS CORP.

Callouts For Fig. 9

Callout	Component Name
1	Telescoping Sensor
2	Steering Column Lock
3	C219
4	C207
5	C211
6	C217
7	C209

8	Steering Wheel Position Sensor
9	Telescoping Drive Motor
10	C210

ABS CONNECTOR END VIEWS

Brake Fluid Pressure Sensor Terminal Identification

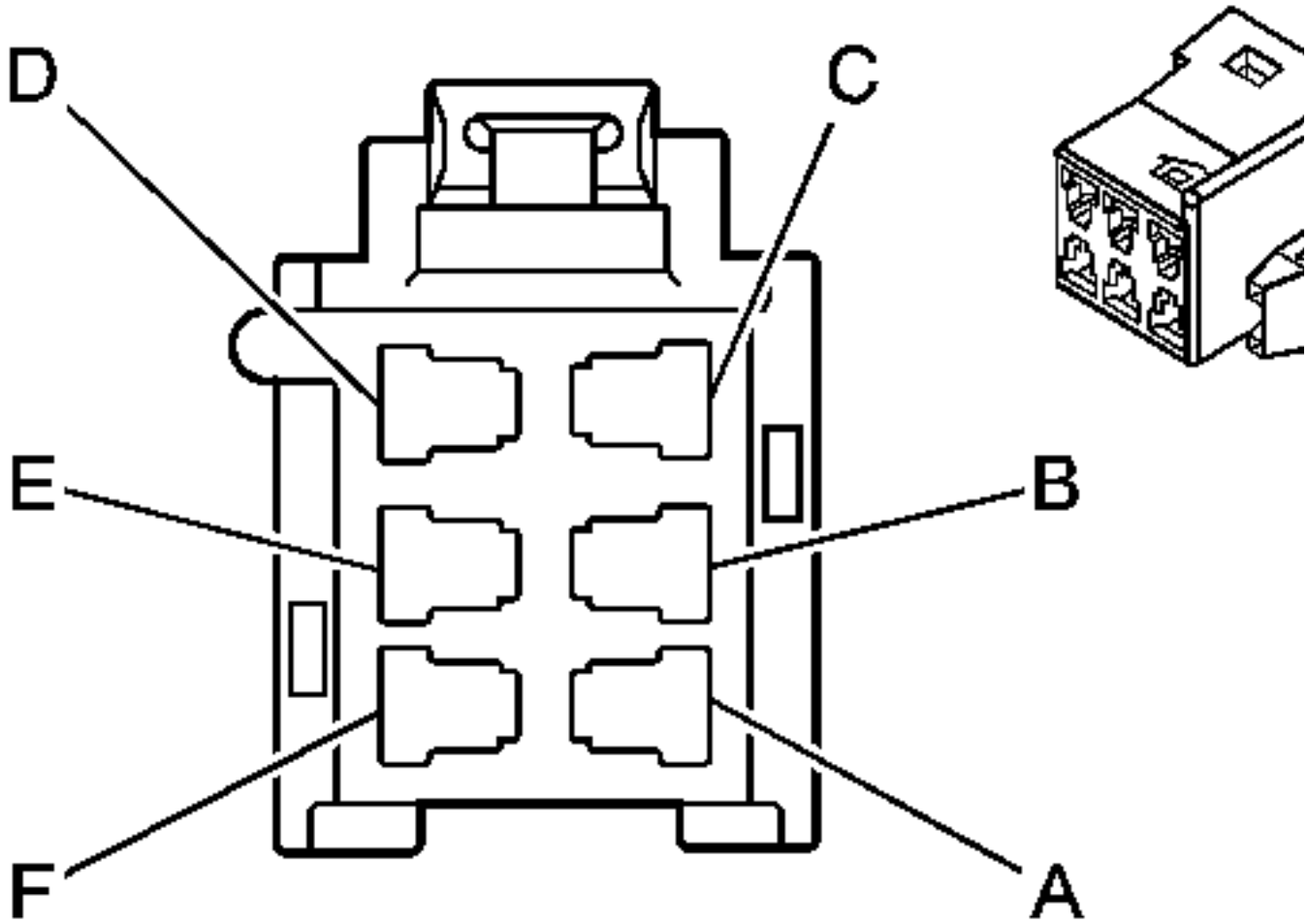

Connector Part Information	• **15324236**

		• 3-Way F Metri-Pack 150 Series (GRY)	
Pin	**Wire Color**	**Circuit No.**	**Function**
1	GRY	556	Low Reference
2	BLK	2626	Brake Pressure Sensor Signal
3	ORN	1056	Steering Wheel Position Sensor 5V Reference Voltage

Electronic Brake Control Module Terminal Identification (EBCM)

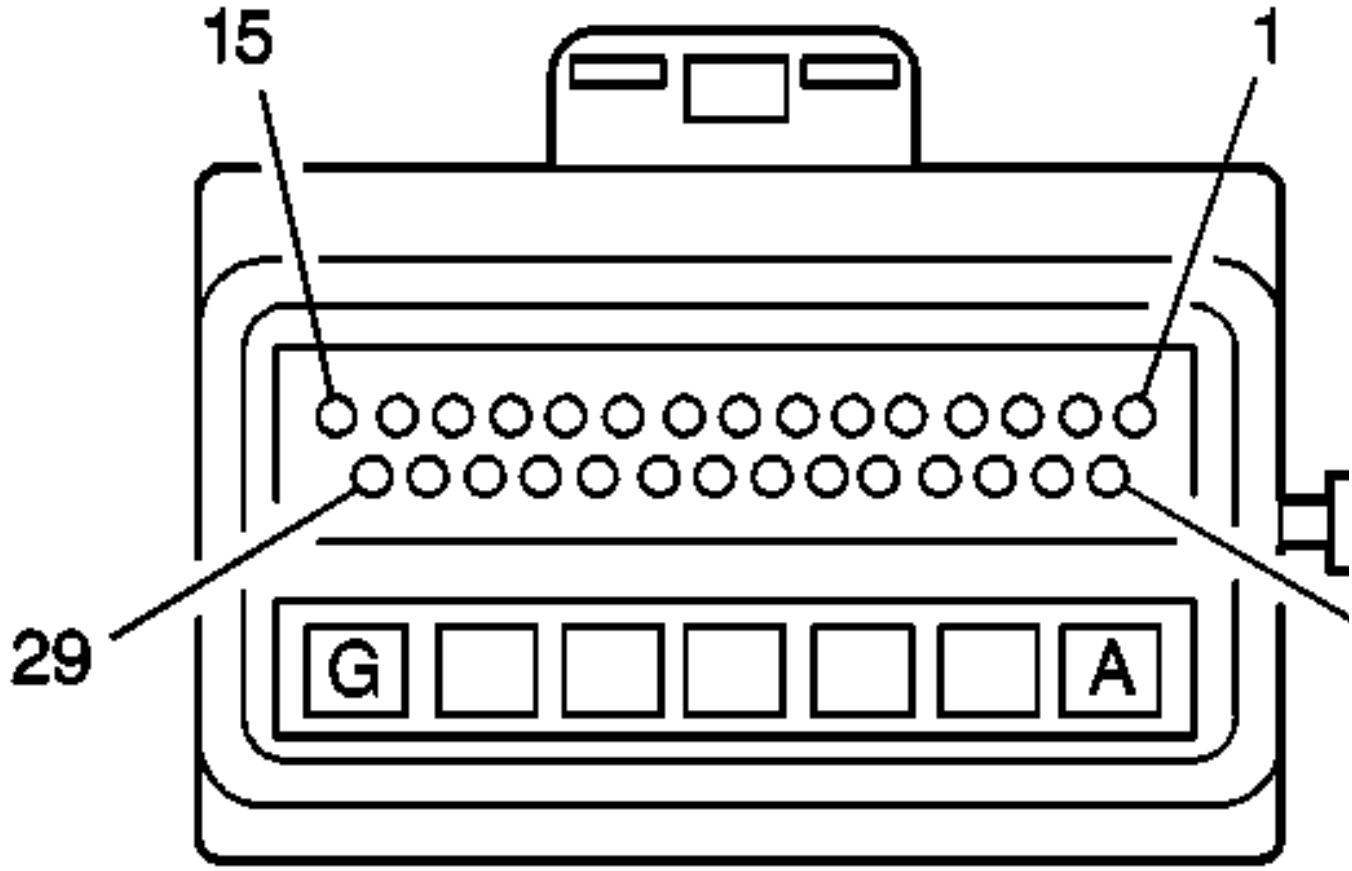

Connector Part Information	• **C1 - 15401425** • **7-Way F Metri-Pack 480, GT 150 Mixed Series (BLK)** • **C2 - 15356700**

		• 29 Way F Micro-Pack 100 Series (GRY)	
Pin	**Wire Color**	**Circuit No.**	**Function**
A	RED	1642	Battery Positive Voltage
B	BRN	641	Ignition 3 voltage
C	GRY	1787	Variable Effort Steering Actuator High Effort Contr
D	WHT	345	Variable Effort Steering Actuator Low Effort Contro
E	-	-	Not Used
F	BLK/WHT	1251	Ground
G	BLK	1250	Ground
1	-	-	Not Used
2	TAN/BLK	464	Delivered Torque Signal
3	LT GRN	1763	Steering Wheel Position Signal A
4	-	-	Not Used
5	LT GRN/BLK	1338	Lateral Accelerometer Input (JL4)
6	LT BLU	20	Stop lamp Supply Voltage
7	-	-	Not Used
8	RED	885	Left Rear Wheel Speed Sensor Low Reference
9	BRN	882	Right Rear Wheel Speed Sensor Signal
10	DK GRN	872	Right Front Wheel Speed Sensor Signal
11	LT BLU	830	Left Front Wheel Speed Sensor Signal
12	ORN/BLK	463	Requested Torque Signal
13	ORN/BLK	556	Low Reference
14-16	-	-	Not Used
17	BLK	2626	Brake Pressure Sensor Signal (JL4)
18	LT BLU	1764	Steering Wheel Position Signal B
19	DK BLU	716	Yaw Rate Sensor Signal (JL4)
20	-	-	Not Used
21	LT BLU	1122	ABS/TCS Class 2 Serial Data
22	BLK	884	Left Rear Wheel Speed Sensor Signal
23	WHT	883	Right Rear Wheel Speed Sensor Low Reference
24	TAN	833	Right Front Wheel Speed Sensor Low Reference
25	YEL	873	Left Front Wheel Speed Sensor Low Reference
26	-	-	Not Used
27	GRY	1056	Steering Wheel Position Sensor 5V Reference Volta
28	LT BLU	2627	Steering Position Sensor Signal
29	-	-	Not Used

Electronic Traction/Suspension Control Switch Terminal Identification

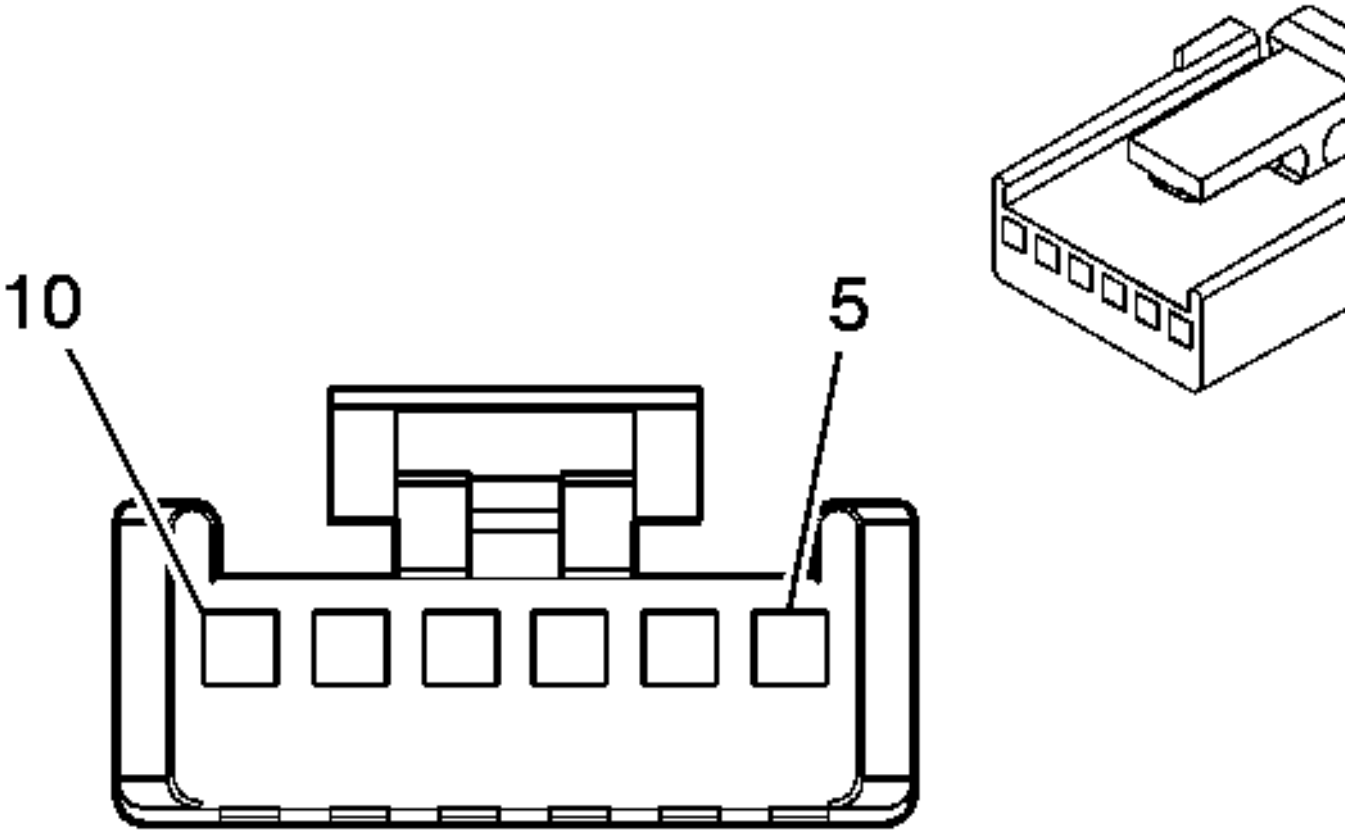

Connector Part Information		• 12040953 • 6-Way F Micro-Pack 100 Series (BLK)	
Pin	**Wire Color**	**Circuit No.**	**Function**
5	BLK	150	Ground
6	BRN/WHT	1571	Traction Control Switch Signal
7	PNK/BLK	1385	Selective Ride Control Switch Low Reference
8	TAN/WHT	1384	Selective Ride Control Switch Signal
9	BRN/WHT	1244	Instrument Panel Lamp Supply Voltage - 2
10	ORN	2840	Battery Positive Voltage

Lateral Accelerometer Sensor Terminal Identification

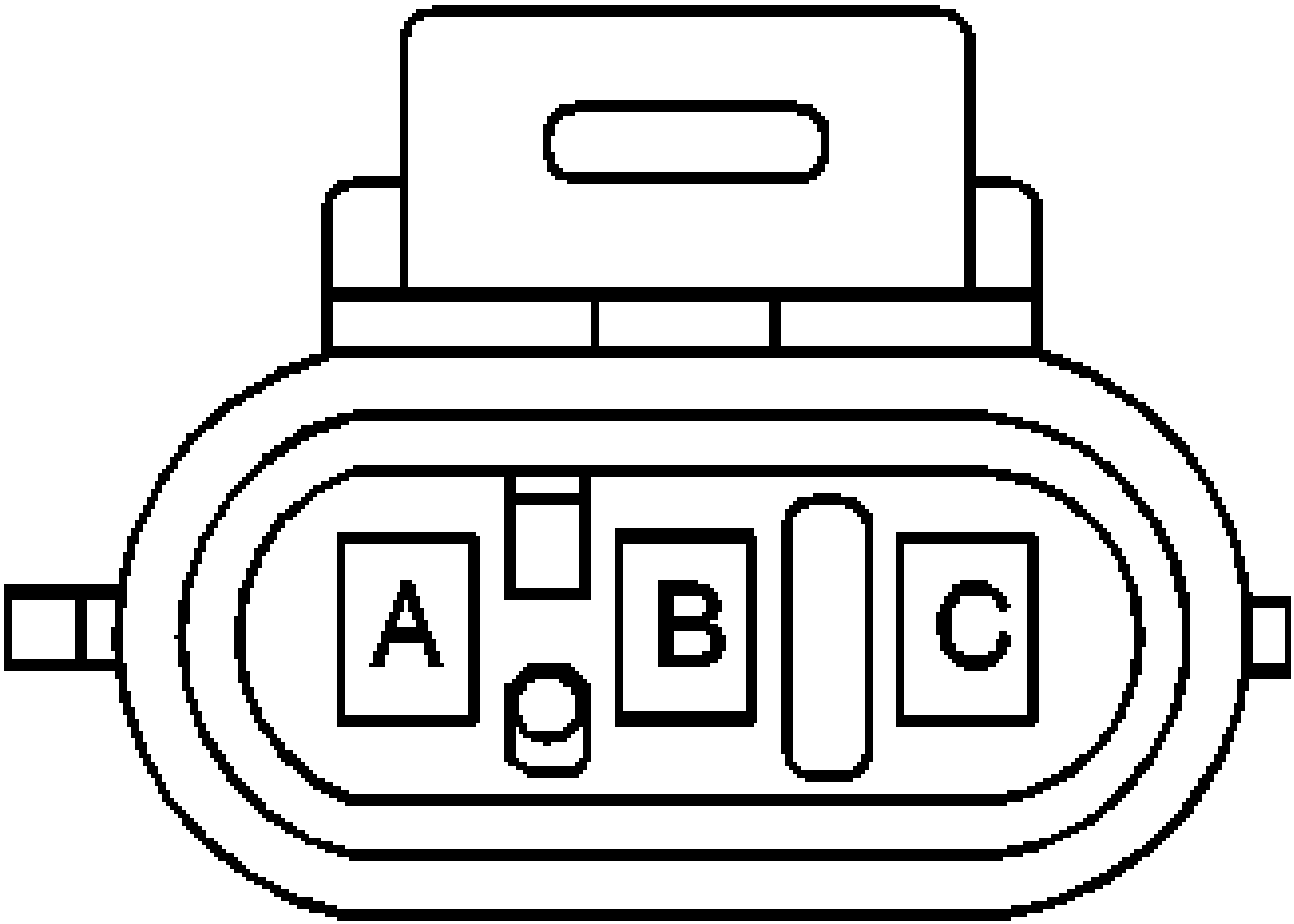

Connector Part Information		• 12146121 • 3-Way F Metri-Pack 150 Series (BRN)	
Pin	**Wire Color**	**Circuit No.**	**Function**
A	GRY	1056	Steering Wheel Position Sensor 5V Reference Voltag

B	LT GRN/BLK	1338	Lateral Accelerometer Signal
C	ORN/BLK	556	Low Reference

Wheel Speed Sensor Terminal Identification (WSS) - LF

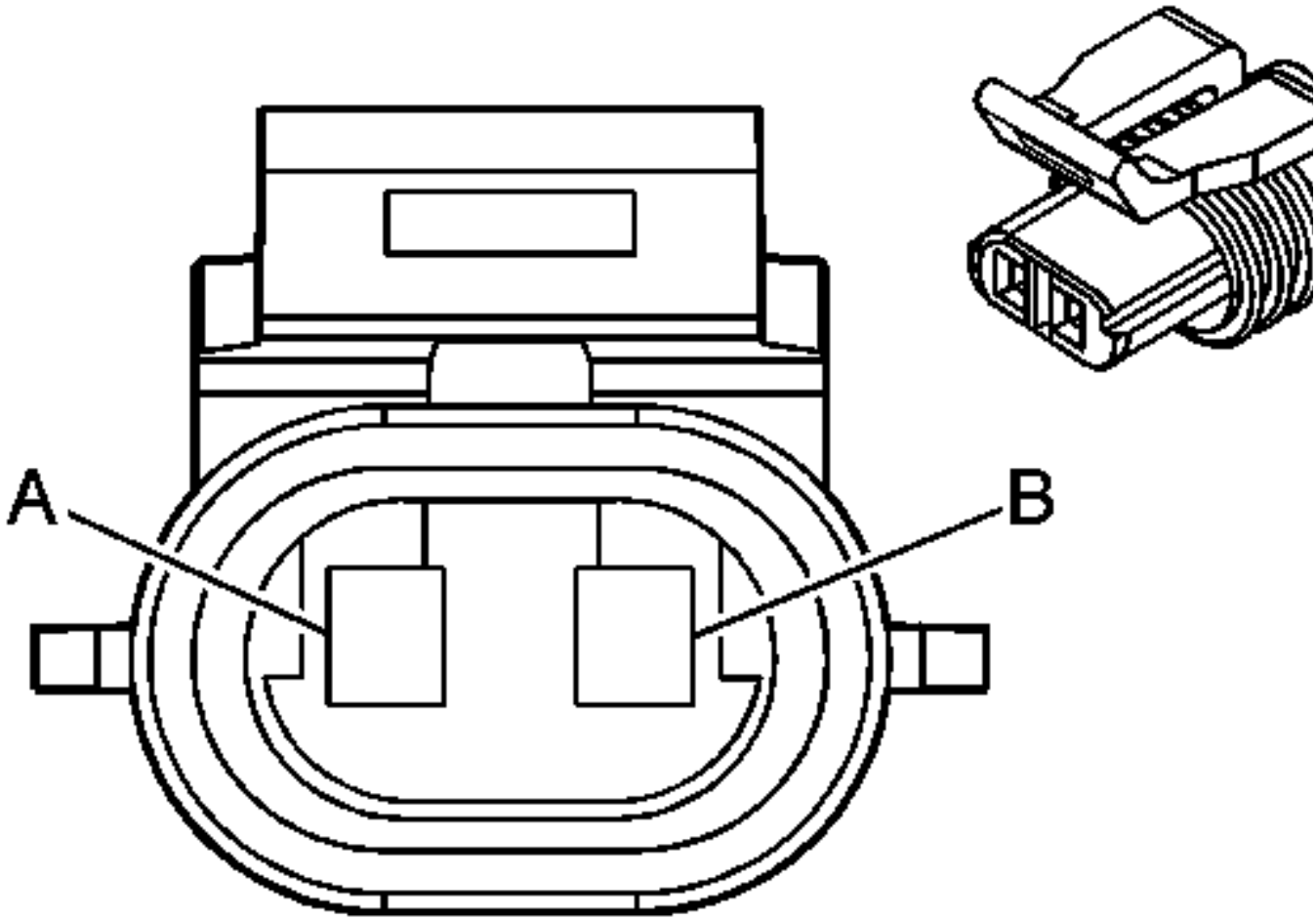

Connector Part Information		• **12052644** • **2 Way F Metri-Pack 150 Sealed (LT GRY)**	
Pin	**Wire Color**	**Circuit No.**	**Function**
A	WHT	873	Left Front Wheel Speed Sensor Low Reference

B	BLK	830	Left Front Wheel Speed Sensor Signal

Wheel Speed Sensor Terminal Identification (WSS) - LR

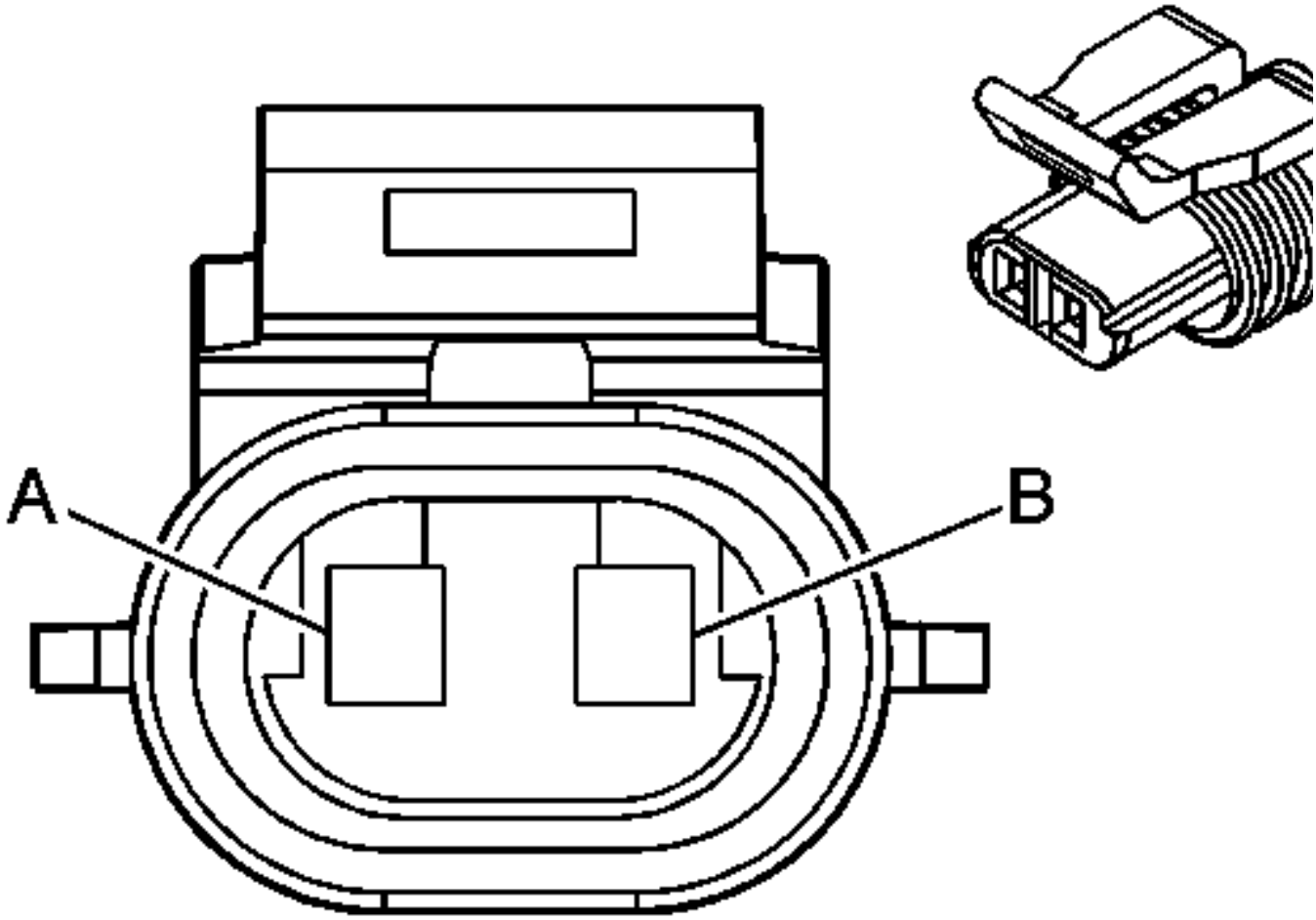

Connector Part Information		• 12186686 • 2 Way F Metri-Pack 150 Sealed (LT GRY)	
Pin	**Wire Color**	**Circuit No.**	**Function**
A	BLK	884	Left Rear Wheel Speed Sensor Signal
B	RED	885	Left Rear Wheel Speed Sensor Low Reference

Wheel Speed Sensor Terminal Identification (WSS) - RF

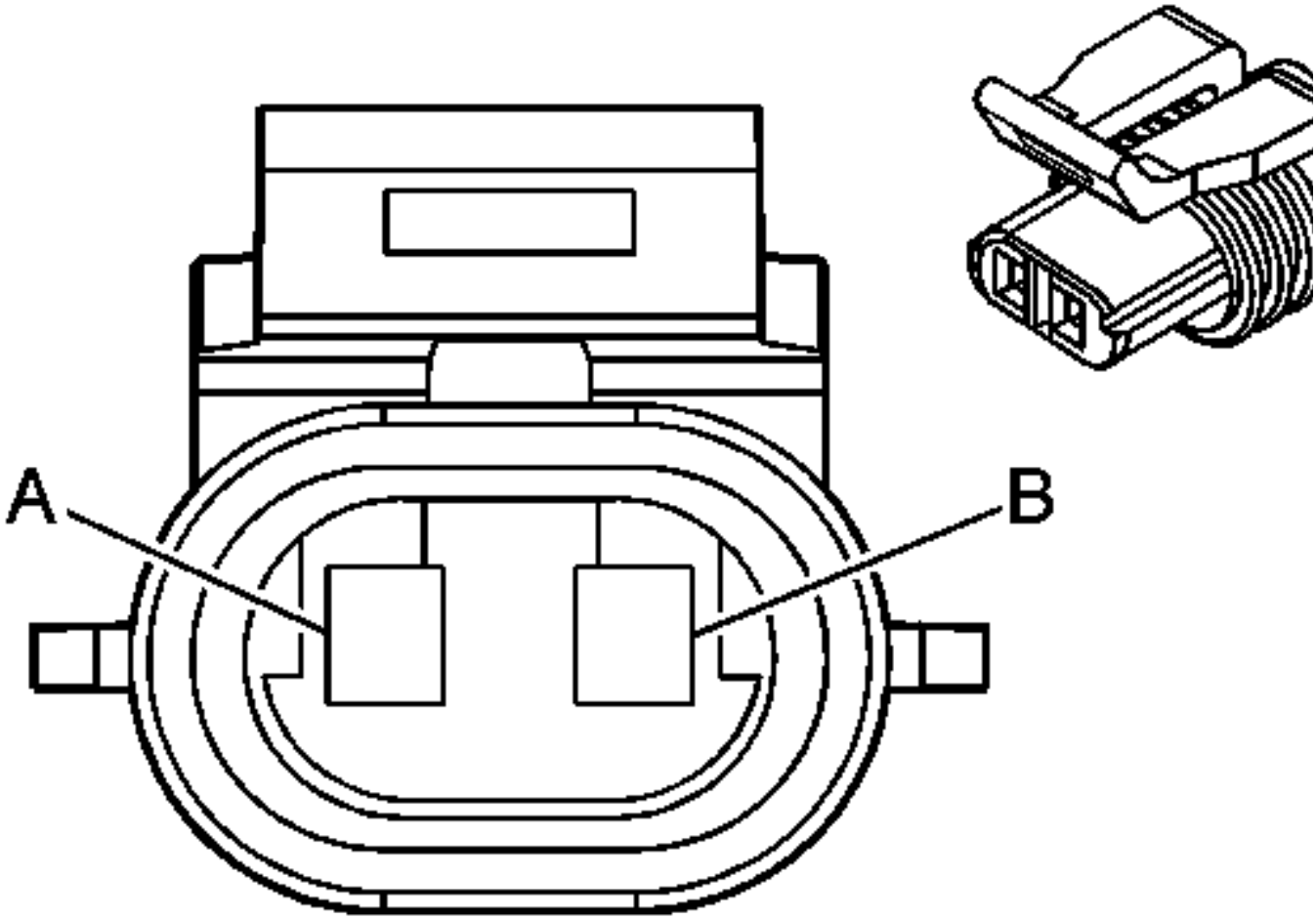

Connector Part Information		• 12052644 • 2 Way F Metri-Pack 150 Sealed (LT GRY)	
Pin	**Wire Color**	**Circuit No.**	**Function**
A	WHT	872	Right Front Wheel Speed Sensor Signal
B	BLK	833	Right Front Wheel Speed Sensor Low Reference

Wheel Speed Sensor Terminal Identification (WSS) - RR

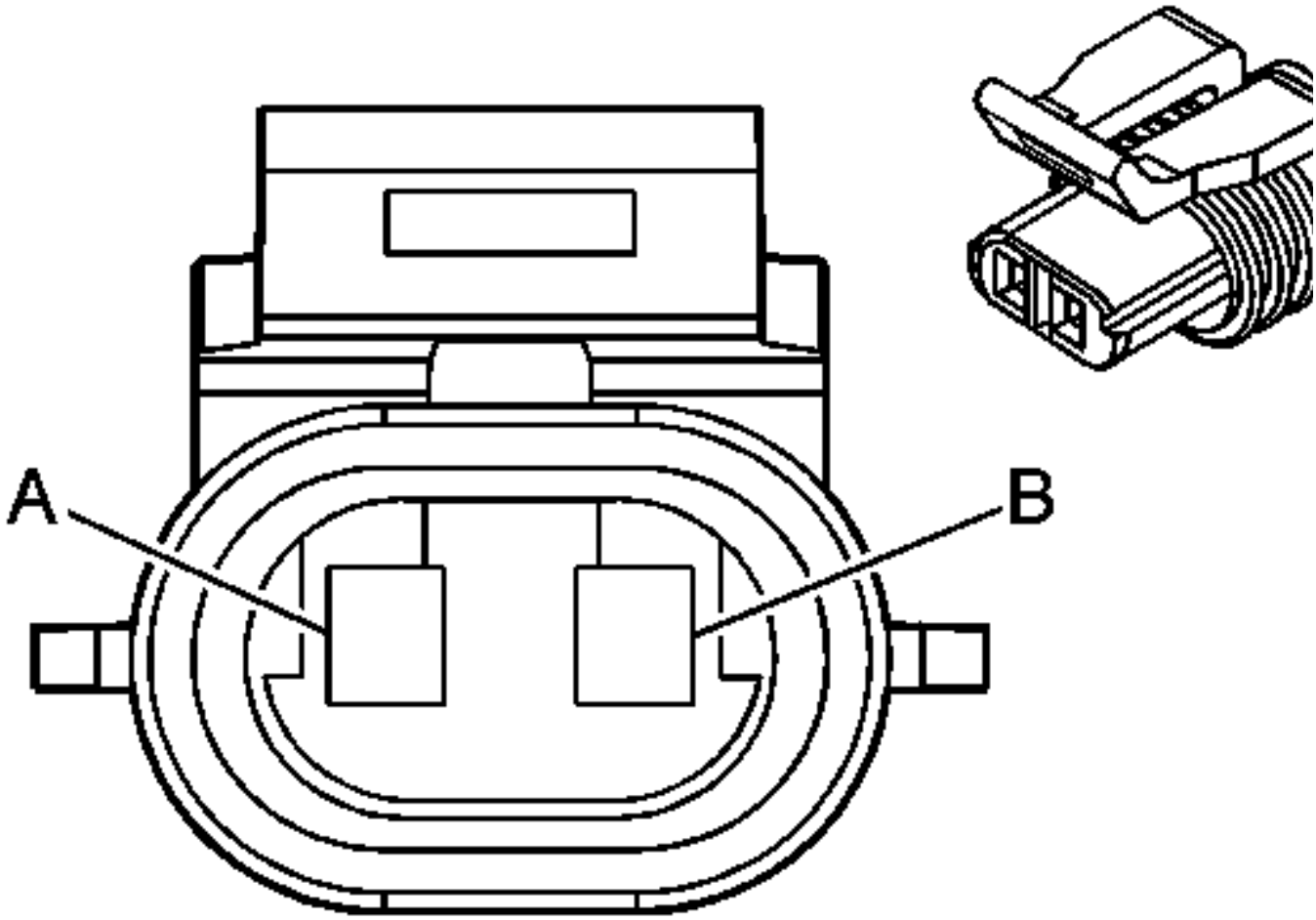

Connector Part Information		• 12186686 • 2 Way F Metri-Pack 150 Sealed (LT GRY)	
Pin	**Wire Color**	**Circuit No.**	**Function**
A	BRN	882	Right Rear Wheel Speed Sensor Signal
B	WHT	883	Right Rear Wheel Speed Sensor Low Reference

Yaw Rate Sensor Terminal Identification

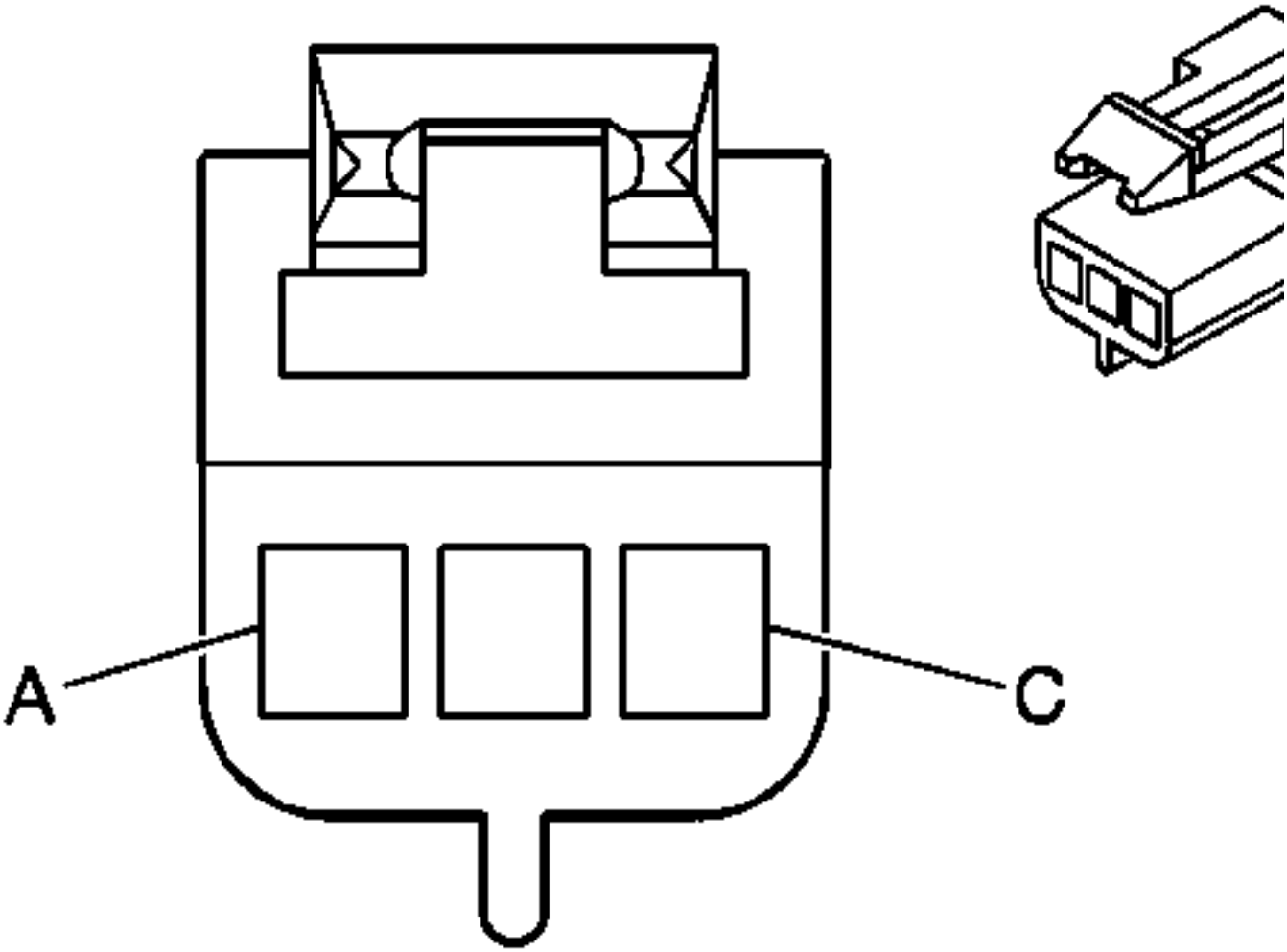

Connector Part Information		• 12064758 • 3-Way F 150 Metri-Pack Series (BLK)	
Pin	**Wire Color**	**Circuit No.**	**Function**
A	GRY	1056	Steering Wheel Position Sensor 5V Reference Voltag
B	ORN/BLK	556	Low Reference
C	DK BLU	716	Yaw Rate Sensor Signal

DIAGNOSTIC INFORMATION AND PROCEDURES

DIAGNOSTIC STARTING POINT - ANTILOCK BRAKE SYSTEM

Begin the system diagnosis with **Diagnostic System Check - ABS** . The Diagnostic System Check will provide the following information:

- The identification of the control modules which command the system
- The ability of the control modules to communicate through the serial data circuit
- The identification of any stored diagnostic trouble codes (DTCs) and their status

The use of the Diagnostic System Check will identify the correct procedure for diagnosing the system and where the procedure is located.

DIAGNOSTIC SYSTEM CHECK - ABS

Circuit Description

The ABS Diagnostic System Check is an organized approach to identify problems associated with the EBCM. This check must be the starting point for any EBCM complaint, and will direct you to the next logical step in diagnosing the complaint. The EBCM is a very reliable component and is not likely the cause of the malfunction. Most system complaints are linked to faulty wiring, connectors, and occasionally to components. Understanding the ABS system and using the tables correctly will reduce diagnostic time and prevent unnecessary parts replacement.

Test Description

The numbers below refer to the step numbers on the diagnostic table.

2: Lack of communication may be due to a partial malfunction of the serial data circuit or due to a total malfunction of the serial data circuit. The specified procedure will determine the particular condition.

4: The presence of DTCs which begin with "U" indicate some other module is not communicating. The specified procedure will compile all the available information before tests are performed.

Diagnostic System Check - ABS

Step	Action	Yes	No
1	Install a scan tool. Does the scan tool power up?	Go to **Step 2**	Go to **Scan Tool Does Not Power Up** in Data Link Communications
	1. Turn ON the ignition, with the engine OFF. 2. Attempt to establish communication with the following control modules: • Body control module		

2	(BCM) • Electronic brake control module (EBCM) • Instrument panel cluster (IPC) • Powertrain control module (PCM) Does the scan tool communicate with all control modules?	Go to **Step 3**	Go to **Scan Tool Does Not Communicate with Class 2 Device** in Data Link Communications
3	Select the display DTCs function on the scan tool for the following control modules: • Body control module (BCM) • Electronic brake control module (EBCM) • Instrument panel cluster (IPC) • Powertrain control module (PCM) Does the scan tool display any DTCs?	Go to **Step 4**	Go to **Symptoms - Antilock Brake System**
4	Does the scan tool display any DTCs which begin with a "U"?	Go to **Scan Tool Does Not Communicate with Class 2 Device** in Data Link Communications	Go to **Step 5**
5	Does the scan tool display DTC B0605 or B1000?	Go to **Diagnostic Trouble Code (DTC) List** in Body Control System	Go to **Diagnostic Trouble Code (DTC) List**

SCAN TOOL OUTPUT CONTROLS

Electronic Brake Control Module (EBCM)

Scan Tool Output Control	Additional Menu Selection(s)	Description
Automated Bleed	-	Used in order to bleed the ABS hydraulics. Refer to **ABS Automated Bleed Procedure** .
		Cycles each solenoid valve and the pump motor in order to verify

Automated Test	-	component operation. This test is identical to the Initialization Sequence. If a malfunction is detected, the EBCM will set the appropriate DTCs. The DTCs will be displayed upon completion of the test.
LF Inlet Valve Solenoid	Solenoid Test	Commands the solenoid ON and OFF.
LF Outlet Valve Solenoid	Solenoid Test	Commands the solenoid ON and OFF.
LR Inlet Valve Solenoid	Solenoid Test	Commands the solenoid ON and OFF.
LR Outlet Valve Solenoid	Solenoid Test	Commands the solenoid ON and OFF.
Pump Motor Test	-	Commands the pump motor ON and OFF.
RF Inlet Valve Solenoid	Solenoid Test	Commands the solenoid ON and OFF.
RF Outlet Valve Solenoid	Solenoid Test	Commands the solenoid ON and OFF.
RR Inlet Valve Solenoid	Solenoid Test	Commands the solenoid ON and OFF.
RR Outlet Valve Solenoid	Solenoid Test	Commands the solenoid ON and OFF.
Steering Position Sensor Test	-	Tests the steering wheel position sensor (SWPS) ability to provide a valid input.

SCAN TOOL DATA LIST

Body Control Module (BCM)

Scan Tool Parameter	Data List	Units Displayed	Typical Data Value
Ignition ON, engine OFF.			
Battery Volts	Data	Volts	12
TCS Switch	Input Data 2	On/Off	Off

Electronic Brake Control Module (EBCM)

Scan Tool Parameter	Data List	Units Displayed	Typical Data Value
Ignition ON, engine OFF, and steering wheel straight.			
8 Digit GM Part Number	Controller Information 1	Numeric	Varies

ABS Active	ABS Data	Yes/No	No
ABS Failed	ABS Data	Yes/No	No
ABS Warning Indicator	ABS Data	On/Off	Off
Brake Pressure Sensor Input	VSES Data	Volts	0
Brake Temp Status	TCS Data	Normal/Over Temp	Normal
Calibration ID	Controller Information 1	Numeric	Varies
Configuration ID	System Configuration	Numeric	Varies
DE Base Part Number	Controller Information 2	Numeric	Varies
DE Build Sequence Number	Controller Information 1	Numeric	Varies
DE Calibration Part Number	Controller Information 2	Numeric	Varies
DE End Model Part Number	Controller Information 2	Numeric	Varies
DE ROM Part Number	Controller Information 2	Numeric	Varies
Delivered Torque PWM Duty Cycle	TCS Data	%	10
DRP Active	ABS Data	Yes/No	No
DRP Disabled	ABS Data	Yes/No	No
DRP Equipped	System Configuration	Yes/No	Yes
Dual Analog Steering Sensor Expected	System Configuration	Yes/No	Varies
Dual Analog SWPS Input A	VSES Data	Volts	Varies 0-5
Dual Analog SWPS Input B	VSES Data	Volts	Varies 0-5
ETS Equipped	System Configuration	Yes/No	No
Extended Travel Brake Switch	• ABS Data • TCS Data	Applied/Released	Released
Ignition Voltage	• ABS Data • TCS Data	Volts	12
Julian Date Code	Controller Information 1	Numeric	Varies
Lateral Accelerometer Input	VSES Data	Volts	2.5
Lateral Accelerometer Input	VSES Data	g	0
Left Front Wheel Speed	• ABS Data • TCS Data • VSES Data	km/h or mph	0

Left Rear Wheel Speed	• ABS Data • TCS Data • VSES Data	km/h or mph	0
LF Inlet Valve Solenoid	ABS Data	Active/Inactive	Inactive
LF Outlet Valve Solenoid	ABS Data	Active/Inactive	Inactive
LF Rotor Temperature	TCS Data	° C/° F	24° C (75° F)
LR Inlet Valve Solenoid	ABS Data	Active/Inactive	Inactive
LR Outlet Valve Solenoid	ABS Data	Active/Inactive	Inactive
Manufacturing Shift Info.	Controller Information 1	Numeric	Varies
Manufacturing Site	Controller Information 1	Alpha	Varies
PROM ID	Controller Information 1	Numeric	Varies
Pump Motor Feedback Voltage	• ABS Data • TCS Data	Volts	12
Pump Motor PWM	ABS Data	%	0
Pump Motor Relay Commanded State	• ABS Data • TCS Data	On/Off	Off
Pump Motor Relay Feedback State	• ABS Data • TCS Data	On/Off	Off
Red Brake Warning Indicator	ABS Data	On/Off	Off
Requested Torque PWM Duty Cycle	TCS Data	%	90
RF Inlet Valve Solenoid	ABS Data	Active/Inactive	Inactive
RF Outlet Valve Solenoid	ABS Data	Active/Inactive	Inactive
RF Rotor Temperature	TCS Data	° C/° F	24° C (75° F)
Right Front Wheel Speed	• ABS Data • TCS Data • VSES Data	km/h or mph	0
Right Rear Wheel Speed	• ABS Data • TCS Data • VSES Data	km/h or mph	0
Rough Road Parameter	• ABS Data • TCS Data	g	0
RR Inlet Valve Solenoid	ABS Data	Active/Inactive	Inactive
RR Outlet Valve Solenoid	ABS Data	Active/Inactive	Inactive
Solenoid Relay Commanded State	• ABS Data • TCS Data	On/Off	On

Solenoid Relay Feedback State	• ABS Data • TCS Data	On/Off	On
Steering Wheel Angle	VSES Data	°	0
Stop Lamp Switch	• ABS Data • TCS Data	Applied/Released	Released
Switched System Battery Voltage	• ABS Data • TCS Data	Volts	12
System ID	System Configuration	Numeric	Varies
TCS Active	TCS Data	Yes/No	No
TCS Active Indicator/Message	TCS Data	On/Off	Off
TCS Failed	TCS Data	Yes/No	No
TCS Warning Indicator/Message	TCS Data	On/Off	Off
TIM Equipped	System Configuration	Yes/No	No
Vehicle Speed	• ABS Data • TCS Data • VSES Data	km/h or mph	0
VES Equipped	System Configuration	Yes/No	Yes
VSES Active	VSES Data	Yes/No	No
VSES Active Indicator/Message	VSES Data	On/Off	Off
VSES Equipped	System Configuration	Yes/No	Varies
VSES Failed	VSES Data	Yes/No	No
VSES Failed Indicator/Message	VSES Data	On/Off	Off
VSES Is Centered	VSES Data	Yes/No	No
Yaw Rate Sensor Input	VSES Data	Volts	2.5
Yaw Rate Sensor Input	VSES Data	° /sec	0

Powertrain Control Module (PCM)

Scan Tool Parameter	Data List	Units Displayed	Typical Data Value
Ignition ON, engine OFF.			
Traction Control Signal	• Cruise Control Data • TAC Data	Active/Inactive	Inactive
Traction Control Status	Engine Data 2	Active/Inactive	Inactive
Torque Delivered Signal	• Engine Data 2 • TAC Data	N.m or ft-lb	0
Torque Requested Signal	• Engine Data 2 • TAC Data	N.m or ft-lb	0

SCAN TOOL DATA DEFINITIONS

8 Digit GM Part Number

The scan tool displays the part number of the control module.

ABS Active

The scan tool displays Yes or No. The active status of the ABS. Indicates if ABS is currently active.

ABS Failed

The scan tool displays Yes or No. The failed status of the ABS. Indicates if the EBCM disabled ABS due to a malfunction.

ABS Warning Indicator

The scan tool displays Off or On. Indicates if the EBCM is commanding the ABS indicator.

Battery Volts

The scan tool displays 0-30 Volts. The voltage measured between the module's battery positive voltage circuit and ground circuit.

Brake Pressure Sensor Input

The scan tool displays 0 to 5 volts. The brake fluid pressure signal from the brake fluid pressure sensor.

Brake Temp Status

The scan tool displays Normal or Over Temp. The status of the brake temperature. Indicates if the brake temperature is above the traction control thermal cutoff point. If brake temperatures are above the thermal cutoff point, Over Temp is displayed and traction control is temporarily suspended until the brake temperature cools below the cutoff. This feature is used to maintain braking effectiveness if the base braking system is required. Overly heated brakes could result in brake fade.

Calibration ID

The scan tool displays the 4 digit calibration ID of the control module.

Configuration ID

The scan tool displays the configuration ID of the EBCM.

DE Base Part Number

The scan tool displays the base part number of the EBCM.

DE Build Sequence Number

The scan tool displays the number in order that the EBCM was built.

DE Calibration Part Number

The scan tool displays the calibration part number of the EBCM.

DE End Model Part Number

The scan tool displays the end model part number of the EBCM.

DE ROM Part Number

The scan tool displays the ROM part number of the EBCM.

Delivered Torque PWM Duty Cycle

The scan tool displays 0 to 100%. The duty cycle of the delivered torque signal. The duty cycle of the signal is used to transmit how much engine torque the PCM is delivering. Normal values are between 10 and 90 percent duty cycle. The signal is at low values (approximately 10 percent) at idle and at higher values under driving conditions.

DRP Active

The scan tool displays Yes or No. The active status of the DRP. Indicates if DRP is currently active.

DRP Disabled

The scan tool displays Yes or No. The failed status of the DRP. Indicates if the EBCM disabled DRP due to a malfunction.

DRP Equipped

The scan tool displays Yes or No. Indicates if the vehicle is equipped with dynamic rear proportioning.

Dual Analog Steering Sensor Expected

The scan tool displays Yes or No. Indicates if the EBCM is expecting an input from the steering wheel position sensor (SWPS).

Dual Analog SWPS Input A

The scan tool displays 0 to 5 volts. The steering wheel position signal A input.

Dual Analog SWPS Input B

The scan tool displays 0 to 5 volts. The steering wheel position signal B input.

ETS Equipped

The scan tool displays Yes or No. Indicates if the vehicle is equipped with the enhanced traction system.

Extended Travel Brake Switch

The scan tool displays Applied or Released. The state of the extended travel brake switch.

Ignition Voltage

The scan tool displays 0 to 17 volts. The level of ignition voltage at the EBCM.

Julian Date Code

The scan tool displays year and day. The first digit indicates the last digit of the year that the EBCM was built. The remaining 3 digits indicate the day of the year that the EBCM was built.

Lateral Accelerometer Input

The scan tool displays 0 to 5 volts. The lateral accelerometer signal from the lateral accelerometer sensor, roughly 2.5 volts equals 0 g lateral acceleration.

Lateral Accelerometer Input

The scan tool displays -1.2 to +1.2 g. The lateral acceleration of the lateral accelerometer signal.

Left Front Wheel Speed

The scan tool displays 0 to 255 km/h (0 to 159 mph). The actual speed of the left front wheel.

Left Rear Wheel Speed

The scan tool displays 0 to 255 km/h (0 to 159 mph). The actual speed of the left rear wheel.

LF Inlet Valve Solenoid

The scan tool displays Active or Inactive. The status of the left front inlet valve solenoid.

LF Outlet Valve Solenoid

The scan tool displays Active or Inactive. The status of the left front outlet valve solenoid.

LF Rotor Temperature

The scan tool displays -40 to +650° C (-40 to +1202° F). The estimated temperature of the left front brake rotor.

LR Inlet Valve Solenoid

The scan tool displays Active or Inactive. The status of the left rear inlet valve solenoid.

LR Outlet Valve Solenoid

The scan tool displays Active or Inactive. The status of the left rear outlet valve solenoid.

Manufacturing Shift Info.

The scan tool displays the shift when the EBCM was built.

Manufacturing Site

The scan tool displays the location where the EBCM was built.

PROM ID

The scan tool displays the 4 digit PROM ID of the EBCM.

Pump Motor Feedback Voltage

The scan tool displays 0 to 17 volts. The voltage available to the pump motor when the pump motor control relay is energized.

Pump Motor PWM

The scan tool displays 0 to 100%. The duty cycle at which the EBCM is commanding the pump motor ON.

Pump Motor Relay Commanded State

The scan tool displays Off or On. Indicates the commanded state of the pump motor control.

Pump Motor Relay Feedback State

The scan tool displays Off or On. Indicate the actual state of the pump motor control.

Red Brake Warning Indicator

The scan tool displays Off or On. Indicates if the red Brake warning indicator is currently ON.

Requested Torque PWM Duty Cycle

The scan tool displays 0 to 100%. The duty cycle of the requested torque signal. The duty cycle of the signal is used to transmit how much torque the EBCM is requesting the PCM to deliver. Normal values are between 10 and 90 percent duty cycle. The signal should be at 90 percent duty cycle when traction control is not active and at lower values (approximately 10 percent) when traction control is active.

RF Inlet Valve Solenoid

The scan tool displays Active or Inactive. The status of the right front inlet valve solenoid.

RF Outlet Valve Solenoid

The scan tool displays Active or Inactive. The status of the right front outlet valve solenoid.

RF Rotor Temperature

The scan tool displays -40 to +650° C (-40 to +1202° F). The estimated temperature of the right front brake rotor.

Right Front Wheel Speed

The scan tool displays 0 to 255 km/h (0 to 159 mph). The actual speed of the right front wheel.

Right Rear Wheel Speed

The scan tool displays 0 to 255 km/h (0 to 159 mph). The actual speed of the right rear wheel.

Rough Road Parameter

The scan tool displays 0 to 1 g. The EBCM calculation of the road surface, this information is sent to the PCM via serial data messages. The PCM uses this information for misfire detection.

RR Inlet Valve Solenoid

The scan tool displays Active or Inactive. The status of the right rear inlet valve solenoid.

RR Outlet Valve Solenoid

The scan tool displays Active or Inactive. The status of the right rear outlet valve solenoid.

Solenoid Relay Commanded State

The scan tool displays Off or On. Indicates the commanded state of the system relay.

Solenoid Relay Feedback State

The scan tool displays Off or On. Indicates the actual state of the system relay.

Steering Wheel Angle

The scan tool displays -720 to +720 degrees. The angle that the steering wheel is turned in degrees.

Stop Lamp Switch

The scan tool displays Applied or Released. The state of the brake switch.

Switched System Battery Voltage

The scan tool displays 0 to 17 volts. The level of the internal EBCM switched battery voltage available to the solenoid valves and pump motor.

System ID

The scan tool displays the configuration ID of the EBCM.

TCS Active

The scan tool displays Yes or No. The active status of the TCS. Indicates if TCS is currently active.

TCS Active Indicator/Message

The scan tool displays Off or On. Indicates if the EBCM is commanding the Traction System Active message to be displayed by the DIC.

TCS Failed

The scan tool displays Yes or No. The failed status of the TCS. Indicates if the EBCM disabled TCS due to a malfunction.

TCS Switch

Display Off or On. Indicates the status of the traction control switch signal.

TCS Warning Indicator/Message

The scan tool displays Off or On. Indicates if the EBCM is commanding the Traction Control and Active Handling indicator ON along with displaying the Service Traction System message on the DIC.

TIM Equipped

The scan tool displays Yes or No. Indicates if the vehicle is equipped with tire inflation monitoring.

Torque Delivered Signal

The scan tool displays 0-10394 N.m (0-7666 lb-ft). The amount of torque that the PCM is delivering to the drive wheels.

Torque Requested Signal

The scan tool displays 0-10394 N.m (0-7666 lb-ft). The amount of torque that the EBCM is requesting the PCM to deliver to the drive wheels.

Traction Control Signal

The scan tool displays Active or Inactive. The active status of the TCS. Indicates if TCS is currently active.

Traction Control Status

The scan tool displays Active or Inactive. The active status of the TCS. Indicates if TCS is currently active.

Vehicle Speed

The scan tool displays 0 to 255 km/h (0 to 159 mph). The vehicle speed from the average of all four wheel speeds.

VES Equipped

The scan tool displays Yes or No. Indicates if the vehicle is equipped with variable effort steering.

VSES Active

The scan tool displays Yes or No. The active status of the VSES. Indicates if VSES is currently active.

VSES Active Indicator/Message

The scan tool displays Off or On. Indicates if the EBCM is commanding the Active Handling message to be displayed by the DIC.

VSES Equipped

The scan tool displays Yes or No. Indicates if the vehicle is equipped with vehicle stability enhancement system.

VSES Failed

The scan tool displays Yes or No. The failed status of the VSES. Indicates if the EBCM disabled VSES due to a malfunction.

VSES Failed Indicator/Message

The scan tool displays Off or On. Indicates if the EBCM is commanding the Traction Control and Active Handling indicator ON along with displaying the Service Active Handling message on the DIC.

VSES Is Centered

The scan tool displays Yes or No. Indicates if the steering wheel is centered.

Yaw Rate Sensor Input

The scan tool displays 0 to 5 volts. The yaw rate signal from the yaw rate sensor, roughly 2.5 volts equals 0 ° /second yaw rate.

Yaw Rate Sensor Input

The scan tool displays -75 to +75° /second. The yaw rate of the yaw rate signal.

DIAGNOSTIC TROUBLE CODE (DTC) LIST

Diagnostic Trouble Code (DTC) List

DTC	Description	Module (s)
DTC B2597	Traction Control System Switch Circuit	BCM
DTC C1214	System Relay Contact or Coil Circuit Open	EBCM
DTC C1217	Pump Motor Shorted to Ground	EBCM
DTC C1218	Pump Motor Circuit Shorted to Voltage or Motor Ground Open	EBCM
DTC C1221	Left Front Wheel Speed Sensor Input Signal is 0	EBCM
DTC C1222	Right Front Wheel Speed Sensor Input Signal is 0	EBCM
DTC C1223	Left Rear Wheel Speed Sensor Input Signal is 0	EBCM
DTC C1224	Right Rear Wheel Speed Sensor Input Signal is 0	EBCM
DTC C1225	Left Front Excessive Wheel Speed Variation	EBCM
DTC C1226	Right Front Excessive Wheel Speed Variation	EBCM
DTC C1227	Left Rear Excessive Wheel Speed Variation	EBCM
DTC C1228	Right Rear Excessive Wheel Speed Variation	EBCM
DTC C1232	Left Front Wheel Speed Circuit Open or Shorted	EBCM
DTC C1233	Right Front Wheel Speed Circuit Open or Shorted	EBCM
DTC C1234	Left Rear Wheel Speed Circuit Open or Shorted	EBCM
DTC C1235	Right Rear Wheel Speed Circuit Open or Shorted	EBCM
DTC C1236	Low System Supply Voltage	EBCM
DTC C1237	High System Supply Voltage	EBCM
DTC C1241 in Variable Effort	Variable Effort Steering Circuit Malfunction	EBCM

Steering		
DTC C1242	Pump Motor Circuit Open	EBCM
DTC C1243	BPMV Pump Motor Stalled	EBCM
DTC C1247 in Hydraulic Brakes	Brake Pressure Differential Switch Activated	EBCM
DTC C1248	EBCM Turned the Red Brake Warning Indicator On	EBCM
DTC C1254	Abnormal Shutdown Detected	EBCM
DTC C1255	EBCM Internal Malfunction	EBCM
DTC C1256	EBCM Internal Malfunction	EBCM
DTC C1261	Left Front Inlet Valve Solenoid Malfunction	EBCM
DTC C1262	Left Front Outlet Valve Solenoid Malfunction	EBCM
DTC C1263	Right Front Inlet Valve Solenoid Malfunction	EBCM
DTC C1264	Right Front Outlet Valve Solenoid Malfunction	EBCM
DTC C1265	Left Rear Inlet Valve Solenoid Malfunction	EBCM
DTC C1266	Left Rear Outlet Valve Solenoid Malfunction	EBCM
DTC C1267	Right Rear Inlet Valve Solenoid Malfunction	EBCM
DTC C1268	Right Rear Outlet Valve Solenoid Malfunction	EBCM
DTC C1271	Left Front TCS Master Cylinder Isolation Valve Malfunction	EBCM
DTC C1272	Left Front TCS Prime Valve Malfunction	EBCM
DTC C1273	Right Front TCS Master Cylinder Isolation Valve Malfunction	EBCM
DTC C1274	Right Front TCS Prime Valve Malfunction	EBCM
DTC C1276	Delivered Torque Signal Circuit Malfunction	EBCM
DTC C1277	Requested Torque Signal Circuit Malfunction	EBCM
DTC C1278	TCS Temporarily Inhibited By PCM	EBCM
DTC C1281	VSES Sensors Uncorrelated	EBCM
DTC C1282	Yaw Rate Sensor Bias Circuit Malfunction	EBCM
DTC C1283	Excessive Time to Center Steering	EBCM
DTC C1284	Lateral Accelerometer Sensor Bias Malfunction	EBCM
DTC C1285	Lateral Accelerometer Sensor Circuit Malfunction	EBCM
DTC C1286	Steering Sensor Bias Malfunction	EBCM
DTC C1287	Steering Sensor Rate Malfunction	EBCM
DTC C1288	Steering Sensor Circuit Malfunction	EBCM
DTC C1291	Open Brake Lamp Switch Contacts During Deceleration	EBCM
DTC C1292	Brake Fluid Pressure Sensor Circuit	EBCM
DTC C1293	Code C1291 Set in Previous Ignition Cycle	EBCM
DTC C1294	Brake Lamp Switch Circuit Always Active	EBCM
DTC C1295	Brake Lamp Switch Circuit Open	EBCM
DTC C1296	Brake Fluid Pressure Sensor Circuit	EBCM
DTC P1571	Traction Control Torque Request Circuit	PCM
DTC P1689	Traction Control Delivered Torque Output Circuit	PCM

DIAGNOSTIC TEST DRIVE

When servicing vehicles with the vehicle stability enhancement system (VSES), test drives will be necessary to allow all tests to be run, and all system functions to be enabled and exercised. A test drive may also be required to duplicate specific DTCs covered in this section. The diagnostic system check (including test drive) should be run when vehicle repairs are complete in order to verify the repair. The diagnostic test drive will vary for ABS, TCS, or VSES concerns.

The following is a suggested VSES diagnostic test drive.

1. Read the Diagnostic Aids and the Conditions for Setting the DTC.
2. Turn OFF the ignition.
3. Reconnect any previously disconnected components.
4. Start the engine.
5. Install a scan tool.
6. With the scan tool, observe the VSES Is Centered parameter in the VSES data list. The scan tool will indicate Yes with the steering wheel centered. Drive the vehicle in a straight line for 45 seconds at 24 km/h (15 mph) while monitoring the scan tool.
7. Remove the scan tool.

IMPORTANT: Do not perform any unlawful or unsafe maneuvers.

8. Drive the vehicle under the following conditions for at least 10 minutes.
   - Highway driving
   - Rough roads
   - Perform turning maneuvers (curved freeway entrance ramp, parking lot maneuvers) and high steering angles and yaw rates at low speeds.
   - Verify the customers concern and duplicate driving conditions
9. With the engine still running, use the scan tool in order to check for DTCs. If any DTCs are set, refer to **Diagnostic Trouble Code (DTC) List** .

ENHANCED DIAGNOSTICS

History Data

Enhanced diagnostic information is found in the History Data function of the scan tool. Enhanced diagnostic information provides the service technician with specific malfunction occurrence information.

The scan tool will display the last 3 DTCs to occur, one at a time. The DTC with the most recent occurrence will be displayed first. Each DTC will include the following:

- The number of drive cycles since the DTC last occurred.
- The number of occurrences for the DTC since the scan tool DTC information was last cleared.

The most recent DTC will also display various data parameters with values from the time of the DTC occurrence.

Diagnostic Strategy

In difficult diagnostic situations use the above information to identify malfunction occurrence trends. Ask question such as the following:

- Did the malfunction only occur once over a large number of drive cycles, indicating an unusual condition present when it occurred?
- Does the malfunction occur infrequently over a large number of drive cycles, indicating that special diagnostic techniques may be required to identify the source of the malfunction?

A malfunction that occurs more frequently increases the odds of finding the cause of the malfunction.

Use the information in order to determine if a DTC is intermittent. Use the information in order to determine if the DTC has not set for long periods of time due to weather changes or a repair prior to this visit.

DTC B2597

Circuit Description

The Traction Control and Active Handling indicator is controlled by the instrument cluster via serial data messages from the EBCM. When the BCM sees the traction control switch input grounded through the momentary traction control switch, it sends a serial data message to the EBCM that tells the EBCM that the traction control switch has been pressed. The EBCM then disables TCS and VSES (w/JL4). The EBCM sends a serial data message to the instrument cluster to turn the Traction Control and Active Handling indicator ON and display the Traction System Off message or the Traction/Active Handling Off message (w/JL4) on the DIC.

With JL4, when the BCM sees the traction control switch input grounded for 5 seconds while the vehicle is stopped and the ignition is ON, it sends a serial data message to the EBCM that tells the EBCM that the traction control switch has been pressed for 5 seconds. The EBCM then disables TCS, while leaving VSES enabled. The EBCM sends a serial data message to the instrument cluster display the Competitive Driving message on the DIC. The Traction Control and Active Handling indicator remains OFF.

Each time the ignition is cycled from OFF to ON, the TCS and VSES (w/JL4) are enabled.

The following conditions will cause the Traction Control and Active Handling indicator to illuminate:

- The EBCM has disabled the TCS or VSES due to a DTC.
- The driver manually disabling the TCS or VSES via the traction control switch.
- The instrument cluster bulb check. When the ignition switch is turned to ON, the Traction Control and Active Handling indicator will turn on for approximately 3 seconds and then turn OFF.

Conditions for Running the DTC

The ignition is ON.

Conditions for Setting the DTC

The BCM detects a ground on the traction control switch signal circuit for longer than 60 seconds.

Action Taken When the DTC Sets

- The ABS remains functional.
- The ABS indicator remains OFF.

Conditions for Clearing the DTC

- The condition for the DTC is no longer present (the DTC is not current) and you used the scan tool Clear DTC function.
- The condition for the DTC is no longer present (the DTC is not current) and you used the On-Board Diagnostics Clear DTC function.
- The BCM automatically clears the history DTC when a current DTC is not detected in 50 consecutive ignition cycles.

Test Description

The numbers below refer to the step numbers on the diagnostic table.

2: Tests for the normal state of the TCS switch using a scan tool.

3: Tests if the BCM is able to detect a change in TCS switch state.

4: Tests for a stuck or shorted TCS switch. If the TCS switch is stuck or shorted, the state will change from On to Off when the TCS switch is disconnected.

5: Tests for a short to ground in the TCS switch signal circuit.

8: When the BCM is replaced, use a scan tool to perform the setup procedure for the BCM. Refer to **Body Control Module (BCM) Programming/RPO Configuration** in Body Control System.

DTC B2597

Step	Action	Yes	No
Schematic Reference: ABS Schematics **Connector End View Reference: ABS Connector End Views or Body Control System Connector End Views** in Body Control System			
1	Did you perform the ABS Diagnostic System Check?	Go to **Step 2**	Go to **Diagnostic System Check - ABS**
2	1. Install a scan tool. 2. Turn ON the ignition, with the engine OFF. 3. With a scan tool, observe the TCS Switch parameter in the BCM data list.		

	Does the scan tool display Off?	Go to **Step 3**	Go to **Step 4**
3	1. Activate the TCS switch. 2. With the scan tool, observe the TCS Switch parameter. Does the TCS Switch parameter change state?	Go to Diagnostic Aids	Go to **Step 4**
4	1. Turn OFF the ignition. 2. Disconnect the TCS switch. 3. Turn ON the ignition, with the engine OFF. 4. With a scan tool, observe the TCS Switch parameter. Does the scan tool display Off?	Go to **Step 7**	Go to **Step 5**
5	Test the signal circuit of the TCS switch for a short to ground. Refer to **Circuit Testing** and **Wiring Repairs** in Wiring Systems. Did you find and correct the condition?	Go to **Step 10**	Go to **Step 6**
6	Inspect for poor connections at the harness connector of the BCM. Refer to **Testing for Intermittent Conditions and Poor Connections** and **Connector Repairs** in Wiring Systems. Did you find and correct the condition?	Go to **Step 10**	Go to **Step 8**
7	Inspect for poor connections at the harness connector of the TCS switch. Refer to **Testing for Intermittent Conditions and Poor Connections** and **Connector Repairs** in Wiring Systems. Did you find and correct the condition?	Go to **Step 10**	Go to **Step 9**
8	**IMPORTANT:** **Perform the setup procedure for the BCM. Refer to Body Control Module (BCM) Programming/RPO Configuration in Body Control System.** Replace the BCM. Refer to **Body Control Module Replacement** in Body Control System.Did you complete the repair?	Go to **Step 10**	-
9	Replace the traction control switch. Refer to **Traction Control Switch Replacement** . Did you complete the repair?	Go to **Step 10**	-
10	1. Use the scan tool in order to clear the DTCs. 2. Operate the vehicle within the Conditions for Running the DTC as specified in the supporting text. Does the DTC reset?	Go to **Step 2**	System OK

DTC C1214

Circuit Description

The system relay is energized when the ignition is ON. The system relay supplies voltage to the solenoid valves and the pump motor. This voltage is referred to as the system voltage.

The electronic brake control module (EBCM) controls each solenoid valve by grounding the solenoid.

The EBCM controls the pump motor by grounding the control circuit. The pump serves 2 purposes:

- Transfers brake fluid from the brake calipers to the master cylinder reservoir during pressure decrease events.
- Transfers brake fluid from the master cylinder reservoir to the brake calipers during pressure increase events.

Conditions for Running the DTC

- The ignition voltage is greater than 10.5 volts.
- The system relay is commanded ON.

Conditions for Setting the DTC

The system voltage is less than 8 volts for 0.23 seconds.

Action Taken When the DTC Sets

If equipped, the following actions occur:

- The EBCM disables the ABS/TCS/VSES for the duration of the ignition cycle.
- The DRP does not function optimally.
- The ABS indicator turns ON.
- The Traction Control and Active Handling indicator turns ON.
- The DIC displays the following messages:
    - Service ABS
    - Service Traction System
    - Service Active Handling

Conditions for Clearing the DTC

- The condition for the DTC is no longer present and the DTC is cleared with a scan tool.
- The EBCM automatically clears the history DTC when a current DTC is not detected in 100 consecutive drive cycles.

Diagnostic Aids

The system relay is integral to the EBCM. The relay is not serviceable.

Test Description

The number below refers to the step number on the diagnostic table.

2: Determines whether the DTC is current.

DTC C1214

Step	Action	Values	Yes	No
Schematic Reference: ABS Schematics **Connector End View Reference: ABS Connector End Views**				
1	Did you perform the ABS Diagnostic System Check?	-	Go to **Step 2**	Go to **Diagnostic System Check - ABS**
2	1. Install a scan tool. 2. Turn ON the ignition, with the engine OFF. 3. Use the scan tool in order to clear the DTCs. 4. With the scan tool, perform the Automated Test. Does the DTC reset as a current DTC?	-	Go to **Step 3**	Go to **Testing for Intermittent Conditions and Poor Connections** in Wiring Systems
3	1. Disconnect the pump motor harness pigtail connector of the BPMV. 2. Measure the resistance between each pump motor control circuit and the housing of the BPMV at the pump motor harness pigtail connector of the BPMV. Does the DMM display the specified value?	OL	Go to **Step 5**	Go to **Step 4**
4	Replace the EBCM and the BPMV. Refer to **Electronic Brake Control Module Replacement** and **Brake Pressure Modulator Valve (BPMV) Replacement** . Did you complete the repair?	-	Go to **Step 6**	-
5	Replace the EBCM. Refer to **Electronic Brake Control Module Replacement** . Did you complete the repair?	-	Go to **Step 6**	-
6	1. Use the scan tool in order to clear the DTCs. 2. With the scan tool, perform the Automated Test. Does the DTC reset?	-	Go to **Step 2**	System OK

DTC C1217

Circuit Description

The system relay is energized when the ignition is ON. The system relay supplies voltage to the solenoid valves and the pump motor. This voltage is referred to as the system voltage.

The electronic brake control module (EBCM) controls each solenoid valve by grounding the solenoid.

The EBCM controls the pump motor by grounding the control circuit. The pump serves 2 purposes:

- Transfers brake fluid from the brake calipers to the master cylinder reservoir during pressure decrease events.
- Transfers brake fluid from the master cylinder reservoir to the brake calipers during pressure increase events.

Conditions for Running the DTC

- The pump motor has been commanded OFF for 1 second.
- The system voltage is greater than 9 volts.

Conditions for Setting the DTC

One of the following conditions exists for 0.2 seconds:

- The voltage across the pump motor is greater than 10.2 volts.
- The pump motor low side voltage is less than 2.7 volts.

Action Taken When the DTC Sets

If equipped, the following actions occur:

- The EBCM disables the ABS/TCS/VSES for the duration of the ignition cycle.
- The DRP does not function optimally.
- The ABS indicator turns ON.
- The Traction Control and Active Handling indicator turns ON.
- The DIC displays the following messages:
  - Service ABS
  - Service Traction System
  - Service Active Handling

Conditions for Clearing the DTC

- The condition for the DTC is no longer present and the DTC is cleared with a scan tool.
- The EBCM automatically clears the history DTC when a current DTC is not detected in 100 consecutive drive cycles.

Diagnostic Aids

- This DTC determines if there is a short in the pump motor control circuit.
- The pump motor is integral to the BPMV. The pump motor is not serviceable.

Test Description

The number below refers to the step number on the diagnostic table.

3: Tests the pump motor circuits of the BPMV for a short to the housing of the BPMV. The wiring from the BPMV to the EBCM should not be repaired.

DTC C1217

Step	Action	Values	Yes	No
Schematic Reference: ABS Schematics **Connector End View Reference: ABS Connector End Views**				
1	Did you perform the ABS Diagnostic System Check?	-	Go to **Step 2**	Go to **Diagnostic System Check - ABS**
2	1. Turn OFF the ignition. 2. Disconnect the EBCM harness connector 3. Connect the J 39700 universal pinout box using the **J 39700-300** cable adapter to the EBCM harness connector only. See **Special Tools and Equipment** . 4. Test both ground circuits of the EBCM including the EBCM ground for a high resistance or an open. Refer to **Circuit Testing** and **Wiring Repairs** in Wiring Systems. Did you find and correct the condition?	-	Go to **Step 8**	Go to **Step 3**
3	1. Disconnect the pump motor harness pigtail connector of the BPMV. 2. Measure the resistance between each pump motor control circuit and the housing of the BPMV at the pump motor harness pigtail connector of the BPMV. Does the resistance measure less than the specified value?	5 ohm	Go to **Step 4**	Go to **Step 5**
4	Inspect for poor connections at the pump motor harness pigtail connector of the BPMV. Refer to **Testing for Intermittent Conditions and Poor Connections** and **Connector Repairs** in Wiring Systems. Did you find and correct the condition?	-	Go to **Step 8**	Go to **Step 6**
5	Inspect for poor connections at the harness connector of the EBCM. Refer to **Testing for Intermittent Conditions and Poor Connections** and **Connector Repairs** in Wiring Systems. Did you find and correct the condition?	-	Go to **Step 8**	Go to **Step 7**
	Replace the BPMV. Refer to **Brake Pressure Modulator Valve**			

6	**(BPMV) Replacement** . Did you complete the repair?	-	Go to **Step 8**	-
7	Replace the EBCM. Refer to **Electronic Brake Control Module Replacement** . Did you complete the repair?	-	Go to **Step 8**	-
8	1. Use the scan tool in order to clear the DTCs. 2. With the scan tool, perform the Automated Test. Does the DTC reset?	-	Go to **Step 2**	System OK

DTC C1218

Circuit Description

The system relay is energized when the ignition is ON. The system relay supplies voltage to the solenoid valves and the pump motor. This voltage is referred to as the system voltage.

The electronic brake control module (EBCM) controls each solenoid valve by grounding the solenoid.

The EBCM controls the pump motor by grounding the control circuit. The pump serves 2 purposes:

- Transfers brake fluid from the brake calipers to the master cylinder reservoir during pressure decrease events.
- Transfers brake fluid from the master cylinder reservoir to the brake calipers during pressure increase events.

Conditions for Running the DTC

- The pump motor is commanded ON.
- The system voltage is greater than 8 volts.

Conditions for Setting the DTC

One of the following conditions exists for 0.16 seconds:

- With the commanded pump motor voltage less than the system voltage, the actual pump motor voltage is 3 volts less than the commanded voltage.
- With the commanded pump motor voltage greater than the system voltage, the actual pump motor voltage is less than 8 volts.

Action Taken When the DTC Sets

If equipped, the following actions occur:

- The EBCM disables the ABS/TCS/VSES for the duration of the ignition cycle.

- The DRP does not function optimally.
- The ABS indicator turns ON.
- The Traction Control and Active Handling indicator turns ON.
- The DIC displays the following messages:
  - Service ABS
  - Service Traction System
  - Service Active Handling

Conditions for Clearing the DTC

- The condition for the DTC is no longer present and the DTC is cleared with a scan tool.
- The EBCM automatically clears the history DTC when a current DTC is not detected in 100 consecutive drive cycles.

Diagnostic Aids

The pump motor is integral to the BPMV. The pump motor is not serviceable.

Test Description

The number below refers to the step number on the diagnostic table.

3: Tests the ability of the EBCM to control the pump motor. If the test lamp illuminates, the pump motor circuit within the EBCM is good.

DTC C1218

Step	Action	Yes	No
Schematic Reference: ABS Schematics **Connector End View Reference: ABS Connector End Views**			
1	Did you perform the ABS Diagnostic System Check?	Go to **Step 2**	Go to **Diagnostic System Check - ABS**
2	1. Install a scan tool. 2. Turn ON the ignition, with the engine OFF. 3. Use the scan tool in order to clear the DTCs. 4. With the scan tool, perform the Automated Test. Does the DTC reset?	Go to **Step 3**	Go to **Testing for Intermittent Conditions and Poor Connections** in Wiring Systems
	1. Turn OFF the ignition. 2. Disconnect the pump motor harness pigtail connector of the BPMV. 3. Connect a test lamp between the pump motor circuits		

3	at the pump motor connector of the EBCM using the **J 35616** connector test adapter kit. 4. Use the scan tool in order to clear the DTCs. 5. With the scan tool, perform the Pump Motor Test. Does the test lamp illuminate?	Go to **Step 5**	Go to **Step 4**
4	1. Turn OFF the ignition. 2. Disconnect the EBCM harness connector. 3. Connect the J 39700 universal pinout box using the **J 39700-300** cable adapter to the EBCM harness connector only. See **Special Tools and Equipment** . 4. Test both ground circuits of the EBCM including the EBCM ground for a high resistance or an open. Refer to **Circuit Testing** and **Wiring Repairs** in Wiring Systems. Did you find and correct the condition?	Go to **Step 9**	Go to **Step 6**
5	Inspect for poor connections at the pump motor harness pigtail connector of the BPMV. Refer to **Testing for Intermittent Conditions and Poor Connections** and **Connector Repairs** in Wiring Systems. Did you find and correct the condition?	Go to **Step 9**	Go to **Step 7**
6	Inspect for poor connections at the harness connector of the EBCM. Refer to **Testing for Intermittent Conditions and Poor Connections** and **Connector Repairs** in Wiring Systems. Did you find and correct the condition?	Go to **Step 9**	Go to **Step 8**
7	Replace the BPMV. Refer to **Brake Pressure Modulator Valve (BPMV) Replacement** . Did you complete the repair?	Go to **Step 9**	-
8	Replace the EBCM. Refer to **Electronic Brake Control Module Replacement** . Did you complete the repair?	Go to **Step 9**	-
9	1. Use the scan tool in order to clear the DTCs. 2. With the scan tool, perform the Automated Test. Does the DTC reset?	Go to **Step 2**	System OK

DTC C1221-C1235

Circuit Description

As the wheel spins, the wheel speed sensor produces an AC signal. The electronic brake control module (EBCM) uses the frequency of the AC signal to calculate the wheel speed.

Conditions for Running the DTC

C1221 through C1228

- DTCs C1232 through C1235 are not set.
- The brake pedal is not pressed.
- The ABS is not active.

C1232 through C1235

The ignition is ON.

Conditions for Setting the DTC

C1221 through C1224

All of the following conditions exists for 2.5 seconds:

- The suspect wheel speed equals zero.
- The other wheel speeds are greater than 8 km/h (5 mph).
- The other wheel speeds are within 11 km/h (7 mph) of each other.

C1225 through C1228

The EBCM detects a rapid variation in the wheel speed. The wheel speed changes by 16 km/h (10 mph) or more in 0.01 second. The change must occur 3 times with no more than 0.2 seconds between occurrences.

C1232 through C1235

One of the following conditions exists for 0.02 seconds:

- A short to voltage - the wheel speed sensor signal circuit and wheel speed sensor return circuit voltages are both greater than 4.25 volts.
- A short to ground - the wheel speed sensor signal circuit and wheel speed sensor return circuit voltages are both less than 0.75 volts.
- An open - the wheel speed sensor signal circuit voltage is greater than 4.25 volts and wheel speed sensor return circuit voltage is less than 0.75 volts.

Action Taken When the DTC Sets

If equipped, the following actions occur:

- The EBCM disables the ABS/TCS/VSES for the duration of the ignition cycle.
- The DRP does not function optimally.
- The ABS indicator turns ON.

- The Traction Control and Active Handling indicator turns ON.
- The DIC displays the following messages:
  - Service ABS
  - Service Traction System
  - Service Active Handling

Conditions for Clearing the DTC

- The condition for the DTC is no longer present and the DTC is cleared with a scan tool.
- The EBCM automatically clears the history DTC when a current DTC is not detected in 100 consecutive drive cycles.

Diagnostic Aids

C1221 through C1224

Under the following conditions, 2 Wheel Speed Sensor Input is 0 DTCs are set:

- The 2 suspect wheel speeds equal zero for 60 seconds.
- The other wheel speeds are greater than 16 km/h (10 mph).
- The other wheel speeds are within 11 km/h (7 mph) of each other.

Diagnose each wheel speed sensor individually.

C1225 through C1228

A possible cause of this DTC is electrical noise on the wheel speed sensor harness wiring. Electrical noise could result from the wheel speed sensor wires being routed to close to high energy ignition system components, such as spark plug wires.

C1232 through C1235

If the customer comments that the ABS indicator is ON only during moist environmental conditions (rain, snow, vehicle wash, etc.), inspect the wheel speed sensor wiring for signs of water intrusion. If the DTC is not current, clear all DTCs and simulate the effects of water intrusion by using the following procedure:

1. Spray the suspected area with a 5 percent saltwater solution. To create a 5 percent saltwater solution, add 2 teaspoons (9.9 ml) of salt to 354 ml (12 oz) of water.
2. Test drive the vehicle over various road surfaces (bumps, turns, etc.) above 40 km/h (25 mph) for at least 30 seconds.
3. If the DTC returns, replace the suspected wheel speed sensor or repair the wheel speed sensor wiring.
4. Rinse the area thoroughly when completed.

Test Description

The numbers below refer to the step numbers on the diagnostic table.

3: Measure the resistance of the wheel speed sensor in order to determine if the sensor has a valid resistance value.

4: Ensures that the wheel speed sensor is generating a valid AC voltage output.

DTC C1221-C1235

Step	Action	Values	Yes	No
Schematic Reference: ABS Schematics **Connector End View Reference: ABS Connector End Views**				
1	Did you perform the ABS Diagnostic System Check?	-	Go to **Step 2**	Go to **Diagnostic System Check - ABS**
2	1. Install a scan tool. 2. Turn ON the ignition. 3. Set up the scan tool snap shot feature to trigger for this DTC. 4. Drive the vehicle at a speed greater than the specified value. Does the scan tool indicate that this wheel speed DTC set?	8 km/h (5 mph)	Go to **Step 3**	Go to Diagnostic Aids
3	1. Raise and support the vehicle. Refer to **Lifting and Jacking the Vehicle** in General Information. 2. Disconnect the wheel speed sensor connector. 3. Measure the resistance across the wheel speed sensor. Does the resistance measure within the specified range?	850-1350 ohm	Go to **Step 4**	Go to **Step 8**
4	1. Spin the wheel. 2. Measure the AC voltage across the wheel speed sensor. Does the AC voltage measure greater than the specified value?	100 mV	Go to **Step 5**	Go to **Step 8**
5	Inspect for poor connections at the harness connector of the wheel speed sensor. Refer to **Testing for Intermittent Conditions and Poor Connections** and **Connector Repairs** in Wiring Systems. Did you find and correct the condition?	-	Go to **Step 10**	Go to **Step 6**
	1. Disconnect the EBCM harness connector. 2. Install the J 39700 universal pinout box using the **J 39700-300** cable adapter to the EBCM harness connector only. See **Special Tools and Equipment** . 3. Test the wheel speed sensor circuits for the following: • An open			

6	• A short to ground • A short to voltage • Shorted together Refer to **Circuit Testing** and **Wiring Repairs** in Wiring Systems.Did you find and correct the condition?	-	Go to **Step 10**	Go to **Step 7**
7	Inspect for poor connections at the harness connector for the EBCM. Refer to **Testing for Intermittent Conditions and Poor Connections** and **Connector Repairs** in Wiring Systems. Did you find and correct the condition?	-	Go to **Step 10**	Go to **Step 9**
8	Replace the wheel speed sensor. Refer to **Wheel Bearing/Hub Replacement - Front** in Front Suspension or **Wheel Bearing/Hub Replacement - Rear** in Rear Suspension. Did you complete the replacement?	-	Go to **Step 10**	-
9	Replace the EBCM. Refer to **Electronic Brake Control Module Replacement** . Did you complete the repair?	-	Go to **Step 10**	-
10	1. Use the scan tool in order to clear the DTCs. 2. Operate the vehicle within the Conditions for Running the DTC as specified in the supporting text. Does the DTC reset?	-	Go to **Step 2**	System OK

DTC C1236

Circuit Description

The electronic brake control module (EBCM) monitors the voltage level available for system operation. A low voltage condition prevents the system from operating properly.

Conditions for Running the DTC

- The vehicle speed is greater than 8 km/h (5 mph).
- The ignition voltage is less than 10.5 volts.
- The system relay is commanded ON.

Conditions for Setting the DTC

One of the following conditions exists for 0.72 seconds:

- During initialization or when the system is inactive, the system voltage is less than 10.5 volts.
- During the system operation, the system voltage is less than 9.0 volts.

Action Taken When the DTC Sets

If equipped, the following actions occur:

- The EBCM disables the ABS/TCS/VSES for the duration of the ignition cycle.
- The ABS indicator turns ON.
- The Traction Control and Active Handling indicator turns ON.
- The DIC displays the following messages:
  - Service ABS
  - Service Traction System
  - Service Active Handling
- The DRP does not function optimally, or with system voltage less than 8.5 volts, the EBCM disables the DRP for the duration of the ignition cycle.
- When the EBCM disables the DRP, the following actions also occur:
  - The EBCM will also set DTC C1248.
  - The red Brake warning indicator turns ON.

Conditions for Clearing the DTC

- The condition for the DTC is no longer present and the DTC is cleared with a scan tool.
- The EBCM automatically clears the history DTC when a current DTC is not detected in 100 consecutive drive cycles.

Diagnostic Aids

- Test the charging system. Refer to **Diagnostic System Check - Engine Electrical** in Engine Electrical.
- Possible causes of this DTC are the following conditions:
  - A charging system malfunction
  - An excessive battery draw
  - A weak battery
  - A faulty system ground

Test Description

The numbers below refer to the step numbers on the diagnostic table.

2: Use the scan tool in order to inspect the voltage to the EBCM.

3: Use the scan tool in order to inspect the voltage to the body control module (BCM). A low voltage value in multiple modules indicates a concern in the charging system.

5: Verifies that the condition is still present.

DTC C1236

Step	Action	Values	Yes	No
Schematic Reference: ABS Schematics **Connector End View Reference: ABS Connector End Views**				
1	Did you perform the ABS Diagnostic System Check?	-	Go to **Step 2**	Go to **Diagnostic System Check - ABS**
2	1. Install a scan tool. 2. Start the engine. 3. With a scan tool, observe the Switched System Battery Voltage parameter in the ABS data list. Does the scan tool indicate the voltage is greater than the specified value?	10.5 V	Go to Diagnostic Aids	Go to **Step 3**
3	With a scan tool, observe the Battery Volts parameter in the Body Control Module data list. Does the scan tool indicate the voltage is greater than the specified value?	10.5 V	Go to **Step 4**	Go to **Diagnostic System Check - Engine Electrical** in Engine Electrical
4	1. Turn OFF the ignition. 2. Disconnect the EBCM harness connector. 3. Install the J 39700 universal pinout box using the **J 39700-300** cable adaptor to the EBCM harness connector only. See **Special Tools and Equipment** . 4. Test the ground circuits of the EBCM including the EBCM ground for a high resistance or an open. Refer to **Circuit Testing** and **Wiring Repairs** in Wiring Systems. Did you find and correct the condition?	-	Go to **Step 7**	Go to **Step 5**
5	1. Reconnect the EBCM harness connector. 2. Turn ON the ignition, with the engine OFF. 3. Use the scan tool in order to clear the DTCs. 4. Operate the vehicle within the Conditions for Running the DTC as specified in the supporting text. Does the DTC reset?	-	Go to **Step 6**	Go to Diagnostic Aids
6	Replace the EBCM. Refer to **Electronic Brake Control Module Replacement** . Did you complete the repair?	-	Go to **Step 7**	-
	1. Use the scan tool in order to clear the DTCs.			

7	2. Operate the vehicle within the Conditions for Running the DTC as specified in the supporting text. Does the DTC reset?	-	Go to **Step 2**	System OK

DTC C1237

Circuit Description

The electronic brake control module (EBCM) monitors the voltage level available for system operation. If the voltage level is too high, damage may result in the system. When the EBCM detects a high voltage condition, the EBCM turns OFF the system relay which removes battery voltage from the solenoid valves and pump motor.

Conditions for Running the DTC

The vehicle speed is greater than 8 km/h (5 mph).

Conditions for Setting the DTC

The system voltage is greater than 17 volts for 0.72 seconds.

Action Taken When the DTC Sets

If equipped, the following actions occur:

- The EBCM disables the ABS/TCS/VSES for the duration of the ignition cycle.
- The DRP does not function optimally.
- The ABS indicator turns ON.
- The Traction Control and Active Handling indicator turns ON.
- The DIC displays the following messages:
  - Service ABS
  - Service Traction System
  - Service Active Handling

Conditions for Clearing the DTC

- The condition for the DTC is no longer present and the DTC is cleared with a scan tool.
- The EBCM automatically clears the history DTC when a current DTC is not detected in 100 consecutive drive cycles.

Diagnostic Aids

A possible cause of this DTC is overcharging.

Test Description

The numbers below refer to the step numbers on the diagnostic table.

2: Use the scan tool in order to inspect the voltage to the EBCM.

3: Use the scan tool in order to inspect the voltage to the body control module (BCM). A high voltage value in multiple modules indicates a concern in the charging system.

4: Verifies that the condition is still present.

DTC C1237

Step	Action	Values	Yes	No
Schematic Reference: ABS Schematics				
1	Did you perform the ABS Diagnostic System Check?	-	Go to **Step 2**	Go to **Diagnostic System Check - ABS**
2	1. Turn OFF all of the accessories. 2. Install a scan tool. 3. Start the engine 4. Run the engine at approximately 2000 RPM. 5. With a scan tool, observe the Switched System Battery Voltage parameter in the ABS data list. Does the scan tool indicate that the voltage is greater than the specified value?	16.3 V	Go to **Step 3**	Go to Diagnostic Aids
3	With a scan tool, observe the Battery Volts parameter in Body Control Module data list. Does the scan tool indicate the voltage is greater than the specified value?	16.3 V	Go to **Diagnostic System Check - Engine Electrical** in Engine Electrical	Go to **Step 4**
4	1. Use the scan tool in order to clear the DTCs. 2. Operate the vehicle within the conditions for Running the DTC as specified in the supporting test. Does the DTC reset?	-	Go to **Step 5**	Go to Diagnostic Aids
5	Replace the EBCM. Refer to **Electronic Brake Control Module Replacement** . Did you complete the repair?	-	Go to **Step 6**	-

6	1. Use the scan tool in order to clear the DTCs. 2. Operate the vehicle within the conditions for Running the DTC as specified in the supporting test. Does the DTC reset?	-	Go to **Step 2**	System OK

DTC C1242 OR C1243

Circuit Description

The system relay is energized when the ignition is ON. The system relay supplies voltage to the solenoid valves and the pump motor. This voltage is referred to as the system voltage.

The electronic brake control module (EBCM) controls each solenoid valve by grounding the solenoid.

The EBCM controls the pump motor by grounding the control circuit. The pump serves 2 purposes:

- Transfers brake fluid from the brake calipers to the master cylinder reservoir during pressure decrease events.
- Transfers brake fluid from the master cylinder reservoir to the brake calipers during pressure increase events.

Conditions for Running the DTC

C1242

- The system voltage is greater than 8.0 volts.
- The system relay is ON.
- The pump motor is commanded OFF.

C1243

- The pump motor is ON for at least 0.3 seconds.
- The system relay is ON.

Conditions for Setting the DTC

C1242

The voltage across the pump motor is between 1.7 - 10.2 volts for 2 seconds.

C1243

The pump motor is stalled or turning slowly.

Action Taken When the DTC Sets

If equipped, the following actions occur:

- The EBCM disables the ABS/TCS/VSES for the duration of the ignition cycle.
- The DRP does not function optimally.
- The ABS indicator turns ON.
- The Traction Control and Active Handling indicator turns ON.
- The DIC displays the following messages:
  - Service ABS
  - Service Traction System
  - Service Active Handling

Conditions for Clearing the DTC

- The condition for the DTC is no longer present and the DTC is cleared with a scan tool.
- The EBCM automatically clears the history DTC when a current DTC is not detected in 100 consecutive drive cycles.

Diagnostic Aids

The pump motor is integral to the BPMV. The pump motor is not serviceable.

Test Description

The number below refers to the step number on the diagnostic table.

3: Tests the ability of the EBCM to control the pump motor. If the test lamp illuminates, the pump motor circuit within the EBCM is good.

DTC C1242 or C1243

Step	Action	Yes	No
Schematic Reference: ABS Schematics **Connector End View Reference: ABS Connector End Views**			
1	Did you perform the ABS Diagnostic System Check?	Go to **Step 2**	Go to **Diagnostic System Check - ABS**
2	1. Install a scan tool. 2. Turn ON the ignition, with the engine OFF. 3. Use the scan tool in order to clear the DTCs. 4. With the scan tool, perform the Automated Test.	Go to	Go to **Testing for Intermittent Conditions and Poor Connections** in Wiring

	Does the DTC reset?	**Step 3**	Systems
3	1. Turn OFF the ignition. 2. Disconnect the pump motor harness pigtail connector of the BPMV. 3. Connect a test lamp between the pump motor circuits at the pump motor connector of the EBCM using the **J 35616** connector test adapter kit. 4. Use the scan tool in order to clear the DTCs. 5. With the scan tool, perform the Pump Motor Test. Does the test lamp illuminate?	Go to **Step 4**	Go to **Step 5**
4	Inspect for poor connections at the pump motor harness pigtail connector of the BPMV. Refer to **Testing for Intermittent Conditions and Poor Connections** and **Connector Repairs** in Wiring Systems. Did you find and correct the condition?	Go to **Step 8**	Go to **Step 6**
5	Inspect for poor connections at the harness connector of the EBCM. Refer to **Testing for Intermittent Conditions and Poor Connections** and **Connector Repairs** in Wiring Systems. Did you find and correct the condition?	Go to **Step 8**	Go to **Step 7**
6	Replace the BPMV. Refer to **Brake Pressure Modulator Valve (BPMV) Replacement** . Did you complete the repair?	Go to **Step 8**	-
7	Replace the EBCM. Refer to **Electronic Brake Control Module Replacement** . Did you complete the repair?	Go to **Step 8**	-
8	1. Use the scan tool in order to clear the DTCs. 2. With the scan tool, perform the Automated Test. Does the DTC reset?	Go to **Step 2**	System OK

DTC C1248

Circuit Description

The dynamic rear proportioning (DRP) is a control system that replaces the hydraulic proportioning function of the mechanical proportioning valve in the base brake system. The DRP control system is part of the operating software in the EBCM. The DRP uses active control with the existing ABS in order to regulate the vehicle's rear brake pressure.

Conditions for Running the DTC

One or more faults have been detected by the EBCM in the ABS/TCS systems.

Conditions for Setting the DTC

One of the following conditions exits:

- DTC C1236 sets and ignition voltage is less than 8.5 volts.
- DTC C1254 or C1255 sets.
- DTCs C1265 and C1267 set.
- Two wheel speed sensor DTCs on the same axle set.

Action Taken When the DTC Sets

- The EBCM disables the DRP for the duration of the ignition cycle.
- The red Brake warning indicator turns ON.

Conditions for Clearing the DTC

- The condition for the DTC is no longer present and the DTC is cleared with a scan tool.
- The EBCM automatically clears the history DTC when a current DTC is not detected in 100 consecutive drive cycles.

Diagnostic Aids

- Use this DTC in order to differentiate which of the following conditions is present:
  - The EBCM turned ON the red Brake warning indicator.
  - The instrument cluster turned ON the red Brake warning indicator due to low brake fluid in the master cylinder reservoir.
  - The instrument cluster turned ON the red Brake warning indicator due to the application of the park brake.
- Diagnose any other ABS DTCs that set along with this DTC.

Test Description

The number below refers to the step number on the diagnostic table.

2: Verifies whether other ABS/TCS/VSES DTCs are set.

DTC C1248

Step	Action	Yes	No
Schematic Reference: ABS Schematics			
1	Did you perform the ABS Diagnostic System Check?	Go to **Step 2**	Go to **Diagnostic System Check - ABS**
	1. Install a scan tool. 2. Turn ON the ignition, with the		

2	engine OFF. 3. Select the display DTCs function on the scan tool for the EBCM. Does the scan tool display any ABS/TCS/VSES DTCs?	Go to **Diagnostic Trouble Code (DTC) List**	Go to **Step 3**
3	1. Use the scan tool in order to clear the DTCs. 2. Operate the vehicle within the Conditions for Running the DTC as specified in the supporting text. Does the DTC reset?	Go to **Step 2**	Go to **Testing for Intermittent Conditions and Poor Connections** in Wiring System

DTC C1254

Circuit Description

The microprocessor contains a data storage area, keep alive memory, which can save pertinent data when the ignition is turned OFF. The keep alive memory (KAM) data is lost if battery power or module ground is removed from the module. The KAM area is an integral part of the microprocessor and cannot be serviced separately.

Conditions for Running the DTC

The ABS conditions and the braking conditions are normal.

Conditions for Setting the DTC

The microprocessor calculates a checksum on those areas of memory that hold critical operation data. This is done at a regular interval and is called the periodic checksum. The microprocessor also calculates a checksum on these memory locations when ever new data is written to them. This is called the running checksum.

To check the keep alive memory (KAM), the microprocessor compares the periodic checksum to the running checksum. If they do not match, the microprocessor sets the DTC.

Action Taken When the DTC Sets

If equipped, the following actions occur:

- The EBCM disables the DRP/ABS/TCS/VSES for the duration of the ignition cycle.
- The EBCM disables the variable effort steering (VES) for the duration of the ignition cycle.
- The ABS indicator turns ON.
- The Traction Control and Active Handling indicator turns ON.
- The DIC displays the following messages:

- Service ABS
- Service Traction System
- Service Active Handling

- The red Brake warning indicator turns ON.
- The EBCM will also set DTC C1248.
- The EBCM will not send serial data messages.
- The EBCM will not send the requested torque output to the PCM.
- The EBCM will not send the steering angle PWM output to the electronic suspension control module.

Conditions for Clearing the DTC

- The condition for the DTC is no longer present and the DTC is cleared with a scan tool.
- The EBCM automatically clears the history DTC when a current DTC is not detected in 100 consecutive drive cycles.

Diagnostic Aids

Possible causes of this DTC are the following conditions:

- A loss of battery ground
- A disconnected battery
- A running reset

  A running reset is detected when the keep alive memory check sum is not updated properly.

- A sudden drop in the system voltage to less than 5 volts
- Long extended engine cranks that cause the battery voltage to drop
- Poor power or ground connections
- An internal EBCM malfunction

Test Description

The numbers below refer to the step numbers on the diagnostic table.

2: Tests for an open in the ground circuits of the EBCM.
4: Verifies the proper operation of the charging system.
6: Determines whether the DTC resets.

DTC C1254

Step	Action	Yes	No
Schematic Reference: ABS Schematics **Connector End View Reference: ABS Connector End Views**			

1	Did you perform the ABS Diagnostic System Check?	Go to **Step 2**	Go to **Diagnostic System Check - ABS**
2	1. Turn OFF the ignition. 2. Disconnect the EBCM harness connector. 3. Install the J 39700 universal breakout box using the **J 39700-300** cable adapter to the EBCM harness connector only. See **Special Tools and Equipment** . 4. Test both ground circuits of the EBCM including the EBCM ground for a high resistance or an open. Refer to **Circuit Testing** and **Wiring Repairs** in Wiring Systems. Did you find and correct the condition?	Go to **Step 8**	Go to **Step 3**
3	Has the battery been disconnected recently?	Go to **Step 8**	Go to **Step 4**
4	Test the charging system. Refer to **Diagnostic System Check - Engine Electrical** in Engine Electrical. Did you find and correct the condition?	Go to **Step 8**	Go to **Step 5**
5	Inspect for poor connections at the harness connector of the EBCM. Refer to **Testing for Intermittent Conditions and Poor Connections** and **Connector Repairs** in Wiring Systems. Did you find and correct the condition?	Go to **Step 8**	Go to **Step 6**
6	1. Use the scan tool in order to clear the DTCs. 2. With the scan tool, perform the Automated Test. Does the DTC reset?	Go to **Step 7**	Go to **Testing for Intermittent Conditions and Poor Connections** in Wiring Systems
7	Replace the EBCM. Refer to **Electronic Brake Control Module Replacement** . Did you complete the repair?	Go to **Step 8**	-
8	1. Use the scan tool in order to clear the DTCs. 2. With the scan tool, perform the Automated Test. Does the DTC reset?	Go to **Step 2**	System OK

DTC C1255 OR C1256

Circuit Description

This DTC identifies a malfunction within the electronic brake control module (EBCM).

Conditions for Running the DTC

The ABS conditions and the braking conditions are normal.

Conditions for Setting the DTC

An internal EBCM malfunction exists.

Action Taken When the DTC Sets

C1255

If equipped, the following actions occur:

- The EBCM disables the DRP/ABS/TCS/VSES for the duration of the ignition cycle.
- The ABS indicator turns ON.
- The Traction Control and Active Handling indicator turns ON.
- The red Brake warning indicator turns ON.
- The DIC displays the following messages:
  - Service ABS
  - Service Traction System
  - Service Active Handling
- The EBCM will also set DTC C1248.
- For some DTC C1255xx, the EBCM disables the variable effort steering (VES) for the duration of the ignition cycle.

C1256

- The ABS remains functional.
- The ABS indicator remains OFF.

Conditions for Clearing the DTC

- The condition for the DTC is no longer present and the DTC is cleared with a scan tool.
- The EBCM automatically clears the history DTC when a current DTC is not detected in 100 consecutive drive cycles.

Diagnostic Aids

- The scan tool displays 2 additional characters after the DTC. Take note of the 2 character code and any other DTCs that are set. The 2 character code is an engineering aid used in order to determine the cause of the internal malfunction.
- When the scan tool displays DTC C1255m3, the EBCM has not been programmed. Perform the setup procedure for the EBCM.

Test Description

The number below refers to the step number on the diagnostic table.

2: Determines whether the DTC is current.

DTC C1255 or C1256

Step	Action	Yes	No
Schematic Reference: ABS Schematics			
1	Did you perform the ABS Diagnostic System Check?	Go to **Step 2**	Go to **Diagnostic System Check - ABS**
2	1. Install a scan tool. 2. Turn ON the ignition, with the engine OFF. 3. Use the scan tool in order to clear the DTCs. 4. With the scan tool, perform the Automated Test. Does the DTC reset as a current DTC?	Go to **Step 3**	Go to **Testing for Intermittent Conditions and Poor Connections** in Wiring Systems
3	Replace the EBCM. Refer to **Electronic Brake Control Module Replacement** . Did you complete the repair?	Go to **Step 4**	-
4	1. Use the scan tool in order to clear the DTCs. 2. With the scan tool, perform the Automated Test. Does the DTC reset?	Go to **Step 2**	System OK

DTC C1261-C1274

Circuit Description

The system relay is energized when the ignition is ON. The system relay supplies voltage to the valve solenoids and the pump motor. This voltage is referred to as the system voltage. The electronic brake control module (EBCM) microprocessor activates the valve solenoids by grounding the control circuit.

Conditions for Running the DTC

- The system voltage is greater than 8 volts.
- The ignition voltage is greater than 9 volts.

Conditions for Setting the DTC

The commanded state of the driver and the actual state of the control circuit do not match for 0.03 seconds.

Action Taken When the DTC Sets

If equipped, the following actions occur:

- The EBCM disables the ABS/TCS/VSES for the duration of the ignition cycle.
- The DRP does not function optimally.
- The ABS indicator turns ON.
- The Traction Control and Active Handling indicator turns ON.
- The DIC displays the following messages:
  - Service ABS
  - Service Traction System
  - Service Active Handling

Conditions for Clearing the DTC

- The condition for the DTC is no longer present and the DTC is cleared with a scan tool.
- The EBCM automatically clears the history DTC when a current DTC is not detected in 100 consecutive drive cycles.

Diagnostic Aids

The solenoid valve circuit is internal to the EBCM. The solenoid valve circuit is not diagnosable external to the EBCM. The DTC sets when there is a malfunction in the solenoid circuit internal to the EBCM.

Test Description

The number below refers to the step number on the diagnostic table.

2: Determines whether the DTC is current.

DTC C1261-C1274

Step	Action	Yes	No
Schematic Reference: ABS Schematics			
1	Did you perform the ABS Diagnostic System Check?	Go to **Step 2**	Go to **Diagnostic System Check - ABS**
2	1. Install a scan tool. 2. Turn ON the ignition, with the engine OFF. 3. Use the scan tool in order to clear the DTCs. 4. With the scan tool, perform the Automated Test. Does the DTC reset as a current DTC?	Go to **Step 3**	Go to **Testing for Intermittent Conditions and Poor Connections** in Wiring Systems
	Replace the EBCM. Refer to **Electronic**		

3	**Brake Control Module Replacement** . Did you complete the repair?	Go to **Step 4**	-
4	1. Use the scan tool in order to clear the DTCs. 2. With the scan tool, perform the Automated Test. Does the DTC reset?	Go to **Step 2**	System OK

DTC C1276, P1644, OR P1689

Circuit Description

The EBCM and the PCM simultaneously control the traction control. The PCM reduces the amount of torque supplied to the drive wheels by retarding spark timing and selectively turning off fuel injectors. The EBCM actively applies the brakes to the front wheels in order to reduce torque.

The EBCM sends a requested torque message via a pulse width modulated (PWM) signal to the PCM. The duty cycle of the signal is used to determine how much engine torque the EBCM is requesting the PCM to deliver. Normal values are between 10 and 90 percent duty cycle. The signal should be at 90 percent when traction control is not active and at lower values during traction control activations. The PCM supplies a pull up voltage of 5 volts that the EBCM switches to ground to create the signal.

The PCM sends a delivered torque message via a pulse width modulated (PWM) signal to the EBCM. The duty cycle of the signal is used to determine how much engine torque the PCM is delivering. Normal values are between 10 and 90 percent duty cycle. The signal should be at low values (around 10 percent) at idle and higher values under driving conditions. The EBCM supplies a pull up voltage of 12 volts that the PCM switches to ground to create the signal.

When certain PCM DTCs are set, the PCM will not be able to perform the torque reduction portion of traction control. A serial data message is sent to the EBCM indicating that traction control is not allowed.

Conditions for Running the DTC

The engine is running.

Conditions for Setting the DTC

C1276

One of the following conditions exists:

- The EBCM detects that delivered torque signal is out of the valid range.
- The EBCM does not receive the delivered torque signal.

P1644 or P1689

The PCM detects that the delivered torque signal voltage is invalid.

Action Taken When the DTC Sets

If equipped, the following actions occur:

- The EBCM disables the TCS/VSES for the duration of the ignition cycle.
- The PCM will store conditions which were present when the DTC set as Fail Records data only.
- The Traction Control and Active Handling indicator turns ON.
- The DIC displays the following messages:
  - Service Traction System
  - Service Active Handling
- The ABS remains functional.

Conditions for Clearing the DTC

- The condition for the DTC is no longer present (the DTC is not current) and you used the scan tool Clear DTC function.
- The condition for the DTC is no longer present (the DTC is not current) and you used the On-Board Diagnostics Clear DTC function.
- The EBCM automatically clears the history DTC when a current DTC is not detected in 100 consecutive drive cycles.
- The PCM automatically clears the history DTC when a current DTC is not detected in 40 consecutive warm-up cycles.

Diagnostic Aids

The following conditions can cause this concern:

- An open in the delivered torque circuit.
- An short to ground or voltage in the delivered torque circuit.
- A wiring problem, terminal corrosion, or poor connection in the delivered torque circuit.
- A communication frequency problem.
- A communication duty cycle problem.
- The EBCM is not receiving information from the PCM.
- Loose or corroded EBCM ground or PCM ground.

Test Description

The numbers below refer to the step numbers on the diagnostic table.

3: Use the scan tool in order to determine if the delivered torque signal has a valid duty cycle.

9: This vehicle is equipped with a PCM which uses an Electrically Erasable Programmable Read Only

Memory (EEPROM). When replacing the PCM, the replacement PCM must be programmed.

DTC C1276, P1644, or P1689

Step	Action	Values	Yes	No
Schematic Reference: ABS Schematics **Connector End View Reference: ABS Connector End Views or Powertrain Control Module (PCM) Connector End Views**				
1	Did you perform the ABS Diagnostic System Check?	-	Go to **Step 2**	Go to **Diagnostic System Check - ABS**
2	Inspect the EBCM ground and PCM ground, making sure each ground is clean and torqued to the proper specification. Refer to **Circuit Testing** and **Wiring Repairs** in Wiring Systems. Did you find and correct the condition?	-	Go to **Step 11**	Go to **Step 3**
3	1. Install a scan tool. 2. Start the engine. 3. With a scan tool, observe the Delivered Torque parameter in the TCS data list. Does the scan tool display the specified value?	90%	Go to **Step 4**	Go to **Testing for Intermittent Conditions and Poor Connections** in Wiring Systems
4	1. Turn OFF the ignition. 2. Disconnect the EBCM harness connector. 3. Install the J 39700 universal breakout box using the **J 39700-300** cable adapter to the EBCM harness connector and the EBCM connector. See **Special Tools and Equipment** . 4. Disconnect the powertrain control module (PCM) harness connector. 5. Turn ON the ignition, with the engine OFF. 6. Measure the voltage from the delivered torque signal circuit to a good ground. Does the voltage measure near the specified value?	B+	Go to **Step 5**	Go to **Step 6**
5	1. Turn OFF the ignition. 2. Disconnect the **J 39700-300** cable adapter from the EBCM connector. See **Special Tools and Equipment** . 3. Turn ON the ignition, with the engine OFF. 4. Test the delivered torque signal circuit for a short to voltage. Refer to **Circuit Testing** and **Wiring Repairs** in Wiring Systems.	-	Go to **Step**	

	Did you find and correct the condition?		**11**	Go to **Step 7**
6	1. Turn OFF the ignition. 2. Disconnect the **J 39700-300** cable adapter from the EBCM connector. See **Special Tools and Equipment** . 3. Test the delivered torque signal circuit for the following conditions: • An open • A short to ground • A high resistance Refer to **Circuit Testing** and **Wiring Repairs** in Wiring Systems.Did you find and correct the condition?	-	Go to **Step 11**	Go to **Step 8**
7	Inspect for poor connections the harness connector of the PCM. Refer to **Testing for Intermittent Conditions and Poor Connections** and **Connector Repairs** in Wiring Systems. Did you find and correct the condition?	-	Go to **Step 11**	Go to **Step 9**
8	Inspect for poor connections the harness connector of the EBCM. Refer to **Testing for Intermittent Conditions and Poor Connections** and **Connector Repairs** in Wiring Systems. Did you find and correct the condition?	-	Go to **Step 11**	Go to **Step 10**
9	**IMPORTANT:** **The replacement PCM must be programmed.** Replace the PCM. Refer to **Powertrain Control Module (PCM) Replacement** in Engine Controls - 5.7L.Did you complete the repair?	-	Go to **Step 11**	-
10	Replace the EBCM. Refer to **Electronic Brake Control Module Replacement** . Did you complete the repair?	-	Go to **Step 11**	-
11	1. Use the scan tool in order to clear the DTCs. 2. Operate the vehicle within the Conditions for Running the DTC as specified in the supporting text. Does the DTC reset?	-	Go to **Step 2**	System OK

DTC C1277 OR P0856

Circuit Description

The EBCM and the PCM simultaneously control the traction control. The PCM reduces the amount of torque supplied to the drive wheels by retarding spark timing and selectively turning off fuel injectors. The EBCM actively applies the brakes to the front wheels in order to reduce torque.

The EBCM sends a requested torque message via a pulse width modulated (PWM) signal to the PCM. The duty cycle of the signal is used to determine how much engine torque the EBCM is requesting the PCM to deliver. Normal values are between 10 and 90 percent duty cycle. The signal should be at 90 percent when traction control is not active and at lower values during traction control activations. The PCM supplies a pull up voltage of 5 volts that the EBCM switches to ground to create the signal.

The PCM sends a delivered torque message via a pulse width modulated (PWM) signal to the EBCM. The duty cycle of the signal is used to determine how much engine torque the PCM is delivering. Normal values are between 10 and 90 percent duty cycle. The signal should be at low values (around 10 percent) at idle and higher values under driving conditions. The EBCM supplies a pull up voltage of 12 volts that the PCM switches to ground to create the signal.

When certain PCM DTCs are set, the PCM will not be able to perform the torque reduction portion of traction control. A serial data message is sent to the EBCM indicating that traction control is not allowed.

Conditions for Running the DTC

The engine is running.

Conditions for Setting the DTC

C1277

The PCM diagnoses the requested torque signal circuit and sends a serial data message to the EBCM indicating a fault is present.

P0856

One of the following conditions exists:

- The PCM detects that requested torque signal is out of the valid range.
- The PCM does not receive the requested torque signal.

Action Taken When the DTC Sets

If equipped, the following actions occur:

- The EBCM disables the TCS/VSES for the duration of the ignition cycle.
- The PCM will store conditions which were present when the DTC set as Fail Records data only.
- The Traction Control and Active Handling indicator turns ON.
- The DIC displays the following messages:
    - Service Traction System

- Service Active Handling
- The ABS remains functional.

Conditions for Clearing the DTC

- The condition for the DTC is no longer present (the DTC is not current) and you used the scan tool Clear DTC function.
- The condition for the DTC is no longer present (the DTC is not current) and you used the On-Board Diagnostics Clear DTC function.
- The EBCM automatically clears the history DTC when a current DTC is not detected in 100 consecutive drive cycles.
- The PCM automatically clears the history DTC when a current DTC is not detected in 40 consecutive warm-up cycles.

Diagnostic Aids

The following conditions can cause this concern:

- An open in the requested torque circuit
- An short to ground or voltage in the requested torque circuit
- A wiring problem, terminal corrosion, or poor connection in the requested torque circuit
- A communication frequency problem
- A communication duty cycle problem
- The PCM is not receiving information from the EBCM
- Loose or corroded EBCM ground or PCM ground

A DTC P1571 may set along with several other PCM DTCs if the key is held in the CRANK position while the engine is running. The starter lockout function of the PCM is enabled several seconds after the engine is running and prevents the starter from engaging while the engine is running. This will cause a partial loss of power to some components and systems.

Test Description

The numbers below refer to the step numbers on the diagnostic table.

3: Clear the DTC in order to verify that the fault is present.

4: Measure the requested torque signal in order to determine if the signal has a valid duty cycle.

5: Measure the requested torque signal in order to determine if the signal has a valid frequency.

11: This vehicle is equipped with a PCM which uses an electrically erasable programmable read only memory (EEPROM). When replacing the PCM, the replacement PCM must be programmed.

DTC C1277 or P0856

Step	Action	Values	Yes	No

Schematic Reference:ABS Schematics
Connector End View Reference:ABS Connector End Views or **Powertrain Control Module (PCM) Connector End Views** in Engine Controls-5.7 L

1	Did you perform the ABS Diagnostic System Check?	-	Go to **Step 2**	Go to **Diagnostic System Check - ABS**
2	Inspect the EBCM ground and PCM ground, making sure each ground is clean and torqued to the proper specification. Refer to **Circuit Testing** and **Wiring Repairs** in Wiring Systems. Did you find and correct the condition?	-	Go to **Step 13**	Go to **Step 3**
3	1. Install a scan tool. 2. Turn ON the ignition, with the engine OFF. 3. Use the scan tool in order to clear the DTCs in both the EBCM and PCM. 4. Turn OFF the ignition. 5. Start the engine. Does the DTC reset as a current DTC?	-	Go to **Step 4**	Go to **Testing for Intermittent Conditions and Poor Connections** in Wiring Systems
4	1. Turn OFF the ignition. 2. Disconnect the EBCM harness connector. 3. Install the J 39700 universal breakout box using the **J 39700-300** cable adapter to the EBCM harness connector and the EBCM connector. See **Special Tools and Equipment** . 4. Start the engine. 5. Measure the DC duty cycle between the requested torque signal circuit and a good ground. Is the duty cycle within the specified range?	5-95%	Go to **Step 5**	Go to **Step 6**
5	Measure the DC Hz between the requested torque signal circuit and a good ground. Does the frequency measure within the specified range?	121-134 Hz	Go to **Step 8**	Go to **Step 6**
6	1. Turn OFF the ignition. 2. Disconnect the **J 39700-300** cable adapter from the EBCM connector. See **Special Tools and Equipment** . **IMPORTANT:** **Disconnecting the EBCM connector and turning ON the ignition could cause other modules to set loss of communication DTCs (Uxxxx). Once the EBCM is reconnected, the**	4-6 V		

	EBCM may set DTC C1298. 3. Turn ON the ignition, with the engine OFF. 4. Measure the voltage from the requested torque signal circuit to a good ground. Does the voltage measure within the specified range?		Go to **Step 10**	Go to **Step 7**
7	1. Turn OFF the ignition. 2. Disconnect the powertrain control module (PCM) harness connector. 3. Test the requested torque signal circuit for the following conditions: • A short to voltage • A short to ground Refer to **Circuit Testing** and **Wiring Repairs** in Wiring Systems.Did you find and correct the condition?	-	Go to **Step 13**	Go to **Step 10**
8	1. Turn OFF the ignition. 2. Disconnect the powertrain control module (PCM) harness connector. 3. Test the requested torque signal circuit for the following conditions: • An open • A high resistance Refer to **Circuit Testing** and **Wiring Repairs** in Wiring Systems.Did you find and correct the condition?	-	Go to **Step 13**	Go to **Step 9**
9	Inspect for poor connections the harness connector of the PCM. Refer to **Testing for Intermittent Conditions and Poor Connections** and **Connector Repairs** in Wiring Systems. Did you find and correct the condition?	-	Go to **Step 13**	Go to **Step 11**
10	Inspect for poor connections the harness connector of the EBCM. Refer to **Testing for Intermittent Conditions and Poor Connections** and **Connector Repairs** in Wiring Systems. Did you find and correct the condition?	-	Go to **Step 13**	Go to **Step 12**
11	**IMPORTANT:** **The replacement PCM must be programmed.** Replace the PCM. Refer to **Powertrain Control Module (PCM) Replacement** in Engine Controls - 5.7	-	Go to **Step**	

	L.Did you complete the repair?		**13**	-
12	Replace the EBCM. Refer to **Electronic Brake Control Module Replacement** . Did you complete the repair?	-	Go to **Step 13**	-
13	1. Use the scan tool in order to clear the DTCs. 2. Operate the vehicle within the Conditions for Running the DTC as specified in the supporting text. Does the DTC reset?	-	Go to **Step 2**	System OK

DTC C1278

Circuit Description

The EBCM and the PCM simultaneously control the traction control. The PCM reduces the amount of torque supplied to the drive wheels by retarding spark timing and selectively turning off fuel injectors. The EBCM actively applies the brakes to the front wheels in order to reduce torque.

The EBCM sends a requested torque message via a pulse width modulated (PWM) signal to the PCM. The duty cycle of the signal is used to determine how much engine torque the EBCM is requesting the PCM to deliver. Normal values are between 10 and 90 percent duty cycle. The signal should be at 90 percent when traction control is not active and at lower values during traction control activations. The PCM supplies a pull up voltage of 5 volts that the EBCM switches to ground to create the signal.

The PCM sends a delivered torque message via a pulse width modulated (PWM) signal to the EBCM. The duty cycle of the signal is used to determine how much engine torque the PCM is delivering. Normal values are between 10 and 90 percent duty cycle. The signal should be at low values (around 10 percent) at idle and higher values under driving conditions. The EBCM supplies a pull up voltage of 12 volts that the PCM switches to ground to create the signal.

When certain PCM DTCs are set, the PCM will not be able to perform the torque reduction portion of traction control. A serial data message is sent to the EBCM indicating that traction control is not allowed.

Conditions for Running the DTC

The ignition is ON.

Conditions for Setting the DTC

The PCM diagnoses a condition preventing the engine control portion of the traction control function and sends a serial data message to the EBCM indicating that torque reduction is not allowed. The PCM will typically set a DTC and the EBCM will set this DTC.

Action Taken When the DTC Sets

If equipped, the following actions occur:

- The EBCM disables the TCS/VSES for the duration of the ignition cycle.
- The Traction Control and Active Handling indicator turns ON.
- The DIC displays the following messages:
  - Service Traction System
  - Service Active Handling
- The ABS remains functional.

Conditions for Clearing the DTC

- The condition for the DTC is no longer present and the DTC is cleared with a scan tool.
- The EBCM automatically clears the history DTC when a current DTC is not detected in 100 consecutive drive cycles.

Diagnostic Aids

This DTC is for information only. As an aid to the technician, this DTC indicates that there are no problems in the ABS/TCS system.

DTC C1278

Step	Action	Yes	No
Schematic Reference: ABS Schematics			
1	Did you perform the ABS Diagnostic System Check?	Go to **Diagnostic System Check - Engine Controls** in Engine Controls - 5.7L	Go to **Diagnostic System Check - ABS**

DTC C1281, C1283, OR C1286

Circuit Description

The vehicle stability enhancement system (VSES) is activated by the electronic brake control module (EBCM) calculating the desired yaw rate and comparing it to the actual yaw rate input. The desired yaw rate is calculated from measured steering wheel position, vehicle speed, and lateral acceleration. The difference between the desired yaw rate and actual yaw rate is the yaw rate error, which is a measurement of oversteer or understeer. If the yaw rate error becomes too large, the EBCM will attempt to correct the vehicle's yaw motion by applying differential braking to the left or right front wheel.

The amount of differential braking applied to the left or right front wheel is based on both the yaw rate error and side slip rate error. The side slip rate error is a function of the lateral acceleration minus the product of the yaw rate and vehicle speed. The yaw rate error and side slip rate error are combined to produce the total delta velocity error. When the delta velocity error becomes too large and the VSES system activates, the drivers steering inputs combined with the differential braking will attempt to bring the delta velocity error toward zero.

The VSES activations generally occur during aggressive driving, in the turns or bumpy roads without much use of the accelerator pedal. When braking during VSES activation, the brake pedal will feel different than the ABS

pedal pulsation. The brake pedal pulsates at a higher frequency during VSES activation.

Conditions for Running the DTC

C1281

- The steer angle has been centered.
- The VSES is active.
- The direction (understeer or oversteer) of the delta velocity error has not changed.
- The centered lateral acceleration value is less than 0.5 g.
- The yaw rate error is less than 6 degrees/second.
- The side slip error is greater than 1.8 meters/second*second.

C1283

The vehicle speed is greater than 40 km/h (25 mph).

C1286

The steer angle has been centered.

Conditions for Setting the DTC

C1281

One of the following conditions exists:

- The VSES is engaged for 10 seconds with the delta velocity error always in either understeer or oversteer. Under this condition, this DTC will set by itself.
- The yaw rate error is greater than 10 degrees/second for 5 seconds. Under this condition, this DTC will set along with DTC C1282.
- The yaw rate error is greater than 10 degrees/second with the vehicle speed less than 60 km/h (37 mph) and the acceleration pedal is pressed more than 25 percent of the pedal travel range for 1 second during the VSES activation. Under this condition, this DTC will set along with DTC C1282.
- With the yaw rate less than 8 degrees/second, the side slip error is greater than 4.9 meters/second*second for 5 seconds. Under this condition, this DTC will set along with DTC C1284.
- With the vehicle speed greater than 10 km/h (6.2 mph) and less than 100 km/h (62 mph) and the centered yaw rate has a value that is positive and is greater than 10 degrees/second, the oversteer term is negative for 2 seconds. The oversteer term is the yaw rate value times the lateral acceleration value. Under this condition, this DTC will set along with DTC C1284.
- With the steer rate less than 80 degrees/second, the difference between the 2 steering sensor signals (Phase A and Phase B) is greater than 20 degrees for 1 second. Under this condition, this DTC will set along with DTC C1287.

C1283

The vehicle has driven for 10 minutes without completing steer angle centering.

C1286

The steering sensor bias moves greater than 40 degrees after steer centering was accomplished.

Action Taken When the DTC Sets

- The EBCM disables the VSES for the duration of the ignition cycle.
- The Traction Control and Active Handling indicator turns ON.
- The DIC displays the Service Active Handling message.
- The ABS remains functional.

Conditions for Clearing the DTC

- The condition for the DTC is no longer present and the DTC is cleared with a scan tool.
- The EBCM automatically clears the history DTC when a current DTC is not detected in 100 consecutive drive cycles.

Diagnostic Aids

- The scan tool may display 2 additional characters after the DTC. Take note of the 2 character code and any other DTCs that are set. The 2 character code is an engineering aid used in order to determine the specific criteria which caused the DTC to set.
- During diagnosis, park the vehicle on a level surface.
- Check the vehicle for proper alignment. The car should not pull in either direction while driving straight on a level surface.
- Find out from the driver under what conditions the DTC was set (when the DIC displayed the Service Active Handling message). This information will help to duplicate the failure.
- The Snapshot function on the scan tool can help find an intermittent DTC.

Test Description

The numbers below refer to the step numbers on the diagnostic table.

2: Perform the Steering Position Sensor Test in order to verify that the steering wheel position sensor (SWPS) is operating properly.

3: Verify that the lateral accelerometer input parameter is within the valid range.

4: Verify that the yaw rate input parameter is within the valid range.

DTC C1281, C1283, or C1286

Step	Action	Values	Yes	No
Schematic Reference: ABS Schematics				
	Did you perform the ABS Diagnostic System Check?			Go to

1		-	Go to **Step 2**	**Diagnostic System Check - ABS**
2	1. Install a scan tool. 2. Turn ON the ignition, with the engine OFF. 3. With the scan tool, perform the Steering Position Sensor Test. Did the SWPS pass the test?	-	Go to **Step 3**	Go to **Step 7**
3	With a scan tool, observe the Lateral Accelerometer Input parameter in the VSES data list. Does the scan tool display within the specified range?	2.3-2.7 V	Go to **Step 4**	Go to **Step 8**
4	With a scan tool, observe the Yaw Rate Sensor Input parameter in the VSES data list. Does the scan tool display within the specified range?	2.3-2.7 V	Go to **Step 5**	Go to **Step 9**
5	1. Use the scan tool in order to clear the DTCs. 2. Perform the Diagnostic Test Drive. Refer to **Diagnostic Test Drive** . Does the DTC reset?	-	Go to **Step 6**	Go to Diagnostic Aids
6	Replace the EBCM. Refer to **Electronic Brake Control Module Replacement** . Did you complete the repair?	-	Go to **Step 10**	-
7	Replace the steering wheel position sensor (SWPS). Refer to **Steering Shaft, Lower Bearing, and Jacket Replacement (Telescoping)** or **Steering Shaft, Lower Bearing, and Jacket Replacement (Manual)** in Steering Wheel and Column. Did you complete the replacement?	-	Go to **Step 10**	-
8	Replace the lateral accelerometer sensor. Refer to **Lateral Accelerometer Replacement** . Did you complete the replacement?	-	Go to **Step 10**	-
9	Replace the yaw rate sensor. Refer to **Yaw Rate Sensor Replacement** . Did you complete the replacement?	-	Go to **Step 10**	-
10	1. Use the scan tool in order to clear the DTCs. 2. Operate the vehicle within the Conditions for Running the DTC as specified in the supporting text. Does the DTC reset?	-	Go to **Step 2**	System OK

DTC C1282

Circuit Description

The vehicle stability enhancement system (VSES) is activated by the electronic brake control mdoule (EBCM) calculating the desired yaw rate and comparing it to the actual yaw rate input. The desired yaw rate is calculated from measured steering wheel position, vehicle speed, and lateral acceleration. The difference between the desired yaw rate and actual yaw rate is the yaw rate error, which is a measurement of oversteer or understeer. If the yaw rate error becomes too large, the EBCM will attempt to correct the vehicle's yaw motion by applying differential braking to the left or right front wheel.

The amount of differential braking applied to the left or right front wheel is based on both the yaw rate error and side slip rate error. The side slip rate error is a function of the lateral acceleration minus the product of the yaw rate and vehicle speed. The yaw rate error and side slip rate error are combined to produce the total delta velocity error. When the delta velocity error becomes too large and the VSES system activates, the drivers steering inputs combined with the differential braking will attempt to bring the delta velocity error toward zero.

The VSES activations generally occur during aggressive driving, in the turns or bumpy roads without much use of the accelerator pedal. When braking during VSES activation, the brake pedal will feel different than the ABS pedal pulsation. The brake pedal pulsates at a higher frequency during VSES activation.

Conditions for Running the DTC

The EBCM performs 6 different tests to detect a DTC condition. The numbers below correspond to the numbers in Conditions for Setting the DTC.

1. The yaw rate sensor bias test runs with the ignition ON.
2. The yaw rate sensor acceleration test runs with the ignition ON.
3. The yaw rate sensor circuit test runs with the vehicle stopped or with the vehicle speed greater than 45 km/h (28 mph).
4. The yaw rate isolation test runs with the following conditions:
   - The brake pedal is not pressed.
   - The ABS is not active.
   - The vehicle speed is greater than 5 km/h (3 mph).
5. The above yaw rate isolation test run with the VSES active.
6. The false activation test runs with the VSES active.

Conditions for Setting the DTC

The EBCM performs 6 different tests to detect a DTC condition. The numbers below correspond to the numbers in Conditions for Running the DTC.

1. The yaw rate bias is greater than 7 degrees/second.
2. The yaw rate input change is greater than 390 degrees/second/second.
3. The yaw rate input voltage is less than 0.15 volts or greater than 4.85 volts for 1 second.
4. The yaw rate error is greater than 10 degrees/second 30 times within a drive cycle.
5. The yaw rate error is greater than 10 degrees/second for 5 seconds. Under this condition, this DTC will set along with DTC C1281.

6. The yaw rate error is greater than 10 degrees/second with the vehicle speed less than 60 km/h (37 mph) and the acceleration pedal is pressed more than 25 percent of the pedal travel range for 1 second during the VSES activation. Under this condition, this DTC will set along with DTC C1281.

Action Taken When the DTC Sets

- The EBCM disables the VSES for the duration of the ignition cycle.
- The Traction Control and Active Handling indicator turns ON.
- The DIC displays the Service Active Handling message.
- The ABS remains functional.

Conditions for Clearing the DTC

- The condition for the DTC is no longer present and the DTC is cleared with a scan tool.
- The EBCM automatically clears the history DTC when a current DTC is not detected in 100 consecutive drive cycles.

Diagnostic Aids

- The scan tool may display 2 additional characters after the DTC. Take note of the 2 character code and any other DTCs that are set. The 2 character code is an engineering aid used in order to determine the specific criteria which caused the DTC to set.
- During diagnosis, park the vehicle on a level surface.
- Check the vehicle for proper alignment. The car should not pull in either direction while driving straight on a level surface.
- Find out from the driver under what conditions the DTC was set (when the DIC displayed the Service Active Handling message). This information will help to duplicate the failure.
- The Snapshot function on the scan tool can help find an intermittent DTC.

Test Description

The numbers below refer to the step numbers on the diagnostic table.

3: Tests for the proper operation of the circuit in the low voltage range.

4: Tests for the proper operation of the circuit in the high voltage range. If the fuse in the jumper opens when you perform this test, the signal circuit is shorted to ground.

5: Tests for a short to voltage in the 5-volt reference circuit.

6: Tests the bias voltage of the yaw rate sensor.

DTC C1282

Step	Action	Values	Yes	No
Schematic Reference:ABS Schematics **Connector End View Reference:ABS Connector End Views**				

1	Did you perform the ABS Diagnostic System Check?	-	Go to **Step 2**	Go to **Diagnostic System Check - ABS**
2	1. Install a scan tool. 2. Turn ON the ignition, with the engine OFF. 3. With a scan tool, observe the Yaw Rate Sensor Input parameter in the VSES data list. Does the scan tool display that the Yaw Rate Sensor Input parameter is within the specified range?	0.15-4.85 V	Go to **Step 6**	Go to **Step 3**
3	1. Turn OFF the ignition. 2. Disconnect the yaw rate sensor connector. 3. Turn ON the ignition, with the engine OFF. 4. With the scan tool, observe the Yaw Rate Sensor Input parameter. Does the scan tool display that the Yaw Rate Sensor Input parameter is less than the specified value?	0.15 V	Go to **Step 4**	Go to **Step 10**
4	1. Turn OFF the ignition. 2. Connect a 3-amp fused jumper wire between the 5-volt reference circuit of the yaw rate sensor and the signal circuit of the yaw rate sensor. 3. Turn ON the ignition, with the engine OFF. 4. With the scan tool, observe the Yaw Rate Sensor Input parameter. Does the scan tool display that the Yaw Rate Sensor Input parameter is greater than the specified value?	4.85 V	Go to **Step 5**	Go to **Step 8**
5	1. Disconnect the fused jumper wire. 2. Measure the voltage between the 5-volt reference circuit of the yaw rate sensor and the low reference circuit of the yaw rate sensor. Does the voltage measure within the specified range?	4.85-5.2 V	Go to **Step 12**	Go to **Step 7**
6	Does the scan tool display that the Yaw Rate Sensor Input parameter is within the specified range?	2.3-2.7 V	Go to Diagnostic Aids	Go to **Step 11**
7	Test the 5-volt reference circuit of the yaw rate sensor for a short to voltage. Refer to **Circuit Testing** and **Wiring Repairs** in Wiring Systems. Did you find and correct the condition?	-	Go to **Step 16**	Go to **Step 13**
	Test the 5-volt reference circuit of the yaw rate sensor for			

8	the following conditions: • An open • A short to ground • A high resistance Refer to **Circuit Testing** and **Wiring Repairs** in Wiring Systems. Did you find and correct the condition?	-	Go to **Step 16**	Go to **Step 9**
9	Test the signal circuit of the yaw rate sensor for the following conditions: • An open • A short to ground • A high resistance Refer to **Circuit Testing** and **Wiring Repairs** in Wiring Systems. Did you find and correct the condition?	-	Go to **Step 16**	Go to **Step 13**
10	Test the signal circuit of the yaw rate sensor for a short to voltage. Refer to **Circuit Testing** and **Wiring Repairs** in Wiring Systems. Did you find and correct the condition?	-	Go to **Step 16**	Go to **Step 13**
11	1. Disconnect the EBCM harness connector. 2. Install the J 39700 universal pinout box using the **J 39700-300** cable adapter to the EBCM harness connector only. See **Special Tools and Equipment** . 3. Test the low reference circuit of the yaw rate sensor for a high resistance or an open. Refer to **Circuit Testing** and **Wiring Repairs** in Wiring Systems. Did you find and correct the condition?	-	Go to **Step 16**	Go to **Step 12**
12	Inspect for poor connections at the harness connector of the yaw rate sensor. Refer to **Testing for Intermittent Conditions and Poor Connections** and **Connector Repairs** in Wiring Systems. Did you find and correct the condition?	-	Go to **Step 16**	Go to **Step 14**
13	Inspect for poor connections at the harness connector of the EBCM. Refer to **Testing for Intermittent Conditions and Poor Connections** and **Connector Repairs** in Wiring Systems.	-	Go to **Step**	

	Did you find and correct the condition?		**16**	Go to **Step 15**
14	Replace the yaw rate sensor. Refer to **Yaw Rate Sensor Replacement** . Did you complete the repair?	-	Go to **Step 16**	-
15	Replace the EBCM. Refer to **Electronic Brake Control Module Replacement** . Did you complete the repair?	-	Go to **Step 16**	-
16	1. Clear the DTCs using the scan tool. 2. Operate the vehicle within the Conditions for Running the DTC as specified in the supporting text. Does the DTC reset?	-	Go to **Step 2**	System OK

DTC C1284 OR C1285

Circuit Description

The vehicle stability enhancement system (VSES) is activated by the electronic brake control mdoule (EBCM) calculating the desired yaw rate and comparing it to the actual yaw rate input. The desired yaw rate is calculated from measured steering wheel position, vehicle speed, and lateral acceleration. The difference between the desired yaw rate and actual yaw rate is the yaw rate error, which is a measurement of oversteer or understeer. If the yaw rate error becomes too large, the EBCM will attempt to correct the vehicle's yaw motion by applying differential braking to the left or right front wheel.

The amount of differential braking applied to the left or right front wheel is based on both the yaw rate error and side slip rate error. The side slip rate error is a function of the lateral acceleration minus the product of the yaw rate and vehicle speed. The yaw rate error and side slip rate error are combined to produce the total delta velocity error. When the delta velocity error becomes too large and the VSES system activates, the drivers steering inputs combined with the differential braking will attempt to bring the delta velocity error toward zero.

The VSES activations generally occur during aggressive driving, in the turns or bumpy roads without much use of the accelerator pedal. When braking during VSES activation, the brake pedal will feel different than the ABS pedal pulsation. The brake pedal pulsates at a higher frequency during VSES activation.

Conditions for Running the DTC

C1284

The EBCM performs 7 different tests to detect a DTC condition. The numbers below correspond to the numbers in Conditions for Setting the DTC.

1. The lateral accelerometer sensor bias test runs with the ignition ON.
2. The lateral accelerometer sensor self test runs with the following conditions:
    - The ignition is ON.

    - The vehicle is stopped.
3. The lateral accelerometer sensor jerk test runs with the ignition ON.
4. The centered lateral accelerometer sensor test runs with the following conditions:
    - The ignition is ON.
    - The vehicle is stopped.
5. The lateral accelerometer sensor isolation test runs with the following conditions:
    - The ignition is ON.
    - DTC C1282 is not set.
    - The yaw rate is less than 8 degrees/second.
6. The above lateral accelerometer sensor isolation test runs with the VSES active.
7. The yaw rate sensor and lateral accelerometer sensor uncorrelated test with the following conditions:
    - The vehicle speed is greater than 10 km/h (6.2 mph) and less than 100 km/h (62 mph).
    - The centered yaw rate has a value that is positive and is greater than 10 degrees/second

C1285

The ignition is ON.

Conditions for Setting the DTC

C1284

The EBCM performs 7 different tests to detect a DTC condition. The numbers below correspond to the numbers in Conditions for Running the DTC.

1. The compensated bias value of the lateral accelerometer sensor is greater than 0.3 g.
2. The lateral accelerometer sensor performs a self test that results in an offset of 0.5 g. The EBCM compares the sensor output during the self test with the output following the test. The DTC sets when the lateral acceleration immediately following the self test is greater than the self test output minus 0.4 g.
3. The lateral jerk is greater than 16.5 g/second for 0.12 seconds more than 2 times within the ignition cycle.
4. The lateral acceleration is 0.4 g for 0.25 seconds.
5. The side slip error is greater than 0.5 g 30 times within a drive cycle.
6. The side slip error is greater than 0.5 g for 5 seconds. Under this condition, this DTC will set along with DTC C1281.
7. The oversteer term is negative for 2 seconds. The oversteer term is the yaw rate value times the lateral acceleration value. Under this condition, this DTC will set along with DTC C1281.

C1285

The lateral accelerometer input voltage is less than 0.15 volts or greater than 4.85 volts for 1 second.

Action Taken When the DTC Sets

- The EBCM disables the VSES for the duration of the ignition cycle.
- The Traction Control and Active Handling indicator turns ON.
- The DIC displays the Service Active Handling message.
- The ABS remains functional.

Conditions for Clearing the DTC

- The condition for the DTC is no longer present and the DTC is cleared with a scan tool.
- The EBCM automatically clears the history DTC when a current DTC is not detected in 100 consecutive drive cycles.

Diagnostic Aids

- The scan tool may display 2 additional characters after the DTC. Take note of the 2 character code and any other DTCs that are set. The 2 character code is an engineering aid used in order to determine the specific criteria which caused the DTC to set.
- During diagnosis, park the vehicle on a level surface.
- Check the vehicle for proper alignment. The car should not pull in either direction while driving straight on a level surface.
- Find out from the driver under what conditions the DTC was set (when the DIC displayed the Service Active Handling message). This information will help to duplicate the failure.
- The Snapshot function on the scan tool can help find an intermittent DTC.

Test Description

The numbers below refer to the step numbers on the diagnostic table.

3: Tests for the proper operation of the circuit in the low voltage range.

4: Tests for the proper operation of the circuit in the high voltage range. If the fuse in the jumper opens when you perform this test, the signal circuit is shorted to ground.

5: Tests for a short to voltage in the 5 volt reference circuit.

6: Tests the bias voltage of the lateral accelerometer sensor.

DTC C1284 or C1285

Step	Action	Values	Yes	No
Schematic Reference:ABS Schematics **Connector End View Reference:ABS Connector End Views**				
1	Did you perform the ABS Diagnostic System Check?	-	Go to **Step 2**	Go to **Diagnostic System Check - ABS**
	1. Install a scan tool. 2. Turn ON the ignition, with the engine OFF.			

2	3. With a scan tool, observe the Lateral Accelerometer Input parameter in the VSES data list. Does the scan tool display that the Lateral Accelerometer Input parameter is within the specified range?	0.15-4.85 V	Go to **Step 6**	Go to **Step 3**
3	1. Turn OFF the ignition. 2. Disconnect the lateral accelerometer sensor connector. 3. Turn ON the ignition, with the engine OFF. 4. With the scan tool, observe the Lateral Accelerometer Input parameter. Does the scan tool display that the Lateral Accelerometer Input parameter is less than the specified value?	0.15 V	Go to **Step 4**	Go to **Step 10**
4	1. Turn OFF the ignition. 2. Connect a 3 amp fused jumper wire between the 5 volt reference circuit of the lateral accelerometer sensor and the signal circuit of the lateral accelerometer sensor. 3. Turn ON the ignition, with the engine OFF. 4. With the scan tool, observe the Lateral Accelerometer Input parameter. Does the scan tool display that the Lateral Accelerometer Input parameter is greater than the specified value?	4.85 V	Go to **Step 5**	Go to **Step 8**
5	1. Disconnect the fused jumper wire. 2. Measure the voltage between the 5 volt reference circuit of the lateral accelerometer sensor and the low reference circuit of the lateral accelerometer. Does the voltage measure less the specified value?	5.1 V	Go to **Step 12**	Go to **Step 7**
6	Does the scan tool display that the Lateral Accelerometer Input parameter is within the specified range?	2.3-2.7 V	Go to Diagnostic Aids	Go to **Step 11**
7	Test the 5 volt reference circuit of the lateral accelerometer sensor for a short to voltage. Refer to **Circuit Testing** and **Wiring Repairs** in Wiring Systems. Did you find and correct the condition?	-	Go to **Step 16**	Go to **Step 13**
	Test the 5 volt reference circuit of the lateral accelerometer sensor for the following conditions: • An open • A short to ground			

8	• A high resistance Refer to **Circuit Testing** and **Wiring Repairs** in Wiring Systems. Did you find and correct the condition?	-	Go to **Step 16**	Go to **Step 9**
9	Test the signal circuit of the lateral accelerometer sensor for the following conditions: • An open • A short to ground • A high resistance Refer to **Circuit Testing** and **Wiring Repairs** in Wiring Systems. Did you find and correct the condition?	-	Go to **Step 16**	Go to **Step 13**
10	Test the signal circuit of the lateral accelerometer sensor for a short to voltage. Refer to **Circuit Testing** and **Wiring Repairs** in Wiring Systems. Did you find and correct the condition?	-	Go to **Step 16**	Go to **Step 13**
11	1. Disconnect the EBCM harness connector. 2. Install the J 39700 universal pinout box using the **J 39700-300** cable adapter to the EBCM harness connector only. See **Special Tools and Equipment** . 3. Test the low reference circuit of the lateral accelerometer sensor for a high resistance or an open. Refer to **Circuit Testing** and **Wiring Repairs** in Wiring Systems. Did you find and correct the condition?	-	Go to **Step 16**	Go to **Step 12**
12	Inspect for poor connections at the harness connector of the lateral accelerometer sensor. Refer to **Testing for Intermittent Conditions and Poor Connections** and **Connector Repairs** in Wiring Systems. Did you find and correct the condition?	-	Go to **Step 16**	Go to **Step 14**
13	Inspect for poor connections at the harness connector of the EBCM. Refer to **Testing for Intermittent Conditions and Poor Connections** and **Connector Repairs** in Wiring Systems. Did you find and correct the condition?	-	Go to **Step 16**	Go to **Step 15**
14	Replace the lateral accelerometer sensor. Refer to **Lateral Accelerometer Replacement** .	-	Go to **Step**	-

	Did you complete the repair?		**16**	
15	Replace the EBCM. Refer to **Electronic Brake Control Module Replacement** . Did you complete the repair?	-	Go to **Step 16**	-
16	1. Clear the DTCs using the scan tool. 2. Operate the vehicle within the Conditions for Running the DTC as specified in the supporting text. Does the DTC reset?	-	Go to **Step 2**	System OK

DTC C1287 OR C1288

Circuit Description

The vehicle stability enhancement system (VSES) is activated by the electronic brake control mdoule (EBCM) calculating the desired yaw rate and comparing it to the actual yaw rate input. The desired yaw rate is calculated from measured steering wheel position, vehicle speed, and lateral acceleration. The difference between the desired yaw rate and actual yaw rate is the yaw rate error, which is a measurement of oversteer or understeer. If the yaw rate error becomes too large, the EBCM will attempt to correct the vehicle's yaw motion by applying differential braking to the left or right front wheel.

The amount of differential braking applied to the left or right front wheel is based on both the yaw rate error and side slip rate error. The side slip rate error is a function of the lateral acceleration minus the product of the yaw rate and vehicle speed. The yaw rate error and side slip rate error are combined to produce the total delta velocity error. When the delta velocity error becomes too large and the VSES system activates, the drivers steering inputs combined with the differential braking will attempt to bring the delta velocity error toward zero.

The VSES activations generally occur during aggressive driving, in the turns or bumpy roads without much use of the accelerator pedal. When braking during VSES activation, the brake pedal will feel different than the ABS pedal pulsation. The brake pedal pulsates at a higher frequency during VSES activation.

Conditions for Running the DTC

The ignition is ON.

Conditions for Setting the DTC

C1287

One of the following conditions exists:

- The steering wheel position sensor is synchronized and the steer rate (speed that the steering wheel appears to be turning) is greater than 1100 degrees/second.
- The steer rate is less than 80 degrees/second and the difference in the phase angle between Phase A and Phase B is greater than 20 degrees.

- The 2 steering sensor signals (Phase A and Phase B) do not agree for 1 second. Under this condition, this DTC will set along with DTC C1281.

C1288

One of the following conditions exists:

- Both Phase A and Phase B are greater than 4.9 volts for 1.6 seconds.
- Both Phase A and Phase B are less than 0.2 volts for 1.6 seconds.
- The difference in the changes in Phase A and Phase B is greater than 35.2 degrees for 9.76 milliseconds.

Action Taken When the DTC Sets

- The EBCM disables the VSES for the duration of the ignition cycle.
- The Traction Control and Active Handling indicator turns ON.
- The DIC displays the Service Active Handling message.
- The ABS remains functional.

Conditions for Clearing the DTC

- The condition for the DTC is no longer present and the DTC is cleared with a scan tool.
- The EBCM automatically clears the history DTC when a current DTC is not detected in 100 consecutive drive cycles.

Diagnostic Aids

- The scan tool may display 2 additional characters after the DTC. Take note of the 2 character code and any other DTCs that are set. The 2 character code is an engineering aid used in order to determine the specific criteria which caused the DTC to set.
- During diagnosis, park the vehicle on a level surface.
- Check the vehicle for proper alignment. The car should not pull in either direction while driving straight on a level surface.
- Find out from the driver under what conditions the DTC was set (when the DIC displayed the Service Active Handling message). This information will help to duplicate the failure.
- The Snapshot function on the scan tool can help find an intermittent DTC.

Test Description

The numbers below refer to the step numbers on the diagnostic table.

2: Perform the Steering Position Sensor Test in order to verify if the steering wheel position sensor (SWPS) is operating properly.

3: Tests for the proper operation of the steering wheel position signal A circuit in the low voltage range.

4: Tests for the proper operation of the steering wheel position signal B circuit in the low voltage range.

5: Tests for the proper operation of the steering wheel position signal A circuit in the high voltage range. If the fuse in the jumper opens when you perform this test, the signal circuit is shorted to ground.

6: Tests for the proper operation of the steering wheel position signal B circuit in the high voltage range. If the fuse in the jumper opens when you perform this test, the signal circuit is shorted to ground.

7: Tests for a short to voltage in the 5-volt reference circuit.

8: Tests for a high resistance or an open in the low reference circuit.

DTC C1287 or C1288

Step	Action	Values	Yes	No
Schematic Reference:ABS Schematics **Connector End View Reference:ABS Connector End Views**				
1	Did you perform the Diagnostic System Check-ABS?	-	Go to **Step 2**	Go to **Diagnostic System Check - ABS**
2	1. Install a scan tool. 2. Turn ON the ignition, with the engine OFF. 3. With the scan tool, perform the Steering Position Sensor Test. Did the SWPS pass the test?	-	Go to Diagnostic Aids	Go to **Step 3**
3	1. Turn OFF the ignition. 2. Disconnect the steering wheel position sensor (SWPS) connector. 3. Turn ON the ignition, with the engine OFF. 4. With the scan tool, observe the Dual Analog SWPS Input A parameter in the VSES data list. Does the scan tool indicate the Dual Analog SWPS Input A parameter is less than the specified value?	0.2 V	Go to **Step 4**	Go to **Step 13**
4	With the scan tool, observe the Dual Analog SWPS Input B parameter. Does the scan tool indicate the Dual Analog SWPS Input B parameter is less than the specified value?	0.2 V	Go to **Step 5**	Go to **Step 14**
5	1. Turn OFF the ignition. 2. Connect a 3-amp fused jumper wire between the 5-volt reference circuit of the steering wheel position sensor (SWPS) and the signal A circuit of the steering wheel position sensor (SWPS). 3. Turn ON the ignition, with the engine OFF. 4. With the scan tool, observe the Dual Analog SWPS Input A parameter.	4.9 V		

	Does the scan tool indicate that the Dual Analog SWPS Input A parameter is greater than the specified value?		Go to **Step 6**	Go to **Step 10**
6	1. Turn OFF the ignition. 2. Disconnect the fused jumper wire. 3. Connect a 3-amp fused jumper wire between the 5-volt reference circuit of the steering wheel position sensor (SWPS) and the signal B circuit of the steering wheel position sensor (SWPS). 4. Turn ON the ignition, with the engine OFF. 5. With the scan tool, observe the Dual Analog SWPS Input B parameter. Does the scan tool indicate that the Dual Analog SWPS Input B parameter is greater than the specified value?	4.9 V	Go to **Step 7**	Go to **Step 10**
7	1. Disconnect the fused jumper wire. 2. Measure the voltage between the 5-volt reference circuit of the steering wheel position sensor (SWPS) and the low reference circuit of the steering wheel position sensor (SWPS). Does the voltage measure less the specified value?	5 V	Go to **Step 8**	Go to **Step 9**
8	1. Turn OFF the ignition. 2. Disconnect the negative battery cable. Refer to **Battery Negative Cable Disconnect/Connect Procedure** in Engine Electrical. 3. Measure the resistance from the low reference circuit of the steering wheel position sensor (SWPS) to a good ground. Does the resistance measure less than the specified value?	5 ohm	Go to **Step 16**	Go to **Step 15**
9	Test the 5-volt reference circuit of the steering wheel position sensor (SWPS) for a short to voltage. Refer to **Circuit Testing** and **Wiring Repairs** in Wiring Systems. Did you find and correct the condition?	-	Go to **Step 20**	Go to **Step 17**
10	Test the 5-volt reference circuit of the steering wheel position sensor (SWPS) for the following conditions: • An open • A short to ground • A high resistance	-		

	Refer to **Circuit Testing** and **Wiring Repairs** in Wiring Systems. Did you find and correct the condition?		Go to **Step 20**	Go to **Step 11**
11	Test the signal A circuit of the steering wheel position sensor (SWPS) for the following conditions: • An open • A short to ground • A high resistance Refer to **Circuit Testing** and **Wiring Repairs** in Wiring Systems. Did you find and correct the condition?	-	Go to **Step 20**	Go to **Step 12**
12	Test the signal B circuit of the steering wheel position sensor (SWPS) for the following conditions: • An open • A short to ground • A high resistance Refer to **Circuit Testing** and **Wiring Repairs** in Wiring Systems. Did you find and correct the condition?	-	Go to **Step 20**	Go to **Step 17**
13	Test the signal A circuit of the steering wheel position sensor (SWPS) for a short to voltage. Refer to **Circuit Testing** and **Wiring Repairs** in Wiring Systems. Did you find and correct the condition?	-	Go to **Step 20**	Go to **Step 17**
14	Test the signal B circuit of the steering wheel position sensor (SWPS) for a short to voltage. Refer to **Circuit Testing** and **Wiring Repairs** in Wiring Systems. Did you find and correct the condition?	-	Go to **Step 20**	Go to **Step 17**
15	1. Disconnect the EBCM harness connector. 2. Install the J 39700 universal pinout box using the **J 39700-300** cable adapter to the EBCM harness connector only. See **Special Tools and Equipment** . 3. Test the low reference circuit of the steering wheel position sensor (SWPS) for a high resistance or an open. Refer to **Circuit Testing** and **Wiring Repairs** in Wiring Systems. Did you find and correct the condition?	-	Go to **Step 20**	Go to **Step 17**
	Inspect for poor connections at the harness connector of the			

16	steering wheel position sensor (SWPS). Refer to **Testing for Intermittent Conditions and Poor Connections** and **Connector Repairs** in Wiring Systems. Did you find and correct the condition?	-	Go to **Step 20**	Go to **Step 18**
17	Inspect for poor connections at the harness connector of the EBCM. Refer to **Testing for Intermittent Conditions and Poor Connections** and **Connector Repairs** in Wiring Systems. Did you find and correct the condition?	-	Go to **Step 20**	Go to **Step 19**
18	Replace the steering wheel position sensor (SWPS). Refer to **Steering Wheel Position Sensor or Steering Shaft Lower Bearing Replacement** in Steering Wheel and Column. Did you complete the repair?	-	Go to **Step 20**	-
19	Replace the EBCM. Refer to **Electronic Brake Control Module Replacement** . Did you complete the repair?	-	Go to **Step 20**	-
20	1. Clear the DTCs using the scan tool. 2. Operate the vehicle within the Conditions for Running the DTC as specified in the supporting text. Does the DTC reset?	-	Go to **Step 2**	System OK

DTC C1291

Circuit Description

The stop lamp switch signal informs the electronic brake control module (EBCM) when the brake pedal is pressed.

Conditions for Running the DTC

The ABS conditions and the braking conditions are normal.

Conditions for Setting the DTC

The stoplamp switch remains open for 3 deceleration cycles.

Action Taken When the DTC Sets

If equipped, the following actions occur:

- The EBCM disables the TCS/VSES for the duration of the ignition cycle.
- The Traction Control and Active Handling indicator turns ON.
- The DIC displays the following messages:
  - Service Traction System

- Service Active Handling
- The ABS remains functional.

Conditions for Clearing the DTC

- The condition for the DTC is no longer present and the DTC is cleared with a scan tool.
- The EBCM automatically clears the history DTC when a current DTC is not detected in 100 consecutive drive cycles.

Diagnostic Aids

- Diagnose any wheel speed sensor DTCs before continuing with the diagnosis of the DTC.
- A deceleration cycle consists of the following sequence:
  1. The vehicle speed is greater than 24 km/h (15 mph).
  2. The vehicle decelerates more than 8 km/h/second (5 mph/second) for 2 seconds.
  3. The vehicle speed decelerates to less than 16 km/h (10 mph).
- Verify proper stop lamp switch operation using the data list of the scan tool. As the brake is applied, the data list displays the stop lamp switch on within 2.54 cm (1 in) of travel.
- Possible causes of this DTC are the following conditions:
  - An open stop lamp switch
  - The stop lamp switch is misadjusted
  - An open fuse
  - Circuit has a wiring problem, terminal corrosion, or poor connections
  - Erratic wheel speeds

Test Description

The numbers below refer to the step numbers on the diagnostic table.

3: Tests the circuit for a change in states.

5: Tests for proper operation of the circuit by bypassing the stoplamp switch. If the fuse in the jumper opens when you perform this test, the signal circuit of the stop lamp switch is shorted to ground.

DTC C1291

Step	Action	Yes	No
Schematic Reference: ABS Schematics **Connector End View Reference: ABS Connector End Views**			
1	Did you perform the ABS Diagnostic System Check?	Go to **Step 2**	Go to **Diagnostic System Check - ABS**
2	Press the brake pedal. Do the brake lamps turn ON?	Go to **Step 3**	Go to **Step 7**

3	1. Press the brake pedal. 2. With a scan tool, observe the Stop Lamp Switch parameter in the TCS data list. Does the Stop Lamp Switch parameter change state?	Go to Diagnostic Aids	Go to **Step 4**
4	1. Turn OFF the ignition. 2. Inspect the stop lamp switch and adjust and/or calibrate if needed. Refer to **Stop Lamp Switch Adjustment** in Lighting Systems. Did you find and correct the condition?	Go to **Step 14**	Go to **Step 5**
5	1. Turn OFF the ignition. 2. Disconnect the stop lamp switch connector. 3. Connect a 3 amp fused jumper wire between the battery positive voltage circuit of the stop lamp switch and the signal circuit of the stop lamp switch. 4. Turn ON the ignition, with the engine OFF. 5. With a scan tool, observe the Stop Lamp Switch parameter. Does the scan tool display Applied?	Go to **Step 11**	Go to **Step 6**
6	Test the signal circuit of the stop lamp switch for an open between the splice pack of the stoplamp signal circuit and the EBCM. Refer to **Circuit Testing** and **Wiring Repairs** in Wiring Systems. Did you find and correct the condition?	Go to **Step 14**	Go to **Step 10**
7	Test the battery positive voltage circuit of the stoplamp switch for a short to ground or an open. Refer to **Circuit Testing** and **Wiring Repairs** in Wiring Systems. Did you find and correct the condition?	Go to **Step 14**	Go to **Step 8**
8	Test the signal circuit of the stop lamp switch for an open between the stop lamp switch and the splice of the stop lamp signal circuit. Refer to **Circuit Testing** and **Wiring Repairs** in Wiring Systems. Did you find and correct the condition?	Go to **Step 14**	Go to **Step 9**
9	Test the signal circuit of the stop lamp switch for a short to ground. Refer to **Circuit Testing** and **Wiring Repairs** in Wiring Systems. Did you find and correct the condition?	Go to **Step 14**	Go to **Step 10**
10	Inspect for poor connections at the harness connector of the EBCM. Refer to **Testing for Intermittent Conditions and Poor Connections** and **Connector Repairs** in Wiring Systems. Did you find and correct the condition?	Go to **Step 14**	Go to **Step 12**
	Inspect for poor connections at the harness connector of the		

11	stoplamp switch. Refer to **Testing for Intermittent Conditions and Poor Connections** and **Connector Repairs** in Wiring Systems. Did you find and correct the condition?	Go to **Step 14**	Go to **Step 13**
12	Replace the EBCM. Refer to **Electronic Brake Control Module Replacement** . Did you complete the repair?	Go to **Step 14**	-
13	Replace the stop lamp switch. Refer to **Stop Lamp Switch Replacement** in Lighting Systems. Did you complete the repair?	Go to **Step 14**	-
14	1. Use the scan tool in order to clear the DTCs. 2. Operate the vehicle within the Conditions for Running the DTC as specified in the supporting text. Does the DTC reset?	Go to **Step 2**	System OK

DTC C1292, C1293, OR C1296

Circuit Description

The EBCM uses the input from the brake fluid pressure sensor for more accurate braking control during VSES.

Conditions for Running the DTC

C1292

The ignition is ON.

C1293

The vehicle speed is greater than 40 km/h (25 mph).

C1296

The ignition is ON for 1.2 seconds.

Conditions for Setting the DTC

C1292

The brake fluid pressure is less than 345 kPa (50 psi) for 3 deceleration cycles.

C1293

The brake fluid pressure is greater than 345 kPa (50 psi) for 2 consecutive ignition cycles.

C1296

One of the following conditions exists:

- The brake fluid pressure sensor signal is greater than 4.9 volts for 2 minutes.
- The brake fluid pressure sensor signal is less than 0.14 volts for 0.1 seconds.

Action Taken When the DTC Sets

- The EBCM disables the VSES for the duration of the ignition cycle.
- The Traction Control and Active Handling indicator turns ON.
- The DIC displays the Service Active Handling message.
- The ABS remains functional.

Conditions for Clearing the DTC

- The condition for the DTC is no longer present and the DTC is cleared with a scan tool.
- The EBCM automatically clears the history DTC when a current DTC is not detected in 100 consecutive drive cycles.

Diagnostic Aids

- Find out from the driver under what conditions the DTC was set (when the DIC displayed the Service Active Handling message). This information will help to duplicate the failure.
- The Snapshot function on the scan tool can help find an intermittent DTC.
- A deceleration cycle consists of the following sequence:
  1. The vehicle speed is greater than 24 km/h (15 mph).
  2. The vehicle decelerates more than 8 km/h/second (5 mph/second) for 2 seconds.
  3. The vehicle speed decelerates to less than 16 km/h (10 mph).

Test Description

The numbers below refer to the step numbers on the diagnostic table.

3: Tests for the proper operation of the circuit in the low voltage range.

4: Tests for the proper operation of the circuit in the high voltage range. If the fuse in the jumper opens when you perform this test, the signal circuit is shorted to ground.

5: Tests for a short to voltage in the 5 volt reference circuit.

6: Tests for a high resistance or an open in the low reference circuit.

DTC C1292, C1293, or C1296

Step	Action	Values	Yes	No
Schematic Reference: ABS Schematics **Connector End View Reference: ABS Connector End Views**				
	Did you perform the ABS Diagnostic System Check?			Go to

1		-	Go to **Step 2**	**Diagnostic System Check - ABS**
2	1. Install a scan tool. 2. Turn ON the ignition, with the engine OFF. 3. With a scan tool, observe the Brake Fluid Pressure Sensor Input parameter in the VSES data list. Does the scan tool display that the Brake Fluid Pressure Sensor Input parameter is within the specified range?	0.14-4.9 V	Go to Diagnostic Aids	Go to **Step 3**
3	1. Turn OFF the ignition. 2. Disconnect the brake fluid pressure sensor connector. 3. Turn ON the ignition, with the engine OFF. 4. With the scan tool, observe the Brake Fluid Pressure Sensor Input parameter. Does the scan tool indicate that the Brake Fluid Pressure Sensor Input parameter is less than the specified value?	0.14 V	Go to **Step 4**	Go to **Step 10**
4	1. Turn OFF the ignition. 2. Connect a 3 amp fused jumper wire between the 5 volt reference circuit of the brake fluid pressure sensor and the signal circuit of the brake fluid pressure sensor. 3. Turn ON the ignition, with the engine OFF. 4. With the scan tool, observe the Brake Fluid Pressure Sensor Input parameter. Does the scan tool indicate that the Brake Fluid Pressure Sensor Input parameter is greater than the specified value?	4.9 V	Go to **Step 5**	Go to **Step 8**
5	1. Disconnect the fused jumper wire. 2. Measure the voltage between the 5 volt reference circuit of the brake fluid pressure sensor and the low reference circuit of the brake fluid pressure sensor. Does the voltage measure less the specified value?	5 V	Go to **Step 6**	Go to **Step 7**
6	1. Turn OFF the ignition. 2. Disconnect the negative battery cable. Refer to **Battery Negative Cable Disconnect/Connect Procedure** in Engine Electrical. 3. Measure the resistance from the low reference circuit of the brake fluid pressure sensor to a good ground.	5 ohm	Go to **Step**	

	Does the resistance measure less than the specified value?		**12**	Go to **Step 11**
7	Test the 5 volt reference circuit of the brake fluid pressure sensor for a short to voltage. Refer to **Circuit Testing** and **Wiring Repairs** in Wiring Systems. Did you find and correct the condition?	-	Go to **Step 16**	Go to **Step 13**
8	Test the 5 volt reference circuit of the brake fluid pressure sensor for the following conditions: • An open • A short to ground • A high resistance Refer to **Circuit Testing** and **Wiring Repairs** in Wiring Systems. Did you find and correct the condition?	-	Go to **Step 16**	Go to **Step 9**
9	Test the signal circuit of the brake fluid pressure sensor for the following conditions: • An open • A short to ground • A high resistance Refer to **Circuit Testing** and **Wiring Repairs** in Wiring Systems. Did you find and correct the condition?	-	Go to **Step 16**	Go to **Step 13**
10	Test the signal circuit of the brake fluid pressure sensor for a short to voltage. Refer to **Circuit Testing** and **Wiring Repairs** in Wiring Systems. Did you find and correct the condition?	-	Go to **Step 16**	Go to **Step 13**
11	1. Disconnect the EBCM harness connector. 2. Install the J 39700 universal pinout box using the **J 39700-300** cable adapter to the EBCM harness connector only. See **Special Tools and Equipment** . 3. Test the low reference circuit of the brake fluid pressure sensor for a high resistance or an open. Refer to **Circuit Testing** and **Wiring Repairs** in Wiring Systems. Did you find and correct the condition?	-	Go to **Step 16**	Go to **Step 13**
12	Inspect for poor connections at the harness connector of the brake fluid pressure sensor. Refer to **Testing for Intermittent Conditions and Poor Connections** and	-		

	Connector Repairs in Wiring Systems. Did you find and correct the condition?		Go to **Step 16**	Go to **Step 14**
13	Inspect for poor connections at the harness connector of the EBCM. Refer to **Testing for Intermittent Conditions and Poor Connections** and **Connector Repairs** in Wiring Systems. Did you find and correct the condition?	-	Go to **Step 16**	Go to **Step 15**
14	Replace the brake fluid pressure sensor. Refer to **Brake Fluid Pressure Sensor Replacement** . Did you complete the repair?	-	Go to **Step 16**	-
15	Replace the EBCM. Refer to **Electronic Brake Control Module Replacement** . Did you complete the repair?	-	Go to **Step 16**	-
16	1. Clear the DTCs using the scan tool. 2. Operate the vehicle within the Conditions for Running the DTC as specified in the supporting text. Does the DTC reset?	-	Go to **Step 2**	System OK

DTC C1294

Circuit Description

The stop lamp switch signal informs the electronic brake control module (EBCM) when the brake pedal is pressed.

Conditions for Running the DTC

The vehicle speed is greater than 40 km/h (25 mph).

Conditions for Setting the DTC

The stop lamp switch input was active for 2 consecutive ignition cycles.

Action Taken When the DTC Sets

If equipped, the following actions occur:

- The EBCM disables the TCS/VSES for the duration of the ignition cycle.
- The Traction Control and Active Handling indicator turns ON.
- The DIC displays the following messages:
  - Service Traction System
  - Service Active Handling
- The ABS remains functional.

Conditions for Clearing the DTC

- The condition for the DTC is no longer present and the DTC is cleared with a scan tool.
- The EBCM automatically clears the history DTC when a current DTC is not detected in 100 consecutive drive cycles.

Diagnostic Aids

Possible causes of this DTC are the following conditions:

- The stop lamp switch circuit is shorted to voltage.
- The stop lamp switch is misadjusted.
- The stop lamp switch is stuck closed.
- A brake pedal that is binding.
- Both brake light bulbs are burned out.

Test Description

The number below refers to the step number on the diagnostic table.

2: Test for the current state of the stop lamp switch parameter.

DTC C1294

Step	Action	Yes	No
Schematic Reference: ABS Schematics **Connector End View Reference: ABS Connector End Views**			
1	Did you perform the ABS Diagnostic System Check?	Go to **Step 2**	Go to **Diagnostic System Check - ABS**
2	1. Install a scan tool. 2. Turn ON the ignition, with the engine OFF. 3. With a scan tool, observe the Stop lamp Switch parameter in the TCS data list. Does the scan tool display Released?	Go to **Step 3**	Go to **Step 4**
3	1. Press the brake pedal. 2. With a scan tool, observe the Stop lamp Switch parameter. Does the Stop Lamp Switch parameter change state?	Go to Diagnostic Aids	Go to **Step 4**
4	1. Turn OFF the ignition. 2. Inspect the stop lamp switch and adjust and/or calibrate if needed. Refer to **Stop Lamp Switch Adjustment** in Lighting Systems.		

	Did you find and correct the condition?	Go to **Step 11**	Go to **Step 5**
5	1. Turn OFF the ignition. 2. Disconnect the stop lamp switch connector. 3. Turn ON the ignition, with the engine OFF. 4. With a scan tool, observe the Stop lamp Switch parameter. Does the scan tool display Released?	Go to **Step 8**	Go to **Step 6**
6	Test the stop lamp switch signal circuit for a short to voltage. Refer to **Circuit Testing** and **Wiring Repairs** in Wiring Systems. Did you find and correct the condition?	Go to **Step 11**	Go to **Step 7**
7	Inspect for poor connections at the harness connector of the EBCM. Refer to **Testing for Intermittent Conditions and Poor Connections** and **Connector Repairs** in Wiring Systems. Did you find and correct the condition?	Go to **Step 11**	Go to **Step 9**
8	Inspect for poor connections at the harness connector of the stoplamp switch. Refer to **Testing for Intermittent Conditions and Poor Connections** and **Connector Repairs** in Wiring Systems. Did you find and correct the condition?	Go to **Step 11**	Go to **Step 10**
9	Replace the EBCM. Refer to **Electronic Brake Control Module Replacement** . Did you complete the repair?	Go to **Step 11**	-
10	Replace the stop lamp switch. Refer to **Stop Lamp Switch Replacement** in Lighting Systems. Did you complete the repair?	Go to **Step 11**	-
11	1. Use the scan tool in order to clear the DTCs. 2. Operate the vehicle within the Conditions for Running the DTC as specified in the supporting text. Does the DTC reset?	Go to **Step 2**	System OK

DTC C1295

Circuit Description

The electronic brake control module (EBCM) sources 5 volts on the stop lamp switch signal circuit when the stop lamp switch is inactive. The voltage is supplied a ground path through the stop lamp bulbs.

Conditions for Running the DTC

The ignition is ON.

Conditions for Setting the DTC

The stop lamp switch input voltage is between 1.87 volts and 5.03 volts for 2 seconds.

Action Taken When the DTC Sets

If equipped, the following actions occur:

- The EBCM disables the TCS/VSES for the duration of the ignition cycle.
- The Traction Control and Active Handling indicator turns ON.
- The DIC displays the following messages:
  - Service Traction System
  - Service Active Handling
- The ABS remains functional.

Conditions for Clearing the DTC

- The condition for the DTC is no longer present and the DTC is cleared with a scan tool.
- The EBCM automatically clears the history DTC when a current DTC is not detected in 100 consecutive drive cycles.

Diagnostic Aids

Possible causes of this DTC are the following conditions:

- A signal circuit of the stop lamp switch is open.
- The stop lamp switch is misadjusted.
- Verify proper stop lamp switch operation using the data list of the scan tool. As the brake is applied, the data list displays the stop lamp switch ON within 2.54 cm (1 in) of travel.
- All brake lamps are open.
- All brake lamp grounds are open.
- Circuit has a wiring problem, terminal corrosion, or poor connections.
- Loose or corroded EBCM ground or ECM ground.
- An internal EBCM problem.

Test Description

The numbers below refer to the step numbers on the diagnostic table.

3: This DTC detects an open stop lamp switch signal circuit from the stoplamp side of the splice pack to the EBCM.

4: The EBCM sources 5 volts on the stop lamp switch signal circuit. This small voltage has a ground path through the stop lamp bulbs. This DTC sets if the path to ground is open.

DTC C1295

Step	Action	Yes	No
Schematic Reference: ABS Schematics **Connector End View Reference: ABS Connector End Views**			
1	Did you perform the ABS Diagnostic System Check?	Go to **Step 2**	Go to **Diagnostic System Check - ABS**
2	1. Press the brake pedal. 2. With the scan tool, observe the Stop lamp Switch parameter in the TCS data list. Does the Stoplamp Switch parameter display Applied?	Go to **Step 4**	Go to **Step 3**
3	Test the signal circuit of the stoplamp switch for an open or high resistance. Refer to **Circuit Testing** and **Wiring Repairs** in Wiring Systems. Did you find and correct the condition?	Go to **Step 9**	Go to **Step 7**
4	Press the brake pedal. Are all of the stop lamps OFF?	Go to **Step 5**	Go to Diagnostic Aids
5	Test the feed circuit of the stoplamps for an open or high resistance. Refer to **Circuit Testing** and **Wiring Repairs** in Wiring Systems. Did you find and correct the condition?	Go to **Step 9**	Go to **Step 6**
6	Test the ground circuit for the stoplamps for an open or high resistance. Refer to **Circuit Testing** and **Wiring Repairs** in Wiring Systems. Did you find and correct the condition?	Go to **Step 9**	Go to Diagnostic Aids
7	Inspect for poor connections at the harness connector of the EBCM. Refer to **Testing for Intermittent Conditions and Poor Connections** and **Connector Repairs** in Wiring Systems. Did you find and correct the condition?	Go to **Step 9**	Go to **Step 8**
8	Replace the EBCM. Refer to **Electronic Brake Control Module Replacement** . Did you complete the replacement?	Go to **Step 9**	-
9	1. Use the scan tool in order to clear the DTCs. 2. Operate the vehicle within the Conditions for Running the DTC as specified in the supporting text. Does the DTC reset?	Go to **Step 2**	System OK

SYMPTOMS - ANTILOCK BRAKE SYSTEM

IMPORTANT: The following steps must be completed before using the symptom tables.

1. Perform **Diagnostic System Check - ABS** before using the Symptom Tables in order to verify that all of the following are true:

- There are no DTCs set.
- The control module(s) can communicate via the serial data link.

2. Review the system operation in order to familiarize yourself with the system functions. Refer to **ABS Description and Operation** .

Visual/Physical Inspection

- Inspect for aftermarket devices which could affect the operation of the antilock brake system. Refer to **Checking Aftermarket Accessories** in Wiring Systems.
- Inspect the easily accessible or visible system components for obvious damage or conditions which could cause the symptom.
- Inspect the master cylinder reservoir for the proper brake fluid level.

Intermittent

Faulty electrical connections or wiring may be the cause of intermittent conditions. Refer to **Testing for Intermittent Conditions and Poor Connections** in Wiring Systems.

Symptom List

Refer to a symptom diagnostic procedure from the following list in order to diagnose the symptom:

- **ABS Indicator Always On**
- **ABS Indicator Inoperative**
- **Traction Control and Active Handling Indicator Always On**
- **Traction Control and Active Handling Indicator Inoperative**
- **Vehicle Stability Enhancement System Inoperative**
- **Vehicle Stability Enhancement System Unwanted Activation**
- **Vehicle Stability Enhancement System Excessive Brake Pulsation**

ABS INDICATOR ALWAYS ON

Circuit Description

The instrument cluster controls the operation of the ABS indicator. The electronic brake control module (EBCM) reports the desired status of the ABS indicator via serial data messages.

Test Description

The numbers below refer to the step numbers on the diagnostic table.

3: Use the scan tool to check the normal state of the ABS indicator control circuit.

4: Ensures that the instrument cluster can operate the ABS indicator.

ABS Indicator Always On

Step	Action	Yes	No
Schematic Reference: ABS Schematics **Connector End View Reference: ABS Connector End Views or Instrument Panel, Gages, and Console Connector End Views**			
1	Did you perform the ABS Diagnostic System Check?	Go to **Step 2**	Go to **Diagnostic System Check - ABS**
2	Inspect the EBCM ground, making sure the ground is clean and torqued to the proper specification. Refer to **Circuit Testing** and **Wiring Repairs** in Wiring Systems. Did you find and correct the condition?	Go to **Step 9**	Go to **Step 3**
3	1. Install a scan tool. 2. Turn ON the ignition, with the engine OFF. 3. With a scan tool, observe the ABS Warning Indicator parameter in the ABS data list. Does the scan tool display Off?	Go to **Step 4**	Go to **Step 5**
4	1. Turn OFF the ignition. 2. Turn ON the ignition, with the engine OFF. 3. Observe the ABS indicator on the instrument cluster (IPC) during the bulb check. Does the ABS indicator illuminate during the bulb check and then turn OFF?	Go to **Testing for Intermittent Conditions and Poor Connections** in Wiring Systems	Go to **Step 6**
5	Inspect for poor connections at the harness connector of the EBCM. Refer to **Testing for Intermittent Conditions and Poor Connections** and **Connector Repairs** in Wiring Systems. Did you find and correct the condition?	Go to **Step 9**	Go to **Step 7**
6	Inspect for poor connections at the harness connector of the instrument cluster (IPC). Refer to **Testing for Intermittent Conditions and Poor Connections** and **Connector Repairs** in Wiring Systems. Did you find and correct the condition?	Go to **Step 9**	Go to **Step 8**
7	Replace the EBCM. Refer to **Electronic Brake Control Module Replacement** . Did you complete the repair?	Go to **Step 9**	-
8	Replace the instrument cluster (IPC). Refer to **Instrument Panel Cluster (IPC) Replacement** in Instrument Panel, Gauges and Console. Did you complete the repair?	Go to **Step 9**	-

9	Operate the system in order to verify the repair. Did you correct the condition?	System OK	Go to **Step 2**

ABS INDICATOR INOPERATIVE

Circuit Description

The instrument cluster controls the operation of the ABS indicator. The electronic brake control module (EBCM) reports the desired status of the ABS indicator via serial data messages.

Test Description

The numbers below refer to the step numbers on the diagnostic table.

3: Use the scan tool to check the normal state of the ABS indicator control circuit.

4: Ensures that the instrument cluster can operate the ABS indicator.

ABS Indicator Inoperative

Step	Action	Yes	No
Schematic Reference: ABS Schematics **Connector End View Reference: ABS Connector End Views or Instrument Panel, Gages, and Console Connector End Views**			
1	Did you perform the ABS Diagnostic System Check?	Go to **Step 2**	Go to **Diagnostic System Check - ABS**
2	Inspect the EBCM ground, making sure the ground is clean and torqued to the proper specification. Refer to **Circuit Testing** and **Wiring Repairs** in Wiring Systems. Did you find and correct the condition?	Go to **Step 9**	Go to **Step 3**
3	1. Install a scan tool. 2. Turn ON the ignition, with the engine OFF. 3. With a scan tool, observe the ABS Warning Indicator parameter in the ABS data list. Does the scan tool display Off?	Go to **Step 4**	Go to **Step 5**
4	1. Turn OFF the ignition. 2. Turn ON the ignition, with the engine OFF. 3. Observe the ABS indicator on the instrument cluster (IPC) during the bulb check. Does the ABS indicator illuminate during the bulb check and then turn OFF?	Go to **Testing for Intermittent Conditions and Poor Connections** in Wiring Systems	Go to **Step 6**

5	Inspect for poor connections at the harness connector of the EBCM. Refer to **Testing for Intermittent Conditions and Poor Connections** and **Connector Repairs** in Wiring Systems. Did you find and correct the condition?	Go to **Step 9**	Go to **Step 7**
6	Inspect for poor connections at the harness connector of the instrument cluster (IPC). Refer to **Testing for Intermittent Conditions and Poor Connections** and **Connector Repairs** in Wiring Systems. Did you find and correct the condition?	Go to **Step 9**	Go to **Step 8**
7	Replace the EBCM. Refer to **Electronic Brake Control Module Replacement** . Did you complete the repair?	Go to **Step 9**	-
8	Replace the instrument cluster (IPC). Refer to **Instrument Panel Cluster (IPC) Replacement** in Instrument Panel, Gauges and Console. Did you complete the repair?	Go to **Step 9**	-
9	Operate the system in order to verify the repair. Did you correct the condition?	System OK	Go to **Step 2**

TRACTION CONTROL AND ACTIVE HANDLING INDICATOR ALWAYS ON

Circuit Description

The Traction Control and Active Handling indicator is controlled by the instrument cluster via serial data messages from the EBCM. When the BCM sees the traction control switch input grounded through the momentary traction control switch, it sends a serial data message to the EBCM that tells the EBCM that the traction control switch has been pressed. The EBCM then disables TCS and VSES (w/JL4). The EBCM sends a serial data message to the instrument cluster to turn the Traction Control and Active Handling indicator ON and display the Traction System Off message or the Traction/Active Handling Off message (w/JL4) on the DIC.

With JL4, when the BCM sees the traction control switch input grounded for 5 seconds while the vehicle is stopped and the ignition is ON, it sends a serial data message to the EBCM that tells the EBCM that the traction control switch has been pressed for 5 seconds. The EBCM then disables TCS, while leaving VSES enabled. The EBCM sends a serial data message to the instrument cluster display the Competitive Driving message on the DIC. The Traction Control and Active Handling indicator remains OFF.

Each time the ignition is cycled from OFF to ON, the TCS and VSES (w/JL4) are enabled.

The following conditions will cause the Traction Control and Active Handling indicator to illuminate:

- The EBCM has disabled the TCS or VSES due to a DTC.
- The driver manually disabling the TCS or VSES via the traction control switch.
- The instrument cluster bulb check. When the ignition switch is turned to ON, the Traction Control and Active Handling indicator will turn on for approximately 3 seconds and then turn OFF.

Test Description

The numbers below refer to the step numbers on the diagnostic table.

2: Use the scan tool to check the normal state of the Traction Control and Active Handling indicator control.

3: Ensures that the instrument cluster can operate the Traction Control and Active Handling indicator.

Traction Control and Active Handling Indicator Always On

Step	Action	Yes	No
Schematic Reference: ABS Schematics **Connector End View Reference: ABS Connector End Views or Instrument Panel, Gages, and Console Connector End Views**			
1	Did you perform the ABS Diagnostic System Check?	Go to **Step 2**	Go to **Diagnostic System Check - ABS**
2	1. Install a scan tool. 2. Turn ON the ignition, with the engine OFF. 3. With a scan tool, observe the TCS Warning Indicator/Message parameter in the TCS data list. Does the scan tool display Off?	Go to **Step 3**	Go to **Step 4**
3	1. Turn OFF the ignition. 2. Turn ON the ignition, with the engine OFF. 3. Observe the Traction Control and Active Handling indicator on the instrument cluster (IPC) during the bulb check. Does the Traction Control and Active Handling indicator illuminate during the bulb check and then turn OFF?	Go to **Testing for Intermittent Conditions and Poor Connections** in Wiring Systems	Go to **Step 5**
4	Inspect for poor connections at the harness connector of the EBCM. Refer to **Testing for Intermittent Conditions and Poor Connections** and **Connector Repairs** in Wiring Systems. Did you find and correct the condition?	Go to **Step 8**	Go to **Step 6**
5	Inspect for poor connections at the harness connector of the instrument cluster (IPC). Refer to **Testing for Intermittent Conditions and Poor Connections** and **Connector Repairs** in Wiring Systems. Did you find and correct the condition?	Go to **Step 8**	Go to **Step 7**
	Replace the EBCM. Refer to **Electronic Brake**		

6	**Control Module Replacement** . Did you complete the repair?	Go to **Step 8**	-
7	Replace the instrument cluster (IPC). Refer to **Instrument Panel Cluster (IPC) Replacement** in Instrument Panel, Gauges and Console. Did you complete the repair?	Go to **Step 8**	-
8	Operate the system in order to verify the repair. Did you correct the condition?	System OK	Go to **Step 2**

TRACTION CONTROL AND ACTIVE HANDLING INDICATOR INOPERATIVE

Circuit Description

The Traction Control and Active Handling indicator is controlled by the instrument cluster via serial data messages from the EBCM. When the BCM sees the traction control switch input grounded through the momentary traction control switch, it sends a serial data message to the EBCM that tells the EBCM that the traction control switch has been pressed. The EBCM then disables TCS and VSES (w/JL4). The EBCM sends a serial data message to the instrument cluster to turn the Traction Control and Active Handling indicator ON and display the Traction System Off message or the Traction/Active Handling Off message (w/JL4) on the DIC.

With JL4, when the BCM sees the traction control switch input grounded for 5 seconds while the vehicle is stopped and the ignition is ON, it sends a serial data message to the EBCM that tells the EBCM that the traction control switch has been pressed for 5 seconds. The EBCM then disables TCS, while leaving VSES enabled. The EBCM sends a serial data message to the instrument cluster display the Competitive Driving message on the DIC. The Traction Control and Active Handling indicator remains OFF.

Each time the ignition is cycled from OFF to ON, the TCS and VSES (w/JL4) are enabled.

The following conditions will cause the Traction Control and Active Handling indicator to illuminate:

- The EBCM has disabled the TCS or VSES due to a DTC.
- The driver manually disabling the TCS or VSES via the traction control switch.
- The instrument cluster bulb check. When the ignition switch is turned to ON, the Traction Control and Active Handling indicator will turn on for approximately 3 seconds and then turn OFF.

Test Description

The numbers below refer to the step numbers on the diagnostic table.

2: Use the scan tool to check the normal state of the Traction Control and Active Handling indicator control.

3: Ensures that the instrument cluster can operate the Traction Control and Active Handling indicator.

Traction Control and Active Handling Indicator Inoperative

Step	Action	Yes	No

Schematic Reference: ABS Schematics
Connector End View Reference: ABS Connector End Views or Instrument Panel, Gages, and Console Connector End Views

1	Did you perform the ABS Diagnostic System Check?	Go to **Step 2**	Go to **Diagnostic System Check - ABS**
2	1. Install a scan tool. 2. Turn ON the ignition, with the engine OFF. 3. With a scan tool, observe the TCS Warning Indicator/Message parameter in the TCS data list. Does the scan tool display Off?	Go to **Step 3**	Go to **Step 10**
3	1. Turn OFF the ignition. 2. Turn ON the ignition, with the engine OFF. 3. Observe the Traction Control and Active Handling indicator on the instrument cluster (IPC) during the bulb check. Does the Traction Control and Active Handling indicator illuminate during the bulb check and then turn OFF?	Go to **Step 4**	Go to **Step 11**
4	1. Turn OFF the ignition. 2. Install a scan tool. 3. Turn ON the ignition, with the engine OFF. 4. With a scan tool, observe the TCS Switch parameter in the Body Control Module data list. 5. Activate the traction control switch. Does the TCS Switch parameter change state?	Go to **Testing for Intermittent Conditions and Poor Connections** in Wiring Systems	Go to **Step 5**
5	1. Turn OFF the ignition. 2. Disconnect the traction control switch connector. 3. Connect a 3 amp fused jumper from the signal circuit of the traction control switch to the ground circuit of the traction control switch. 4. Turn ON the ignition, with the engine OFF. 5. With a scan tool, observe the TCS Switch parameter. Does the scan tool display On?	Go to **Step 9**	Go to **Step 6**
	Test the signal circuit of the traction control switch for an open or high resistance. Refer to **Circuit Testing**		

6	and **Wiring Repairs** in Wiring Systems. Did you find and correct the condition?	Go to **Step 16**	Go to **Step 7**
7	Test the ground circuit of the traction control switch for an open or high resistance. Refer to **Circuit Testing** and **Wiring Repairs** in Wiring Systems. Did you find and correct the condition?	Go to **Step 16**	Go to **Step 8**
8	Inspect for poor connections at the harness connector of the body control module (BCM). Refer to **Testing for Intermittent Conditions and Poor Connections** and **Connector Repairs** in Wiring Systems. Did you find and correct the condition?	Go to **Step 16**	Go to **Step 12**
9	Inspect for poor connections at the harness connector of the traction control switch. Refer to **Testing for Intermittent Conditions and Poor Connections** and **Connector Repairs** in Wiring Systems. Did you find and correct the condition?	Go to **Step 16**	Go to **Step 13**
10	Inspect for poor connections at the harness connector of the EBCM. Refer to **Testing for Intermittent Conditions and Poor Connections** and **Connector Repairs** in Wiring Systems. Did you find and correct the condition?	Go to **Step 16**	Go to **Step 14**
11	Inspect for poor connections at the harness connector of the instrument cluster (IPC). Refer to **Testing for Intermittent Conditions and Poor Connections** and **Connector Repairs** in Wiring Systems. Did you find and correct the condition?	Go to **Step 16**	Go to **Step 15**
12	Replace the body control module (BCM). Refer to **Body Control Module Replacement** in Body Control System. Did you complete the replacement?	Go to **Step 16**	-
13	Replace the traction control switch. Refer to **Traction Control Switch Replacement** . Did you complete the replacement?	Go to **Step 16**	-
14	Replace the EBCM. Refer to **Electronic Brake Control Module Replacement** . Did you complete the repair?	Go to **Step 16**	-
15	Replace the instrument cluster (IPC). Refer to **Instrument Panel Cluster (IPC) Replacement** in Instrument Panel, Gauges and Console. Did you complete the repair?	Go to **Step 16**	-
16	Operate the system in order to verify the repair. Did you correct the condition?	System OK	Go to **Step 2**

VEHICLE STABILITY ENHANCEMENT SYSTEM INOPERATIVE

Circuit Description

The vehicle stability enhancement system (VSES) is activated by the electronic brake control mdoule (EBCM) calculating the desired yaw rate and comparing it to the actual yaw rate input. The desired yaw rate is calculated from measured steering wheel position, vehicle speed, and lateral acceleration. The difference between the desired yaw rate and actual yaw rate is the yaw rate error, which is a measurement of oversteer or understeer. If the yaw rate error becomes too large, the EBCM will attempt to correct the vehicle's yaw motion by applying differential braking to the left or right front wheel.

The amount of differential braking applied to the left or right front wheel is based on both the yaw rate error and side slip rate error. The side slip rate error is a function of the lateral acceleration minus the product of the yaw rate and vehicle speed. The yaw rate error and side slip rate error are combined to produce the total delta velocity error. When the delta velocity error becomes too large and the VSES system activates, the drivers steering inputs combined with the differential braking will attempt to bring the delta velocity error toward zero.

The VSES activations generally occur during aggressive driving, in the turns or bumpy roads without much use of the accelerator pedal. When braking during VSES activation, the brake pedal will feel different than the ABS pedal pulsation. The brake pedal pulsates at a higher frequency during VSES activation.

Test Description

The numbers below refer to the step numbers on the diagnostic table.

3: Perform the Steering Position Sensor Test in order to verify if the steering wheel position sensor (SWPS) is operating properly.

4: Verify that the lateral accelerometer input parameter is within the valid range.

5: Verify that the yaw rate input parameter is within the valid range.

Vehicle Stability Enhancement System Inoperative

Step	Action	Values	Yes	No
Schematic Reference: ABS Schematics				
1	Did you perform the ABS Diagnostic System Check?	-	Go to **Step 2**	Go to **Diagnostic System Check - ABS**
2	1. Install a scan tool. 2. Start the engine. 3. Observe the VSES Is Centered parameter in the VSES data list. 4. Perform the Diagnostic Test Drive. Refer to **Diagnostic Test Drive** . Did the scan tool display Yes within the specified value?	30 seconds	Go to **Testing for Intermittent Conditions and Poor Connections** in Wiring Systems	Go to **Step 3**
3	With the scan tool, perform the With the scan tool, perform the Steering Position Sensor Test. Did the SWPS pass the test?	-	Go to **Step 4**	Go to **Step 7**

4	With a scan tool, observe the Lateral Accelerometer Input parameter in the VSES data list. Does the scan tool display within the specified range?	2.3-2.7 V	Go to **Step 5**	Go to **Step 8**
5	With a scan tool, observe the Yaw Rate Sensor Input parameter in the VSES data list. Does the scan tool display within the specified range?	2.3-2.7 V	Go to **Step 6**	Go to **Step 9**
6	Replace the EBCM. Refer to **Electronic Brake Control Module Replacement** . Did you complete the replacement?	-	Go to **Step 10**	-
7	Replace the steering wheel position sensor (SWPS). Refer to **Steering Shaft, Lower Bearing, and Jacket Replacement (Telescoping)** or **Steering Shaft, Lower Bearing, and Jacket Replacement (Manual)** in Steering Wheel and Column. Did you complete the replacement?	-	Go to **Step 10**	-
8	Replace the lateral accelerometer sensor. Refer to **Lateral Accelerometer Replacement** . Did you complete the replacement?	-	Go to **Step 10**	-
9	Replace the yaw rate sensor. Refer to **Yaw Rate Sensor Replacement** . Did you complete the replacement?	-	Go to **Step 10**	-
10	Operate the system in order to verify the repair. Did you correct the condition?	-	System OK	Go to **Step 2**

VEHICLE STABILITY ENHANCEMENT SYSTEM UNWANTED ACTIVATION

Circuit Description

The vehicle stability enhancement system (VSES) is activated by the electronic brake control mdoule (EBCM) calculating the desired yaw rate and comparing it to the actual yaw rate input. The desired yaw rate is calculated from measured steering wheel position, vehicle speed, and lateral acceleration. The difference between the desired yaw rate and actual yaw rate is the yaw rate error, which is a measurement of oversteer or understeer. If the yaw rate error becomes too large, the EBCM will attempt to correct the vehicle's yaw motion by applying differential braking to the left or right front wheel.

The amount of differential braking applied to the left or right front wheel is based on both the yaw rate error and side slip rate error. The side slip rate error is a function of the lateral acceleration minus the product of the yaw rate and vehicle speed. The yaw rate error and side slip rate error are combined to produce the total delta velocity error. When the delta velocity error becomes too large and the VSES system activates, the drivers steering inputs combined with the differential braking will attempt to bring the delta velocity error toward zero.

The VSES activations generally occur during aggressive driving, in the turns or bumpy roads without much use

of the accelerator pedal. When braking during VSES activation, the brake pedal will feel different than the ABS pedal pulsation. The brake pedal pulsates at a higher frequency during VSES activation.

Test Description

The number below refers to the step number on the diagnostic table.

6: Perform the Steering Position Sensor Test in order to verify if the steering wheel position sensor (SWPS) is operating properly.

Vehicle Stability Enhancement System Unwanted Activation

Step	Action	Values	Yes	No
Schematic Reference: ABS Schematics				
1	Did you perform the ABS Diagnostic System Check?	-	Go to **Step 2**	Go to **Diagnostic System Check - ABS**
2	Inspect the mounting of the yaw rate sensor. Refer to **Yaw Rate Sensor Replacement** . Did you find and correct the condition?	-	Go to **Step 15**	Go to **Step 3**
3	1. Install a scan tool. 2. Start the engine. 3. With a scan tool, observe the Yaw Rate Sensor Input parameter in the VSES data list. 4. Perform the Diagnostic Test Drive. Refer to **Diagnostic Test Drive** . Does the scan tool display suddenly increase or decrease without rapid turning of the vehicle?	-	Go to **Step 4**	Go to **Step 5**
4	Perform the diagnosis for DTC C1282. Refer to **DTC C1282** . Did you find and correct the condition?	-	Go to **Step 15**	Go to **Step 12**
5	1. Straighten the front wheels. 2. Observe the Dual Analog SWPS Input A and Dual Analog SWPS Input B in the VSES data list. 3. Slowly rotate the steering wheel in both directions. Does the scan tool display change states as the steering wheel was rotated?	-	Go to **Step 6**	Go to **Step 14**
6	With the scan tool, perform the Steering Position Sensor Test. Did the SWPS pass the test?	-	Go to **Step 7**	Go to **Step 14**
	1. Place the vehicle on a level surface.			

7	2. With a scan tool, observe the Lateral Accelerometer Input parameter in the VSES data list. Does the scan tool display within the specified range?	2.3-2.7 V	Go to **Step 9**	Go to **Step 8**
8	Inspect the mounting of the lateral accelerometer sensor. Refer to **Lateral Accelerometer Replacement** . Did you find and correct the condition?	-	Go to **Step 15**	Go to **Step 9**
9	Inspect the EBCM for the proper part number. Did you find the correct part number?	-	Go to **Step 10**	Go to **Step 12**
10	Inspect the power steering gear for the proper part number. Did you find the correct part number?	-	Go to **Step 11**	Go to **Step 13**
11	Inspect the alignment of the vehicle. Refer to **Measuring Wheel Alignment** in Wheel Alignment. Did you find and correct the condition?	-	Go to **Step 15**	Go to **Testing for Intermittent Conditions and Poor Connections** in Wiring Systems
12	Replace the EBCM. Refer to **Electronic Brake Control Module Replacement** . Did you complete the repair?	-	Go to **Step 15**	-
13	Replace the power steering gear. Refer to **Power Steering Gear Replacement** in Power Steering System. Did you complete the repair?	-	Go to **Step 15**	-
14	Replace the steering wheel position sensor (SWPS). Refer to **Steering Shaft, Lower Bearing, and Jacket Replacement (Telescoping)** or **Steering Shaft, Lower Bearing, and Jacket Replacement (Manual)** in Steering Wheel and Column. Did you complete the repair?	-	Go to **Step 15**	-
15	Operate the system in order to verify the repair. Did you correct the condition?	-	System OK	Go to **Step 2**

VEHICLE STABILITY ENHANCEMENT SYSTEM EXCESSIVE BRAKE PULSATION

Circuit Description

The vehicle stability enhancement system (VSES) is activated by the electronic brake control mdoule (EBCM) calculating the desired yaw rate and comparing it to the actual yaw rate input. The desired yaw rate is calculated from measured steering wheel position, vehicle speed, and lateral acceleration. The difference between the desired yaw rate and actual yaw rate is the yaw rate error, which is a measurement of oversteer or understeer. If the yaw rate error becomes too large, the EBCM will attempt to correct the vehicle's yaw motion by applying differential braking to the left or right front wheel.

The amount of differential braking applied to the left or right front wheel is based on both the yaw rate error and side slip rate error. The side slip rate error is a function of the lateral acceleration minus the product of the yaw rate and vehicle speed. The yaw rate error and side slip rate error are combined to produce the total delta velocity error. When the delta velocity error becomes too large and the VSES system activates, the drivers steering inputs combined with the differential braking will attempt to bring the delta velocity error toward zero.

The VSES activations generally occur during aggressive driving, in the turns or bumpy roads without much use of the accelerator pedal. When braking during VSES activation, the brake pedal will feel different than the ABS pedal pulsation. The brake pedal pulsates at a higher frequency during VSES activation.

Vehicle Stability Enhancement System Excessive Brake Pulsation

Step	Action	Values	Yes	No
Schematic Reference: ABS Schematics				
1	Did you perform the ABS Diagnostic System Check?	-	Go to **Step 2**	Go to **Diagnostic System Check - ABS**
2	1. Install a scan tool. 2. Turn ON the ignition, with the engine OFF. 3. Select the powertrain control module (PCM) display DTCs function. Does the scan tool display DTC P1575?	-	Go to **DTC P1575** in Cruise Control	Go to **Step 3**
3	1. With a scan tool, observe the Extended Travel Brake Switch parameter in the ABS data list. 2. Step on and off the brake pedal with enough force to simulate a hard braking condition. As the brake pedal is pressed and released, the scan tool should read Applied and Released. 3. Use a tape measure in order to measure the distance that the brake pedal travels for the scan tool to read Applied. Does the distance measure within the specified range?	2.5-3.3 in (1.0-1.3 cm)	Go to **Testing for Intermittent Conditions and Poor Connections** in Wiring Systems	Go to **Step 4**
4	Adjust or repair the extended travel brake switch as necessary. Refer to **Stop Lamp Switch Adjustment** or **Stop Lamp Switch Replacement** in Lighting Systems. Did you complete the repair?	-	Go to **Step 5**	-
	Operate the system in order to verify the			

5	repair. Did you correct the condition?	-	System OK	Go to **Step 2**

REPAIR INSTRUCTIONS

ABS AUTOMATED BLEED PROCEDURE

Bleeding the ABS System

Perform a manual or pressure bleeding procedure. Refer to **Hydraulic Brake System Bleeding (Manual)** or **Hydraulic Brake System Bleeding (Pressure)** in Hydraulic Brakes. If the desired brake pedal height results are not achieved, perform the automated bleed procedure below.

The procedure cycles the system valves and runs the pump in order to purge the air from the secondary circuits normally closed off during normal base brake operation and bleeding. The automated bleed procedure is recommended when air ingestion is suspected in the secondary circuits, or when the BPMV has been replaced.

Automated Bleed Procedure

NOTE: **The Auto Bleed Procedure may be terminated at any time during the process by pressing the EXIT button. No further Scan Tool prompts pertaining to the Auto Bleed procedure will be given. After exiting the bleed procedure, relieve bleed pressure and disconnect bleed equipment per manufacturers instructions. Failure to properly relieve pressure may result in spilled brake fluid causing damage to components and painted surfaces.**

1. Raise the vehicle on a suitable support. Refer to **Lifting and Jacking the Vehicle** in General Information.
2. Remove all four tire and wheel assemblies. Refer to **Tire and Wheel Removal and Installation** in Tires and Wheels.
3. Inspect the brake system for leaks and visual damage. Refer to **Brake Fluid Loss** or **Symptoms - Hydraulic Brakes** in Hydraulic Brakes. Repair or replace as needed.
4. Inspect the battery state of charge. Refer to **Battery Inspection/Test** in Engine Electrical.
5. Install a scan tool.
6. Turn ON the ignition, with the engine OFF.
7. With the scan tool, establish communications with the EBCM. Select Special Functions. Select Automated Bleed from the Special Functions menu.
8. Bleed the base brake system. Refer to **Hydraulic Brake System Bleeding (Manual)** or **Hydraulic Brake System Bleeding (Pressure)** in Hydraulic Brakes.
9. Follow the scan tool directions until the desired brake pedal height is achieved.
10. If the bleed procedure is aborted, a malfunction exists. Perform the following steps before resuming the bleed procedure:
    - If a DTC is detected, refer to **Diagnostic Trouble Code (DTC) List** and diagnose the appropriate

DTC.

- If the brake pedal feels spongy, perform the conventional brake bleed procedure again. Refer to **Hydraulic Brake System Bleeding (Manual)** or **Hydraulic Brake System Bleeding (Pressure)** in Hydraulic Brakes.

11. When the desired pedal height is achieved, press the brake pedal in order to inspect for firmness.
12. Remove the scan tool.
13. Install the tire and wheel assemblies. Refer to **Tire and Wheel Removal and Installation** in Tires and Wheels.
14. Inspect the brake fluid level. Refer to **Master Cylinder Reservoir Filling** in Hydraulic Brakes.
15. Road test the vehicle while inspecting that the pedal remains high and firm.

ELECTRONIC BRAKE CONTROL MODULE REPLACEMENT

Removal Procedure

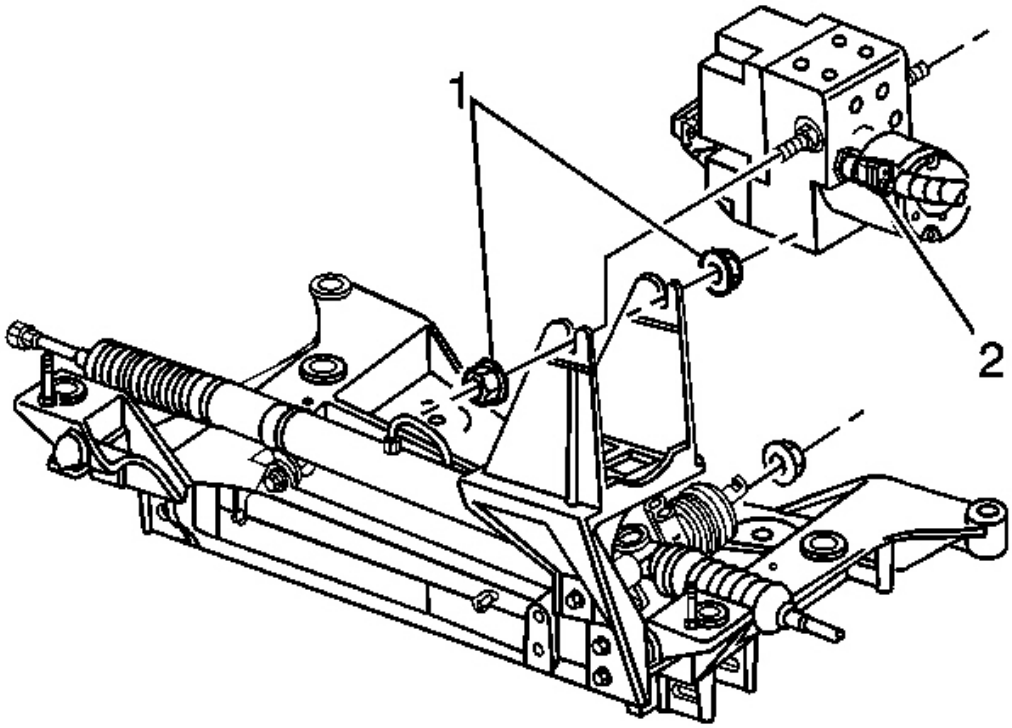

Fig. 10: EBCM Harness Connector & Bracket
Courtesy of GENERAL MOTORS CORP.

1. Turn the ignition switch to the OFF position.
2. Disconnect the EBCM harness connector.
3. Remove the two insulator nuts (1).
4. Lift the EBCM/BPMV out of the bracket high enough to allow clearance to remove the insulator mounting bolt and the EBCM.

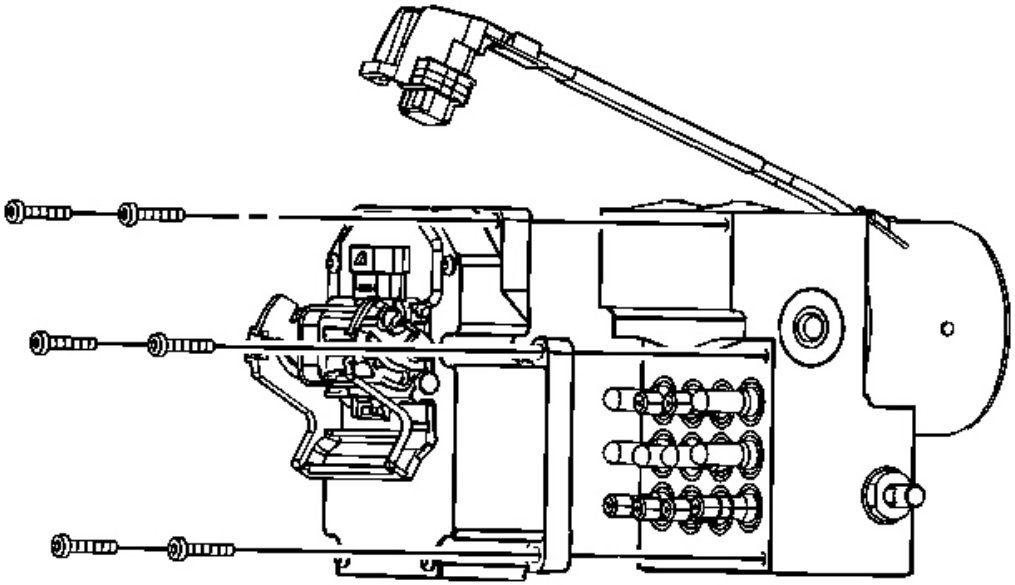

Fig. 11: Insulator Mounting Bolt To EBCM
Courtesy of GENERAL MOTORS CORP.

5. Remove the insulator mounting bolt from the EBCM.
6. Remove the six EBCM to BPMV bolts.
7. Separate the EBCM from the BPMV by gently pulling apart until separated.
8. Carefully remove the seal.

   The seal may by reused if it is not cut or damaged.

Installation Procedure

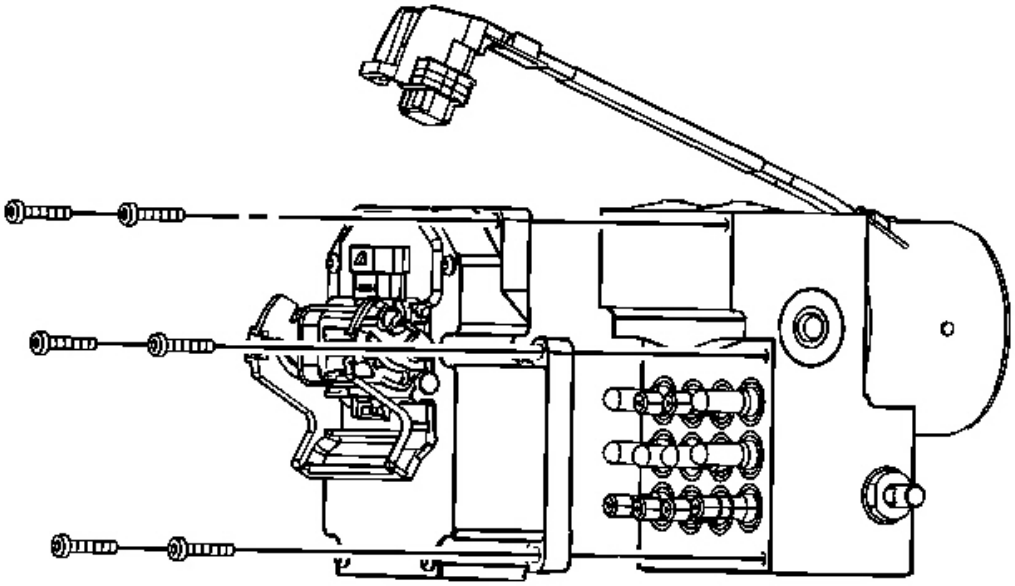

Fig. 12: Insulator Mounting Bolt To EBCM
Courtesy of GENERAL MOTORS CORP.

1. Clean the BPMV seal surface with alcohol using a clean rag.
2. Install the seal to the BPMV if it is not cut or damaged.
3. Install the EBCM to the BPMV.

NOTE: Refer to Fastener Notice in Cautions and Notices.

4. Tighten the six mounting bolts in the following sequence:

Tighten:

- First pass to 3 N.m (27 lb in).
- Second pass to 6 N.m (53 lb in).

IMPORTANT: If the insulator nut was removed it must be replaced with a new insulator nut.

5. Install the front EBCM insulator mounting bolt.

Tighten: Tighten the bolt to 14 N.m (10 lb ft).

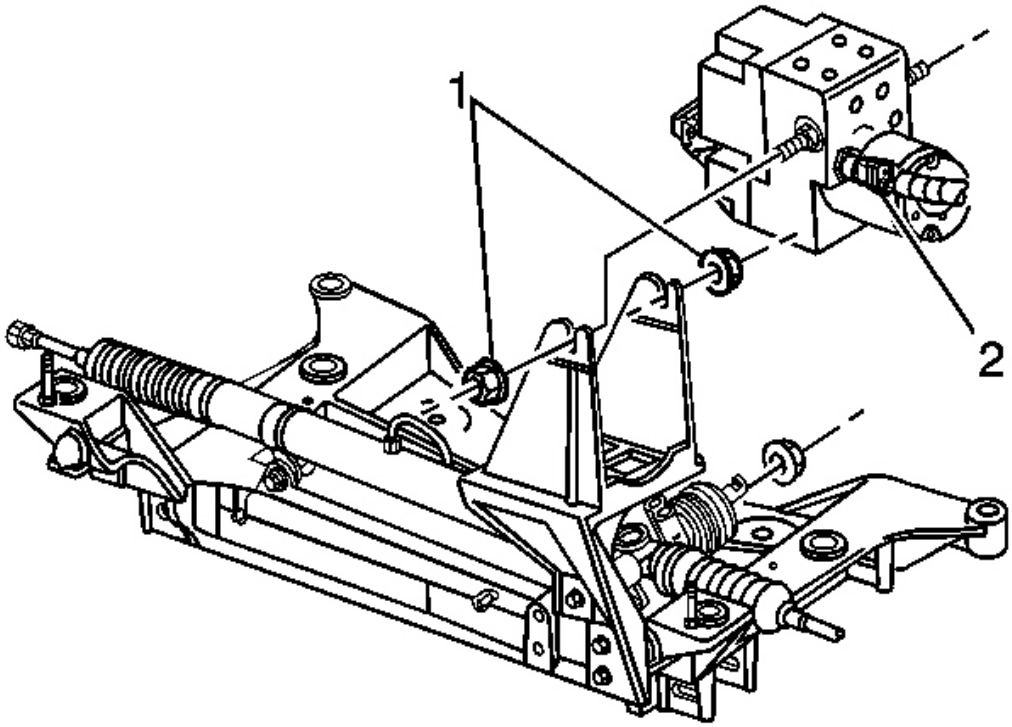

Fig. 13: EBCM Harness Connector & Bracket
Courtesy of GENERAL MOTORS CORP.

6. Install the EBCM/BPMV into the bracket.
7. Install the two insulator nuts (1).

   Tighten: Tighten the two insulator nuts to 12 N.m (106 lb in).

8. Connect the EBCM harness connector.

   IMPORTANT: Both sides of the EBCM harness connector must be engaged with lever before closing.

9. Turn the ignition switch to the ON position; do NOT start the engine.
10. Perform the **Diagnostic System Check - ABS** .

BRAKE PRESSURE MODULATOR VALVE (BPMV) REPLACEMENT

Removal Procedure

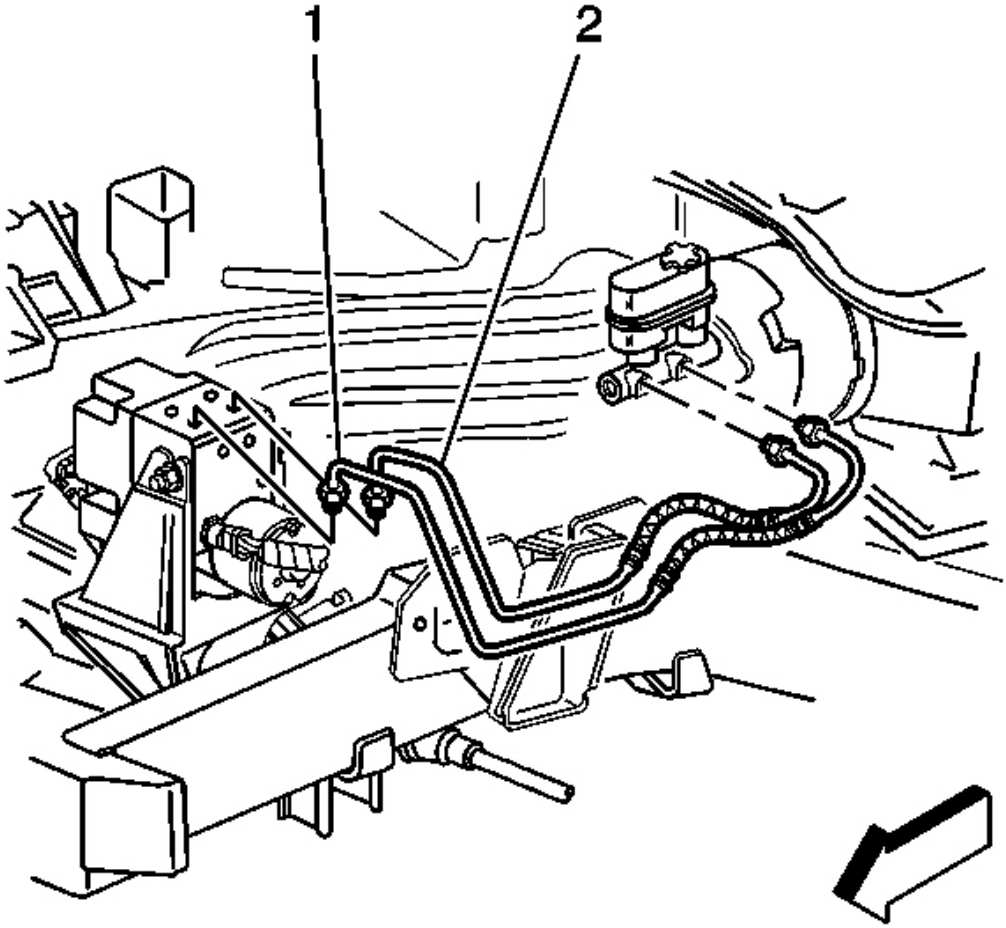

Fig. 14: Brake Pipes To Master Cylinder
Courtesy of GENERAL MOTORS CORP.

1. Turn the ignition switch to the OFF position.
2. Disconnect the EBCM harness connector.
3. Remove the BPMV pump motor ground wire.
4. Remove the brake pipes from the master cylinder to the BPMV (1, 2), noting the location.

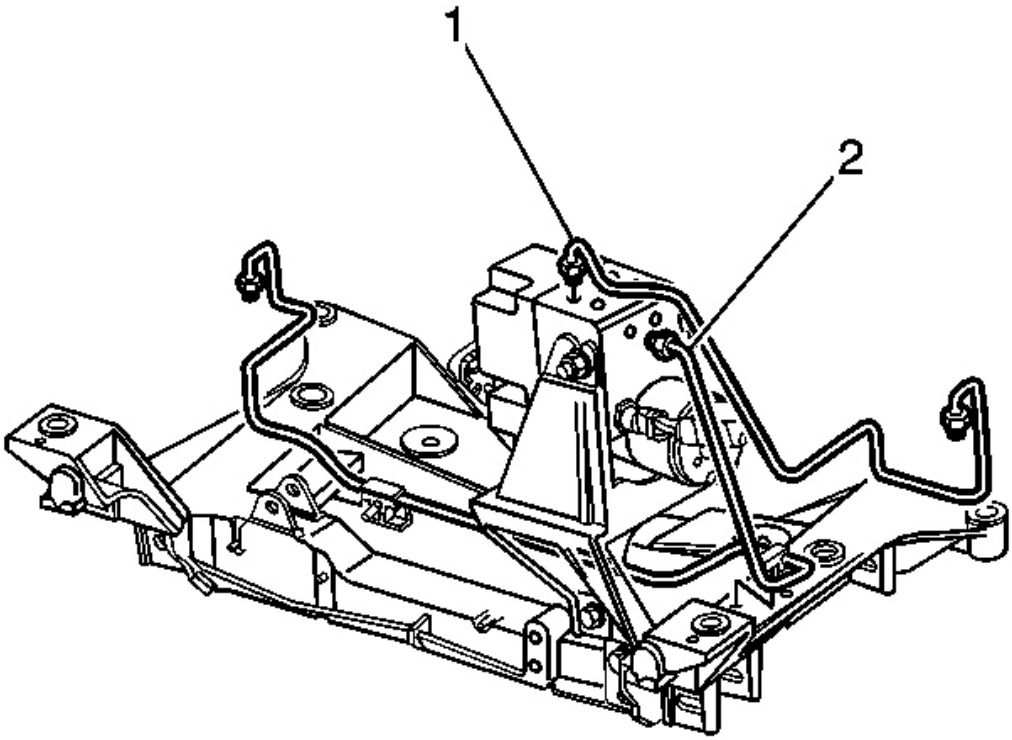

Fig. 15: Brake Pipes At BPMV To Front Brake Calipers
Courtesy of GENERAL MOTORS CORP.

5. Remove the brake pipes from the BPMV (1, 2) to the front brake calipers, noting the location.

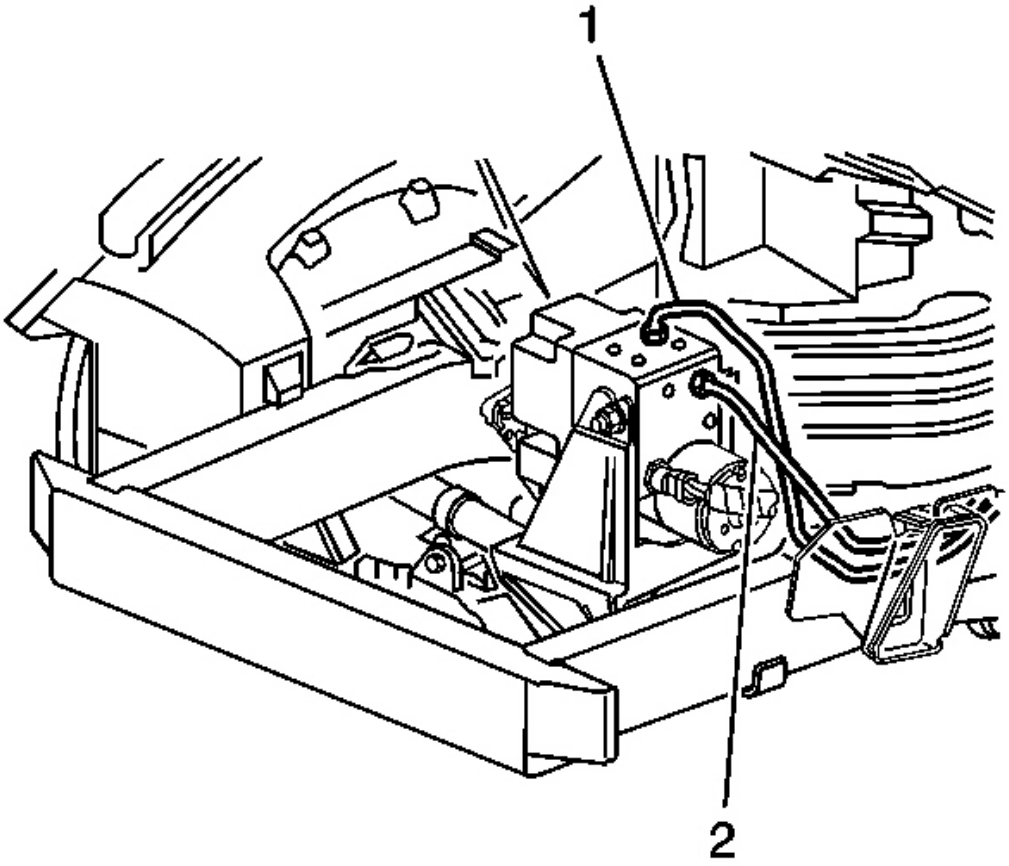

Fig. 16: Brake Pipes At BPMV To Rear Brake Calipers
Courtesy of GENERAL MOTORS CORP.

6. Remove the brake pipes from the BPMV (1, 2) to the rear brake calipers, noting the location.

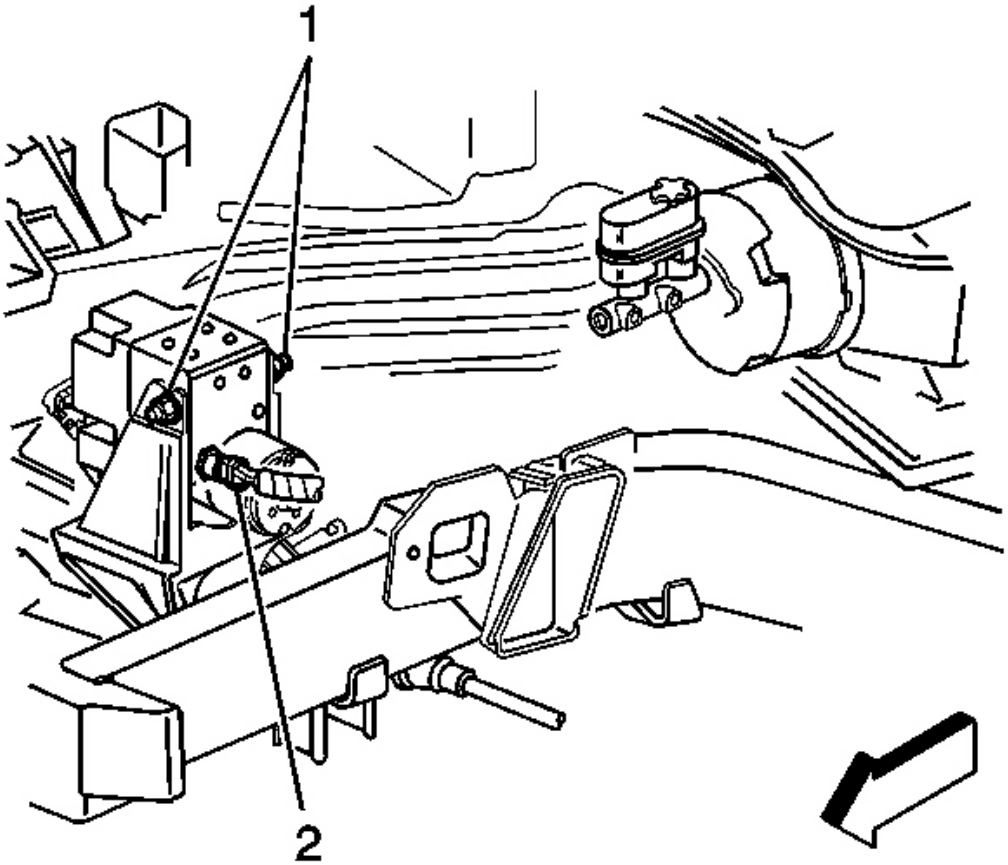

Fig. 17: Electrical Connector To Brake Fluid Pressure Sensor
Courtesy of GENERAL MOTORS CORP.

7. Disconnect the electrical connector from the brake fluid pressure sensor (2).
8. Remove the two insulator nuts (1).
9. Remove the EBCM/BPMV from the vehicle as one unit.

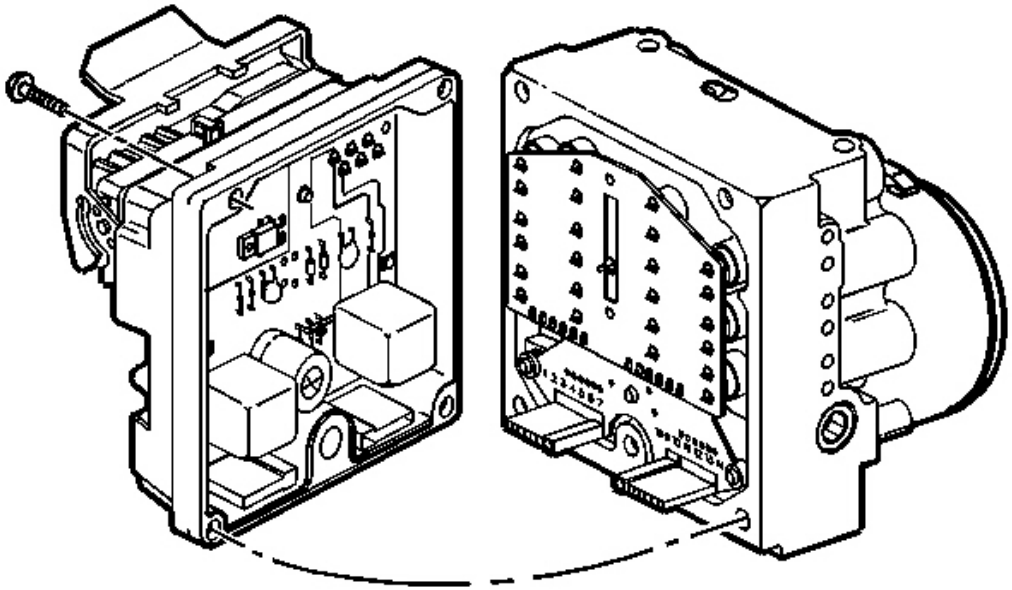

Fig. 18: EBCM To BPMV
Courtesy of GENERAL MOTORS CORP.

10. Remove the insulator mounting bolt from the EBCM.
11. Remove the four EBCM to BPMV bolts.
12. Separate the EBCM from the BPMV by gently pulling apart until separated.
13. Carefully remove the seal.

    The seal may be reused if it is not cut or damaged.

Installation Procedure

IMPORTANT: When installing a new BPMV, do NOT remove the shipping plugs from the outlets until after installation into the vehicle.

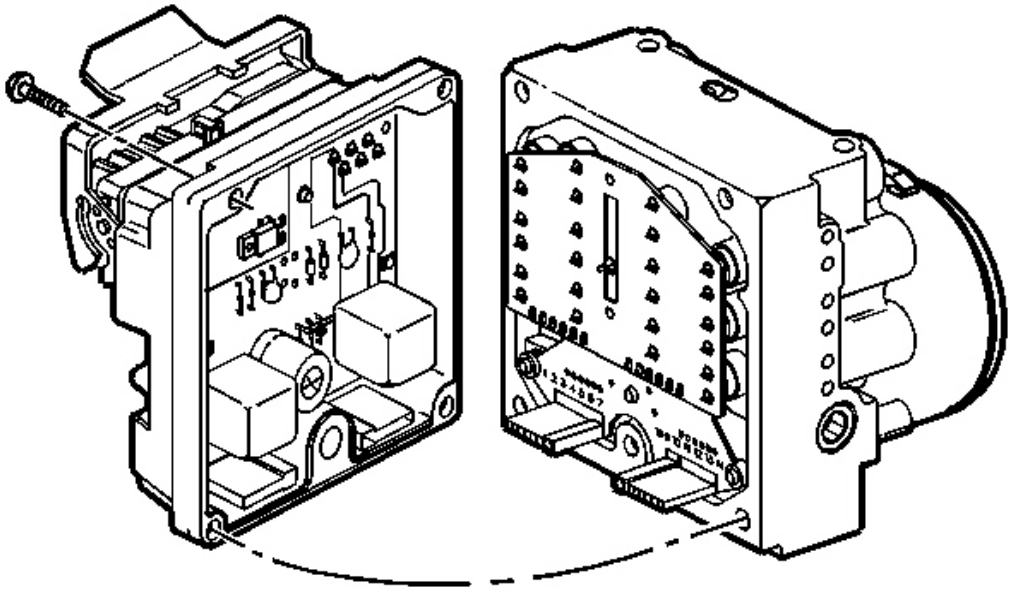

Fig. 19: EBCM To BPMV
Courtesy of GENERAL MOTORS CORP.

1. Clean the BPMV seal surface with alcohol using a clean rag.
2. Install the seal to the BPMV, if it is not cut or damaged.

NOTE: Refer to Fastener Notice in Cautions and Notices.

3. Install the EBCM to the BPMV.
4. Tighten the mounting bolts in the following sequence:

Tighten:

- First pass to 3 N.m (27 lb in).
- Second pass to 6 N.m (53 lb in).

5. Install the EBCM/BPMV insulator mounting bolt.

Tighten: Tighten the bolt to 14 N.m (10 lb ft).

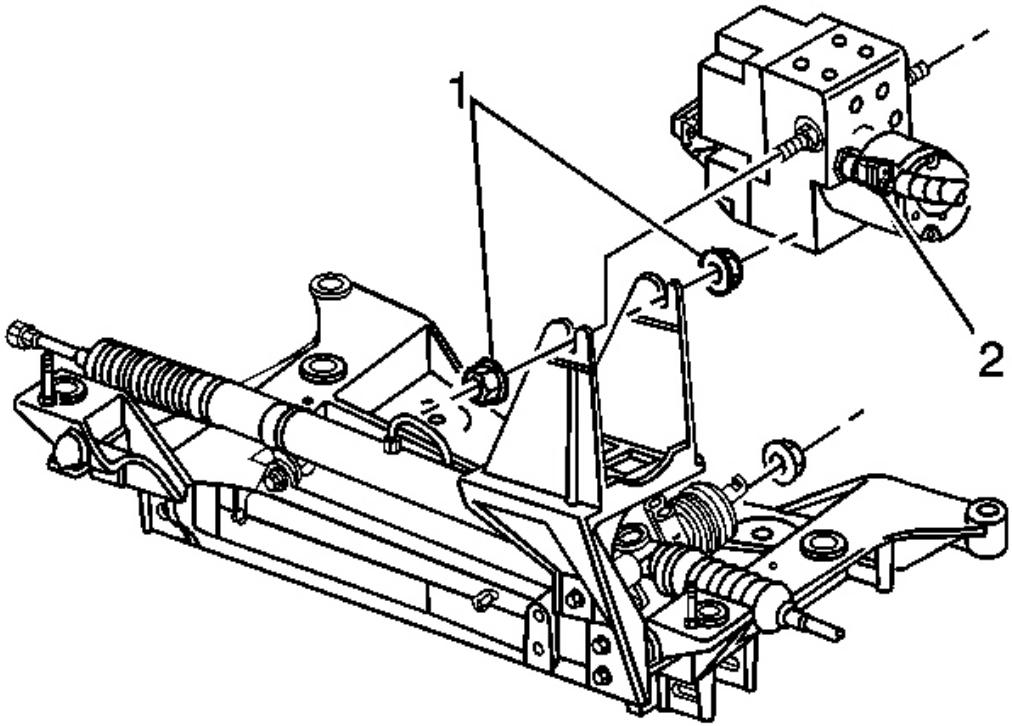

Fig. 20: EBCM Harness Connector & Bracket
Courtesy of GENERAL MOTORS CORP.

6. Install the EBCM/BPMV into the bracket on the vehicle.
7. Install the two insulator nuts (1).

   Tighten: Tighten the to 12 N.m (106 lb in).

8. Connect the brake fluid pressure sensor electrical connector (2).

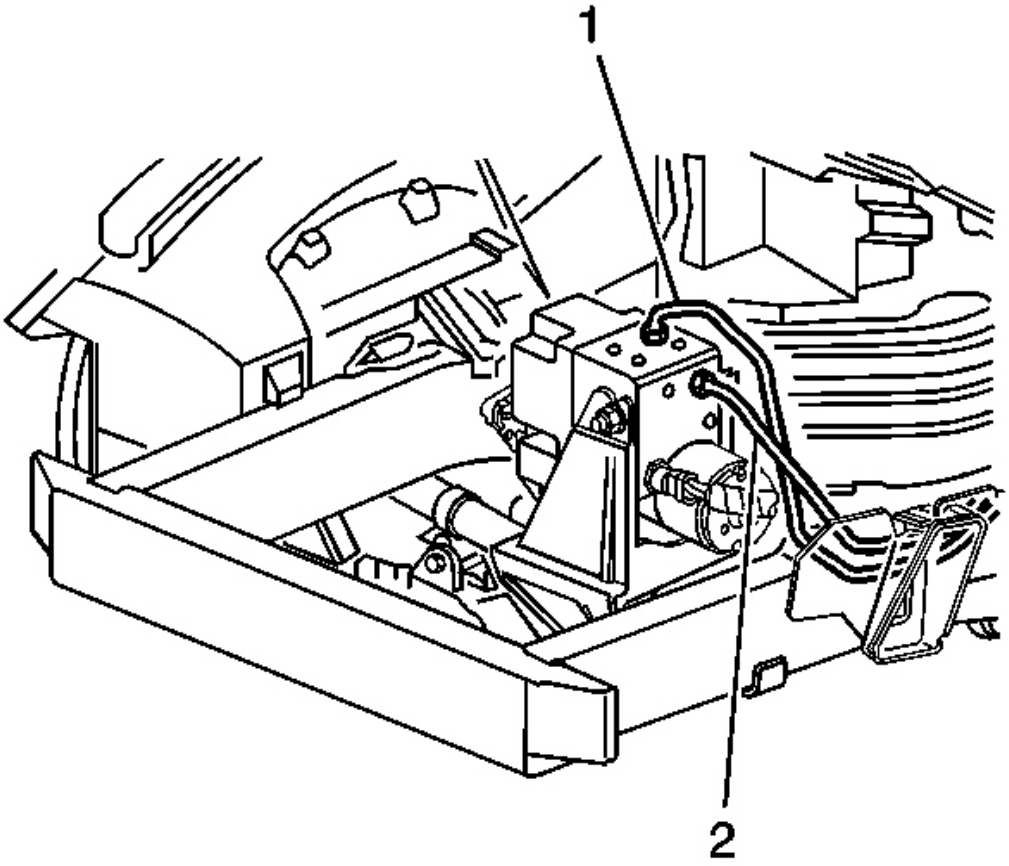

Fig. 21: Brake Pipes At BPMV To Rear Brake Calipers
Courtesy of GENERAL MOTORS CORP.

9. Install the brake pipes from the rear brake calipers (1, 2) to the BPMV in the same location as removed.

   Tighten: Tighten the brake pipe fittings to 16 N.m (12 lb ft).

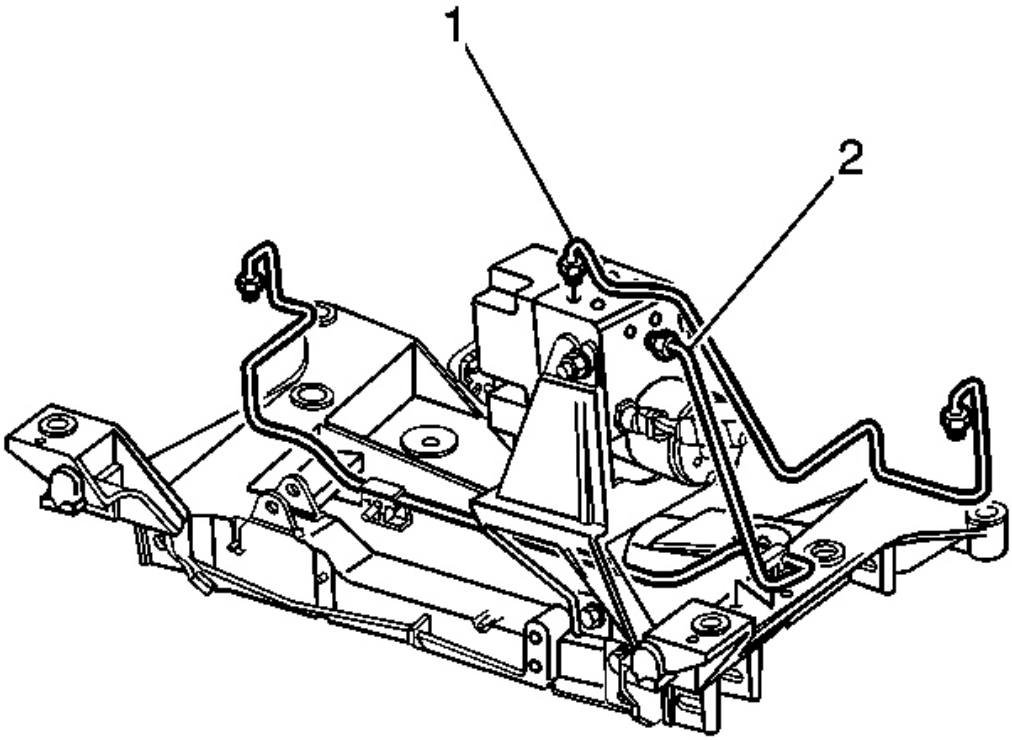

Fig. 22: Brake Pipes At BPMV To Front Brake Calipers
Courtesy of GENERAL MOTORS CORP.

10. Install the brake pipes from the front brake calipers (1, 2) to the BPMV in the same location as removed.

    Tighten: Tighten the brake pipe fittings to 16 N.m (12 lb ft).

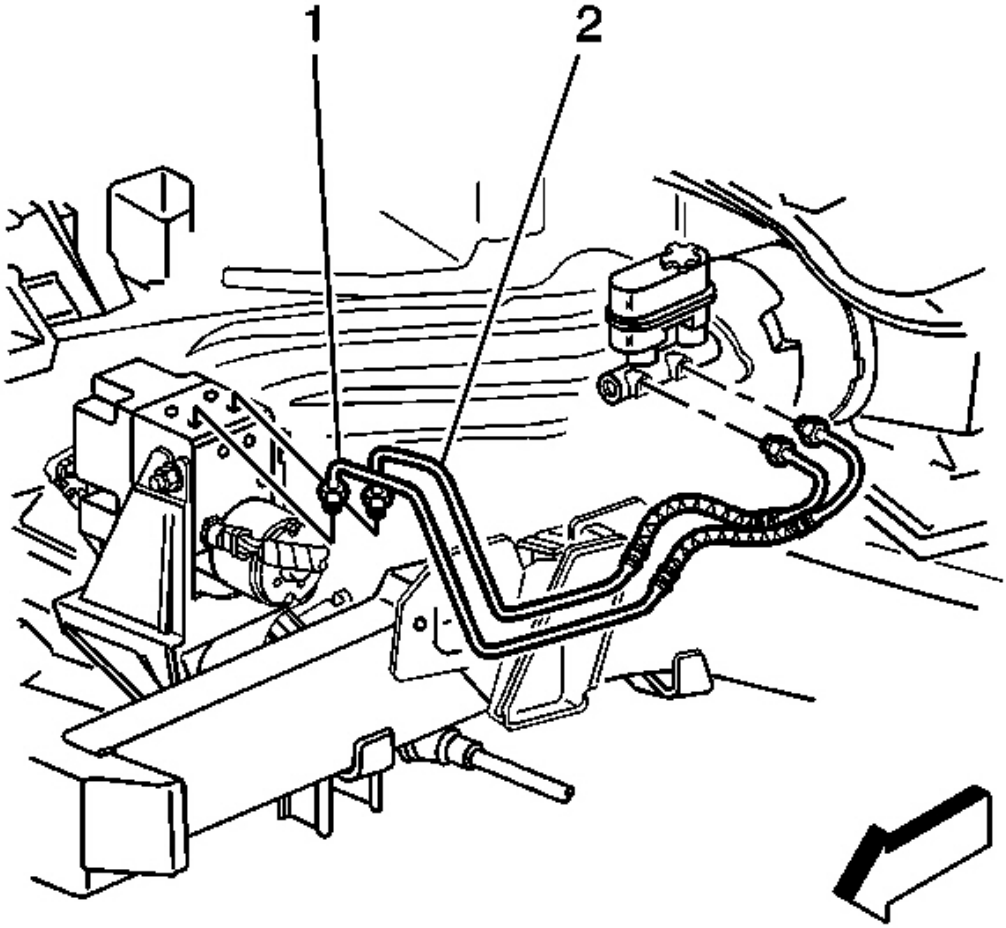

Fig. 23: Brake Pipes To Master Cylinder
Courtesy of GENERAL MOTORS CORP.

11. Install the brake pipes from the master cylinder (1, 2) to the BPMV in the same location as removed.

    Tighten: Tighten the brake pipe fittings to 16 N.m (12 lb ft).

12. Connect the BPMV pump motor ground.
13. Connect the EBCM harness connector.

IMPORTANT: Both sides of the EBCM harness connector must be engaged with lever before closing.

14. Turn the ignition switch to the ON position; do NOT start the engine.
15. Fill and bleed the hydraulic brake system. Refer to **Master Cylinder Reservoir Filling** and **Hydraulic Brake System Bleeding (Manual)** or **Hydraulic Brake System Bleeding (Pressure)** in Hydraulic Brakes.
16. Perform the Automated Bleed Procedure. Refer to **ABS Automated Bleed Procedure** .
17. Perform the **Diagnostic System Check - ABS** .

BRAKE FLUID PRESSURE SENSOR REPLACEMENT

IMPORTANT: The brake fluid pressure sensor is no longer serviced on an individual basis. If the sensor needs to be replaced, the brake pressure modulator valve (BPMV) must also be replaced. Refer to Brake Pressure Modulator Valve (BPMV) Replacement .

BRAKE PRESSURE MODULATOR VALVE (BPMV) BRACKET REPLACEMENT

Removal Procedure

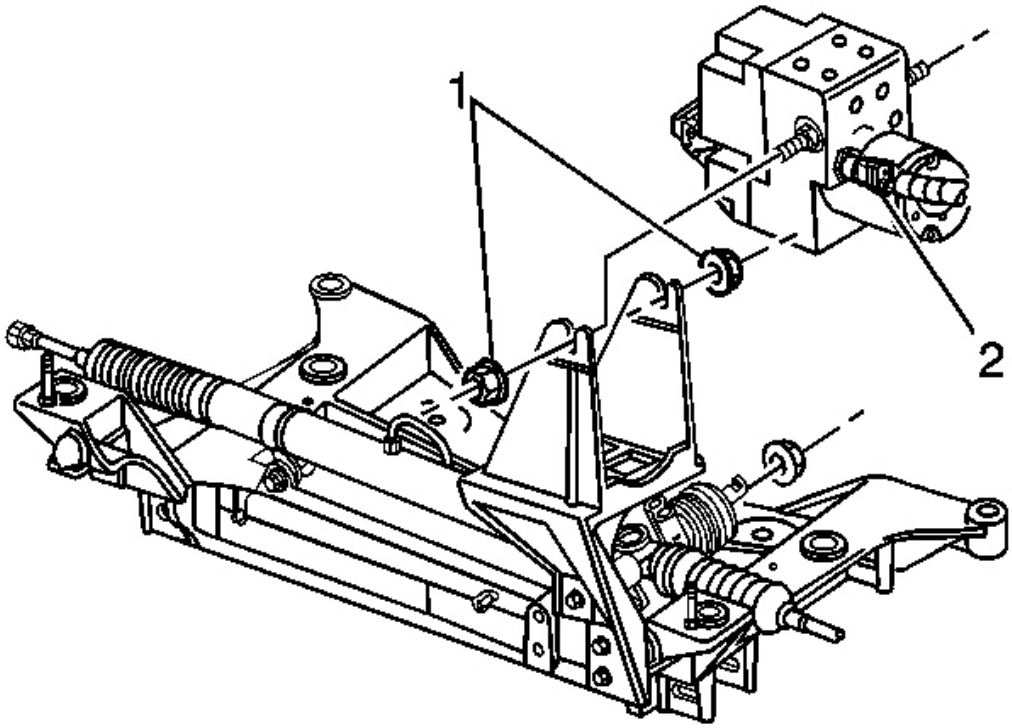

Fig. 24: EBCM Harness Connector & Bracket
Courtesy of GENERAL MOTORS CORP.

1. Turn the ignition switch to the OFF position.
2. Loosen the two insulator nuts (1).

IMPORTANT: Do not kink or bend the brake lines when moving the EBCM/BPMV assembly.

3. Lift the EBCM/BPMV assembly out of the bracket and support.
4. Raise and suitably support the vehicle. Refer to **Lifting and Jacking the Vehicle** in General Information.

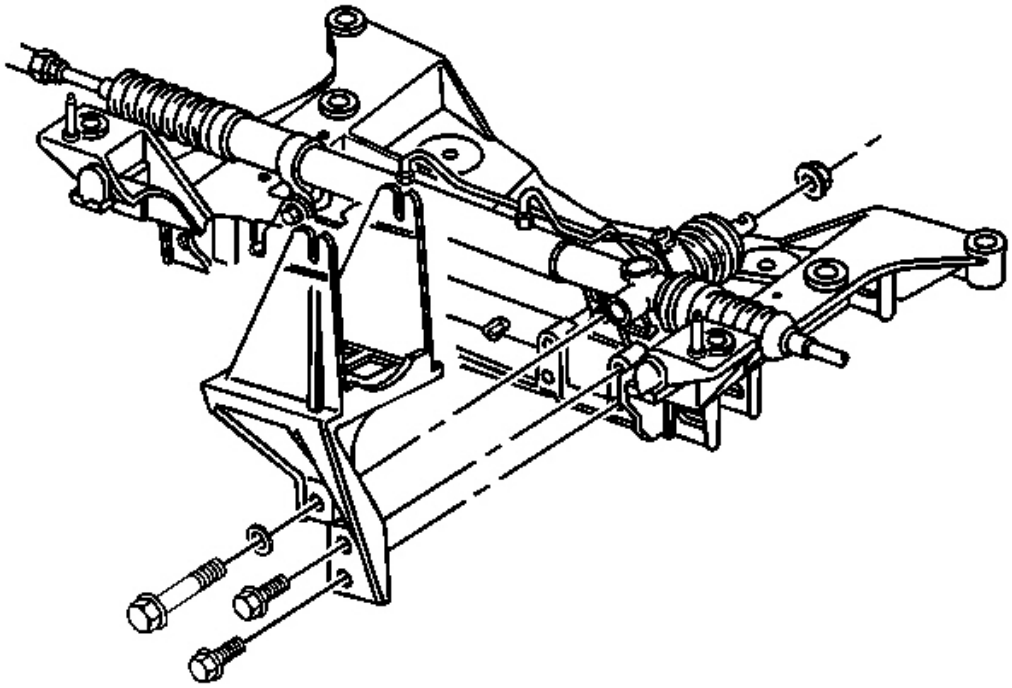

Fig. 25: Steering Gear Nut & BPMV Bracket
Courtesy of GENERAL MOTORS CORP.

5. Remove the two BPMV bracket bolts.
6. Remove the steering gear nut and bolt.
7. Remove the BPMV bracket.

Installation Procedure

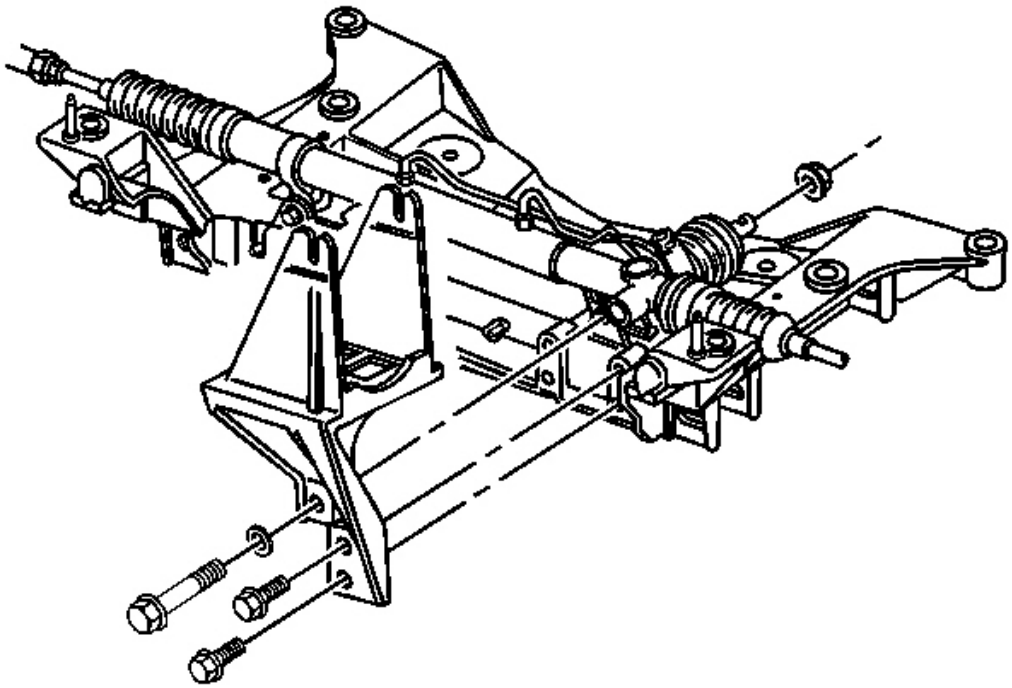

Fig. 26: Steering Gear Nut & BPMV Bracket
Courtesy of GENERAL MOTORS CORP.

NOTE: Refer to Fastener Notice in Cautions and Notices.

1. Install the EBCM/BPMV bracket to the crossmember.
2. Install the two bracket bolts to the EBCM/BPMV bracket.

   Tighten: Tighten the bolts to 27 N.m (20 lb ft).

3. Install the steering gear bolt and nut.

   Tighten: Tighten the nut to 100 N.m (74 lb ft).

4. Lower the vehicle.

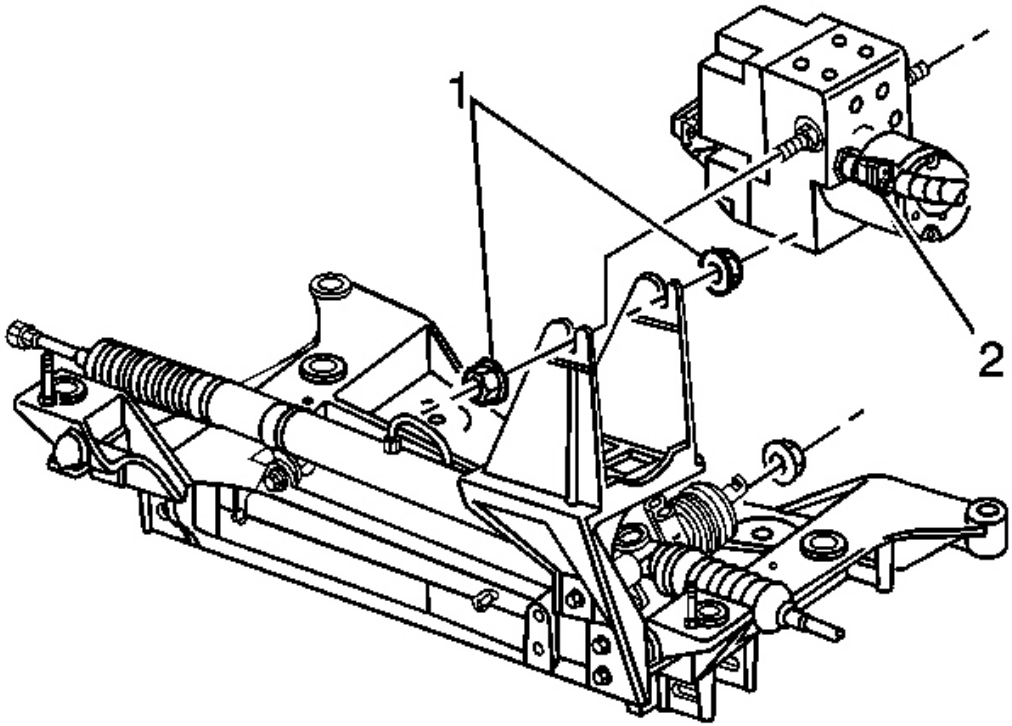

Fig. 27: EBCM Harness Connector & Bracket
Courtesy of GENERAL MOTORS CORP.

5. Install the EBCM/BPMV assembly into the bracket.
6. Install the insulator nuts (1) to the EBCM/BPMV assembly.

   Tighten: Tighten the nuts to 12 N.m (106 lb in).

WHEEL SPEED SENSOR REPLACEMENT - FRONT

The front wheel speed sensors are integral with the hub and bearing assemblies. If a speed sensor needs replacement, you must replace the entire hub and bearing assembly. Do not try to service the harness pigtail individually because the harness pigtail is part of the sensor. Refer to **Wheel Bearing/Hub Replacement - Front** in Front Suspension.

WHEEL SPEED SENSOR REPLACEMENT - REAR

The rear wheel speed sensors are integral with the hub and bearing assemblies. If a speed sensor needs replacement, you must replace the entire hub and bearing assembly. Do not try to service the harness pigtail

individually because the harness pigtail is part of the sensor. Refer to **Wheel Bearing/Hub Replacement - Rear** in Rear Suspension.

TRACTION CONTROL SWITCH REPLACEMENT

Removal Procedure

1. Turn off the ignition switch.
2. Open the center console door.
3. Pull up on the rear of the switch assembly in order to release the mounting clips; if the switch does not release from the trim plate, perform the following steps:
    1. Carefully insert a screwdriver into the access hole located on the rear of the switch assembly.
    2. Gently pull up on the switch.

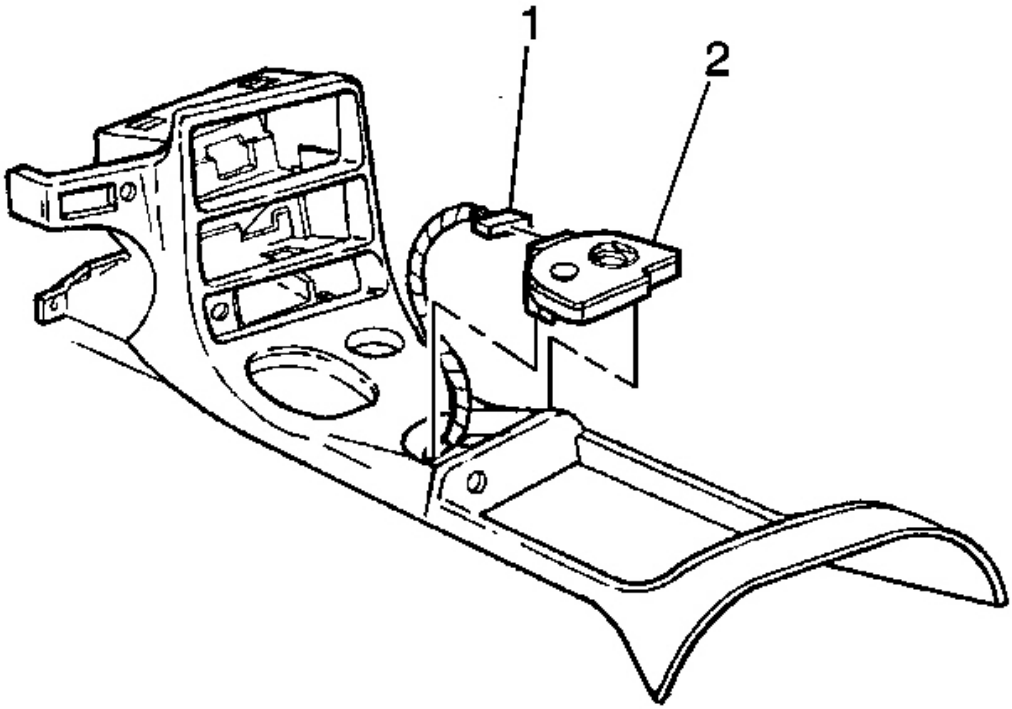

Fig. 28: Harness Connector To Switch Assembly
Courtesy of GENERAL MOTORS CORP.

4. Disconnect the harness connector (1).
5. Remove the switch assembly (2).

Installation Procedure

1. Connect the harness connector (1).
2. Insert the switch assembly (2) into the front of the center console trim plate.

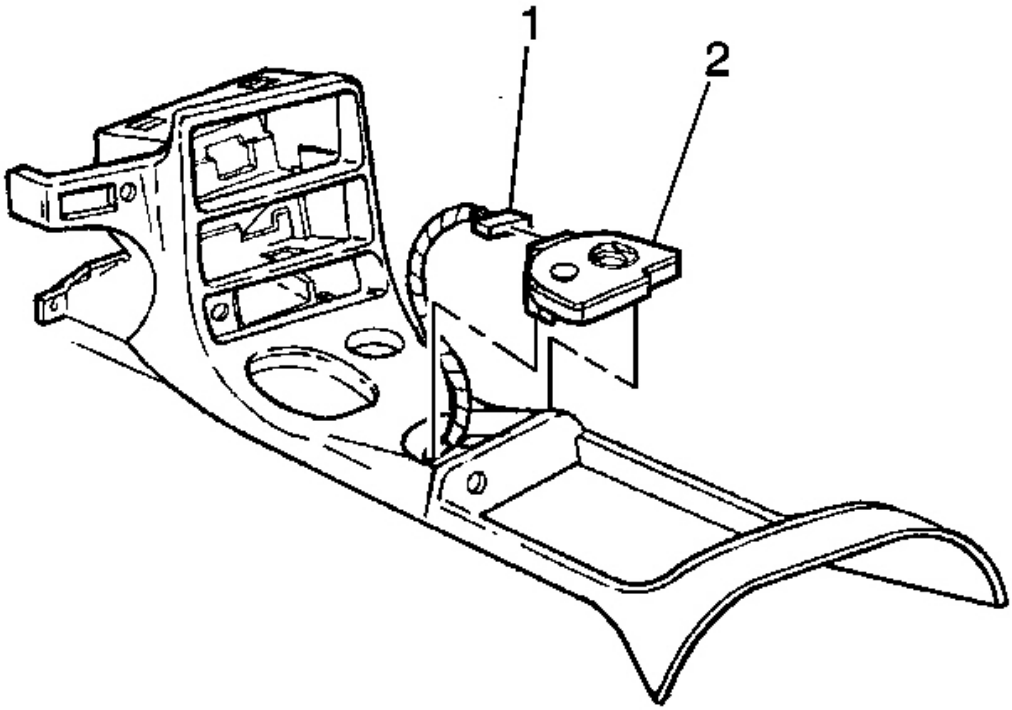

Fig. 29: Harness Connector To Switch Assembly
Courtesy of GENERAL MOTORS CORP.

3. Press into place the rear of the switch assembly (2) into the console trim plate.
4. Close the center console door.

LATERAL ACCELEROMETER REPLACEMENT

Removal Procedure

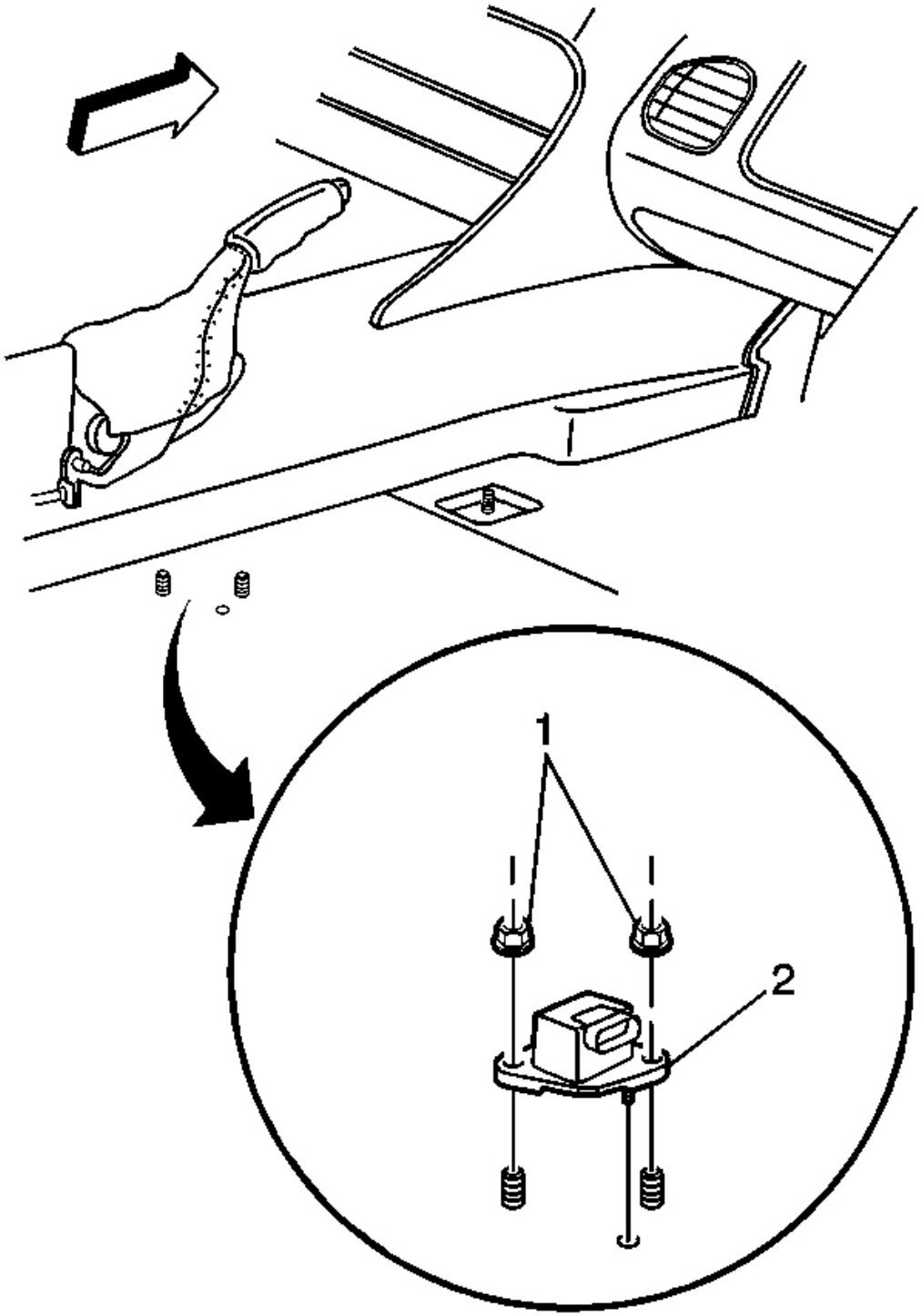
1
2

Fig. 30: Lateral Accelerometer Connector
Courtesy of GENERAL MOTORS CORP.

1. Turn the ignition switch to the OFF position.
2. Remove the passenger seat. Refer to **Seat Replacement (Power)** or **Seat Replacement (Manual)** in Seats.
3. Disconnect the lateral accelerometer connector.
4. Remove the two lateral accelerometer nuts (1).
5. Remove the lateral accelerometer (2).

Installation Procedure

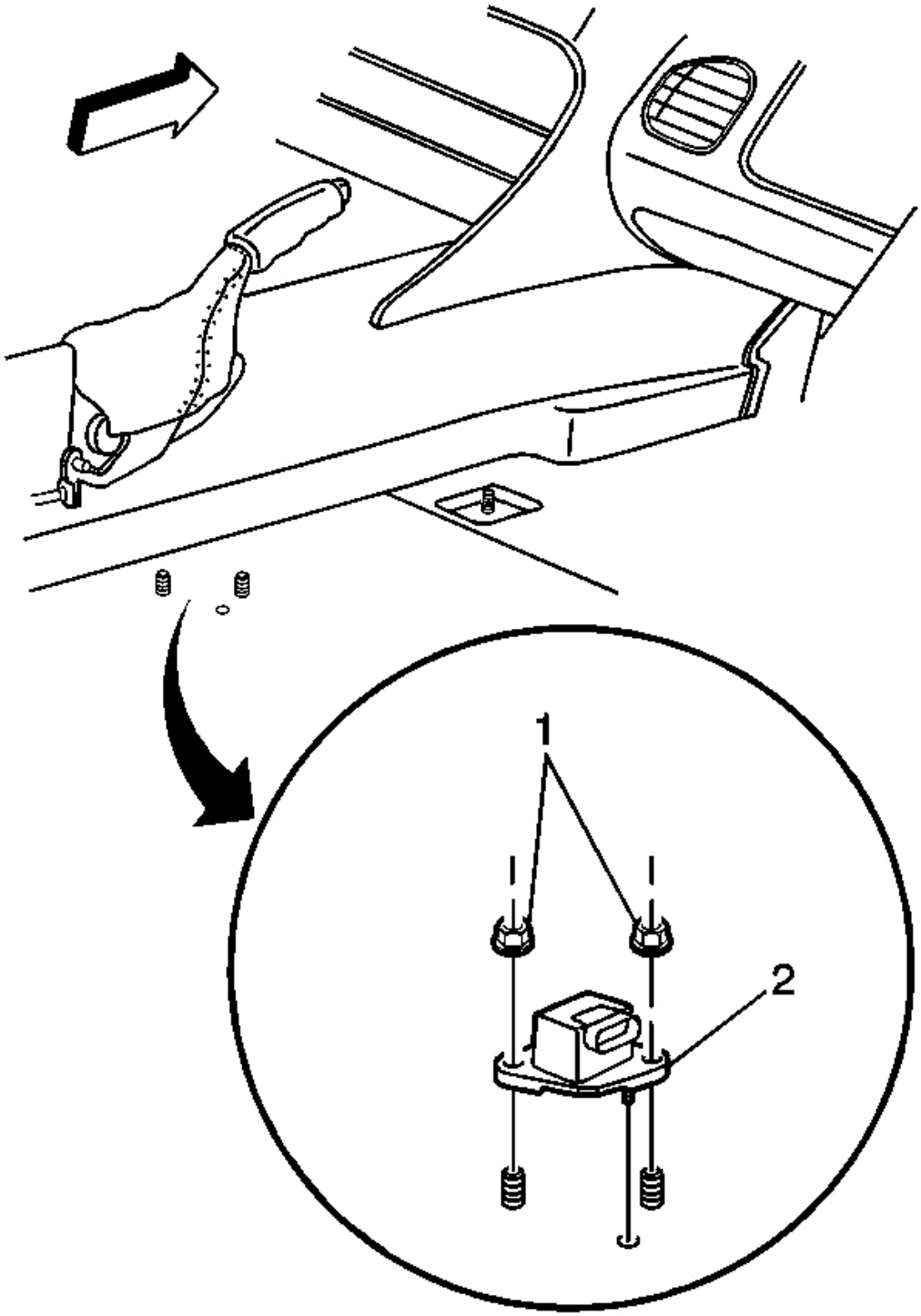
1
2

Fig. 31: Lateral Accelerometer Connector
Courtesy of GENERAL MOTORS CORP.

NOTE: Refer to Fastener Notice in Cautions and Notices.

1. Install the lateral accelerometer (2).

   Tighten: Tighten the two lateral accelerometer nuts (1) to 3 N.m (24 lb in).

2. Connect the lateral accelerometer connector.
3. Install the passenger seat. Refer to **Seat Replacement (Power)** or **Seat Replacement (Manual)** in Seats.
4. Turn the ignition switch to the ON position, engine off.
5. Perform the **Diagnostic System Check - ABS** .

YAW RATE SENSOR REPLACEMENT

Removal Procedure

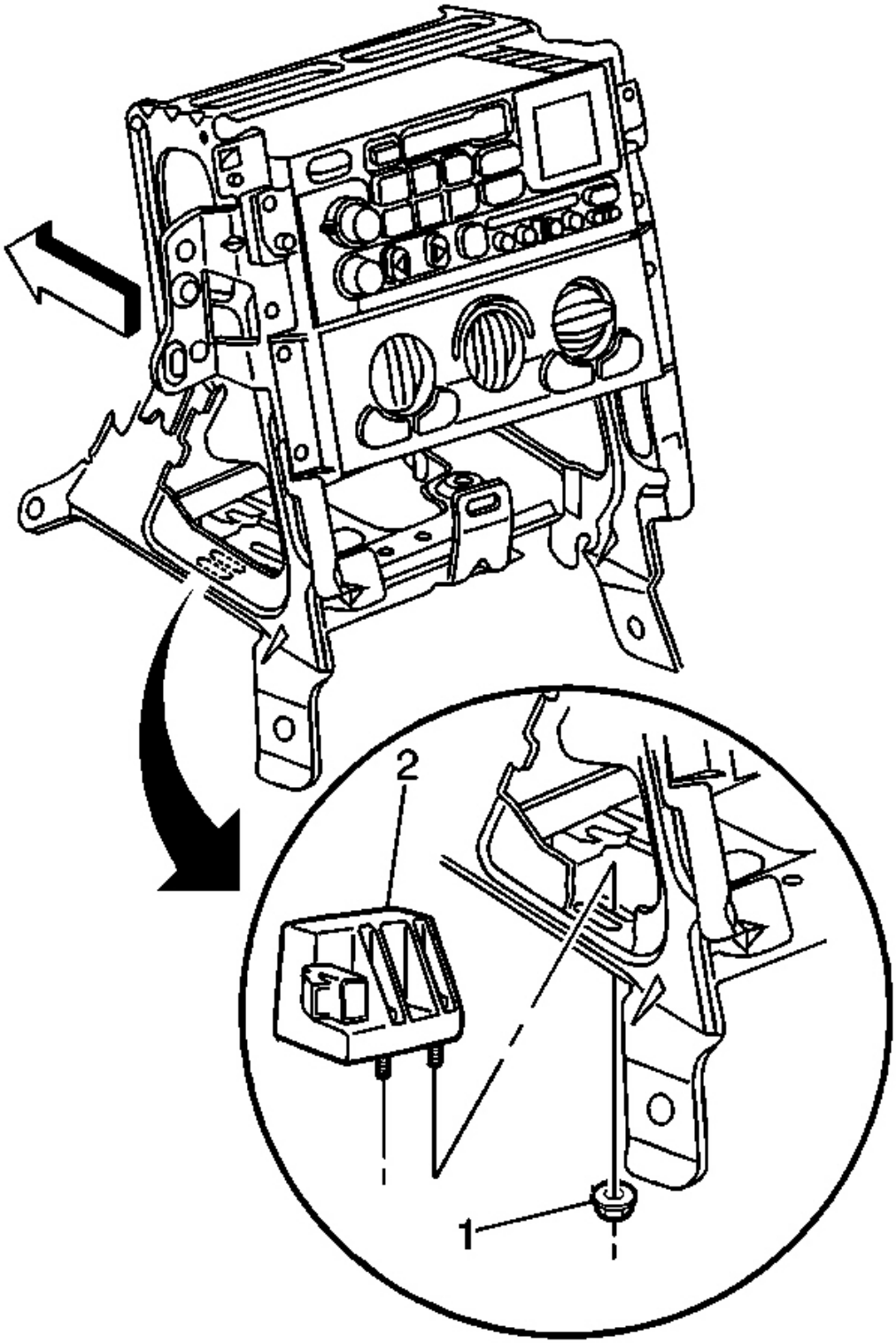
2
1

Fig. 32: Yaw Rate Sensor Connector
Courtesy of GENERAL MOTORS CORP.

1. Turn the ignition switch to the OFF position.
2. Remove the IP accessory trim plate. Refer to **Trim Plate Replacement - Instrument Panel (I/P) Accessory** in Instrument Panel, Gages and Console.
3. Disconnect the yaw rate sensor connector.
4. Loosen the two yaw rate sensor nuts (1).
5. Remove the yaw rate sensor (2).

Installation Procedure

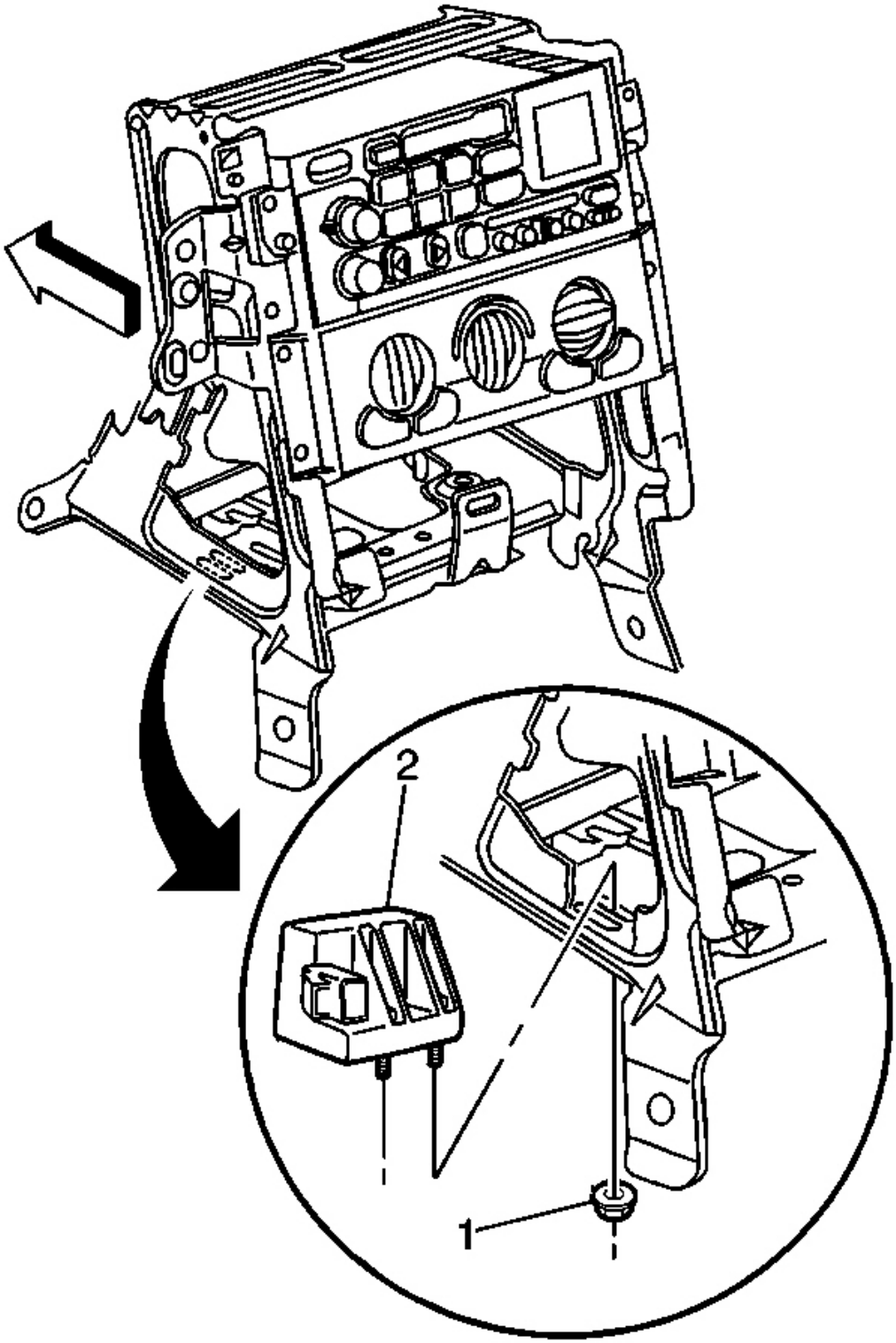
2
1

Fig. 33: Yaw Rate Sensor Connector
Courtesy of GENERAL MOTORS CORP.

NOTE: Refer to Fastener Notice in Cautions and Notices.

1. Install the yaw rate sensor (2) onto the bracket.
2. Install the yaw rate sensor mounting bolts (1).

   Tighten: Tighten the nuts to 7 N.m (62 lb in).

3. Connect the yaw rate sensor electrical connector.
4. Install the IP accessory trim plate. Refer to **Trim Plate Replacement - Instrument Panel (I/P) Accessory** in Instrument Panel, Gages and Console.
5. Turn the ignition switch to the ON position, engine off.
6. Perform the **Diagnostic System Check - ABS** .

DESCRIPTION AND OPERATION

ABS DESCRIPTION AND OPERATION

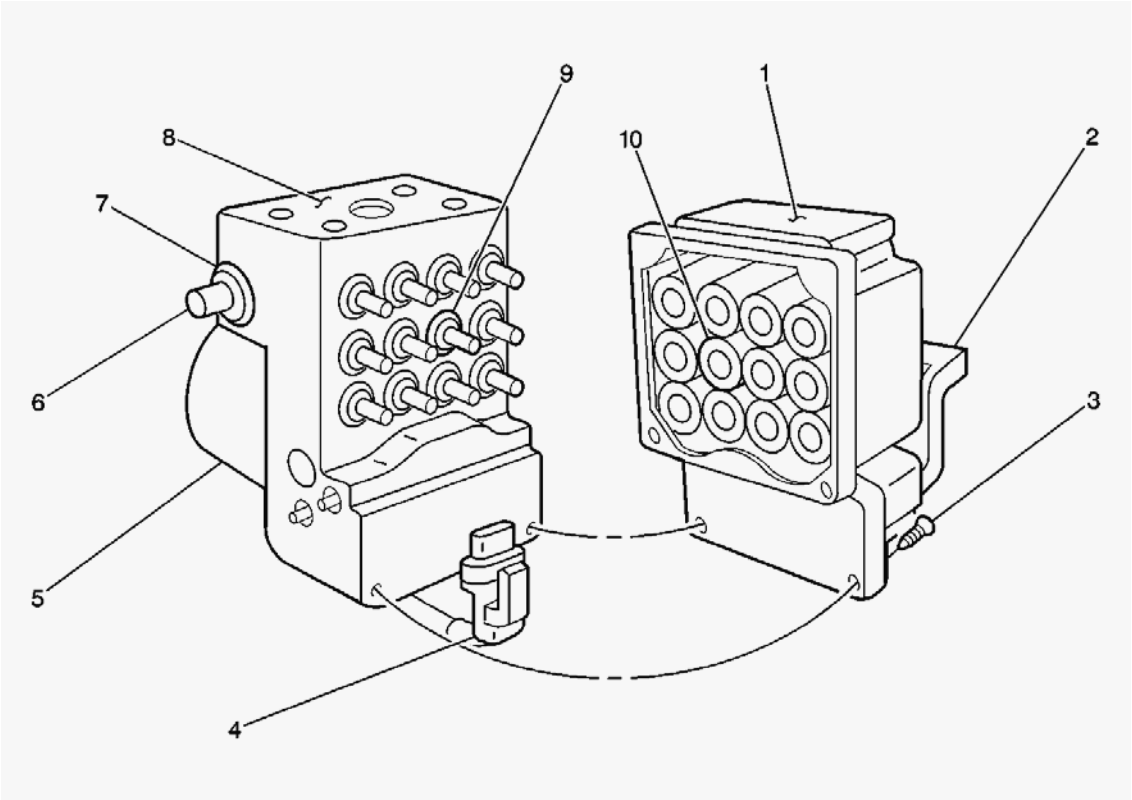

Fig. 34: BPMV and EBCM
Courtesy of GENERAL MOTORS CORP.

Callouts For Fig. 34

Callout	Component Name
1	Electronic Brake Control Module (EBCM)
2	EBCM Electrical Connector
3	EBCM to Brake Pressure Modulator Valve (BPMV) Screw
4	BPMV Electrical Connector
5	BPMV Pump Motor
6	BPMV Bracket Bolts
7	Rubber Isolator
8	BPMV
9	BPMV Solenoid Valves
10	EBCM Solenoid Valve Coils

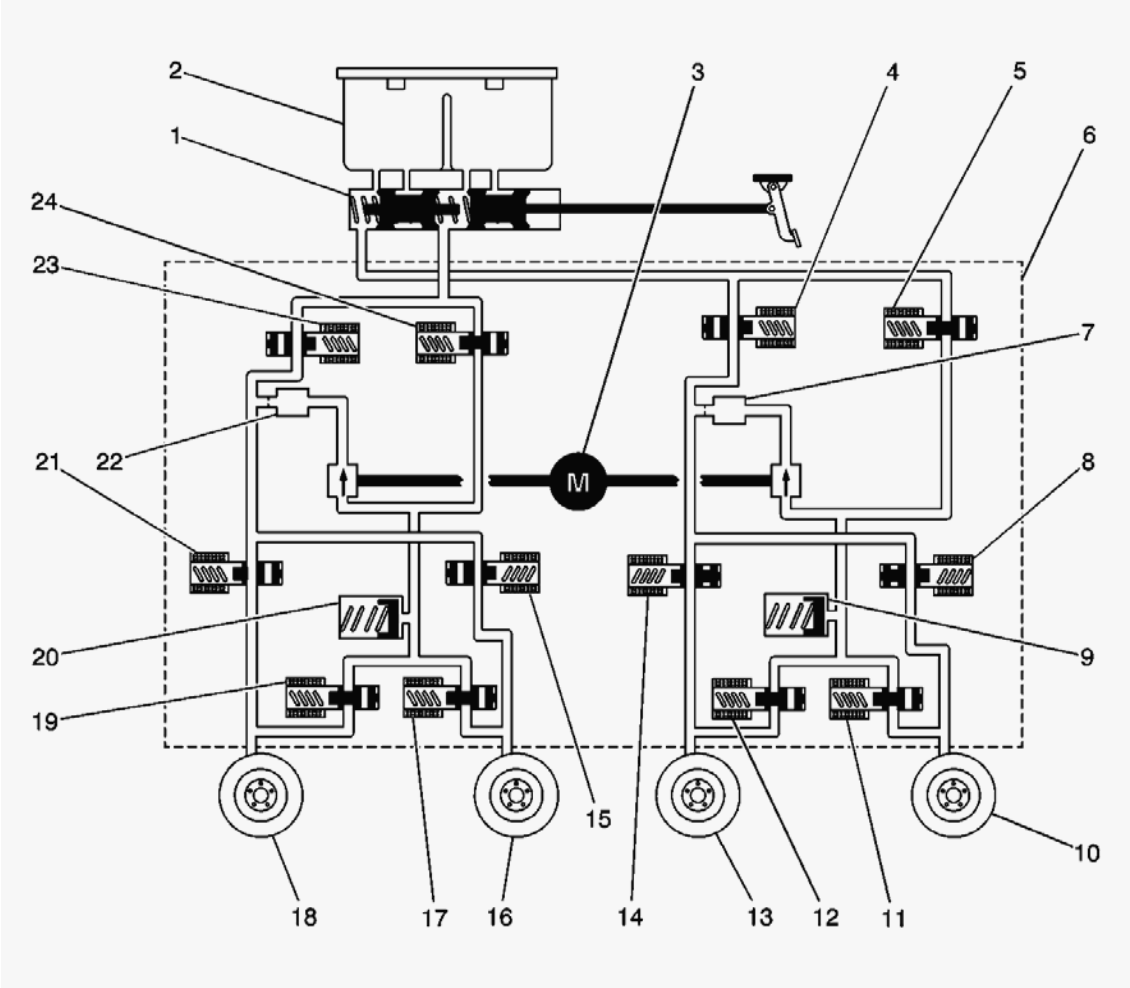

Fig. 35: BPMV Hydraulic Flow
Courtesy of GENERAL MOTORS CORP.

Callouts For Fig. 35

Callout	Component Name
1	Master Cylinder
2	Master Cylinder Reservoir
3	Pump
4	Rear Master Cylinder Isolation Valve
5	Rear Prime Valve
6	Brake Pressure Modulator Valve (BPMV)
7	Damper
8	Right Rear Inlet Valve
9	Accumulator
10	Right Rear Brake
11	Right Rear Outlet Valve
12	Left Rear Outlet Valve
13	Left Rear Brake
14	Left Rear Inlet Valve
15	Left Front Inlet Valve
16	Left Front Brake
17	Left Front Outlet Valve
18	Right Front Brake
19	Right Front Outlet Valve
20	Accumulator
21	Right Front Inlet Valve
22	Damper
23	Front Master Cylinder Isolation Valve
24	Front Prime Valve

This vehicle is equipped with the Delco/Bosch 5.3 antilock braking system.

The vehicle is equipped with the following braking systems:

- Antilock Brake System (ABS)
- Dynamic Rear Proportioning (DRP)
- Traction Control System (TCS)
- Vehicle Stability Enhancement System (VSES) (w/JL4)

The following components are involved in the operation of the above systems:

- Electronic Brake Control Module (EBCM) - The EBCM controls the system functions and detects failures.

  The EBCM contains the following components:

- System Relay - The system relay is energized when the ignition is ON and no ABS DTCs are present. It supplies battery positive voltage to the solenoid valves and pump motor.
- Vent Tube - The vent tube, located in the EBCM connector, is an opening to the internal cavity of the EBCM. It allows ventilation of the EBCM internals.

- Brake Pressure Modulator Valve (BPMV) - The BPMV contains the hydraulic valves and pump motor that are controlled electrically by the EBCM. The BPMV uses a 4 circuit configuration with a front/rear split. The BPMV directs fluid from the reservoir of the master cylinder to the front wheels and fluid from the other reservoir to the rear wheels. The circuits are hydraulically isolated so that a leak or malfunction in one circuit will allow continued braking ability on the other.

  IMPORTANT: There is a rubber isolator located under the BPMV and on the mounting studs. The rubber isolators protect the BPMV and the EBCM from vehicle vibrations.

  The BPMV contains the following components:

  - Pump Motor
  - Inlet Valves (one per wheel)
  - Outlet Valves (one per wheel)
  - Master Cylinder Isolation Valves (one per drive wheel)
  - Prime Valves (one per drive wheel)
- Wheel Speed Sensors (WSS) - As the wheel spins, the wheel speed sensor produces an AC signal. The EBCM uses this AC signal to calculate wheel speed. The wheel speed sensors are replaceable only as part of the wheel hub and bearing assemblies.
- Traction Control Switch - The TCS is manually disabled or enabled using the traction control switch.
- Stoplamp Switch - The EBCM uses the stoplamp switch as an indication that the brake pedal is applied.
- Lateral Accelerometer Sensor (w/JL4) - The EBCM uses the lateral accelerometer sensor as an indication of the lateral acceleration of the vehicle.
- Yaw Rate Sensor (w/JL4) - The EBCM uses the yaw rate sensor as an indication of the yaw rate of the vehicle.
- Steering Wheel Position Sensor (SWPS) (w/JL4) - The EBCM uses the SWPS as an indication of the position and rotation of the steering wheel.
- Brake Fluid Pressure Sensor (w/JL4) - The brake fluid pressure sensor is attached to the BPMV. The EBCM uses the brake fluid pressure sensor as an indication of the brake fluid pressure in the BPMV.

Initialization Sequence

The EBCM performs 1 initialization test each ignition cycle. The initialization of the EBCM occurs when 1 set of the following conditions occur:

Both of the following conditions occur:

- The EBCM detects that there is a minimum of 500 RPM from the PCM via a serial data message.

- The stop lamp switch is not applied.

OR

Both of the following conditions occur:

- The vehicle speed is greater than 16 km/h (10 mph).
- The stop lamp switch is applied.

The initialization sequence may also be commanded with a scan tool.

The initialization sequence cycles each solenoid valve and the pump motor, as well as the necessary relays, for approximately 1.5 seconds to check component operation. The EBCM sets a DTC if any error is detected. The initialization sequence may be heard and felt while it is taking place, and is considered part of normal system operation.

The EBCM defines a drive cycle as the completion of the initialization sequence.

Antilock Brake System

When wheel slip is detected during a brake application, the ABS enters antilock mode. During antilock braking, hydraulic pressure in the individual wheel circuits is controlled to prevent any wheel from slipping. A separate hydraulic line and specific solenoid valves are provided for each wheel. The ABS can decrease, hold, or increase hydraulic pressure to each wheel brake. The ABS cannot, however, increase hydraulic pressure above the amount which is transmitted by the master cylinder during braking.

During antilock braking, a series of rapid pulsations is felt in the brake pedal. These pulsations are caused by the rapid changes in position of the individual solenoid valves as the EBCM responds to wheel speed sensor inputs and attempts to prevent wheel slip. These pedal pulsations are present only during antilock braking and stop when normal braking is resumed or when the vehicle comes to a stop. A ticking or popping noise may also be heard as the solenoid valves cycle rapidly. During antilock braking on dry pavement, intermittent chirping noises may be heard as the tires approach slipping. These noises and pedal pulsations are considered normal during antilock operation.

Vehicles equipped with ABS may be stopped by applying normal force to the brake pedal. Brake pedal operation during normal braking is no different than that of previous non-ABS systems. Maintaining a constant force on the brake pedal provides the shortest stopping distance while maintaining vehicle stability.

Pressure Hold

The EBCM closes the inlet valve and keeps the outlet valve closed in order to isolate the system when wheel slip occurs. This holds the pressure steady on the brake so that the hydraulic pressure does not increase or decrease.

Pressure Decrease

The EBCM decreases the pressure to individual wheels during a deceleration when wheel slip occurs. The inlet valve is closed and the outlet valve is opened. The excess fluid is stored in the accumulator until the return pump can return the fluid to the master cylinder.

Pressure Increase

The EBCM increases the pressure to individual wheels during a deceleration in order to reduce the speed of the wheel. The inlet valve is opened and the outlet valve is closed. The increased pressure is delivered from the master cylinder.

Dynamic Rear Proportioning (DRP)

The dynamic rear proportioning (DRP) is a control system that replaces the hydraulic proportioning function of the mechanical proportioning valve in the base brake system. The DRP control system is part of the operation software in the EBCM. The DRP uses active control with existing ABS in order to regulate the vehicle's rear brake pressure.

The red brake warning indicator is illuminated when the dynamic rear proportioning function is disabled.

Traction Control System (TCS) (NW9)

When drive wheel slip is noted while the brake is not applied, the EBCM will enter traction control mode.

First, the EBCM requests the PCM to reduce the amount of torque to the drive wheels via the requested torque signal circuit. The PCM reduces torque to the drive wheels by retarding spark timing and turning off fuel injectors. The PCM reports the amount torque delivered to the drive wheels via the delivered torque signal circuit.

If the engine torque reduction does not eliminate drive wheel slip, the EBCM will actively apply the drive wheel brakes. During traction control braking, hydraulic pressure in each drive wheel circuit is controlled to prevent the drive wheels from slipping. The master cylinder isolation valve closes in order to isolate the master cylinder from the rest of the hydraulic system. The prime valve then opens in order to allow the pump to accumulate brake fluid in order to build hydraulic pressure for braking. The drive wheel inlet and outlet solenoid valves then open and close in order to perform the following functions:

- Pressure hold
- Pressure increase
- Pressure decrease

Vehicle Stability Enhancement System (VSES)

The vehicle stability enhancement system (VSES) includes an additional level of vehicle control to the EBCM. The VSES is activated by the EBCM calculating the desired yaw rate and comparing it to the actual yaw rate input. The desired yaw rate is calculated from measured steering wheel position, vehicle speed, and lateral acceleration. The difference between the desired yaw rate and actual yaw rate is the yaw rate error, which is a measurement of oversteer or understeer. If the yaw rate error becomes too large, the EBCM will attempt to correct the vehicle's yaw motion by applying differential braking to the left or right front wheel.

The amount of differential braking applied to the left or right front wheel is based on both the yaw rate error and side slip rate error. The side slip rate error is a function of the lateral acceleration minus the product of the yaw rate and vehicle speed. The yaw rate error and side slip rate error are combined to produce the total delta velocity error. When the delta velocity error becomes too large and the VSES system activates, the driver's steering inputs combined with the differential braking will attempt to bring the delta velocity error toward zero.

The EBCM also uses the input from the brake fluid pressure sensor for more accurate braking control during VSES.

The VSES activations generally occur during aggressive driving, in the turns or bumpy roads without much use of the accelerator pedal. When braking during VSES activation, the brake pedal will feel different than the ABS pedal pulsation. The brake pedal pulsates at a higher frequency during VSES activation.

Rear Stability Control

When the vehicle performs a high speed turn or curve, the EBCM will enter rear stability control mode. The vehicle speed is greater than 48 km/h (30 mph) and the vehicle lateral acceleration is greater than 0.6 g. The vehicle will exit rear stability control when the vehicle speed is less than 40 km/h (25 mph) or the vehicle lateral acceleration is less than 0.4 g.

During a rear stability control event, the EBCM performs a pressure increase on the outside rear brake and a pressure hold on the inside rear brake. The driver may hear the pump motor run and may feel a vibration in the brake pedal.

Brake System Indicator(s)

BRAKE

The IPC illuminates the brake indicator when the following occurs:

- The IPC detects a low brake fluid condition (signal circuit is low).
- The IPC detects the park brake is engaged (signal circuit low).
- The IPC performs the displays test at the start of each ignition cycle. The indicator illuminates for approximately 3 seconds.
- There is a Dynamic Rear Proportioning (DRP) failure.

LOW BRAKE FLUID

The IPC illuminates the LOW BRAKE FLUID indicator in the message center when the IPC receives a hardwire input from the brake fluid level sensor (signal is low).

ABS Indicator(s)

ABS

The IPC illuminates the ABS indicator when the following occurs:

- The electronic brake control module (EBCM) detects a malfunction with the antilock brake system. The IPC receives a class 2 message from the EBCM requesting illumination.
- The driver information center displays the SERVICE ABS message, SERVICE ACTIVE HNDLG message, TRAC/ACT HNDLG-ON/OFF message, TRACTION SYS ACTIVE message, or the TRACTION SYSTEM-ON/OFF message.
- The IPC performs the displays test at the start of each ignition cycle. The indicator illuminates for approximately 3 seconds.

ABS ACTIVE

The IPC illuminates the ABS ACTIVE indicator in the message center when the electronic brake control module (EBCM) detects the antilock brake system is on. The IPC receives a class 2 message from the EBCM requesting illumination. The DIC displays this message for 3.5 seconds.

SERVICE ABS

The IPC illuminates the SERVICE ABS indicator in the message center when the following occurs:

- The EBCM detects no anti-lock brakes on the vehicle. The IPC receives a class 2 message from the EBCM requesting illumination.
- The IPC also illuminates the ABS indicator and the traction control and active handling system indicator along with a chime when this message is on.

Traction Control and Active Handling System Indicator(s)

ACT HNDLG-WARMING UP

The IPC illuminates the ACT HNDLG-WARMING UP indicator in the message center when the following occurs:

- The active handling option needs to be present in order for this indicator to appear. The EBCM detects that the engine is on and the vehicle speed is at 6 mph (10 km/h) or below. The IPC receives a class 2 message from the EBCM. The DIC will display this message for 3.5 seconds and then turn off. A chime will sound will this message is displayed.
- When this message is displayed the traction control and active handling system indicator turns on.

ACTIVE HANDLING

The active handling option needs to be present in order for this indicator to appear. The IPC illuminates the ACTIVE HANDLING indicator in the message center when the EBCM detects that the vehicle stability enhancement system is on. The IPC receives a class 2 message from the EBCM. The DIC will display this message for 3.5 seconds and then turn off.

COMPETITIVE DRIVING

The IPC illuminates the COMPETITIVE DRIVING indicator in the message center when the following occurs:

- The active handling option needs to be present in order for this indicator to appear. The EBCM detects that competitive driving is on. The IPC receives a class 2 message from the EBCM.
- When competitive driving is on and this message is displayed the traction control and active handling system indicator turns off.
- When competitive driving is on and this message is displayed the TRAC/ACT HNLDG-ON/OFF message will be turned off in the message center, unless the TRAC/ACT HNDLG-ON was on before the COMPETITIVE DRIVING message turned on. If the TRAC/ACT HNDLG-ON was on before the COMPETITIVE DRIVING message then after the COMPETITIVE DRIVING message is displayed the TRAC/ACT HNDLG-OFF message will turn on.

SERVICE ACTIVE HNDLG

The IPC illuminates the SERVICE ACTIVE HNDLG indicator in the message center when the following occurs:

- The active handling option needs to be present in order for this indicator to appear. The EBCM detects a problem with the active handling system. The IPC receives a class 2 message from the EBCM.
- The IPC also illuminates the ABS indicator and the traction control and active handling system indicator along with a chime when this message is on.

SERVICE TRACTION SYSTEM

The IPC illuminates the SERVICE TRACTION SYSTEM indicator in the message center when the following occurs:

- The EBCM detects that there is a problem with the traction control system. The IPC receives a class 2 message from the EBCM.
- When the traction system is on and this message is displayed the traction control and active handling system indicator turns on.
- The IPC will also illuminate the SERVICE ACTIVE HNDLG indicator after the SERVICE TRACTION SYSTEM indicator is displayed in the message center, when the active handling system is present.

Traction Control and Active Handling

The IPC illuminates the TRACTION indicator when the following occurs:

- The electronic brake control module (EBCM) detects a traction control event. The IPC receives a class 2 message from the EBCM requesting illumination.
- The driver information center displays the SERVICE ABS, the ACT HNDLG-WARMING UP, the SERVICE ACTIVE HNDLG, the SERVICE TRACTION SYSTEM, the TRAC/ACT HNDLG-ON/OFF, or the TRACTION SYSTEM-ON/OFF message.
- The IPC performs the display test at the start of each ignition cycle. The indicator illuminates for approximately 3 seconds.

TRAC/ACT HNDLG-ON/OFF

The IPC illuminates the TRAC/ACT HNDLG-ON/OFF indicator in the message center when the following occurs:

- The active handling option needs to be present in order for this indicator to appear. The EBCM detects that the traction/active control system switch is pressed on the console. The IPC receives a class 2 message from the EBCM. When the traction/active system is on, the DIC will display this message for 5 seconds and then turn off. If the traction/active system is off, the DIC will display this message continuously until the traction system is turned on.
- When the traction/active system is on and this message is displayed the ABS indicator and the traction control and active handling system indicator turn on.
- If the active handling system is inoperative, the IPC reverts to and illuminates the TRACTION SYSTEM-ON/OFF indicator after the SERVICE ACTIVE HNDLG message is displayed in the message center.

TRACTION SYS ACTIVE

The IPC illuminates the TRACTION SYS ACTIVE indicator in the message center when the electronic brake control module (EBCM) detects the traction control system is limiting wheel spin. The IPC receives a class 2 message from the EBCM requesting illumination. The DIC displays this message for 3.5 seconds. The ABS indicator also turns on when the TRACTION SYS ACTIVE indicator is on.

TRACTION SYSTEM-ON/OFF

The IPC illuminates the TRACTION SYSTEM-ON/OFF indicator in the message center when the following occurs:

- The EBCM detects that the traction control system switch is pressed on the console. The IPC receives a class 2 message from the EBCM. When the traction system is on, the DIC will display this message for 5 seconds and then turn off. If the traction system is off, the DIC will display this message continuously until the traction system is turned on.
- When the traction system is on and this message is displayed the ABS indicator and the traction control and active handling system indicator turn on.
- The IPC illuminates the TRACTION SYSTEM-ON/OFF indicator after the SERVICE ACTIVE HNDLG message is displayed in the message center, when the active handling system is inoperative.

WARM UP COMPLETE

The active handling option needs to be present in order for this indicator to appear. The IPC illuminates the WARM UP COMPLETE indicator in the message center when the EBCM has completed the functional check of the active handling system. The IPC receives a class 2 message from the EBCM. The DIC will display this message for 3.5 seconds and then turn off. A chime will sound will this message is displayed.

SPECIAL TOOLS AND EQUIPMENT

SPECIAL TOOLS

Special Tools

Illustration	Tool Number/ Description
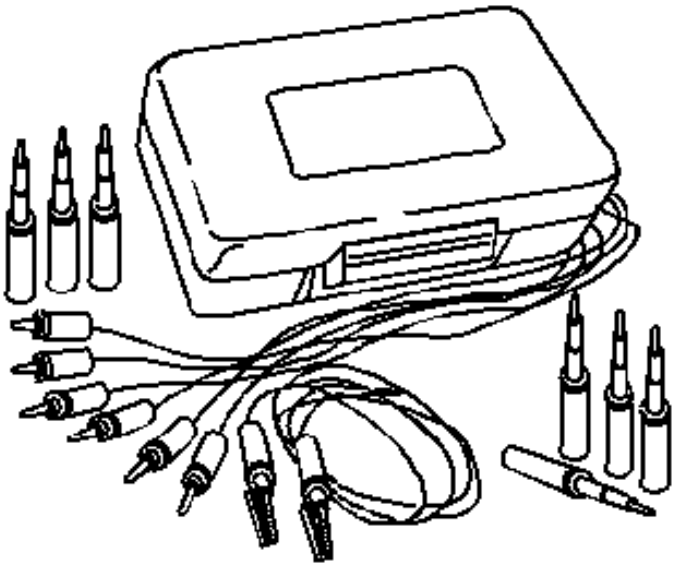	J 35616-A Connector Test Adapter Kit
	J 39700 Universal Pinout Box

J 39700-300
Cable Adapter

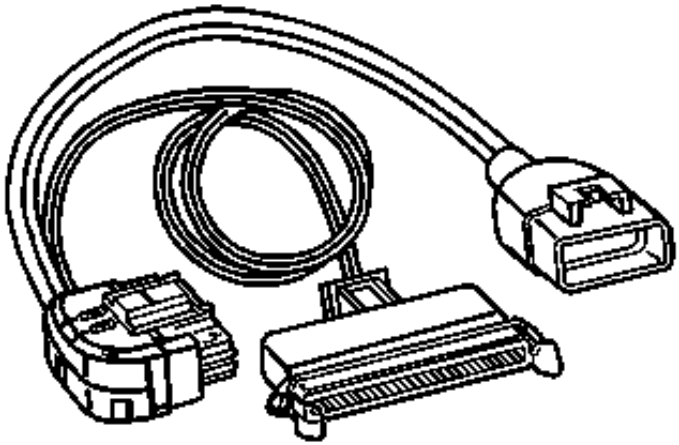
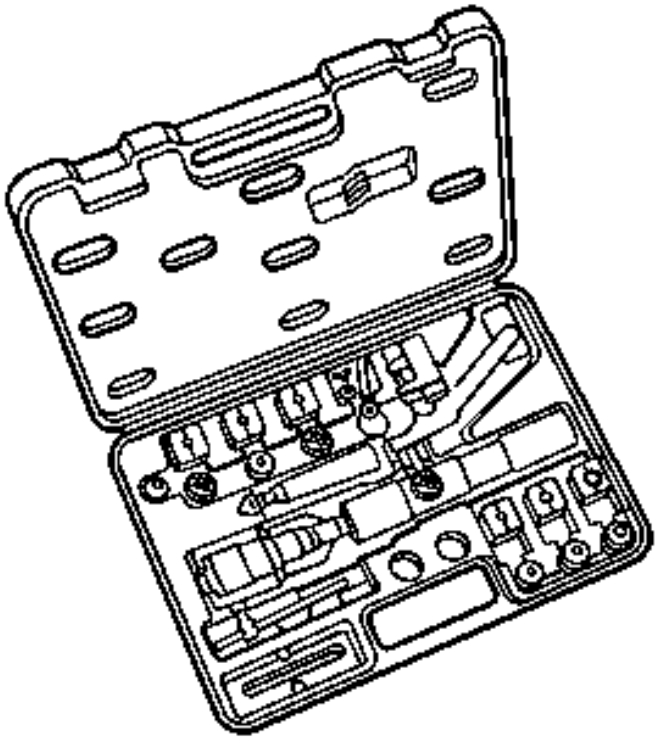
J 45405
Pipe Flaring Tool Kit