Service Training

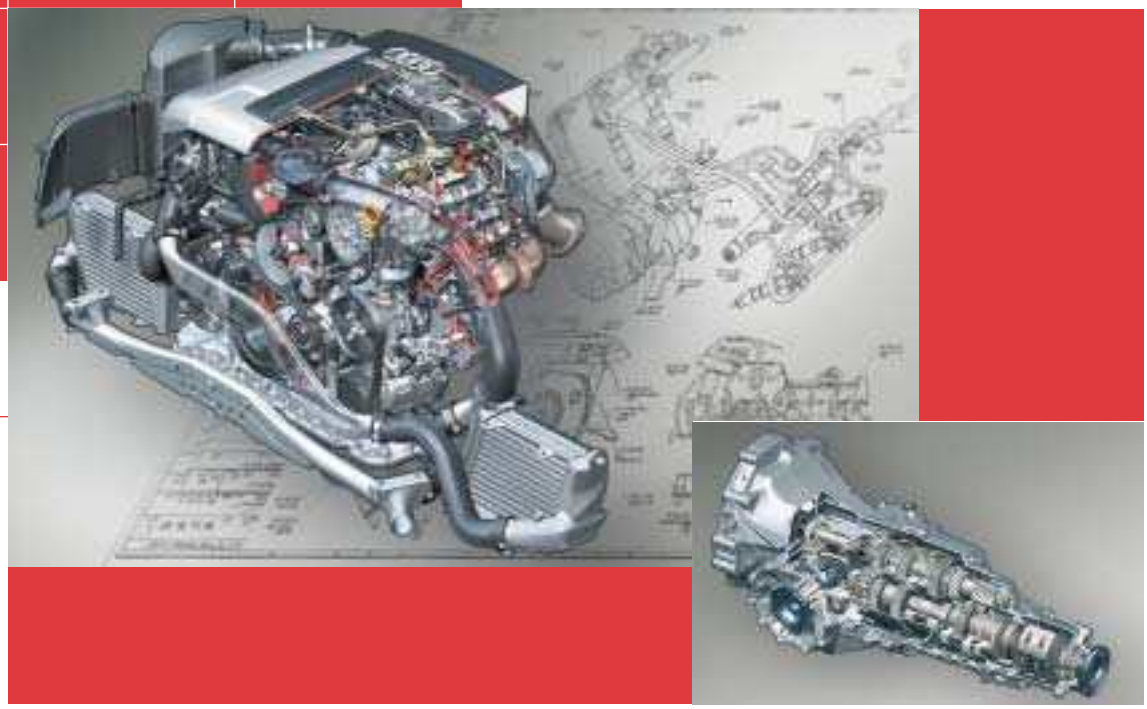

AUDI A6 '05 Assemblies

Self-Study Programme 325

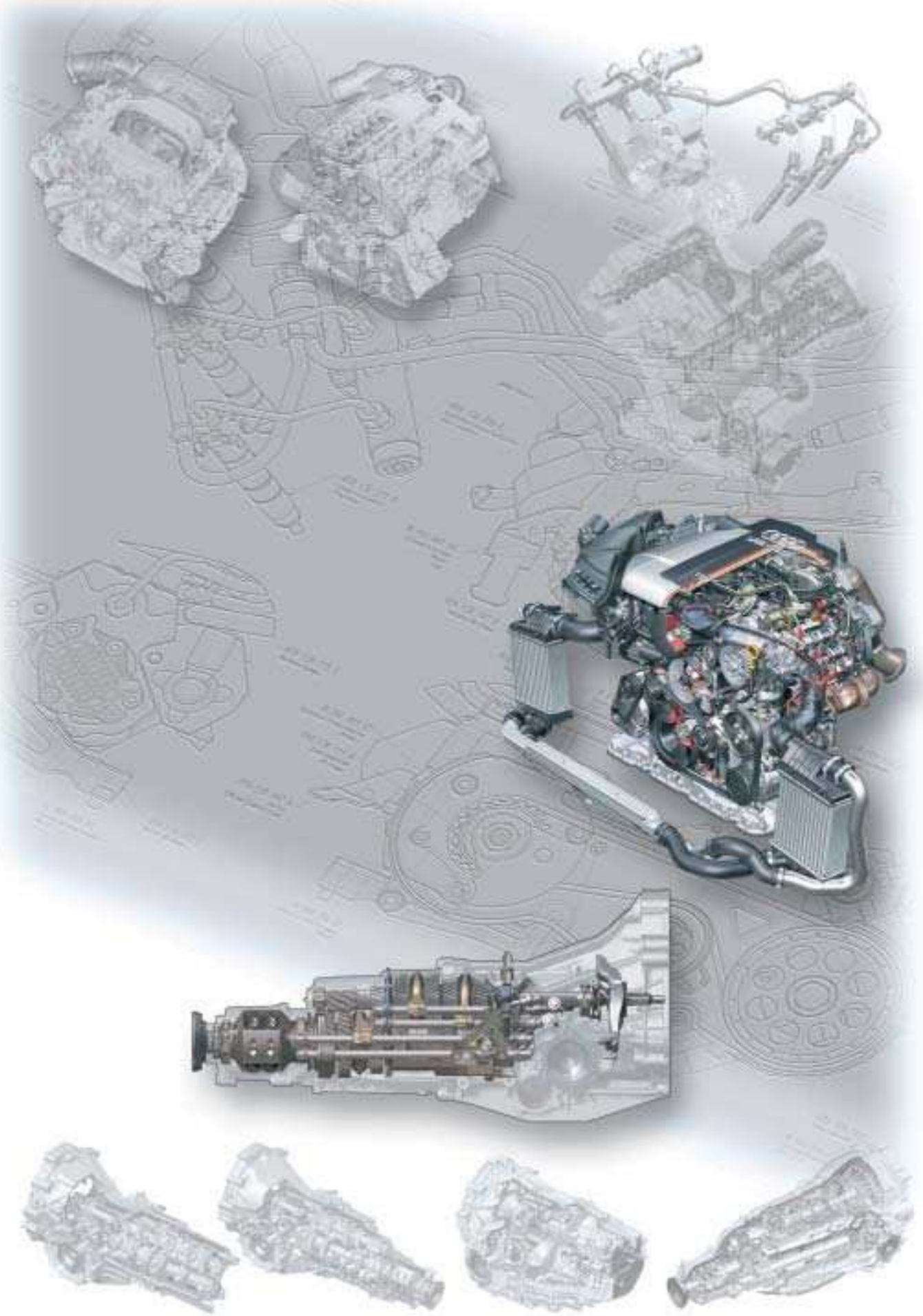

Engine/gearbox combinations

Contents

3,0 l-V6-TDI-Motor mit Common-Rail-Einspritzung3.0 l V6

Introduction 6
Technical data 7
Mechanics – Crankcase/Crank drive/Oil pump 8
Cylinder head 10
Chain drive 12
Air intake 13
VTG turbocharger 15
Exhaust gas recirculation 15
Exhaust system 16
Oxygen sensing 17
Pre-heating system 17
Fuel supply – 3rd generation common rail 18
Piezo injector 21
Particle filter 24
Engine management/System overview 26
Function diagram 28

3.2 l V6 FSI engine

Introduction 30
Technical data 31
Mechanics – Crankcase and crankshaft assembly 32
Engine ventilation 34
Oil supply 35
Engine control – Chain drive 36
Cylinder head 37
Camshaft adjusters 38
Intake system 39
Exhaust system 41
Fuel supply 42
FSI operating methods 45
Engine management/System overview 46
Function diagram 48
Special tools 50

The Self-Study Programme provides information on the fundamentals of design and function of new vehicle models, new vehicle components or new technologies.

The Self-Study Programme is not a Workshop Manual!
Specified values serve only to make the information easier to understand and relate to the software version that was valid at the time the Self-Study Programme (SSP) was created.

For maintenance and repair work, please make sure to use the current technical documentation.

Reference

Note

Gearbox – manual transmission

Introduction 52
Technical data. 53
Brief description of 0A3 gearbox 54
Brief description of the 01X/02X gearbox. 56
01X/02X bearings. 58
0A3 bearings. 59
01X/02X lubrication 60
0A3 lubrication 62
Inner gearshift 64
0A3 synchronisation 66
01X and 02X synchronisation 67
Gear selector (outer gearshift). 68

Gearbox – automatic transmission

Introduction 70
Gear selector. 71
Selector lever locks 72
Emergency release. 73
Selector lever positioning/Display unit 74
Ignition key anti-removal lock 75
Steering wheel Tiptronic. 76
6-gear automatic transmission 09L 77
6-gear automatic gearbox 09L 78
Technical data. 80
Converter clutch. 81
Oil management and lubrication 82
Function diagram for 09L gearbox. 83
Transmission ratio/Hydraulics (lubrication). 84
Dynamic switching programme – DSP 85
Electro-hydraulic control. 85
Multitronic 01J 86
Combination with the 3.2 l V6 FSI engine. 86
New features – measures. 86
Vane-type pump. 88
Tiptronic /Dynamic Regulating Programme DRP 89
Hill starts 89
Function diagram for 01J multitronic 90

3.0 l V6 TDI engine with common-rail injection

Introduction

With the 3.0 l V6 TDI engine with common rail, Audi has introduced the fourth engine in the new generation of V engines.

Its dimensions and its total weight of approx. 220 kg make it one of the lightest and most compact V6 diesel engines around.

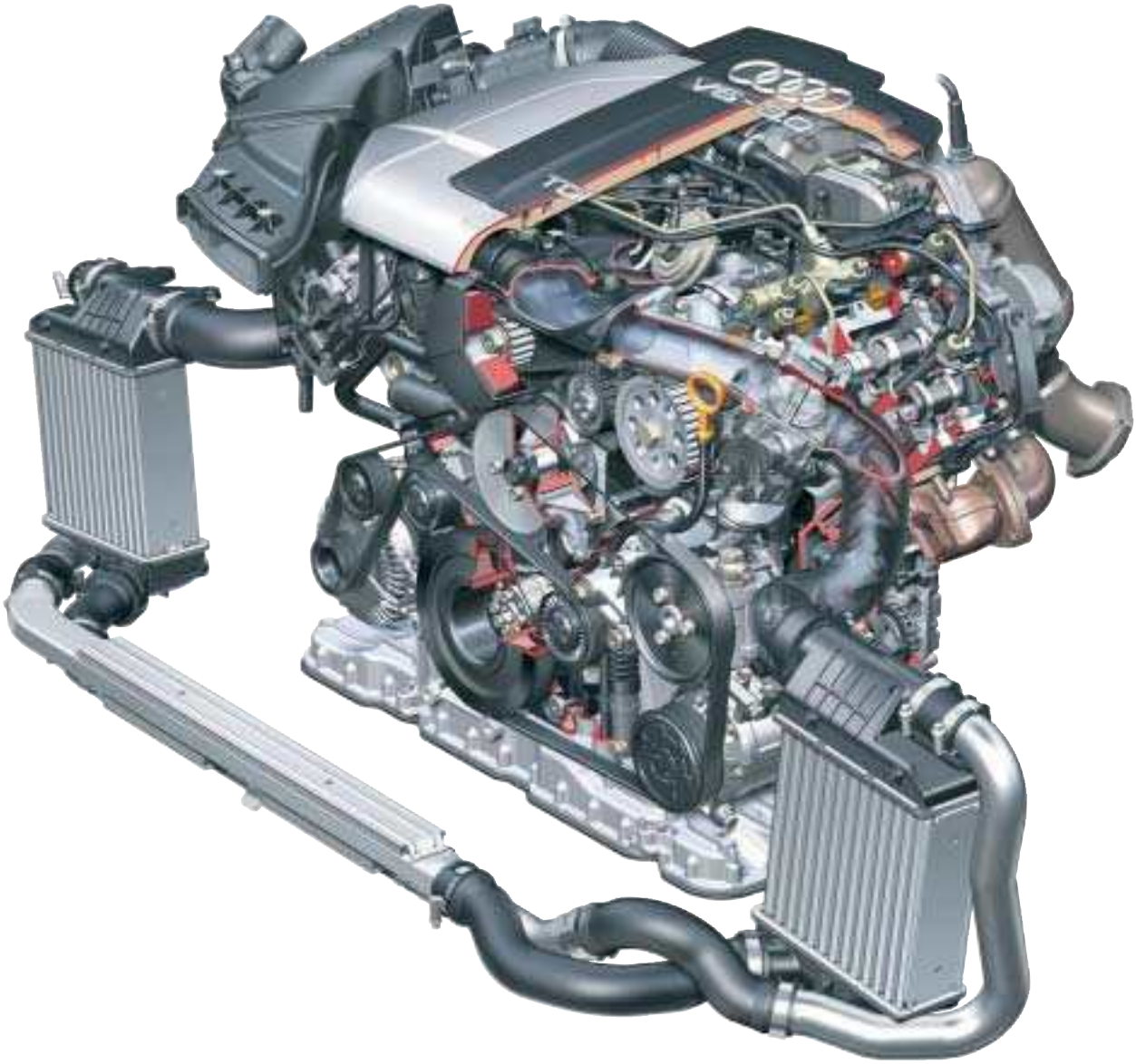

325_001

The engine code and the engine number are located at the front right of the cylinder block, next to the vibration damper.

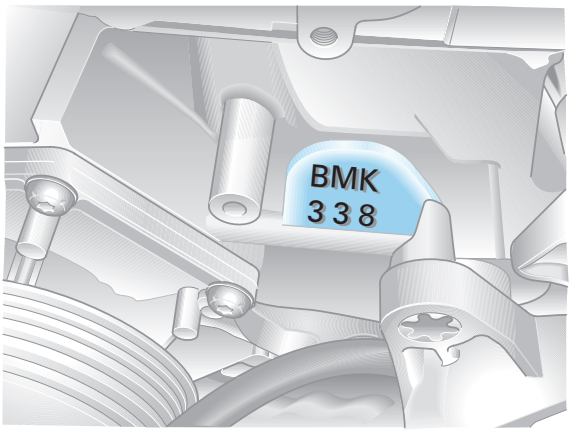

325_013

Torque performance curve

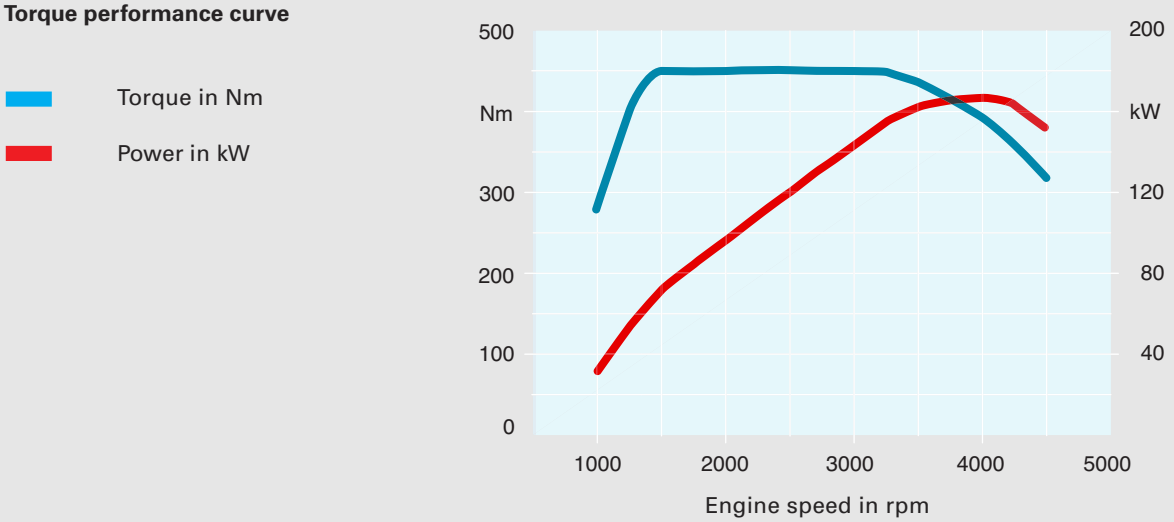

Technical data	
Code	BMK
Type	V engine with an angle of 90°
Displacement in cm^3	2967
Power in kW (hp)	165 (224) at 4,000 rpm
Torque in Nm	450 at 1,400 to 3,250 rpm
Bore in mm	83.0
Stroke in mm	91.4
Compression	17.0 : 1
Weight in kg	Approx. 221
Firing order	1-4-3-6-2-5
Emission control	With catalytic converter, oxygen sensor, cooled exhaust gas recirculation (particle filter optional)
Engine management	EDC 16 CP, (common rail)
Exhaust standard	EU IV

Mechanics

325_005

Crankcase

The engine block is made of GGV-40 (vermicular graphite cast iron) with a cylinder gap of 90 mm (previously 88 mm).

The cylinder bores undergo UV-photon honing for friction optimisation and in order to minimise initial oil consumption. (Note on page 7)

Crank drive

The crankshaft, which is forged from temper-hardened steel, is mounted in four places in a main bearing frame.

Industrially cracked trapezoid con-rods are screwed to the crankshaft using a sputtered bearing at the top and a 3-material bearing at the bottom.

325_030

325_032

Piston

A cast piston without valve pockets and with a centrally arranged piston trough is cooled with injection oil via a ring channel (as for 3.3 l V8 CR).

UV photon honing

This involves using a laser beam to smooth the cylinder bores following honing.
The laser beam, which is applied at high force, melts down the remaining metal nibs in the one-billionth range. A smooth cylinder bore is achieved immediately in this way rather than through the working of the piston.

Oil pump

The tried-and-trusted Duocentric oil pump is used for the new generation of V6 engines.
It is driven by the chain drive via a hexagon shaft.

325_027

Bolts/ main bearing assembly

325_010

Retaining frame

A sturdy retaining frame made of GGG 60 forms the main bearing assembly and serves to reinforce the crankcase.

Top section of oil pan

The division between the crankcase and the oil pan is at the middle of the crankshaft.
The two-section oil pan is made up of an aluminium pressure-cast top section and a bottom section made of steel plate.

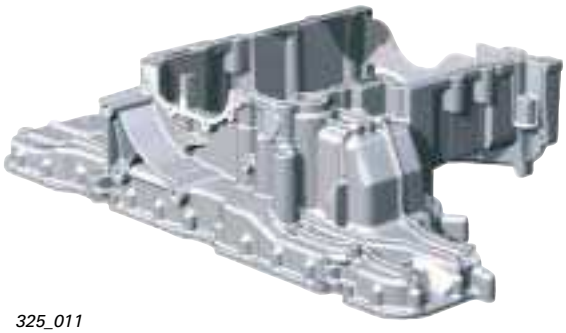

325_011

Cylinder head

Four valves per cylinder ensure optimum charging of the combustion chamber. In the new V6 TDI, the valves are actuated by roller-type cam followers with hydraulic valve clearance compensation.

The acoustics of the unit benefits from the use of the roller-type cam followers. These, together with the tensioned and practically play-free camshaft drive pinions, reduce the mechanical noise of the valve gear.

Cylinder head cover

Cylinder head cover seal

Retaining frame

Camshaft

The two sturdy camshafts are manufactured from a precision steel tube, cam rings and the two steel plugs using the IHU procedure*. The exhaust camshafts are driven by the inlet camshafts via spur gears.
The spur gears are straight-toothed (previously the spur gears had bevelled teeth).

Camshaft

Valve gear

Cylinder head

325_034

* IHU – internal high-pressure recasting

Tooth profile clearance compensation

The spur gear of the exhaust camshaft (driven spur gear) comes in two parts. The wide spur gear is held on the camshaft through spring actuation and has three ramps at the front.
The narrow spur gear has the corresponding grooves and is capable of both radial and axial movement.

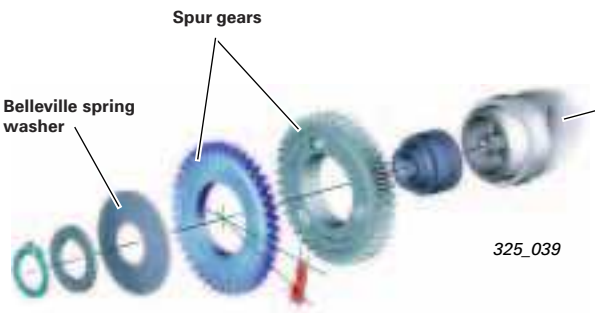

325_039

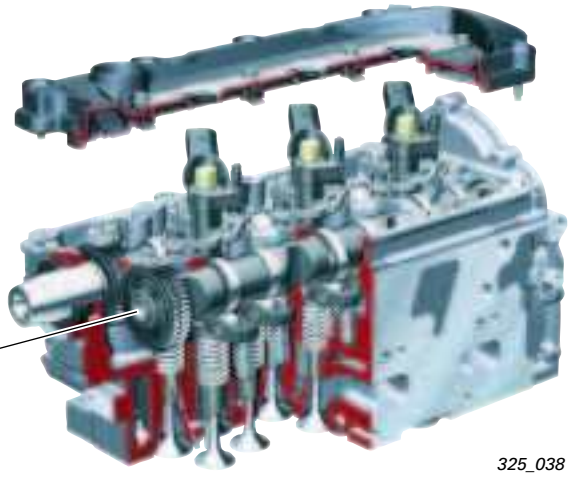

325_038

Note:

Please see assembly instructions in Workshop Manual.

A defined axial force is produced via a Belleville spring washer, where the axial movement is converted at the same time into a rotary movement with the help of the ramps. This offsets the teeth of the two driven spur gears, which in turn affects tooth clearance compensation.

Installation position

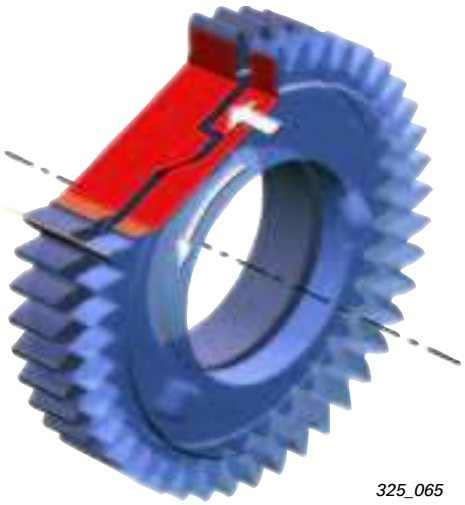

325_065

Clearance compensation

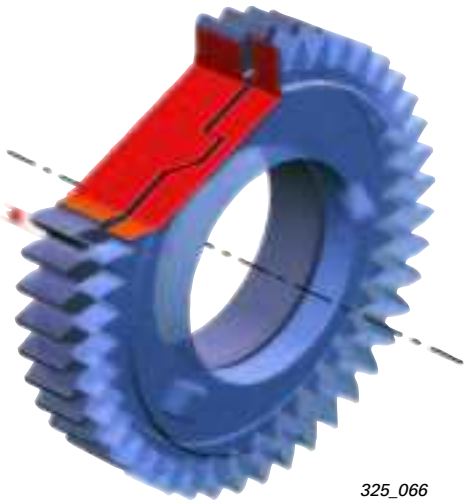

325_066

Chain drive

The new drive generation of V engines is implemented via chain drives and thus replaces the toothed belt. This has made it possible to use a shorter engine type for a wider range of possible applications in various models.

The chain drive is designed as a simplex bush chain (single chain) and is fitted at the gearbox side.
It is made up of a central chain (drive A) running from the crankshaft to the intermediate sprockets and a chain to the inlet-side camshaft of both the left and right cylinder heads (drive B + C).
And on a second level, from the crankshaft to the oil pump drive and the balancer shaft (drive D).

A separate hydraulic, spring-supported chain tensioner with the required chain guides is fitted for each chain drive.
Advantage: Maintenance-free and designed for the service life of the engine.

Balancer shaft

The new feature here is that the balancer shaft is accommodated in the inner V of the engine block, where the shaft goes through the engine and the balancing weights are secured at the ends.

Driven by chain drive D, the balancer shaft turns at crankshaft speed against the direction of rotation of the engine.

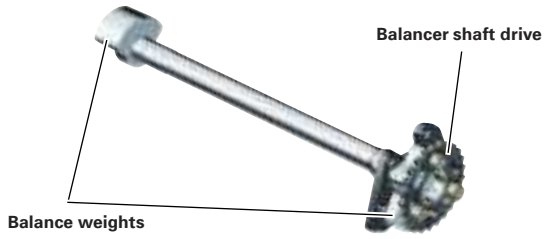

325_076

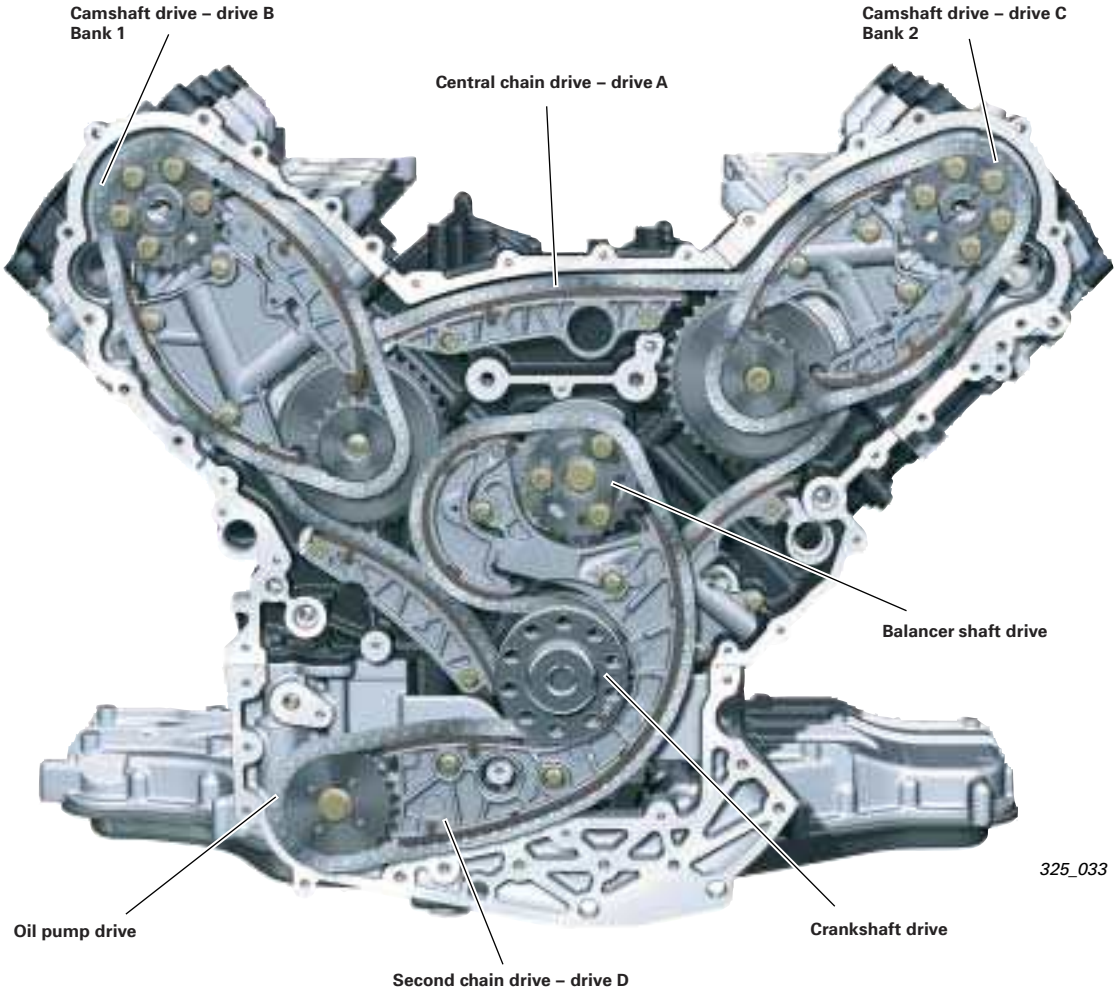

325_033

Air intake

Intake manifold with butterfly valves

Butterfly valves that can be regulated smoothly are integrated into the intake tract. These can be used to adapt the air movement according to the current engine speed and load with regard to emissions, consumption and torque/power.

The butterfly valve adjuster with potentiometer reports the current position of the butterfly valve back to the engine control unit.

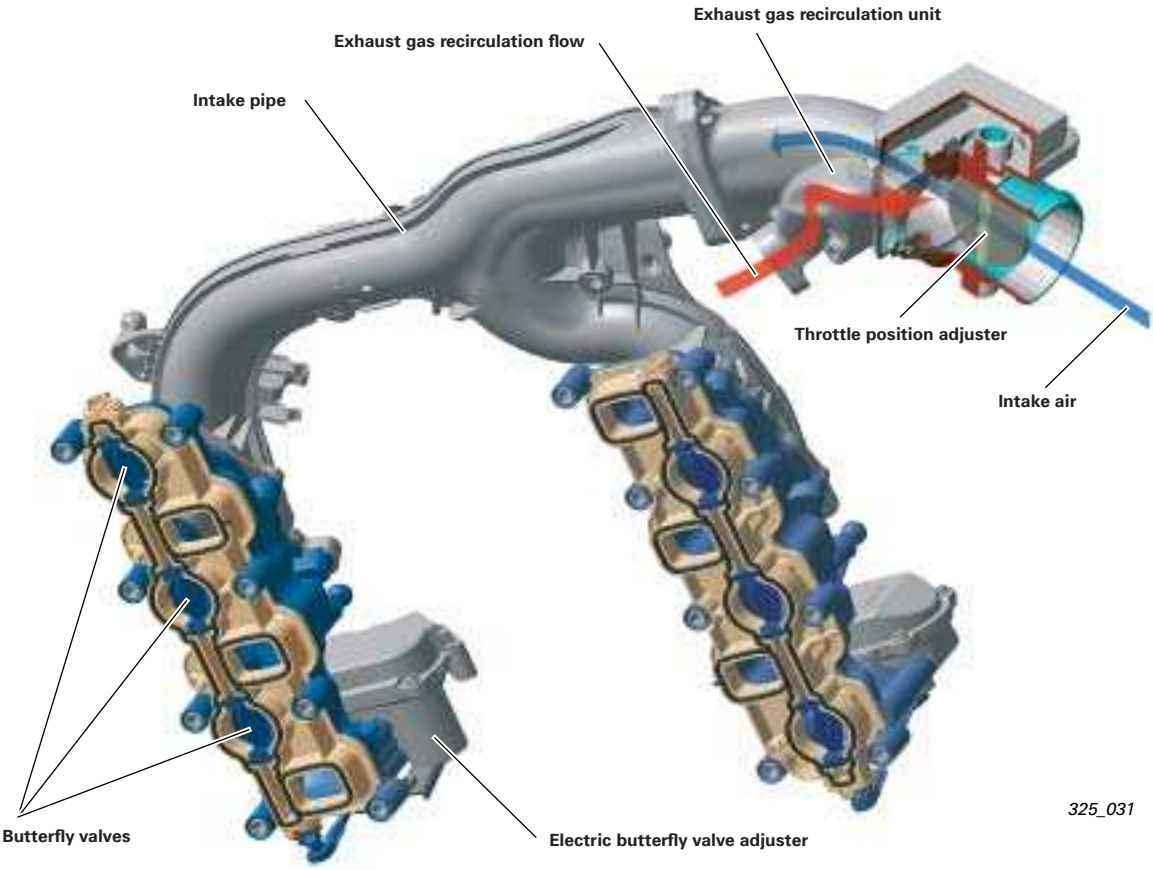

Exhaust gas recirculation:

This involves high-pressure exhaust gas recirculation.
The entry of exhaust gasses into the intake tract counters the intake air flow. This results in a constant mixture of fresh air and exhaust gas.

Throttle position adjuster:

The throttle is closed in order to stop the engine. This reduces the compression effect and achieves softer engine coasting.
In addition, the exhaust gas recirculation rate can be increased through targeted, map-controlled closure.

Note:

The throttle and butterfly valves are opened in coasting mode in order to check the air flow sensor and balance the oxygen sensor.

Intake manifold with electric adjuster for controlling the butterfly valves

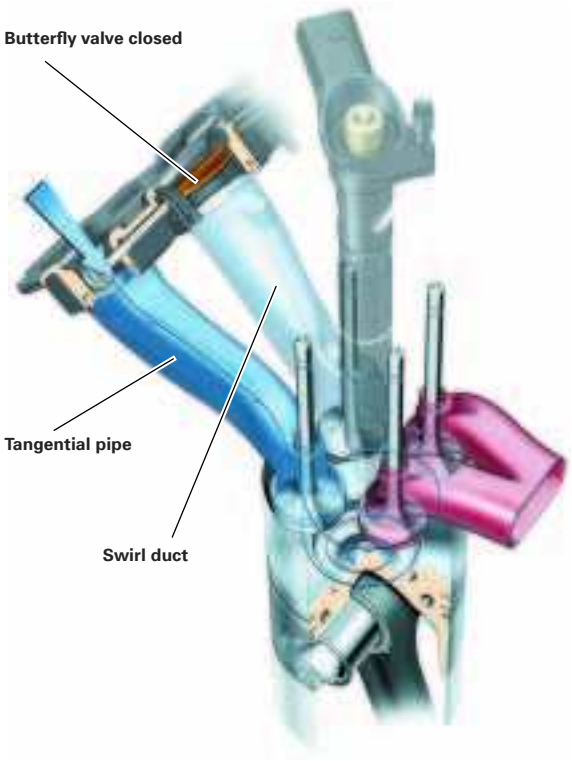

325_047

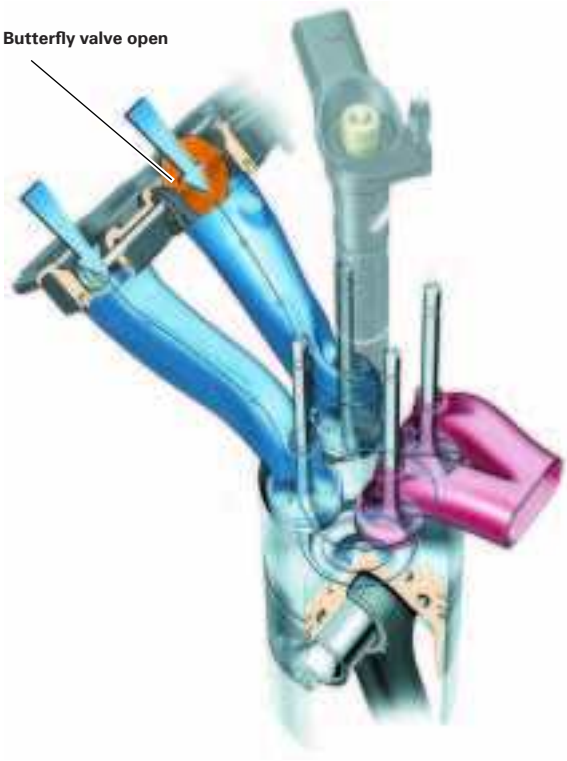

325_048

To optimise the torque and combustion, a closed swirl duct increases the swirl at low loads.

When the engine is started, the butterfly valves are open and are only closed again at idle speed (duty cycle: approx. 80 %).
Continuous opening is performed from idle speed to approx. 2,750 rpm (duty cycle: approx. 20 %).

To optimise performance and combustion, an open swirl duct allows a high level of cylinder charging at high loads.

The butterfly valves are always completely open at a speed of approx. 2,750 rpm or higher.
The butterfly valve is also open both at idle speed and during coasting.

Note:

When the adjuster is replaced, it must be adapted to suit the butterfly valves.
The valve body must also be replaced when the adjuster is replaced from another engine.

VTG turbocharger, electrically adjustable

To guarantee a fast response from the turbocharger at low speeds, air guide vane adjustment has been implemented using an electric adjuster.
This allows the exact positioning of the air guide vane to achieve optimum boost pressure.

In addition, a temperature sensor is integrated in front of the turbine in the turbine housing.
This measures the boost air temperature and prevents the turbocharger from overheating by activating engine management.
This is also used to initiate the regeneration of the particle filter if the measured temperature is 450 °C or higher.
The connection for exhaust gas recirculation is located in the downpipe, which joins the two cylinder banks on the exhaust side.
This involves high-pressure exhaust gas recirculation. This means that the exhaust gas recirculation pressure is always higher than the intake pipe pressure.

Note:

Turbocharger adjustment is performed in a controlled way at:
– a low load and low speed in order to build up the boost pressure quickly.

Regulated at:
– a high load and high speed in order to maintain the boost pressure at the optimum range.

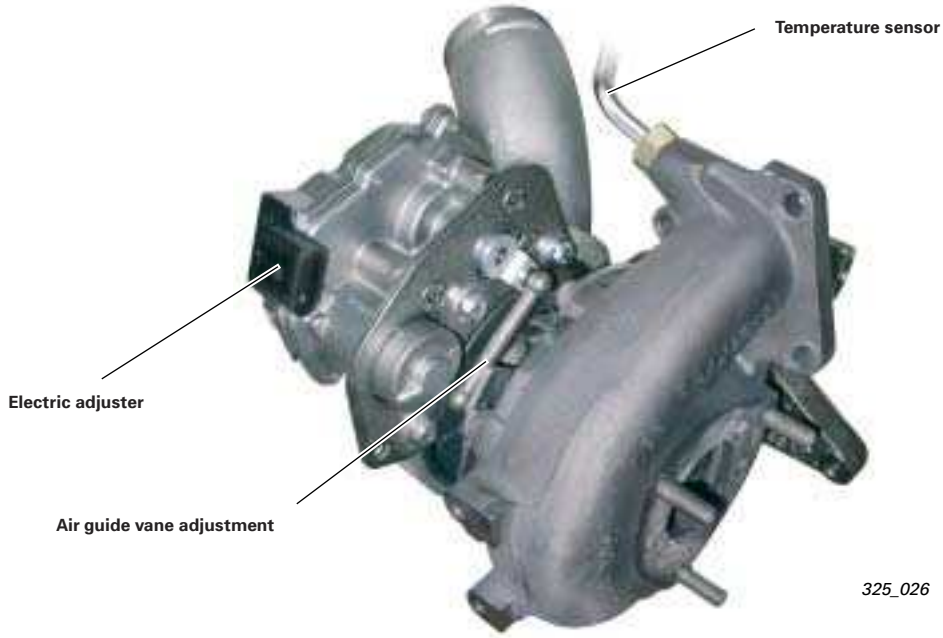

325_026

Exhaust gas recirculation

To achieve a high exhaust gas recirculation flow, a vacuum-controlled exhaust gas recirculation valve is installed. This controls the quantity of exhaust gas recirculated in the intake tract.

To effectively reduce the particle and nitric oxide (NO_x) emissions, the exhaust gasses are cooled by a switchable, water-filled exhaust gas recirculation cooler when the engine is warm.

325_035

Cold engine: By-pass flap open

Exhaust gas recirculation is performed immediately so as to heat up the catalytic converter as quickly as possible.

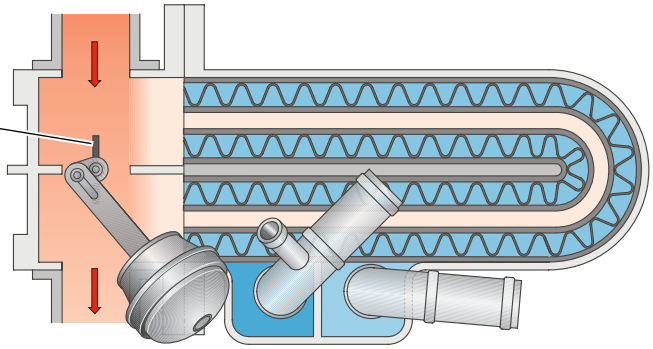

325_037

Warm engine: By-pass flap closed

Exhaust gas recirculation must be performed using the water-cooled exhaust gas recirculation cooler.

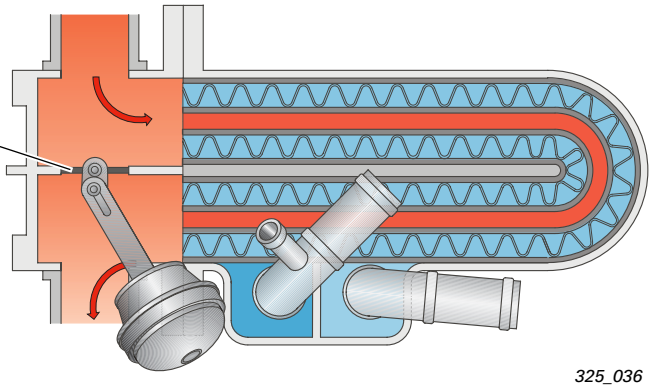

325_036

Exhaust system

The exhaust manifolds are designed as an air gap-insulated sheet metal manifold.

They are installed in the inner V of the engine on the exhaust turbocharger.

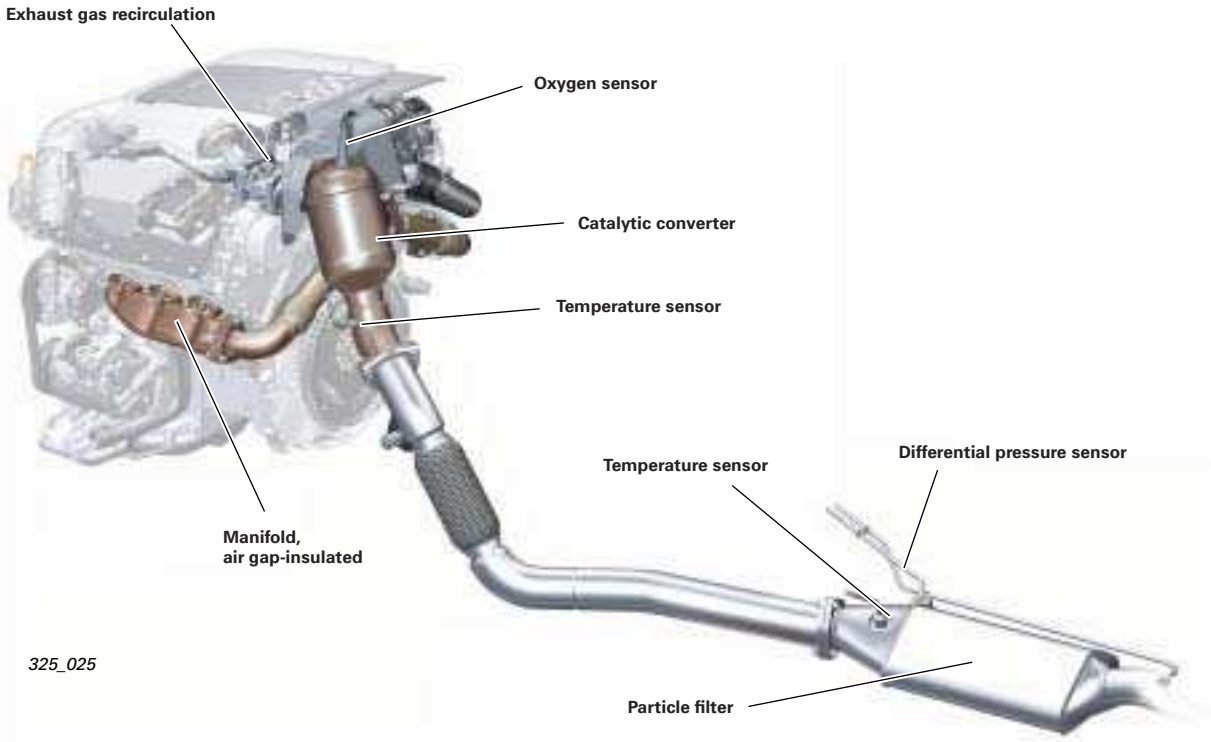

325_025

Oxygen sensing

An oxygen sensor is used for the first time in an Audi diesel engine.

This is the broadband oxygen sensor, which you may already know from the petrol engine. An important feature of this oxygen sensor is that it can record the oxygen signal over the entire engine speed range.
The oxygen sensor regulates the exhaust gas recirculation quantity and corrects smoke emissions.
Oxygen sensing (approx. 1.3 or less) can help to adjust the exhaust gas recirculation rate to the smoke limit, thereby producing higher exhaust gas recirculation rates.
The engine works with excess air.

Oxygen sensing is also used for mass air flow sensor plausibility (HFM). The mass air flow is calculated from the oxygen value using a calculation model and compared to the value from the mass air flow sensor.
Adjustments can thus be made over the whole system (exhaust gas recirculation, injection, fuel delivery).

Note:

If the oxygen signal fails, a fault is entered and the malfunction indicator light (MIL) comes on.

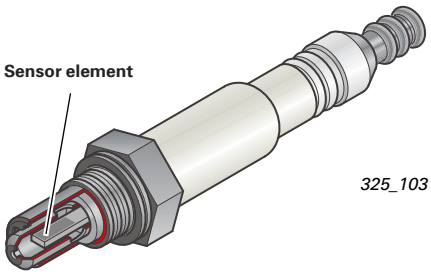

Pre-heating system

Here, the pre-heating system known as the diesel quick-start system is used with new ceramic glow plugs. They reach a temperature of 1,000 °C in two seconds and thus guarantee a petrol-engine quick-start without the "minute's silence" for diesel.
The voltage is reduced step-by-step in the following activating intervals and is significantly less than the available vehicle voltage.
To relieve the vehicle voltage, the glow plugs are activated with pulse width modulation (PWM) and phase offset.

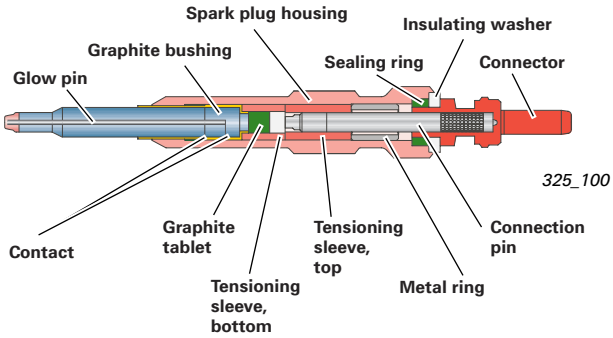

Voltage profile

Phase 1: approx. 9.8 V – fast heating
Phase 2: 6.8 V
Phase 3: 5 V

Temperature curve

Power curve

Voltage curve

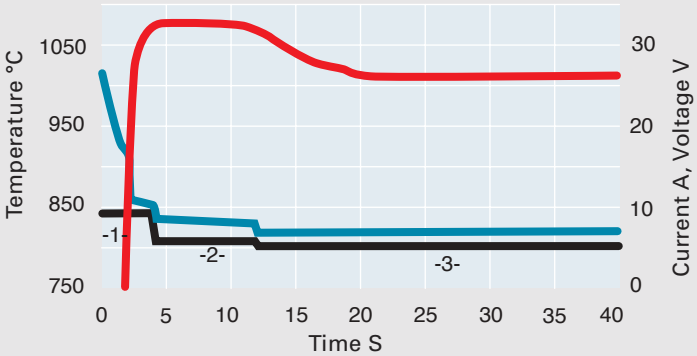

Note:

Please observe the precautionary measures described in the Workshop Manual when working with ceramic glow plugs.
Caution, very easily damaged!

Fuel supply – 3rd generation common rail

A 3rd generation common-rail system from Bosch controls the fuel/air mixture.

It has a high-pressure pump, driven by a toothed belt and one distributor plate (rail) for each cylinder bank.

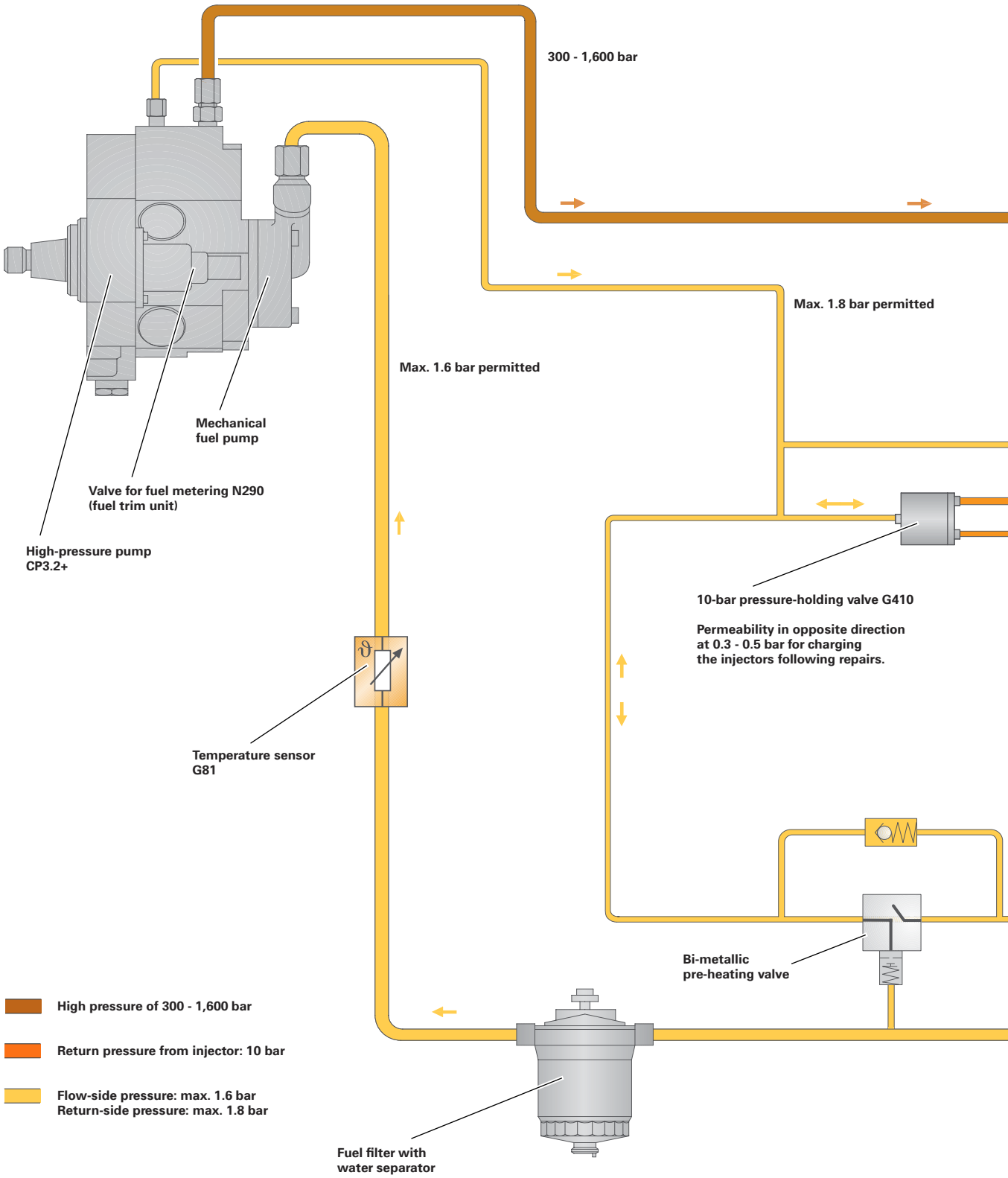

The injection pressure has been increased to 1,600 bar, which is 250 bar more than in earlier 2nd generation common-rail systems.

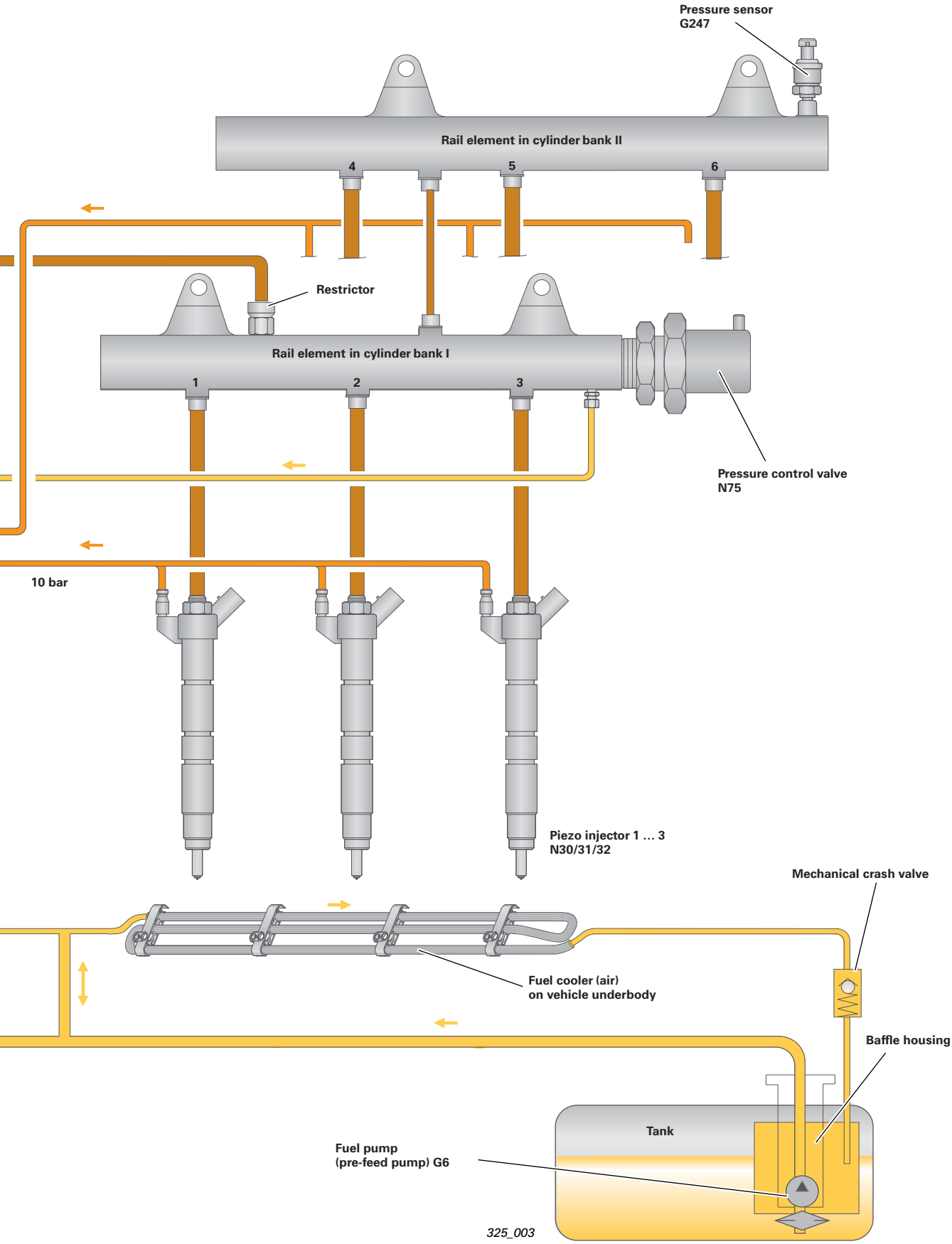

High-pressure fuel circuit

The Piezo injectors are the most important new feature of the new common-rail system.
Fuel injection involves the Piezo effect.

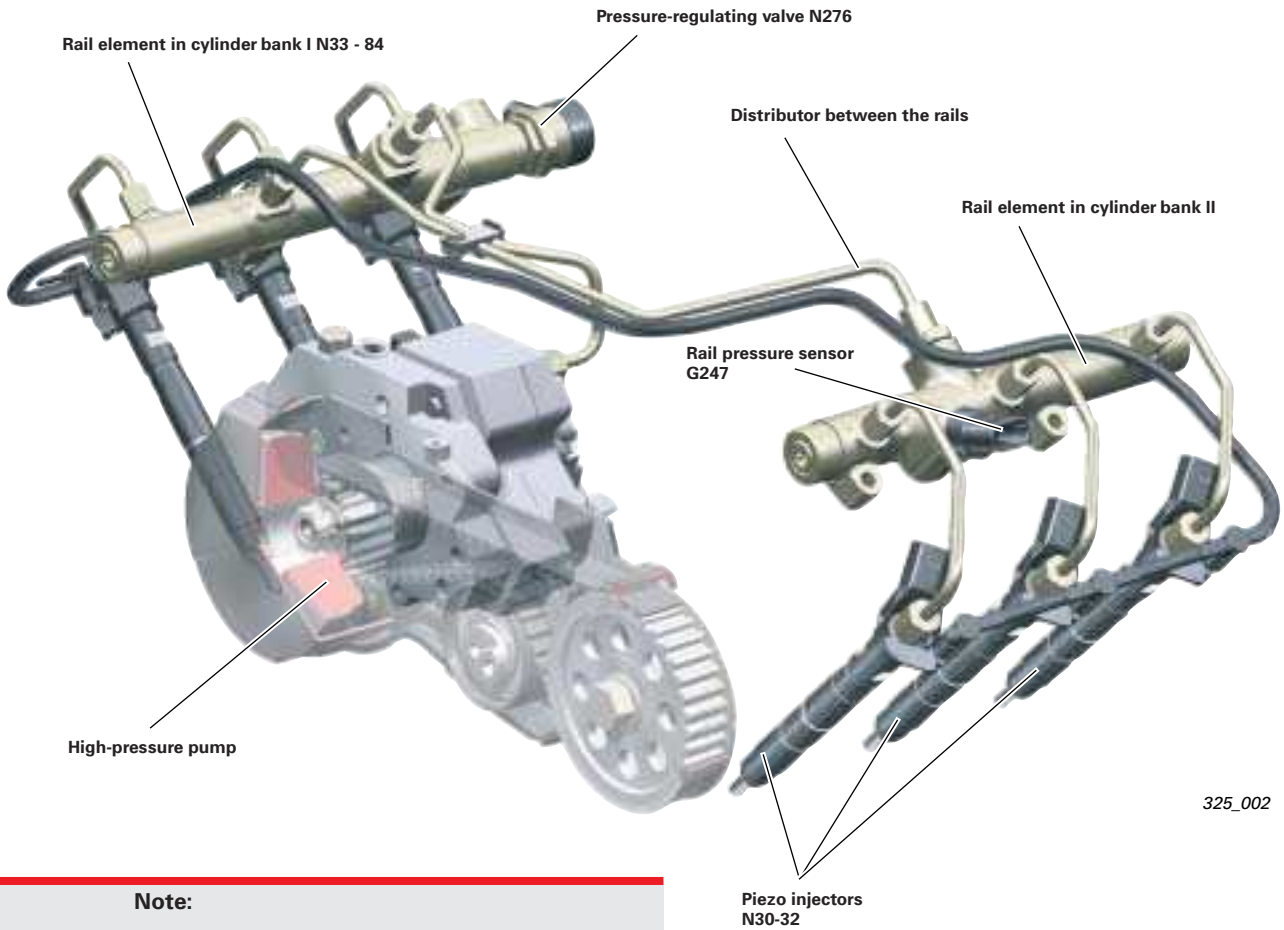

325_002

Note:

The design and function of the high-pressure pump are described in the SSP 227.

Gear pump

The gear pump, which is driven via the continuous eccentric shaft of the high-pressure pump by a toothed belt, feeds the fuel from the tank to the high-pressure pump using the inner tank pump.

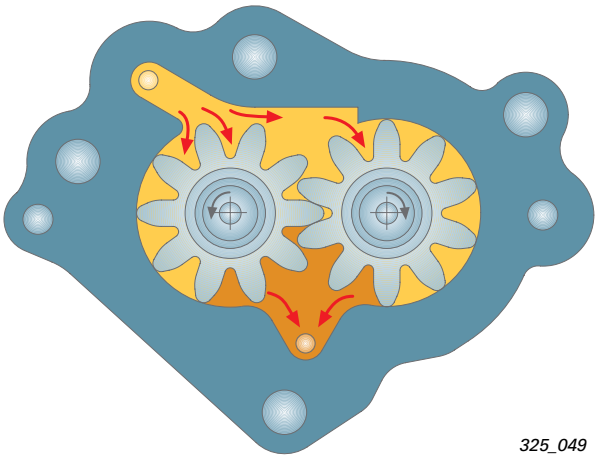

325_049

High-pressure pump

A dual-regulator system is used to regulate the fuel pressure. The fuel pressure is regulated in the near-idle speed range, when the engine is cold and to reduce the engine torque using the fuel pressure regulator N276 on the rail.
At full-power and when the engine is hot, the fuel is routed to the pressure-regulating system via the fuel pressure regulator (fuel trim unit) N290 to prevent the fuel from heating up unnecessarily.

The engine control unit initiates injection release when the fuel pressure is 200 bar or higher in the rail.
The engine control unit disables fuel injection as soon as the fuel pressure in the rail falls below 130 bar.

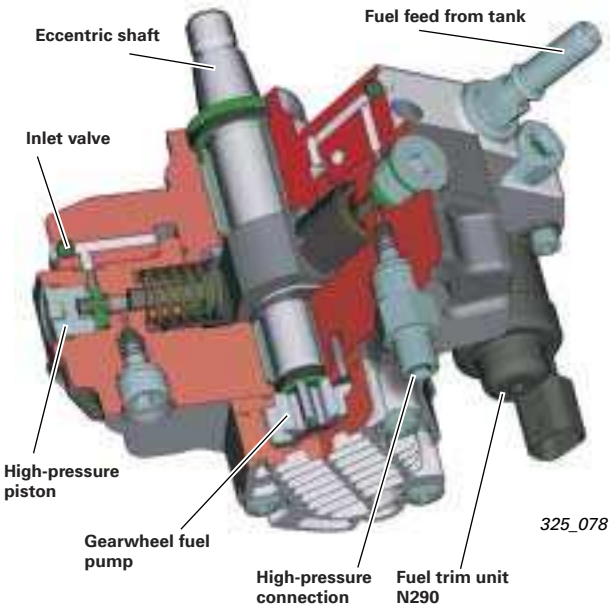

Piezo injector

Note:

Whenever an injector is replaced, it must be adapted to suit the injection system and an injector quantity comparison (IQC) must be performed.
Please follow the relevant troubleshooting steps to do this.

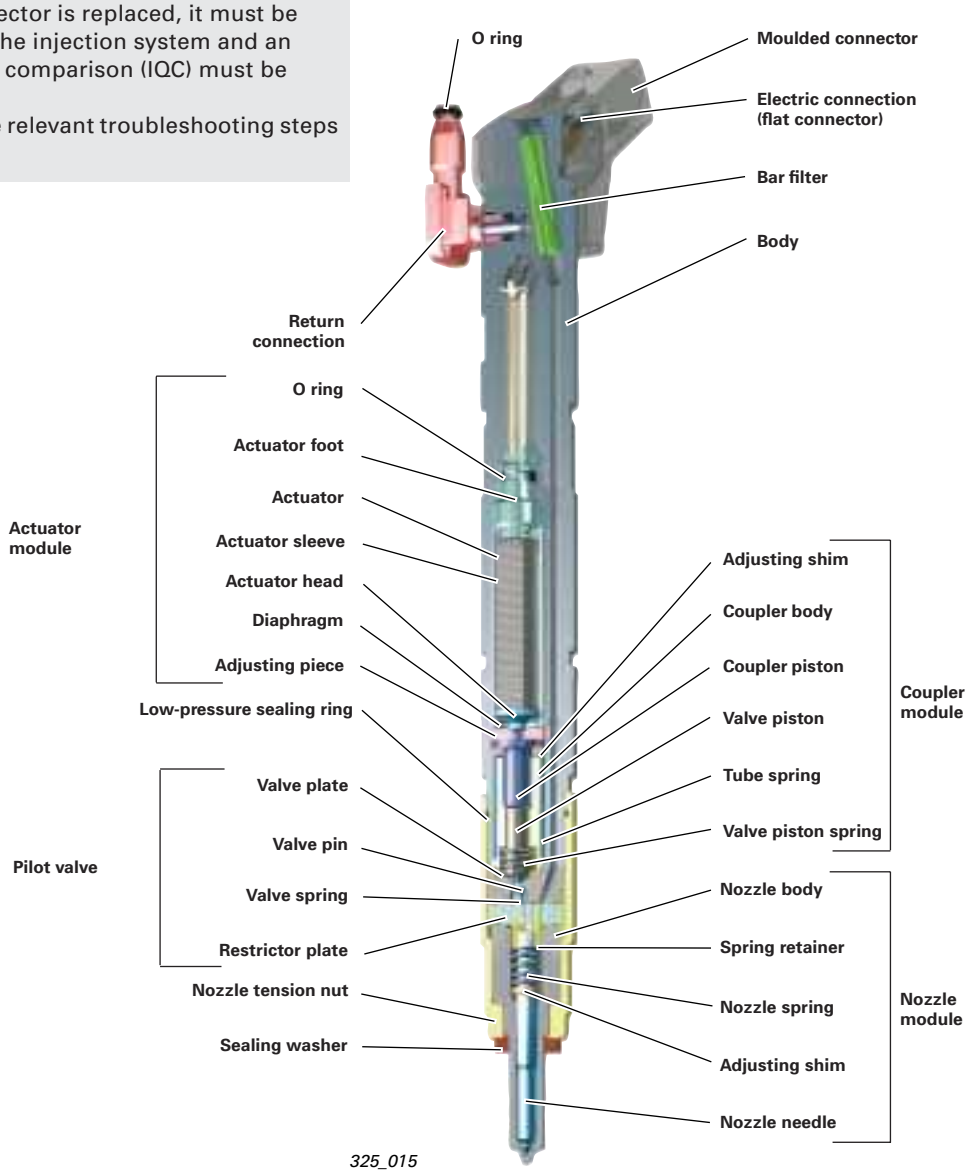

Injector function

The Piezo effect is used for controlling the injector.

The use of the Piezo element means that:

- more electrical activation periods per stroke
- very short switching times for several injections
- huge force against the current rail pressure
- high lift accuracy for fast drop-off of the fuel pressure
- activation voltage of 110 - 148 volts, depending on the rail pressure

can be achieved.

264 Piezo layers are installed in the actuator.

325_016

Piezo effect

If you deform a crystal made up of ions (turmalin, quartz, Seignette salt), an electric potential is produced.
The Piezo-electric effect can be reversed by applying a certain voltage. This makes the crystal longer.

Caution, high voltage!
Please read safety notes in Workshop Manual.

A hydraulic converter (coupler module) converts the increase in length of the actuator module into hydraulic pressure and motion, which affect the pilot valve.

The coupler module works like a hydraulic cylinder. It is continuously thrown into reverse movement with a fuel pressure of 10 bar by a pressure-regulating valve.
The fuel serves as the pressure pad between coupler piston "A" and valve piston "B" in the coupler module.
When an injector is closed (air in the system), the injector is bled by starting at starter speed.
In addition, the injector is filled against the fuel flow direction with the help of the inner tank pump via the pressure-holding valve.

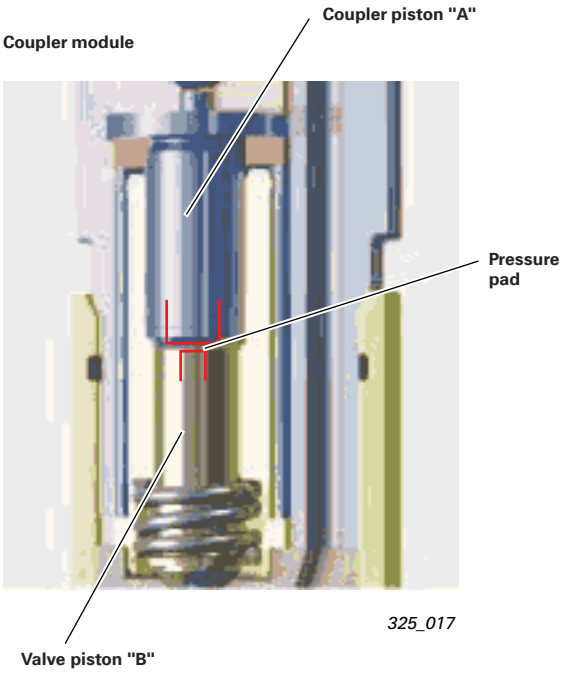

325_017

Note:

If this pressure is not present in the reverse stroke, the injector function is disabled.

The pilot valve consists of a valve plate, valve pin, valve spring and a restrictor plate.

The fuel flows at current rail pressure through the feed restrictor (Z) in the restrictor plate to the nozzle needle and into the space above the nozzle needle. This produces pressure compensation above and below the nozzle needle. The nozzle needle is kept closed mainly by the spring force of the nozzle spring.

When the valve pin is pressed, the return opens and the rail pressure flows off first through a larger drain restrictor (A) above the nozzle needle. The rail pressure lifts the nozzle needle from its seat, thereby causing injection. The fast switching pulses of the Piezo element result in several injections per stroke one after the other.

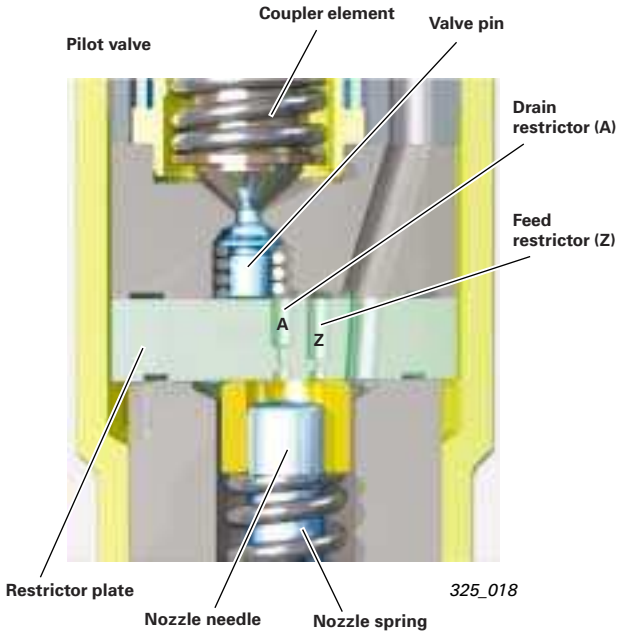

Pre- and post-injections
Two pre-injections are performed when the engine is cold and in the near-idle speed range. As the load increases, the pre-injections are gradually retarded until only the main injection is used at full power.
The two post-injections are needed in order to regenerate the particle filter.

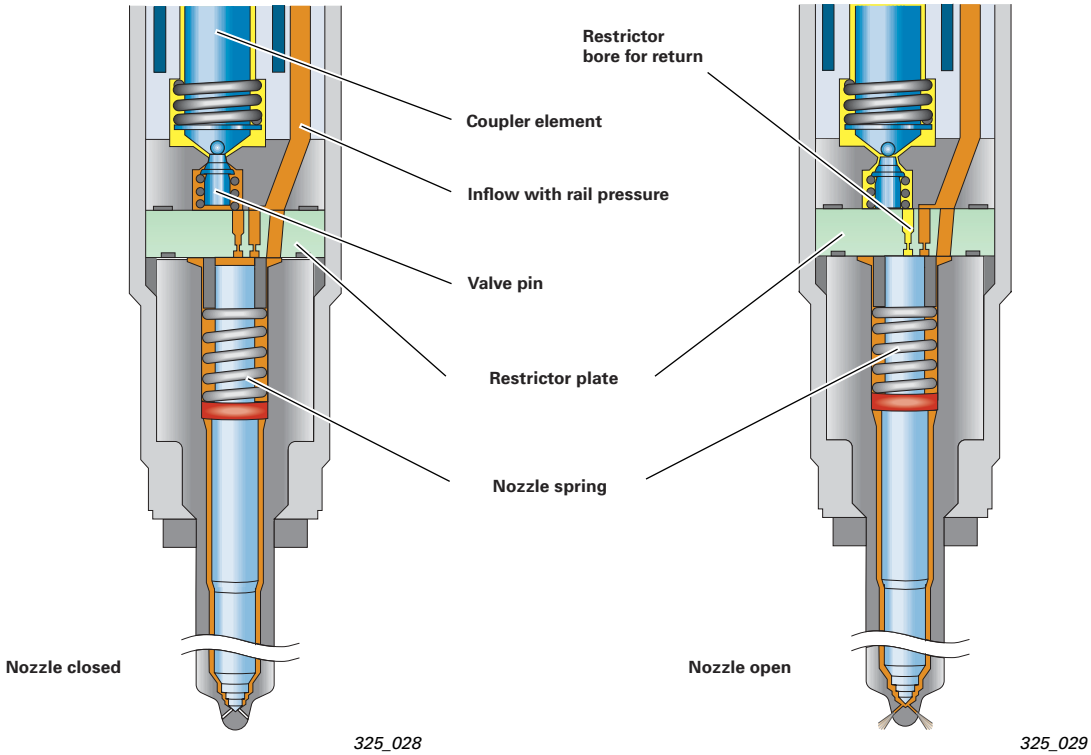

Note:

The pre-injections depend on the load, the speed and the engaged gear (acoustics).

High pressure

Low pressure

Particle filter

A particle filter without a catalytic-effect additive is used in the 3.0 l V6 CR diesel engine. The so-called "Catalysed Soot Filter" (CSF) has a filter coating containing precious metal.
Several sensors are needed in order to initiate the regeneration of the filter and system monitoring. Three temperature sensors are installed – one in front of the turbocharger, one behind the catalytic converter and one in front of the particle filter.
A differential pressure sensor monitors the pressure difference before and after the filter.
The accumulation of soot on the filter is detected here.

During passive regeneration without engine management intervention, the soot stored in the particle filter is converted slowly and carefully into CO_2.
This happens at temperatures of between 350 °C and 500 °C, primarily when travelling on motorways, due to the low exhaust gas temperature during short journeys or city travel.
For frequent city travel, an active regeneration must be performed via engine management every 1,000 - 1,200 km.

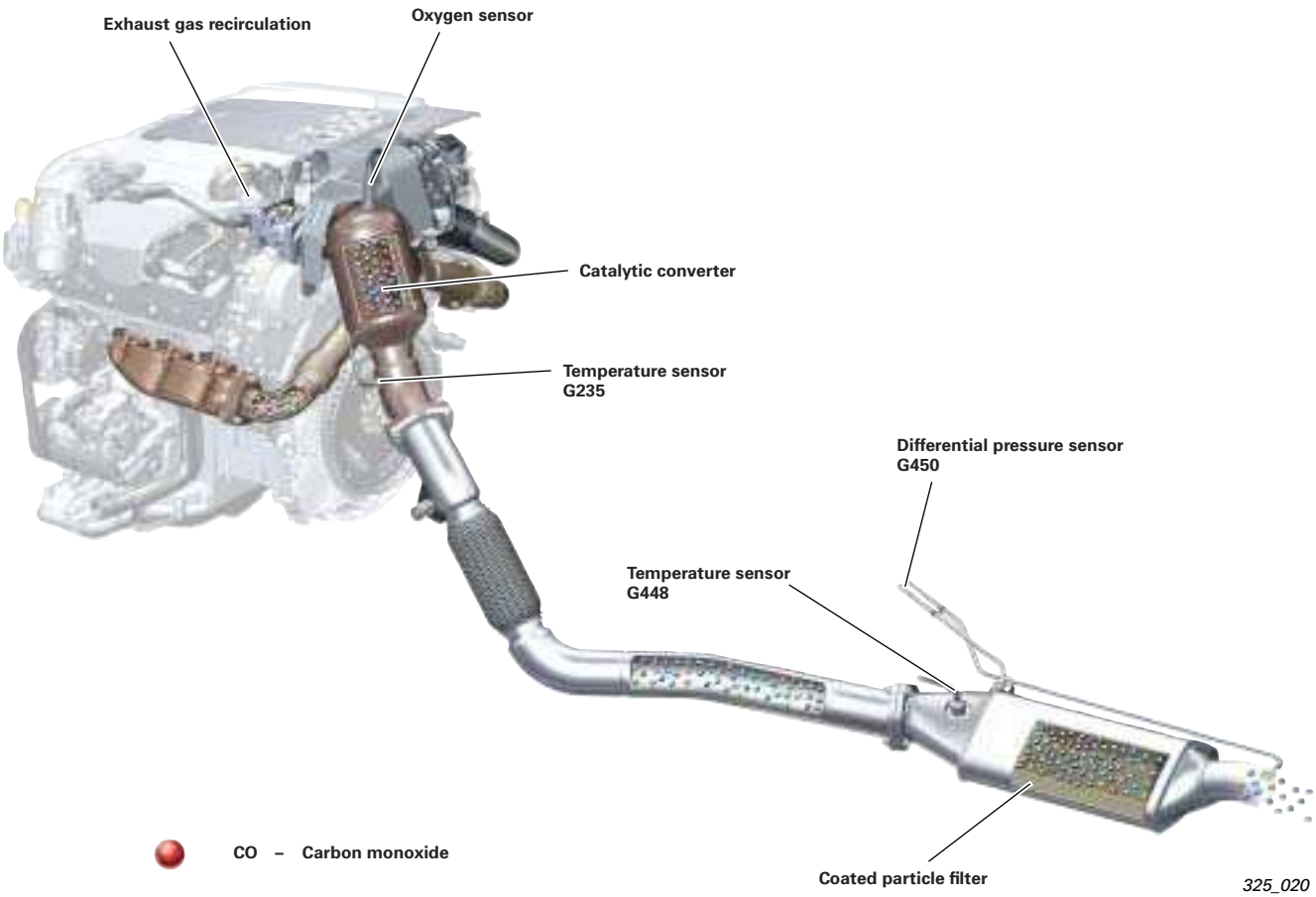

- CO – Carbon monoxide
- HC – Hydrocarbon
- C – Soot
- CO_2 – Carbon dioxide
- NO_x – Nitric oxide
- H_2O – Water
- O_2 – Oxygen

The filter element is like a conventional catalytic converter, the only difference being that the pipes are closed off alternately in inlet and outlet direction. This means that the soot-laden exhaust gasses must penetrate the gas-permeable silicon carbide walls. The gas therefore flows to the exhaust system outlet, while the soot stays on the ceramic wall. This is coated with a mixture of platinum and ceroxide.

The platinum coating of the filter element produces nitrogen dioxide NO_2, which causes soot oxidation above a temperature of 350 °C (passive regeneration).
The ceroxide component of the coating accelerates the fast thermal regeneration with oxygen (O_2) above 580 °C (active regeneration).

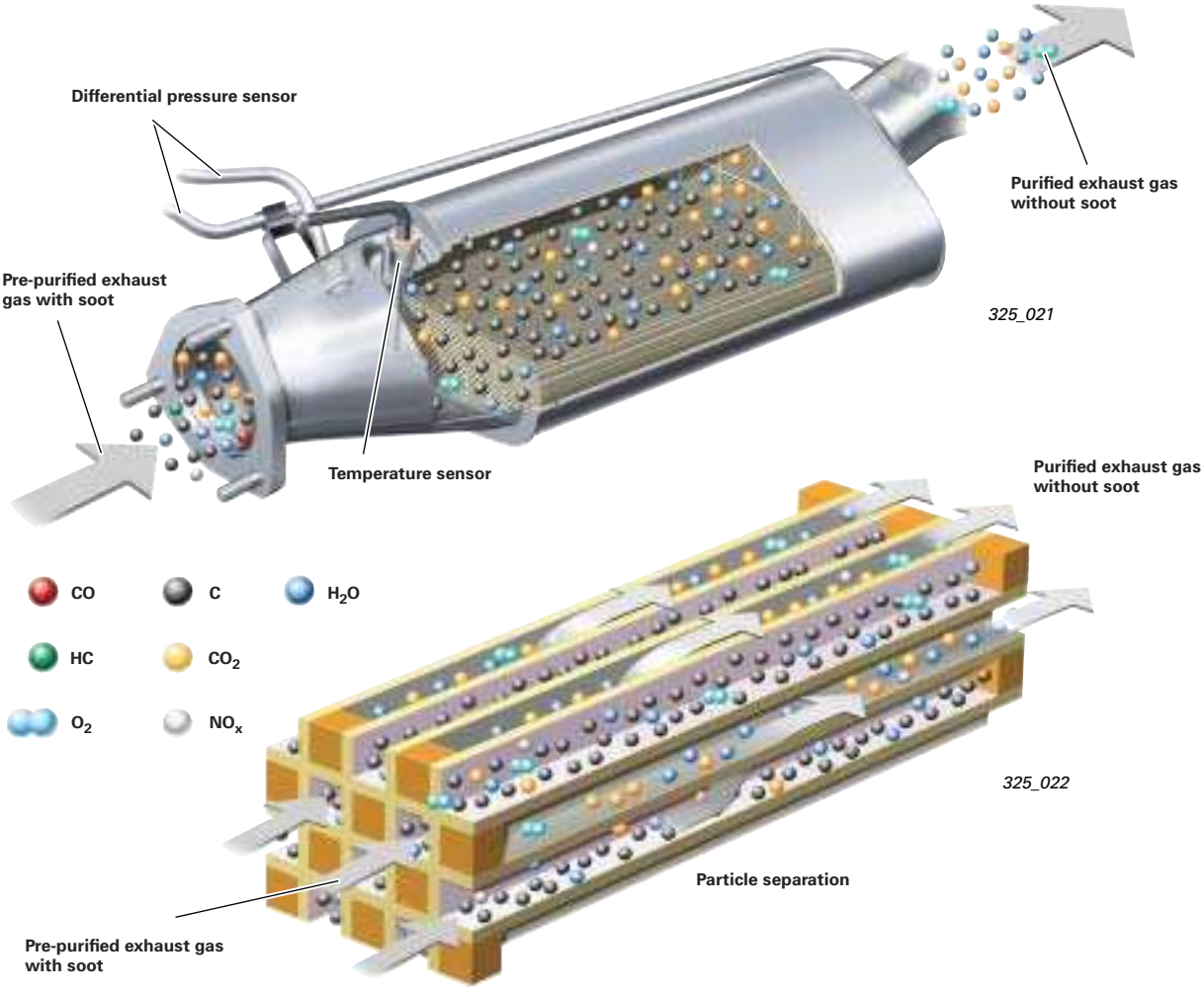

Regeneration is performed, as required, using a pre-programmed simulation model in the engine control unit, which determines the filter loading from the user's driving profile and the value indicated by the differential pressure sensor.
For this purpose, the temperature on the turbocharger is regulated to approx 450 °C by performing a post-injection close to the main injection, by increasing the injection quantity, delaying the injection time, disabling exhaust gas recirculation and by choking on the throttle.
When a temperature of approx. 350 °C is exceeded behind the catalytic converter, a second post-injection is performed away from the main injection. This post-injection is so late that the fuel only evaporates and no more combustion takes place.

However, this fuel vapour is converted on the catalytic converter and increases the gas temperature to up to 750 °C. The soot particles can thus be burned. A temperature sensor on the filter adapts the quantity of the remote post-injection in such a way that a temperature of 620 °C is reached in the underbody position, before the filter. The soot particles can thus be burned in a matter of minutes.
With an increasingly high mileage (150,000 - 200,000 km), the filter becomes blocked, depending on oil consumption, and must be replaced. The remains of burned oil (oil ashes), which do not burn and accumulate in the filter, are responsible for this.

Engine management

System overview

Fault prompting replacement	Sensors
Control unit for diesel injection system detects additional mass air flow from boost pressure and speed	Air flow sensor G70
Engine will not start	Engine speed sensor G28
Engine will not start	Hall sender G40
Control unit for diesel injection system detects a fixed value	Coolant temperature sensor G62
Control unit takes a fixed value of 90 °C - 5 %	Fuel temperature sensor G81
Engine control unit switches to nominal value and controlled operation	Fuel pressure sensor G247
Engine runs at increased idle speed	Accelerator pedal sensor with sensor for accelerator pedal position G79 and G185
Reduction in fuel quantity – less power	Brake light switch F and brake pedal switch F47
No effect, an entry is recorded in the fault memory	Oxygen sensor G39
No effect	Temperature sensor for particle filter G235, G450
Replacement value – boost pressure control reduced by 5 %	Temperature sensor for turbocharger G20
Fault memory entry	Differential pressure sensor
	Additional signals: Speed control system Coolant temperature sensor Speed signal Terminal 50 Crash signal from airbag control unit Start request to engine control unit (Kessy 1 + 2)

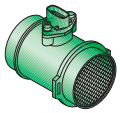

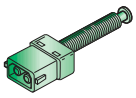

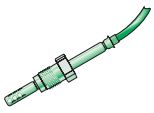
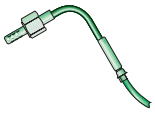

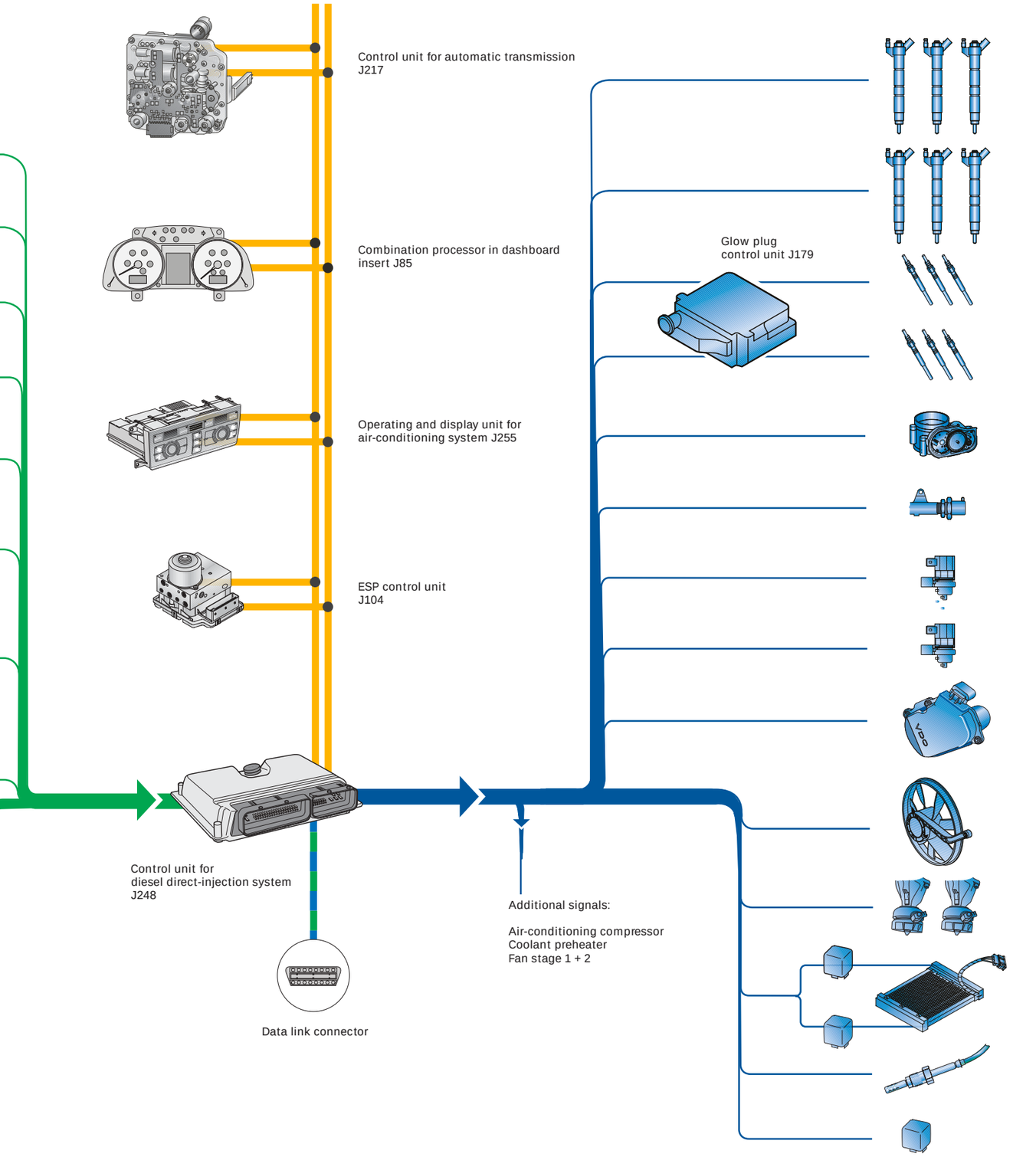

325_019

Actuators	Fault prompting replacement
Piezo element for injector, cylinder 1 - 3 N30 - N32 Piezo element for injector, cylinder 4 - 6 N33 - N83 - N84	Misfire detection via engine speed sensor, cylinder in question is disabled after several cycles
Relay for glow plugs J52 Glow plugs 1 - 4 Q6 Relay 2 for glow plugs J495 Glow plugs 5 - 8 Q6	Fault entry in control unit
Throttle control unit N239/J338	Remains open
Fuel pressure control valve N276	The fuel pressure is regulated by the fuel level regulator in the high-pressure pump. Control unit function changes from regulating to control.
Solenoid valve for exhaust gas recirculation N18	No exhaust gas recirculation possible
Butterfly valve adjuster V157 + V275	By-pass flap is closed, exhaust gas recirculation is always cooled
Switch-over valve for exhaust gas recirculation cooler N345	Butterfly valves remain open
Left/right solenoid valve for electro-hydraulic engine mount N144/N145	Heat control comes on when the engine temperature is exceeded.
Electric fan	Fault memory entry only
Relay for auxiliary heater J359 + J360 Auxiliary heater Z35	No auxiliary heating
Oxygen sensor heater Z19	No oxygen signal, oxygen sensor is switched off and the system is not adjusted
Fuel pump relay J17 Fuel pump (pre-feed pump) G6	Engine starts with filled lines, driving behaviour problems with high fuel throughputs.

Function diagram

Colour coding

= Input signal
= Output signal
= Positive
= Ground
= Bi-directional
= CAN BUS

Components

A	Battery
E45	Switch for speed control system
E408	Engine start/stop button
E415	Switch for access and start authorisation
F	Brake light switch
F47	Brake pedal switch
F60	Idle speed switch
F194	Clutch pedal switch (US model only)
G20	Temperature sensor 1 for catalytic converter
G23	Fuel pump
G28	Engine speed sensor
G31	Boost pressure sensor
G39	Oxygen sensor
G40	Hall sender
G42	Intake air temperature sensor
G62	Coolant temperature sensor
G70	Air flow sensor
G79	Sensor for accelerator pedal position
G81	Fuel temperature sensor
G169	Fuel level sensor -2-
G185	Sensor -2- for accelerator pedal position
G235	Exhaust gas temperature sensor -1-
G247	Fuel pressure sensor
G448	Exhaust gas temperature sensor in front of particle filter
G450	Pressure sensor 1 for exhaust gas
J17	Fuel pump relay
J49	Relay for electric fuel pump 2
J53	Starter relay
J179	Control unit for glow time mechanism
J248	Control unit for diesel direct-injection system
J317	Voltage supply relay, terminal 30
J329	Power supply relay, terminal 15
J338	Throttle control unit
J359	Relay for low heating power
J360	Relay for high heating power
J518	Control unit for access and start authorisation
J694	Power supply relay, terminal 75
J695	Starter relay
J724	Control unit for exhaust gas turbocharger
M9	Lamp for left brake light
M10	Lamp for right brake light
N18	Exhaust gas recirculation valve
N30	Injection valve for cylinder 1
N31	Injection valve for cylinder 2
N32	Injection valve for cylinder 3
N33	Injection valve for cylinder 4
N83	Injection valve for cylinder 5
N84	Injection valve for cylinder 6
N144	Left solenoid valve for electro-hydraulic engine mount
N145	Right solenoid valve for electro-hydraulic engine mount
N276	Fuel pressure control valve
N290	Fuel metering valve
N335	Intake air switch-over valve
N345	Switch-over valve for exhaust gas recirculation cooler
Q10-15	Glow plugs 1 - 6
S	Fuse
S204	Fuse -1-, terminal 30
V157	Motor for intake pipe flap
V275	Motor for intake pipe flap 2
Z35	Heater element for auxiliary air heating
Z19	Oxygen sensor heater
1	Fan stage 1
2	Fan stage 2
3	Engine speed
4	To starter
5	Terminal 50
6	Selector lever (P/N)
7	Terminal 50, stage 1
8	Terminal 50, stage 2
9	CAN BUS L
10	CAN BUS H
11	CAN BUS Convenience
12	CAN BUS Drive
13	To lights

Data link connector

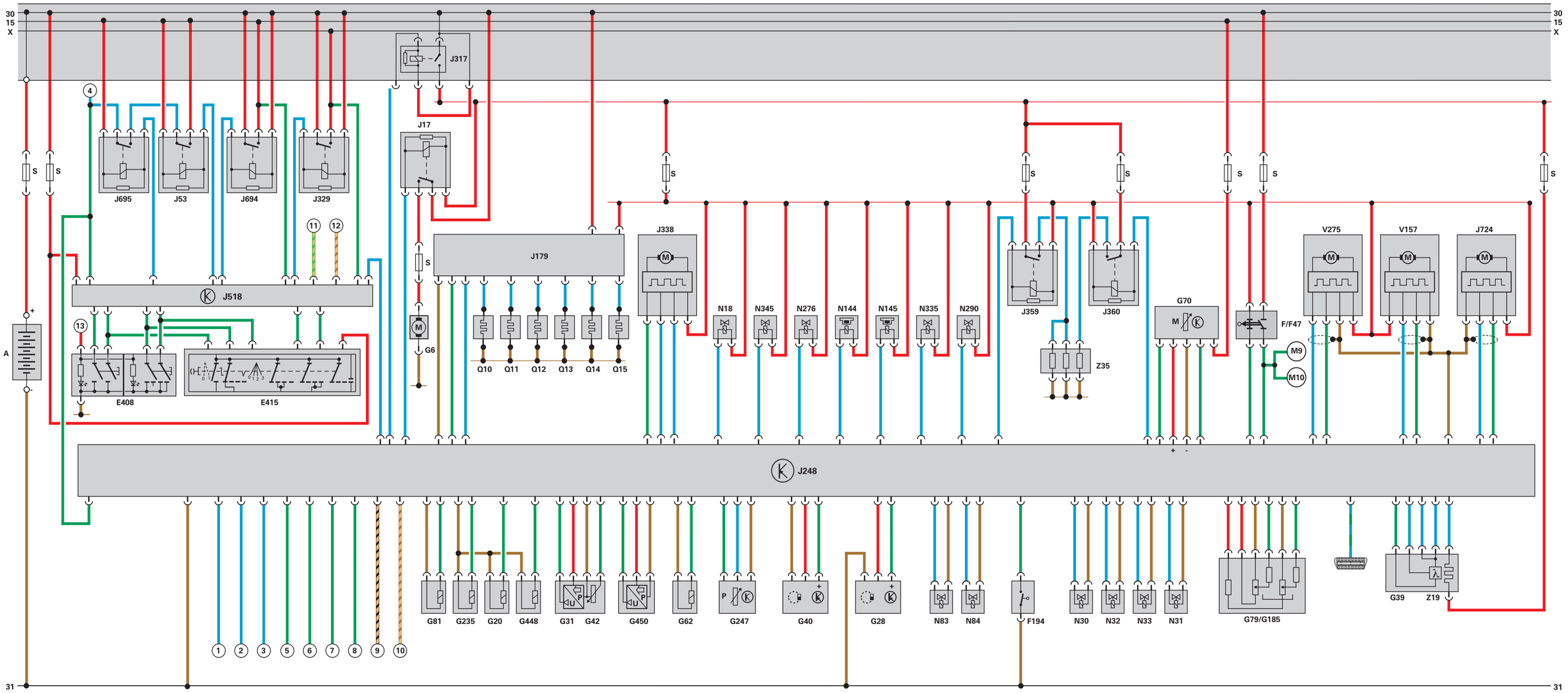
30
15
X
J317
J695
J53
J694
J329
J17
J518
J179
J338
J359
J360
G70
F/F47
V275
V157
J724
M9
M10
Z35
G6
Q10
Q11
Q12
Q13
Q14
Q15
N18
N345
N276
N144
N145
N335
N290
E408
E415
A
J248
G81
G235
G20
G448
G31
G42
G450
G62
G247
G40
G28
N83
N84
F194
N30
N32
N33
N31
G79/G185
G39
Z19
31

325_040

Introduction

A V6 engine with FSI technology has been developed for the first time for the new Audi A6. This engine is also used in the A8 and A4.

The following development goals have been achieved here:

- Compliance with the EU IV exhaust gas standard
- Reduced fuel consumption
- High performance
- High and ample torque
- Sporty and agile behaviour with a high level of comfort
- Powerful, sportingly dynamic V6 sound

Technical features are as follows:

- Light-weight crankcase made of an aluminium/silicon/copper alloy
- Light plastic, two-position intake pipe
- Balancer shaft for the elimination of first-order free inertia forces
- Low-friction cylinder head with 4-valve roller-type cam followers
- Engine control via rear chain drive
- Front ancillary units are driven by Poly-V belts
- Continuous camshaft adjustment on inlet and exhaust side
- Siemens engine management with electronic throttle actuator control (E gas)
- Emission control through continuous oxygen sensing, 2 catalytic converters close to the engine
- P/N system for air mass metering

325_055

The engine code and the engine number are located at the front right of the cylinder block.

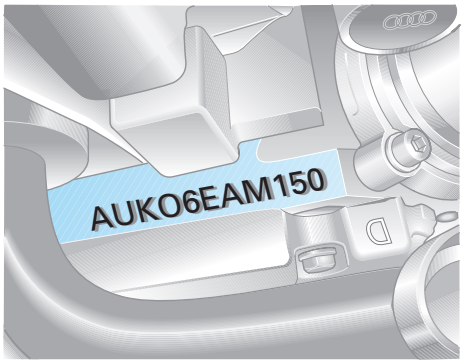

325_012

Torque performance curve

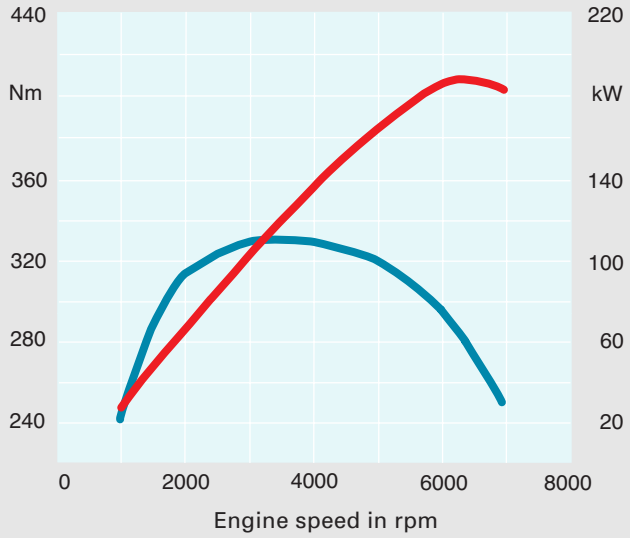

Technical data	
Code	AUK
Type	V engine with an angle of 90°
Displacement in cm^3	3123
Power in kW (hp)	188 (255) at 6,500 rpm
Torque in Nm	330 at 3,250 rpm
Engine speed	7,200 rpm
Bore in mm	84.5
Stroke in mm	92.8
Compression	12.5 : 1
Weight in kg	Approx. 169.5
Fuel	ROZ 95/91
Firing order	1-4-3-6-2-5
Ignition gap	120°
Engine management	Siemens with E gas
Engine oil	SAE 0W 30
Exhaust standard	EU IV

Mechanics

Crankcase and crankshaft assembly

The crankcase is made of an aluminium alloy.
This over-eutectoid monoblock is manufactured using the chill-casting procedure.
No bushings are cast in.

Hard primary silicon particles, which are deposited in the liquefied material, are exposed in a special procedure.

The bottom of the crankcase (bedplate) reinforces the crankcase and contains the four main crankshaft bearings.

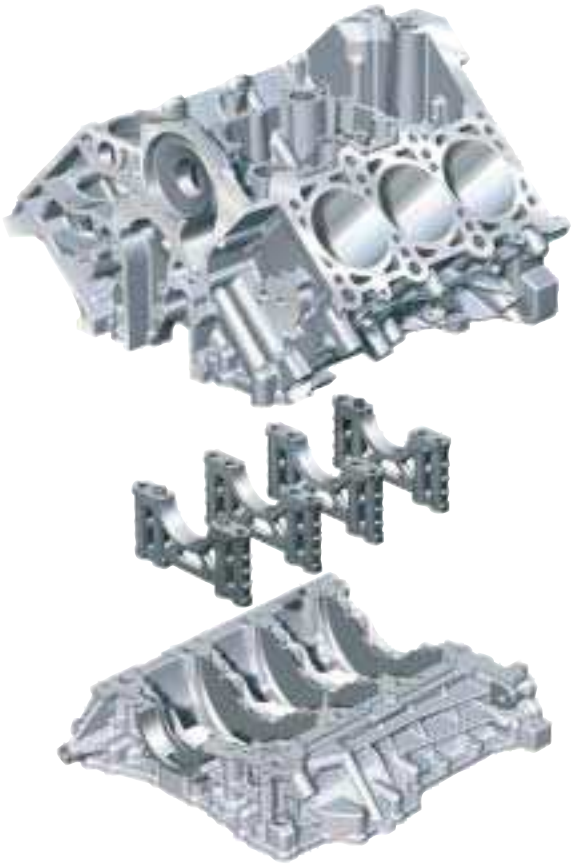

325_056

Reference

Further information on this can be found in the Self-Study Programme 267.

The flood wall (oil plane) and the oil pump are integrated in the top of the oil pan.
The bottom of the oil pan contains the oil level sensor.

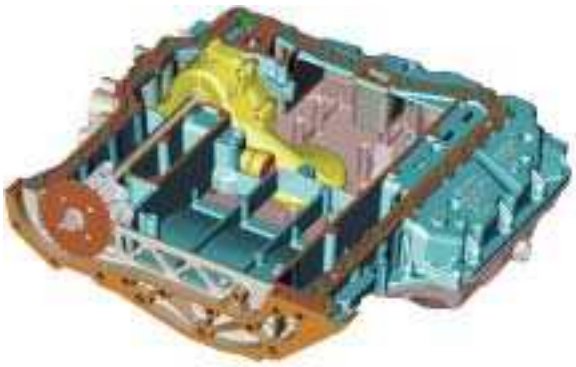

325_129

The crankshaft is a four-position steel crankshaft with a vibration damper. The con-rods are designed as trapezoid industrially-cracked con-rods.
The faces are 1 mm wider compared with the 3.0 l V5 engine. The lift pin diameters were increased from 54 mm to 56 mm. This also increased the rigidity as well as the strength of the crankshaft.

The con-rod measurements were reduced (from C70 to 33 Mn VS4) by changing the material used.
The higher strength of the new material means that the higher gas forces can be transferred safely.

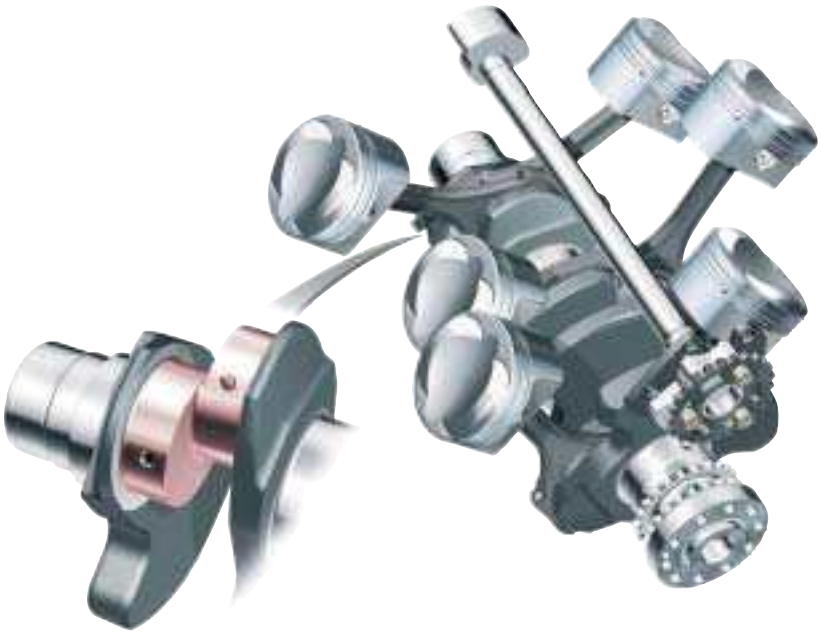

325_063

The forged piston has an FSI-specific combustion chamber well.
The piston shaft is coated with a wear-resistant ferrous coating.
Piston cooling is performed using oil spray jets.

325_045

Engine ventilation

Engine ventilation involves pure head ventilation. This means that the blow-by gasses are removed only through the cylinder head covers.
A rough separation of the oil is performed in the cylinder head covers using a labyrinth.

The blow-by gasses are routed out of the cylinder head covers and into the internal engine V compartment. This contains the dual-cyclone oil separator, which diverts the separated oil directly into the crankcase and also heats the purified blow-by gasses to 20 - 25 °C. The application of heat prevents the pipes and the pressure-regulating valve from freezing.

Advantages:

– Good package
– Protection against freezing

The blow-by gasses, which have a low oil content, are passed on to the intake pipe via the pressure-regulating valve and supplied to the combustion system.

The use of active crankcase ventilation also prevents freezing.
Here, the blow-by volume flow is raised in the near-idle speed range. To do this, fresh air is removed from the intake pipe and routed directly into the crankcase.
This has a positive effect on the oil quality since more water and fuel residues are removed from the engine oil due to the higher throughput of blow-by gasses.

The connection is set up in front of the throttle and on the V compartment lid. To prevent the blow-by gasses from being sucked in (e.g. as a result of the pressure difference between the crankcase and the intake pipe at full speed and when the throttle is open), a return valve is integrated in the pipe.

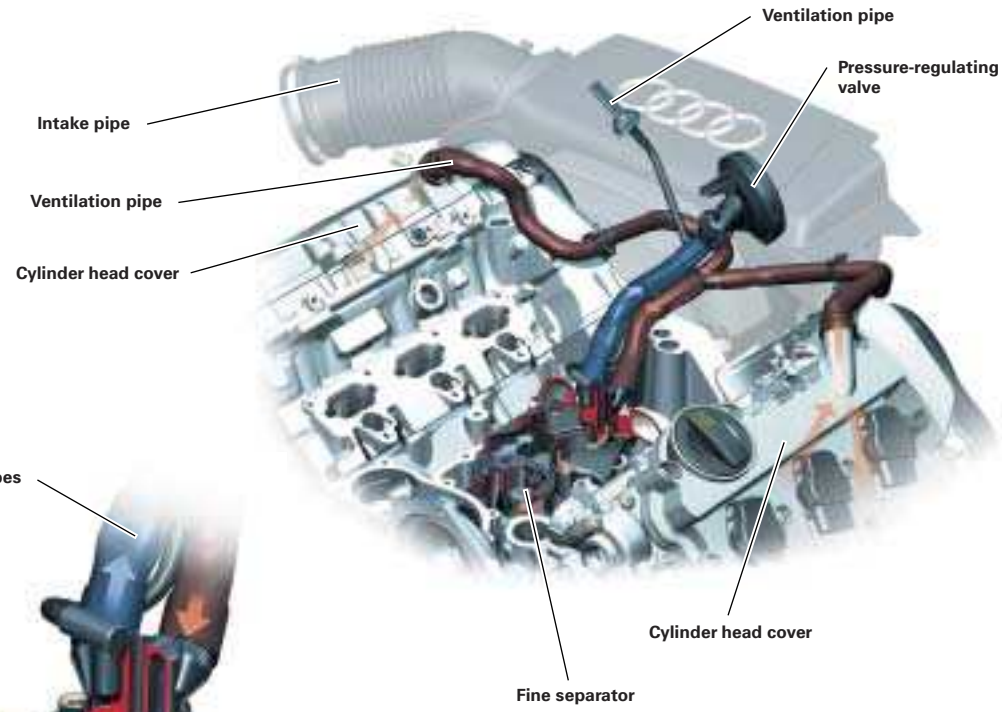

325_074

Pressure-regulating valve

The pressure-regulating valve regulates the gas throughput and pressure compensation of the crankcase ventilation system. It is a spring-loaded diaphragm valve.
The control connection is linked to the intake manifold. The intake manifold pressure works on the diaphragms. This actuates the valve. There is a strong vacuum in the intake manifold when the throttle is closed. This vacuum closes the pressure-regulating valve against the spring force.

The shaft seals may be damaged if the pressure-regulating valve is faulty (defective diaphragms).
If the pressure-regulating valve does not close, an excessively high vacuum builds up via the intake manifold in the crankcase. The shaft seals are pulled inward and can then start to leak.

If the valve does not open, too much pressure builds up in the crankcase. This can also damage the shaft seals.

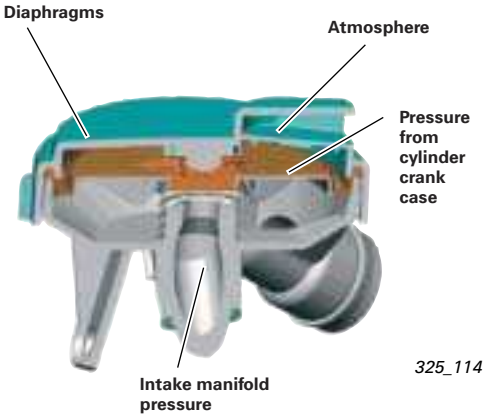

Oil supply

- Forced-feed lubrication designed for oil specification SAE 0W 30
- Oil pressure control on pure oil-side
- Duocentric oil pump with cold-start valve as overload protection for oil cooler and oil filter
- The oil supply for the camshaft adjusting motors and the head-side chain modules has been separated from the cylinder head oil supply. As a result, the oil pressure in the cylinder head could be throttled back.
- New oil filter module means that filters can be changed faster and in a more service-friendly way.

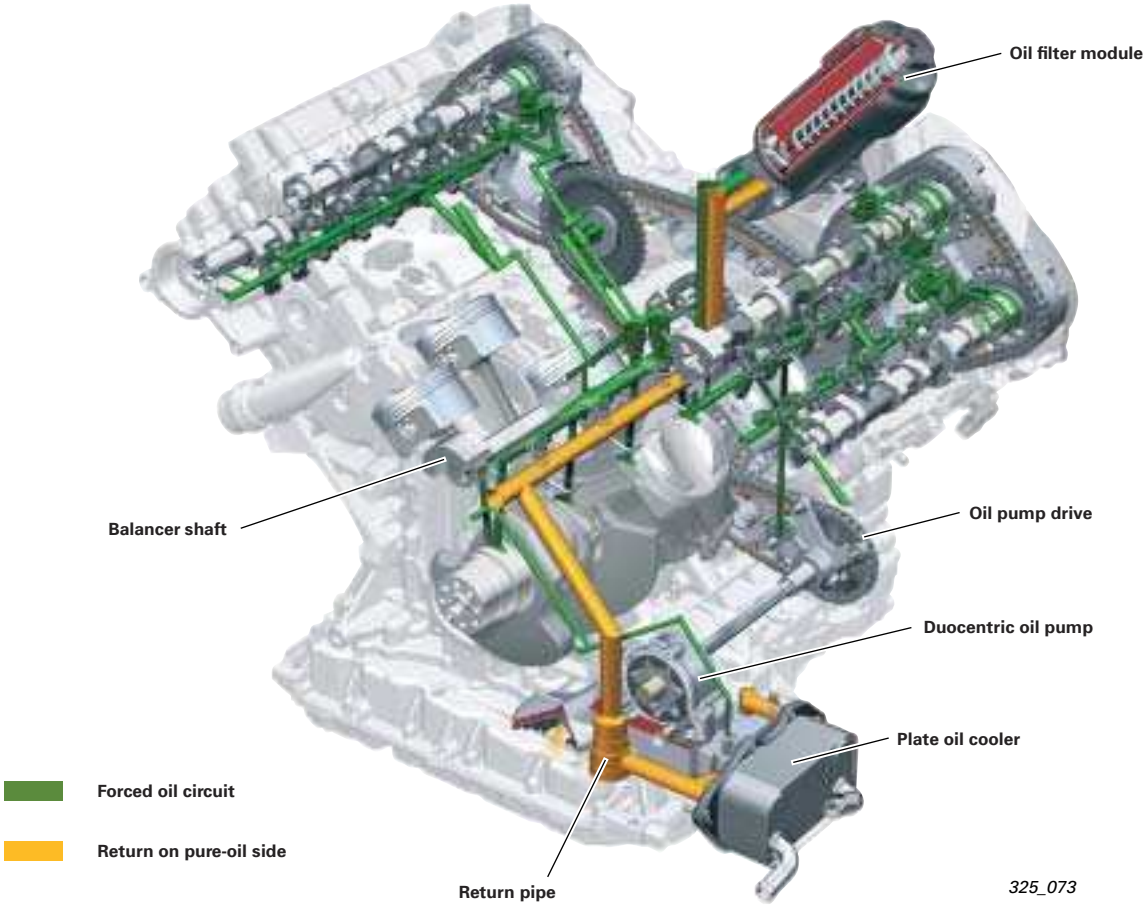

Engine control

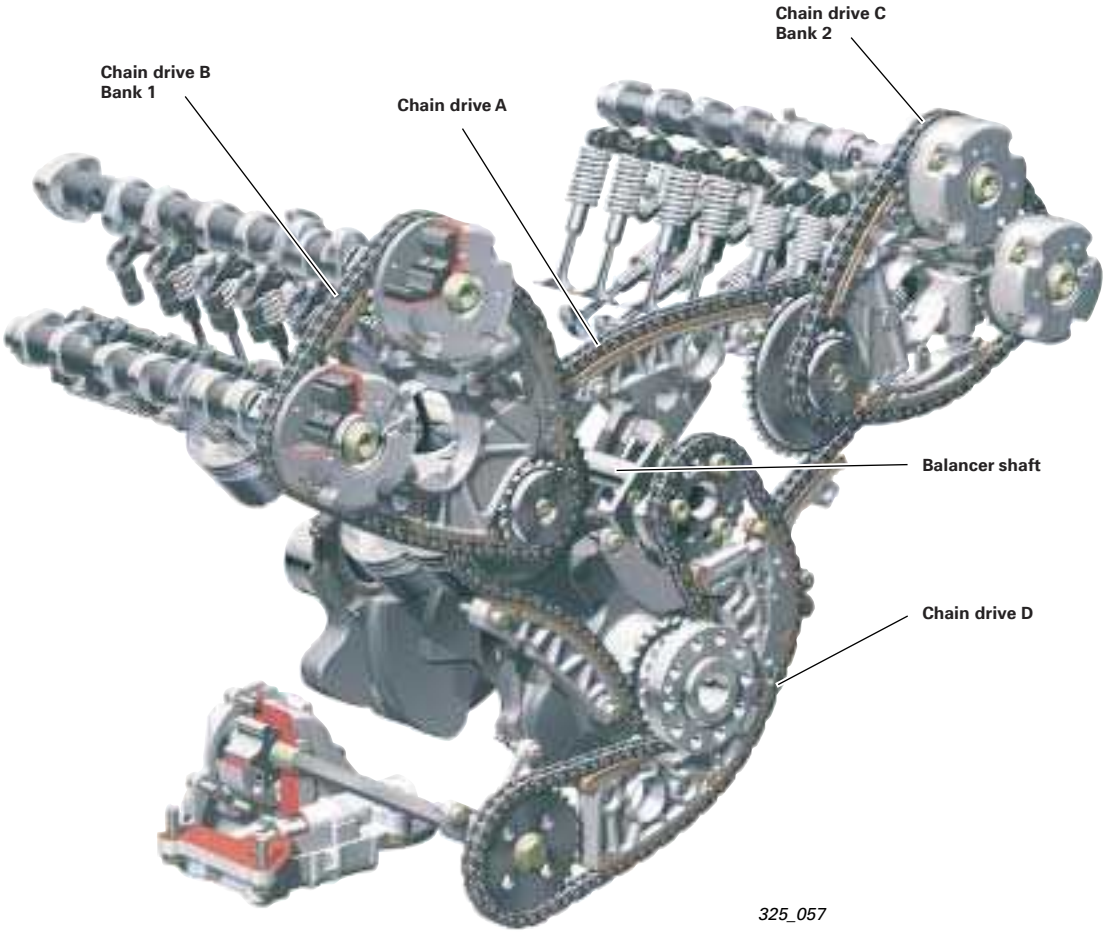

The chain drive is located at the power-output side of the engine. It is arranged over two levels.
Four chains are installed in total.

3/8-inch sleeve chains are used for chain drive A, B and C. A single roller chain is used for chain drive D. The chains are designed for the service life of the engine.

- Chain drive A: Crankshaft intermediate sprockets
- Chain drive B/C: Camshaft drive
- Chain drive D: Oil pump via plug-in shaft and balancer shaft

The chains are lubricated using oil spray, which is controlled by the camshaft adjusters.

The chain drives A, B and C are tensioned using mechanical chain tensioners with a hydraulic damping function. Chain drive D is tensioned using a simple mechanical tensioner.
Low-friction guide elements guarantee the smooth running of the entire engine control system.

Balancer shaft

The masses rotating and oscillating in the engine produce vibrations, which cause noise and rough operation.
Free inertia forces of the first order reduce the level of comfort and can be balanced by the balancer shaft.

The shaft is made of GGG 70. It is fitted in the internal engine V compartment and supported on two bearings.

Oil is supplied via two rising bores on the main bearing assembly.

It is driven at engine speed by the chain drive.
The direction of rotation of the balancer shaft is reversed in th

Cylinder head

- Aluminium cylinder head
- FSI inlet pipes with variable loading movement; the horizontal pipe division produces a tumble effect
- Valve actuation via roller-type cam followers with smooth hydraulic clearance compensation
- Valve guide made of sintered material (chromium-plated valves are thus required)
- Spring retainer made of (hardened) aluminium with additional wear-resistant washer
- Simple valve spring
- 2 camshafts installed for each cylinder head
- Smooth inlet camshaft adjusters (adjustment range up to a crank angle of 42°)
- Smooth exhaust camshaft adjusters (adjustment range up to a crank angle of 42°)
- 4 hall senders for camshaft position detection
- Camshaft bearing lid designed as a retaining frame (attached via fixing pins)
- Cylinder head gasket as a multi-layer metal seal with silicon pads on the chain housing
- Detached plastic cylinder head cover with integrated oil separator (as a labyrinth)

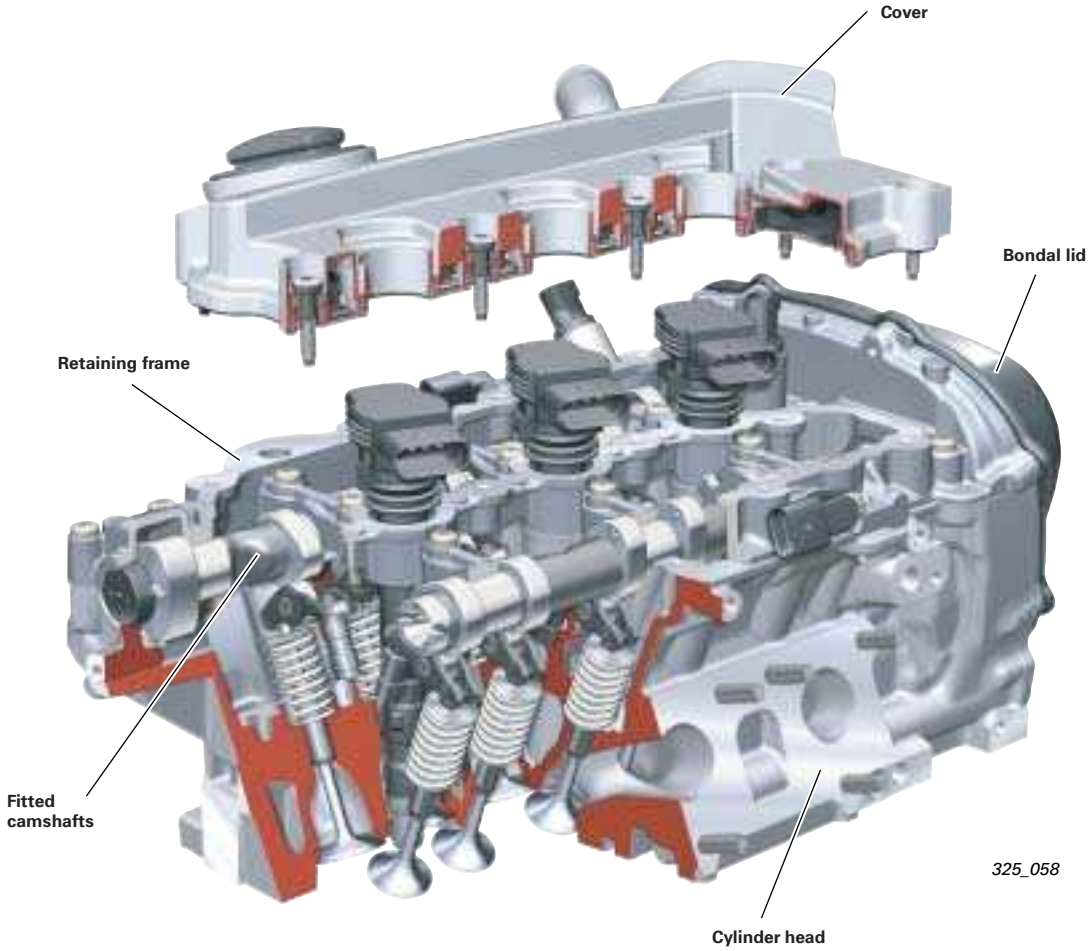

Camshaft adjusters

The camshaft adjusters work according to the well-known hydraulic rocker engine principle. They are manufactured by Denso.

Both the inlet camshaft adjuster and the exhaust camshaft adjuster have an adjusting range of up to a crank angle of 42°. The rotor and stator are weight-optimised and are made of aluminium. Spring-loaded sealing elements are used for the radial sealing of each of the four pressure chambers.
The adjusters must be locked in a defined position until the required engine oil pressure is built up after starting the engine. Locking takes place in the "Late" position.

Inlet camshaft adjuster

Locking is free from play here.

Exhaust camshaft adjuster

A return spring supports the movement of the adjuster into the Early position.
When the engine is stopped, the adjuster is locked in the Late position and the return spring is tensioned. A limited amount of play has been allowed here at the locking pin so that the adjuster can be unlocked safely.

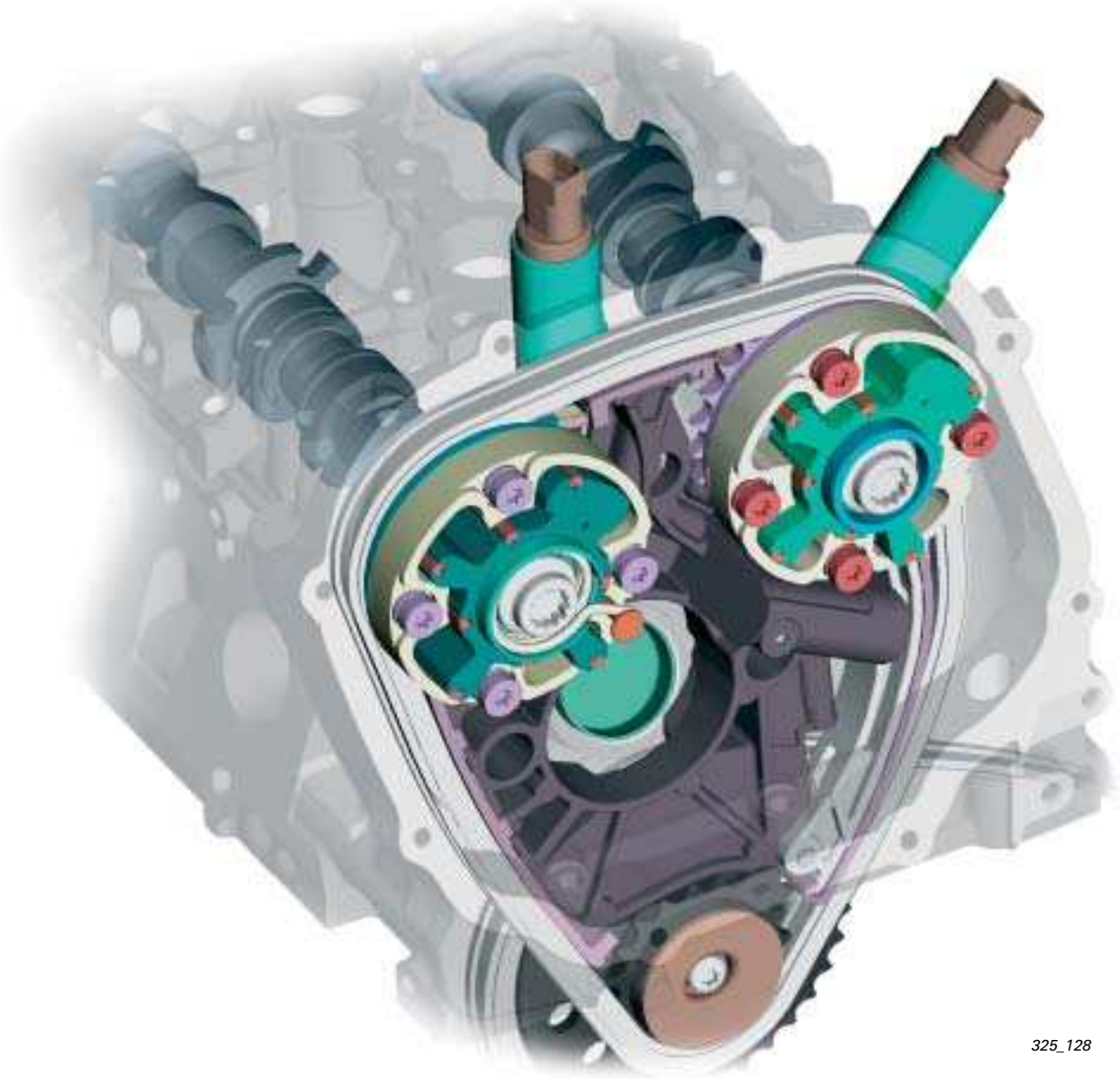

325_128

Intake system

The intake system, from the intake opening at the front of the vehicle to the pure air outlet at the filter element, is the same for all engines except for the 2.4 l V6 engine.

A cylindrical air filter cartridge is used to increase the useful life of the air filter.
An outlet valve in the filter housing has been used to optimise the discharge of water from the filter housing.

If the engine requires a large amount of air, the engine control unit (active opening) activates the solenoid valve N335 and a vacuum modulator opens the wheel housing inlet.

The passive opening of the wheel housing inlet is activated if an excessively high vacuum is created in the air filter housing (e.g. obstruction of the intake opening at the front of the vehicle). The increased vacuum forces the flap of the wheel housing inlet open.

The raw-air intake system is fitted with an additional intake pipe from the wheel housing with flow-optimised cross-sections.

A snow strainer and hot-air intake system are also available for cold countries. The hot-air intake system is controlled by a wax extension element. The throttle body is a single-flow system and includes water-heating as an option.

Note:

Engine management is performed without an air flow sensor, i.e. the mass air flow is calculated from the engine speed and intake manifold pressure.

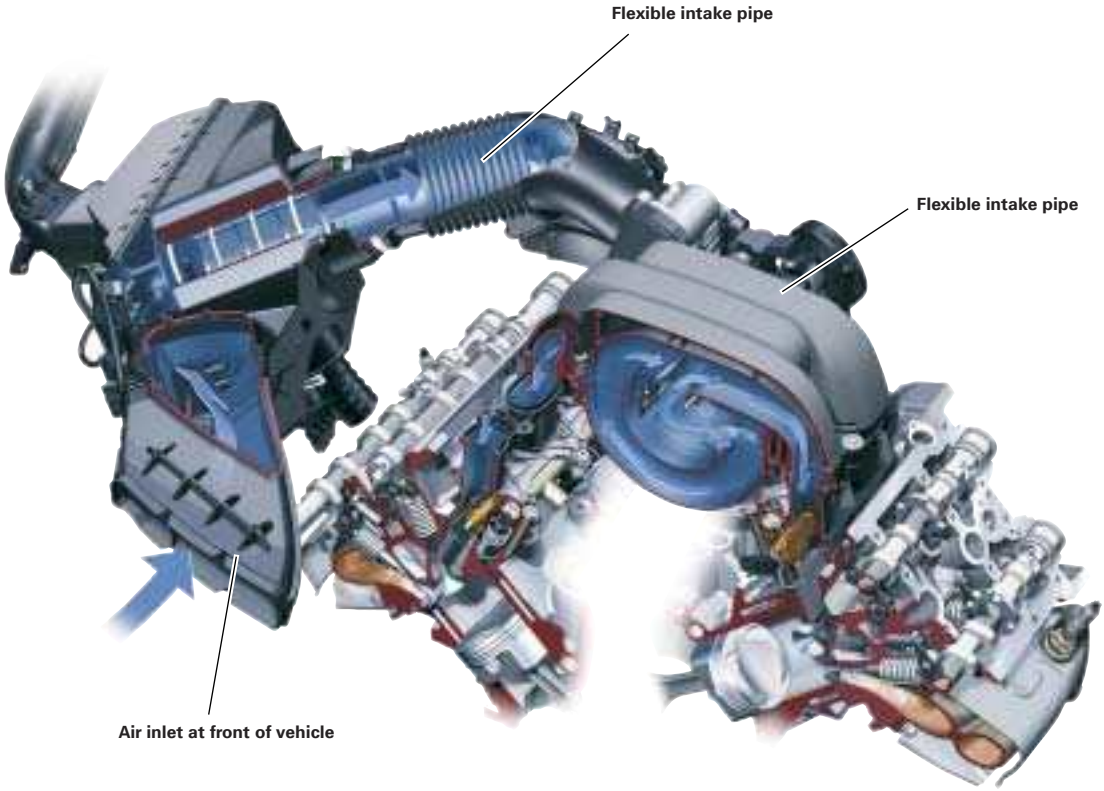

325_059

The switch-over intake pipe is disconnected acoustically in order to reduce noise. It has two settings – short and long intake method – for power and torque.
The switching is controlled by a solenoid valve.
The pipe is returned to its original setting by spring force.
The vacuum accumulator is integrated and has a design function.
The duo-sensor (pressure/temperature) as well as the mounting point for the pressure-regulating valve of the ventilation system are located in the intake pipe.

Two selector shafts are used for the longitudinal switching of the switch-over intake pipe. These are connected together via a gear set.

The plastic flaps have an airfoil section, which improves the flow.
They have an elastomer extrusion-coating to protect against leakage losses.

Note:

The engine control unit continuously monitors the position of the intake pipe flaps using hall sensors.

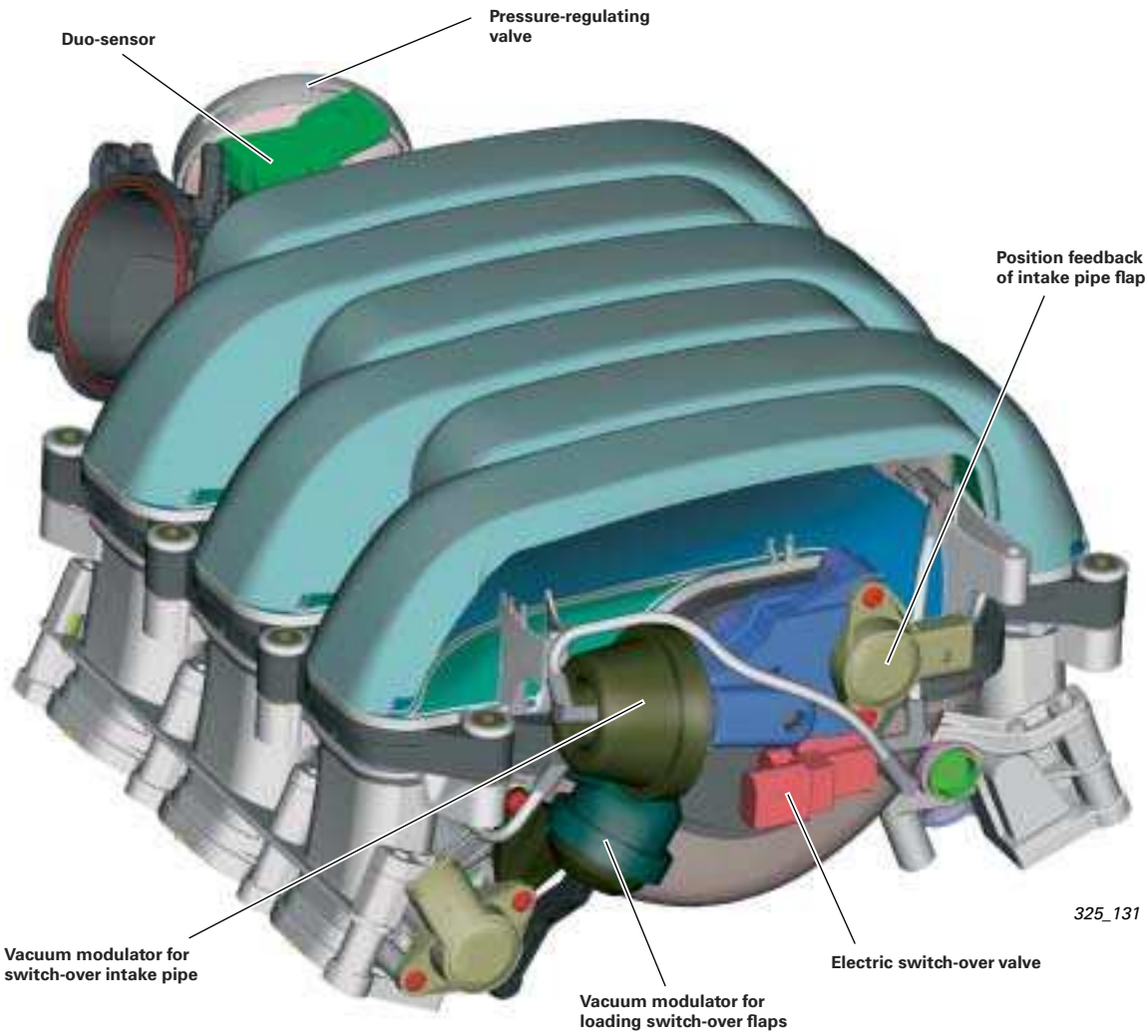

The intake pipe in the cylinder head is divided horizontally into two halves by an inserted refined-steel plate.
It is possible to close off the lower intake pipe using the pre-positioned intake pipe flaps. This increases the flow intensity and causes a rolling movement (tumble) of the air columns in the combustion chamber. The best possible swirling of the fuel-air mixture is achieved in this way.

The intake pipe flaps are fitted eccentrically in order to reduce any flow losses. As a result, they are completely integrated into the pipe wall in open position.

The 2-stage adjustment of the intake pipe flaps is achieved via vacuum, while spring force is responsible for readjustment.
In normal position, the flaps are closed as a result of spring force (small cross-section).
The position is reported back via hall sensors.

325_127

325_061

Exhaust system

The exhaust manifold is a cast-iron part.
Connections to the cylinder head are divided into individual flanges in order to prevent thermal stress.
The exhaust gasses are combined from cylinder 3 to cylinder 2 to cylinder 1, i.e. not a cloverleaf model.

The oxygen sensor is fitted at the best possible flow point for all three cylinders, thereby allowing cylinder-selective oxygen sensing.
Engine management can thus have a greater influence on the fuel/air mix formation of each cylinder.

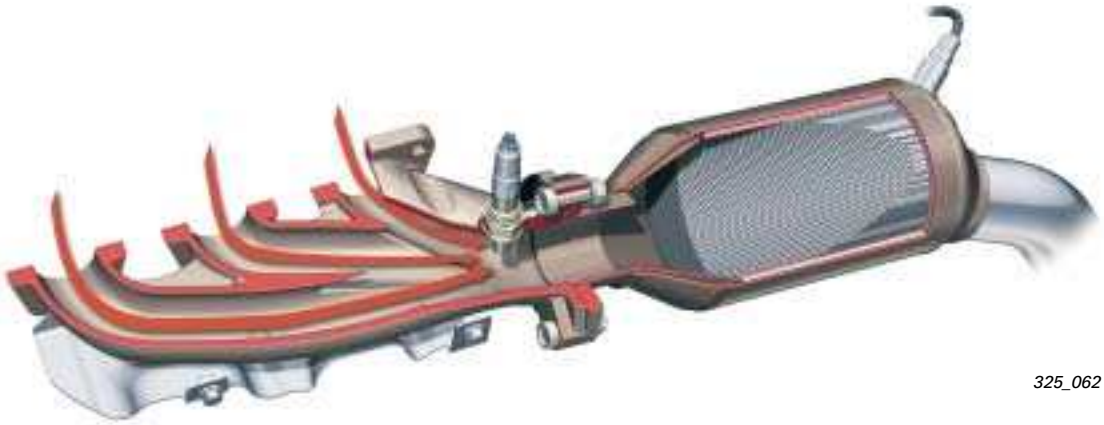

325_062

Fuel supply

System overview

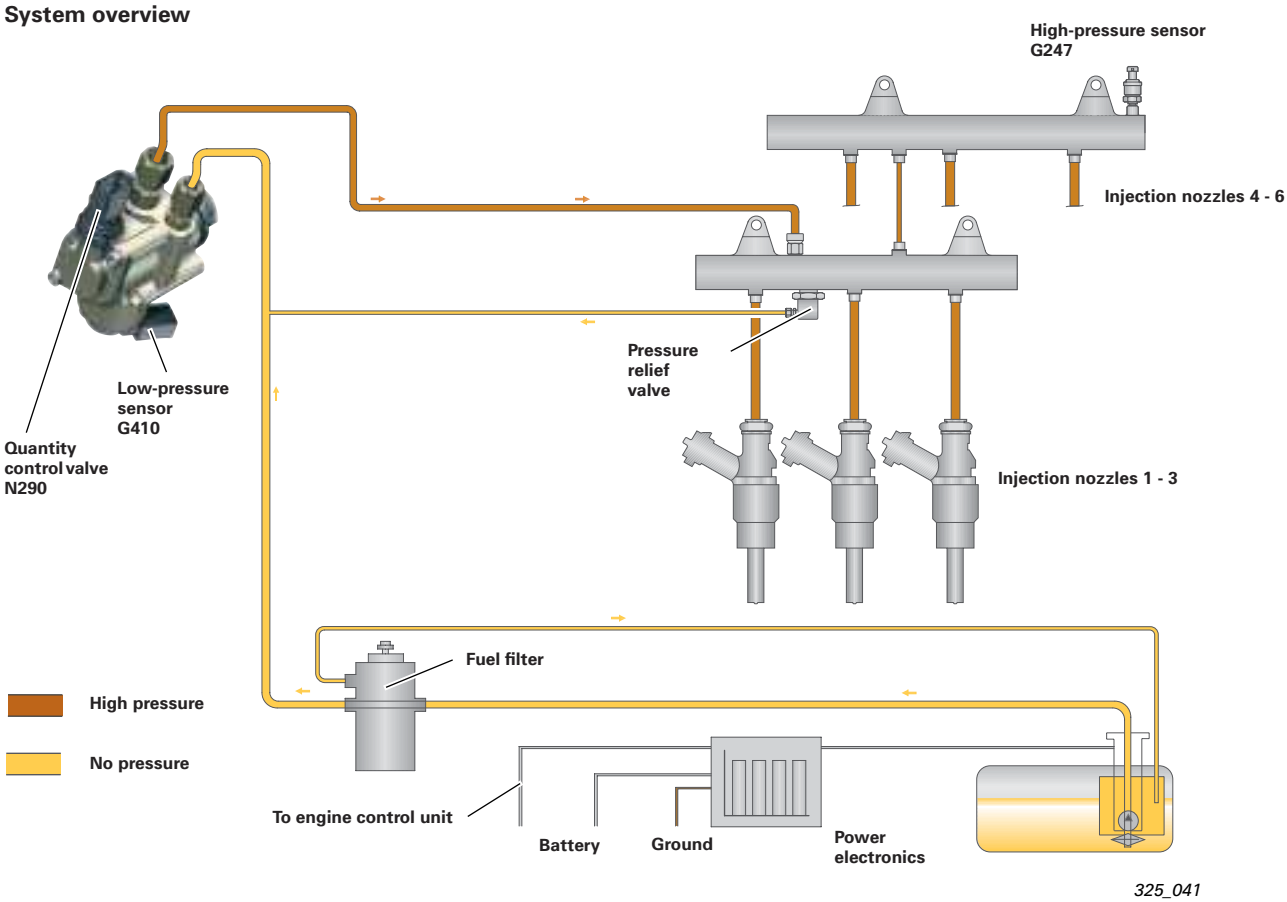

The fuel supply system is divided into two systems, namely the low-pressure and the high-pressure system.

The low-pressure system is a requirement-regulated fuel system. Here, the power of the electric fuel pump (EFP) is regulated by performance electronics via PWM signal (pulse width-modulated).
Signal transfer from the engine control unit to the performance electronics also takes place via the PWM signal. There is no fuel return line.
The low-pressure sensor N410 ensures that the variable pressure is maintained.

Advantages

- Energy saving due to the lower power consumption of the electric fuel pump
- Lower heat absorption in the fuel – only the fuel quantity that is currently required is compressed
- The service life of the electric fuel pump is extended
- Reduced noise, particularly at idle speed
- On-board diagnosis of the low-pressure system and the shock absorber of the high-pressure system is possible (via the low-pressure sensor)

The pre-feed pressure must be increased by 2 bar for the following operating states:

- When stopping the engine (electric fuel pump after-run)
- Before starting the engine (fuel pump fore-run) when the ignition is on or when the driver's door contact is up
- While starting the engine and up to around 5 seconds after engine start
- When warm-starting and when the engine is warm – the time depends on the temperature (t < 5 seconds) in order to prevent the formation of vapour bubbles

Note:

When the pump control unit or the engine control unit is replaced, the pump control unit must always be adapted accordingly using the specified troubleshooting steps.

High-pressure system

The high-pressure system is made up of the following components:

- High-pressure fuel distributor panel, integrated in the intake manifold flange, with pressure sensor and pressure-control valve
- High-pressure fuel injection pump
- High-pressure fuel lines
- High-pressure injection valves

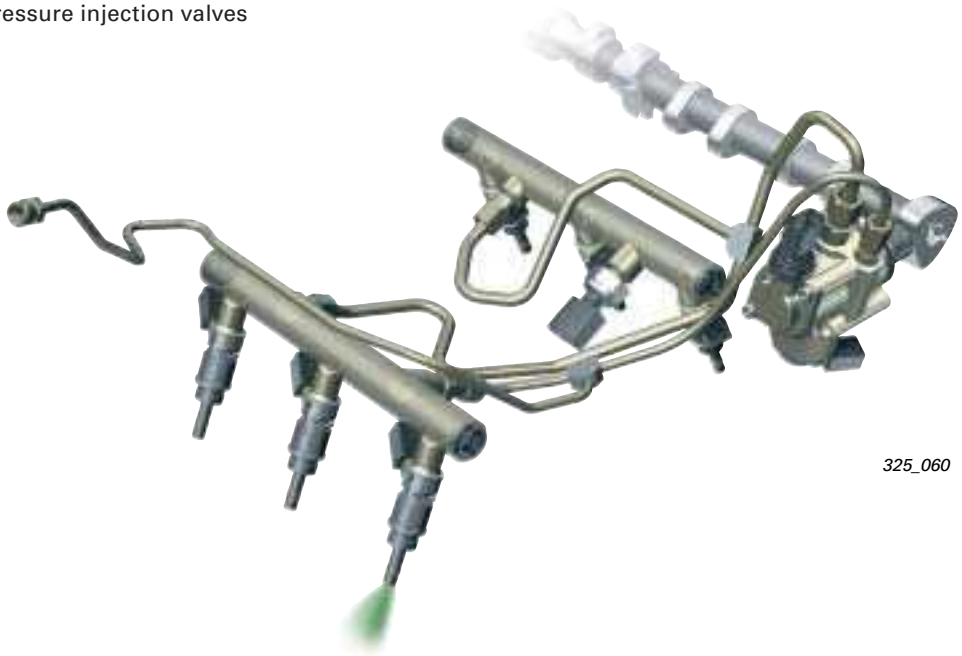

325_060

Single-piston high-pressure pump

This is manufactured by Hitachi.
It is driven at the end of the inlet camshaft of bank 2 via a triple cam.
It produces a fuel pressure of between 30 and 120 bar. The pressure is set by the quantity control valve N290, depending on the nominal value.
The fuel pressure sensor G247 monitors the pressure here.

The pump does not have a leakage line, but feeds the controlled fuel back into the flow-side internally.
The low-pressure fuel sensor G410 is integrated in the pump.

This system is a requirement-regulated high-pressure pump.
This means that only the quantity of fuel stored in the engine control unit map is fed into the high-pressure rail.

The advantage of this system compared with a continuous-feed high-pressure pump is the reduced drive power. Only the fuel that is actually needed is fed into the system.

325_124

Intake stroke

The shape of the cam and the force of the piston springs move the pump piston downwards.
The increased space in the inside of the pump causes the fuel to flow in. The quantity control valve ensures that the low-pressure valve remains open.
The quantity control valve is de-energised.

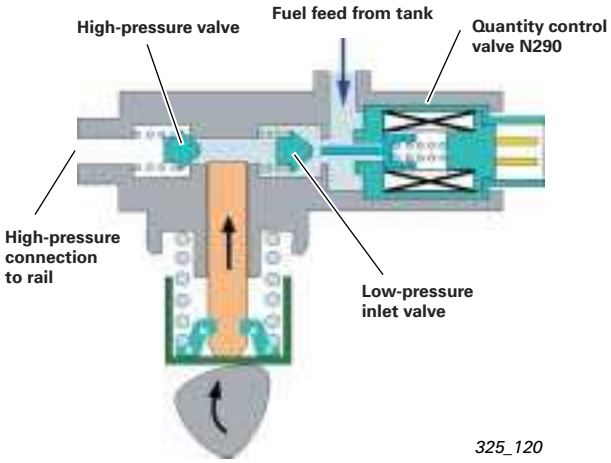

325_120

Useful stroke

The cam moves the pump piston upwards. Pressure still cannot be built up because the quantity control valve is de-energised.
This prevents the low-pressure inlet valve from closing.

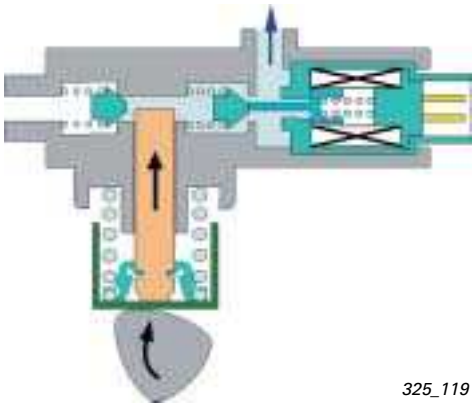

325_119

Pressure stroke

The engine control unit now supplies current to the quantity control valve. The magneto armature is drawn up.
The pressure inside the pump presses the low-pressure inlet valve into its seat.
If the pressure inside the pump exceeds the rail pressure, the return valve is pushed open and fuel is delivered to the rail.

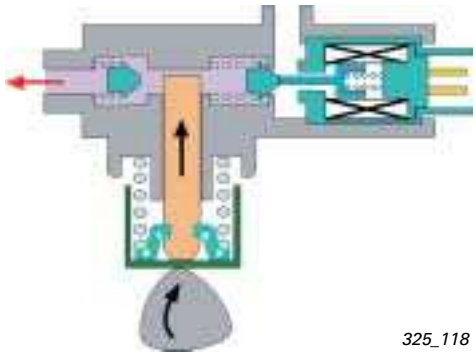

325_118

Like the high-pressure pump, the high-pressure injection valves are also manufactured by Hitachi. Their job is to inject fuel directly into the combustion chamber at the right time and in the right quantity.

The engine control unit activates the injection valves by applying approx. 65 volts of power.
The quantity of fuel is determined by the opening time and the fuel pressure.
The combustion chamber is sealed with a Teflon seal, which must always be replaced following disassembly.

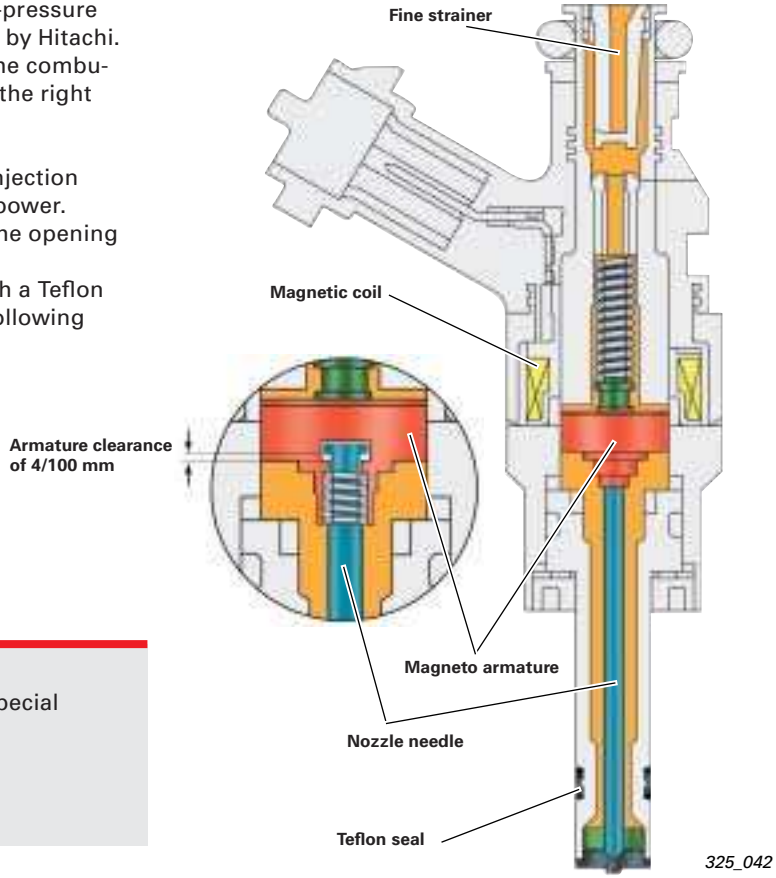

Note:

Replace the Teflon seal using the special tool T10133.

FSI operating methods

The FSI combustion procedure is essentially restricted to homogeneous operation.

The "layer loading operation" method is not implemented for the following reason.

In the lower engine speed range and with a low engine load, a high-volume 6-cylinder engine has a lower thermal load than a 4-cylinder engine with low piston displacement. Due to the low exhaust gas temperature, the NO_x storage catalytic converter does not reach its operating temperature of up to 600 °C.

The "homogeneous operation" method is divided into two operating states.

1. Homogeneous operation with closed intake manifold flap

The intake manifold flap is closed in the engine speed range up to approx. 3,750 rpm or with an engine load of up to 40 %, depending on the map.
The lower intake pipe is closed off.
The mass air flow, which is sucked in, is accelerated via the top intake pipe and flows in rolls (tumbles) into the combustion chamber.
Injection takes place in the intake tract.

2. Homogeneous operation with open intake manifold flap

The intake manifold flap opens at an engine speed of approx. 3,750 rpm or with an engine load of more than 40 %. This ensures high air throughput at a high engine speed and engine load.
This is supported by a high volume-dimensioned two-stage intake pipe, which has switched to suit the performance range (short intake pipe).
Injection also takes place in the intake tract here.

Engine management

System overview

Fault prompting replacement	Sensors
Fault memory entry / replacement model / MIL on	Manifold pressure sensor G71 Intake air temperature sensor G42
Fault memory entry / compensating engine speed from camshaft speed / MIL on	Engine speed sensor G28
Fault memory entry / no camshaft adjustment / loss of power / MIL on	Hall sender G40 Hall sender G163 + G300 Hall sender G301
Fault memory entry / MIL on / EPC on	Throttle control unit J338 Angle sensor G188/G187
Fault memory entry / MIL on / EPC on	Sensor for accelerator pedal position G79 Sensor 2 for accelerator pedal position G185 Hand switch F36 + F194 only
Fault memory entry in transmission control unit	Brake light switch F Brake pedal switch for GRA F47
Fault memory entry / no high pressure possible / loss of power / MIL on Fault memory entry / no low-pressure regulation	Fuel pressure sensor G247 Low-pressure fuel sensor G410
Fault memory entry / intake manifold flaps screwed down / loss of power / MIL on	Potentiometer for intake manifold flap 1 G336 Potentiometer for intake manifold flap 2 G512
Fault memory entry / replacement model / loss of power	Knock sensor G61, G66
Fault memory entry / replacement model / loss of power	Coolant temperature sensor G62
Fault memory entry / intake manifold flaps set / loss of power / MIL on	Valve for intake manifold flap N316
Fault memory entry / loss of power	Sensor for switch-over intake pipe position G513
Fault memory entry / no oxygen sensing / MIL on	Oxygen sensor ahead of catalytic converter G108 + G39 Oxygen sensor behind catalytic converter G130 + G131
	Additional signals: J393 (door contact signal), J518 (start request), J695 (output from start relay, terminal 50 stage 2), J53 (output from start relay, terminal 50 stage 1), J518 (terminal 50 on starter), J364 (auxiliary heating), E45 (speed control system)

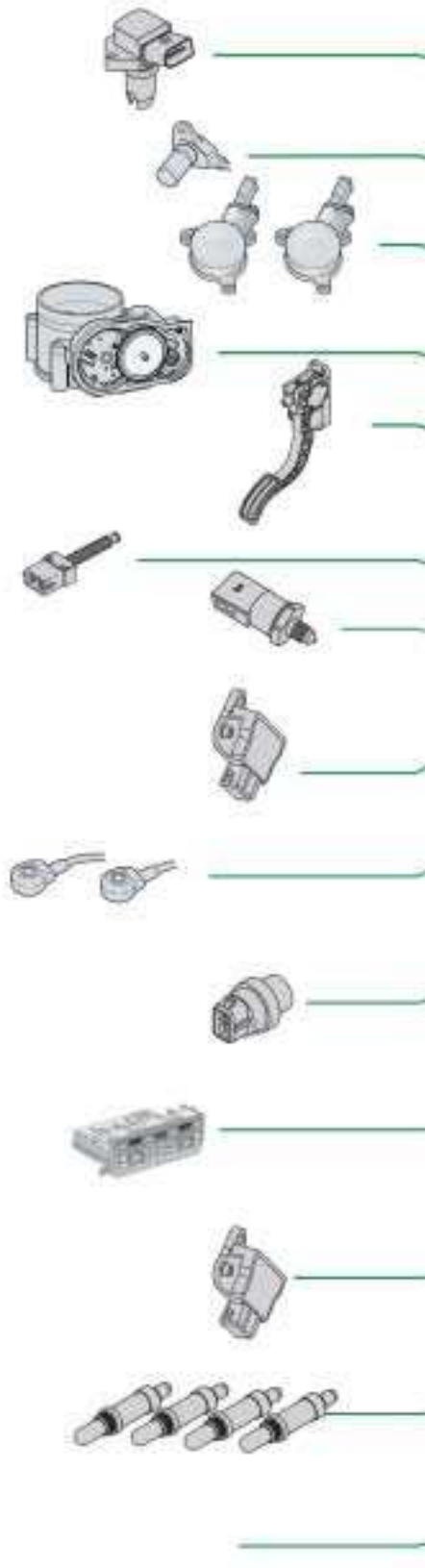

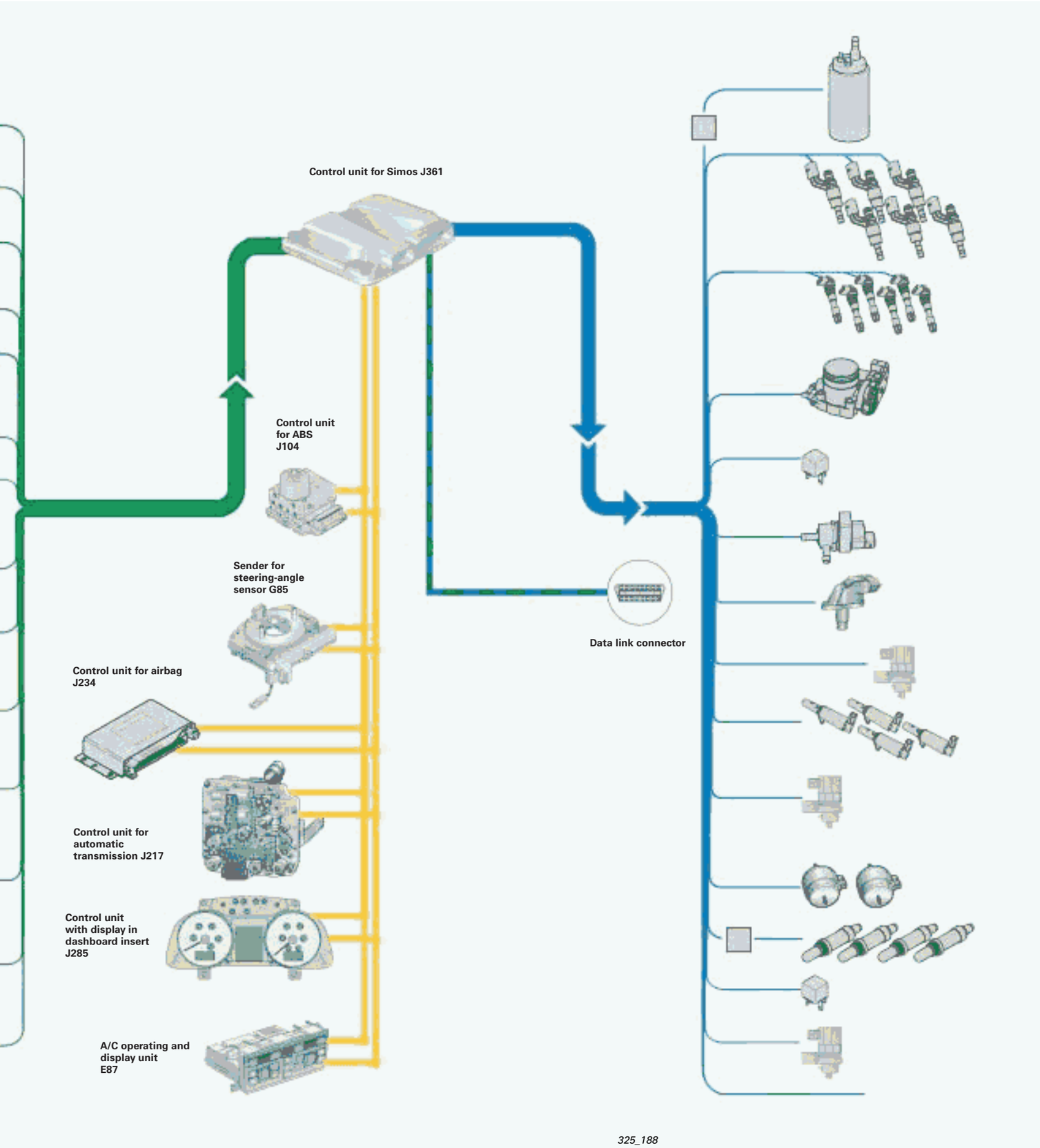

325_188

Actuators	Fault prompting replacement
Fuel pump control unit J538 Fuel pump V276	Fault memory entry
Injection valves for cylinders 1 - 6 N30 - 33 and N83, N84	Fault memory entry / misfiring / cylinder deactivation / MIL on
Ignition coil 1 with final output stage N70 Ignition coil 2 with final output stage N127 Ignition coils N70, N127, N291, N292, N323, N324	Fault memory entry / misfiring / cylinder deactivation / MIL on
Throttle control unit J338 Throttle drive G186	Fault memory entry / MIL on / EPC on
Power supply relay for engine components J757	Fault memory entry / no high pressure possible / loss of power / MIL on
Solenoid valve for carbon canister system N80	Fault memory entry / no tank ventilation possible / MIL on
Valve for fuel metering N290	Fault memory entry / no high pressure possible / loss of power / MIL on
Valve for register manifold switching N156	Fault memory entry / loss of power
Valve 1 + 2 for camshaft adjustment N205/N208 Valve 1 + 2 for exhaust camshaft adjustment N118/N119	Fault memory entry / loss of power / MIL on
Valve for intake manifold flaps N316	Fault memory entry / butterfly valves set / loss of power / MIL on
Solenoid valves for electro-hydraulic engine mount N144/N145	Fault memory entry
Control unit for oxygen sensors J754 Oxygen sensor heating Z19, Z28, Z29, Z30 Pre-catalytic converter 1 G39 and pre-catalytic converter 2 B108 Post-catalytic converter G130/G131	Fault memory entry / no oxygen sensing / MIL on
Relay for additional coolant pump J469 and pump for coolant after-run V51	
Intake air switch-over valve N335	Fault memory entry
Additional signals: Fan stage 1 / PWM cooler fan 1 J293	

Function diagram

Colour coding

= Input signal
= Positive
= Bi-directional
= Output signal
= Ground
= CAN BUS

Components

A	Battery
E45	Switch for speed control system
E408	Engine start/stop button
E415	Switch for access and start authorisation
F194	Clutch pedal switch (manual transmission only)
G	Sender for fuel level indicator
G28	Engine speed sensor
G39	Oxygen sensor
G40	Hall sender
G42	Intake air temperature sensor
G61	Knock sensor 1
G62	Coolant temperature sensor
G66	Knock sensor 2
G71	Manifold pressure sensor
G79	Sensor for accelerator pedal position
G108	Oxygen sensor 2
G130	Oxygen sensor behind catalytic converter
G131	Oxygen sensor 2 behind catalytic converter
G163	Hall sender 2
G169	Fuel level sensor -2-
G185	Sensor -2- for accelerator pedal position
G186	Throttle drive for electric gas actuation
G187	Angle sensor -1- for throttle drive
G188	Angle sensor -2- for throttle drive
G247	Fuel pressure sensor
G300	Hall sender 3
G301	Hall sender 4
G336	Potentiometer for intake manifold flap 1
G410	Fuel pressure sensor for low pressure
G501	Sender -1- for input shaft speed
G513	Sender for switch-over pipe position
G512	Potentiometer for intake manifold flap 2
J53	Starter relay
J271	Power supply relay for Motronic
J317	Voltage supply relay, terminal 30
J329	Power supply relay, terminal 15
J338	Throttle control unit
J361	Control unit for Simos
J496	Relay for auxiliary coolant pump
J518	Control unit for access and start authorisation
J538	Fuel pump control unit
J694	Power supply relay, terminal 75
J695	Starter relay
J757	Power supply relay for engine components
N30 ... ... N33	Injection valves for cylinders 1 - 4
N70	Ignition coil 1 with final output stage
N80	Solenoid valve 1 for carbon canister
N83	Injection valve for cylinder 5
N84	Injection valve for cylinder 6
N127	Ignition coil 2 with final output stage
N144	Left solenoid valve for electro-hydraulic engine mount
N145	Right solenoid valve for electro-hydraulic engine mount
N156	Valve for register manifold switching
N205	Valve -1- for camshaft adjustment
N208	Valve -2- for camshaft adjustment
N290	Fuel metering valve
N291	Ignition coil 3 with final output stage
N292	Ignition coil 4 with final output stage
N316	Valve for intake manifold flap
N318	Valve -1- for exhaust camshaft adjustment
N319	Valve -2- for exhaust camshaft adjustment
N323	Ignition coil -5- with final output stage
N324	Ignition coil -6- with final output stage
N335	Intake air switch-over valve
S	Fuse
S204	Fuse 1, terminal 30
V51	Pump for coolant after-run
V276	Fuel pump 1
1	Fuel level for dashboard insert
2	Fuel level for dashboard insert (for quattro only)
3	Terminal 87, from control unit for auxiliary heating
4	Door contact signal
5	Terminal 50, stage 1
6	Terminal 50, stage 2
7	Terminal 50
8	Selector lever position (P/N)
9	Engine speed
10	Fan stage 1
11	Redundant brake light signal
12	Brake light signal
13	CAN Drive data bus, High
14	CAN Drive data bus, Low
15	CAN Convenience data bus
16	CAN Drive data bus
17	To lights
x + y	connections within the function diagram

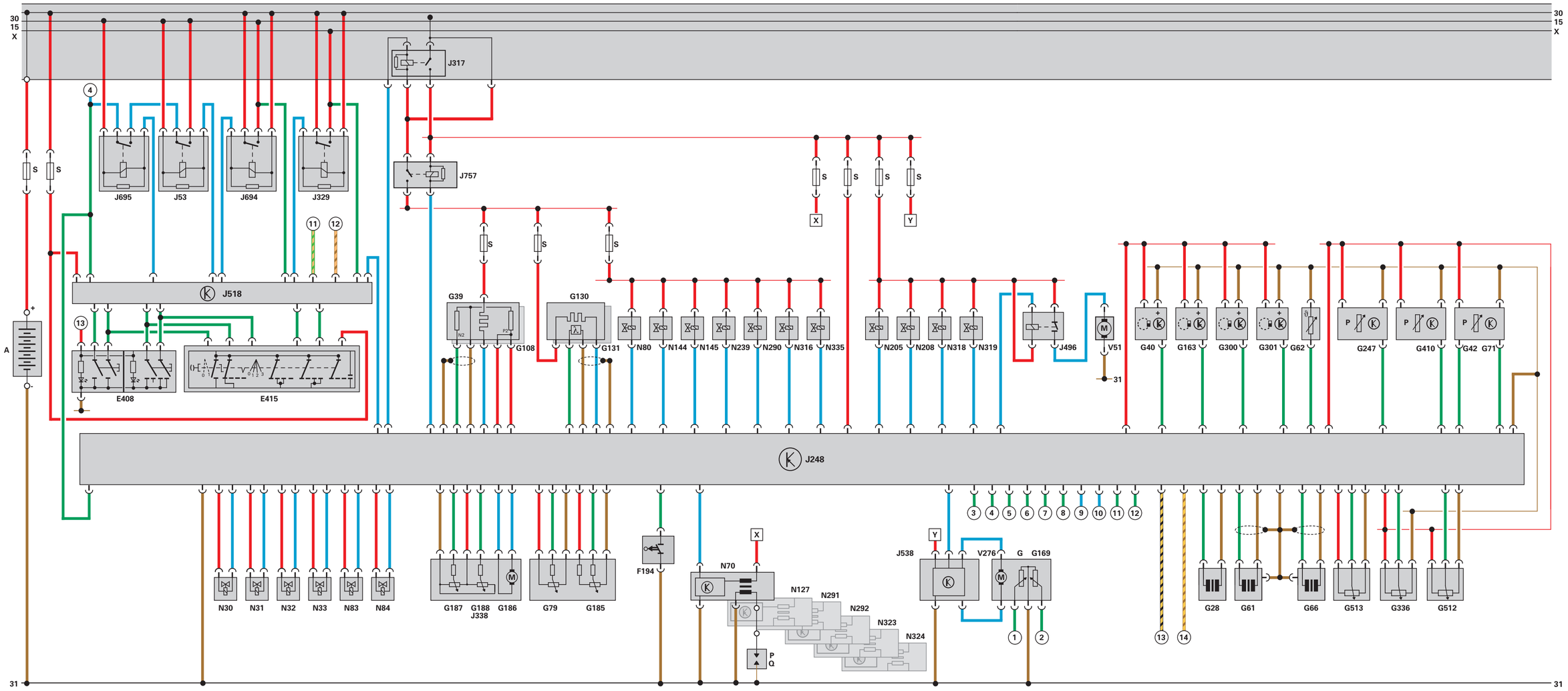
30
15
X
J317
J695
J53
J694
J329
J757
J518
E408
E415
A
G39
G108
G130
G131
N80
N144
N145
N239
N290
N316
N335
N205
N208
N318
N319
J496
V51
G40
G163
G300
G301
G62
G247
G410
G42
G71
J248
N30
N31
N32
N33
N83
N84
G187
G188
J338
G186
G79
G185
F194
N70
N127
N291
N292
N323
N324
J538
V276
G
G169
G28
G61
G66
G513
G336
G512
31

325_075

Service

Special tools

Here you see the new special tools
for the 3.0 l V6 TDI and the 3.2 l V6 FSI engine.

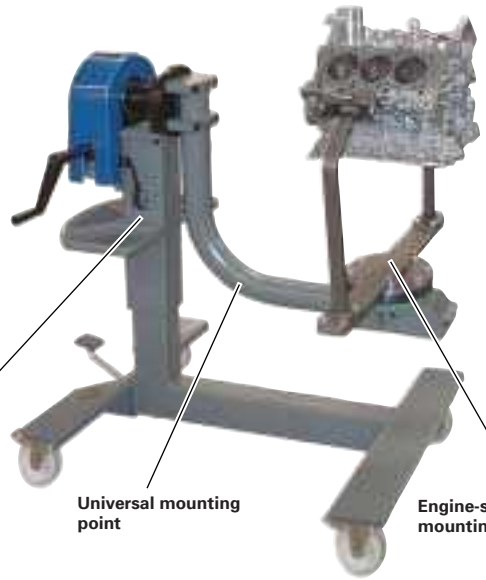

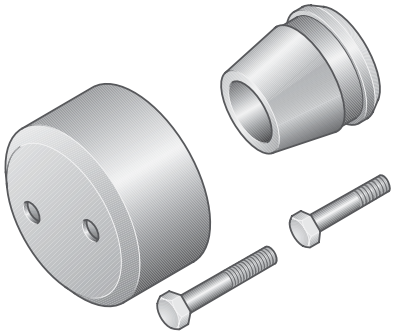

325_206

T40048
Assembly device for
crankshaft sealing ring

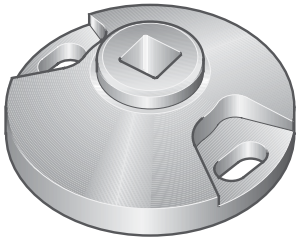

325_207

T40049
Adapter
Crankshaft turns on flywheel side

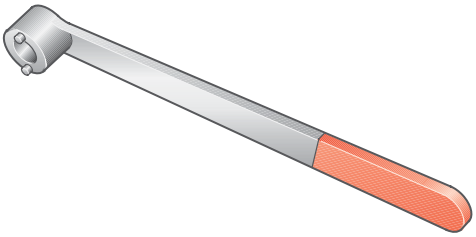

325_208

T40053
Counterer
for high-pressure pump wheel

325_209

T40055
Socket wrench for
high-pressure line

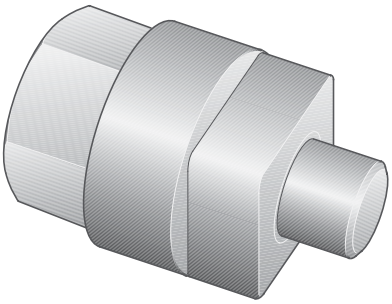

325_210

T40058
Adapter
Crankshaft turns belt pulley

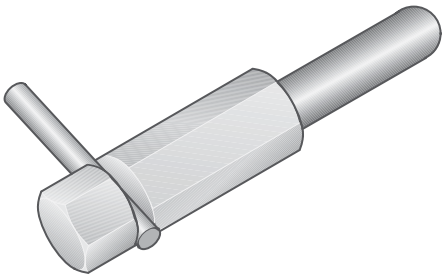

325_211

T40060
2 alignment pins
for chain sprocket

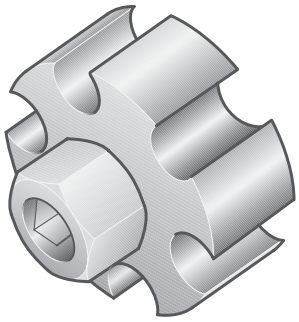

325_212

T40061
Adapter
for camshaft

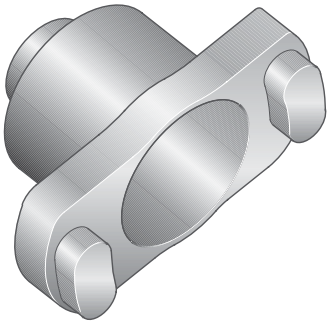

325_213

T40062
Adapter
for chain sprocket

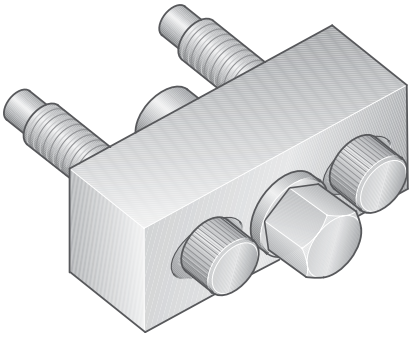

325_214

T40064
Pullers
for high-pressure pump wheel

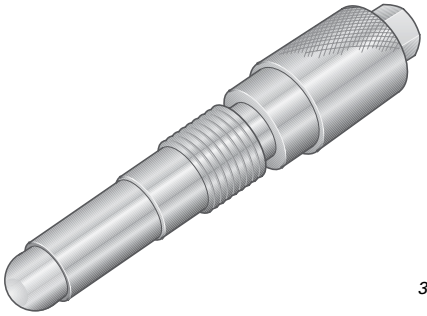

325_139

T40069
Fixing pin

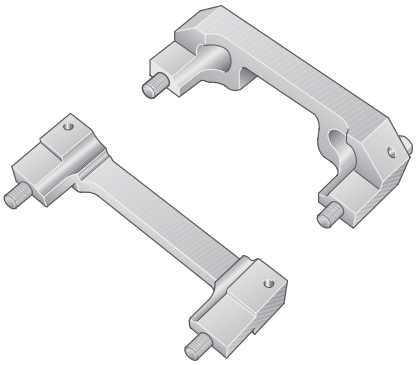

325_140

T40070
Camshaft fixing device

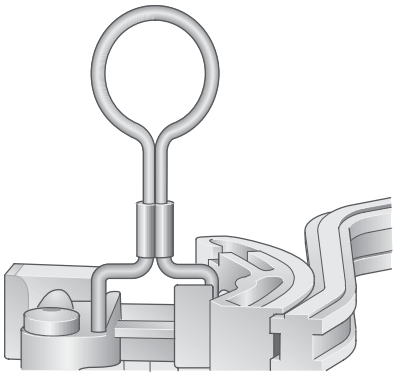

325_141

T40071
Lock pin
for chain tensioner

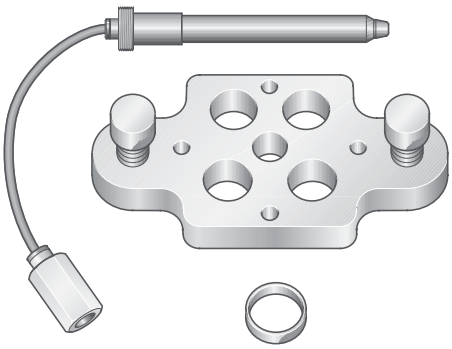

VAS 5161
Valve keys a + e
VAS 5161/xx

Introduction

In addition to the successful multitronics, newly developed 6-gear transmissions will be used exclusively in the Audi A6 ´05.

Manual transmission

Two new generations of 6-gear manual gearboxes, front and quattro versions respectively, now replace the previously used 5-gear and 6-gear transmissions.

In addition to increasing torque capacity, the main emphasis here has been placed on reworking the inner and outer gearshift. Gearshift force, comfort and precision have been significantly improved. The gearboxes are already used in some Audi A4 and Audi S4 models.

The versions 01X (front) and 02X (quattro) are used for torques of up to 330 Nm.

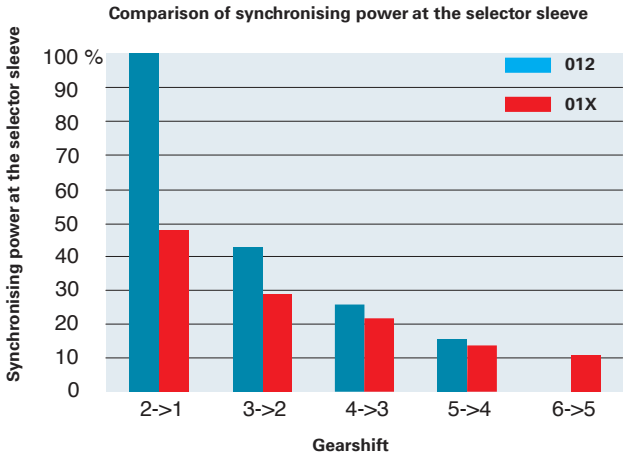

325_202

01X

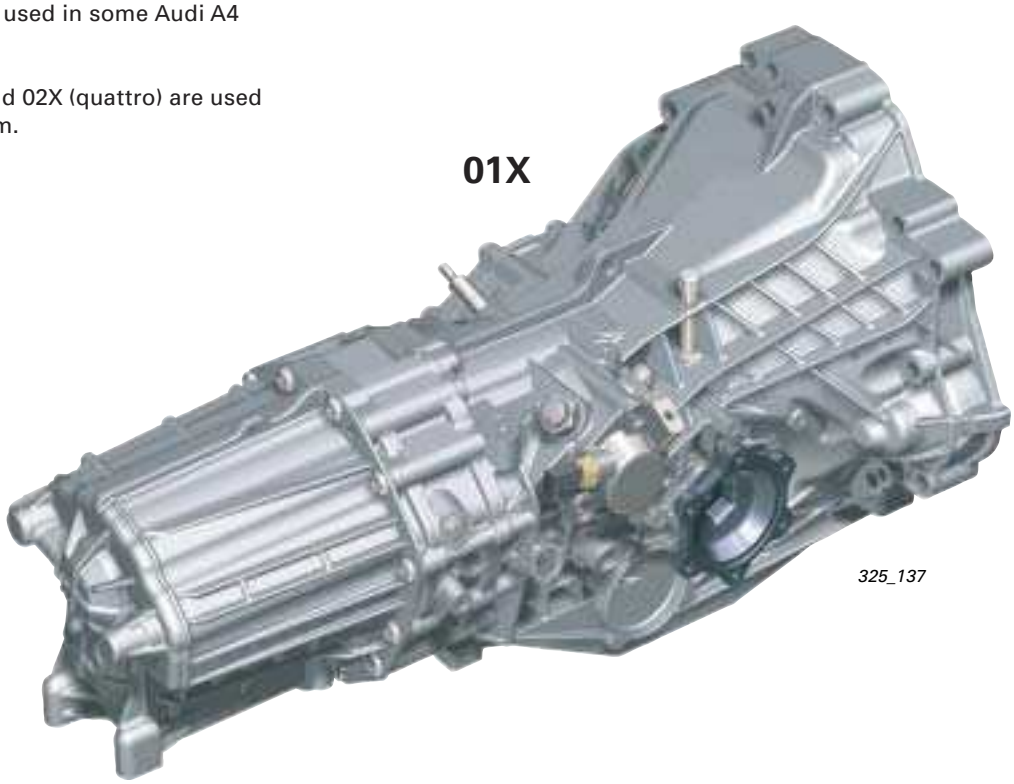

325_137

The 01X is designed for the following engines:
– 2.0 l R4 TDI PD
– 2.4 l V6 MPI
– 3.2 l V6 FSI

02X

325_195

The 02X is designed for the following engines:
– 2.4 l V6 MPI
3.2 l V6 FSI

A maximum possible gear spread in the 7.5 range together with the 6th gear opens up a wide range of possible uses. For example, for a sporty model with short gearshifts for maximum acceleration or for the very economic model, with a "long" 6th gear for fuel economy without loosing out too much on driving dynamics.

The 0A3 (quattro) is used for a torque of 350 Nm or higher.

0A3

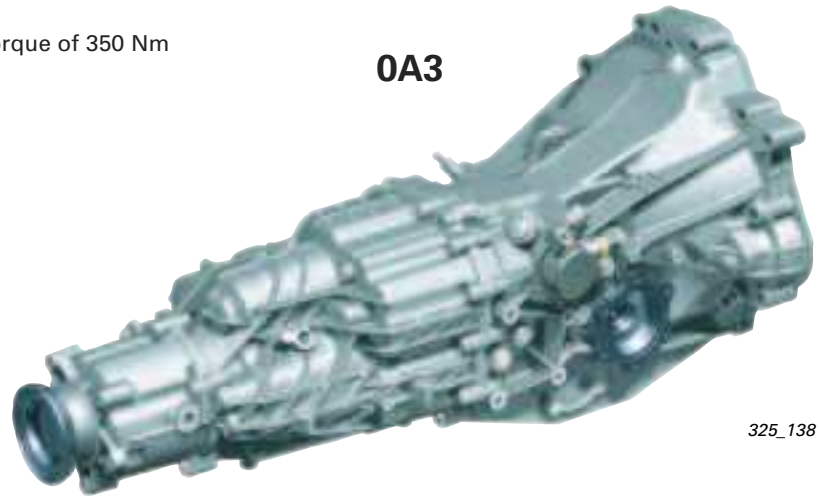

The 0A3 is designed for the 3.0 l V6 TDI CR.

325_138

Technical data

Service code	0A3	01X	02X
Manufacturer code	ML450 - 6Q	ML310 - 6F	ML310 - 6Q
Development/manufacturer	Getrag, Audi Getrag	Audi/VW Kassel	Audi/VW Kassel
Weight with oil (without clutch) in kg	72.7	58.6	69.7
Max. torque in Nm	450	330	330
Axle base in mm	82	75	
Oil quantity in l	3.2	3.0	3.5
Housing	3-part	3-part	4-part
	Aluminium with screwed-on steel-plate bearing carrier	Aluminium with central bearing housing	
Synchronisation	1st and 2nd gear with triple cones 3rd to 6th gear and Reverse with twin cones	1st gear with triple cones 2nd gear with twin cones 3rd to 6th gear and Reverse with a single outer cone	
Gear spread	Up to max. 7.5 possible	Up to max. 7.68 possible	
Central differential Torque distribution	Torsen 50/50	—	Torsen 50/50

Brief description of 0A3 gearbox

The new 6-gear manual gearbox 0A3 is a further development of the tried-and-trusted 01E gearbox, which rang in the 6-gear era at Audi at the beginning of the '90s.

Like the predecessor gearbox, it was developed jointly by Getrag and Audi and is manufactured by Getrag.

The transmission housing of the 0A3 gearbox is divided into 3 parts and is made completely from pressure-cast aluminium.

The axle base, which was increased from 75 mm (01E) to 82 mm, increases the lever arm, thereby allowing a higher torque transmission.

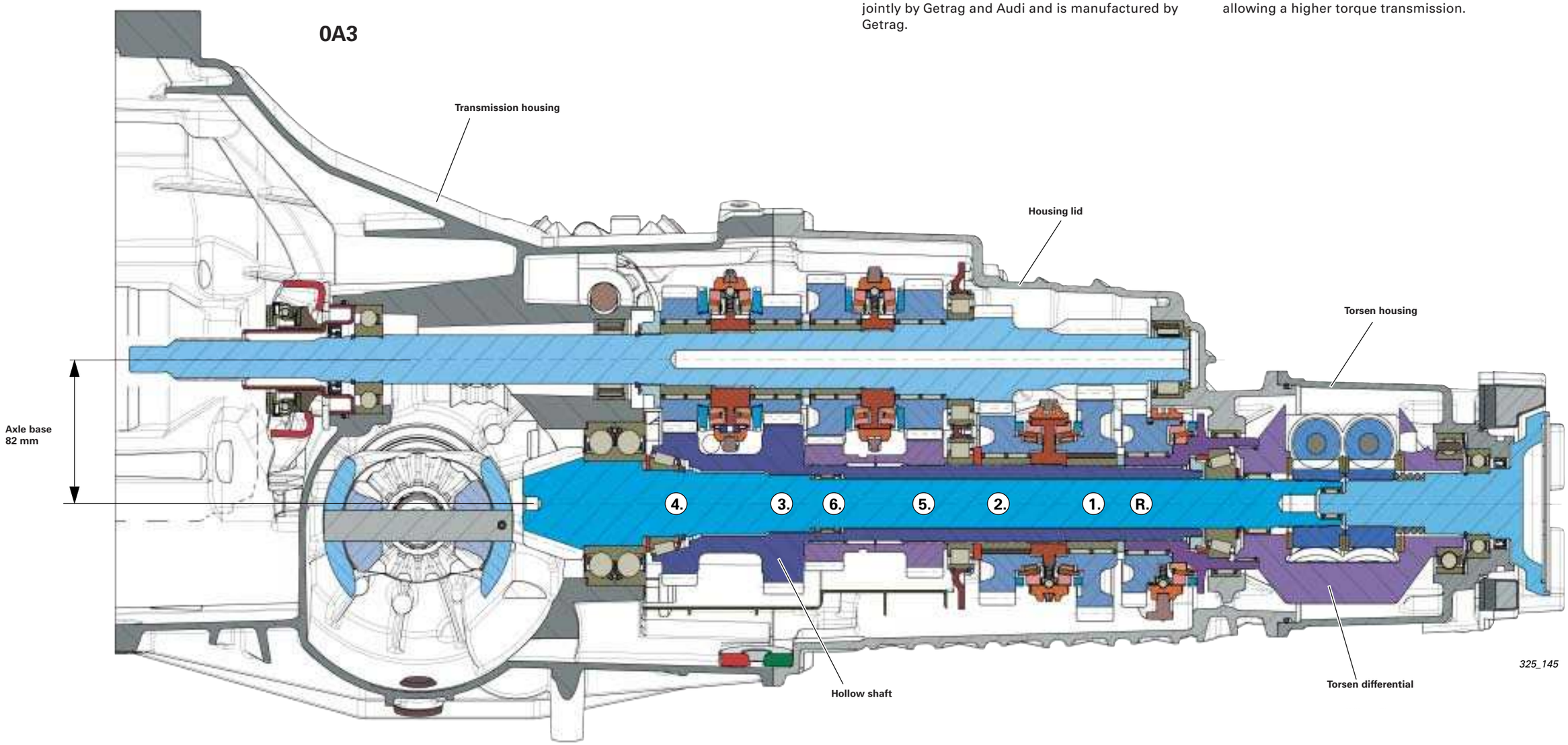

Note:

The clutch with SAC pressure plate, which you may already know from the predecessor, is used for power transmission in the 0A3 gearbox (see Self-Study Programme 198).

The gear set is operated in the previously tried-and-trusted way for longitudinal quattro gearboxes using the original quattro hollow shaft.

Four-wheel distribution is achieved using the Torsen differential, which has been used successfully since 1986.

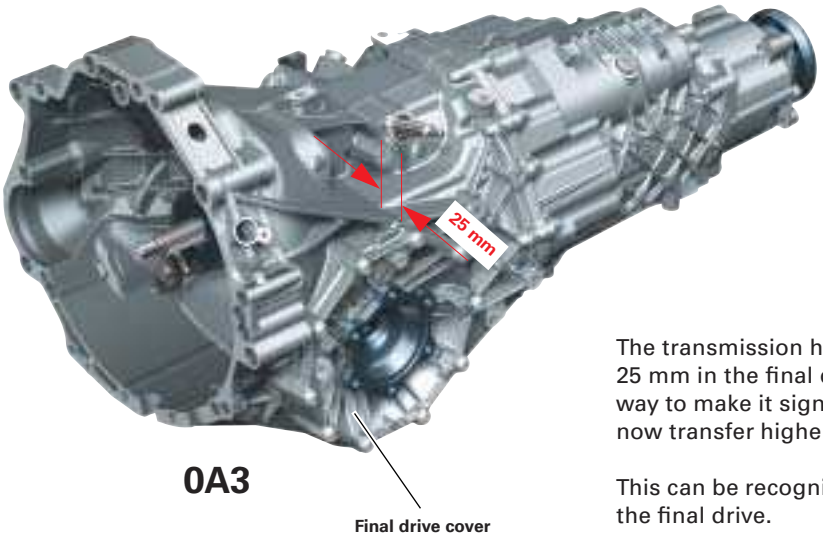

325_152

0A3

The transmission housing has been widened by 25 mm in the final drive area. It was possible in this way to make it significantly more sturdy and it can now transfer higher torques.

This can be recognised by the shell-shaped cover of the final drive.

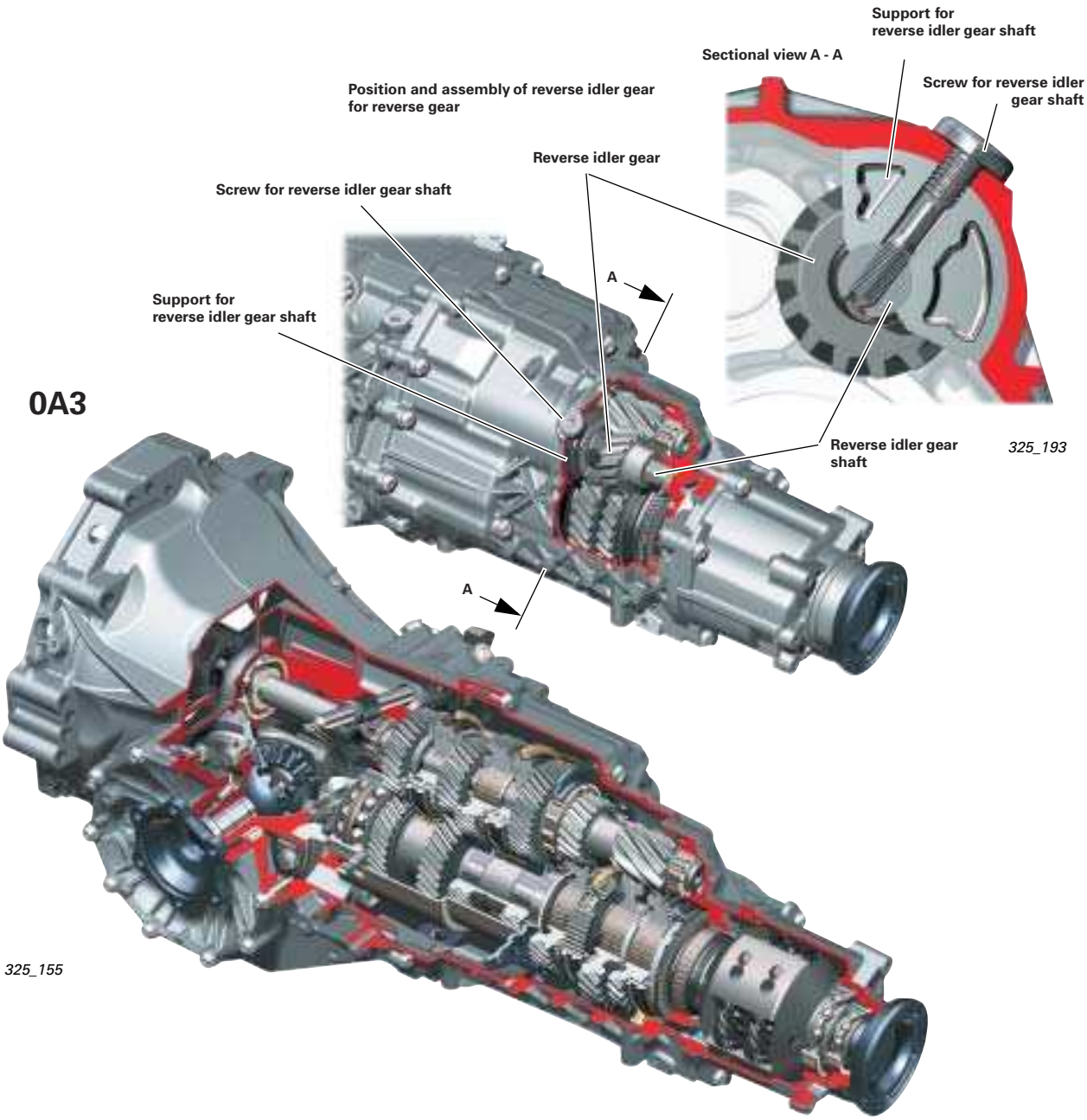

0A3

325_193

325_155

Brief description of the 01X/02X gearbox

The new 6-gear manual gearboxes 01X and 02X replace the previous generation of 5-gear manual gearboxes 012 (01W - 0A9) and 01A.

Like the predecessor gearbox, they were developed by Audi and are manufactured in the VW plant in Kassel.

The transmission housing of the 01X gearbox is divided into 3 parts and is made completely from pressure-cast aluminium.

The axle base, which was increased from 71 mm (012) to 75 mm, increases the lever arm, thereby allowing a higher torque transmission.

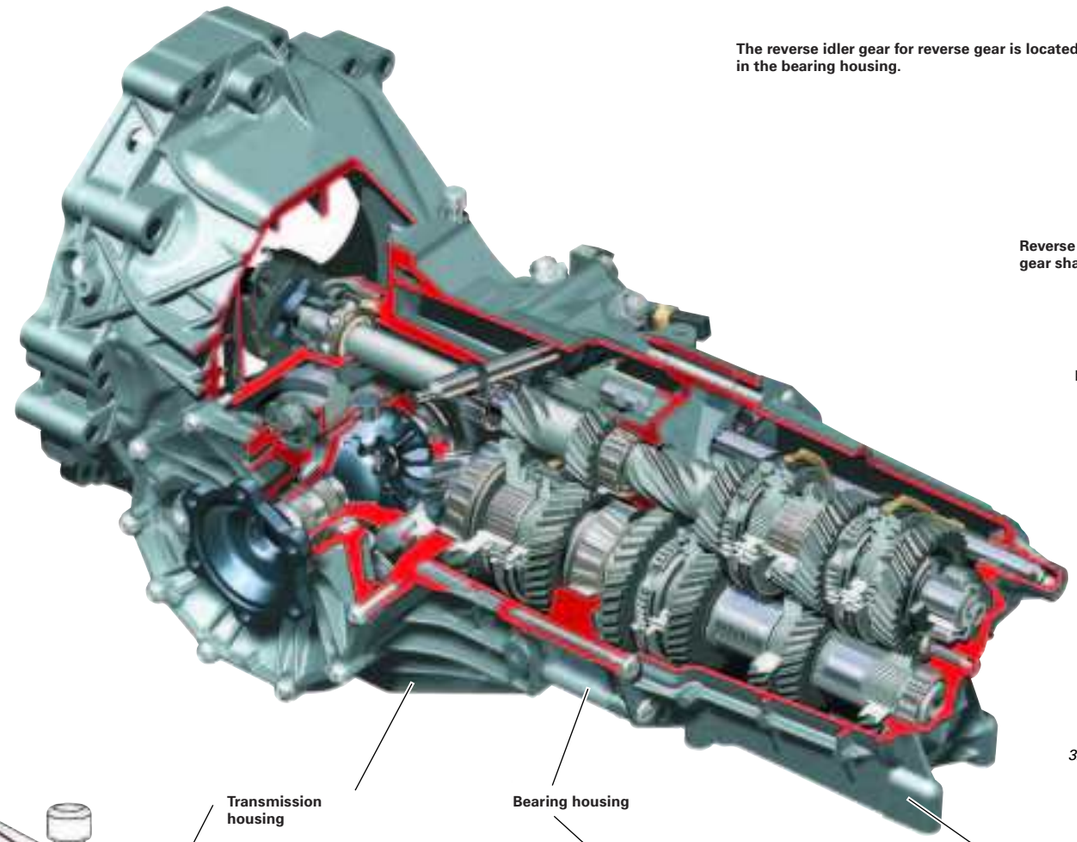

325_154

The reverse idler gear for reverse gear is located in the bearing housing.

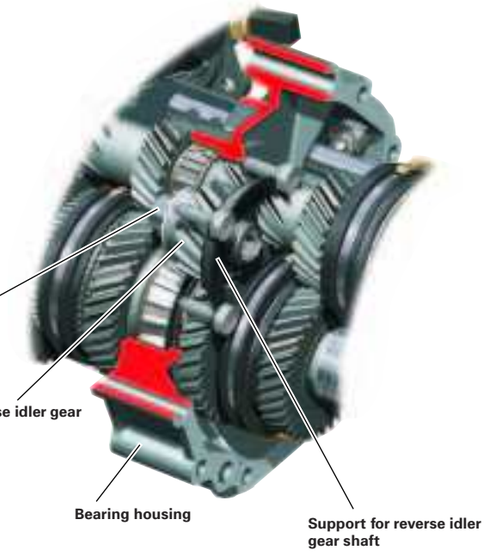

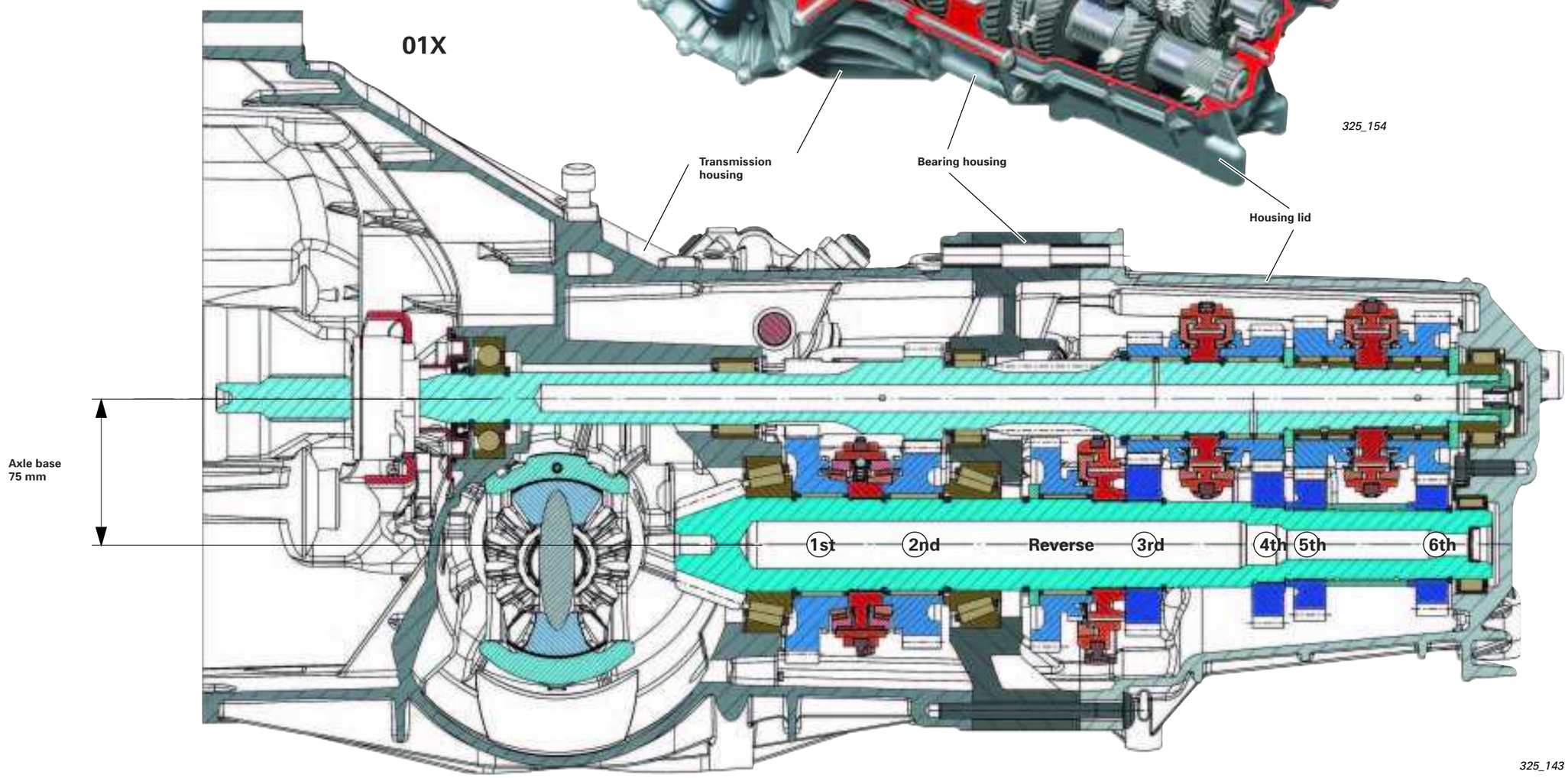

325_143

The gear set is operated in the previously tried-and-trusted way for longitudinal Front gearboxes as a twin-shaft gearbox and for longitudinal quattro gearboxes using the original quattro hollow shaft.

Four-wheel distribution is achieved using the Torsen differential, which has been used successfully since 1986.

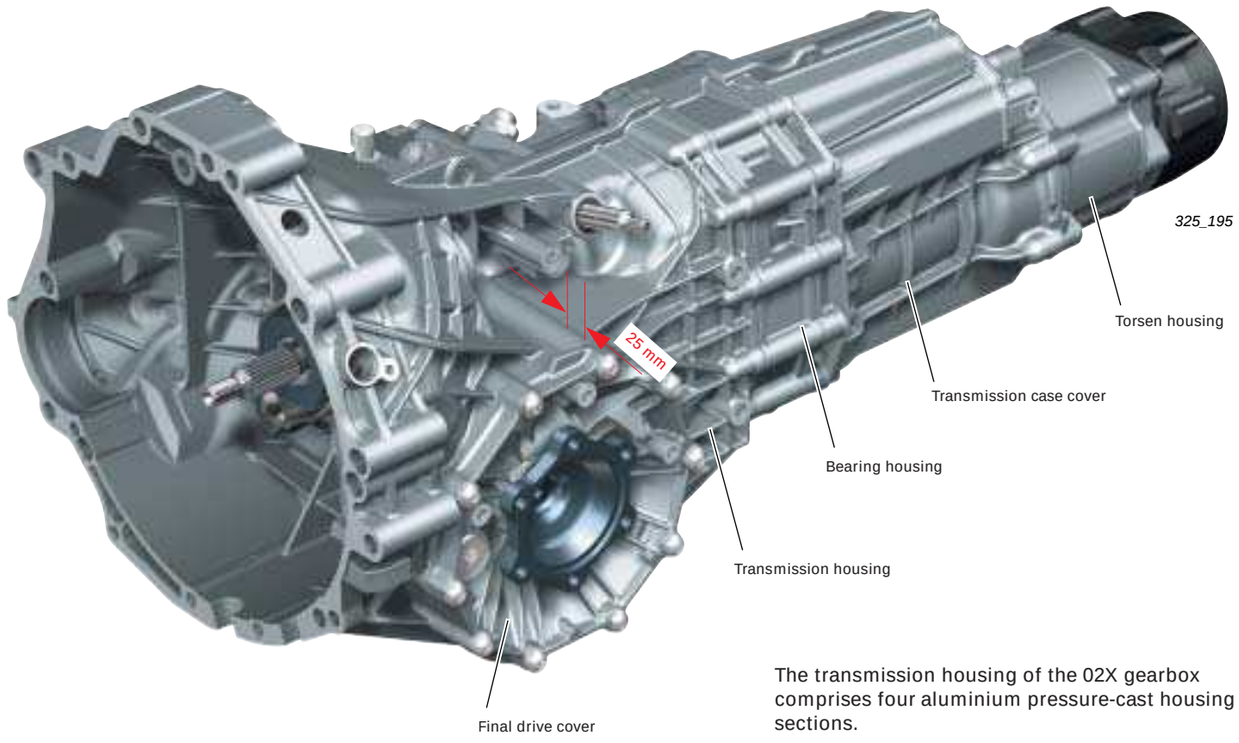

325_195

The transmission housing of the 02X gearbox comprises four aluminium pressure-cast housing sections.

The transmission housing has been widened in the final drive area, as in the 0A3 gearbox, in order to make it more rigid (01X and 02X).

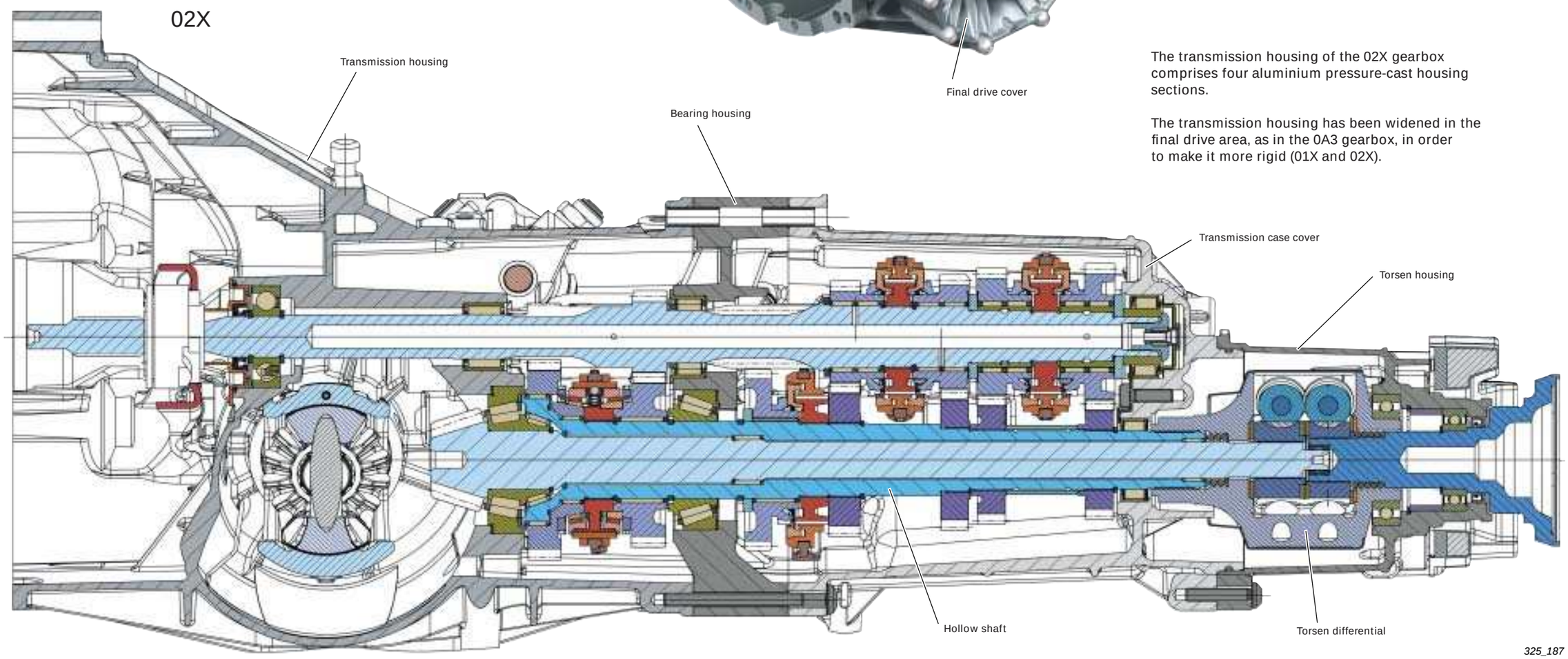

325_187

01X/02X bearings

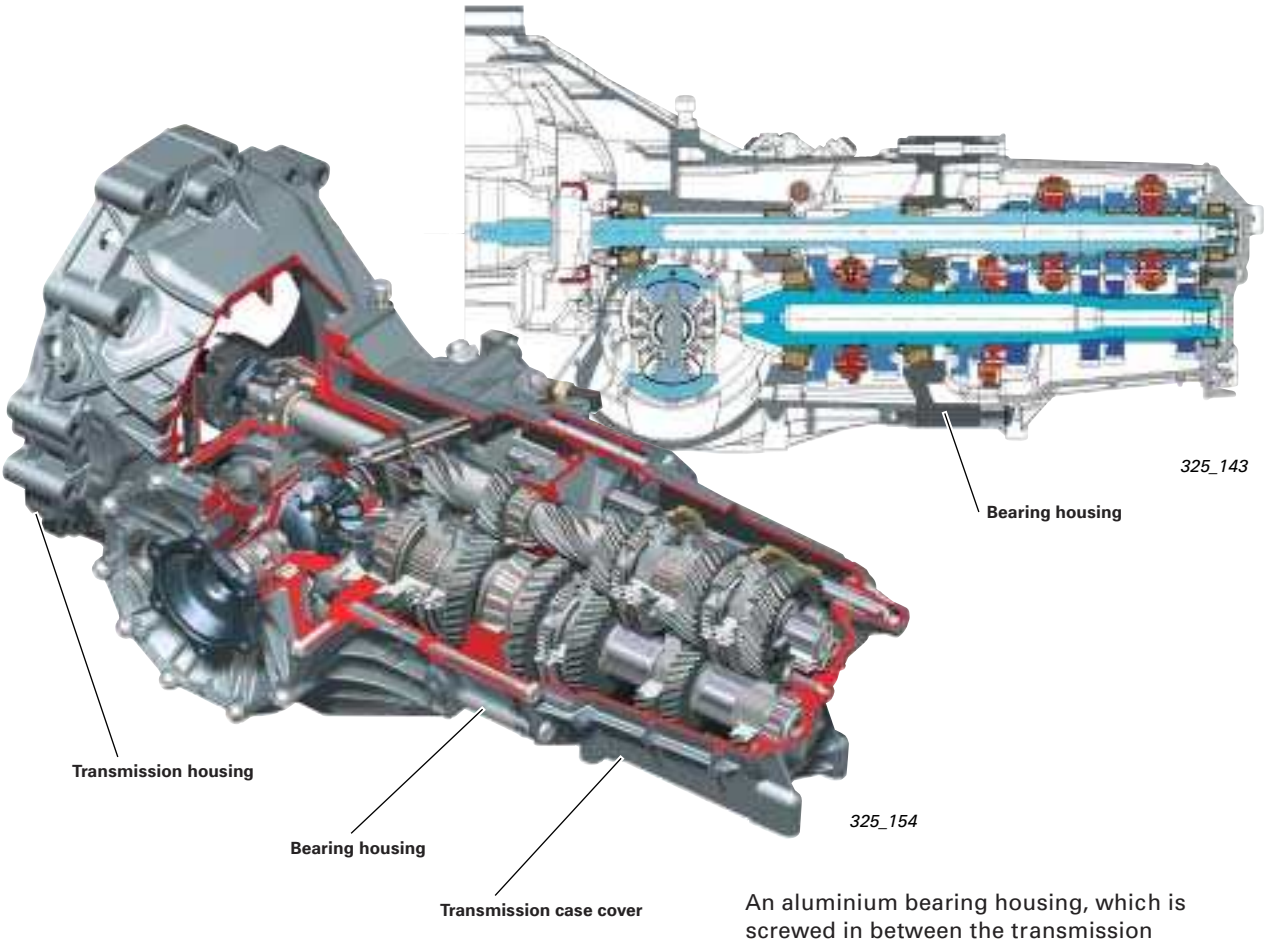

An aluminium bearing housing, which is screwed in between the transmission housing and the transmission case cover, was developed for the 01X and 02X gearboxes.
In addition to the radial support function for the input and output shafts, the bearing housing also bears the high axial strengths of the output shaft.

It was possible to keep the distance between the two tapered roller bearings very small. As a result, there is no need for temperature compensation, which is achieved via the gasket in the 012 gearbox.

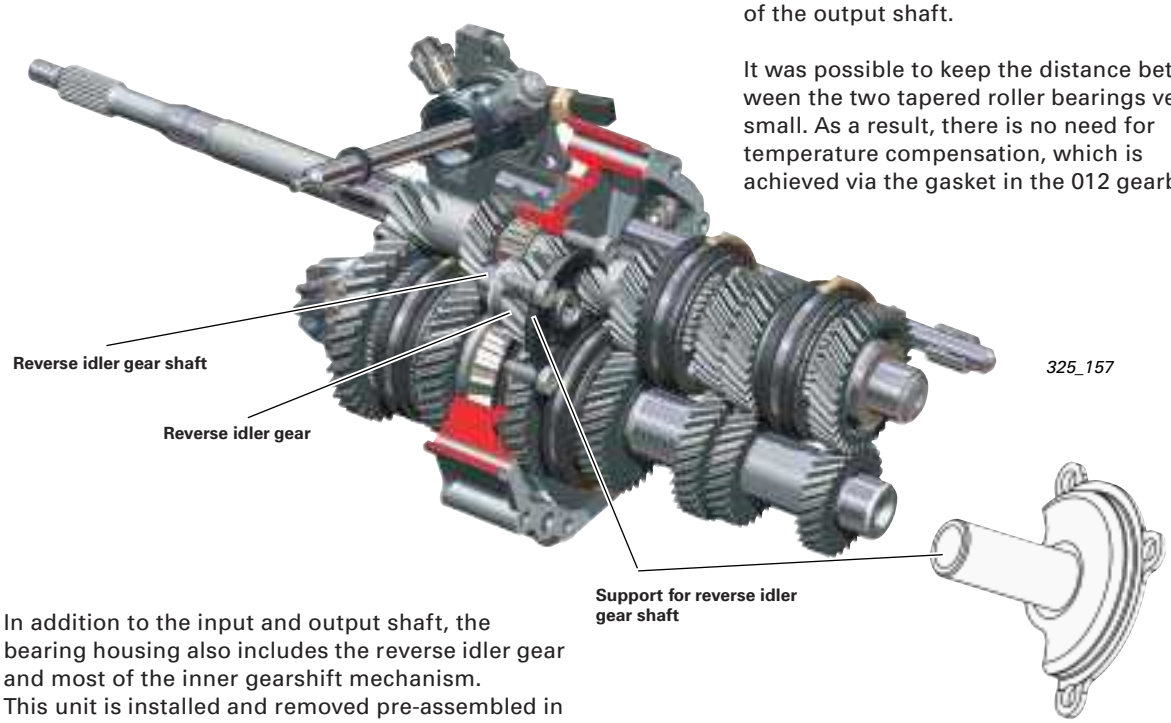

In addition to the input and output shaft, the bearing housing also includes the reverse idler gear and most of the inner gearshift mechanism.
This unit is installed and removed pre-assembled in this way.

0A3 bearings

The new feature here is the output shaft bearing application using a double angular contact ball bearing as the fixed bearing.

This has important advantages over the conventional pre-tensioned tapered roller bearing:

- The reduced bearing preload reduces friction, which in turn improves efficiency.
- The fixed/loose bearings (see full section) are not affected by the thermal expansion of the transmission housing.
- The double roller bearing, which is used, is a
- sealed bearing ("clear bearing"). No dirt (e.g. grit) can get into the bearing, which extends the service life significantly.

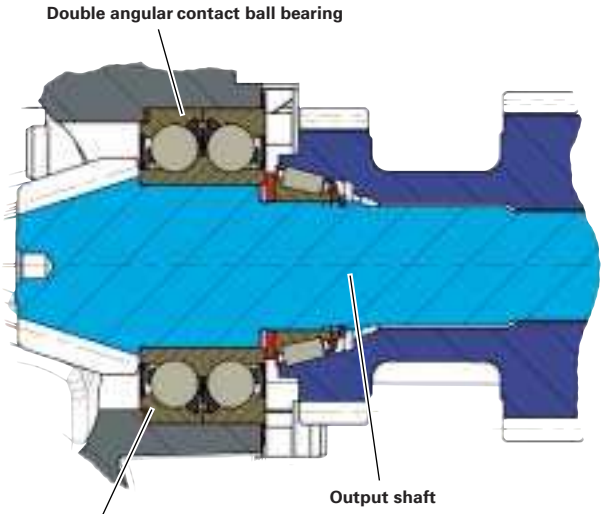

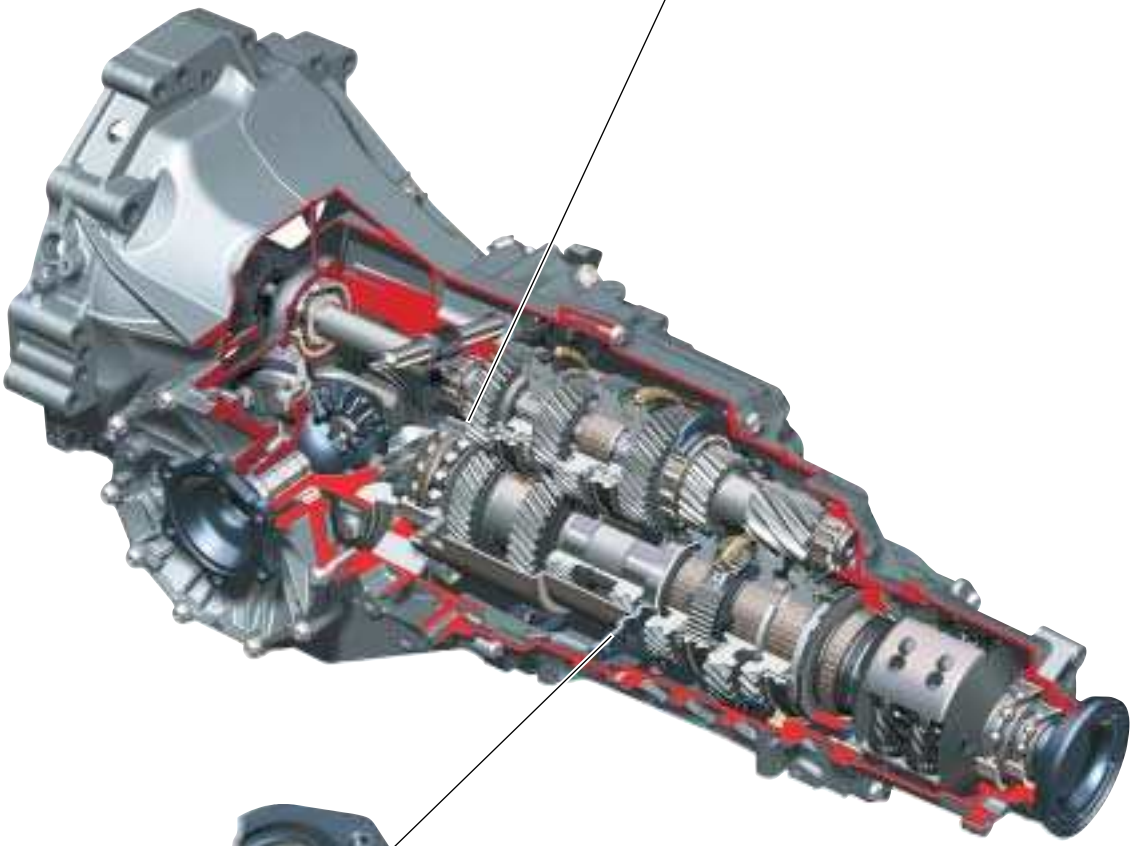

325_155

The central shaft is mounted using a screwed bearing carrier made of steel plate. As a result, the housing setup and assembly is simpler.

01X/02X lubrication

A low oil usage level can be achieved by performing targeted lubrication using an oil collection tray (01X/02X) or oil feed pan (0A3). This reduces splash losses and increases transmission efficiency.

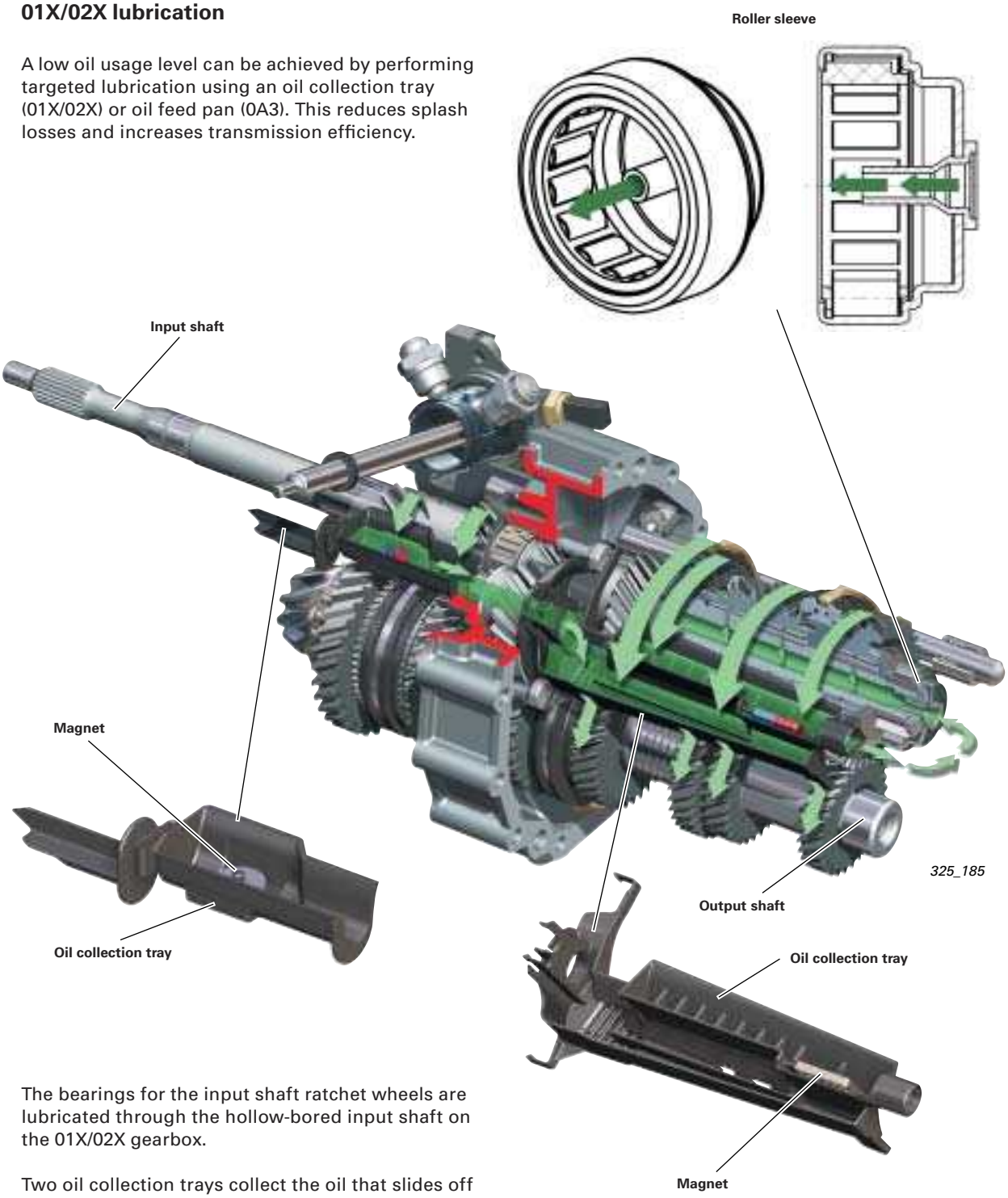

The bearings for the input shaft ratchet wheels are lubricated through the hollow-bored input shaft on the 01X/02X gearbox.

Two oil collection trays collect the oil that slides off the gearwheels. The oil is guided into the input shaft bore via ducts in the housing and in the roller sleeve. The cross bores on the bearings guide the oil to the respective bearings.

The openings at the bottom of the rear oil collection tray guide the oil on to the output shaft gearwheels.

02X lubrication

The Torsen differential in the 02X gearbox is encapsulated using a so-called sealing cylinder. Lubrication of the Torsen differential is designed in such a way that the grit remains in the Torsen differential and is not passed into the whole gearbox.
The advantage is a longer service life for all bearings.

325_194

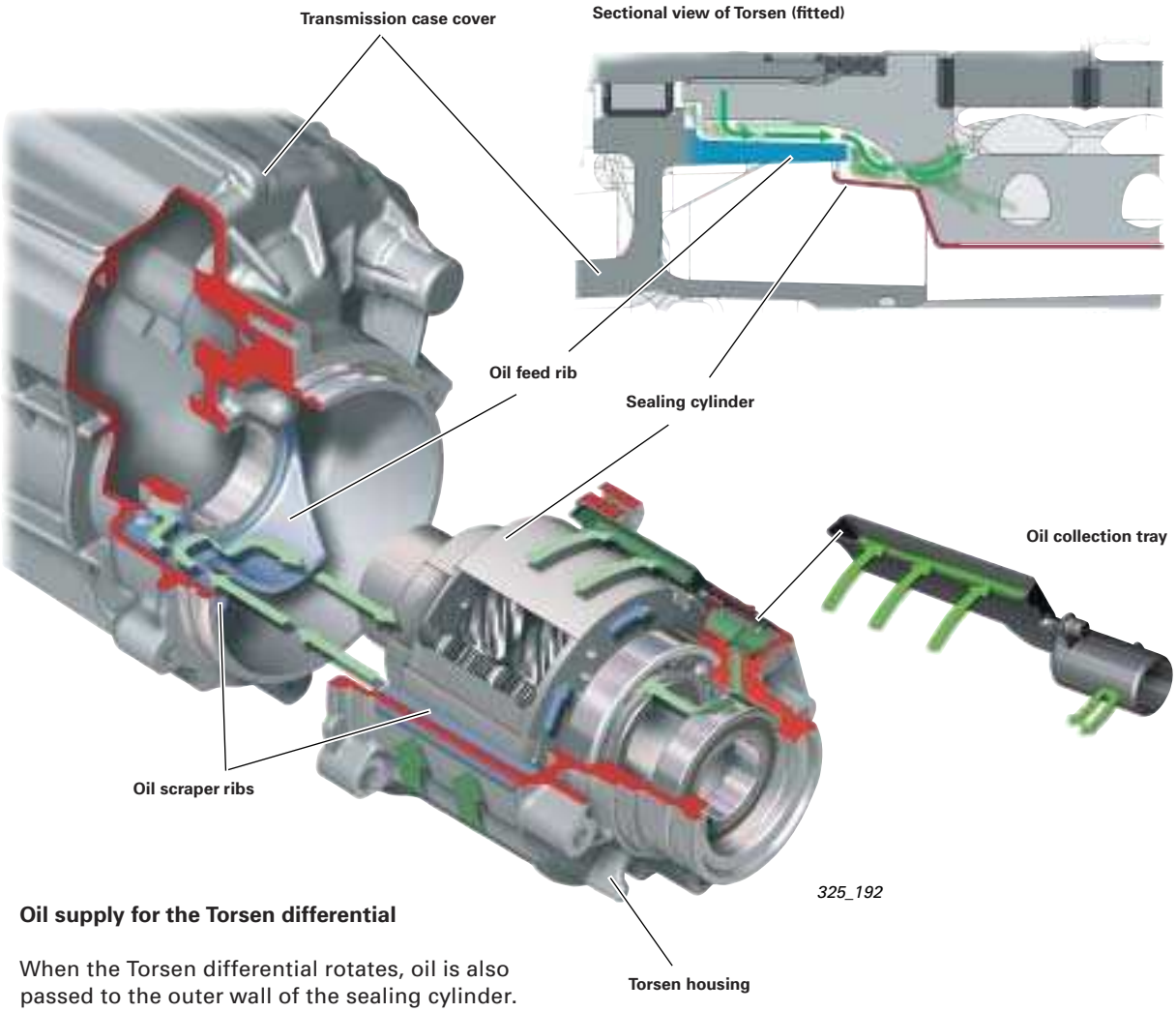

325_192

Oil supply for the Torsen differential

When the Torsen differential rotates, oil is also passed to the outer wall of the sealing cylinder. Most of this oil is scraped off by the oil scraper rib in the Torsen housing and is passed on to the slightly lower oil scraper rib of the transmission case cover. The oil then flows over the oil feed rib into the sealing cylinder and thus into the Torsen differential.

The bores at the back of the Torsen differential allow the oil to flow back into the Torsen housing , thereby limiting the oil level.

0A3 lubrication

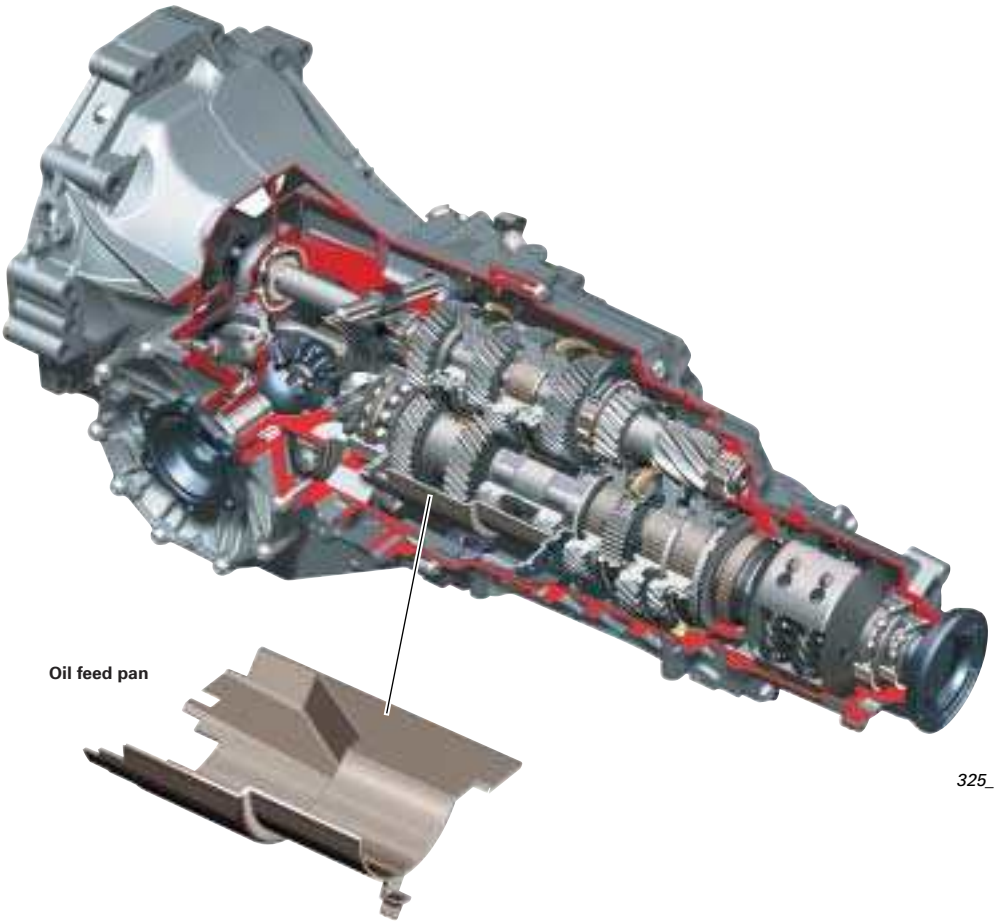

325_155

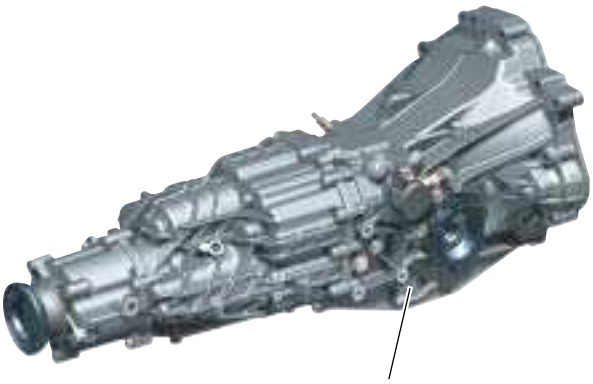

325_156

Oil pump installation position (not necessary at present)

The 0A3 can be fitted with an oil pump for oil cooling, if required.

In the 0A3 gearbox, an oil feed pan is used for targeted lubrication and also helps to improve efficiency here.

The success of all the measures aimed at improving efficiency is already apparent in that unlike the predecessor gearbox, no oil cooling (with oil pump) is necessary on the Audi S4 with 0A3 gearbox, for example.

The new 6-gear transmissions are filled with the transmission oil G 052 911 A (SAE 75W 90 synthetic oil), which was used previously.
The transmission oil does not need to be changed as part of normal maintenance work – "lifetime fill".

Inner gearshift

Particular attention was paid to gearshift comfort in the new gearboxes.
Gearshift force and gearshift times are reduced by reworked, highly-efficient synchronisations.
Reverse gear has also been completely synchronised.

The gearshift feel has been optimised thanks to numerous individual measures applied to the internalgearshift operation (locks, shift cylinders, shift rods and selector sleeves, bearings and stops).

To improve the shift operation, the shift rods and locks are fitted with ball bearings.

The gates and locking contours of the shift rods and shift cylinder are designed in such a way that they guarantee freedom from play in neutral position and in the selected end position.

The shift forks of the forward gears are mounted in an oscillating position on the shift rods.
This balances out wobbling movements in the selector sleeves and prevents them from reaching the outer gearshift mechanism. As a result, no troublesome vibrations are felt in the gearshift lever.

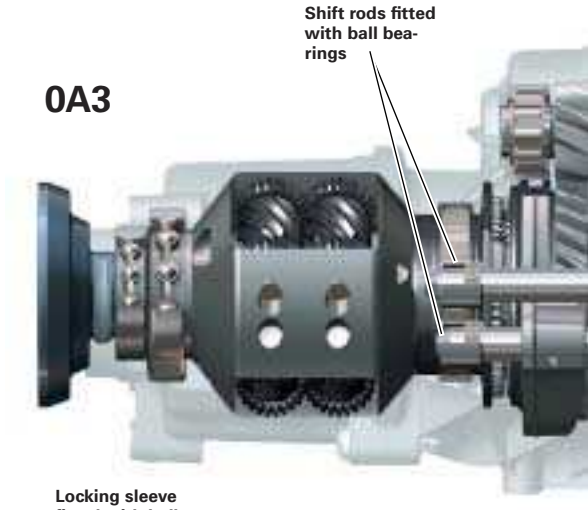

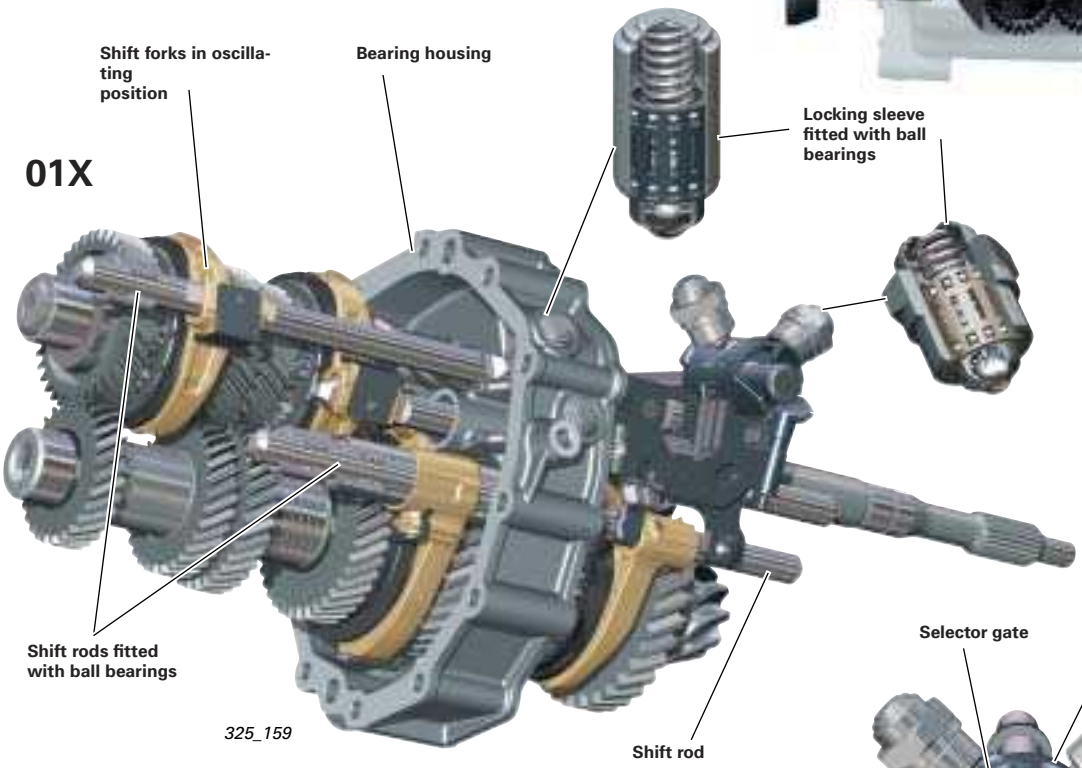

325_159

The shift cylinder has separate gate/locking elements for the shift and selector direction, which produce the selector and return power to neutral position.

Defined contours in the gates support theshift operation in a positive way.

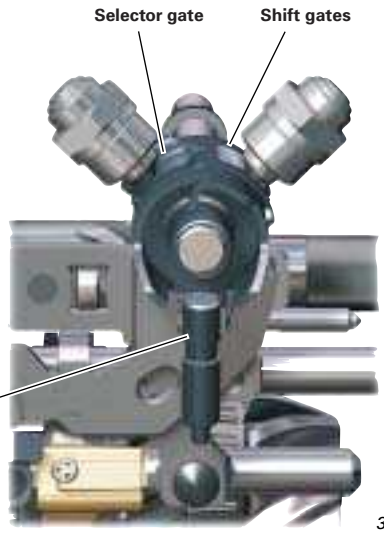

325_160

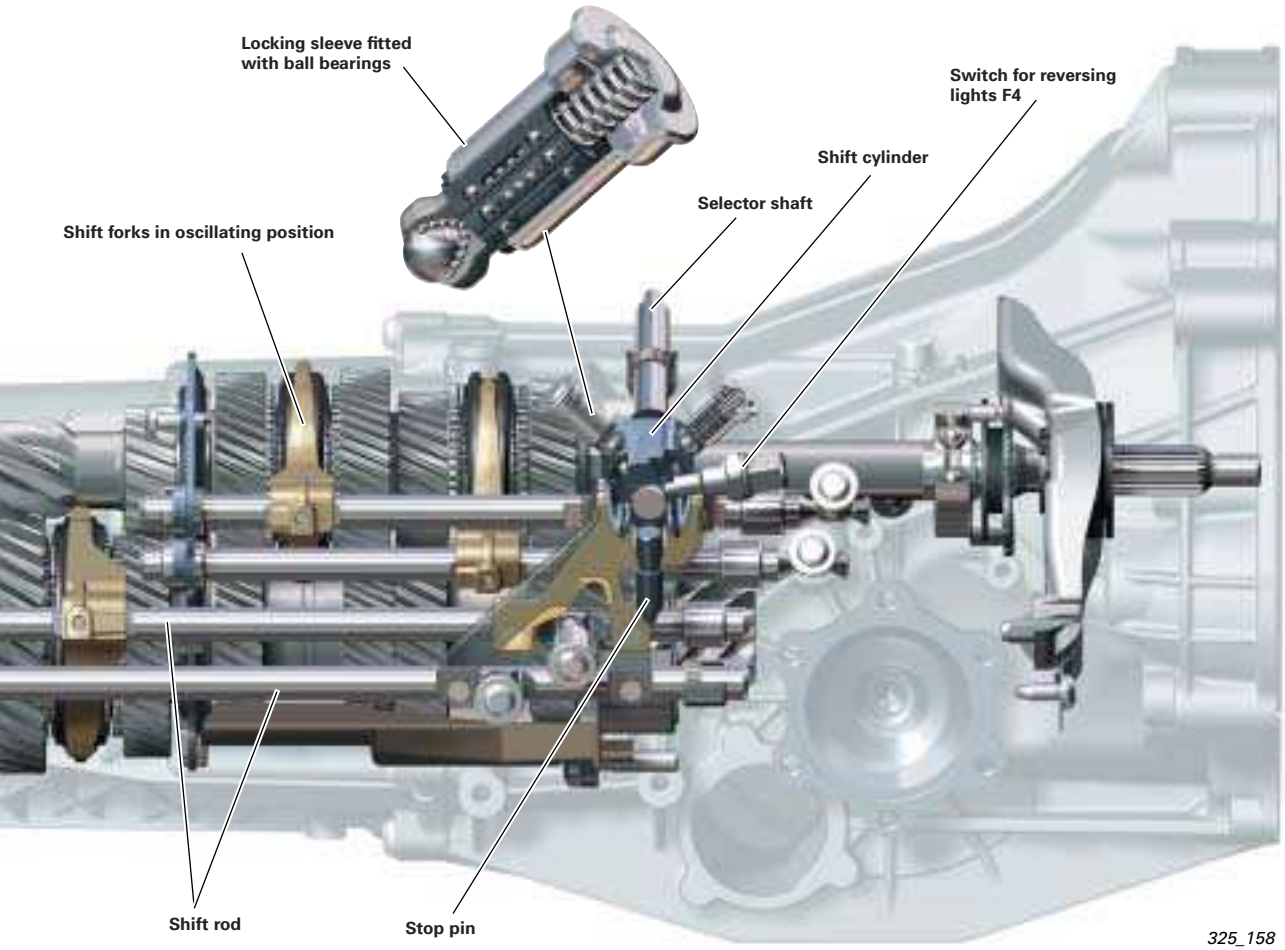

Disengaging the inner gearshift mechanism

The shift cylinder has a stop at its end position (gear engaged).
The kinematics of the locks is designed in such a way that the shift finger of the shift cylinder does not touch the shift jaws of the shift rails in this position. Vibrations in the shift rods are thus removed from the selector shaft and are therefore not transferred to the manual shift lever.

In neutral, the locks control the disengaging action from the shift finger to the shift jaws.

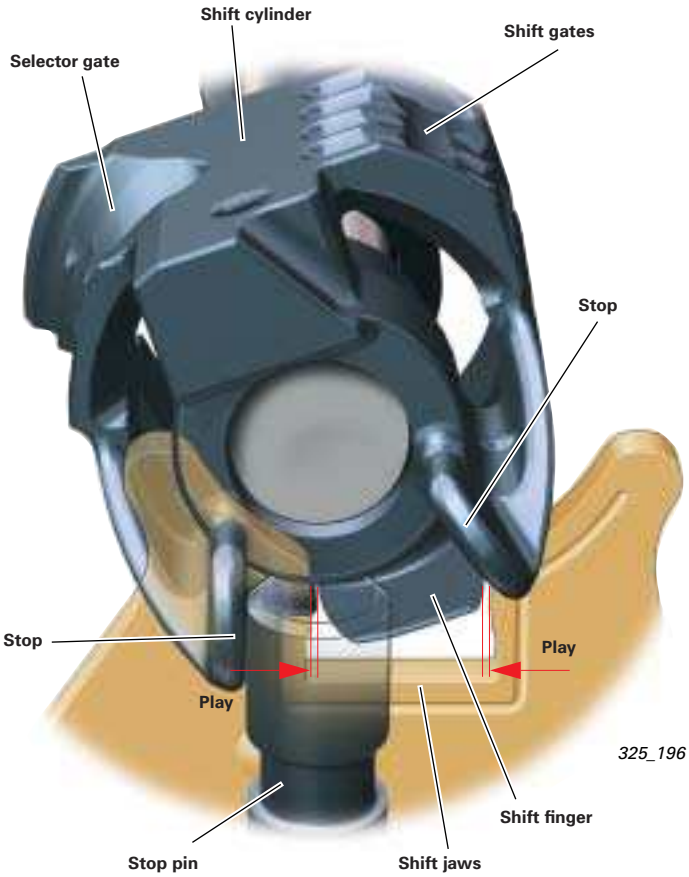

0A3 synchronisation

1st and 2nd gear are switched using triple-cone synchronisation, i.e. the Borg Warner system. Carbon friction linings are used to achieve a high service life and synchronisation performance.

3rd to 6th gear and reverse gear are switched using twin-cone synchronisation, also based on the Borg Warner system.
Synchronising rings with sintered linings are used.

Triple-cone synchronisation
1st/2nd gear

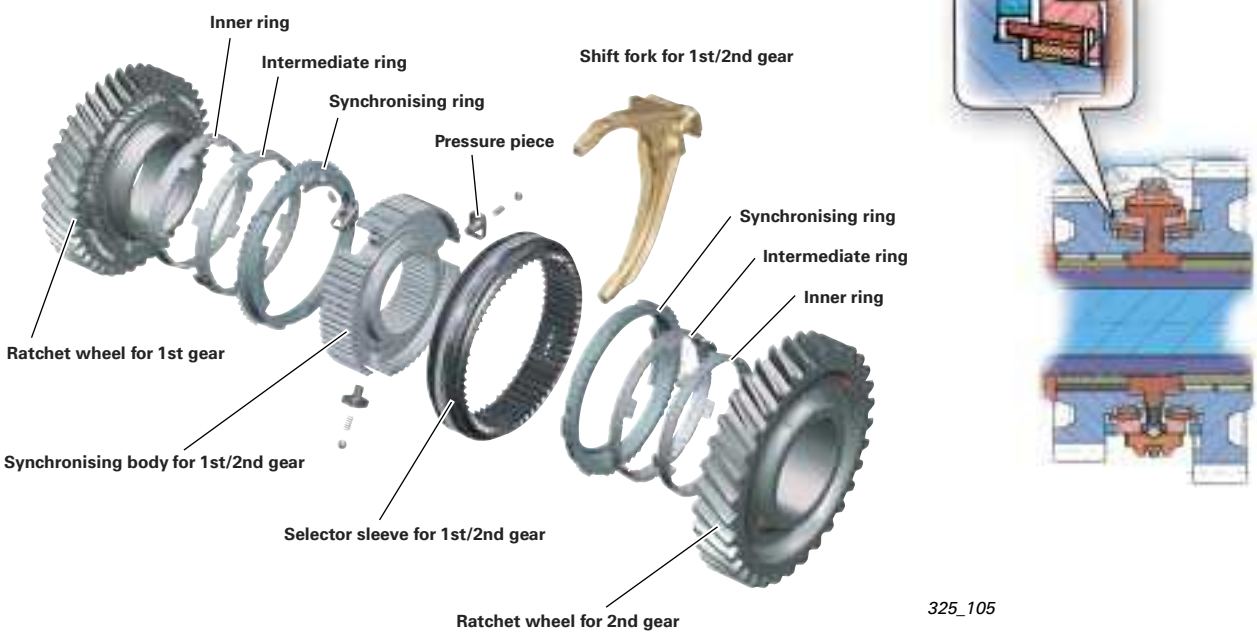

325_105

Twin-cone synchronisation
3rd/4th/5th/6th and reverse gear

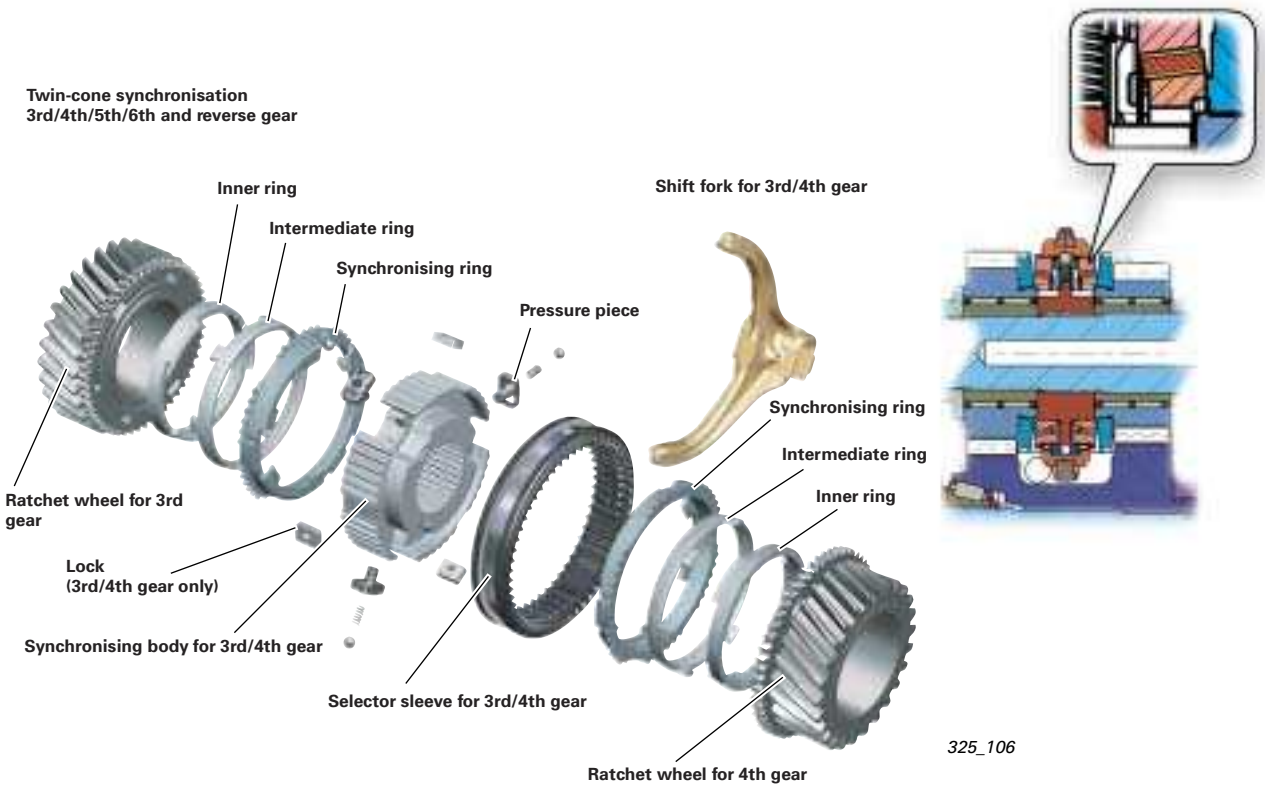

325_106

01X and 02X synchronisation

1st gear uses triple-cone synchronisation and 2nd gear uses twin-cone synchronisation, i.e. the Borg Warner system with carbon linings, while 3rd to 6th gear and reverse gear use single outer cone synchronisation, i.e. the Audi system made of molybdenum-sprayed brass.

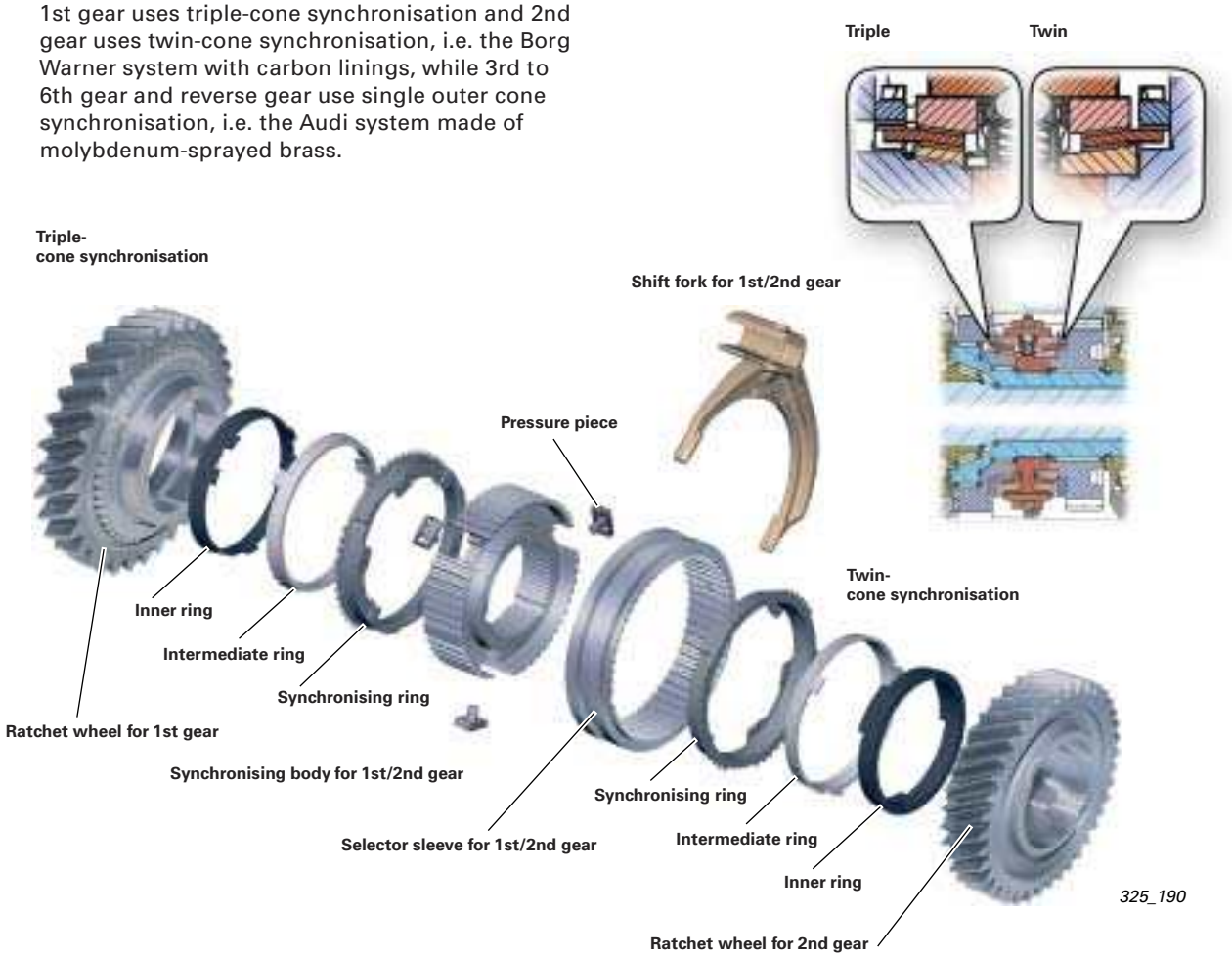

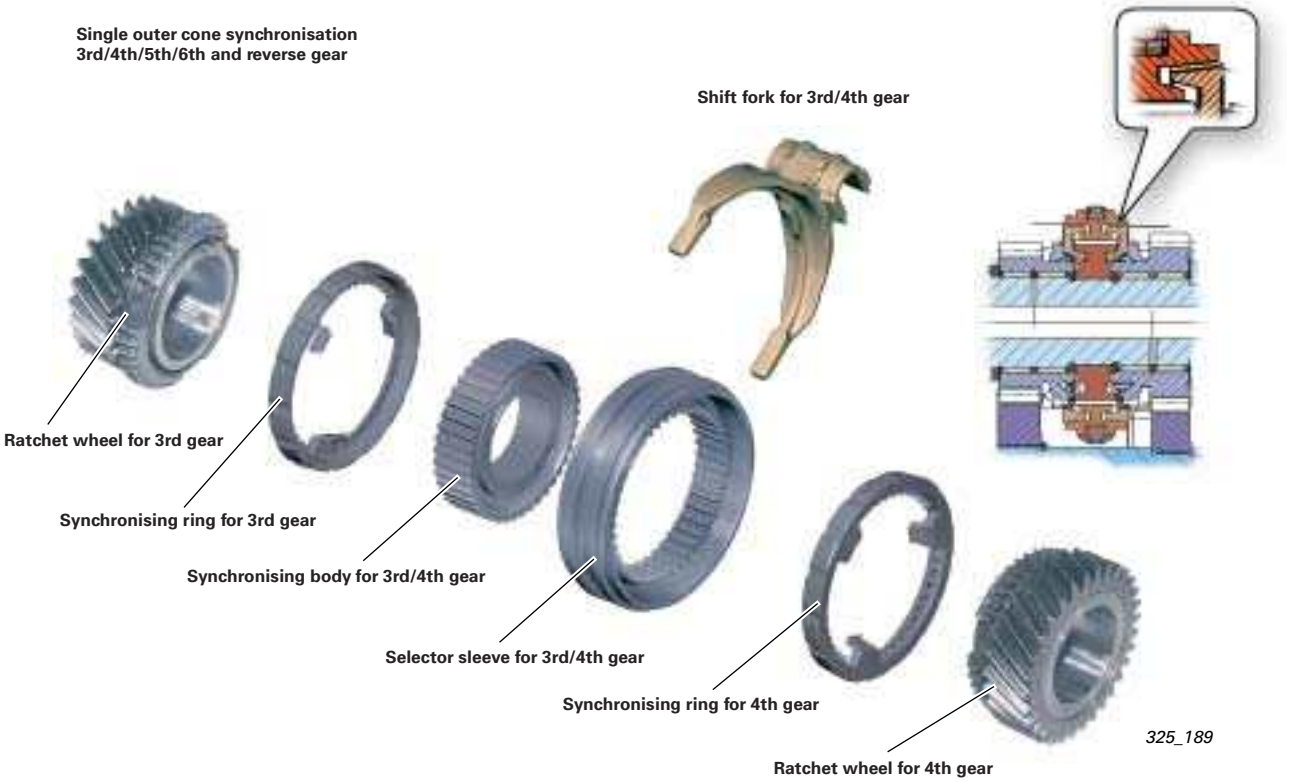

01X/02X/0A3 gear selector (outer gearshift)

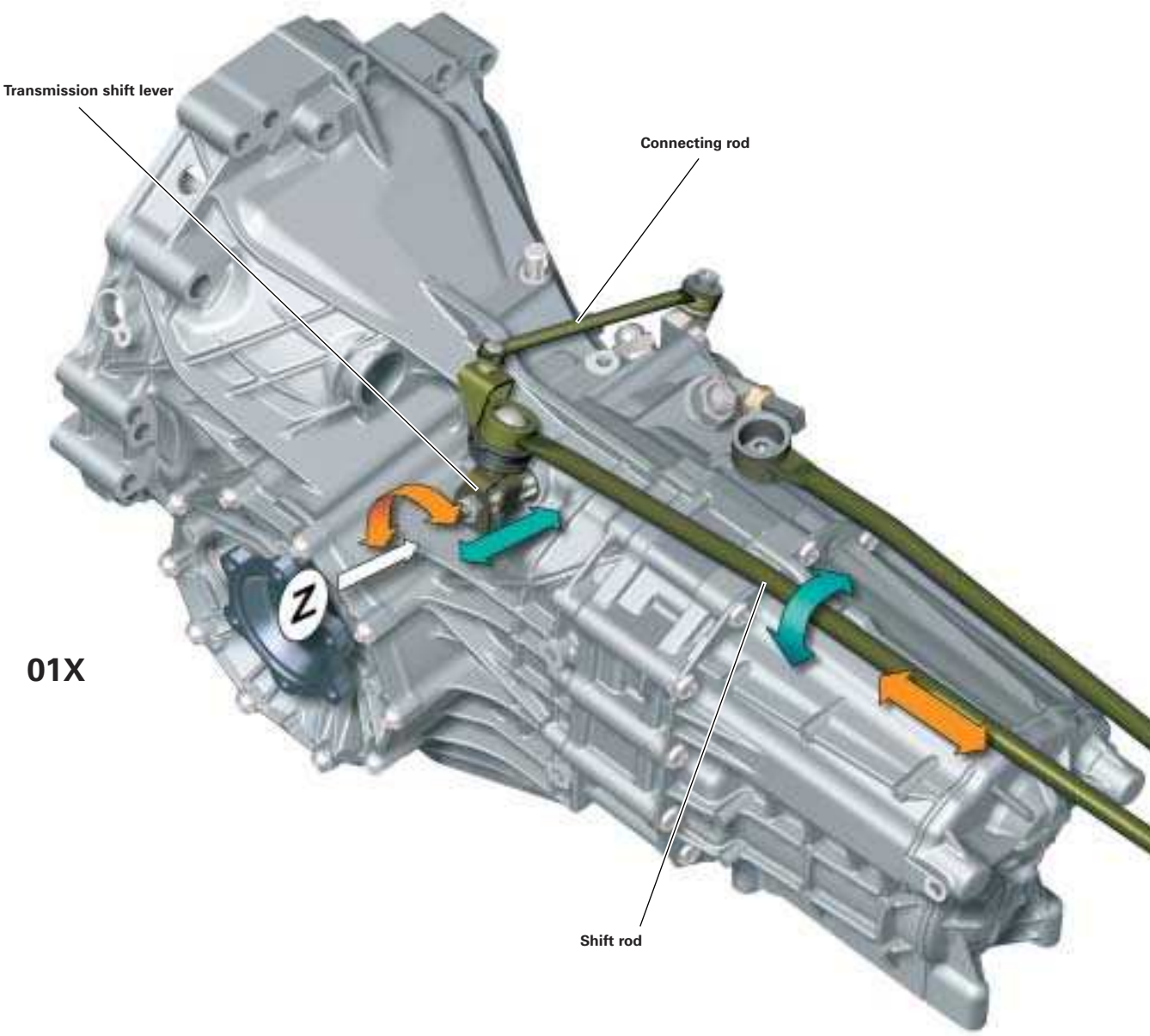

01X

The fundamental design of the gear selector (outer gearshift) for the 01X/02X and 0A3 gearboxes is the same.

The shift direction (view Z in illustration) between the gearbox types 01X (02X) and 0A3 is going the opposite way. While the selector shaft is turned to the right to shift into 1st gear in the 01X, for example, it must be turned to the left in the 0A3.
Since the gear selector is the same, the transmission shift lever and thus also the linkage is adapted according to the relevant gearbox type.

View Z
(Example: shifting into 1st gear)

01X

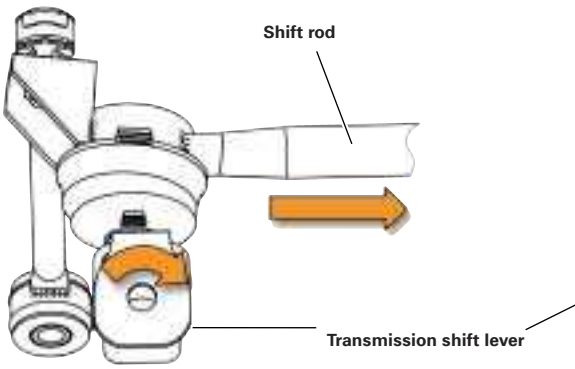

Smooth gearshift

To keep the load-shift movements of the gearbox as far as possible away from the gearshift lever, the gearshift lever mount is movable.

Function:

The shift rod transfers the load-shift movements of the gearbox to the gearshift lever.
The push bar connects the gearbox to the gearshift lever mount and also transfers the gearbox movements to the gearshift lever mount.
The gearshift lever mount is supported on two rails that can be moved along the longitudinal axis of the vehicle and can follow the movements of the gearbox.

The points at which the push bars are secured to the gearbox and ball housing are selected in such a way that the movements caused by the shift rod are balanced out.
The gearshift lever thus remains very much undisturbed in its position during load shifts.

When adjusting the gearshift, the position of the gearshift lever mount must first be adjusted.
No special tools are needed (see Workshop Manual).

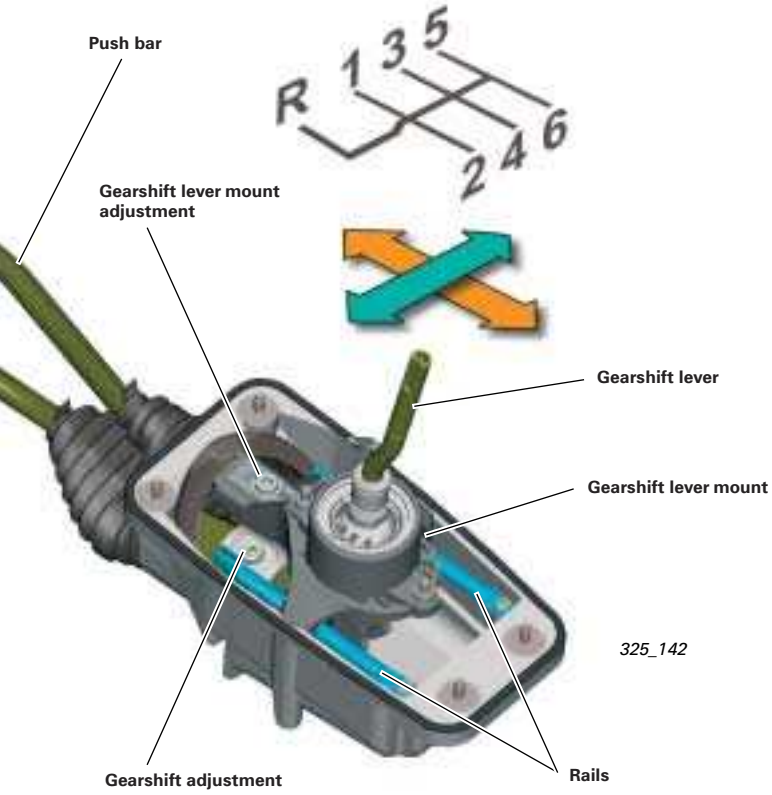

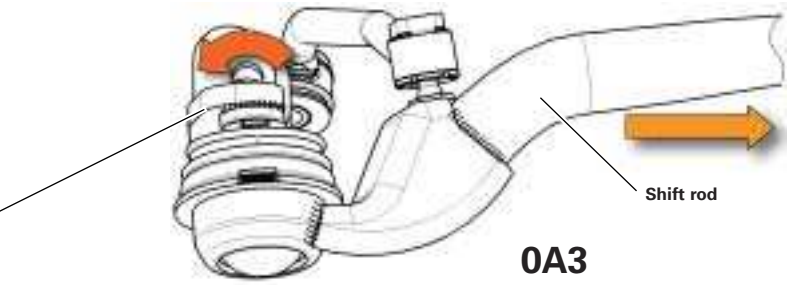

0A3

Introduction

Automatic transmission

The tried-and-trusted multitronic 01J is used for all automatic transmission versions with front-wheel drive (CVT – Continuously Variable Transmission).

Multitronic is characterised by its stepless transmission adjustment. It combines high driving comfort with convincing driving dynamics and guarantees economic driving performance.
The torque capacity was increased to 330 Nm for the 3.2 l FSI engine, which is unique worldwide for a CVT gearbox.

01J

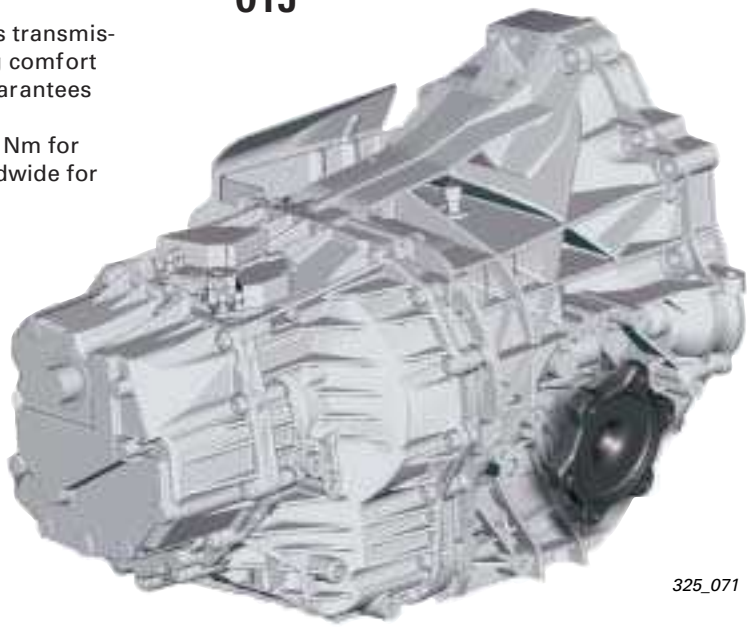

325_071

The 01J is designed for the following engines:
- **2.0 l R4 TDI PD**
- **2.4 l V6 MPI**
- **3.0 l V6 MPI**
- **3.2 l V6 FSI**

The new 6-gear multi-step automatic transmission 09L is used for all automatic transmission versions with quattro drive.

It is based on the 6-gear automatic transmission generation 09E, which was introduced in the Audi A8 ´03. A torque capacity of up to 450 Nm means that it can be combined with the new 3.0 l V6 TDI.
This gearbox was first used in the Audi S4 sports model.

09L

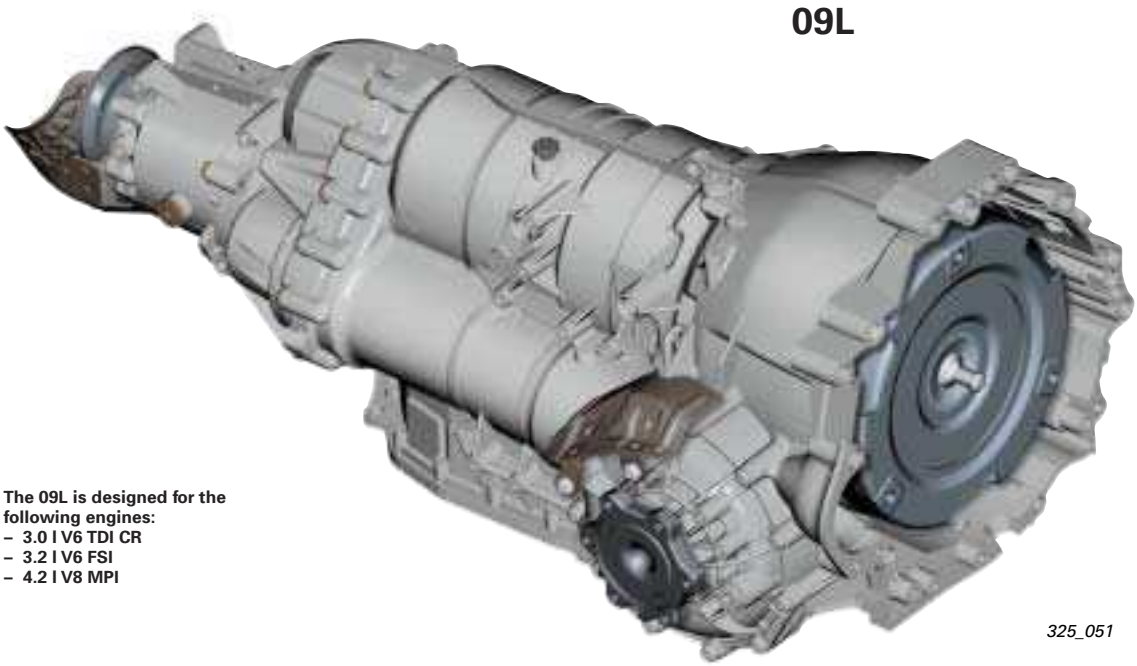

The 09L is designed for the following engines:
- **3.0 l V6 TDI CR**
- **3.2 l V6 FSI**
- **4.2 l V8 MPI**

325_051

Gear selector

The new design:

- Independent display unit
- Gear selector with shift sack

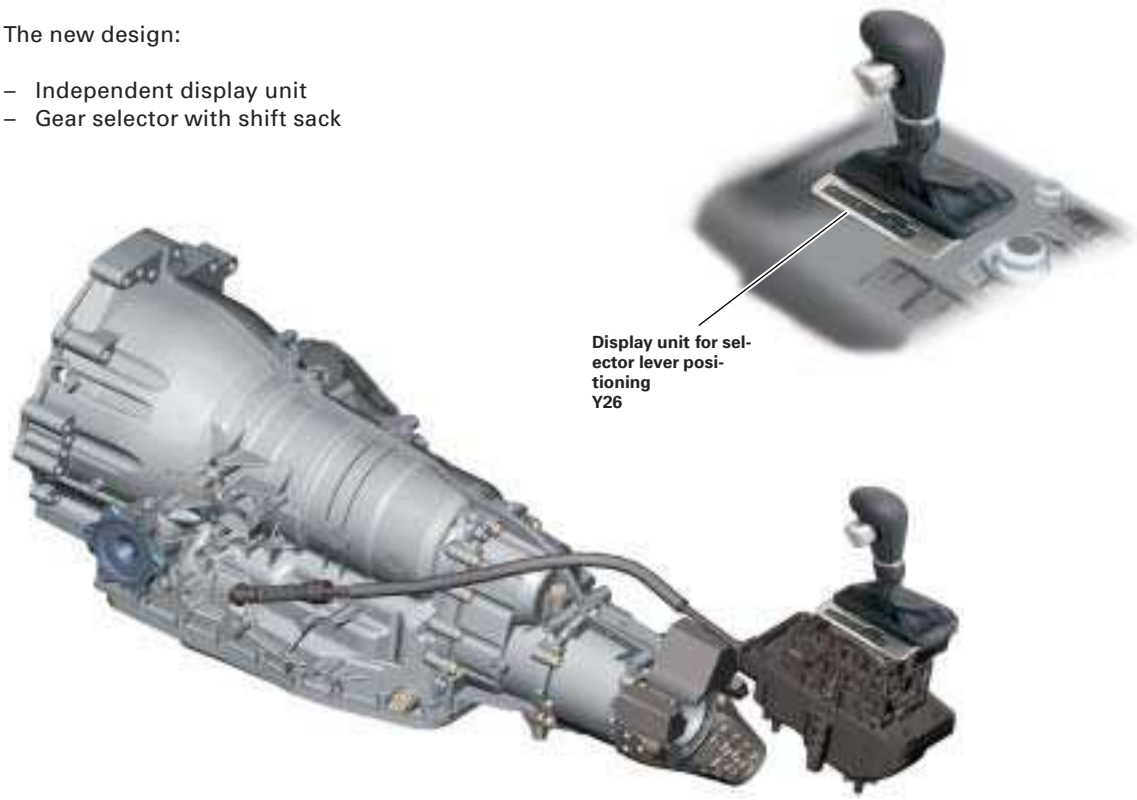

325_108

The assembly has also changed due to the new design.

X =
Do not touch or block the button for disassembly.

The button must be removed in order to install the gearshift handle.

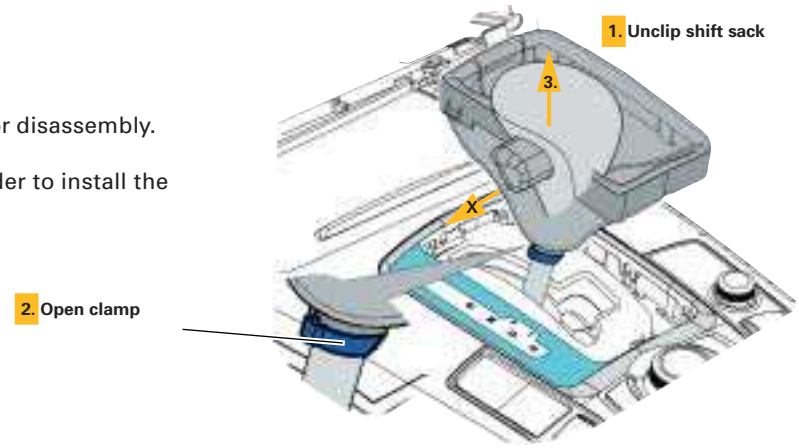

325_175

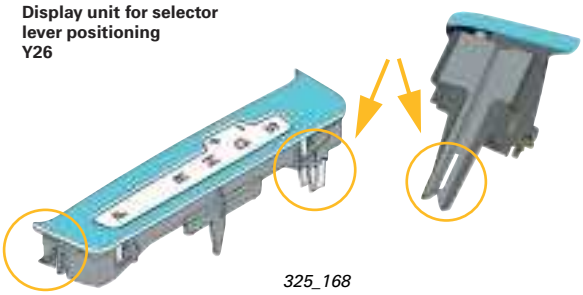

325_168

Once the shift sack has been unclipped, the display unit can also be unclipped.

Selector lever locks (P lock and P/N lock)

These pictures show the structure of the gear selection mechanism.

Basically, we can differentiate here between the P/N lock while driving or when the ignition is switched on and locking the selector lever in position "P" when the ignition key is removed (P lock).

The P lock was previously operated by the steering column lock via a cable for gear selection. This cable is no longer used because of the electric steering column lock and the new ignition switch E415.

The kinematics of the locking mechanism was designed in such a way as to enable locking both in the de-energised state of the N110 (P) and when current is applied (N).

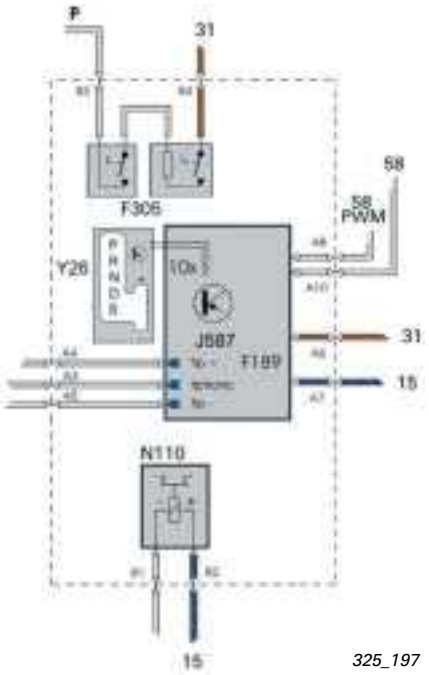

325_197

325_176

* The left and right locking lever is linked to an axle (one component).

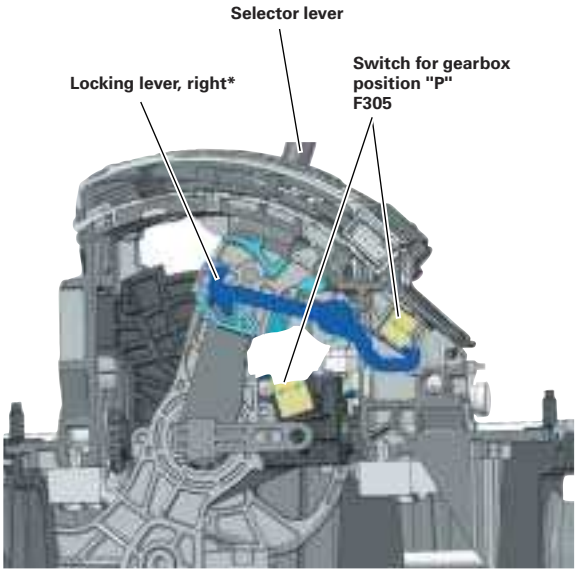

Sectional view from right

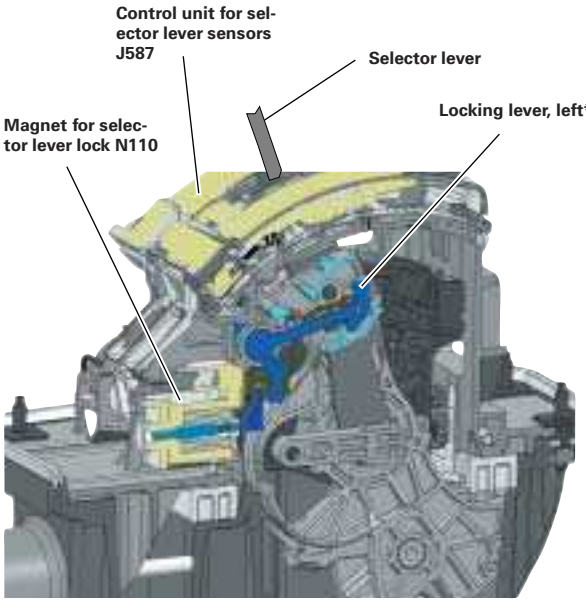

Sectional view from left

325_178

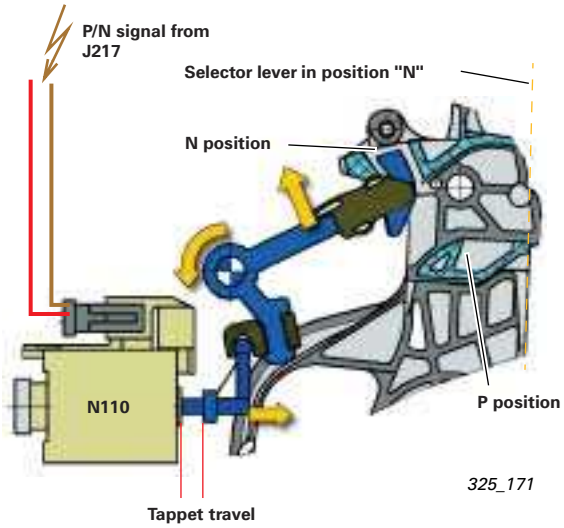

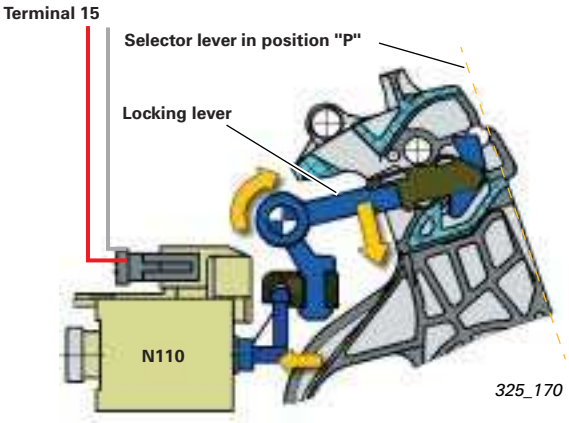

Lock in position "P"

The magnet N110 is deactivated and the locking lever is locked by gravity and the springs in the N110 magnet.
To release the lock, the magnet N110 is activated and the magnet then presses the locking lever out of the P position.

Lock in position "N"

The magnet N110 is activated and presses the lokking lever up, where its hooks engage in the N position and it is locked.
To release the lock, the magnet N110 is deactivated and the locking lever drops down.

The magnet N110 is controlled directly by the control unit J217 (see function diagram).

Note:

The N110 is controlled by negative force in the 09L gearbox.
The N110 is controlled by positive force in the 01J gearbox (see the relevant function diagram).

Emergency release for P lock

Because the P lock is only released when the magnet N110 is activated, the selector lever remains locked in position "P" in the event of malfunctions (e.g. battery flat, magnet N110 does not function, ...).

The emergency release lever on the left locking lever can be used to move the vehicle in such an instance..

The emergency release can be accessed by removing the ashtray slot and the cover clip beneath.

The locking lever is released by pressing the emergency release lever (e.g. with a pin). The button must be pressed and the selector lever pulled back at the same time.

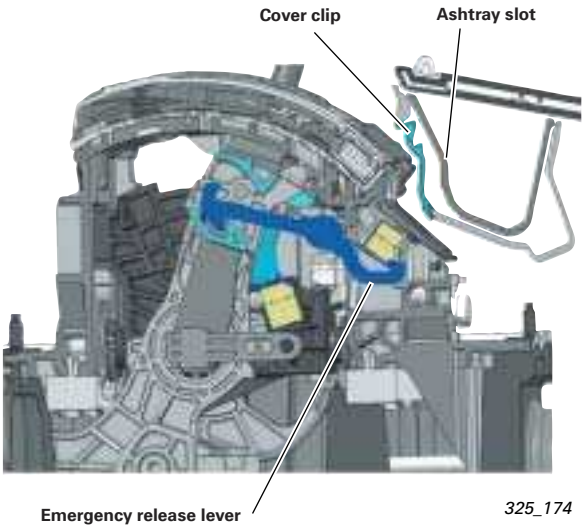

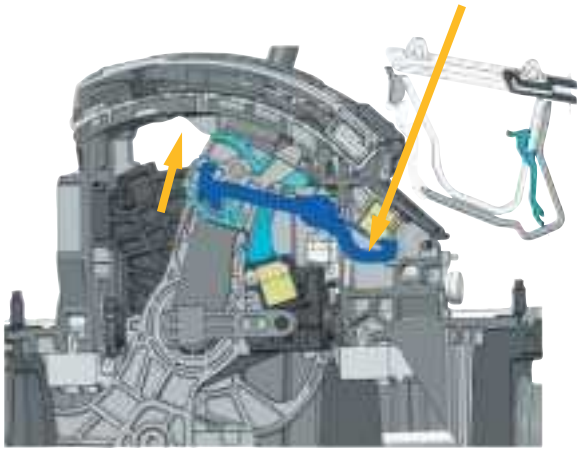

Control unit for selector lever sensors J587

The selector lever sensors include the hall sensors for controlling the display element and the hall sensors for the switch for Tiptronic F189.

Reference

The function and design are described from page 18 onwards in the SSP 283 and from page 18 onwards in the SSP 284.

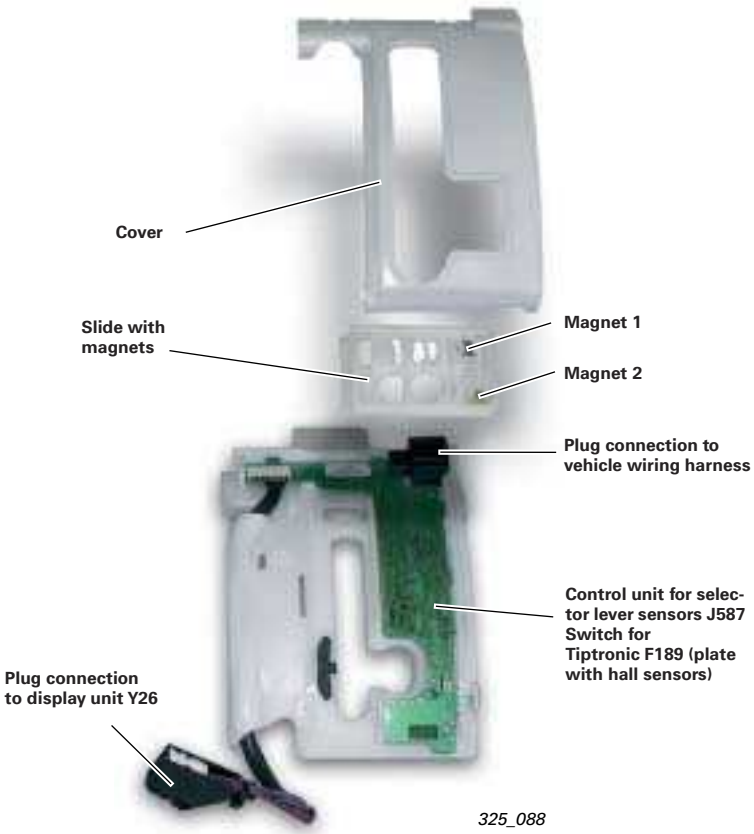

325_088

Display unit for selector lever positioning Y26

The display unit is supplied with voltage by the selector lever sensors and is activated by J587 in accordance with the selector lever position.

325_089

Ignition key anti-removal lock

The function of the ignition key anti-removal lock is fundamentally changed.
Because of the "electronic ignition switch" E415 (switch for access and start authorisation) and the electromagnetic steering column lock, the mechanical connection (cable) from the gear selector to the steering column lock is no longer used.

Reference

The basic function of the ignition key anti-removal lock is described from page 28 onwards in the Self-Study Programme 283

The release for the ignition key anti-removal lock is controlled by the switch for access and start authorisation E415 and is operated by the magnet for the ignition key anti-removal lock N376, which is integrated into the E415.

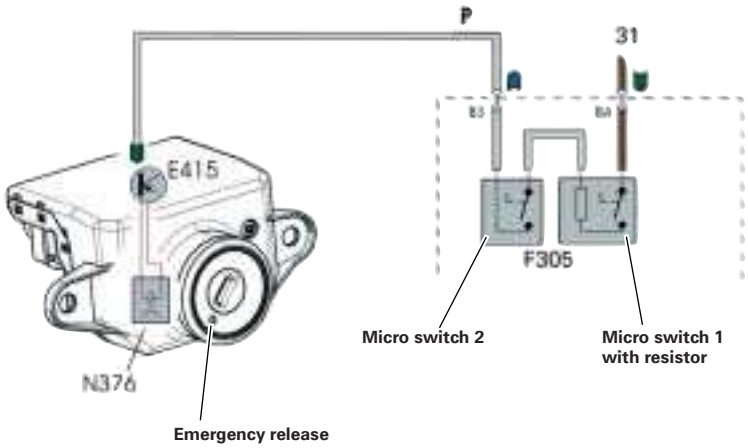

325_183

The information from selector lever position "P" supplies the two mechanical micro switches F305. They are connected in series and form one unit.

Both switches are closed in selector lever position "P" and supply a ground signal to the E415. If the ignition is switched off, the magnet N376 is supplied with current for a short time and a lever mechanism lifts up the ignition key anti-removal lock.

Two micro switches are installed for safety reasons:

Micro switch 1 is only actuated (hit) when the selector lever button is released in selector lever position "P" (button not pressed). The series-connected resistor allows the diagnosis of the signal lead.

Micro switch 2 is only actuated when the locking lever for the P/N lock is in the initial position (see function description for P/N lock).
It signals the actual locking in selector lever position "P".

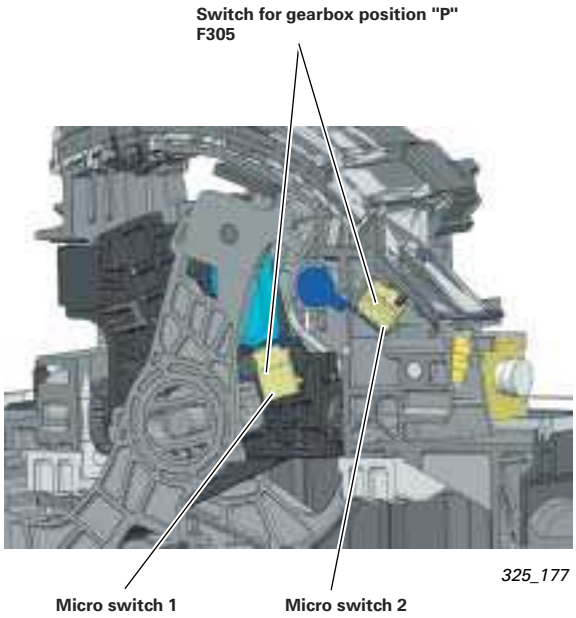

325_177

Steering wheel Tiptronic

With regard to operation, we differentiate two types of steering wheel Tiptronic:

- with multi-function steering wheel
- without multi-function steering wheel

Tiptronic with multi-function steering wheel

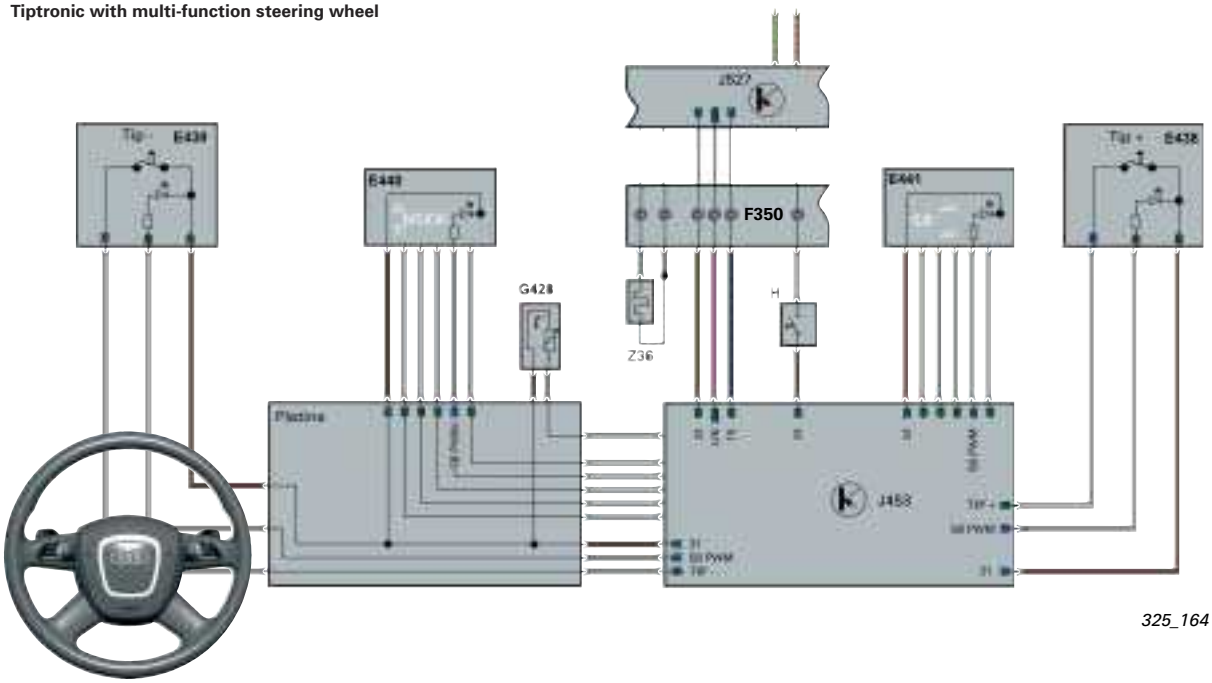

325_164

Signal flow for steering wheel Tiptronic with multi-function steering wheel:

- from E438 or E439 directly (discretely) to J453
- from J453 via LIN data bus to J527
- from J527 via CAN Convenience to the gateway J533
- from J533 via CAN Drive to the transmission control unit J217

Tiptronic without multi-function steering wheel

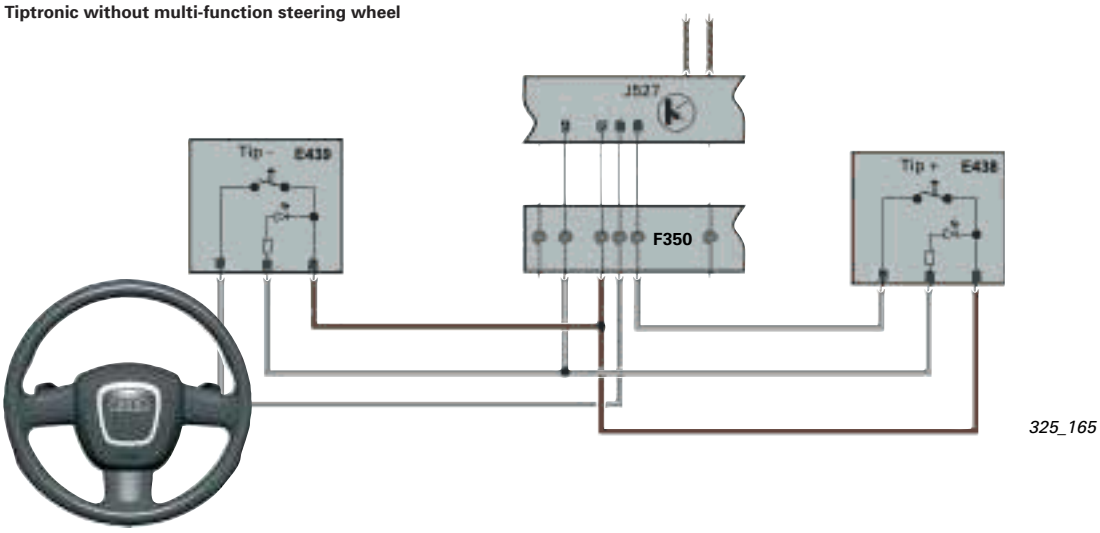

325_165

Signal flow for steering wheel Tiptronic without multi-function steering wheel:

- from E438 or E439 directly (discretely) to J527
- from J527 via CAN Convenience to the gateway J533
- from J533 via CAN Drive to the transmission control unit J217

E438	Switch for Tiptronic in steering wheel, up
E439	Switch for Tiptronic in steering wheel, down
E440	Multi-function button in steering wheel, left
E441	Multi-function button in steering wheel, r.
F350	Spiral spring
G428	Sender for heated steering wheel
J453	Control unit for multi-function st. wheel
J527	Control unit for steering column electronics
Z36	Heated steering wheel

6-gear automatic transmission 09L

The new 6-gear automatic transmission 09L is used as a "quattro automatic gearbox".
A torque capacity of up to 450 Nm covers the complete engine programme available today.
It replaces the two 5-gear automatic transmissions 01V and 01L.

The 09L gearbox is a derivative of the 09E gearbox from the system supplier ZF, with which we are all familiar from the Audi A8 '03.

The design and function of the gear mechanism and transmission control is for the most part identical to that of the 09E gearbox.

The Lepelletier gear set concept allows 6 gear steps with only 5 switching elements. The main feature of this gear set is its simple and light-weight design.

The main difference between the 09L gearbox and the 09E gearbox is that the 09L has a lower torque capacity and the individual components are therefore laid out differently. The positioning of the front-axle differential was retained from the predecessor models (after the torque converter).

325_051

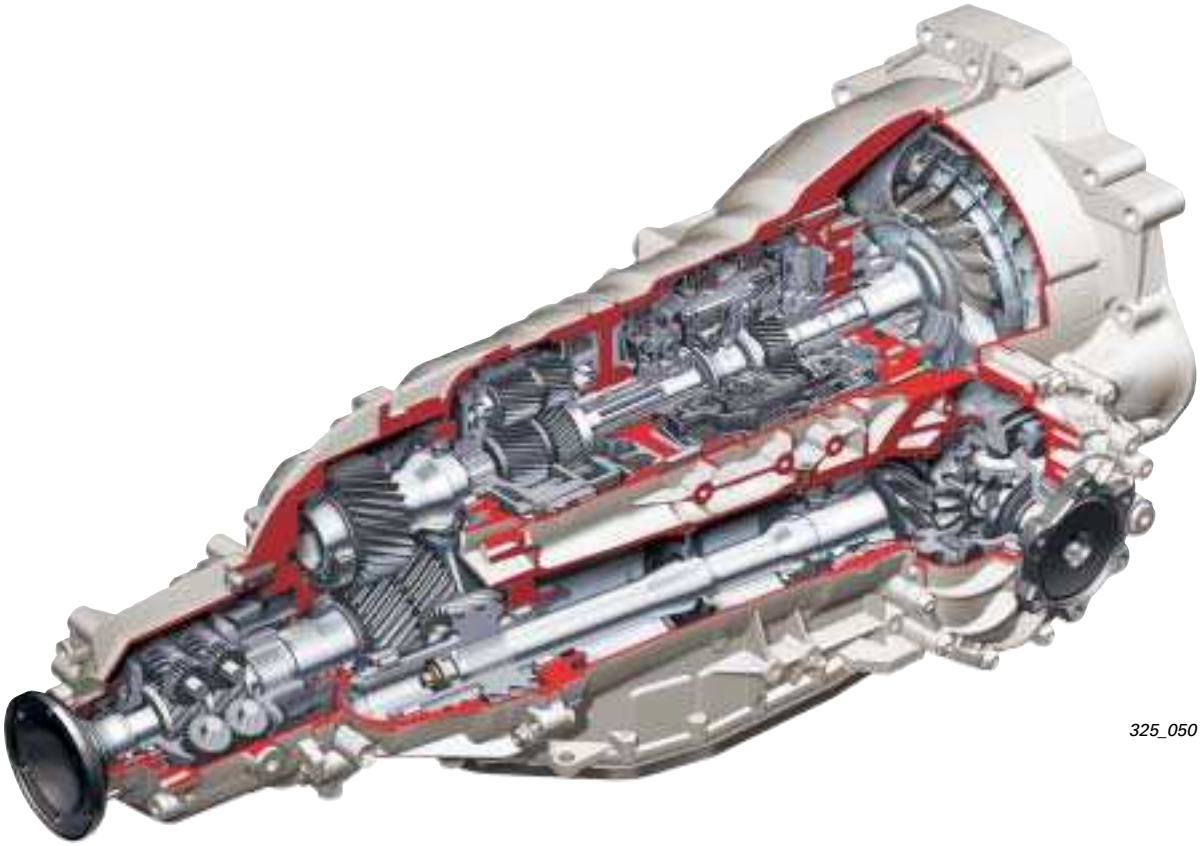

325_050

Reference

For further information, please refer to the Self-Study Programmes 283 and 284.

6-gear automatic gearbox 09L

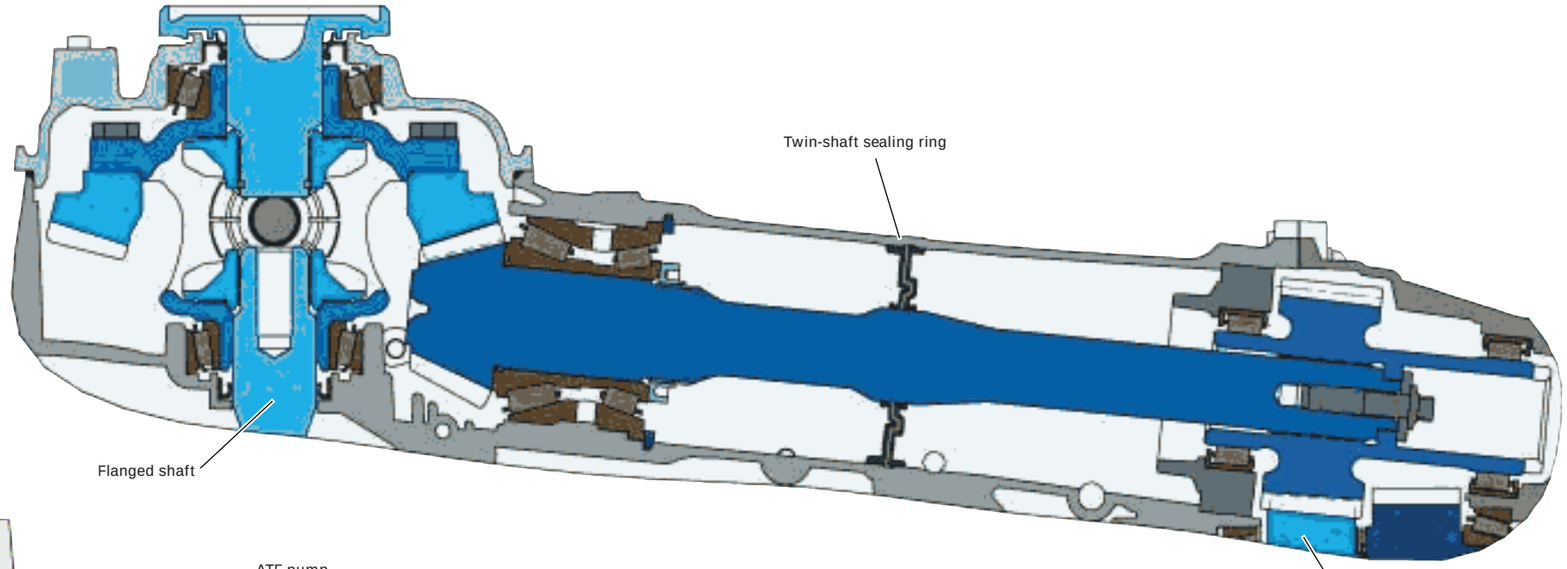

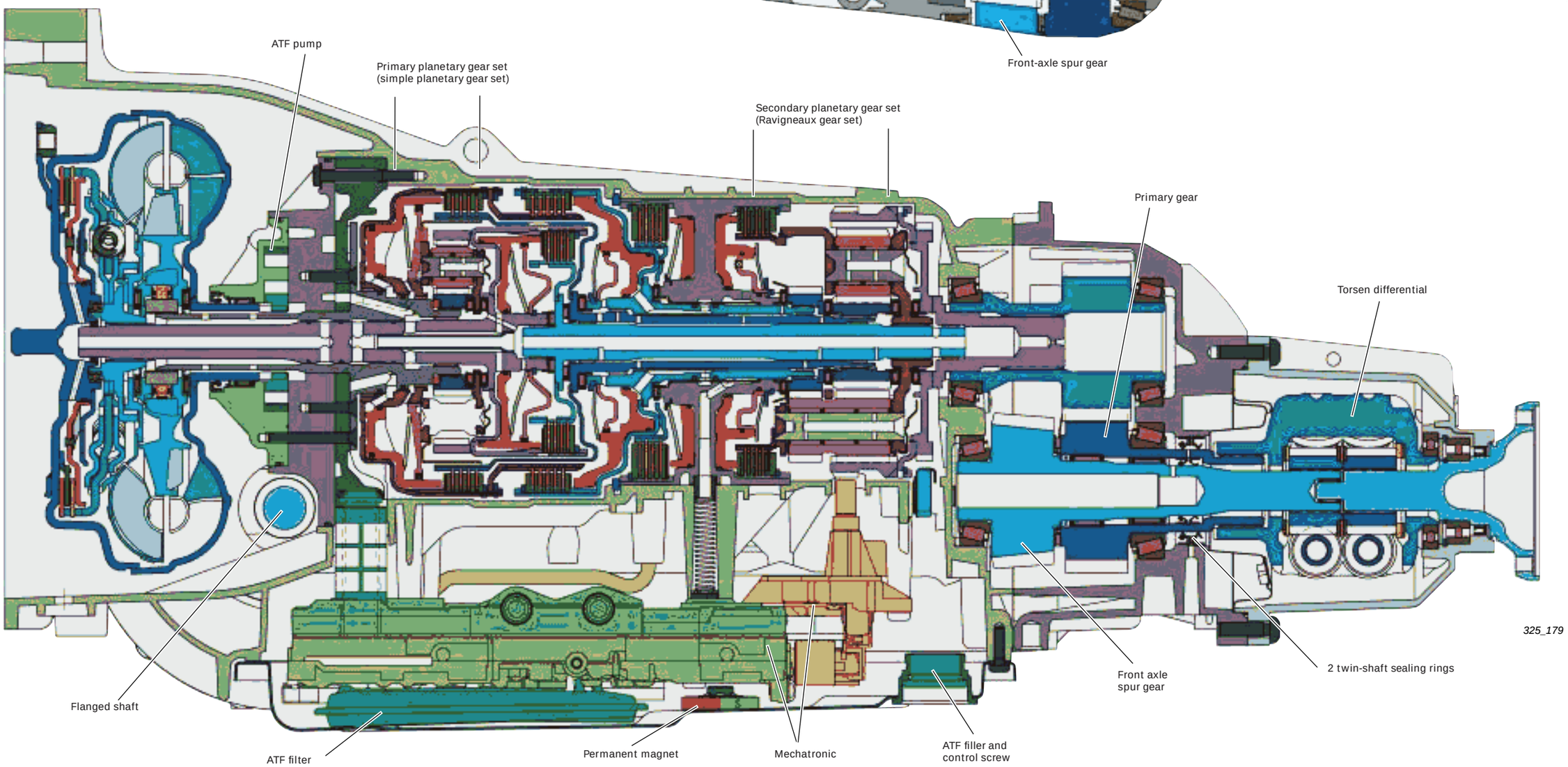

Gearbox cross-section 09L

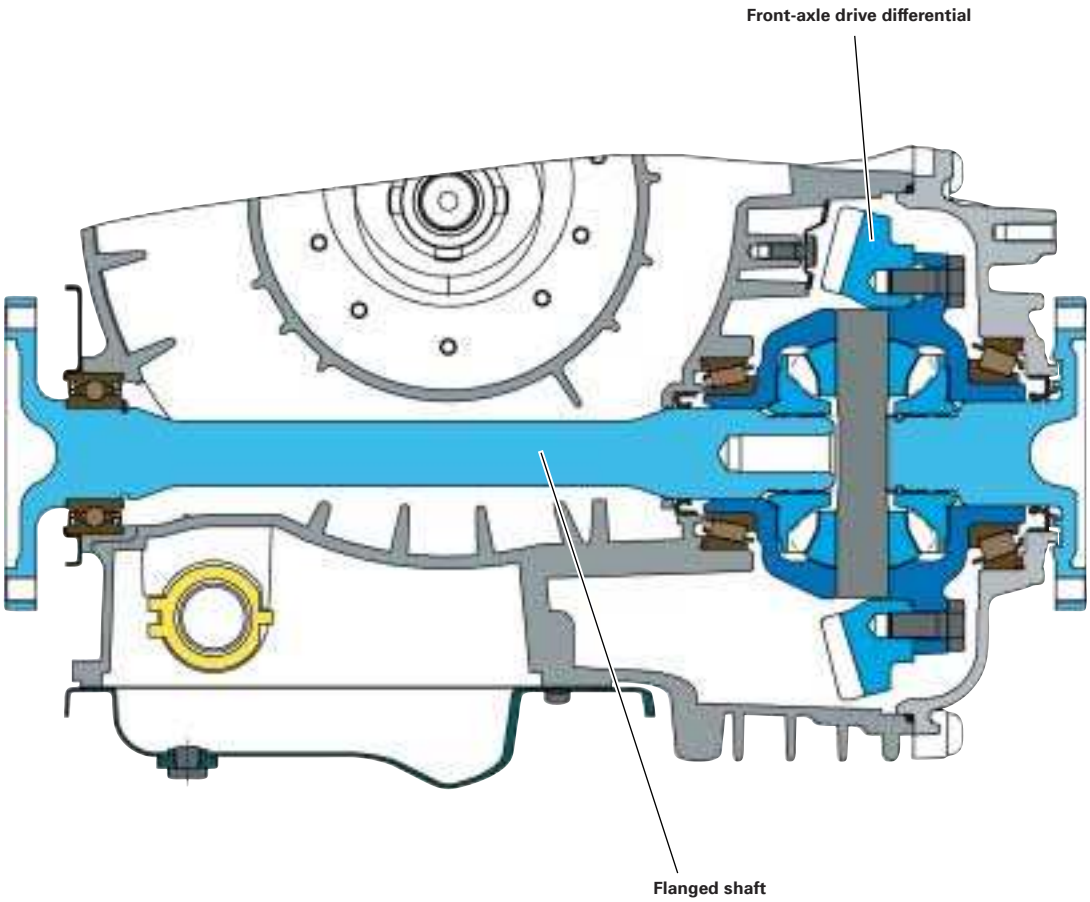

- Hydraulic parts/control
- Components of the planetary gear sets
- Shafts/gearwheels
- Electronic components, control unit
- Multi-disc clutches, bearings, plates, snap rings
- Plastic, seals, rubber, washers
- Components of the switching elements for cylinders, pistons and baffle plates
- Housing, screws, bolts

Technical data	
Service code	09L
ZF code	6HP-19A
Audi code	AL 420 6Q
Gearbox type	6-gear planetary transmission (multi-step automatic transmission), electronically controlled with hydro-dynamic torque converter with slip-controlled torque converter lockup clutch
Control	Mechatronic (integration of the hydraulic control unit and electric control to form one unit) Dynamic switching programme with a separate sport programme "S" and the Tiptronic switching programme for manual gear change
Torque converter	W255 RH-4 GWK
Power transmission	Permanent four-wheel drive "quattro" with Torsen central differential
ATF	9.0 litre G 055 005 (Shell ATF M-1375.4) Lifetime fill
Differential, FA/RA	1.1 litre/0.5 litre G 052 145 (Burmah SAF-AG4 1016) Lifetime fill
Weight including oil in kg	Approx. 115 kg
Max. torque in Nm	Up to 450 Nm, depending on engine version
Kingpin inclination	6.04

Apart from the additional gear ratios and the high torque capacity, the following improvements have been made to the 09L gearbox:

- It weighs 14 kg less (compared to the 01V)
- Improved efficiency
- Increased kingpin inclination
- Further developed DSP
- Higher shift speeds
- Improved shift quality

Converter clutch

The permitted friction conduction of the converter clutch has been increased in the 09L gearbox through the use of 4 friction linings.

This allows a considerable expansion of the control operation of the converter clutch, which improves the overall efficiency of the drive line.

ATF G 055 005 is required to ensure the long-term load-bearing capacity of the converter clutch. It has been developed to meet the highest demands.

Converter clutch with 4 linings

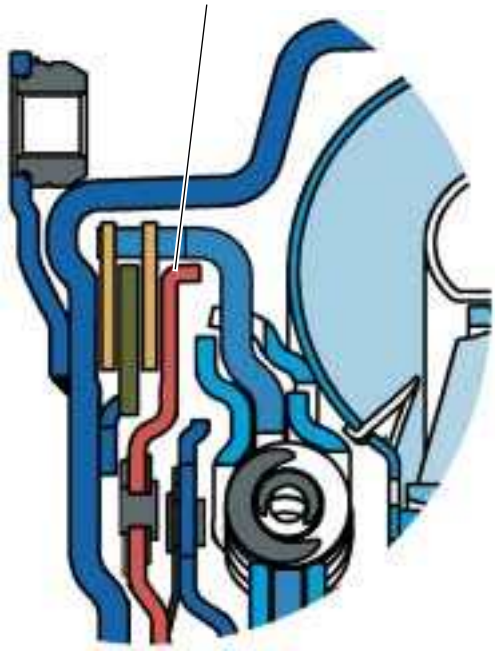

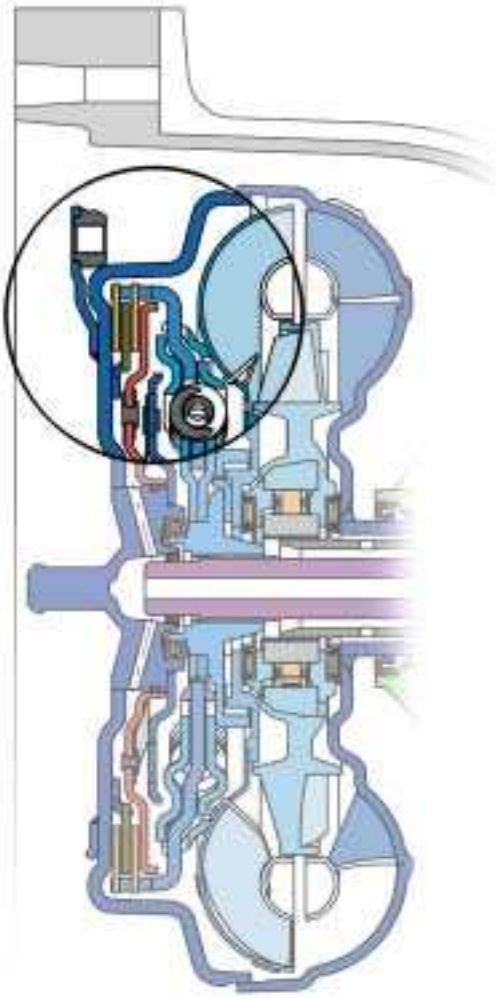

325_180

Reference

Further information on this can be found on page 34 onwards in the Self-Study Programme 283

Oil management and lubrication

The 09L gearbox has three separate oil chambers. Twin-shaft sealing rings are used to separate the adjacent, yet different oil chambers.
In the event of leaks at the twin-shaft sealing rings, the oil escapes out of the corresponding oil leakage bore.

Reference

Further information on this can be found on page 34 onwards in the Self-Study Programme 283.

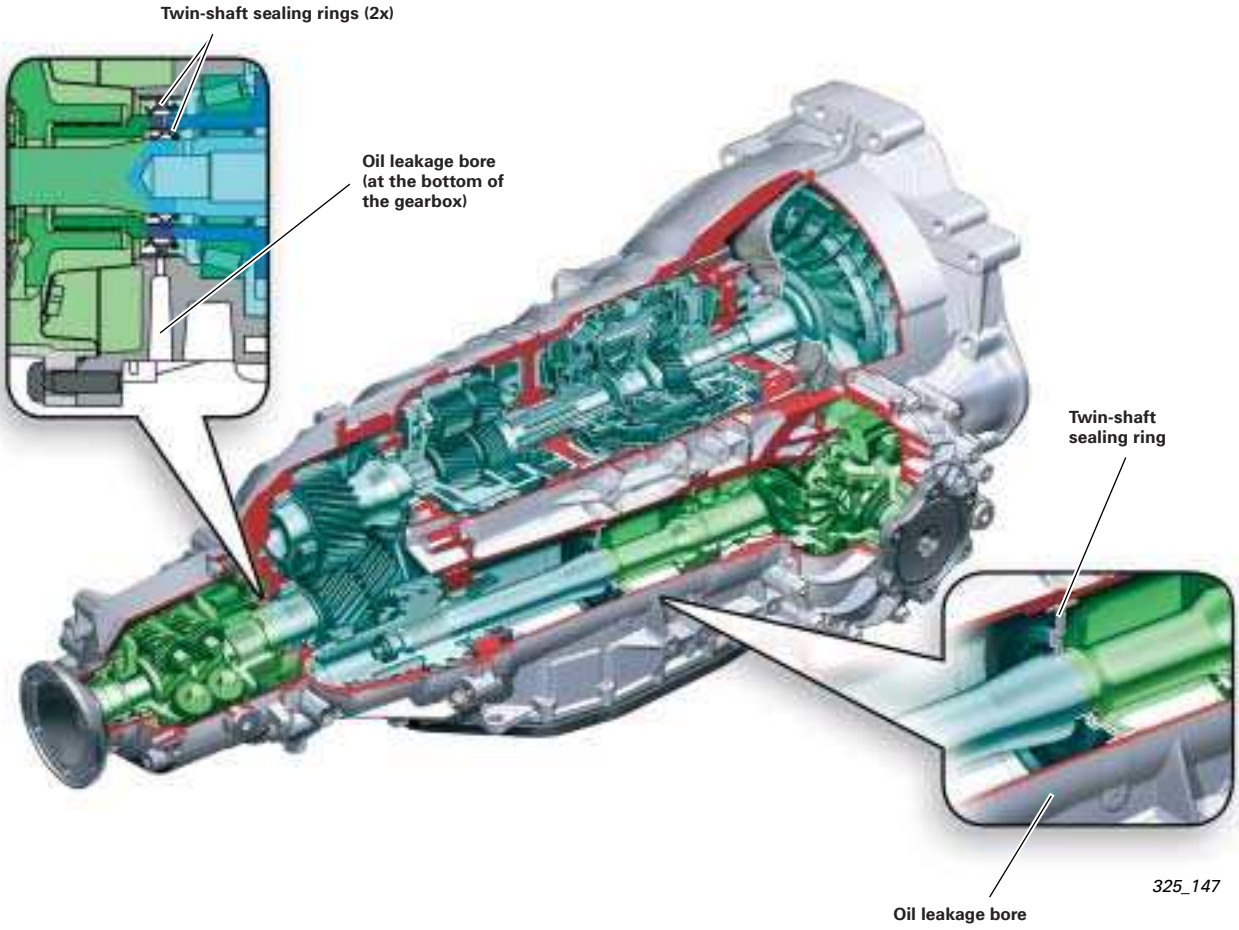

Transmission oil

ATF

Function diagram for 09L gearbox

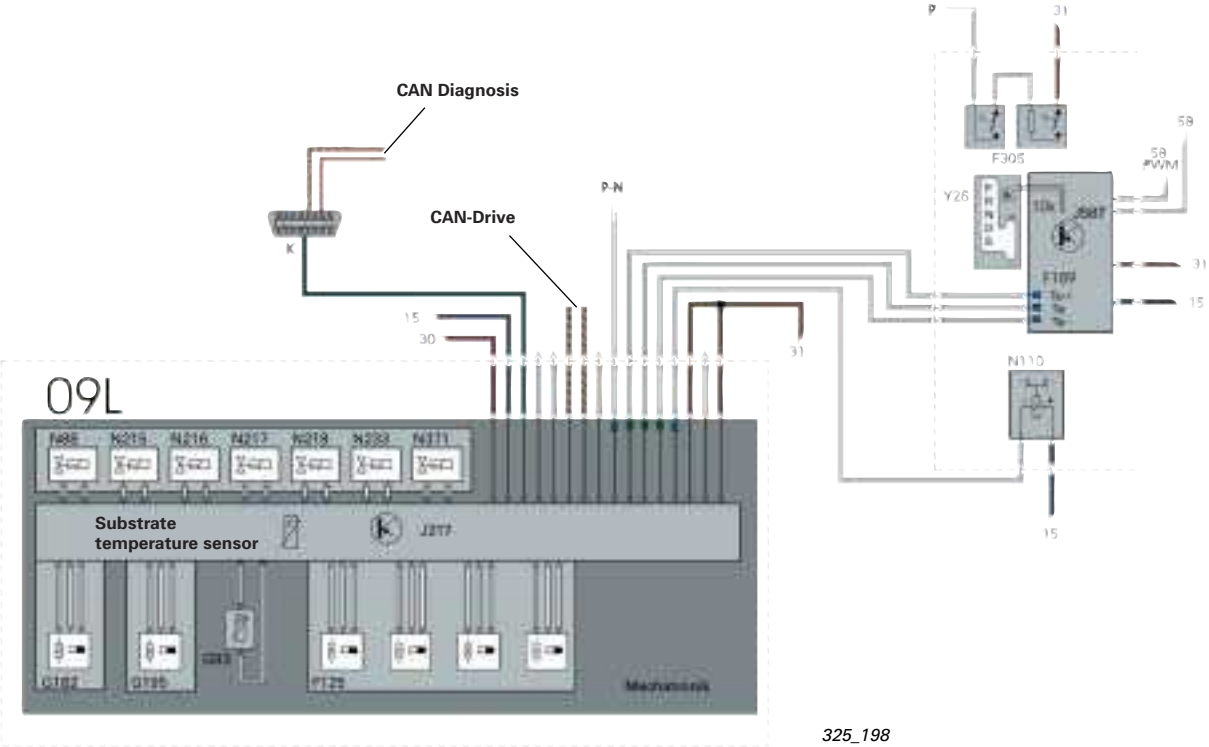

325_198

Legend

F125	Transmission range sensor
E189	Switch for Tiptronic
F305	Switch for gearbox position "P"
G93	Transmission oil temperature sensor
G182	Sender for transmission input speed
G195	Sender for transmission output speed
J217	Control unit for automatic transmission
J587	Control unit for selector lever sensors
N88	Solenoid valve 1
N110	Magnet for selector lever lock
N215	Electric pressure control valve -1-
N216	Electric pressure control valve -2-
N217	Electric pressure control valve -3-
N218	Electric pressure control valve -4-
N233	Electric pressure control valve -5- (system pressure)
N371	Electric pressure control valve -6- (converter clutch)
Y26	Display unit for selector lever positioning
P	P signal to switch for access and start authorisation E415 (for the ignition key anti-removal lock function)
P-N	P/N signal to control unit for access and start authorisation J518 (for the start control function)
K	Bi-directional diagnosis lead (K lead)

Transmission ratio

The gear spread has been increased by 22 % compared to the 01V gearbox.
Most of that was used to achieve a lower take-off ratio in order to improve take-off dynamics.

On the one hand, the higher kingpin inclination has provided more wheel torque for vehicle acceleration in low gears, while on the other hand, it ensures lower engine speeds for motorway driving, and as a result, a lower noise level and improved fuel consumption.

The basic transmission ratio design for top speed is different for diesel engines and petrol engines.

Top speed is reached in 6th gear with diesel engines.
Top speed is reached in 5th gear with petrol engines.
Top speed can be reached both in 5th and 6th gear with corresponding engine power.

	09L	01V
	Transmission ratio	Transmission ratio
1st gear	4.171	3.665
2nd gear	2.340	1.999
3rd gear	1.521	1.407
4th gear	1.143	1.000
5th gear	0.867	0.742
6th gear	0.691	
Reverse	3.403	4.096
Kingpin inclination	6.04	4.94

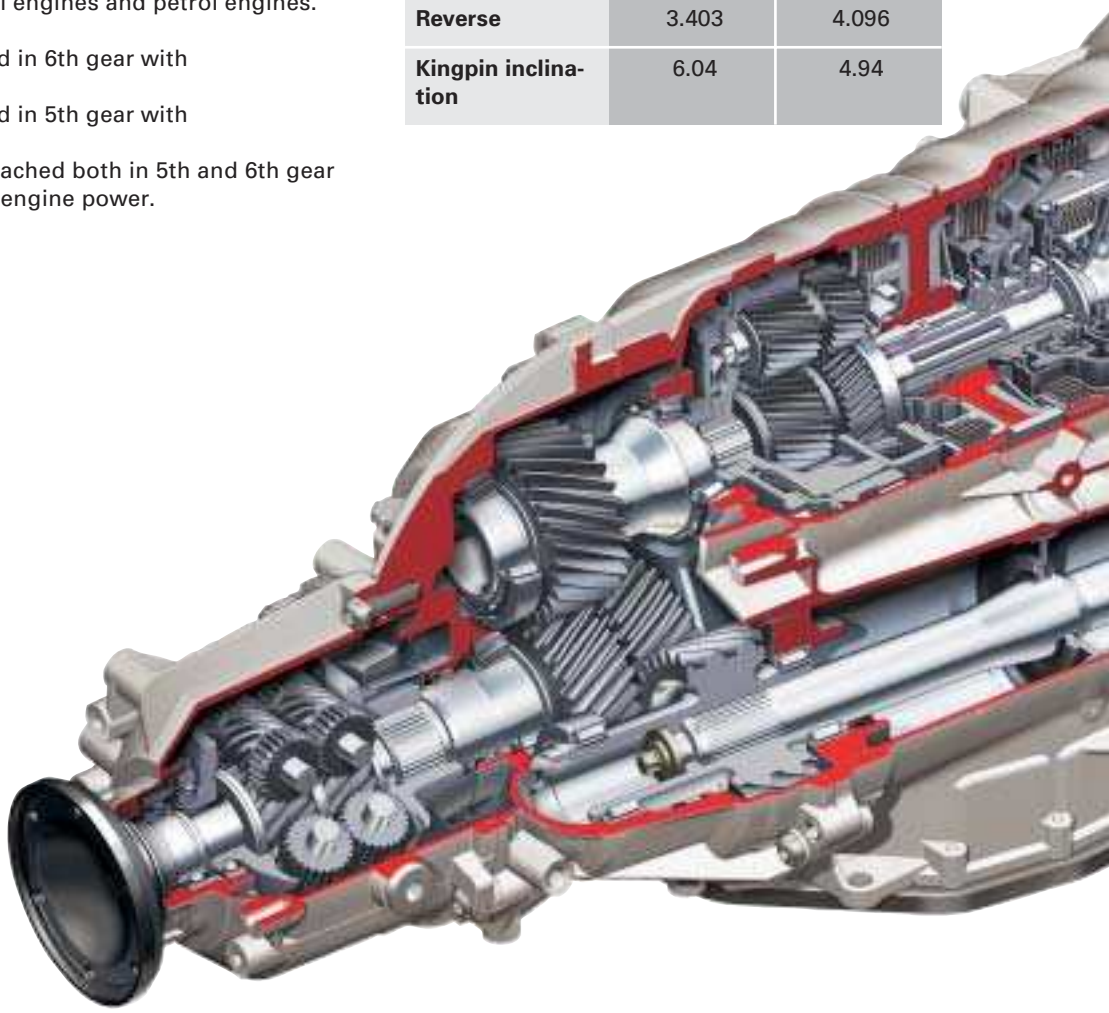

Hydraulics (lubrication)

A significant reduction in leaks in the hydraulic system, particularly due to the use of new pressure regulators, means that a smaller oil pump can be used. The oil pump in the 09L gearbox still only has 50 % of the torque absorption of the 01V gearbox.

Furthermore, a lower-viscosity ATF is used for the 09L gearbox (as for the 09E gearbox). This results in significantly lower torque losses at low temperatures.

Both measures ensure not only a reduction in fuel consumption, but also a higher top speed.

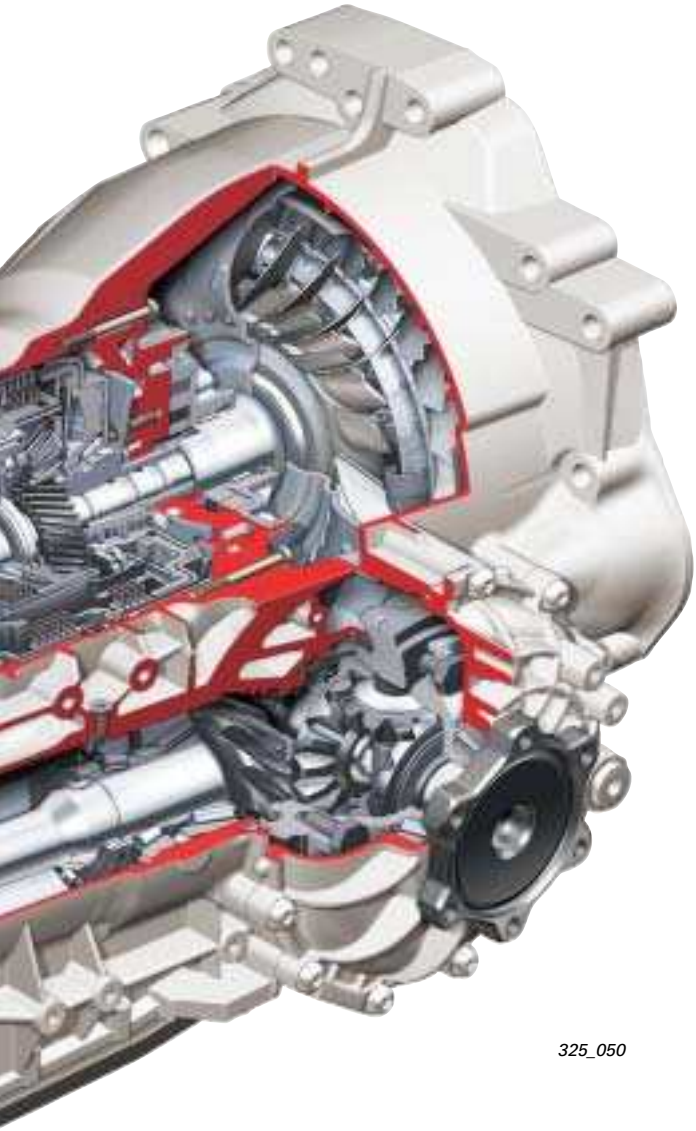

325_050

Dynamic switching programme – DSP

The driving strategy has been further developed in order to highlight the sporty character of the new Audi A6.
For example, different switching programmes are used in the D and S mode, depending on accelerator pedal gradient, vehicle acceleration and lateral acceleration. This eliminates annoying up-shifts, e.g. when driving into corners, during sporty driving.

Furthermore, the first take-off procedure is already under evaluation in order to change over to different switching characteristics both in the D and S programme in the very near future, so that the gearbox can be adapted even more quickly to the driver type.

To meet the requirements of the new Audi A6 with regard to comfort and convenience, various tuning parameters for clutch control have been implemented for the D, S and Tiptronic settings.
A spontaneous map set is activated during the switching operation in sport and Tiptronic mode, thereby reducing the switching time.
The main emphasis is on comfort in the D mode, which extends the switching time slightly.

Electro-hydraulic control

To increase the shift speed, especially for changing down, more far-reaching functions in relation to engine control have been developed in addition to optimisations in gearshift operation.

Multiple change-downs are interstaged, which contributes to a significant increase in spontaneity. This measure means that during the first change-down, the next change-down is already electrically and hydraulically prepared so that the change can then be performed without delay.

Coasting change-downs are reduced by around 50 % through active intermediate acceleration, which significantly increases agility. The spontaneity of change-downs, which are only performed for a light pull, is also increased significantly as a result of this measure.

Multitronic 01J

The Multitronic has been developed further with regard to efficiency and sportiness.

When use in **combination with the 3.2 l V6 FSI engine**, the transmission ratio capacity was increased to 330 Nm and 188 kW.

This was achieved by implementing the following measures:

- The spring packs and the flywheel mass were adapted for the flywheel damper unit.
- The required oil pressure and the oil quantity for clutch cooling was increased for the drive-off clutch.
- The toothing of the spur gears and the bevel gear was strengthened and their cooling system was optimised.
- The material and heat processing was optimised on the variator. The diameter of the disc set shafts was increased. The strength of the shafts was increased by optimising the oil bore guide.
- The contact point geometry of the chain pin and bevel slide valve was improved to support the higher pressures resulting from the increased torque.
- The hydraulic control system was adapted for the clutch and variator due to the higher pressures.

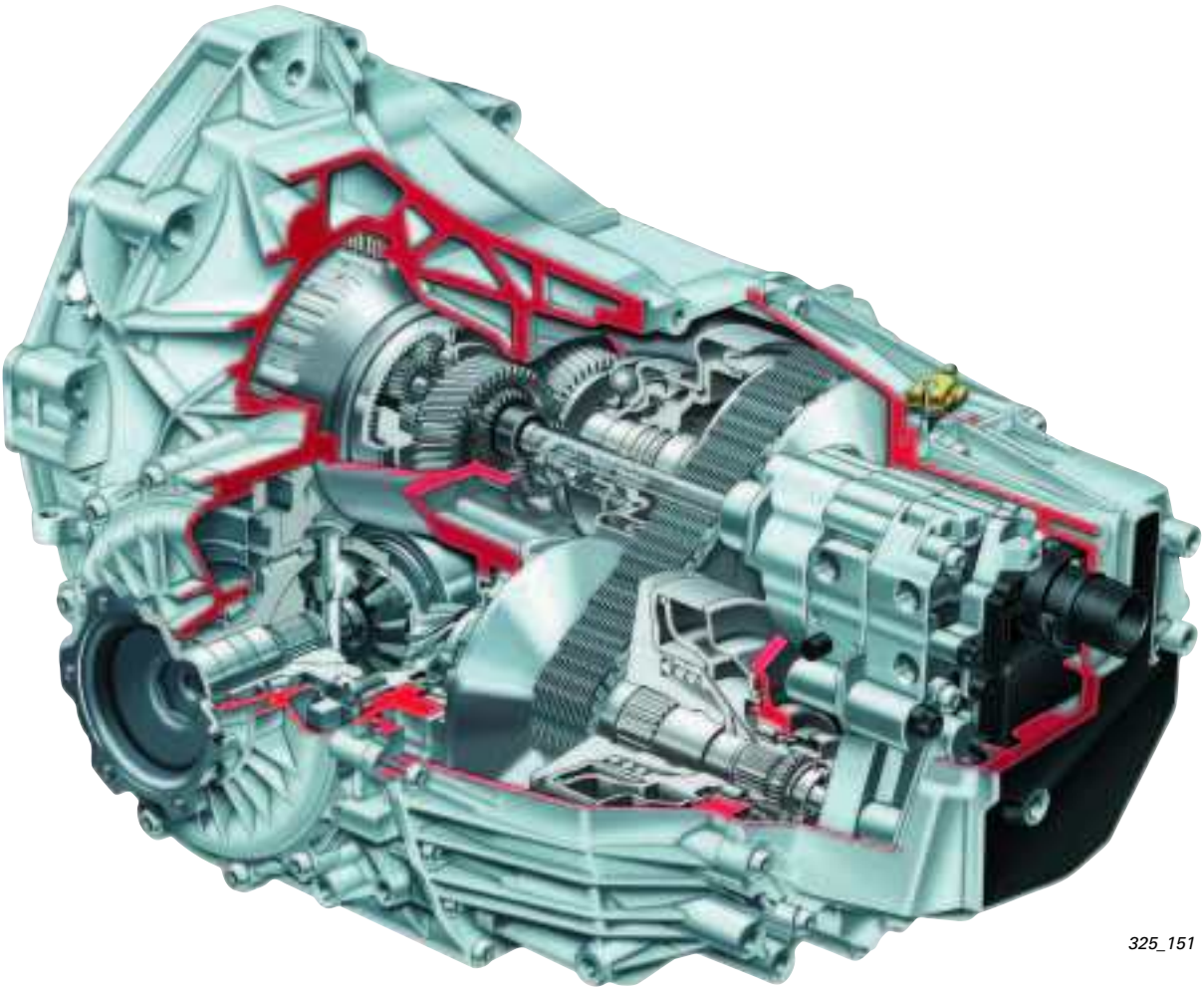

325_151

The gear spread was increased from 6.05 to 6.20 in order to achieve more agility and sportiness while maintaining good fuel consumption values.

Reference

The design and function of the Multitronic are described in the Self-Study Programme 228. Further information on this can be found in the Service Net Update, SSP 228.

The transmission efficiency was improved in order to reduce consumption and increase driving power. This was mainly achieved by reducing the pump absorption power.

Two measures must be mentioned here:

- A reduction in leaks on the entire hydraulics system reduces the required oil feed quantity. Newly developed piston rings in the twist inlets of the disc sets have contributed significantly to this.

- A new vane-type pump with a lower power consumption also helps to improve efficiency.

Comparison between crescent-type pump (predecessor) and vane-type pump

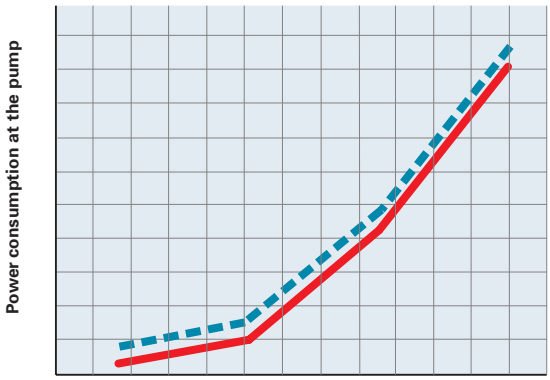

325_204

Piston rings in the disc set twist inlets

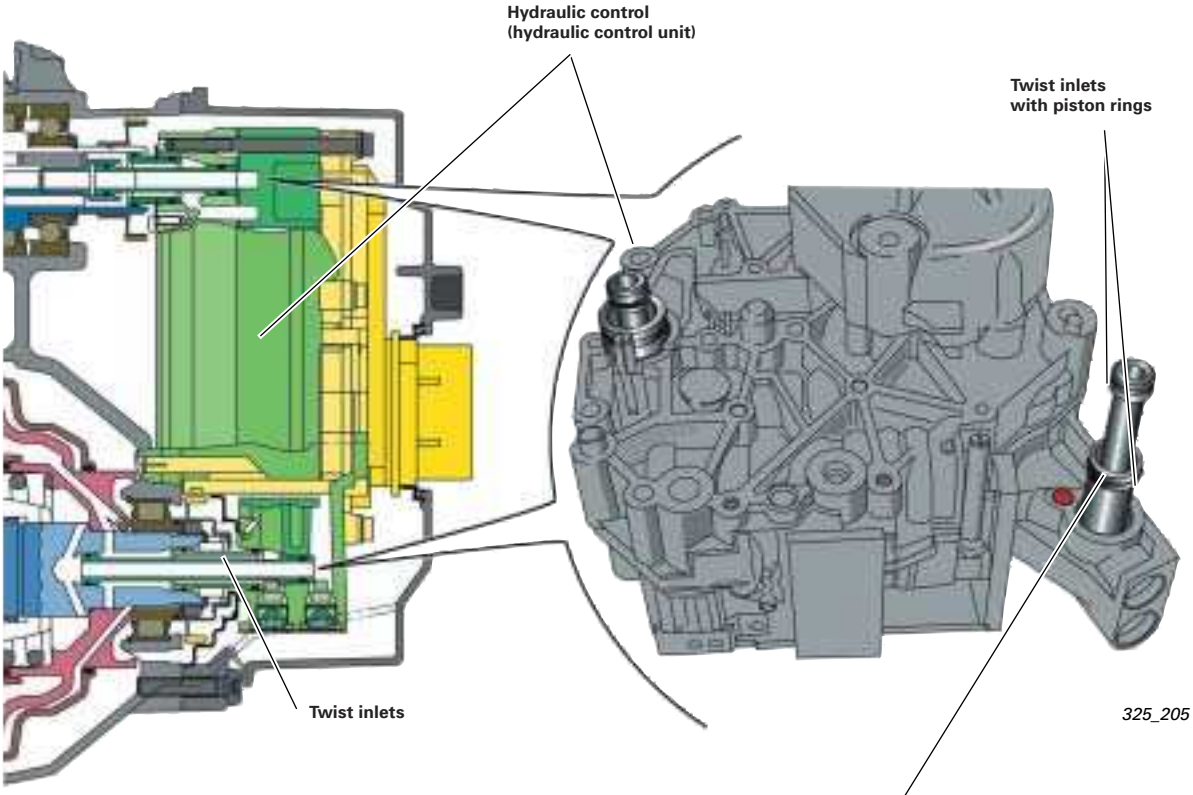

325_205

Previously used piston rings

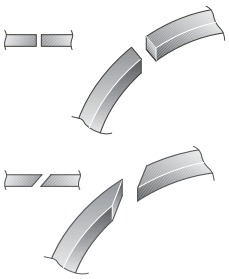

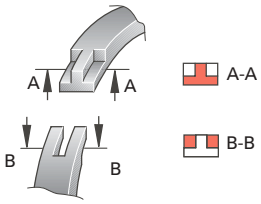

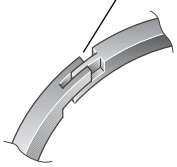

The new piston rings with a so-called "T lock" have fewer leaks than the previously used square- or diagonal-cut piston rings. The required oil feed quantity is lower, which in turn improves efficiency.

The new oil pump is an up-and-down stroke **vane-type pump**. The pump housing is shaped in such a way that two suction cones and pressure cones exist. The feed capacity per rotation is thus twice as high as with the conventional shape.

The symmetric shape means that there is not much pressure on the pump shaft.
The vane-type pump is very compact and has a lower power consumption compared with the predecessor pump.

As on the predecessor pump, special measures were implemented to improve the so-called "inner seal".

To compress the pump impeller, the pump pressure is guided into the guide grooves of the rotor, which presses the vanes to the pump housing. The pump chambers are also sealed axially.
The pump pressure is applied to the side housing covers of the pump. As the pressure increases, the housing covers are pressed with more force on to the rotor and its vanes.

Up-and-down stroke vane-type pump

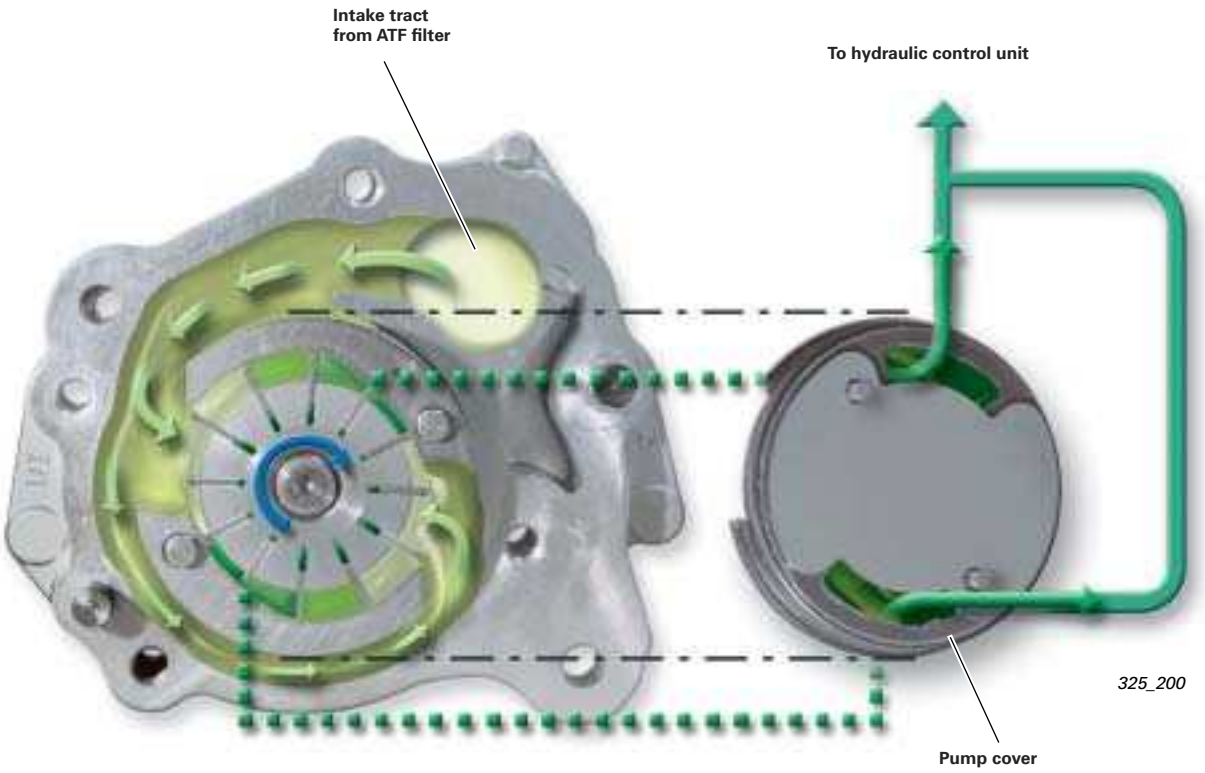

Functions

The following functions have been further developed in order to highlight the sporty character of the new Audi A6:

– Tiptronic
– Dynamic Regulating Programme DRP
– Hill starts

Tiptronic

A7-gear version is used in tiptronic operation.
We can differentiate two different gearing variants:

Variant 1: In the tip gate selector lever position or in selector lever position "D" for steering wheel tiptronic, the design is implemented economically as so-called 6+E gearing.

Variant 2: In selector lever position "S" for steering wheel tiptronic, gearing is implemented in the form of a 7-gear "sports-style gearbox" with short transmission ratios.

325_215

Dynamic Regulating Programme DRP

Switching in 7 gears is now possible in a "stepped" way during acceleration in the S programme.
This provides increased engine speed dynamics.

Hill starts

Take-off comfort on hills has been improved.
Here, the vehicle is held for a short time by the service brake until the driver accelerates to take off.
This prevents the vehicle from rolling back on slopes.

Function:

If the driver takes his/her foot off the brake pedal after stopping on a slope, the braking pressure that was previously applied by the driver is maintained by closing the ABS outlet valves. If the driver puts his/her foot on to the accelerator pedal within one second and accelerates, the brake is opened if the engine torque is sufficient for taking off. If the driver does not press the accelerator pedal immediately after letting off the service brake, the brake is opened again after one second. If the creep torque is not sufficient to hold the vehicle, it will roll back unless the driver intervenes.

Reference:

For further information, please read the creep control function description from page 24 onwards in the SSP 228.

Function diagram for 01J multitronic

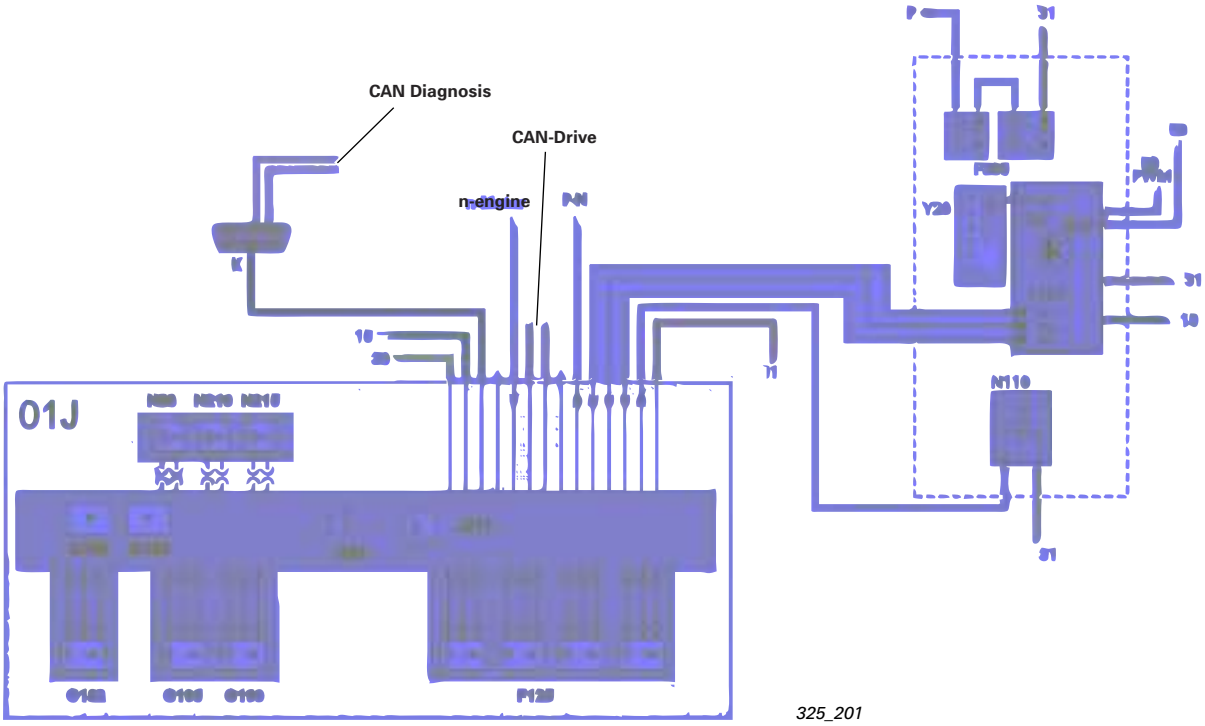

Legend

F125	Transmission range sensor
E189	Switch for Tiptronic
F305	Switch for gearbox position "P"
G93	Transmission oil temperature sensor
G182	Sender for transmission input speed
G193	Sender -1- for hydraulic pressure, automatic transmission (clutch pressure)
G194	Sender -2- for hydraulic pressure, automatic transmission (contact pressure)
G195	Sender for transmission output speed
G196	Sender -2- for transmission output speed
J217	Control unit for automatic transmission
J587	Control unit for selector lever sensors
N88	Solenoid valve 1
N110	Magnet for selector lever lock
N215	Electric pressure control valve -1-
N216	Electric pressure control valve -2-
Y26	Display unit for selector lever positioning
P	P signal to switch for access and start authorisation E415 (for the ignition key anti-removal lock function)
P-N	P/N signal to control unit for access and start authorisation J518 (for the start control function)
K	Bi-directional diagnosis lead (K lead)
n-engine	Engine speed signal, (from the relevant engine control unit) see SSP 228, page 76

Vorsprung durch Technik **www.audi.co.uk**

325

All rights reserved. Subject
to technical change.

Copyright
AUDI AG
I/VK-35
Service.training@audi.de
Fax +49-841/89-36367

AUDI AG
D-85045 Ingolstadt
Technical release 01/04

Printed in Germany
A04.5S00.08.20