# BRAKES

## Antilock Brake System - Non-Hybrid Less than 3900 kg (8600 lb) GVW - Escalade, Suburban, Tahoe, Yukon

## SPECIFICATIONS

### FASTENER SPECIFICATIONS

| Application | Specification | |
|---|---|---|
| | Metric | English |
| Brake Pipe Fitting - Brake Pressure Modulator Valve Inlet | 32 N.m | 24 lb ft |
| Brake Pipe Fitting | 18 N.m | 13 lb ft |
| Brake Pressure Modulator Valve Bracket Bolt | 22 N.m | 16 lb ft |
| Brake Pressure Modulator Valve Bolt | 10 N.m | 89 lb in |
| Electronic Brake Control Module Bolt | 3 N.m | 27 lb in |
| Steering Column Bracket Screw | 6 N.m | 53 lb in |
| Wheel Speed Sensor Bolt - Front | 13 N.m | 115 lb in |
| Wheel Speed Sensor Bolt - Rear | 13 N.m | 115 lb in |

## SCHEMATIC WIRING DIAGRAMS

### ANTILOCK BRAKE SYSTEM WIRING SCHEMATICS

#### Power, Ground, Serial Data and Traction Controls

cardiagn.com

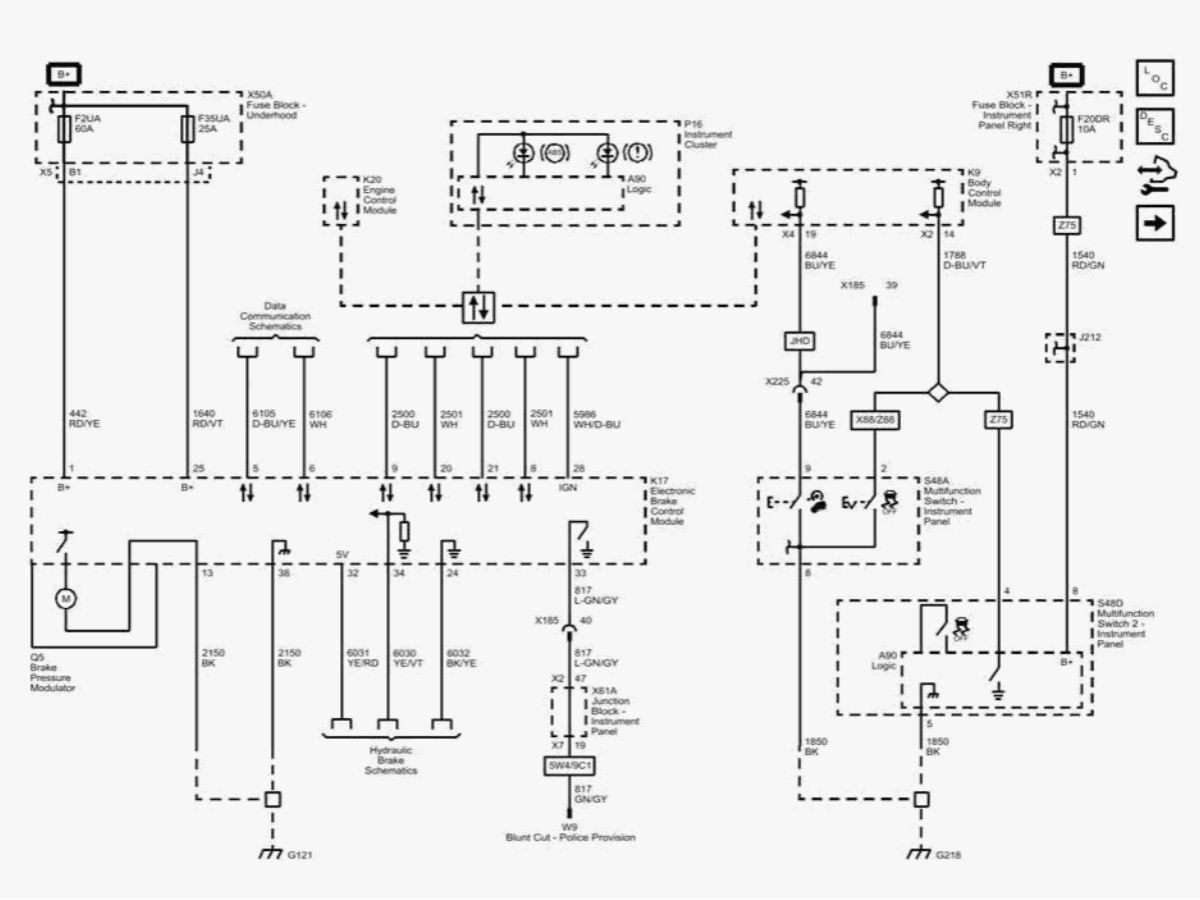


**Fig. 1: Power, Ground, Serial Data and Traction Controls**
**Courtesy of GENERAL MOTORS COMPANY**

## Wheel Speed Signals

cardiagn.com

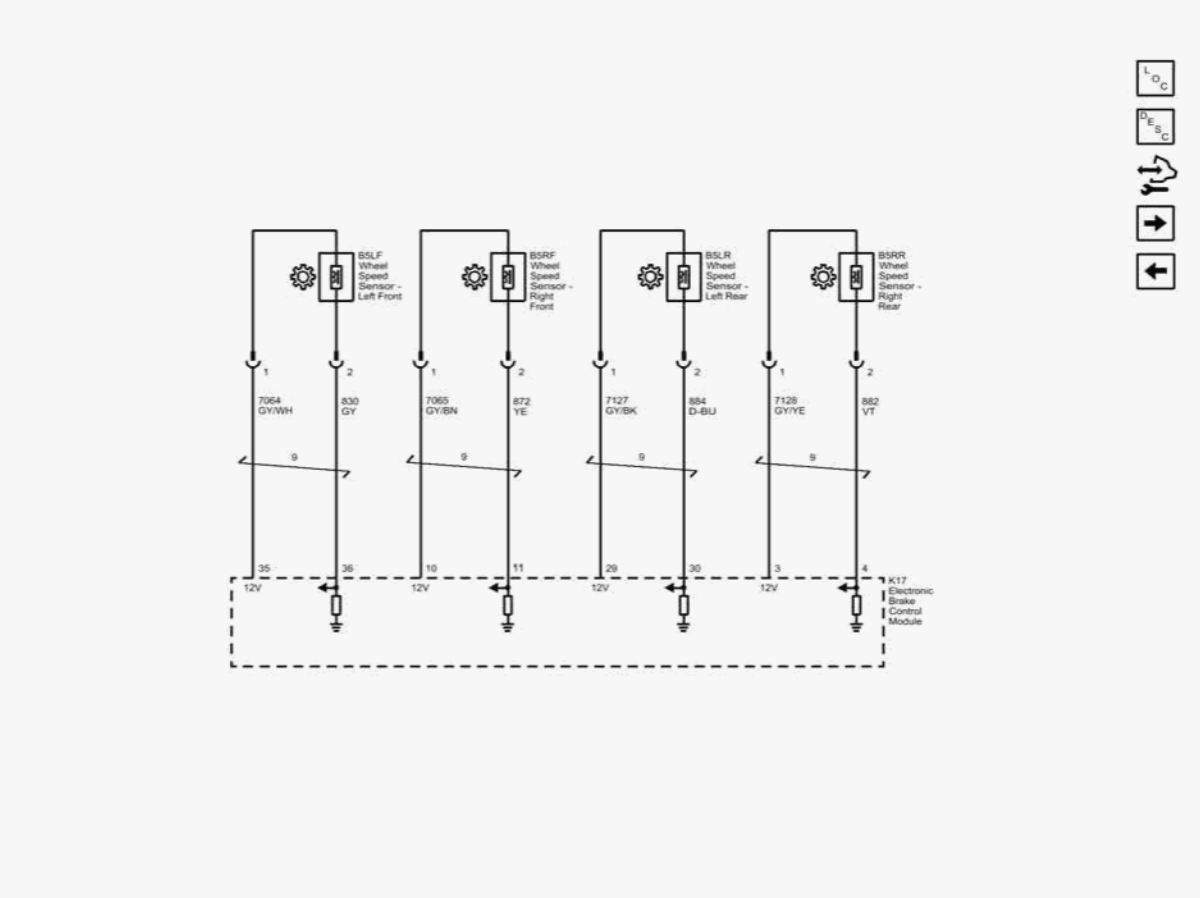


**Fig. 2: Wheel Speed Signals**
**Courtesy of GENERAL MOTORS COMPANY**

**Vehicle Stability**

cardiagn.com

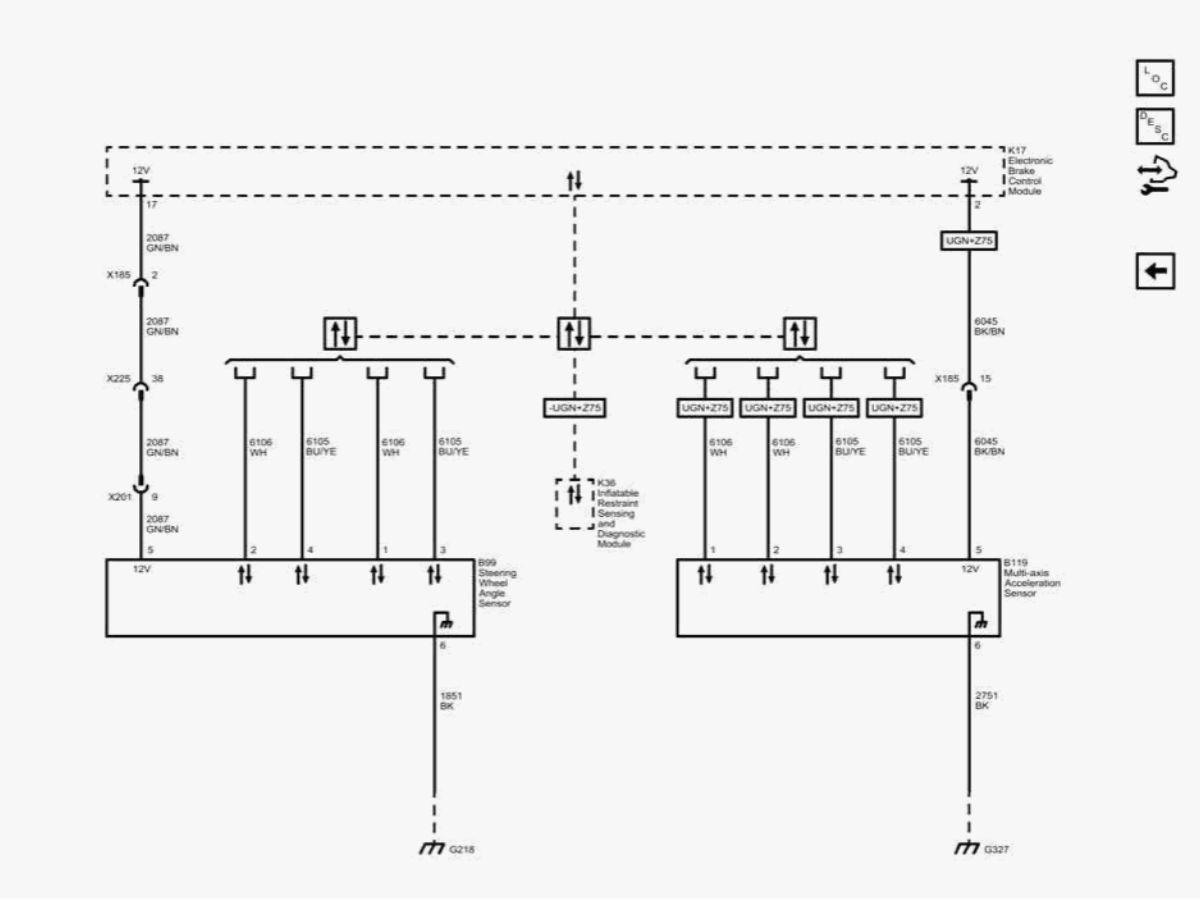


**Fig. 3: Vehicle Stability**
**Courtesy of GENERAL MOTORS COMPANY**

# DIAGNOSTIC INFORMATION AND PROCEDURES

## DTC B2745: TRACTION CONTROL SWITCH CIRCUIT SHORT TO GROUND

### Diagnostic Instructions

- Perform the **Diagnostic System Check - Vehicle** prior to using this diagnostic procedure.
- Review **Strategy Based Diagnosis** for an overview of the diagnostic approach.
- Refer to **Diagnostic Procedure Instructions** to provide an overview of each diagnostic category.

cardiagn.com

### DTC Descriptor

## DTC B2745 02

Traction Control Switch Circuit Short to Ground

### Diagnostic Fault Information

| Circuit | Short to Ground | Open/High Resistance | Short to Voltage | Signal Performance |
|---|---|---|---|---|
| Signal | U0422 71, B2745 02 | 1 | 1 | - |
| Ground | - | 1 | - | - |
| 1. Traction control switch malfunction | | | | |

### Circuit/System Description

The body control module monitors the signal circuit from the traction control switch. When the traction control switch is pressed once, the body control module will request the electronic brake control module via serial data to disable the traction control. The electronic brake control module will request the instrument cluster via serial data to turn the traction control off indicator ON to notify the driver of the deactivation.

When the traction control switch is pressed and held for 5 s, the body control module will request the electronic brake control module to disable the traction control and the electronic stability control. The electronic brake control module will request the instrument cluster via serial data to turn the traction control off and stability control off indicator ON to notify the driver of the deactivation.

### Conditions for Running the DTC

Ignition ON

### Conditions for Setting the DTC

The body control module detects a short to ground on the signal circuit.

### Action Taken When the DTC Sets

The body control module ignores the traction control switch signal input.

### Conditions for Clearing the DTC

- The DTC clears when the diagnostic runs and passes.

cardiagn.com

- The history DTC will clear after 40 consecutive fault-free ignition cycles have occurred.

### Reference Information

Schematic Reference

**Antilock Brake System Schematics**

Connector End View Reference

**COMPONENT CONNECTOR END VIEWS - INDEX**

Description and Operation

**ABS Description and Operation**

Electrical Information Reference

- **Circuit Testing**
- **Connector Repairs**
- **Testing for Intermittent Conditions and Poor Connections**
- **Wiring Repairs**

Scan Tool Reference

**Control Module References** for scan tool information

### Circuit/System Verification

1. Ignition ON.
2. Verify the scan tool Body Control Module Traction Control Switch parameter changes between Active and Inactive when pressing and releasing the traction control switch.
    - **If the parameter does not change**

      Refer to Circuit/System Testing.

    - **If the parameter changes**

cardiagn.com

3. All OK.

### Circuit/System Testing

1. Ignition OFF and all vehicle systems OFF, disconnect the X1 harness connector at the S48A Multifunction Switch - Instrument Panel. It may take up to 2 min for all vehicle systems to power down.
2. Test for less than 5 Ω between the ground circuit terminal 14 and ground.
   - **If 5 Ω or greater**
   1. Ignition OFF.
   2. Test for less than 2 Ω in the ground circuit end to end.
      - If 2 Ω or greater, repair the open/high resistance in the circuit.
      - If less than 2 Ω, repair the open/high resistance in the ground connection.
   - **If less than 5 Ω**
3. Ignition ON.
4. Verify the scan tool Body Control Module Traction Control Switch parameter is Inactive.
   - **If not Inactive**
   1. Ignition OFF, disconnect the X2 harness connector at the K9 Body Control Module.
   2. Test for infinite resistance between the signal circuit terminal 14 X2 and ground.
      - If less than infinite resistance, repair the short to ground on the circuit.
      - If infinite resistance, replace the K9 Body Control Module.
   - **If Inactive**
5. Install a 3 A fused jumper wire between the signal circuit terminal 17 and the ground circuit terminal 14.
6. Verify the scan tool Traction Control Switch parameter is Active.
   - **If not Active**
   1. Ignition OFF, disconnect the X2 harness connector at the K9 Body Control Module, ignition ON.
   2. Test for less than 1 V between the signal circuit and ground.
      - If 1 V or greater, repair the short to voltage on the circuit.
      - If less than 1 V
   3. Test for less than 2 Ω in the signal circuit end to end.
      - If 2 Ω or greater, repair the open/high resistance in the circuit.

cardiagn.com

- If less than 2 Ω, replace the K9 Body Control Module.
- **If Active**

7. Test or replace the S48A Multifunction Switch - Instrument Panel.

### Component Testing

1. Ignition OFF, disconnect the X1 harness connector at the S48A Multifunction Switch - Instrument Panel.
2. Test for infinite resistance between the signal terminal 17 and the ground terminal 14 with the switch in the open position.
   - **If less than infinite resistance**

     Replace the S48A Multifunction Switch - Instrument Panel.

   - **If infinite resistance**
3. Test for less than 2 Ω between the signal terminal 17 and the ground terminal 14 with the switch in the closed position.
   - **If 2 Ω or greater**

     Replace the S48A Multifunction Switch - Instrument Panel.

   - **If less than 2 Ω**
4. All OK.

### Repair Instructions

Perform the **Diagnostic Repair Verification** after completing the repair.

- Refer to **Vehicle Stability Control System Switch Replacement (Chevrolet / GMC)Vehicle Stability Control System Switch Replacement (Cadillac)**
- Refer to **Control Module References** for body control module replacement, programming and setup

## DTC B273A: HILL DESCENT CONTROL SWITCH SHORT TO GROUND

### Diagnostic Instructions

- Perform the **Diagnostic System Check - Vehicle** prior to using this diagnostic procedure.
- Review **Strategy Based Diagnosis** for an overview of the diagnostic approach.
- Refer to **Diagnostic Procedure Instructions** to provide an overview of each diagnostic category.

cardiagn.com

### DTC Descriptor

## DTC B273A 02

Hill Descent Control Switch Short to Ground

### Diagnostic Fault Information

| Circuit | Short to Ground | Open/High Resistance | Short to Voltage | Signal Performance |
|---|---|---|---|---|
| Signal | U0422 71, B273A 02 | 1 | 1 | - |
| Ground | - | 1 | - | - |
| 1. Hill descent control switch inoperative | | | | |

### Circuit/System Description

The body control module monitors the signal circuit from the hill descent control switch. The hill descent switch is a momentary switch that is normally open. When the hill descent control switch is pressed once, the body control module will request the electronic brake control module via serial data to disable or enable the hill descent control. When activated, the switch grounds the hill descent control system signal circuit. The electronic brake control module then enables or disables the hill descent control system. The electronic brake control module will request the instrument cluster via serial data to turn the hill descent indicator ON or OFF to notify the driver.

### Conditions for Running the DTC

Ignition ON

### Conditions for Setting the DTC

The body control module detects a short to ground on the signal circuit.

### Action Taken When the DTC Sets

The body control module ignores the hill descent switch signal input.

### Conditions for Clearing the DTC

- The DTC clears when the diagnostic runs and passes.
- The history DTC will clear after 40 consecutive fault-free ignition cycles have occurred.

cardiagn.com

### Reference Information

Schematic Reference

- **Antilock Brake System Schematics**
- **Hydraulic Brake Schematics**

Connector End View Reference

**COMPONENT CONNECTOR END VIEWS - INDEX**

Description and Operation

**ABS Description and Operation**

Electrical Information Reference

- **Circuit Testing**
- **Connector Repairs**
- **Testing for Intermittent Conditions and Poor Connections**
- **Wiring Repairs**

Scan Tool Reference

**Control Module References** for scan tool information

### Circuit/System Verification

1. Ignition ON.
2. Verify the scan tool Body Control Module Hill Descent Control Switch parameter changes between Inactive and Active when pressing and releasing the hill descent control switch.
    - **If the parameter does not change**

      Refer to Circuit/System Testing.

    - **If the parameter changes**
3. All OK.

cardiagn.com

### Circuit/System Testing

1. Ignition OFF and all vehicle systems OFF, disconnect the X1 harness connector at the S48A Multifunction Switch - Instrument Panel. It may take up to 2 min for all vehicle systems to power down.
2. Test for less than 5 Ω between the ground circuit terminal 14 and ground.
   - **If 5 Ω or greater**
   1. Ignition OFF.
   2. Test for less than 2 Ω in the ground circuit end to end.
      - If 2 Ω or greater, repair the open/high resistance in the circuit.
      - If less than 2 Ω, repair the open/high resistance in the ground connection.
   - **If less than 5 Ω**
3. Ignition ON.
4. Verify the scan tool Hill Descent Control Switch parameter is Inactive.
   - **If not Inactive**
   1. Ignition OFF, disconnect the X4 harness connector at the K9 Body Control Module.
   2. Test for infinite resistance between the signal circuit terminal 19 X4 and ground.
      - If less than infinite resistance, repair the short to ground on the circuit.
      - If infinite resistance, replace the K9 Body Control Module.
   - **If Inactive**
5. Install a 3 A fused jumper wire between the signal circuit terminal 4 and the ground circuit terminal 14.
6. Verify the scan tool Hill Descent Control Switch parameter is Active.
   - **If not Active**
   1. Ignition OFF, disconnect the X4 harness connector at the K9 Body Control Module, ignition ON.
   2. Test for less than 1 V between the signal circuit and ground.
      - If 1 V or greater, repair the short to voltage on the circuit.
      - If less than 1 V
   3. Test for less than 2 Ω in the signal circuit end to end.
      - If 2 Ω or greater, repair the open/high resistance in the circuit.
      - If less than 2 Ω, replace the K9 Body Control Module.

cardiagn.com

- **If Active**

7. Test or replace the S48A Multifunction Switch - Instrument Panel.

### Component Testing

1. Ignition OFF, disconnect the X1 harness connector at the S48A Multifunction Switch - Instrument Panel.
2. Test for infinite resistance between the signal terminal 4 and the ground terminal 14 with the switch in the open position.
   - **If less than infinite resistance**

     Replace the S48A Multifunction Switch - Instrument Panel.

   - **If infinite resistance**
3. Test for less than 2 Ω between the signal terminal 4 and the ground terminal 14 with the switch in the closed position.
   - **If 2 Ω or greater**

     Replace the S48A Multifunction Switch - Instrument Panel.

   - **If less than 2 Ω**
4. All OK.

### Repair Instructions

Perform the **Diagnostic Repair Verification** after completing the repair.

- Refer to **Vehicle Stability Control System Switch Replacement (Chevrolet / GMC)Vehicle Stability Control System Switch Replacement (Cadillac)**
- Refer to **Control Module References** for body control module replacement, programming and setup

## DTC C0035-C0050: WHEEL SPEED SENSOR CIRCUITS

### Diagnostic Instructions

- Perform the **Diagnostic System Check - Vehicle** prior to using this diagnostic procedure.
- Review **Strategy Based Diagnosis** for an overview of the diagnostic approach.
- Refer to **Diagnostic Procedure Instructions** to provide an overview of each diagnostic category.

### DTC Descriptors

cardiagn.com

**DTC C0035 04**

Left Front Wheel Speed Sensor Circuit Open

**DTC C0035 05**

Left Front Wheel Speed Sensor Circuit High Voltage/Open

**DTC C0035 08**

Left Front Wheel Speed Sensor Circuit Performance - Signal Invalid

**DTC C0035 18**

Left Front Wheel Speed Sensor Circuit Low Signal Amplitude

**DTC C0035 0F**

Left Front Wheel Speed Sensor Circuit Signal Erratic

**DTC C0035 3A**

Left Front Wheel Speed Sensor Circuit Incorrect Component Installed

**DTC C0040 04**

Right Front Wheel Speed Sensor Circuit Open

**DTC C0040 05**

Right Front Wheel Speed Sensor Circuit High Voltage/Open

**DTC C0040 08**

Right Front Wheel Speed Sensor Circuit Performance - Signal Invalid

**DTC C0040 18**

Right Front Wheel Speed Sensor Circuit Low Signal Amplitude

cardiagn.com

**DTC C0040 0F**

Right Front Wheel Speed Sensor Circuit Signal Erratic

**DTC C0040 3A**

Right Front Wheel Speed Sensor Circuit Incorrect Component Installed

**DTC C0045 04**

Left Rear Wheel Speed Sensor Circuit Open

**DTC C0045 05**

Left Rear Wheel Speed Sensor Circuit High Voltage/Open

**DTC C0045 08**

Left Rear Wheel Speed Sensor Circuit Performance - Signal Invalid

**DTC C0045 18**

Left Rear Wheel Speed Sensor Circuit Low Signal Amplitude

**DTC C0045 0F**

Left Rear Wheel Speed Sensor Circuit Signal Erratic

**DTC C0045 3A**

Left Rear Wheel Speed Sensor Circuit Incorrect Component Installed

**DTC C0050 04**

Right Rear Wheel Speed Sensor Circuit Open

**DTC C0050 05**

Right Rear Wheel Speed Sensor Circuit High Voltage/Open

cardiagn.com

### DTC C0050 08

Right Rear Wheel Speed Sensor Circuit Performance - Signal Invalid

### DTC C0050 18

Right Rear Wheel Speed Sensor Circuit Low Signal Amplitude

### DTC C0050 0F

Right Rear Wheel Speed Sensor Circuit Signal Erratic

### DTC C0050 3A

Right Rear Wheel Speed Sensor Circuit Incorrect Component Installed

#### Diagnostic Fault Information

| Circuit | Short to Ground | Open/High Resistance | Short to Voltage | Signal Performance |
|---|---|---|---|---|
| Left Front Wheel Speed Sensor Ignition | C0035 05 | C0035 04 | C0035 05 | C0035 08, C0035 18, C0035 0F |
| Left Front Wheel Speed Sensor Signal | - | C0035 04 | C0035 05 | C0035 08, C0035 18, C0035 0F, C0035 3A |
| Right Front Wheel Speed Sensor Ignition | C0040 05 | C0040 04 | C0040 05 | C0040 08, C0040 18, C0040 0F |
| Right Front Wheel Speed Sensor Signal | - | C0040 04 | C0040 05 | C0040 08, C0040 18, C0040 0F, C0040 3A |
| Left Rear Wheel Speed Sensor Ignition | C0045 05 | C0045 04 | C0045 05 | C0045 08, C0045 18, C0045 0F |
| Left Rear Wheel Speed Sensor Signal | - | C0045 04 | C0045 05 | C0045 08, C0045 18, C0045 0F, C0045 3A |
| Right Rear Wheel Speed Sensor Ignition | C0050 05 | C0050 04 | C0050 05 | C0050 08, C0050 18, C0050 0F |
| Right Rear Wheel Speed Sensor Signal | - | C0050 04 | C0050 05 | C0050 08, C0050 18, C0050 0F, C0050 3A |

cardiagn.com

| Component | Condition | DTC Symptom Bytes |
|---|---|---|
| Wheel Speed Sensor | • Physical damage<br>• Debris on the wheel speed sensor or the encoder ring<br>• Loose or improperly mounted sensor<br>• Air gap between the wheel speed sensor and the encoder ring too large<br>• Water intrusion in the wiring harness | 08, 18, or 0F |

### Circuit/System Description

The wheel speeds are detected by active wheel speed sensors and encoder rings. The encoder ring consists of permanent magnets. Each wheel speed sensor receives ignition voltage from the electronic brake control module and provides an alternating current square wave signal to the electronic brake control module. As the wheel spins, the electronic brake control module uses the frequency of the square wave signal to calculate the wheel speed.

### Conditions for Running the DTC

**C0035 04, C0040 04, C0045 04, and C0050 04**

Ignition ON

**C0035 05, C0040 05, C0045 05, and C0050 05**

- Ignition ON
- Vehicle speed is greater than 16 km/h (10 MPH).

**C0035 08, C0040 08, C0045 08, and C0050 08**

- No electrical faults are detected.
- Vehicle speed is greater than 16 km/h (10 MPH).

**C0035 18, C0040 18, C0045 18, and C0050 18**

- Ignition ON
- Vehicle speed is greater than 12.9 km/h (8 MPH).

cardiagn.com

**C0035 0F, C0040 0F, C0045 0F, and C0050 0F**

- Ignition ON
- Vehicle speed is greater than 12.9 km/h (8 MPH).

**C0035 3A, C0040 3A, C0045 3A, and C0050 3A**

- Ignition ON
- Vehicle speed is greater than 15 km/h (10 MPH).

### Conditions for Setting the DTC

**C0035 04, C0040 04, C0045 04, or C0050 04**

- A open or high resistance is detected on the wheel speed sensor ignition circuit.
- A open or high resistance is detected on the wheel speed sensor signal circuit.

**C0035 05, C0040 05, C0045 05, or C0050 05**

- A short to ground or a short to voltage is detected on the wheel speed sensor ignition circuit.
- A short to ground or a short to voltage is detected on the wheel speed sensor signal circuit.

**C0035 08, C0040 08, C0045 08, or C0050 08**

- A high resistance is detected in the wiring harness.
- A short to voltage is detected on the high side wheel speed sensor circuit.

**C0035 18, C0040 18, C0045 18, or C0050 18**

- The tone ring may be demagnetized.
- Incorrectly mounted wheel speed sensor.
- An erratic wheel speed sensor signal is detected.
- Air gap between the wheel speed sensor and the tone ring is too large.

**C0035 0F, C0040 0F, C0045 0F, or C0050 0F**

cardiagn.com

- Incorrectly mounted wheel speed sensor.
- Debris on the wheel speed sensor or the tone ring.
- Missing tooth or teeth on the wheel speed sensor tone ring.
- Electrical magnetic interference with the wheel speed sensor harness.

**C0035 3A, C0040 3A, C0045 3A, or C0050 3A**

- The wrong hub or tone ring may be installed.
- A incompatible wheel speed sensor may be installed.

### Action Taken When the DTC Sets

- The ABS indicator turns ON.
- The adaptive cruise control is inhibited.
- The traction/stability control indicator turns ON.
- The Service Stabilitrak message is displayed on the driver information center.
- The electronic brake control module disables the ABS, the traction control, the hill start assist, the electronic stability control, and the trailer sway control for the duration of the ignition cycle.

### Conditions for Clearing the DTC

- The DTC clears when the diagnostic runs and passes.
- The history DTC will clear after 40 consecutive fault-free ignition cycles have occurred.

### Diagnostic Aids

- Do not use a magnet to clean the encoder ring.
- Inspect the encoder ring for rust or corrosion.
- If more than one wheel speed DTC is set, diagnose each wheel speed sensor individually.
- If any of the symptom byte codes 08, 18, or 0F are set, refer to the Diagnostic Fault Information table for possible mechanical faults or conditions.
- If the customer comments that the ABS indicator is ON only during moist environmental conditions (rain, snow, vehicle wash, etc.), inspect the wheel speed sensor wiring for signs of water intrusion.

### Reference Information

cardiagn.com

Schematic Reference

**Antilock Brake System Schematics**

Connector End View Reference

**COMPONENT CONNECTOR END VIEWS - INDEX**

Description and Operation

**ABS Description and Operation**

Electrical Information Reference

- **Circuit Testing**
- **Connector Repairs**
- **Testing for Intermittent Conditions and Poor Connections**
- **Wiring Repairs**

Scan Tool Reference

**Control Module References** for scan tool information

### Circuit/System Verification

1. Test drive the vehicle at speeds greater than 16 km/h (10 MPH).
2. Verify all scan tool Wheel Speed Sensor parameters are within 4 km/h (2.5 MPH) of each other.
    - **If any parameter is not within 4 km/h (2.5 MPH) of each other**

      Refer to Circuit/System Testing.

    - **If each parameter is within 4 km/h (2.5 MPH) of each other**
3. Verify DTC C0035, C0040, C0045, or C0050 is not set.
    - **If any of the DTCs are set**

      Diagnose each wheel speed sensor individually, refer to Circuit/System Testing.

cardiagn.com

- **If none of the DTCs are set**

4. All OK.

### Circuit/System Testing

1. Ignition OFF and all vehicle systems OFF, disconnect the harness connectors at the appropriate B5 Wheel Speed Sensor and the harness connector at the K17 Electronic Brake Control Module, ignition ON.
2. Test for less than 1 V between the appropriate K17 Electronic Brake Control Module harness connector terminals listed below and ground:
   - B5LF Wheel Speed Sensor - Left Front - terminal 35 and terminal 36
   - B5LR Wheel Speed Sensor - Left Rear - terminal 29 and terminal 30
   - B5RF Wheel Speed Sensor - Right Front - terminal 10 and terminal 11
   - B5RR Wheel Speed Sensor - Right Rear - terminal 3 and terminal 4
   - **If 1 V or greater**

     Repair the short to voltage on the circuit.

   - **If less than 1 V**
3. Ignition OFF.
4. Test for infinite resistance between the K17 Electronic Brake Control Module harness connector terminals listed below and ground:
   - B5LF Wheel Speed Sensor - Left Front - terminal 35 and terminal 36
   - B5LR Wheel Speed Sensor - Left Rear - terminal 29 and terminal 30
   - B5RF Wheel Speed Sensor - Right Front - terminal 10 and terminal 11
   - B5RR Wheel Speed Sensor - Right Rear - terminal 3 and terminal 4
   - **If less than infinite resistance**

     Repair the short to ground on the circuit.

   - **If infinite resistance**
5. Test for less than 2 Ω between the B5 Wheel Speed Sensor harness connector terminal 1 and the K17 Electronic Brake Control Module harness connector terminal listed below:
   - B5LF Wheel Speed Sensor - Left Front - terminal 35
   - B5LR Wheel Speed Sensor - Left Rear - terminal 29

cardiagn.com

- B5RF Wheel Speed Sensor - Right Front - terminal 10
- B5RR Wheel Speed Sensor - Right Rear - terminal 3
- **If 2 Ω or greater**

  Repair the open/high resistance in the circuit.

- **If less than 2 Ω**

6. Test for less than 2 Ω between the B5 Wheel Speed Sensor harness connector terminal 2 and the K17 Electronic Brake Control Module harness connector terminal listed below:
   - B5LF Wheel Speed Sensor - Left Front - terminal 36
   - B5LR Wheel Speed Sensor - Left Rear - terminal 30
   - B5RF Wheel Speed Sensor - Right Front - terminal 11
   - B5RR Wheel Speed Sensor - Right Rear - terminal 4
   - **If 2 Ω or greater**

     Repair the open/high resistance in the circuit.

   - **If less than 2 Ω**
7. Replace the B5 Wheel Speed Sensor.
8. Verify the DTC does not set while operating the vehicle within the Conditions for Running the DTC.
   - **If the DTC sets**

     Replace the K17 Electronic Brake Control Module.

   - **If the DTC does not set**
9. All OK.

### Repair Instructions

Perform the **Diagnostic Repair Verification** after completing the repair.

- Refer to **Front Wheel Speed Sensor Replacement (Without 9C1)Front Wheel Speed Sensor Replacement (With 9C1)**
- Refer to **Rear Wheel Speed Sensor Replacement**
- Refer to **Control Module References** for electronic brake control module replacement, programming and setup

cardiagn.com

# DTC C0110: PUMP MOTOR

## Diagnostic Instructions

- Perform the **Diagnostic System Check - Vehicle** prior to using this diagnostic procedure.
- Review **Strategy Based Diagnosis** for an overview of the diagnostic approach.
- Refer to **Diagnostic Procedure Instructions** to provide an overview of each diagnostic category.

## DTC Descriptors

### DTC C0110 04

Pump Motor Circuit Open

### DTC C0110 06

Pump Motor Circuit Low Voltage/Open

### DTC C0110 61

Pump Motor Stuck

## Diagnostic Fault Information

| Circuit | Short to Ground | Open/High Resistance | Short to Voltage | Signal Performance |
|---|---|---|---|---|
| B+ Terminal 1 | C0110 06 | C0110 06 | - | - |
| Ground Terminal 13 | - | C0110 04, C0110 06 | - | - |
| Ground Terminal 38 | - | U0121 | - | - |

| Component | Condition | DTCs |
|---|---|---|
| Pump Motor | • Wear<br>• Damage<br>• Lock | C0110 61 |

## Circuit/System Description

cardiagn.com

The pump motor is an integral part of the brake pressure modulator, while the pump motor relay is integral to the electronic brake control module. The pump motor relay is not engaged during normal system operation. When ABS operation is required the electronic brake control module activates the pump motor relay and battery voltage is provided to the pump motor.

### Conditions for Running the DTC

**C0110 04 or C0110 06**

Ignition ON.

**C0110 61**

- The vehicle speed is greater than 20 km/h (13 MPH), and brake is not applied.
- The test is initiated once per ignition cycle, when the vehicle speed is greater than 15 km/h (9 MPH), and a fault was set on the last ignition cycle.

### Conditions for Setting the DTC

**C0110 04 or C0110 06**

- A short to ground or an open/high resistance is detected on the pump motor B+ circuit.
- The electronic brake control module detects a low voltage in the pump motor supply circuit when the feedback voltage is less than 4.5 V for greater than 150 ms, and the pump motor is not activated.

**C0110 61**

The pump motor continues to rotate briefly after deactivation creating a feedback voltage. The electronic brake control module sets the DTC if the measured feedback voltage indicates a binding or stalled pump motor.

### Action Taken When the DTC Sets

- The ABS indicator turns ON.
- The red brake warning indicator may turn ON.
- The electronic stability control indicator turns ON.
- The electronic brake control module disables the ABS, the traction control, the electronic stability control, the intelligent brake assist, and the trailer stability control for the duration of the ignition cycle.

### Conditions for Clearing the DTC

cardiagn.com

- The condition for setting the DTC is no longer present.
- The history DTC will clear after 40 consecutive fault-free ignition cycles have occurred.

### Reference Information

Schematic Reference

**Antilock Brake System Schematics**

Connector End View Reference

**COMPONENT CONNECTOR END VIEWS - INDEX**

Description and Operation

**ABS Description and Operation**

Electrical Information Reference

- **Circuit Testing**
- **Connector Repairs**
- **Testing for Intermittent Conditions and Poor Connections**
- **Wiring Repairs**

Scan Tool Reference

**Control Module References** for scan tool information

### Circuit/System Verification

1. Ignition ON
2. Verify the ABS pump motor turns On and Off when commanding the ABS Pump Motor On and Off with a scan tool.
    - **If the pump motor does not turn On and Off**

      Refer to Circuit/System Testing.

    - **If the pump motor turns On and Off**

cardiagn.com

3. All OK.

### Circuit/System Testing

1. Ignition OFF and all vehicle systems OFF, disconnect the harness connector at the K17 Electronic Brake Control Module. It may take up to 2 min for all vehicle systems to power down.
2. Test for less than 10 Ω between the ground circuit terminals listed below and ground:
    - Terminal 13
    - Terminal 38
    - **If 10 Ω or greater**
    1. Ignition OFF
    2. Test for less than 2 Ω in the ground circuit end to end.
        - If 2 Ω or greater, repair the open/high resistance in the circuit.
        - If less than 2 Ω, repair the open/high resistance in the ground connection.
    - **If less than 10 Ω**
3. Ignition ON.
4. Verify a test lamp illuminates between the B+ circuit terminal 1 and ground.
    - **If the test lamp does not illuminate and the circuit fuse is good**
    1. Ignition OFF, remove the test lamp.
    2. Test for less than 2 Ω in the B+ circuit end to end.
        - If 2 Ω or greater, repair the open/high resistance in the circuit.
        - If less than 2 Ω, verify the fuse is not open and there is voltage at the fuse.
    - **If the test lamp does not illuminate and the circuit fuse is open**
    1. Ignition OFF, remove the test lamp.
    2. Test for infinite resistance between the B+ circuit and ground.
        - If less than infinite resistance, repair the short to ground on the circuit.
        - If infinite resistance, replace the K17 Electronic Brake Control Module with Brake Pressure Modulator.
    - **If the test lamp illuminates**
5. Replace the K17 Electronic Brake Control Module with Brake Pressure Modulator.

### Repair Instructions

cardiagn.com

Perform the **Diagnostic Repair Verification** after completing the repair.

- Refer to **Brake Pressure Modulator Valve Replacement**
- Refer to **Control Module References** for electronic brake control module replacement, programming and setup

## DTC C0131: TRACTION CONTROL SYSTEM PRESSURE CIRCUIT

### Diagnostic Instructions

- Perform the **Diagnostic System Check - Vehicle** prior to using this diagnostic procedure.
- Review **Strategy Based Diagnosis** for an overview of the diagnostic approach.
- Refer to **Diagnostic Procedure Instructions** to provide an overview of each diagnostic category.

### DTC Descriptors

#### DTC C0131 02

Traction Control System Pressure Circuit Short to Ground

#### DTC C0131 05

Traction Control System Pressure Circuit High Voltage/Open

#### DTC C0131 0F

Traction Control System Pressure Circuit Erratic

#### DTC C0131 5A

Traction Control System Pressure Circuit Not Plausible

### Circuit/System Description

The electronic brake control module monitors the brake pressure sensor which is integral to the brake pressure modulator. The body control module monitors the brake pedal position sensor signal when the brake pedal is applied and sends a serial data message to the electronic brake control module indicating the brake pedal position. The electronic brake control module compares the brake pressure to the actual brake pedal position and uses this information for vehicle stability control.

### Conditions for Running the DTC

cardiagn.com

- The engine is running.
- The brake pedal has been applied and released.

### Conditions for Setting the DTC

**C0131 02**

The electronic brake control module detects the ABS brake pressure circuit is shorted to ground.

**C0131 05**

The electronic brake control module detects the ABS brake pressure circuit is shorted to battery or open.

**C0131 0F**

The electronic brake control module detects the ABS brake pressure signal is erratic.

**C0131 5A**

- The brake pressure sensor offset is out of the specified range.
- The electronic brake control module detected an invalid or erratic brake pressure.
- The brake pressure is not plausible with the vehicle acceleration or deceleration.

### Action Taken When the DTC Sets

- The traction/stability control indicator turns ON.
- The electronic brake control module disables the traction/stability for the duration of the ignition cycle.

### Conditions for Clearing the DTC

- The DTC clears when the diagnostic runs and passes.
- The history DTC will clear after 40 consecutive fault-free ignition cycles have occurred.

### Reference Information

Schematic Reference

**Antilock Brake System Schematics**

cardiagn.com

Connector End View Reference

**COMPONENT CONNECTOR END VIEWS - INDEX**

Description and Operation

**ABS Description and Operation**

Electrical Information Reference

- **Circuit Testing**
- **Connector Repairs**
- **Testing for Intermittent Conditions and Poor Connections**
- **Wiring Repairs**

Scan Tool Reference

**Control Module References** for scan tool information

### Circuit/System Verification

1. Ignition ON.
2. Apply and release brake pedal. Verify the brake stop lamps operate properly.
   - **If the brake stop lamps do not operate properly**

     Refer to **Symptoms - Lighting** .

   - **If the brake stop lamps operate properly**
3. Verify that DTC C0131 is not set.
   - **If the DTC is set**
   1. Perform the **Brake Pressure Modulator Valve Pressure Sensor Calibration**.
   2. Verify the DTC does not set.
      - If the DTC sets, replace the K17 Electronic Brake Control Module with the Brake Pressure Modulator.
      - If the DTC does not set
   3. All OK.

cardiagn.com

- **If the DTC is not set**

4. All OK.

### Repair Instructions

Perform the **Diagnostic Repair Verification** after completing the repair.

- Refer to **Brake Pressure Modulator Valve Replacement**
- Refer to **Control Module References** for electronic brake control module replacement, programming and setup

## DTC C0161: ANTILOCK BRAKING SYSTEM BRAKE SWITCH CIRCUIT

### Diagnostic Instructions

- Perform the **Diagnostic System Check - Vehicle** prior to using this diagnostic procedure.
- Review **Strategy Based Diagnosis** for an overview of the diagnostic approach.
- Refer to **Diagnostic Procedure Instructions** to provide an overview of each diagnostic category.

### DTC Descriptor

#### DTC C0161 5A

Antilock Braking System Brake Switch Circuit Not Plausible

#### DTC C0161 71

Antilock Braking System Brake Switch Circuit Invalid Data

### Circuit/System Description

When the brake pedal is applied, the body control module sends a serial data message to the electronic brake control module in reference to the brake pedal positions. The electronic brake control module compares the correlation between the brake pedal position and the amount of brake pressure it senses from the brake pressure sensor, which is internal to the brake pressure modulator. It uses this information to control the vehicle during an electronic stability control event.

### Conditions for Running the DTC

- Ignition ON.

cardiagn.com

- DTC C0131 is not present.

### Conditions for Setting the DTC

- The electronic brake control module detects the brake pedal is not applied and the brake pressure is greater than 1500 kPa (218 psi) for 2 s.
- The electronic brake control module detects the vehicle speed is greater than 16 km/h (10 MPH), the brake pedal is applied for 122 s, and the brake pressure is less than 620 kPa (90 psi).

### Action Taken When the DTC Sets

- A message and/or indicator may be displayed.
- The electronic brake control module disables the ABS, the traction control and the electronic stability control for the duration of the ignition cycle.

### Conditions for Clearing the DTC

- A current DTC clears when the diagnostic runs and passes.
- The history DTC will clear after 40 consecutive fault-free ignition cycles have occurred.

### Diagnostic Aids

- Diagnose all other stop lamp DTCs or symptoms prior to performing this diagnostic procedure.
- DTC C0161 may set if the brake pedal is applied while accelerating, such as two footed driving.

### Reference Information

Schematic Reference

**Antilock Brake System Schematics**

Connector End View Reference

**COMPONENT CONNECTOR END VIEWS - INDEX**

Description and Operation

**ABS Description and Operation**

Electrical Information Reference

cardiagn.com

- **Circuit Testing**
- **Connector Repairs**
- **Testing for Intermittent Conditions and Poor Connections**
- **Wiring Repairs**

Scan Tool Reference

**Control Module References** for scan tool information

### Circuit/System Verification

1. Ignition ON.
2. Verify that DTC C0277 or C0890 is not set.
   - **If either DTC is set**

     Refer to **DTC C0277 or C0890** .

   - **If the DTC is not set**
3. Verify the B22 Brake Pedal Position Sensor or the brake pedal are not binding causing residual brake pressure to be detected.
   - **If a condition is found**

     Repair or replace the appropriate component.

   - **If a condition is not found**
4. Verify the scan tool Electronic Brake Control Module Brake Pedal Position Sensor parameter changes between Inactive and Active while applying and releasing the brake pedal.
   - **If the parameter does not change**

     Refer to **Symptoms - Lighting** .

   - **If the parameter changes**
5. All OK, refer to Diagnostic Aids.

### Repair Instructions

Perform the **Diagnostic Repair Verification** after completing the repair.

cardiagn.com

## DTC C0186, C0187, C0196, OR C0287: LATERAL ACCELERATION SENSOR SIGNAL/MULTI-AXIS ACCELERATION SENSOR CIRCUIT/YAW RATE SIGNAL/LONGITUDINAL ACCELERATION SENSOR SIGNAL (WITHOUT UGN)

### Diagnostic Instructions

- Perform the **Diagnostic System Check - Vehicle** prior to using this diagnostic procedure.
- Review **Strategy Based Diagnosis** for an overview of the diagnostic approach.
- Refer to **Diagnostic Procedure Instructions** to provide an overview of each diagnostic category.

### DTC Descriptors

#### DTC C0186

Lateral Acceleration Sensor Signal (Inflatable Restraint Sensing and Diagnostic Module)

#### DTC C0187

Multi-Axis Acceleration Sensor Circuit (Electronic Brake Control Module)

#### DTC C0196

Yaw Rate Signal (Inflatable Restraint Sensing and Diagnostic Module and/or Electronic Brake Control Module)

#### DTC C0287

Longitudinal Acceleration Sensor Signal (Inflatable Restraint Sensing and Diagnostic Module and/or Electronic Brake Control Module)

For symptom byte information refer to **Symptom Byte List** .

### Circuit/System Description

The yaw rate, lateral acceleration and longitudinal acceleration sensors are combined into one multi-axis acceleration sensor, internal to the inflatable restraint sensing and diagnostic module. The multi-axis acceleration sensor communicates with the electronic brake control module via serial data. The electronic brake control module activates the stability control function depending on the multi-axis acceleration sensor input. The inflatable restraint sensing and diagnostic module uses the multi-axis acceleration sensor to determine if the vehicle is in a roll over or near collision incident.

### Conditions for Running the DTC

Ignition ON.

cardiagn.com

### Conditions for Setting the DTC

**C0186 00 or C0187 5A**

- The lateral acceleration signal offset is out of the specified range.
- An internal fault in multi-axis acceleration sensor will set this DTC.
- Improperly mounted or loose inflatable restraint sensing and diagnostic module may set this DTC.
- The lateral acceleration signal is not plausible with the yaw rate, the steering wheel angle signal and the vehicle speed.

**C0196 5A**

- The yaw rate signal is out of the specified range.
- An internal fault in multi-axis acceleration sensor may set DTC C0196 5A.
- Improperly mounted or loose inflatable restraint sensing and diagnostic module may set this DTC.
- The yaw rate signal is not plausible with the lateral acceleration signal, the steering wheel angle sensor signal and the vehicle speed.

**C0196 00**

The yaw rate signal is out of the specified range.

**C0287 00**

The longitudinal acceleration signal is out of the specified range.

**C0287 5A**

- An internal fault in multi-axis acceleration sensor will set this DTC.
- The longitudinal acceleration signal is not plausible with the vehicle acceleration.

### Action Taken When the DTC Sets

- The air bag indicator turns ON.
- The adaptive cruise control is inhibited.
- The traction/stability control indicator turns ON.
- The electronic brake control module disables the hill hold and the trailer sway control for the duration of the ignition cycle.

cardiagn.com

### Conditions for Clearing the DTC

- A current DTC clears when the diagnostic runs and passes.
- The history DTC will clear after 40 consecutive fault-free ignition cycles have occurred.

### Reference Information

Schematic Reference

**Antilock Brake System Schematics**

Connector End View Reference

**COMPONENT CONNECTOR END VIEWS - INDEX**

Description and Operation

**ABS Description and Operation**

Electrical Information Reference

- **Circuit Testing**
- **Connector Repairs**
- **Testing for Intermittent Conditions and Poor Connections**
- **Wiring Repairs**

Scan Tool Reference

**Control Module References** for scan tool information

### Circuit/System Verification

1. Verify DTC B101D is not set current or history in the K36 Inflatable Restraint Sensing and Diagnostic Module.
   - **If DTC B101D is set current or history in the K36 Inflatable Restraint and Sensing Diagnostic Module**

     Replace the K36 Inflatable Restraint Sensing and Diagnostic Module.

   - **If DTC B101D is not set current or history in the K36 Inflatable Restraint and Sensing Diagnostic Module**

cardiagn.com

2. Verify DTC C0186, C0196, or C0287 is not set in the K36 Inflatable Restraint Sensing and Diagnostic Module.
   - **If any of the DTCs are set**

     Perform the **Vehicle Yaw Sensor Learn**.

   - **If none of the DTCs are set**
3. Verify DTC C0187, C0196, or C0287 is not set in the K17 Electronic Brake Control Module.
   - **If any of the DTCs are set**
   1. Replace the K36 Inflatable Restraint Sensing and Diagnostic Module.
   2. Verify the DTC does not set while operating the vehicle within the Conditions for Running the DTC.
      - If the DTC sets, replace the K17 Electronic Brake Control Module.
      - If the DTC does not set
   3. All OK.
   - **If none of the DTCs are set**
4. All OK.

### Repair Instructions

Perform the **Diagnostic Repair Verification** after completing the repair.

Refer to **Control Module References** for electronic brake control module or inflatable restraint sensing and diagnostic module replacement, programming and setup

## DTC C0186, C0187, C0196, OR C0287: LATERAL ACCELERATION SENSOR SIGNAL/MULTI-AXIS ACCELERATION SENSOR CIRCUIT/YAW RATE SIGNAL/LONGITUDINAL ACCELERATION SENSOR SIGNAL (WITH UGN)

### Diagnostic Instructions

- Perform the **Diagnostic System Check - Vehicle** prior to using this diagnostic procedure.
- Review **Strategy Based Diagnosis** for an overview of the diagnostic approach.
- Refer to **Diagnostic Procedure Instructions** to provide an overview of each diagnostic category.

### DTC Descriptors

### DTC C0186

cardiagn.com

Lateral Acceleration Sensor Signal (Electronic Brake Control Module)

### DTC C0187

Multi-Axis Acceleration Sensor Circuit (Electronic Brake Control Module)

### DTC C0196

Yaw Rate Signal (Inflatable Restraint Sensing and Diagnostic Module and/or Electronic Brake Control Module)

### DTC C0287

Longitudinal Acceleration Sensor Signal (Inflatable Restraint Sensing and Diagnostic Module and/or Electronic Brake Control Module)

For symptom byte information refer to **Symptom Byte List** .

#### Diagnostic Fault Information

| Circuit | Short to Ground | Open/High Resistance | Short to Voltage | Signal Performance |
|---|---|---|---|---|
| Ignition | U0125, U0126, C0186 71, C0196 71, C0287 71 | U0125, U0126, C0186 71, C0196 71, C0287 71 | - | C0186 5A, C0196 5A |
| Ground | - | U0125, U0126, C0186 71, C0196 71, C0287 71 | - | C0186 5A, C0196 5A |

#### Circuit/System Description

The yaw rate, lateral acceleration and longitudinal acceleration sensors are combined into one multi-axis acceleration sensor, external to the electronic brake control module. The electronic brake control module supplies ignition voltage to the multi-axis acceleration sensor. The multi-axis acceleration sensor communicates with the electronic brake control module via serial data. The electronic brake control module activates the ABS, the traction control and the stability control depending on the multi-axis acceleration sensor input.

#### Conditions for Running the DTC

Ignition ON.

cardiagn.com

### Conditions for Setting the DTC

**C0186 00 or C0187 5A**

- The lateral acceleration signal offset is out of the specified range.
- An internal fault in multi-axis acceleration sensor will set this DTC.
- Improperly mounted or loose multi-axis acceleration sensor may set this DTC.
- The lateral acceleration signal is not plausible with the yaw rate, the steering wheel angle signal and the vehicle speed.

**C0196 5A**

- The yaw rate signal is out of the specified range.
- An internal fault in multi-axis acceleration sensor may set DTC C0196 5A.
- Improperly mounted or loose inflatable restraint sensing and diagnostic module may set this DTC.
- The yaw rate signal is not plausible with the lateral acceleration signal, the steering wheel angle sensor signal and the vehicle speed.

**C0196 00**

The yaw rate signal is out of the specified range.

**C0287 00**

The longitudinal acceleration signal is out of the specified range.

**C0287 5A**

- An internal fault in multi-axis acceleration sensor will set this DTC.
- The longitudinal acceleration signal is not plausible with the vehicle acceleration.

### Action Taken When the DTC Sets

- The air bag indicator turns ON.
- The adaptive cruise control is inhibited.
- The traction/stability control indicator turns ON.
- The electronic brake control module disables the hill hold and the trailer sway control for the duration of the ignition cycle.

cardiagn.com

### Conditions for Clearing the DTC

- A current DTC clears when the diagnostic runs and passes.
- The history DTC will clear after 40 consecutive fault-free ignition cycles have occurred.

### Reference Information

Schematic Reference

**Antilock Brake System Schematics**

Connector End View Reference

**COMPONENT CONNECTOR END VIEWS - INDEX**

Description and Operation

**ABS Description and Operation**

Electrical Information Reference

- **Circuit Testing**
- **Connector Repairs**
- **Testing for Intermittent Conditions and Poor Connections**
- **Wiring Repairs**

Scan Tool Reference

**Control Module References** for scan tool information

### Circuit/System Verification

1. Verify DTC C0186, C0196, or C0287 are not set.
    - **If any of the DTCs are set**

      Perform the **Vehicle Yaw Sensor Learn**.

    - **If none of the DTCs are set**

cardiagn.com

2. Verify the B119 Multi-axis Acceleration Sensor is installed correctly.
   - **If loose or incorrect installation**

     Correct the installation of the component.

   - **If installed correctly**
3. Ignition OFF, all vehicle system OFF, and the scan tool disconnected, disconnect the harness connector at the B119 Multi-axis Acceleration Sensor. It may take up to 2 minutes for all vehicle systems to power down.
4. Test for less than 10 Ω between the ground circuit terminal 6 and ground.
   - **If 10 Ω or greater**
   1. Ignition OFF.
   2. Test for less 2 Ω in the ground circuit end to end.
      - If 2 Ω or greater, repair the open/high resistance in the circuit.
      - If less than 2 Ω, repair the open/high resistance in the ground connection.
   - **If less than 10 Ω**
5. Ignition ON.
6. Verify a test lamp illuminates between the ignition circuit terminal 5 and ground.
   - **If the test lamp does not illuminate**
   1. Ignition OFF, disconnect the harness connector at the K17 Electronic Brake Control Module.
   2. Test for infinite resistance between the ignition circuit and ground.
      - If less than infinite resistance, repair the short to ground on the circuit.
      - If infinite resistance
   3. Test for less than 2 Ω in the ignition circuit end to end.
      - If 2 Ω or greater, repair the open/high resistance in the circuit.
      - If less than 2 Ω, replace the K17 Electronic Brake Control Module.
   - **If the test lamp illuminates**
7. Replace the B119 Multi-axis Acceleration Sensor.
8. Verify the DTC does not set while operating the vehicle within the Conditions for Running the DTC.
   - **If the DTC sets**

cardiagn.com

Replace the K17 Electronic Brake Control Module.

- **If the DTC does not set**

9. All OK.

### Repair Instructions

Perform the **Diagnostic Repair Verification** after completing the repair.

Refer to **Control Module References** for electronic brake control module or inflatable restraint sensing and diagnostic module replacement, programming and setup

## DTC C018C: MULTI-AXIS ACCELERATION SENSOR MODULE - INCORRECT COMPONENT INSTALLED

### Diagnostic Instructions

- Perform the **Diagnostic System Check - Vehicle** prior to using this diagnostic procedure.
- Review **Strategy Based Diagnosis** for an overview of the diagnostic approach.
- Refer to **Diagnostic Procedure Instructions** to provide an overview of each diagnostic category.

### DTC Descriptors

### DTC C018C 3A

Multi-Axis Acceleration Sensor Module - Incorrect Component Installed

### Circuit/System Description

The distance sensing cruise control module detects that the incorrect multi-axis acceleration sensor is installed. No external circuit diagnosis is involved.

### Conditions for Running the DTC

Ignition ON

### Conditions for Setting the DTC

The distance sensing cruise control module detects that the incorrect multi-axis acceleration sensor is installed.

cardiagn.com

### Action Taken When the DTC Sets

- The traction/stability control indicator turns ON.
- The electric brake control module disables the stability control and hill start assist for the duration of the ignition cycle.
- The drivers information center displays the CRUISE TEMPORARILY UNAVAILABLE message.

### Conditions for Clearing the DTC

- A current DTC clears when the diagnostic runs and passes.
- The history DTC will clear after 40 consecutive fault-free ignition cycles have occurred.

### Reference Information

Schematic Reference

**Antilock Brake System Schematics**

Connector End View Reference

**COMPONENT CONNECTOR END VIEWS - INDEX**

Description and Operation

**ABS Description and Operation**

Electrical Information Reference

- **Circuit Testing**
- **Connector Repairs**
- **Testing for Intermittent Conditions and Poor Connections**
- **Wiring Repairs**

Scan Tool Reference

**Control Module References** for scan tool information

### Circuit/System Testing

cardiagn.com

1. Ignition ON
2. Verify that DTC C018C 3A is not set.
    - **If the DTC is set**
    1. Install the correct part number multi-axis acceleration sensor. Clear DTCs and retest.
        - If the DTC returns, replace the K14 Distance Sensing Cruise Control Module.
        - If the DTC does not return
    2. All OK.
    - **If the DTC is not set**
3. All OK.

### Repair Instructions

Perform the **Diagnostic Repair Verification** after completing the repair.

- Refer to **Vehicle Dynamic Sensor Replacement (Except Cadillac, without DCK)Vehicle Dynamic Sensor Replacement (Cadillac without DCK)Vehicle Dynamic Sensor Replacement (With DCK)**
- Refer to **Control Module References** for distance sensing cruise control module replacement, programming and setup.

## DTC C0242: ENGINE CONTROL MODULE INDICATED TRACTION CONTROL MALFUNCTION

### Diagnostic Instructions

- Perform the **Diagnostic System Check - Vehicle** prior to using this diagnostic procedure.
- Review **Strategy Based Diagnosis** for an overview of the diagnostic approach.
- Refer to **Diagnostic Procedure Instructions** to provide an overview of each diagnostic category.

### DTC Descriptors

### DTC C0242

Engine Control Module Indicated Traction Control Malfunction

For symptom byte information refer to **Symptom Byte List** .

### Circuit/System Description

cardiagn.com

The electronic brake control module and the engine control module simultaneously control the traction control. The electronic brake control module sends a serial data message to the engine control module requesting torque reduction. When certain engine control module DTCs are set, the engine control module will not be able to perform the torque reduction for traction control. A serial data message is sent to the electronic brake control module indicating that traction control is not allowed.

### Conditions for Running the DTC

Engine running

### Conditions for Setting the DTC

The engine control module detects a fault that prevents it from performing a traction control function and sends a serial data message to the electronic brake control module indicating that torque reduction is not allowed.

### Action Taken When the DTC Sets

The electronic brake control module sends a serial data message to illuminate the appropriate warning/indicator message.

### Conditions for Clearing the DTC

- The condition for the DTC is no longer present.
- The electronic brake control module clears the history DTC when a current DTC is not detected in 100 consecutive drive cycles.

### Diagnostic Aids

- Inspect for proper transmission operation.
- Inspect the exhaust system for a possible restriction.
- Inspect for lack of engine power, hesitation, stumble or rough idle.
- Some intermittent communication concerns may be caused by fretting corrosion on the serial data circuit terminals. Inspect all connectors at the control module that set the communication DTC, the control module that the communication DTC was set against, and any inline harness connectors between the two control modules. Do not replace a control module based only on fretting corrosion.

### Reference Information

Schematic Reference

**Antilock Brake System Schematics**

cardiagn.com

Connector End View Reference

**COMPONENT CONNECTOR END VIEWS - INDEX**

Description and Operation

**ABS Description and Operation**

Electrical Information Reference

- **Circuit Testing**
- **Connector Repairs**
- **Testing for Intermittent Conditions and Poor Connections**
- **Wiring Repairs**

Scan Tool Reference

**Control Module References** for scan tool information

### Circuit/System Verification

1. Ignition ON.
2. Verify that no other DTCs are set except for C0242.
   - **If any other DTCs are set**

     Refer to the **Diagnostic Trouble Code (DTC) List - Vehicle** .

   - **If no other DTCs are set**
3. Replace the K20 Engine Control Module.
4. Verify that DTC C0242 does not set while operating the vehicle within the Conditions for Running the DTC.
   - **If DTC sets**

     Replace the K17 Electronic Brake Control Module.

   - **If DTC does not set**
5. All OK.

cardiagn.com

### Repair Instructions

Perform the **Diagnostic Repair Verification** after completing the diagnostic procedure.

Refer to **Control Module References** for electronic brake control module or engine control module replacement, programming and setup

## DTC C0245: WHEEL SPEED SENSOR FREQUENCY MALFUNCTION

### Diagnostic Instructions

- Perform the **Diagnostic System Check - Vehicle** prior to using this diagnostic procedure.
- Review **Strategy Based Diagnosis** for an overview of the diagnostic approach.
- Refer to **Diagnostic Procedure Instructions** to provide an overview of each diagnostic category.

### DTC Descriptor

### DTC C0245 00

Wheel Speed Sensor Frequency Malfunction

### Circuit/System Description

The wheel speeds are detected by active wheel speed sensors. Each wheel speed sensor receives ignition voltage from the electronic brake control module and provides an alternating current square wave signal to the electronic brake control module. As the wheel spins, the electronic brake control module uses the frequency of the square wave signal to calculate the wheel speed.

### Conditions for Running the DTC

- Brake is not applied.
- Vehicle is not cornering.
- Vehicle speed is greater than 14 km/h (9 MPH).
- DTC C0035, C0040, C0045, or C0050 is not present.

### Conditions for Setting the DTC

Wheel speed differences between one wheel and the others is greater than 20 percent.

### Action Taken When the DTC Sets

cardiagn.com

- The ABS indicator turns ON.
- A message may be displayed.
- The red Brake warning indicator turns ON.
- The traction/stability control indicator turns ON.
- The electronic brake control module disables the ABS, the traction control, the electronic stability control and the hill start assist for the duration of the ignition cycle.

### Conditions for Clearing the DTC

- A current DTC clears when the diagnostic runs and passes.
- The history DTC will clear after 40 consecutive fault-free ignition cycles have occurred.

### Reference Information

Schematic Reference

**Antilock Brake System Schematics**

Connector End View Reference

**COMPONENT CONNECTOR END VIEWS - INDEX**

Description and Operation

**ABS Description and Operation**

Electrical Information Reference

- **Circuit Testing**
- **Connector Repairs**
- **Testing for Intermittent Conditions and Poor Connections**
- **Wiring Repairs**

Scan Tool Reference

**Control Module References** for scan tool information

cardiagn.com

### Circuit/System Verification

1. Verify that all tires have the proper air pressure.
   - **If not the proper air pressure**

     Adjust all tire air pressures to the stated cold air pressure as identified on the tire placard or specification.

   - **If the proper air pressure**
2. Verify that all tires are of uniform size and matching brand.
   - **If not of uniform size or matching brand**
   1. Replace the mis-sized or non-matching brand tire.
   2. Verify the DTC does not set while operating the vehicle within the Conditions for Running the DTC.
      - If the DTC is set, replace the K17 Electronic Brake Control Module.
      - If the DTC does not set.
   3. All OK.
   - **If all tires are of uniform size and matching brand**
3. All OK.

### Repair Instructions

Perform the **Diagnostic Repair Verification** after completing the repair.

Refer to **Control Module References** for electronic brake control module replacement, programming and setup

## DTC C0252: VEHICLE STABILITY CONTROL MODULE SENSORS CORRELATION MALFUNCTION

### Diagnostic Instructions

- Perform the **Diagnostic System Check - Vehicle** prior to using this diagnostic procedure.
- Review **Strategy Based Diagnosis** for an overview of the diagnostic approach.
- Refer to **Diagnostic Procedure Instructions** to provide an overview of each diagnostic category.

### DTC Descriptor

### DTC C0252 00

cardiagn.com

Vehicle Stability Control Module Sensors Correlation Malfunction

### Circuit/System Description

The Yaw Rate, Lateral Acceleration and Longitudinal Acceleration Sensors are combined into one Multi-axis Acceleration Sensor. The Multi-axis Acceleration Sensor is located internal to the Airbag Sensing and Diagnostic Module. The Electronic Brake Control Module controls the stability control by monitoring the inputs of the Multi-axis Acceleration Sensor and the Steering Wheel Angle Sensor. The readings are compared to an internal calibrated value so it knows if the vehicle is having an instability condition to activate the stability control.

### Conditions for Running the DTC

The vehicle is operated at a speed greater than 13 km/h (8 MPH).

### Conditions for Setting the DTC

When the vehicle is driven in a straight line the Multi-axis Acceleration Sensor, the Steering Wheel Angle Sensor, and the vehicle speed correlation is not recognized after a distance of 2.5 km (1.5 mi).

### Action Taken When the DTC Sets

One or more of the following actions may occur:

- The EBCM disables the antilock brake system (ABS)/traction control system (TCS) and vehicle stability enhancement system (VSES) for the duration of the ignition cycle.
- The ABS indicator illuminates.
- The StabiliTrak indicator illuminates.
- The driver information center (DIC) displays All Wheel Drive Off/Service Traction Control/Service StabiliTrak message.

### Conditions for Clearing the DTC

- The condition for the DTC is no longer present.
- The EBCM clears the history DTC when a current DTC is not detected in 40 consecutive drive cycles.

**NOTE:** **During normal diagnostic and/or repair verification technicians may find that the ABS, Traction Control and/or Stabilitrak indicators may be ON with NO DTCs displayed by the EBCM. Do not replace the EBCM for this condition.**

If the ABS, Traction Control and/or Stabilitrak telltales are ON with no DTCs set, perform the following steps:

cardiagn.com

1. Remove the key from the ignition, open and close the driver's door to turn off retained accessory power (RAP), and wait 60 seconds.
2. Ignition ON, if the ABS, Traction Control and/or Stabilitrak telltales are still illuminated, operate the vehicle at speeds greater than 15 km/h (10 mph) to complete the self test. The EBCM should request all telltale indicators to turn OFF.
3. If the telltales remain ON with no DTCs set after the drive cycle, disconnect the battery for at least 60 seconds then reconnect the battery.
4. Operate the vehicle at speeds greater than 40 km/h (25 mph), the EBCM should request all telltale indicators to turn OFF.

### Diagnostic Aids

The following conditions can cause this concern:

- An improperly mounted or loose Multi-axis Acceleration Sensor (located internally in the Airbag Sensing and Diagnostic Module).
- The car should not pull in either direction causing the Steering Wheel to be off center while driving in a straight line on a level surface.

### Reference Information

Schematic Reference

**Antilock Brake System Schematics**

Connector End View Reference

**COMPONENT CONNECTOR END VIEWS - INDEX**

Description and Operation

**ABS Description and Operation**

Electrical Information Reference

- **Circuit Testing**
- **Connector Repairs**
- **Testing for Intermittent Conditions and Poor Connections**
- **Wiring Repairs**

Scan Tool Reference

**Control Module References** for scan tool information

cardiagn.com

### Circuit/System Verification

1. Ignition ON.
2. Verify that DTC C0187, C0196, C0287, or C0710 is not set.
   - **If any of the DTCs are set**

     Refer to **Diagnostic Trouble Code (DTC) List - Vehicle** .

   - **If none of the DTCs are set**
3. Perform the **Vehicle Yaw Sensor Learn**, and **Steering Wheel Angle Sensor Centering**.
4. Ignition ON.
5. Verify DTC C0252 does not set while operating the vehicle within the Conditions for Running the DTC.
   - **If the DTC is set**
   1. Replace the B99 Steering Wheel Angle Sensor.
   2. Ignition ON
   3. Verify DTC C0252 does not set while operating the vehicle within the Conditions for Running the DTC.
      - If the DTC is set
   4. Replace the K36 Inflatable Restraint Sensing and Diagnostic Module
   5. Ignition ON.
   6. Verify the DTC does not set while operating the vehicle within the Conditions for Running the DTC.
      - If the DTC sets, replace the K17 Electronic Brake Control Module.
   - **If the DTC is not set**
6. All OK.

### Repair Instructions

Perform the **Diagnostic Repair Verification** after completing the repair.

- Refer to **Steering Angle Sensor Replacement**
- Refer to **Control Module References** for Electronic Brake Control Module replacement, Inflatable Restraint Sensing and Diagnostic Module, programming and setup.

## DTC C0274, C0275, OR C0280: ISOLATION VALVE HIGH TEMPERATURE/DUMP VALVE HIGH TEMPERATURE/STABILITY

cardiagn.com

# SYSTEM ACTIVE TOO LONG

### Diagnostic Instructions

- Perform the **Diagnostic System Check - Vehicle** prior to using this diagnostic procedure.
- Review **Strategy Based Diagnosis** for an overview of the diagnostic approach.
- Refer to **Diagnostic Procedure Instructions** to provide an overview of each diagnostic category.

### DTC Descriptors

## DTC C0274 54

Isolation Valve High Temperature

## DTC C0275 54

Dump Valve High Temperature

## DTC C0280 54

Stability System Active Too Long

### Circuit/System Description

The solenoid valves are integral parts of the brake pressure modulator. The brake pressure modulator contains an isolation solenoid valve and a dump solenoid valve for each wheel. A traction/stability control supply solenoid valve and a isolation solenoid valve for each brake circuit. The solenoid valves are not engaged during normal system operation. When the ABS, the traction control or the stability control operation is required the electronic brake control module turns the required solenoid ON.

### Conditions for Running the DTC

Ignition ON

### Conditions for Setting the DTC

The calculated solenoid valve temperature is greater than the threshold.

### Action Taken When the DTC Sets

- The ABS indicator turns ON.

cardiagn.com

- The traction/stability control indicator turns ON.
- The adaptive cruise control is inhibited.
- The electronic brake control module disables the ABS, the traction control, the hill hold, the electronic stability control, and the trailer sway control for the duration of the ignition cycle.

### Conditions for Clearing the DTC

The condition for setting the DTC is no longer present.

### Diagnostic Aids

DTCs may set due to extended operation of the ABS, the traction control or the stability control.

### Reference Information

Schematic Reference

**Antilock Brake System Schematics**

Connector End View Reference

**COMPONENT CONNECTOR END VIEWS - INDEX**

Description and Operation

**ABS Description and Operation**

Electrical Information Reference

- **Circuit Testing**
- **Connector Repairs**
- **Testing for Intermittent Conditions and Poor Connections**
- **Wiring Repairs**

Scan Tool Reference

**Control Module References** for scan tool information

cardiagn.com

### Circuit/System Verification

**NOTE:** **Since most occurrences of this DTC are caused by excessive ABS or traction control usage, review with the customer the conditions under which the DTC set.**

1. Ignition ON.
2. Verify that DTC C0186, C0187, C0196, C0287, or C0710 is not set.
   - **If any of the DTCs are set**

     Refer to **Diagnostic Trouble Code (DTC) List - Vehicle** .

   - **If none of the DTCs are set**
3. Ignition OFF, allow the hydraulic brake pressure modulator to cool down to ambient temperature.
4. Ignition ON.
5. Verify that DTC C0274 54, C0275 54, or C0280 54 are not set while driving the vehicle within normal braking conditions.
   - **If any of the DTCs are set**

     Replace the K17 Electronic Brake Control Module with Brake Pressure Modulator.

   - **If none of the DTCs are set**
6. All OK.

### Repair Instructions

Perform the **Diagnostic Repair Verification** after completing the repair.

- Refer to **Brake Pressure Modulator Valve Replacement**
- Refer to **Control Module References** for electronic brake control module replacement, programming and setup

## DTC C0558: CALIBRATION DATA CONFIGURATION NOT PROGRAMMED

### Diagnostic Instructions

- Perform the **Diagnostic System Check - Vehicle** prior to using this diagnostic procedure.
- Review **Strategy Based Diagnosis** for an overview of the diagnostic approach.
- Refer to **Diagnostic Procedure Instructions** to provide an overview of each diagnostic category.

cardiagn.com

### DTC Descriptor

## DTC C0558 46

Calibration Data Configuration Not Programmed

### Circuit/System Description

The electronic brake control module receives serial data messages from other modules. The electronic brake control module must be configured with the vehicle identification number (VIN), configuration data and vehicle options. If not properly configured after installation, the electronic brake control module may set this DTC.

The internal fault detection is handled inside the control module. No external circuits are involved.

### Conditions for Running the DTC

Ignition ON.

### Conditions for Setting the DTC

The electronic brake control module is not programmed.

### Action Taken When the DTC Sets

- The traction/stability control indicator turns ON.
- The electronic brake control module disables the traction control, the stability control and the hill start assist for the duration of the ignition cycle.

### Conditions for Clearing the DTC

A current DTC clears when the diagnostic runs and passes.

### Diagnostic Aids

A newly replaced electronic brake control module may set this DTC on its initial ignition ON cycle.

### Reference Information

Schematic Reference

cardiagn.com

**Antilock Brake System Schematics**

Connector End View Reference

**COMPONENT CONNECTOR END VIEWS - INDEX**

Description and Operation

**ABS Description and Operation**

Electrical Information Reference

- **Circuit Testing**
- **Connector Repairs**
- **Testing for Intermittent Conditions and Poor Connections**
- **Wiring Repairs**

Scan Tool Reference

**Control Module References** for scan tool information

### Circuit/System Verification

1. Ignition ON.
2. Verify that DTC C0558 46 is not set.
    - **If DTC C0558 46 is set**
    1. Program the K17 Electronic Brake Control Module.
    2. Verify the DTC does not set.
        - If the DTC sets, replace the K17 Electronic Brake Control Module.
        - If the DTC does not set
    3. All OK.
    - **If DTC C0558 46 is not set**
3. All OK.

### Repair Instructions

cardiagn.com

Perform the **Diagnostic Repair Verification** after completing the repair.

Refer to **Control Module References** for electronic brake control module replacement, programming and setup

## DTC C0710: STEERING POSITION SIGNAL

### Diagnostic Instructions

- Perform the **Diagnostic System Check - Vehicle** prior to using this diagnostic procedure.
- Review **Strategy Based Diagnosis** for an overview of the diagnostic approach.
- Refer to **Diagnostic Procedure Instructions** to provide an overview of each diagnostic category.

### DTC Descriptor

#### DTC C0710 00

Steering Position Signal Malfunction

#### DTC C0710 4B

Steering Position Signal Calibration Not Learned

#### DTC C0710 71

Steering Position Signal Invalid Data

#### DTC C0710 5A

Steering Position Signal Not Plausible

### Diagnostic Fault Information

| Circuit | Short to Ground | Open/High Resistance | Short to Voltage | Signal Performance |
|---|---|---|---|---|
| 12 V Reference | U0126 00, C0710 4B | U0126 00 | - | C0710 00 |
| High Serial Data | U0077 00, U0126 00, U0151 00, U0403 71 | U0077 00, U0126 00, U0151 00, U0403 71 | U0077 00, U0403 71 | C0710 71, C0710 5A |

cardiagn.com

| Circuit | Short to Ground | Open/High Resistance | Short to Voltage | Signal Performance |
|---|---|---|---|---|
| Low Serial Data | U0077 00, U0126 00, U0151 00, U0403 71 | U0077 00, U0126 00, U0151 00, U0403 71 | U0077 00, U0403 71 | C0710 71, C0710 5A |
| Ground | - | U0126 00 | - | - |

### Circuit/System Description

The steering wheel angle sensor receives a 12 V reference voltage from the electronic brake control module. The electronic brake control module receives serial data inputs from the steering wheel angle sensor identifying the position and direction of the steering wheel rotation. The module utilizes this signal to calculate the driver intended driving direction.

### Conditions for Running the DTC

Ignition ON.

### Conditions for Setting the DTC

**C0710 00**

The steering wheel angle sensor signal is invalid.

**C0710 4B**

- No steering wheel angle sensor signal
- The steering wheel angle sensor 12 V reference is shorted to ground.

**C0710 5A**

- No steering wheel angle sensor signal
- The steering wheel angle sensor offset is out of the specified range.
- The steering wheel angle sensor signal is not plausible with the yaw rate sensor signal.

### Action Taken When the DTC Sets

- The adaptive cruise control is inhibited.

cardiagn.com

- The traction/stability control indicator turns ON.
- The Service Stabilitrak message is displayed on the driver information center.
- The electronic brake control module disables the hill hold, the electronic stability control, and the trailer sway control for the duration of the ignition cycle.

### Conditions for Clearing the DTC

- A current DTC clears when the diagnostic runs and passes.
- The history DTC will clear after 40 consecutive fault-free ignition cycles have occurred.

### Diagnostic Aids

- Improperly mounted or loose steering wheel angle sensor.
- The car should not pull in either direction causing the steering wheel to be off center while driving in a straight line on a level surface.
- Confirm that all tires are of the proper size and that all are matching brands. Check and adjust all tires to the stated cold air pressure as identified on the tire placard. If a miss sized or non-matching brand tire is present, inform the customer that in order for the vehicle stability enhanced system to function normally, tires need to be a uniform size and rolling diameter.

### Reference Information

Schematic Reference

**Antilock Brake System Schematics**

Connector End View Reference

**COMPONENT CONNECTOR END VIEWS - INDEX**

Description and Operation

**ABS Description and Operation**

Electrical Information Reference

- **Circuit Testing**
- **Connector Repairs**
- **Testing for Intermittent Conditions and Poor Connections**

cardiagn.com

- **Wiring Repairs**

Scan Tool Reference

**Control Module References** for scan tool information

### Circuit/System Verification

1. Verify that DTC U0077 or U0126 is not set.
   - **If DTC U0077 or U0126 is set**

     Refer to **Diagnostic Trouble Code (DTC) List - Vehicle** .

   - **If DTC U0077 or U0126 is not set**
2. Verify the scan tool Steering Wheel Angle parameter value constantly changes from +550 to -550Â° as the steering wheel is turned through its entire range from left to right.
   - **If the parameter does not constantly change with the steering wheel position or the reading is erratic**

     Refer to Circuit/System Testing.

   - **If the parameter constantly changes with the steering wheel position**
3. All OK.

### Circuit/System Testing

1. Ignition ON.
2. Verify that DTC C0710 4B or C0710 5A is not set.
   - **If DTC C0710 4B or C0710 5A is set**

     Refer to **Steering Wheel Angle Sensor Centering**.

   - **If DTC C0710 4B or C0710 5A is not set**
3. Verify the B99 Steering Wheel Angle Sensor is installed correctly.
   - **If loose or incorrect installation**

     Correct the installation or replace the component.

cardiagn.com

- **If correct installation**

4. Ignition OFF and all vehicle systems OFF, disconnect the harness connector at the B99 Steering Wheel Angle Sensor. It may take up to 2 min for all vehicle systems to power down.
5. Test for less than 5 Ω between the ground circuit terminal 6 and ground.
   - **If 5 Ω or greater**
   1. Ignition OFF.
   2. Test for less than 2 Ω in the ground circuit end to end.
      - If 2 Ω or greater, repair the open/high resistance in the circuit.
      - If less than 2 Ω, repair the open/high resistance in the ground connection.
   - **If less than 5 Ω**
6. Ignition ON.
7. Verify a test lamp illuminates between the 12 V reference circuit terminal 5 and ground.
   - **If the test lamp does not illuminate**
   1. Ignition OFF, disconnect the harness connector at the K17 Electronic Brake Control Module.
   2. Test for infinite resistance between 12 V reference circuit and ground.
      - If less than infinite resistance, repair the short to ground on the circuit.
      - If infinite resistance
   3. Test for less than 2 Ω in the 12 V reference circuit end to end.
      - If 2 Ω or greater, repair the open/high resistance in the circuit.
      - If less than 2 Ω, replace the K17 Electronic Brake Control Module.
   - **If the test lamp illuminates**
8. Replace the B99 Steering Wheel Angle Sensor.
9. Ignition ON.
10. Verify that DTC C0710 is not set.
    - **If DTC C0710 is set**

      Replace the K17 Electronic Brake Control Module.

    - **If DTC C0710 is not set**
11. All OK.

cardiagn.com

### Repair Instructions

Perform the **Diagnostic Repair Verification** after completing the repair.

- Refer to **Steering Wheel Angle Sensor Centering**
- Refer to **Control Module References** for electronic brake control module replacement, programming and setup

## DTC C124F, C1250, OR C1251: LATERAL ACCELERATION SENSOR

### Diagnostic Instructions

- Perform the **Diagnostic System Check - Vehicle** prior to using this diagnostic procedure.
- Review **Strategy Based Diagnosis** for an overview of the diagnostic approach.
- Refer to **Diagnostic Procedure Instructions** to provide an overview of each diagnostic category.

### DTC Descriptors

#### DTC C124F

Lateral Acceleration Sensor Circuit Low Voltage

#### DTC C1250

Lateral Acceleration Sensor Circuit High Voltage

#### DTC C1251

Lateral Acceleration Sensor Performance

For symptom byte information refer to **Symptom Byte List** .

### Circuit/System Description

The yaw rate, lateral acceleration and longitudinal acceleration sensors are combined into one multi-axis acceleration sensor, internal to the inflatable restraint sensing and diagnostic module. The multi-axis acceleration sensor communicates with the electronic brake control module and transmission control module via serial data. The electronic brake control module activates the stability control function depending on the multi-axis acceleration sensor input. The inflatable restraint sensing and diagnostic module uses the multi-axis acceleration sensor to determine if the vehicle is in a roll over or near collision incident. The transmission control module sets these DTCs.

cardiagn.com

### Conditions for Running the DTC

Vehicle speed is greater than 15 km/h (10 MPH).

### Conditions for Setting the DTC

The transmission control module detects a fault that prevents it from performing a hill hold function.

### Action Taken When the DTC Sets

- The adaptive cruise control is inhibited.
- The traction/stability control indicator turns ON.
- The electronic brake control module disables the hill hold, the electronic stability control, and the trailer sway control for the duration of the ignition cycle.

### Conditions for Clearing the DTC

- The DTC clears when the diagnostic runs and passes.
- The history DTC will clear after 40 consecutive fault-free ignition cycles have occurred.

### Reference Information

Schematic Reference

**Antilock Brake System Schematics**

Connector End View Reference

**COMPONENT CONNECTOR END VIEWS - INDEX**

Description and Operation

**ABS Description and Operation**

Electrical Information Reference

- **Circuit Testing**
- **Connector Repairs**

cardiagn.com

- **Testing for Intermittent Conditions and Poor Connections**
- **Wiring Repairs**

Scan Tool Reference

**Control Module References** for scan tool information

### Circuit/System Verification

1. Ignition ON.
2. Verify that no other DTCs are set.
   - **If any other DTCs are set**

     Refer to **Diagnostic Trouble Code (DTC) List - Vehicle** .

   - **If no other DTCs are set**
3. Replace the K71 Transmission Control Module.
4. Verify that the DTC does not set while operating the vehicle within the Conditions for Running the DTC.
   - **If the DTC sets**

     Replace the K17 Electronic Brake Control Module.

   - **If the DTC does not set**
5. All OK.

### Repair Instructions

Perform the **Diagnostic Repair Verification** after completing the repair.

Refer to **Control Module References** for electronic brake control module or transmission control module replacement, programming and setup

## DTC C1252-C1254: LONGITUDINAL ACCELERATION SENSOR

### Diagnostic Instructions

- Perform the **Diagnostic System Check - Vehicle** prior to using this diagnostic procedure.
- Review **Strategy Based Diagnosis** for an overview of the diagnostic approach.

cardiagn.com

- Refer to **Diagnostic Procedure Instructions** to provide an overview of each diagnostic category.

### DTC Descriptors

## DTC C1252

Longitudinal Acceleration Sensor Circuit Low Voltage

## DTC C1253

Longitudinal Acceleration Sensor Circuit High Voltage

## DTC C1254

Longitudinal Acceleration Sensor Performance

For symptom byte information refer to **Symptom Byte List** .

### Circuit/System Description

The yaw rate, lateral acceleration and longitudinal acceleration sensors are combined into one multi-axis acceleration sensor, internal to the inflatable restraint sensing and diagnostic module. The multi-axis acceleration sensor communicates with the electronic brake control module and transmission control module via serial data. The electronic brake control module activates the stability control function depending on the multi-axis acceleration sensor input. The inflatable restraint sensing and diagnostic module uses the multi-axis acceleration sensor to determine if the vehicle is in a roll over or near collision incident. The transmission control module sets these DTCs.

### Conditions for Running the DTC

Vehicle speed is greater than 16 km/h (10 MPH).

### Conditions for Setting the DTC

The transmission control module detects a fault that prevents it from performing a hill hold start assist function.

### Action Taken When the DTC Sets

- The air bag indicator turns ON.
- The traction/stability control indicator turns ON.
- The electronic brake control module disables the stability control and the hill hold start assist for the duration of the ignition cycle.

cardiagn.com

### Conditions for Clearing the DTC

- The DTC clears when the diagnostic runs and passes.
- The history DTC will clear after 40 consecutive fault-free ignition cycles have occurred.

### Reference Information

Schematic Reference

**Antilock Brake System Schematics**

Connector End View Reference

**COMPONENT CONNECTOR END VIEWS - INDEX**

Description and Operation

**ABS Description and Operation**

Electrical Information Reference

- **Circuit Testing**
- **Connector Repairs**
- **Testing for Intermittent Conditions and Poor Connections**
- **Wiring Repairs**

Scan Tool Reference

**Control Module References** for scan tool information

### Circuit/System Verification

1. Ignition ON.
2. Verify that no other DTCs are set.
    - **If any other DTCs are set**

      Refer to **Diagnostic Trouble Code (DTC) List - Vehicle** .

cardiagn.com

- **If no other DTCs are set**

3. Replace the K71 Transmission Control Module.
4. Verify that the DTC does not set while operating the vehicle within the Conditions for Running the DTC.
   - **If the DTC sets**

     Replace the K17 Electronic Brake Control Module.

   - **If the DTC does not set**
5. All OK.

### Repair Instructions

Perform the **Diagnostic Repair Verification** after completing the repair.

Refer to **Control Module References** for control module replacement, programming, and setup.

## DTC P0856: TRACTION CONTROL TORQUE REQUEST CIRCUIT

### Diagnostic Instructions

- Perform the **Diagnostic System Check - Vehicle** prior to using this diagnostic procedure.
- Review **Strategy Based Diagnosis** for an overview of the diagnostic approach.
- Refer to **Diagnostic Procedure Instructions** to provide an overview of each diagnostic category.

### DTC Descriptor

### DTC P0856

Traction Control Torque Request Circuit

### Circuit/System Description

The electronic brake control module and the engine control module simultaneously control the traction control. The electronic brake control module sends a serial data message to the engine control module requesting torque reduction. When certain engine control module DTCs are set, the engine control module will not be able to perform the torque reduction for traction control. A serial data message is sent to the electronic brake control module indicating that traction control is not allowed.

### Conditions for Running the DTC

cardiagn.com

Engine running

### Conditions for Setting the DTC

The engine control module diagnoses a condition preventing the engine control portion of the traction control function and sends a serial data message to the electronic brake control module indicating that torque reduction is not allowed. The engine control module sets this DTC.

### Action Taken When the DTC Sets

- The ABS remains functional.
- The traction/stability control indicator turns ON.
- The electronic brake control module disables the traction control and stability control for the duration of the ignition cycle.

### Conditions for Clearing the DTC

- The condition for the DTC is no longer present.
- The engine control module clears the history DTC when a current DTC is not detected in 100 consecutive drive cycles.

### Reference Information

Schematic Reference

**Antilock Brake System Schematics**

Connector End View Reference

**COMPONENT CONNECTOR END VIEWS - INDEX**

Description and Operation

**ABS Description and Operation**

Electrical Information Reference

- **Circuit Testing**
- **Connector Repairs**
- **Testing for Intermittent Conditions and Poor Connections**
- **Wiring Repairs**

cardiagn.com

Scan Tool Reference

**Control Module References** for scan tool information

### Circuit/System Testing

1. Verify that no other DTCs are set except for P0856.
   - **If any other DTCs are set**

     Refer to **Diagnostic Trouble Code (DTC) List - Vehicle** .

   - **If only DTC P0856 is set**
2. Replace the K20 Engine Control Module.
3. Verify the DTC does not set while operating the vehicle within the Conditions for Running the DTC.
   - **If DTC sets**

     Replace the K17 Electronic Brake Control Module.

   - **If DTC does not set**
4. All OK.

### Repair Instructions

Perform the **Diagnostic Repair Verification** after completing the repair.

Refer to **Control Module References** for electronic brake control module and engine control module replacement, programming and setup

## DTC P15F8: AUTOMATIC BRAKING ENGINE TORQUE REQUEST SIGNAL MESSAGE COUNTER INCORRECT

### Diagnostic Instructions

- Perform the **Diagnostic System Check - Vehicle** prior to using this diagnostic procedure.
- Review **Strategy Based Diagnosis** for an overview of the diagnostic approach.
- Refer to **Diagnostic Procedure Instructions** to provide an overview of each diagnostic category.

### DTC Descriptor

### DTC P15F8

cardiagn.com

Automatic Braking Engine Torque Request Signal Message Counter Incorrect

### Circuit/System Description

The electronic brake control module and the engine control module simultaneously control the vehicle performance. During a automatic brake event the electronic brake control module sends a serial data message to the engine control module requesting torque reduction. If the engine control module receives corrupt data from the electronic brake control module, DTC P15F8 will set in the engine control module. The engine control module then sends a serial data message to the electronic brake control module that torque reduction is not allowed.

### Conditions for Running the DTC

- The ignition is ON.
- Ignition voltage is greater than 8 V.

### Conditions for Setting the DTC

The engine control module detects a corrupted data message from the electronic brake control module.

### Action Taken When the DTC Sets

- The ABS remains functional.
- DTC P15F8 is a Type B DTC.
- The traction Off indicator turns ON.
- The traction/stability control indicator turns ON.
- A message may be displayed on the driver information center.

### Conditions for Clearing the DTC

DTC P15F8 is a Type B DTC.

### Diagnostic Aids

Inspect the serial data circuits and connections at the engine control module and the electronic brake control module. They should be free from sources of electromagnetic interference and the connections should be clean and tight.

### Reference Information

Schematic Reference

cardiagn.com

**Antilock Brake System Schematics**

Connector End View Reference

**COMPONENT CONNECTOR END VIEWS - INDEX**

Description and Operation

**ABS Description and Operation**

Electrical Information Reference

- **Circuit Testing**
- **Connector Repairs**
- **Testing for Intermittent Conditions and Poor Connections**
- **Wiring Repairs**

Scan Tool Reference

**Control Module References** for scan tool information

### Circuit/System Testing

1. Verify that no other DTCs are set except for DTC P15F8.
    - **If any other DTCs are set**

      Refer to **Diagnostic Trouble Code (DTC) List - Vehicle** .

    - **If only DTC P15F8 is set**
2. Replace the K17 Electronic Brake Control Module.
3. Verify the DTC does not set while operating the vehicle within the Conditions for Running the DTC.
    - **If DTC sets**

      Replace the K20 Engine Control Module.

    - **If DTC does not set**

cardiagn.com

4. All OK.

### Repair Instructions

Perform the **Diagnostic Repair Verification** after completing the repair.

Refer to **Control Module References** for electronic brake control module and engine control module replacement, programming and setup

## DTC P15FD: WHEEL SPEED SENSOR MESSAGE SEQUENCE INCORRECT

### Diagnostic Instructions

- Perform the **Diagnostic System Check - Vehicle** prior to using this diagnostic procedure.
- Review **Strategy Based Diagnosis** for an overview of the diagnostic approach.
- Refer to **Diagnostic Procedure Instructions** to provide an overview of each diagnostic category.

### DTC Descriptor

## DTC P15FD

Wheel Speed Sensor Message Sequence Incorrect

### Circuit/System Description

The wheel speeds are detected by active wheel speed sensors. Each wheel speed sensor receives a 12 V reference voltage from the electronic brake control module (EBCM) and provides an alternating current square wave signal to the EBCM. As the wheel spins, the EBCM uses the frequency of the square wave signal to calculate the wheel speed. The EBCM sends the wheel speed information as a high speed controller area network (CAN) serial data message.

### Conditions for Running the DTC

Ignition ON

### Conditions for Setting the DTC

A supervised periodic message that includes the wheel speed serial data has not been received.

### Action Taken When the DTC Sets

Specific subsystems will not function or operate in degraded mode.

cardiagn.com

### Conditions for Clearing the DTC

A current DTC clears when the diagnostic runs and passes.

### Reference Information

Schematic Reference

**Antilock Brake System Schematics**

Connector End View Reference

**COMPONENT CONNECTOR END VIEWS - INDEX**

Description and Operation

**ABS Description and Operation**

Electrical Information Reference

- **Circuit Testing**
- **Connector Repairs**
- **Testing for Intermittent Conditions and Poor Connections**
- **Wiring Repairs**

Scan Tool Reference

**Control Module References** for scan tool information

### Diagnostic Aids

- This DTC can be set due to an incorrect part wheel speed sensor installed.
- Inspect the wheel encoder ring for rust or corrosion.
- If the customer comments that the ABS indicator is ON only during moist environmental conditions (rain, snow, vehicle wash, etc.), inspect the wheel speed sensor wiring for signs of water intrusion.

### Circuit/System Verification

cardiagn.com

Ignition ON, observe the scan tool EBCM Wheel Speed Sensor parameters. The reading should be the same speed on all sensors when driving in a straight line at a speed greater than 20 km/h (13 MPH).

### Circuit/System Testing

1. Ignition ON.
2. Verify that DTC C0035, C0040, C0045, or C0050 is not set in the EBCM.
   - **If any listed DTC is set**

     Refer to **Diagnostic Trouble Code (DTC) List - Vehicle** to diagnose that DTC prior to this diagnostic.

   - **If any listed DTC is not set**
3. Replace the K17 Electronic Brake Control Module.
4. Verify the DTC does not set while operating the vehicle under the Conditions for Running the DTC.
   - **If the DTC sets**

     Replace the module that set the DTC.

   - **If the DTC does not set**
5. All OK.

### Repair Instructions

Perform the **Diagnostic Repair Verification** after completing the repair.

Refer to **Control Module References** for control module replacement, programming and setup

## SYMPTOMS - ANTILOCK BRAKE SYSTEM

**NOTE:** **The following steps must be completed before using the symptom tables.**

1. Perform the **Diagnostic System Check - Vehicle** before using the symptom tables in order to verify that all of the following are true:
   - There are no DTCs set.
   - The control modules can communicate via the serial data link.
2. Review the system description and operation in order to familiarize yourself with the system functions. Refer to **ABS Description and Operation**.

cardiagn.com

### Visual/Physical Inspection

- Inspect for aftermarket devices which could affect the operation of the ABS. Refer to **Checking Aftermarket Accessories**
- Inspect the easily accessible or visible system components, for obvious damage or conditions, which could cause the symptom.

### Intermittent

Faulty electrical connections or wiring may be the cause of intermittent conditions. Refer to **Testing for Intermittent Conditions and Poor Connections**

### Symptom List

Refer to a symptom diagnostic procedure from the following list in order to diagnose the symptom:

- **ABS Indicator Malfunction**
- **Hill Descent Control Indicator Malfunction**
- **Traction Control/Stability Control Indicator Malfunction**

## ABS INDICATOR MALFUNCTION

### Diagnostic Instructions

- Perform the **Diagnostic System Check - Vehicle** prior to using this diagnostic procedure.
- Review **Strategy Based Diagnosis** for an overview of the diagnostic approach.
- Refer to **Diagnostic Procedure Instructions** to provide an overview of each diagnostic category.

### Circuit/System Description

The instrument cluster turns the ABS indicator on for 5 s after the ignition is turned on, or when the electronic brake control module detects a fault it sends a serial data message to the instrument cluster commanding the indicator on.

### Reference Information

Schematic Reference

**Antilock Brake System Schematics**

Connector End View Reference

cardiagn.com

**COMPONENT CONNECTOR END VIEWS - INDEX**

Description and Operation

**ABS Description and Operation**

Electrical Information Reference

- **Circuit Testing**
- **Connector Repairs**
- **Testing for Intermittent Conditions and Poor Connections**
- **Wiring Repairs**

Scan Tool Reference

**Control Module References** for scan tool information

### Circuit/System Verification

1. Ignition ON.
2. Verify that no DTCs are set.
   - **If any DTCs are set**

     Refer to **Diagnostic Trouble Code (DTC) List - Vehicle** .

   - **If no DTCs are set**
3. Verify the Instrument Cluster ABS indicator turns On and Off when commanding the All Indicators On and Off with a scan tool.
   - **If ABS indicator does not turn On and Off**

     Replace the P16 Instrument Cluster.

   - **If the ABS indicator turns On and Off**
4. Verify the ABS indicator turns Off five s after the ignition is turned On.
   - **If the ABS indicator does not turn Off**

     Replace the K17 Electronic Brake Control Module.

cardiagn.com

- **If the ABS indicator turns Off**

5. All OK.

### Repair Instructions

Perform the **Diagnostic Repair Verification** after completing the repair.

Refer to **Control Module References** for electronic brake control module or instrument cluster replacement, programming and setup

## HILL DESCENT CONTROL INDICATOR MALFUNCTION

### Diagnostic Instructions

- Perform the **Diagnostic System Check - Vehicle** prior to using this diagnostic procedure.
- Review **Strategy Based Diagnosis** for an overview of the diagnostic approach.
- Refer to **Diagnostic Procedure Instructions** to provide an overview of each diagnostic category.

### Diagnostic Fault Information

| Circuit | Short to Ground | Open/High Resistance | Short to Voltage | Signal Performance |
|---|---|---|---|---|
| Signal | U0422 71, B273A 02 | 1 | 1 | - |
| Ground | - | 1 | - | - |
| 1. Hill descent control switch malfunction | | | | |

### Circuit/System Description

The instrument cluster illuminates the hill descent indicator and hill descent control off indicator for 5 s after the ignition is turned ON. When the electronic brake control module detects a fault it sends a serial data message to the instrument cluster commanding the hill descent control indicator ON.

The body control module monitors the signal circuit from the hill descent control switch. The hill descent switch is a momentary switch that is normally open. When the hill descent control switch is pressed once, the body control module will request the electronic brake control module via serial data to disable or enable the hill descent control. When activated, the switch grounds the hill descent control system signal circuit. The electronic brake control module then enables or disables the hill descent control system. The electronic brake control module will request the instrument cluster via serial data to turn the hill descent indicator ON or OFF to notify the driver.

cardiagn.com

### Reference Information

Schematic Reference

- **Antilock Brake System Schematics**
- **Hydraulic Brake Schematics**

Connector End View Reference

**COMPONENT CONNECTOR END VIEWS - INDEX**

Description and Operation

**ABS Description and Operation**

Electrical Information Reference

- **Circuit Testing**
- **Connector Repairs**
- **Testing for Intermittent Conditions and Poor Connections**
- **Wiring Repairs**

Scan Tool Reference

**Control Module References** for scan tool information

### Circuit/System Verification

1. Ignition ON.
2. Verify the instrument cluster hill descent control indicator turns On and Off when commanding the All Indicators On and Off with a scan tool.
   - **If any indicator does not turn On and Off**

     Replace the P16 Instrument Cluster.

   - **If all indicators turn On and Off**
3. Verify the scan tool Body Control Module Hill Descent Control Switch parameter changes between Inactive and Active when pressing and releasing the hill descent control switch.

cardiagn.com

- **If the parameter does not change**

  Refer to Circuit/System Testing.

- **If the parameter changes**

4. All OK.

### Circuit/System Testing

1. Ignition OFF and all vehicle systems OFF, disconnect the X1 harness connector at the S48A Multifunction Switch - Instrument Panel. It may take up to 2 min for all vehicle systems to power down.
2. Test for less than 5 Ω between the ground circuit terminal 14 and ground.
   - **If 5 Ω or greater**
   1. Ignition OFF.
   2. Test for less than 2 Ω in the ground circuit end to end.
      - If 2 Ω or greater, repair the open/high resistance in the circuit.
      - If less than 2 Ω, repair the open/high resistance in the ground connection.
   - **If less than 5 Ω**
3. Ignition ON.
4. Verify the scan tool Body Control Module Hill Descent Control Switch parameter is Inactive.
   - **If not Inactive**
   1. Ignition OFF, disconnect the X4 harness connector at the K9 Body Control Module.
   2. Test for infinite resistance between the signal circuit terminal 19 X4 and ground.
      - If less than infinite resistance, repair the short to ground on the circuit.
      - If infinite resistance, replace the K9 Body Control Module.
   - **If Inactive**
5. Install a 3 A fused jumper wire between the signal circuit terminal 4 and the ground circuit terminal 14.
6. Verify the scan tool Hill Descent Control Switch parameter is Active.
   - **If not Active**
   1. Ignition OFF, disconnect the X4 harness connector at the K9 Body Control Module, ignition ON.
   2. Test for less than 1 V between the signal circuit and ground.

cardiagn.com

- If 1 V or greater, repair the short to voltage on the circuit.
- If less than 1 V

3. Test for less than 2 Ω in the signal circuit end to end.
    - If 2 Ω or greater, repair the open/high resistance in the circuit.
    - If less than 2 Ω, replace the K9 Body Control Module.

- **If Active**

7. Test or replace the S48A Multifunction Switch - Instrument Panel.

### Component Testing

1. Ignition OFF, disconnect the X1 harness connector at the S48A Multifunction Switch - Instrument Panel.
2. Test for infinite resistance between the signal terminal 4 and the ground terminal 14 with the switch in the open position.
    - **If less than infinite resistance**

      Replace the S48A Multifunction Switch - Instrument Panel.

    - **If infinite resistance**
3. Test for less than 2 Ω between the signal terminal 4 and the ground terminal 14 with the switch in the closed position.
    - **If 2 Ω or greater**

      Replace the S48A Multifunction Switch - Instrument Panel.

    - **If less than 2 Ω**
4. All OK.

### Repair Instructions

Perform the **Diagnostic Repair Verification** after completing the repair.

- Refer to **Vehicle Stability Control System Switch Replacement (Chevrolet / GMC)Vehicle Stability Control System Switch Replacement (Cadillac)**
- Refer to **Control Module References** for body control module or instrument cluster replacement, programming and setup

## TRACTION CONTROL/STABILITY CONTROL INDICATOR MALFUNCTION

cardiagn.com

### Diagnostic Instructions

- Perform the **Diagnostic System Check - Vehicle** prior to using this diagnostic procedure.
- Review **Strategy Based Diagnosis** for an overview of the diagnostic approach.
- Refer to **Diagnostic Procedure Instructions** to provide an overview of each diagnostic category.

### Diagnostic Fault Information

| Circuit | Short to Ground | Open/High Resistance | Short to Voltage | Signal Performance |
|---|---|---|---|---|
| Signal | U0422 71, B2745 02 | 1 | 1 | - |
| Ground | - | 1 | - | - |
| 1. Traction control switch malfunction | | | | |

### Circuit/System Description

The instrument cluster illuminates the traction/stability control indicator, the traction control off indicator and the stability control off indicator for 5 s after the ignition is turned ON. When the electronic brake control module detects a fault it sends a serial data message to the instrument cluster commanding the traction/stability control indicator ON.

The body control module monitors the signal circuit from the traction control switch. When the traction control switch is pressed once, the body control module sends a serial data message to the electronic brake control module to disable the traction control system and turn the traction control off indicator ON to notify the driver of the deactivation. When the traction control switch is pressed and held for 5 s, the body control module will request the electronic brake control module to disable the traction control and the electronic stability control. The electronic brake control module will request the instrument cluster to turn the traction control off and stability control off indicator ON to notify the driver of the deactivation.

### Reference Information

Schematic Reference

**Antilock Brake System Schematics**

Connector End View Reference

**COMPONENT CONNECTOR END VIEWS - INDEX**

Description and Operation

cardiagn.com

**ABS Description and Operation**

Electrical Information Reference

- **Circuit Testing**
- **Connector Repairs**
- **Testing for Intermittent Conditions and Poor Connections**
- **Wiring Repairs**

Scan Tool Reference

**Control Module References** for scan tool information

### Circuit/System Verification

1. Ignition ON.
2. Verify the Instrument Cluster indicators listed below turn On and Off when commanding the All Indicators On and Off with a scan tool.
   - Traction control off indicator
   - Stability control off indicator
   - Traction/stability control indicator
   - **If any indicator does not turn On and Off**

     Replace the P16 Instrument Cluster.

   - **If all indicators turn On and Off**
3. Verify the scan tool Body Control Module Traction Control Switch parameter changes between Active and Inactive when pressing and releasing the traction control switch.
   - **If the parameter does not change**

     Refer to Circuit/System Testing.

   - **If the parameter changes**
4. All OK.

### Circuit/System Testing

cardiagn.com

**NOTE:** **Circuit/System Verification must be performed before Circuit/System Testing.**

1. Ignition OFF, disconnect the X1 harness connector at the S48A Multifunction Switch - Instrument Panel. It may take up to 5 min for all vehicle systems to power down.
2. Test for less than 5 Ω between the ground circuit terminal 8 and ground.
   - **If 5 Ω or greater**
   1. Ignition OFF.
   2. Test for less than 2 Ω in the ground circuit end to end.
      - If 2 Ω or greater, repair the open/high resistance in the circuit.
      - If less than 2 Ω, repair the open/high resistance in the ground connection.
   - **If less than 5 Ω**
3. Ignition ON.
4. Verify the scan tool Body Control Module Traction Control Switch parameter is Inactive.
   - **If not Inactive**
   1. Ignition OFF, disconnect the X2 harness connector at the K9 Body Control Module.
   2. Test for infinite resistance between the signal circuit terminal 14 X2 and ground.
      - If less than infinite resistance, repair the short to ground on the circuit.
      - If infinite resistance, replace the K9 Body Control Module.
   - **If Inactive**
5. Install a 3 A fused jumper wire between the signal circuit terminal 2 and the ground circuit terminal 8.
6. Verify the scan tool Traction Control Switch parameter is Active.
   - **If not Active**
   1. Ignition OFF, disconnect the X2 harness connector at the K9 Body Control Module, ignition ON.
   2. Test for less than 1 V between the signal circuit and ground.
      - If 1 V or greater, repair the short to voltage on the circuit.
      - If less than 1 V.
   3. Test for less than 2 Ω in the signal circuit end to end.
      - If 2 Ω or greater, repair the open/high resistance in the circuit.
      - If less than 2 Ω, replace the K9 Body Control Module.

cardiagn.com

- **If Active**

7. Test or replace the S48A Multifunction Switch - Instrument Panel.

### Component Testing

1. Ignition OFF, disconnect the X1 harness connector at the S48A Multifunction Switch - Instrument Panel.
2. Test for infinite resistance between the signal circuit terminal 2 and the ground terminal 8 with the switch in the open position.
   - **If less than infinite resistance**

     Replace the S48A Multifunction Switch - Instrument Panel.

   - **If infinite resistance**
3. Test for less than 2 Ω between the signal terminal 2 and the ground terminal 8 with the switch in the closed position.
   - **If 2 Ω or greater**

     Replace the S48A Multifunction Switch - Instrument Panel.

   - **If less than 2 Ω**
4. All OK.

### Repair Instructions

Perform the **Diagnostic Repair Verification** after completing the repair.

- Refer to **Vehicle Stability Control System Switch Replacement (Chevrolet / GMC)Vehicle Stability Control System Switch Replacement (Cadillac)**
- Refer to **Control Module References** for body control module or instrument cluster replacement, programming and setup

# REPAIR INSTRUCTIONS

## ANTILOCK BRAKE SYSTEM AUTOMATED BLEED

**CAUTION:** **Only use products that comply with GM specifications and check manufacturer information respectively. We recommend the use of GM genuine products. Instructions must be followed at all times. The use of any type of fluid other than the recommended type of brake fluid, may cause contamination which could result in damage to the internal rubber seals and/or rubber linings of hydraulic brake system components.**

cardiagn.com

**CAUTION:** **Avoid spilling brake fluid onto painted surfaces, electrical connections, wiring, or cables. Brake fluid will damage painted surfaces and cause corrosion to electrical components. If any brake fluid comes in contact with painted surfaces, immediately flush the area with water. If any brake fluid comes in contact with electrical connections, wiring, or cables, use a clean shop cloth to wipe away the fluid.**

**CAUTION:** **Refer to Brake Fluid Effects on Paint and Electrical Components Caution .**

**NOTE:** **The base hydraulic brake system must be bled before performing this automated bleeding procedure. If you have not yet performed the base hydraulic brake system bleeding procedure, refer to Hydraulic Brake System Bleeding (Pressure) Hydraulic Brake System Bleeding (Manual) before proceeding.**

1. Install a scan tool.
2. Start the engine and allow the engine to idle.
3. Using the scan tool, begin the automated bleed procedure.
4. Follow the instructions on the scan tool to complete the automated bleed procedure. Apply the brake pedal when instructed by the scan tool.
5. Turn the ignition OFF.
6. Remove the scan tool from the vehicle.
7. Fill the brake master cylinder reservoir to the maximum-fill level with Delco Supreme 11Â®, GM P/N 12377967 (Canadian P/N 992667), or equivalent DOT-3 brake fluid from a clean, sealed brake fluid container.
8. Bleed the hydraulic brake system. Refer to **Hydraulic Brake System Bleeding (Pressure) Hydraulic Brake System Bleeding (Manual)** .
9. With the ignition OFF, apply the brakes several times until the brake pedal becomes firm, in order to deplete the brake booster power reserve.
10. Slowly apply and release the brake pedal. Observe the feel of the brake pedal.
11. If the brake pedal feels spongy, repeat the automated bleeding procedure. If the brake pedal still feels spongy after repeating the automated bleeding procedure, inspect the brake system for external leaks. Refer to **Brake System External Leak Inspection** .
12. Turn the ignition key ON, with the engine OFF; check to see if the brake system warning lamp remains illuminated.
13. If the brake system warning lamp remains illuminated, DO NOT allow the vehicle to be driven until it is diagnosed and repaired. Refer to **Symptoms - Hydraulic Brakes** .
14. Drive the vehicle to exceed 13 km/h (8 mph) to allow ABS initialization to occur. Observe the feel of the brake pedal.
15. If the brake pedal feels spongy, repeat the automated bleeding procedure until a firm brake pedal is obtained.

## STEERING ANGLE SENSOR REPLACEMENT

cardiagn.com

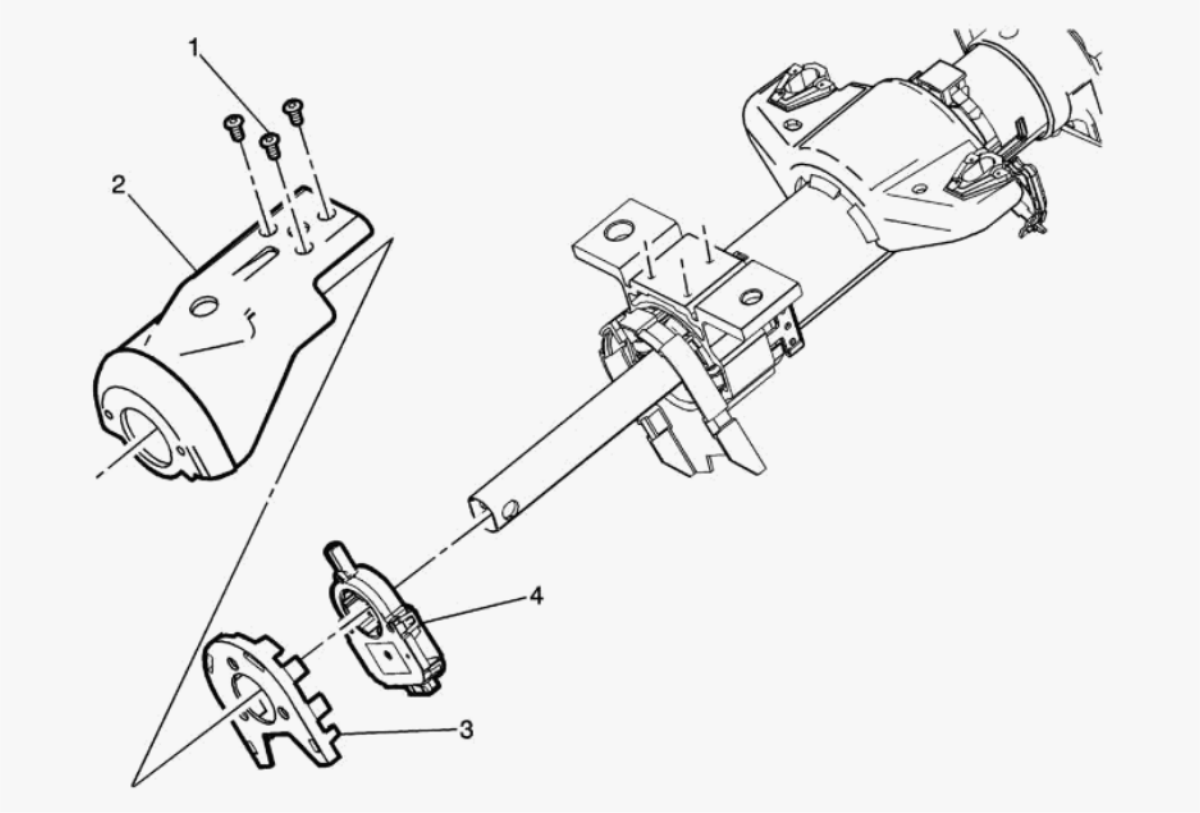


**Fig. 4: Steering Angle Sensor**
**Courtesy of GENERAL MOTORS COMPANY**

| Callout | Component Name |
|---|---|
| **Preliminary Procedure**<br>Refer to **Steering Column Replacement (N33, N37)** or **Steering Column Replacement (N38)** | |
| 1 | Steering Column Bracket Screw (Qty: 3)<br><br>**CAUTION:**<br>**Refer to Fastener Caution .** |

cardiagn.com

| Callout | Component Name |
|---|---|
| | **Tighten**<br>6 N.m (53 lb in) |
| 2 | Steering Column Bracket |
| 3 | Steering Angle Sensor Retaining Clip |
| 4 | Steering Angle Sensor<br><br>**Procedure**<br><br>1. Disconnect the electrical connector.<br>2. Center the steering angle sensor. Refer to **Steering Wheel Angle Sensor Centering** |

## STEERING WHEEL ANGLE SENSOR CENTERING

**NOTE:** **The GDS2 calibration software must be updated to the latest diagnostic package for the scan tool Reset and Learn functions to work correctly.**

The steering angle sensor does not require centering often. Centering of the steering angle sensor might be required after certain service procedures are performed. Some of these procedures are as follows:

- Wheel alignment
- Steering gear replacement
- Steering column replacement
- Steering angle sensor replacement
- Collision or other physical damage
- Electronic brake control module (EBCM) replacement

The steering angle sensor centering procedure can be completed with a scan tool using the following steps:

1. Using the steering wheel, align the front wheels in the center forward position.
2. Apply the parking brake, or set the transmission in the P position.
3. Install the scan tool to the data link connector.
4. Ignition ON, engine OFF

cardiagn.com

**NOTE:** **If installing a new steering angle sensor, the Reset function is not required. Proceed to step 7. Reset function only needs to be performed when using a vehicles existing steering angle sensor.**

5. Select Steering Wheel Angle Sensor Reset in the Steering Wheel Angle Sensor Module Configuration/Reset Functions list.
6. Follow the scan tool directions to complete the Reset procedure.
7. Select Steering Wheel Angle Sensor Learn in the Steering Wheel Angle Sensor Module Configuration/Reset Functions list.
8. Follow the scan tool directions to complete the Learn procedure.
9. Select Steering Wheel Angle Sensor Learn in the Electronic Brake Control Module Configuration/Reset Functions list.
10. Follow the scan tool directions to complete the Learn procedure.
11. Clear any DTCs that may be set.

## ELECTRONIC BRAKE CONTROL MODULE REPLACEMENT

### Removal Procedure

**CAUTION:** **To prevent equipment damage, never connect or disconnect the wiring harness connection from the EBCM with the ignition switch in the ON position.**

1. Place the ignition switch in the OFF position.
2. Raise and support the vehicle. Refer to **Lifting and Jacking the Vehicle** .

cardiagn.com

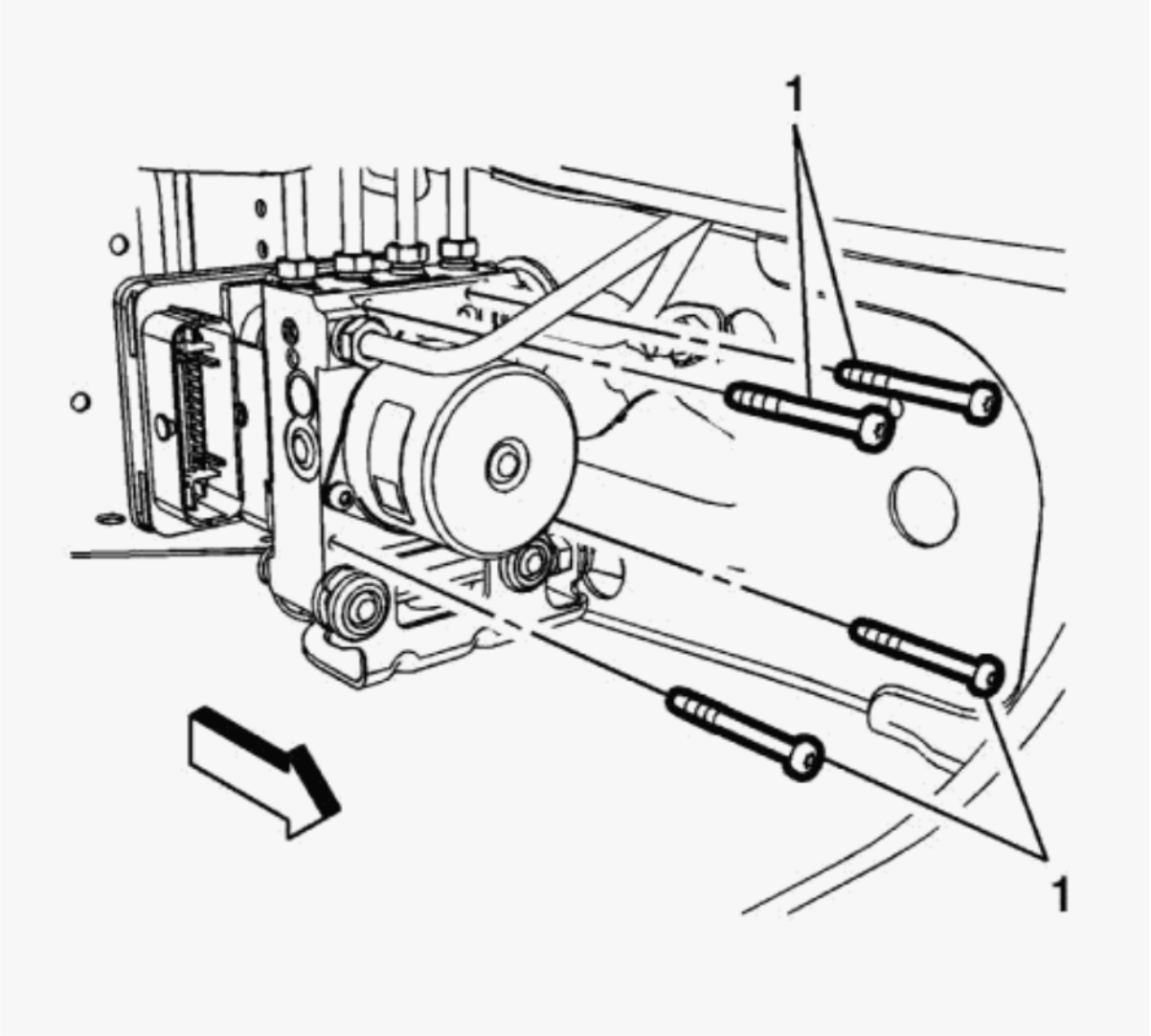


**Fig. 5: EBCM Bolts**
**Courtesy of GENERAL MOTORS COMPANY**

3. Thoroughly clean the area around the electronic brake control module (EBCM) of all dirt and debris.
4. Disconnect the EBCM electrical connector.
5. Remove the EBCM bolts (1).

cardiagn.com

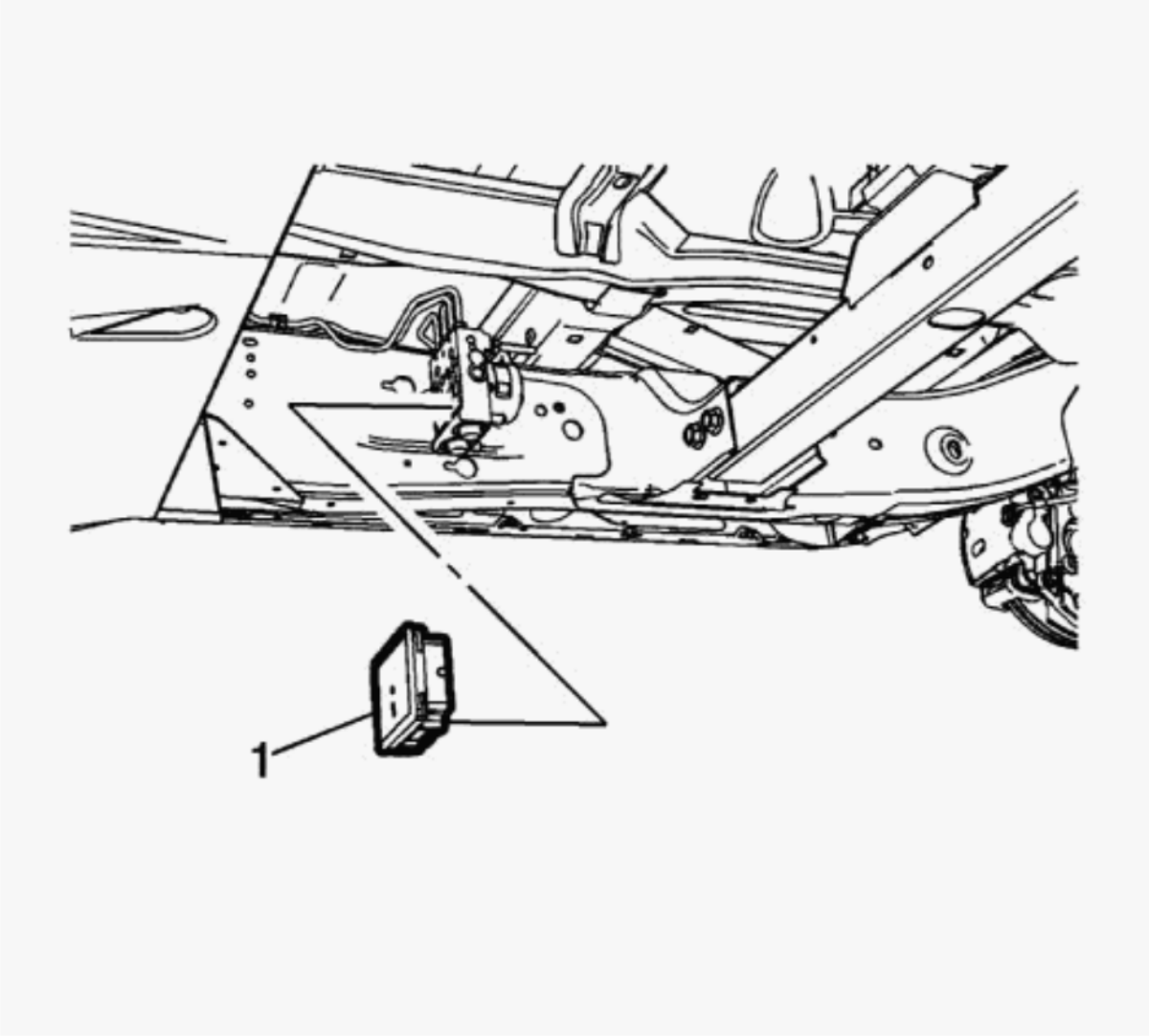


**Fig. 6: EBCM And Brake Pressure Modulator Valve (BPMV)**
**Courtesy of GENERAL MOTORS COMPANY**

**NOTE:** **Do not attempt to pry or lever against the EBCM.**

6. Carefully separate the EBCM (1) from the brake pressure modulator valve (BPMV) by pulling straight away from the BPMV.

**Installation Procedure**

cardiagn.com

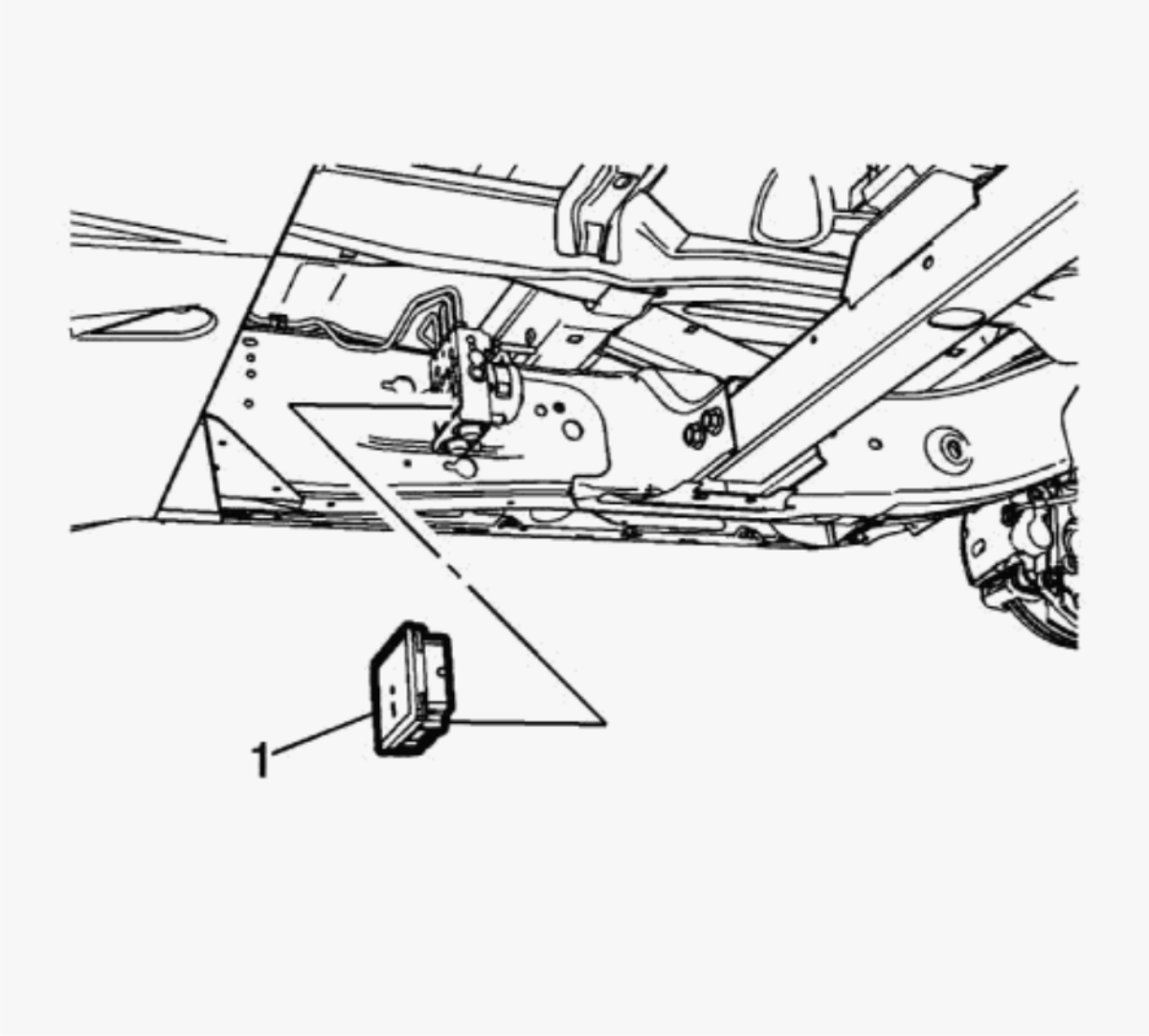


**Fig. 7: EBCM And Brake Pressure Modulator Valve (BPMV)**
**Courtesy of GENERAL MOTORS COMPANY**

1. Clean the sealing surfaces of the EBCM and the BPMV with denatured alcohol and allow to dry.
2. Inspect the EBCM to BPMV gasket for damage and replace, if necessary.
3. Install the EBCM (1) to the BPMV.

cardiagn.com

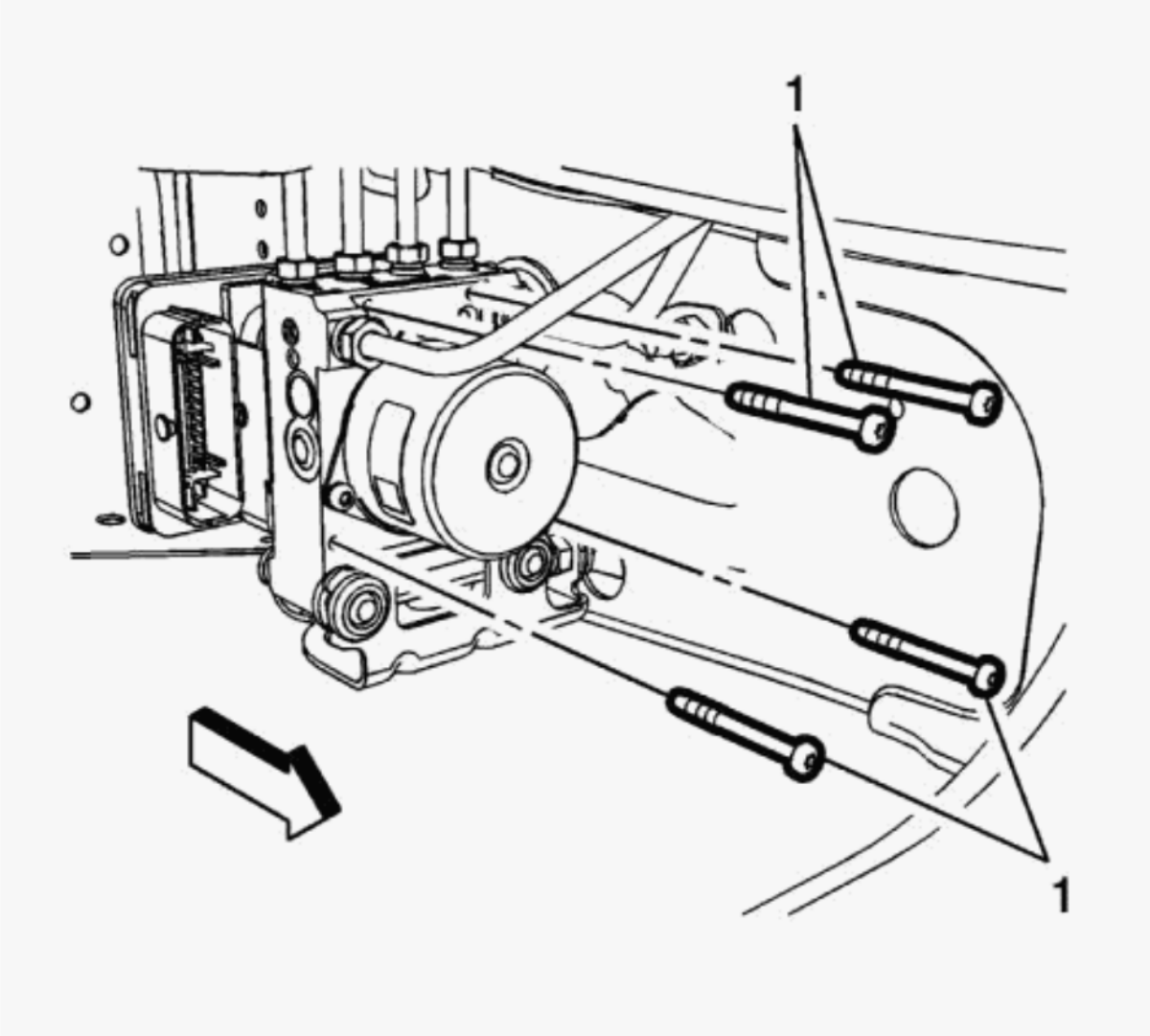


**Fig. 8: EBCM Bolts**
**Courtesy of GENERAL MOTORS COMPANY**

**CAUTION: Refer to Fastener Caution .**

4. Install the EBCM bolts (1) and tighten in a cross pattern to 3 N.m (27 lb in).
5. Connect the EBCM electrical connector.

cardiagn.com

6. Program the EBCM. Refer to **Electronic Brake Control Module Programming and Setup** .

## BRAKE PRESSURE MODULATOR VALVE REPLACEMENT

### Removal Procedure

**CAUTION: Refer to Brake Fluid Effects on Paint and Electrical Components Caution .**

**CAUTION: Always connect or disconnect the wiring harness connector from the EBCM/EBTCM with the ignition switch in the OFF position. Failure to observe this precaution could result in damage to the EBCM/EBTCM.**

1. Place the ignition switch in the OFF position.
2. Raise and support the vehicle. Refer to **Lifting and Jacking the Vehicle** .
3. Clean the area surrounding the electronic brake control module (EBCM) and brake pressure modulator valve (BPMV) assembly of any accumulated dirt and debris.
4. Disconnect the EBCM electrical connector.

cardiagn.com

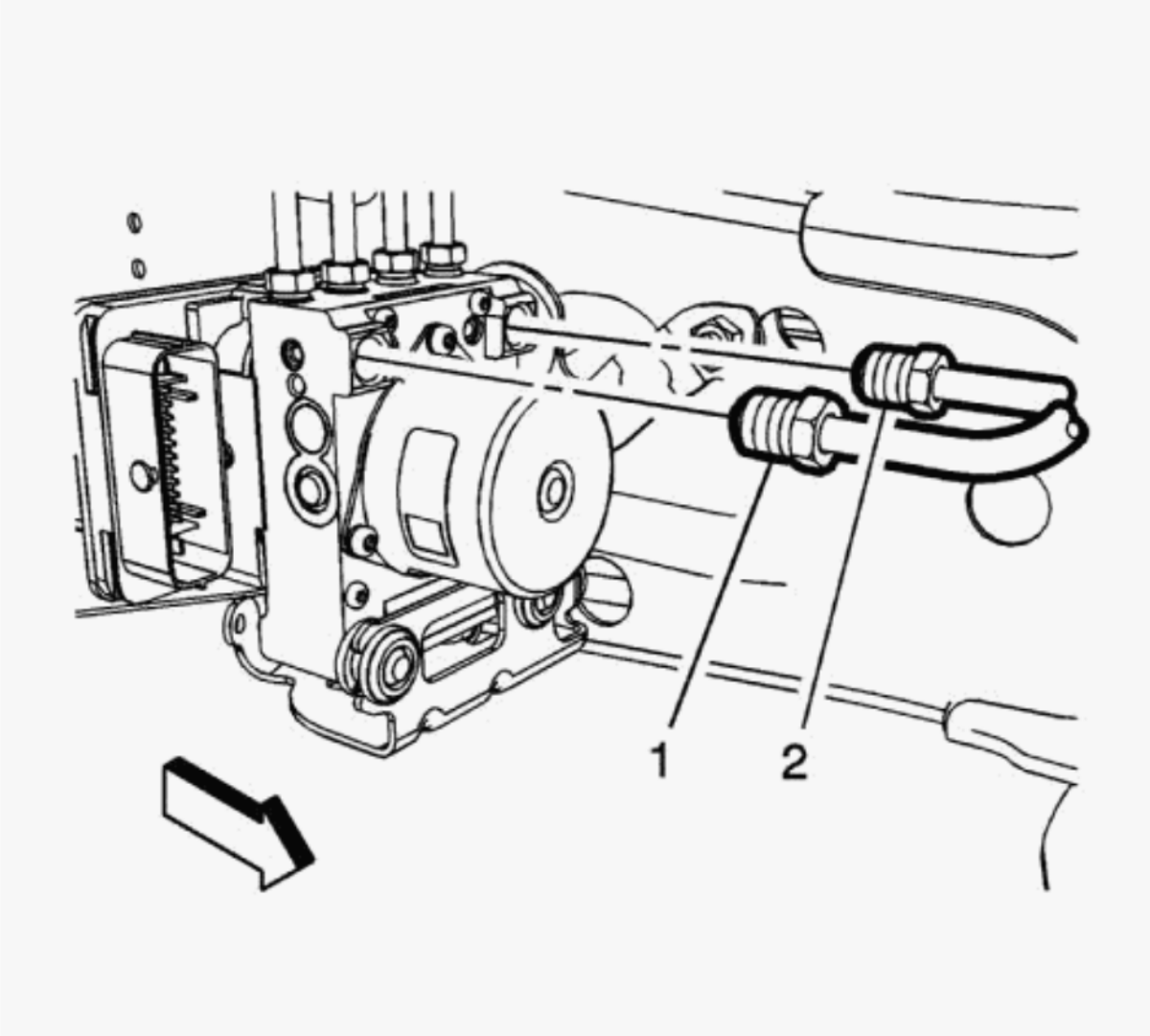


**Fig. 9: Master Cylinder Secondary Inlet Brake Pipe Fitting And Master Cylinder Primary Inlet Brake Pipe Fitting**
**Courtesy of GENERAL MOTORS COMPANY**

5. Disconnect the master cylinder secondary brake pipe fitting (1).
6. Cap the brake pipe fitting to prevent brake fluid loss and contamination.
7. Disconnect the master cylinder primary brake pipe fitting (2).
8. Cap the brake pipe fitting to prevent brake fluid loss and contamination.

cardiagn.com

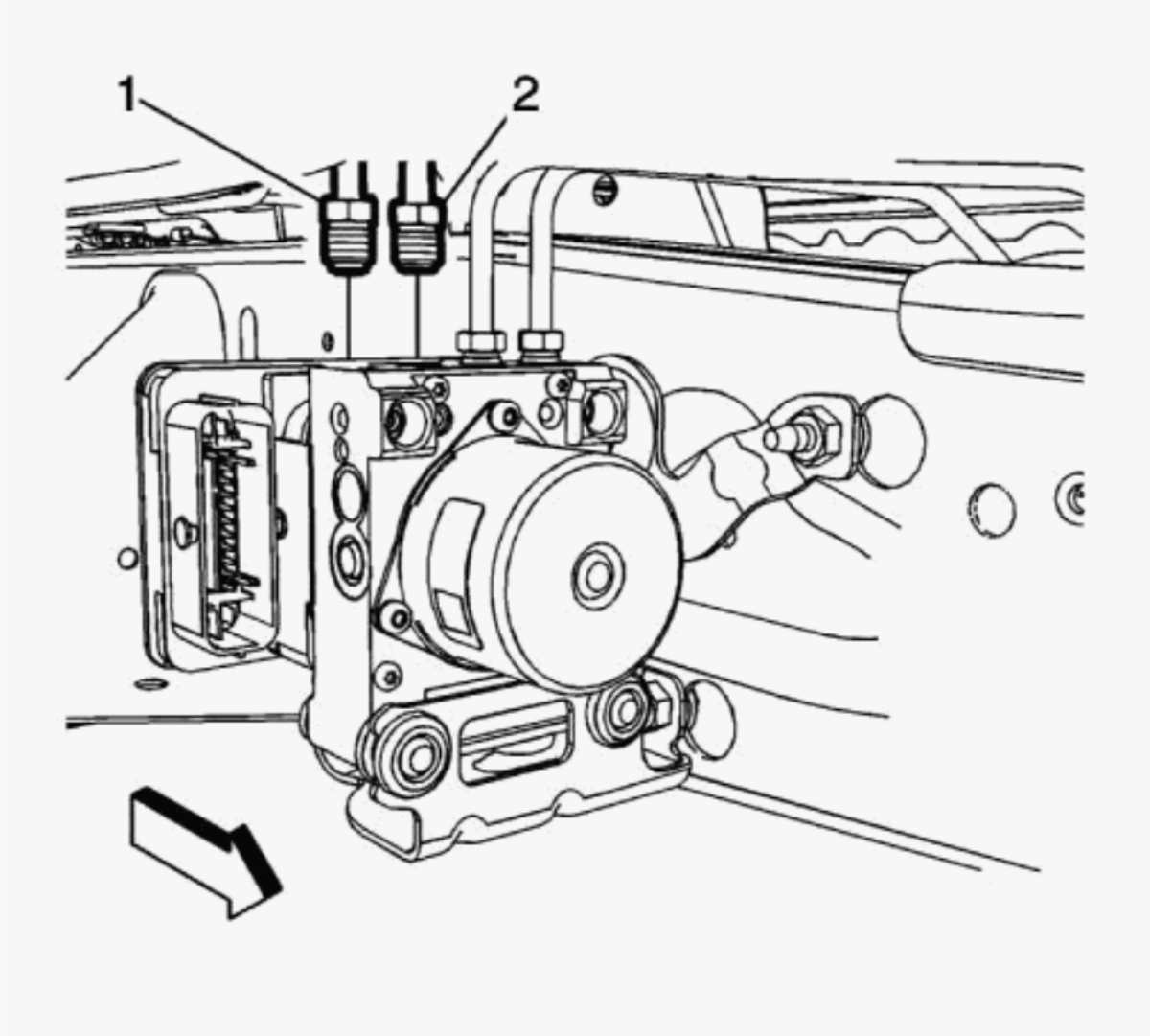


**Fig. 10: Left Rear And Right Rear Brake Pipe Fittings**
**Courtesy of GENERAL MOTORS COMPANY**

9. Disconnect the left rear brake pipe fitting (1).
10. Cap the brake pipe fitting to prevent brake fluid loss and contamination.
11. Disconnect the right rear brake pipe fitting (2).
12. Cap the brake pipe fitting to prevent brake fluid loss and contamination.

cardiagn.com

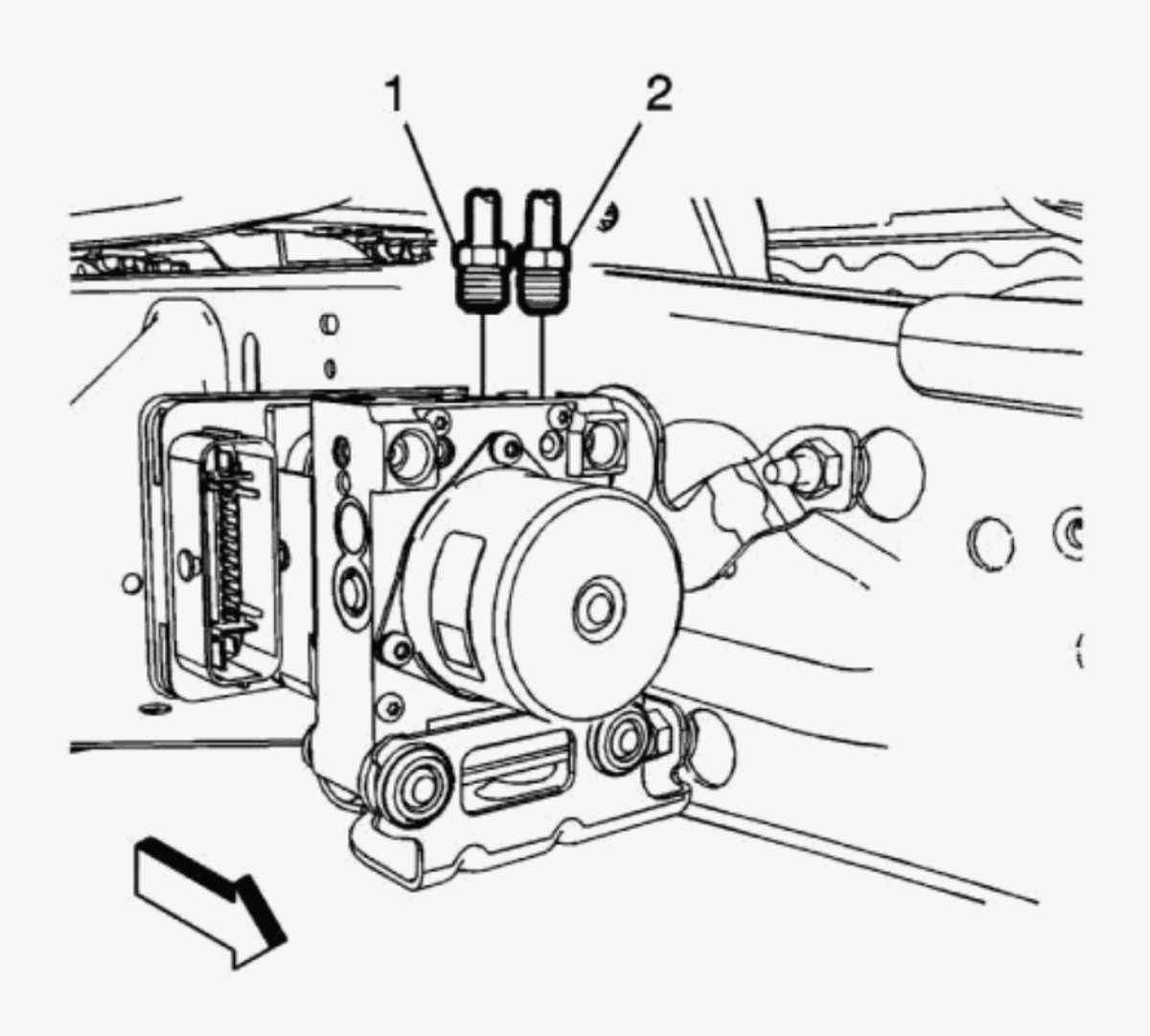


**Fig. 11: Right Front And Left Front Brake Pipe Fittings**
**Courtesy of GENERAL MOTORS COMPANY**

13. Disconnect the right front brake pipe fitting (1).
14. Cap the brake pipe fitting to prevent brake fluid loss and contamination.
15. Disconnect the left front brake pipe fitting (2).
16. Cap the brake pipe fitting to prevent brake fluid loss and contamination.

cardiagn.com

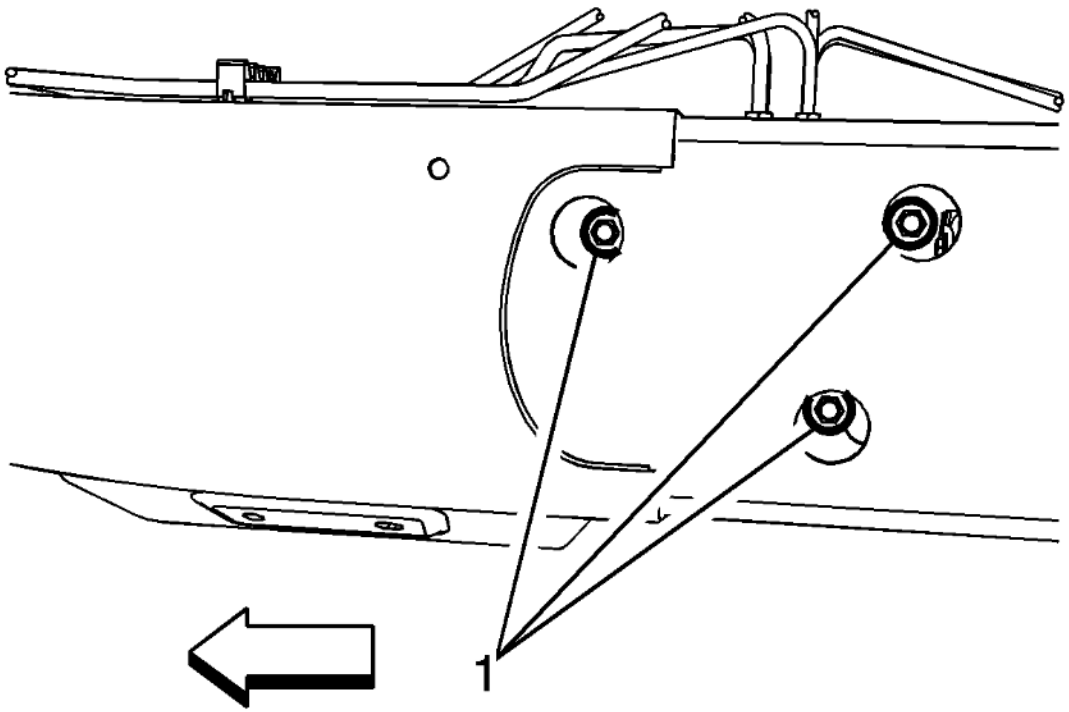


Fig. 12: BPMV Bracket Bolts
**Courtesy of GENERAL MOTORS COMPANY**

**NOTE:** **It is not necessary to remove the BPMV bracket bolts.**

17. Loosen, but do not remove, the BPMV bracket bolts (1).
18. Slide the BPMV and bracket assembly toward the rear of the vehicle and remove the assembly.

cardiagn.com

19. If necessary, remove the BPMV bracket. Refer to **Brake Pressure Modulator Valve Bracket Replacement**.
20. Remove the EBCM, if necessary. Refer to **Electronic Brake Control Module Replacement**.

### Installation Procedure

1. Install the EBCM, if removed. Refer to **Electronic Brake Control Module Replacement**.
2. Install the BPMV to the bracket, if removed. Refer to **Brake Pressure Modulator Valve Bracket Replacement**.
3. Install the BPMV and bracket assembly to the frame rail and slide the BPMV and bracket assembly toward the front of the vehicle.

cardiagn.com

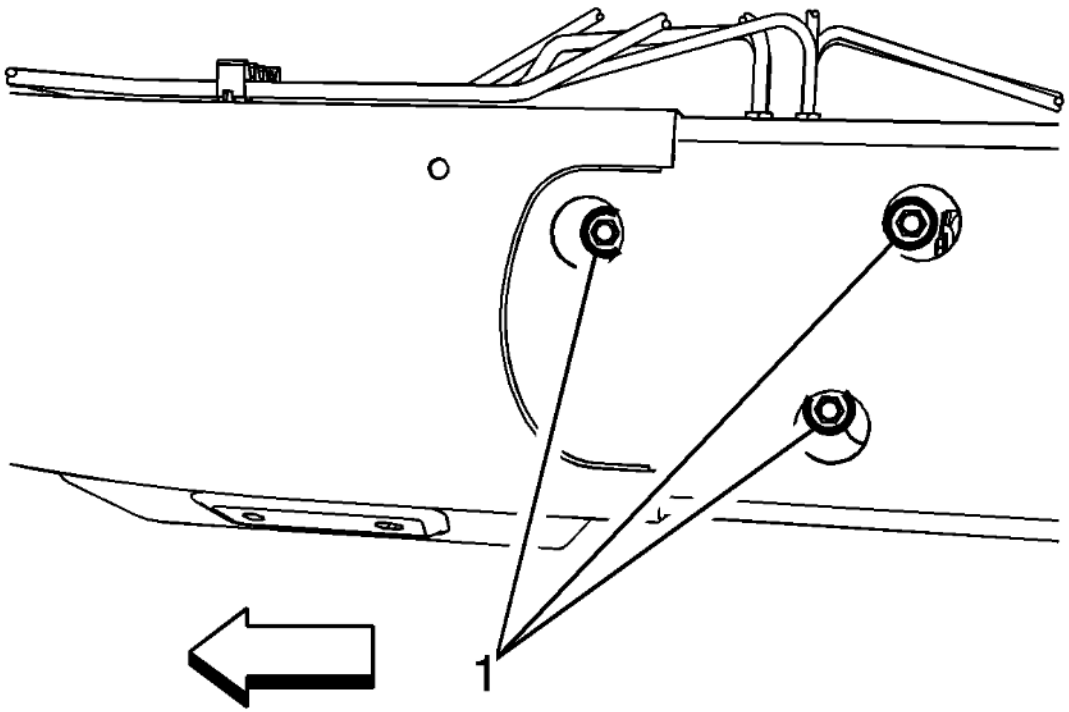


Fig. 13: BPMV Bracket Bolts
Courtesy of GENERAL MOTORS COMPANY

**CAUTION:** **Refer to Fastener Caution .**

4. Keep the BPMV and bracket assembly firmly seated in the slots of the frame rail and tighten the BPMV bracket bolts (1) to 22 N.m (16 lb ft).

cardiagn.com

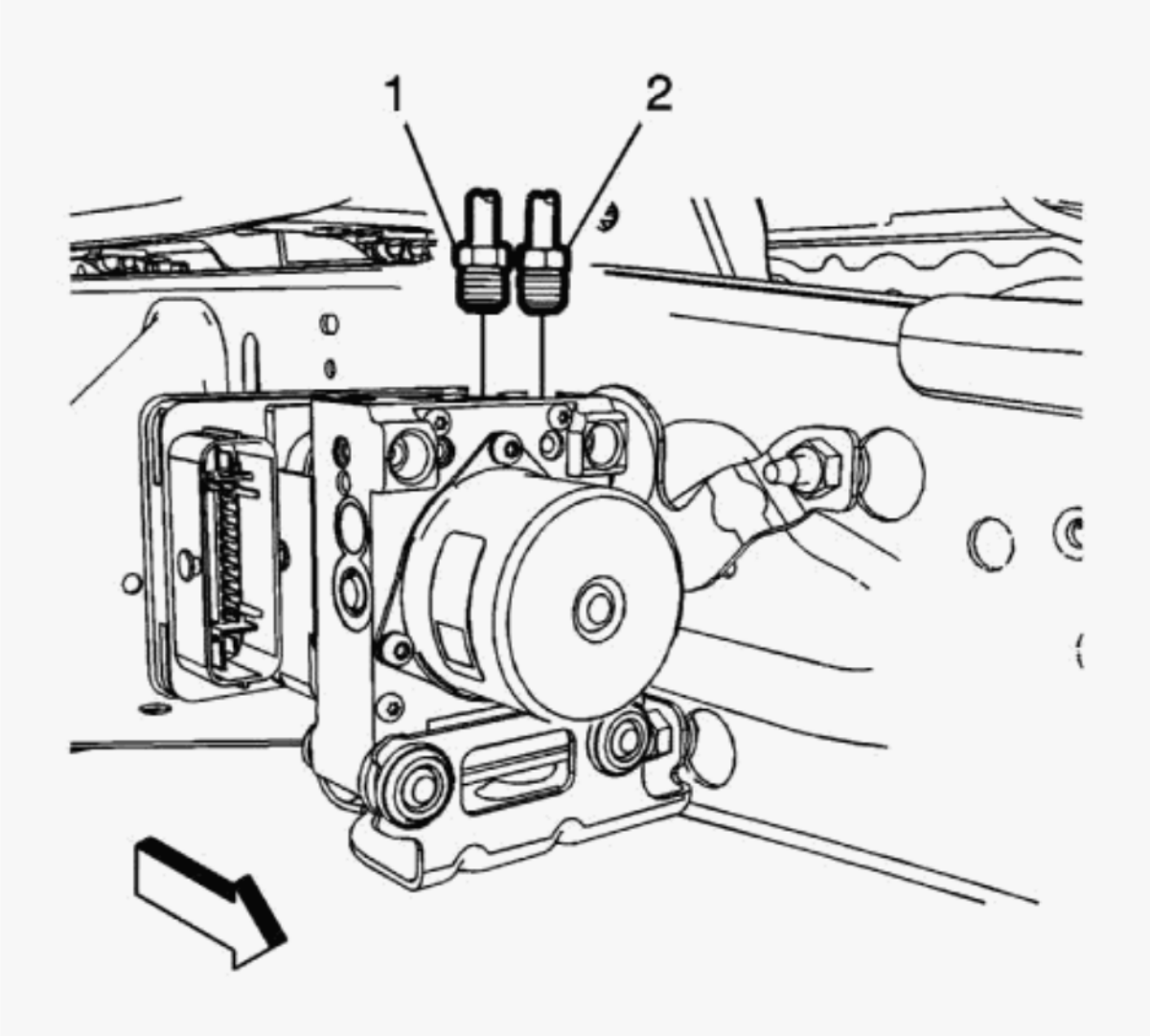


**Fig. 14: Right Front And Left Front Brake Pipe Fittings**
**Courtesy of GENERAL MOTORS COMPANY**

5. Connect the right front brake pipe fitting (1) and tighten the fitting to 18 N.m (13 lb ft).
6. Connect the left front brake pipe fitting (2) and tighten the fitting to 18 N.m (13 lb ft).

cardiagn.com

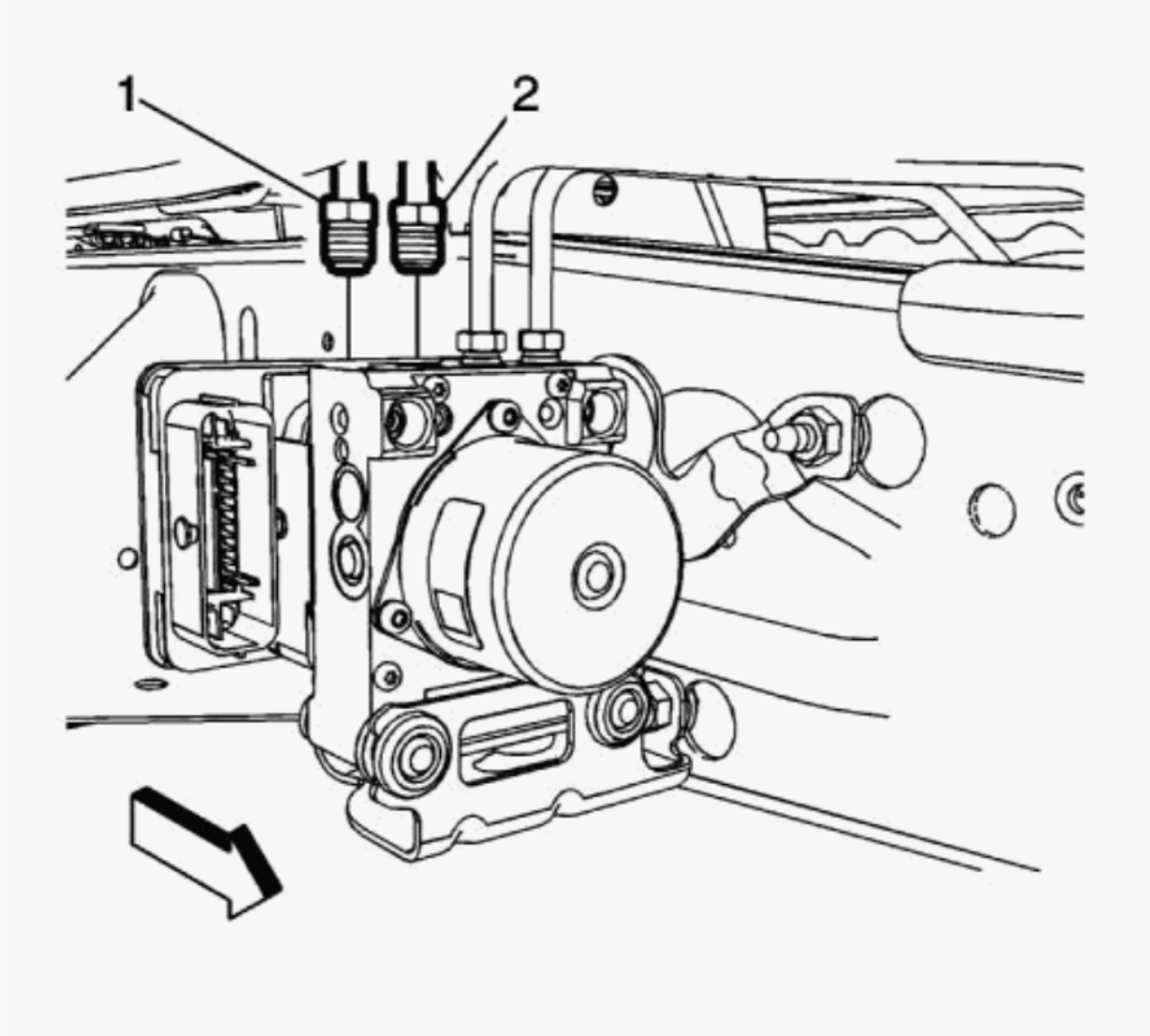


**Fig. 15: Left Rear And Right Rear Brake Pipe Fittings**
**Courtesy of GENERAL MOTORS COMPANY**

7. Connect the left rear brake pipe fitting (1) and tighten the fitting to 18 N.m (13 lb ft).
8. Connect the right rear brake pipe fitting (2) and tighten the fitting to 18 N.m (13 lb ft).

cardiagn.com

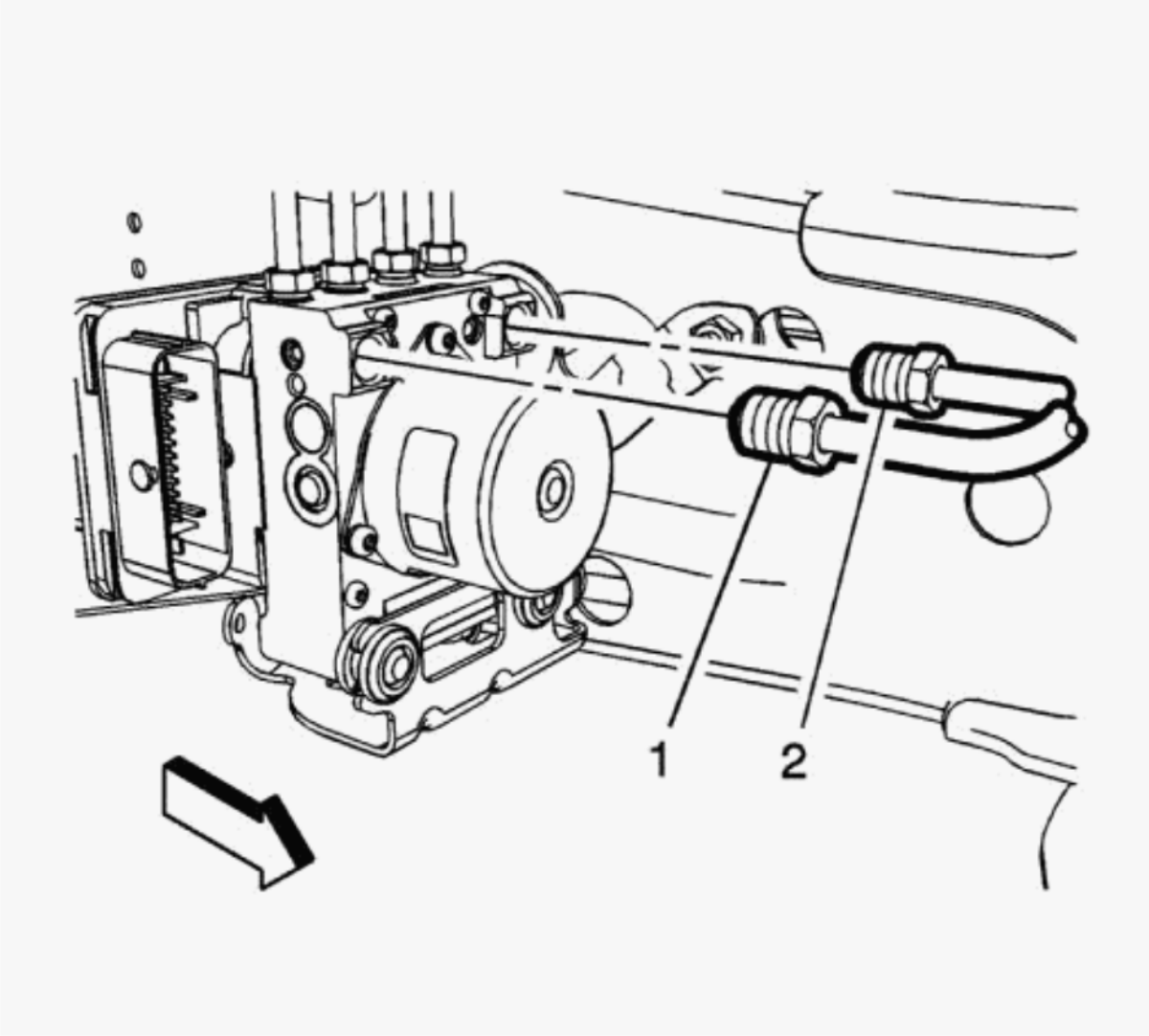


**Fig. 16: Master Cylinder Secondary Inlet Brake Pipe Fitting And Master Cylinder Primary Inlet Brake Pipe Fitting**
**Courtesy of GENERAL MOTORS COMPANY**

9. Connect the master cylinder secondary brake pipe fitting (1) and tighten the fitting to 32 N.m (24 lb ft).
10. Connect the master cylinder primary brake pipe fitting (2) and tighten the fitting to 32 N.m (24 lb ft).
11. Connect the EBCM electrical connector.
12. Bleed the antilock brake system. Refer to **Antilock Brake System Automated Bleed**.

cardiagn.com

13. Program the EBCM. Refer to **Electronic Brake Control Module Programming and Setup** .
14. Calibrate the BPMV pressure sensor. Refer to **Brake Pressure Modulator Valve Pressure Sensor Calibration**.

## BRAKE PRESSURE MODULATOR VALVE PRESSURE SENSOR CALIBRATION

The brake pressure sensor does not require calibration often. Calibration of the brake pressure sensor might be required after certain service procedures are performed. Some of these procedures are as follows:

- Electronic brake control module (EBCM) replacement.
- Brake pressure modulator valve assembly replacement

The Brake Pressure Sensor Calibration procedure can be completed with a scan tool using the following steps:

1. Apply the parking brake, or set the transmission in the P position.
2. Release the brake pedal.
3. Install the scan tool to the data link connector.
4. Ignition ON, engine OFF
5. Select Brake Pressure Sensor Calibration in the EBCM Configuration/Reset Functions list.
6. Follow the scan tool directions to complete the calibration procedure.
7. Clear any DTCs that may be set.

## BRAKE PRESSURE MODULATOR VALVE ADAPTIVE PRESSURE CALIBRATION

The adaptive pressure control learn is not required the learn will automatically perform a maintenance run every 200-300 ignition cycles at vehicle speeds between (40-50 mph). If a customer is concerned about an intermittent humming or buzzing noise perform this adaptive pressure control learn to determine if this is what the customer heard.

The adaptive pressure control learn can be completed with a scan tool using the following steps:

1. Place the vehicle on a flat level surface.
2. Maintain the system voltage by connecting a battery charger.
3. Apply the parking brake, or set the transmission in the Park.
4. Release the brake pedal.
5. Install the scan tool to the data link connector.

cardiagn.com

6. Engine running
7. Turn Off or disable systems that may put a load on the vehicles battery such as; interior lights, exterior lights (including daytime running lights), HVAC, radio, etc.
8. Select Adaptive Pressure Control Learn in the Electronic Brake Control Module Configuration/Reset Functions list.
9. Follow the scan tool directions to complete the calibration learn procedure.
10. Clear any DTCs that may be set.

## BRAKE PRESSURE MODULATOR VALVE BRACKET REPLACEMENT

### Removal Procedure

1. Place the ignition switch in the OFF position.
2. Remove the brake pressure modulator valve (BPMV) assembly. Refer to **Brake Pressure Modulator Valve Replacement**.

cardiagn.com

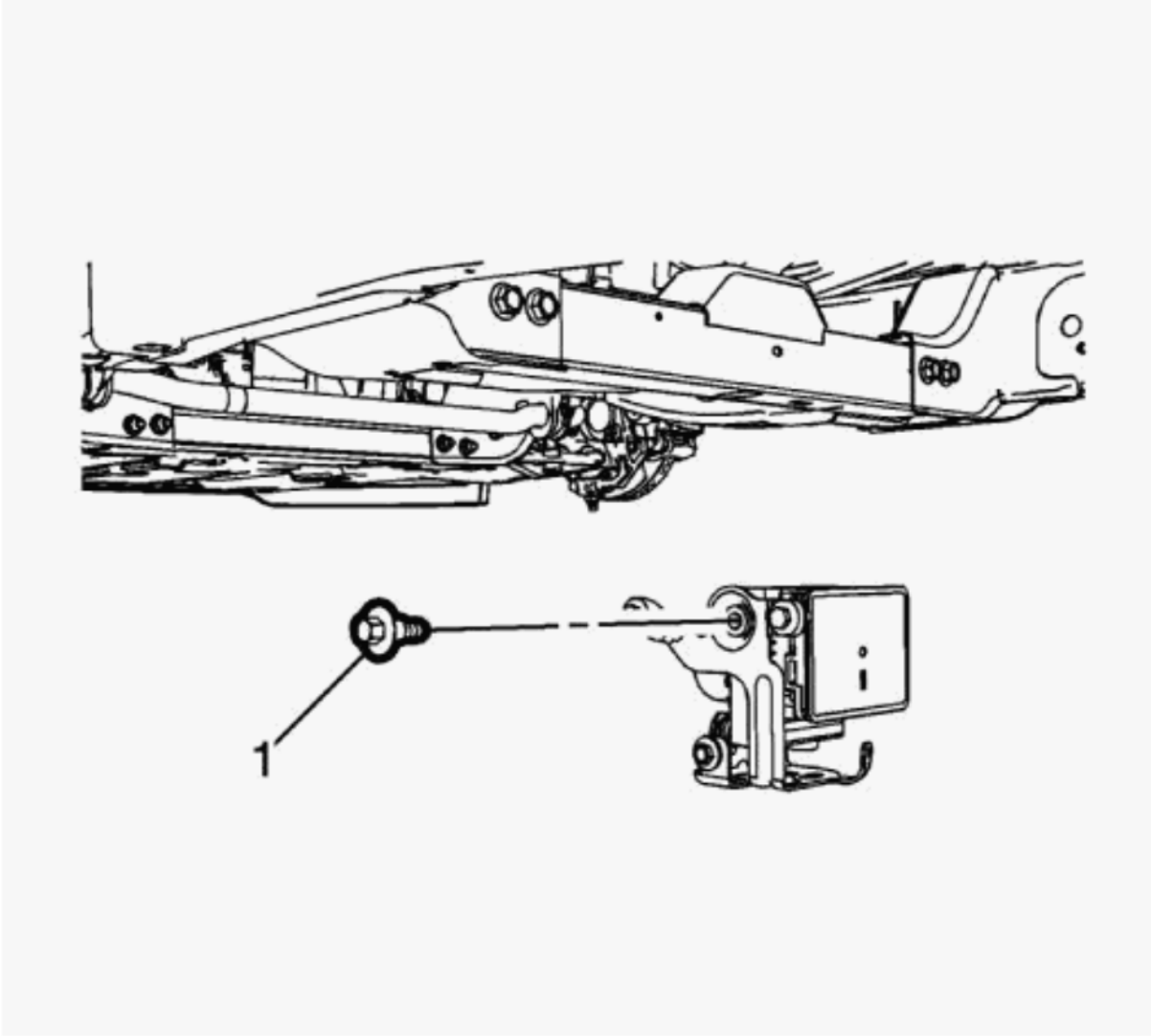


**Fig. 17: BPMV Bolt**
**Courtesy of GENERAL MOTORS COMPANY**

3. Remove the BPMV bolt (1).

cardiagn.com

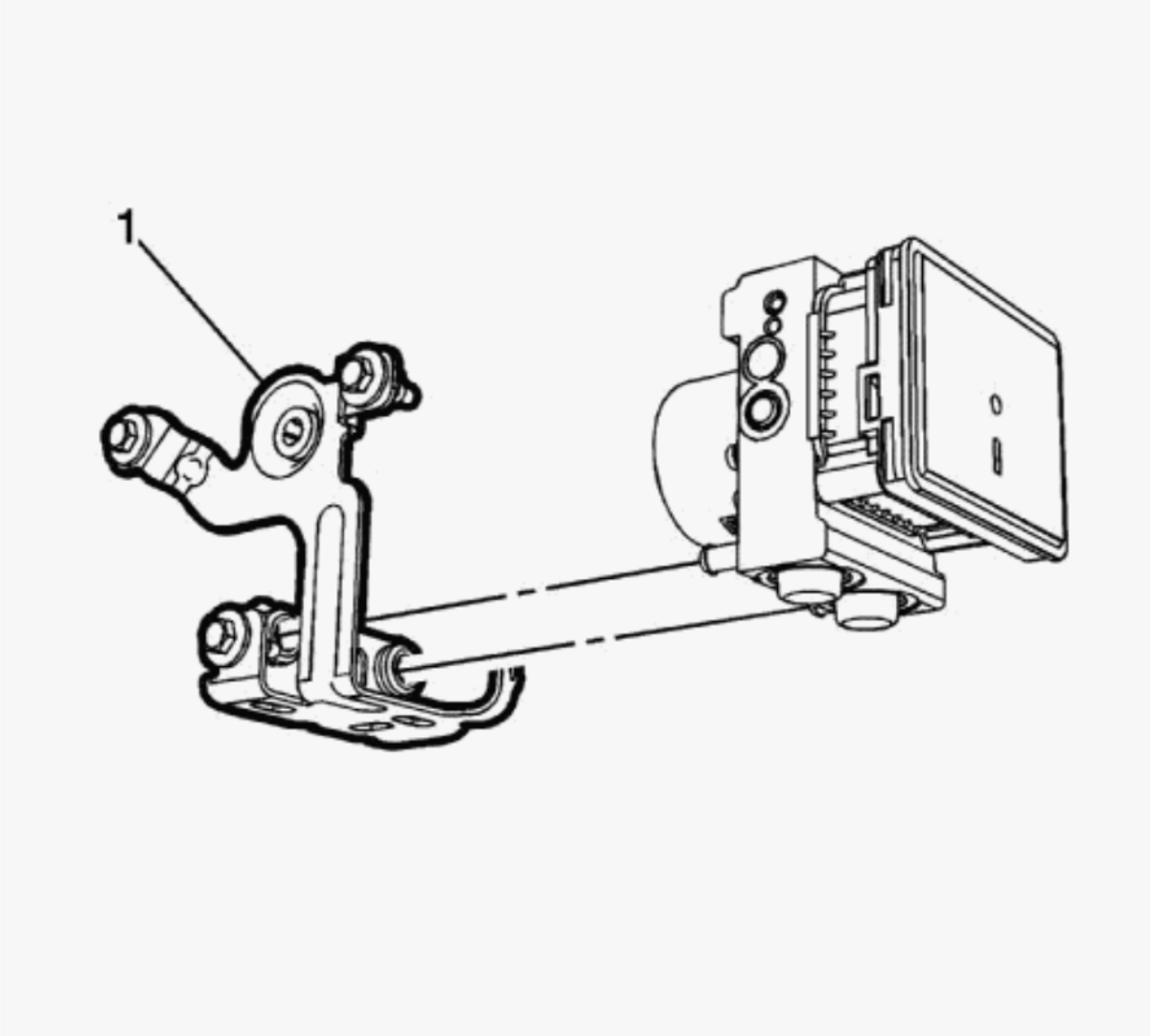


**Fig. 18: BPMV Bracket**
**Courtesy of GENERAL MOTORS COMPANY**

**NOTE:** **Do not pry on the accumulator caps on the underside of the BPMV.**

4. Carefully separate the BPMV assembly from the BPMV bracket insulators and remove the BPMV bracket (1).
5. Inspect the insulators for damage and replace, if necessary.

cardiagn.com

## Installation Procedure

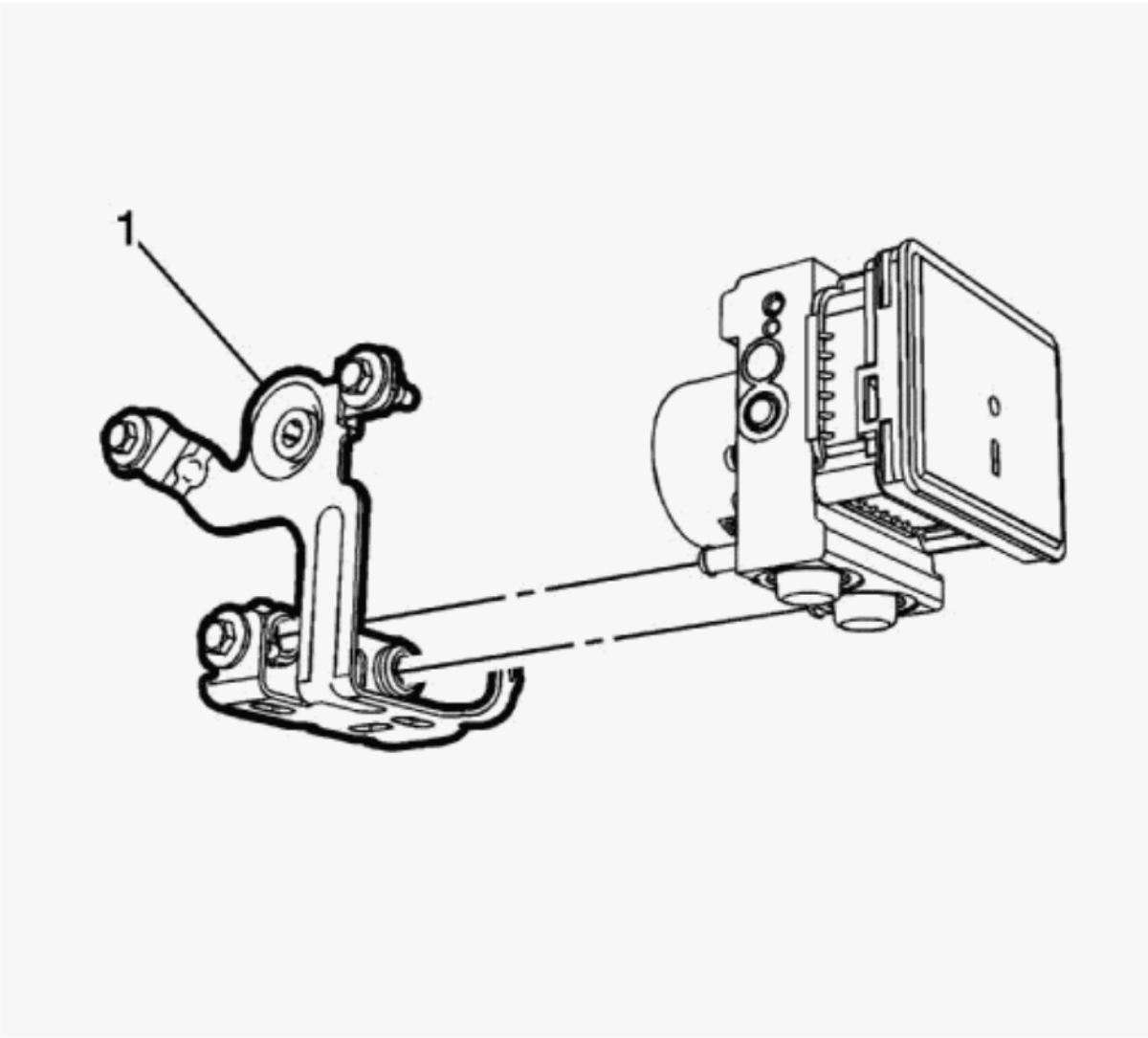


**Fig. 19: BPMV Bracket**
**Courtesy of GENERAL MOTORS COMPANY**

1. Install the BPMV bracket (1).

cardiagn.com

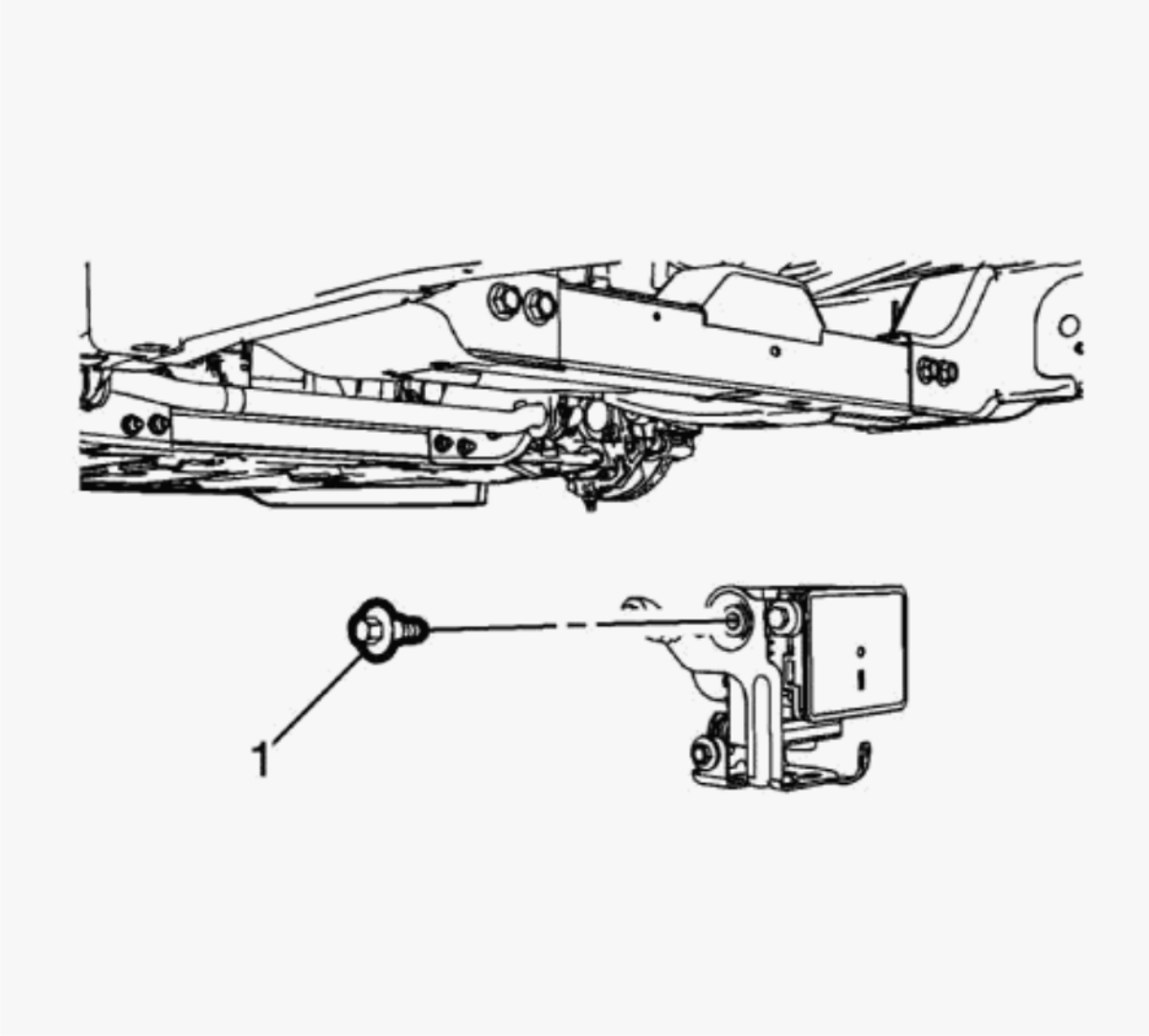


Fig. 20: BPMV Bolt
Courtesy of GENERAL MOTORS COMPANY

**CAUTION: Refer to Fastener Caution .**

2. Install the BPMV bolt (1) and tighten to 10 N.m (89 lb in).
3. Install the BPMV assembly. Refer to **Brake Pressure Modulator Valve Replacement**.

cardiagn.com

## FRONT WHEEL SPEED SENSOR REPLACEMENT (WITHOUT 9C1)

### Removal Procedure

**WARNING: Refer to Brake Dust Warning .**

1. Raise and support the vehicle. Refer to **Lifting and Jacking the Vehicle** .
2. Remove the tire and wheel assembly. Refer to **Tire and Wheel Removal and Installation (6-Lug Wheel)** **Tire and Wheel Removal and Installation (8-Lug Wheel)** .
3. Remove the front brake rotor. Refer to **Front Brake Rotor Replacement (JD9)** **Front Brake Rotor Replacement (J95)** .
4. Disconnect the front wheel speed sensor electrical connector.

cardiagn.com

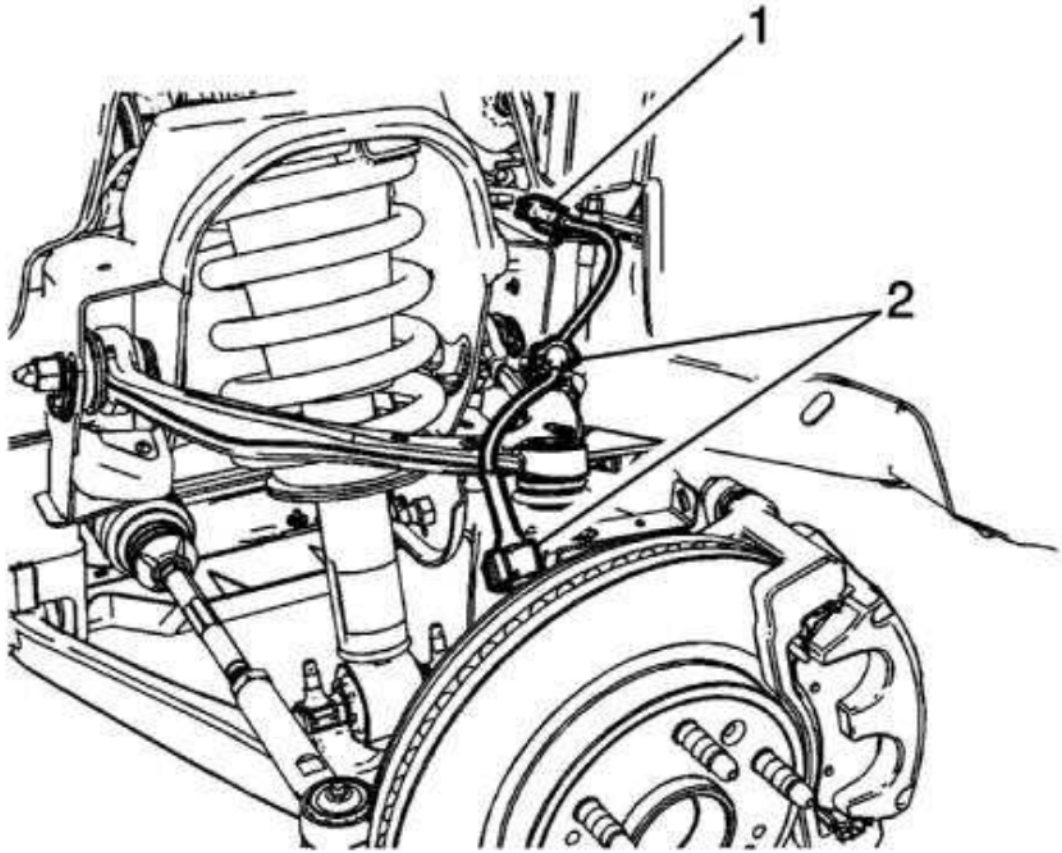


**Fig. 21: Front Wheel Speed Sensor Harness Electrical Connector**
**Courtesy of GENERAL MOTORS COMPANY**

5. Release the front wheel speed sensor harness electrical connector (1) from the brake hose bracket.
6. Release the front wheel speed sensor harness retainers (2).

cardiagn.com

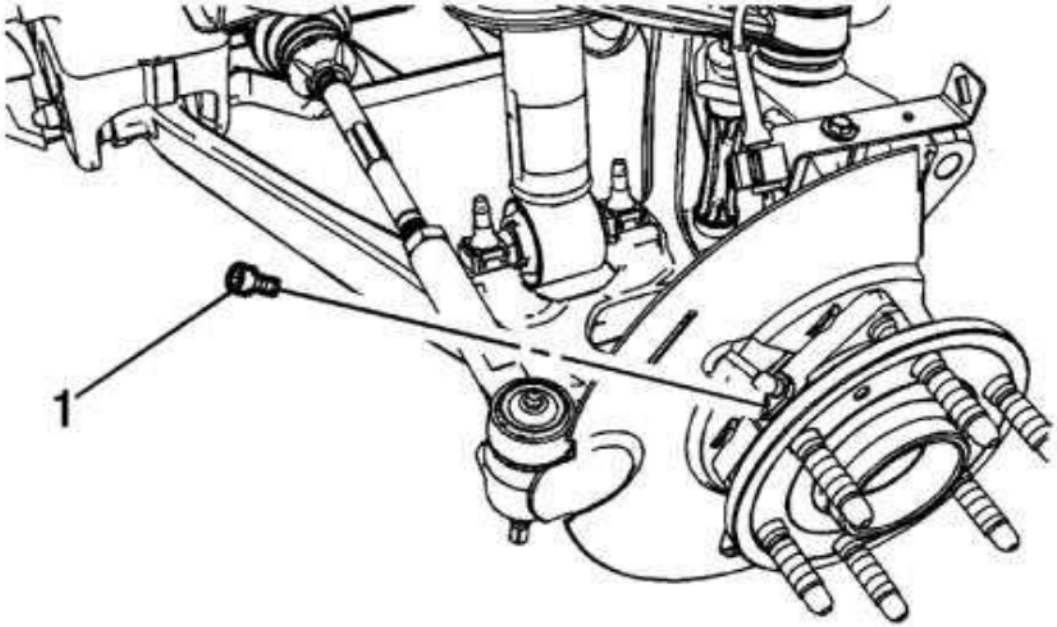


**Fig. 22: Front Wheel Speed Sensor Bolt**
**Courtesy of GENERAL MOTORS COMPANY**

7. Clean the front wheel speed sensor area on the wheel hub and bearing assembly of any accumulated dirt and debris.
8. Remove the front wheel speed sensor bolt (1).
9. Remove the front wheel speed sensor assembly from the wheel hub and bearing assembly by pulling straight out.

**Installation Procedure**

cardiagn.com

1. Install a plug into the wheel speed sensor hole in the wheel hub and bearing assembly.
2. Thoroughly clean the wheel speed sensor mounting pad on the wheel hub and bearing assembly of any accumulated dirt, grease, and debris.
3. Remove the wheel speed sensor hole plug.
4. Apply a light coat of high temperature silicone brake lubricant to the wheel speed sensor mounting pad on the wheel hub and bearing assembly.

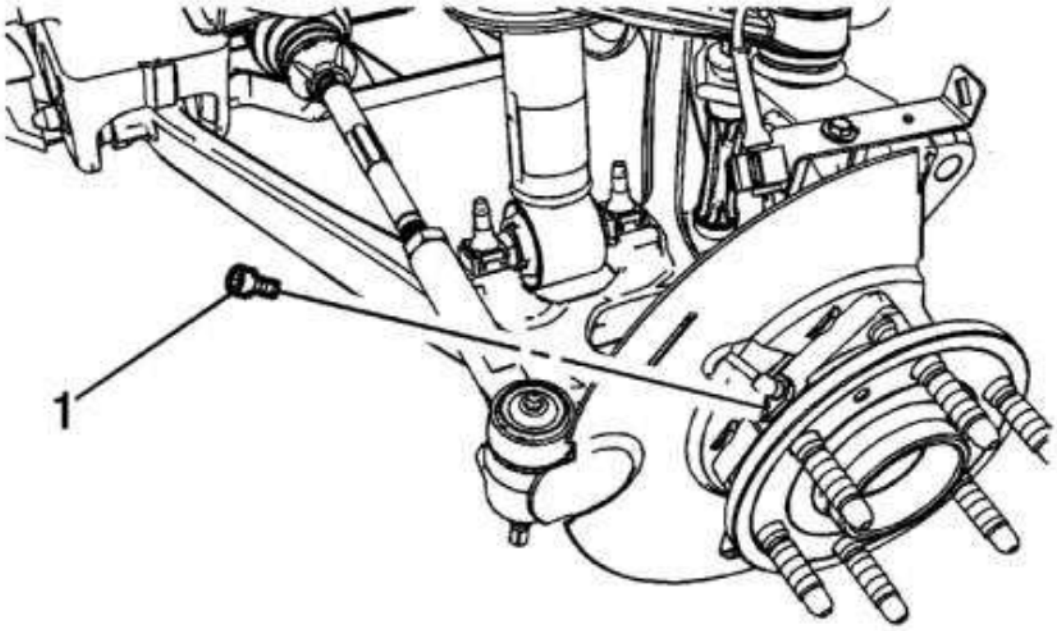


**Fig. 23: Front Wheel Speed Sensor Bolt**
**Courtesy of GENERAL MOTORS COMPANY**

cardiagn.com

5. Install the front wheel speed sensor assembly to the wheel hub and bearing assembly.

**CAUTION:** **Refer to Fastener Caution .**

6. Install the front wheel speed sensor bolt (1) and tighten to 13 N.m (115 lb in).

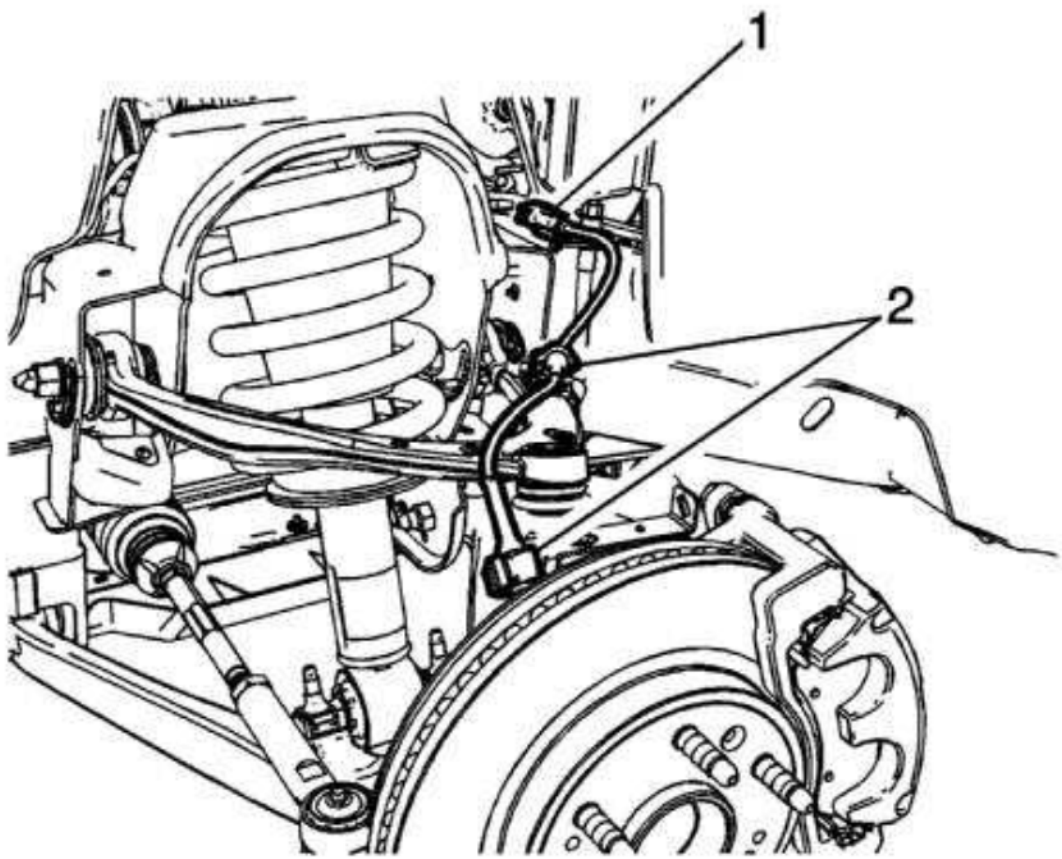


**Fig. 24: Front Wheel Speed Sensor Harness Electrical Connector**
**Courtesy of GENERAL MOTORS COMPANY**

cardiagn.com

7. Secure the front wheel speed sensor harness retainers (2).
8. Secure the front wheel speed sensor harness electrical connector (1) to the brake hose bracket.
9. Connect the front wheel speed sensor electrical connector.
10. Install the front brake rotor. Refer to **Front Brake Rotor Replacement (JD9)** **Front Brake Rotor Replacement (J95)** .
11. Install the tire and wheel assembly. Refer to **Tire and Wheel Removal and Installation (6-Lug Wheel)** **Tire and Wheel Removal and Installation (8-Lug Wheel)** .
12. Perform the **Diagnostic System Check - Vehicle** .

## FRONT WHEEL SPEED SENSOR REPLACEMENT (WITH 9C1)

### Removal Procedure

**WARNING: Refer to Brake Dust Warning**

1. Raise and support the vehicle. Refer to **Lifting and Jacking the Vehicle**
2. Remove the tire and wheel assembly. Refer to **Tire and Wheel Removal and Installation (6-Lug Wheel)** **Tire and Wheel Removal and Installation (8-Lug Wheel)**
3. Remove the front brake rotor. Refer to **Front Brake Rotor Replacement (JD9)** **Front Brake Rotor Replacement (J95)** Â»Remove
4. Disconnect Wheel Speed Sensor Electrical Connector.

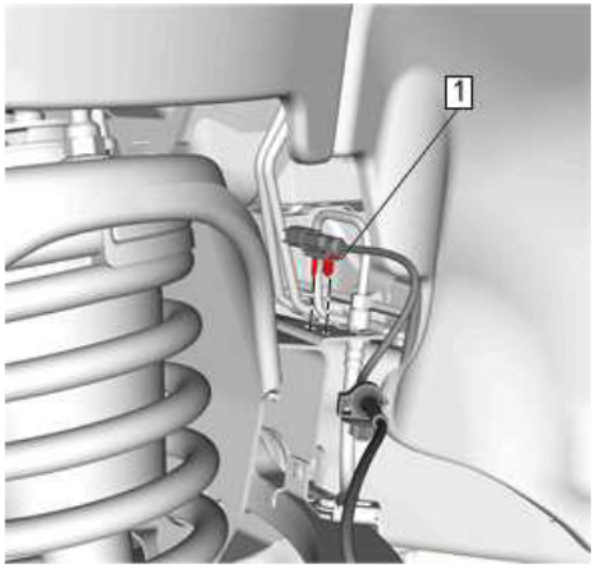


cardiagn.com

**Fig. 25: Wheel Speed Sensor Electrical Connector Clip**
**Courtesy of GENERAL MOTORS COMPANY**

5. Release Wheel Speed Sensor Electrical Connector Clip (1)

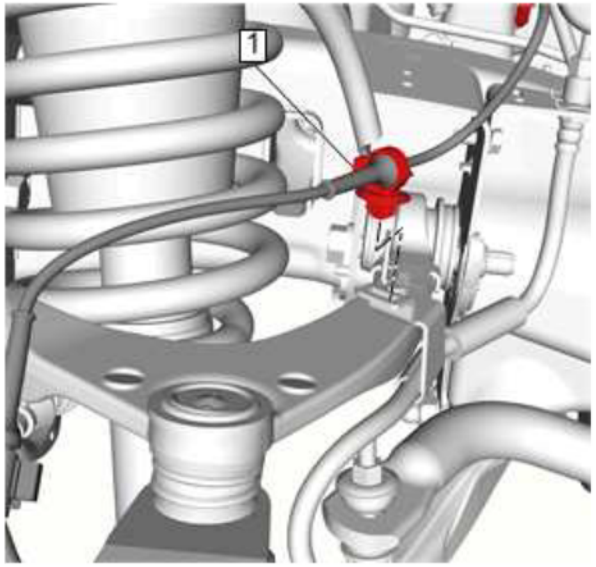


**Fig. 26: Wheel Speed Sensor Harness Clip**
**Courtesy of GENERAL MOTORS COMPANY**

6. Release Wheel Speed Sensor Harness Clip (1) @ Brake Hose

cardiagn.com

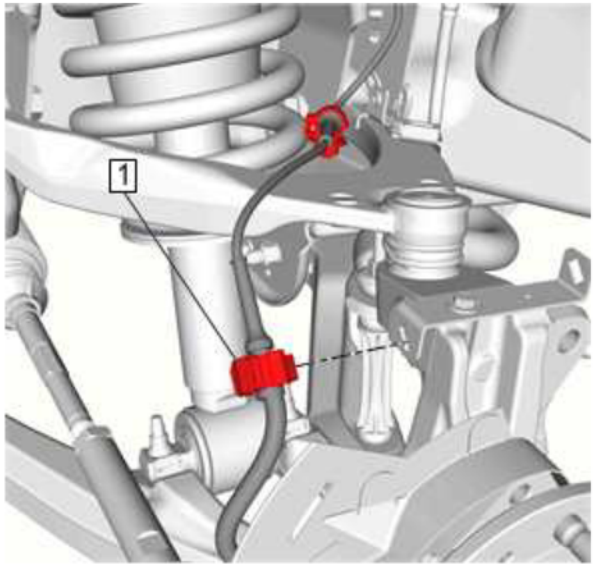


**Fig. 27: Wheel Speed Sensor Harness Clip**
**Courtesy of GENERAL MOTORS COMPANY**

7. Release Wheel Speed Sensor Harness Clip (1) @ Steering Knuckle
8. Remove the front wheel hub and bearing bolts. Refer to **Front Wheel Hub, Bearing, and Seal Replacement (Light Duty)** **Front Wheel Hub, Bearing, and Seal Replacement (Heavy Duty)**
9. Remove the front wheel hub and bearing assembly from the steering knuckle while carefully feeding the wheel speed sensor harness through the brake shield.

cardiagn.com

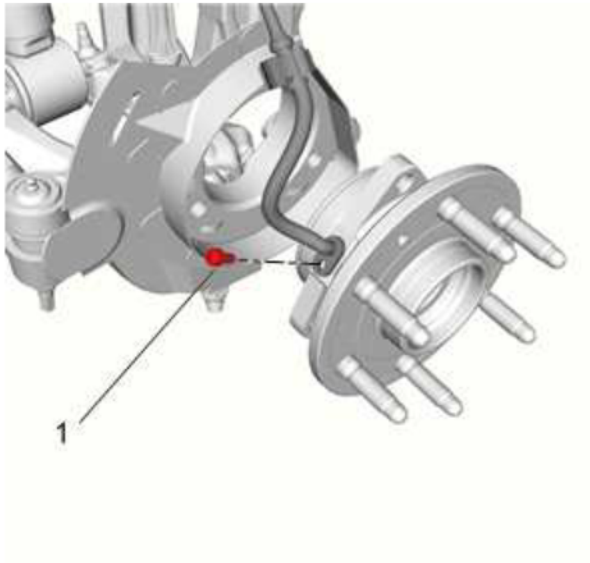


**Fig. 28: Wheel Speed Sensor Bolt**
**Courtesy of GENERAL MOTORS COMPANY**

10. Remove Wheel Speed Sensor Bolt (1)

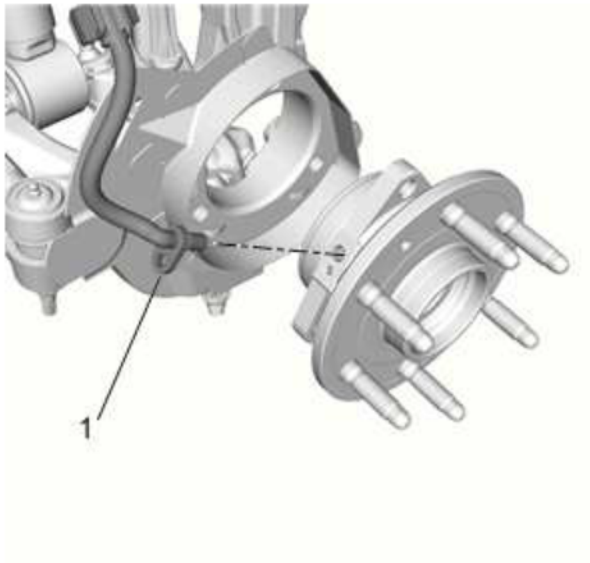


**Fig. 29: Wheel Speed Sensor**

cardiagn.com

**Courtesy of GENERAL MOTORS COMPANY**

11. Remove Wheel Speed Sensor (1)

## Installation Procedure

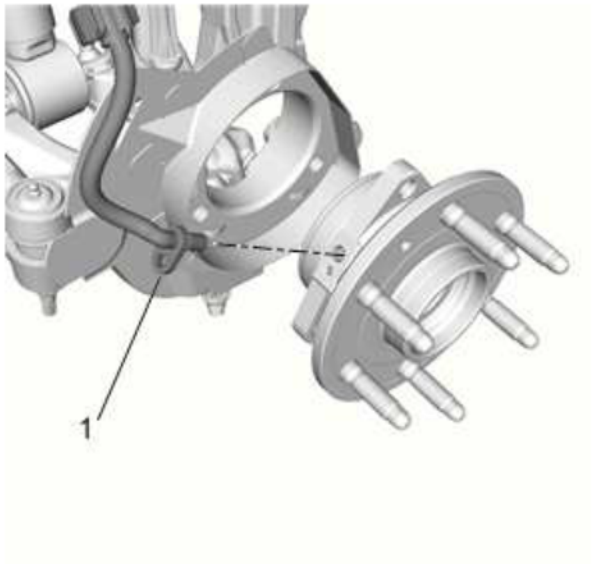


**Fig. 30: Wheel Speed Sensor**
**Courtesy of GENERAL MOTORS COMPANY**

1. Install Wheel Speed Sensor (1)

cardiagn.com

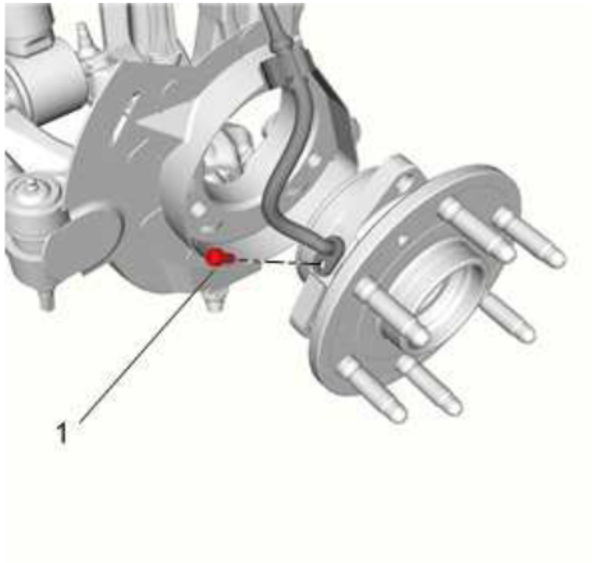


**Fig. 31: Wheel Speed Sensor Bolt**
**Courtesy of GENERAL MOTORS COMPANY**

**CAUTION: Refer to Fastener Caution**

2. Install and tighten Wheel Speed Sensor Bolt (1) 13 N.m (115 lb in)
3. Install the front wheel hub and bearing assembly to the steering knuckle while carefully feeding the wheel speed sensor harness through the brake shield.
4. Install the front wheel hub and bearing bolts. Refer to **Front Wheel Hub, Bearing, and Seal Replacement (Light Duty)** **Front Wheel Hub, Bearing, and Seal Replacement (Heavy Duty)**

cardiagn.com

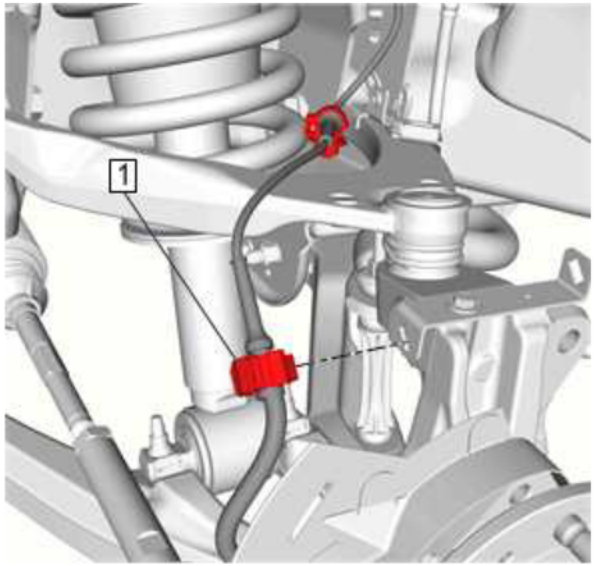


**Fig. 32: Wheel Speed Sensor Harness Clip**
**Courtesy of GENERAL MOTORS COMPANY**

5. Secure Wheel Speed Sensor Harness Clip (1) @ Steering Knuckle

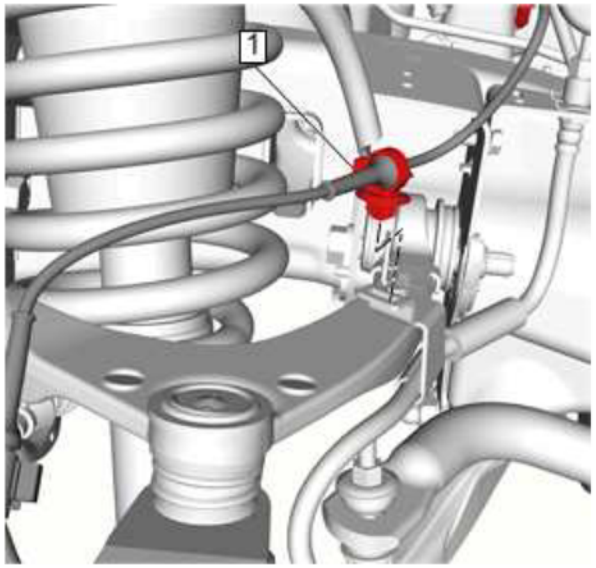


**Fig. 33: Wheel Speed Sensor Harness Clip**

cardiagn.com

**Courtesy of GENERAL MOTORS COMPANY**

6. Secure Wheel Speed Sensor Harness Clip (1) @ Brake Hose

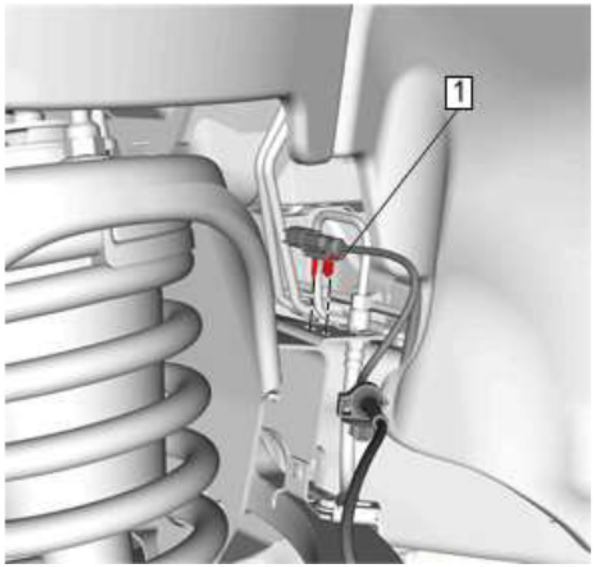


**Fig. 34: Wheel Speed Sensor Electrical Connector Clip**
**Courtesy of GENERAL MOTORS COMPANY**

7. Secure Wheel Speed Sensor Electrical Connector Clip (1)
8. Connect Wheel Speed Sensor Electrical Connector
9. Install Front Brake Rotor. Refer to **Front Brake Rotor Replacement (JD9)** **Front Brake Rotor Replacement (J95)**
10. Install the tire and wheel assembly. Refer to **Tire and Wheel Removal and Installation (6-Lug Wheel)** **Tire and Wheel Removal and Installation (8-Lug Wheel)**
11. Perform the Diagnostic Repair Verification after completing the repair. Refer to **Diagnostic Repair Verification**

## REAR WHEEL SPEED SENSOR REPLACEMENT

### Removal Procedure

**WARNING: Refer to Brake Dust Warning .**

cardiagn.com

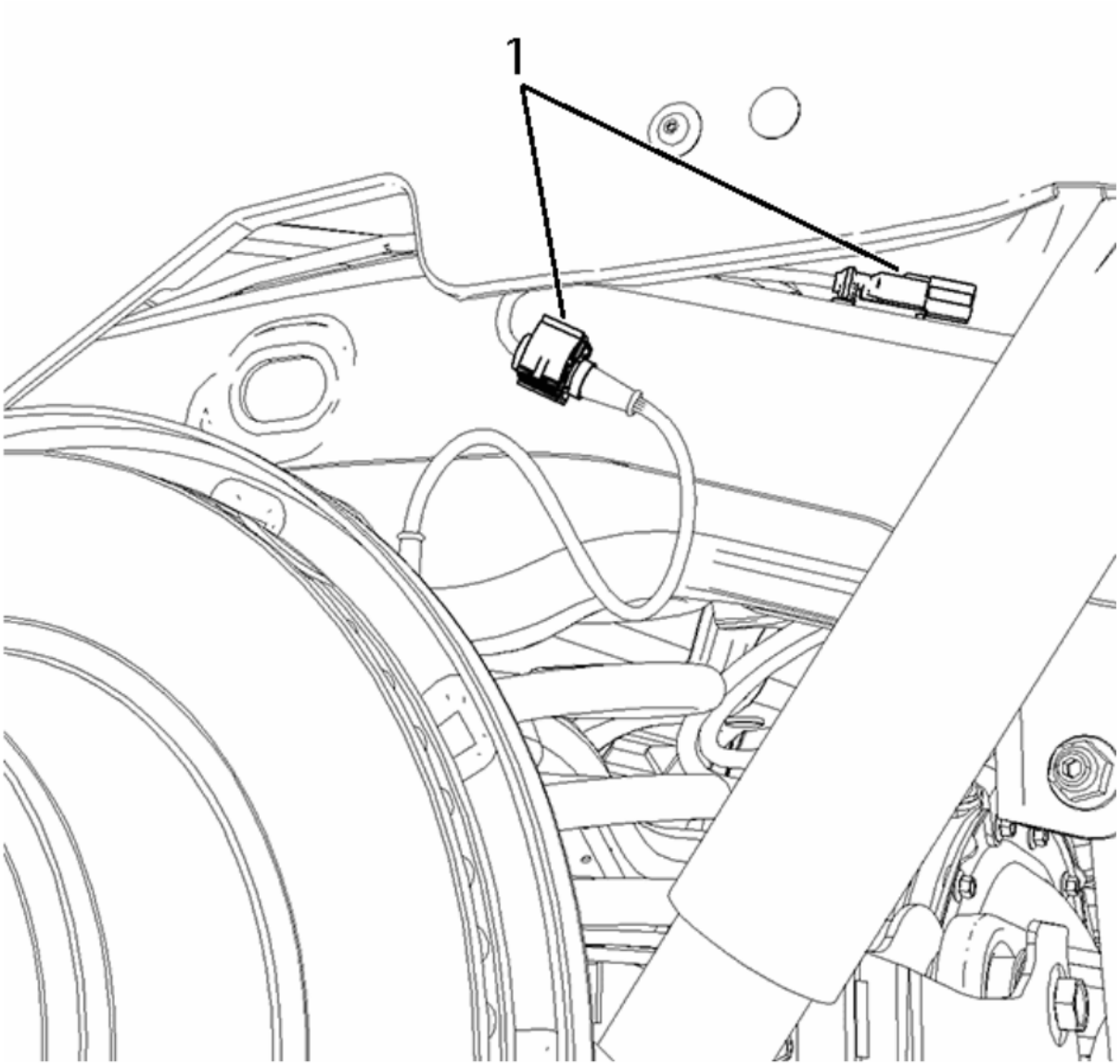


**Fig. 35: Rear Wheel Speed Sensor Harness Retainer**
**Courtesy of GENERAL MOTORS COMPANY**

1. Raise and support the vehicle. Refer to **Lifting and Jacking the Vehicle** .
2. Remove the tire and wheel assembly. Refer to **Tire and Wheel Removal and Installation (6-Lug Wheel)** **Tire and Wheel Removal and Installation (8-Lug Wheel)** .

cardiagn.com

3. Disconnect the rear wheel speed sensor electrical connector and release the retainers (1) from the frame rail.

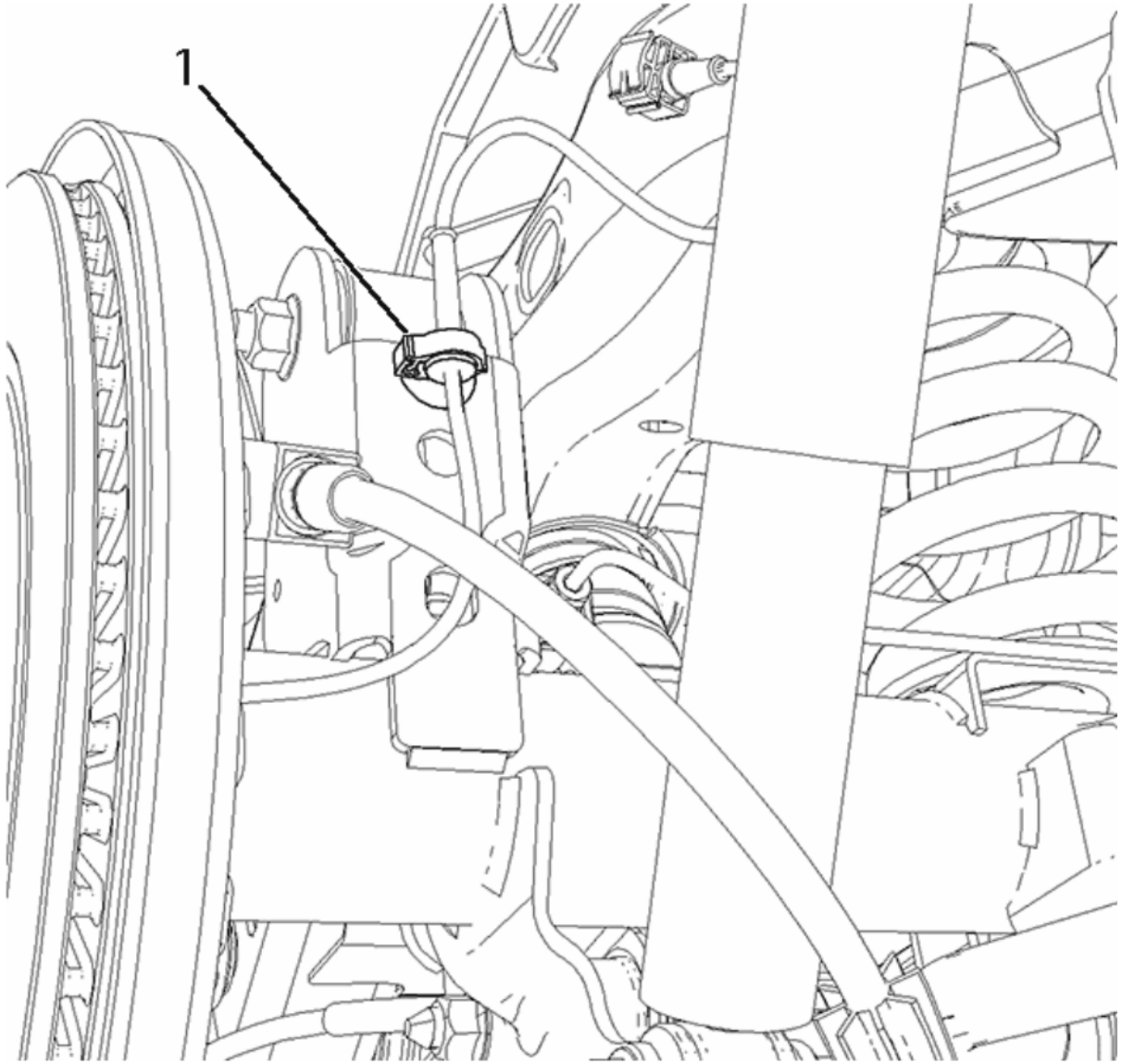


**Fig. 36: Rear Wheel Speed Sensor Harness Retainer**
**Courtesy of GENERAL MOTORS COMPANY**

4. Release the rear wheel speed sensor harness retainer (1) from the rear axle.

cardiagn.com

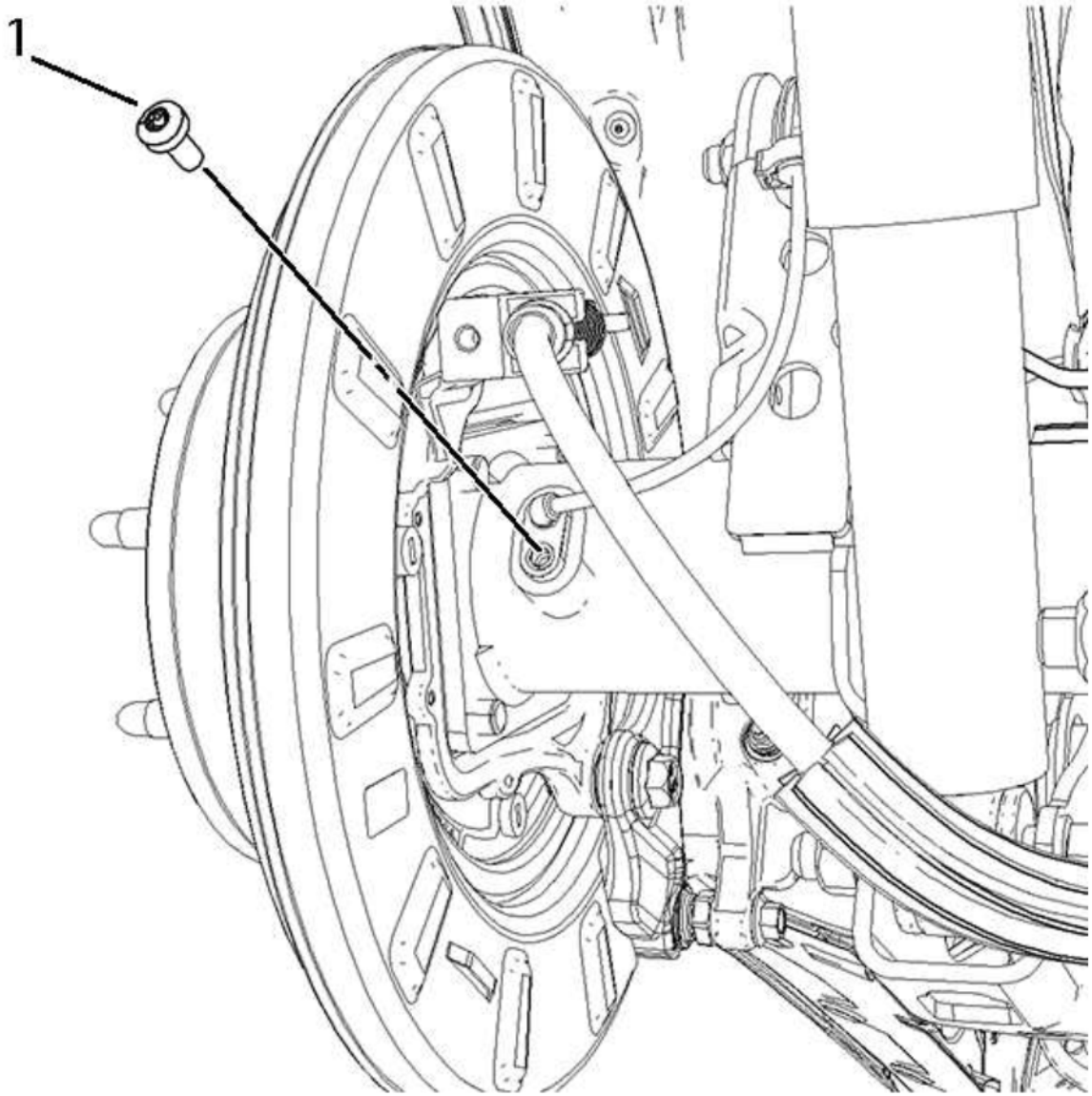


**Fig. 37: Rear Wheel Speed Sensor Bolt**
**Courtesy of GENERAL MOTORS COMPANY**

5. Clean the rear wheel speed sensor area on the rear axle of any accumulated dirt and debris.
6. Remove the rear wheel speed sensor bolt (1).
7. Remove the rear wheel speed sensor assembly from the rear axle by pulling straight out.

cardiagn.com

### Installation Procedure

1. Lightly lubricate the rear wheel speed sensor O-ring with rear axle lubricant. Refer to **Adhesives, Fluids, Lubricants, and Sealers** .

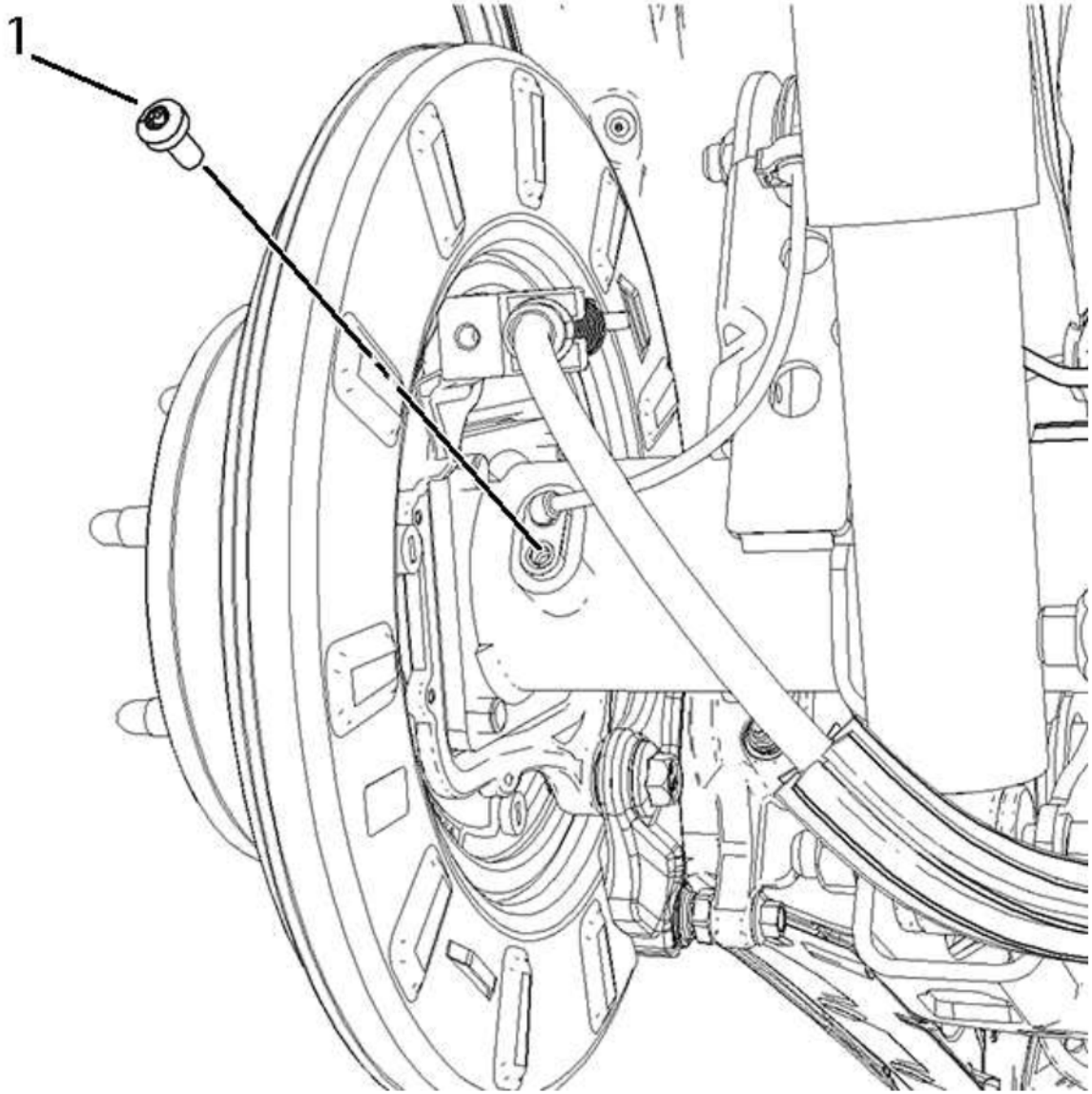


**Fig. 38: Rear Wheel Speed Sensor Bolt**
**Courtesy of GENERAL MOTORS COMPANY**

cardiagn.com

2. Install the rear wheel speed sensor assembly to the rear axle.

**CAUTION:** **Refer to Fastener Caution .**

3. Install the rear wheel speed sensor bolt (1) and tighten to 13 N.m (115 lb in).

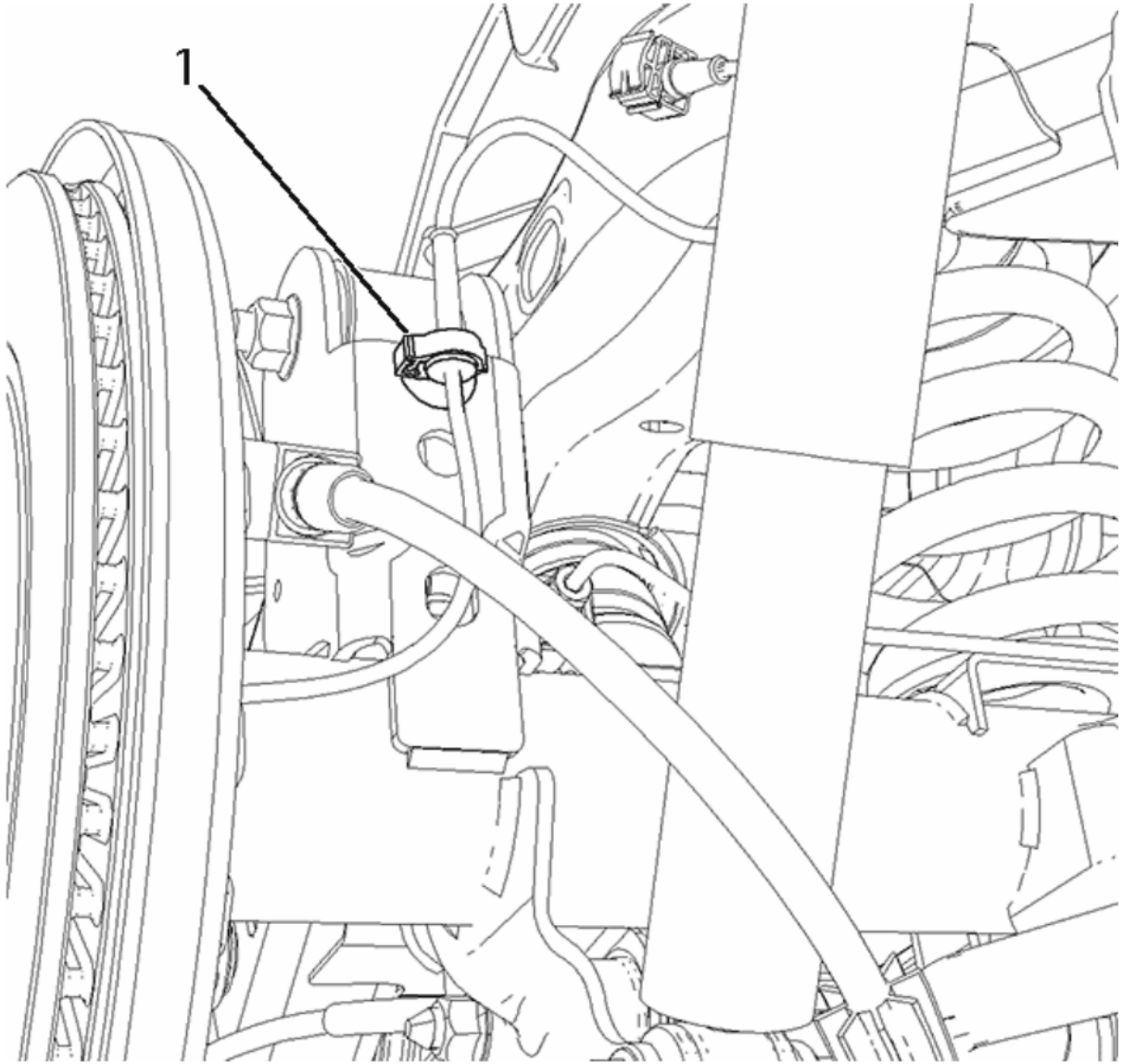


cardiagn.com

**Fig. 39: Rear Wheel Speed Sensor Harness Retainer**
**Courtesy of GENERAL MOTORS COMPANY**

4. Install the rear wheel speed sensor harness retainer (1) to the rear axle.

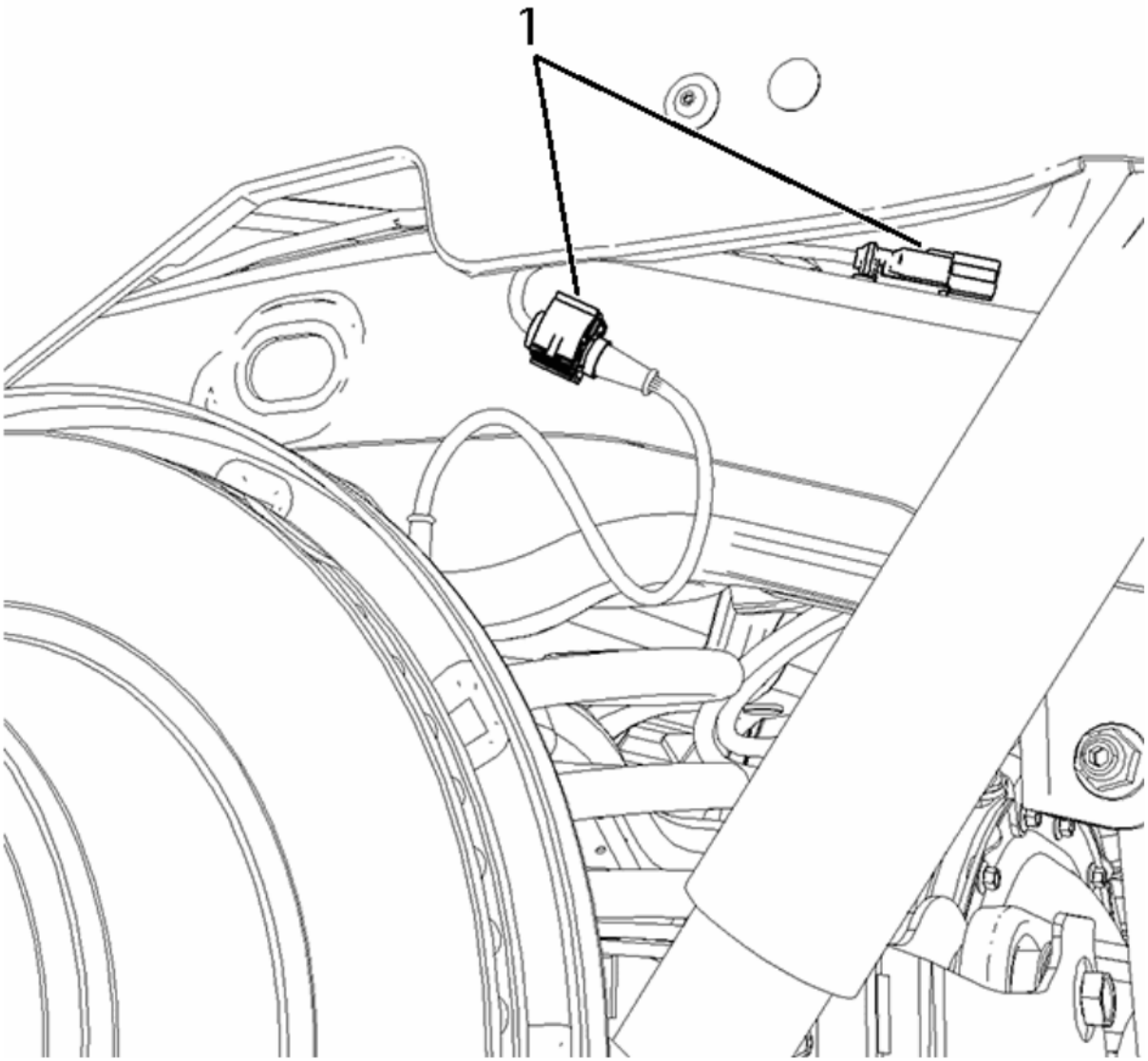


**Fig. 40: Rear Wheel Speed Sensor Harness Retainer**
**Courtesy of GENERAL MOTORS COMPANY**

cardiagn.com

5. Connect the rear wheel speed sensor electrical connector and install the retainers (1) to the frame rail.
6. Install the tire and wheel assembly. Refer to **Tire and Wheel Removal and Installation (6-Lug Wheel)** **Tire and Wheel Removal and Installation (8-Lug Wheel)** .
7. Perform the **Diagnostic System Check - Vehicle** .

## REAR WHEEL SPEED SENSOR RING REPLACEMENT

### Special Tools

- **J-8092** Driver Handle
- **J-2619-01** Slide Hammer
- **J-45857** Tone Wheel and/or Bearing Remover
- **J-45860** Tone Ring Installer

### Removal Procedure

1. Raise and support the vehicle. Refer to **Lifting and Jacking the Vehicle** .
2. Remove the tire and wheel assembly. Refer to **Tire and Wheel Removal and Installation (6-Lug Wheel)** **Tire and Wheel Removal and Installation (8-Lug Wheel)** .
3. Remove the rear wheel speed sensor. Refer to **Rear Wheel Speed Sensor Replacement**.
4. Remove the rear axle shaft bearing. Refer to **Rear Axle Shaft Bearing Replacement** .

cardiagn.com

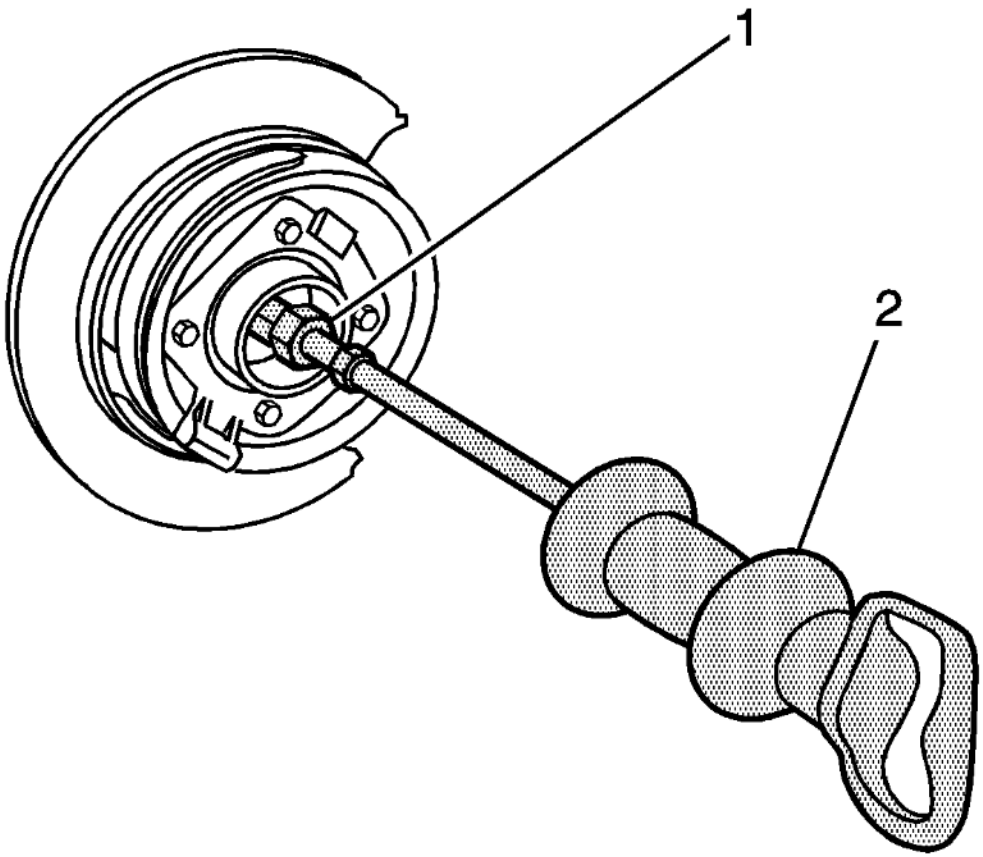


**Fig. 41: Removing Wheel Speed Sensor Ring From Axle Housing**
**Courtesy of GENERAL MOTORS COMPANY**

5. Remove the rear wheel speed sensor ring from the axle housing using the **J-45857** tone wheel and/or bearing remover (1) and the **J-2619-01** slide hammer (2).

## Installation Procedure

cardiagn.com

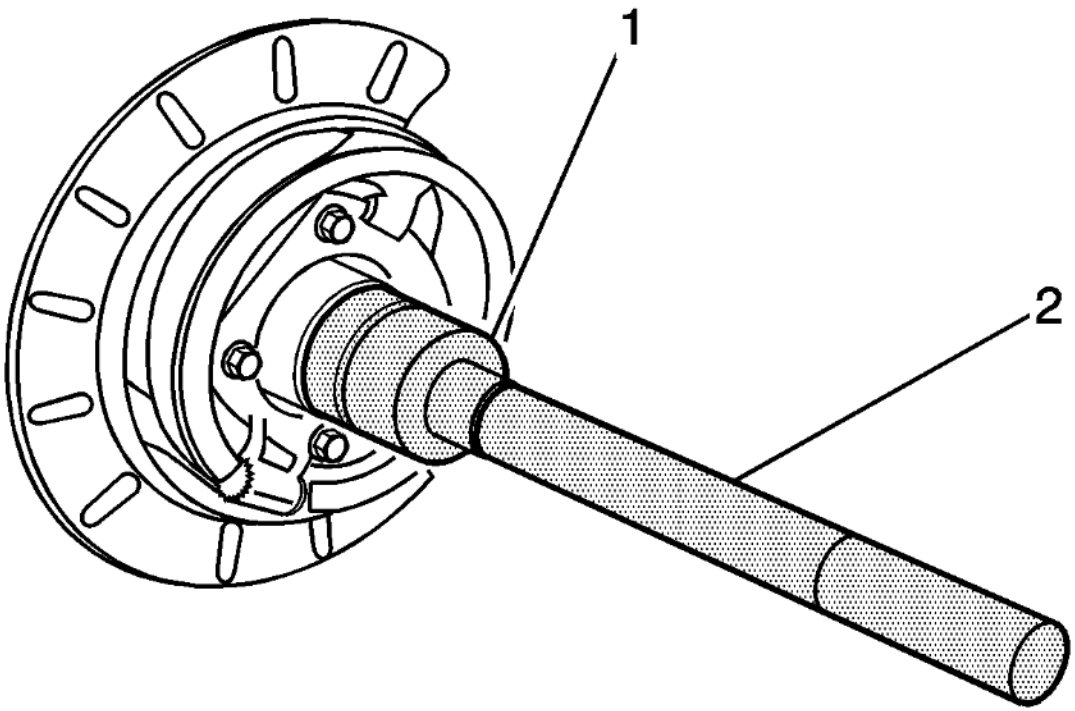


**Fig. 42: Installing Wheel Speed Sensor Ring**
**Courtesy of GENERAL MOTORS COMPANY**

1. Install the rear wheel speed sensor ring using the **J-45860** tone ring installer (1) and the **J-8092** driver handle (2).
2. Drive the wheel speed sensor ring into the axle housing until the tool bottoms against the tube.
3. Install the rear axle shaft bearing. Refer to **Rear Axle Shaft Bearing Replacement** .
4. Install the rear wheel speed sensor. Refer to **Rear Wheel Speed Sensor Replacement**.

cardiagn.com

5. Install the tire and wheel assembly. Refer to **Tire and Wheel Removal and Installation (6-Lug Wheel)** **Tire and Wheel Removal and Installation (8-Lug Wheel)** .
6. Lower the vehicle.

## WHEEL SPEED SENSOR RELUCTOR RING REPLACEMENT

### Special Tools

- **J-2619-01** Slide Hammer W 1/2 x 13 Adapter
- **J-8092** Universal Driver Handle 3/4 x 10 inch
- **J-21128** Axle Pinion Oil Seal Installer
- **J-29713** Oil Seal Installer
- **J-23690** Axle Bearing Installer
- **J-44685** Rear Axle Seal and Bearing Remover
- **J-29712** Axle Bearing Remover
- **J-45857** VSES Wheel Bearing Remover
- **J-45860** Tone Ring Installer

### Removal Procedure

1. Raise and support the vehicle. Refer to **Lifting and Jacking the Vehicle** .
2. Remove the tire and wheel assembly. Refer to **Tire and Wheel Removal and Installation (6-Lug Wheel)** **Tire and Wheel Removal and Installation (8-Lug Wheel)** .
3. Remove the rear axle housing cover. Refer to **Rear Axle Housing Cover Replacement (8.6/9.5/9.7 Inch Axle)** **Rear Axle Housing Cover Replacement (10.5 Inch Axle)** .
4. Remove the axle shaft. Refer to **Rear Axle Shaft Replacement** .

cardiagn.com

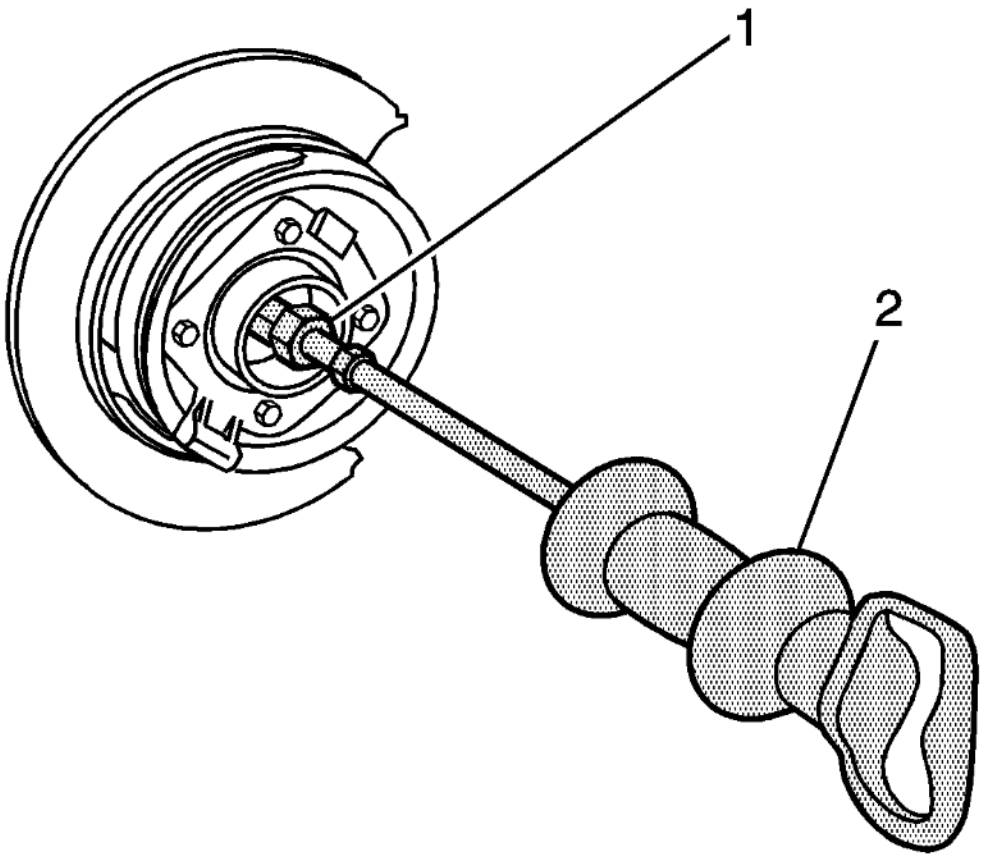


**Fig. 43: Removing Wheel Speed Sensor Ring From Axle Housing**
**Courtesy of GENERAL MOTORS COMPANY**

5. Using the **J-45857** remover (1) and the **J-2619-01** hammer (2), remove axle shaft seal and bearing first, then follow with removal of reluctor/wheel speed sensor ring.

## Installation Procedure

cardiagn.com

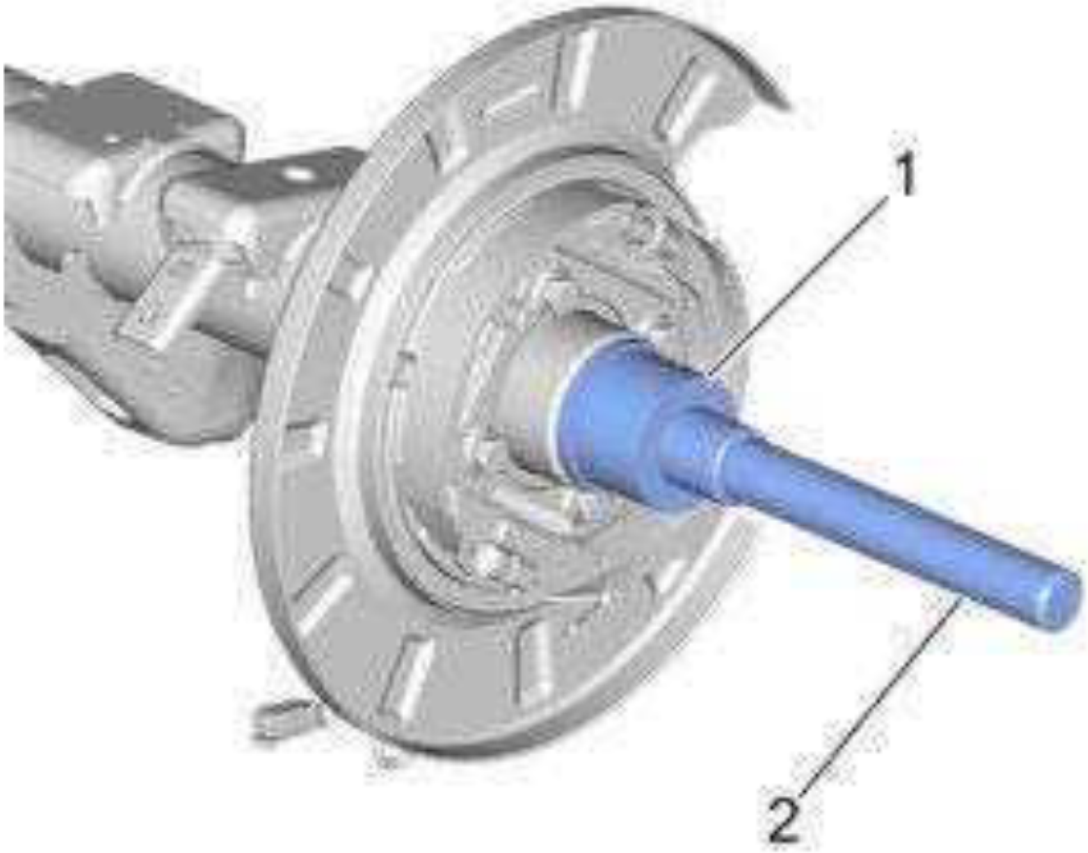


**Fig. 44: Installing Rear Wheel Speed Sensor/Reluctor Ring**
**Courtesy of GENERAL MOTORS COMPANY**

1. Install the rear wheel speed sensor/reluctor ring, using **J-45860** ring installer (1) and the **J-8092** driver (2).

cardiagn.com

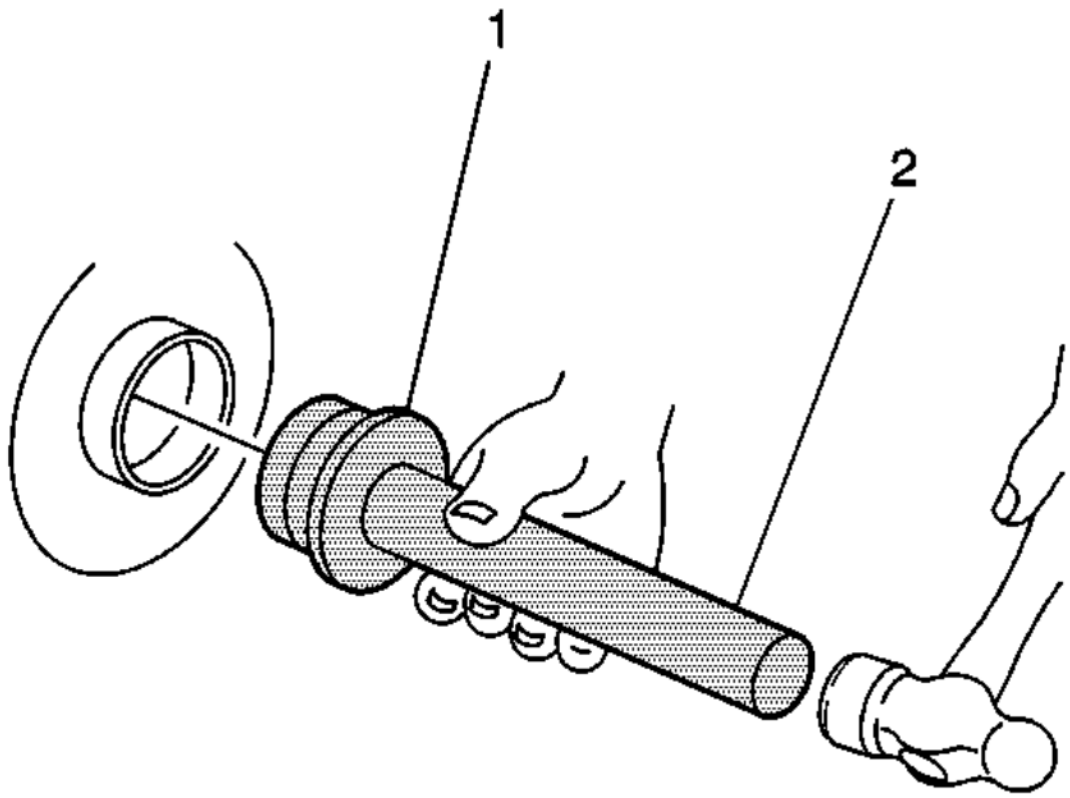


Fig. 45: Axle Shaft Bearing And Installation Tools
**Courtesy of GENERAL MOTORS COMPANY**

**NOTE:** **Ensure that the axle shaft bearing is fully seated in the rear axle shaft housing.**

2. Using the **J-23690** installer (1) and the **J-8092** driver (2), install the axle shaft bearing.

cardiagn.com

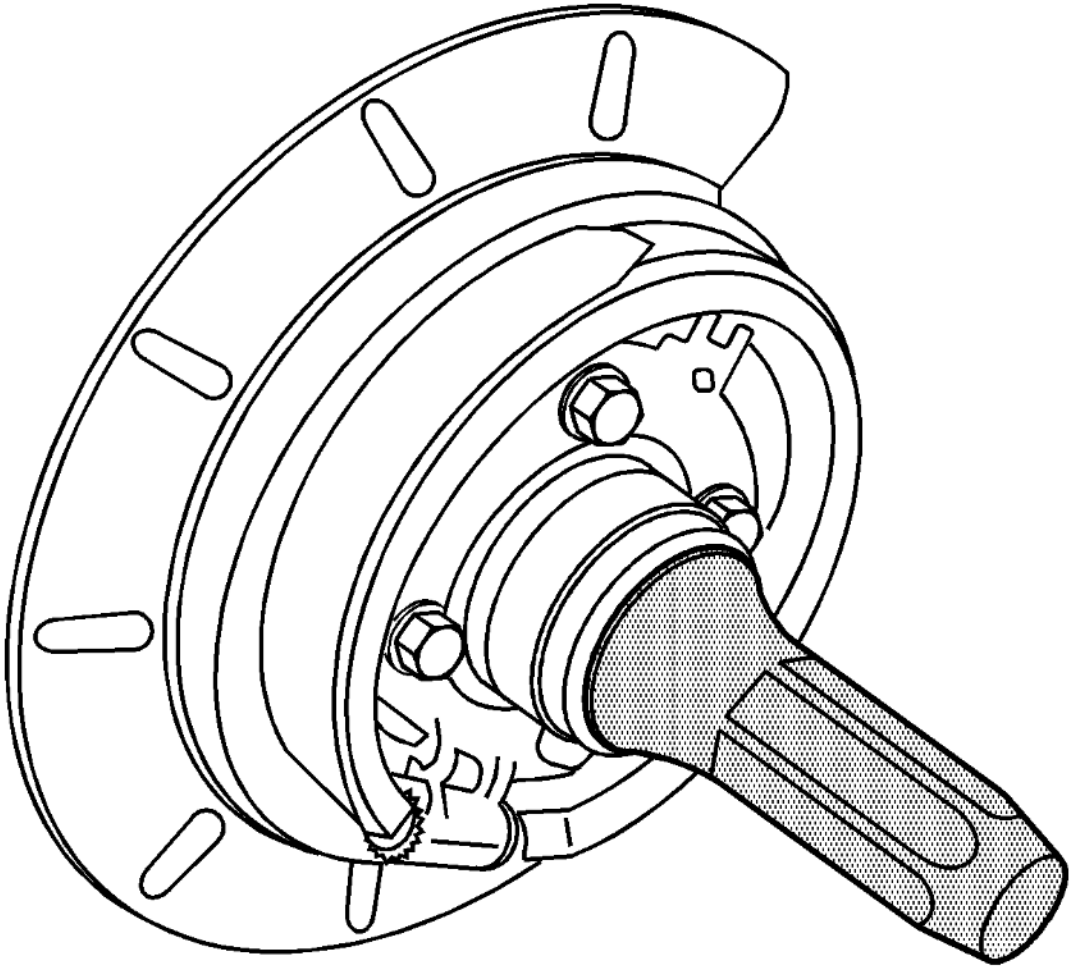

**Fig. 46: Installing Axle Shaft Seal**
**Courtesy of GENERAL MOTORS COMPANY**

3. Using the **J-21128** installer, 8.6 and 9.5/9.76 inch axle, or the **J-29173** installer, 9.5 inch axle, install the axle shaft seal.
4. Drive the tool into the bore until the axle shaft seal bottoms flush with the tube.
5. Install the rear axle shaft. Refer to **Rear Axle Shaft Replacement** .
6. Install the rear axle housing cover. Refer to **Rear Axle Housing Cover Replacement (8.6/9.5/9.7 Inch Axle)** **Rear Axle Housing Cover**

cardiagn.com

Replacement (10.5 Inch Axle) .

7. Install the tire and wheel assembly. Refer to Tire and Wheel Removal and Installation (6-Lug Wheel) Tire and Wheel Removal and Installation (8-Lug Wheel) .
8. Fill the rear axle. Refer to Differential Oil Replacement (8.6 Inch Axle) Differential Oil Replacement (9.5/9.76 Inch Axle) Differential Oil Replacement (10.5 Inch Axle) .
9. Remove the support and lower the vehicle.

## VEHICLE STABILITY CONTROL SYSTEM SWITCH REPLACEMENT (CHEVROLET / GMC)

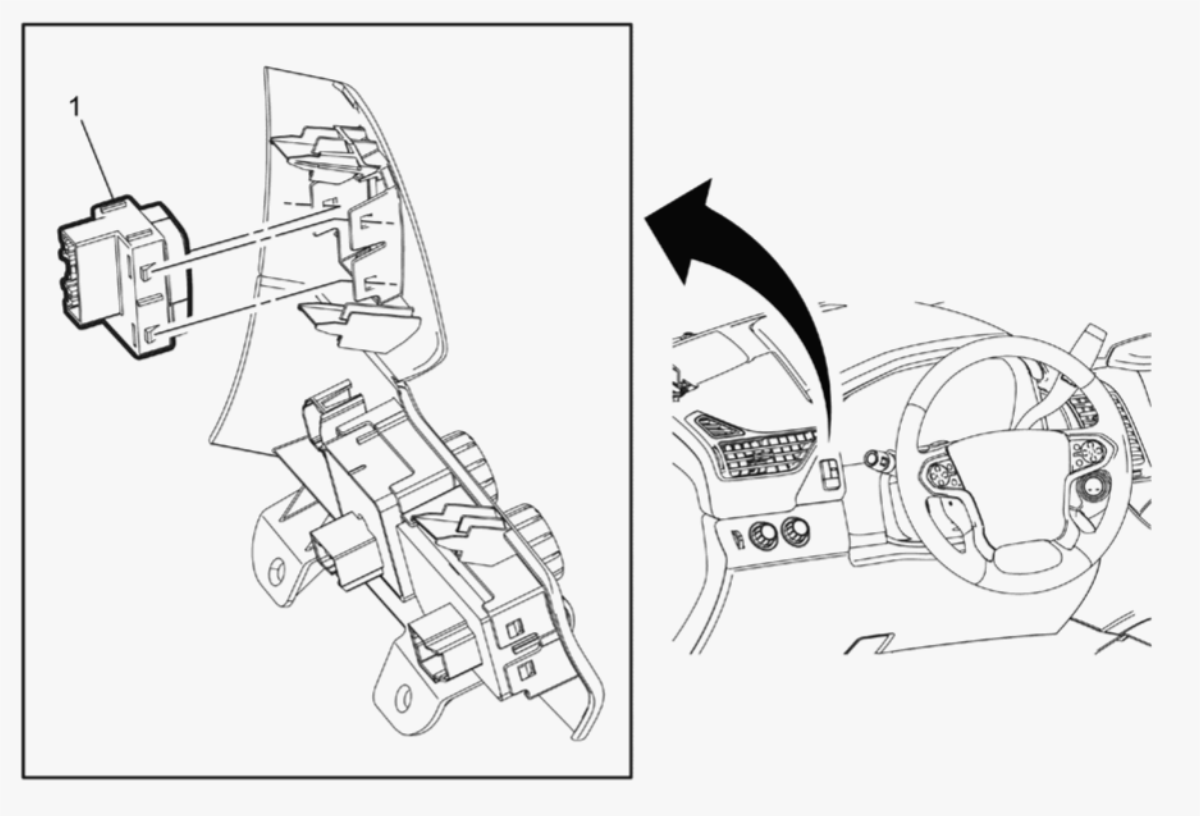


Fig. 47: Vehicle Stability Control System Switch (Chevrolet, GMC)
Courtesy of GENERAL MOTORS COMPANY

| Callout | Component Name |
|---|---|
| Preliminary Procedure | |

cardiagn.com

| Callout | Component Name |
|---|---|
| Remove the instrument panel accessory bezel. Refer to **Instrument Panel Accessory Bezel Replacement (Chevrolet / GMC)** . | |
| 1 | Vehicle Stability Control System Switch<br>**Procedure**<br>Using the appropriate tool, gently depress the tabs securing the switch to the bezel. |

## VEHICLE STABILITY CONTROL SYSTEM SWITCH REPLACEMENT (CADILLAC)

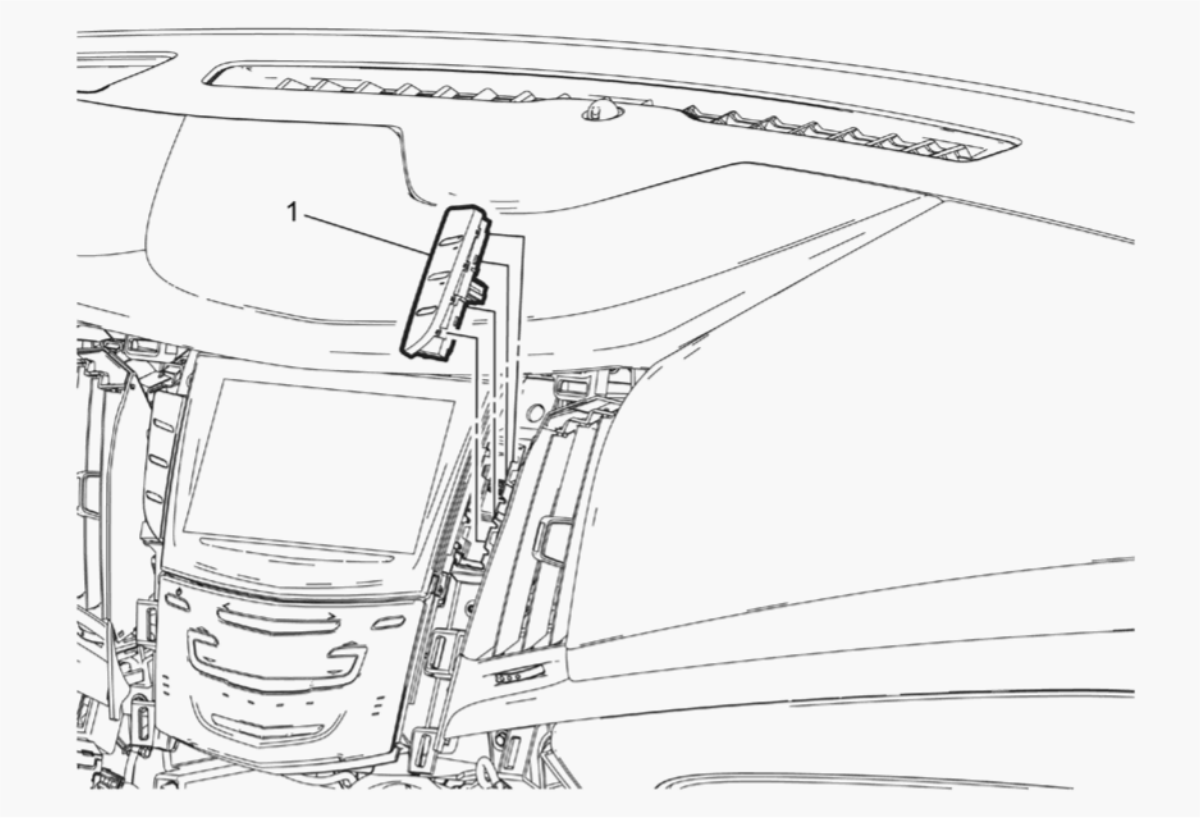


**Fig. 48: Vehicle Stability Control System Switch (Cadillac)**
**Courtesy of GENERAL MOTORS COMPANY**

| Callout | Component Name |
|---|---|
| **Preliminary Procedure**<br>Remove the instrument panel lower trim plate applique. Refer to **Instrument Panel Lower Trim Plate Applique Replacement (Cadillac)** . | |

cardiagn.com

| Callout | Component Name |
|---|---|
| 1 | Vehicle Stability Control System Switch<br><br>**Procedure**<br><br>1. Using a flat bladed tool, release the two locking tabs on both sides of the switch.<br>2. Lift the switch from the instrument panel.<br>3. Disconnect the electrical connector. |

## VEHICLE YAW SENSOR LEARN

The yaw rate sensor does not require calibration often. Calibrating the yaw rate sensor might be required after certain service procedures are performed. Some of these procedures are as follows:

- Yaw Rate Sensor replacement
- Electronic Brake Control Module replacement
- Inflatable Restraint Sensing and Diagnostic Module replacement

The yaw rate sensor learn procedure can be completed with a scan tool using the following steps:

1. Place vehicle on a level surface
2. Apply the parking brake, or set the transmission in the Park position.
3. Install the scan tool to the data link connector.
4. Ignition ON, engine OFF.
5. Select Yaw Rate Sensor Learn in the Electronic Brake Control Module Configuration/Reset Functions list.
6. Follow the scan tool directions to complete the calibration procedure.
7. Clear any DTCs that may be set.

## VEHICLE DYNAMIC SENSOR REPLACEMENT (EXCEPT CADILLAC, WITHOUT DCK)

cardiagn.com

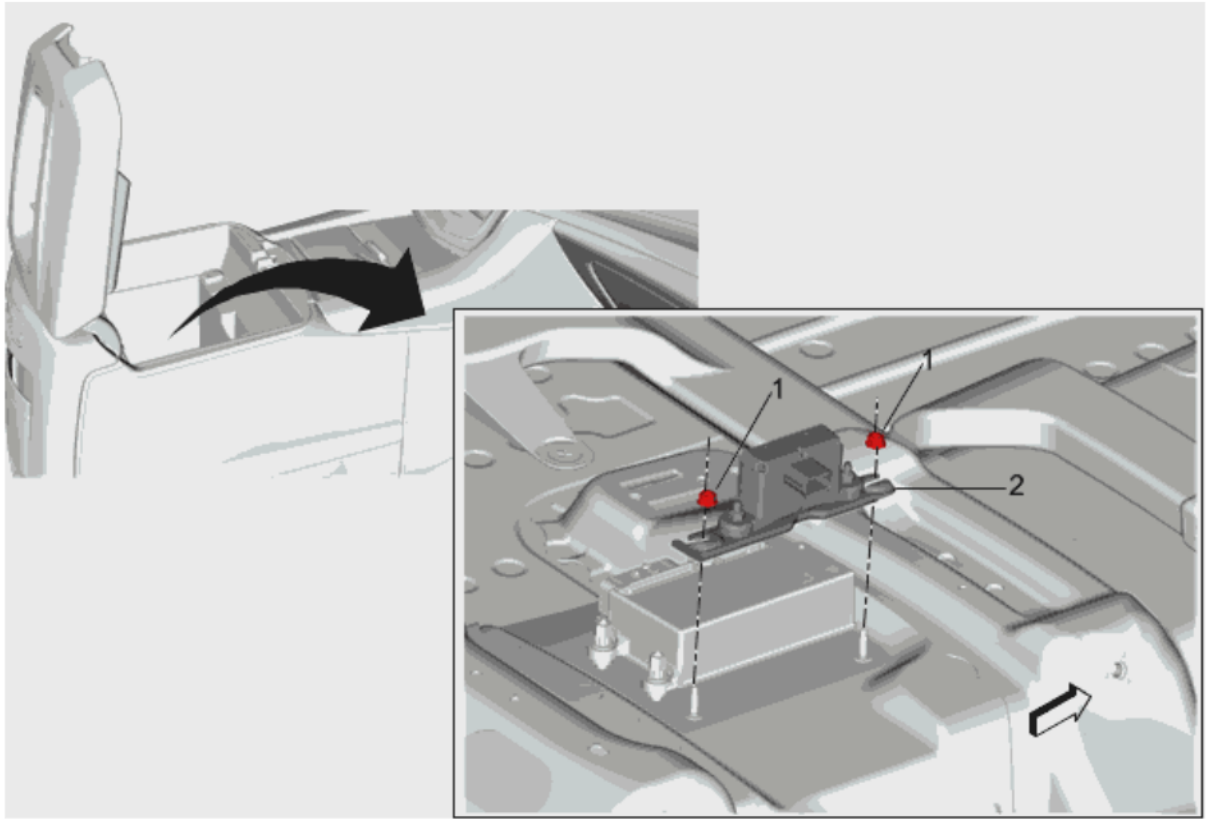


Fig. 49: Vehicle Dynamic Sensor (Except Cadillac, Without DCK)
Courtesy of GENERAL MOTORS COMPANY

| Callout | Component Name |
|---|---|
| **Preliminary Procedures**<br><br>1. Turn the ignition OFF.<br>2. Remove the front floor console front compartment cover. Refer to **Front Floor Console Front Compartment Cover Replacement (Chevrolet / GMC)** . | |
| 1 | Vehicle Dynamic Sensor Nut (Qty: 2)<br><br>**CAUTION:** |

cardiagn.com

| Callout | Component Name |
|---|---|
| | **Refer to** **Fastener Caution** .<br><br>**Tighten**<br>9 N.m (80 lb in) |
| 2 | Vehicle Dynamic Sensor<br><br>**Procedure**<br><br>1. Disconnect the electrical connector.<br>2. Perform the **Vehicle Yaw Sensor Learn**. |

## VEHICLE DYNAMIC SENSOR REPLACEMENT (CADILLAC WITHOUT DCK)

cardiagn.com

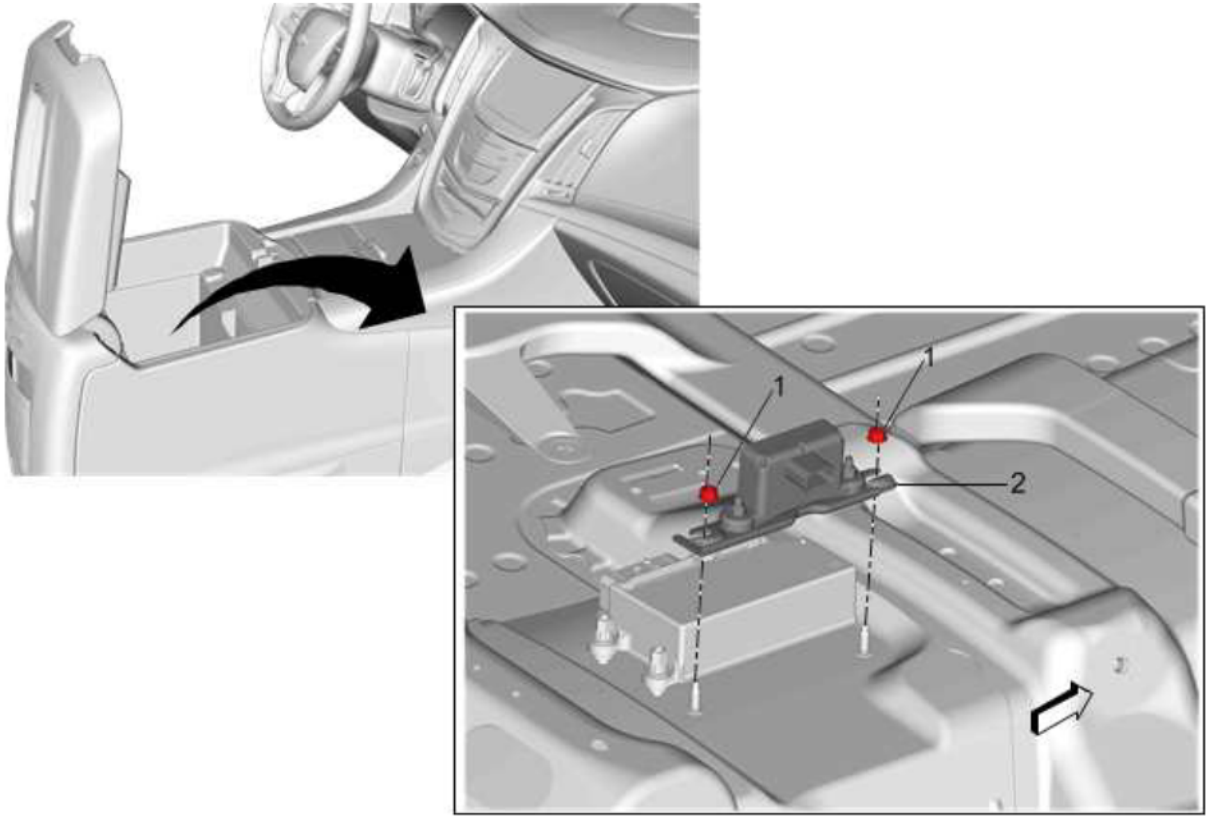


**Fig. 50: Vehicle Dynamic Sensor (Cadillac Without DCK)**
**Courtesy of GENERAL MOTORS COMPANY**

| Callout | Component Name |
|---|---|
| **Preliminary Procedures**<br>1. Turn the ignition OFF.<br>2. Remove the front floor console front compartment. Refer to **Front Floor Console Front Compartment Replacement (Cadillac)** . | |
| 1 | Vehicle Dynamic Sensor Nut (Qty: 2)<br>**CAUTION:**<br>**Refer to**<br>**Fastener** |

cardiagn.com

| Callout | Component Name |
|---|---|
| | **Caution** .<br><br>**Tighten**<br>9 N.m (80 lb in) |
| 2 | Vehicle Dynamic Sensor<br><br>**Procedure**<br><br>1. Disconnect the electrical connector.<br>2. Perform the **Vehicle Yaw Sensor Learn**. |

## VEHICLE DYNAMIC SENSOR REPLACEMENT (WITH DCK)

cardiagn.com

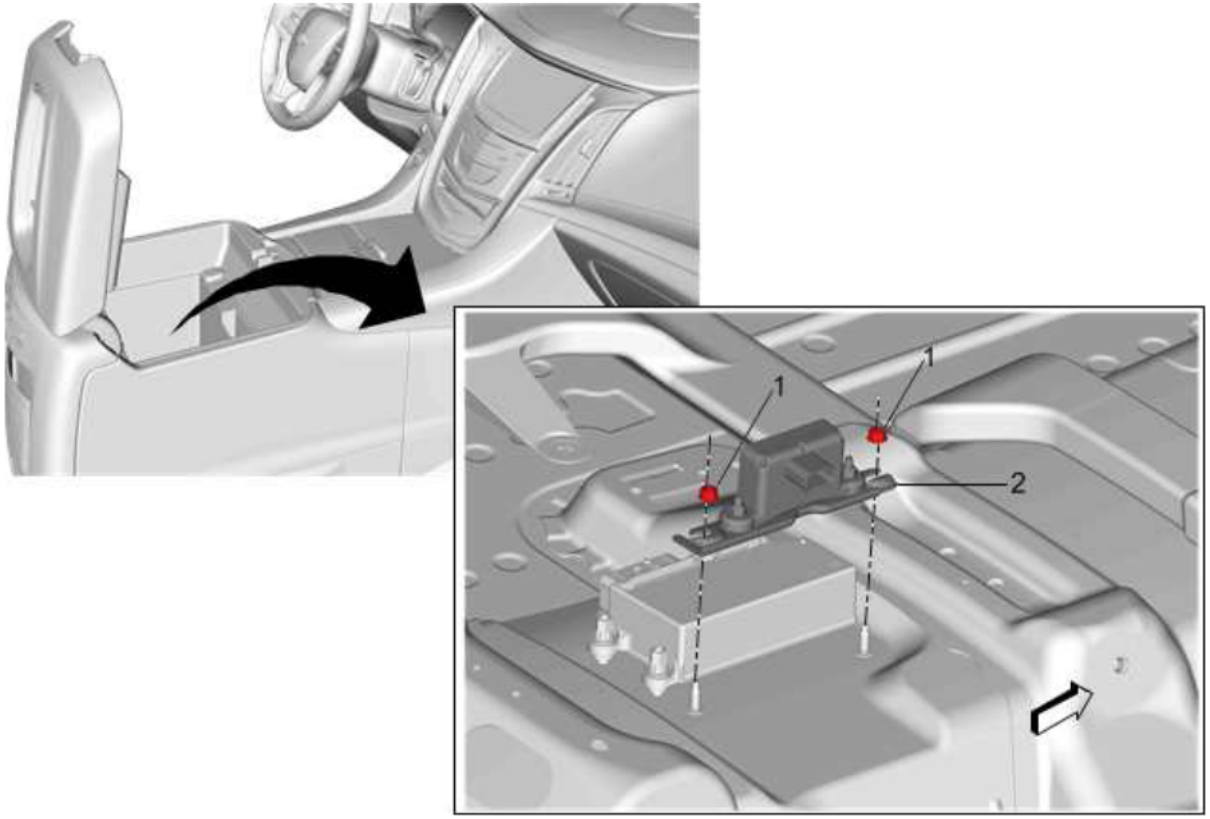


**Fig. 51: Vehicle Dynamic Sensor (With DCK)**
**Courtesy of GENERAL MOTORS COMPANY**

| Callout | Component Name |
|---|---|
| **Preliminary Procedures**<br><br>1. Turn the ignition OFF.<br>2. Remove the front floor console center compartment. Refer to **Front Floor Console Center Compartment Replacement (Insert)** **Front Floor Console Center Compartment Replacement (Chevrolet / GMC)** **Front Floor Console Center Compartment Replacement (Cadillac)** . | |
| 1 | Vehicle Dynamic Sensor Nut (Qty: 2)<br><br>**CAUTION:** |

cardiagn.com

| Callout | Component Name |
|---|---|
| | **Refer to** **Fastener Caution** .<br><br>**Tighten**<br>9 N.m (80 lb in) |
| 2 | Vehicle Dynamic Sensor<br><br>**Procedure**<br><br>1. Disconnect the electrical connector.<br>2. Perform the **Vehicle Yaw Sensor Learn**. |

# DESCRIPTION AND OPERATION

## ABS DESCRIPTION AND OPERATION

cardiagn.com

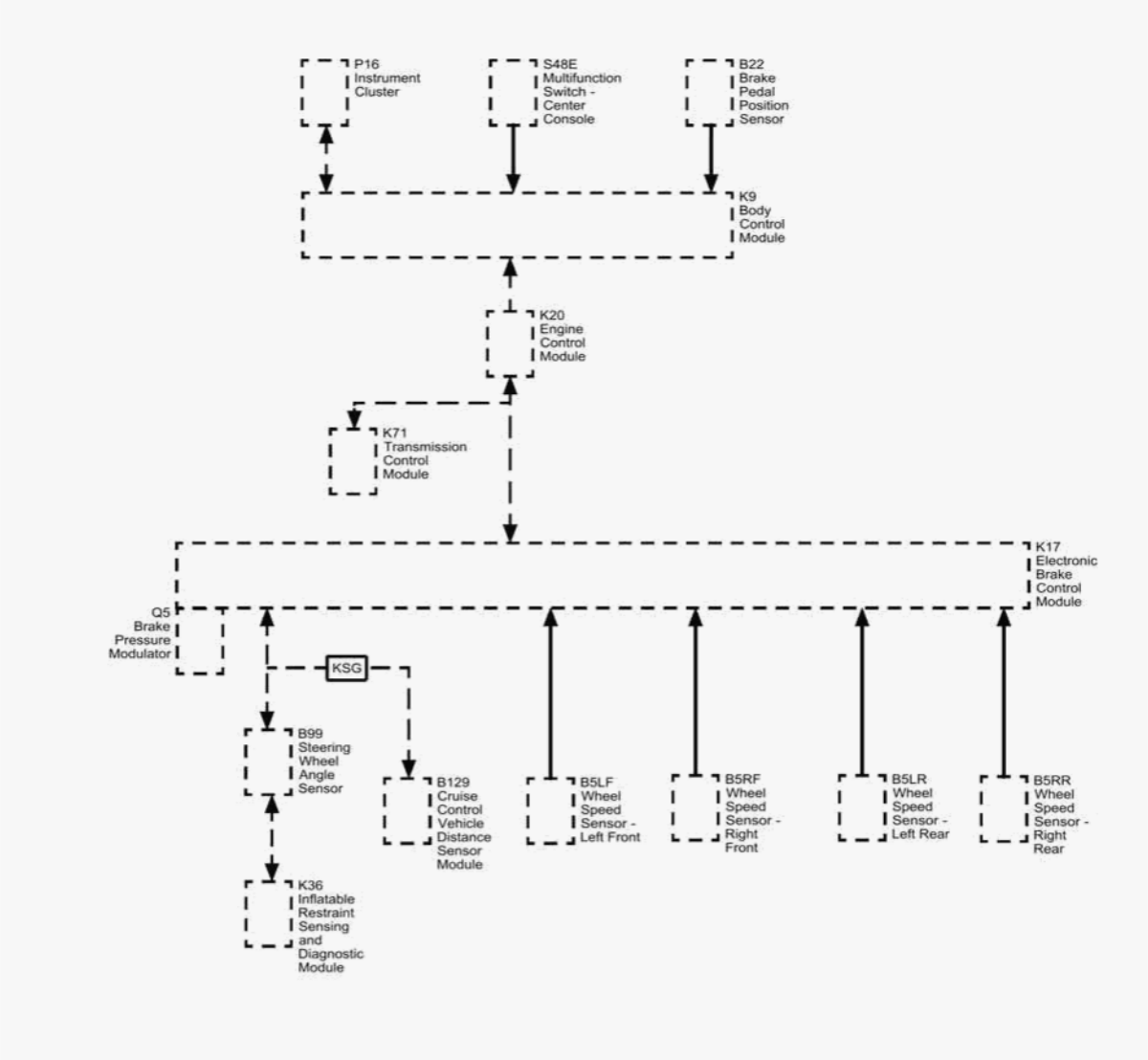


**Fig. 52: TRW EBC460 Block Diagram**
**Courtesy of GENERAL MOTORS COMPANY**

| Callout | Component Name |
|---|---|
| P16 | P16 Instrument Cluster |
| S48E | S48E Multifunction Switch - Center Console |
| B22 | B22 Brake Pedal Position Sensor |

cardiagn.com

| Callout | Component Name |
|---|---|
| K9 | K9 Body Control Module |
| K20 | K20 Engine Control Module |
| K71 | K71 Transmission Control Module |
| K17 | K17 Electronic Brake Control Module |
| Q5 | Q5 Brake Pressure Modulator |
| B5RR | B5RR Wheel Speed Sensor - Right Rear |
| B5LR | B5LR Wheel Speed Sensor - Left Rear |
| B5RF | B5RF Wheel Speed Sensor - Right Front |
| B5LF | B5LF Wheel Speed Sensor - Left Front |
| B129 | B129 Cruise Control Vehicle Distance Sensor Module |
| B99 | B99 Steering Wheel Angle Sensor |
| K36 | K36 Inflatable Restraint Sensing and Diagnostic Module |

This vehicle is equipped with a TRW EBC460 brake system. The electronic brake control module and the brake pressure modulator are serviced separately. The brake pressure modulator uses a four circuit configuration to control hydraulic pressure to each wheel independently.

Depending on options, the following vehicle performance enhancement systems are provided.

- ABS
- Traction Control
- Stability Control
- Dynamic Rear Proportioning
- Hill Descent Control System
- Hill Hold Start Assist
- Cornering Brake Control
- Hydraulic Brake Assist
- Optimized Hydraulic Braking System
- Intelligent Brake Assist
- Trailer Brake Control System
- Trailer Sway Control

cardiagn.com

The following components listed below are involved in the operation of the brake system:

- Electronic brake control module - The electronic brake control module controls the system functions and detects failures. It supplies voltage to the solenoid valves and pump motor.
- Brake pressure modulator - The brake pressure modulator contains the following components:
  - Brake pressure sensor
  - Hydraulic pump with pump motor
  - Four isolation vales
  - Four dump valves
  - Two traction/stability control supply valves
  - Two traction/stability control isolation valves
  - High pressure accumulator
  - Low pressure accumulator
- Body control module monitors the brake pedal position sensor signal when the brake pedal is applied and sends a high speed serial data message to the electronic brake control module indicating the brake pedal position.
- Brake pressure sensor is used to sense the action of the driver application of the brake pedal. The sensor provides an analog voltage signal that will increase as the brake pedal is applied. The electronic brake control module monitors the brake pressure sensor which is integral to the brake pressure modulator.
- Instrument cluster - The instrument cluster displays the vehicle speed based on the information from the engine control module. The engine control module sends the vehicle speed information via a high speed serial data to the body control module. The body control module then sends the vehicle speed information via a low speed serial data to the instrument cluster in order to display the vehicle speed, either in kilometers or miles, based on the vehicle requirements.
- Multi-axis acceleration sensor - The yaw rate, lateral acceleration and longitudinal acceleration sensors are combined into one multi-axis acceleration sensor, internal to the inflatable restraint sensing and diagnostic module. The electronic brake control module receives serial data message inputs from the yaw rate, lateral acceleration and longitudinal acceleration sensor and activates stability control and hill hold start assist function depending on multi-axis acceleration sensor input.
- Multifunction switch - The traction control switch is a multifunction momentary switch. The body control module monitors the signal circuit from the traction control switch and sends a high speed serial data message to the electronic brake control module indicating the switch position. The traction control and stability control are manually disabled or enabled by pressing the traction control switch.
- Steering wheel angle sensor - The electronic brake control module receives serial data message inputs from the steering angle sensor. The steering wheel angle sensor signal is used to calculate the intended driving direction.
- Transmission control module - The electronic brake control module receives high speed serial data message inputs from the transmission

cardiagn.com

control module indicating the gear position of the transmission for hill start assist or hill hold functions.

- Active wheel speed sensors - The electronic brake control module supplies a ignition voltage to each wheel speed sensor. As the wheel spins, the wheel speed sensor produces an alternating current square wave signal. The electronic brake control module uses the frequency of the square wave signal to calculate the wheel speed. The electronic brake control module uses the frequency of the square wave signal to calculate the wheel speed. The electronic brake control module sends the wheel speed information via high speed serial data to the engine control module.

### Power-Up-Self Test

The electronic brake control module is able to detect many malfunctions whenever the ignition is ON. However, certain failures cannot be detected unless active diagnostic tests are performed on the components. Shorted solenoid coil or motor windings, for example, cannot be detected until the components are commanded ON by the electronic brake control module. Therefore, a power-up self-test is performed to verify correct operation of system components. The electronic brake control module performs the first phase of the power-up self-test when the ignition is first turned ON. This phase consists of internal self-testing of the electronic brake control module along with electrical checks of system sensors and circuits.

### Initialization Sequence

The initialization sequence cycles each solenoid valve and the pump motor, as well as the necessary relays, for approximately forty milliseconds to check component operation. One of the checks performed is the adaptive pressure calibration that occurs when the engine is running and the brake pedal is not applied. The adaptive pressure calibration will cycle each of the six isolation valves to verify valve operation. The initialization sequence may be heard and felt while it is taking place, and is considered part of normal system operation. The active test is initiated by the electronic brake control module at the start of the ignition cycle and the speed of the fastest wheel exceeds 16 km/h (10 MPH). If a fault condition is detected the electronic brake control module sets a DTC.

### ABS

When wheel slip is detected during a brake application, an ABS event occurs. During ABS braking, hydraulic pressure in the individual wheel circuits is controlled to prevent any wheel from slipping. A separate hydraulic line and specific solenoid valves are provided for each wheel. The ABS can decrease, hold, or increase hydraulic pressure to each wheel. The ABS does not, however, increase hydraulic pressure above the amount which is transmitted by the master cylinder during braking.

During ABS braking, a series of rapid pulsations is felt in the brake pedal. These pulsations are caused by the rapid changes in position of the individual solenoid valves as the electronic brake control module responds to wheel speed sensor inputs and attempts to prevent wheel slip. These pedal pulsations are present only during ABS braking and stop when normal braking is resumed or when the vehicle comes to a stop. A ticking or popping noise may also be heard as the solenoid valves cycle rapidly. During ABS braking on dry pavement, intermittent chirping noises may be heard as the tires approach slipping. These noises and pedal pulsations are considered normal during ABS operation.

cardiagn.com

Vehicles equipped with ABS may be stopped by applying normal force to the brake pedal. Brake pedal operation during normal braking is no different than that of previous non-ABS systems. Maintaining a constant force on the brake pedal provides the shortest stopping distance while maintaining vehicle stability. The typical ABS activation sequence is as follows.

**Pressure Hold**

The electronic brake control module closes the isolation valve and keeps the dump valve closed in order to isolate the slipping wheel when wheel slip occurs. This holds the pressure steady on the brake so that the hydraulic pressure does not increase or decrease.

**Pressure Decrease**

If a pressure hold does not correct the wheel slip condition, a pressure decrease occurs. The electronic brake control module decreases the pressure to individual wheels during deceleration when wheel slip occurs. The isolation valve is closed and the dump valve is opened. The excess fluid is stored in the accumulator until the pump can return the fluid to the master cylinder or fluid reservoir.

**Pressure Increase**

After the wheel slip is corrected, a pressure increase occurs. The electronic brake control module increases the pressure to individual wheels during deceleration in order to reduce the speed of the wheel. The isolation valve is opened and the dump valve is closed. The increased pressure is delivered from the master cylinder.

### Traction Control

When drive wheel slip is noted, the electronic brake control module will enter traction control mode.

First, the electronic brake control module requests the engine control module to reduce the amount of torque to the drive wheels via a serial data message. The engine control module reduces torque to the drive wheels and reports the amount of delivered torque.

If the engine torque reduction does not reduce drive wheel slip, the electronic brake control module will actively apply the brakes on the slipping drive wheel. During traction control braking, hydraulic pressure in each drive wheel circuit is controlled to prevent the drive wheels from slipping. The electronic brake control module commands the pump motor and appropriate solenoid valves ON and OFF to apply brake pressure to the slipping wheel.

Traction control can be manually disabled or enabled by pressing the traction control switch.

### Stability Control

Stability control provides added stability during aggressive maneuvers. Yaw rate is the rate of rotation about the vehicle's vertical axis. The stability

cardiagn.com

control is activated when the electronic brake control module determines that the desired yaw rate does not match the actual yaw rate as measured by the yaw rate sensor.

The desired yaw rate is calculated by the electronic brake control module using the following inputs:

- Steering wheel position
- Vehicle speed
- Lateral acceleration

The difference between the desired yaw rate and the actual yaw rate is the yaw rate error, which is a measurement of oversteer or understeer. When a yaw rate error is detected, the electronic brake control module attempts to correct the vehicle's yaw motion by applying brake pressure to one or more of the wheels. The amount of applied brake pressure varies, depending on the correction required. The engine torque may be reduced also, if it is necessary to slow the vehicle while maintaining stability.

Stability control activations generally occur in turns during aggressive driving. When braking during stability control activation, the brake pedal may pulsate.

Stability control can be manually disabled or enabled by pressing and holding the traction control switch for five seconds.

### Dynamic Rear Proportioning

The dynamic rear proportioning is a control system that replaces the mechanical proportioning valve. Under certain driving conditions the electronic brake control module will reduce the rear wheel brake pressure by commanding the appropriate solenoid valves ON and OFF.

### Hill Descent Control System

The hill descent control system allows a smooth and controlled hill descent in rough terrain without the driver needing to touch the brake pedal. The vehicle will automatically decelerate to a low speed and remain at that speed while activated. Some noise or vibration from the brake system may be apparent when the system is active. The descent control system may be activated, if equipped, by pressing the button on the console. To activate, press the button when traveling at speeds less that 50 km/h (30 MPH). To deactivate, press the button on the console, the brake pedal, or the accelerator. Descent control enables the vehicle to descend using the ABS to control each wheel's speed. If the vehicle accelerates without driver input, the system automatically applies the brakes to slow the vehicle down to the desired speed

### Hill Hold Start Assist

The hill hold start assist allows the driver to launch the vehicle without a roll back while moving the foot from the brake pedal to the accelerator pedal. The electronic brake control module calculates the brake pressure, which is needed to hold the vehicle on an incline and locks that pressure for a certain time by commanding the appropriate solenoid valves ON and OFF when the brake pedal is released. Hill hold start assist is activated when

cardiagn.com

the electronic brake control module determines that the driver wishes to move the vehicle up-hill, either backwards or forwards.

The following inputs are used for hill hold start assist feature:

- Accelerator pedal position
- Brake switch
- Brake pressure
- Clutch switch, if equipped
- Engine torque
- Longitudinal acceleration
- Transmission gear information
- Vehicle speed

### Cornering Brake Control

Cornering brake control is a slip control function that is intended to improve the vehicle's lateral/yaw stability during combined braking and cornering situations.

The electronic brake control module will reduce the brake pressure to the inside wheels by commanding the appropriate solenoid valves ON and OFF.

### Hydraulic Brake Assist

The hydraulic brake assist function is designed to support the driver in emergency braking situations.

The electronic brake control module receives inputs from the brake pressure sensor. When the electronic brake control module senses an emergency braking situation, the electronic brake control module will actively increase the brake pressure to a specific maximum.

### Intelligent Brake Assist

The intelligent brake assist function is designed to provide limited braking to help prevent front and rear low speed collisions.

The electronic brake control module receives inputs from the brake pedal position sensor, wheel speed sensors, short range radar and ultrasonic sensors to detect a collision. When the electronic brake control module senses a possible collision, it will actively increase the hydraulic brake pressure to apply the brakes.

### Optimized Hydraulic Braking System

cardiagn.com

With some engines the electronic brake control module monitors the vacuum in the brake booster with a vacuum sensor and controls a brake booster vacuum pump depending on vacuum sensor input. It also has a hydraulic brake boost feature which supplements the brake system to maintain consistent brake performance under conditions of low brake booster vacuum. Low brake booster vacuum conditions can include initial start up after the vehicle has been parked for several hours, very frequent brake stops, or high altitude driving. The hydraulic brake boost system activates only during a brake apply under low vacuum conditions. In this case the electronic brake control module will actively increase and control the hydraulic brake pressure by turning the pump motor ON and the appropriate solenoid valves ON and OFF. When hydraulic brake boost is active, a series of rapid pulsations is felt in the brake pedal.

### Trailer Brake Control System

A trailer brake control system is used to control the amount of trailer braking power that is made available to trailers with brakes that require a controlled output electrical signal for actuation. The trailer brake control system determines the trailer brake type (Electric Brake or Electric Over Hydraulic Brake) automatically.

### Trailer Sway Control

The trailer sway control will detect any vehicle yaw instability, caused by an attached trailer. When instability is detected, the electronic brake control module attempts to correct the vehicle's yaw motion by applying brake pressure to one or more of the wheels. The engine torque may be reduced also, if it is necessary to slow down the vehicle.

### Driver Information Indicators

#### Brake Warning Indicator

The instrument cluster turns the brake warning indicator ON when the following occurs:

- The instrument cluster performs the bulb check.
- The body control module detects that the parking brake is engaged. The instrument cluster receives a serial data message from the body control module requesting illumination.
- The electronic brake control module detects a faulty pump motor, solenoid valves, an internal hardware failure or a too high or too low battery voltage and sends a serial data message to the instrument cluster requesting illumination.

#### ABS Indicator

The instrument cluster turns the ABS indicator ON when the following occurs:

- The instrument cluster performs the bulb check.

cardiagn.com

- The electronic brake control module detects a malfunction which disables the ABS and sends a serial data message to the instrument cluster requesting illumination.

**Hill Descent Control Indicator**

The instrument cluster turns the hill descent control indicator ON when the following occurs:

- The instrument cluster performs the bulb check.
- The driver manually enables or disables the hill descent control by pressing the hill descent control switch. The electronic brake control module sends a serial data message to the instrument cluster requesting illumination.

**Traction Control Off Indicator**

The instrument cluster turns the traction control off indicator ON when the following occurs:

- The instrument cluster performs the bulb check.
- The driver manually disables the traction control by pressing the traction control switch. The electronic brake control module sends a serial data message to the instrument cluster requesting illumination.

**Stability Control Off Indicator**

The instrument cluster turns the stability control off indicator ON when the following occurs:

- The instrument cluster performs the bulb check.
- The driver manually disables the stability control by pressing and holding the traction control switch for five seconds. The electronic brake control module sends a serial data message to the instrument cluster requesting illumination.

**Traction/Stability Control Indicator**

The instrument cluster turns the traction/stability control indicator ON when the following occurs:

- The instrument cluster performs the bulb check.
- The ABS system is in traction control or stability control mode.
- The electronic brake control module detects a traction/stability control disabling malfunction and sends a serial data message to the instrument cluster requesting illumination.

## SPECIAL TOOLS AND EQUIPMENT

cardiagn.com

## SPECIAL TOOLS

| Illustration | Tool Number/Description |
|---|---|
| 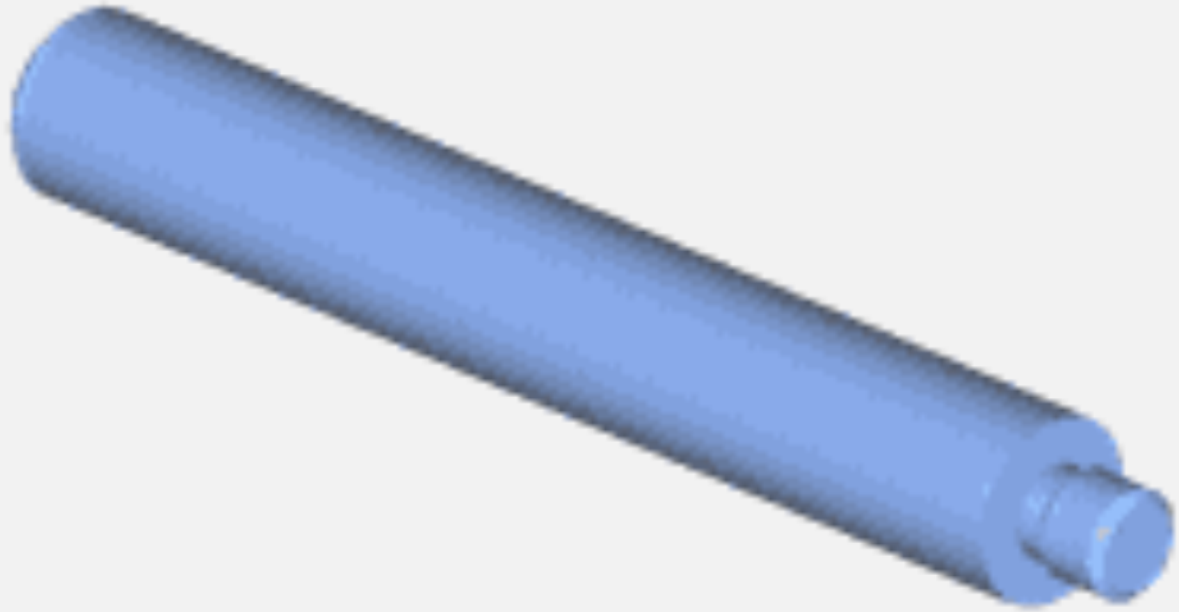 | J 8092<br>Driver Handle |

cardiagn.com

| Illustration | Tool Number/Description |
| --- | --- |
| 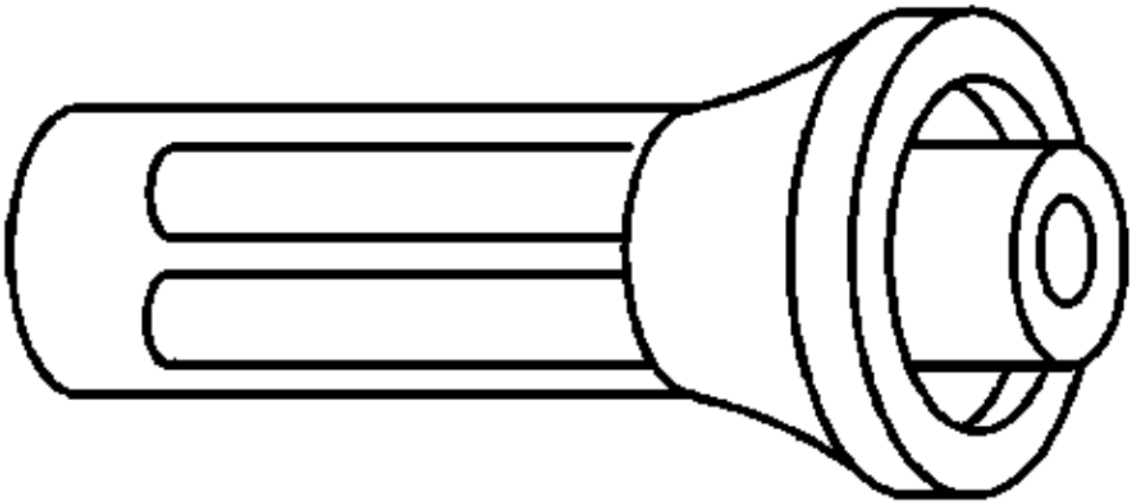 | J 21128<br>Axle Pinion Oil Seal Installer |

cardiagn.com

| Illustration | Tool Number/Description |
| --- | --- |
| 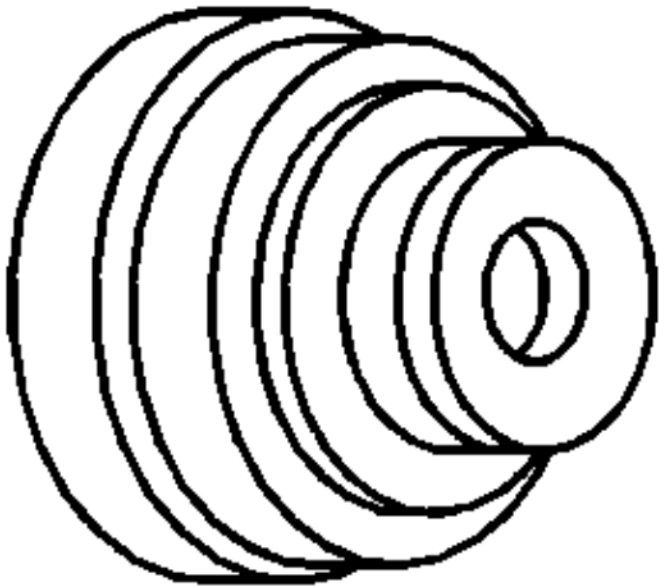 | J 23690<br>Bearing Installer |

cardiagn.com

| Illustration | Tool Number/Description |
| --- | --- |
| 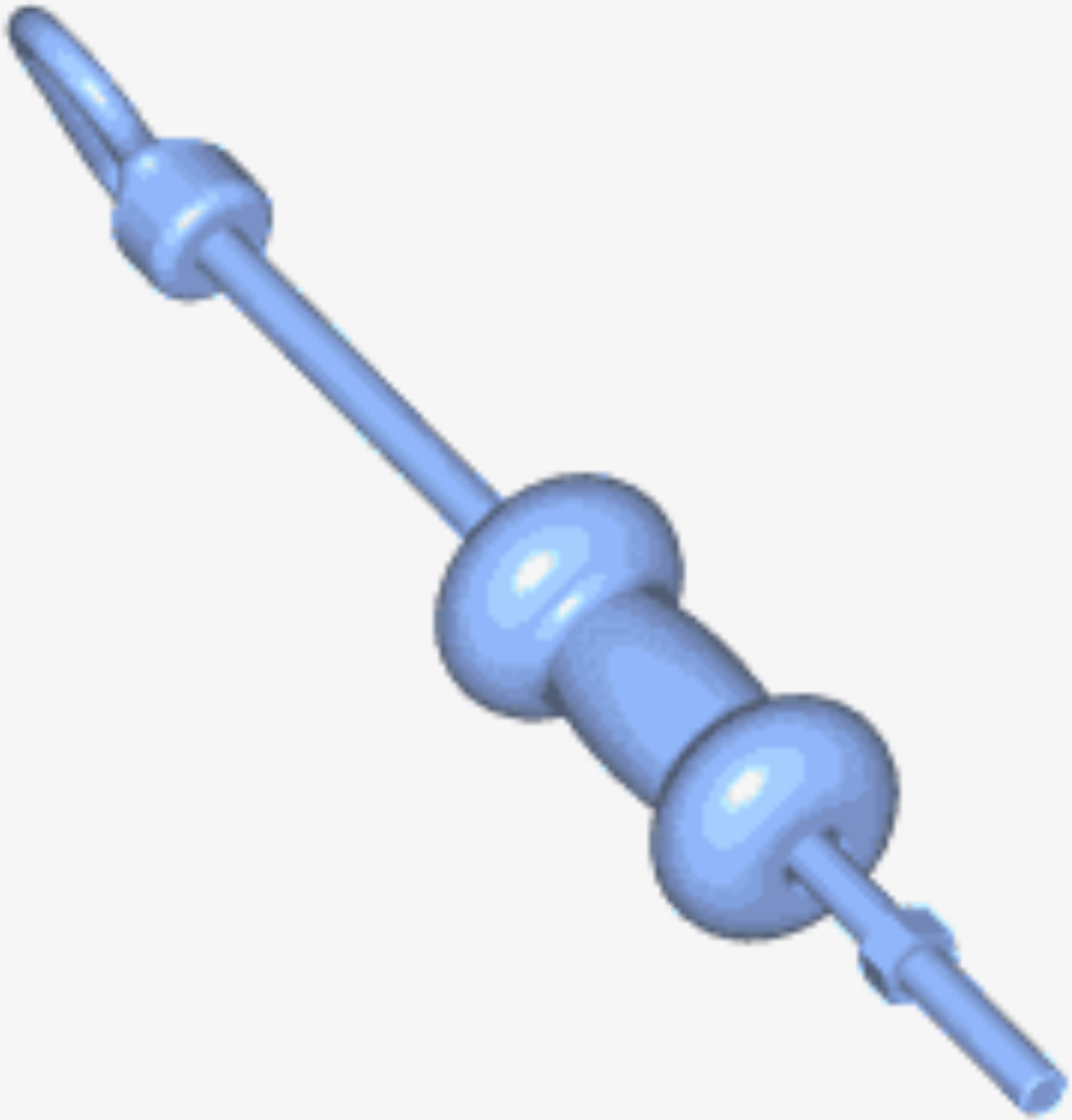 | J 2619-01<br>Slide Hammer |

cardiagn.com

| Illustration | Tool Number/Description |
| --- | --- |
| | J 39700<br>100-Pin Breakout Box |

cardiagn.com

| Illustration | Tool Number/Description |
| --- | --- |
| 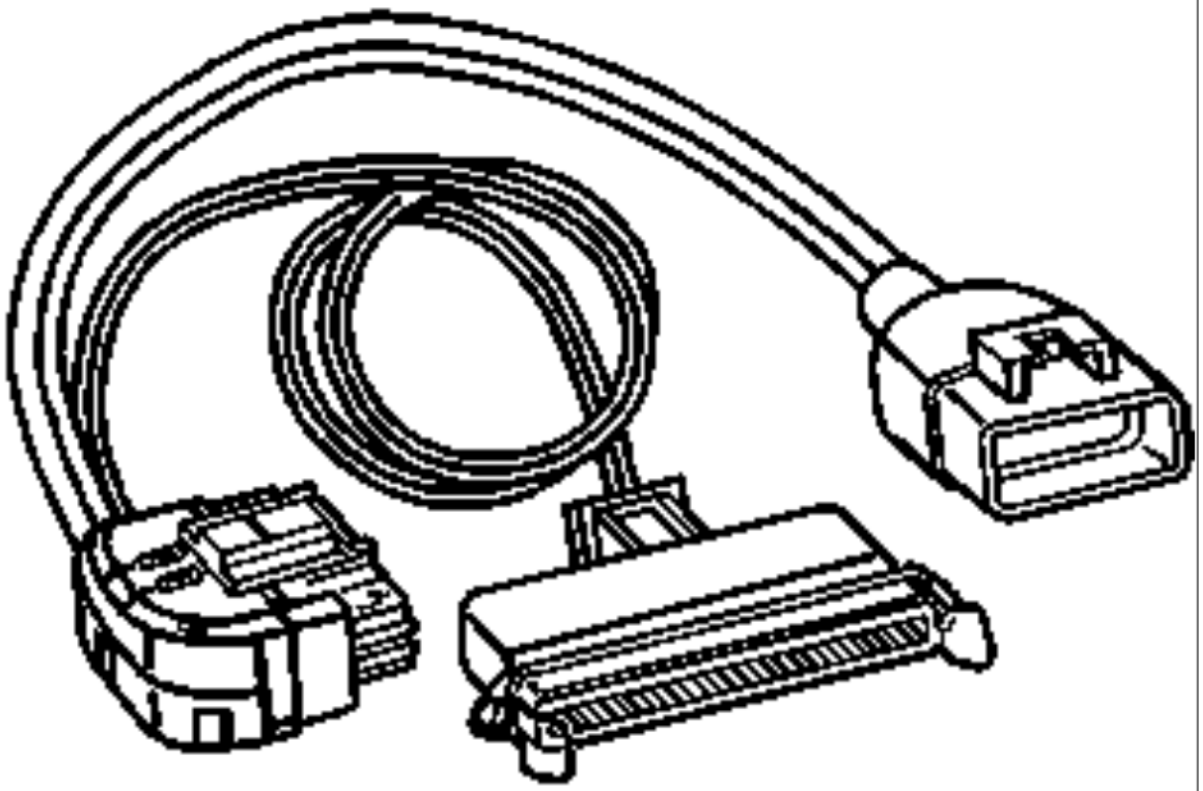 | J 39700-325<br>Breakout Box Adapter |

cardiagn.com

| Illustration | Tool Number/Description |
| --- | --- |
| 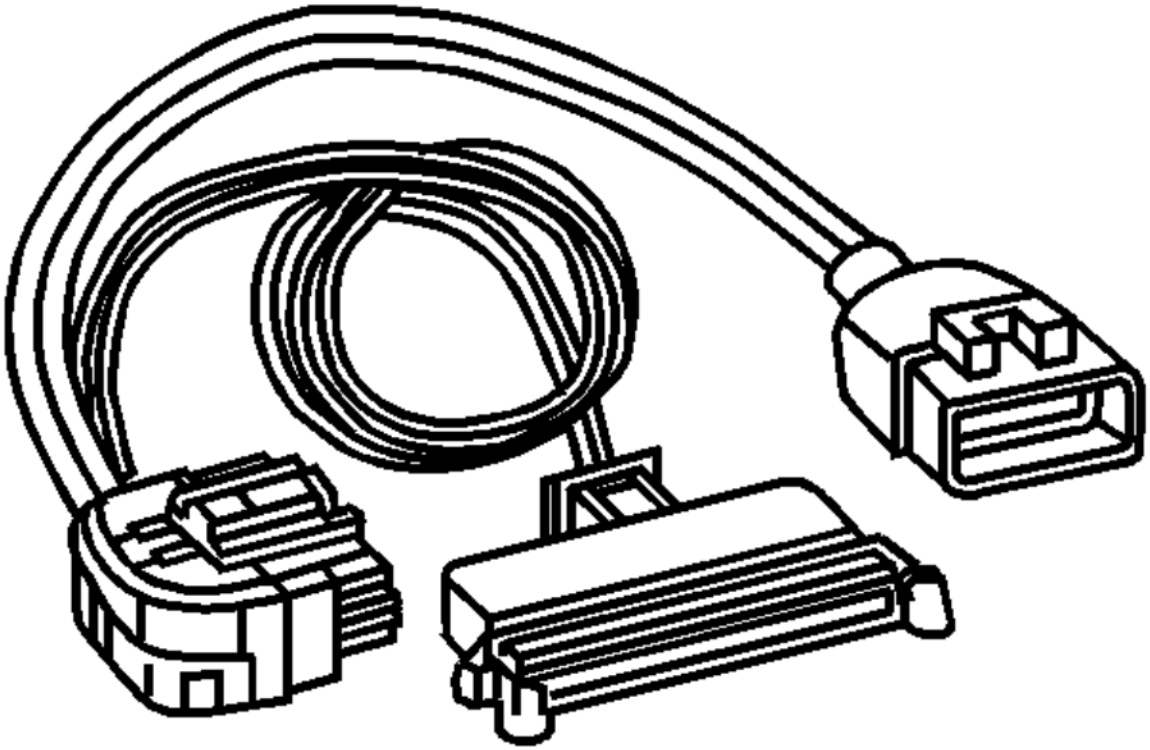 | J 39700-650<br>Adapter Cable |

cardiagn.com

| Illustration | Tool Number/Description |
| --- | --- |
| 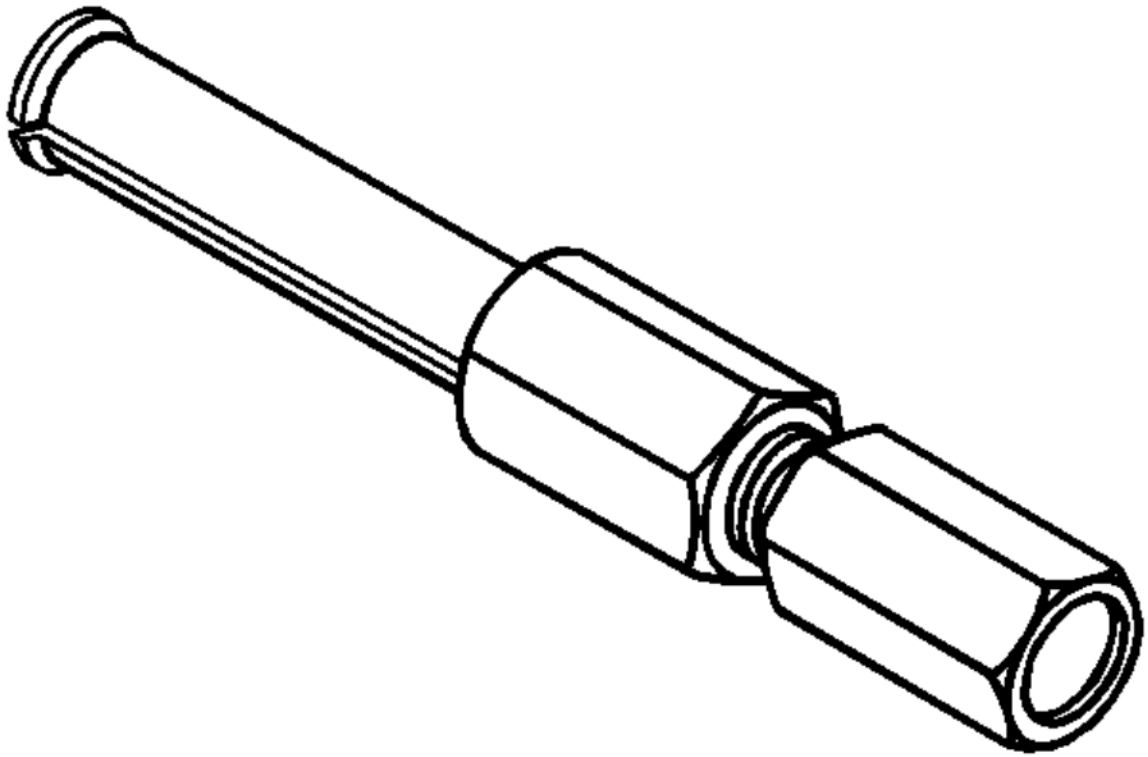 | J 45857<br>Tone Wheel and/or Bearing Remover |

cardiagn.com

| Illustration | Tool Number/Description |
| --- | --- |
| 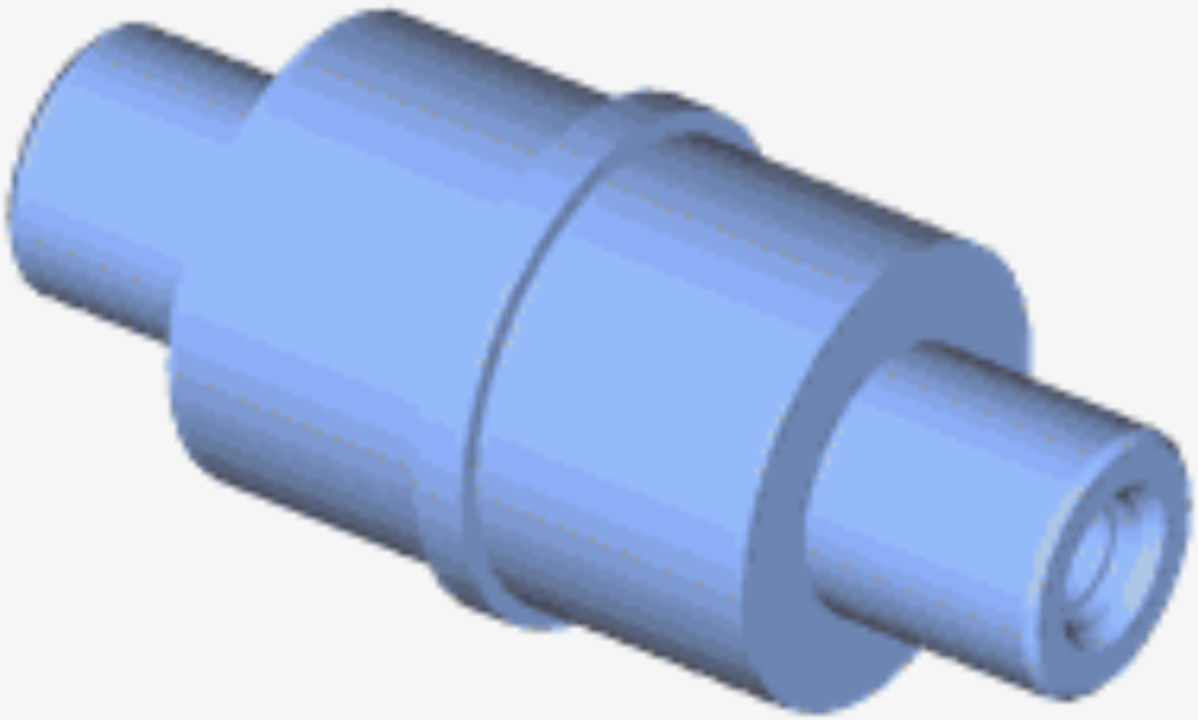 | J 45860<br>Tone Ring Installer |

cardiagn.com

| Illustration | Tool Number/Description |
|---|---|
| 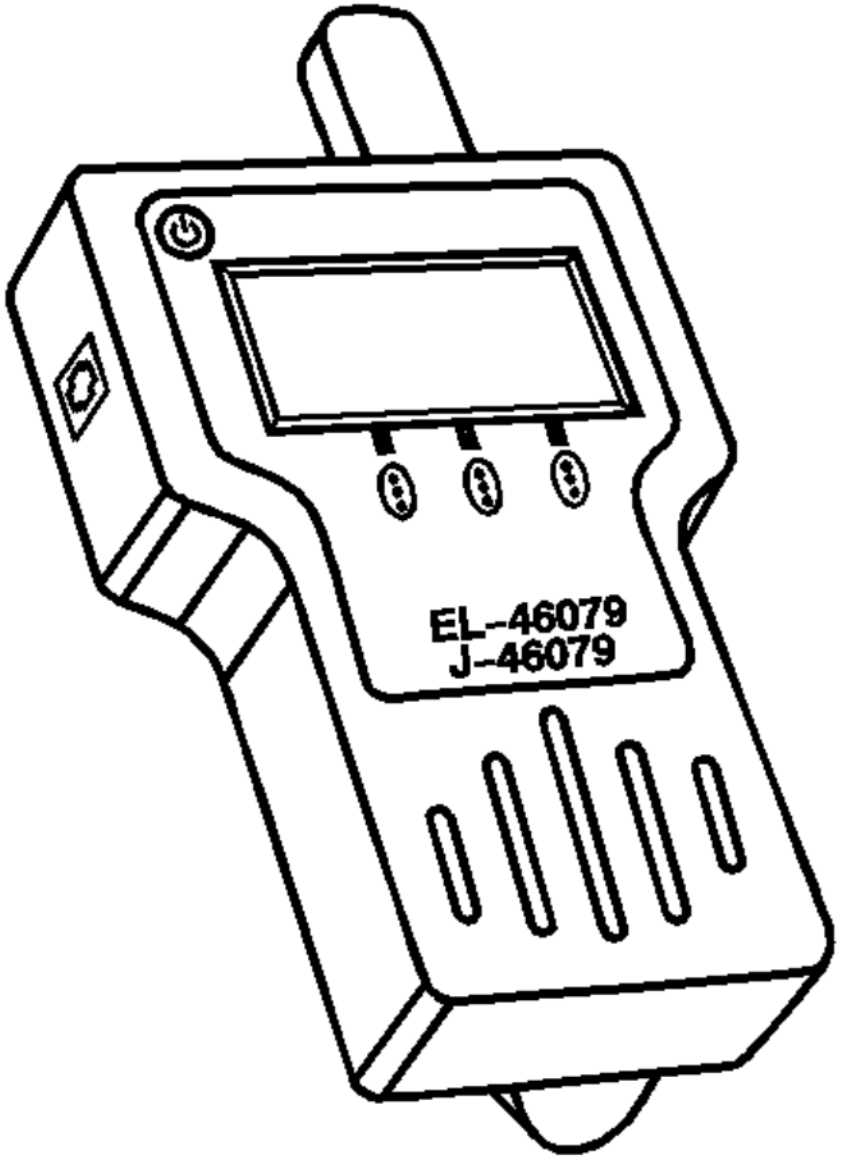  | J 46079<br>Tire Pressure Monitor Diagnostic Tool |

cardiagn.com