2001 MANUAL TRANSMISSIONS

Borg-Warner T56 6-Speed Overhaul - "Y" Body

APPLICATION

MANUAL TRANSMISSION APPLICATIONS

Application	Transmission Model (RPO Code)
Chevrolet Corvette	Borg-Warner T56 (MM6 Or M12)

IDENTIFICATION

Transmission has 2 identification labels located on lower left side of case. One label contains a VIN derivative. Other label is transmission identification information, giving model type and date of manufacturer.

GEAR RATIOS

TRANSMISSION GEAR RATIOS

Gear Range	Gear Ratio
1st	2.66:1
2nd	1.78:1
3rd	1.30:1
4th	1.00:1
5th	0.74:1
6th	0.50:1
Reverse	2.90:1

DESCRIPTION

Borg-Warner T56 transmission is a fully synchronized 6-speed unit. Manufacturer also identifies transmission as 85-mm 6-speed. Transmission has an aluminum case with internal shift rail mechanism.

OPERATION

Transmission is equipped with a solenoid that operates a reverse lock-out assembly. Solenoid prevents operator from shifting transmission into Reverse when vehicle is moving forward. To enhance fuel economy, transmission also is equipped with a gear select solenoid, which inhibits

2nd and 3rd gears when shifting from 1st gear. Solenoid is activated when engine coolant temperature is greater than 161°F (77°C), vehicle speed is 15-21 MPH and throttle opening is 35 percent or less.

Vehicles are also equipped with a 1-to-4 upshift indicator light, which is controlled by the Powertrain Control Module (PCM). Light is used to inform driver when optimal shift timing is present. For diagnosis of the transmission electronic control system, see BORG-WARNER T56 6-SPEED ELECTRONIC CONTROLS article.

LUBRICATION

NOTE: For additional information, see appropriate MANUAL TRANSMISSION SERVICING article in TRANSMISSION SERVICING.

RECOMMENDED FLUID

Manufacturer recommends Dexron-IIE or III ATF to protect synchronizer friction material.

FLUID CAPACITIES

Capacity is 3.65 qts. (3.45L). Remove fill plug and ensure fluid is even with bottom of fill plug opening. Adjust level as needed.

ON-VEHICLE SERVICE

The following components can be serviced without transmission removal.

- Gear Select (Skip Shift) Solenoid
- Reverse Lock-Out Solenoid

For removal and installation of listed components, see REMOVAL & INSTALLATION in BORG-WARNER T56 6-SPEED ELECTRONIC CONTROLS article.

TROUBLE SHOOTING

NOTE: See MANUAL TRANSMISSION TROUBLE SHOOTING article in GENERAL INFORMATION.

REMOVAL & INSTALLATION

TRANSMISSION

NOTE: For manual transmission removal procedures, see appropriate CLUTCHES article in TRANSMISSION SERVICING.

TRANSMISSION DISASSEMBLY

NOTE: During disassembly procedure, refer to appropriate illustration for component location and sequence. See Fig. 1 -Fig. 4 .

1. Ensure exterior of transmission is free of dirt and grease prior to disassembly. Mount support fixture to transmission and install on bench-mounted fixture. Rotate transmission to horizontal position with shift mechanism up. Drain transmission fluid. Place transmission in Neutral.
2. Remove extension housing bolts and housing. Remove rear bearing retainer ring, spacer, mainshaft rear bearing and spacer. See **Fig. 1** . Remove snap ring, reverse gear thrust washer, reverse gear, needle bearing, wave washer and synchronizer ring. See **Fig. 2** .
3. Remove reverse synchronizer snap ring. Remove and discard shift fork snap ring. Scribe mark position of reverse synchronizer hub to sleeve for reassembly reference. Remove thrust washer, reverse synchronizer assembly and shift fork. Using appropriate puller, remove 5th-6th driven gear. See **Fig. 2** . Remove 5th-6th shift fork collar, roll pin and snap ring.
4. Rotate transmission to horizontal position with guide plate up. Remove countershaft extension assembly with 5th-6th shift fork, 6th gear and needle bearing. 6th gear bearing spacer will slide out during countershaft extension removal. See **Fig. 1** .
5. Remove reverse lock-out sensor. Remove reverse lock-out solenoid from reverse lock-out body. See **Fig. 5** . Remove reverse lock-out assembly bolt, then remove reverse lock-out body.
6. Remove shifter cover plate bolts and cover plate. Remove shift detent assembly. Remove 9 of 11 adapter plate-to-transmission bolts. Rotate transmission to vertical position. Remove 2 remaining adapter plate bolts. Remove shift lever guide bolts. Remove case magnets. Remove offset lever roll pin from inside shifter housing.
7. Slide transmission case up off of gear clusters and shift rail components. Hold offset lever against guide plate to prevent release of detent ball and spring. Remove offset lever from transmission case. Remove detent guide plate from top of transmission case.

CAUTION: Reverse lock-out assembly is under spring pressure. Use caution when removing retainer snap ring.

8. If necessary, disassemble reverse lock-out assembly as follows: remove "O" ring and snap ring from body. Remove reverse lock-out inner spring. Compress plunger and collar in a

vise and remove snap ring. Remove reverse lock-out plunger, outer spring and collar. See **Fig. 6** .

9. Rotate 5th-6th and reverse shift rail levers from shift interlock plate. Remove 5th-6th and reverse shift rail assembly. Lift up mainshaft enough to remove countershaft. Remove mainshaft and shift rail assembly as complete assemblies. Use care not to lose dowel pin from shift rail. See **Fig. 7** . Remove shift rail assembly from mainshaft. Remove input shaft.

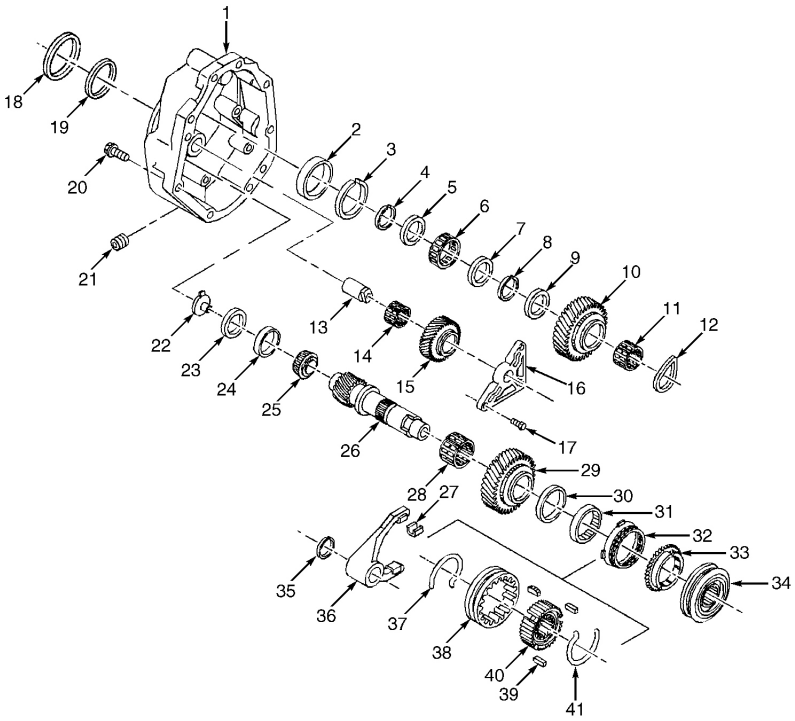

1. Extension Housing
2. Mainshaft Bearing Race
3. Mainshaft Rear Bearing Snap Ring
4. Mainshaft Rear Bearing Snap Ring
5. Mainshaft Rear Bearing Spacer
6. Mainshaft Rear Bearing
7. Mainshaft Rear Bearing Spacer
8. Synchronizer Snap Ring
9. Reverse Gear Thrust Washer
10. Reverse Gear
11. Reverse Gear Bearing
12. Reverse Gear Washer
13. Reverse Idler Gear Shaft
14. Reverse Idler Gear Needle Bearing
15. Reverse Idler Gear
16. Reverse Idler Bracket
17. Reverse Idler Bracket Bolt
18. Outer Output Shaft Seal
19. Inner Output Shaft Seal
20. Extension Housing-To-Transmission Case Bolts
21. Oil Drain Plug
22. Lubrication Funnel
23. Front Countershaft Extension Bearing Shim
24. Countershaft Extension Bearing Race
25. Countershaft Extension Bearing
26. Countershaft Extension
27. Shift Fork Pad
28. 5th Speed Drive Gear Needle Bearing
29. 5th Speed Drive Gear
30. 5th Speed Drive Gear Thrust Washer
31. 5th Speed Drive Gear Inner Cone
32. 5th Speed Drive Gear Friction Cone
33. 5th Synchronizer Ring
34. 5th-6th Synchronizer Assembly
35. 5th Gear Shift Fork Snap Ring
36. 5th-6th Shift Fork
37. 5th-6th Synchronizer Spring
38. 5th-6th Synchronizer Sleeve
39. 5th-6th & Reverse Synchronizer Key
40. 5th-6th Synchronizer Hub
41. 5th-6th Synchronizer Spring

G99F54655

Fig. 1: Exploded View Of Extension Housing Components
Courtesy of GENERAL MOTORS CORP.

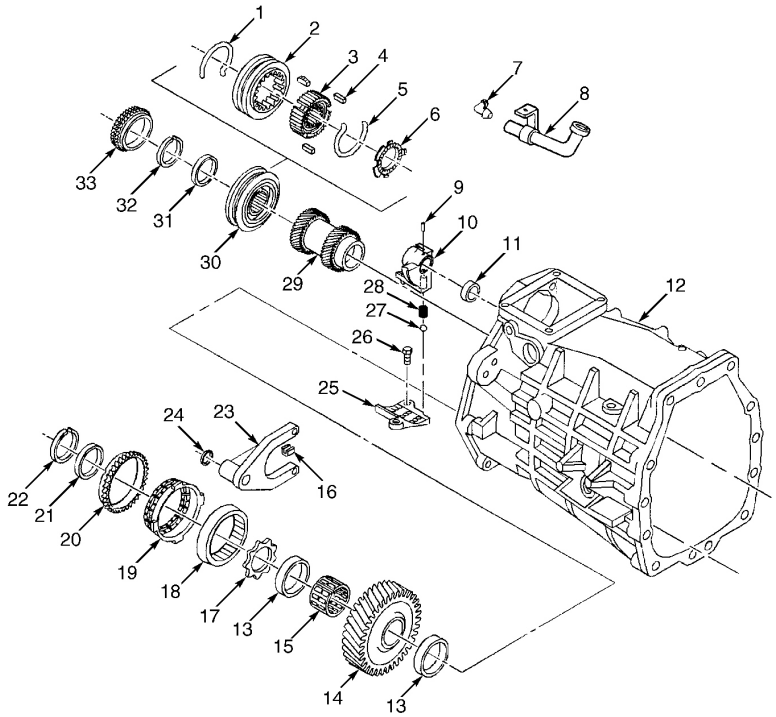

1. Reverse Synchronizer Spring
2. Reverse Synchronizer Sleeve
3. Reverse Synchronizer Hub
4. Reverse Synchronizer Key
5. Reverse Synchronizer Spring
6. Reverse Synchronizer Key Retainer
7. Vent
8. Vent Pipe
9. Offset Shift Lever Roll Pin
10. Offset Shift Lever
11. Top Shift Rail Bushing
12. Transmission Case
13. 6th Speed Drive Gear Bearing Spacer
14. 6th Speed Drive Gear
15. 6th Speed Drive Gear Needle Bearing
16. Reverse Shift Fork Pad
17. 6th Speed Drive Gear Thrust Washer
18. 6th Speed Drive Gear Inner Cone
19. 6th Speed Drive Gear Friction Cone
20. 6th Speed Drive Gear Synchronizer Ring
21. 6th Speed Drive Gear Bearing Spacer
22. Synchronizer Snap Ring
23. Reverse Shift Fork
24. Reverse Shift Fork Snap Ring
25. Guide Plate
26. Guide Plate Bolt
27. Shift Detent Ball
28. Shift Detent Ball Spring
29. 5th-6th Driven Gear
30. Reverse Synchronizer Hub & Sleeve
31. Reverse Gear Thrust Washer
32. Reverse Synchronizer Snap Ring
33. Reverse Synchronizer Ring

G99C54652

Fig. 2: Exploded View Of Transmission Case Components (1 Of 3)
Courtesy of GENERAL MOTORS CORP.

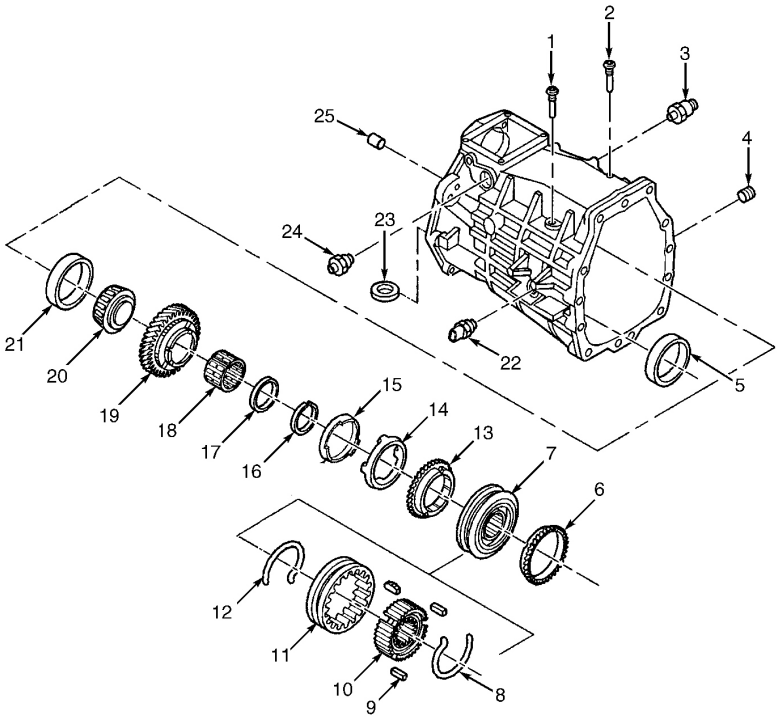

1. 5th-6th Speed Lever Guide Bolt
2. Interlock Guide Bolt
3. Gear Select Solenoid
4. Oil Fill Plug
5. Countershaft Bearing Race
6. 2nd Gear Synchronizer Ring
7. 1st-2nd Synchronizer Assembly
8. 1st-2nd Synchronizer Spring
9. 1st-2nd Synchronizer Key
10. 1st-2nd Synchronizer Hub
11. 1st-2nd Synchronizer Sleeve
12. 1st-2nd Synchronizer Spring
13. 1st Gear Synchronizer Ring
14. 1st Speed Drive Gear Friction Cone
15. 1st Speed Drive Gear Inner Cone
16. Synchronizer Snap Ring
17. 1st Speed Drive Gear Bearing Spacer
18. 1st Speed Drive Gear Needle Bearing
19. 1st Speed Drive Gear
20. Mainshaft Rear Bearing
21. Mainshaft Rear Bearing Race
22. Back-Up Light Switch
23. Magnet
24. Shift Detent Assembly
25. Case Rear Extension Pin

G99D54653

Fig. 3: Exploded View Of Transmission Case Components (2 Of 3)
Courtesy of GENERAL MOTORS CORP.

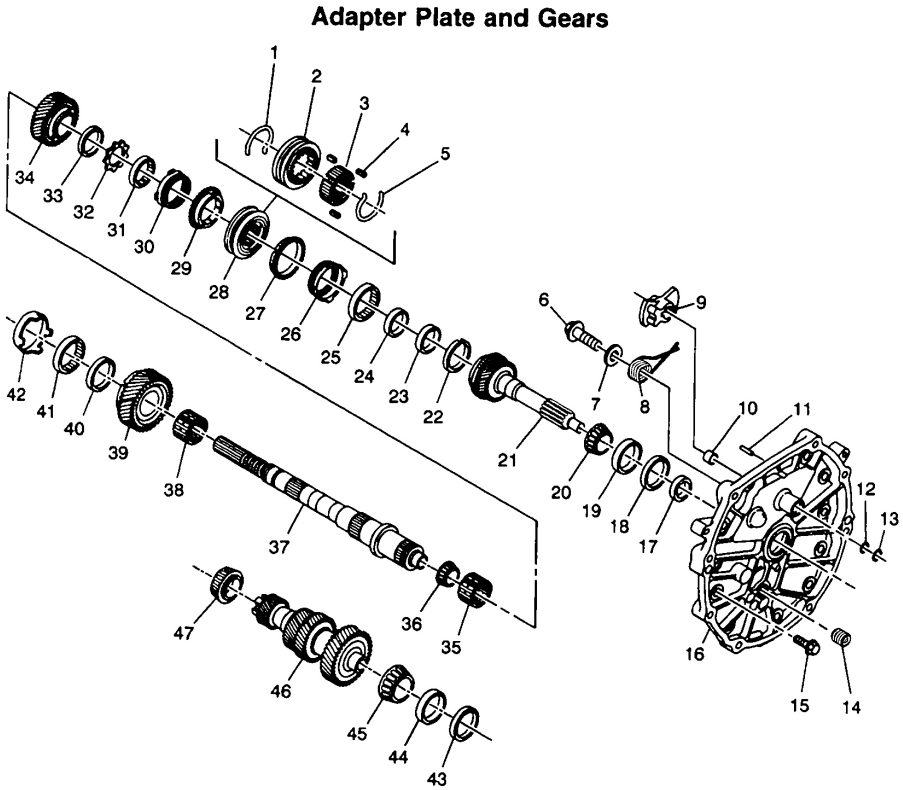

Legend

(1) 3rd /4th Synchronizer Spring
(2) 3rd /4th Synchronizer Sleeve
(3) 3rd /4th Synchronizer Hub
(4) 3rd /4th Synchronizer Key
(5) 3rd /4th Synchronizer Spring
(6) Neutral Return Cam Spring Bolt
(7) Neutral Return Cam Spring Washer
(8) Neutral Return Cam Spring
(9) Neutral Return Cam
(10) Top Shaft Rail Bushing
(11) Dowel Pin
(12) Inner Shift Shaft Seal
(13) Outer Shift Shaft Seal
(14) Adapter Plate Inspection Plug
(15) Adapter to Transmission Case Bolt
(16) Front Adapter Plate
(17) Input Shaft Seal
(18) Input Shaft Bearing Shim
(19) Input Shaft Bearing Race
(20) Input Shaft Bearing
(21) Input Shaft
(22) Input Shaft Bearing Race
(23) 3rd /4th Synchronizer Retaining Ring
(24) 4th Speed Drive Gear Thrust Washer
(25) 4th Speed Drive Gear Inner Cone
(26) 4th Speed Drive Gear Friction Cone
(27) 4th Speed Drive Gear Blocker Ring
(28) 3rd /4th Synchronizer Assembly
(29) 3rd Speed Drive Gear Synchronizer Blocking Ring
(30) 3rd Speed Drive Gear Friction Cone
(31) 3rd Speed Drive Gear Inner Cone
(32) 3rd Speed Drive Gear Thrust Washer
(33) 3rd Speed Drive Gear Thrust Washer
(34) 3rd Speed Drive Gear
(35) 3rd Speed Drive Gear Bearing
(36) Mainshaft Small Tapered Bearing
(37) Mainshaft
(38) 2nd Speed Drive Gear Needle Bearing
(39) 2nd Speed Drive Gear
(40) 2nd Speed Drive Gear Bearing Spacer
(41) 2nd Speed Drive Gear Inner Cone
(42) 2nd Speed Drive Gear Friction Cone
(43) Countershaft Bearing Adjust Shim
(44) Countershaft Bearing Race
(45) Countershaft Front Bearing
(46) Countershaft
(47) Countershaft Rear Bearing

G00060734

Fig. 4: Exploded View Of Transmission Case Components (3 Of 3)
Courtesy of GENERAL MOTORS CORP.

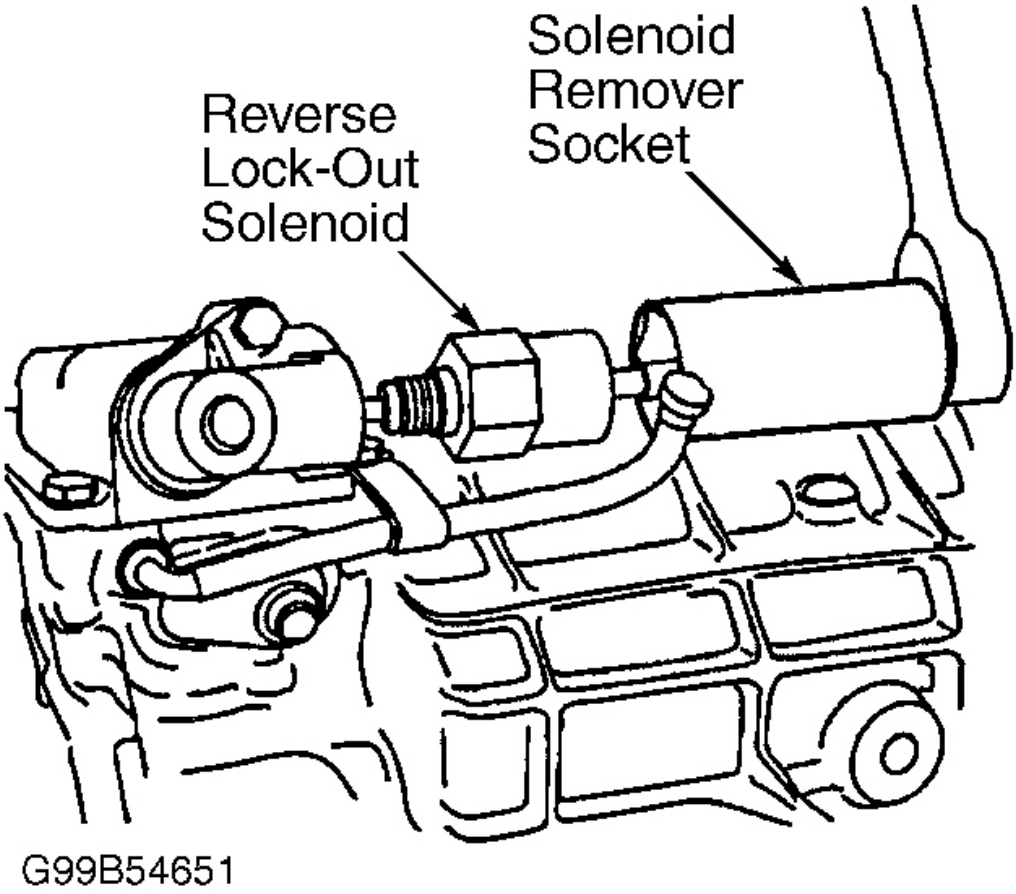

Fig. 5: Removing Reverse Lock-out Solenoid
Courtesy of GENERAL MOTORS CORP.

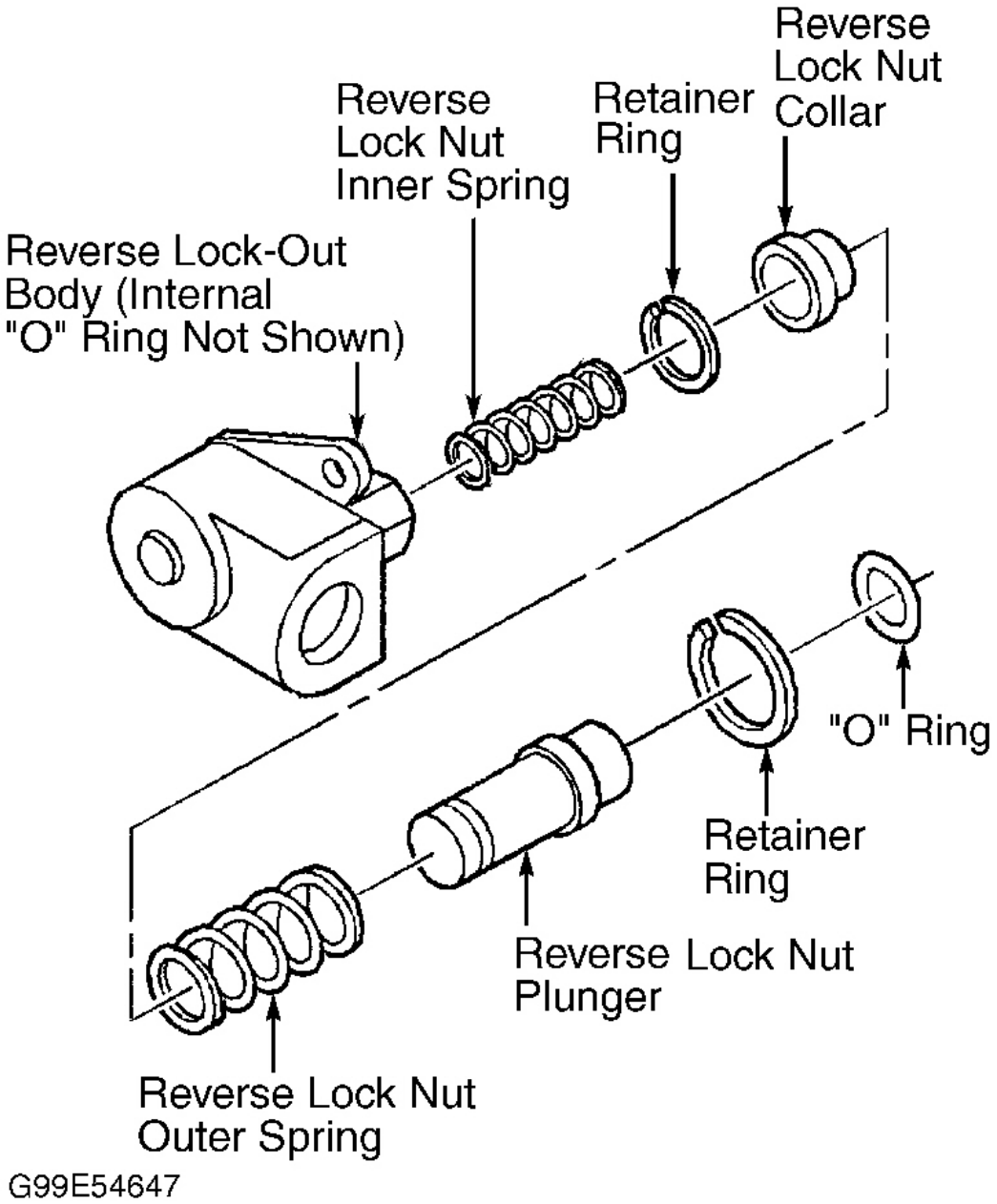

Fig. 6: Exploded View Of Reverse Lock-out Assembly
Courtesy of GENERAL MOTORS CORP.

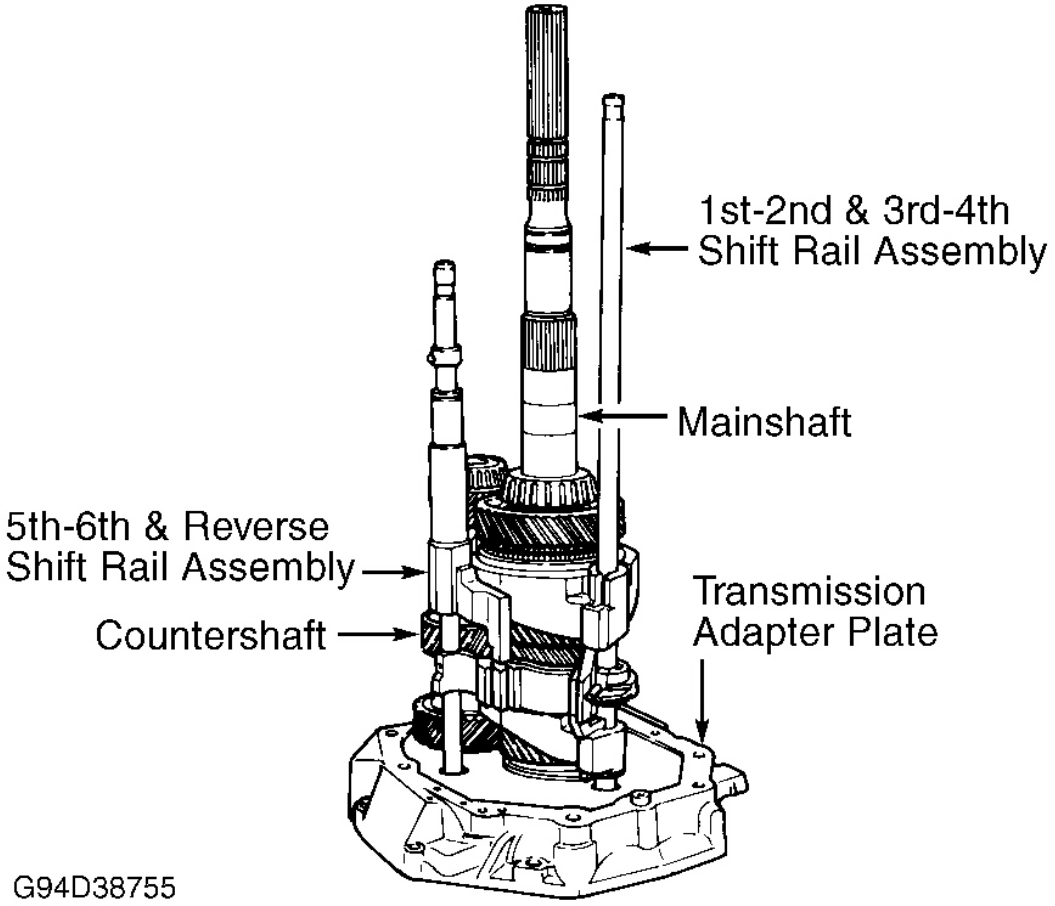

Fig. 7: Identifying Shift Rail Assemblies
Courtesy of GENERAL MOTORS CORP.

COMPONENT DISASSEMBLY & REASSEMBLY

INPUT SHAFT

NOTE: Do not remove input shaft bearing unless inspection indicates bearing damage. Replace bearing and race as an assembly, if necessary. For synchronizer disassembly and reassembly, see SYNCHRONIZER ASSEMBLIES .

Disassembly

Using bearing separator and hydraulic press, remove input shaft bearing from input shaft. Using

race remover and slide hammer, remove input bearing race.

Cleaning & Inspection

1. Clean components with solvent and dry with compressed air. DO NOT spin dry bearings. Inspect input shaft and spline for excessive wear or cracks. Inspect gear teeth for excessive wear, pitting, scoring, galling or breaks.
2. Inspect bearing for rough rotation, burred or pitted condition. If scuffed, nicked, burred or scored condition cannot be repaired with a soft stone or crocus cloth, replace components as necessary.
3. Install input shaft in adapter plate and install mainshaft on input shaft. Using feeler gauge, measure gap between 4th gear synchronizer ring and 4th gear. Replace 4th gear synchronizer ring if gap is less than .050" (1.27 mm).

Reassembly

Using press tube and hydraulic press, install input shaft bearing. Ensure bearing rotates smoothly after installation.

MAINSHAFT

Disassembly

1. Using bearing separator and press, remove large mainshaft bearing and discard "O" ring. Remove 1st gear, 1st gear needle bearing and bearing spacer. Remove 1st gear inner cone, friction cone and synchronizer ring. Remove snap ring. Scribe mark synchronizer hub and sleeve for reassembly reference. Ensure mating parts are kept together. Remove 2nd gear. 1st-2nd synchronizer assembly, synchronizer ring, friction cone and inner cone are removed with 2nd gear. See **Fig. 8** .

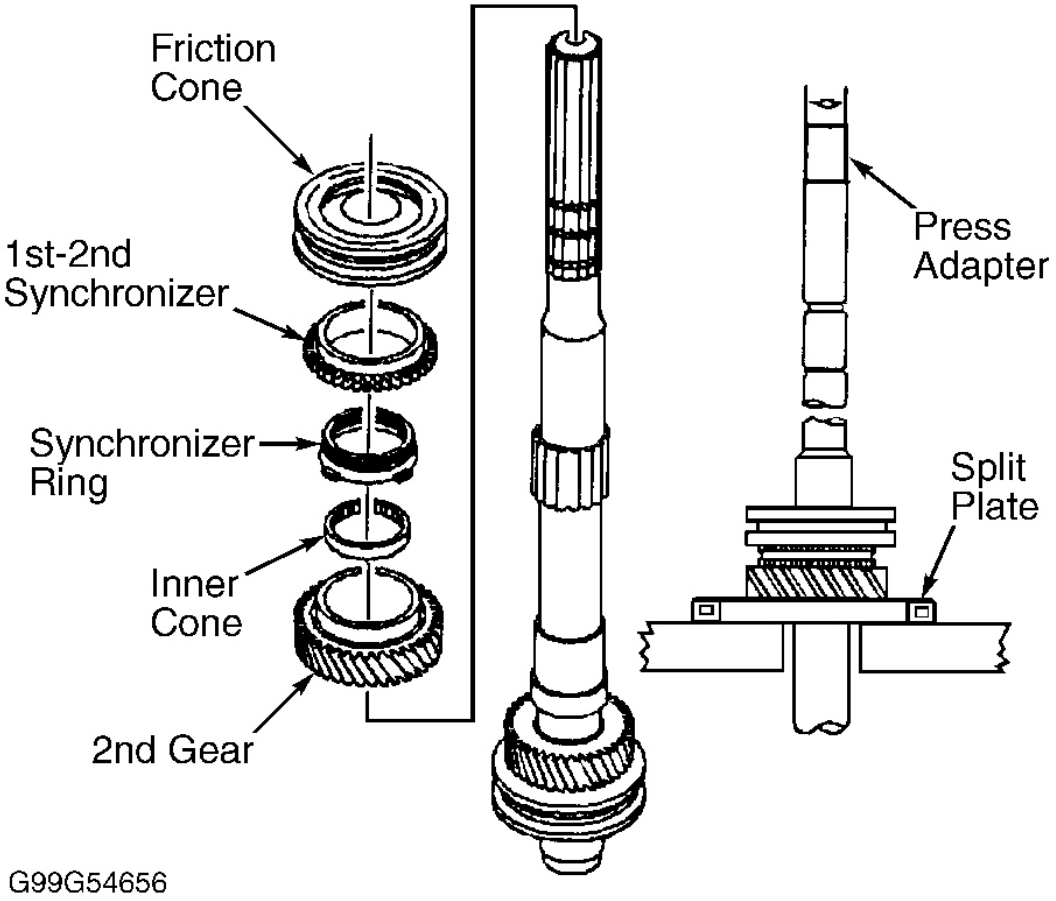

Fig. 8: Removing 2nd Gear Assembly From Mainshaft
Courtesy of GENERAL MOTORS CORP.

2. Remove 2nd gear spacer and needle bearing. Using appropriate bearing separator and hydraulic press, remove and discard small tapered bearing. Remove retainer, 4th gear thrust washer, inner cone, friction cone and synchronizer ring.
3. Scribe mark synchronizer sleeve and hub for reassembly reference. Using bearing separator, "V" blocks and hydraulic press, remove 3rd gear with 3rd-4th synchronizer assembly, 3rd gear synchronizer ring, 3rd gear friction cone, inner cone, thrust washer and spacer. Remove 3rd gear needle bearing.

Cleaning & Inspection

Clean components with solvent and dry with compressed air. Inspect mainshaft and spline for excessive wear or cracks. Inspect gear teeth for excessive wear, pitting, scoring, galling or breaks.

Inspect bearings for rough rotation, burred or pitted conditions. If scratches, grooves or nicks cannot be removed using a soft stone or crocus cloth, replace component as necessary.

Reassembly

1. Install mainshaft 3rd gear needle bearing, spacer and 3rd gear. Check for proper alignment of scribe marks on 3rd-4th gear synchronizer hub and sleeve. Press on 3rd-4th gear synchronizer assembly. Ensure keys engage with synchronizer ring slots. Lift and rotate 3rd gear to engage keys with synchronizer ring during assembly process until synchronizer is seated.
2. Using press tube and adapter with hydraulic press, press 3rd gear, thrust washer, inner cone, friction cone, synchronizer ring and 3rd-4th gear synchronizer assembly onto mainshaft. Ensure groove on sleeve faces 3rd gear. Install synchronizer snap ring. Install NEW mainshaft small tapered bearing.
3. Install 2nd gear needle bearing and spacer. Ensure synchronizer keys engage synchronizer ring slots. Lift and rotate 2nd gear to engage keys of synchronizer ring during assembly process until synchronizer is seated. Using press and plate, install 2nd gear, inner cone, friction cone and synchronizer ring. Install 1st-2nd synchronizer assembly. Ensure inside diameter groove on sleeve faces 1st gear.
4. Install snap ring, synchronizer ring, friction cone and inner cone. Install 1st gear bearing spacer, needle bearing 1st gear and large tapered bearing onto mainshaft.

COUNTERSHAFT ASSEMBLY

NOTE: Do not remove countershaft bearings unless inspection indicates bearing damage. Replace bearing and race as an assembly if necessary.

Disassembly

Using bearing separator and hydraulic press, remove and discard small tapered bearing from countershaft. Remove large tapered bearing from countershaft.

Cleaning & Inspection

1. Clean components with solvent and dry with compressed air. DO NOT spin dry bearings. Inspect countershaft for excessive wear or cracks. Inspect gear teeth for excessive wear, pitting, scoring, galling or breaks.
2. Inspect bearings for rough rotation or burred or pitted condition. If scuffed, nicked, burred or scored condition cannot be repaired with a soft stone or crocus cloth, replace components

as necessary.

Reassembly

Press on large tapered bearing. Using press tube and hydraulic press, install small tapered bearing. Ensure bearings rotate smoothly after installation.

COUNTERSHAFT EXTENSION ASSEMBLY

NOTE: Do not remove countershaft extension bearing unless inspection indicates bearing damage. Replace bearing and race as an assembly, if necessary.

Disassembly

1. Remove 5th-6th shift fork, 6th gear bearing spacer, drive gear, needle bearing and bearing spacer. Remove 5th-6th gear synchronizer snap ring and thrust washer. Remove 6th gear inner cone, friction cone and synchronizer ring. Discard snap ring.

   NOTE: 5th-6th synchronizer assembly and 5th gear synchronizer ring will press off with 5th gear.

2. Using bearing separator and hydraulic press, remove 5th gear. Remove 5th gear needle bearing. Using bearing separator, press adapter and hydraulic press, remove small tapered bearing.

Cleaning & Inspection

1. Clean countershaft extension components with solvent and dry with compressed air. DO NOT spin dry bearing. Inspect countershaft and spline for excessive wear or cracks. Inspect gear teeth for excessive wear, pitting, scoring, galling or breaks.
2. Inspect bearing for rough rotation or burred or pitted condition. If scuffed, nicked, burred or scored condition cannot be repaired with a soft stone or crocus cloth, replace components as necessary.

Reassembly

1. Using hydraulic press and appropriate accessories, install countershaft extension small tapered bearing (if removed). Install 5th-6th synchronizer assembly onto countershaft extension. Ensure synchronizer keys engage synchronizer ring slots during assembly process. Lift and rotate 5th gear to engage keys of synchronizer ring until synchronizer is fully seated.

2. Press on 5th drive gear needle bearing, drive gear, synchronizer ring, and 5th-6th synchronizer assembly. Ensure inner diameter groove on sleeve faces 5th gear. Install 6th gear spacer, needle bearing and 6th gear. Install 5th-6th shift fork.

SYNCHRONIZER ASSEMBLIES

NOTE: Identify synchronizer rings to gears prior to disassembly. DO NOT mix synchronizer rings. Synchronizer components are not interchangeable. Keep synchronizer components separate.

Disassembly

Scribe mark each synchronizer hub to its sleeve before disassembly. Using small screwdriver, remove synchronizer springs. Remove synchronizer sleeve and keys from hub. On reverse synchronizer assembly, remove spring, sleeve from hub (turn hub over and keys will slide out), key retainer and spring. Discard key retainer.

Cleaning & Inspection

1. Clean components with solvent and dry with compressed air. Inspect synchronizer for worn, nicked, burred or broken teeth. Replace hub and sleeve if excessive wear exists. Inspect keys and springs for wear, cracks or distortion. If scuffed, nicked or burred conditions cannot be repaired with a soft stone or crocus cloth, replace components as necessary.
2. Inspect synchronizer rings for excessive wear. Using feeler gauge, measure clearance between each synchronizer ring and gear. Ensure rings and gears are matched correctly and rings are fully seated on gear. If clearance for all rings except reverse is less than .050" (1.27 mm), replace appropriate synchronizer ring.
3. If clearance for reverse synchronizer ring is less than .050" (1.27 mm) when measured without wave washer between gear and ring, replace reverse synchronizer ring.

Reassembly

1. Install synchronizer sleeve to hub, aligning scribe marks made during disassembly. Align key openings in hub with cuts in synchronizer sleeve. Install keys with slots facing hub. Install one synchronizer spring, with locating spring tang to side of 2 keys for 1st-2nd synchronizer, spring tang to one of key slots on all other synchronizers.
2. Turn synchronizer assembly over. Install other synchronizer spring. On 1st-2nd synchronizer, locate spring tang to side of 2 keys so gap is not between same 2 keys as first spring. On all other synchronizers, locate spring tang on same key but in opposite direction. Install NEW synchronizer key retainer on reverse synchronizer with retainer tangs over

synchronizer keys.

SHIFT RAIL ASSEMBLIES

1st-2nd & 3rd-4th Shift Rail (Disassembly)

Remove neutral return cam pin from shift rail. Remove 1st-2nd shift fork from shift rail. Remove shift interlock plate from 1st-2nd shift fork. Remove 3rd-4th shift fork from shift rail. Remove shift interlock plate from 3rd-4th shift fork. Remove control select arm from gear select interlock plate. Remove 1st-2nd shift fork pin. Remove control select arm from shift rail. See **Fig. 9** .

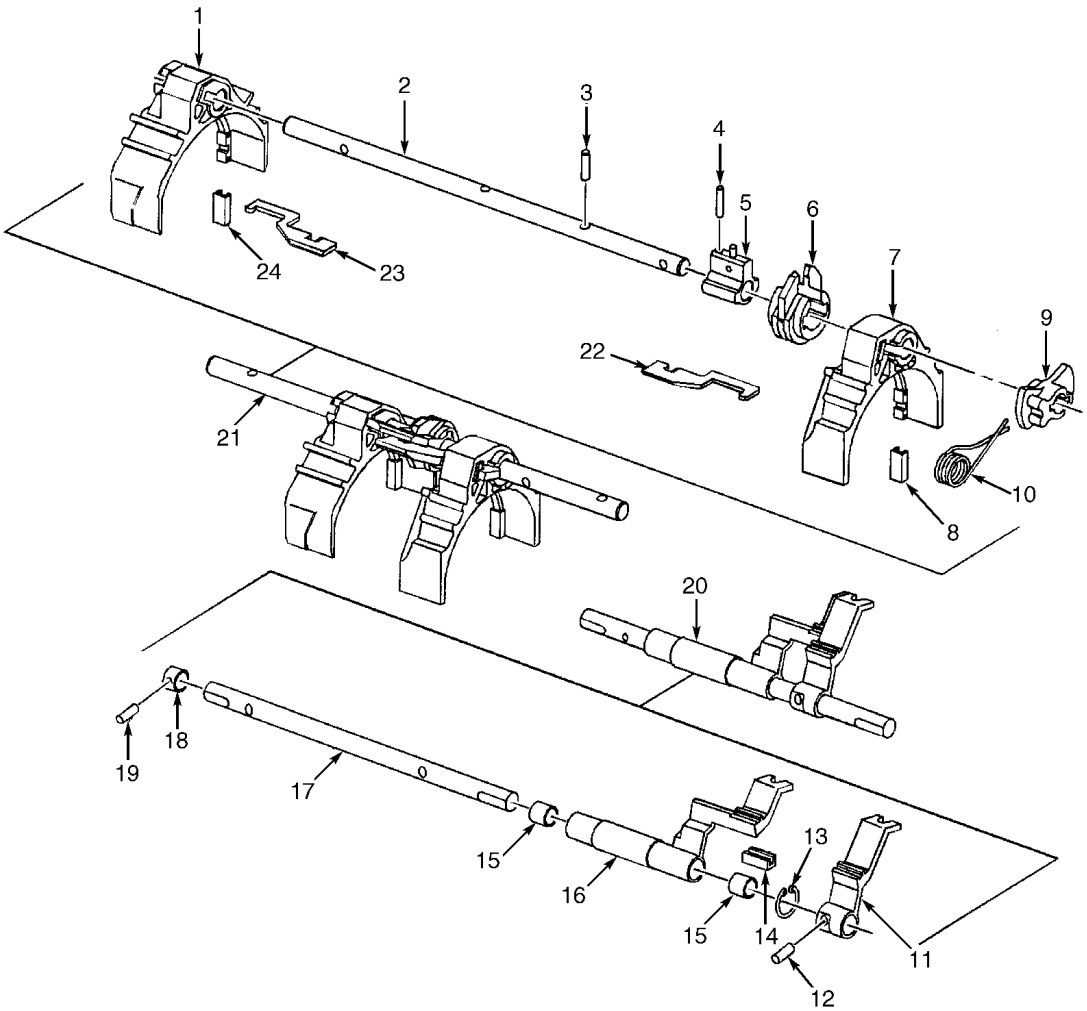

1. 1st-2nd Shift Fork
2. 1st-2nd & 3rd-4th Shift Rail
3. Neutral Return Cam Pin
4. 1st-2nd Shift Fork Pin
5. Control Select Arm
6. Gear Select Interlock Plate
7. 3rd-4th Shift Fork
8. 3rd-4th Shift Fork Pad
9. Neutral Return Cam
10. Neutral Return Cam Spring
11. Reverse Shift Rail Lever
12. Reverse Shift Lever Pin
13. Retaining Ring
14. 5th-6th Shift Lever Pad
15. 5th-6th Shift Rail Lever Bushing
16. 5th-6th Shift Rail Lever
17. 5th-6th Reverse Shift Rail
18. Collar
19. Reverse Shift Collar Pin
20. 5th-6th Shift Rail Assembly
21. 1st-2nd Shift Rail Assembly
22. Shift Interlock Plate
23. Shift Interlock Plate
24. 1st-2nd Shift Fork Pad

G99G54649

Fig. 9: Exploded View Of Shift Rail Assemblies
Courtesy of GENERAL MOTORS CORP.

Cleaning & Inspection

Clean components with solvent and dry with compressed air. Inspect shift rail for excessive wear or burrs. Inspect shift forks and shift links for excessive wear, breaks or distortion. Inspect shift fork nylon inserts for excessive wear. Replace components as necessary.

Reassembly

1. Install control select arm on shift rail. Align and install roll pin through control select arm shift rail. Install interlocking plate to control select arm. Install shift interlock plate in 3rd-4th shift fork and install to shift rail. Align notch on interlock plate with control select arm.
2. Install shift interlock plate in 1st-2nd shift fork. Install 1st-2nd shift fork on shift rail. Install 1st-2nd shift rail link on top of 3rd-4th shift rail link on interlocking plate and control select arm assembly. Use suitable holder to hold neutral return cam pin in place after pin is installed (pin fits loosely).

5th-6th & Reverse Shift Rail (Disassembly)

NOTE: Do not remove bushings unless inspection indicates bushing damage.

Remove reverse shift lever pin. Remove reverse shift rail lever from shift rail. Remove 5th-6th shift rail lever from rail. Remove retaining ring from 5th-6th shift lever. Using slide hammer and bushing remover, remove 5th-6th shift rail lever bushings. See **Fig. 9** .

Cleaning & Inspection

Clean components with solvent and dry with compressed air. Inspect shift rail for excessive wear or burrs. Inspect shift fork nylon insert for excessive wear. Inspect shift rail levers for excessive wear, fracture or distortion. Inspect shift rail lever bushings for excessive wear. Replace components as necessary.

Reassembly

Install 5th-6th shift rail lever bushings and 5th-6th shift rail lever, using bushing installer and a hammer. Install retaining ring on 5th-6th shift lever. Install 5th-6th shift lever on rail. Install reverse shift lever on shift rail. Install reverse lever roll pin.

TRANSMISSION ADAPTER PLATE

Disassembly

NOTE: Do not remove bushings unless inspection indicates bushing damage.

Remove neutral cam bolt, cam, washer and neutral cam spring. Remove input shaft and countershaft bearing races and shims. Remove adapter plate plug and input shaft seal. Using bushing remover and slide hammer, remove 1st-2nd and 3rd-4th shift rail bushings. Remove

dowel pins. See **Fig. 4** .

Cleaning & Inspection

Clean components with solvent and dry with compressed air. Inspect bearing races and bores for wear, scratches or grooves. Inspect bushings for excessive wear or burrs. Inspect case for cracks and replace if necessary. Inspect sealing surfaces for nicks, burrs or scratches. If scratches, grooves or nicks cannot be removed using a soft stone or crocus cloth, replace component as necessary.

Reassembly

1. Install dowel pins. Using bushing installer, install 1st-2nd and 3rd-4th shift rail bushings. Using seal installer, install input shaft seal. If end play measurement procedure has been performed, install selected shims in appropriate positions.
2. Measure end play. See **INPUT SHAFT, MAINSHAFT & COUNTERSHAFT SELECTIVE SHIM PROCEDURE** and **COUNTERSHAFT EXTENSION SELECTIVE SHIM PROCEDURE** under ADJUSTMENTS. Install countershaft and input shaft bearing races.

TRANSMISSION CASE

Disassembly

NOTE: Do not remove bearing races unless inspection indicates bearing race damage.

Remove fill plug. Remove back-up light switch and dowel pins. Using race remover, removing countershaft and mainshaft bearing races. Using bushing remover and drive handle, remove 1st-2nd and 3rd-4th shift rail bushing. See **Fig. 9** .

Cleaning & Inspection

Clean components with solvent and dry with compressed air. Inspect bearing races and bores for wear, scratches or grooves. Inspect bushing for excessive wear. Inspect transmission case for cracks and replace if necessary. Inspect for damaged threads, sealing surfaces for nicks, burrs or scratches. If scratches, grooves or nicks cannot be removed using a soft stone or crocus cloth, replace component as necessary.

Reassembly

Using bushing installer, install 1st-2nd and 3rd-4th shift rail bushings. Install mainshaft and

countershaft bearing races. Install dowel pins. Install back-up light switch and fill plug. Tighten to specification. See **TORQUE SPECIFICATIONS** .

EXTENSION HOUSING

Disassembly

NOTE: Do not remove bearing race unless inspection indicates bearing race damage.

1. Remove reverse idler shaft bracket bolts and bracket. Remove reverse idler gear and roller bearing. Remove reverse idler shaft. Remove countershaft extension bearing race, shim and funnel. See **Fig. 1** .
2. Remove outer and inner output shaft seals. Remove mainshaft bearing race snap ring. Using bearing race remover and drive handle, remove mainshaft bearing race.

Cleaning & Inspection

1. Clean components with solvent and dry with compressed air. Inspect bearing races and bores for wear, scratches or grooves. Inspect bushing for excessive wear or burrs.
2. Inspect housing for cracks and sealing surfaces for nicks, burrs or scratches. If scratches, grooves or nicks cannot be removed using a soft stone or crocus cloth, replace component as necessary. Use straight edge to check mating surface flatness.

Reassembly

Using bearing race installer and drive handle, install mainshaft bearing race and snap ring. Using seal installer, install inner output shaft seal with garter spring facing inward. Install output shaft outer seal with garter spring facing outward. Install sealant to drain plug threads and install. Tighten drain plug to specification. See **TORQUE SPECIFICATIONS** .

ADJUSTMENTS

INPUT SHAFT, MAINSHAFT & COUNTERSHAFT SELECTIVE SHIM PROCEDURE

1. Position transmission in vertical position. Install input shaft to adapter plate, 4th gear synchronizer ring to input shaft, and install mainshaft assembly. Lift mainshaft up and install countershaft. Install transmission case and case-to-adapter plate bolts. Tighten bolts to specification. See **TORQUE SPECIFICATIONS** .
2. Place tip of dial indicator on end of mainshaft. See **Fig. 10** . Measure input shaft/mainshaft end play by moving input shaft up and down. Record measurement. Select appropriate shim

to achieve 0-.002" (0-.05 mm) preload. Remove adapter plate plug to access end of countershaft. Remove dial indicator and place tip of dial indicator on end of countershaft. See **Fig. 11** .

3. Install Countershaft End Play Rod (J-39444-1) through adapter plate plug hole. See **Fig. 11** . Measure countershaft end play by moving countershaft up and down with end play rod. Record measurement. Select appropriate shim to achieve 0-.002" (0-.05 mm) preload. Remove end play rod tool.
4. Remove adapter plate-to-transmission case bolts. Remove transmission case and countershaft. Remove mainshaft from input shaft. Remove input shaft from adapter plate. Remove input shaft and countershaft bearing race. Install selective shim(s).

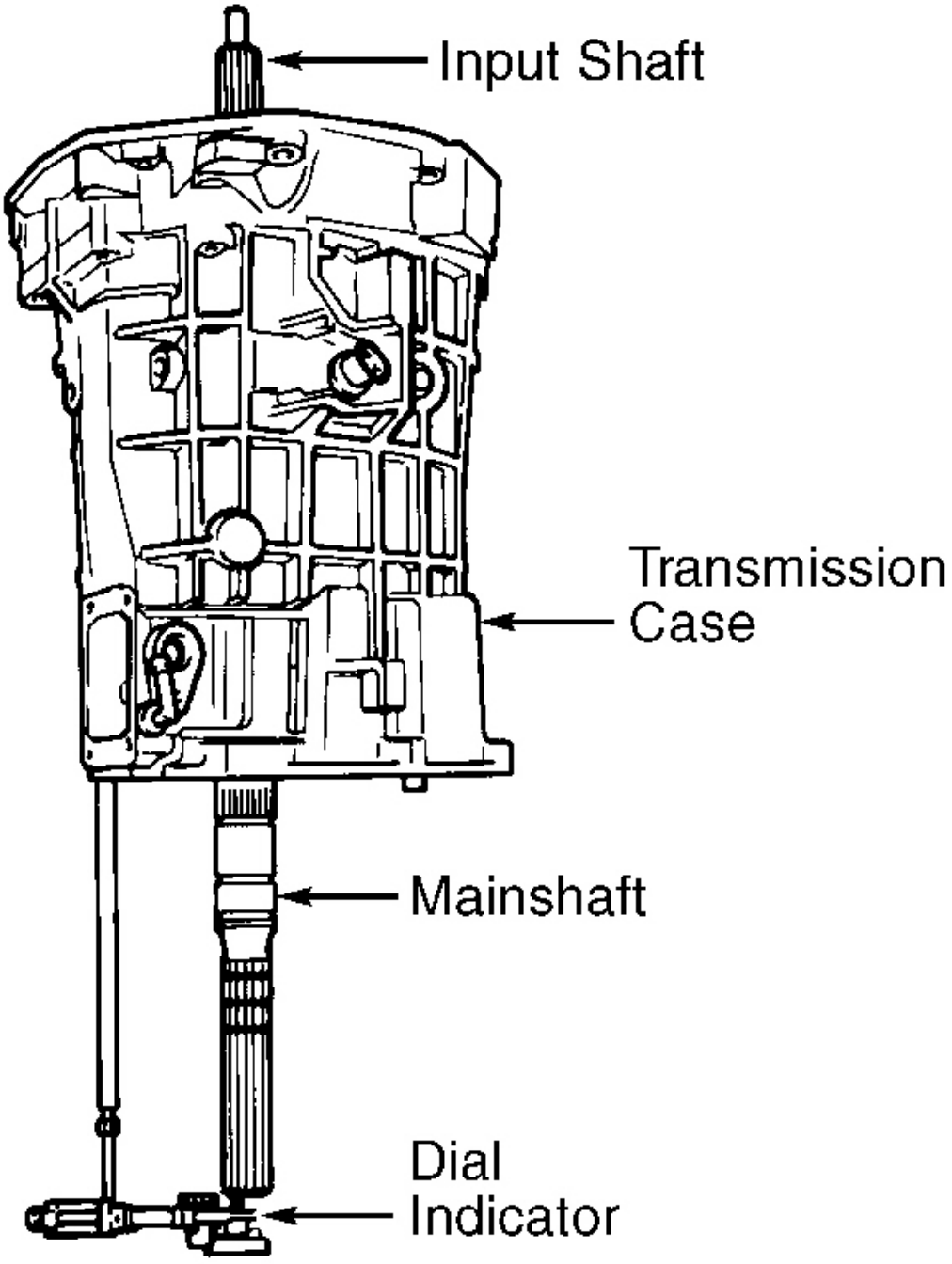

G94H38759

Fig. 10: Measuring Input Shaft & Mainshaft End Play
Courtesy of GENERAL MOTORS CORP.

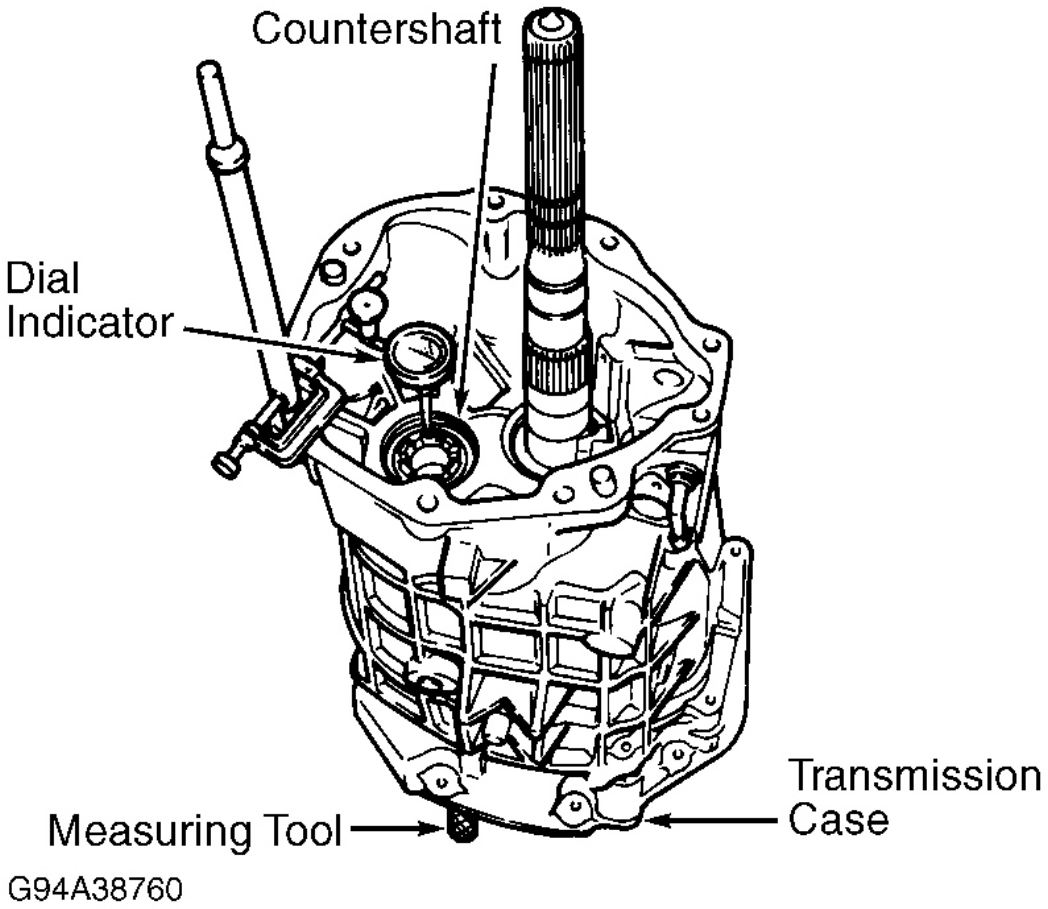

Fig. 11: Measuring Countershaft End Play
Courtesy of GENERAL MOTORS CORP.

COUNTERSHAFT EXTENSION SELECTIVE SHIM PROCEDURE

NOTE: This procedure cannot be performed accurately until countershaft selective shim procedure has been performed.

1. Position transmission in horizontal position. Install countershaft extension to countershaft, ensuring splines fully engage. Install extension housing and bolts. Tighten bolts to specification. See **TORQUE SPECIFICATIONS** . Remove adapter plate plug. Install

Countershaft Extension End Play Measuring Rod (J-39444-2) through adapter plate plug hole, and screw rod into countershaft extension. See **Fig. 12** .

2. Install dial indicator with tip on end of measuring rod. Position transmission in a vertical position. Measure countershaft end play using rod to move countershaft extension up and down. End play should be .002-.005" (.05-.13 mm). Select appropriate shim to obtain specification.
3. Remove dial indicator and measuring rod. Apply sealant to adapter plate plug threads and install. Tighten to specification. See **TORQUE SPECIFICATIONS** . Install selective shim. Install countershaft extension and bearing race. Install extension housing and bolts. Tighten to specification. See **TORQUE SPECIFICATIONS** .

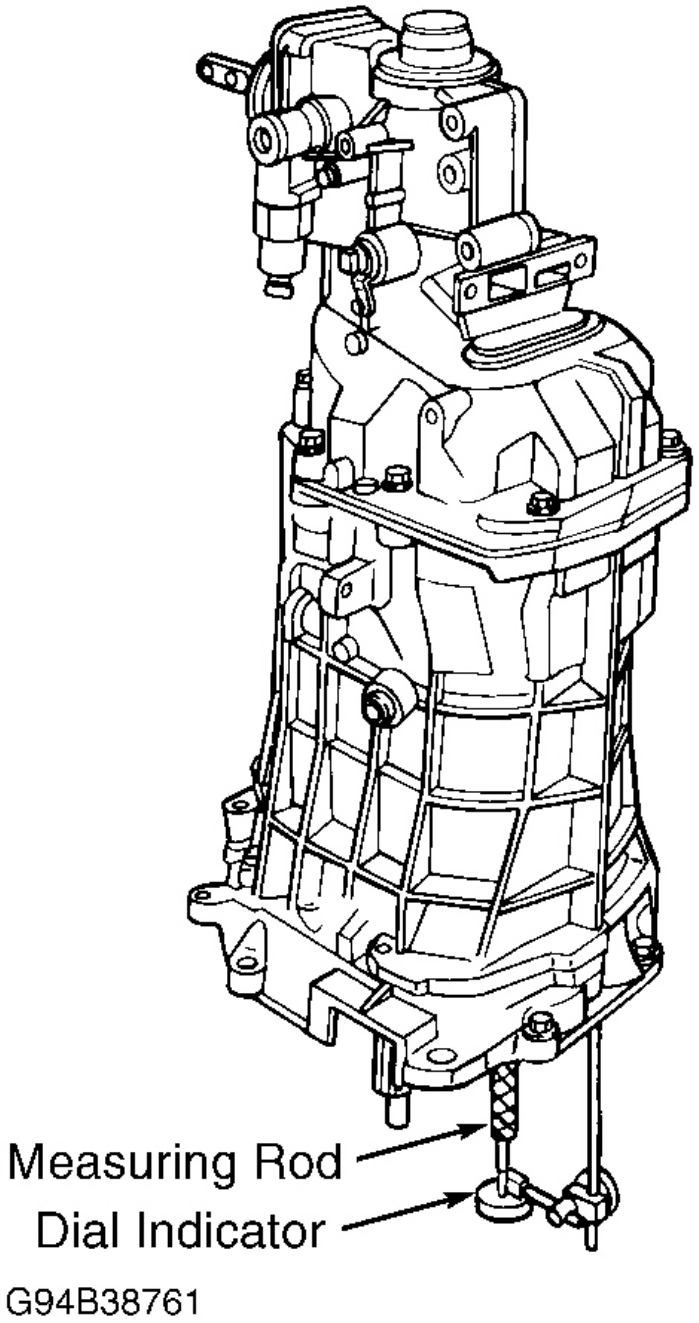

Fig. 12: Measuring Countershaft Extension End Play
Courtesy of GENERAL MOTORS CORP.

TRANSMISSION REASSEMBLY

1. Lubricate all components during reassembly process. Install appropriate selective shims onto adaptive plate. See **INPUT SHAFT, MAINSHAFT & COUNTERSHAFT SELECTIVE SHIM PROCEDURE** under ADJUSTMENTS. Install input shaft and countershaft bearing races. Install input shaft and 4th gear synchronizer assembly.
2. Install shift rail assembly to mainshaft assembly. Install mainshaft assembly with shift rail assembly. See **Fig. 7** . Lift mainshaft assembly enough to install countershaft assembly. Install countershaft assembly. Lift mainshaft assembly enough to rotate input shaft to engage synchronizer keys with 4th gear synchronizer ring.
3. Install 5th-6th and reverse shift rail. Align slots of shift rail levers with interlock plate. Install sealant at transmission case to adapter plate mating surface. Assemble ball detent in offset lever. Ensure transmission is in Neutral to keep 3rd-4th shift rail from engaging. Install offset shift lever. See **Fig. 2** . Compress front offset lever together while sliding onto shift rail to prevent spring release of inner components.
4. Slide transmission case onto gear clusters and shift rail components. Apply anaerobic sealer to threads of 2 shift lever guide bolts and install guide bolts. Pull up on 5th-6th and reverse shift rail assembly enough to align slot of shift interlock plate with guide hole. Tighten guide bolts to specification. See **TORQUE SPECIFICATIONS** .
5. Install adapter plate to transmission case bolts and tighten to specification. Install shift detent ball in neutral detent groove of shift guide plate. Install shift detent spring into front offset lever. Install front offset lever and spring to shift guide plate and ball. See **Fig. 2** .
6. Install guide plate and front offset lever together. Lubricate shift rail with assembly lube. Compress guide plate and front offset lever together while sliding onto shift rail to prevent spring release of inner components.
7. Install shift guide plate bolts and tighten to specification. Install front offset lever roll pin and shift detent assembly. Apply anaerobic sealer to threads of shift detent assembly. Tighten shift detent assembly to specification. See **TORQUE SPECIFICATIONS** .
8. Apply sealant to mating surface of cover and install cover. Install cover bolts and tighten bolts to specification. Install gear select solenoid. Install countershaft extension assembly and 5th-6th shift fork with transmission in horizontal position. Ensure splines of countershaft extension engage splines of countershaft. Install 5th-6th shift fork snap ring. See **Fig. 1** .
9. Using gear installer assembly, install 5th-6th gear with smaller outside diameter of gear facing down. Engage splines of 5th-6th gear to shaft splines prior to pressing gear onto shaft. Install reverse shift fork, synchronizer and thrust washer. Install NEW reverse shift fork snap ring. Install reverse synchronizer snap ring.
10. Install reverse gear synchronizer ring. Install wave washer so concave side faces synchronizer ring. Install needle bearing, reverse gear, thrust washer and snap ring. Install spacer, roller bearing, spacer and roller bearing snap ring.

11. Install one speedometer gear snap ring. Install speedometer gear using gear installer assembly. Install other speedometer gear snap ring. Install sealing ring. Install funnel to extension housing.
12. Install appropriate countershaft extension selective shim. See **COUNTERSHAFT EXTENSION SELECTIVE SHIM PROCEDURE** under ADJUSTMENTS. Install countershaft extension bearing race. Install reverse idler shaft and thrust washer.
13. Install roller bearing, reverse idler gear and thrust washer. Install reverse idler shaft bracket. Apply sealant to shift bracket bolt threads and install bolts. Tighten bolts to specification. Apply sealant at extension housing to transmission case mating surface. Align 5th-6th and reverse shift rail with extension housing bore and install extension housing. See **Fig. 1** .
14. Apply sealant to bolt threads retaining transmission bumper. Install extension housing bolts and transmission bumper. Tighten bolts to specification. See **TORQUE SPECIFICATIONS** . Install rear offset shift lever and isolator cup. Install rear offset shift lever roll pin.
15. Apply sealant at extension housing to shifter mating surface and install shifter. Tighten bolts to specification. Remove transmission from support fixture and holding fixture. Install clutch fork and "T" handle.
16. Apply sealant to clutch fork bolt threads and install bolt. Install clutch housing and clutch housing bolts. Tighten bolts to specification. Install vent tube.

TORQUE SPECIFICATIONS

TORQUE SPECIFICATIONS

Application	Ft. Lbs. (N.m)
Adapter Plate Plug	20 (27)
Adapter Plate-To-Transmission Bolt	36 (48)
Back-Up Light Switch	20 (27)
Cover Plate Bolt	15 (20)
Extension Housing Plug	20 (27)
Extension Housing-To-Transmission Bolt	36 (48)
Gear Select Solenoid	30 (40)
Intermediate Pipe-To-Muffler Bolt	36 (48)
Neutral Return Cam Spring Bolt	18 (25)
Reverse Idler Shaft Bracket Bolt	18 (25)
Reverse Lock-out Assembly Bolt	13 (18)
Reverse Lock-out Solenoid	30 (40)

Shift Detent Assembly Bolt	30 (40)
Shift Guide Plate Bolt	16 (22)
Shift Lever Guide Bolt	20 (27)
Transmission Case Drain & Fill Plug	13 (18)
Transmission-To-Driveline Support Assembly Bolt/Stud	36 (48)

TRANSMISSION SPECIFICATIONS

TRANSMISSION SPECIFICATIONS

Application	In. (mm)
Countershaft Preload	0-.002 (0-.05)
Countershaft Extension End Play	.002-.005 (.05-.13)
Input Shaft Preload	0-.002 (0-.05)
Synchronizer Clearance	.050 (1.27)