GROUP 01

CONTENTS

ENGINE REMOVAL AND INSTALLATION 01-4
- Foreword 01-4
- Removal 01-5
- Installation 01-9

ENGINE DISASSEMBLY 01-11
- Preliminary operations 01-11
- External parts 01-12
- Removal of fuel system components 01-14
- Fuel system components 01-16
- External components 01-17
- Removal of accessories 01-18
- Removal of the cylinder heads 01-21
- Engine block 01-22
- Removal of components from engine block 01-24
- Cylinder head 01-28
- Disassembly of the cylinder head on bench 01-30

CHECKING AND TESTING THE CYLINDER HEADS 01-36
- Checking and testing cylinder head and valves 01-36
- Checking cylinder head flatness 01-36
- Checking cylinder head bushings 01-36
- Checking valve seats 01-40
- Checking valve guides 01-41
- Checking the valves 01-42
- Checking valve springs 01-43
- Checking tappets and tappet seats 01-44
- Checking rocker arms and rocker arm shaft 01-44
- Checking camshafts and journal bearings 01-44

ASSEMBLY OF THE CYLINDER HEADS (ON BENCH) 01-46
- Installation of valves and rocker arm shafts 01-46
- Installation of camshaft 01-48

aptureEze97 engine...

CONTENTS (Contd.)

Valve clearance adjustment 01-49
Installation of distributor and oil pump drive pulley 01-50
Installation of camshaft drive pulley 01-51
Installation of intake stub pipes 01-51
Removal of cylinder head from the bench 01-51
CHECKING THE ENGINE BLOCK 01-52
Checking the engine block 01-52
Crankshaft 01-52
Main and connecting rod half-bearings 01-53
Main bearings and main bearing caps 01-54
Thrust rings 01-54
Cylinder liners 01-54
Disassembly of connecting rod-piston assembly 01-55
Reassembly of the connecting rod-piston assembly 01-58
Replacing flywheel ring gear 01-59
Replacing oil sump cover 01-59
ASSEMBLY OF ENGINE BLOCK 01-60
Crankshaft 01-60
Main bearing caps 01-60
Oil seal (rear) 01-62
Engine flywheel 01-62
Cylinder liners, pistons and connecting rods 01-63
Front cover 01-65
Crankshaft front pulley 01-65
Oil pump 01-66
Reinstallation of cylinder heads 01-69
Reinstalling of accessories 01-70
INSTALLATION OF FUEL SYSTEM COMPONENTS 01-79
Final operations 01-79
Replacing the rear cover silentbloc 01-80
LUBRICATION SYSTEM 01-81
Description 01-81
Checking the oil pressure 01-81

CONTENTS (Contd.)

SERVICE DATA AND SPECIFICATIONS 01-82
Technical data 01-82
General specifications 01-83
Checks and adjustments 01-85
Tightening torques 01-97
TROUBLE DIAGNOSIS AND CORRECTIONS 01-98
SPECIAL SERVICE TOOLS 01-100

ENGINE REMOVAL AND INSTALLATION

FOREWORD

This section contains all the data and procedures relating to the removal and installation of the engine fitted on the following Alfa Romeo vehicles:

- V6 2.5 milano (019.11)
- V6 3.0 milano (061.24)

Given that the operations involved in removing and installing the engine are somewhat numerous, the operator is urged to read the intervention procedures carefully and to examine with care the illustrations of the assembly that give an indispensable but of course incomplete overall view of the engine.

Following the above advice permits the correct operational techniques to be acquired and familiarizes the technician with the technical data, and caution and warning captions.

LOCATION OF ENGINE SUPPORTS

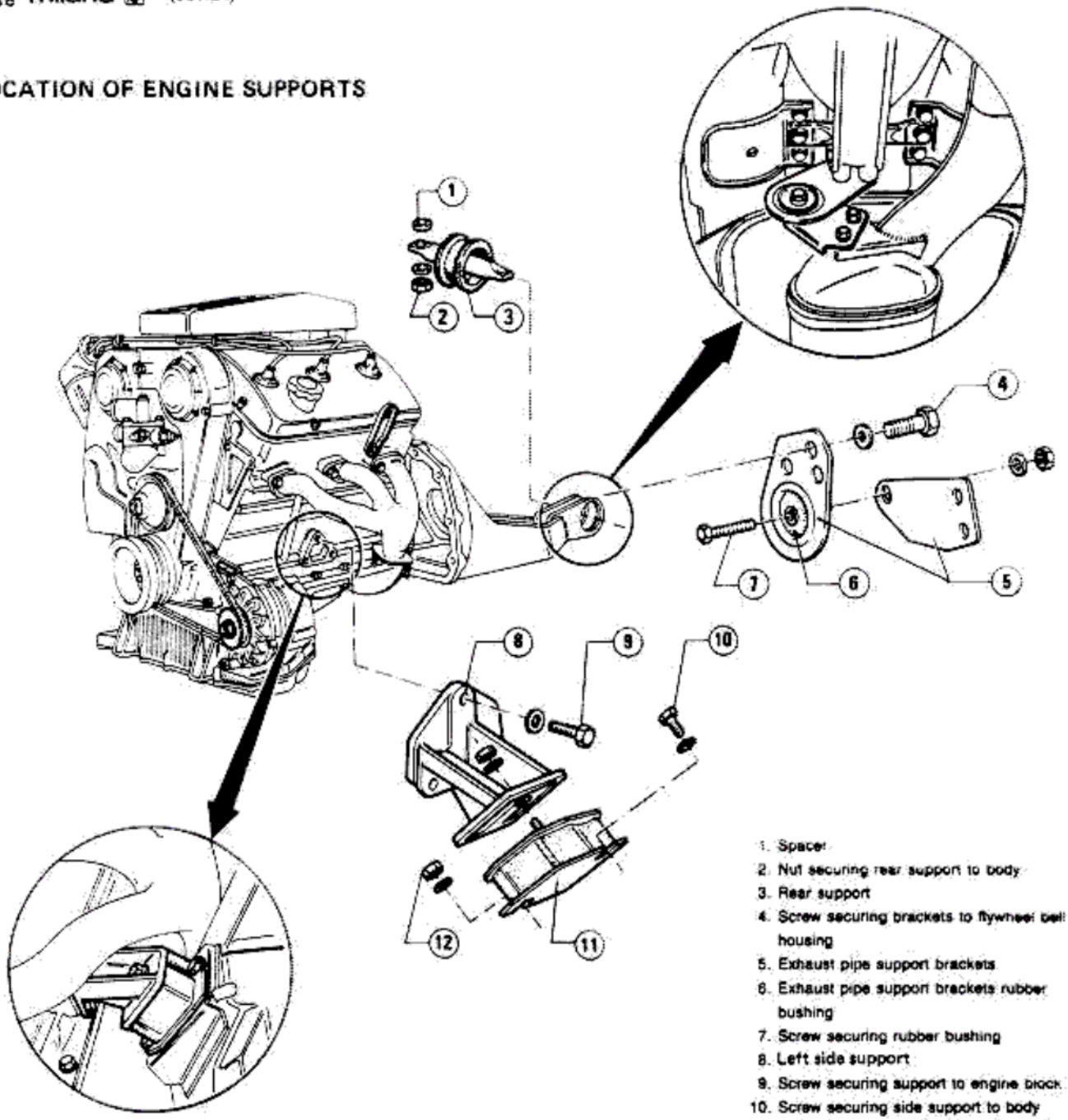

1. Spacer
2. Nut securing rear support to body
3. Rear support
4. Screw securing brackets to flywheel bell housing
5. Exhaust pipe support brackets
6. Exhaust pipe support brackets rubber bushing
7. Screw securing rubber bushing
8. Left side support
9. Screw securing support to engine block
10. Screw securing side support to body
11. Left side support flexible component
12. Nut securing side support to body

REMOVAL

1 Preliminary operations

a. Place the vehicle on a lift and lock the wheels with suitable safety chocks.
b. Open the hood and support it with the support rod provided.

WARNING:
Proceed with care when working on a hot engine to avoid being burned.

c. Disconnect the terminals from the battery, and the anchoring bracket, then remove the battery.
d. Support the hood, unscrew and remove the bolts securing the hinges, then tilt it back completely.

CAUTION:
Protect the hood contact areas with soft cloth.

WARNING:
For maximum safety, the hood should be kept in position using the method the operator considers most suitable.
Ignoring this advice can result in the hood closing unexpectedly.

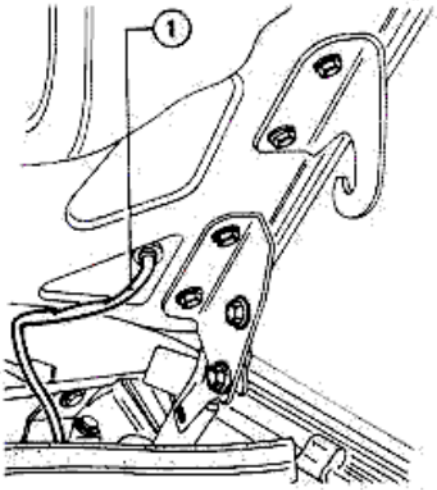

1 Engine compartment lamp wiring

For reference numbers in the following procedure refer to "View of Engine Compartment" relevant to the vehicle concerned.

e. Disconnect hose (19) from the singleacting valve on intake air box (18).

2. Removal of fuel and air supply system

a. Disconnect cable (60) from sensor (61) and extract it from bracket (62).
b. Disconnect the following hoses and sleeves, and remove them from the indicated part.
- Hose (12), from union on intake air box.
- Hose (49), from tappets cover.
- Hose (17), from intake air box (18).
- Hose (5), from corrugated sleeve (7).
- Hose (6), from auxiliary air device.
- Corrugated sleeve (7), from throttle body.

c. Unhook the securing clips and remove air cleaner cover (59) together with air-flow sensor (61), corrugated sleeve (7) and the hosing connected to it.
d. Remove the filtering element, then unscrew screws and nuts securing air cleaner container and remove it from the vehicle.
e. Disconnect the fuel tubing, and remove from indicated part.
- Hose (14), from fitting on manifold.
- Hose (44), from pressure regulator.

f. **[For 3000 engine]:**
- Disconnect hose (63) from corrugated sleeve.
- Disconnect hose (64) from air intake box.
- Disconnect hose (66) from throttle body.
- Disconnect hose (67) from ignition advance vacuum regulator on distributor or from hose (66).

WARNING:
- **Proceed with caution: the supply system may be under pressure.**
- **Keep tubing pointing upwards to prevent fuel escaping.**
  Ensure also, that the workshop is correctly equipped to enable operations to be performed safely.

3. Electric cables disconnection

a. Disconnect cables (33), (34), (35), (37) and (47) from thermostat (43).
b. Detach the harness of the above mentioned cables from the support brackets secured on the thermostat and timing belt protective covers.
c. Refer to the following figure and unscrew both securing screws and remove guard (3) of intake air box (2).

One of the two screws fixes the corresponding earth braid (1) to the intake air box.

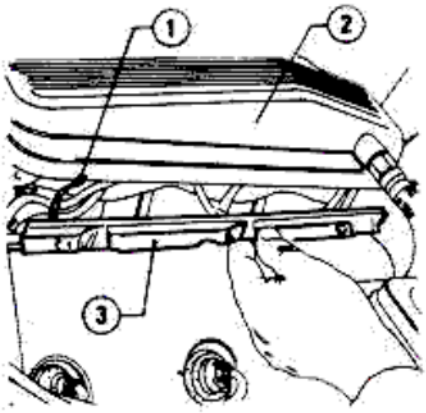

1 Intake air box earth braid
2 Intake air box
3 Guard

d. Refer to figure "View of Engine Compartment", and disconnect the following electric cables, and remove them from the part indicated.
- Cables (23), from the injectors.
- Cables (16), from the switch on the throttle.
- Cables (15), from the cold start injector.
- Cables (2) and (1), from the auxiliary air device.
- Cables (21), from bulb on engine block.
- Cables (20), from bulb on the cylinder head.
- Lambda sensor cables (4) and (3) from free connector near corrugated sleeve (7).
- Cables (8) and (10) from terminal board (9) on engine firewall.

- Alternator power supply cable (29) from positive battery cable.
- Cables (50), from ignition distributor.
- Cables (55), from compressor electromagnetic coupling connection.
- Ground cable (56) from air conditioner compressor.
- Cables (39), from connector.
- Cables (40), from thermal switch on radiator.
- Cables (31), from screw securing power steering pump support
- Cables (24), from coil.
- Cables (30) from connector in correspondence with the left side fender.
- Cables (28) and (27), from terminal board on left side fender.

CAUTION:
Detach the electric cables from any clamps, separate them from the propeller unit to prevent them obstructing the units removal.

4. Accelerator control cable disconnection

a. Turn the accelerator lever (11) and extract the end of the control cable.
b. Remove the sheath from bracket (13), extracting it from the lower part of the intake air box.

5. Removal of cooling system radiator and hosing

a. Disconnect the following hoses and sleeves, and remove them preferably from the part indicated.
- Sleeve (48), from radiator.

Place a suitable container under the vehicle to collect the coolant.

- Sleeve (46), from thermostat.
- Sleeve (45), from thermostat.
- Hose (51), from radiator.
- Hose (58), from 3-way union.

b. Unscrew screw (42) securing radiator (38) and remove it together with the electric fan.

6. Removal of air conditioner compressor

a. Unscrew nut (53) securing the belt-tensioner pulley, loosen the compressor drive belt and remove it.
b. Unscrew nut (54) and, working from under the vehicle, both screws securing the lower bracket to the engine block.
c. Move compressor (52) to the right side of the vehicle, and secure it.
d. If necessary, bleed Freon and disconnect hose unions (57) from compressor (52).

7. Removal of power steering pump

a. Loosen both screws securing power steering pump (26) to rear bracket (25).
b. Loosen the three screws securing bracket (32) to left side cylinder head.
c. Remove the power steering pump drive belt.
d. Remove both screws securing the power steering pump to front and rear brackets, then move the pump to the vehicle side, and secure it.

For the following operations refer to "View of Underbody".

8. Oil draining
(if necessary, depending on operations to be performed)

a. Raise the vehicle on the lift.
b. Unscrew plug (1) and drain engine oil. Screw plug back in after operation is completed.

9. Removal of exhaust pipe

a. Unscrew bolt securing clamp (21) and release Lambda sensor wiring.
b. Unscrew the two nuts securing catalytic converter (3) to each of the two exhaust manifolds.
c. Loosen clamp (12).
d. Unscrew the two bolts (16) securing the catalytic converter to support (17).
e. Unhook retaining rings (11) and remove catalytic converter (3) and exhaust pipe center section (13) having separated it from the tail section.

10. Removal of propeller shaft

a. Unscrew the securing screws and remove heatproof protection (15).
b. Remove center cross member (14), unscrewing the screws securing it to the body.
c. Remove boot (8), unscrew and remove bolt (6) and disconnect rod (7). If necessary, unscrew the four screws securing support (5), and move it to make removal of the propeller shaft easier.
d. Unscrew the bolts and remove engine flywheel protective cover (22).
e. With gearbox in neutral, rotate the propeller shaft, and alternately unscrew nuts (2) and bolts (10) that connect it to the engine flywheel and to clutch fork respectively.
f. Unscrew both screws (19) and disconnect engine rear support pin (20) from the body.
g. Unscrew both nuts (9) and disconnect the propeller shaft center support (4) from the body.
h. Unscrew the screws securing rear cross member to the body.
i. Raise the rear axle with a lift column fitted with support **A.2.0075** then remove the propeller shaft from the clutch fork.
l. Lower the column lift and remove the propeller shaft.

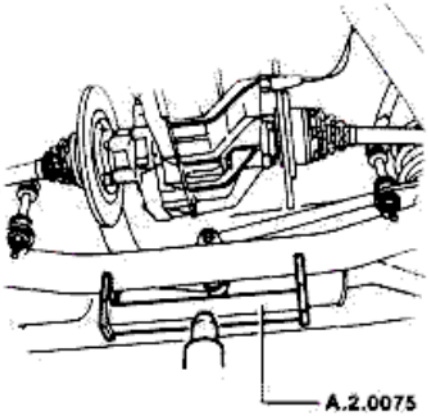

VIEW OF ENGINE COMPARTMENT V.8 milano

1 Ground cables
2 Auxiliary air device power supply cable
3 Lambda sensor connector
4 Lambda sensor resistance connector
5 Fuel vapor recirculation hose
6 Auxiliary air delivery hose for cold start
7 Corrugated sleeve
8 Starter energizing cable
9 Terminal board
10 Starter power supply cable
11 Accelerator control lever
12 By-pass hose for regulating idle speed
13 Bracket
14 Fuel to manifold delivery hose
15 Cold start injector power supply cable
16 Throttle opening position transmitter cable
17 Fuel vapor recirculation hose
18 Intake air box
19 Brake booster vacuum intake hose
20 Low oil pressure transmitter cable
21 Oil pressure transmitter cable
22 Intake air box earth braid
23 Injectors power supply cable
24 Coil high voltage cable
25 Power steering pump rear bracket
26 Power steering pump
27 Alternator warning lamp cable
28 Alternator power supply cable
29 Alternator power supply cable
30 Minimum oil level warning lamp cables (ALFA ROMEO Control)
31 Engine ground cable
32 Power steering pump front bracket
33 Coolant temperature warning lamp and indicator cables
34 Thermostat ground cable
35 Coolant temperature to electronic control unit transmitter cable
36 Fuel pressure regulator
37 Coolant temperature to ignition advance control unit transmitter cable
38 Radiator
39 Electric fan power supply cable
40 Electric fan enabling cable
41 Electric fan
42 Screw securing radiator
43 Thermostat
44 Excess fuel return hose
45 Coolant to thermostat return sleeve
46 Coolant to radiator delivery sleeve
47 Cold start thermal-switch cable
48 Coolant from radiator outlet sleeve
49 Oil vapor breather hose
50 Low voltage cable
51 Radiator breather hose
52 Air conditioning system compressor
53 Nut securing compressor belt-tensioner pulley
54 Nut
55 Compressor electromagnetic coupling power supply cable
56 Compressor ground cable
57 Freon from compressor inlet and outlet hose
58 Coolant to heater delivery hose
59 Air cleaner cover
60 Air-flow sensor cable
61 Air-flow sensor
62 Bracket

For vehicles fitted with ABS braking system

63 Cap
64 Brake and clutch fluid tank
65 Window wash liquid tank
66 Accumulator
67 Electropump unit
68 Electropump supply hose

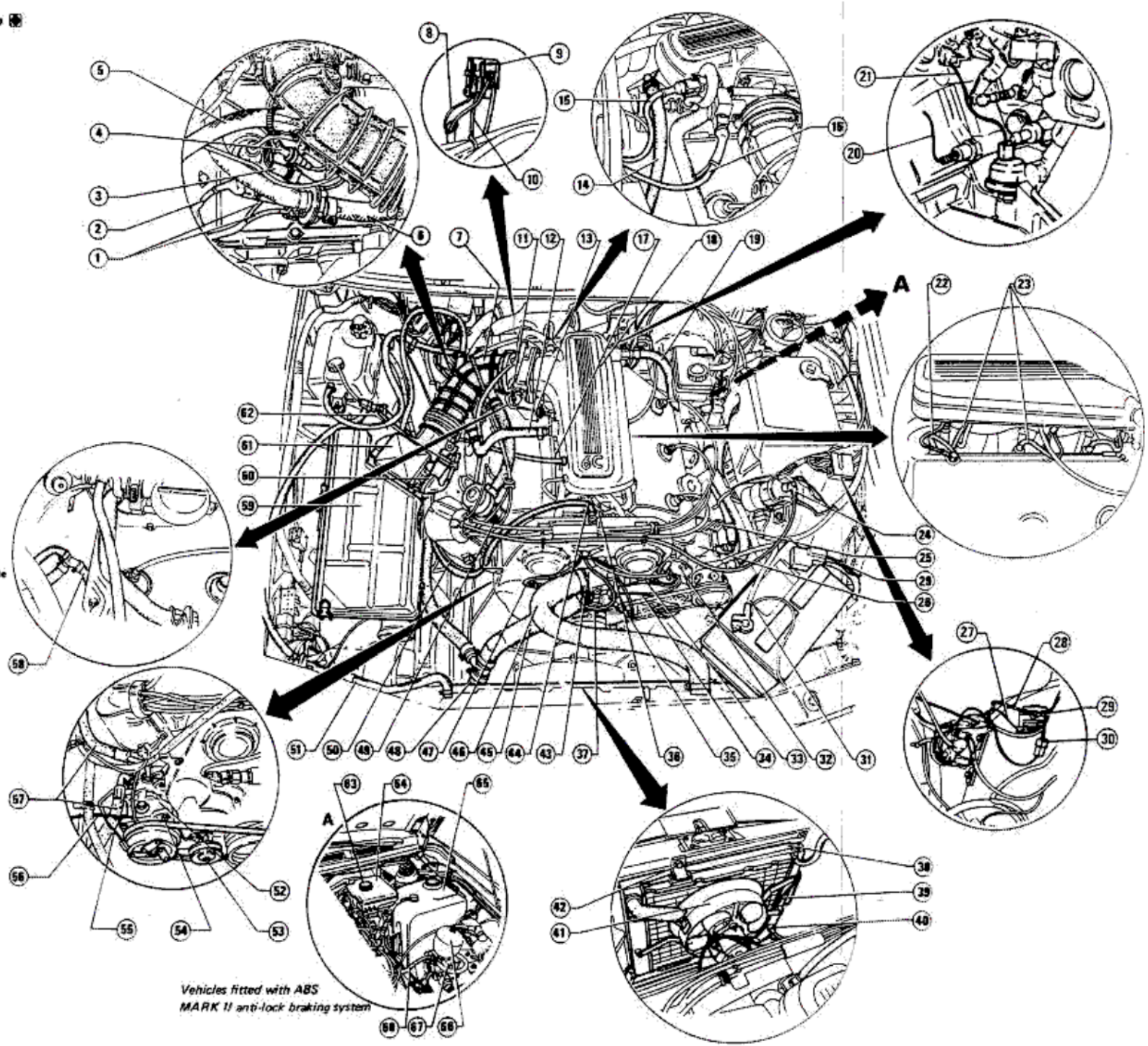

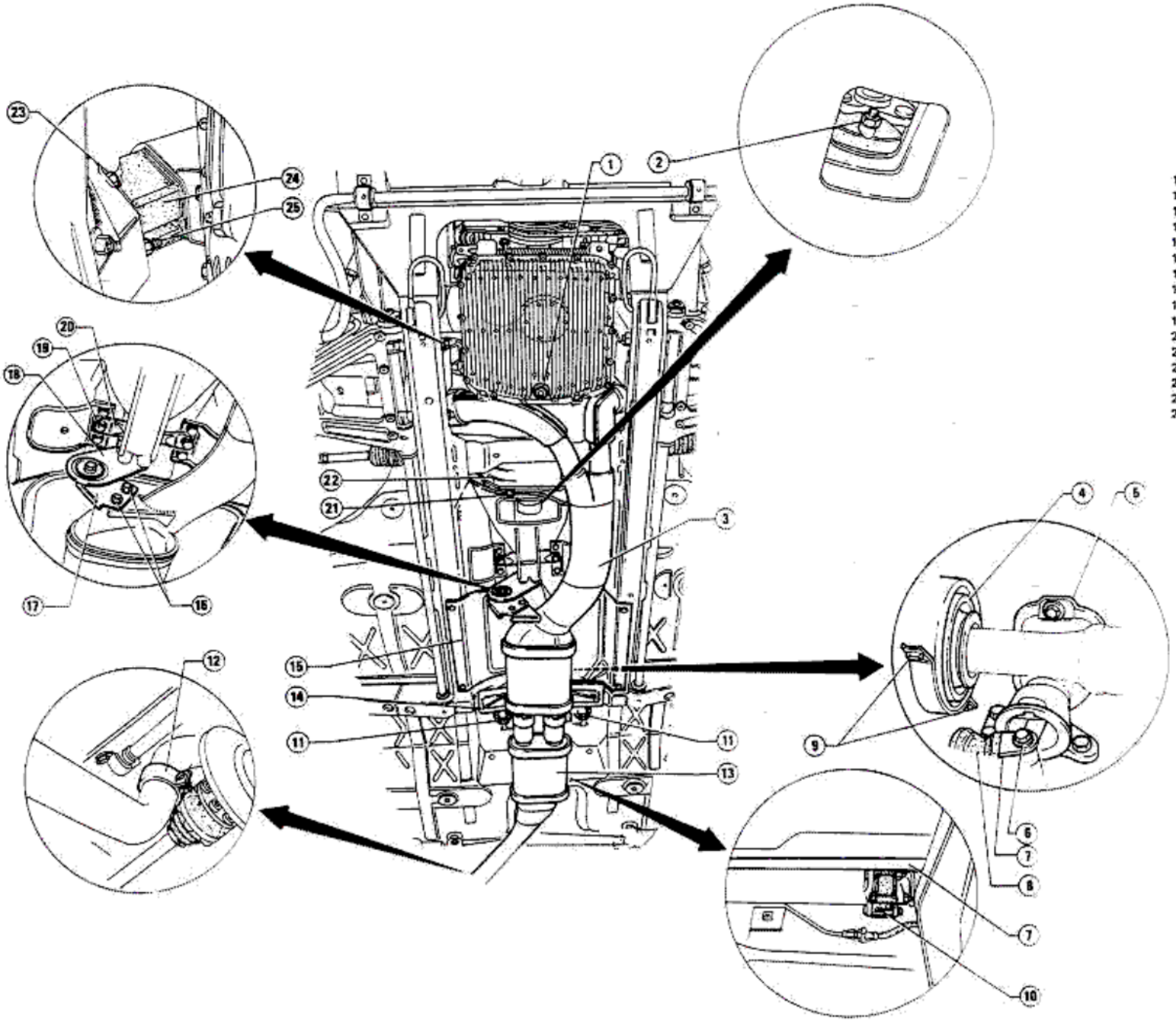

1 Oil drain plug
2 Nut securing front flexible coupling
3 Catalytic converter
4 Propeller shaft center support
5 Gearbox lever support
6 Bolt connecting gearbox rod-lever
7 Gearbox rod
8 Boot
9 Nuts securing propeller shaft center support
10 Bolt securing rear flexible coupling
11 Exhaust pipe support retaining rings
12 Clamp
13 Exhaust pipe center section
14 Center cross member
15 Heat proof protection
16 Bolts
17 Exhaust pipe support bracket
18 Bracket
19 Screw securing engine rear support to body
20 Engine rear support pin
21 Clamp
22 Engine flywheel cover
23 Screw securing upper part of engine side support
24 Engine side support
25 Nut securing lower part of engine side support

VIEW OF ENGINE COMPARTMENT V6 3.0 milano

1 Ground cables
2 Auxiliary air device power supply cable
3 Lambda sensor connector
4 Lambda sensor resistance connector
5 Fuel vapor recirculation hose
6 Auxiliary air delivery hose for cold start
7 Corrugated sleeve
8 Starter energizing cable
9 Terminal board
10 Starter power supply cable
11 Accelerator control lever
12 By-pass hose for regulating idle speed
13 Bracket
14 Fuel to manifold delivery hose
15 Cold start injector power supply cable
16 Throttle opening position transmitter cable
17 Fuel vapor recirculation hose
18 Intake air box
19 Brake booster vacuum intake hose
20 Low oil pressure transmitter cable
21 Oil pressure transmitter cable
22 Intake air box earth braid
23 Injectors power supply cable
24 Coil high voltage cable
25 Power steering pump rear bracket
26 Power steering pump
27 Alternator warning lamp cable
28 Alternator power supply cable
29 Alternator power supply cable
30 Minimum oil level warning lamp cables (ALFA ROMEO Control)
31 Engine ground cable
32 Power steering pump front bracket
33 Coolant temperature warning lamp and indicator cables
34 Thermostat ground cable
35 Coolant temperature to electronic control unit transmitter cable
36 Fuel pressure regulator
37 Coolant temperature to ignition advance control unit transmitter cable
38 Radiator
39 Electric fan power supply cable
40 Electric fan enabling cable
41 Electric fan
42 Screw securing radiator
43 Thermostat
44 Excess fuel return hose
45 Coolant to thermostat return sleeve
46 Coolant to radiator delivery sleeve
47 Cold start thermal-switch cable
48 Coolant from radiator outlet sleeve
49 Oil vapor breather hose
50 Low voltage cable
51 Radiator breather hose
52 Air conditioning system compressor
53 Nut securing compressor belt-tensioner pulley
54 Nut
55 Compressor electromagnetic coupling power supply cable
56 Compressor ground cable
57 Freon from compressor inlet and outlet hose
58 Coolant to heater delivery hose
59 Air cleaner cover
60 Air-flow sensor cable
61 Air-flow sensor
62 Bracket
63 Hose for air delivery to intake air box from A.C. solenoid
64 Hose for air delivery to A.C. solenoid
65 Air conditioner solenoid
66 Vacuum hose for purge control valve
67 Vacuum intake hose for ingition advance vacuum regulator
68 Purge control valve

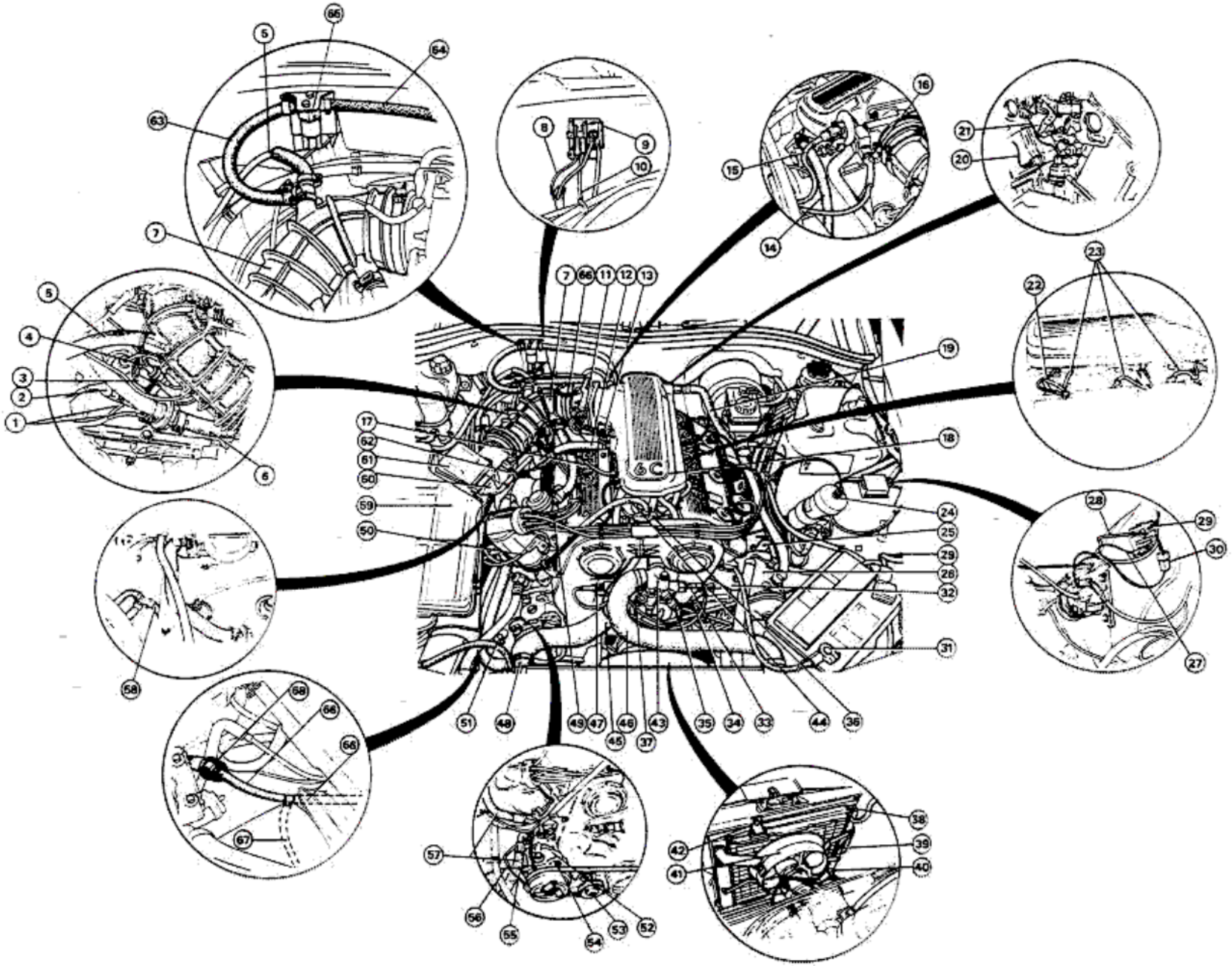

11. Final operations

a. Unscrew the three securing screws and remove bracket (18) from the engine rear support.
b. Fit a suitable operating lever on the engine rear support to aid engine removal operations.
c. Unscrew and remove nuts (25) securing the lower part of side supports (24).
d. Lower the lift, then unscrew and remove screws (23) securing the upper part of side support (24).
e. Hook the engine on the lifting brackets, lift it out of the engine compartment with a hoist, positioning it with the operating lever.

CAUTION:
Proceed with great care to avoid damaging the servo-assisted steering box.

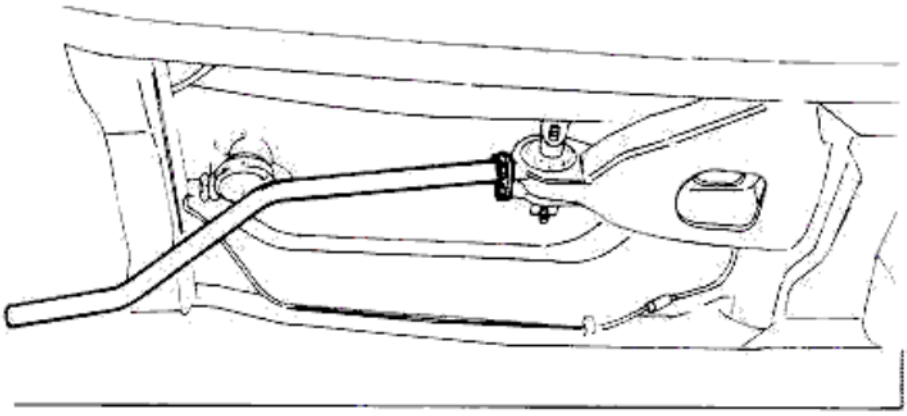

INSTALLATION

For the following operations refer to "View of Underbody".

CAUTION:
Proceed with great care to avoid damaging the servo-assisted steering box.

1. Preliminary operations

a. Fit the operating lever on the engine rear support.
b. Hook the engine on the appropriate lifting bracket, and using a hoist, drop it slowly into the engine compartment, positioning it as necessary with the operating lever.
c. Center the engine in its compartment, resting it on the two side supports, and make sure that the screw and stud holes correspond on both supports.
d. Insert and lock, on both sides, screws (23) securing the flexible supports to the body.
e. Lift the vehicle, screw and lock, on both sides, nuts (25) securing the lower part of the flexible supports to the body.
f. Remove the operating lever from the engine rear support.
g. Refit bracket (18) on the engine rear support and secure it with the three screws.

2. Installation of propeller shaft

a. Reinstall the complete propeller shaft unit on the vehicle by reversing the removal procedure and observing the following instructions.
- **Lubricate** propeller shaft front bush and the rear coupling spherical seat with **5 cm³ (0.30 cu·in)** of **ISECO MOLYKOTE BR2** grease.
- Rotate the propeller shaft a little at a time, blocking it in a suitable way, and tightening the flexible coupling bolts and nuts to the specified torque.

(T) : **Tightening torque**
Nuts and bolts securing the propeller shaft flexible couplings to the engine flywheel and clutch fork
55 to 57 N·m
(40.5 to 42.0 ft·lb;
5.6 to 5.8 kg·m)

- Lock the nuts securing propeller shaft center support to vehicle floor.

(T) : **Tightening torque**
Nuts securing propeller shaft center support
93 to 103 N·m
(70.0 to 77.4 ft·lb;
9.5 to 10.5 kg·m)

b. Secure engine rear support pin (20) to body.
c. Refit engine flywheel protective cover (22).
d. Reconnect rod (7) to gearbox lever with bolt (6), then fit boot (8).
e. Secure center cross member (14) to the body.
f. Refit heatproof protection (15).

3. Installation of exhaust pipe

a. Reconnect exhaust pipe center section (13) to tail section and hook up retaining rings (11).
b. Secure exhaust pipes to corresponding manifolds, inserting new gaskets.
c. Secure the catalytic converter to bracket (17) with bolts (16).
d. Shake the exhaust pipe to bring it into line.
e. Tighten all exhaust pipe fasteners and clamp (12).
f. Position Lambda sensor wiring and secure it with corresponding clamp (21).

For the following operations refer to "View of Engine Compartment".

4. Installation of power steering pump

a. Position power steering pump (26), secure it to front bracket (32), and lock both screws.
b. Screw, without locking, the two screws securing the pump to the rear bracket.

c. Fit the drive belt on the pulleys, move the pump outwards to obtain specified belt tension, then lock the securing screws on front and rear brackets.

Load to be applied to belt center
P = 15 to 30 kg (33.1 to 66.1 lb)

Deflection
F = 13 mm (0.51 in)

5. Installation of air conditioner compressor

a. Reconnect compressor lower bracket to engine block securing it from under the vehicle with the corresponding screws.
b. Refit compressor drive belt, and lock nut (54).
c. Restore correct tension to compressor drive belt and lock nut (53).

Load to be applied to belt center
P = 20 to 35 kg (44.1 to 77.2 lb)

Deflection
F = 14 mm (0.55 in)

d. If hose unions (57) are disconnected, secure them to compressor (52).

6. Installation of radiator

Refit radiator together with electric fan, then reconnect cooling system tubing by reversing the order of the procedure described in "Removal" step 5.

7. Electrical connections

Restore electrical connection, reversing the order of the procedure described in "Removal" - step 3.

8. Installation of accelerator control cable

a. Insert the accelerator control cable with sheath under the intake air box, and position it on bracket (13).
b. Rotate lever (11) and hook up the end of the accelerator control cable.

9. Air and fuel supply system

Restore air and fuel supply system by reversing the procedure described in "Removal" - step 2.

10. Final operations

a. Reconnect servobrake vacuum intake hose (19) to single - acting valve on intake air box.
b. Position battery in its compartment and secure it with the appropriate bracket.
c. Refill and adjust the following
- Engine oil
- Engine coolant
- Power steering system oil level
- Air conditioning system Freon
- Timing check
- Accelerator control cable adjustment
- Engine idle speed adjustment
- Adjustment of percentage of exhaust CO at idle
- Electric fan activation check on engine at normal running temperature

d. Release the hood, support it and reconnect bolts securing hinges on both sides of the vehicle.

ENGINE DISASSEMBLY

PRELIMINARY OPERATIONS

a. Remove the engine group from the vehicle using the procedures described in the paragraph «Engine Removal and Installation» for the vehicle in question.

b. Prepare the engine assembly for installation on the rotating engine overhaul stand by placing it on the bench and lifting by means of a suitable hoist (if possible a hydraulic type).

c. **Removal of the exhaust manifolds and starting motor**

— From the right side of the engine remove the nuts with washers (1) and unscrew the three screws (2) retaining the exhaust manifolds to the right cylinder head.

— Remove the exhaust manifolds (3) and heat shield (4) protecting the starting motor.

— Slacken and remove nuts and washers (5) from screws (6) retaining the starting motor.

— Remove the starting motor (7) with relative wiring (8) by sliding it out from the brackets (9) on the rear cover.

— Proceed in a similar way for the removal of the exhaust manifolds from the left side of the engine.

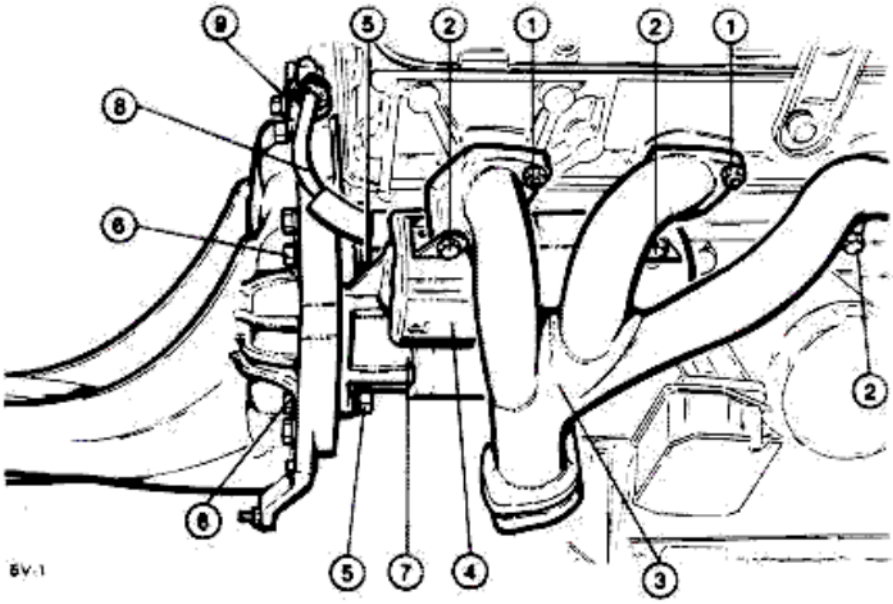

1. Nuts and washers
2. Screws
3. Exhaust manifolds
4. Heat shield
5. Nuts and washers
6. Screws
7. Starting motor
8. Wiring
9. Brackets

d. **Removal of rear cover**

— Unscrew the two upper screws (1) to recover the two brackets (2) supporting the starting motor wiring bundle.

— Unscrew the remaining screws (3) and remove the rear cover (4).

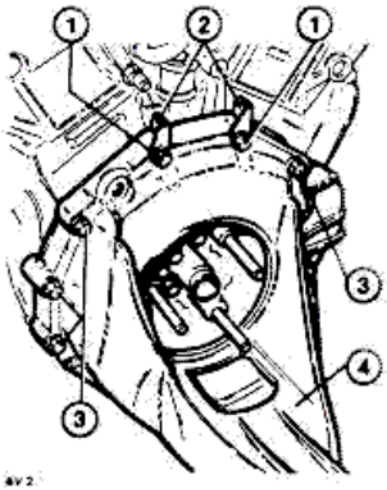

1. Upper screws
2. Wiring support brackets
3. Screws
4. Rear cover

e. Slacken and remove the washers and nuts (1) and remove the engine supports (2) on both sides of the engine block.

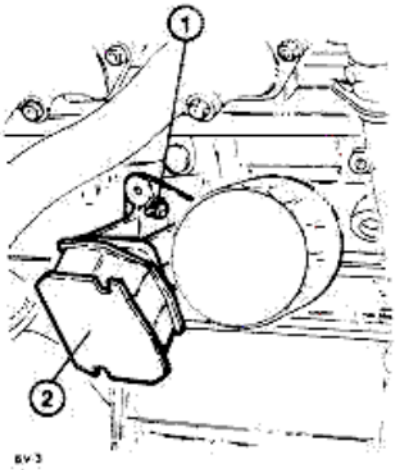

1. Nuts and washers
2. Engine supports

f. Install the motor support brackets (1) and secure them to the engine block by means of the nuts with washers for fixing the engine supports.

g. Place the engine assembly on the overhaul stand (2) using a suitable hoist. Secure the engine support brackets (1) to supports (3) of the rotating engine overhaul stand by means of bolts (4).

h. Remove the engine oil dipstick; remove the drain plug of the lower sump and drain the engine oil (operation to be performed if the oil has not been discharged during the «Engine Removal»).

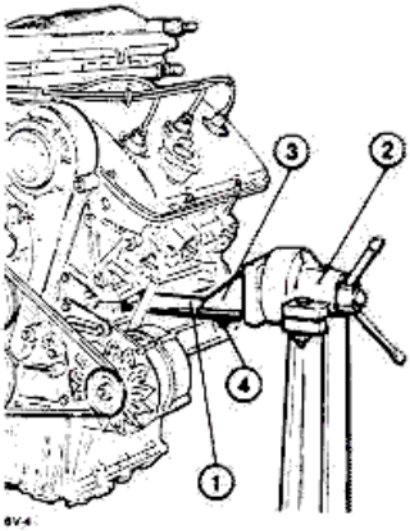

6V-4

1. Engine support brackets
2. Rotary engine overhaul stand
3. Rotary stand supports
4. Bolts

EXTERNAL PARTS (Cylinder heads and engine block)

1. Oil sump cover
2. Oil sump cover gasket
3. Oil sump
4. Oil sump gasket
5. Front cover gasket
6. Front cover
7. Front cover retaining screws
8. Front oil seal
9. Back up washer
10. Camshaft drive pulley
11. Crankshaft pulley
12. Spacer
13. Lock washer
14. Crankshaft pulley locknut
15. Hydraulic belt stretcher
16. Belt stretcher locknut
17. Distributor and oil pump drive belt
18. Pulley retaining screws
19. Camshaft drive belt
20. Left guard
21. Guard retaining screws
22. Right guard
23. Camshaft hub covers
24. Guard joining bolt
25. Spark plug cable clamps
26. Toothed pulley locknut
27. Toothed pulley hub
28. Hub retaining screws
29. Seal ring
30. Hub and toothed pulley support
31. Camshaft drive pulley
32. Camshaft drive key
33. Cylinder head gasket
34. Cylinder head cover gasket
35. Cylinder head cover
36. Plug gasket
37. Oil filler plug
38. Cylinder head cover screws
39. Nuts securing cylinder head to engine block
40. Rear bushing or bearing of crankshaft
41. Engine flywheel
42. Screws securing flywheel to crankshaft
43. Lock washer
44. Screws securing flywheel to clutch group
45. Oil sump retaining screws
46. Oil pump
47. Oil pump retaining screws
48. Oil drain plug

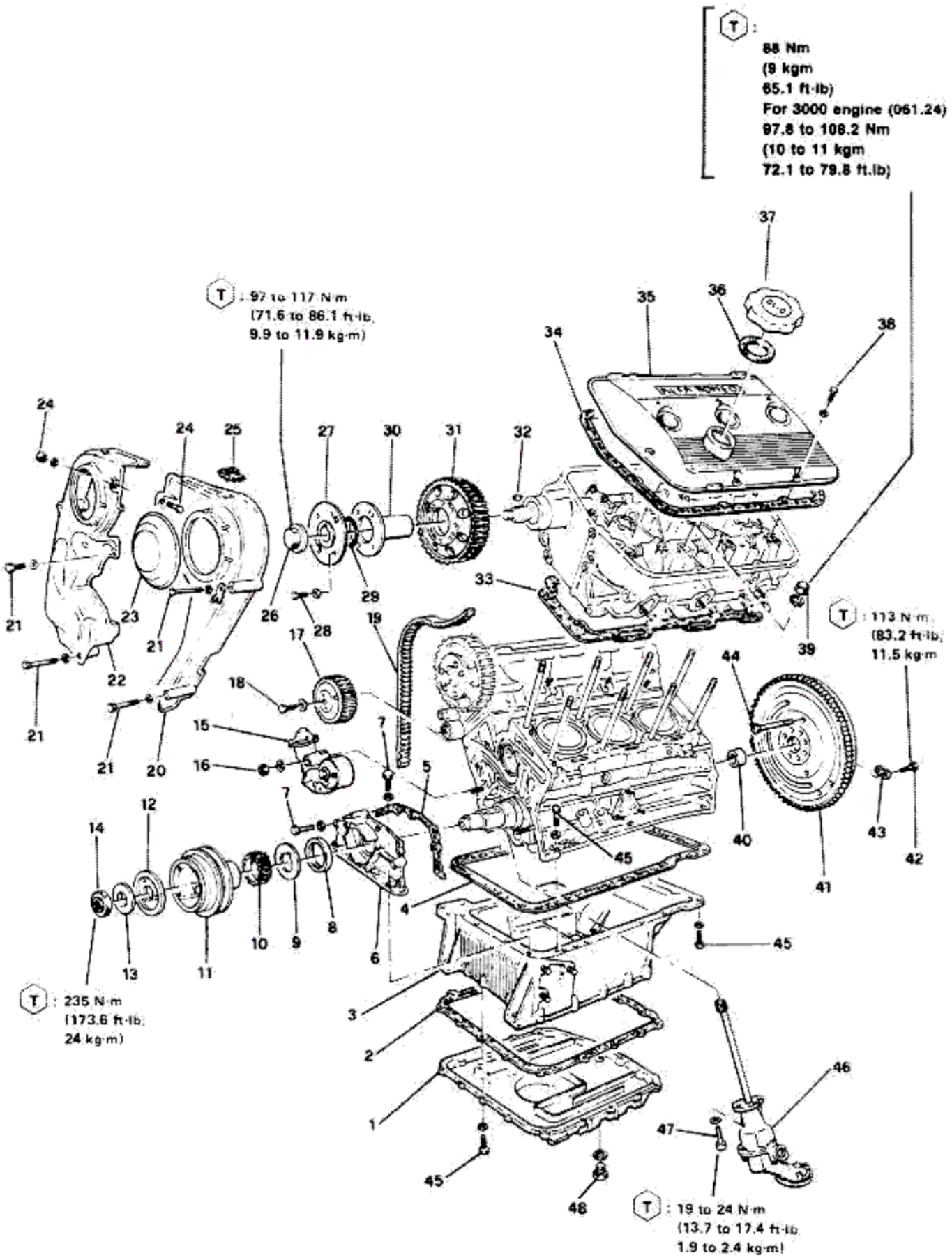
T : 88 Nm (9 kgm 65.1 ft·lb) For 3000 engine (061.24) 97.8 to 108.2 Nm (10 to 11 kgm 72.1 to 79.8 ft.lb)
T : 97 to 117 N·m (71.6 to 86.1 ft·lb, 9.9 to 11.9 kg·m)
T : 113 N·m (83.2 ft·lb, 11.5 kg·m
T : 235 N·m (173.6 ft·lb, 24 kg·m)
T : 19 to 24 N·m (13.7 to 17.4 ft·lb 1.9 to 2.4 kg·m)

REMOVAL OF FUEL SYSTEM COMPONENTS

a. Slacken clamps (1) and (2) and disconnect auxiliary air feed hose (3) from plenum chamber and hose (4) feeding air to the auxiliary air device.
b. Unscrew screws (5) and remove auxiliary air device (6) from right cylinder head cover.
c. Slacken clamp (7) and disconnect oil vapor recirculation hose (8) from oil vapor separator (9).
d. Disconnect vacuum hose (10) of the vacuum spark advance regulator from the intake capacity and the distributor.
e. Disconnect vacuum hose (11) from the intake capacity and from the pressure regulator.
e1. Disconnect the fuel vapor recirculation hose (12) from the intake capacity.
e2. **[For 3000 engine]:**
Disconnect the vacuum hose of the purge control valve from the intake capacity.
f. Slacken clamp (14) and disconnect the corrugated sleeve (15) from the throttle housing.

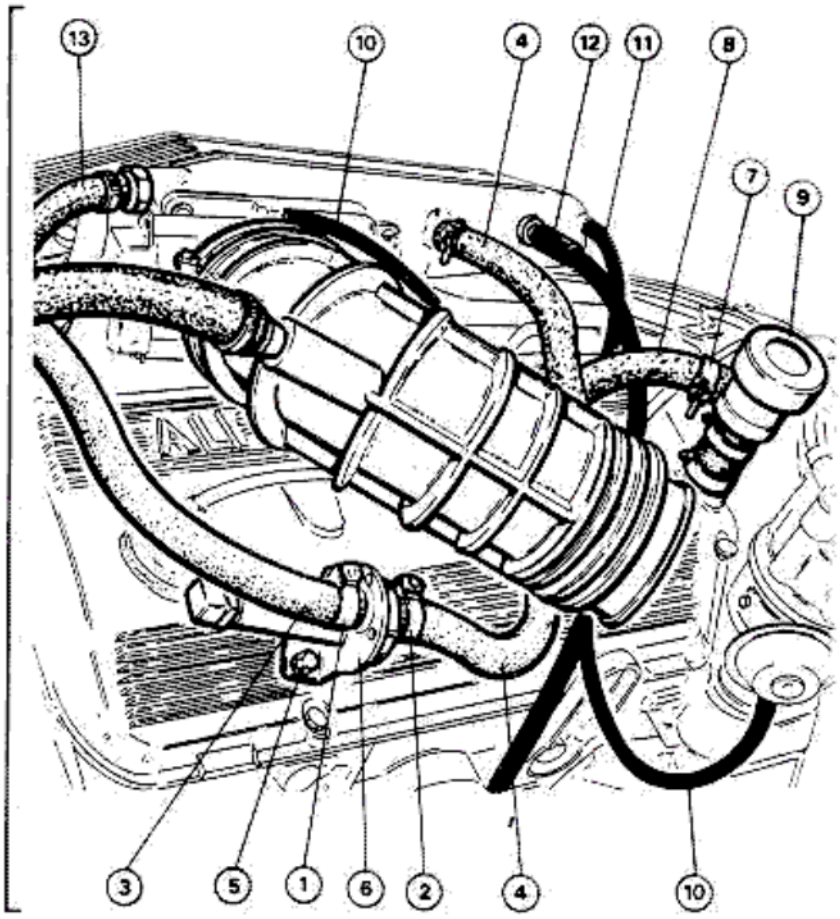

1 Clamp
2 Clamp
3 Auxiliary air hose to the plenum chamber
4 Air feed hose to the auxiliary air device
5 Screws
6 Auxiliary air device
7 Clamp
8 Oil vapor recirculation hose
9 Oil vapor separator
10 Vacuum hose for spark vacuum advance regulator
11 Vacuum hose for pressure regulator
12 Fuel vapor recirculation hose
13 Vacuum hose for purge control valve
14 Clamp
15 Corrugated sleeve

g. Slacken clamps (1) fixing the plenum chamber (2) to the rubber sleeves (3) of the intake manifolds.

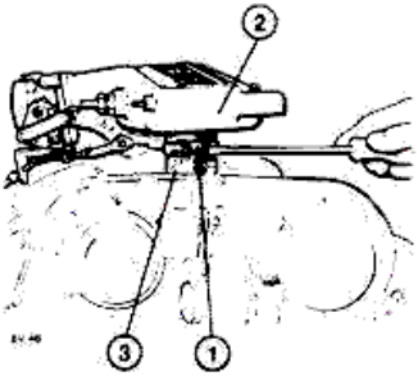

1. Clamp
2. Plenum chamber
3. Rubber sleeve connecting plenum chamber to intake manifold

h. Remove the plenum chamber (1) complete with throttle housing and rubber sleeves forming the connection with the intake manifolds.

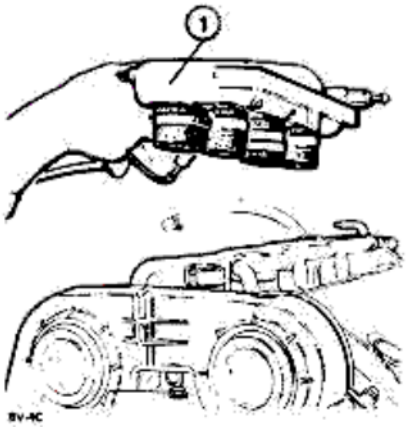

1. Plenum chamber

i. Unscrew the screws (1) securing the injectors to the air feed manifold (two for each injector) and to the petrol intake throat (2).

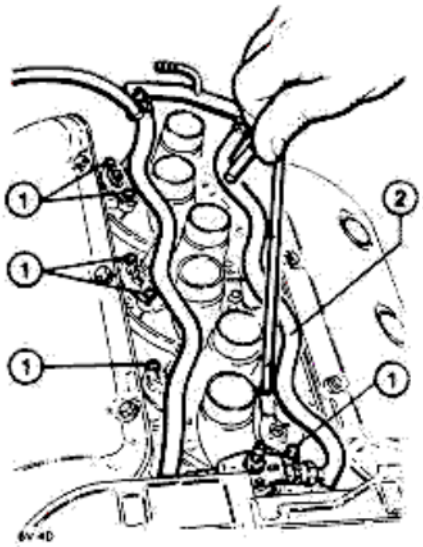

1 Injector retaining screws
2 Petrol intake throat

j. Remove the petrol intake throat (1) together with the injectors.

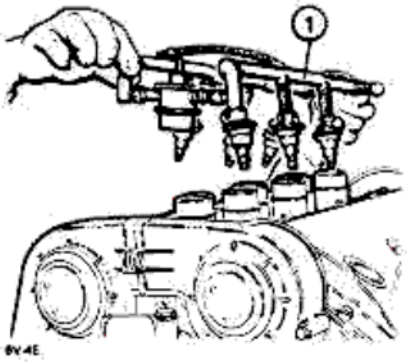

1. Petrol intake throat

NOTE:
For further disassembly and/or checks of the fuel supply system refer to Group 04.

FUEL SYSTEM COMPONENTS (L-JETRONIC System)

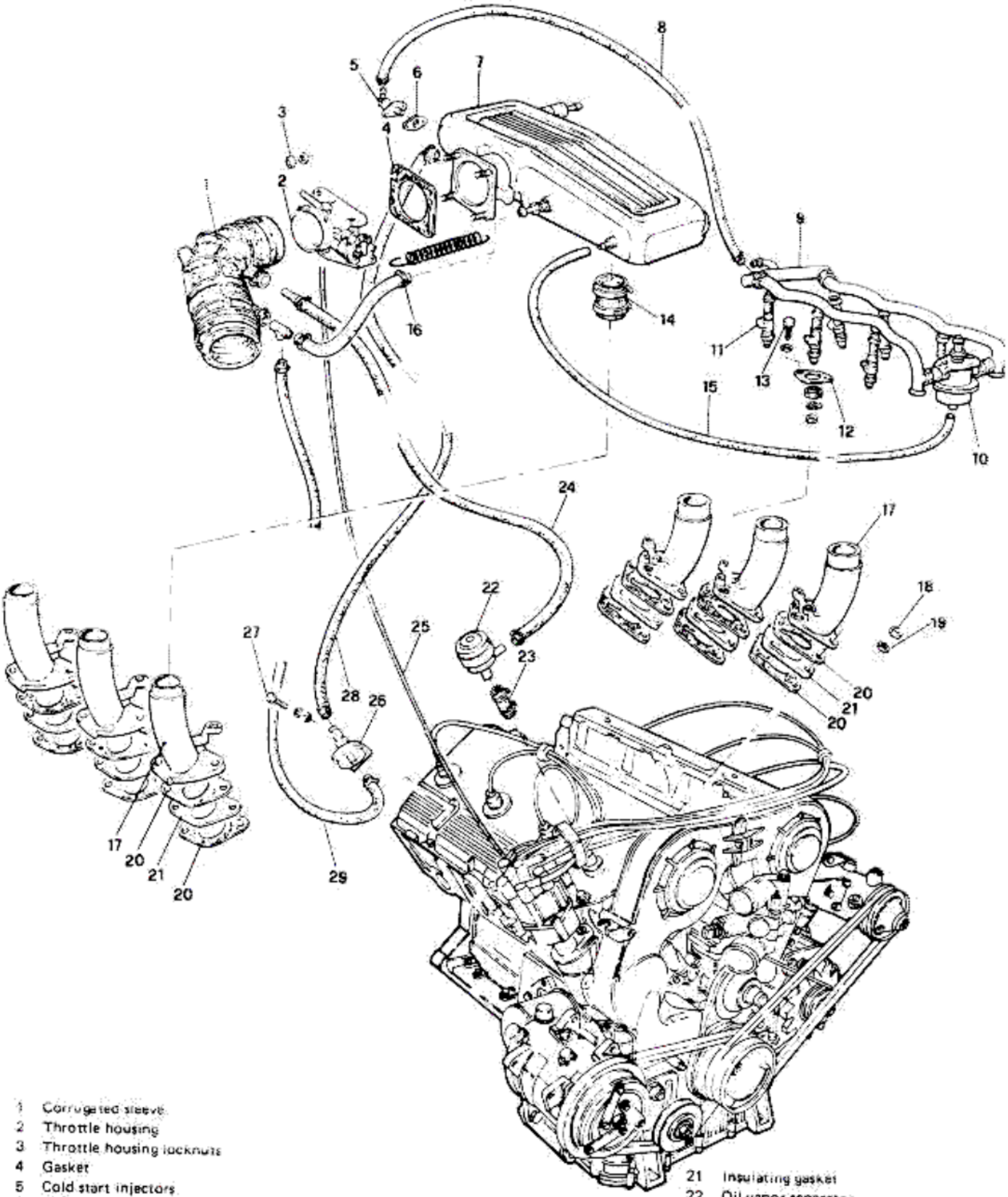

1 Corrugated sleeve
2 Throttle housing
3 Throttle housing locknuts
4 Gasket
5 Cold start injectors
6 Gasket
7 Plenum chamber
8 Cold start injector feed hose
9 Fuel supply manifold
10 Fuel pressure regulator
11 Injectors
12 Injector flange
13 Screws securing injectors to intake stub pipes
14 Sleeve connecting intake capacity to respective stub pipes
15 Vacuum take-off hose for pressure regulator
16 By-pass hose for idling adjustment
17 Intake stub pipes
18 Stub pipe lock nuts
19 Washer
20 Gaskets
21 Insulating gasket
22 Oil vapor separator
23 Oil recovery hose
24 Oil vapor re-circulation hose
25 Vacuum offtake hose for spark advance vacuum regulator
26 Auxiliary air device
27 Auxiliary air device retaining screws
28 Hose taking auxiliary air to plenum chamber
29 Hose taking air to auxiliary air device

EXTERNAL COMPONENTS (Accessories)

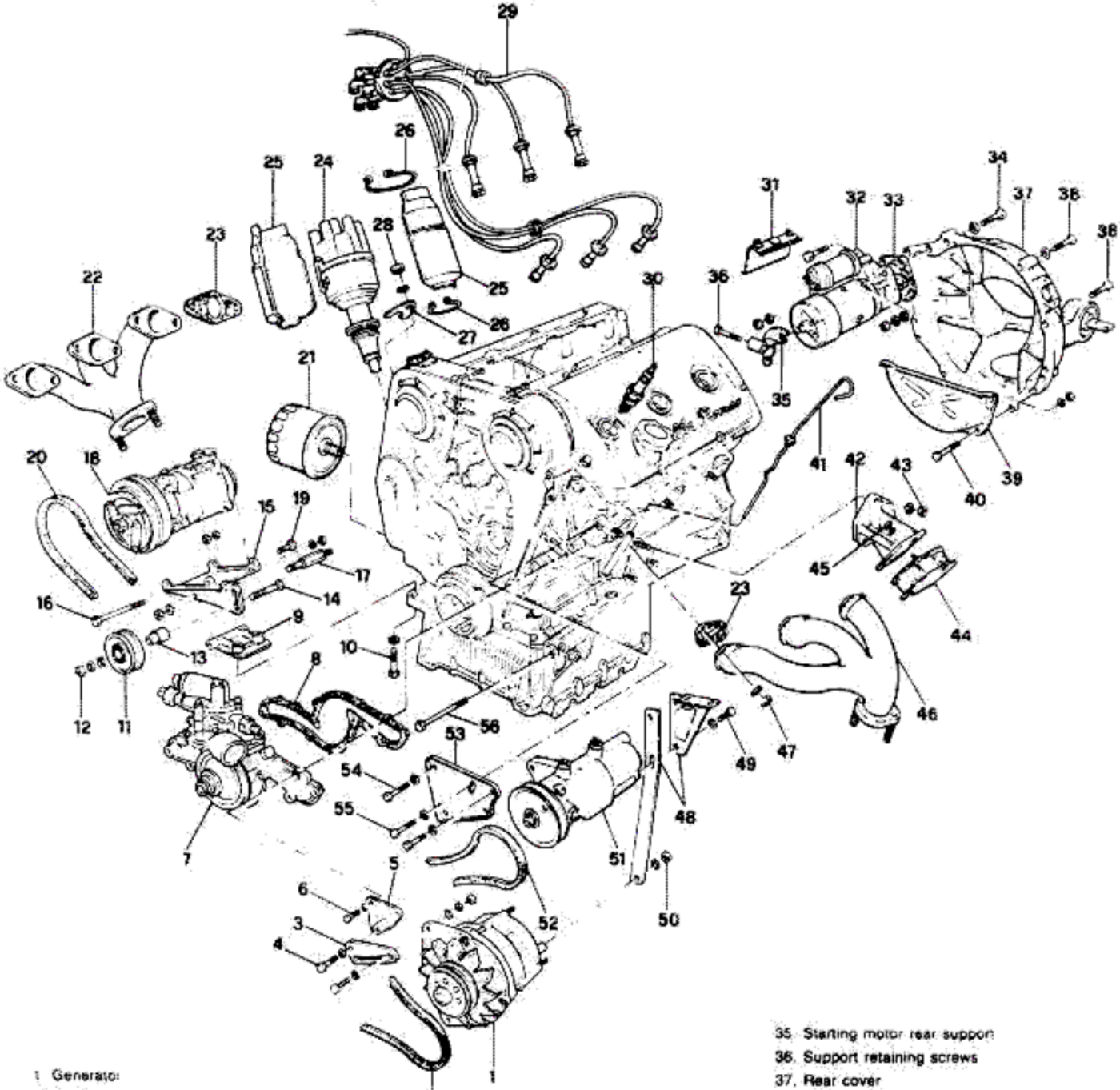

1. Generator
2. Drive belt (generator and water pump)
3. Regulation bracket
4. Bracket retaining screws
5. Generator support
6. Support and water pump retaining screws
7. Water pump complete with thermostat unit
8. Water pump gasket
9. Bracket fixing compressor to oil sump
10. Bracket retaining screws
11. Belt stretcher
12. Belt stretcher locknut
13. Belt stretcher pulley hub
14. Belt stretcher fixing pin
15. Compressor support
16. Screws fixing support to bracket
17. Pin fixing support to cylinder block
18. Air conditioner compressor
19. Compressor retaining screw
20. Drive belt
21. Engine oil filter
22. Exhaust manifold (right side)
23. Gasket
24. Distributor
25. Shields
26. Retaining springs
27. Retaining bracket
28. Locknut
29. High voltage wires complete with suppressors
30. Spark plug
31. Starting motor shield
32. Starting motor
33. Gasket
34. Screws fixing starting motor
35. Starting motor rear support
36. Support retaining screws
37. Rear cover
38. Rear cover retaining screws
39. Flywheel lower guard
40. Guard retaining screws
41. Engine oil dipstick
42. Engine side support
43. Support locknut
44. Rubber shock absorber
45. Shock absorber locknut
46. Exhaust manifold (left side)
47. Exhaust manifold locknut
48. Power steering pump rear bracket
49. Screw fixing pump to bracket
50. Nut fixing pump to generator
51. Power steering pump
52. Drive belt
53. Bracket fixing pump to engine block
54. Bracket retaining screw
55. Power steering pump retaining screws
56. Lower screw fixing generator

REMOVAL OF ACCESSORIES

a. **Removal of power steering pump**

— Slacken screw (1) securing the power steering, screws (2) determining the tension of the V-belt and the bolt securing the rear bracket (6).

— Move the power steering pump (3) towards the cylinder head and remove the V-belt (4) from the crankshaft pulley.

— Unscrew completely screws (1) and (2) and the rear bracket bolt (already slackened) and remove the power steering pump (3) complete with support bracket (5).

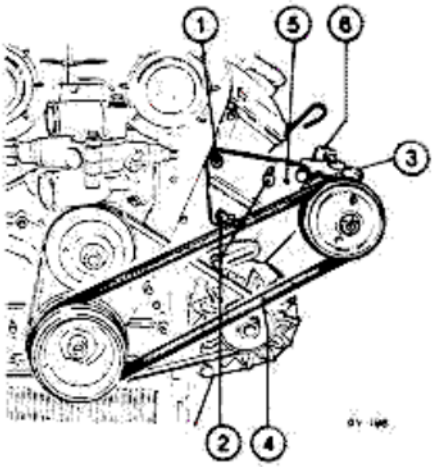

1. Retaining screws
2. Adjustment screws
3. Power steering pump
4. V-belt
5. Support bracket
6. Rear bracket

b. **Removal of the generator**

— Slacken nuts (1) and (2) and nut (3) which determine the tension of the V-belt.

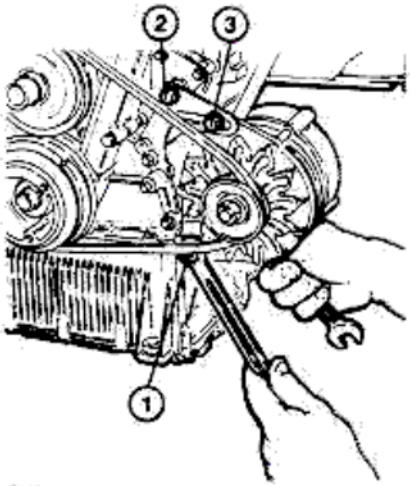

1. Lock nut
2. Lock nut
3. Adjustment nut

— Move the generator (1) towards the engine block and remove the V-belt (2) from the crankshaft and water pump pulleys.

— Remove the generator (1) together with the adjustment bracket (3), after having unscrewed bolts (4) and (5) completely.

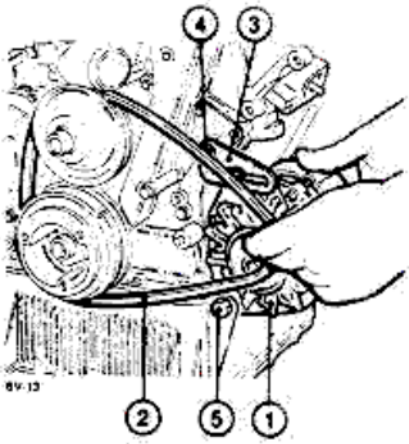

1. Generator
2. V-belt
3. Adjustment bracket
4. Retaining bolt
5. Retaining bolt

c. **Removal of the conditioning system compressor**

— Slacken nut (1) securing the belt stretcher (2).

— Slip off the V-belt (3) from the compressor pulley and from the crankshaft pulley (to facilitate this turn the crankshaft).

— Slacken and then completely unscrew the screws fixing the support brackets (4) of the compressor to the oil sump.

— Slacken and unscrew bolt (5) and remove the compressor (6).

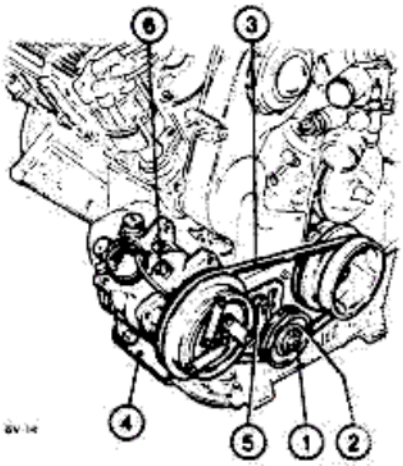

1. Nut
2. Belt stretcher
3. V-belt
4. Support bracket
5. Bolt
6. Compressor of conditioning system

d. **Removal of distributor cap**

— Disconnect suppressors (1) from spark plugs (2).

— Free springs (3) securing the distributor cap.

— Remove cap (4) from the distributor complete with the high voltage wires (5) after removing them from the respective cable clamps (6) located above the distributor belt guard.

— Remove spark plugs (2).

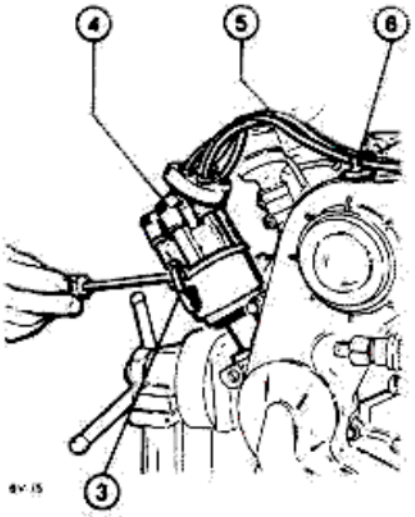

DETAIL OF SPARK PLUG AREA

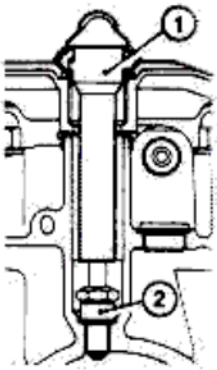

1. Suppressors
2. Spark plugs
3. Spring
4. Distributor cap
5. High voltage cables
6. Cable clamp

e. **Removal of timing belt guard**

— Remove covers (1) from the toothed timing belt guard.

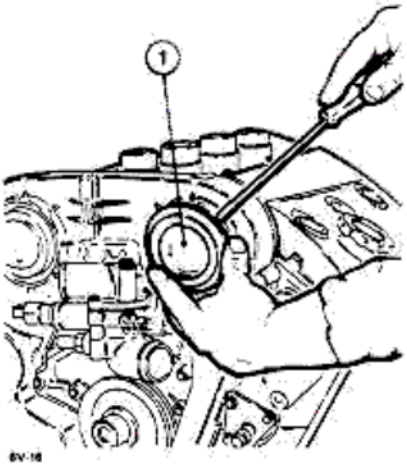

1. Covers

— Unscrew bolt (1) that joins right guard (2) to left guard (3).

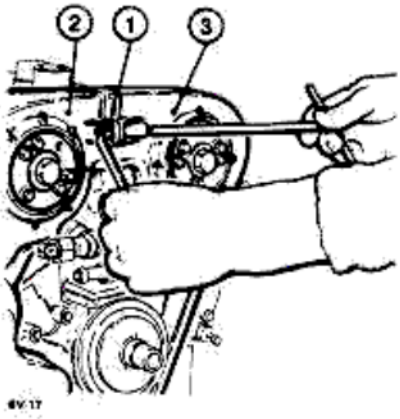

1. Guard joining bolt
2. Right guard
3. Left guard

— Release and remove screws (1) securing guards (2) to the engine.

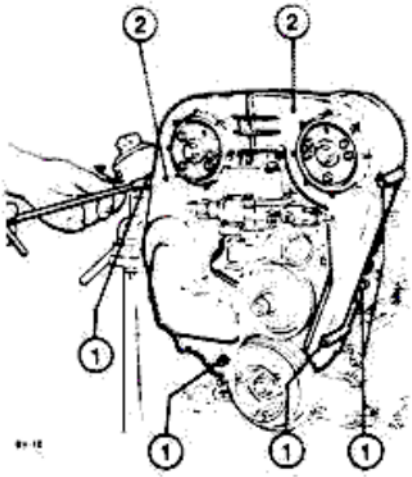

1. Retaining screws
2. Guards

f. **Removal of distributor**

— Release and remove the nut securing the connecting plate (1).
Remove connecting plate (1).

— Extract distributor (2).

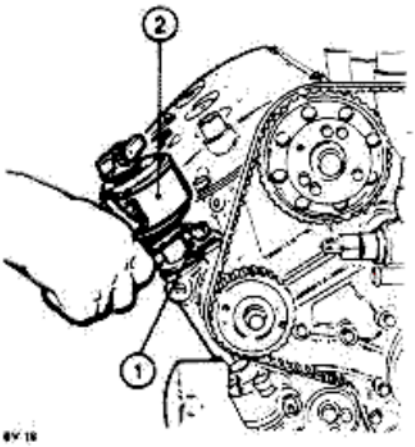

1. Connecting plate
2. Distributor

g. **Removal of hydraulic belt stretcher and timing belt**

— Stop the hydraulic belt stretcher from rotating (on the distributor belt, raise the arm of the belt stretcher (1) and use tool **A.2.0363** to lock the belt stretcher. To insert tool **A.2.0363** seating hole (2) must be in line with that on the belt stretcher body.

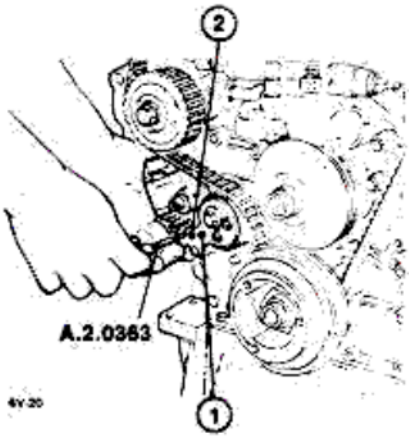

1. Belt stretcher arm
2. Tool insertion seat

— Slacken nuts (1) and (2) securing the body of belt stretcher (3) to the engine block.

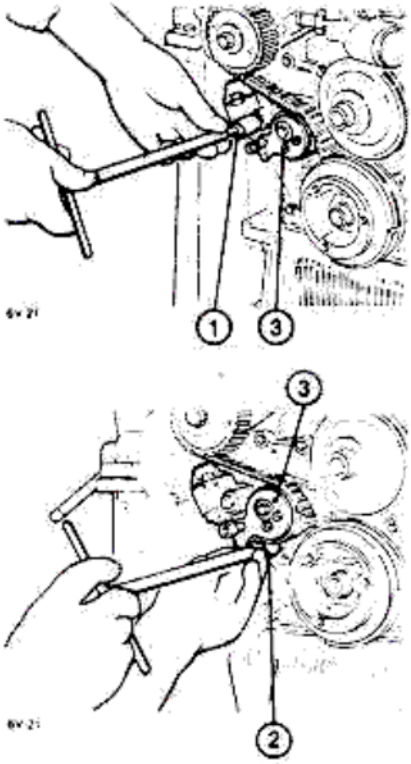

1. Locknut
2. Locknut
3. Hydraulic belt stretcher

— Rotate the hydraulic belt stretcher (1) upward and lock it in this position by tightening nut (2), previously slackened.

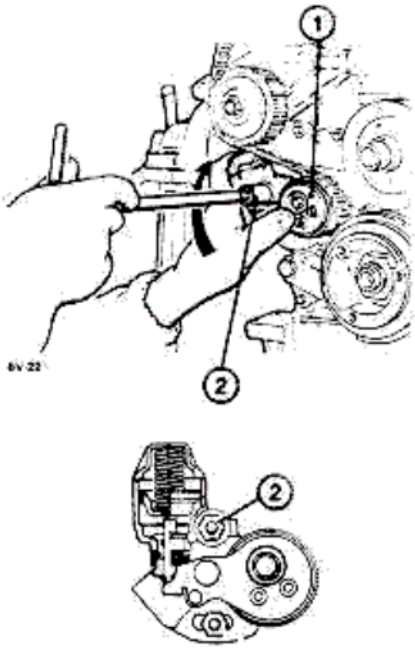

1. Hydraulic belt stretcher
2. Locknut

— Slip off and remove timing belt (1) from the toothed pulleys installed on the cylinder heads and slide out from the crankshaft front pulley.

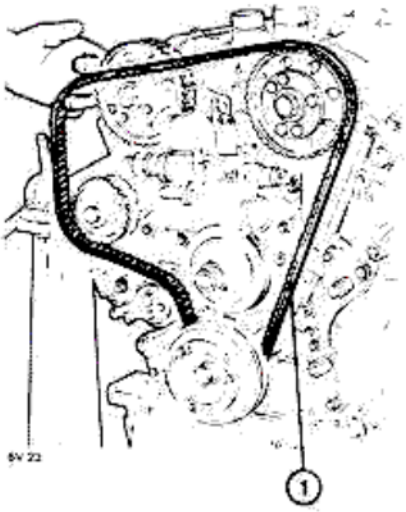

1. Toothed timing belt

— Unscrew the two screws fixing the belt stretcher body to the cylinder block. Remove the hydraulic belt stretcher (1) together with the spring and plate (2) holding the belt stretcher spring (3).

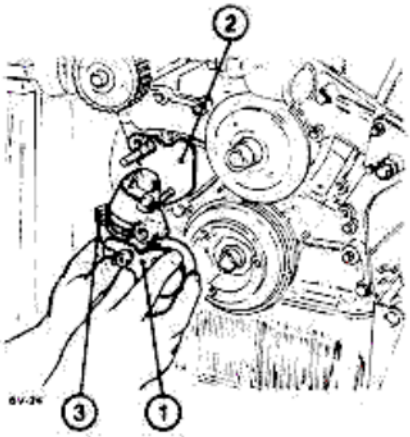

1. Hydraulic belt stretcher
2. Plate
3. Belt stretcher spring

h. **Removal of thermostat unit**

— Unscrew the three screws with washers (1) fixing the cover of the thermostat unit.
Remove cover (2) complete with thermostat valve.

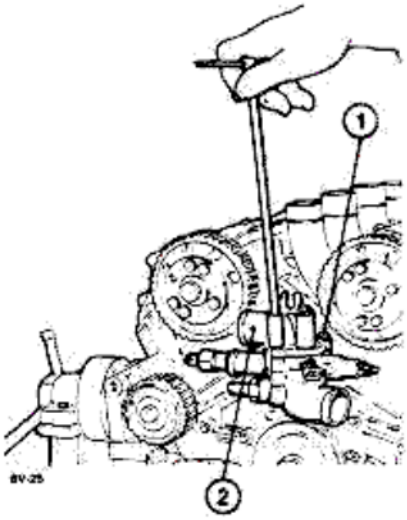

1. Screws with washers
2. Cover with thermostat valve

— Open metal clamps (1) holding the rubber sleeves (2) to the cooling ducts of each cylinder head.

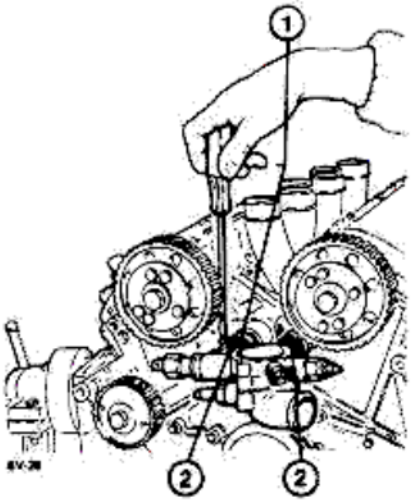

1. Metal clamps
2. Rubber sleeves

— Remove housing (1) of the thermostat unit by sliding it out from the cooling ducts of each cylinder head.

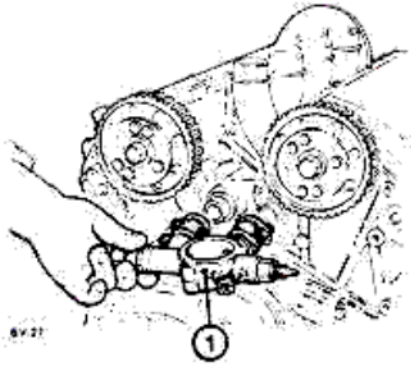

1 Thermostat unit housing

NOTE:
For the disassembly and/or checking of the setting of the thermostat valve refer to Group 07.

REMOVAL OF THE CYLINDER HEADS

a. Slacken and remove screws with washers (1) securing the valve cover (2) to the cylinder head.

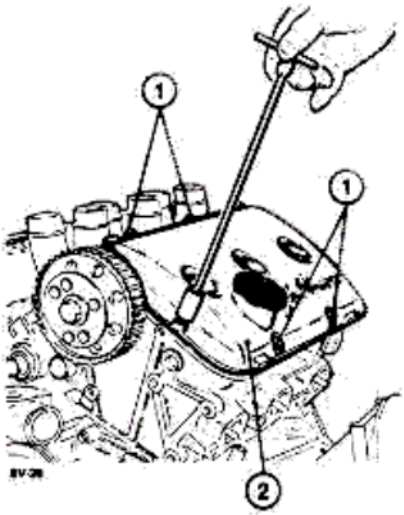

1. Screws with washers
2. Valve cover

b. Remove the valve cover (1) and relative gasket under it.

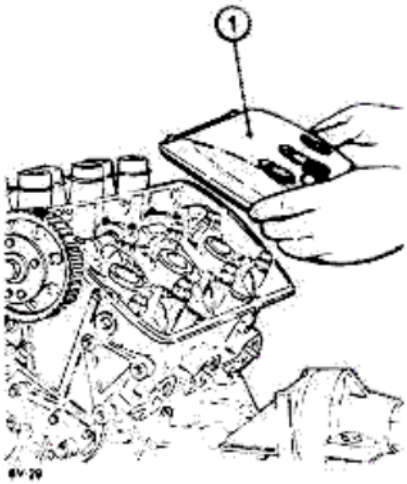

1. Valve cover

NOTE:
Perform the above mentioned operations on both cylinder heads.

c. Remove packings (1) from the six spark plug wells.

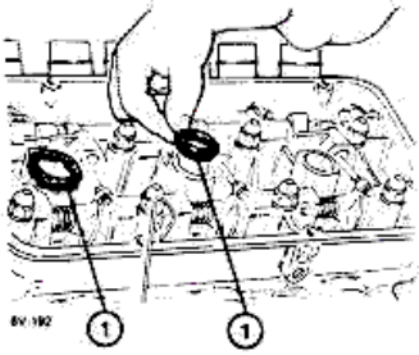

1. Rubber packing

d. Extract intermediate gear (1) operating the distributor and oil pump from the right cylinder head.

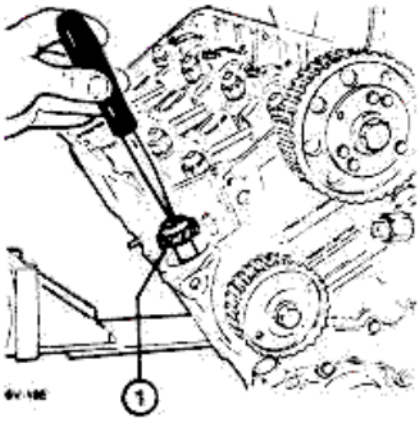

1. Intermediate gear

e. Slacken and remove nuts with washers (1) (eight for each head) securing the cylinder heads to the block.
Remove cylinder heads (2), paying particular attention not to damage the studs of the engine block while lifting the heads.

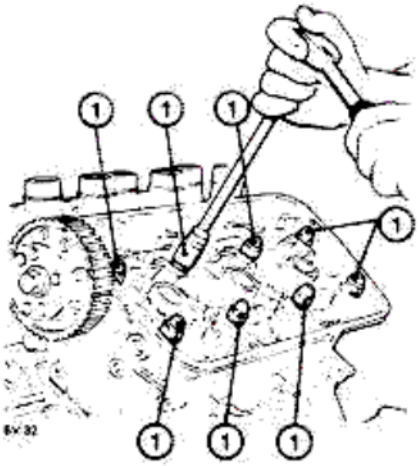

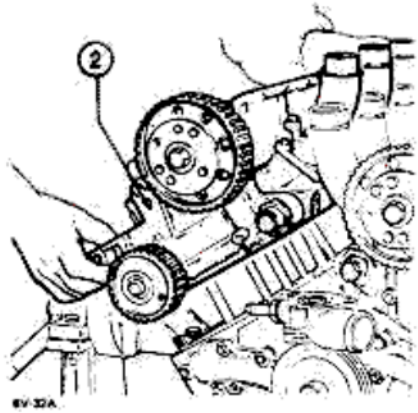

1. Nuts with washers
2. Cylinder heads

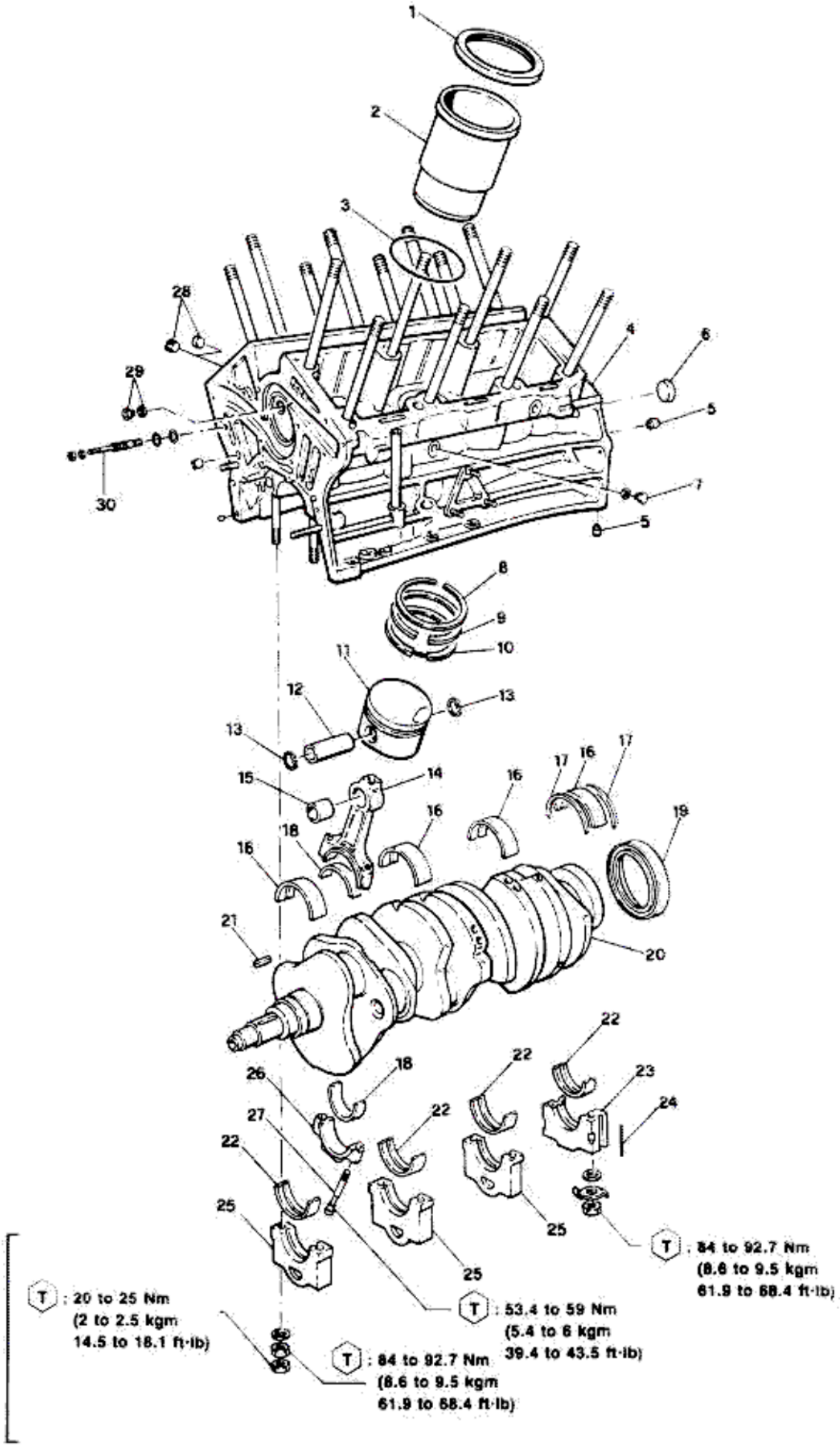
1
2
3
28
29
30
4
6
5
7
5
8
9
10
11
12
13
13
15
14
16
17
16
17
16
18
16
19
21
20
22
18
22
23
26
24
27
22
22
25
25
25
T : 84 to 92.7 Nm
(8.6 to 9.5 kgm
61.9 to 68.4 ft·lb)
T : 20 to 25 Nm
(2 to 2.5 kgm
14.5 to 18.1 ft·lb)
T : 53.4 to 59 Nm
(5.4 to 6 kgm
39.4 to 43.5 ft·lb)
T : 84 to 92.7 Nm
(8.6 to 9.5 kgm
61.9 to 68.4 ft·lb)

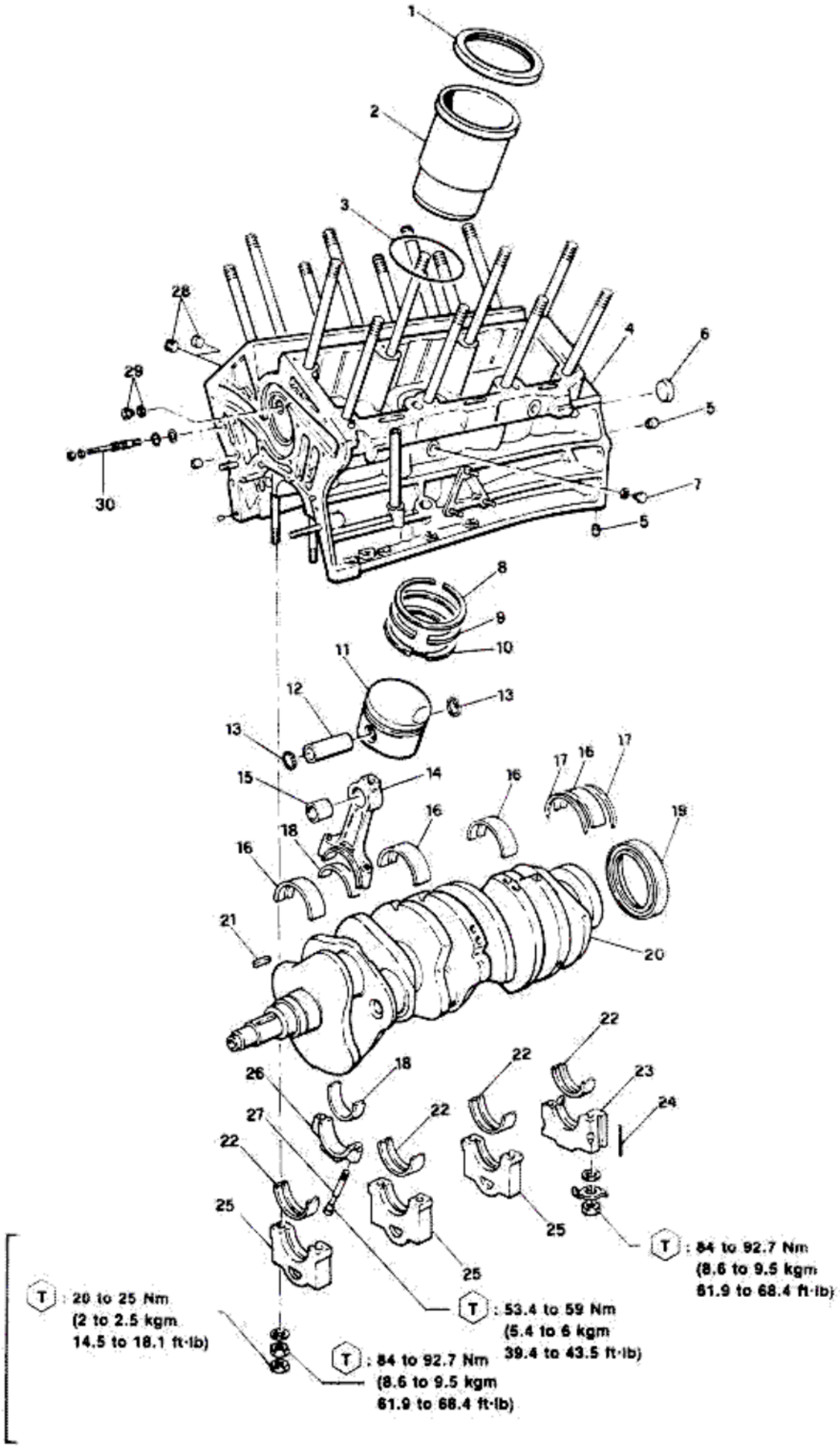
1
2
3
28
29
30
4
6
5
7
5
8
9
10
11
12
13
13
15
14
16
17
16
17
16
18
16
19
21
20
22
18
22
23
24
26
27
22
22
25
25
25
T : 84 to 92.7 Nm
(8.6 to 9.5 kgm
61.9 to 68.4 ft·lb)
T : 20 to 25 Nm
(2 to 2.5 kgm
14.5 to 18.1 ft·lb)
T : 53.4 to 59 Nm
(5.4 to 6 kgm
39.4 to 43.5 ft·lb)
T : 84 to 92.7 Nm
(8.6 to 9.5 kgm
61.9 to 68.4 ft·lb)

REMOVAL OF COMPONENTS FROM ENGINE BLOCK

a. Insert cylinder liner locking tool **A.2.0117** with the respective complementary washers (**A.2.0362**), in the engine block studs as shown in the figure.
Lock tools **A.2.0117** with the nuts and washers (1) used to fix the cylinder head.

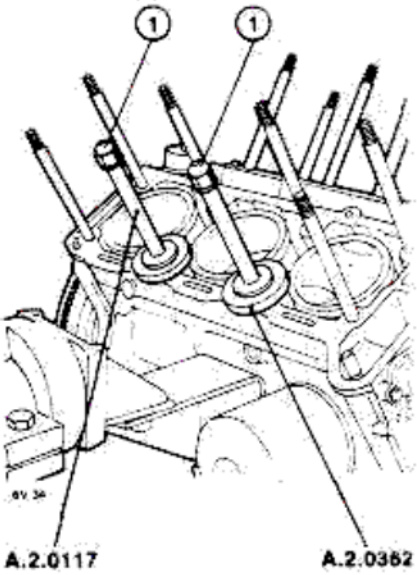

1. Nuts and washers

b. Slacken and remove all the screws with washers (1) fixing the water pump to the engine block.
Remove support (2) which secures the generator adjustment bracket.

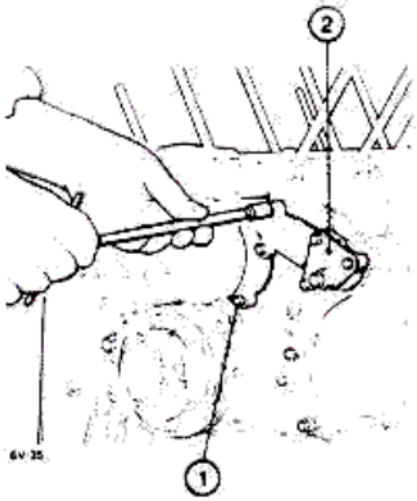

1. Screws and washers
2. Support for generator bracket

c. Remove water pump (1) and put the gasket (2) aside.

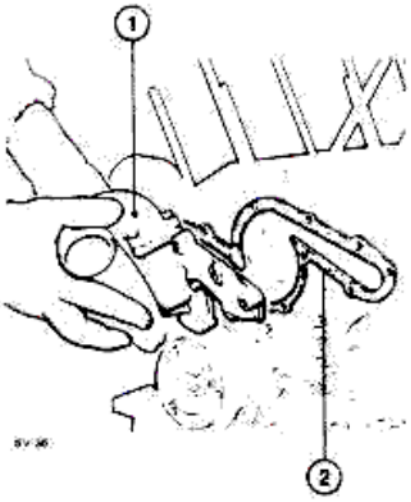

1. Water pump
2. Gasket

NOTE:
For the inspection and/or testing of the water pump refer to Group 07.

d. Remove engine oil filter (1) by unscrewing it from the engine block using a suitable wrench (2) (belt or chain type).

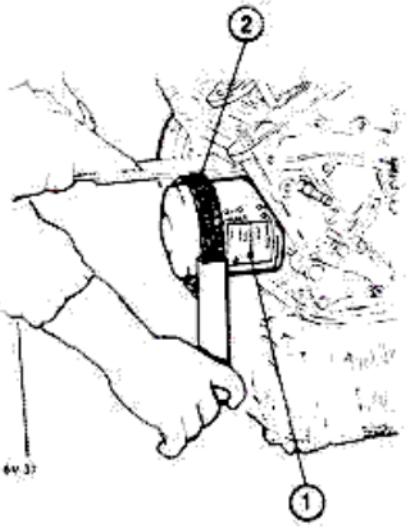

1. Engine oil filter
2. Filter removal wrench

e. Free the overhaul stand and turn the engine assembly 180°.
Fit a suitable tool (1) to the flywheel to permit the rotation of the crankshaft and lock it by means of the self-locking nuts (2).
Unscrew all the screws and washers (3) holding the oil sump to the engine block.

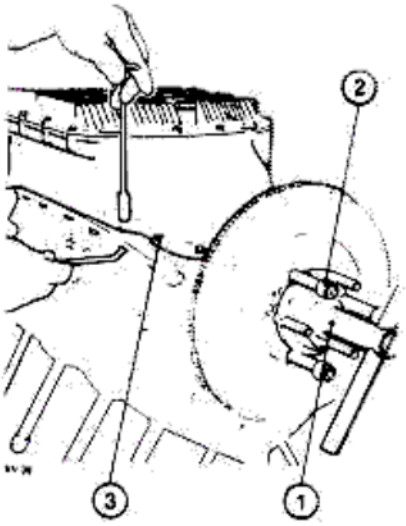

1. Tool for rotation
2. Self-locking nuts
3. Screws and washers securing oil sump

f. Remove the oil sump (1) complete and the relative gasket (2).
If necessary, remove traces of sealant on the oil sump or engine block.

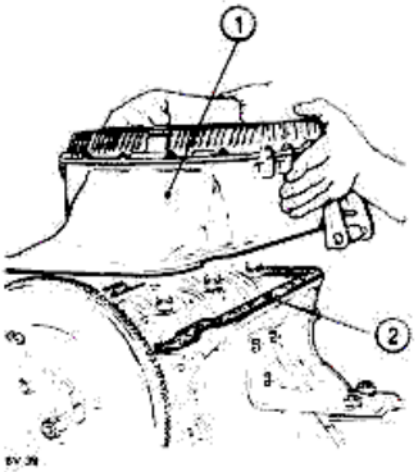

1. Sump
2. Gasket

g. Unscrew the three socket screws (1) securing pump (2) to the engine block.

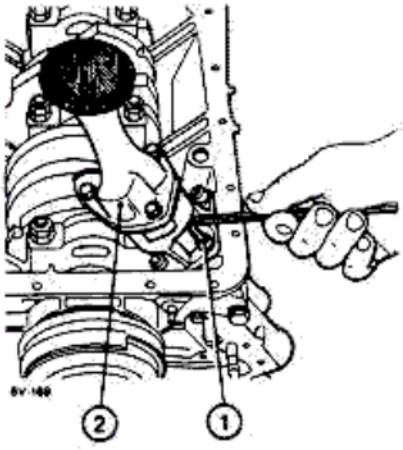

1. Socket screws
2. Oil pump

h. Extract oil pump (1) from the engine block (pull it upwards and save the seal ring).

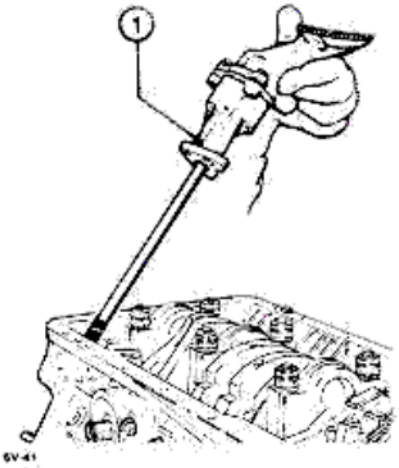

1. Oil pump, complete

i. Free the engine overhaul stand and turn the engine assembly 180°.
Fit tool **A.2.0145** to lock the rotation of the flywheel.
Ensure, before locking it with screws (1), that the tooth is perfectly aligned with those of the toothed crown of the flywheel.

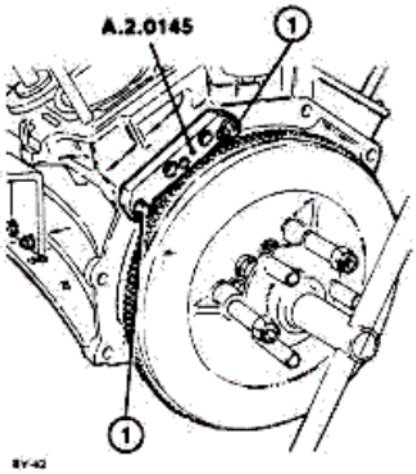

1. Tool retaining screws

j. **Removal of crankshaft front pulley**
Working on the front side remove the crankshaft pulley.
Proceed as follows:
— Eliminate the calking from the collar of the nut securing the pulley.
— Using a torque wrench (1) with adequate extension slacken and unscrew the nut fixing the pulley.

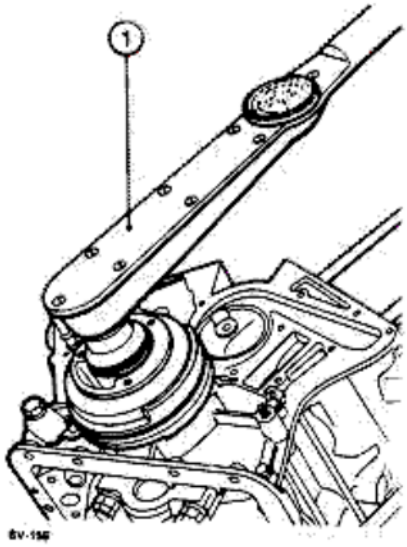

1. Torque wrench

— Unscrew nut (1) completely and remove in order: washer (2), crankshaft pulley (3), toothed pulley (4) of timing belt and cup washer (5) (the convex part of the washer faces inwards), which serves as a shoulder for the timing drive belt.

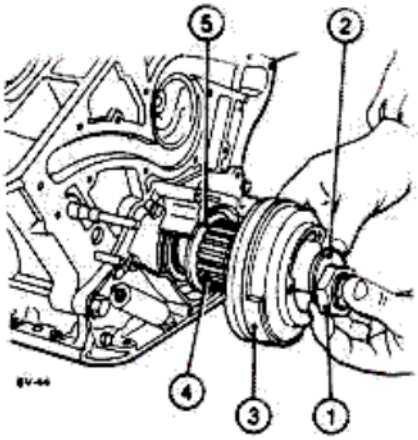

1. Nut
2. Washer
3. Crankshaft pulley
4. Toothed pulley
5. Cup washer

k. Unscrew screw with washer (1) and remove the plate (2) securing hydraulic belt stretcher spring (3).

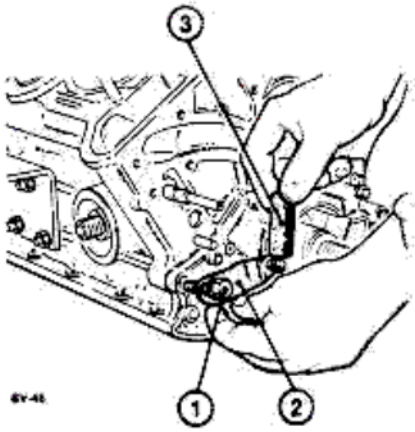

1. Screws and washers
2. Securing plate
3. Hydraulic belt stretcher spring

l. Slacken and remove screws with washers (1) securing the front cover.
Remove front cover (2) and retrieve the gasket under it (3).
Extract seal ring (4) from the front cover.

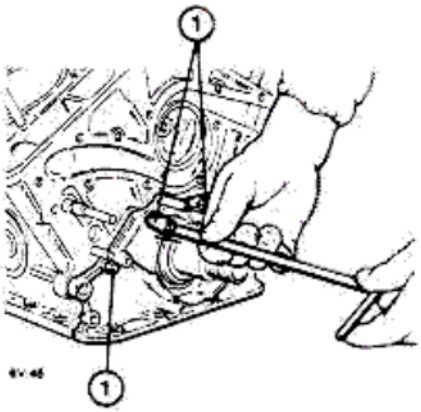

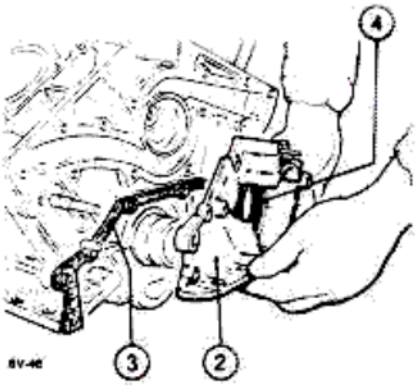

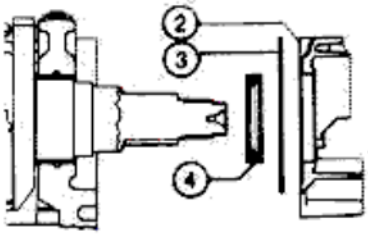

1. Screws with washers
2. Front cover
3. Gasket
4. Seal ring

m. **Removal of piston liners, pistons and connecting rods**

— Remove tool **A.2.0145** which prevents the rotation of the engine flywheel.
Turn the crankshaft so as to make screws (1) securing the con rod caps to the con rods accessible.
Slacken and remove screws (1), using a torque wrench (2), which secure the con rod caps (3).

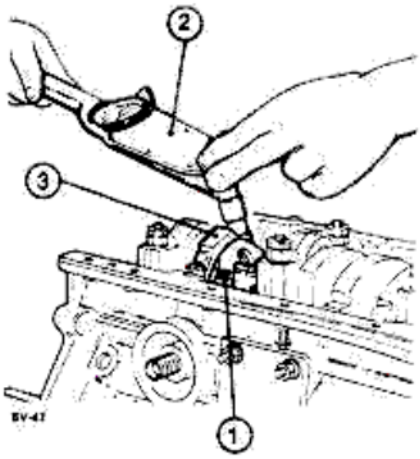

1 Screws securing con rod caps
2 Torque wrench
3 Con rod caps

— Remove con rod caps (1) complete with respective lower half-bearings (2).
Proceed in the same way for the remaining con rod caps.

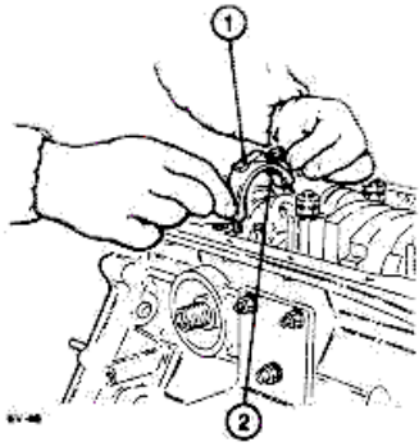

1. Con rod caps
2. Con rod lower half-bearings

— Free the overhaul stand and turn the engine 180°.
Unscrew nut with washer (1) and remove the liner locking tool **A.2.0117** and respective washer **A.2.0362**.
Extract all the con rod-piston groups (2) complete with con rod upper half-bearings and together with the cylinder liners (3).
Remove seal ring (4) from each cylinder liner.

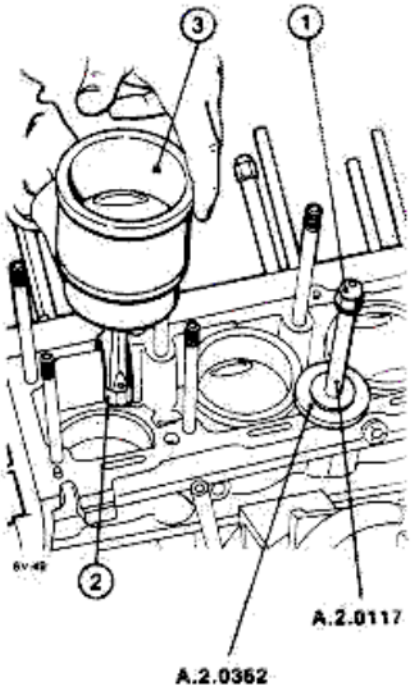

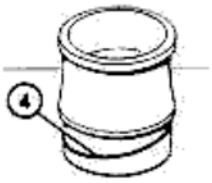

1. Nut with washer
2. Con rod-piston group
3. Cylinder liner
4. Seal ring

n. Tilt the cylinder block slightly and fit tool **A.2.0145** again.
Lock with screws (1).
Remove the tool from the engine flywheel to permit the rotation of the crankshaft.
Unscrew screws (2) securing the flywheel to the crankshaft (the screws securing the flywheel are sealed on mounting with LOCTITE 270 (green) cement P/N 3524-00009).
Remove screws (2) and lock washers (3).

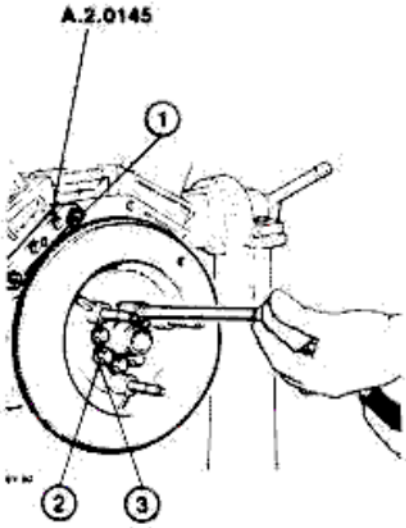

1. Tool fixing screws
2. Flywheel fixing screws
3. Lock washers

o. Remove tool **A.2.0145** and remove flywheel (1).

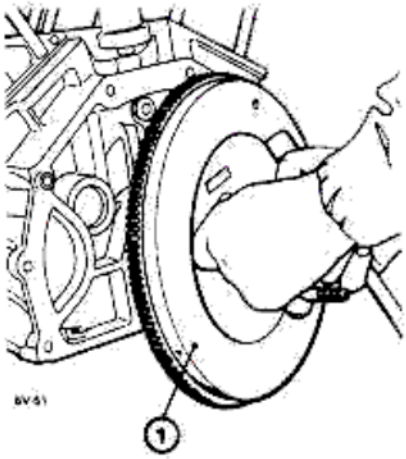

1. Engine flywheel

p. Extract the bushing for the direct drive shaft from the rear flange of crankshaft (1): the bushing should be extracted with extracting tool **A.3.0210**.

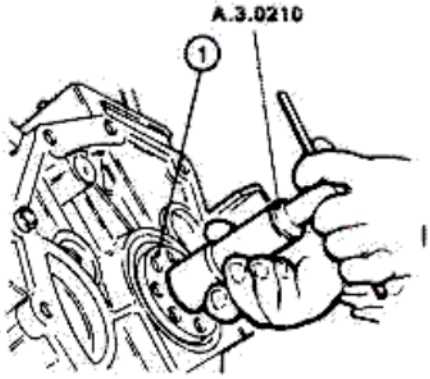

1. Crankshaft rear flange

q. **Removal of crankshaft**

1. Remove the three front main bearing caps as follows:
— Remove lock nuts (1) using a suitable wrench.

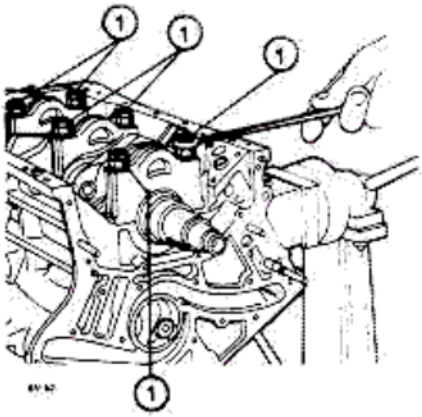

1. Lock nuts

— Slacken and unscrew using a torque wrench, the remaining nuts and washers (1) fixing the front main bearing caps (six).

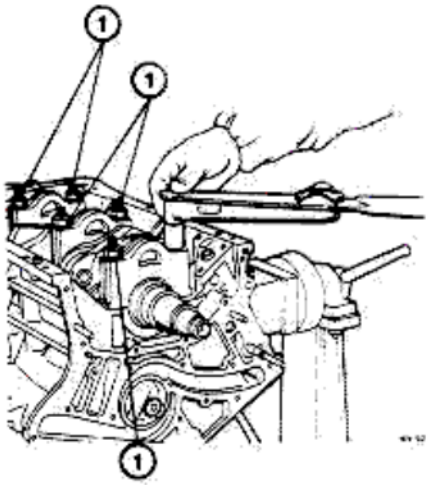

1. Nuts and washers fixing the front main bearing caps

— Remove the three front main bearing caps (1), using a suitable extracting tool (2) if necessary.

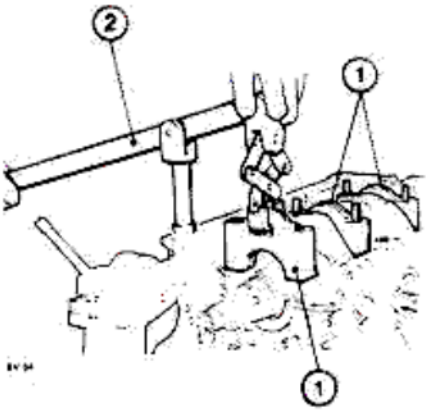

1. Front main bearing caps
2. Extracting tool

2. Remove the rear main bearing cap as follows:
— Straighten the safety tabs which secure the nuts of the rear main bearing cap.
Slacken and remove the nuts with the respective tabs.
— Remove the rear main bearing cap (1) using the extraction tool composed of lever **A.3.0139/0001** and fork **A.3.0139/0002**.
Retrieve the grommets (2) on the sides of the rear main bearing cap.

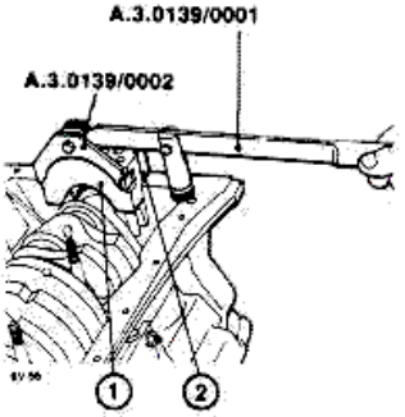

1. Rear main bearing cap
2. Grommets

3. Remove the seal ring (1) from the rear flange of the crankshaft.

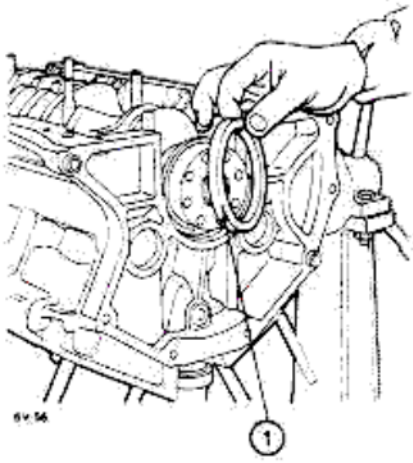

1. Rear seal ring

4. Extract the two rear thrust half-rings (1) and turn the crankshaft to facilitate its extraction.
Remove the crankshaft (2) from the cylinder block.

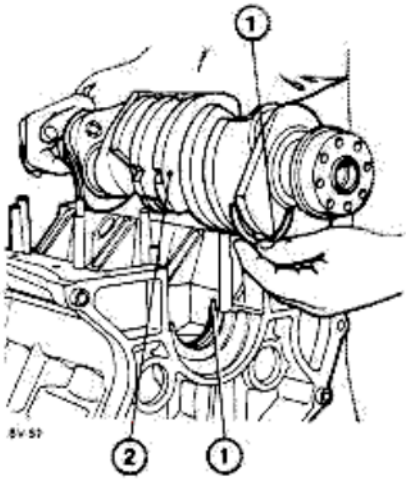

1. Thrust half-rings
2. Crankshaft

5. Remove the upper main half-bearings (1) located in their respective seats on the main bearings.

Mark the reciprocal position of the half-bearings (1) in case they are re-utilized when re-assembling.

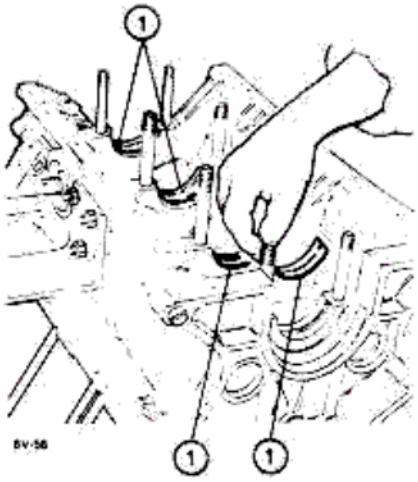

1. Upper main half-bearings

CYLINDER HEAD

1. Right cylinder head
2. Idle gear
3. Bushing
4. Seal ring
5. Shaft for toothed pulley
6. Key
7. Bushing
8. Spacer
9. Distributor and oil pump drive gear
10. Lock washer
11. Lock nut
12. Seal ring
13. Bushings
14. Key
15. Camshaft
16. Camshaft caps (four)
17. Plugs
18. Engine lifting bracket
19. Retaining screws
20. Spark plug well gasket
21. Left cylinder head
22. Valve seats
23. Rocker shaft bushing
24. Plug
25. Cylinder head cooling union
26. Exhaust valve tappet
27. Rods
28. Exhaust valve adjustment screw and nut
29. Rockers
30. Rocker shaft
31. Cotters
32. Upper cap
33. Inner spring
34. Outer spring
35. Grommet
36. Stop ring
37. Lower cap
38. Exhaust valve guide
39. Exhaust valve
40. Intake valve
41. Intake valve guide
42. Adjustment cap for intake valve
43. Intake valve tappet
44. Washer
45. Spring

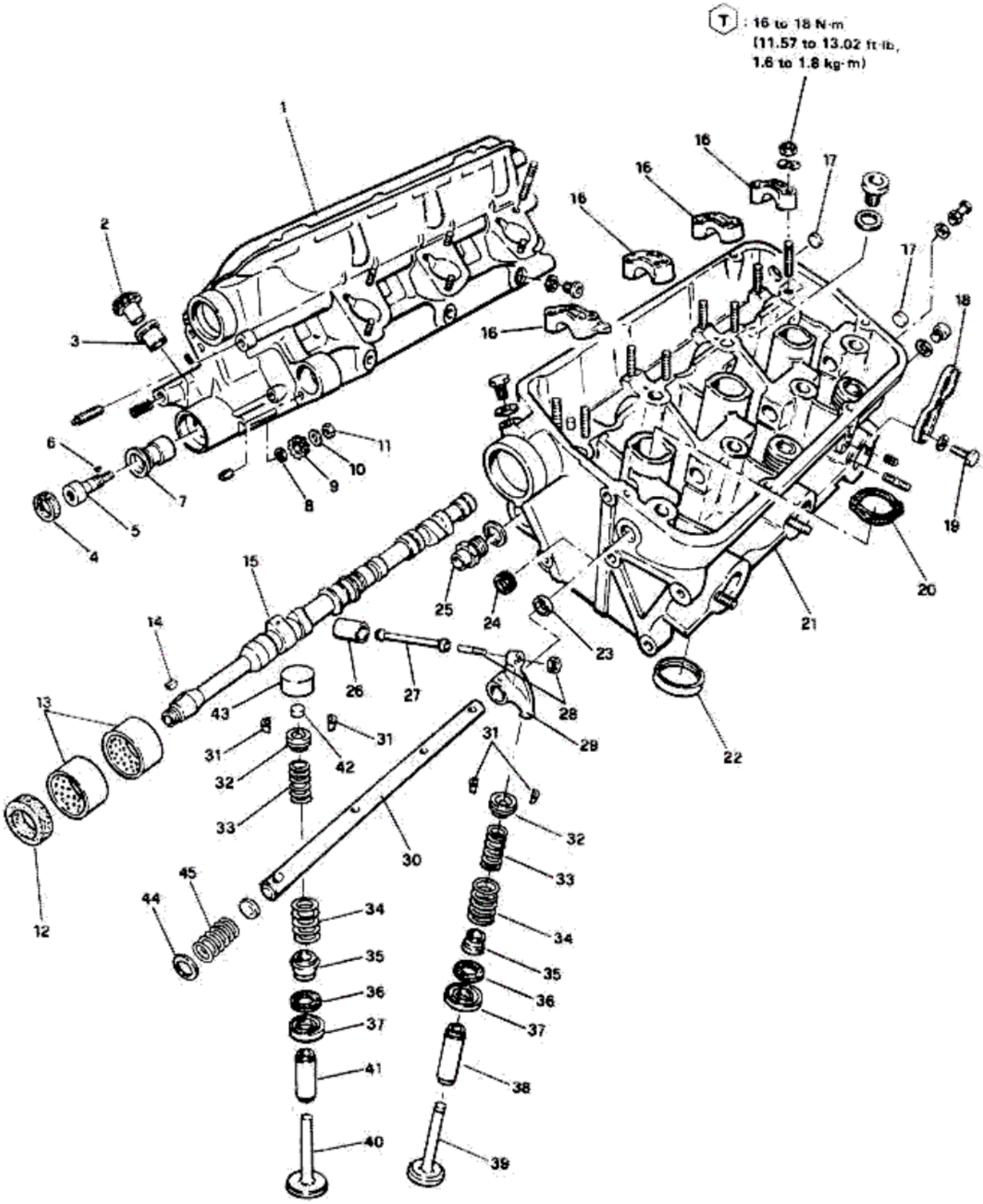
T : 16 to 18 N·m
(11.57 to 13.02 ft·lb,
1.6 to 1.8 kg·m)
1
2
3
4
5
6
7
8
9
10
11
12
13
14
15
16
17
18
19
20
21
22
23
24
25
26
27
28
29
30
31
32
33
34
35
36
37
38
39
40
41
42
43
44
45

DISASSEMBLY OF THE CYLINDER HEAD ON BENCH

The disassembly operation described here is for the right cylinder head. To disassemble the left cylinder head proceed in the same way.

PRELIMINARY OPERATIONS

a. Lock revolving support (tool **A.2.0195**) in a vice, fit the fork to support the cylinder head (tool **A.2.0360**) and fix it to the revolving support.

b. Place cylinder head (1) on the fork and fix it with two lock nuts of the cylinder head (removed previously).

c. Remove engine lifting bracket (2).

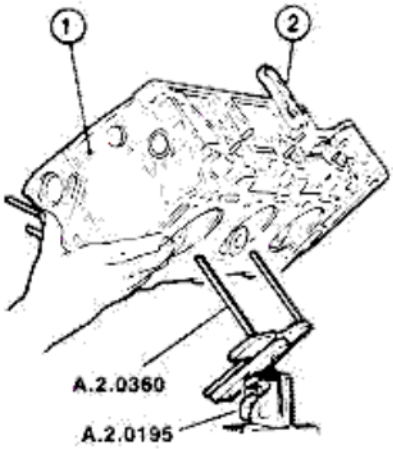

1 Cylinder head
2 Engine lifting bracket

REMOVAL OF INTAKE STUB PIPES

a. Slacken and remove nuts with washers (1) securing the intake stub pipes (2) to the cylinder head.

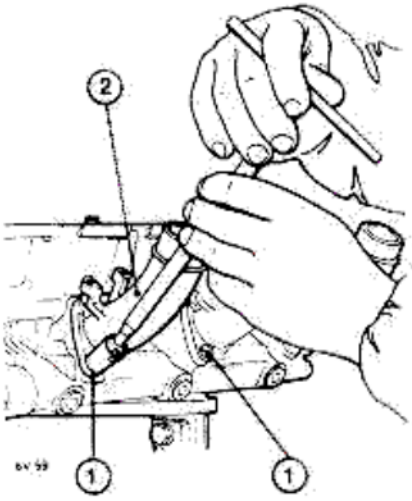

1 Nuts and washers
2 Intake stub pipes

b. Remove the intake stub pipes (1) and then remove, in order, the following parts: gasket (2), insulating gasket (3) and gasket (4).

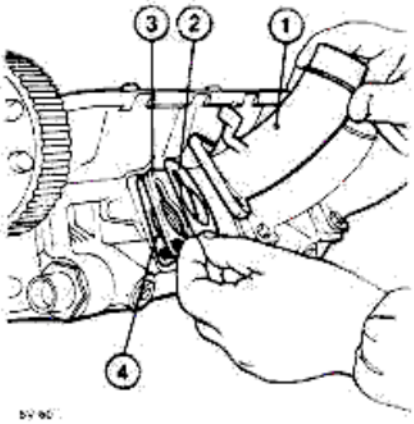

1 Intake stub pipes
2 Gasket
3 Insulating gasket
4 Gasket

REMOVAL OF THE CAMSHAFT PULLEY

Remove the toothed pulley driving the camshaft in the following way:

a. Unscrew nut (1)

Use the lever (tool **A.2.0361**) to prevent toothed pulley (2) from rotating.

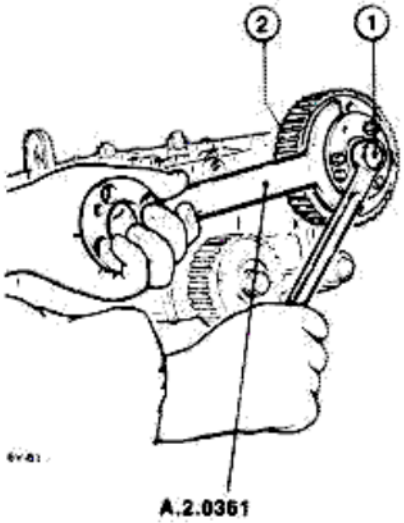

1. Nut
2. Toothed pulley

b. Slacken and unscrew screws (1) fixing the support hub (2) to the toothed pulley (3).

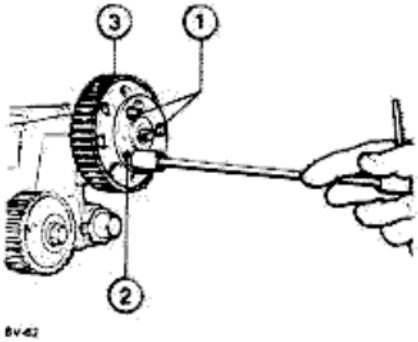

1. Screws
2. Support hub
3. Toothed pulley

c. Free the support hub, which is interference-fitted, using the puller (tool **A.3.0521**) and lever (tool **A.2.0361**).

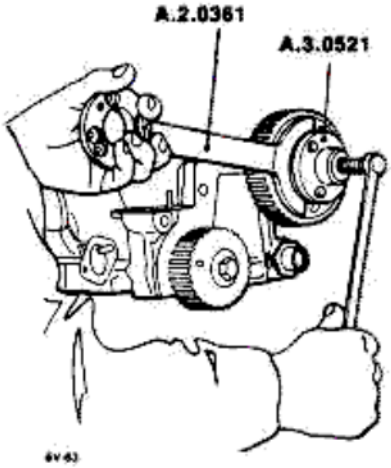

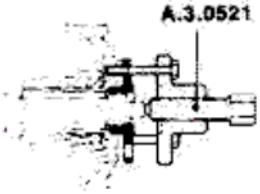

d. Slide out hub (1) complete with seal (2).

Extract toothed pulley (3) and retrieve seal (4).

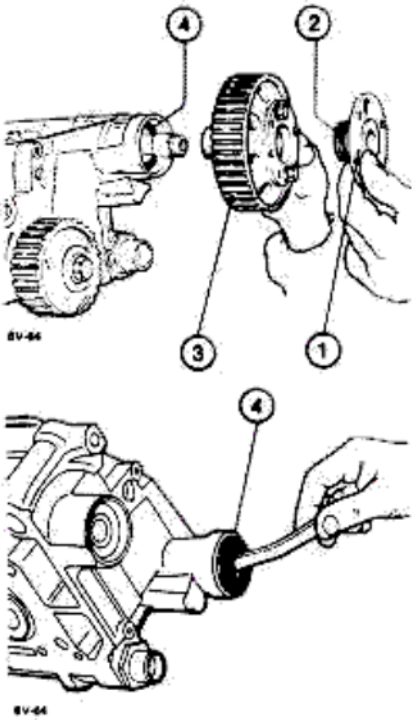

1. Hub
2. Seal ring
3. Toothed pulley
4. Seal ring

REMOVAL OF DISTRIBUTOR AND OIL PUMP DRIVE PULLEY

a. Raise the safety tab of nut (1) securing the gear.

b. Slacken nut (1) (use lever - tool **A.2.0361** to maintain it).

c. Unscrew and remove nut (1) with relative washer (2).

d. Slide out toothed pulley (3) complete with drive shaft (4) secured by screw with washer (5).

At the same time retrieve gear (6) and relative spacer (7) from the lower part of the cylinder head.

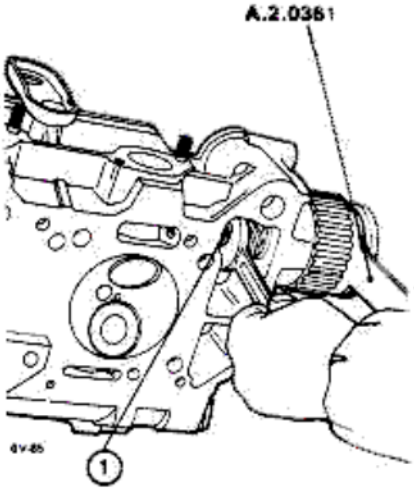

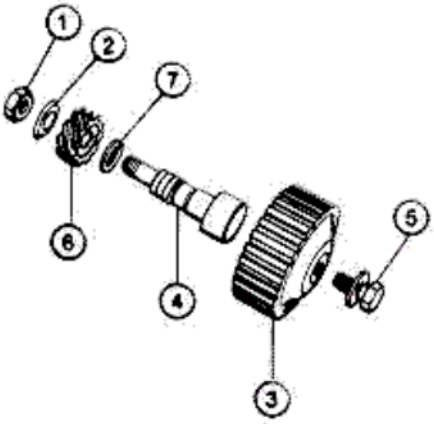

1. Nut
2. Lock washer
3. Toothed pulley
4. Drive shaft
5. Screw with washer
6. Gear
7. Spacer

e. Remove the oil ring (1) from under the cylinder head.

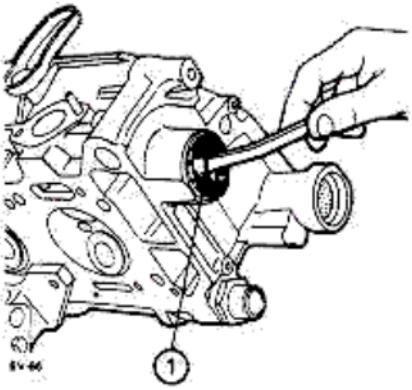

1. Seal (oil ring)

REMOVAL OF CAMSHAFT

a. Slacken and remove nuts with washers (1) securing the caps (2) of the camshaft.

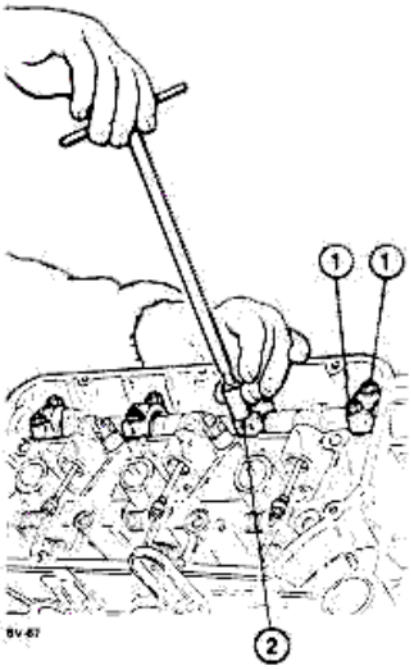

1. Nuts with washers
2. Camshaft caps

b. Remove caps. The camshaft caps are numbered progressively (1-2-3 etc.).
Cap (1) is located on the front part of the cylinder head.
When reassembling fit the caps in the same order.

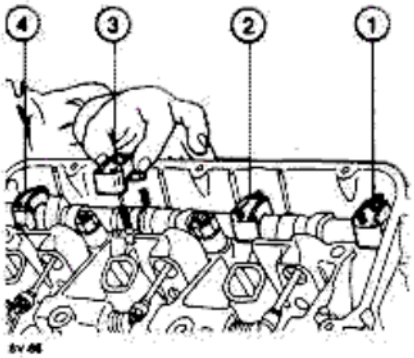

1. Cap no. 1
2. Cap no. 2
3. Cap no. 3
4. Cap no. 4

c. Remove camshaft (1) by raising the rear part first and then sliding it out in the direction indicated by the arrows in the figure.

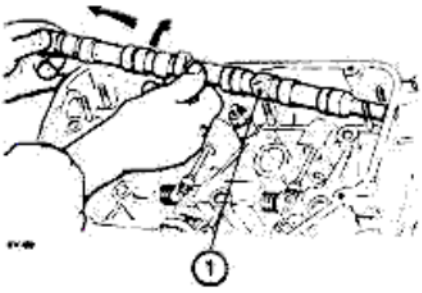

1. Camshaft

REMOVAL OF ROCKER ARM SHAFT AND VALVES

Disassemble the rocker arm support shaft as follows:

a. Remove tappets (1) from their seats in the cylinder head.

b. Slide out push rods (2) operating rocker arms (3) of the exhaust valves.

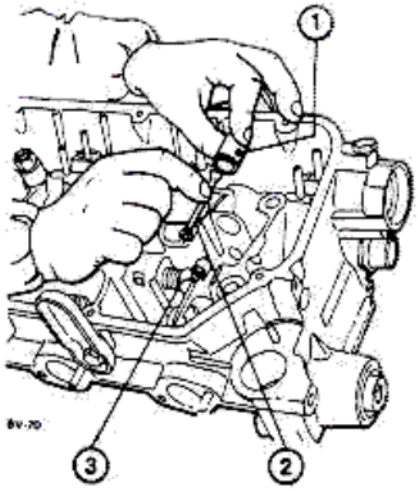

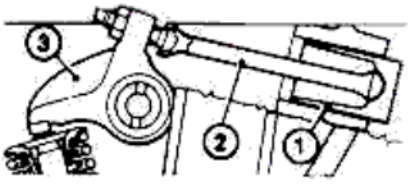

1. Tappet
2. Push rods
3. Rocker arms

c. Slacken and unscrew plug (1) sealing the rocker arm support shaft.

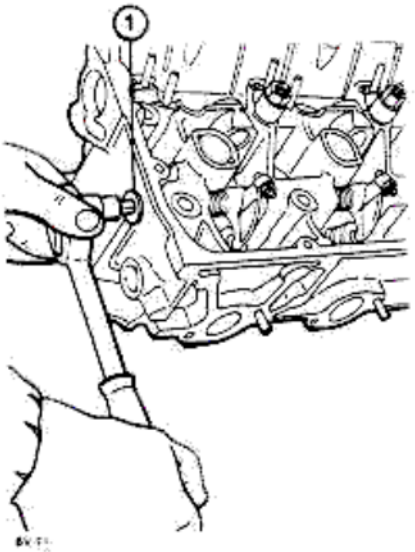

1. Plug

d. Screw a suitable tool (2) to the threaded shank of the rocker arm support shaft (1).

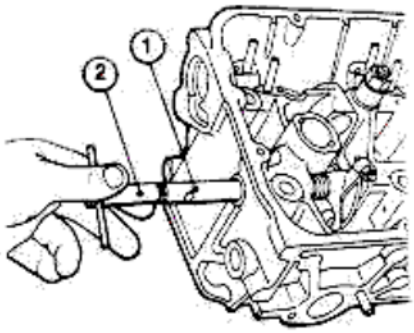

1. Rocker arm support shaft
2. Tool for removing shaft

e. Gradually extract the rocker arm shaft and retrieve, one at a time, the following parts:

— washer (1)
— rocker arms (2)
— spring (3)

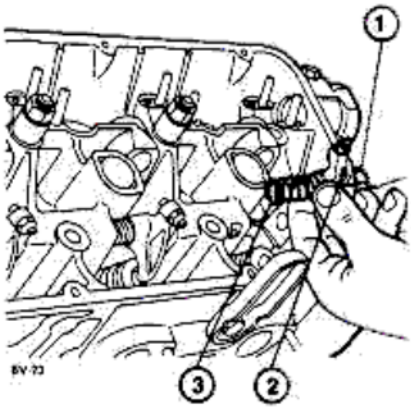

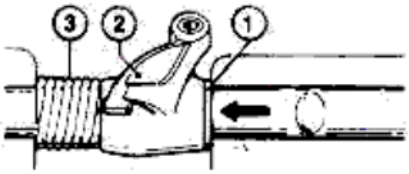

1. Washer
2. Rocker arms
3. Spring

f. Slide out tappets (1) located on the intake valves, complete with cap nut (2) which determines valve clearance. Remove in sequence so that they can be replaced in the same order.

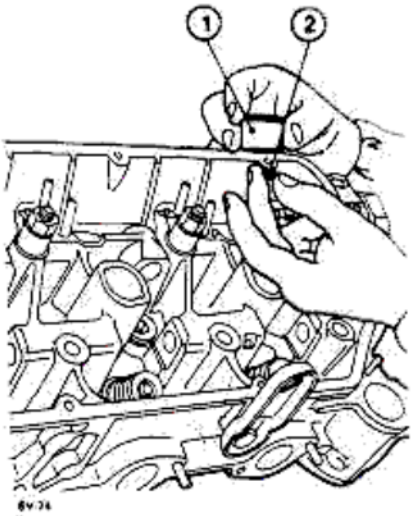

1. Intake valve tappets
2. Valve clearance adjustment cap nut

g. **Disassemble the valves** in the following way and using the following tools:

— Insert tool **A.2.0192** to support the valves by passing it under the spark plug well and lock it with special nut (tool **A.2.0359**). Screw support (tool **A.3.0522**) to the threaded shank of tool **A.2.0359**.

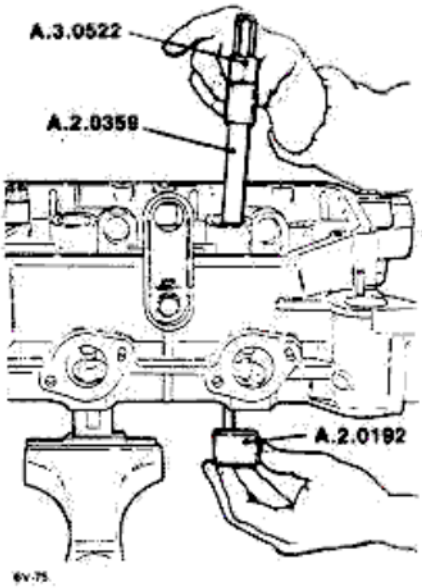

— Fit the cage for the removal and refitting of the cotters (tool **A.3.0520**) to the lever (tool **A.3.0324**) and fit the group to the tools already mounted, as shown in the figure.

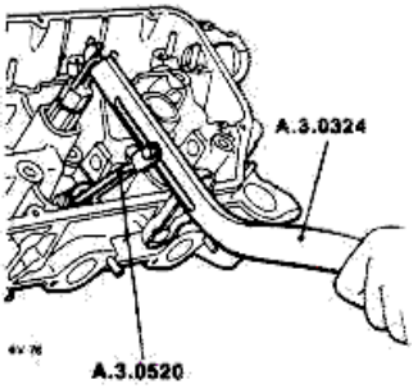

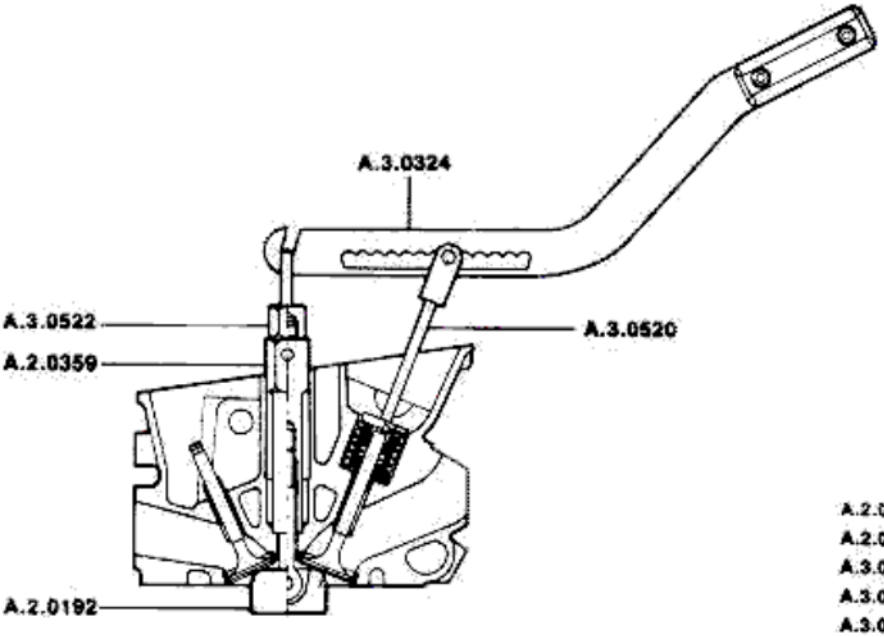

A.2.0192 Support for valves
A.2.0359 Special nut to secure A.2.0192
A.3.0522 Support for lever A.3.0324
A.3.0324 Lever for disassembly
A.3.0520 Cage for disassembling cotters

— Disassemble each pair of valves (intake and exhaust) and move the tool group each time.
Press the lever (tool **A.3.0324**) to overcome the resistance of the valve springs and remove cotters (1) (for this operation use a small screwdriver).
Then disassemble in the following order: upper cap (2), outer spring (3) and inner spring (4).

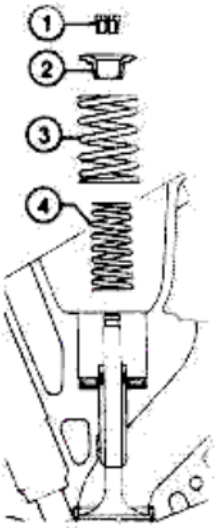

1. Cotters
2. Upper cap
3. Outer spring
4. Inner spring

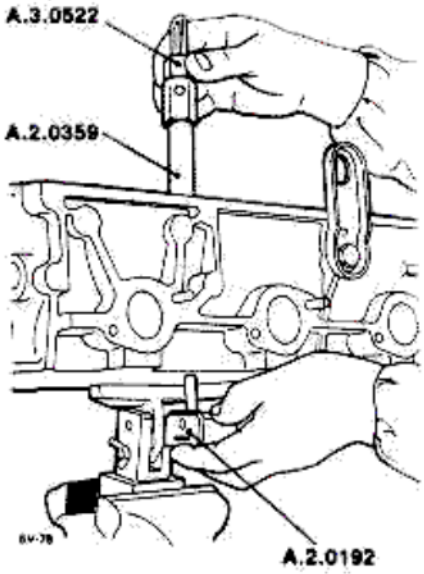

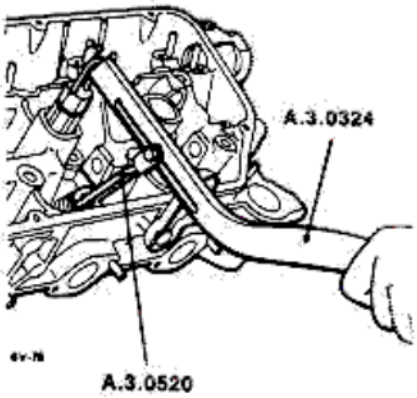

— Unscrew special nut (tool **A.2.0359**) complete with support (tool **A.3.0522**) from valve support (tool **A.2.0192**).

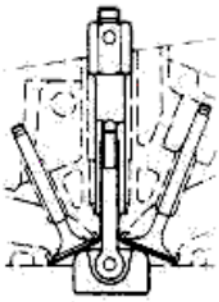

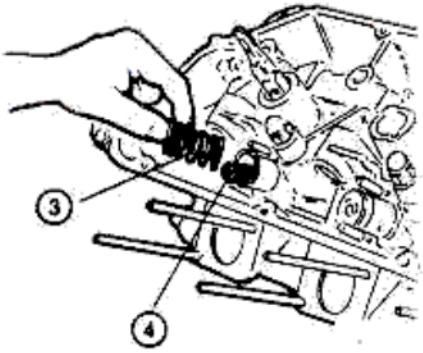

— Withdraw pair of valves (exhaust valve (1) and intake valve (2)) from the respective guides.
Repeat the operations described for the remaining pairs of valves.

1. Exhaust valves
2. Intake valves

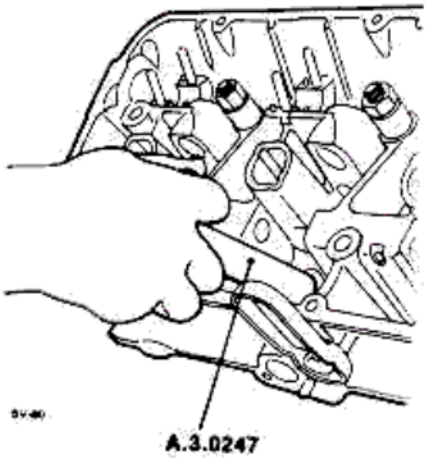

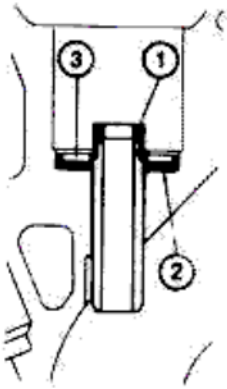

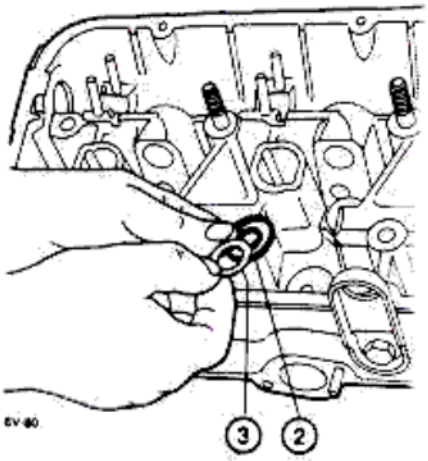

1. Rubber oil seals
2. Lower caps
3. Spring seat rings

h. **Removal of rubber oil seals and lower caps from the valves**

— Using tool **A.3.0247** remove rubber oil seals (1) from the guides of the intake and exhaust valves.
Remove lower caps (2) from both intake and exhaust valves, complete with spring seat rings (3).

CHECKING AND TESTING THE CYLINDER HEADS

CHECKING AND TESTING CYLINDER HEAD AND VALVES

a. Examine visually and with care, the casting and all the parts making up the cylinder head to check for cracks, burns, seizing or signs of excessive wear.

b. If this inspection should indicate the possibility of re-utilizing one or more parts check, according to the instructions given and after thorough cleaning of the head, the dimensions of the same.

CHECKING CYLINDER HEAD FLATNESS

a. Thoroughly clean the surfaces of the cylinder head to remove any gasket fragments. Use butyl acetate or methylethylketone.

b. The checking of the flatness of the lower surface of the cylinder head must be performed by means of a straight edge (1) placed on the lower surface of the head; the extent of deformation should be measured with a suitable thickness gauge (2).

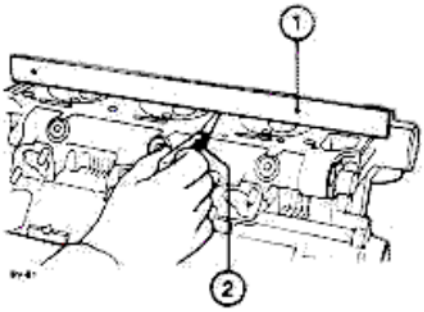

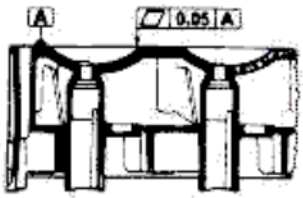

1. Straight edge
2. Thickness gauge

Maximum flatness error of the lower surface of the cylinder head:
A = 0.05 mm (0.002 in)

c. If the lower surface of the cylinder head should prove to be excessively deformed it must be levelled.
Levelling must be performed on both heads.

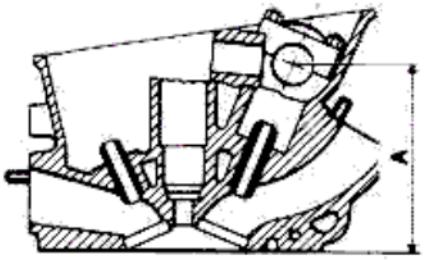

A. Distance between camshaft axis and lower surface of cylinder head

Min. permitted height of cylinder head after regrinding:
A = 124.5 mm (4.902 in)

For 3000 engine (061.24)
A = 124.85 to 125.15 mm (4.915 to 4.927 in)

CAUTION:
Do not exceed the minimum limit permitted as this can cause serious engine malfunctions.

d. Check that the lower surface of the head is well-finished.

CHECKING CYLINDER HEAD BUSHINGS

a. Measure the diameter of the following bushings mounted on the cylinder head:
- «A», bushing for the distributor and oil pump drive gear;
- «B», bushing for the distributor and oil pump drive pulley shaft;
- «C», bushings for the shaft of the toothed pulley driving the camshaft.

NOTE:
Bushings «A» and «B» are not mounted on the left cylinder head.

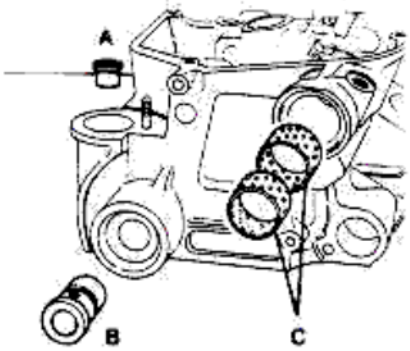

A. Distributor and oil pump bushing
B. Distributor and oil pump bushing toothed pulley
C. Camshaft toothed pulley bushing

b. Measure the internal diameter as follows:
- using a micrometer (2) establish dimension «d» to be measured (refer to the table);

— fit the most suitable bore gauge (1) to the stem of the dial indicator;
— zero-set the dial indicator at the dimension established on the micrometer and then measure diameter «d» of the bushings measured on 120° of the circumference.

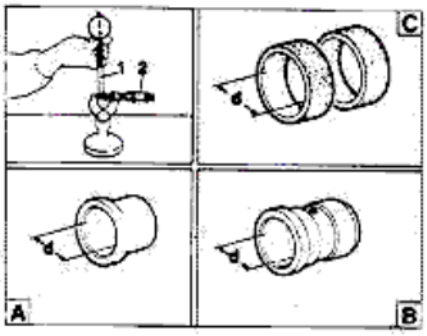

«d» mm (in)
(bushing I.D.)

Bushing		
A	B	C
19.000 to 19.021 (0.7480 to 0.7489)	19.000 to 19.021 (0.7480 to 0.7489)	32.000 to 32.025 (1.2598 to 1.2608)

1. Bore gauge and dial indicator
2. Micrometer

c. If the values obtained are not within the specified limits replace the bushings involved. For removal and installation use the tool illustrated (**A.3.0528**) as shown below

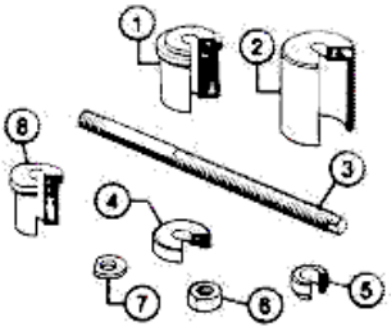

Components of tool A.3.0528

1. Spool
2. Bowl
3. Tie rod
4. Flange
5. Special washer
6. Hex nut (M10 x 1.25)
7. Shaped washer
8. Spool

d. **Removal of bushings**

— Bushing «A» of the gear operating the oil pump and the distributor should be withdrawn using special washer (5) as a pusher, and using bowl (2) as a support (which will accompany the bushing as it is extracted).

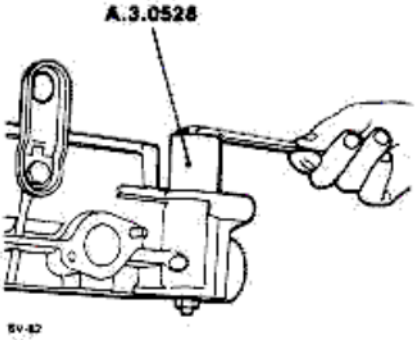

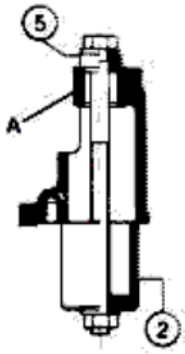

A. Bushing
2. Bowl (A.3.0528)
5. Special bushing (A.3.0528)

— Proceeding in the same way as described above, withdraw the two bushings «C» of the toothed pulley support shaft operating the camshaft. Use flange (4) as a pusher, together with cup (2).

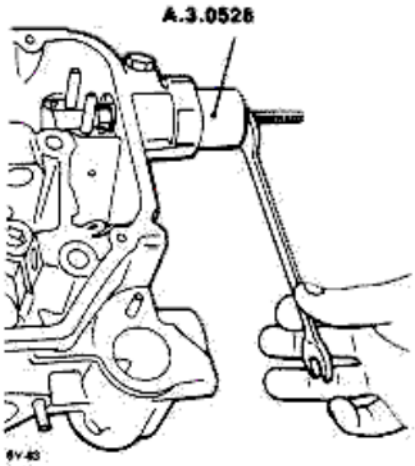

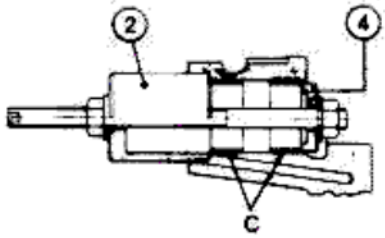

C. Bushings
2. Bowls (A.3.0528)
4. Flange (A.3.0528)

— Extract bushing «B» for the shaft of the pulley operating the oil pump and the distributor using, in addition to cup (2), special washer (5) as a pusher.

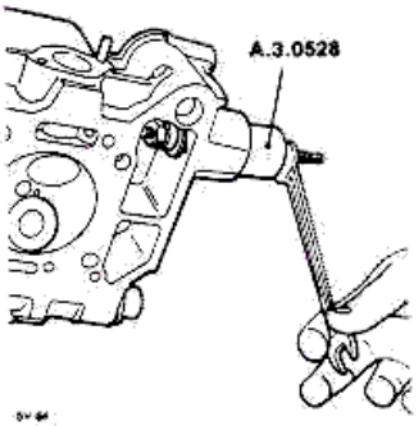

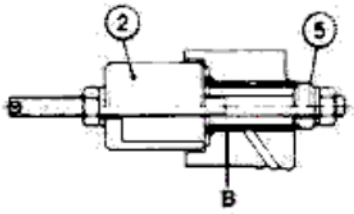

B. Bushing
2. Cup (A.3.0528)
5. Special washer (A.3.0528)

e. **Installation of the bushings**

— Bushings «C», made of antifriction metal, for the shaft of the pulley operating the camshaft, must be inserted in the following way.
Temporarily fit cap (9) of the camshaft and lock it with nuts (10).
Place the rear bushing «C», **recognizable because it is thinner**, so that it is sufficiently centered in its seat.
Place, as illustrated in the figure, tool **A.3.0528** comprising spool (1) which acts as a pusher, and spool (8).
Insert until the lip of spool (1) touches the bushing seat.

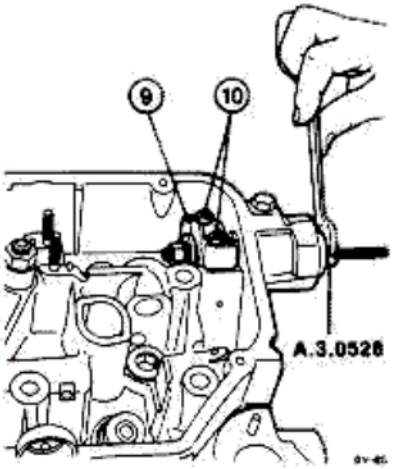

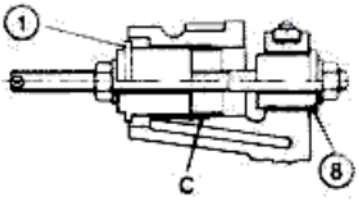

C. Bushing
1. Spool (A.3.0528)
8. Spool (A.3.0528)
9. Cap
10. Nuts

— To insert the front bushing «C» proceed in the same way but use spool (1) in inverted position as illustrated in the following figure so as to obtain the correct position of the bushing.

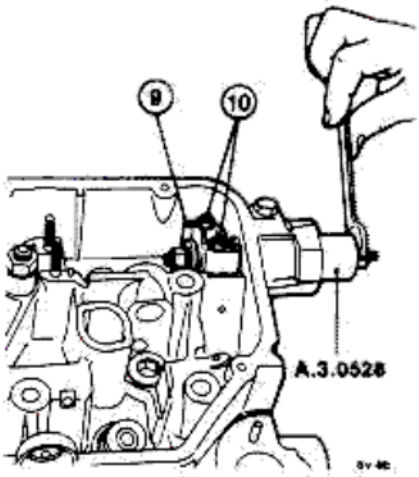

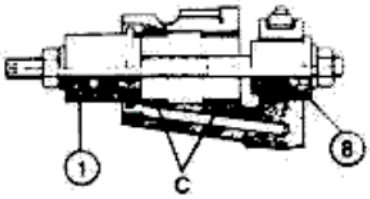

C. Bushings
1. Spool (A.3.0528)
8. Spool (A.3.0528)
9. Cap
10. Nuts

— Insert bushing «B» for the shaft of the toothed pulley operating the oil pump and the distributor using spool (1) as a pusher and flange (4) as a support

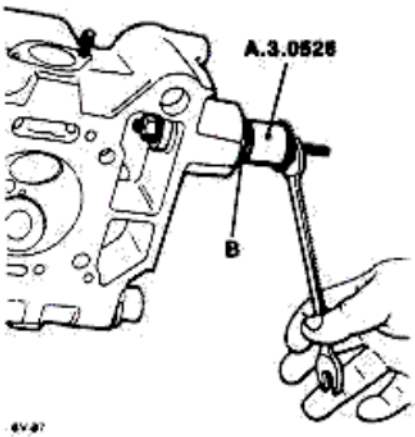

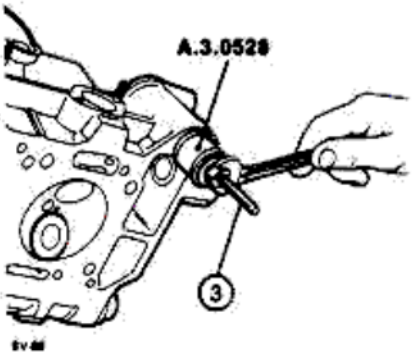

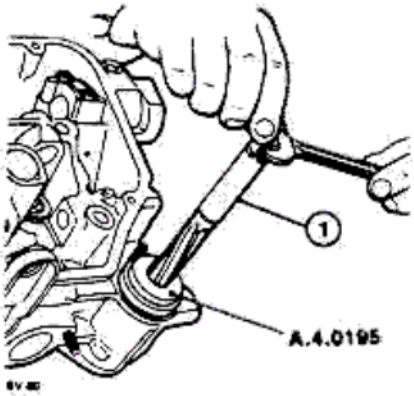

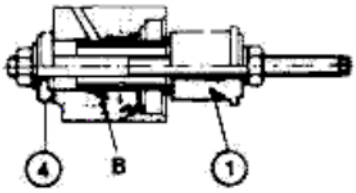

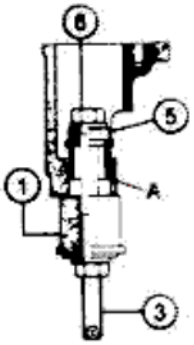

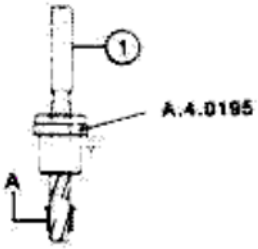

B. Bushing
1. Spool (A.3.0528)
4. Flange (A.3.0528)

A. Bushing
1. Spool (A.3.0528)
3. Tie rod (A.3.0528)
5. Special washer (A.3.0528)
6. Nut (A.3.0528)

A. Bushing
1. Reamer [19 mm H7 (0.7480 to 0.7489 in)]

— Insert, from the upper side of the distributor seat, bushing «A» for the distributor and oil pump drive gear. Place tool **A.3.0528** in the following way: insert tie rod (3) complete with nut (6) and special washer (5) (as pusher); from the opposite side insert support spool (1) in the tie rod and complete the insertion of the bushing "A" in this way.

f. **Reaming bushings «A» and «B»**

After inserting the two bushings «A» and «B» for the distributor and oil pump drive mechanism, they must be reamed to the specified dimensions.

— **Bushing «A»**; insert tool **A.4.0195** and then, using a suitable reamer (1) [19 mm H7 (0.7480 to 0.7489 in)] bore as specified.

Diameter after reaming; bushing for distributor and oil pump drive gear shaft: 19.000 to 19.021 mm (0.7480 to 0.7489 in)

— Bushing «B»; insert guide tool **A.4.0195** and then, using a suitable reamer (1) [19 mm H7 (0.7480 to 0.7489 in)] bore as specified.

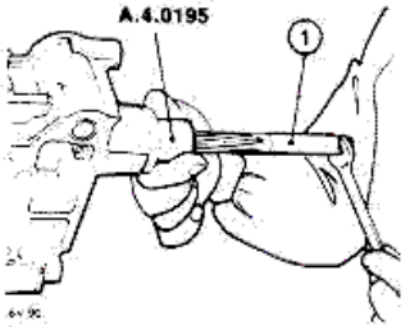

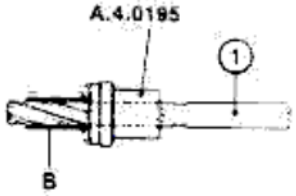

B. Bushing
1. Reamer [19 mm H7 (0.7480 to 0.7489 in)]

Diameter after reaming: bushing for distributor and oil pump drive pulley shaft: 19.000 to 19.021 mm (0.7480 to 0.7489 in)

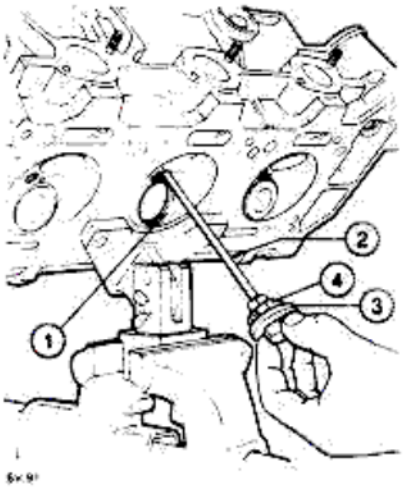

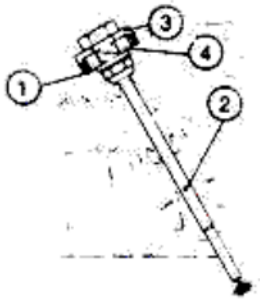

1. Valve seat
2. Mandrel for extraction
3. Stop ring
4. Screw tap for threading the valve seats to be extracted

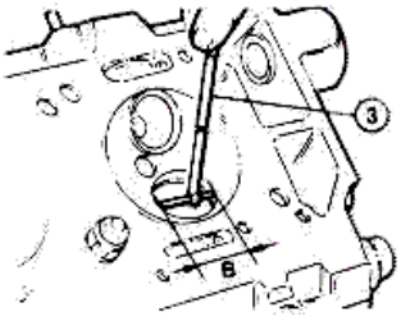

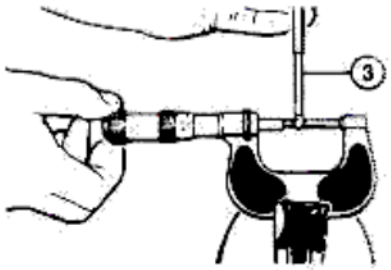

1. Micrometer
2. Valve seat
3. Bore meter

CHECKING VALVE SEATS

a. Check that the valve seats do not show scoring, cracking or burning and that they are well-fitted in their respective seats on the cylinder head - if necessary replace them.

b. Withdraw the valve seats (1) using a suitable tool as illustrated in the figure. Proceed as follows:

— fit and lock stop ring (3) and screw tap (4) (selected according to the diameter of the valve seat to be extracted) on mandrel (2);
— insert the group thus formed in the valve guide until screw tap (4) comes into contact with the valve seat (1);
— thread the valve seat by means of a no. 22 mm wrench on the head of the mandrel until ring (3) touches the surface of the valve seat - then unscrew a half turn;
— tap the extremity of the mandrel protruding from the head to extract the valve seat.

c. Use a micrometer (1) to measure the diameter of the new valve seat (2) and a bore meter (3) to measure that of the respective seat in the cylinder head to check the correct fitting interference. Compare the values obtained with those given in the table.

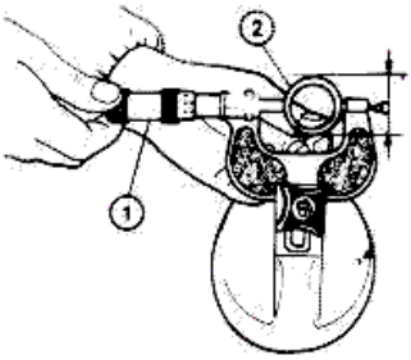

Valve		Engine 019.11
Valve seat O.D. A = mm (in)	Normal	i. 42.065 to 42.100 (1.6561 to 1.6575); e. 37.065 to 37.100 (1.4593 to 1.4606);
	Oversize	i. 42.365 to 42.400 (1.6679 to 1.6693); e. 37.365 to 37.400 (1.4711 to 1.4724);
Valve seat housing I.D. B = mm (in)	Normal	i. 42.000 to 42.025 (1.6535 to 1.6545); e. 37.000 to 37.025 (1.4567 to 1.4577);
	Oversize	i. 42.300 to 42.325 (1.6654 to 1.6663); e. 37.300 to 37.325 (1.4685 to 1.4695);

i. = Intake valve e. = Exhaust valve

Valve		Engine 061.24
Valve seat O.D. A = mm (in)	Normal	i. 45.065 to 45.100 (1.7742 to 1.7756); e. 39.065 to 39.100 (1.5380 to 1.5394);
	Oversize	i. 45.365 to 45.400 (1.7860 to 1.7874); e. 39.365 to 39.400 (1.5498 to 1.5512);
Valve seat housing I.D. B = mm (in)	Normal	i. 45.000 to 45.025 (1.7716 to 1.7726); e. 39.000 to 39.025 (1.5354 to 1.5364);
	Oversize	i. 45.300 to 45.325 (1.7835 to 1.7844); e. 39.300 to 39.325 (1.5472 to 1.5482);

i. = Intake valve e. = Exhaust valve

d. Pre-heat the cylinder head in a suitable oven to **120°C (274°F)**.

e. Insert the valve seat (of intake and exhaust valves) using the tool used for the removal in the following way:

— fit and lock stop ring (2) (selected according to the diameter of the valve seat to be fitted) on mandrel (1);
— insert the group thus formed into the valve guide until stop ring (2) comes into contact with the valve seat;
— tap the extremity of mandrel (1) protruding from the head, to insert the valve seat.

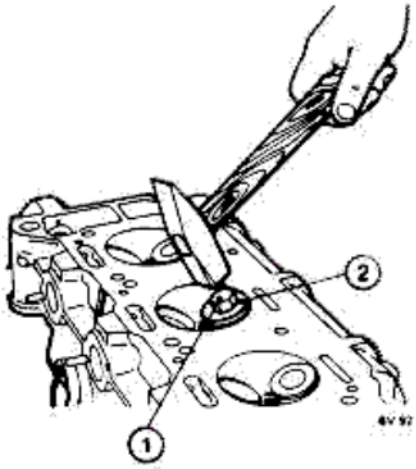

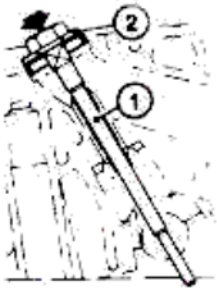

1. Mandrel for insertion
2. Stop ring

CHECKING VALVE GUIDES

Determine the clearance between valve guide and the stem.

If the clearance exceeds the permitted tolerance replace the worn parts.

a. **Determination of clearance**

— Using a micrometer measure the diameter of the valve stem in three places and in directions at right angles to each other.

— Using a bore gauge (1) measure the I.D. of the valve guide «d».

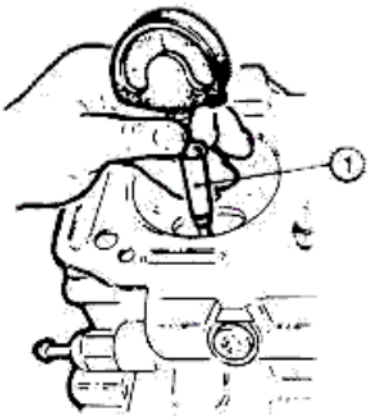

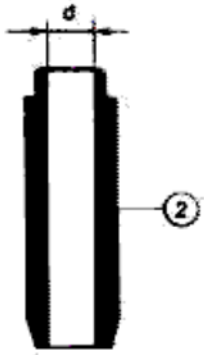

1. Bore gauge
2. Valve guide

Valve guide I.D. (intake and exhaust).
d = 9.000 to 9.015 mm
(0.3543 to 0.3549 in)

— Calculate the clearance, subtracting the maximum diameter of the valve stem from the I.D. of the valve guide.

Radial clearance between valve stem and valve guide I.D.:
Intake: 0.013 to 0.043 mm
(0.0005 to 0.0017 in)
Exhaust: 0.040 to 0.080 mm
(0.0016 to 0.0031 in)

b. **Replacing the valve guide**

— Visually check the valve guides, ensuring that there is no scoring or traces of seizing and that they have not undergone deformation or moved from mounting position.
— If necessary remove the worn valve guides (1) using extracting tool **A.3.0134** as illustrated in the figure.

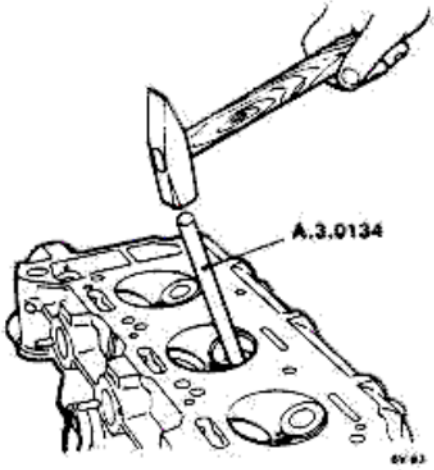

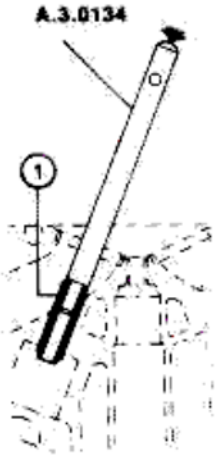

1. Valve guide

c. **Insertion of the valve guide**

— Check the I.D. of the valve guide seat and the O.D. of the new valve guide; the fitting interference should be within the prescribed limits (the values are valid for both intake and exhaust valves).

Valve guide seat I.D.:
13.990 to 14.018 mm
(0.5508 to 0.5519 in)

Valve guide O.D.:
14.033 to 14.044 mm
(0.5525 to 0.5529 in)

For 3000 engine (061.24)
External diameter of exhaust valve guide: 14.048 to 14.059 mm
(0.5531 to 0.5535 in)

Interference between valve guide and seat of valve guide:
0.015 to 0.054 mm
(0.0006 to 0.0021 in)

— Insert the new valve guides using tool **A.3.0526** for the intake valve guides and Exhaust, ~~and tool A.3.0527 for the exhaust valve guides.~~

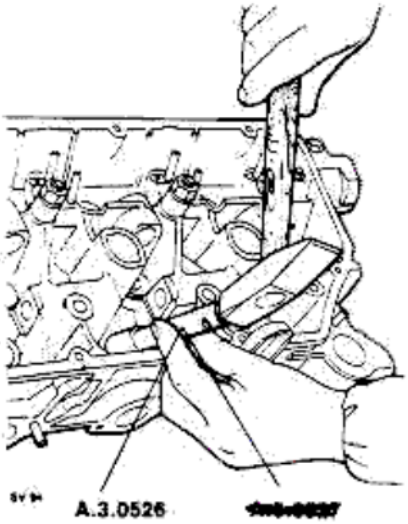

— These tools ensure the correct protrusion of the valve guides with respect to the support surface of the lower spring cap on the cylinder head.

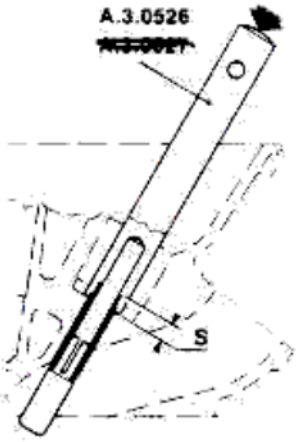

Protrusion of the valve guides from the cylinder head:
S = 10.2 to 10.6 mm
(0.402 to 0.417 in)

d. **Reaming the valve guides**

— Ream intake and exhaust valve guides (1) using a 9 mm H7 (0.3543 to 0.3549 in) reamer (2) to calibrate the holes to the prescribed diameter and then measure the I.D. of the valve guides.

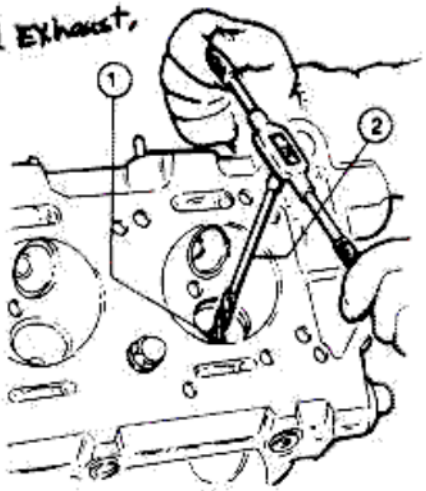

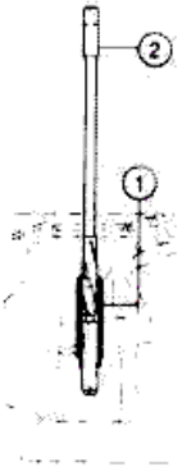

1. Valve guides
2. Reamer
[diameter 9 mm H7 (0.3543 to 0.3549 in)]

I.D. of the intake and exhaust valve guides: 9.000 to 9.015 mm (0.3543 to 0.3549 in)

e. **Turning the valve seats**

— Wait until the cylinder head is cooled and perform the turning of the valve seats in the following way.

— Position support (1) of the portable lathe (2) on the cylinder head and secure it in a suitable way.

— The angle of turning, which is identical for both intake and exhaust, should be:

Taper of intake and exhaust valve seats:
α = 90°

[**For 3000 engine (061.24)**
α = 89°40' to 90°20'

— Taper α is obtained with the tool of the portable lathe at 45° (for both intake and exhaust valves).

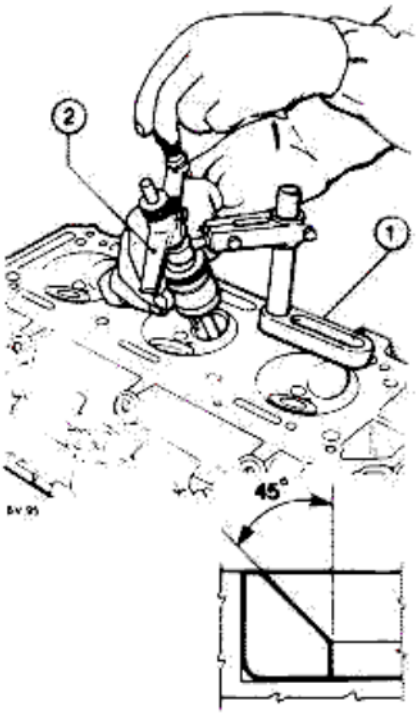

1. Portable lathe support
2. Portable lathe

CAUTION:
The turning of the valve seats which do not require replacing is suitable for the elimination of minor defects of the working area: however, ascertain, before performing the operation, that there is sufficient machining allowance.

CHECKING THE VALVES

Check that the valves are not scored or burnt or do not show marks of mating (steps) with the corresponding seats on the cylinder head.
Renew them if necessary.

a. If the valves are in good condition check the diameters of the stem and heads (which must be within the tolerances given in the table).

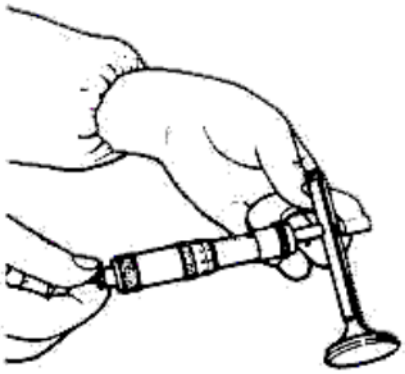

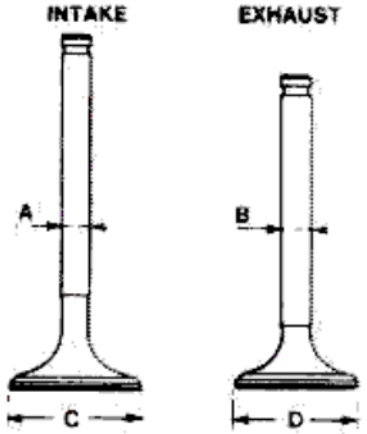

Diameter of valve stem [mm (in)]		
Reference		**Engine 019.11**
Intake valve	A	8.972 to 8.987 (0.3532 to 0.3538)
Exhaust valve	B	8.935 to 8.960 (0.3518 to 0.3528)
Reference		**Engine 061.24**
Intake valve	A	8.972 to 8.987 (0.3532 to 0.3538)
Exhaust valve	B	8.940 to 8.955 (0.3520 to 0.3526)

Diameter of valve head [mm (in)]		
Reference		**Engine 019.11**
Intake valve	C	40.850 to 41.000 (1.6083 to 1.6142)
Exhaust valve	D	36.400 to 36.600 (1.4331 to 1.4409)
Reference		**Engine 061.24**
Intake valve	C	43.850 to 44.000 (1.7264 to 1.7323)
Exhaust valve	D	38.500 to 38.700(1) (1.5157 to 1.5236)(1)

(1) For LIVIA type valve: 38.450 to 38.600 mm (1.5138 to 1.5197 in)

GRINDING OF THE VALVES AND VALVE SEATS

a. After checking the valves and valve guides grind as follows:

— spread polishing paste (SIPAL AREXONS Carbosilicium for valves - P/N 4100-31502);

— use engine oil to lubricate the valve stem;

— attach the lower surface of the head of the valve to the suction cup of the pneumatic grinder (1);

— insert the valve in its guide, turn on the pneumatic grinder (1) and grind.

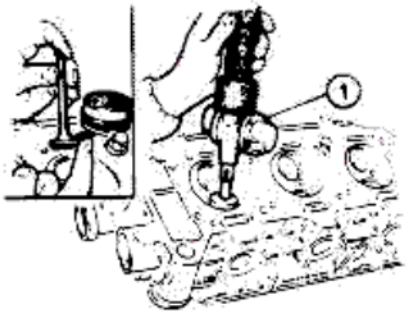

1 Pneumatic grinder for valves and valve seats

— Grind and then carefully clean the valves and valve seats using petrol or solvent.

CHECKING VALVE SPRINGS

a. Carefully examine the valve springs and, if there are no signs of excessive wear or yielding, check that:

— the terminal turns must be parallel and perpendicular to the axis of the spring (max. error 2°);

— the lenght of the «free» springs corresponds to the following values:

Length of free springs [mm (in)]		
External spring	La	44.6 (1.756)
Internal spring	Lb	44.1 (1.736)

— The flexibility values, measured by means of a dynamometer (1) must be within the limits given in the table.

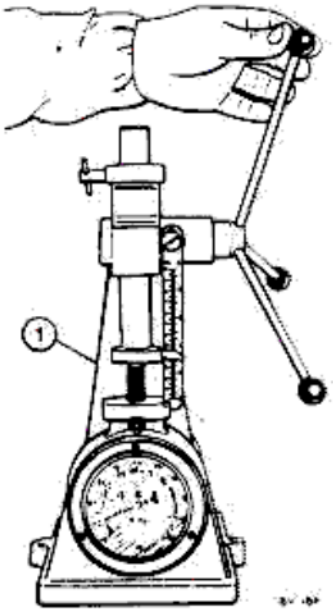

1. Dynamometer

External spring		
Spring length	**mm (in)**	**Test force**
With valve closed	32.5 (1.280)	24.80 to 25.66 kg (243.2 to 251.6 N) (54.6 to 56.5 lb)
With valve open	23.5 (0.925)	47.95 to 49.75 kg (470.2 to 487.8 N) (105.7 to 109.7 lb)

Internal spring		
Spring length	**mm (in)**	**Test force**
With valve closed	30.5 (1.201)	12.82 to 13.28 kg (125.7 to 130.2 N) (28.3 to 29.3 lb)
With valve open	21.5 (0.846)	22.67 to 23.53 kg (222.3 to 230.7 N) (50.0 to 51.9 lb)

CHECKING TAPPETS AND TAPPET SEATS

a. Check that the external surface of the tappets and the upper surface on which the cams operate are free from any trace of seizing, scoring or abnormal wear.
If they can be re-utilized check the dimensions.

— Using a micrometer check the outside diameters are within the specified limits.

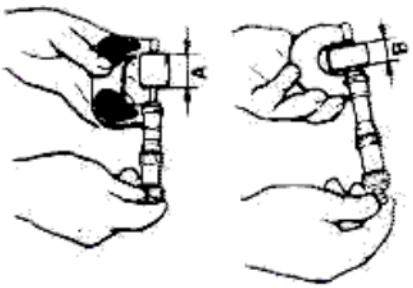

A = intake tappet diameter:
34.973 to 34.989 mm
(1.3769 to 1.3775 in)

B = exhaust tappet diameter:
21.971 to 21.989 mm
(0.8650 to 0.8657 in)

— Check the tappet seats formed in the cylinder head casting and check the dimensions with a bore gauge applied to a dial indicator.
Compare the value obtained for the tappet seat of the intake valve with the specified tolerance.

A = intake valve tappet seat diameter:
35.000 to 35.025 mm
(1.3780 to 1.3789 in)

— In the same way as described previously measure the value for the exhaust valve tappet seat and compare it with that specified.

B = exhaust valve tappet seat diameter:
22.000 to 22.021 mm
(0.8661 to 0.8670 in)

CHECKING ROCKER ARMS AND ROCKER ARM SHAFT

— Use bore gauge (1) to measure the I.D. of the rocker arms (2) and check that they are within the specified tolerances.

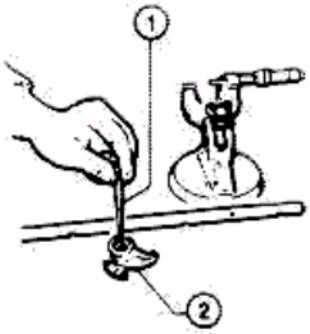

1. Bore gauge
2. Rocker arms

A = diameter of shaft hole in rocker arm:
16.016 to 16.034 mm
(0.6306 to 0.6313 in)

— Measure the O.D. of the rocker arm shaft with a micrometer (2) and compare the values with those specified.

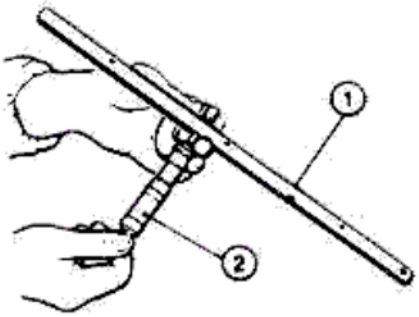

1. Rocker arm shaft
2. Micrometer

B = rocker arm shaft diameter:
15.988 to 16.000 mm
(0.6294 to 0.6299 in)

CHECKING CAMSHAFTS AND JOURNAL BEARINGS

a. Check the dimensions of the camshaft journal bearings in the following way:

— Fit caps (1) in the order indicated by the numbers stamped on the caps themselves - cap no. 1 must be fitted towards the front of the cylinder head.

— Screw nuts (2) fixing the caps of the camshaft, lubricate them and tighten to the torque specified.

(T) : Torque wrench setting
Camshaft cap lock nuts
16 to 18 N·m
(11.57 to 13.02 ft·lb;
1.6 to 1.8 kg·m)

— Check, using a bore gauge (3) applied to a dial indicator (4) the diameter of the camshaft journal bearings and compare the values measured with those specified.

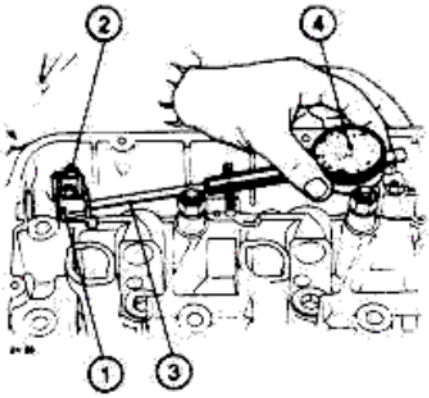

1. Camshaft caps
2. Lock nuts
3. Bore gauge
4. Dial indicator

Diameter of camshaft main journal seat:
27.000 to 27.033
(1.0630 to 1.0643 in)

b. Carefully examine the working area of the cams and the main journals of the camshaft and ensure they are free from scoring, traces of seizing or signs of overheating or abnormal wear. Check the diameters of the camshaft main journals as follows:

— Measure the diameter of the camshaft main journals (1) at the four points indicated by the arrows in the figure and compare them with the specified values.

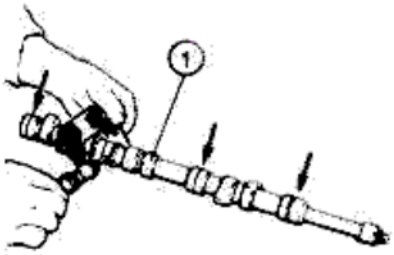

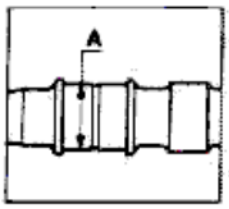

1. Camshaft

A = diameter of camshaft main journals:
26.949 to 26.970 mm
(1.0610 to 1.0618 in)

— Check the eccentricity of the camshaft main journals between two supports by means of a dial indicator.

— Measure the height of the cams with a dial indicator.
If the cam height is less than the specified value replace the shaft.

Minimum cam height [mm (in)]	
Intake valve cam	9 (0.354) (1)
Exhaust valve cam	6.4 (0.252)

(1) For 3000 engine (061.24): 9.1 (0.358)

CHECKING END FLOAT OF CAMSHAFT

a. Fit the caps, noting the sequence indicated by the numbers stamped on the caps themselves.
Cap no. 1 must be fitted towards the front part of the cylinder head.

b. Screw on the nuts securing the camshaft caps, lubricate them and tighten:

(T) : Torque wrench setting
Camshaft cap lock nuts
16 to 18 N·m
(1.6 to 1.8 kg·m
11.57 to 13.02 ft·lb)

c. Place plate (1) on the upper surface of the cylinder head.

d. Apply magnetic base (2) to the plate (1) and place the sensor of dial indicator (3) so that it is in contact with the camshaft as illustrated in the figure.

e. Move the camshaft axially and measure the end play; check that the value is within the limits specified.
If not the camshaft must be replaced.

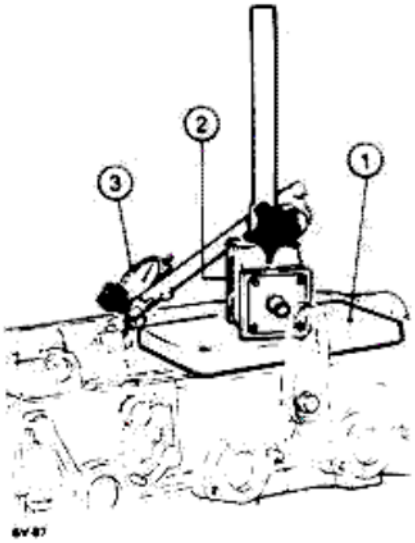

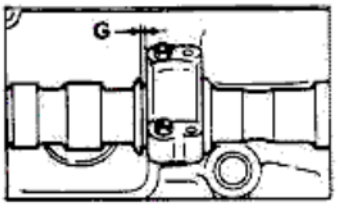

1. Support plate
2. Magnetic base
3. Dial indicator

G = camshaft end float:
0.065 to 0.200 mm
(0.0026 to 0.0079 in)

For 3000 engine (061.24):
G = 0.060 to 0.201 mm
(0.0024 to 0.0079 in)

ASSEMBLY OF THE CYLINDER HEADS (ON BENCH)

INSTALLATION OF VALVES AND ROCKER ARM SHAFTS

CAUTION:
The re-fitting of the valves is performed by using the same set of tools used for removal.
It is therefore necessary to reinstall the pair of valves (intake and exhaust) of each cylinder by moving the tool group each time.

a. Insert the lower caps (1) and stop washers (2) on the guides of the intake and exhaust valves.

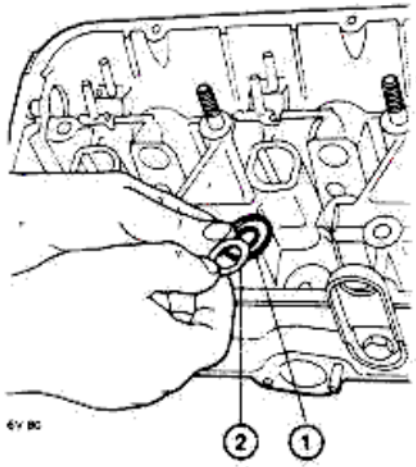

1. Lower caps
2. Stop washers

b. Fit rubber oil seals (1) on the guides of the intake and exhaust valves using tool **A.3.0244**.

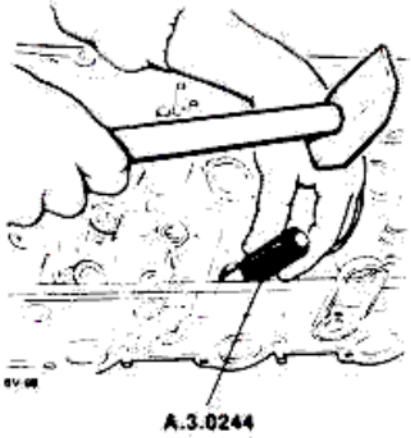

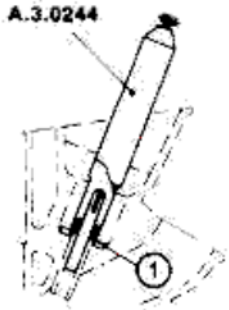

1. Rubber oil seal

c. Lubricate the stem of the valve with clean engine oil, insert valves (1) into the respective guides and support them with tool **A.2.0192** which, in turn must be fixed to the spark plug well by means of special nut **A.2.0359**, complete with support for valve fitting, tool **A.3.0522**.

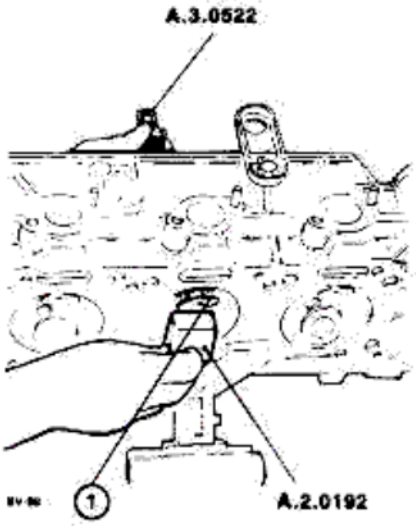

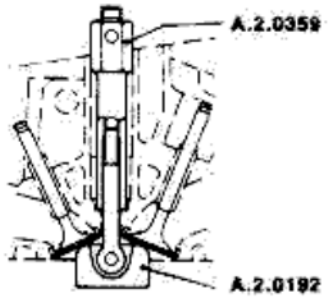

1. Intake and exhaust valves

d. Complete fitting by inserting the following in the sequence given, on the valve stem:
- inner springs (1);
- outer springs (2);
- upper caps (3).

NOTE:
The damping coils of the springs must be facing downwards.

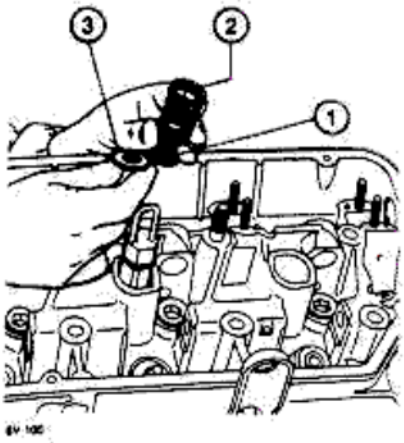

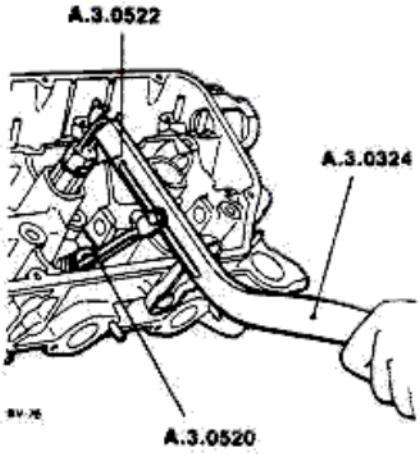

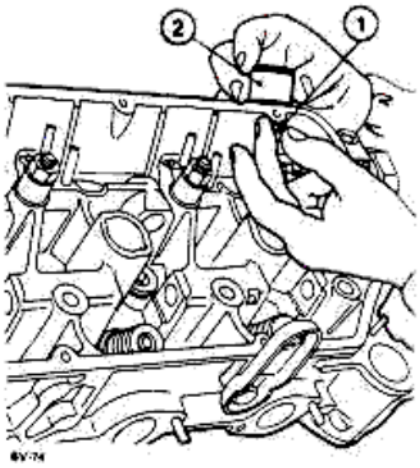

1. Caps
2. Bowls

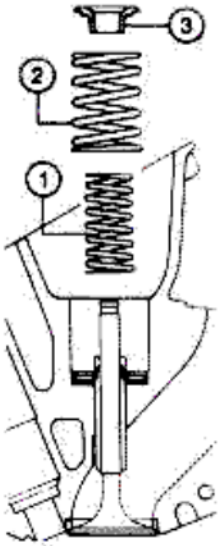

1. Inner springs
2. Outer springs
3. Upper caps

e. Connect lever (tool **A.3.0324**) complete with cage (tool **A.3.0520**) to support (tool **A.3.0522**).
Using lever **A.3.0324** compress the spring and insert cotters (1).
During fitting ensure that the cotters are correctly seated in the channel in the valve stem.

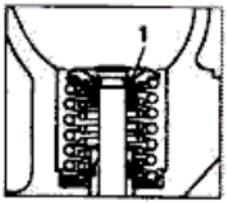

1. Cotters

f. **Checking tightness of valves and valve seats**
Insert the spark plugs in their seats.
Put a little petrol in a combustion chamber so that the valve head being examined is just covered.
Introduce low pressure air into the intake and exhaust ducts and check that there are no air bubbles in the petrol.
If there is leakage ensure that the valves are perfectly seated and repeat the tightness test.
If the result is negative the grinding of the valve seats must be repeated as specified in the paragraph "CHECKING AND TESTING THE CYLINDER HEADS - Checking the Values".
g. After fitting all the valves mount the caps (1) (which determine the clearances) on the intake valves. The positions should be the same as those before removal.
Lubricate bowls (2) with clean engine oil and insert them in their respective seats.

h. **Re-fitting of rocker arms and rocker arm shaft**
Perform the following operations to re-fit the shaft and rocker arms which operate the exhaust valves:
— screw on a suitable tool (1) to the threaded shank of the rocker arm shaft (2);
— insert the shaft, suitably lubricated with engine oil, in the seat in the cylinder head and, on this, in sequence: springs (3), rocker arms (4) and washers (5) previously lubricated with engine oil.

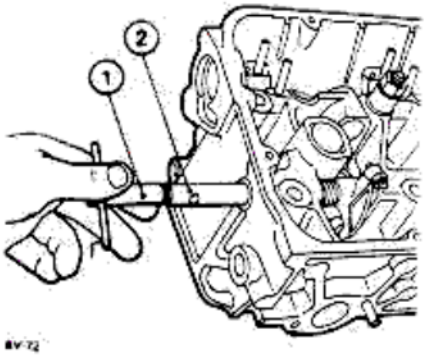

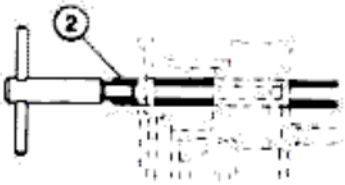

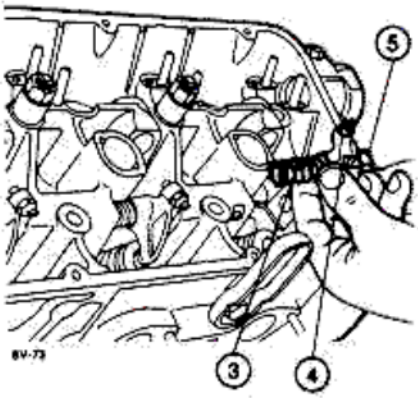

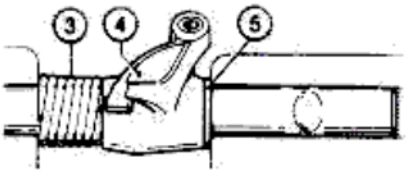

1. Shaft insertion tool
2. Rocker arm shaft
3. Springs
4. Rocker arms
5. Washers

— After completing the re-fitting of the rocker arms rotate the shaft using tool (1) until the notches on the shaft are aligned with holes (2) in order to permit the passage of the cylinder head support studs; to check that this is so use a **12 mm (0.472 in)** dia. pin (3).

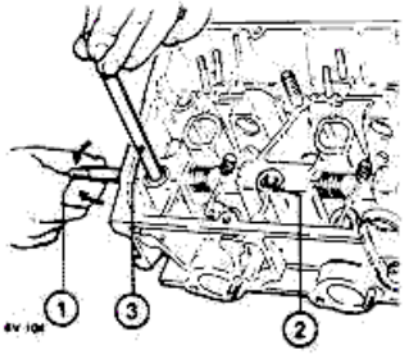

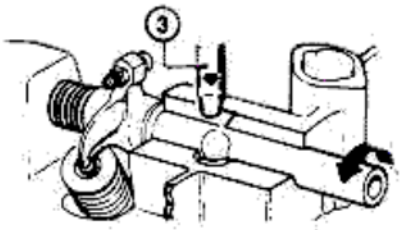

1. Tool
2. Stud holes
3. 12 mm (0.472 in) dia. pin

— Remove the tool from the rocker arm shaft and re-screw plug (1) with relative gasket.

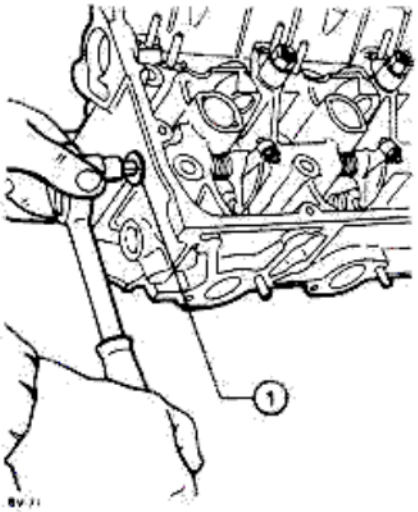

1. Plug with gasket

i. **Re-fitting of push rods and exhaust valve tappets**

Lubricate tappets (1) with engine oil and insert them in their respective seats in the cylinder head.

Reinstall push rods (2) (after lubricating them) taking care to:

— rotate rocker arm (3) forwards and downwards to facilitate fitting;

— position the ball head of the rod in the seat provided in the tappet.

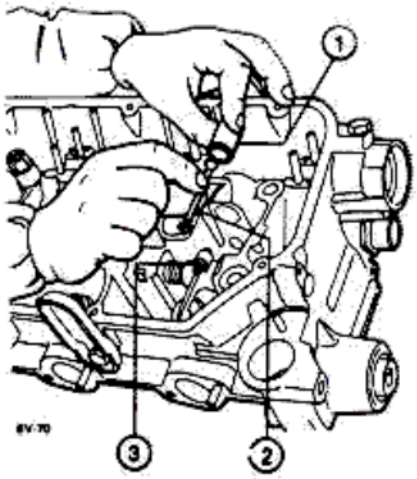

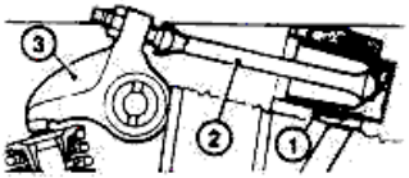

1. Tappets
2. Rods
3. Rocker arms

INSTALLATION OF CAMSHAFT

a. Using clean engine oil lubricate the journals of camshaft (1) and the respective seats on the cylinder head on which the shaft must be placed (as shown by the arrows).

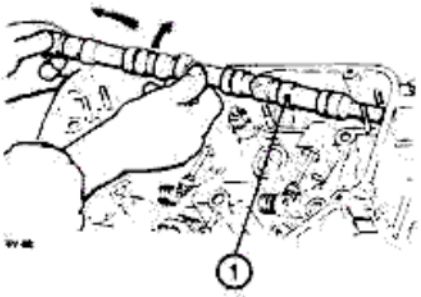

1. Camshaft

b. Position caps (1) in sequence according to the numbers (no. 1 should be fitted on the front of the cylinder head); place and tighten the nuts with respective washers (2) in oil to the required torque.

(T) : **Torque setting**
Camshaft cap stop nuts (in oil)
16 to 18 N·m
(11.57 to 13.02 ft·lb;
1.6 to 1.8 kg·m)

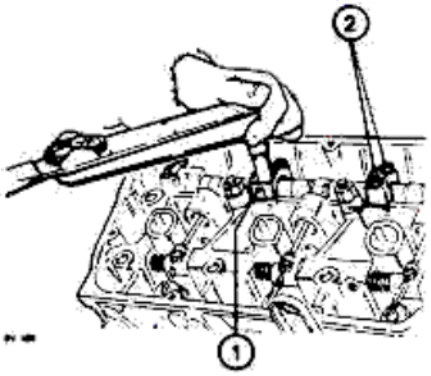

1. Camshaft caps
2. Nuts and washers

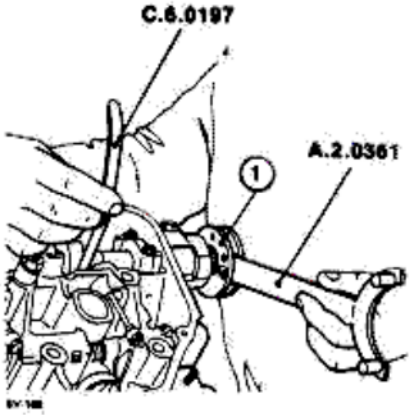

1. Hub for toothed pulley operating the camshaft

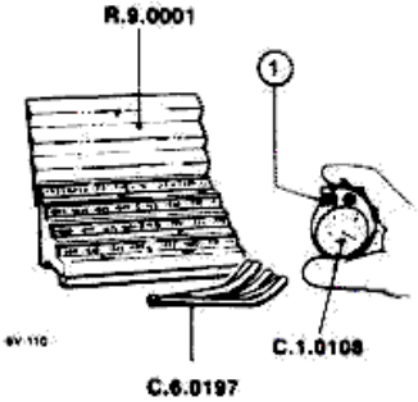

1. Caps

VALVE CLEARANCE ADJUSTMENT

a. **Checking the intake valve clearance**

After re-fitting the camshaft check the intake valve clearance in the following way:

— temporarily fit hub (1) which serves to fix the toothed pulley operating the timing system;

— rotate, using lever **A.2.0361**, the camshaft until it is possible to fit thickness gauge **C.6.0197** on the cam of the valve of which the clearance is to be measured (cams in rest position facing upwards);

— note the values for each valve and compare them with those specified.

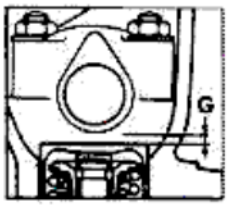

G = clearance between lowest radius of the cam and the crown of the tappet operating the intake valve: 0.475 to 0.500 mm (0.018) to 0.0197 in)

b. **Adjustment of intake valve clearance**

If necessary adjust valve clearance as follows:

— Remove the caps fixing the camshaft and the camshaft itself;

— withdraw the tappets and retrieve caps (1) underneath;

— measure the thickness of the caps using specific gauge **C.1.0108** and then, on the basis of the difference with respect to the values obtained previously, select from the set of caps (**R.9.0001**) those which will restore the correct clearance of each valve.

Reinstall tappets, camshaft and caps.

Tighten the nuts on camshaft caps to the specified torque and check valve clearance again.

c. **Checking and adjustment of exhaust valve clearance**

Adjust the exhaust valve clearance to restore the clearance between the crown of the tappet and the lowered radius of the cams.

For the adjustment use special wrench (tool **A.5.0220**) as follows:

— temporarily install hub (1) which serves to fit toothed pulley operating the timing system;

— rotate, using lever **A.2.0361**, the camshaft until it is possible to fit thickness gauge **C.6.0197** on the cam of the valve of which the clearance is to be measured (cams in rest position facing the opposite side of the tappet);

— note the values measured for each valve and compare them with those specified.

— slacken lock nut (2) securing adjustment screw (3) using the lever of the wrench (tool **A.5.0220**) combined 3 and 11 mm (0.12 and 0.43 in) wrench

— rotate screw (3) using wrench **A.5.0220** until the specified value is obtained (determine by means of a blade-type thickness gauge **C.6.0197**)

— tighten lock nut (2) and check the exhaust valve clearance again

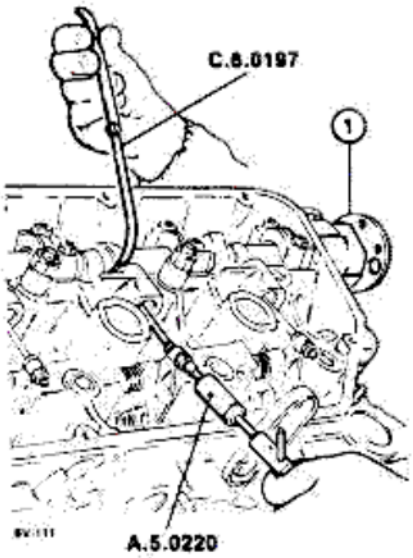

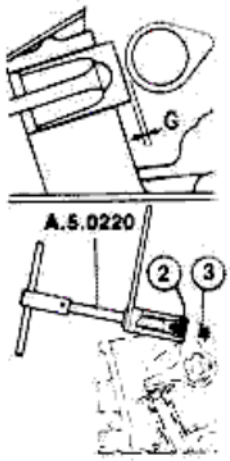

1. Hub
2. Lock nut
3. Adjustment screw

G = clearance between lowered radius of the cam and crown of the tappet operating the exhaust valve: 0.225 to 0.250 mm (0.0089 to 0.0098 in)

INSTALLATION OF DISTRIBUTOR AND OIL PUMP DRIVE PULLEY

Re-fit the toothed pulley which operates, together with the relative gear, the distributor and oil pump.

a. Lubricate the sealing lip «A» of seal ring (1) with the specified grease and the outer surface «B» with clean engine oil. Then insert ring using tool **A.3.0525**.

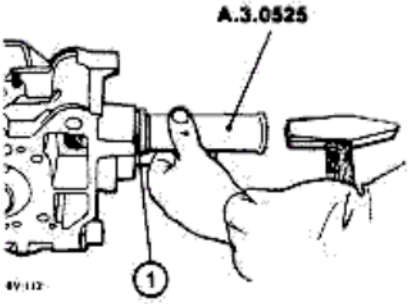

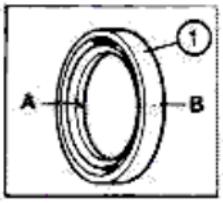

1. Seal ring
A. Sealing lip: lubricate with ISECO Molykote BR2
B. Outer surface: lubricate with clean engine oil

b. Insert operating shaft (1) in its seat and insert spacing washer (2) from the other side.

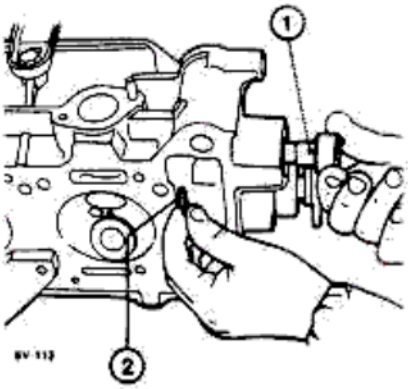

1. Drive shaft
2. Spacing washer

c. Fit toothed pulley (1) on the drive shaft and then fit gear (2) operating the distributor and the oil pump.

Lock the gear with the relative nut (3) complete with washer having a safety tab: prevent the rotation of the pulley using the lever of tool **A.2.0361**.
After tightening the nut bend the safety tab over.

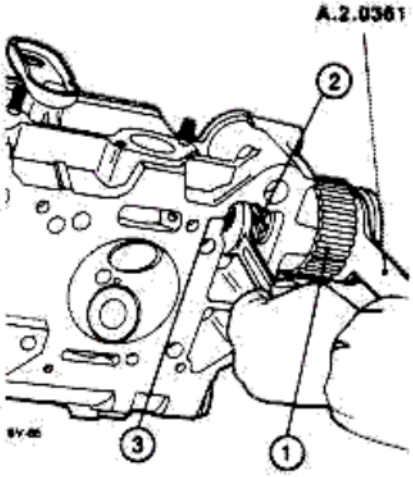

1. Toothed pulley
2. Gear operating camshaft and oil pump
3. Lock nut

d. Tighten the screw with washer fixing pulley (1) to its shaft.
Prevent the rotation of the pulley with lever (tool **A.2.0361**) and then lock the screw using a torque wrench.

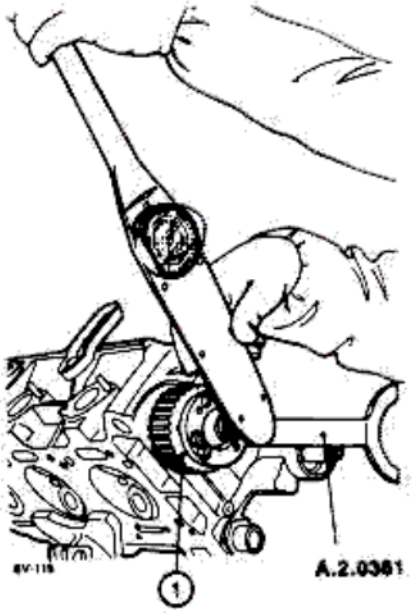

1. Toothed pulley

INSTALLATION OF CAMSHAFT DRIVE PULLEY

a. Remove the hub of the toothed pulley, mounted temporarily, and refit the seal ring of the camshaft (after lubricating the outer surface "B" with engine oil and sealing lip "A" with the specified grease).
Seal ring (1) must be fitted using insertion tool **A.3.0525**.

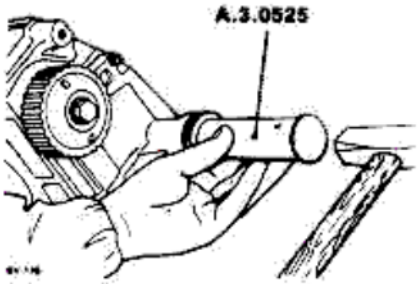

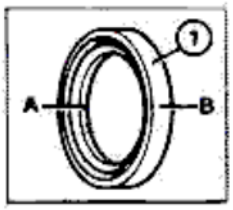

1. Seal ring
A. Sealing lip: lubricate with ISECO Molykote BR2 grease
B. Outer surface: lubricate with clean engine oil

b. Lubricate surface «A» of the anti-friction bushings using clean engine oil.
Fit toothed pulley (1) on the shank of the camshaft; re-fit pulley support (2) and hub (3) complete with rubber ring (4) and tighten screws (5) fixing it to the pulley.

c. Tighten the nut fixing the toothed pulley (1) to the camshaft; prevent the rotation of the pulley with the lever (tool **A.2.0361**) and tighten the nut to the specified torque.
Also fully tighten screws (5) fixing the hub to the pulley.

(T) : **Torque setting**
Nut securing front hub of camshaft
97 to 117 N·m
(71.6 to 86.1 ft-lb;
9.9 to 11.9 kg·m)

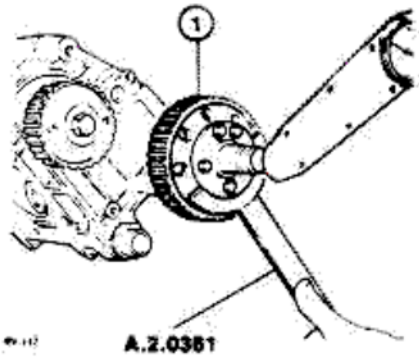

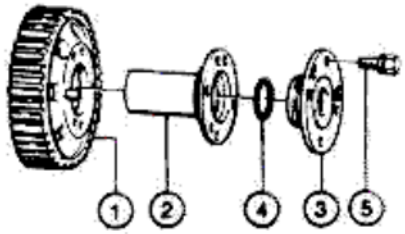

6V-117

1. Toothed pulley
2. Pulley support
3. Hub
4. Rubber ring
5. Hub securing screws

INSTALLATION OF INTAKE STUB PIPES

Install the intake stub pipes (1) as follows
- insert gasket (2) in the studs of the cylinder head;
- insert insulating gasket (3);
- insert gasket (4);
- fix intake stub pipes (1) to the studs of the cylinder head by means of the nuts with relative washers.

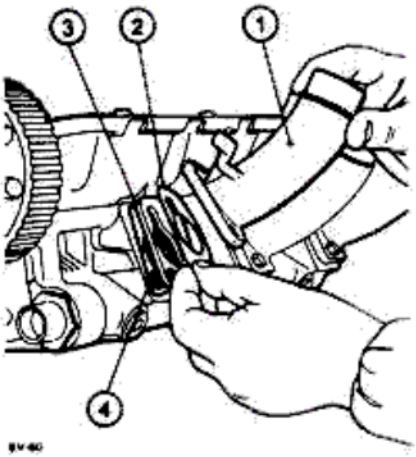

1. Intake stub pipes
2. Gasket
3. Insulating gasket
4. Gasket

REMOVAL OF CYLINDER HEAD FROM THE BENCH

After the re-assembly of the cylinder head remove the head (1) from the support yoke (tool **A.2.0360**) after removing the two lock nuts.
Remove the support yoke complete with adjustable support (tool **A.2.0195**) from the vice.

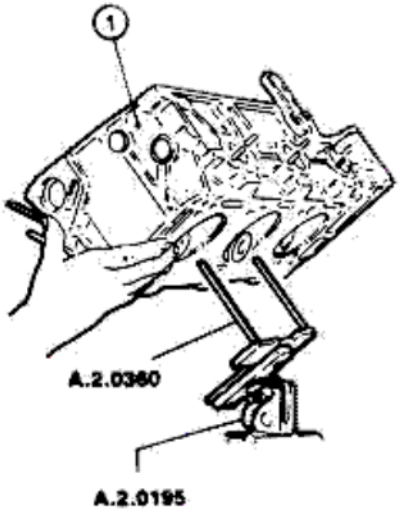

1. Cylinder head

CHECKING THE ENGINE BLOCK

CHECKING THE ENGINE BLOCK

a. Check the block visually for cracks and signs of excessive wear of the sliding surfaces.

b. Carefully clean the surfaces of the block to remove any gasket fragments. Use butyl acetate or Methylethylketone.

CRANKSHAFT

a. Check that the working area of the main and rod journals do not show signs of abnormal wear, scoring or traces of seizing or overheating.

WARNING:
The chrome-molybdenum steel crankshaft has been subjected to a nitriding treatment and thus cannot be ground. For this reason the crankshaft must be replaced if it shows signs of excessive wear.

b. Place the crank shaft on the bench between supports and measure the diameter of main journals «A» and rod journals «B» and compare them with the specified values.

WARNING:
The range of tolerances permitted for the machining of the main and rod journals has been divided into two classes.
It is possible to identify the class of the journal being checked as the respective counterweights have indelible RED or BLUE marks.

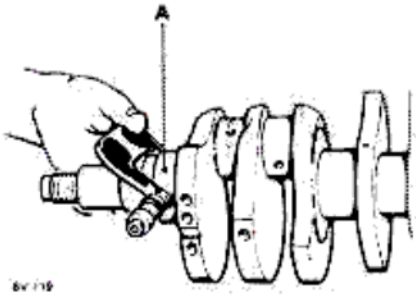

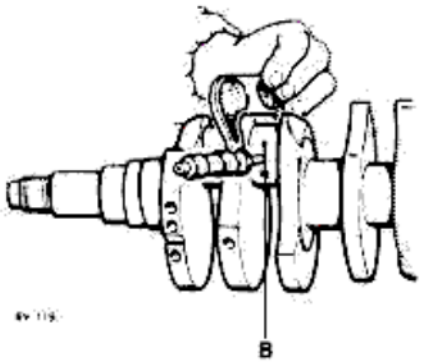

A. Main journals
B. Rod journals

Class		RED [mm (in)]
Diameter of main journal	A	59.961 to 59.971 (1) (2.3607 to 2.3611) (1)
Diameter of main journal for over-sized crankshaft	A	59.971 to 59.981 (2.3611 to 2.3615)
Diameter of rod journal	B	51.990 to 52.000 (2.0433 to 2.0472)

Class		BLUE [mm (in)]
Diameter of main journal	A	59.951 to 59.961 (1) (2.3603 to 2.3607) (1)
Diameter of main journal for over-sized crankshaft	A	59.961 to 59.971 (2.3607 to 2.3611)
Diameter of rod journal	B	51.980 to 51.990 (2.0465 to 2.0469)

(1) Values applicable for 2500 engine (019.11)

c. **Also check the following:**

— Check the ovalization (○) of the rod journals and main journals by comparing the diameter at various points of their circumference.

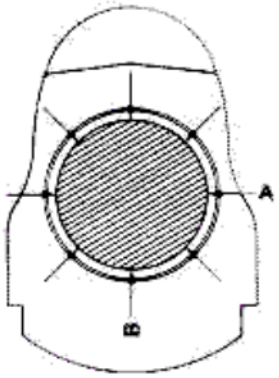

Maximum main or rod journal ovalization error:
A-B = 0.004 mm (0.0002 in)

— Check the taper (⬭) of the main and rod journals by comparing the diameter at the ends of the journal.

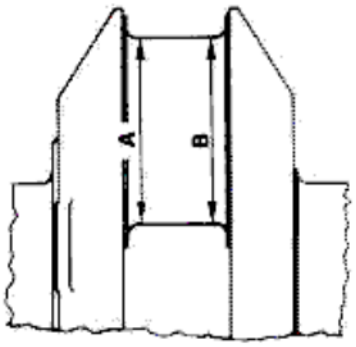

Maximum main or rod journal taper error:
A-B = 0.010 mm (0.0004 in)

— Check the concentricity (◎) between the centre main journals and front and rear main journals.

Maximum eccentricity of main journals:
0.040 mm (0.0016 in)

— Check the parallelism (//) between the centerlines of the main and rod journals.

Maximum parallelism error between main and rod journals:
0.015 mm (0.0006 in)

— Check the length of the rear main journal (which must be within the specified values).

Maximum length of the rear main journal:
C = 31.300 to 31.335 mm
(1.2323 to 1.2337 in)

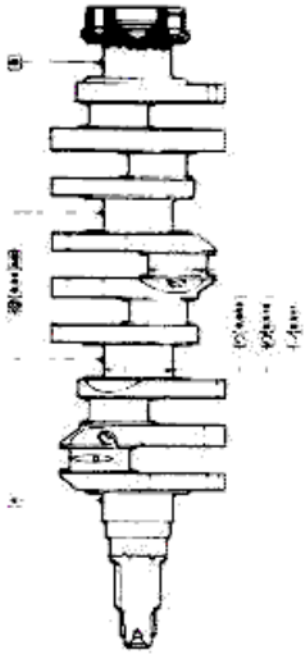

d. If, after these checks, the shaft can be re-utilized, proceed with the cleaning of the drilled oil passages:

— Use a punch (1) to make a hole in plugs (2) sealing the extremities of the oil passages.
Extract plugs and eliminate any burrs created by the previous calking.

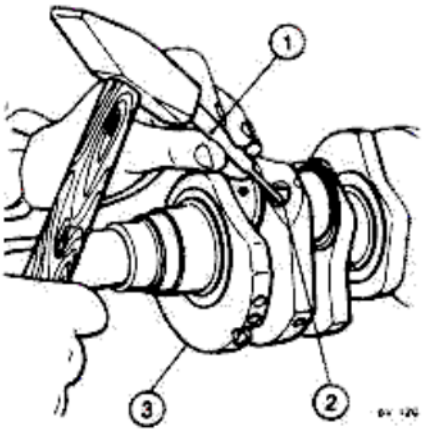

1. Punch
2. Plugs
3. Crankshaft

— Clean the oil passages with a steel wire pipe brush.

— Wash the shaft and oil passages with hot solvent and dry with compressed air (paying particular attention to the oil passages).

— Apply sealant (**LOCTITE 270 Green**) to the new plugs (1) and seal the holes in the oil passages with new plugs (using a suitable tool (2)).

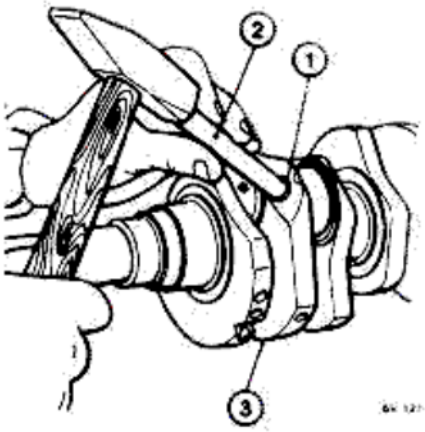

1. Plugs
2. Insertion tool
3. Crankshaft

— After completing the sealing of the oil passages calk the edges of plugs (1) with a suitable tool **A.2.0369**.

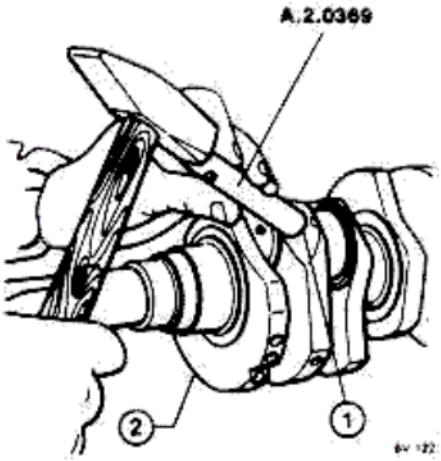

1. Plugs
2. Crankshaft

MAIN AND CONNECTING ROD HALF-BEARINGS

a. Clean the main and con rod half-bearings and check visually for signs of scoring or seizing.

b. If there are sings of excessive wear replace all the half-bearings.

c. The fitting of main and rod half-bearings to the crankshaft must be performed by pairing pieces of the same dimensional class, identifiable by a mark of the same colour **RED** or **BLUE** on the side of the half-bearing and on the relative journal of the crankshaft.

d. Using a micrometer measure the width of the half-bearings (1) and compare the values with those given in the table; replace the half-bearings if their values are not within the specified tolerances.

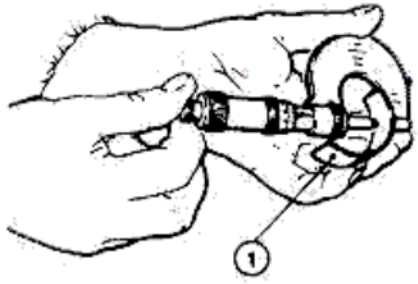

1. Main and rod half-bearings

2500 Engine (019.11)		
Class	**Half-bearings [mm (in)]**	
Red	Main	1.829 to 1.835 (0.0720 to 0.0722)
	Rod	1.737 to 1.745 (0.0684 to 0.0687)
Blue	Main	1.835 to 1.841 (0.0722 to 0.0725)
	Rod	1.741 to 1.749 (0.0685 to 0.0689)
Green	Rod	1.845 to 1.851 (1) (0.0726 to 0.0729) (1)

(1) Only to be used on a **non-oversized** crankshaft if the end play between journal and half-bearing is greater than 0.050 mm (0.0020 in) after checking the dimensions of each individual journal.

3000 Engine (061.24)		
Class	**Half-bearings [mm (in)]**	
Red	Main	1.828 to 1.839 (0.0720 to 0.0724)
	Rod	1.737 to 1.745 (0.0684 to 0.0687)
Blue	Main	1.834 to 1.845 (0.0722 to 0.0726)
	Rod	1.741 to 1.749 (0.0685 to 0.0689)

MAIN BEARINGS AND MAIN BEARING CAPS

a. Fit the main bearing caps (1) on the main bearings, positioning them according to the numbering on them (cap no. 1 must be fitted on the front part of the main bearings).

b. Tighten in oil the nuts, with respective washers (2) securing the main bearing caps, to the required torque.

(T) : **Torque setting**
Nuts securing the main bearing caps to the cylinder block supports
84 to 92.7 N·m
(8.6 to 9.5 kg·m
61.9 to 68.4 ft·lb)

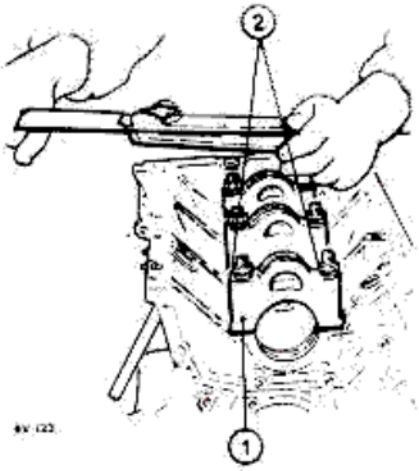

1. Main bearing caps
2. Nuts and washers

c. Using bore gauge (1) fitted to a dial indicator (2) measure the diameter of the main bearings (3) and check that they are within the specified tolerances.

Main bearing diameter:
63.657 to 63.676 mm
(2.5062 to 2.5069 in)

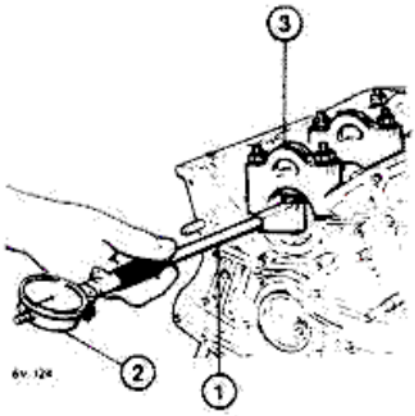

1. Bore gauge
2. Dial indicator
3. Main bearings

d. Check the length of the shoulder of the rear main bearing.

Length of the shoulder of the rear main bearing:
26.450 to 26.500 mm
(1.0413 to 1.0433 in)

THRUST RINGS

a. Check the thickness of the thrust rings (fitted on the rear main bearing).
The value must be within the specified tolerances.

Thrust ring thickness:
2.310 to 2.360 mm
(0.0909 to 0.0929 in)

CYLINDER LINERS

a. Determine the class of the cylinder liners and then check the dimensions.
The liners are divided, on the basis of their I.D., into three classes «A», «B» and «C» and are identifiable by indelible spots of paint - **BLUE, PINK** and **GREEN** - on the outside of each cylinder liner.

b. To check the dimensions proceed as follows:
- Zero set bore gauge (1) using a suitable micrometer (2).
- Use the bore gauge (1) fitted to a dial indicator to measure the I.D. of the cylinder liners (3) measured at 120° of the median, upper and lower circumference included in the «area of measurement» illustrated in the figure.
- Check that the values obtained are within the specified tolerances (divided into classes) given in the table.
- Check that the maximum taper and ovalization are within the specified values.

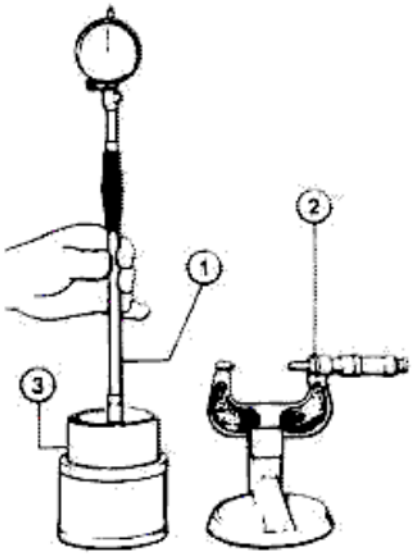

1. Bore gauge
2. Micrometer
3. Cylinder liner

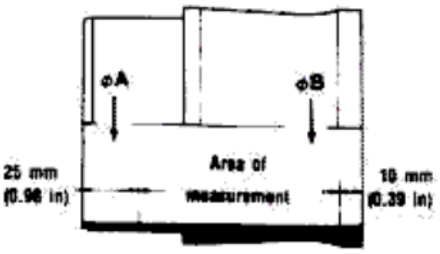

Maximum taper of the liner:
A-B = 0.01 mm (0.0004 in)

Maximum ovalization of the liner:
X-Y = 0.01 mm (0.0004 in)

Cylinder liner diameter [mm (in)]		
Class	Engines	
	019.11	061.24
A (Blue)	87.985 to 87.994 (3.4640 to 3.4643)	92.985 to 92.994 (3.6608 to 3.6612)
B (Pink)	87.995 to 88.004 (3.4644 to 3.4647)	92.995 to 93.004 (3.6612 to 3.6616)
C (Green)	88.005 to 88.014 (3.4648 to 3.4651)	93.005 to 93.014 (3.6616 to 3.6620)

DISASSEMBLY OF CONNECTING ROD-PISTON ASSEMBLY

Before making measurements divide the con rod-piston assembly as follows:

a. Using a suitable screwdriver extract the two snap rings (1) securing the pin holding the con rod to the piston (2).

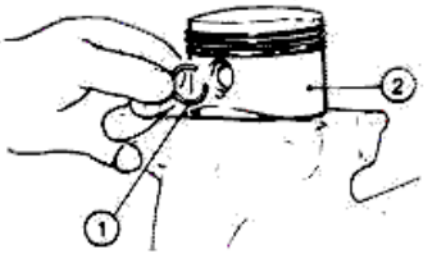

BV 126

1. Snap rings
2. Piston

b. Extract seal rings (2) and oil scraper ring (3) from piston (1) using a suitable tool; proceed with care to avoid accidentally breaking rings which could be re-utilized.
Retrieve spring (4).

c. Withdraw gudgeon pin (5) and separate the piston from the connecting rod.

BV 127

1. Piston
2. Seal rings
3. Oil scraper ring
4. Spring
5. Gudgeon pin

PISTONS AND GUDGEON PINS

The pistons and gudgeon pins are paired when fitting according to the dimensional class (established by the different machining tolerances).

It is possible to identify the class by the paint marks **WHITE** or **BLACK**, inside the gudgeon pin and on the outside of the piston boss.

a. Using a micrometer, measure the O.D of the gudgeon pin (1) and, using a bore gauge, measure the diameter of the hole for the connection to piston (2).

b. Ensure that the values are within the tolerances given for the various dimensional classes in the table.

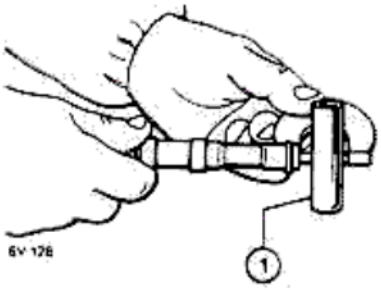

BV 128

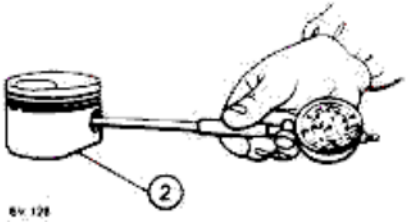

BV 128

1. Gudgeon pin
2. Piston

Diameter of gudgeon pin hole in piston [mm (in)]	
BLACK	WHITE
22.003 to 22.006 (0.86626 to 0.86638)	22.006 to 22.009 (0.86638 to 0.86650)

Gudgeon pin O.D.:
Black = 21.994 to 21.997 mm (0.86591 to 0.86602 in)
White = 21.997 to 22.000 mm (0.86602 to 0.86614 in)

c. Check that the seats of the gudgeon pin in the connecting rod small end and in the piston bosses are not excessively worn.

d. Carefully examine the piston before measuring for deep scoring of the skirt or the grooves of the rings, which would require replacing.

The pistons, like the cylinder liners, are divided into three classes according to the machining tolerances.
In this case too the classes are called «A», «B» and «C» and identified by indelible paint marks (**BLUE**, **PINK** and **GREEN**) on the piston top.

e. Check the O.D. of piston (1) with a micrometer.
The O.D. must be measured perpendicular to the gudgeon pin hole at a distance of **12 mm (0.47 in)** from the lower edge of the skirt.

f. Compare the value measured with the specified tolerances, according to the class, in the table.

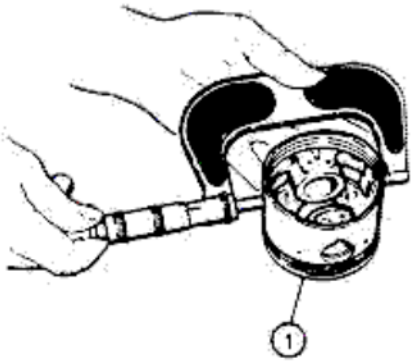

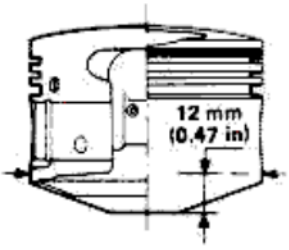

1. Piston

Piston diameter [mm (in)]		
Class	Engines	
	019.11	061.24
A (Blue)	87.935 to 87.945 (3.4620 to 3.4624)	92.935 to 92.945 (3.6588 to 3.6592)
B (Pink)	87.945 to 87.955 (3.4624 to 3.4628)	92.945 to 92.955 (3.6592 to 3.6596)
C (Green)	87.955 to 87.965 (3.4628 to 3.4632)	92.955 to 92.965 (3.6596 to 3.6600)

g. Measure the thickness of compression rings (1) and (2) and that of oil control ring (3); check that the values measured are within the tolerances given in the table.

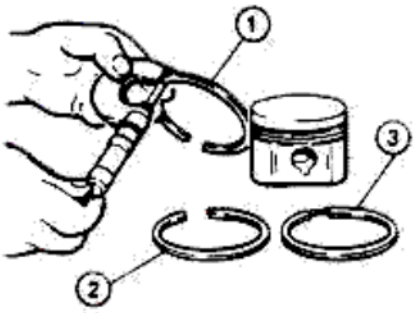

1. First compression ring
2. Second compression ring
3. Oil control ring

Piston ring thickness [mm (in)]	
	Engine 019.11
First ring	1.478 to 1.490 (0.0582 to 0.0587)
Second ring	1.728 to 1.740 (0.0680 to 0.0685)
Oil control ring	3.978 to 3.990 (0.1566 to 0.1571)
	Engine 061.24
First ring	1.478 to 1.490 (0.0582 to 0.0587)
Second ring	1.478 to 1.490 (0.0582 to 0.0587)
Oil control ring	3.478 to 3.490 (0.1369 to 0.1374)

h. Insert the piston rings in the cylinder liner (1) and check gap «A» using a feeler gauge.

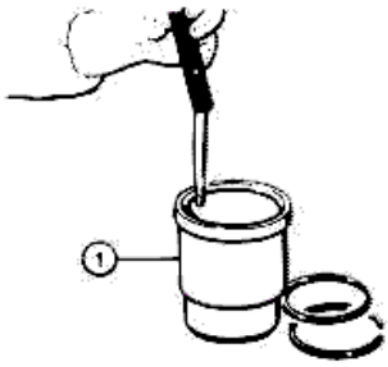

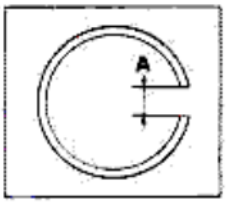

1. Cylinder liners

Piston ring gap (A) [mm (in)]	
	Engine 019.11
First ring	0.30 to 0.45 (0.012 to 0.018)
Second ring	0.30 to 0.45 (0.012 to 0.018)
Oil control ring	0.25 to 0.40 (0.010 to 0.016)
	Engine 061.24
First ring	0.40 to 0.65 (0.016 to 0.026)
Second ring	0.40 to 0.65 (0.016 to 0.026)
Oil control ring	0.30 to 0.60 (0.012 to 0.024)

i. Lubricate the piston rings with clean engine oil and reinstall them in their respective seats on the piston (1), taking care to insert, in sequence:
- spring (2) and oil control ring (3) in the third groove, bearing in mind that the spring joint must be at 180° with respect to the cut of the ring;
- compression rings (4) and (5) in the second and first groove respectively.

Position the rings so that the word «TOP» stamped on the rings is facing upwards.

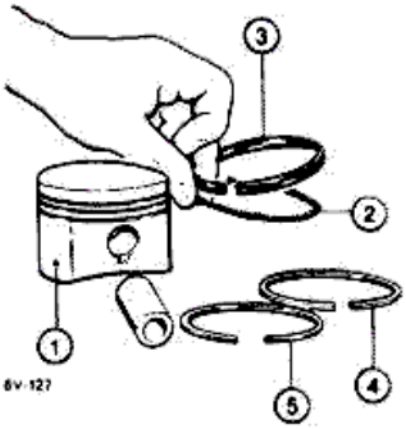

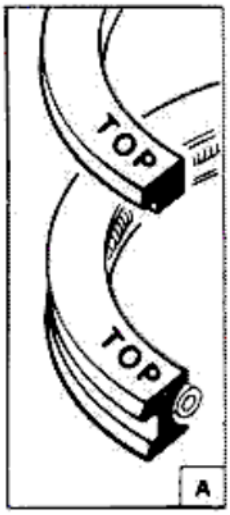

1. Piston
2. Spring
3. Oil control ring
4. Second compression ring
5. First compression ring

j. Measure the clearance between piston grooves and rings using a feeler gauge

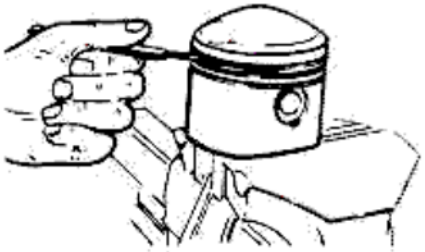

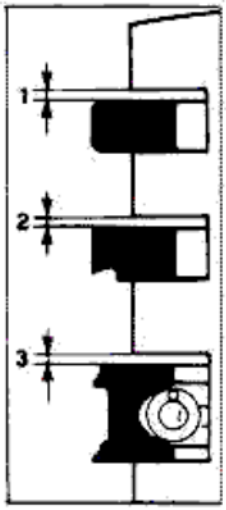

1. First compression ring
2. Second compression ring
3. Oil control ring

Clearance between piston grooves and rings [mm (in)]	
First ring	0.035 to 0.067 (0.0014 to 0.0026)
Second ring	0.035 to 0.067 (0.0014 to 0.0026)
Oil control ring	0.025 to 0.057 (0.0010 to 0.0022)

k. Examine the gudgeon pins in order to pair them with pistons marked with paint of the same colour (**White** or **Black**). The mark is located on the external surface of the boss and on the inside of the gudgeon pin.

l. If the parts are to be re-utilized bear in mind that the working areas, in particular the seat of the gudgeon pin in the piston should be free from even the slightest scoring.

m. Insert the gudgeon pin in each piston (selected according to the class - **Black** and **White**); lock with the snap rings and, using a balance similar to the one illustrated check that **the difference between the weights of the pistons is no greater than 4 grams (0.14 oz)**.

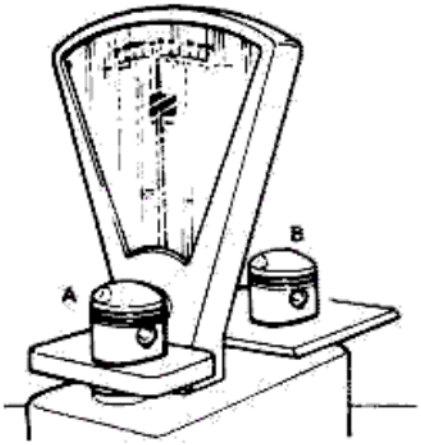

A-B = 4 grams (0.14 oz) (max)

CONNECTING RODS AND CONNECTING ROD CAPS

a. Check the con rods visually for cracks, scoring and signs of excessive wear. The con rods and con rod caps which can be re-utilized must be checked for the correct dimensions as follows.

b. Using a bore gauge (1) fitted to a dial indicator (2) measure the diameter of the bushing in the con rod small end (3).

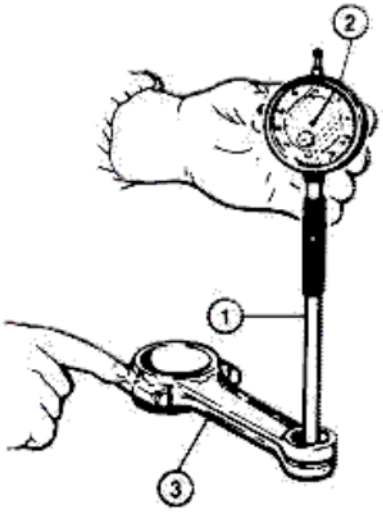

1. Bore gauge
2. Dial indicator
3. Connecting rod

Bushing I.D. - Connecting rod small end:
22.005 to 22.015 mm
(0.8663 to 0.8667 in)

c. Fit the con rod caps, tightening the respective screws in oil to the specified torque. Check the diameter of the con rod small end as described in point b.

(T) : **Torque setting**
Screws retaining con rod caps (in oil)
53.4 to 59 N·m
(5.4 to 6 kg·m
39.4 to 43.5 ft·lb)

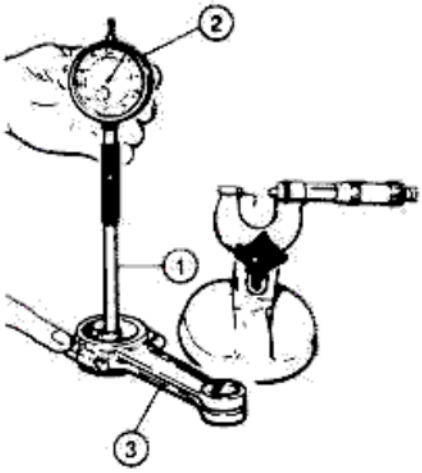

1. Bore gauge
2. Dial indicarator
3. Connecting rod

Connecting rod I.D.:
55.511 to 55.524 mm
(2.1855 to 2.1860 in)

d. Using a balance similar to the one illustrated, check that the difference between the weights of the two con rods (complete with caps, half-bearings and screws) **is no greater than 2 grams (0.07 oz)**. To restore the exact weight remove the excess metal from parts «C» and «D».

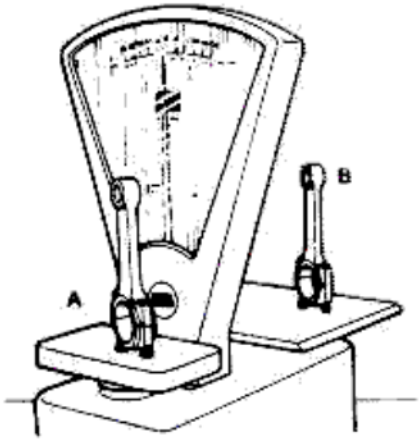

A-B = 2 grams (0.07 oz) (max)

C. } areas to be machined to
D. } obtain the exact weight

e. Check the perpendicularity of connecting rods (1) using a jig similar to the one illustrated.

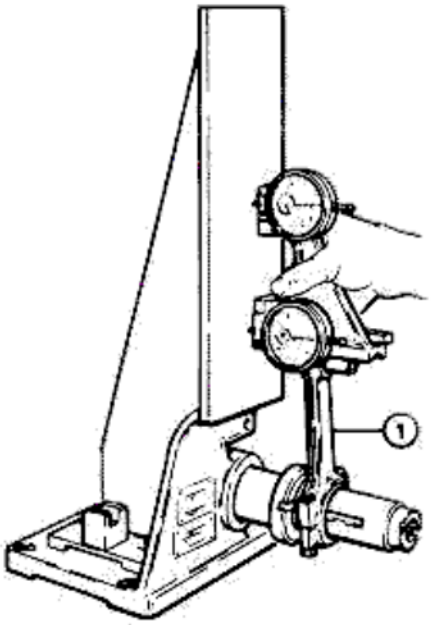

1. Connecting rods

WARNING:
If the connecting rod is not true it must be replaced to avoid abnormal stress during engine running and consequent irregular wear of the piston and the con rod itself.

See Tec. Bulletin 01-03-85

REASSEMBLY OF THE CONNECTING ROD-PISTON ASSEMBLY

Reassemble the assembly formed by the connecting rod and the piston considering that:

a. If the previously disassembled pistons and con rods are to be re-utilized the initial pairing (i.e. piston no. 1 with con rod no. 1) must be restored.

b. The connecting rods for the **right** side of the engine which match pistons no. 1, 2, 3, must be fitted with the offset towards the rear of the engine while those for the **left** side which match pistons no. 4, 5 and 6, must be fitted with offset towards the front.

c. Remember that the arrow stamped on the top of the piston should face toward the front of the engine.

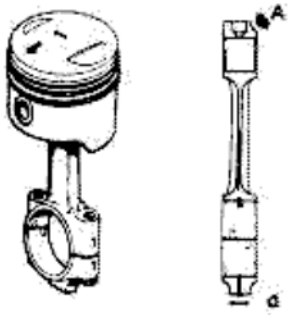

A: the notch to which the arrow points indicates the offset side «d».

d. The piston and the gudgeon pin must belong to the same dimensional class (this can be seen from the **White** or **Black** paint marks on the piston boss and inside the gudgeon pin).

e. The gudgeon pin (1) should enter the piston (2) easily with the pressure of the thumb alone.

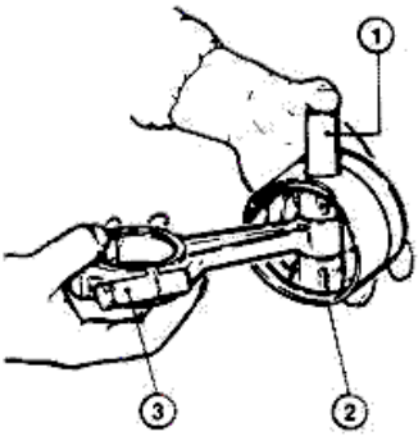

1. Gudgeon pin
2. Piston
3. Connecting rod

f After mounting the snap rings retaining the gudgeon pin the piston should move freely but be quite precise; to check this position the assembly as in the figure and ensure that the piston, as a result of its own weight, passes **slowly** from position «A» to position «B».

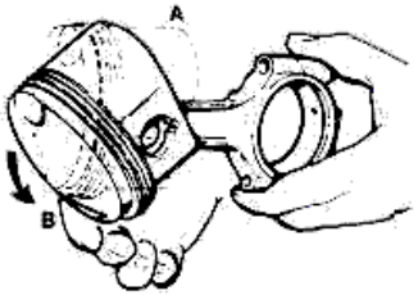

Clearance between con rod small end bushing hole and gudgeon pin:

Black = 0.008 to 0.021 mm (0.0003 to 0.0008 in)

White = 0.005 to 0.018 mm (0.0002 to 0.0007 in)

Clearance between piston hole and gudgeon pin:

0.006 to 0.012 mm (0.0002 to 0.0005 in)

REPLACING FLYWHEEL RING GEAR

Check the flywheel ring gear and, when necessary, replace it as follows:

a. Heat the flywheel in a suitable oven until the specified temperature is reached.

b. Remove the flywheel from the oven and, using a suitable mallet, separate the ring gear from the flywheel.

c. Heat the new ring gear uniformly up to the required temperature and then mount it on the engine flywheel, taking care that it is positioned correctly.

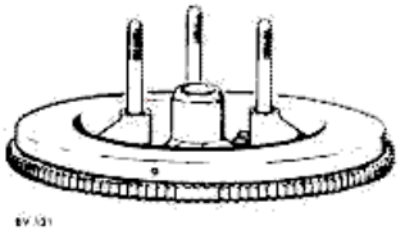

Temperature to which the ring gear should be heated for fitting/removing on/from the engine flywheel: 120 to 140°C (248 to 284°F)

REPLACING OIL SUMP COVER

If necessary it is possible to replace the oil sump cover in the following way:

a. Slacken and unscrew screws with washers (1) which fix cover (2) to the oil sump.

b. Remove the gasket bearing in mind that it was spread with sealant during assembly.

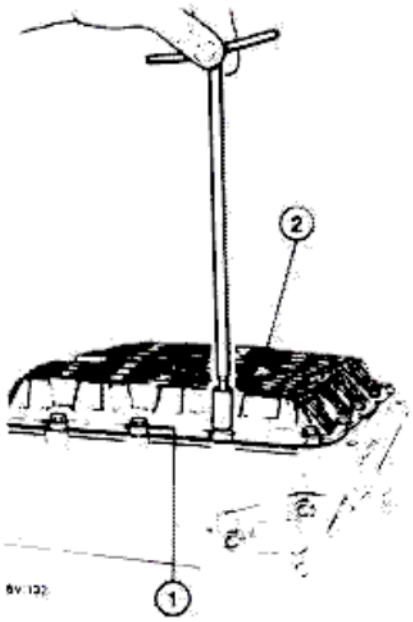

1. Screws and washers
2. Oil sump cover

c. Carefully clean the contact surface of the oil sump and its cover, fit a new gasket (1) covered with the specified sealant on both sides.

d. Replace cover (2) on oil sump (3), screw all the screws (with washers) and oil drain plug.

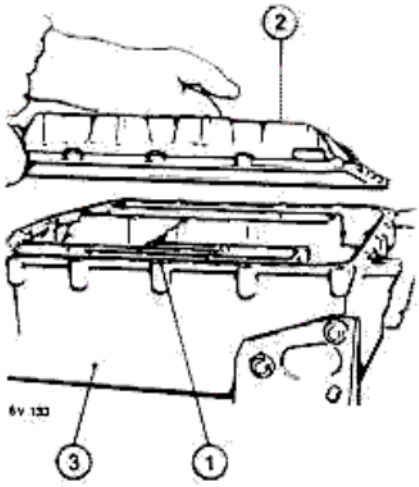

1. Gasket
2. Cover
3. Oil sump

ASSEMBLY OF ENGINE BLOCK

CRANKSHAFT

Mount the crankshaft on the block in the following way:

a. Select the main half-bearings pairing them with the relative shaft journals (according to the dimensional class).

b. The assembly on the crankshaft must be performed by pairing parts of the same dimensional class, identified by paint marks of the same colour **Red** or **Blue**, on the side of half-bearing (1) and on crank shaft journal (2).

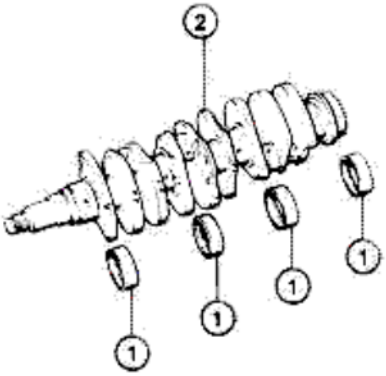

1. Main half-bearings
2. Crankshaft

c. Clean the main bearings, lubricate them with clean engine oil and then position the upper main half-bearings (1), taking care that, during fitting the safety notches are in their respective seats in the cylinder block.

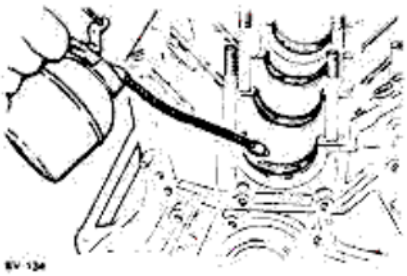

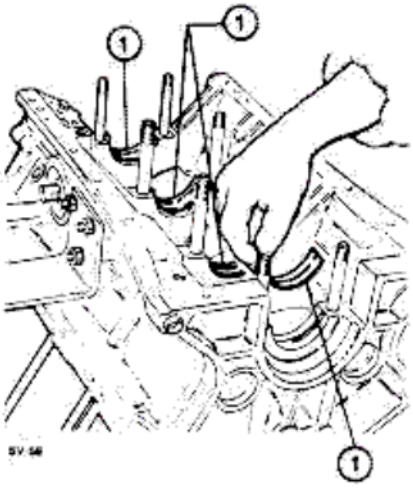

1. Upper main half-bearings

d. Lubricate the main bearings and crankshaft journals again with clean engine oil and place the shaft (1), in the correct position on the main bearings.

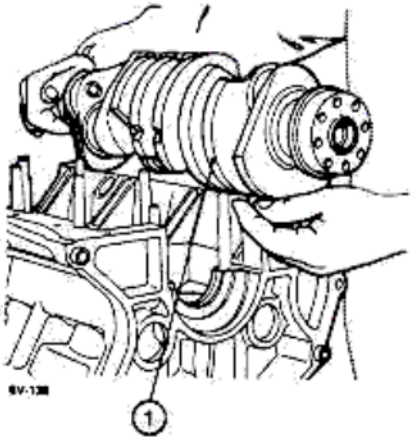

1. Crankshaft

e. Insert thrust half-rings (1) and settle them by rotating the crankshaft.

CAUTION:
The half-rings must be fitted ensuring that the lubrication grooves are facing towards the shoulders of the crankshaft.

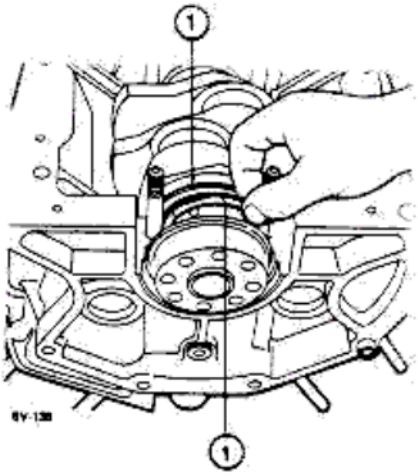

1. Thrust half-rings

MAIN BEARING CAPS

a. Place the lower main half-bearings (1) in the respective main bearing caps (2) after lubricating them with clean engine oil, check that the safety notches are correctly positioned.

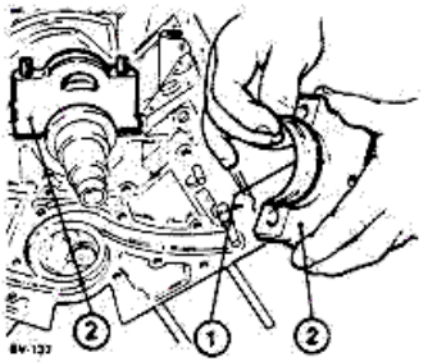

1. Lower main half-bearings
2. Main bearing caps

b. Re-fit caps (1) on the first three main bearings.
They must be oriented so that the safety notches are in line with those of the cylinder block; their position and orientation should be according to the numbers stamped on them (cap no. 1 should be fitted on the front bearing).
c. Re-fit rear main bearing cap (2), taking care not to damage the rubber seals (3).
Lubricate rubber seals (3) using lubricant 50HB-5100 or MILLOIL (Norm. 4500-17502).

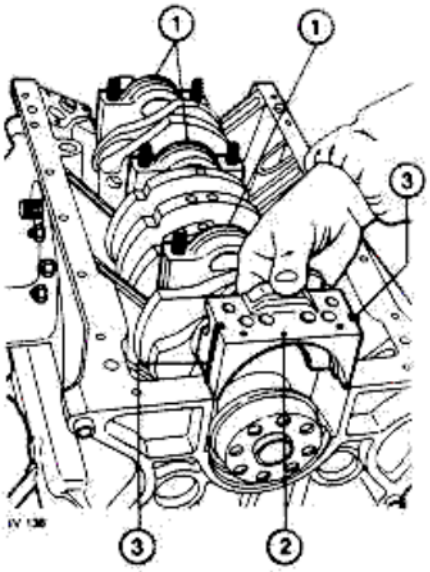

1. Front main bearing caps
2. Rear main bearing cap
3. Rubber seals

d. Tighten, in oil, nuts with washers (1) fixing main bearing caps (2).
Use the specified torque setting. The nuts fixing the rear main bearing cap (3) are provided with safety tabs (4) which **must not be removed** for the time being.

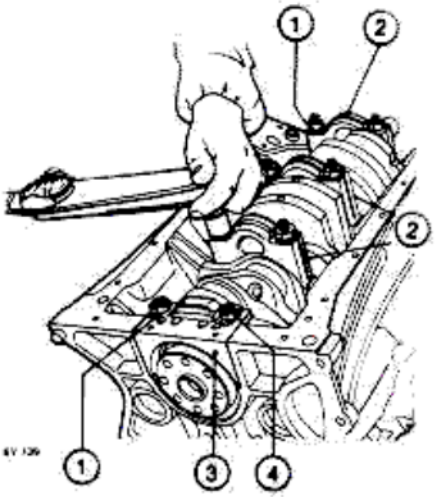

1. Nuts and washers
2. Front main bearing caps
3. Rear main bearing cap
4. Safety tab

(T) : Torque setting
Main bearing cap fixing nuts (in oil)
84 to 92.7 N·m
(8.6 to 9.5 kg·m
61.9 to 68.4 ft·lb)

e. **Checking the crankshaft end float**
— Apply a dial indicator (1) with magnetic base so that the sensor of the instrument is in contact with the crankshaft parallel to the shaft axis.
— Using a screwdriver (2) move the crankshaft (3) and use the dial indicator to check that the end float is within the specified limits.
— Compare the value with that specified and, if necessary replace the thrust half-rings.
— To replace them it is necessary to remove the rear main bearing cap again.

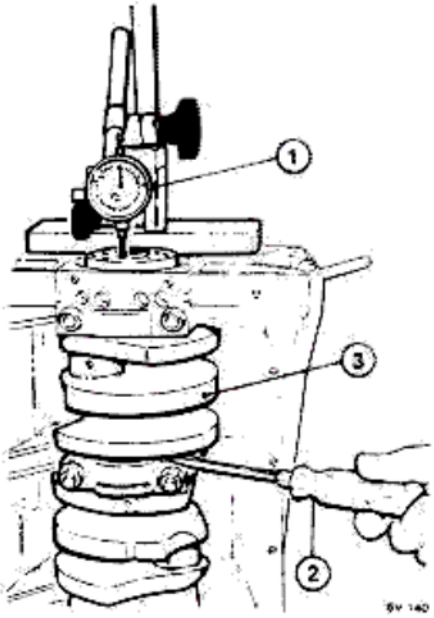

1. Dial indicator
2. Screwdriver
3. Crankshaft

End float of crankshaft:
0.080 to 0.265 mm
(0.0031 to 0.0104 in)

f. After fitting the new half-rings check the crankshaft end float and, if it is within the specified tolerance, bend the safety tabs (1) of nuts (2) of the rear main bearing cap (3).
g. Screw locknuts (5) on the remaining front main bearing caps (4).

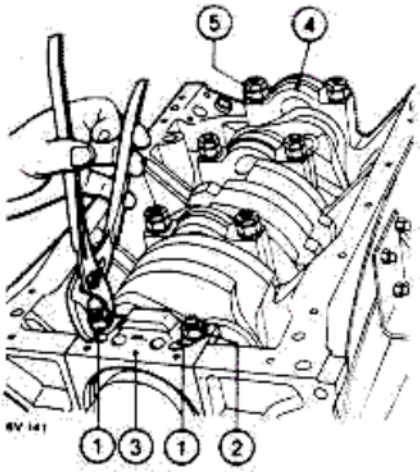

1. Safety tabs
2. Nuts
3. Rear main bearing cap
4. Front main bearing caps
5. Locknuts

h. Tighten locknuts (1) of the front main bearing caps (2) to the specified torque.

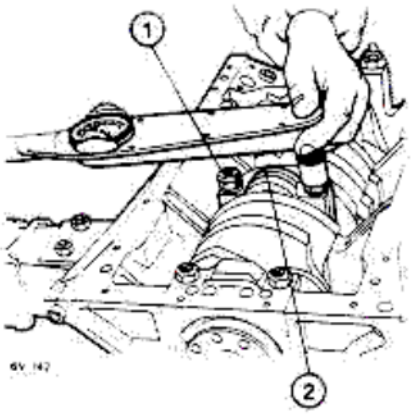

1. Locknuts
2. Front main bearing caps

(T) : Torque setting
Locknuts securing main bearing caps (in oil)
20 to 25 N·m
(14.5 to 18.1 ft·lb
2 to 2.5 kg·m)

OIL SEAL (REAR)

a. Lubricate the outer surface and the lip of the rear oil seal with clean engine oil.
b. Contain the internal spring of the rear oil ring by applying a thin layer of ISECO Molykote BR2 grease (P/N 3671-69841).
c. Place the oil seal on the flared surfaces of the centering ring of tool **A.3.0178**. Fit the oil seal using tool **A.3.0178**; ensure that it is in the correct position during mounting.

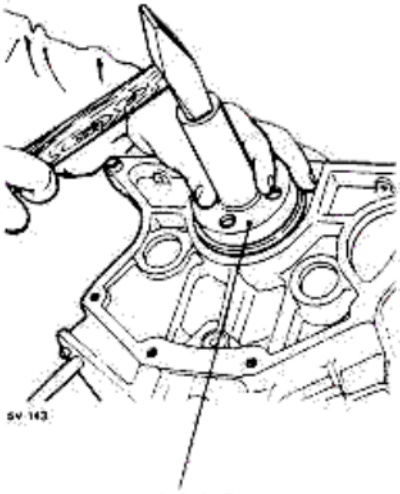

A.3.0178

ENGINE FLYWHEEL

a. **Fitting of direct drive shaft bushing**

— Mount bushing (1) for the direct drive shaft on the rear flange of the driving shaft (2) using inserting tool **A.3.0305**.

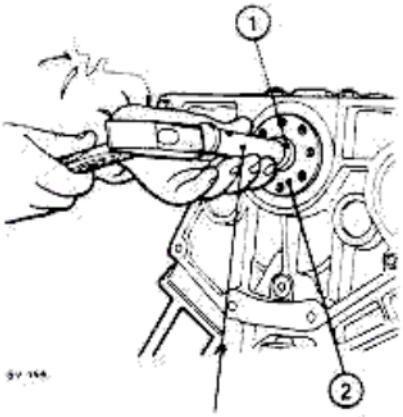

A.3.0305

1. Bushing for direct drive shaft
2. Crankshaft rear flange

b. **Fit the engine flywheel** in the following way:
— clean the crankshaft flange and the contact surface of the flywheel carefully;
— rest the flywheel (1) on the flange. The flywheel can only be mounted in one position due to the fact that the mounting holes are not equidistant, position safety washer (2) in the same way;
— finger tighten screws (3) securing the flywheel (after spreading the specified sealant over them).

CAUTION:
Before applying the sealant to the threads of the screws (LOCTITE 270 - Green) eliminate any trace of the old sealant by brushing and blowing air over the threads. In any case remove any grease from the threads with trichloroethylene or chlorothene.

— fit tool **A.2.0145** to prevent the rotation of flywheel (1);
— tighten securing screws (3) to the specified torque.
Before mounting lubricate the screws with engine oil.

(T) : **Torque setting**
Screws securing flywheel to crankshaft
113 N·m
(83.2 ft·lb;
11.5 kg·m)

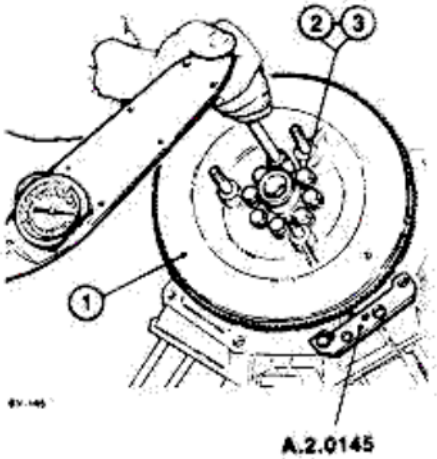

1. Engine flywheel
2. Safety washers
3. Retaining screws

c. Fit a suitable tool (1) on the flywheel that will permit the rotation of the crankshaft and remove the stop device previously fitted (tool **A.2.0145**).

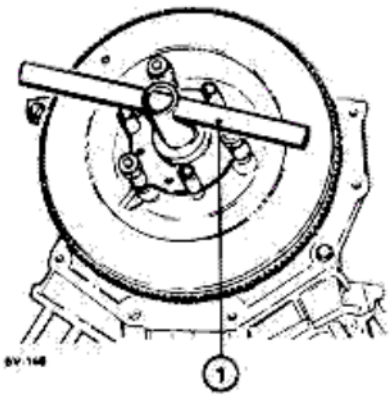

1. Tool for turning crankshaft

CYLINDER LINERS, PISTONS AND CONNECTING RODS

a. Clean the cylinder liners (1) carefully and fit seal (2). Then insert the liners in the block, ensuring that they go all the way.

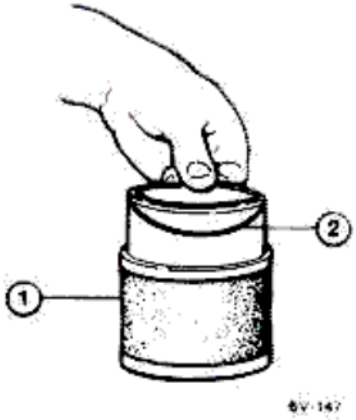

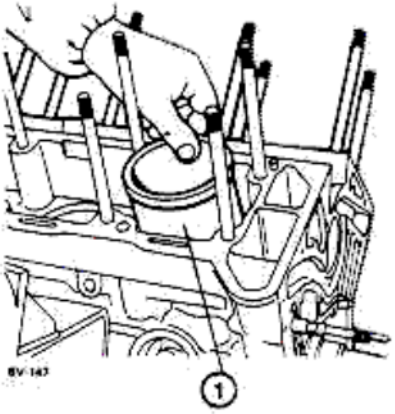

1. Cylinder liners
2. Seal ring

b. **Checking the protrusion of the cylinder liners**
If it is necessary to check the protrusion of the cylinder liners with the seal rings fitted proceed as follows:
— Fix the cylinder liners to the block by means of cylinder liner fixing tool **A.2.0117** (complete with additional rings **A.2.0362**).
— Secure the liner fixing tools and tighten the respective nuts (1) to the specified torque.

(T) : **Torque setting**
Cylinder liner locknuts
10 to 15 N·m
(7.2 to 10.8 ft·lb;
1 to 1.5 kg·m)

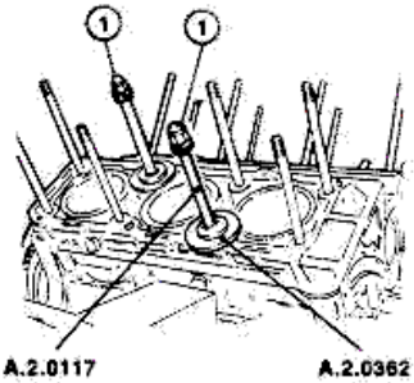

1. Cylinder liner locknuts

— Apply the dial indicators (1) to the gauge, tool **C.6.0148**.
Place the group on a surface plate (2) and zero the indicators.

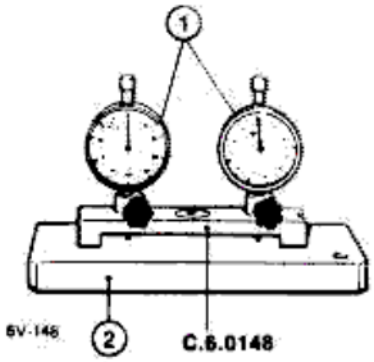

1. Dial indicators
2. Surface plate

— Apply gauge, tool **C.6.0148** to the cylinder block so that the sensors of the dial indicators rest on the edge of the cylinder liner (1) indicating the protrusion.
— Check that the values obtained are within the specified tolerances.

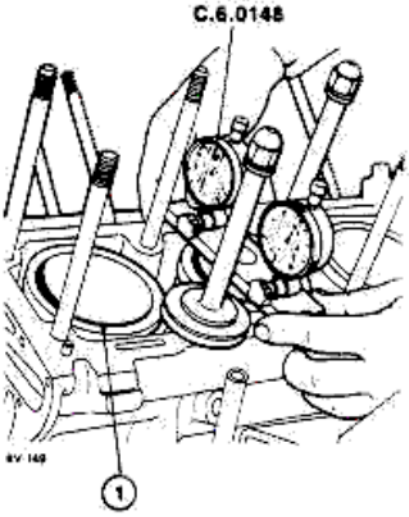

1. Cylinder liners

Protrusion of cylinder liner from cylinder block:
0.01 to 0.06 mm (0.0004 to 0.0024 in)

— Remove the liner fixing tools, **A.2.0117** complete with additional washers, **A.2.0362**.

c. **Fitting pistons and connecting rods**

Fit the previously selected half-bearings on the connecting rod big end and on the respective caps. Proceed as follows:

— Position the half-bearings (1) and (2) in the con rod big end and in cap (3) respectively, after lubricating them with clean engine oil.

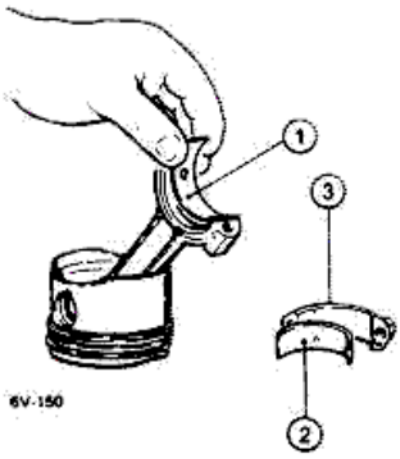

1. Upper half-bearings
2. Lower half-bearings
3. Connecting rod cap

— Using clean engine oil, lubricate the piston and position the respective piston rings so that the cuts (openings) are staggered as in the figure.

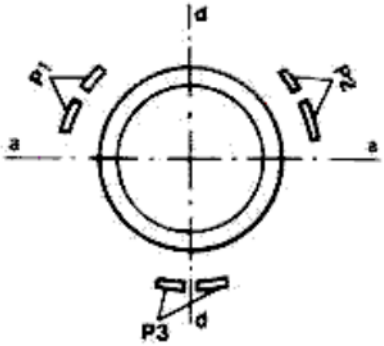

P_1. Position of first compression ring
P_2. Position of second compression ring
P_3. Position of oil control ring
aa. Gudgeon pin axis
dd. Direction of thrust

— Insert the con rod-piston group in the respective liner, ensuring that the **arrow** stamped on the top of the piston **is facing towards the front** of the engine; a suitable guide tool (1) must be used for insertion.

CAUTION:
To avoid scoring the cylinder liners the con rod must be guided during the insertion of the piston.

— Fix the cylinder liners with suitable tools **A.2.0117** complete with additional washers **A.2.0362**.

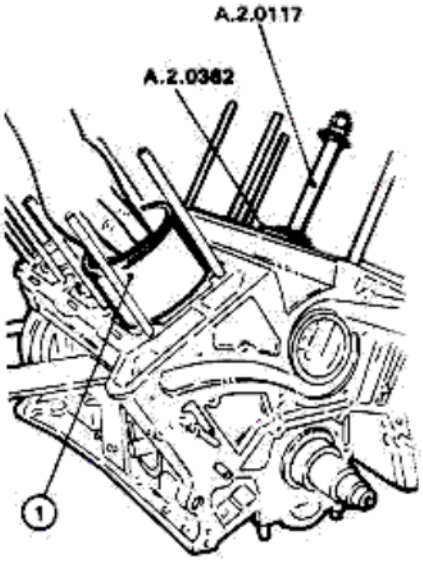

1. Guide [I.D. 88 mm (3.465 in)] for the insertion of the pistons in the cylinder liners

— Lubricate the con rod caps and respective crankshaft journals with clean engine oil.
Free the cylinder block from the rotating stand and turn it over.
Bring con rod (1) to the respective journal of the crankshaft and fit con rod cap (2) so that it matches the notches of the half-bearings.

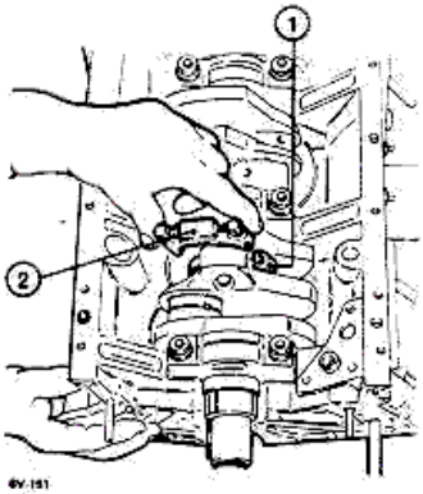

1. Connecting rod
2. Connecting rod cap

— Insert screws (1) securing the con rod caps (2) and tighten them to the specified torque (after lubricating them with engine oil).

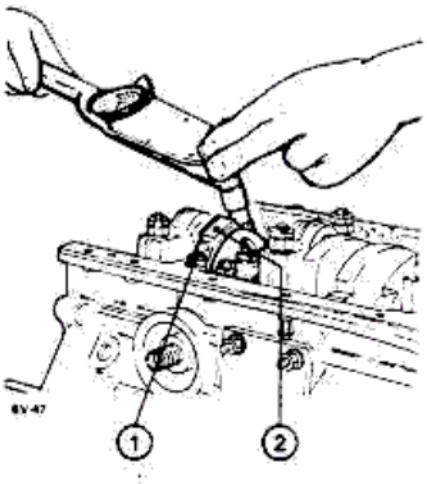

1. Retaining screws
2. Connecting rod caps

(T) : **Torque setting**
Retaining screws of con rod caps (in oil)
53.4 to 59 N·m
(5.4 to 6 kg·m
39.4 to 43.5 ft·lb)

FRONT COVER

Free the overhaul stand and turn the cylinder block over (restoring it to normal position).

a. Before fitting the front cover clean the cylinder block support surfaces and the cover itself to remove any fragments of gasket.

Use butyl acetate or methylethylketone.

b. Insert the gasket over the studs.

c. Fit the cover (1) and screw and lock retaining screws (2).

d. Mount plate (3), for the pre-loading spring of the hydraulic belt stretcher, on the front cover and fix it by means of screw with washer (4).

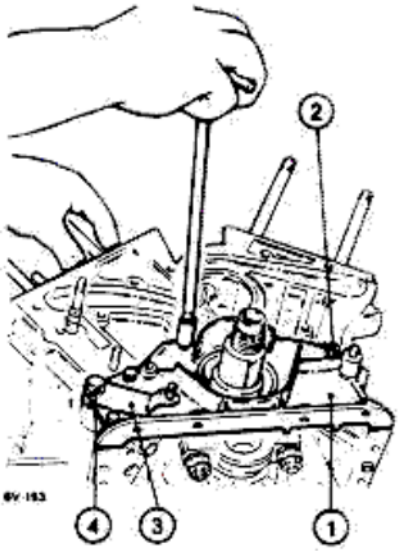

1. Front cover
2. Retaining screws
3. Plate
4. Retaining screw

CRANKSHAFT FRONT PULLEY

Re-fit crankshaft seal ring on the front cover.

a. Lubricate the outer surface of the seal ring (1) with clean engine oil and the respective lip with ISECO Molykote BR2 grease (P/N 3671-69841).

b. Drive the seal ring (1) onto the crankshaft using tool **A.3.0524**.

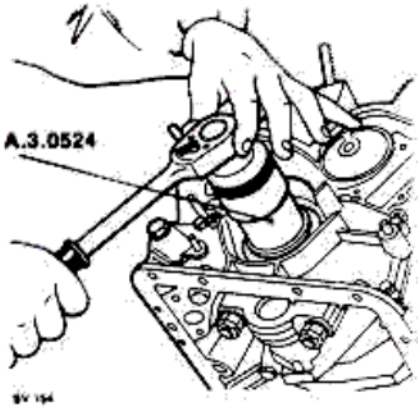

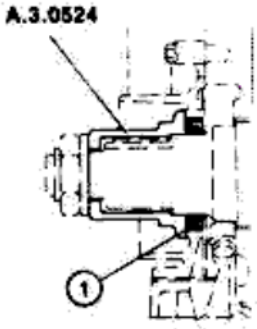

1. Seal ring

c. Stop the flywheel from rotating by means of tool **A.2.0145**.

d. Mount ring (1) on the crankshaft. This serves as a shoulder for the timing mechanism toothed belt; the crown of the ring must face inwards.

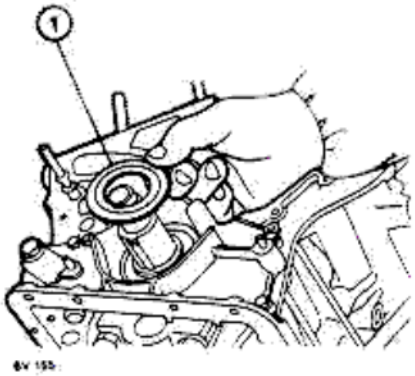

1. Shoulder ring

e. Mount the timing mechanism drive toothed pulley (1) on the crankshaft.

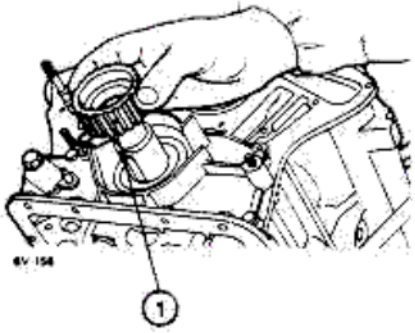

1. Toothed pulley

f. Mount the front pulley (1) fitting it into respective slot with the key on the crankshaft.

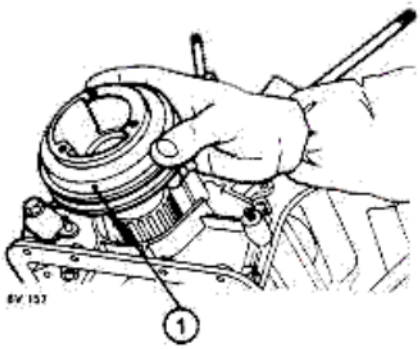

1. Front pulley

g. Fit washer (1) onto the crankshaft and finger tighten the locknut (2).

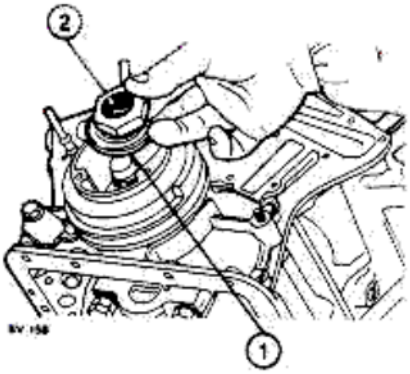

1. Washer
2. Locknut

h. Tighten the nut securing the front pulley (1) (in oil) to the required torque; use a suitable tool (2) to tighten the nut.

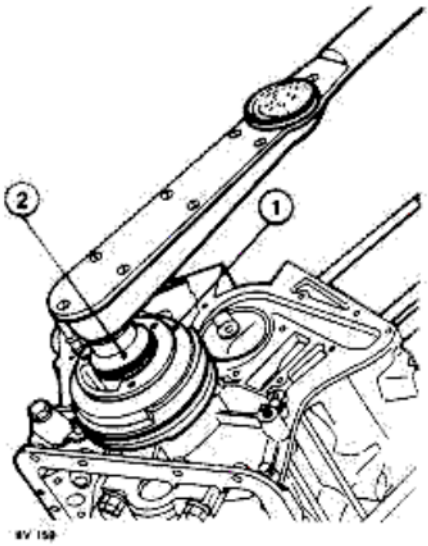

1. Front pulley
2. Nut tightening tool

(T) : **Torque setting**
Nut securing crankshaft front pulley (in oil)
235 N·m
(174 ft·lb;
24 kg·m)

i. Caulk the collar of nut (1) after tightening to the specified torque.

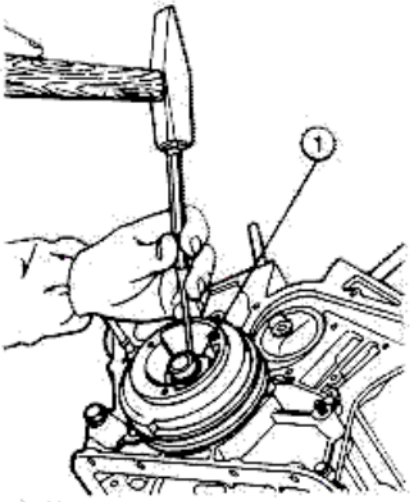

1. Front pulley locknut

OIL PUMP

Disassembly

a. Hold the oil pump in a vice and disassemble the pressure regulation group.

- remove the cotter pin (1);
- extract, in sequence: cover (2), spring (3) and piston (4).

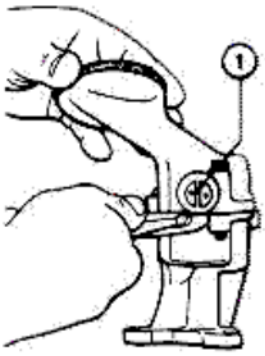

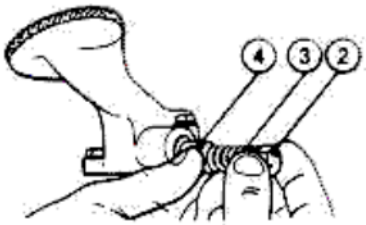

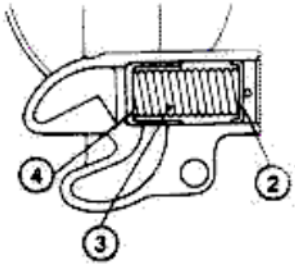

1. Cotter pin
2. Cover
3. Spring
4. Piston

b. Separate the oil suction housing (2) from the pump housing (3) after removing screws (1).

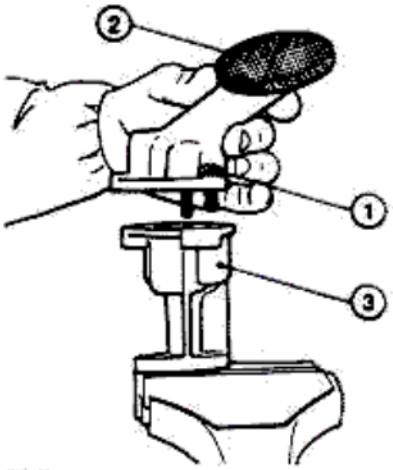

1. Retaining screws
2. Oil suction housing
3. Pump housing

c. Extract the inner rotor (1) complete with spindle (2) and the driven rotor (3) from the pump housing.

IMPORTANT:
Inner rotor (1) must not be removed from spindle (2).

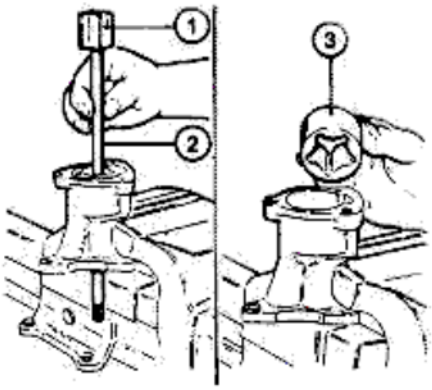

1. Inner rotor
2. Spindle
3. Driven rotor

Checking

Check the rotors visually for deep scoring or evidence of seizure; check the piston of the valve regulating the oil pressure in the same way.

a. Using a micrometer measure the O.D. of the driven rotor (1) and, using a bore gauge, measure the I.D. of the pump housing (2).
Ensure that the values obtained are within the specified tolerances.

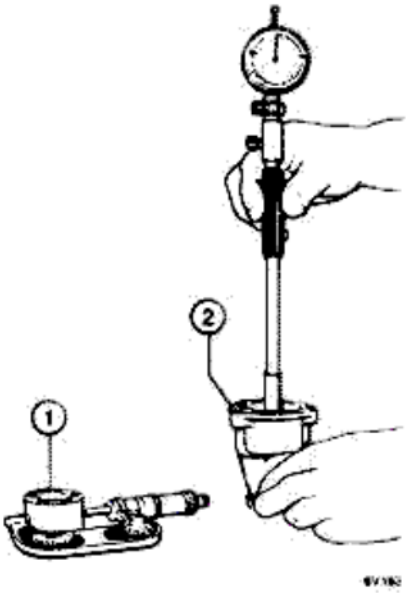

1. Inner driven rotor
2. Pump housing

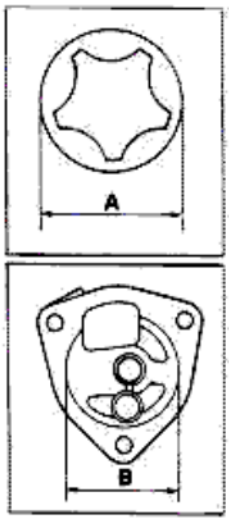

A = O.D. of driven rotor:
49.100 to 49.155 mm
(1.9331 to 1.9352 in)

B = I.D. of rotor seat in pump housing:
49.325 to 49.375 mm
(1.9419 to 1.9439 in)

b. Use a dynamometer (1) to check the flexibility of the spring (2) operating the oil pressure regulation valve; see table for specified values.

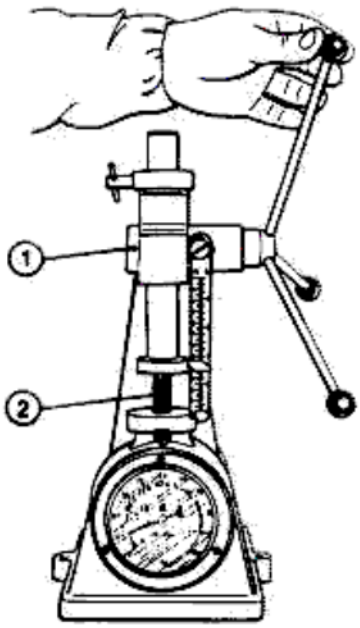

1. Dynamometer
2. Spring

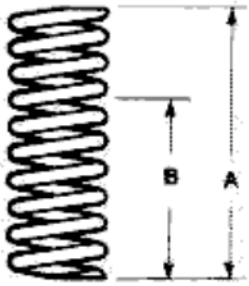

Test load		170 to 176 N (38.2 to 39.6 lb; 17.31 to 17.97 kg)
Length of free spring	A	49.29 mm (1.941 in)
Length of loaded spring	B	31.90 mm (1.256 in)

Re-assembly

a. Re-assemble the oil pump as follows:
— insert driven rotor (1) in the pump housing (4) and then insert the inner rotor (2) complete with spindle (3).

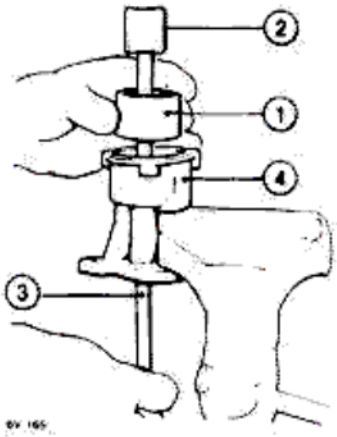

1. Driven rotor
2. Inner rotor
3. Spindle
4. Pump housing

— position the rotors as indicated in the figure and measure the clearance «G» that exists between the lobe of the inner rotor (1) and that of the driven rotor (2); compare the clearance with that specified.

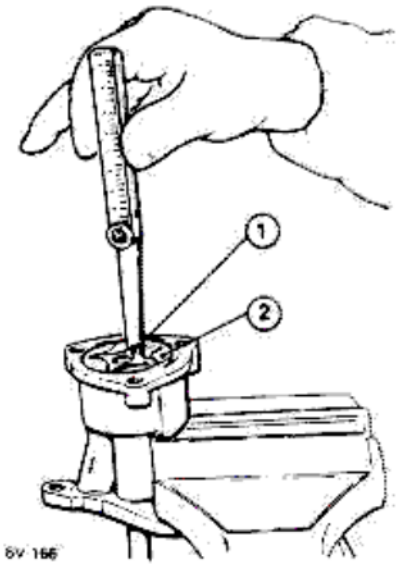

1. Inner rotor
2. Driven rotor

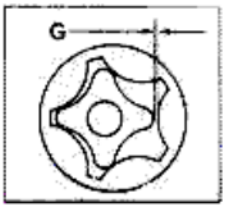

G = Clearance between driven rotor and inner rotor of the oil pump:
0.040 to 0.290 mm
(0.0016 to 0.0114 in)

— check the end float «G» of the two rotors with respect to the pump housing surface; this is done with a thickness gauge placed between the rotors themselves and the test roller resting on the surface.

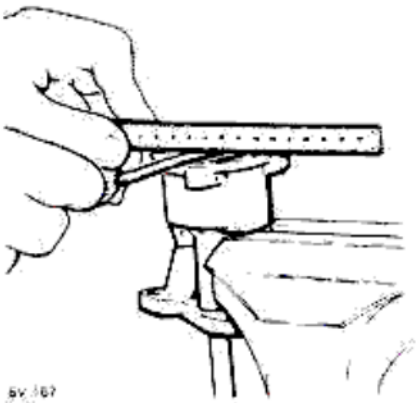

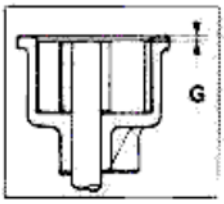

G = End float between the two rotors with respect to the pump housing surface:
0.025 to 0.075 mm
(0.0010 to 0.0030 in)

b. Re-assemble the oil movement group (1) complete with suction rose on the pump housing (2) and secure with screws and washers (3).
Re-assemble the valve regulating the oil pressure by reinstalling: piston (4), spring (5) and cover (6).
Overcome, with the aid of a pair of long-nosed pliers, the force of the valve spring and insert safety cotter (7).

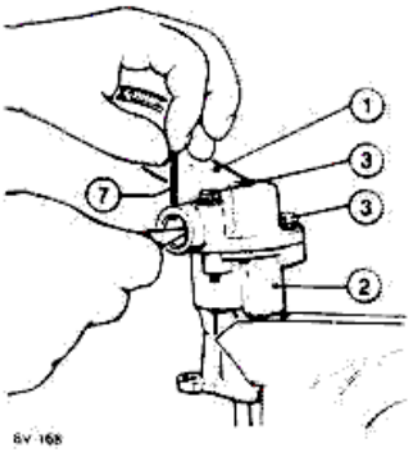

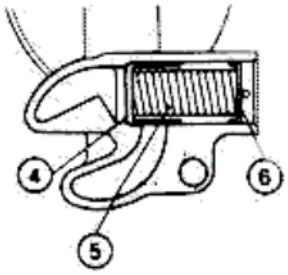

1. Oil movement group
2. Pump housing
3. Screws and washers
4. Piston
5. Spring
6. Cover
7. Safety cotter

Re-fitting the oil pump to the block

a. Insert the oil drive shaft in its seat in the cylinder block.
b. Fix the oil pump (1) to the base using the three socket head screws (2), tightening to the specified torque

(T) : Torque setting
Screws securing oil pump
19 to 24 N·m
(14 to 17.7 ft·lb;
1.94 to 2.45 kg·m)

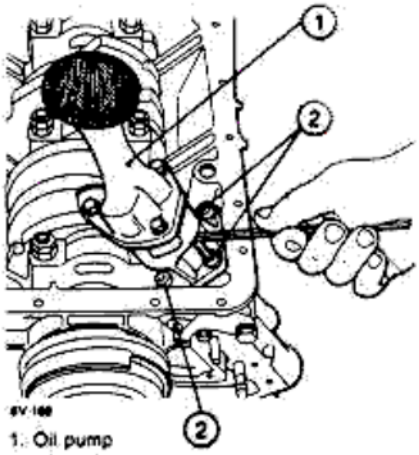

1. Oil pump
2. Retaining screws

 Also 01-89-08 and 01-89-09

See Tec. Bulletins 01-88-01, 01-88-02 and 01-88-03

REINSTALLATION OF CYLINDER HEADS

a. Free the overhaul stand and turn the block over.

Remove tool **A.2.0145** preventing the rotation of the flywheel.

b. Turn the crankshaft until the piston of cylinder no. 1 is in T.D.C. position during explosion stroke; this position is assured by the collimation of the notch on the engine pulley (1) and mark (2) on the front cover.

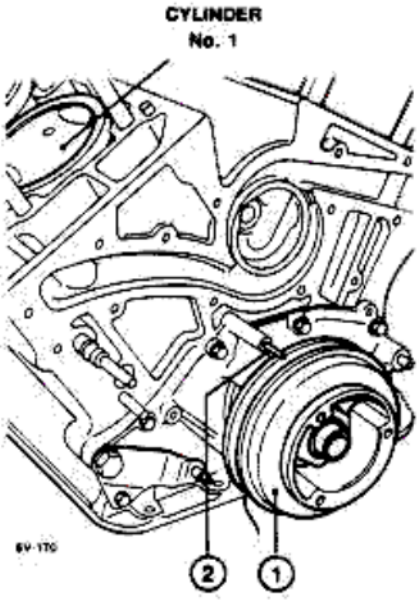

1. Engine pulley
2. Reference mark

c. Remove the cylinder liner fixing tools **A.2.0117** and additional washers **A.2.0362**, insert the fireproof gasket (1) on the cylinder liners (2).

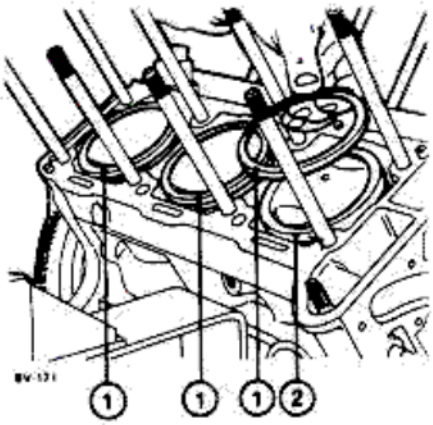

1. Fireproof gasket
2. Cylinder liners

d. Insert gasket (1) of the cylinder head and position seal ring (2) of the lubrication oil ducts.

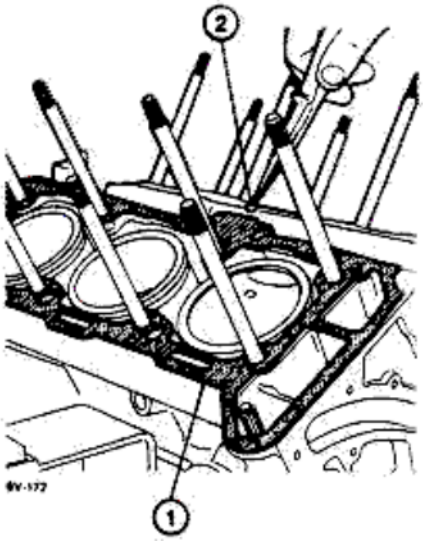

1. Cylinder head gasket
2. Seal ring

e. Prepare, as described, the two cylinder heads for re-fitting on the block:

— with lever (tool **A.2.0361**), turn camshaft (1) of each head until the timing notches (ref. **A**) are in line with the timing notches of the specified fixing caps (2).

On the RIGHT head the notch corresponds with the **third** cap, while on the LEFT head it is on the **second** cap.

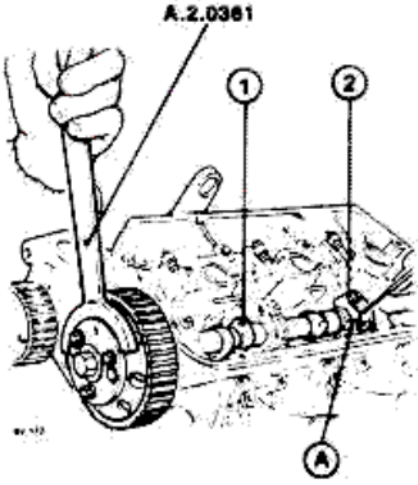

1. Camshaft
2. Camshaft cap

A. Timing notches

f. Fit the cylinder heads (1) to the block and lubricate the threads of the studs, the washers and locknuts with clean engine oil; proceed with care so as not to damage the studs.

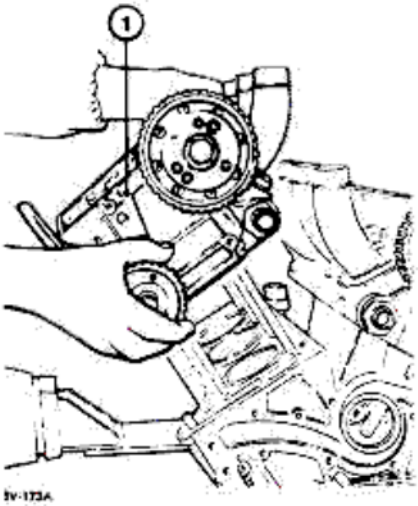

1. Cylinder head

g. Screw and tighten (to the required torque) the eight locknuts of the cylinder heads according to the sequence indicated in the following figure.

NOTE:
The operation illustrated is that for the RIGHT head.
For the LEFT head the tightening order is symmetrical.

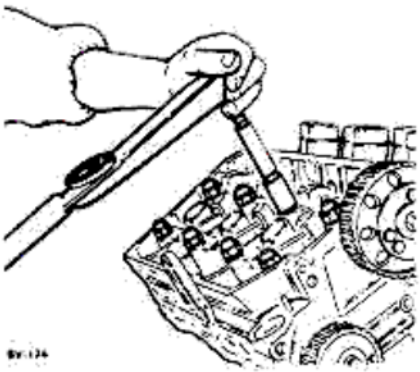

(T) : Torque setting
Nuts securing cylinder head to block
78 N·m
(57.9 ft·lb
8 kg·m)
For 3000 engine (061.24)
88.5 to 97.8 N·m
(9 to 10 kg·m
65.0 to 72.3 ft·lb)

CAUTION:
After about 1000 km, with engine cold, slacken the nuts by 1 turn one at a time in the order indicated. Moisten the surfaces between washer and nut with oil and re-tighten to the following torque:
88 N·m
(65.1 ft·lb) (9 kg·m)
For 3000 engine (061.24)
97.8 to 108.2 N·m
(72.1 to 79.8 ft·lb) (10 to 11 kg·m)

REINSTALLING OF ACCESSORIES

WATER PUMP

a. Fit the water pump (1) complete with the new gasket (2) to the front part of the cylinder block.
b. Mount support (3) for the generator regulation bracket and secure the water pump (1) tightening screws with washers (4) to the required torque.

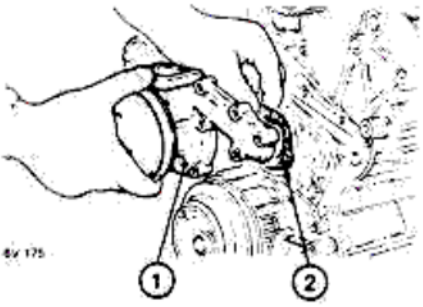

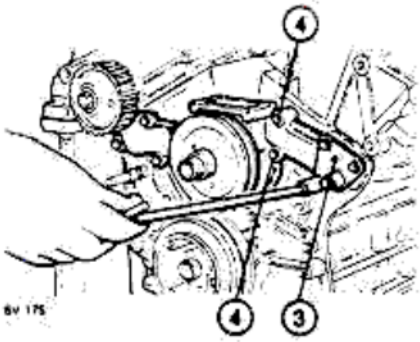

1. Water pump
2. Gasket
3. Support
4. Screws with washers

(T) : Torque setting
Water pump retaining screws
8.1 to 9.3 N·m
(6 to 6.9 ft·lb;
0.83 to 0.95 kg·m)

c. Mount union (1) on the water pump, first fitting a new gasket, and secure by tightening screws (2).
d. Mount intermediate union (3) (fitting a new gasket (4)) and simultaneously connecting rubber sleeves with clamps to the cylinder head cooling hoses.

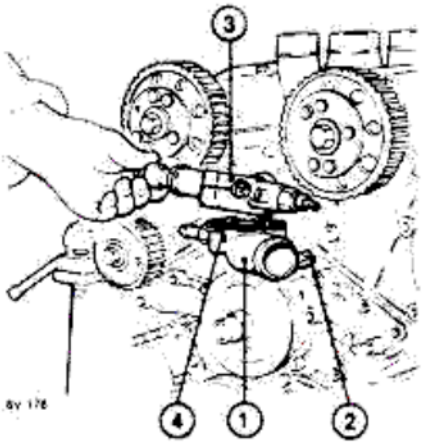

1. Water pump union
2. Retaining screws
3. Intermediate union
4. Gasket

e. Fit cup (1) complete with thermostat (2), inserting a new gasket (3) and securing the entire group by tightening screws (4).
Fit plate (5) for the thermostat group wiring harness on the thermostat cup.

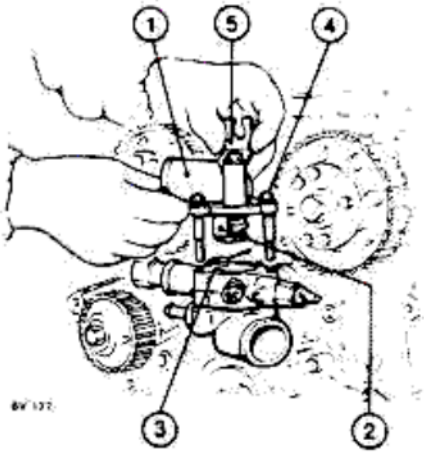

1. Cup
2. Thermostat
3. Gasket
4. Retaining screws
5. Plate

f. Finally connect rubber sleeves (1) to the cylinder head cooling hoses. Tighten clamps (2).

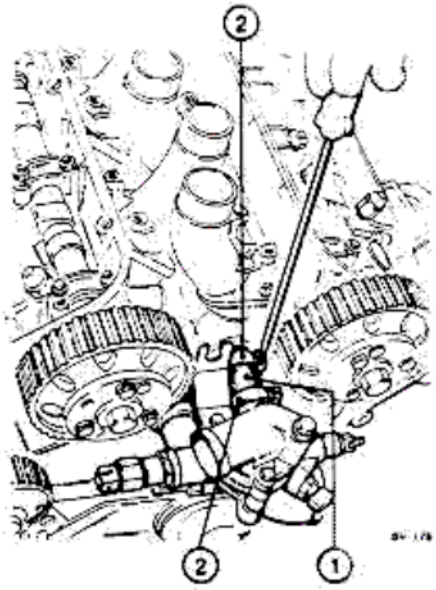

1. Rubber sleeves
2. Clamp

See Technical Bulletins : 01-89-03, 01-93-03 and 01-93-04

 Also 01-93-08

HYDRAULIC BELT STRETCHER

Disassembly

a. Lock the hydraulic belt stretcher (1) in a vice and, proceeding as illustrated in the figure, extract the pin (tool **A.2.0363**) to relieve the internal spring (2).

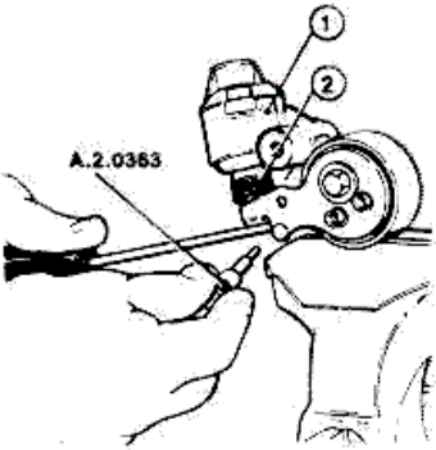

6V-179

1. Hydraulic belt stretcher
2. Spring

b. Unscrew socket head screws (1) and disassemble the belt stretcher plate (2).

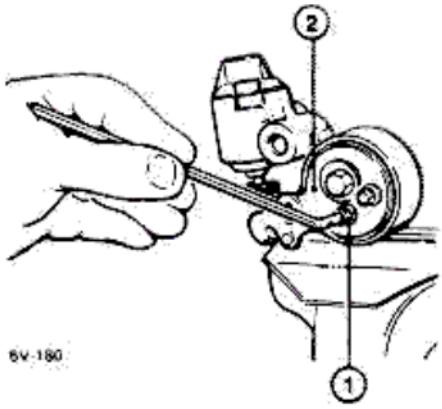

6V-180

1. Retaining screws
2. Belt stretcher plate

c. Disassemble the belt-stretcher pulley as follows:

— unscrew screw (1) and remove spacer below;
— retrieve seal ring (2) from the pulley pin;
— withdraw pulley (3) and retrieve the inner seal ring.

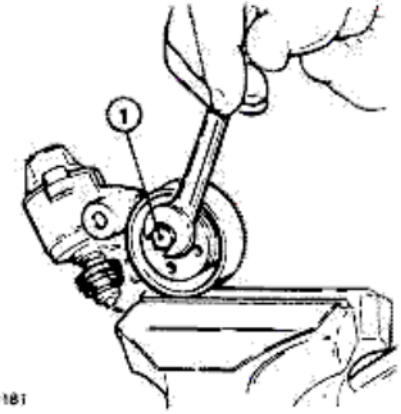

6V-181

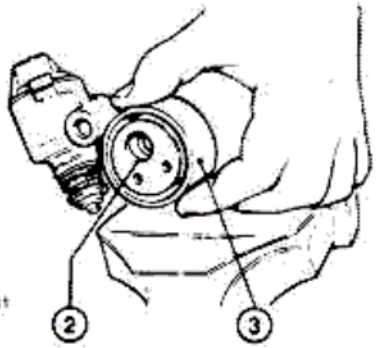

6V-181

1. Retaining screws
2. Seal ring
3. Pulley

d. Disassemble the piston in the following manner:

— remove snap ring (1) and slide washer (2) from the rod of the piston;
— then extract rubber (3) and boot (4).

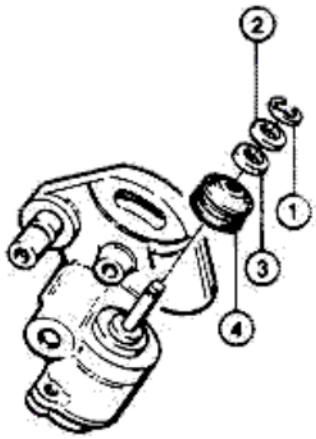

6V-182

1. Snap ring
2. Washer
3. Rubber
4. Boot

— slacken and unscrew the screws, remove cover (1) and, simultaneously retrieve spring (2) and the cover gasket.

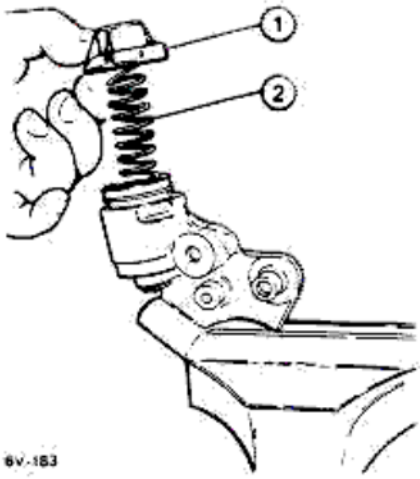

6V-183

1. Cover
2. Spring

— extract piston (1) from the belt stretcher housing and retrieve seal ring (2), then remove ring (3) from the lower part of the belt stretcher housing.

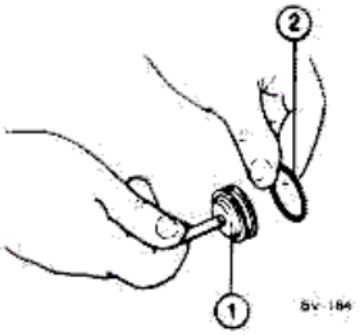

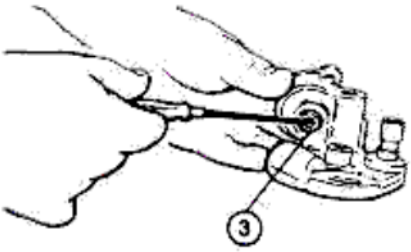

1. Piston
2. Seal ring
3. Seal ring

Checks

Subject the disassembled parts to a thorough visual examination in order to ascertain if there are signs of excessive wear; in the same way check the pin of the belt stretcher pulley for excessive wear.

CAUTION:
It is advisable to replace all the rings each time the belt stretcher is overhauled.

a. Also inspect spring «A», which acts on the piston and spring «B» which determines the pre-loading of the hydraulic belt stretcher.
Then check that the setting corresponds to that given in the table.

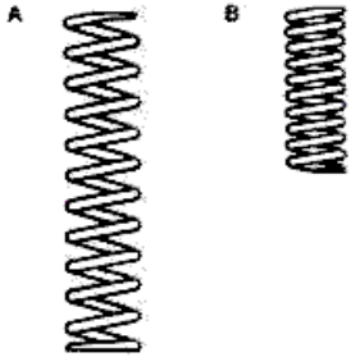

Belt stretcher spring	A	B
No. of useful coils	12	9
Length of free spring	93 mm (3.66 in)	45.5 mm (1.79 in)
Static test load	93.16 N (20.9 lb) (9.5 kg)	98 N (22 lb) (10 kg)
Length of spring under load	48 mm (1.89 in)	30 mm (1.18 in)

Reassembly

a. Insert seal ring (1), suitably lubricated with engine oil and place it in the lower bushing of the belt stretcher housing (2). Insert piston (3) complete with seal ring (4), suitably lubricated with engine oil.

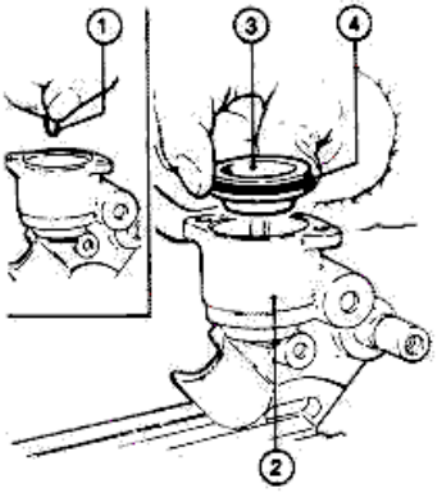

1. Seal ring
2. Belt stretcher housing
3. Piston
4. Seal ring

b. Position spring (1) on the piston and gasket (2) on the belt stretcher housing. Then, compressing the spring close cover (3) and fix it with the relative Allen screws (4).

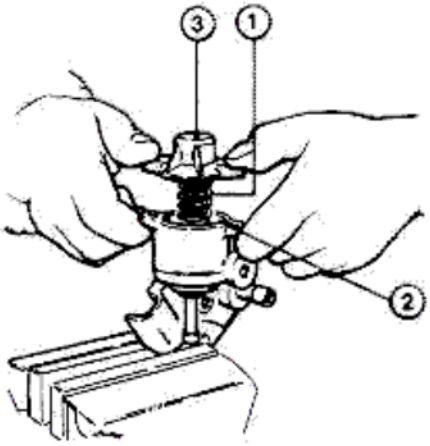

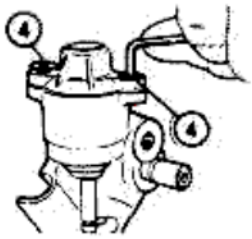

1. Spring
2. Gasket
3. Cover
4. Retaining screws

c. Reinstall boot (1) on the piston rod, taking care to fit it on the lower bushing of the belt stretcher housing, and then install rubber (2), washer (3) and safety snap ring (4).

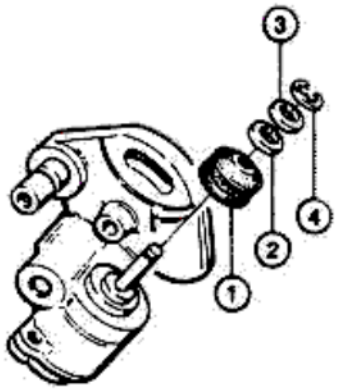

6V-182

1. Boot
2. Rubber
3. Washer
4. Snap ring

d. Position the inner seal ring on the pulley, reassemble pulley (1) on the belt stretcher pin suitably lubricated with ISECO Molykote BR2 grease, and fit the outer seal ring (2).

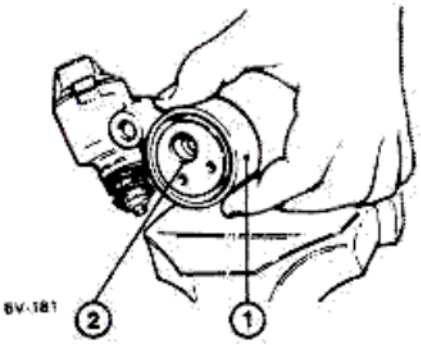

1. Pulley
2. Outer seal ring

e. Re-fit the spacer and screw in screw (1) securing the pulley.
Then tighten the screw to the specified torque.

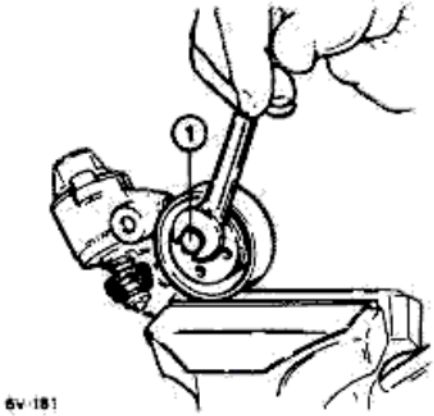

1. Pulley retaining screw

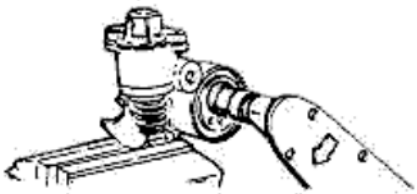

(T) : **Torque setting**
Screw securing belt stretcher pulley to the support pin
17 to 20 N·m
(12.30 to 14.47 ft·lb;
1.7 to 2 kg·m)

f. Fit the belt stretcher plate (1) and, after having positioned it correctly re-tighten the two Allen screws (2).

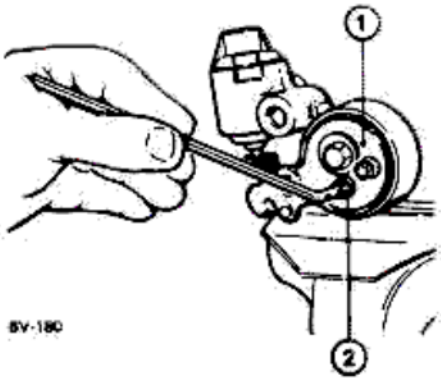

1. Belt stretcher plate
2. Retaining screws

g. When reassembly is complete lock the belt stretcher plate in spring compressed position using the pin (tool **A.2.0363**).

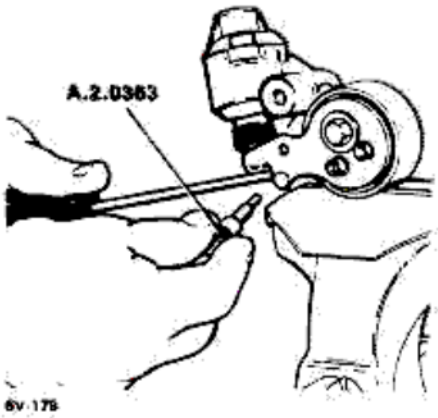

Reinstallation on the cylinder block

To reinstall the hydraulic belt stretcher proceed as follows:

a. Mount plate (1) restraining the spring placing it over the belt stretcher support pin.

b. Position rubber seals (2) and (3) on the belt stretcher support pin.

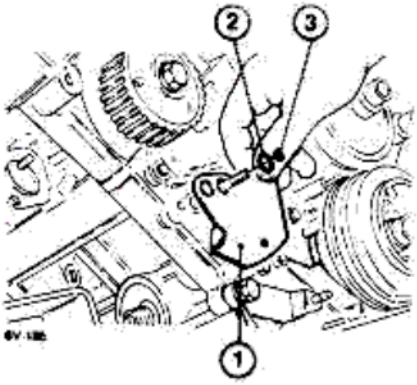

1. Spring restraining plate
2. Rubber seal
3. Rubber seal

See Tec. Bulletin 01.92-02

c. Check that belt stretcher (1) is locked by the pin (tool **A.2.0363**) and then mount it on the support pin complete with pre-loading spring (2) and reaction spring (3).

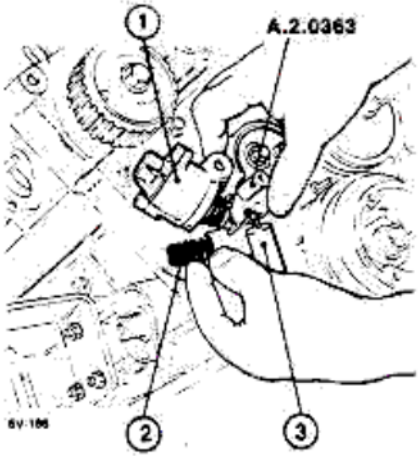

1. Hydraulic belt stretcher
2. Pre-loading spring
3. Reaction spring

d. Fix belt stretcher (1) to the cylinder block, turning it clockwise as far as it goes and screwing the nuts and washers (2); fit reaction spring (3) on the pin of plate (4).

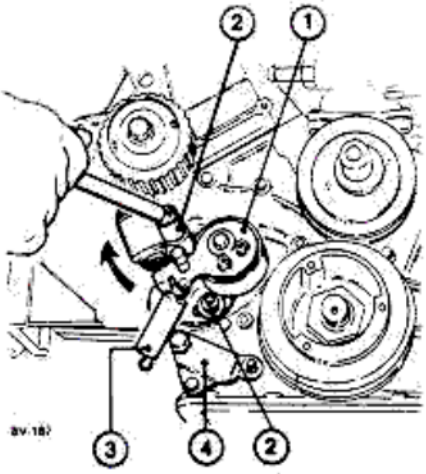

1. Belt stretcher
2. Nuts and washers
3. Reaction spring
4. Plate

DISTRIBUTOR

a. After lubricating it with engine oil, insert gear (1).
This engages the oil pump spindle and drives the pump and the distributor.

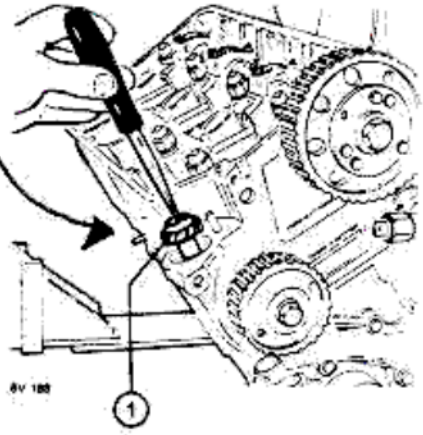

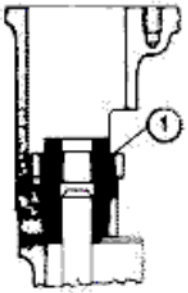

1. Gear

b. Fit the distributor (1), with a new seal ring (2).
Position rotating brush (3) towards the cylinder no. 1, and thus with the notch on the distributor housing.
Mount plate (4) and secure the distributor with nut and washer (5); **do not tighten nut (5) at this time.**

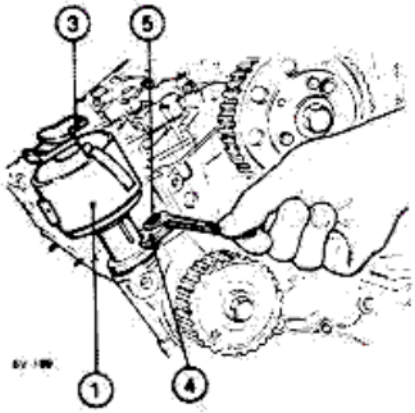

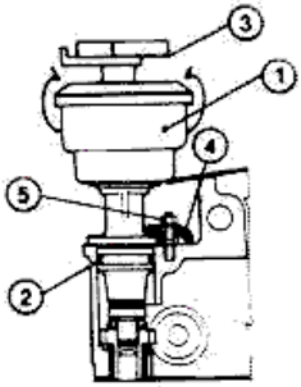

1. Distributor
2. Seal ring
3. Rotating brush
4. Plate
5. Nut and washer

INSTALLATION OF TIMING BELT AND CHECK OF ENGINE TIMING

a. Mount tool **C.6.0183** complete with dial indicator in the spark plug seat of the 1st cylinder.

b. Turn the crankshaft in the normal direction until piston of cylinder no. 1 reaches T.D.C. position during the compression stroke (with both valves closed); this condition is indicated by the static period between the clockwise and anti-clockwise oscillations of the dial indicator pointer.

c. Check that in this position the following conditions occur:

- notch «P» on the engine pulley (1) must be aligned with reference pin (2) on the cylinder block;
- notches (3) and (4) on the camshaft must be aligned with the corresponding reference notches on the relative caps;

— rotating brush (5) of the distributor must be facing towards cylinder no. 1 and aligned with the reference notch on the distributor housing.

CAUTION:
During all the belt re-fitting operations check that there is still alignment.

d. Fit the timing belt (6) on the pulleys maintaining the driving sections taut and respecting the following assembly order:

A. Crankshaft toothed pulley;
B. Left cylinder head toothed pulley;
C. Right cylinder head toothed pulley;
D. Camshaft and oil pump drive pulley;
E. Hydraulic belt stretcher pulley.

e. Slacken the nuts securing the hydraulic belt stretcher and seat the timing belt by means of the device fixed to the flywheel and turning the crankshaft in the normal rotation direction for two or three complete turns, taking care to maintain the driving sections of the toothed belt taut.

f. Keep the belt sections taut, press the pulley of the belt stretcher against the belt itself and lock the belt stretcher with the two screws.

g. Raise the belt stretcher arm slightly, remove pin **A.2.0363** and release the arm.

h. Bring the piston of cylinder no. 1 to T.D.C. once more and check that all the alignment and timing conditions listed in steps b. and c. are fulfilled.

i. If the notches on the camshafts and relative caps are not aligned proceed with the timing procedure as described in the GROUP 00 - ENGINE MAINTENANCE.

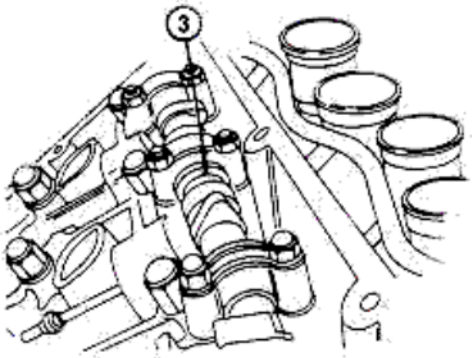

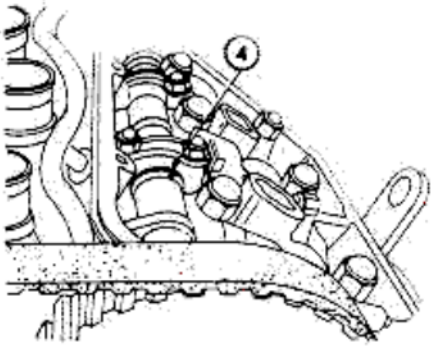

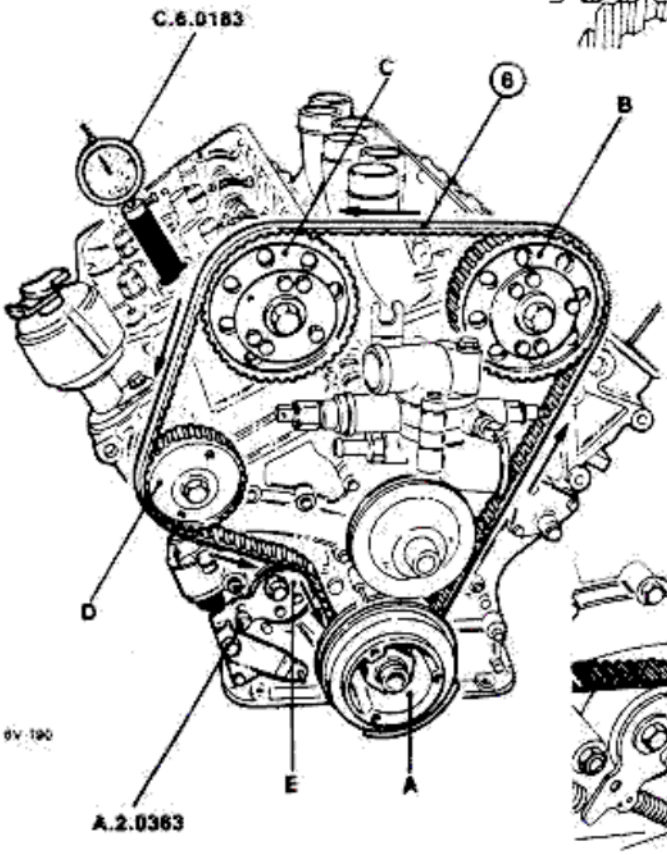

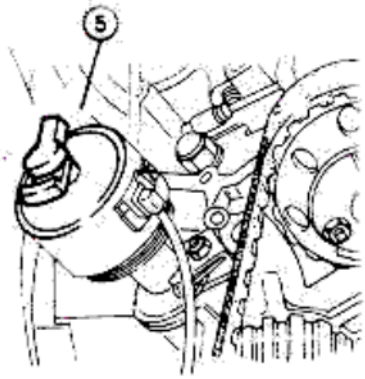

6V-190

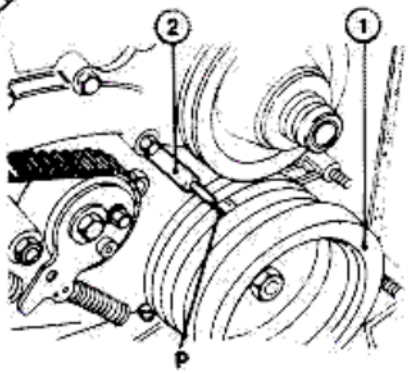

1. Crankshaft pulley
2. Reference pin
3. Notches on right camshaft
4. Notches on left camshaft
5. Rotating brush
6. Camshaft toothed belt

j. Hook reaction spring (1) to hydraulic belt stretcher (2) and to the pin of plate (3).

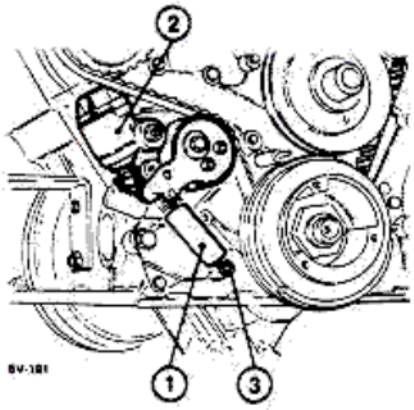

1. Reaction spring
2. Hydraulic belt stretcher
3. Plate

CYLINDER HEAD COVERS

a. Mount gaskets (1) on the spark plug holes.

b. Fill the wells of the camshaft bearings after checking that they are perfectly dry. Use the specified engine oil.

Quantity of oil required for each well:
1 lb (0.450 kg)

c. Clean the support face of the cylinder head covers to remove any fragments of gasket remaining.
Use butyl acetate or methylethylketone.

CAUTION:
Before mounting the head covers spread the specified cement (DIRING Heldtite) over the gaskets (only surfaces in contact with the head).

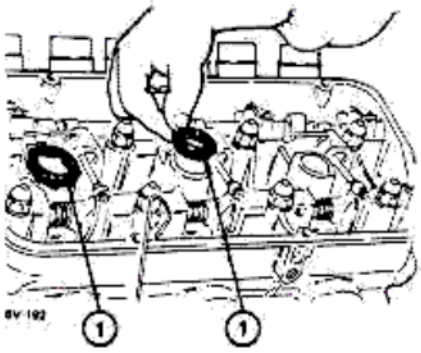

1. Spark plug hole gaskets

d. Place covers (1) on the cylinder heads complete with respective gaskets (2) and fix them with the respective screws and washers.

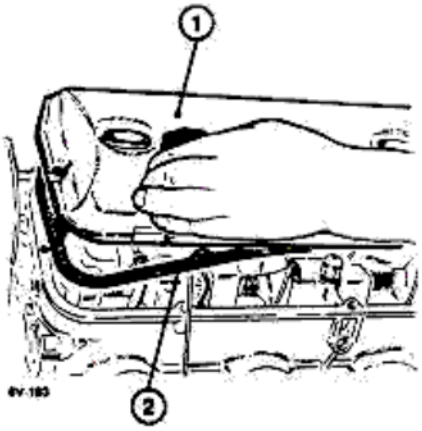

1. Cylinder head covers
2. Gaskets

OIL SUMP

a. Rotate the engine assembly by unlocking the overhaul stand and fit the oil filter (1) using a suitable wrench.

b. Apply the specified cement (DIRING Heldtite P/N 3522-00015) uniformly over the gasket.

c. Before applying the cement eliminate any trace of the old cement by de-greasing the surface.

d. Fit the oil sump (2) complete with gasket (3) and tighten with lag screws (4) and through screws (5).
Screw the oil drain plug (6) to the oil sump.

e. Free the engine assembly from the overhaul stand and turn the assembly over again.

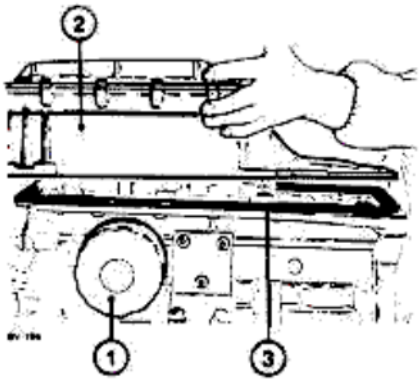

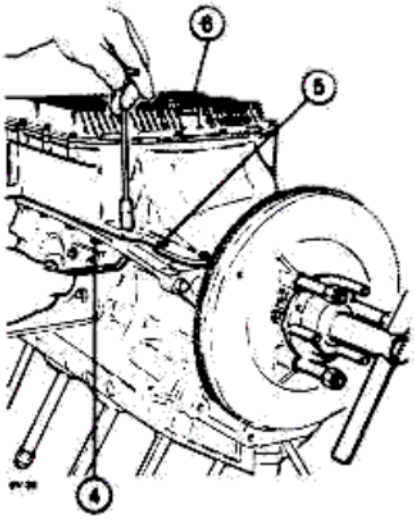

1. Oil filter
2. Oil sump
3. Gasket
4. Lag screws
5. Through screws
6. Oil drain plug

TIMING BELT GUARD

a. Place plastic guards (1) covering the timing belt in position and fix them to the cylinder block and cylinder heads with screws (2).

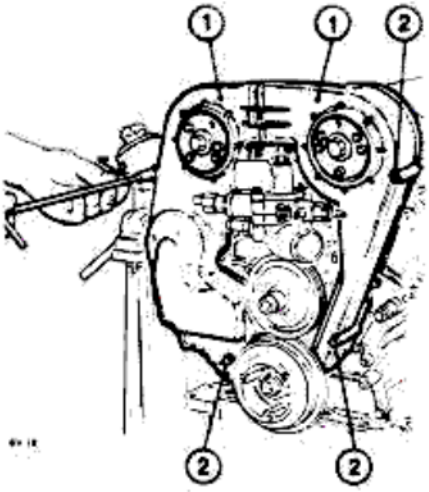

1. Guard
2. Retaining screws

b. Connect guards (2) and (3) with bolt (1).

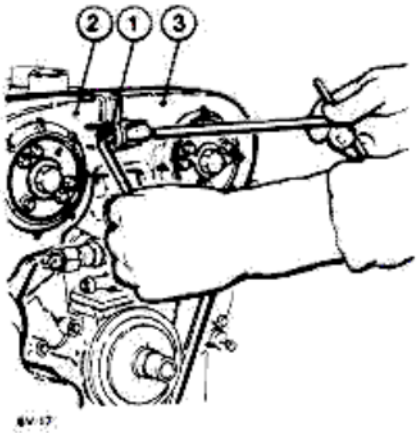

1. Connecting bolt
2. Right guard
3. Left guard

CAUTION:
To check that the engine timing is correct, with engine installed, ensure that the notches on the hubs of toothed pulleys (1) and (2) are aligned with the respective tabs (3) and (4) on the belt guards.

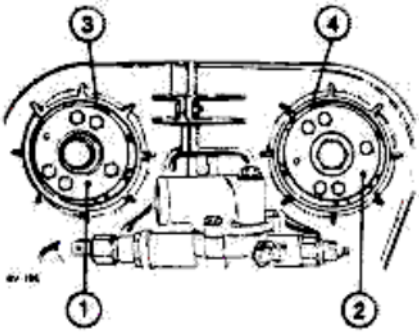

1. Right toothed pulley hub
2. Left toothed pulley hub
3. Right guard tab
4. Left guard tab

c. Reinstall the covers of the toothed pulley hubs on the guards.

GENERATOR

a. Fit generator (1) complete with regulation bracket (2) on support (3) of the oil sump, insert screw (4) and secure without tightening the respective nut.
b. Turn without tightening screw (5) and bolt (6).

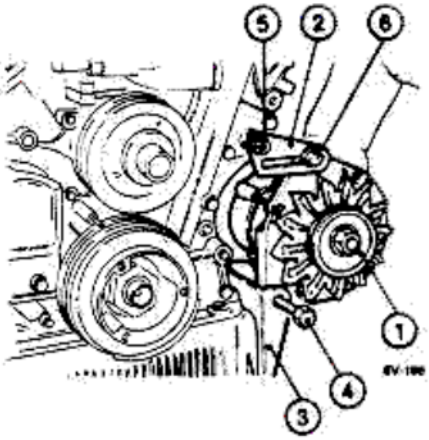

1. Generator
2. Regulation bracket
3. Generator support
4. Screw and nut
5. Screw
6. Bolt

c. Move the generator toward the cylinder block and slide the V-belt (1) onto the crankshaft and water pump pulleys.

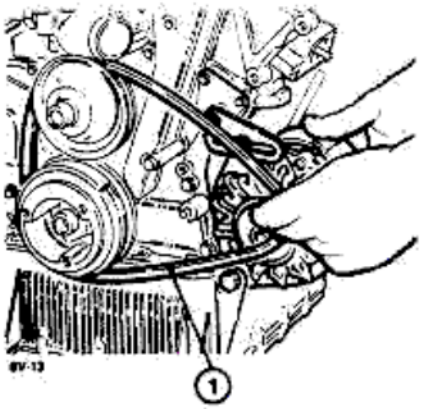

1. V-belt

d. Move generator (1) outwards, levering it as shown in the figure, until the correct tension of the V-belt (2) is obtained.

The tension of the belt is correct if, when subjected to a load of about

147 to 294 N
(33 to 66 lb; 15 to 30 kg)

at the center point, the belt deflection is :

16 mm (0.63 in)

e. Secure the generator tightening in sequence: bolt (3), bolt (4) and screw (5).

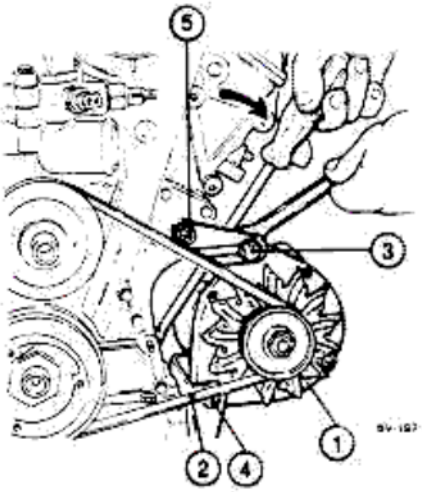

1. Alternator
2. V-belt
3. Bolt
4. Bolt
5. Screw

The tension is correct if, when subjected to a load of about

147 to 294 N
(33 to 66 lb; 15 to 30 kg)

at the center point, the belt deflection is:

13 mm (0.51 in)

d. Tighten the adjustment screws (2), screw (1) fixing the support bracket (6) and the bolt fixing the rear bracket (3).

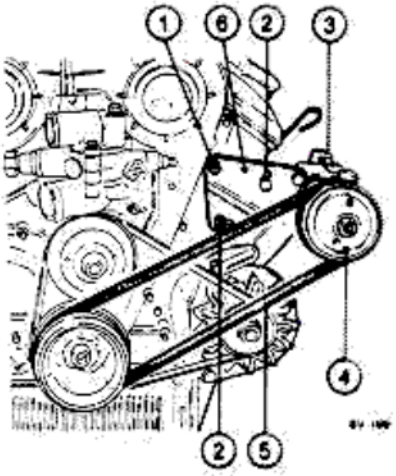

1. Retaining screw
2. Adjustment screws
3. Rear bracket
4. Power steering pump
5. V-belt
6. Support bracket

The tension is correct when a load of about

196 to 343 N
(44 to 77 lb; 20 to 35 kg)

at the center of the belt causes a belt deflection of about:

14 mm (0,55 in)

e. Fully tighten nut (2) securing the belt stretcher pulley (3).

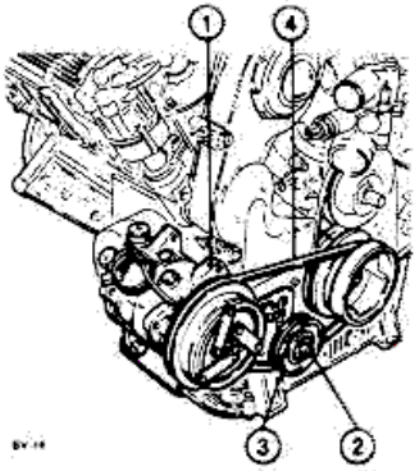

1. Compressor
2. Nut
3. Belt stretcher pulley
4. V-belt

POWER STEERING PUMP

a. Place the pump, complete with support bracket, on the cylinder block without locking screw (1), adjustment screws (2) and the locking bolt of the rear bracket (3).

b. Move the power steering pump (4) towards the cylinder block and slide the V-belt (5) onto the crankshaft pulley and onto that of the power steering pump.

c. Move the power steering pump outwards until the correct tension of the belt is obtained.

CONDITIONER COMPRESSOR

a. Place the compressor of the air conditioner (1) complete with its support bracket, on the flange of the oil sump and secure it with the two screws.

b. Slacken nut (2) securing belt stretcher pulley (3).

c. Slide the V-belt (4) onto the crankshaft pulley, onto the belt stretcher pulley and onto the compressor pulley.

d. Lower the belt stretcher pulley (3) until the correct belt tension is obtained.

INSTALLATION OF FUEL SYSTEM COMPONENTS

a. To reinstall the components of the fuel system proceed in the opposite order to that described for removal, following the specifications and checks described in Group 04.

FINAL OPERATIONS

a. Remove the tool previously fixed to the flywheel so that the flywheel rotates freely.
b. Fit right exhaust manifolds (1) with relative gaskets to the cylinder head and lock them with nuts and washers (2) and screws (3).
c. Proceed in the same way for the exhaust manifolds to be mounted from the left side of the engine.
d. Fit the rear cover (4) to the rear flange of the cylinder block and lock it with screws (5).
e. Position the spacer and starting motor (6) on the rear cover, screw on nuts with washers (7) and tighten.
f. Install the heat shield (8) protecting the starting motor and fix it with screws (9).

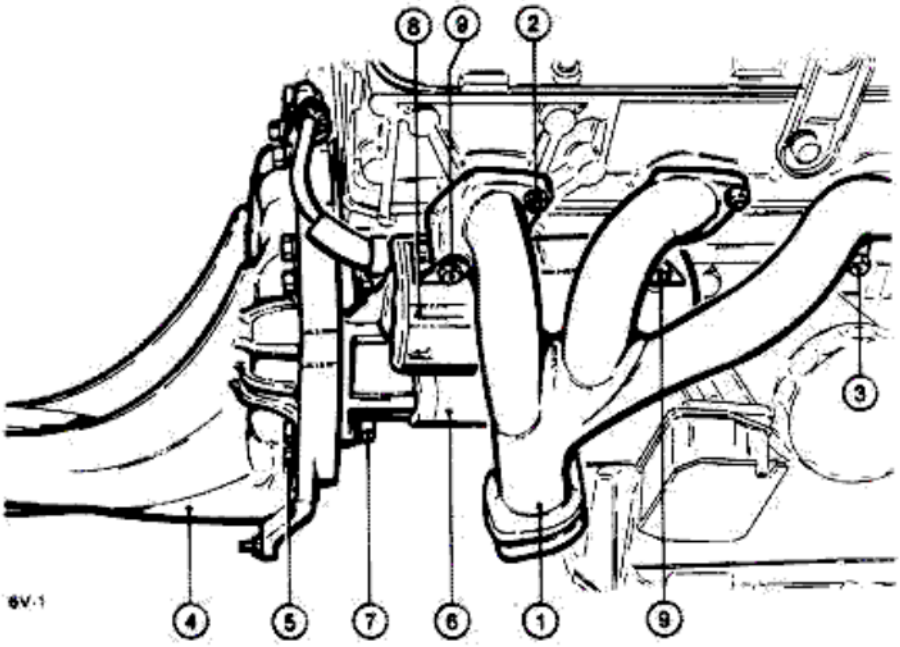

1. Exhaust manifolds
2. Nuts and washers
3. Screws
4. Rear cover
5. Screws
6. Starting motor
7. Nuts and washers
8. Heat shield
9. Screws

g. Hook a suitable hoist to the lifting brackets and, maintaining a slight tension, slacken bolts (1) connecting brackets (2) and (3) fixed to the overhaul stand.

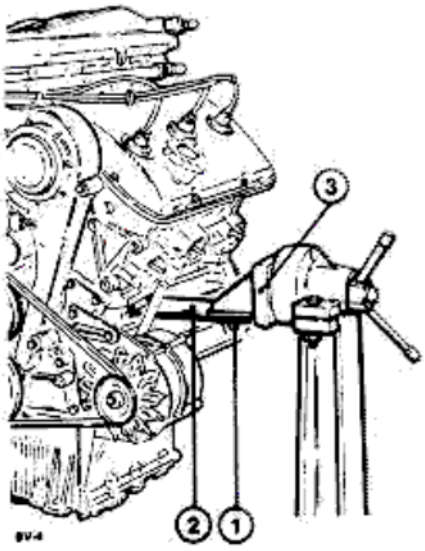

1. Bolts
2. Engine support brackets
3. Overhaul stand supports

h. Replace the brackets fixed to the cylinder block with right and left engine supports (1); lock nuts and washers (2) on the cylinder block studs.

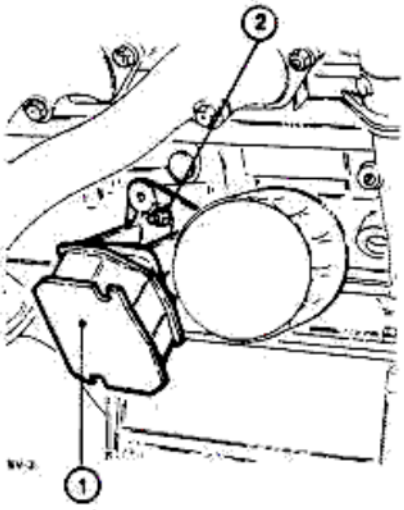

1. Engine supports
2. Nuts and washers

i. Install the engine group in the vehicle following the procedure described in the paragraph «ENGINE REMOVAL AND INSTALLATION» for the vehicle in question.

REPLACING THE REAR COVER SILENTBLOC

To replace the silentbloc of the rear cover proceed as follows:

a. Provide a suitable base (1) for the extraction of the Silentbloc and position it as illustrated in the figure.

b. Using a suitable punch (2) extract the Silentbloc.

c. Fit the new Silentbloc using the same equipment.

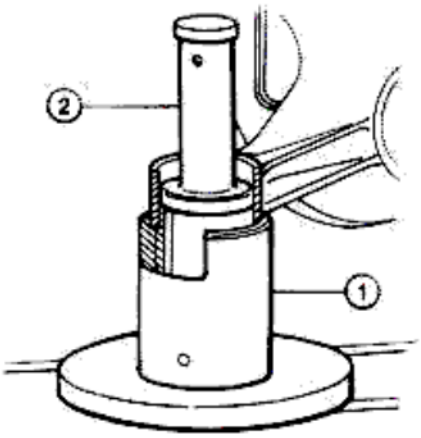

1. Base
2. Punch

CAUTION:
The Silentbloc (1) must be placed parallel to the side of the bevel in the seat on the rear cover as shown in the figure.

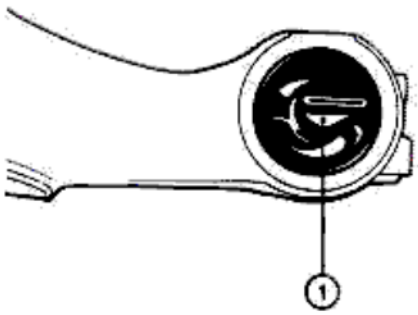

1. Silentbloc

LUBRICATION SYSTEM

DESCRIPTION

The engine lubrication system is of the forced flow type with replaceable filter element.
The oil circulation is provided by a rotating lobe pump which is operated by the toothed timing belt through a toothed pulley and an auxiliary shaft.
The oil pump is installed in the lower part of the cylinder block.
The oil pressure is regulated by a maximum pressure valve in the pump housing.
The oil is filtered, with total passage, during suction by means of a screen fitted on the oil feed housing of the pump and then by a cartridge filter (total flow) on the delivery duct.
The filter cartridge is provided with a by-pass valve permitting the normal circulation of the oil even if the cartridge is completely clogged.
The oil filler is located on the cover of the left cylinder head.
The right cylinder head cover is provided with fittings for the re-circulation of the oil vapor at idling and high speed.
Insufficient oil pressure is signalled on the instrument panel by means of an indicator light connected to a pressure sender on the main channel of the cylinder block.

CHECKING THE OIL PRESSURE

a. Start the engine and let the engine oil heat up to normal running temperature (90°C; 194°F). Then stop the engine.

b. Remove the oil pressure sender.

c. Apply a pressure gauge to the sender hole.

d. Start the engine and read the oil pressure indicated on the pressure gauge.

Engine speed (rpm)		Engine oil pressure
800 to 900	kPa	49.03
	bar	0.49
	kg/cm²	0.5
	psi	7.1
5500	kPa	392.24 to 588.36
	bar	3.92 to 5.88
	kg/cm²	4 to 6
	psi	56.89 to 85.34

e. Remove the pressure gauge and re-fit the sender.

f. If the oil pressure is not within the limits indicated in the table check the oil pump.

SERVICE DATA AND SPECIFICATIONS

TECHNICAL DATA

ENGINE

Features		Engine	
		2500	3000
		(019.11)	(061.24)
Cycle		Otto/4 stroke	
Number of cylinders and layout		6 in V, 60° angle	
Cylinder numbering		Running direction ← RH cylinder block: 1 3 5; LH cylinder block: 2 4 6	
Bore and stroke	mm (in)	88 × 68.3 (3.46 × 2.69)	93 × 72.6 (3.66 × 2.85)
Cylinder capacity	cm^3 (cu in)	2492 (152.1)	2959 (180.5)
Combustion chamber capacity	cm^3 (cu in)	52 (3.17)	58 (3.54)
Compression ratio		9	9.5
Power output DIN Maximum Specific	kW (HP)	115 (157) 46 (61.7) at 5600 rpm	136 (188) at 5800 rpm
Max. torque DIN	Nm (kgm; ft·lb)	210 (21.4; 154.7) at 4000 rpm	216 (22; 159.3) at 1000 rpm
			235 (24; 173.3) at 2000 rpm
			245 (25; 180.7) at 3000 rpm
			245 (25; 180.7) at 4000 rpm
Mean effective piston speed (1)	m/1'' (ft/s)	12.7 (41.67)	
Octane rating	RON PON Sensitivity (2)	91 86 10	95 90 10
Engine Oil pressure (3) at 800 to 900 rpm at 5500 rpm	kPa (bar; kg/cm^2; psi)	49.03 (0.49; 0.5; 7.11) 392.24 to 588.36 (3.92 to 5.88; 4 to 6; 56.89 to 85.34)	

(1) At peak rpm
(2) Difference between Research Method Octane Number and Motor Method Octane Number
(3) Values to be read at engine operating temperature

GENERAL SPECIFICATIONS

FLUIDS AND LUBRICANTS

Application	Type	Name	Q.ty lb (kg)
Gasket for rear main bearing cap	FLUID	Union CARBIDE CHEMICALS CO. Ucon Lubricant 50 HB-5100 MILLOIL: Lubricant for rubber sections Part no. 4500-17502	—
Crankshaft oil seals — Front: outer surface	OIL	AGIP Sint 2000 10W50 IP Sintiax 10W40 Part no. 3631—693/52 SHELL Fire & Ice Motor 15W/50	—
Lip	GREASE	ISECO Molykote BR2 Part no. 3671-69841	—
— Rear: outer surface Lip	OIL	AGIP Sint 2000 10W50 IP Sintiax 10W40 Part no. 3631-693/52 SHELL Fire & Ice Motor 15W/50	—
Cylinder head support sumps (1)	OIL	AGIP Sint 2000 10W50 IP Sintiax 10W40	0.99 (0.45)
Engine oil sump The quantity indicated includes the following capacities: — sump at max. level — filter and corresponds to periodic replacements during maintenance — difference between min and max level on dipstick		SHELL Fire & Ice Motor 15W/50	13.23 (6.0) 12.13 (5.5) 1.1 (0.5) 4.41 (2.0)
Camshaft oil seals	OIL	AGIP Sint 2000 10W50 IP Sintiax 10W40	—
Sealing ring for distributor/oil pump drive pulley shaft — outer surface — lip	GREASE	SHELL Fire & Ice Motor 15W/50 Part.no. 3631-693152 ISECO Molikote BR2 Part no. 3671-69841	—
Pin for hydraulic tensioner	GREASE	ISECO Molikote paste G Part no. 3671-69840	—

(1) Refill only if disassembled (cylinder head dry)

ABRASIVES

Application	Type	Name	Q.ty
Grinding paste for valves and valve seats	PASTE	SIPAL AREXONS Paste: Carbosilicium for valves Part No. 4100-31502	—

SEALANTS AND FIXING AGENTS

Application	Type	Name	Q.ty
Hydraulic belt tensioner stud (1) Screws securing flywheel to crankshaft (1)	FIXING AGENT	LOCTITE 270 Part No. 3524-00009	—
Cylinder head cover gaskets (head side) Oil sump gasket	SEALING COMPOUND	DIRING Heldite DOW CORNING: Hermetite Part No. 3522-00015	—

(1) Prior to applying the locking agent, all traces of old material must be removed by brushing and blowing on the threads. Always de-grease the threads by means of trichlorethylene or chlorothene.

CHECKS AND ADJUSTMENTS

TIMING DATA (1)

TIMING MARKS ON CAMSHAFT BEARINGS CAPS
(Viewed from front of engine)

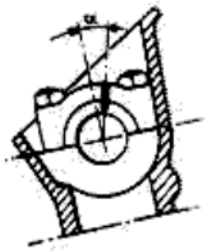

RH cylinder head

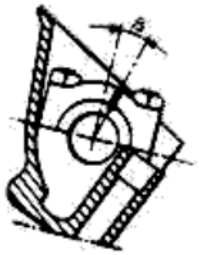

LH cylinder head

VALVE CLEARANCE

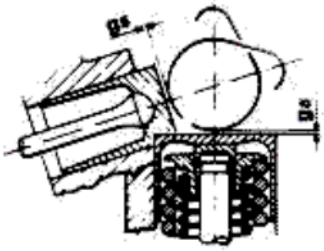

Unit: mm (in)

			Engine	
			2500	3000
			(019.11)	(061.24)
Camshafts	RH cylinder head		119.00.03.200.25	195.32.03.200.10
	LH cylinder head		119.00.03.201.25	193.32.03.201.10
Nominal cam lift	Intake cam		9 (0.35)	9.1 (0.36)
	Exhaust cam		6.4 (0.25)	
Angle of timing mark on camshaft bearing cap	RH cylinder head	(α)	15°	
	LH cylinder head	(β)	15°	
Clearance between heel of cam and top of bucket	Intake	ga	0.475 to 0.500 (0.0187 to 0.0197)	
	Exhaust	gs	0.225 to 0.250 (0.0089 to 0.0098)	

(1) All values are with engine cold

VALVE TIMING DIAGRAM
(Clockwise crankshaft rotation when viewed from the front)

			Engine	
			2500	3000
			(019.11)	(061.24)
Intake	Opening (before T.D.C.)	g	36°50'	32°30'
	Closing (after B.D.C.)	h	60°50'	67°30'
	Duration (intake)	i	277°40'	280°
Exhaust	Opening (before B.D.C.)	l	59°55'	
	Closing (after T.D.C.)	m	23°55'	
	Duration (exhaust)	n	263°50'	

CYLINDER LINERS, COMPRESSION RINGS, PISTONS AND PINS

Cylinder liners

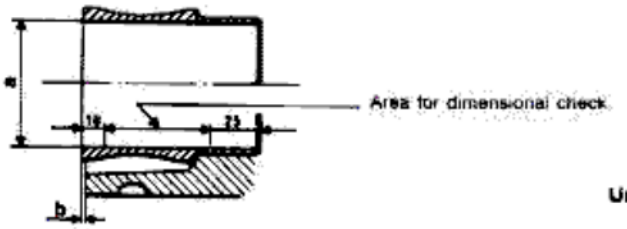

Unit: mm (in)

Check dimensions			Engine	
			2500	3000
			(019.11)	(061.24)
Cylinder liner bore	(a)	Grade A (Blue)	87.985 to 87.994 (3.4640 to 3.4643)	92.985 to 92.994 (3.6608 to 3.6611)
		Grade B (Pink)	87.995 to 88.004 (3.4644 to 3.4647)	92.995 to 93.004 (3.6612 to 3.6616)
		Grade C (Green)	88.005 to 88.014 (3.4648 to 3.4651)	93.005 to 93.014 (3.6616 to 3.6620)
Protrusion of cylinder liner beyond cylinder block (1)		(b)	0.01 to 0.06 (0.0004 to 0.0024)	0.01 to 0.06 (0.0004 to 0.0024)
Maximum cylinder liner ovality and taper			—	0.01 (0.0004)
Maximum cylinder liner ovality and taper			0.01 (0.0004)	—

(1) When measuring apply the liner clamping tools, and tighten nuts to the torque of 10 to 15 Nm (7.23 to 10.84 ft.lb; 1 to 1.5 kgm)

Compression rings

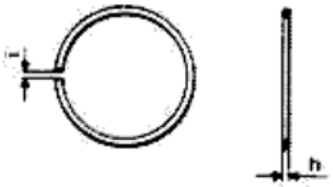

Unit: mm (in)

Check dimensions			Engine	
			2500	3000
			(019.11)	(061.24)
Ring thickness	(h)	Compression ring no. 1	1.478 to 1.490 (0.0582 to 0.0587)	1.478 to 1.490 (0.0582 to 0.0587)
		Compression ring no. 2	1.728 to 1.740 (0.0680 to 0.0685)	1.478 to 1.490 (0.0582 to 0.0587)
		Oil scraper ring	3.978 to 3.990 (0.1566 to 0.1571)	3.478 to 3.490 (0.1369 to 0.1374)
Ring gap (1)	(i)	Compression ring no. 1	0.30 to 0.45 (0.012 to 0.018)	0.40 to 0.65 (0.0157 to 0.0256)
		Compression ring no. 2	0.30 to 0.45 (0.012 to 0.018)	0.40 to 0.65 (0.0157 to 0.0256)
		Oil scraper ring	0.25 to 0.40 (0.010 to 0.016)	0.30 to 0.60 (0.0118 to 0.0236)

(1) To be measured inside the cylinder bore or inside a ring gauge

Pistons

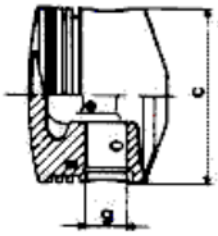

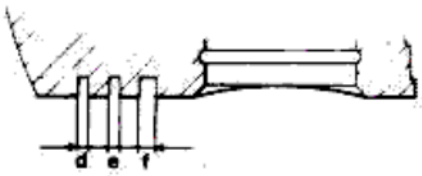

Unit: mm (in)

Check dimensions			Engine	
			2500	3000
			(019.11)	(061.24)
Piston diameter (1)	(c)	Grade A (Blue)	87.935 to 87.945 (3.4620 to 3.4624)	92.935 to 92.945 (3.6588 to 3.6592)
		Grade B (Pink)	87.945 to 87.955 (3.4624 to 3.4628)	92.945 to 92.955 (3.6592 to 3.6596)
		Grade C (Green)	87.955 to 87.965 (3.4628 to 3.4632)	92.955 to 92.965 (3.6596 to 3.6600)
Grove width of compression ring no. 1	(d)		1.525 to 1.545 (0.0600 to 0.0608)	1.525 to 1.545 (0.0600 to 0.0608)
Grove width of compression ring no. 2	(e)		1.775 to 1.795 (0.0699 to 0.0707)	1.525 to 1.545 (0.0600 to 0.0608)
Grove width of oil scraper ring	(f)		4.015 to 4.035 (0.1581 to 0.1589)	3.515 to 3.535 (0.1384 to 0.1392)
Gudgeon pin bore diameter in piston	(g)	Black	22.003 to 22.006 (0.8663 to 0.8664)	22.003 to 22.006 (0.8663 to 0.8664)
		White	22.006 to 22.009 (0.8664 to 0.8665)	22.006 to 22.009 (0.8664 to 0.8665)

(1) For 2500 (019.11) engine, measure at right angles to pin bore at 12 mm (0.47 in) from lower edge of skirt
For 3000 (061.24) engine measure at right angles to pin bore at 14 mm (0.55 in) from lower edge of skirt

Pins

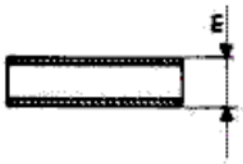

Unit: mm (in)

Check dimensions			Engine	
			2500	3000
			(019.11)	(061.24)
Gudgeon pin external diameter	(m)	Black	21.994 to 21.997 (0.8659 to 0.8660)	
		White	21.997 to 22.000 (0.8660 to 0.8661)	

CRANKSHAFT, CRANKCASE, CONNECTING RODS, BEARINGS AND FLYWHEEL

Crankshaft

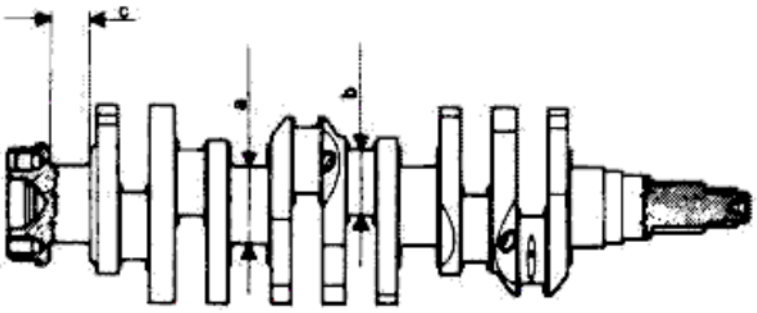

Unit: mm (in)

Check dimensions			Engine	
			2500	3000
			(019.11)	(061.24)
Main journal diameter	(a)	Red	59.961 to 59.971 (2.3607 to 2.3610) 59.971 to 59.981 (2.3610 to 2.3614) (1)	59.971 to 59.981 (2.3611 to 2.3614)
		Blue	59.951 to 59.961 (2.3603 to 2.3607) 59.961 to 59.971 (2.3607 to 2.3610) (1)	59.961 to 59.971 (2.3607 to 2.3611)
Crankpin	(b)	Red	51.990 to 52.000 (2.0468 to 2.0472)	
		Blue	51.980 to 51.990 (2.0465 to 2.0468)	
Lenght of rear main journal		(c)	31.300 to 31.335 (1.2323 to 1.2336)	
Maximum permissible ovality for main journals and crankpins			0.004 (0.0002)	
Maximum permissible taper for main journals and crankpins			0.010 (0.0004)	
Maximum variation in parallelism between main and crankpins			0.015 (0.0006)	
Maximum eccentricity between main journals			0.040 (0.002)	
Max. crankpin offset (crankpin centreline to main journal centreline)				0.3 (0.01)

(1) Oversize crankshaft

Crankcase

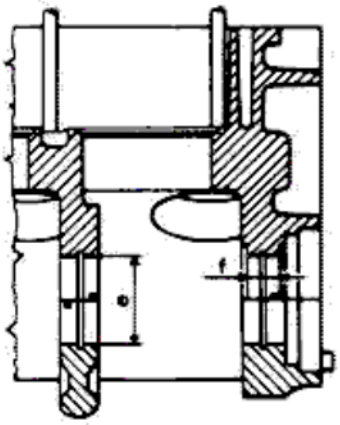

Unit: mm (in)

Check dimensions		Engine	
		2500	3000
		(019.11)	(061.24)
Main bearing support bore diameter	(e)	63.657 to 63.676 (2.5062 to 2.5069)	
Length of rear main bearing support shoulder	(f)	26.450 to 26.500 (1.0413 to 1.0433)	

Connecting rod

See Tec. Bulletin 01-03-85

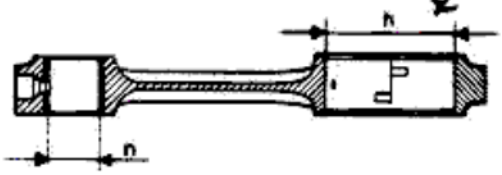

Unit: mm (in)

Check dimensions		Engine	
		2500	3000
		(019.11)	(061.24)
Big end bore diameter	(h)	55.511 to 55.524 (2.1854 to 2.1860)	
Small end bush hole diameter	(n)	22.005 to 22.015 (0.8663 to 0.8667)	

Main bearings

Clearance: Minimum .016mm (.0006") to Maximum .057mm (.0022")

Unit: mm (in)

Check dimensions			Engine	
			2500	3000
			(019.11)	(061.24)
Thickness of main bearing	(i)	Red	1.829 to 1.835 (0.0720 to 0.0722)	1.828 to 1.839 (0.0720 to 0.0724)
		Blue	1.835 to 1.841 (0.0722 to 0.0725)	1.834 to 1.845 (0.0722 to 0.0726)
		Green	1.845 to 1.851 (0.0726 to 0.0729) (1)	—

(1) Only to be used on standard **(non-oversized)** crankshafts if the radial mating clearance between pin and half-bearings is greater than **0.050 mm (0.0020 in)** (after checking the dimensions of each single bearing

Big end bearings

Clearance: Minimum .021mm (.0008") to Maximum .060mm (.0023")

Unit: mm (in)

Check dimensions			Engine	
			2500	3000
			(019.11)	(061.24)
Thickness of big end bearing	(l)	Red	1.737 to 1.745 (0.0684 to 0.0687)	
		Blue	1.741 to 1.749 (0.0685 to 0.0689)	

Thrust rings

Unit: mm (in)

Check dimensions		Engine	
		2500	3000
		(019.11)	(061.24)
Thickness of thrust ring	(m)	2.310 to 2.360 (0.0909 to 0.0929)	

Flywheel

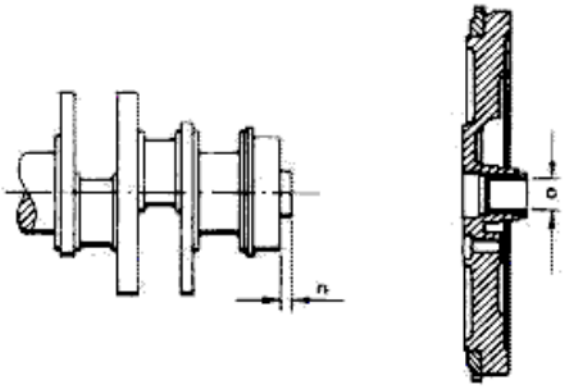

Unit: mm (in)

Check dimensions		Engine	
		2500	3000
		(019.11)	(061.24)
Protrusion of flywheel center bushing from rear surface of crankshaft	(n)	4 (0.16)	8 (0.32)
I.D. of flywheel centre bushing (reamed)	(o)	26.010 to 26.023 (1.0240 to 1.0245)	

CAMSHAFT, ROCKERS, BOWLS, SPRINGS, VALVES AND CYLINDER HEAD

Camshaft

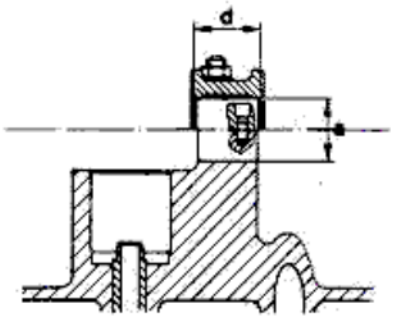

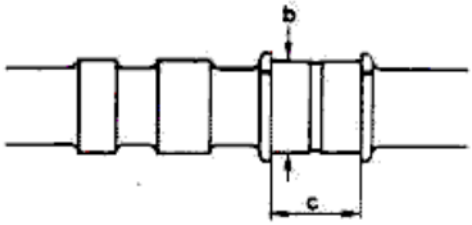

Unit: mm (in)

Check dimensions		Engine	
		2500	3000
		(019.11)	(061.24)
Camshaft journal seat diameter	(a)	27.000 to 27.033 (1.0630 to 1.0643)	
Camshaft journal diameter	(b)	26.949 to 26.970 (1.0610 to 1.0618)	
Shoulder length	(c)		27.000 to 27.052 (1.0630 to 1.0650)
Maximum offset between camshafts			0.03 (0.0012)
Maximum shoulder length	(d)		26.851 to 26.940 (1.0571 to 1.0606)

Rockers

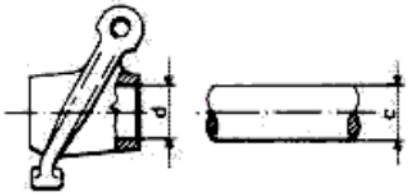

Unit: mm (in)

Check dimensions		Engine	
		2500	3000
		(019.11)	(061.24)
Rocker shaft diameter	(c)	15.988 to 16.000 (0.6294 to 0.6299)	
Rocker shaft bore diameter	(d)	16.016 to 16.034 (0.6305 to 0.6313)	

Bowls

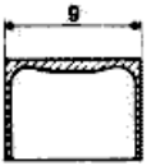

Unit: mm (in)

Check dimensions			Engine	
			2500	3000
			(019.11)	(061.24)
Valve Bowl diameter	(g)	Intake	34.973 to 34.989 (1.3769 to 1.3775)	
		Exhaust	21.971 to 21.989 (0.8650 to 0.8657)	

Springs

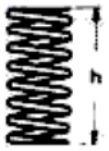

Check dimensions			Engine	
			2500	3000
			(019.11)	(061.24)
Lenght of valve spring, valve open	(h)	Outer spring mm (in)	23.5 (0.93)	
		Inner spring mm (in)	21.5 (0.85)	
Spring load at length	(h)	Outer spring N [kg (lb)]	470.2 to 487.8 [47.95 to 49.75 (105.71 to 109.68)]	
		Inner spring N [kg (lb)]	222.3 to 230.7 [22.67 to 23.53 (49.98 to 51.87)]	

Valves

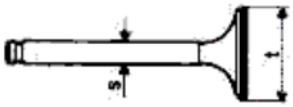

Unit: mm (in)

Check dimensions			Engine	
			2500	3000
			(019.11)	(061.24)
Valve stem diameter	(s)	Intake	8.972 to 8.987 (0.3532 to 0.3538)	8.972 to 8.987 (0.3532 to 0.3538)
		Exhaust	8.935 to 8.960 (0.3518 to 0.3528)	8.940 to 8.955 (0.3520 to 0.3526)
Valve head diameter	(t)	Intake	40.85 to 41.00 (1.608 to 1.614)	43.850 to 44.000 (1.7264 to 1.7323)
		Exhaust	36.40 to 36.60 (1.433 to 1.444)	38.500 to 38.700 (1.5157 to 1.5236)
Valve stem diameter (LIVIA type)	(s)	Intake		8.972 to 8.987 (0.3532 to 0.3538)
		Exhaust		8.940 to 8.955 (0.3520 to 0.3526)
Valve head diameter (LIVIA type)	(t)	Intake		43.850 to 44.000 (1.7264 to 1.7323)
		Exhaust		38.450 to 38.600 (1.5138 to 1.5197)

Cylinder head

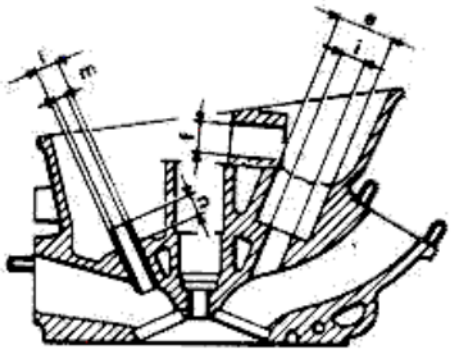

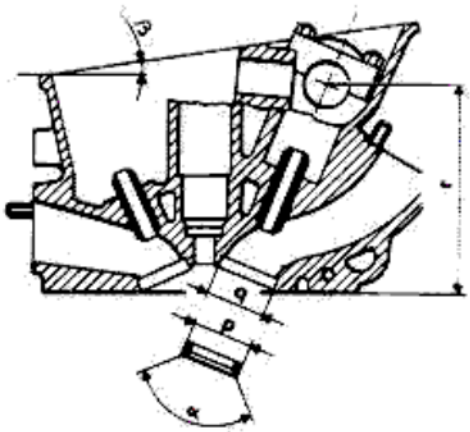

Unit: mm (in)

Check dimensions			Engine	
			2500	3000
			(019.11)	(061.24)
Bowl seat diameter, intake valve		(e)	35.000 to 35.025 (1.3780 to 1.3789)	
Bowl seat diameter, exhaust valve		(f)	22.000 to 22.021 (0.8661 to 0.8670)	
Valve guide seat diameter		(i)	13.990 to 14.018 (0.5508 to 0.5519)	
Valve guide external diameter (2)		(l)	14.033 to 14.044 (0.5525 to 0.5529)	
Exhaust valve guide external diameter		(l)		14.048 to 14.059 (0.5531 to 0.5535)
Valve guide bore diameter (reamed)		(m)	9.000 to 9.015 (0.3543 to 0.3549)	
Protrusion of valve guide		(n)	10.2 to 10.6 (0.40 to 0.42)	
Valve seat external diameter (p)	Standard size	Intake	42.065 to 42.100 (1.6561 to 1.6575)	45.065 to 45.100 (1.7742 to 1.7756)
		Exhaust	37.065 to 37.100 (1.4592 to 1.4606)	39.065 to 39.100 (1.5380 to 1.5394)
	Oversize	Intake	42.365 to 42.400 (1.6679 to 1.6693)	45.365 to 45.400 (1.7860 to 1.7874)
		Exhaust	37.365 to 37.400 (1.4711 to 1.4724)	39.365 to 39.400 (1.5498 to 1.5512)
Valve seat bore diameter (q)	Standard size	Intake	42.000 to 42.025 (1.6535 to 1.6545)	45.000 to 45.025 (1.7717 to 1.7726)
		Exhaust	37.000 to 37.025 (1.4567 to 1.4577)	39.000 to 39.025 (1.5354 to 1.5364)
	Oversize	Intake	42.300 to 42.325 (1.6654 to 1.6663)	45.300 to 45.325 (1.7835 to 1.7844)
		Exhaust	37.300 to 37.325 (1.4685 to 1.4695)	39.300 to 39.325 (1.5472 to 1.5482)
Valve seat taper		(α)	90°	89°40' to 90°20'
Minimum height of cylinder head after planing (dimensions between camshaft centre line and cylinder head lower face) (1)		(r)	124.5 (4.90)	124.85 to 125.15 (4.9153 to 4.9272)
Maximum flatness tolerance of cylinder head lower face			0.05 (0.002)	
Angle of cylinder head top face		(β)	8°	7°55' to 8°5'

(1) The planing of the cylinder heads must always be carried out on both cylinder heads
(2) For 3000 engine (061.24) figure refers to intake valve

CAMSHAFT DRIVE — OIL PUMP

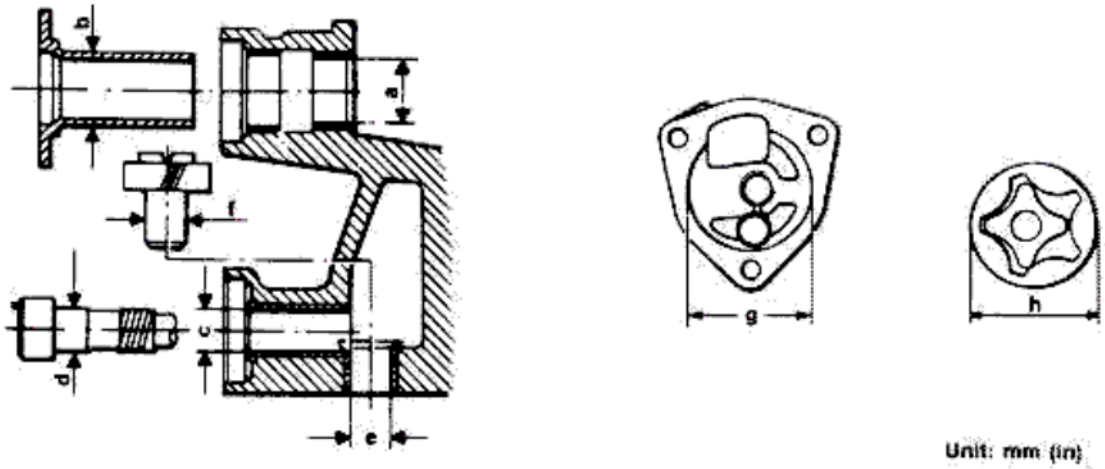

Unit: mm (in)

Check dimensions		Engine	
		2500	3000
		(019.11)	(061.24)
Diameter of camshaft pulley hub bush (reamed)	(a)	32.000 to 32.025 (1.2598 to 1.2608)	
Diameter of camshaft pulley hub	(b)	31.959 to 31.975 (1.2582 to 1.2589)	
Diameter of bush for distributor/oil pump drive pulley hub (reamed) (1)	(c)	19.000 to 19.021 (0.7480 to 0.7489)	
Diameter of distributor/oil pump drive gear hub (reamed) (1)	(d)	18.967 to 18.980 (0.7467 to 0.7472)	
Diameter of distributor/oil pump drive gear hub (reamed) (1)	(e)	19.000 to 19.021 (0.7480 to 0.7489)	
Diameter of distributor/oil pump drive gear hub (1)	(f)	18.967 to 18.980 (0.7467 to 0.7472)	
Diameter of outer rotor seat in oil pump housing	(g)	49.325 to 49.375 (1.9419 to 1.9439)	
Outside diameter of outer oil pump rotor	(h)	49.100 to 49.155 (1.9330 to 1.9352)	

(1) Only on RH cylinder head

Oil pressure adjustment valve spring

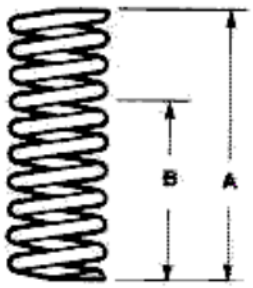

Test load		170 to 176 N (38.2 to 39.6 lb; 17.31 to 17.97 kg)
Length of free spring	A	49.29 mm (1.941 in)
Length of spring under test load	B	31.90 mm (1.256 in)

ASSEMBLY INTERFERENCE FITS AND CLEARANCES

Unit: mm (in)

Check dimensions		Engine	
		2500	3000
		(019.11)	(061.24)
Piston clearance in cylinder		0.040 to 0.059 (0.0016 to 0.0023)	
Compression rings end float in groove	Compression ring no. 1	0.035 to 0.067 (0.0014 to 0.0026)	
	Compression ring no. 2	0.035 to 0.067 (0.0014 to 0.0026)	
	Oil scraper ring	0.025 to 0.057 (0.0010 to 0.0022)	
Gudgeon pin clearance in piston		0.006 to 0.012 (0.0002 to 0.0004)	
Gudgeon pin clearance in small end bush	Black	0.008 to 0.021 (0.0003 to 0.0008)	
	White	0.005 to 0.018 (0.0002 to 0.0007)	
Running clearance between main bearings and main journals	Red	0.016 to 0.057 (0.0006 to 0.0022) 0.006 to 0.047 (0.0002 to 0.0018) (3)	
	Blue	0.014 to 0.055 (0.0006 to 0.0022) 0.004 to 0.045 (0.0002 to 0.0018) (3)	
Running clearance between big end bearings and crankpins	Red	0.021 to 0.060 (0.0008 to 0.0024)	
	Blue	0.023 to 0.062 (0.0009 to 0.0024)	
Crankshaft end-float		0.080 to 0.265 (0.0031 to 0.0104)	
Big end-float		0.2 to 0.3 (0.008 to 0.012)	
Running clearance between journal and camshaft seat		0.030 to 0.084 (0.0012 to 0.0033)	
Camshaft end-float		0.065 to 0.200 (0.0026 to 0.0079)	0.060 to 0.201 (0.0024 to 0.0079)
Running clearance between rockers and rocker shaft		0.016 to 0.046 (0.0006 to 0.0018)	
Running clearance between valve bowl and seat	Intake	0.011 to 0.052 (0.0004 to 0.0020)	
	Exhaust	0.011 to 0.050 (0.0004 to 0.0020)	
Valve stem running clearance in valve guide	Intake	0.013 to 0.043 (0.0005 to 0.0017)	
	Exhaust	0.040 to 0.080 (0.0016 to 0.0031)	0.045 to 0.075 (0.0018 to 0.0030)
Interference fit of valve guide in cylinder head		0.015 to 0.054 (0.0006 to 0.0021)	
Interference fit of valve seat in cylinder head		0.040 to 0.100 (0.0016 to 0.0039)	
Clearance between inner and outer oil pump rotors (1)	(i)	0.040 to 0.290 (0.0016 to 0.0114)	
Rotor end-float in oil pump body	(j)	0.025 to 0.075 (0.0010 to 0.0030)	
Running clearance between outer rotor and oil pump body		0.170 to 0.275 (0.0067 to 0.0108)	
Running clearance between bush and camshaft pulley hub		0.025 to 0.066 (0.0010 to 0.0026)	
Running clearance between bush and distributor/oil pump pulley hub (2)		0.020 to 0.054 (0.0008 to 0.0021)	
Running clearance between bush and distributor/oil pump drive gear hub (2)		0.020 to 0.054 (0.0008 to 0.0021)	

(1) Measure with the rotors in the position illustrated
(2) Only on RH cylinder head
(3) Only on oversize crankshaft and 3000 engine (061.24) crankshaft

TIMING BELT STRETCHER SPRINGS

Belt stretcher spring	A	B
No. of useful coils	12	9
Length of free spring	93 mm (3.66 in)	45.5 mm (1.79 in)
Static test load	93.16 N (20.9 lb , 9.5 kg)	98 N (22 lb ; 10 kg)
Length of spring under test load	48 mm (1.89 in)	30 mm (1.18 in)

BELT TENSIONING

	Unit of measurement	Data
Alternator-pump belt tensioning		
Force applied to belt	N (lb ; kg)	147 to 294 (33.1 to 66.1 ; 15 to 30)
Arrow	mm (in)	16 (0.63)
Power steering pump belt tensioning		
Force applied to belt	N (lb ; kg)	147 to 294 (33.1 to 66.1 ; 15 to 30)
Arrow	mm (in)	13 (0.51)
Air conditioner compressor belt tensioning		
Force applied to belt	N (lb ; kg)	196 to 343 (44.1 to 77.2 ; 20 to 35)
Arrow	mm (in)	14 (0.55)

HEATING TEMPERATURES

Component	Temperatures
Cylinder head temperature for fitting valve seats	120°C (248°F)
Starter ring gear temperature for shrinking onto flywheel	120 to 140°C (248 to 284°F)

TIGHTENING TORQUES

Unit: Nm (kgm; ft.lb)

Item	Engine	
	2500	3000
	(019.11)	(061.24)
Nuts securing cylinder head to crankcase (1)	(*)	
Nut tightening order	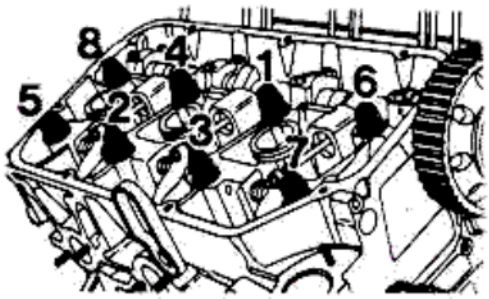	
a) When fitting the cylinder heads, proceed as follows: — with engine cold lubricate washer, nut and threads, then tighten progressively in the sequence showed	78 (8.0; 57.5)	88.5 to 97.8 (9 to 10; 65 to 72.3)
b) After approx. 1000 km (621 mi.) and engine cold, slacken the nuts by one turn and retighten the nuts in the sequence indicated, after having previously oiled the surfaces of washer and nut	88 (9.0; 64.9)	97.8 to 108.2 (10 to 11; 72.1 to 79.8)
Nuts securing main bearing caps to crankcase (oiled)	84 to 92.7 (8.6 to 9.5; 61.9 to 68.4)	
Locknuts securing main bearing caps to crankcase (oiled)	20 to 25 (2.0 to 2.6; 14.7 to 18.4)	
Screws securing connecting rod caps (oiled)	53.4 to 59 (5.4 to 6; 39.4 to 43.5)	
Crankshaft pulley retaining nut (oiled)	235 (24; 173.3)	
Screws securing flywheel to crankshaft (using sealant, see item «Sealants and Fixing Agents»)	113 (11.5; 83.3)	
Nuts securing camshaft caps (oiled)	16 to 18 (1.6 to 1.8; 11.8 to 13.2)	
Camshaft hub retaining nut	97 to 117 (9.9 to 11.9; 71.5 to 86.3)	
Screw securing belt tensioner pulley to support pin	17 to 20 (1.7 to 2.0; 12.5 to 14.8)	
Screw securing earth braid to rear engine cover	18 to 22 (1.8 to 2.2; 13.1 to 15.9)	
Screw securing earth braid to body strut	11 to 14 (1.1 to 1.4; 7.9 to 10.1)	
Screw and nut securing earth braid to rear eye of air conditioner compressor (if fitted)	22 to 28 (2.2 to 2.8; 15.9 to 20.2)	
Screw securing electronic injection earth cables to upper RH cover	9 to 11 (0.9 to 1.1; 6.5 to 7.9)	
Screw securing electronic injection earth cables to supplementary air supply valve screws	5 to 6 (0.5 to 0.6; 3.6 to 4.3)	
Screw securing earth braid to air intake housing	5 to 6 (0.5 to 0.6; 3.6 to 4.3)	
Screw securing earth braid to upper LH cylinder head cover through air intake housing	9 to 11 (0.9 to 1.1; 6.5 to 7.9)	
Screw securing earth cable to thermostat bowl.	5 to 6 (0.5 to 0.6; 3.6 to 4.3)	
Screw securing battery earth cable to power steering pump support	18 to 22 (1.8 to 2.2; 13 to 15.9)	
Screw securing oil pump pulley	17.8 to 22.1 (1.8 to 2.2; 13.1 to 16.3)	
Oil sump drain plug	69 to 78 (7 to 8; 50.6 to 57.8)	
Screws securing head upper covers	8.9 to 11 (0.91 to 1.1; 6.6 to 7.9)	
Front cover securing	8.1 to 9.3 (0.83 to 0.95; 6 to 6.9)	
Screws securing coolant pump to crankcase	8.1 to 9.3 (0.83 to 0.95; 6 to 6.9)	
Screws securing pulley to front and rear hubs	13 to 15.7 (1.3 to 1.6; 9.4 to 11.6)	
Tightening pulley on intermediate shaft	76 to 92 (7.7 to 9.4; 55.7 to 68)	
Tightening nut/screw adjusting rocker clearance	14.8 to 17.7 (1.5 to 1.8; 10.8 to 13)	
Screws securing oil pump	19 to 24 (1.94 to 2.45; 14 to 17.7)	

(1) When carrying out the A Service, proceed as indicated in item b) above.

(*) **NOTE: Figure shows the right hand head; the tightening order for the left hand is symmetrical**

TROUBLE DIAGNOSIS AND CORRECTIONS

Condition	Probable cause	Corrective action
Noisy engine knocking of crankshaft	Excessive crankshaft running clearance on bearings and/or end play on thrust half-rings	Replace bearings and/or thrust half-rings
Piston and connecting rod knocking	• Fit incorrect	Adjust
	• Pin end float	Adjust
Camshaft and valves knocking (intake side)	• Excessive valve clearance	Adjust
	• Valve bowls incorrect fit	Replace
	• Valve spring broken	Replace
	• Camshafts worn	Replace
Water pump noisy	Rotor shaft excessive backlash	Replace water pump
Other mechanical troubles		
Valve seat seized	• Improper valve clearance	Replace and adjust
	• Valve spring broken	Replace
Cylinders and pistons excessively worn	• Fit surfaces defective	Restore correct installation
	• Poor oil quality	User proper oil
	• Air cleaner dirty or inefficient	Replace filter
Big end bearings faulty	• Shortage of engine oil	Check lubrication system
	• Poor engine oil quality	Use proper oil
	• Crank pins worn or out-of-round	Grind or replace
	• Big end bearing - crankpin coupling incorrect	Replace

Condition	Probable cause	Corrective action
Main bearings faulty	• Shortage of engine oil	Check lubrication system
	• Poor engine oil quality	Use proper oil
	• Main journal worn or out-of-round	Grind or replace
	• Main bearings main journal coupling incorrect	Replace
Lubrication		
Oil leakage	• Oil sump drain plug loosened	Tighten
	• Oil leakage from sump gasket	Replace gasket
	• Oil leakage from camshaft seal-rings	Replace seal rings
	• Oil leakage from engine gaskets and seal rings	Replace seal rings and worn gaskets
	• Oil leakage from oil filter gasket	Tighten filter
Pressure decrease	• Pressure regulating valve dirty	Clean
	• Poor engine oil quality	Replace

SPECIAL SERVICE TOOLS

Tool number	Tool name	Refer to page
A.2.0075	Vehicle lift support	01-6
A.2.0117	Cylinder liner retainer (2 pieces)	01-24 01-26 01-63 01-64 01-69
A.2.0145	Flywheel retainer	01-25 01-26 01-27 01-63 01-65 01-69
A.2.0192	Valve support	01-33 01-34 01-46
A.2.0195	Cylinder head support base	01-30 01-51
A.2.0359	Special nut for valve supporting tool (to be used with A.2.0192-A.3.0522)	01-33 01-34 01-46
A.2.0360	Yoke for cylinder head support (to be used with A.2.0195)	01-30 01-51
A.2.0361	Tool for rotating camshaft and auxiliary control pulleys	01-31 01-49 01-50 01-51 01-69
A.2.0362	Washer for stopping cylinder liners (4 pieces are necessary to be used with A.2.0117)	01-24 01-26 01-63 01-64 01-69

Tool number	Tool name	Refer to page
A.2.0363	Pin for stopping belt-tensioner device	01-19 01-71 01-73 01-74 01-75
A.2.0369	Tool for caiking crankshaft oil passage plugs	01-53
A.3.0134	Valve guide remover	01-41
A.3.0139/0001	Rear main bearing cap remover lever	01-27
A.3.0139/0002	Rear main bearing cap puller	01-27
A.3.0178	Rear crankshaft seal installer	01-62
A.3.0210	Adjustable puller for rear crankshaft bushing	01-27
A.3.0244	Valve guide seal driver jiler, adjustable from 15 to 22 mm (0.6 to 0.9 in) dia.	01-46
A.3.0247	Valve guide seal remover	01-35

Tool number	Tool name	Refer to page
A.3.0305	Flywheel bushing driver	01-62
A.3.0324	Valve spring compressor lever	01-33 01-34 01-47
A.3.0520	Yoke for assembling and disassembling valves (to be used with A.2.0192 - A.3.0324 - A.3.0522 - A.2.0359)	01-33 01-34 01-47
A.3.0521	Puller of camshaft pulley	01-31
A.3.0522	Loop for assembly and disassembly of valves (to be used with A.3.0324 - A.2.0359 - A.2.0192 - A.3.0520)	01-33 01-34 01-46 01-47
A.3.0524	Driver of crankshaft front oil seal	01-65
A.3.0525	Driver of front oil seal on camshafts and auxiliary controls	01-50 01-51
A.3.0526	Intake valve guide driver	01-42
~~A.3.0527~~ Same as	Exhaust valve guide driver	01-42

Tool number	Tool name	Refer to page
A.3.0528	Puller-driver of oil pump shaft and camshaft bushings	01-37 01-38 01-39
A.4.0195	Guide for reaming of the bush seats of the idler sprocket and distributor control shafts	01-39
A.5.0220	Combined 3 mm and 11 mm wrench for adjusting exhaust side tappets	01-49
C.1.0108	Dial gauge for checking valve caps	01-49
C.6.0148	Cylinder liner/piston standout gauge	01-63 01-64
C.6.0183	Tool for checking T.D.C.	01-74
C.6.0197	Feeler gauge for checking valve clearance	01-49
R.9.0001	Container for valve clearance adjustment caps	01-49