2001-03 AUTOMATIC TRANSMISSIONS

Hydra-Matic 4L60-E - Overhaul

APPLICATION

CAUTION: Flush oil cooler and oil cooler lines prior to transmission installation. Oil cooling system contamination may cause premature transmission failure. For additional information, see LUBRICATION in appropriate SERVICING - A/T article

AUTOMATIC TRANSMISSION APPLICATIONS

Application (Body/Series Code)	Engine Size
Cadillac Escalade ("K")	5.7L
Chevrolet	
Astro ("L" & "M")	4.3L
Blazer ("S" & "T")	4.3L
Camaro ("F")	3.8L & 5.7L
Chevy Express 1500/2500 ("G")	4.3L, 5.0L & 5.7L
Corvette ("Y")	5.7L
Pickup ("C" & "K")	5.7L
Silverado 1500 ("C" & "K")	4.3, 4.8L & 5.3L
Suburban 1500 ("C" & "K")	5.3L
S10 Pickup ("S" & "T")	2.2L & 4.3L
Tahoe ("C" & "K")	4.8L, 5.3L & 5.7L
GMC	
Envoy & Jimmy ("S" & "T")	4.3L
Pickup ("C" & "K")	5.7L
Safari ("L" & "M")	4.3L
Savana 1500/2500 ("G")	4.3L, 5.0L & 5.7L
Sierra 1500 ("C" & "K")	4.3, 4.8L & 5.3L
Sonoma ("S" & "T")	2.2L & 4.3L

cardiagn.com

Yukon ("C" & "K")	4.8L, 5.3L & 5.7L
Yukon XL ("C" & "K")	5.3L
Isuzu Hombre	2.2L & 4.3L
Oldsmobile Bravada ("T")	4.3L
Pontiac Firebird ("F")	3.8L & 5.7L

IDENTIFICATION

Vehicle model is identified by 4th character (cars), or 5th character (trucks) of Vehicle Identification Number (VIN). VIN is stamped on metal pad on top of left end of instrument panel, near windshield. See **MODEL IDENTIFICATION** table.

The Hydra-Matic 4L60-E transmission can be identified by a letter code contained in identification number. Identification number is stamped on transmission case above oil pan rail on right rear side, or to rear of oil pan. See **Fig. 1** . Identification number contains information which must be used when ordering replacement parts. Transmission RPO code is M30.

MODEL IDENTIFICATION

Body/Series (1)	**Model**
"C"	Sierra, Silverado, Suburban, Tahoe, Yukon & Yukon XL
"F"	Camaro & Firebird
"G"	Chevy Express & Savana
"K"	Sierra, Silverado, Suburban, Tahoe, Yukon, Yukon XL & AWD Escalade
"L"	AWD Astro & Safari
"M"	2WD Astro & Safari
"S"	2WD Blazer, Envoy, Jimmy, Sonoma & S10 Pickup
"T"	4WD Blazer, Bravada, Envoy, Jimmy, Sonoma & S10 Pickup
"Y"	Corvette
(1) Vehicle body/series code is 4th character of VIN for cars or 5th character of VIN for trucks.	

cardiagn.com

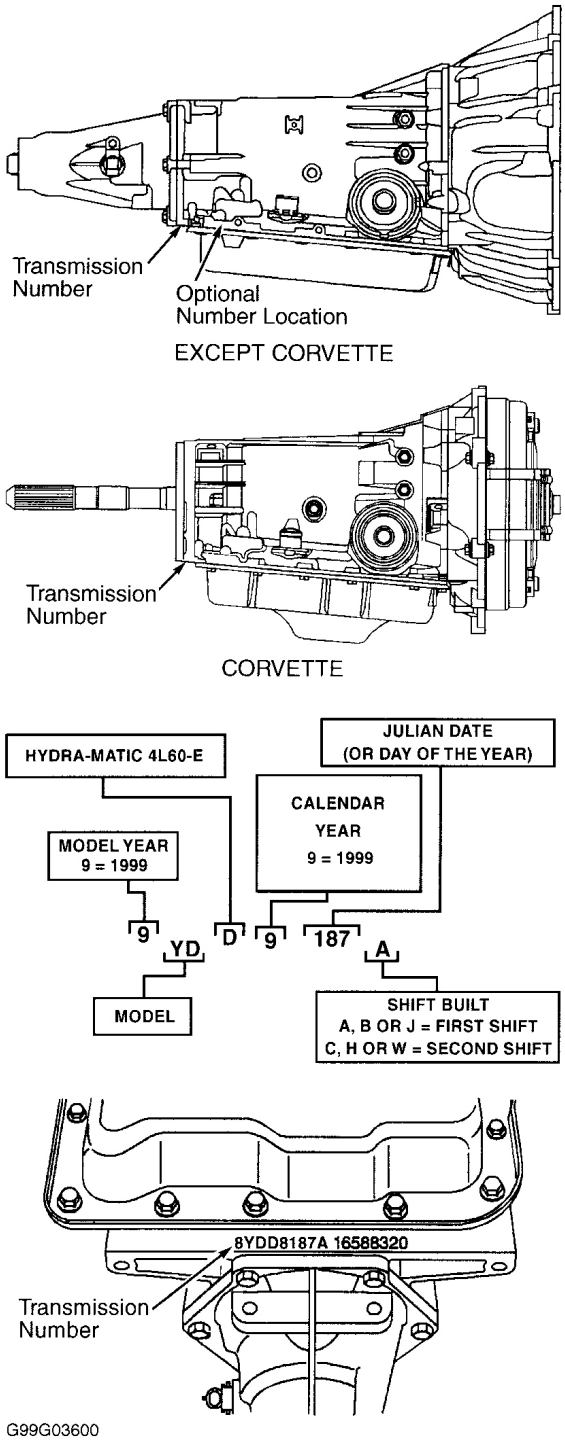

Fig. 1: Locating Transmission Identification Number
Courtesy of GENERAL MOTORS CORP.

GEAR RATIOS

cardiagn.com

TRANSMISSION GEAR RATIOS

Gear Range	Gear Ratio
1st	3.059:1
2nd	1.625:1
3rd	1.000:1
4th	0.696:1
"R"	2.294:1

DESCRIPTION & OPERATION

The Hydra-Matic 4L60-E is a fully automatic transmission consisting of a 3-element hydraulic torque converter with a Torque Converter Clutch (TCC). The 4-speed transmission is equipped with 2 planetary gear sets, 5 multiple-disc clutches, one sprag clutch, one roller clutch and a 2-4 band. See **Fig. 2** .

A hydraulic system, pressurized by a variable capacity vane type oil pump, provides pressure required to operate friction elements and automatic controls. The 4L60-E contains electronic solenoids that control hydraulic operations. A Powertrain Control Module (PCM) or Vehicle Control Module (VCM) receives input signals from Vehicle Speed Sensor (VSS), Throttle Position (TP) sensor and Transmission Fluid Pressure (TFP) manual valve position switch which incorporates the fluid temperature sensor. These input signals help the PCM/VCM determine when to switch 2 shift solenoids, 3-2 downshift solenoid, and/or TCC solenoid on or off. PCM/VCM can control line pressure through pressure control solenoid (force motor).

Line pressure control system compensates for normal wear of transmission components during upshifts in order to maintain optimal shift quality during life of transmission. PCM/VCM uses "adaptive learning" to maintain acceptable upshift times by adjusting line pressure. PCM/VCM compares actual "acceptable" shift time to calibrated desired shift time and calculates difference. An "acceptable" shift is considered valid if no inconsistent vehicle operations (A/C compressor cycling or extreme throttle changes) occurred during upshift. Line pressure is either increased or decreased depending on duration of upshift time.

cardiagn.com

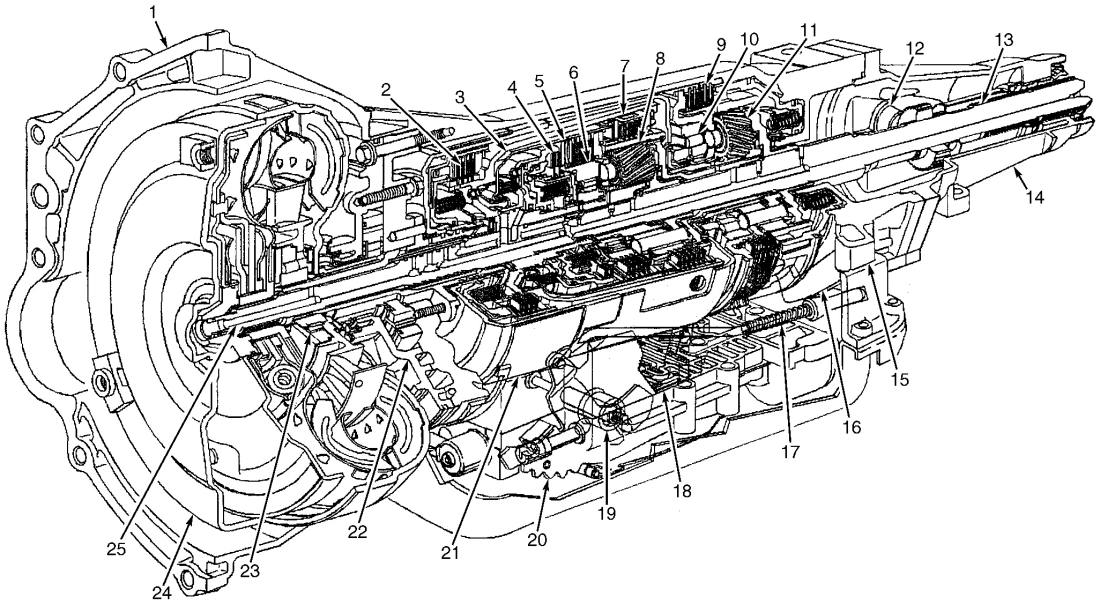

1. Converter Housing
2. Reverse Input Clutch
3. Input Clutch Housing
4. Overrun Clutch
5. Forward Clutch
6. Forward Sprag Clutch Assembly
7. 3-4 Clutch
8. Input Planetary Gear Set
9. Low/Reverse Clutch
10. Low Roller Clutch Assembly
11. Reaction Planetary Gear Set
12. Speed Sensor
13. Output Shaft
14. Case Extension
15. Main Section Case
16. Parking Pawl
17. Parking Lock Actuator Assembly
18. Control Valve Assembly
19. Manual Shaft
20. Inside Detent Lever
21. 2-4 Band Assembly
22. Pump Assembly
23. Stator Roller Clutch
24. Torque Converter Assembly
25. Turbine Shaft

G00023547

Fig. 2: Identifying 4L60-E Transmission Components
Courtesy of GENERAL MOTORS CORP.

LUBRICATION

NOTE: **For additional information, see appropriate AUTOMATIC TRANSMISSION SERVICING article in TRANSAXLE/TRANSMISSIONS.**

NOTE: **The 4L60-E transmission used on Corvette is not equipped with a dipstick.**

TROUBLE SHOOTING

NOTE: **For testing and diagnostic procedures of electronic components, see HYDRA-MATIC 4L60-E ELECTRONIC CONTROLS article.**

cardiagn.com

COMPONENT TESTS

TORQUE CONVERTER

Inspection

A visual inspection of torque converter may reveal converter is Blue from overheating. If torque converter has been removed from vehicle, stator roller clutch can be checked by inserting a finger into splined inner race of roller clutch and attempting to rotate race in both directions. Inner race should rotate freely clockwise, but should not rotate or should be difficult to rotate counterclockwise.

Torque converter must be replaced for any of the following reasons:

- Damage To Pump Assembly
- Metal Particles Present In Oil
- Leaks In Hub Weld Area
- Hub Scored Or Damaged
- Stator Failure
- Torque Converter Imbalance
- Engine Coolant Contamination
- Excessive End Play

Torque Converter End Play Check

1. Inspect torque converter for hub scoring, cracks or weld area cracks before checking end play. Install End Play Checking Tool (J-35138) on torque converter. See **Fig. 3** .
2. Note end play of torque converter. End play must be within specification. See **TORQUE CONVERTER END PLAY SPECIFICATIONS** table. Replace torque converter if end play is not within specification or damage to hub area exists.

TORQUE CONVERTER END PLAY SPECIFICATIONS

Converter Diameter - In. (mm)	End Play - In. (mm)
9.650 (245)	0-.015 (0-.38)
10.157 (258)	.004-.020 (.10-.50)
11.732 (298)	0-.019 (0-.48)
11.811 (300)	.004-.020 (.10-.50)

cardiagn.com

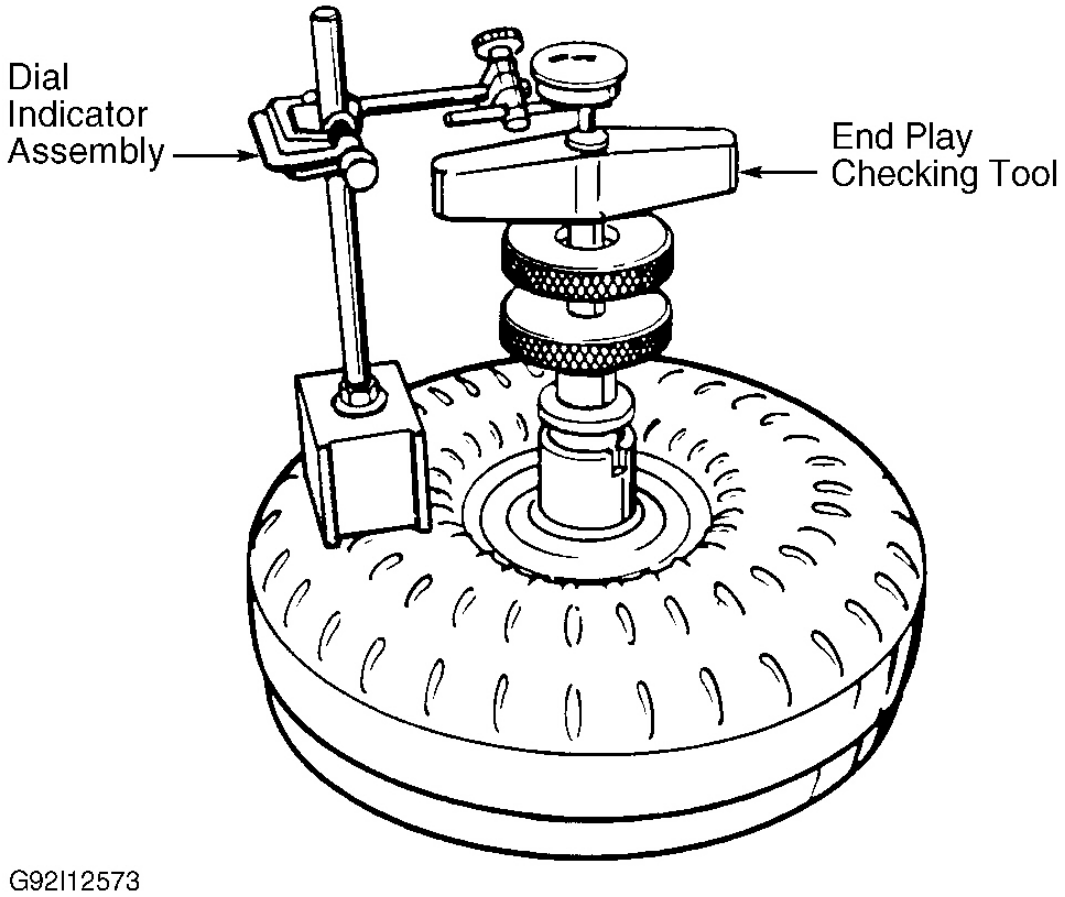

Fig. 3: Checking Torque Converter End Play
Courtesy of GENERAL MOTORS CORP.

TRANSMISSION DISASSEMBLY

CONVERTER HOUSING

Mount transmission on bench using Holding Fixture (J-8763-02). Remove torque converter. Using 50 mm Torx Plus Bit (J-41510), remove converter housing bolts, and remove converter housing. See **Fig. 4** .

cardiagn.com

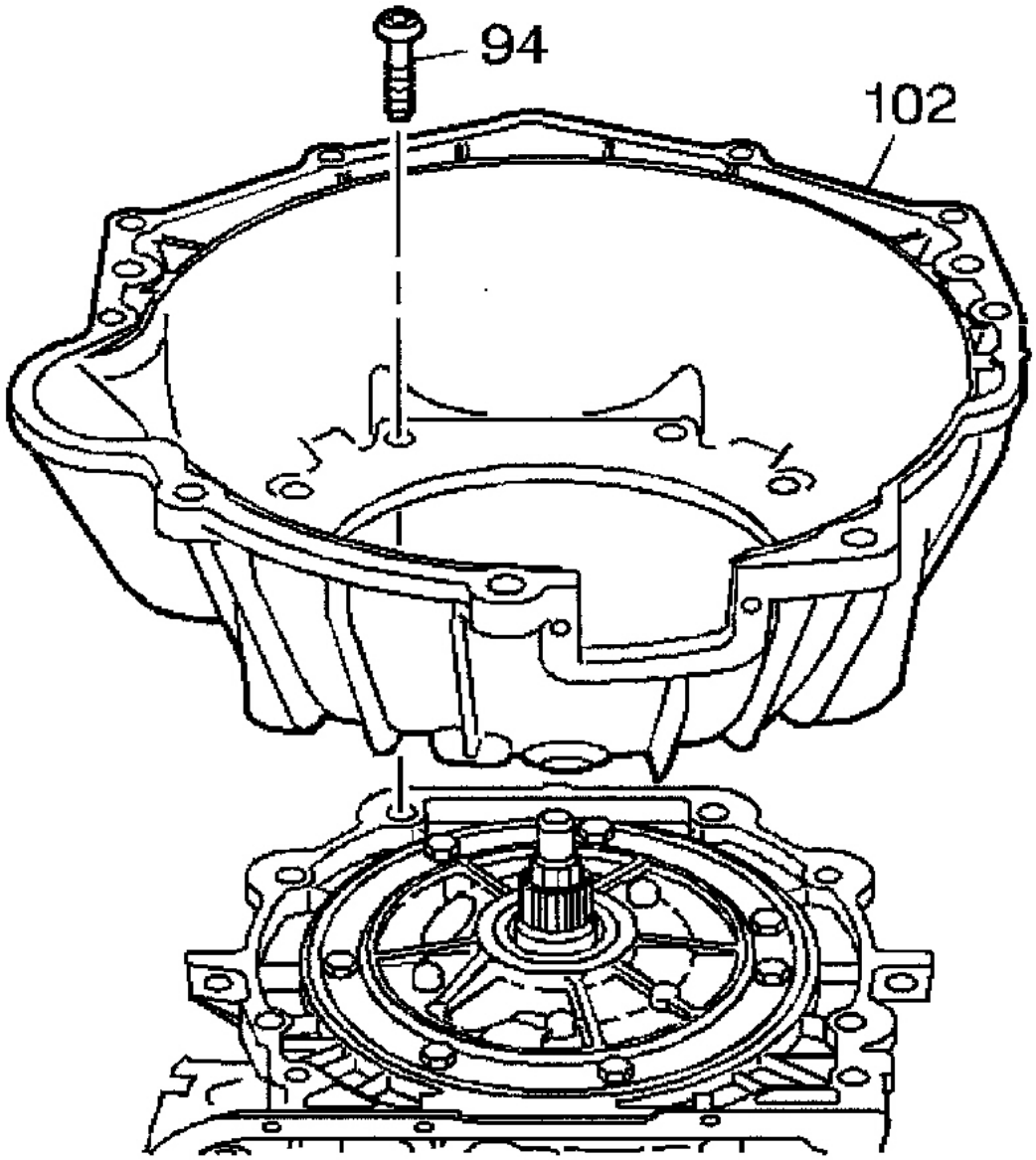

Fig. 4: Removing Torque Converter

2-4 SERVO ASSEMBLY

Install Servo Cover Compressor (J-29714-A) on oil pan. See **Fig. 6** . Compress servo cover. Remove retaining ring, servo cover and "O" ring. Remove 2-4 servo assembly. See **Fig. 5** .

cardiagn.com

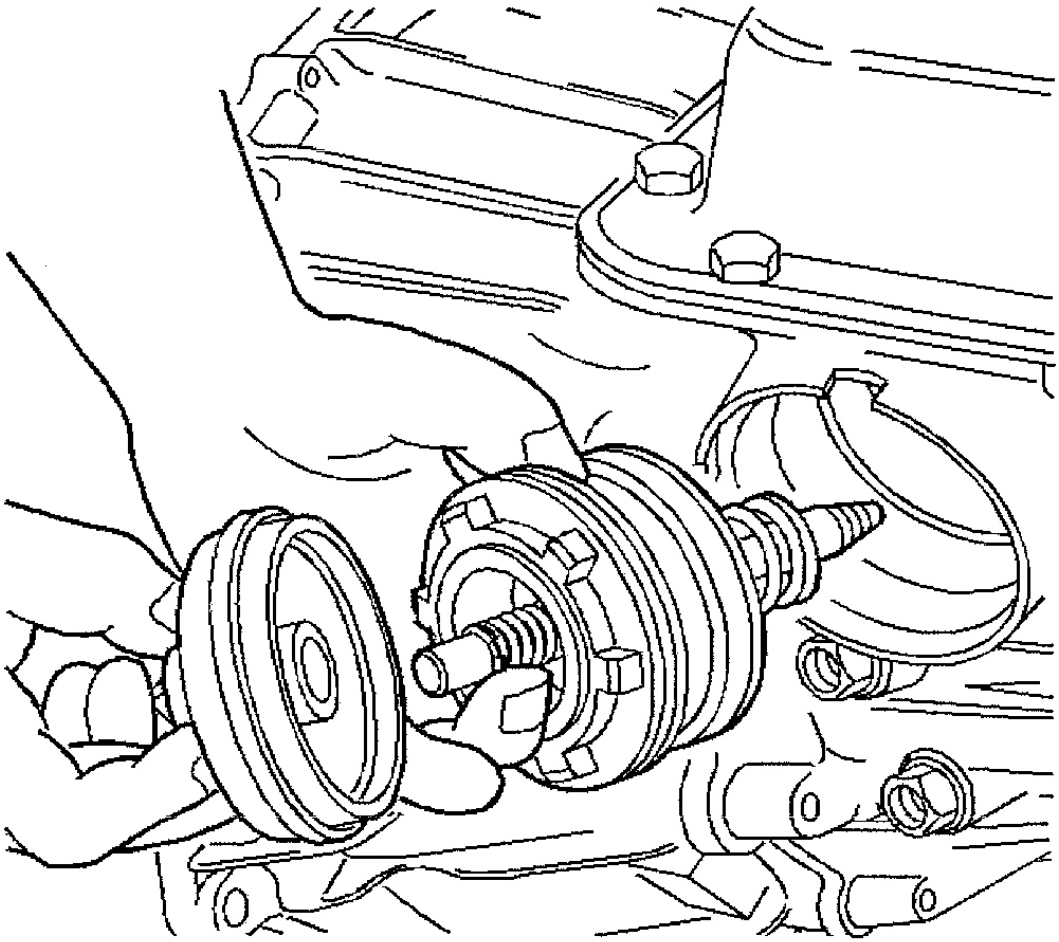

G00221150

Fig. 5: Removing Servo Assembly

cardiagn.com

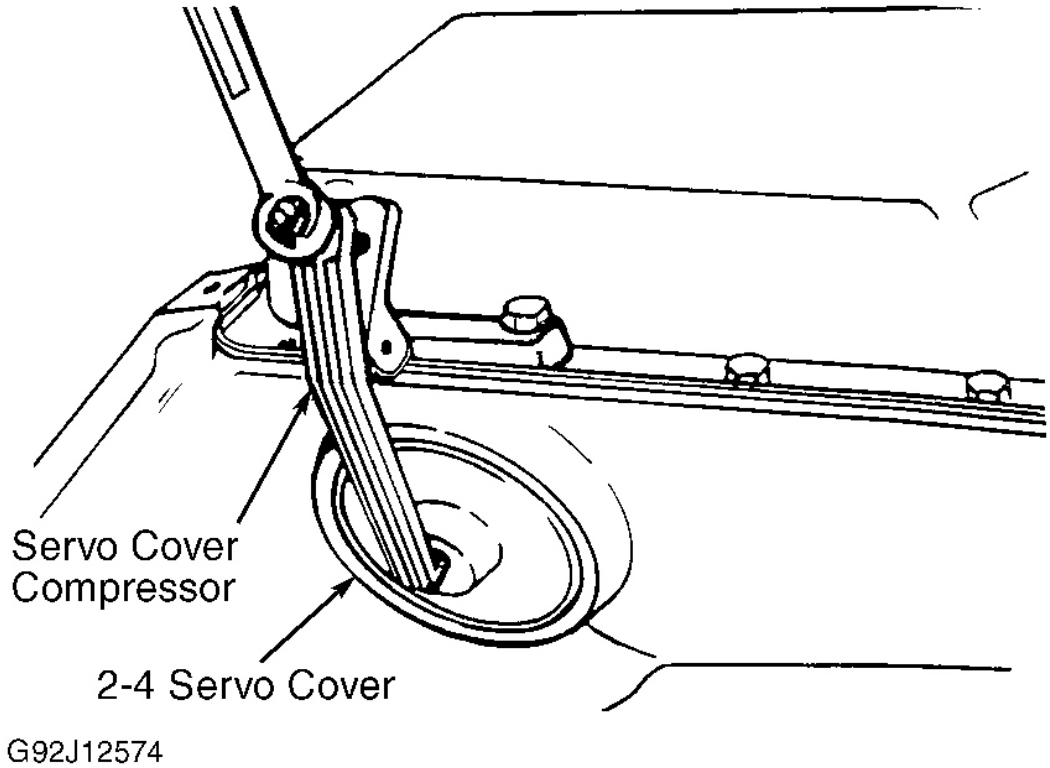

Fig. 6: Compressing Servo Cover
Courtesy of GENERAL MOTORS CORP.

EXTENSION HOUSING

Remove Vehicle Speed Sensor (VSS) retaining bolt. Remove speed sensor assembly and "O" ring. See **Fig. 26** . Remove extension housing and seal. Remove output shaft sleeve and "O" ring (if equipped). Remove speed sensor rotor from output shaft (if necessary). Install Gear Puller (J-21427-01) and Adapter (J-8433) on rotor. Pull rotor from output shaft. Install Output Shaft Support Fixture (J-29837-A) on output shaft. See **Fig. 7** .

cardiagn.com

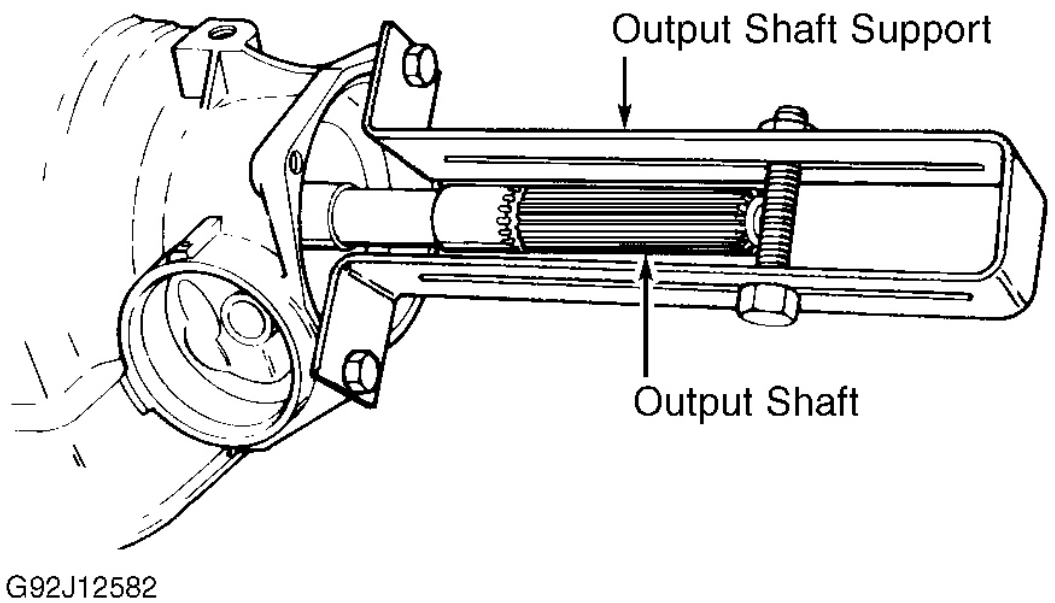

Fig. 7: Installing Output Shaft Support
Courtesy of GENERAL MOTORS CORP.

VALVE BODY, 1-2 & 3-4 ACCUMULATORS

CAUTION: Note valve body bolt length and location during removal procedure. Transmission case damage may occur if bolts are installed incorrectly.

1. Remove transmission oil pan. Remove oil filter and "O" ring. Ensure "O" ring is removed from transmission case. Remove electrical connectors from switches and solenoids, and mark for reassembly reference. See **Fig. 8** Remove TCC PWM solenoid retainer clip. Remove solenoid. See **Fig. 9**
2. Remove TCC solenoid bolts. See **Fig. 10** . Remove valve body bolts securing wiring harness. Remove TCC solenoid and allow wiring harness to hang over side of case. See **Fig. 11** . Remove transmission fluid pressure manual valve position switch. See **Fig. 12** . Remove detent spring bolt. Remove detent spring. See **Fig. 13** . Remove remaining valve body bolts. Note length and location of bolts for installation reference. See **Fig. 14** .
3. Note direction of manual valve link. Remove manual valve link from manual valve at valve body. See **Fig. 15** . Remove valve body. Note location of check balls on valve body. See **Fig. 16** .

cardiagn.com

4. Carefully remove accumulator cover retaining bolts, 1-2 accumulator cover and pin assembly. See **Fig. 27** . Remove 1-2 accumulator piston, seal and spring. Remove spacer plate beside 1-2 accumulator. Note check ball and filter locations. See **Fig. 17** . Remove spacer plates. Remove spring, 3-4 accumulator piston and pin.

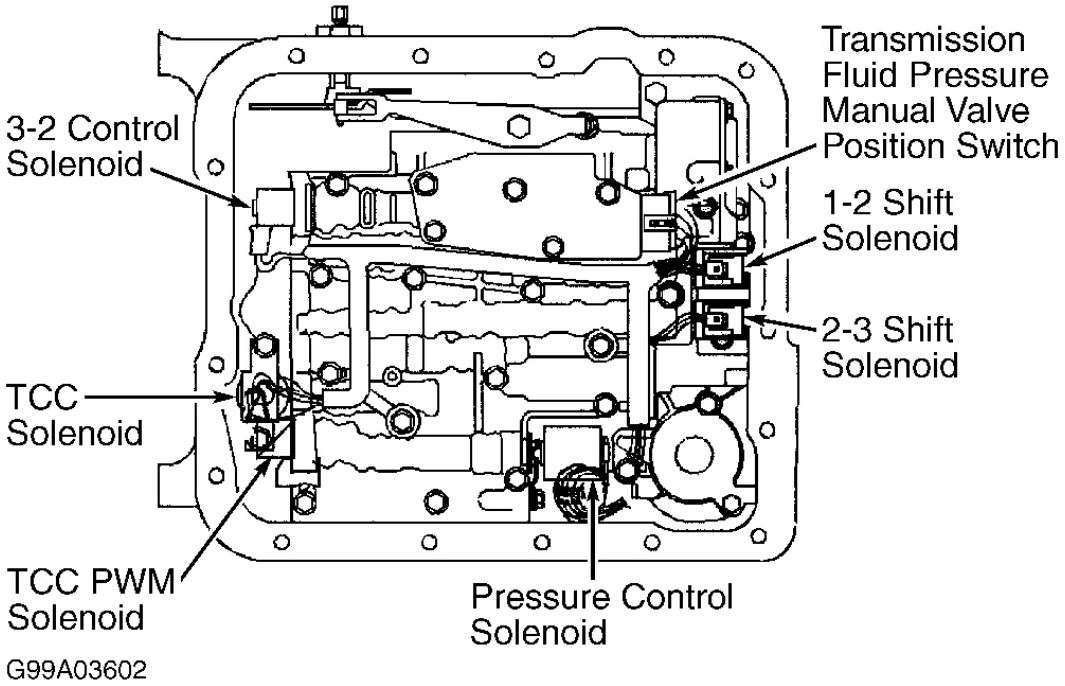

Fig. 8: Locating Valve Body Solenoids

cardiagn.com

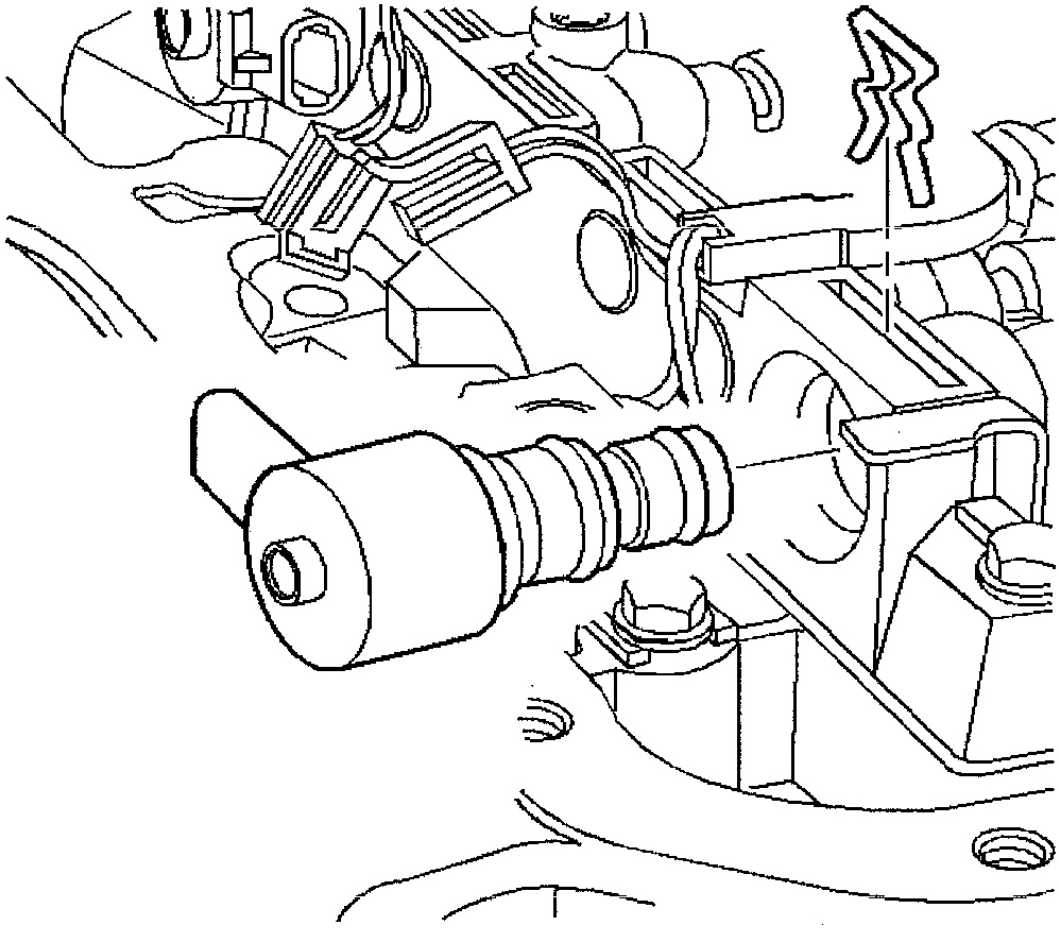

G00221151

Fig. 9: Removing TCC PWM Solenoid

cardiagn.com

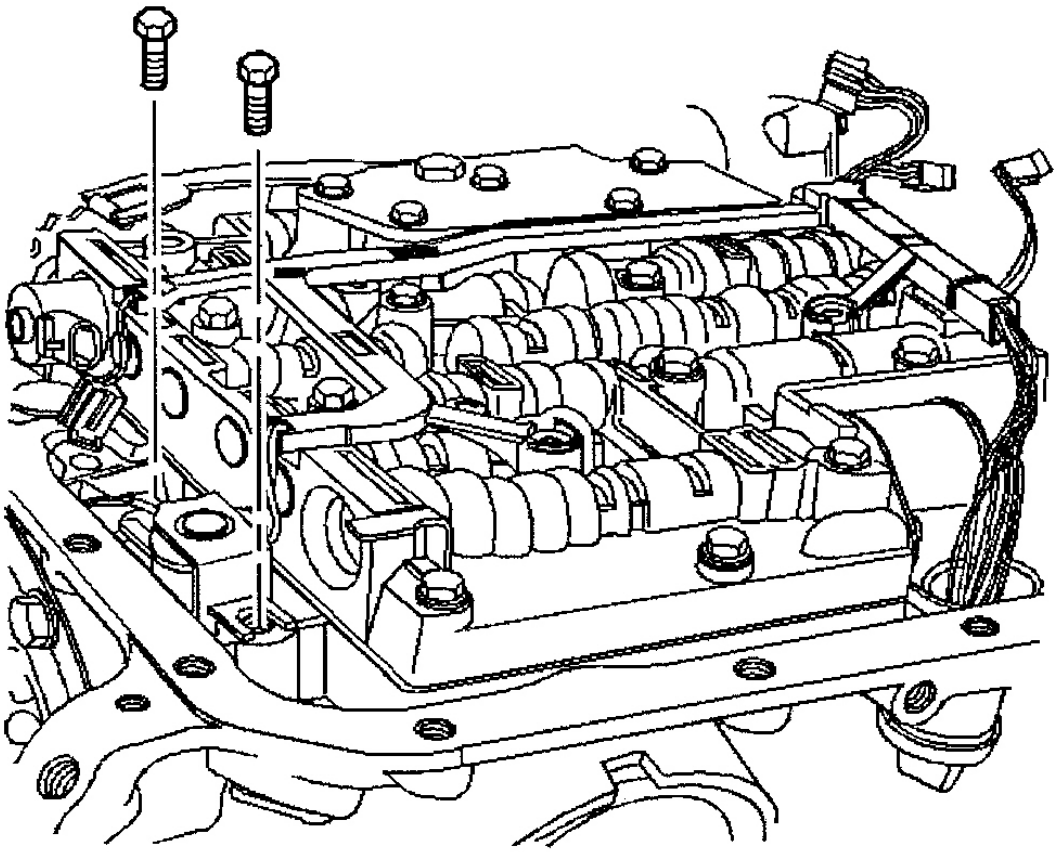

G00221152

Fig. 10: Removing TCC Bolts

cardiagn.com

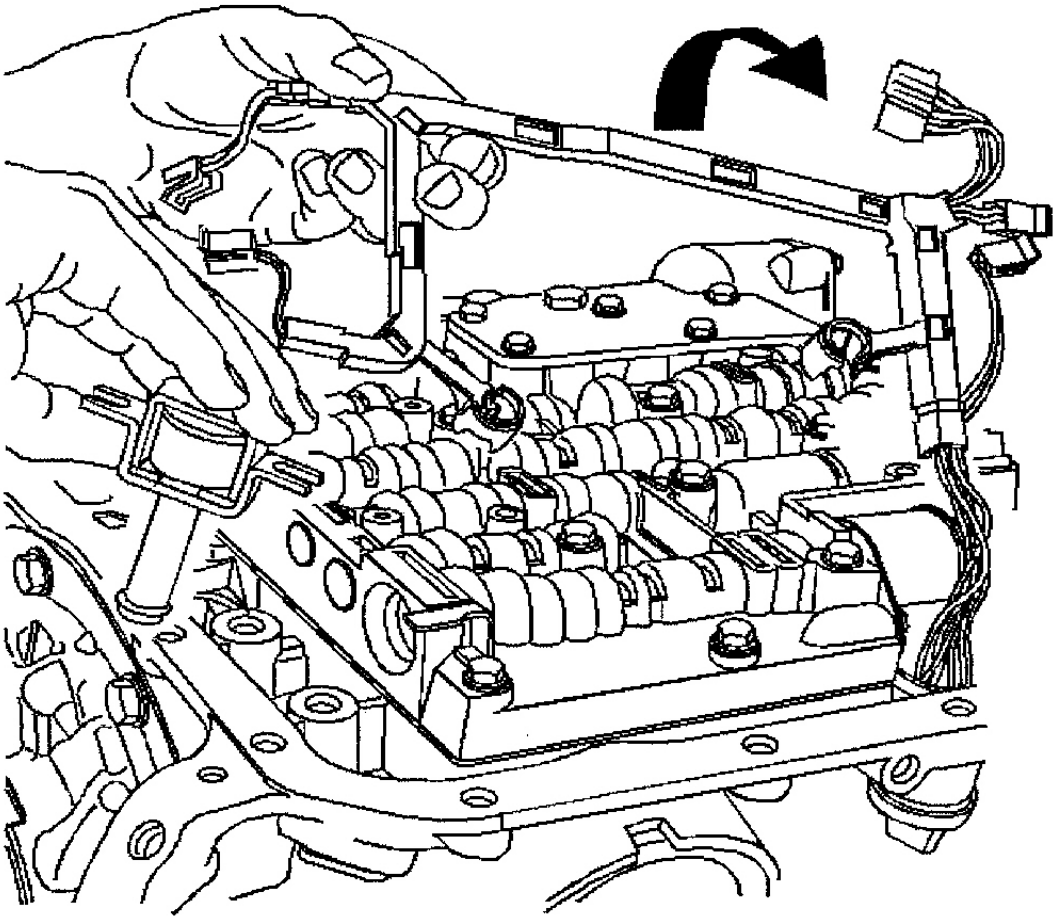

G00221153

Fig. 11: Removing TCC Solenoid & Wire Harness

cardiagn.com

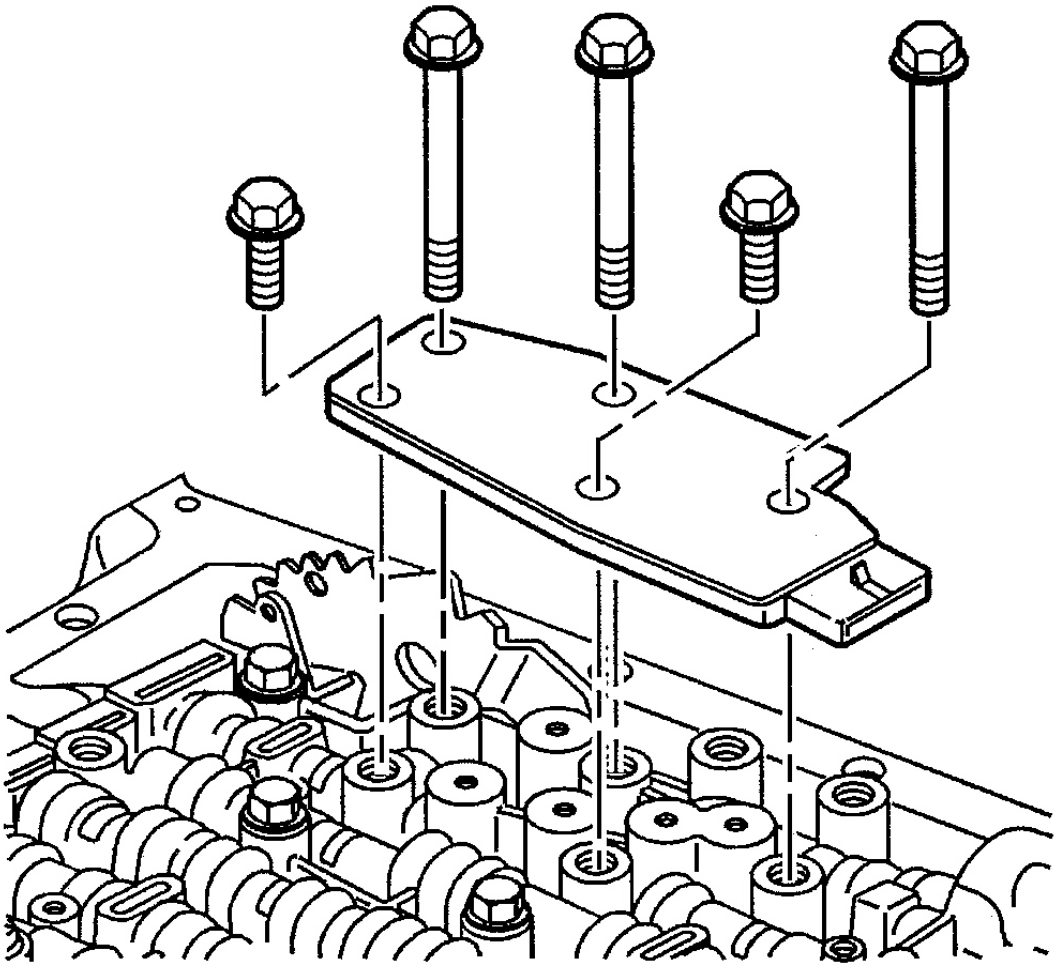

G00221154

Fig. 12: Removing Transmission Fluid Pressure Assembly

cardiagn.com

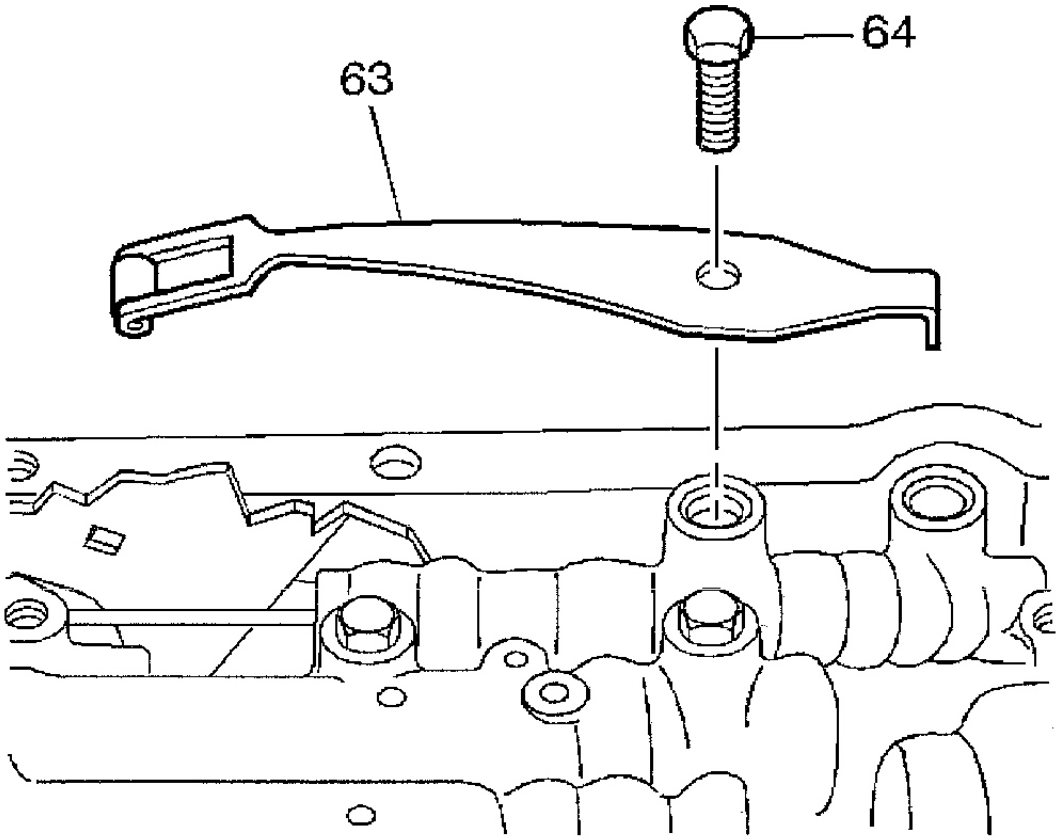

Fig. 13: Removing Detent Spring Assembly

cardiagn.com

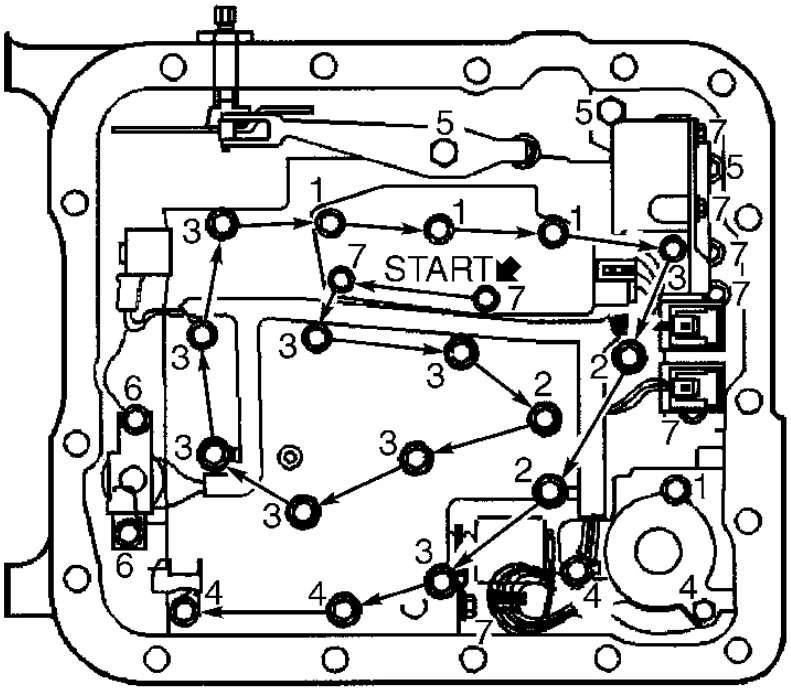

NOTE: Numbers identify bolt length.
Arrows identify tightening sequence.

VALVE BODY BOLT IDENTIFICATION

Bolt No.	Length In. (mm)
1	2.56 (65)
2	2.14 (54.4)
3	1.87 (47.5)
4	1.38 (35)
5	.79 (20)
6	.47 (12)
7	.71 (18)

G99C03603

Fig. 14: Identifying Valve Body Bolt Location

cardiagn.com

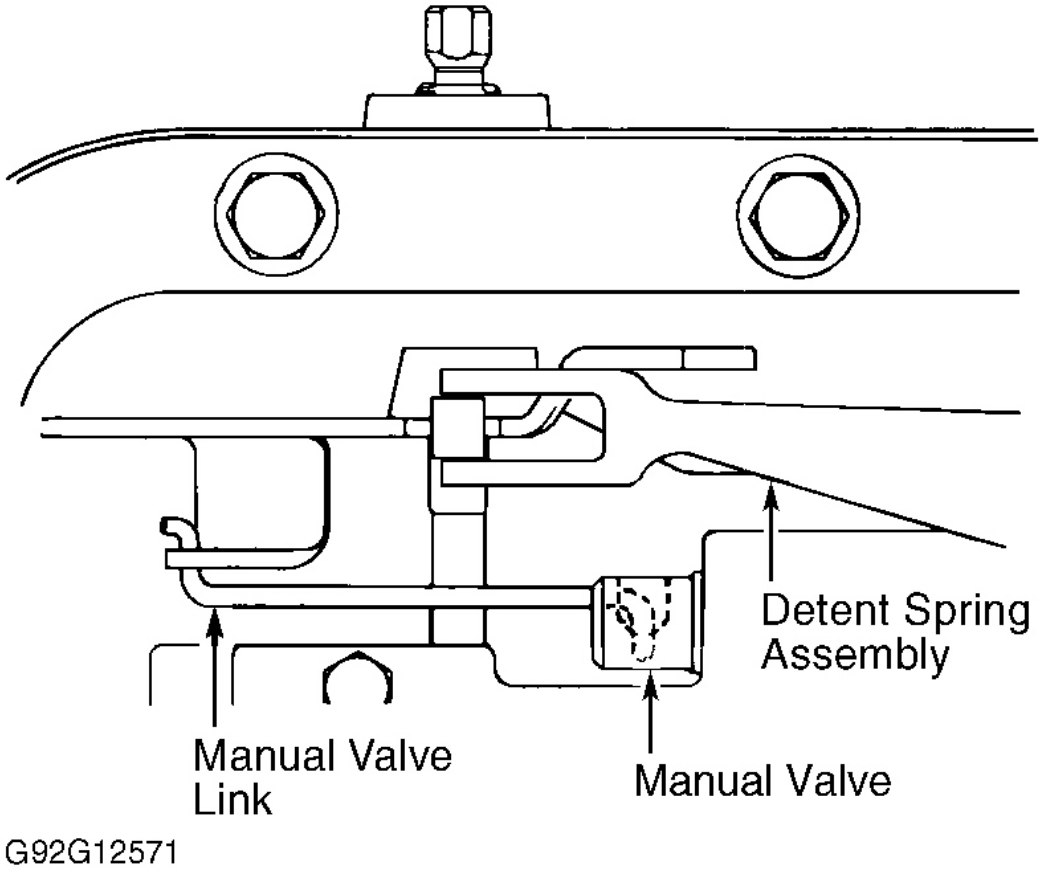

Fig. 15: Installing Manual Valve Link
Courtesy of GENERAL MOTORS CORP.

cardiagn.com

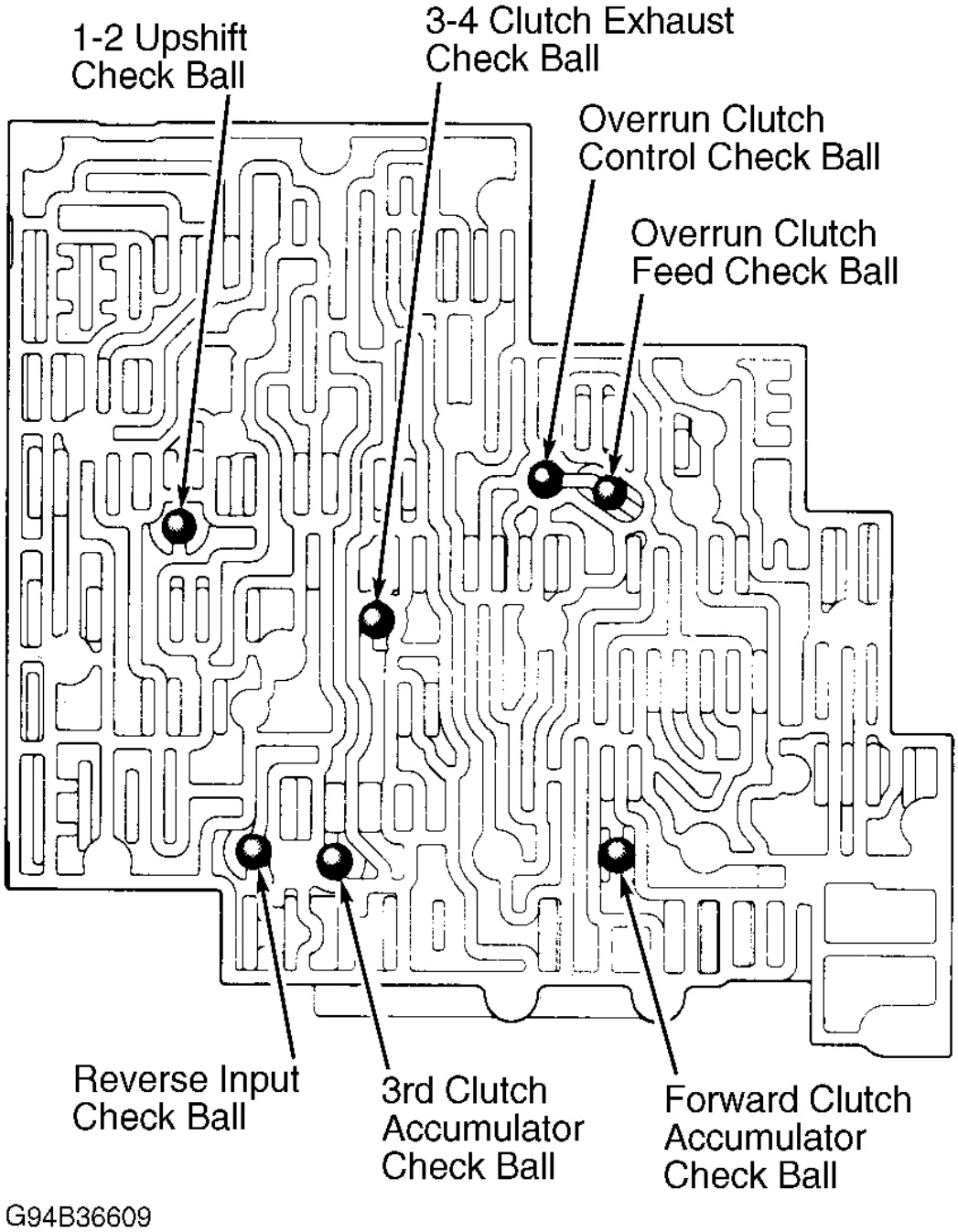

Fig. 16: Locating Valve Body Check Balls (4L60-E)
Courtesy of GENERAL MOTORS CORP.

cardiagn.com

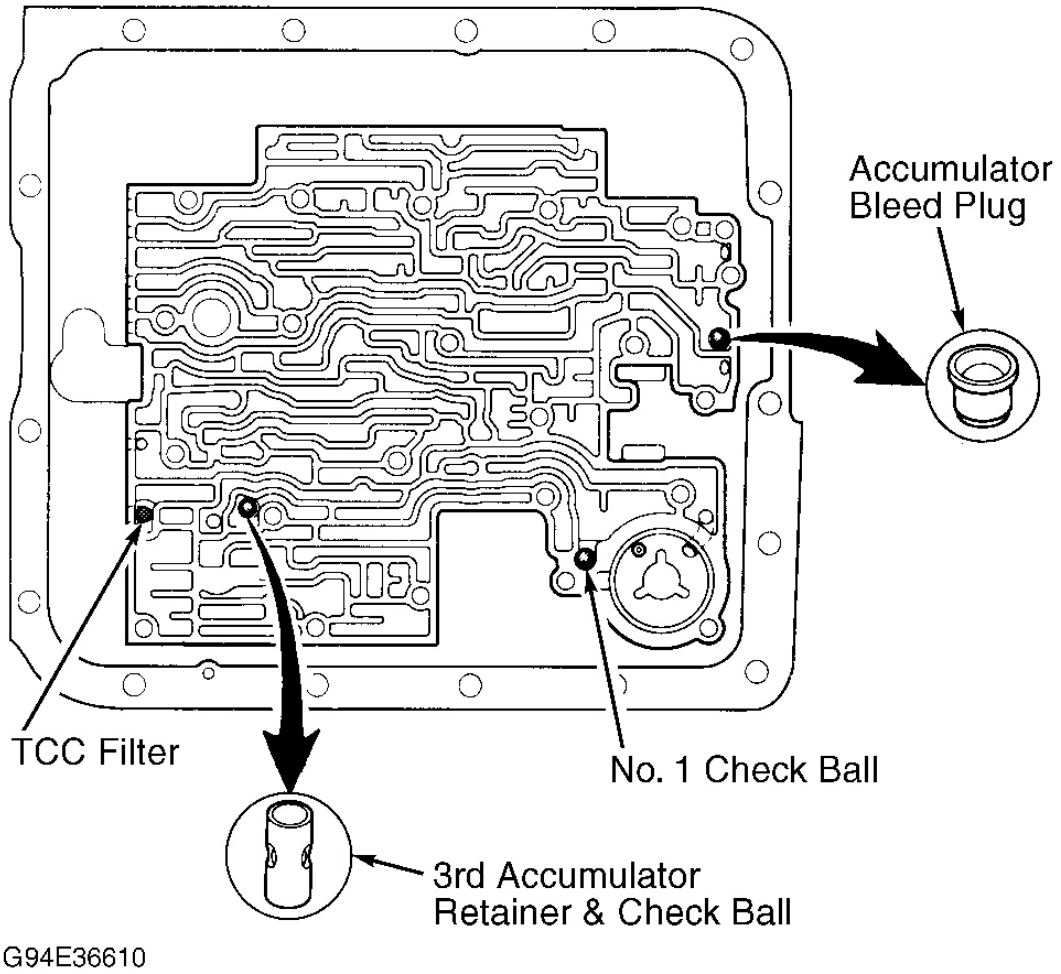

Fig. 17: Locating Check Balls In Case (4L60-E)
Courtesy of GENERAL MOTORS CORP.

OIL PUMP, INPUT CLUTCH & REVERSE CLUTCH

1. Ensure TCC solenoid assembly and oil filter are removed before oil pump removal. Remove turbine shaft "O" ring. Remove oil pump retaining bolts. Using Oil Pump Remover (J-37789-A) and Adapter (J-39119), pull oil pump assembly free from case. See **Fig. 18** .
2. Remove oil pump, seal and gasket. Remove reverse input clutch-to-pump thrust washer from pump. Remove band anchor pin from case. See **Fig. 25** Lift out input housing, shaft assembly, reverse input clutch housing and drum assembly. See **Fig. 19** .

cardiagn.com

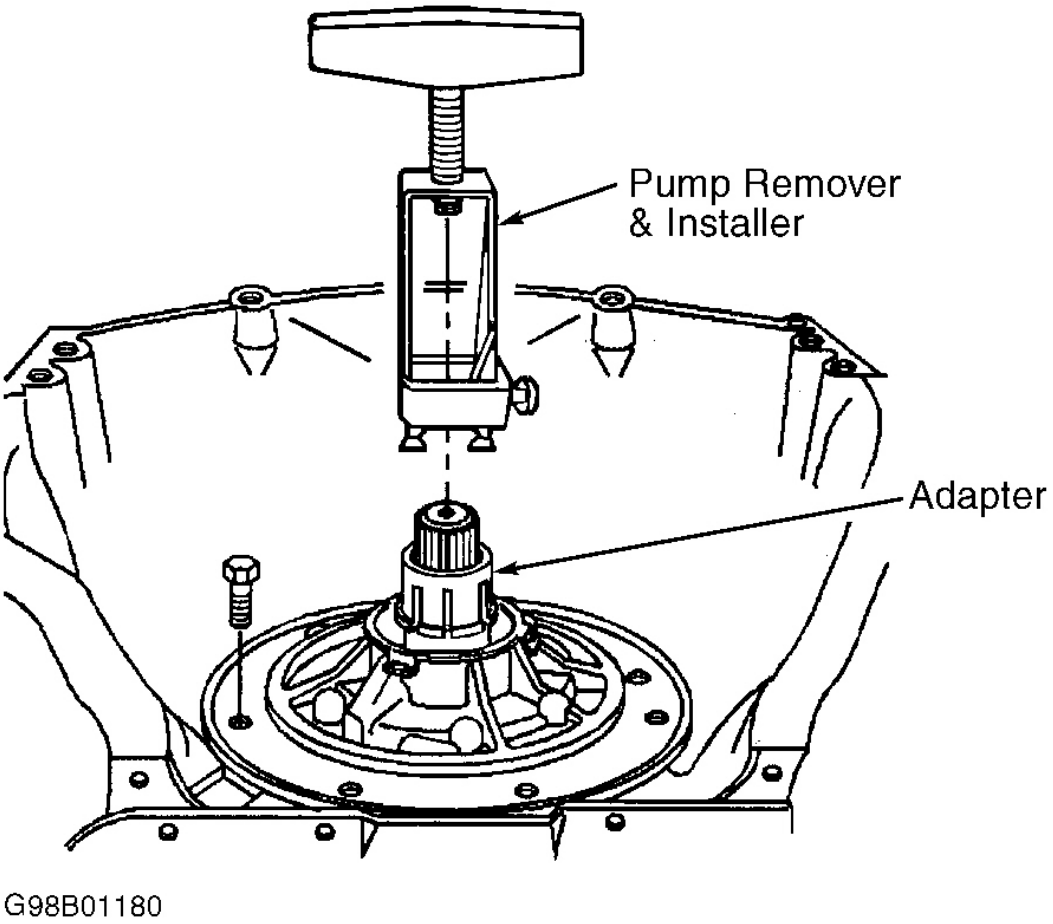

Fig. 18: Removing Oil Pump Assembly
Courtesy of GENERAL MOTORS CORP.

cardiagn.com

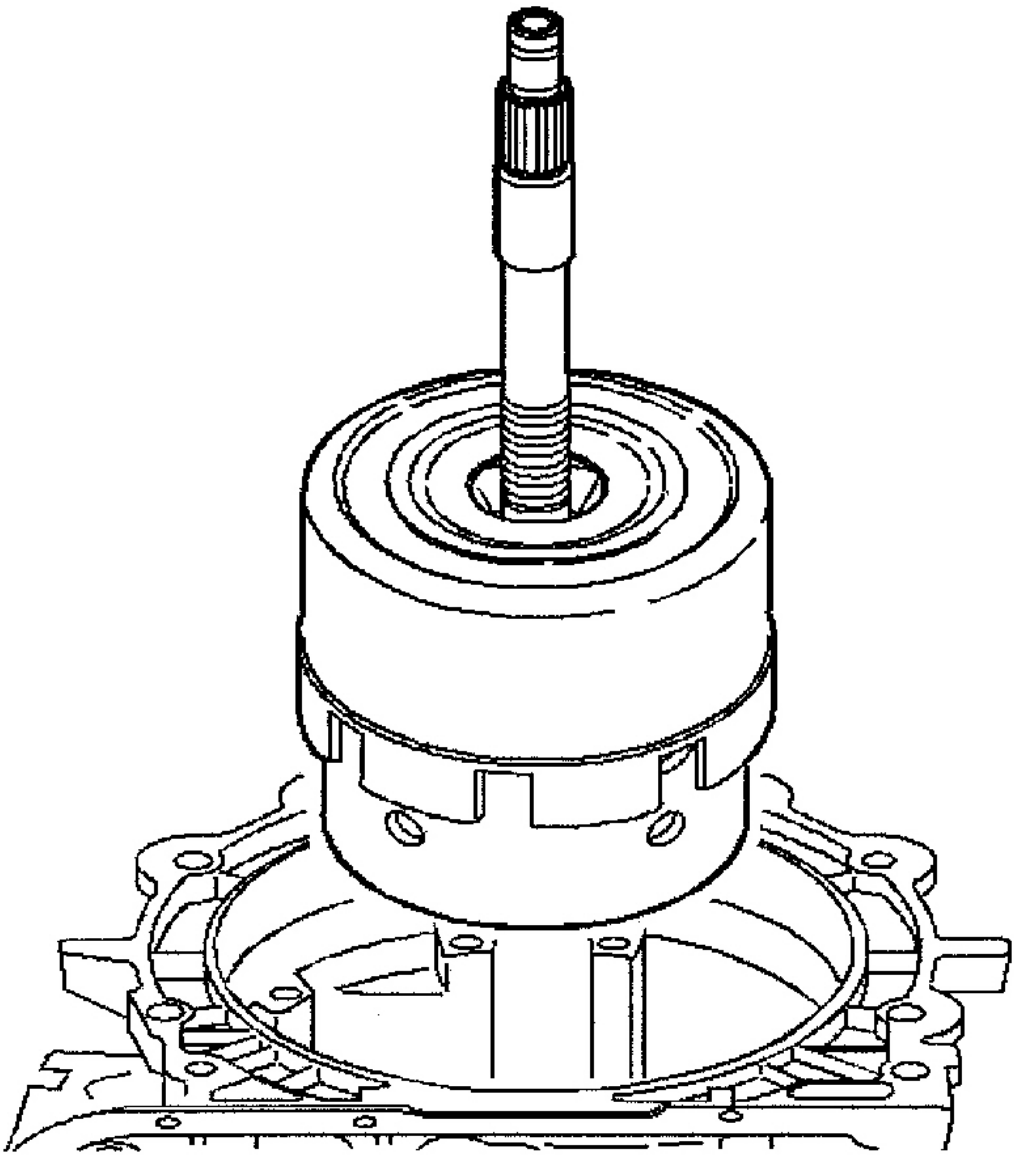

Fig. 19: Removing/Installing Input Clutch Assembly

2-4 BAND, INPUT GEAR SET & REACTION GEAR SET

1. Remove 2-4 band assembly from case. See **Fig. 20** . Remove input sun gear. See **Fig. 28** .

CAUTION: Output shaft must be held in place when removing input

cardiagn.com

carrier retainer ring.

2. Remove input carrier-to-output shaft retainer ring. See **Fig. 21** . Remove input carrier (planetary). Remove input carrier thrust bearing from reaction carrier shaft. See **Fig. 22** .
3. Remove input internal gear and reaction carrier shaft assembly. See**Fig. 23** . Remove reaction sun shell and thrust washer. See **Fig. 24** . Remove reaction sun gear, thrust washer, low-reverse roller clutch race and roller clutch. See **Fig. 28** .

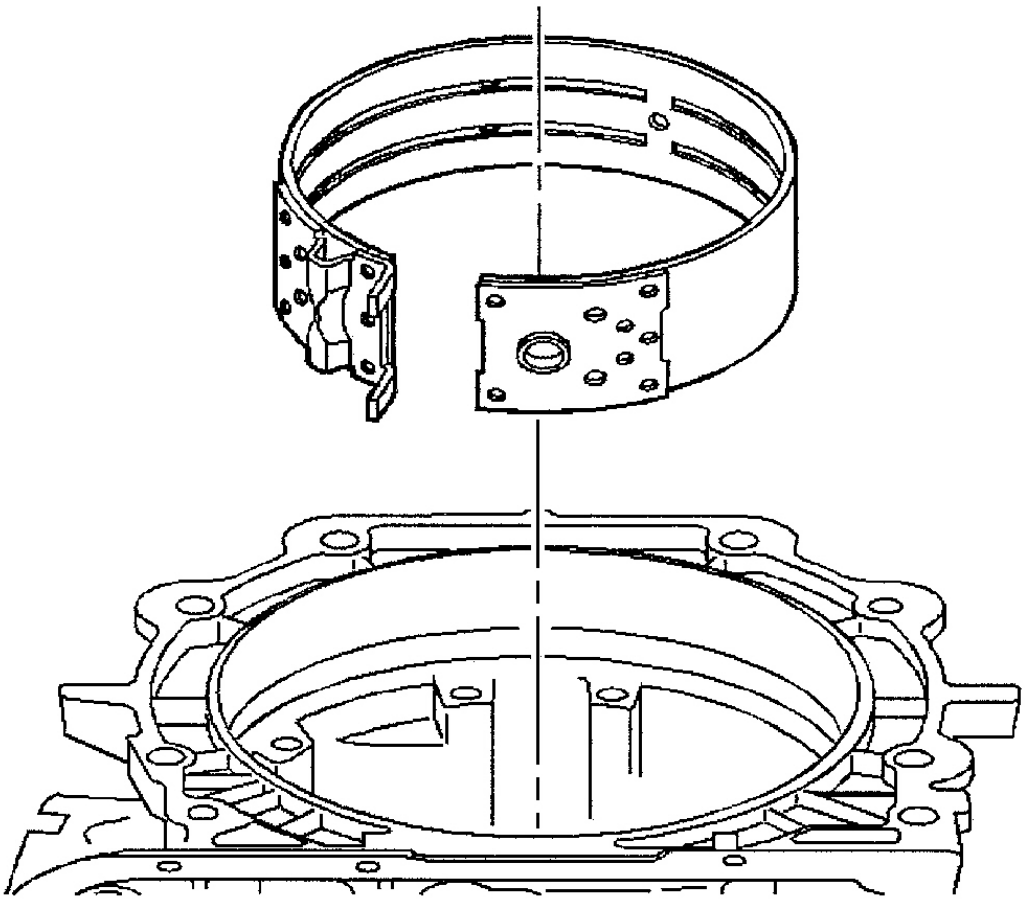

G00221157

Fig. 20: Removing/Installing 2-4 Band Assembly

cardiagn.com

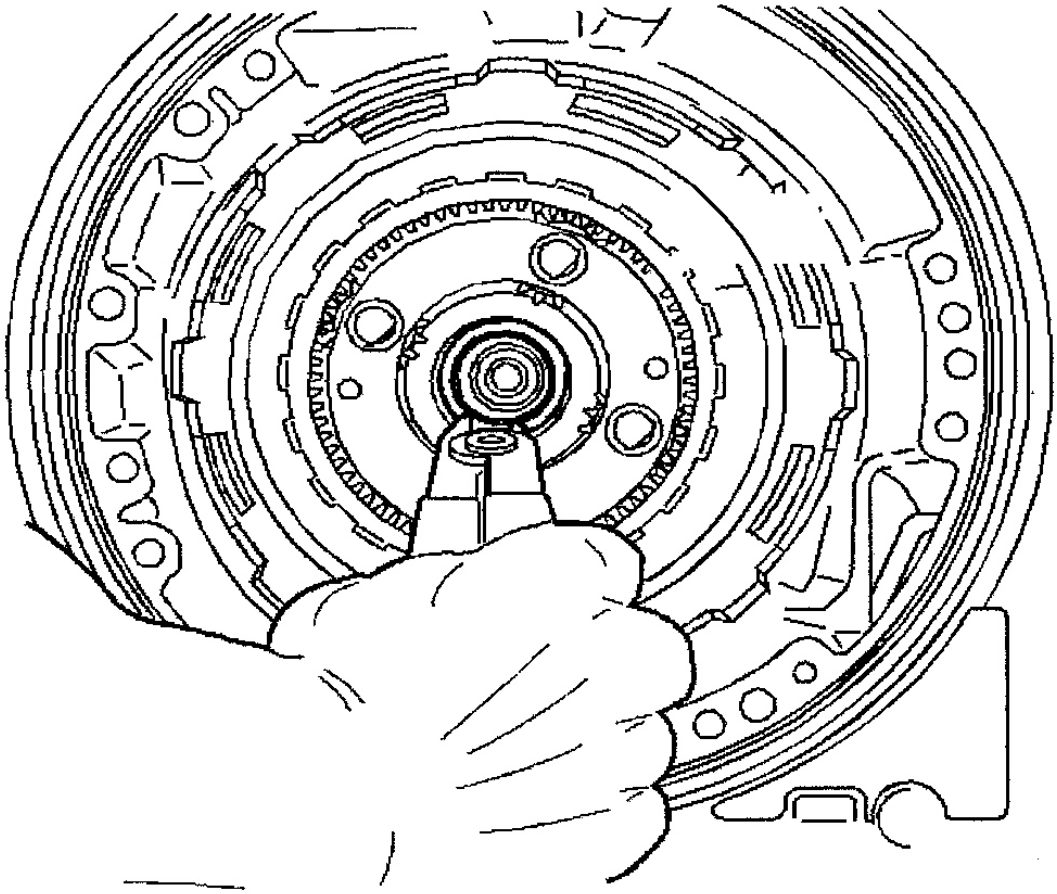

G00221158

Fig. 21: Removing/Installing Input Carrier To Output Shaft Retainer

cardiagn.com

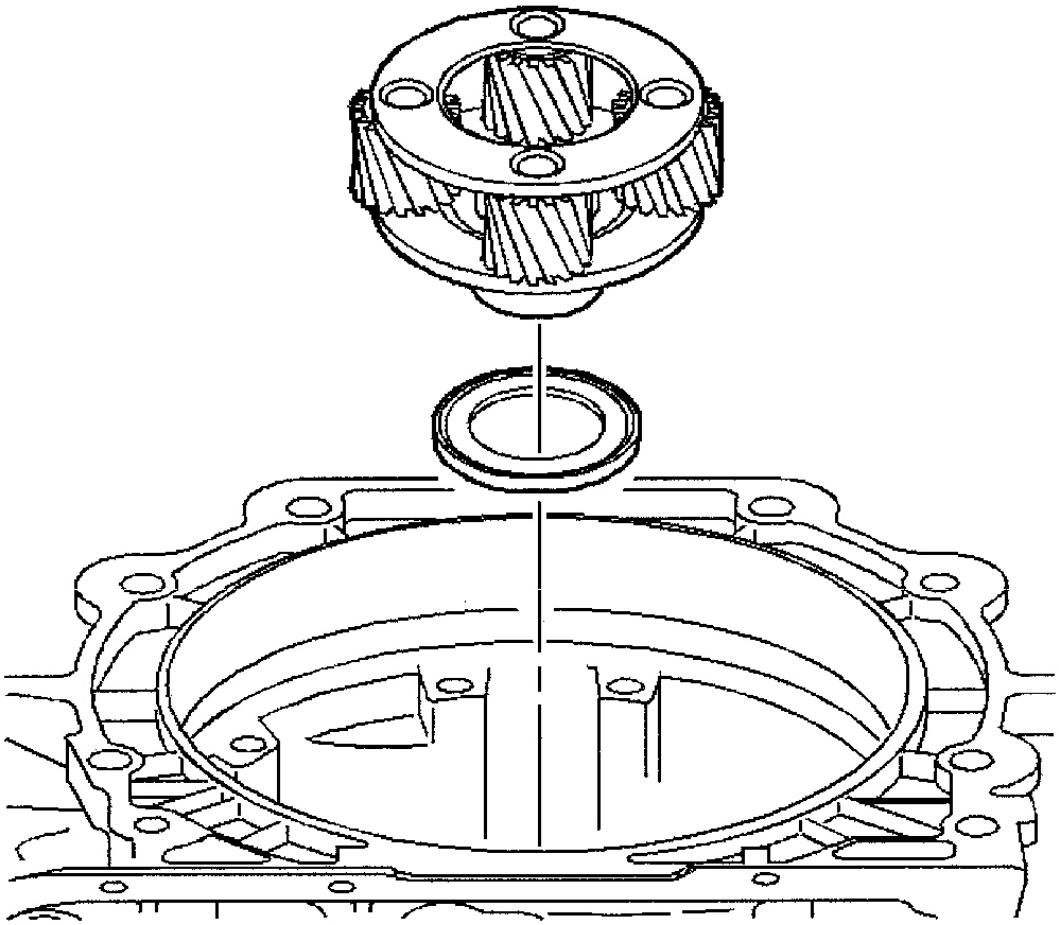

Fig. 22: Removing/Installing Input Carrier Assembly

cardiagn.com

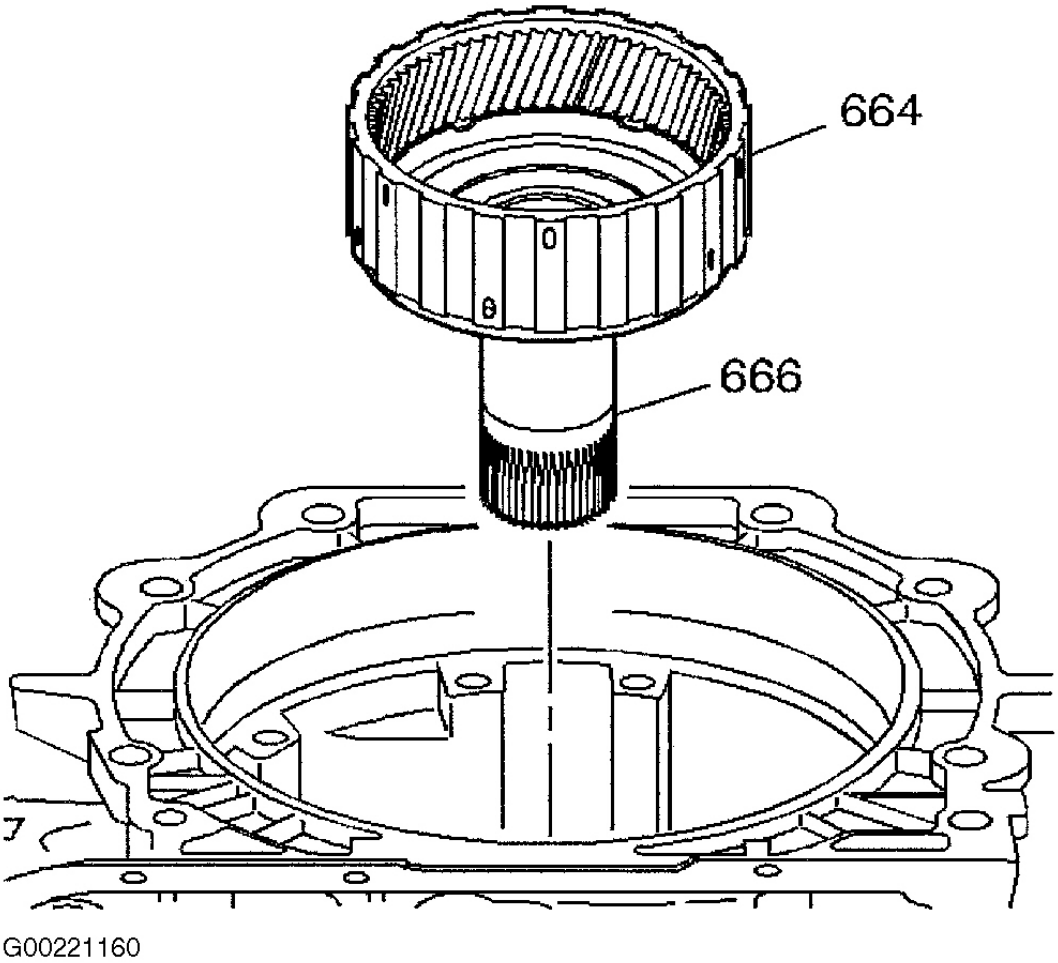

Fig. 23: Removing/Installing Input Internal Gear & Reaction Carrier Shaft Assembly

cardiagn.com

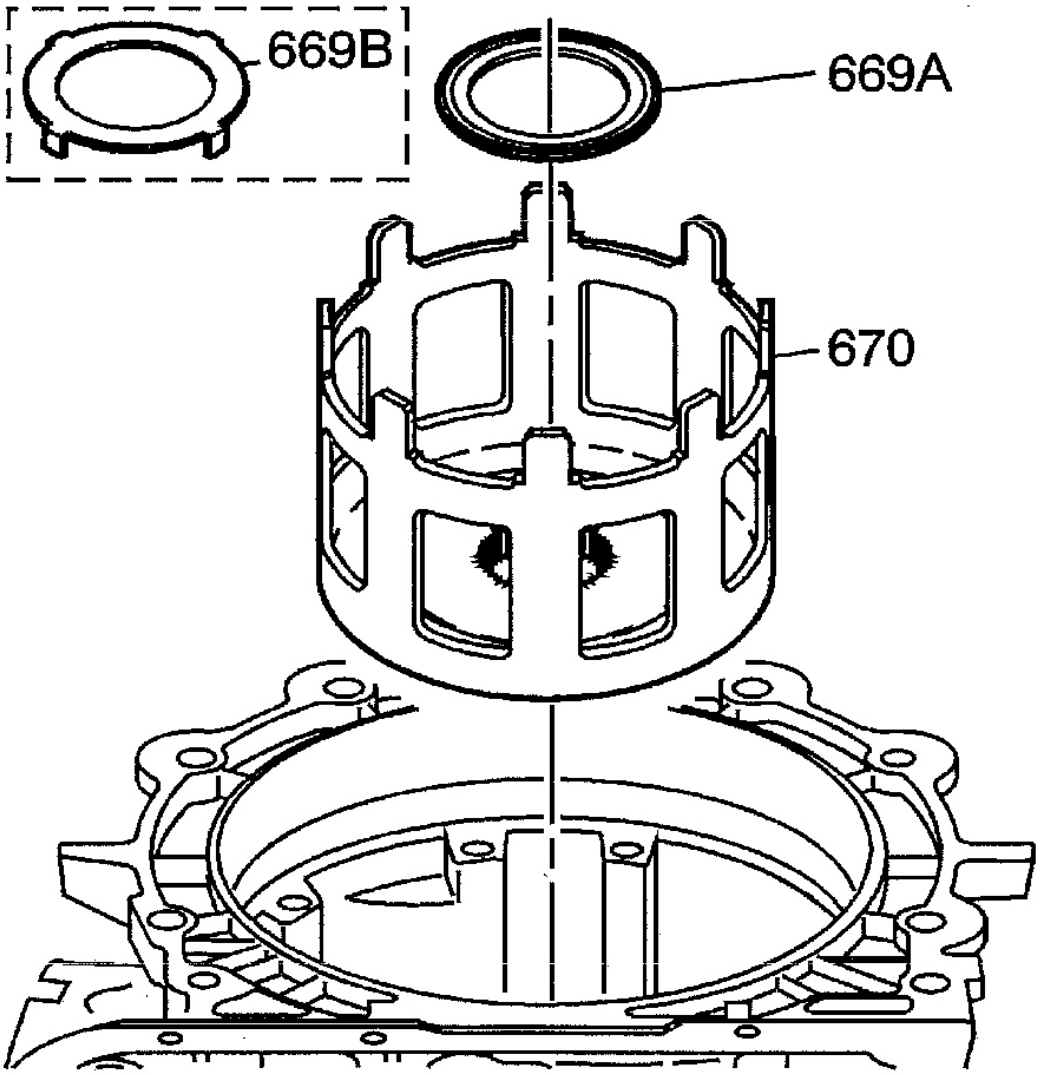

Fig. 24: Removing Thrust Washer & Reaction Sun Shell

cardiagn.com

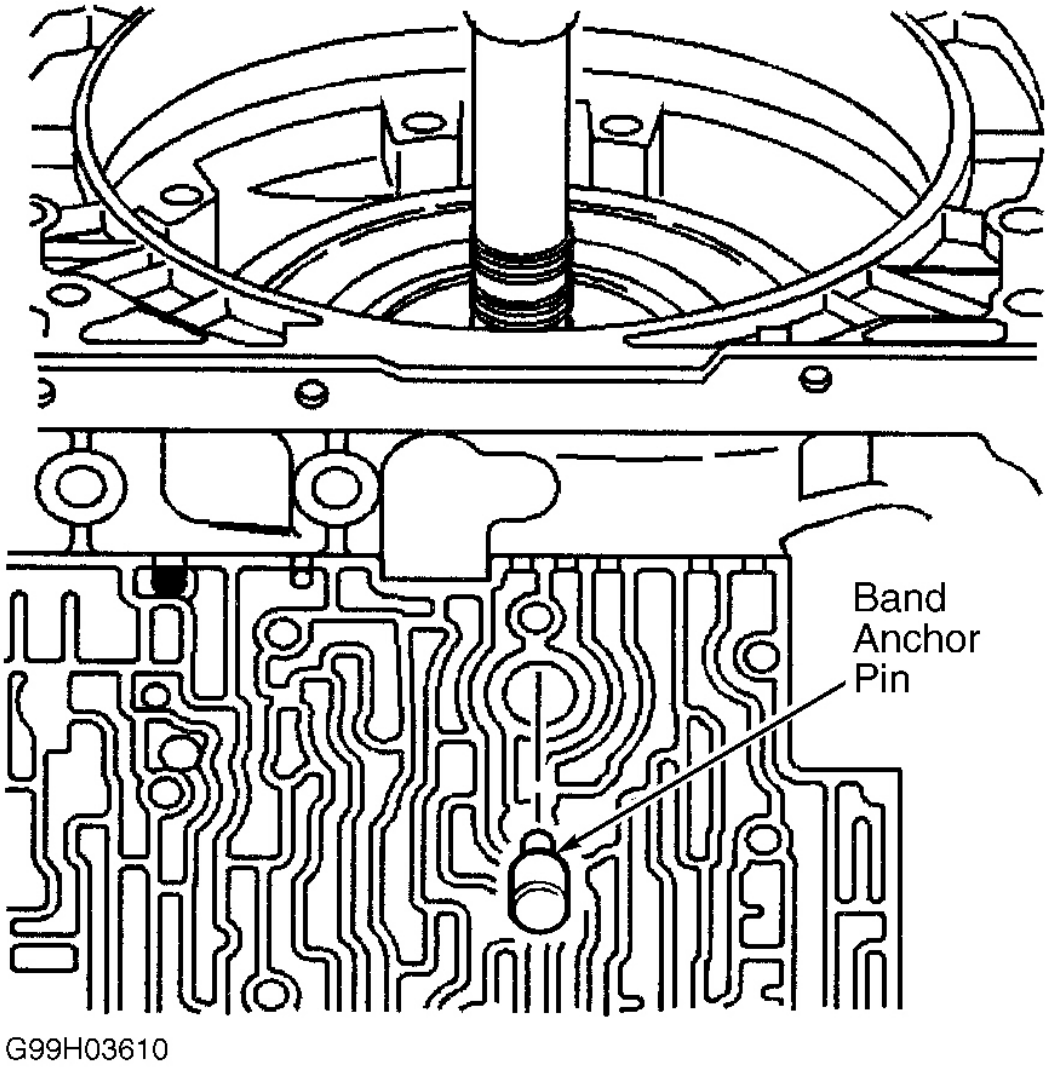

Fig. 25: Removing/Installing 2-4 Band Anchor Pin
Courtesy of GENERAL MOTORS CORP.

cardiagn.com

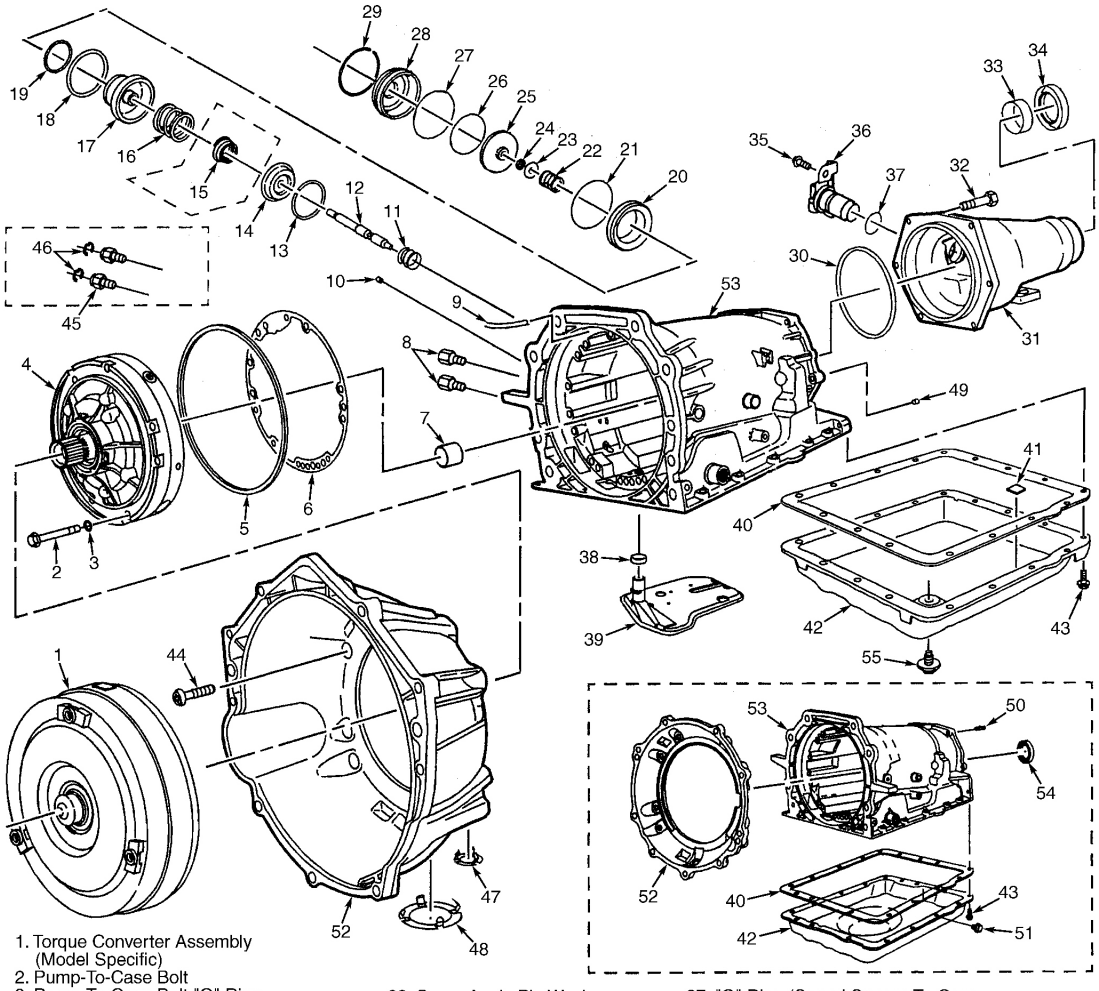

1. Torque Converter Assembly (Model Specific)
2. Pump-To-Case Bolt
3. Pump-To-Case Bolt "O" Ring
4. Oil Pump Assembly
5. Oil (Pump-To-Case) Seal
6. Pump Cover-To-Case Gasket
7. Case Bushing
8. Oil Cooler Pipe Connector (Model Specific)
9. Transmission Vent Assembly
10. Case Servo Plug
11. Servo Return Spring
12. 2nd Apply Piston Pin
13. Retainer (2nd Apply Piston) Ring
14. Servo Cushion Spring Retainer
15. Servo Cushion (Inner) Spring (Model Specific)
16. Servo Cushion (Outer) Spring
17. 2nd Apply Piston
18. Oil Seal (2nd Apply Piston - Outer) Ring
19. Oil Seal (2nd Apply Piston - Inner) Ring
20. Servo Piston (Inner) Housing
21. "O" Ring Seal
22. Servo Apply Pin Spring
23. Servo Apply Pin Washer
24. Retainer (Apply Pin) Ring
25. 4th Apply Piston
26. Oil Seal (4th Apply Piston - Outer) Ring
27. "O" Ring (2-4 Servo Cover) Seal
28. 2-4 Servo Cover
29. Servo Cover Retaining Ring
30. Case Extension-To-Case Seal
31. Case Extension (Model Specific)
32. Case Extension-To-Case Bolt
33. Case Extension Bushing
34. Case Extension Oil Seal Assembly (Model Specific)
35. Speed Sensor Retaining Bolt
36. Internal Transmission Speed Sensor
37. "O" Ring (Speed Sensor-To-Case Extension) Seal
38. Filter Seal
39. Oil Filter Assembly (Model Specific)
40. Oil Pan Gasket
41. Magnet
42. Oil Pan (Model Specific)
43. Oil Pan Screw
44. Converter Housing-To-Case Bolt
45. Oil Cooler Quick Connector (Model Specific)
46. Oil Cooler Quick Connect Clip (Model Specific)
47. Converter Housing Access Hole Plug (Model Specific)
48. Converter Bolt Inspection Plate (Model Specific)
49. Cup "D4" Orifice Plug
50. Transmission Case Stud (Corvette Only)
51. Oil Pan Plug Assembly (Corvette Only)
52. Converter Housing (Model Specific)
53. Main Case Section (Model Specific)
54. Case Oil Seal Assembly (Corvette Only)
55. Transmission Oil Pan Hex Head Plug Assembly ("C" & "K" Truck Only)

G00023548

Fig. 26: Exploded View Of 4L60-E Transmission External Components (1 Of 2)
Courtesy of GENERAL MOTORS CORP.

cardiagn.com

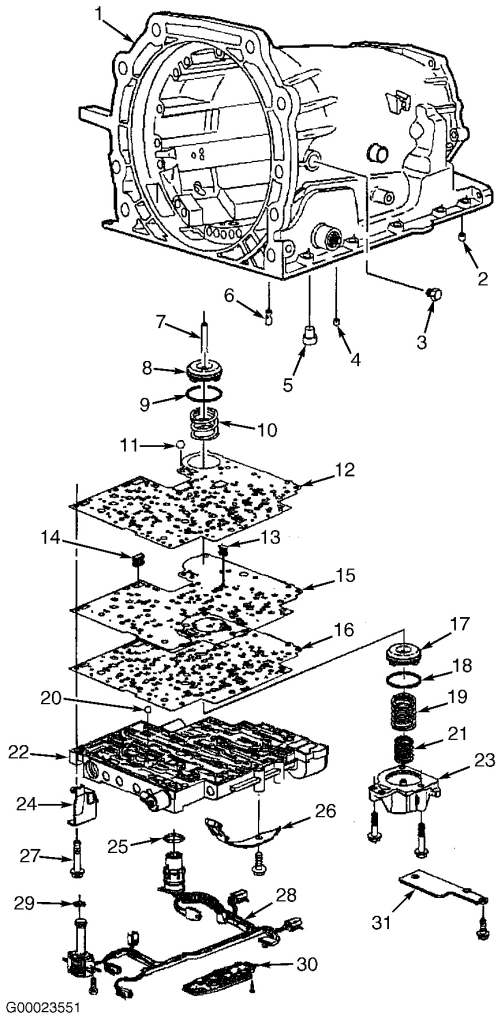

1. Main Case Section (Model Specific)
2. Transmission Case Plug (Accumulator Bleed)
3. Pressure Plug
4. Retainer & Ball Assembly (Double Orifice)
5. Band Anchor Pin
6. 3rd Accumulator Retainer & Ball Assembly
7. Accumulator Piston Pin
8. 3-4 Accumulator Piston
9. Oil Seal Ring (3-4 Accumulator Piston)
10. 3-4 Accumulator Spring (Model Specific)
11. No. 1 Check Ball
12. Spacer Plate-To-Case Gasket
13. Shift Solenoid Screen
14. Pressure Control Solenoid Screen
15. Valve Body Spacer Plate
16. Spacer Plate-To-Valve Body Gasket
17. 1-2 Accumulator Piston
18. Oil Seal Ring (1-2 Accumulator)
19. 1-2 Accumulator Spring (Outer)
20. Check Balls (No. 2, 3, 4, 5, 6, 8 & 12)
21. 1-2 Accumulator Spring (Inner)
22. Control Valve Body Assembly
23. 1-2 Accumulator Cover & Pin Assembly
24. Dipstick Stop Bracket (Model Specific)
25. Wiring Harness Pass-Through Connector "O" Ring Seal
26. Manual Detent Spring Assembly
27. Valve Body Bolt
28. Wiring Harness Solenoid Assembly
29. Solenoid "O" Ring Seal
30. TFP Manual Valve Position Switch Assembly
31. Spacer Plate Support Plate

Fig. 27: Exploded View Of 4L60-E Transmission External Components (2 Of 2)
Courtesy of GENERAL MOTORS CORP.

cardiagn.com

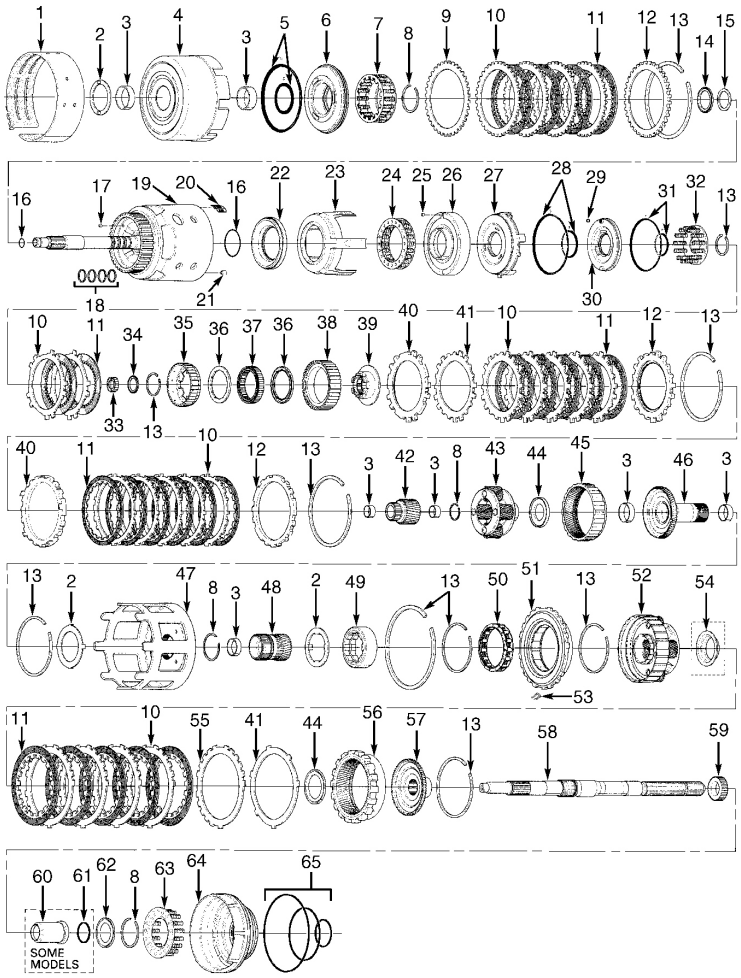

1. 2-4 Band Assembly
2. Thrust Washer
3. Bushing
4. Reverse Input Clutch Housing & Drum Assembly
5. Reverse Input Clutch Seals
6. Clutch Piston
7. Clutch Spring Assembly
8. Retainer Ring
9. Belleville Plate
10. Steel Plate
11. Composition Plate
12. Selective Backing Plate
13. Snap Ring
14. Stator Shaft Bearing Assembly
15. Selective Thrust Washer
16. "O" Ring Seal
17. Orificed Cup Plug
18. Oil Seal Rings
19. Input Shaft & Housing Assembly
20. 3-4 Clutch Boost Spring Assembly
21. Check Ball & Retainer Assembly
22. 3-4 Clutch Piston
23. 3-4 Clutch Apply Ring
24. 3-4 Clutch Spring Assembly
25. Forward Clutch Housing Ball & Retainer Assembly
26. Forward Clutch Housing
27. Forward Clutch Piston
28. Forward Clutch Seals
29. Overrun Clutch Ball
30. Overrun Clutch Piston
31. Overrun Clutch Seals
32. Overrun Clutch Spring Assembly
33. Input Housing-To-Output Shaft Seal
34. Input Sun Gear Bearing Assembly
35. Overrun Clutch Hub
36. Sprag Assembly Retainer Rings
37. Forward Sprag Assembly
38. Forward Clutch Race
39. Sprag Retainer & Race Assembly
40. Apply Plate
41. Waved Plate
42. Input Sun Gear
43. Input Carrier Assembly
44. Thrust Bearing
45. Input Internal Gear
46. Reaction Carrier Shaft
47. Reaction Sun Shell
48. Reaction Sun Gear
49. Low-Reverse Roller Clutch Race
50. Low-Reverse Roller Clutch Assembly
51. Low-Reverse Clutch Support Assembly
52. Reaction Carrier Assembly
53. Support Retainer Spring
54. Oil Deflector (High Output Models)
55. Selective Spacer Plate
56. Internal Reaction Gear
57. Internal Reaction Gear Support
58. Output Shaft
59. Speed Sensor Rotor
60. Output Shaft Sleeve
61. Output Shaft Seal
62. Bearing
63. Low-Reverse Clutch Spring Assembly
64. Low-Reverse Clutch Piston
65. Low-Reverse Clutch Seals

G96J04446

Fig. 28: Exploded View Of 4L60-E Transmission Internal Components
Courtesy of GENERAL MOTORS CORP.

LOW-REVERSE CLUTCH

cardiagn.com

NOTE: Parking pawl may require removal to access low-reverse clutch.

1. Remove low-reverse support-to-case retaining snap ring. Remove output shaft support fixture. See **Fig. 7** . Push up on output shaft to loosen low-reverse clutch support. Remove support retainer spring from low-reverse support. Remove low-reverse support assembly and reaction carrier assembly (planetary). See **Fig. 28** . Remove output shaft.
2. Remove low-reverse clutch plates. Note locations of components. See **Fig. 29** . Remove internal reaction gear and thrust bearing. Remove internal reaction gear support-to-case thrust bearing. See **Fig. 30** .
3. Remove parking lock bracket retaining bolts. Remove lock bracket. Using screw extractor, remove shaft plug. Remove parking pawl shaft, parking pawl and return spring if necessary. See **Fig. 32** .
4. Using Clutch Spring Compressor (J-23327), compress low reverse clutch spring retainer. Remove spring retaining ring and low-reverse spring assembly. Remove low-reverse clutch piston by applying air pressure in case apply passage. See **Fig. 31** .

cardiagn.com

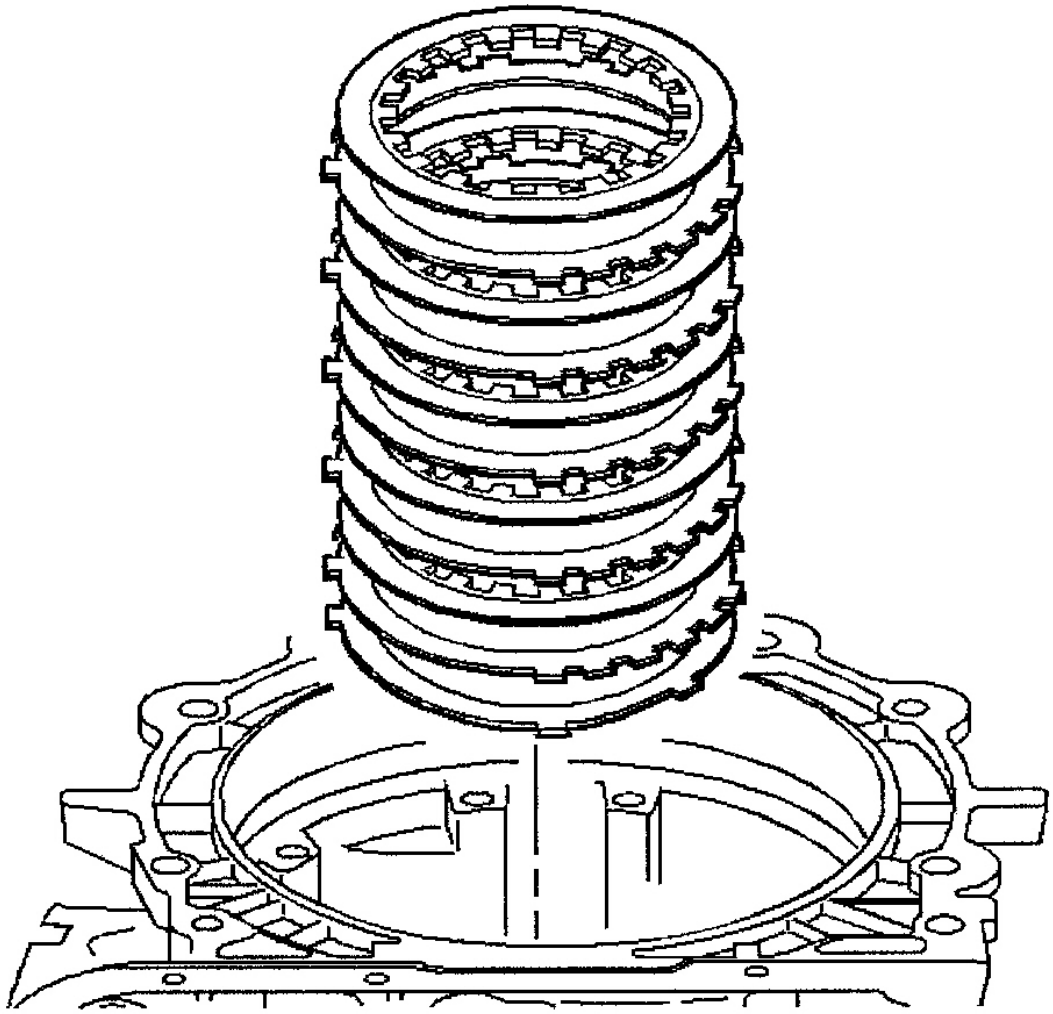

G00221162

Fig. 29: Removing/Installing Low Reverse Clutch Plates
Courtesy of GENERAL MOTORS CORP.

cardiagn.com

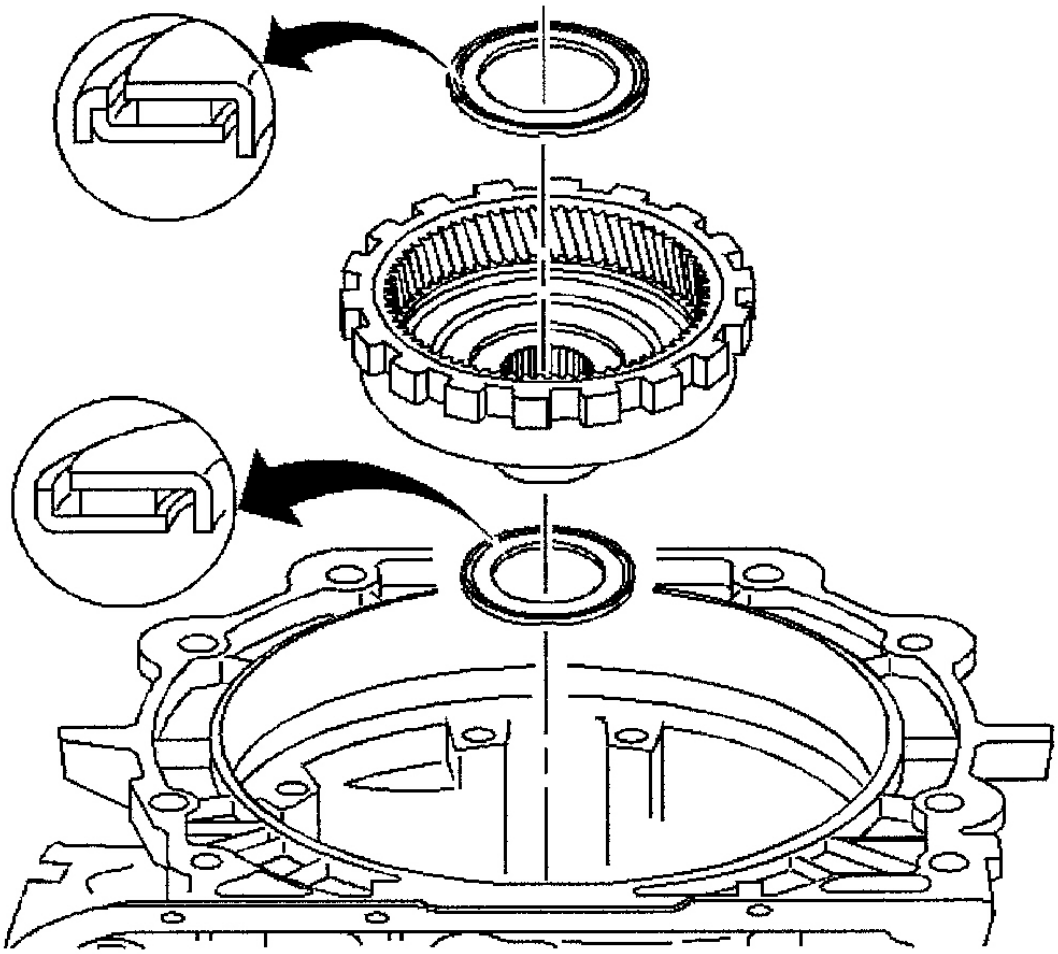

Fig. 30: Removing/Installing Internal Reaction Gear & Thrust Bearing

cardiagn.com

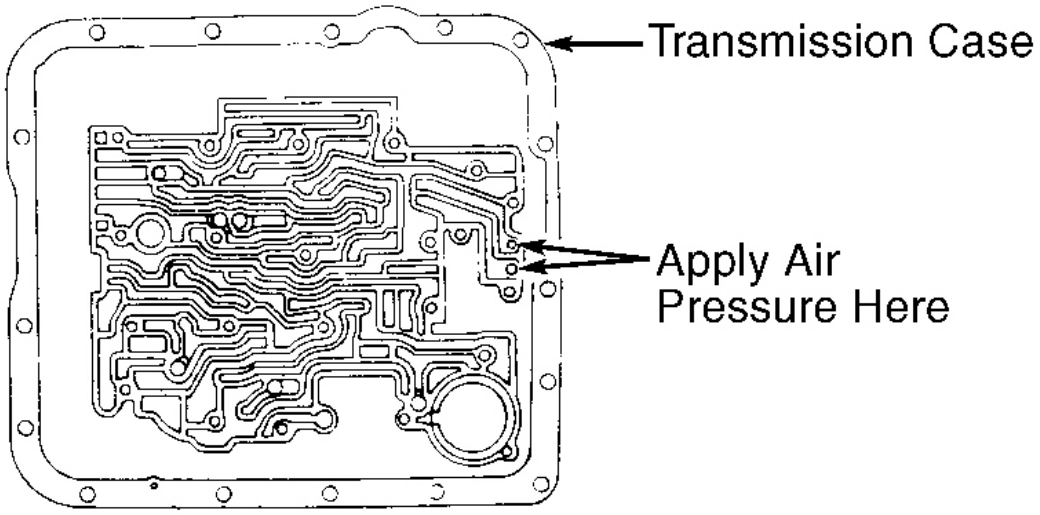

Fig. 31: Removing Low-Reverse Clutch Piston
Courtesy of GENERAL MOTORS CORP.

INNER MANUAL SHAFT LINKAGE

Remove manual shaft nut. Remove manual shaft and retainer. Remove parking lock actuator assembly and inner detent lever. Remove manual shaft seal from transmission case. See **Fig. 32** .

cardiagn.com

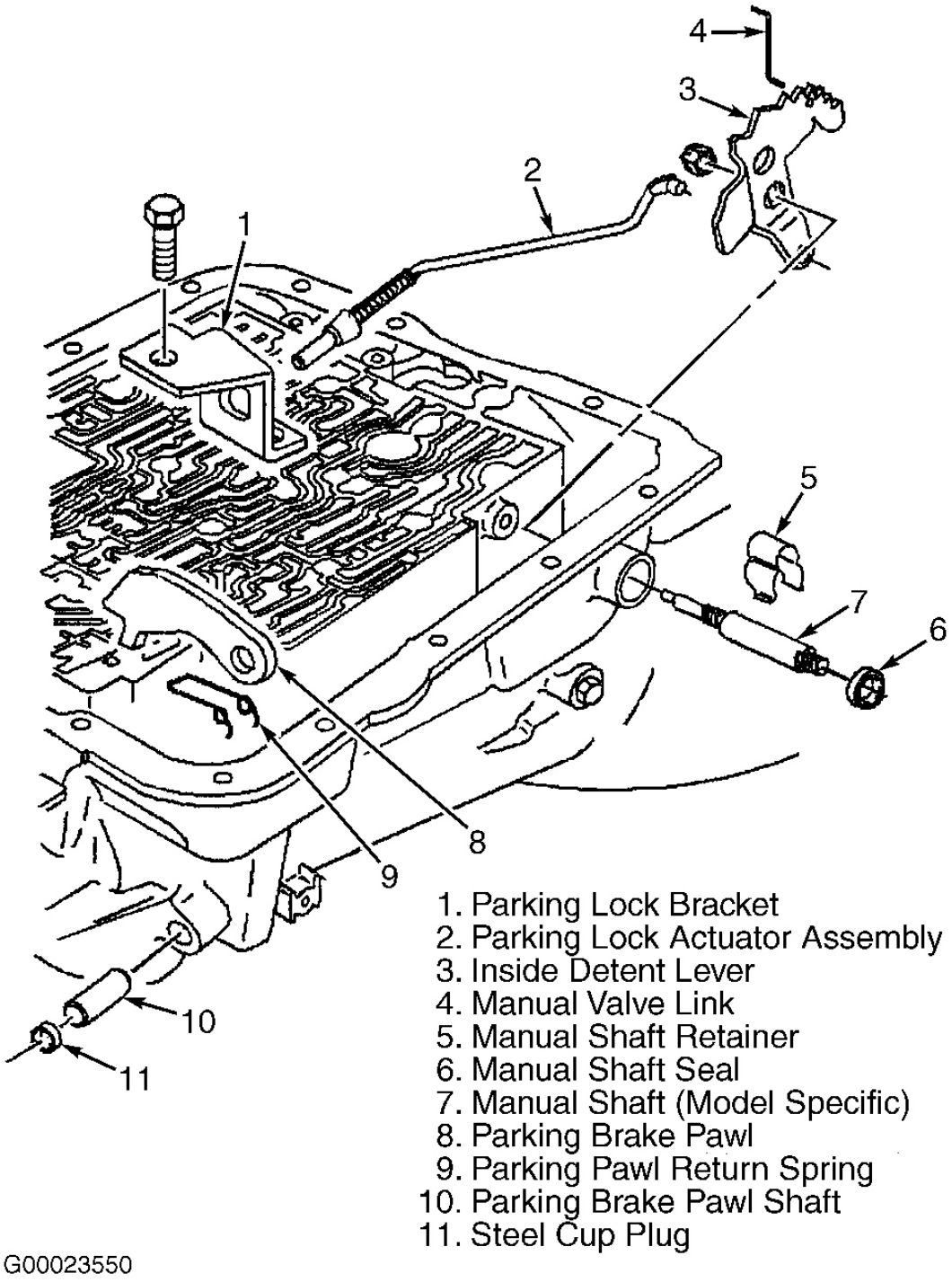

Fig. 32: Exploded View Of Parking Pawl Components
Courtesy of GENERAL MOTORS CORP.

cardiagn.com

3RD ACCUMULATOR RETAINER & BALL ASSEMBLY

1. Check 3rd accumulator retainer and ball assembly before removing it. DO NOT remove check valve unless it is leaking. Install servo assembly in bore. Install servo cover and retaining ring. See **Fig. 6** . Pour clean solvent in bore. Inspect for leaks in transmission case. Replace check valve assembly if it leaks. See **Fig. 33** . Remove servo assembly.
2. For check valve removal, install No. 4 screw extractor in check valve assembly. Remove check valve. Ensure bore is free of burrs. Installation tool must be made to ensure proper installation depth is obtained. Using a 3/8" O.D. rod, scribe indicator mark at 1.653" (41.98 mm) from end of rod. Install check valve until scribe mark on rod is flush with case. See **Fig. 33** . Ensure slot in retainer is completely open. Observe 3rd accumulator retainer and ball assembly in 2-4 band servo bore.

cardiagn.com

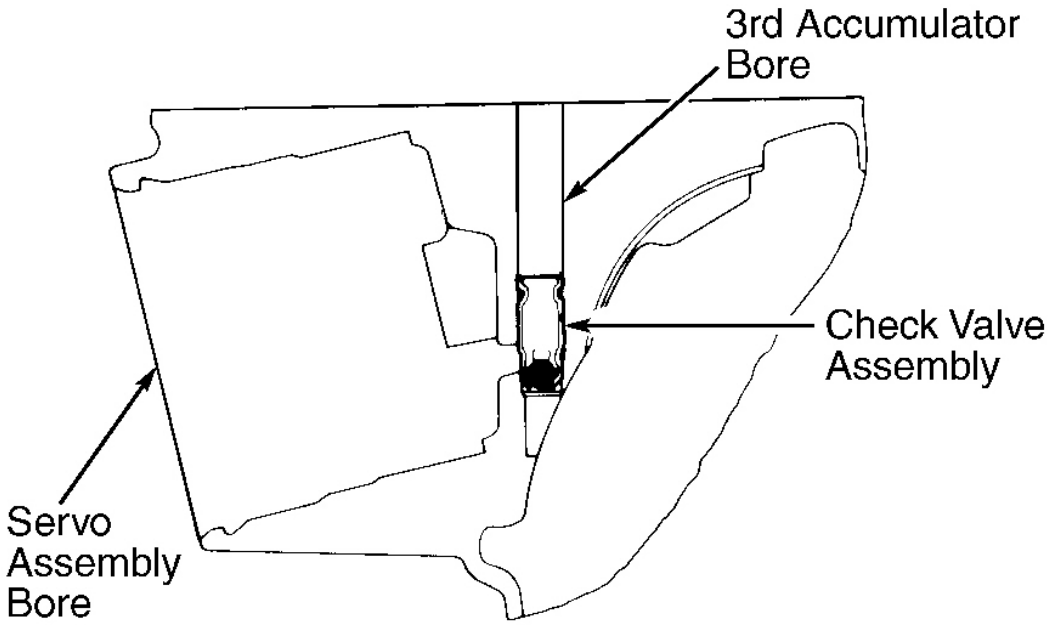

CHECK VALVE OPERATION

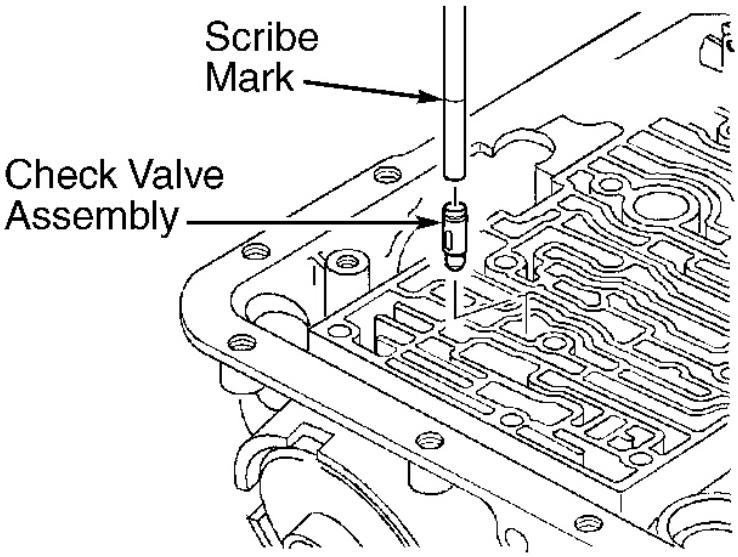

INSTALLING CHECK VALVE

G99F03609

Fig. 33: Installing 3rd Accumulator Retainer & Ball Assembly
Courtesy of GENERAL MOTORS CORP.

cardiagn.com

COMPONENT DISASSEMBLY & REASSEMBLY

OIL PUMP

Disassembly

1. Remove reverse input clutch drum-to-oil pump thrust washer, pump-to-case gasket and pump-to-case oil seal ring from pump assembly. See **Fig. 34** . Remove pump cover retaining bolts. Separate pump cover from pump body. See **Fig. 35** .

WARNING: Pump slide spring and pressure relief spring rivet are under high pressure. To prevent possible injury, cover springs during removal.

CAUTION: Keep pump vanes in installed position. If pump vanes are installed upside-down or backward, they will wear rapidly.

2. Using needle-nose pliers, compress pump slide spring. Remove from pump by pulling straight out. Remove pump vane rings, pump vanes, pump rotor and rotor guide from pump pocket.
3. Remove slide from pump pocket. Remove slide seal and seal support from pump slide. See **Fig. 36** . Remove pivot pin and pivot pin spring. Remove seal ring and "O" ring from pump slide. Remove seal retainer and seal from pump body.
4. Check condition of pump bushing. If bushing is in good condition, do not remove it. Push inward on converter clutch valve stop to compress spring. Remove snap ring. Remove valve stop, converter clutch apply valve and springs.
5. Using small punch, remove pressure relief spring retaining rivet. Remove relief spring and check ball. Remove oil screen and "O" ring from pump cover. Remove reverse boost valve sleeve. Remove reverse boost valve, pressure regulator valve spring and pressure regulator valve.

cardiagn.com

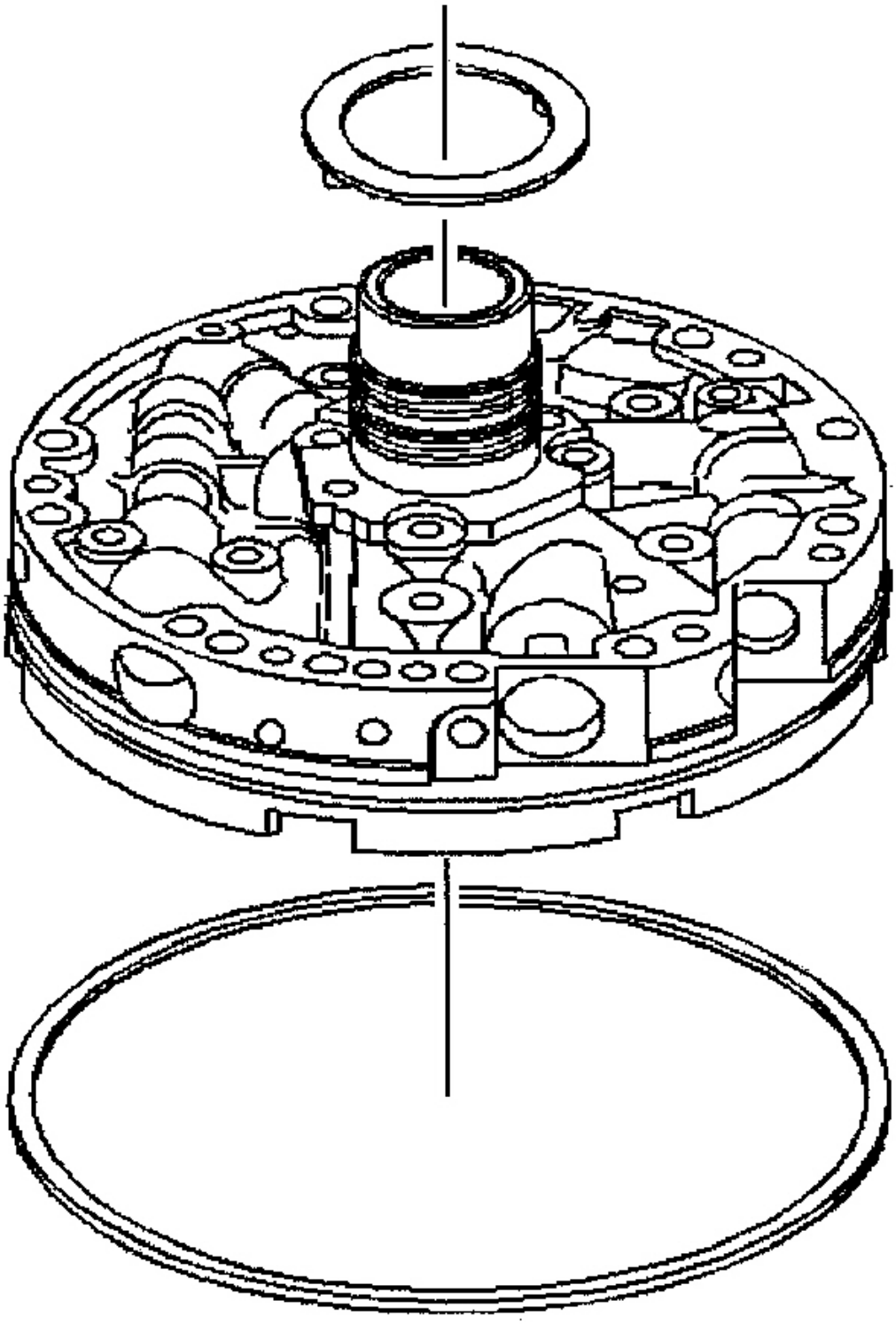

G00221164

cardiagn.com

Fig. 34: Removing/Installing Thrust Washer & Oil Seal
Courtesy of GENERAL MOTORS CORP.

cardiagn.com

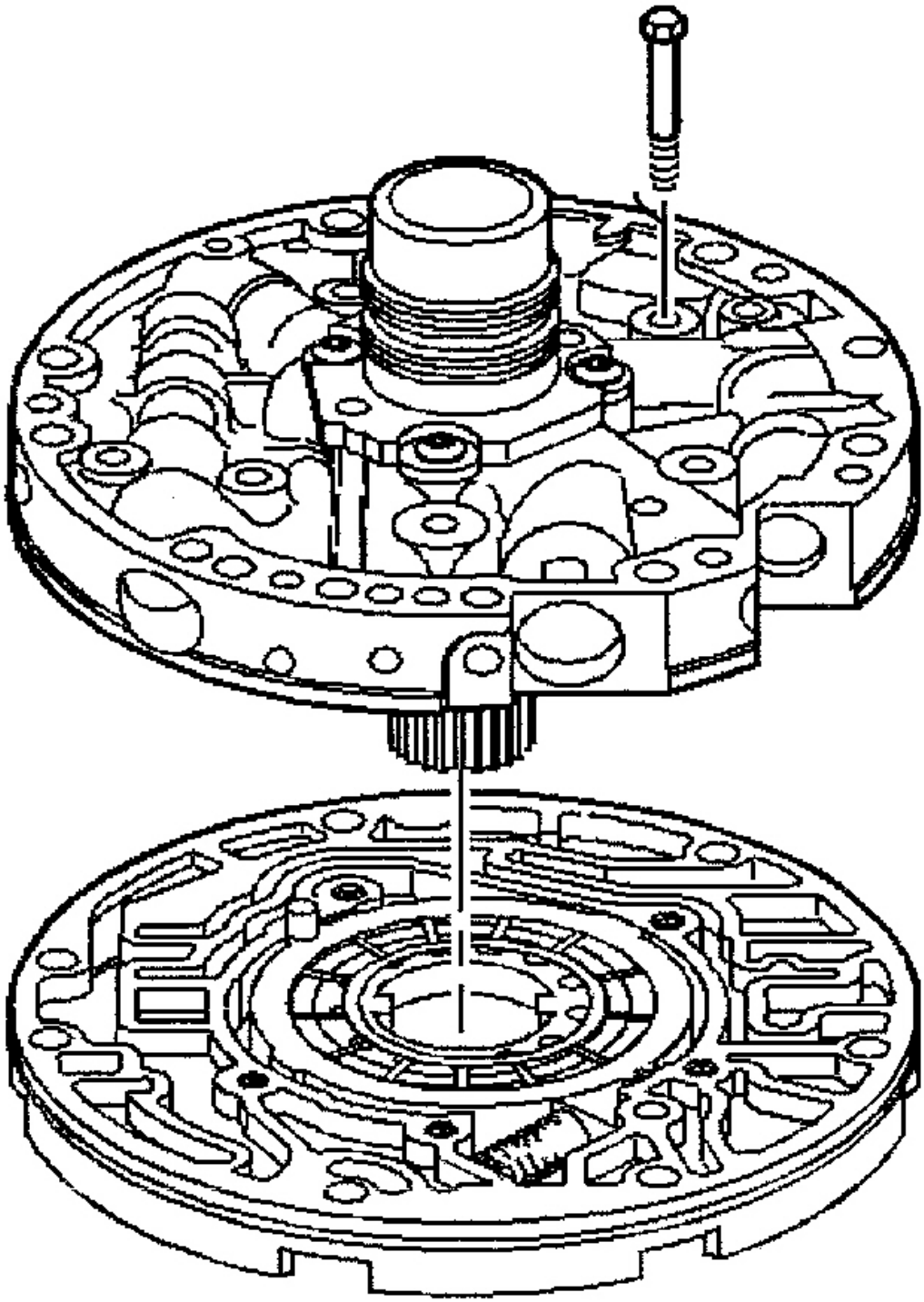

G00221165

cardiagn.com

Fig. 35: Removing/Installing Oil Pump Bolts & Cover
Courtesy of GENERAL MOTORS CORP.

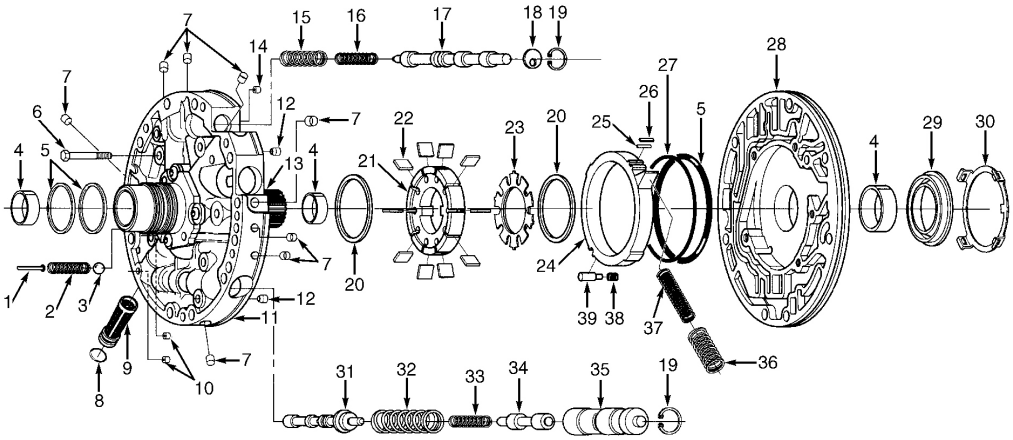

1. Rivet
2. Pressure Relief Spring
3. Check Ball
4. Bushing
5. Oil Seal Rings
6. Cover-To-Body Bolt
7. Oil Pump Cover Plugs
8. "O" Ring
9. Screen
10. Orificed Cup Plug
11. Pump Cover
12. Retainer & Ball Assembly
13. Stator Shaft
14. Converter Clutch Signal Orifice Cup Plug
15. Converter Clutch Spring (Outer)
16. Converter Clutch Spring (Inner)
17. Converter Clutch Valve
18. Valve Stop
19. Snap Ring
20. Pump Vane Ring
21. Oil Pump Rotor
22. Pump Vane
23. Rotor Guide
24. Pump Slide
25. Seal Support
26. Pump Slide Seal
27. "O" Ring Seal
28. Pump Body
29. Oil Seal Assembly
30. Seal Retainer
31. Pressure Regulator Valve
32. Pressure Regulator Valve Spring
33. Pressure Regulator Isolator Spring
34. Reverse Boost Valve
35. Reverse Boost Valve Sleeve
36. Pump Slide Spring (Outer)
37. Pump Slide Spring (Inner)
38. Pivot Pin Spring
39. Pivot Pin

G96B04447

Fig. 36: Exploded View Of Oil Pump Assembly
Courtesy of GENERAL MOTORS CORP.

Inspection

1. Inspect all valves, springs, sleeves and bushings for chips, burrs, distortion and free movement in bores. Check pressure relief check ball and spring for damage and distortion. Low line pressure will result if check ball and spring are damaged.
2. Inspect pump cover screen and "O" ring for wear and damage. Clean pump body and cover. Check all bores for obstructions. Inspect mating sides of cover and body for scoring, flatness and damage between channels. Check channels for dirt and damaged passages. Inspect stator shaft and pump body bushings for damage.
3. Inspect rotor and slide for scoring, cracks and damage. Check rotor guide and pump vane rings for excessive wear and damage. Inspect all seals for damage.
4. Measure pump rotor and slide thickness for surface wear. Rotor and slide measurements must fall into same thickness range. See **OIL PUMP COMPONENT THICKNESS** table. If rotor and slide measurements do not fall into same thickness range, or are outside of all ranges, oil pump must be replaced as an assembly.

cardiagn.com

OIL PUMP COMPONENT THICKNESS

Component	Thickness - In. (mm)
Pump Rotor & Slide	.7066-.7071 (17.948-17.960)

Reassembly

1. Install "O" ring and seal ring in groove on back side of pump slide. Retain seal ring using petroleum jelly. Install pivot pin and spring in pump body. Install pump slide. Notch in pump slide must align with pivot pin hole and with flat oil seal ring facing downward in pump pocket. Install slide seal and support. See **Fig. 37** .

CAUTION: Keep pump vanes in installed position. If pump vanes are installed upside-down or backward, they will rapidly wear out.

2. Install pump vane ring into pump pocket. Coat rotor guide with petroleum jelly. Install rotor guide on rotor. Install rotor and guide into pump pocket with guide toward pump pocket. Install vanes in rotor. Install vane guide ring. Compress pump slide spring and install into pump pocket. All parts must be even with pump body surface. Install "O" ring on pump screen, and install screen in pump cover with "O" ring end out.
3. Install oil seal in pump body. Install seal retainer. Install pressure relief check ball and spring in pump cover. Install retaining rivet. Install converter clutch valve springs and converter clutch valve. Install valve stop and snap ring. Install pressure regulator valve and spring in pump cover. See **Fig. 36** .
4. Coat reverse boost valve with petroleum jelly. Install reverse boost valve in boost valve sleeve with small end first. Install reverse boost valve sleeve in pump cover.
5. Install pump cover on pump body. Install retaining bolts finger tight. Align pump body and cover using Alignment Strap (J-21368). See **Fig. 38** . Place bolt through pump-to-case bolt hole. Tighten retaining bolts to specification. See **TORQUE SPECIFICATIONS** . Remove alignment strap. Position pump-to-case gasket on pump, and retain with petroleum jelly.
6. Install oil seal rings on stator hub. Place Stator Shaft Seal Installer (J39855-1) over oil pump stator hub (stator support). See **Fig. 39** . Set height of installer tool to just above seal groove. Push seal ring over installer tool using Seal Pusher (J38735-3). Install remaining seal rings. Place Stator Shaft Seal Sizer (J39855-2) over stator hub and leave until oil pump installation.
7. Install pump-to-case oil seal on cover. Ensure seal is not twisted. Coat seal with ATF. Install pump-to-drum thrust washer. Ensure tangs on washer engage with holes in hub.

cardiagn.com

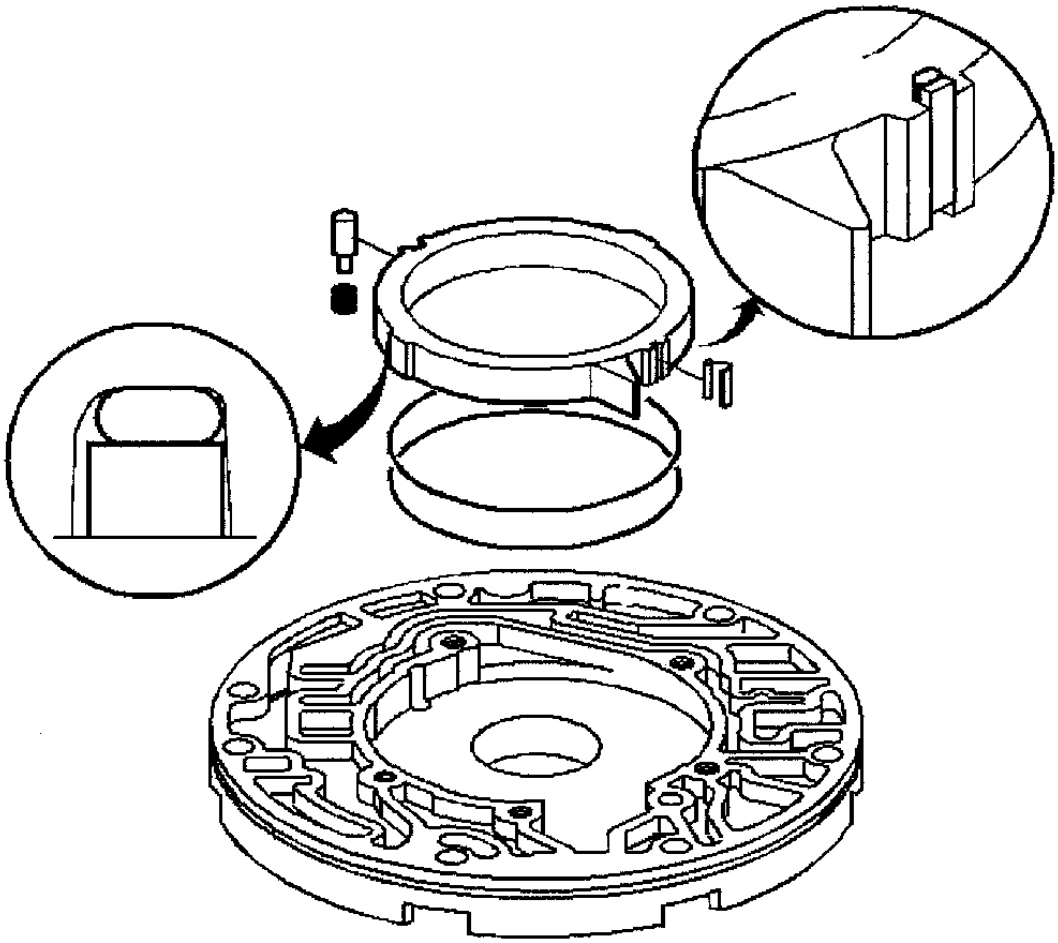

Fig. 37: Assembling Oil Pump Internal Components
Courtesy of GENERAL MOTORS CORP.

cardiagn.com

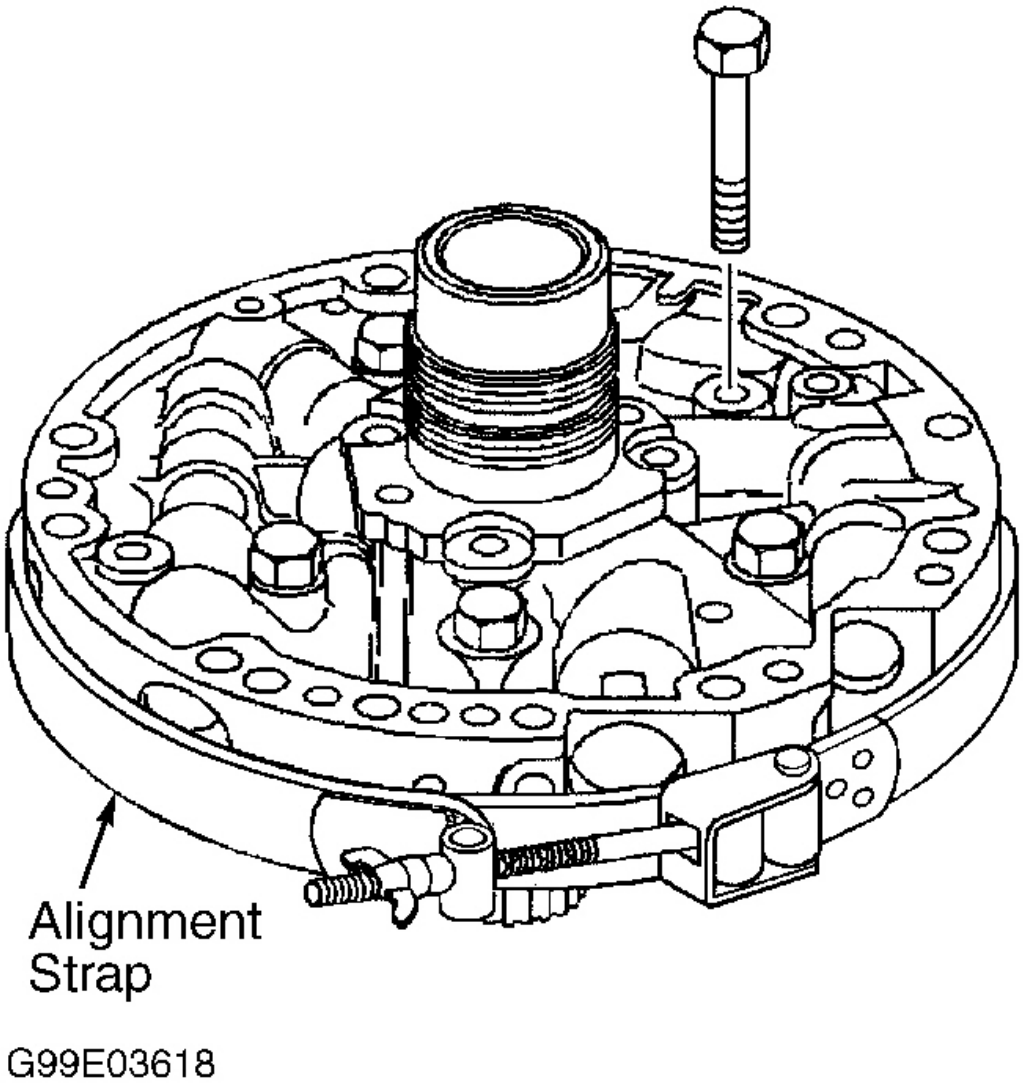

Fig. 38: Installation Of Oil Pump Strap
Courtesy of GENERAL MOTORS CORP.

cardiagn.com

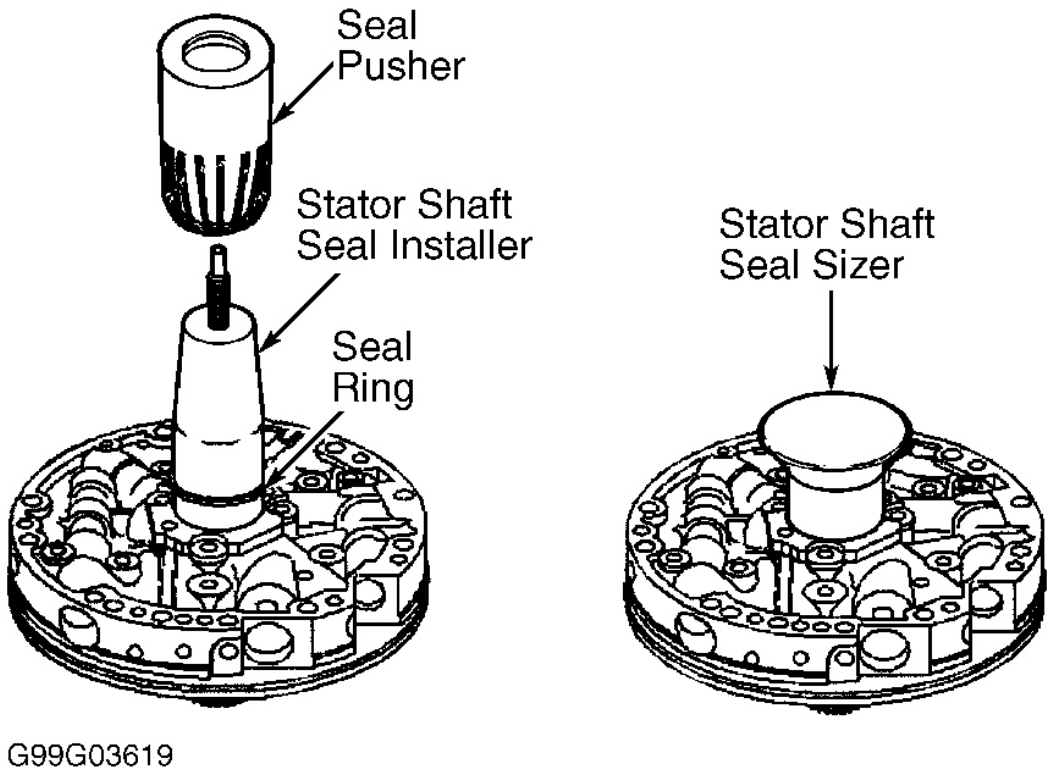

Fig. 39: Installing Oil Pump Stator Hub Seal Rings
Courtesy of GENERAL MOTORS CORP.

REVERSE INPUT CLUTCH & FORWARD CLUTCH

Disassembly

1. Remove the reverse input clutch housing and drum assembly from the input clutch assembly. Remove the stator/selective washer bearing assembly. Remove the selective thrust washer. Remove the 3rd and 4th clutch backing plate retainer ring. Remove all 3rd and 4th clutch plates. Remove the 3-4 clutch boost spring assemblies. See **Fig. 28** .

NOTE: **The 3rd and 4th clutch plate stack is different for 2.2L models. The M30 RPO 3-4 Clutch plate stack up is application specific. The stack up on a 2.2L S/T platform is 5 fiber plates, and 6 fiber plates on all other models. The M32 RPO (heavy-duty design) uses 7 fiber plates. These fiber plates are thinner thickness which can not be used in a M30 stack up. M32 fiber plates must**

cardiagn.com

not be used in a M30 design.

2. Remove the forward clutch backing plate retainer ring (651). Remove the forward clutch selective backing plate (650). Remove the forward clutch sprag assembly. See **Fig. 42** .
3. Remove all forward clutch plates (646, 648, 649A, 649B). Remove the input sun gear bearing assembly (637). Remove the input housing to output shaft seal (636). Remove all overrun clutch plates (645A, 645B). See **Fig. 41** .
4. Install the clutch spring compressor and adapter. Compress the overrun clutch spring using the clutch spring compressor and press. Remove the overrun clutch spring retainer snap ring (635). See **Fig. 40** .
5. Remove the overrun clutch spring assembly (634). Remove the overrun clutch piston (632). Remove the forward clutch piston (630). Remove the forward clutch housing (628). Remove the 3rd and 4th clutch spring assembly (626). Remove the 3rd and 4th clutch apply ring (625). Remove the 3rd and 4th clutch piston (623). See **Fig. 43** .

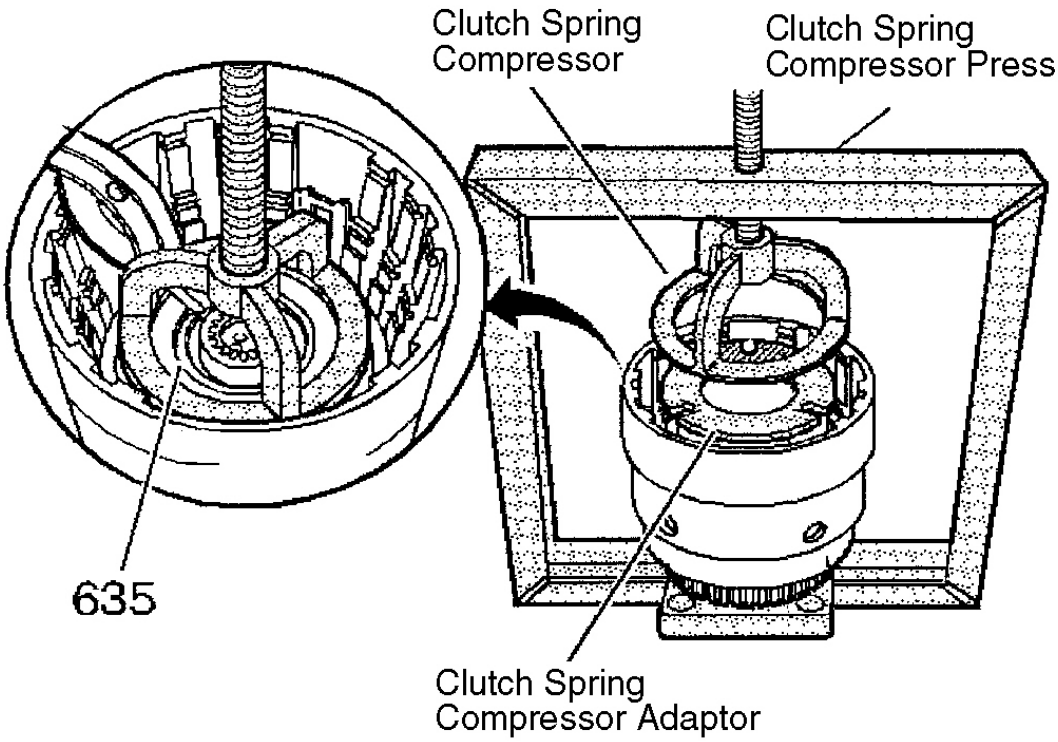

Fig. 40: Removing Overrun Clutch Spring & Snap Ring

cardiagn.com

Courtesy of GENERAL MOTORS CORP.

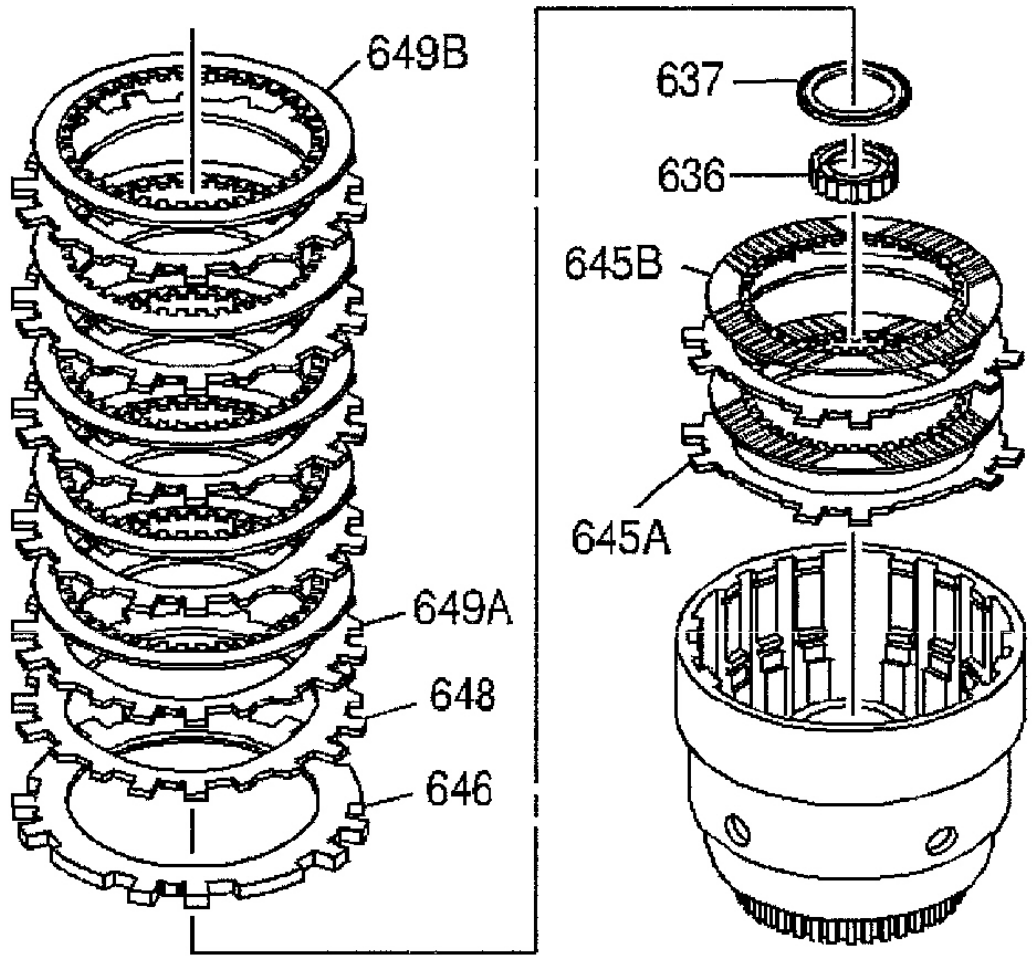

Fig. 41: Removing Forward And Overrun Clutch Plates
Courtesy of GENERAL MOTORS CORP.

cardiagn.com

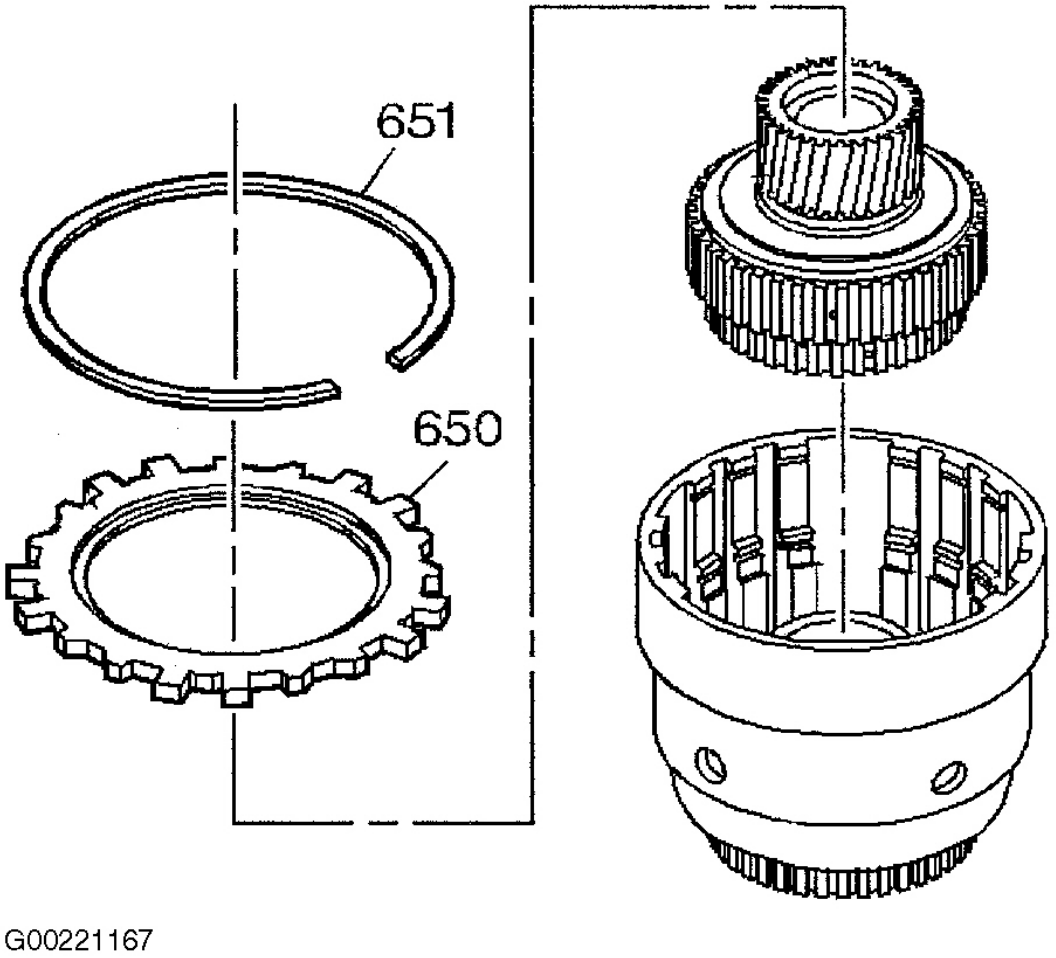

Fig. 42: Removing Forward Clutch Sprag Assembly
Courtesy of GENERAL MOTORS CORP.

cardiagn.com

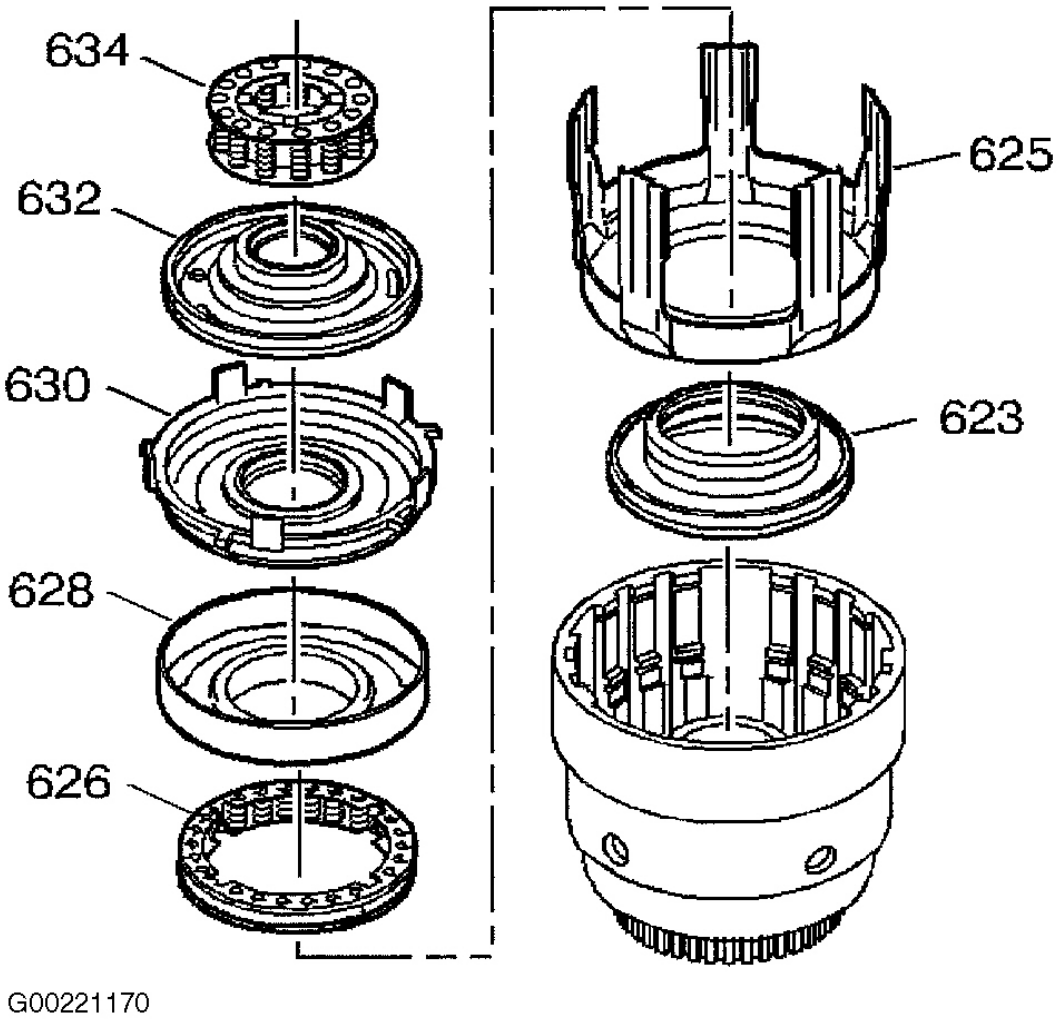

Fig. 43: Removing 3rd, 4th, Forward And Overrun Clutch Assemblies
Courtesy of GENERAL MOTORS CORP.

Reassembly

1. Place input clutch housing with turbine shaft downward. Install 3-4 piston seals with lips facing away from hub. Install 3-4 piston in input housing.
2. Install 3-4 clutch apply ring. Install "O" ring seal in input clutch housing. Install forward clutch housing. Install seals on forward clutch piston with lips facing away from tangs.
3. Install forward clutch piston in forward clutch housing. Install 3-4 spring on 3-4 clutch apply ring. Install forward clutch assembly on 3-4 spring assembly. Align forward clutch piston legs with tangs of 3-4 apply ring. Install Seal Protector (J-29883) on input housing.

cardiagn.com

4. Install 3-4 apply ring and forward clutch assembly in input clutch housing. Hold apply ring tangs while installing. DO NOT allow forward clutch piston to separate from assembly. Ensure assembly is firmly seated.
5. Install Seal Protector (J-29883) on input housing. Install overrun clutch piston with hub facing upward. If fully seated, overrun piston should be 3/16" below top of snap ring groove in input housing hub. Install spring assembly on overrun clutch piston. Compress springs, and install snap ring. Install input housing seal.

NOTE: Soak clutch plates in ATF before installation. Coat all seals and "O" rings with ATF. Coat thrust washers and bearings with petroleum jelly.

6. Install 4 overrun clutch plates, starting with steel plate. Align wide notches with case lugs. Install remaining clutch plates, alternating steel and composition plates.
7. Install bearing assembly on input clutch hub. Bearing inner race must face input housing hub. Ensure bearing is centered. Align clutch plate tabs. Install forward clutch sprag assembly in input housing. Align overrun clutch hub with clutch plates.
8. Install forward clutch apply plate in input housing. Install forward clutch waved plate. Ensure all plates are aligned with input housing tangs. Starting with steel plate, install clutch plates, alternating steel and composition plates. Install backing plate and snap ring. See **Fig. 44** .
9. Using 2 feeler gauges, measure clearance between backing plate and snap ring. See **Fig. 45** . Ensure clearance is as specified. See **FORWARD CLUTCH CLEARANCE SPECIFICATIONS** table. If clearance is not as specified, install proper size backing plate with chamfered side upward. See **FORWARD CLUTCH BACKING PLATE SPECIFICATIONS** table. Install snap ring.

FORWARD CLUTCH CLEARANCE SPECIFICATIONS

Application	Clearance - In. (mm)
9.650" (245 mm) Converter	.030-.069 (.76-1.75)
258 mm Converter	(1)
298 mm Converter	.034-.074 (.86-1.88)
300 mm Converter	.034-.074 (.86-1.88)
(1) Specification is not available from manufacturer.	

FORWARD CLUTCH BACKING PLATE SPECIFICATIONS

cardiagn.com

Identification	Thickness - In. (mm)
A	.274-.278 (6.96-7.06)
B	.250-.255 (6.35-6.48)
C	.227-.232 (5.77-5.89)
D	.205-.208 (5.21-5.28)
E	.180-.185 (4.57-4.70)

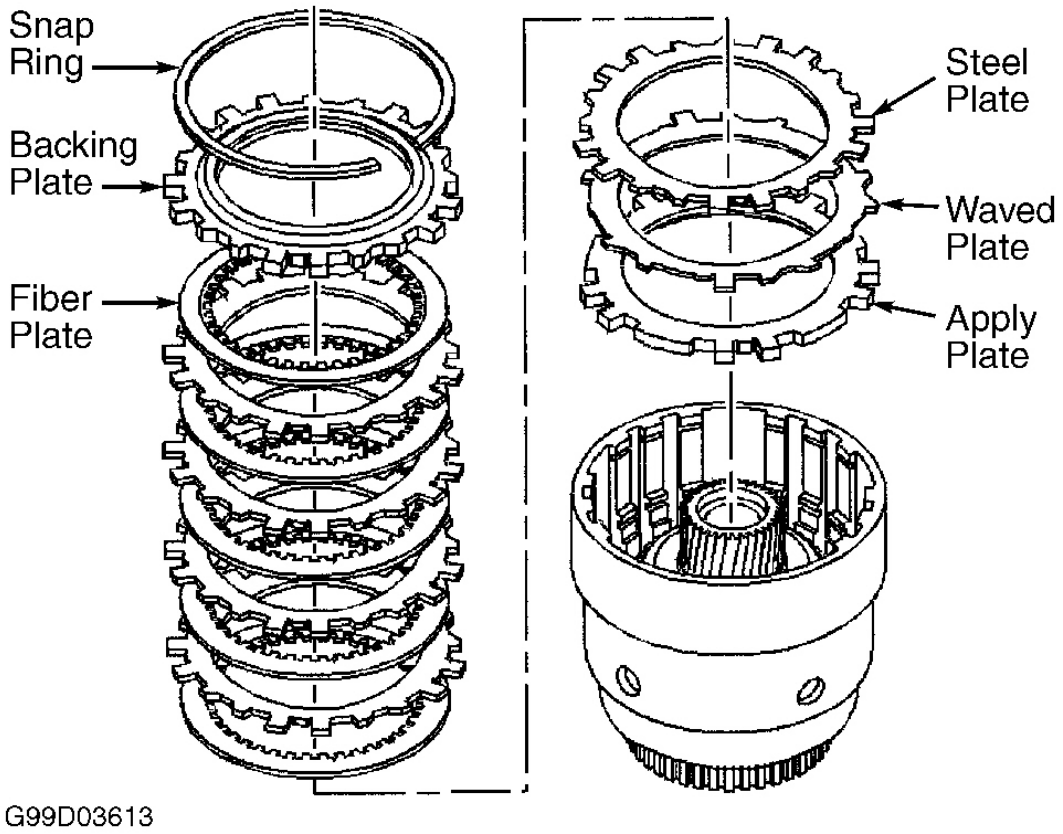

Fig. 44: Installing Forward Clutch Assembly Components
Courtesy of GENERAL MOTORS CORP.

cardiagn.com

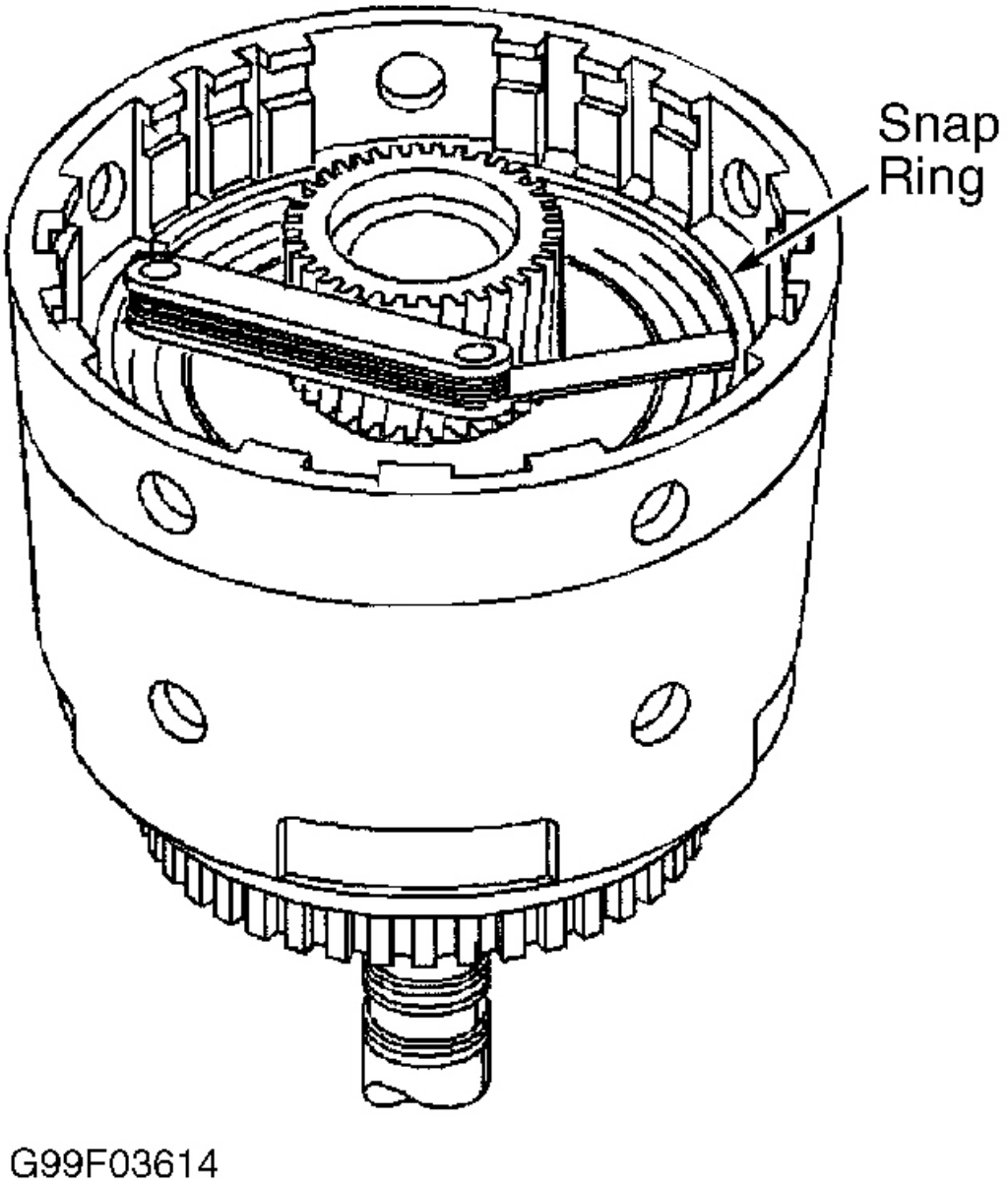

Fig. 45: Measuring Forward Clutch Pack Clearance
Courtesy of GENERAL MOTORS CORP.

NOTE: **Vehicles equipped with 2.2L engines use an additional thin steel plate between apply plate and fiber plate.**

cardiagn.com

10. Install apply plate and 3-4 clutch plates. See **Fig. 46** . Install 3-4 clutch booster spring assemblies. See **Fig. 47** . Install backing plate with chamfered side upward. Install retaining snap ring. Using feeler gauge, measure clearance between backing plate and first composition plate. See **Fig. 48** . Clearance should be .035-.083" (.89-2.11 mm).
11. If clearance is not as specified, select proper backing plate to obtain correct clearance. See **3-4 BACKING PLATE SPECIFICATIONS** table. Air check all clutches at feed holes in turbine shaft. See **Fig. 49** .
12. During overrun clutch test, air pressure will blow past forward clutch piston seals and exit out forward clutch feed hole in turbine shaft. Turbine shaft seals require sizing and should be installed before oil pump installation. Position Seal Installer (J-36418-1B) on input shaft. See **Fig. 50** . Adjustment screw in seal installer must be adjusted to obtain correct height for each seal installation. Install 4 turbine shaft seals.

3-4 BACKING PLATE SPECIFICATIONS

Identification	Thickness - In. (mm)
A	.224-.231 (5.69-5.87)
B	.187-.196 (4.75-4.98)
C	.154-.161 (3.91-4.09)

cardiagn.com

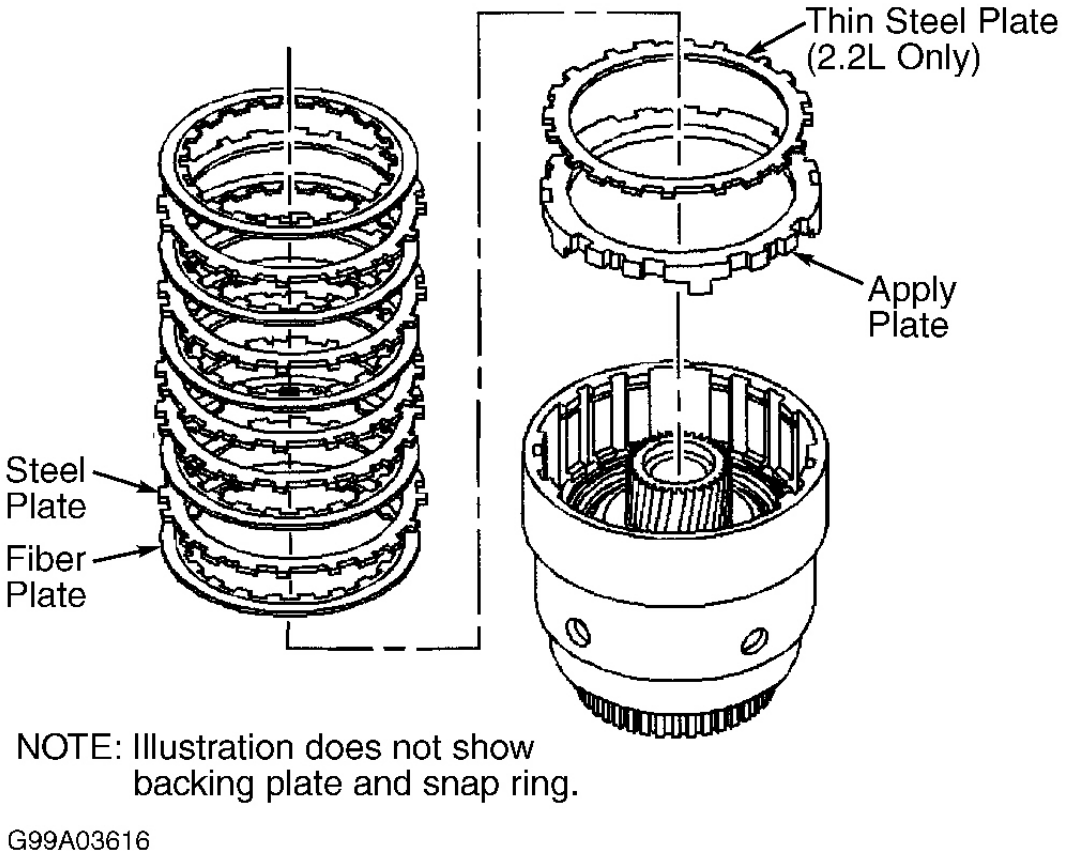

Fig. 46: Installing 3-4 Clutch Assembly Components
Courtesy of GENERAL MOTORS CORP.

cardiagn.com

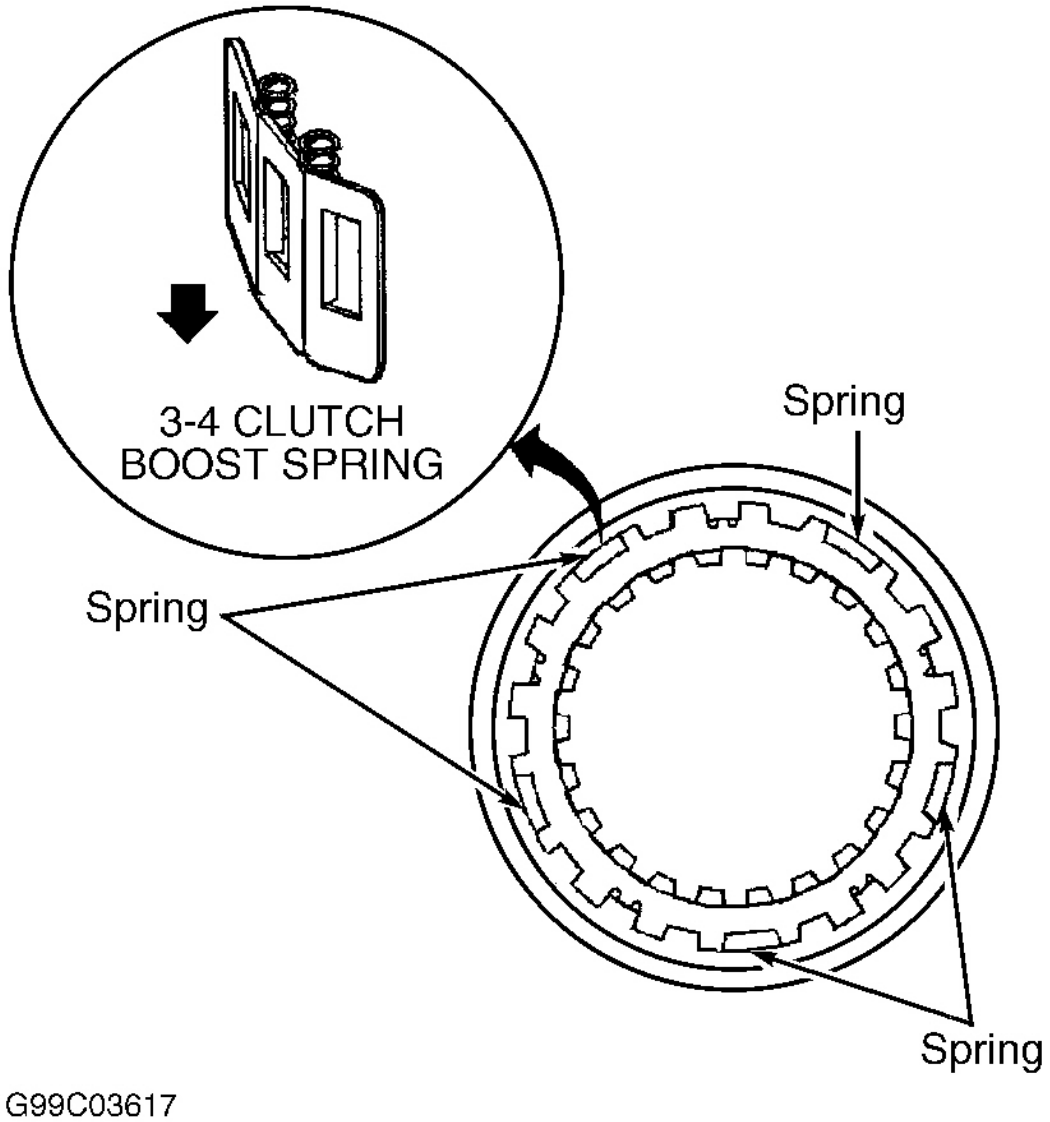

Fig. 47: Locating 3-4 Clutch Booster Springs
Courtesy of GENERAL MOTORS CORP.

cardiagn.com

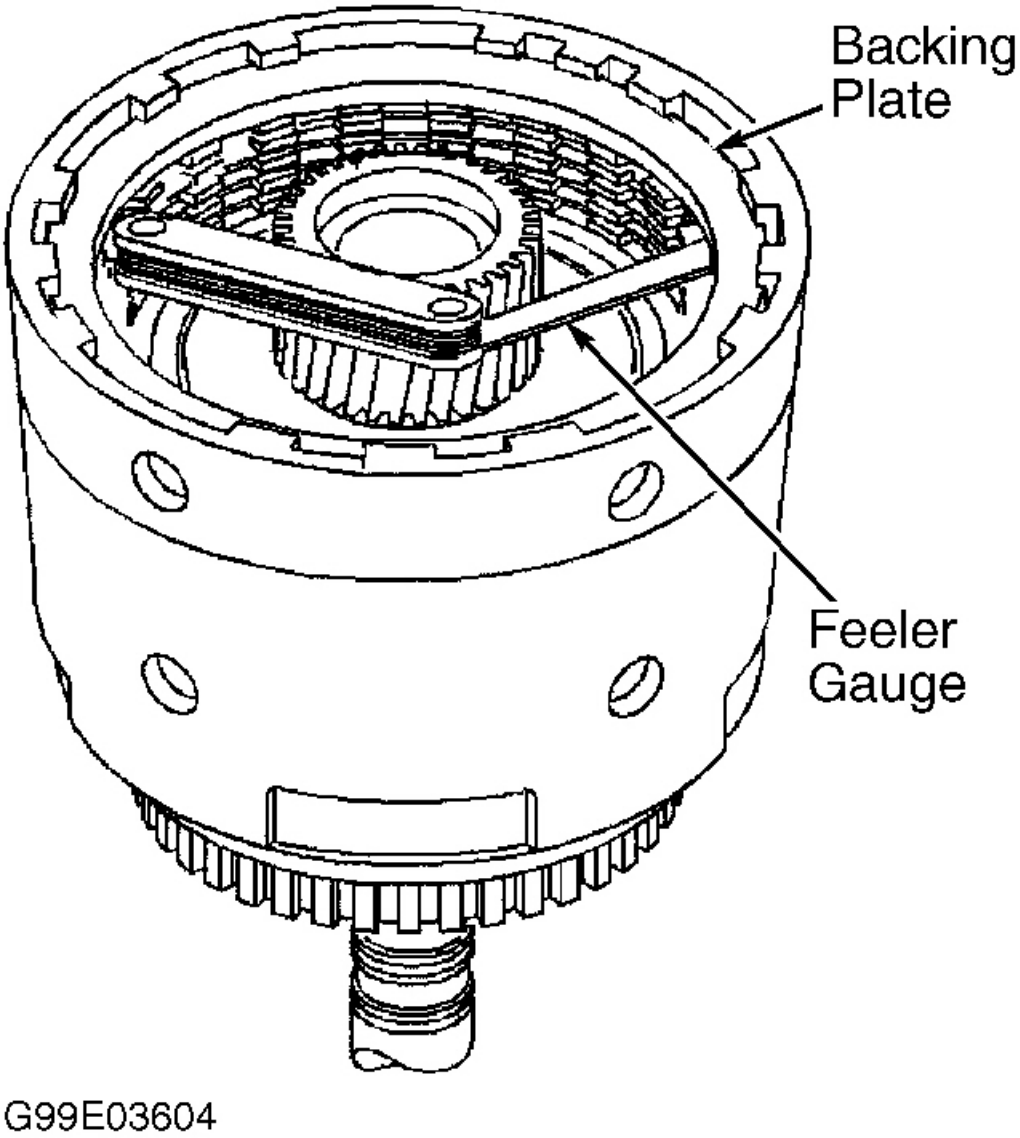

Fig. 48: Measuring 3-4 Clutch Pack Clearance
Courtesy of GENERAL MOTORS CORP.

cardiagn.com

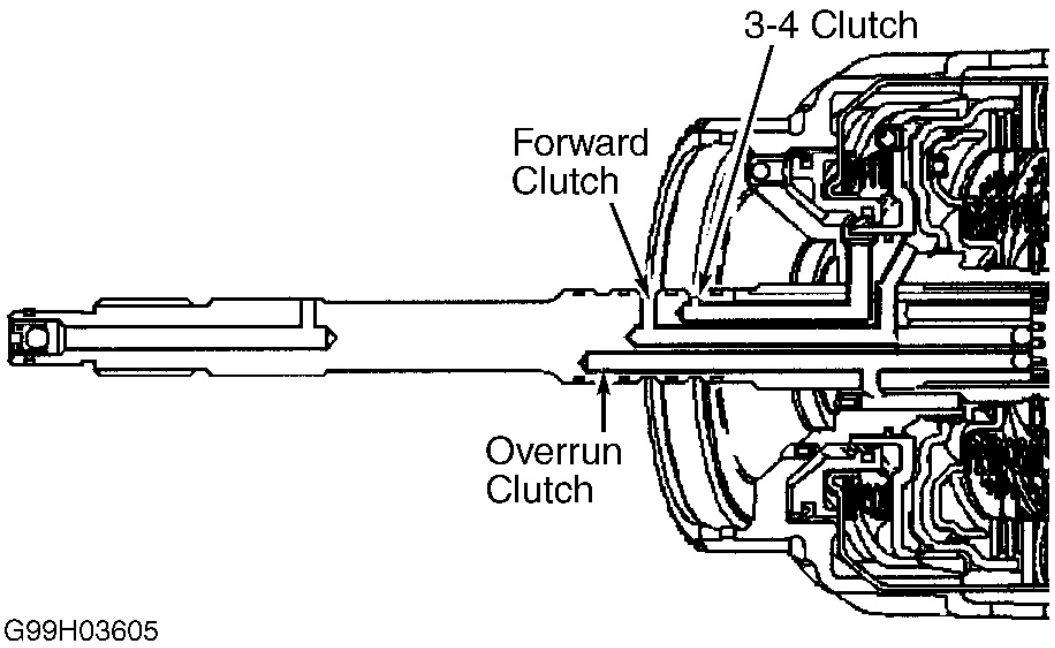

Fig. 49: Air Checking Input Clutch Assembly
Courtesy of GENERAL MOTORS CORP.

cardiagn.com

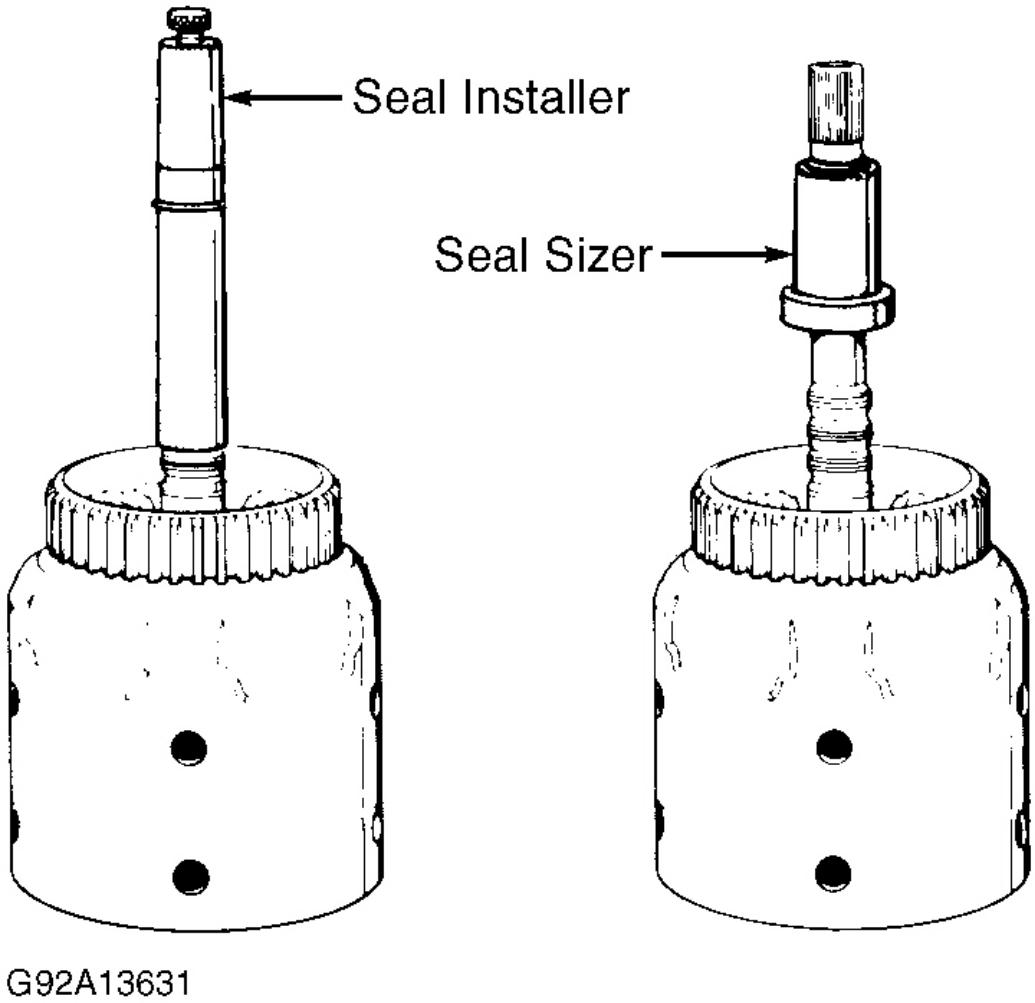

Fig. 50: Installing & Sizing Turbine Shaft Seals
Courtesy of GENERAL MOTORS CORP.

FORWARD CLUTCH SPRAG

Disassembly

1. Remove the overrun clutch hub retaining snap ring (638). Remove the overrun clutch hub (639). Remove the forward sprag clutch inner race and input sun gear assembly (640). See **Fig. 51** .
2. Remove the sprag assembly retainer rings (643). See **Fig. 52** .

cardiagn.com

Inspection

1. Inspect sprag assembly for weak or damaged springs and retainers and worn rollers. Inspect overrun clutch hub for spline damage, excessive wear and open oil passages. Inspect retainer and race for spline damage, surface wear and damaged ring grooves.
2. Replace sprag assembly if damaged. Inspect forward clutch race for spline damage, excessive wear and open oil passages. Inspect input shaft and housing for spline damage, wear and open oil passages.
3. Inspect 3 sealing check balls located in rear of turbine shaft for tightness. Turbine shaft contains one open lubrication hole. Ensure orifice cup plug is installed. Inspect turbine shaft seal areas for roughness and burrs.
4. Inspect check ball located in input housing for free operation. Inspect pistons for wear, damage and porosity. Inspect spring assemblies for damage and distortion.
5. Inspect steel and composition plates for damage. Inspect snap rings for distortion and damage. Check backing plates for flatness and distortion. Inspect clutch apply rings for distortion and damaged tangs.
6. Inspect forward clutch housing check ball for proper operation (if equipped). Inspect housing for cracks and damage in seal areas. Inspect bearings for excessive wear, flatness, damage and flat rollers.

Reassembly

1. Install the forward sprag assembly (642) into the forward clutch outer race (644). See **Fig. 53** .
2. Install the sprag assembly retainer rings (643) into the forward clutch sprag assembly (644). See **Fig. 54** .
3. Install the forward sprag clutch inner race and input sun gear assembly (640) into the forward sprag and outer race assembly. See **Fig. 55** .
4. Install the overrun clutch hub (639) onto the sprag clutch inner race and input sun gear assembly (640). Install the overrun clutch hub retaining snap ring (638). See **Fig. 56** .

NOTE: **If the forward clutch sprag assembly operates backwards, you have installed the sprag backwards. Reassemble the sprag correctly. Test the forward clutch sprag assembly for proper operation. Position the forward clutch sprag assembly with the input sun gear facing up. See Fig. 57 .**

5. Important The sun gear should only rotate in a counterclockwise direction. Hold the forward sprag clutch outer race with one hand and rotate the input sun gear with the other

cardiagn.com

hand. Install the forward clutch sprag and input sun gear assembly into the input clutch housing. Index the overrun clutch hub into the overrun clutch plates. See **Fig. 58** .

cardiagn.com

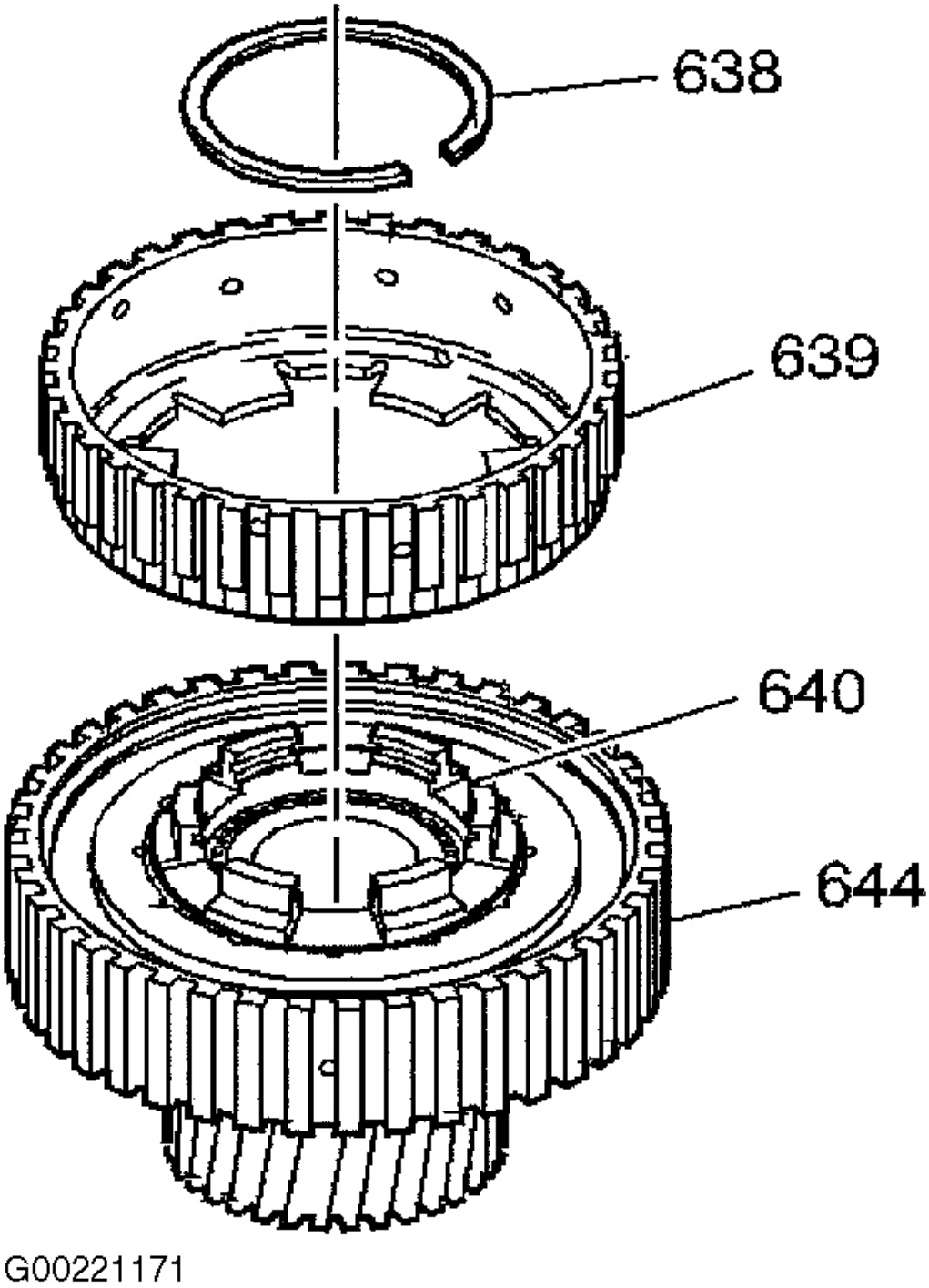

Fig. 51: Disassembly Of Forward Clutch Sprag (1)

cardiagn.com

Courtesy of GENERAL MOTORS CORP.

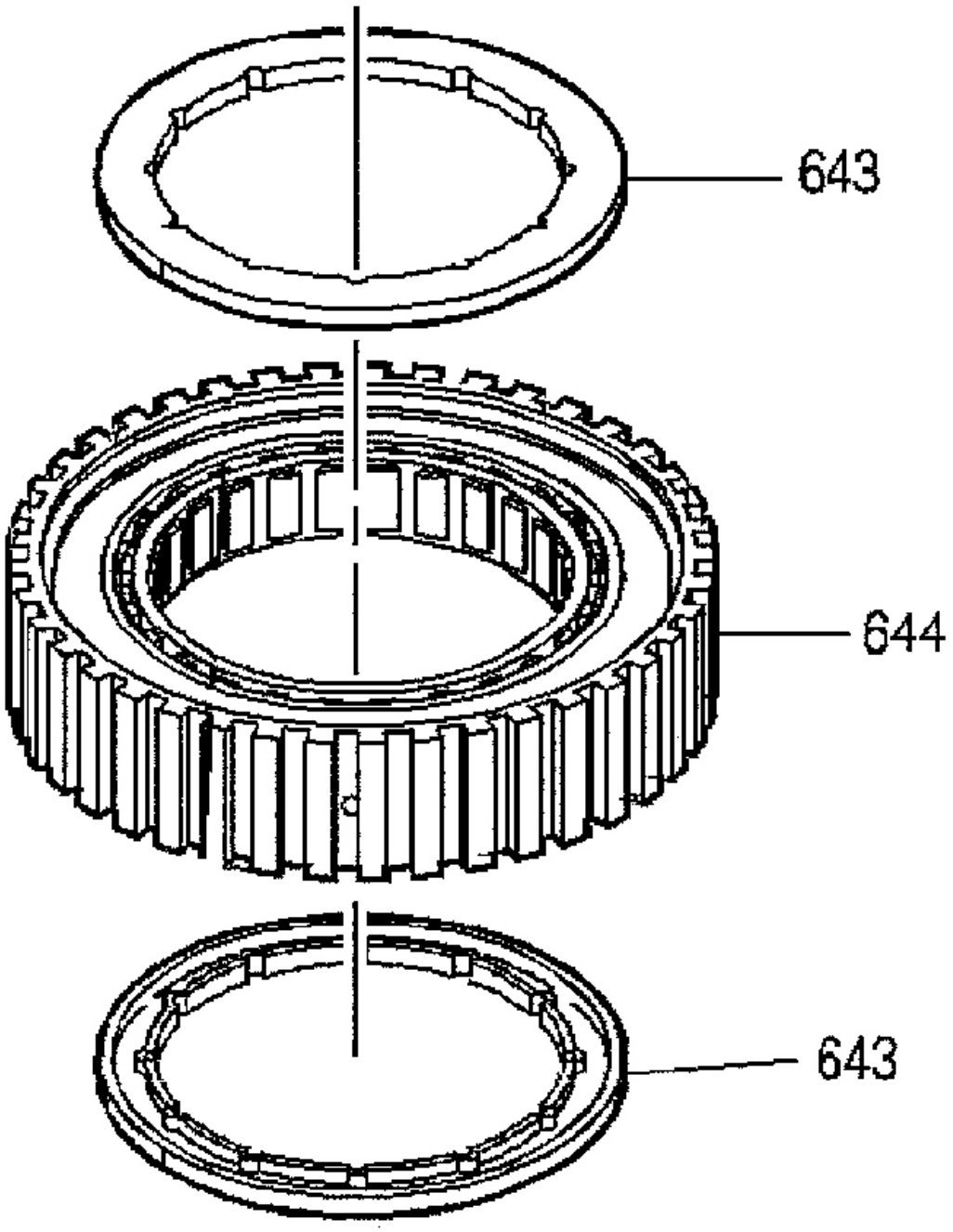

G00221172

cardiagn.com

Fig. 52: Disassembly Of Forward Clutch Sprag (2)
Courtesy of GENERAL MOTORS CORP.

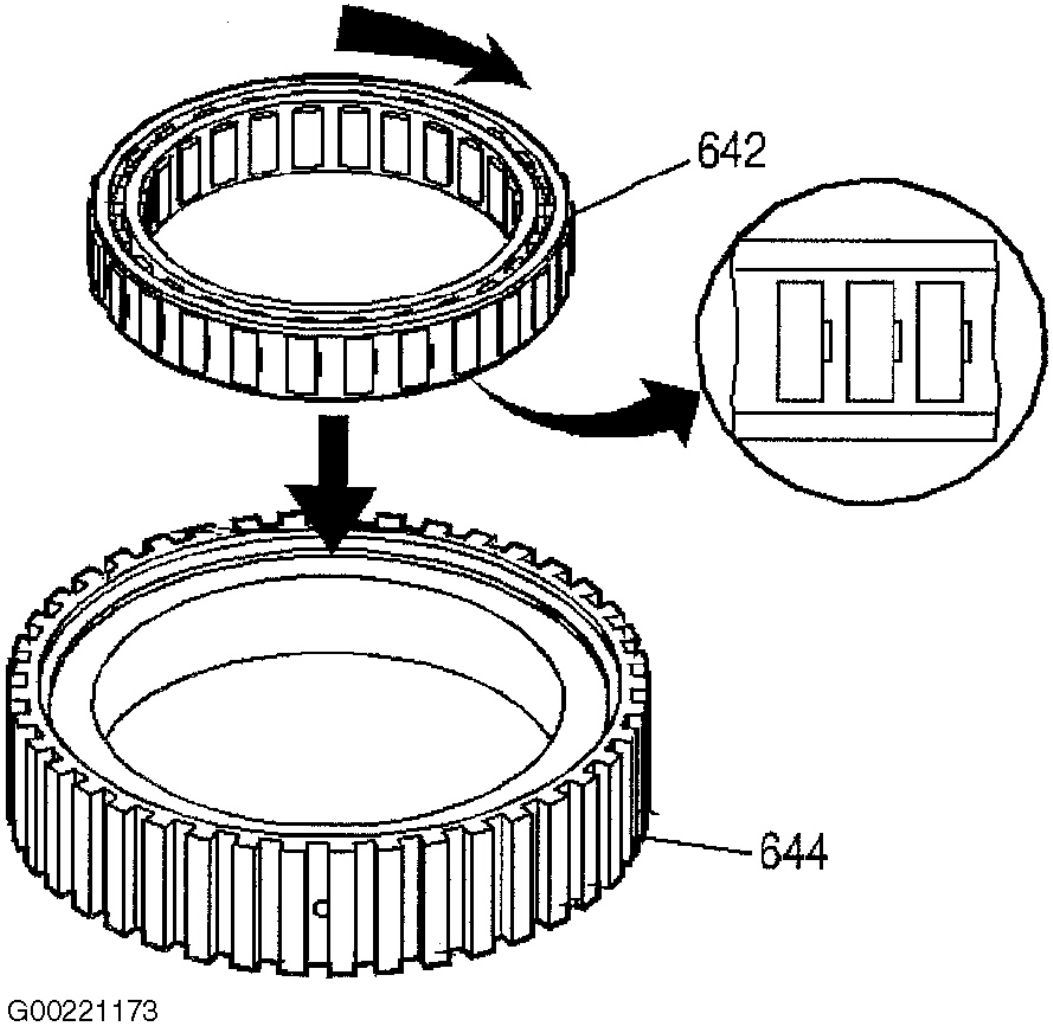

Fig. 53: Installing Forward Sprag Assembly
Courtesy of GENERAL MOTORS CORP.

cardiagn.com

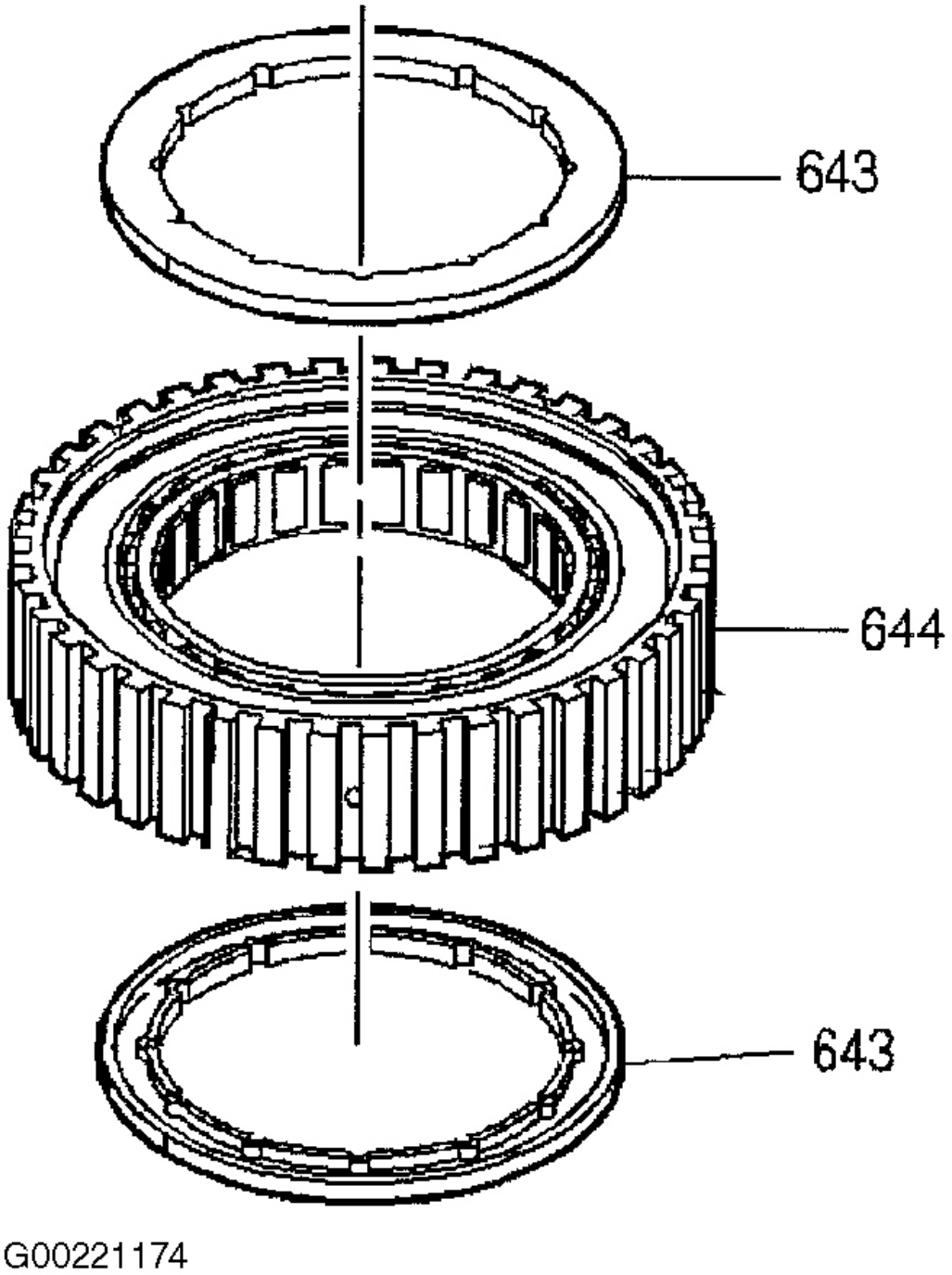

Fig. 54: Installing Sprag Assembly Retainer Ring
Courtesy of GENERAL MOTORS CORP.

cardiagn.com

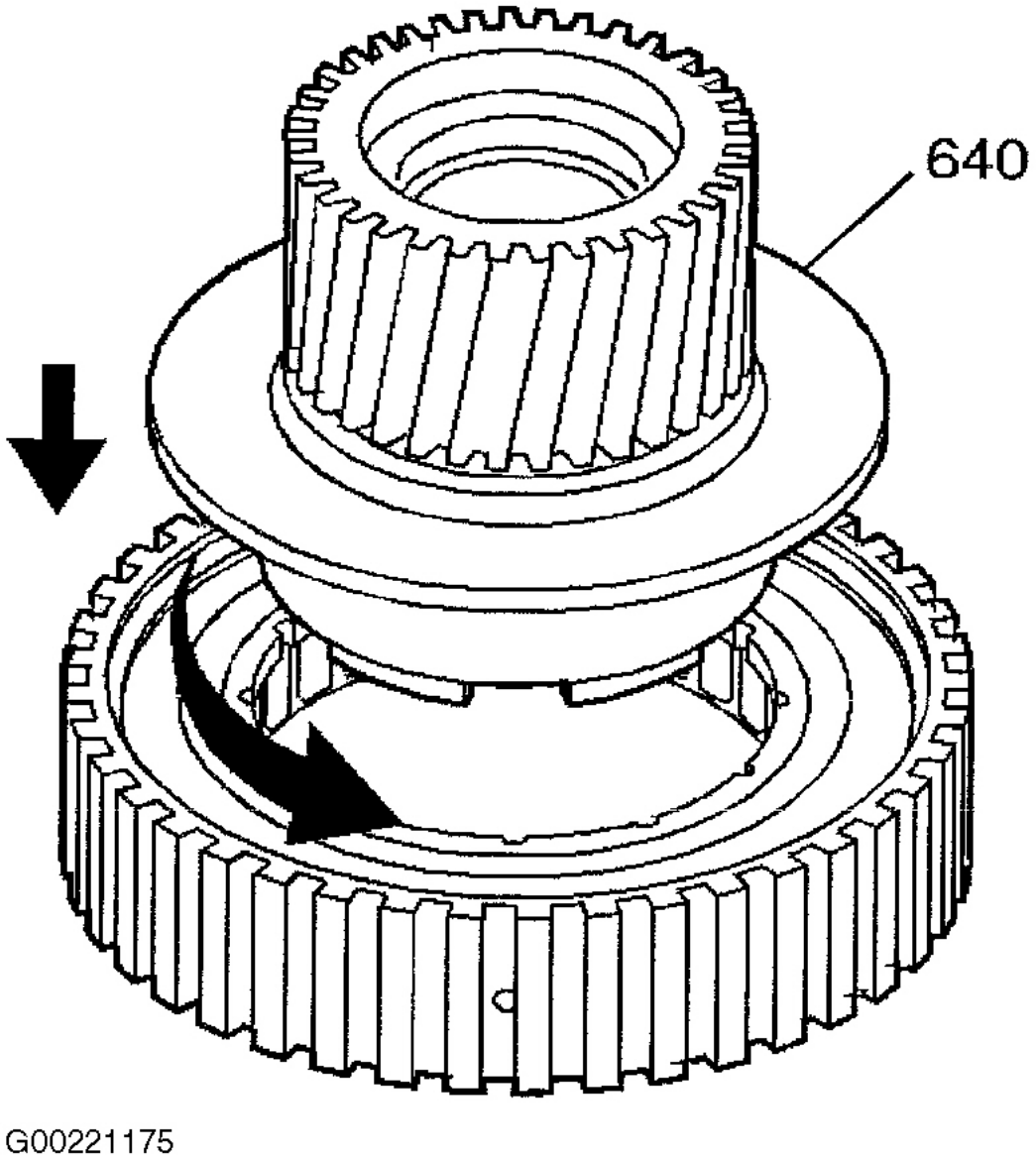

Fig. 55: Installing Inner Race & Input Sun Gear Assembly
Courtesy of GENERAL MOTORS CORP.

cardiagn.com

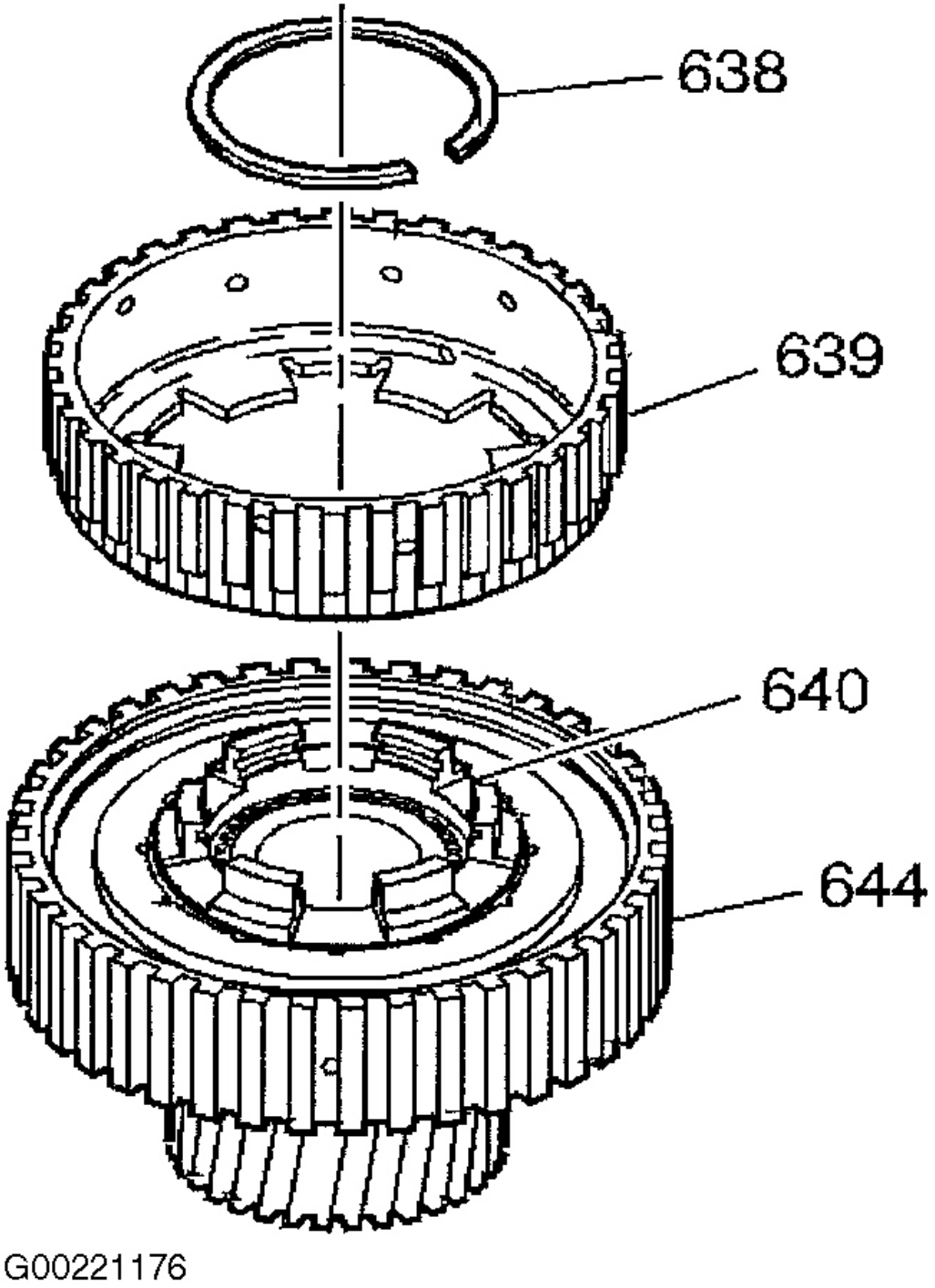

Fig. 56: Installing Overrun Clutch Hub & Retaining Snap Ring Assembly

cardiagn.com

Courtesy of GENERAL MOTORS CORP.

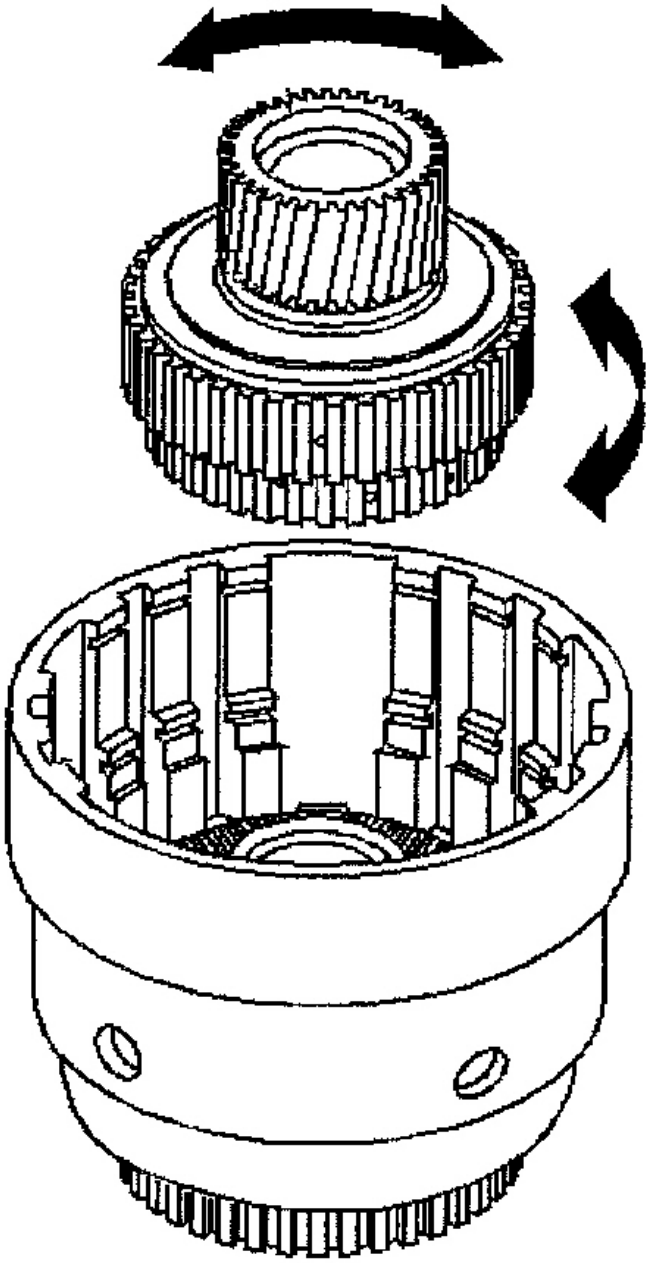

Fig. 57: Installing Forward Sprag Assembly Into Housing
Courtesy of GENERAL MOTORS CORP.

cardiagn.com

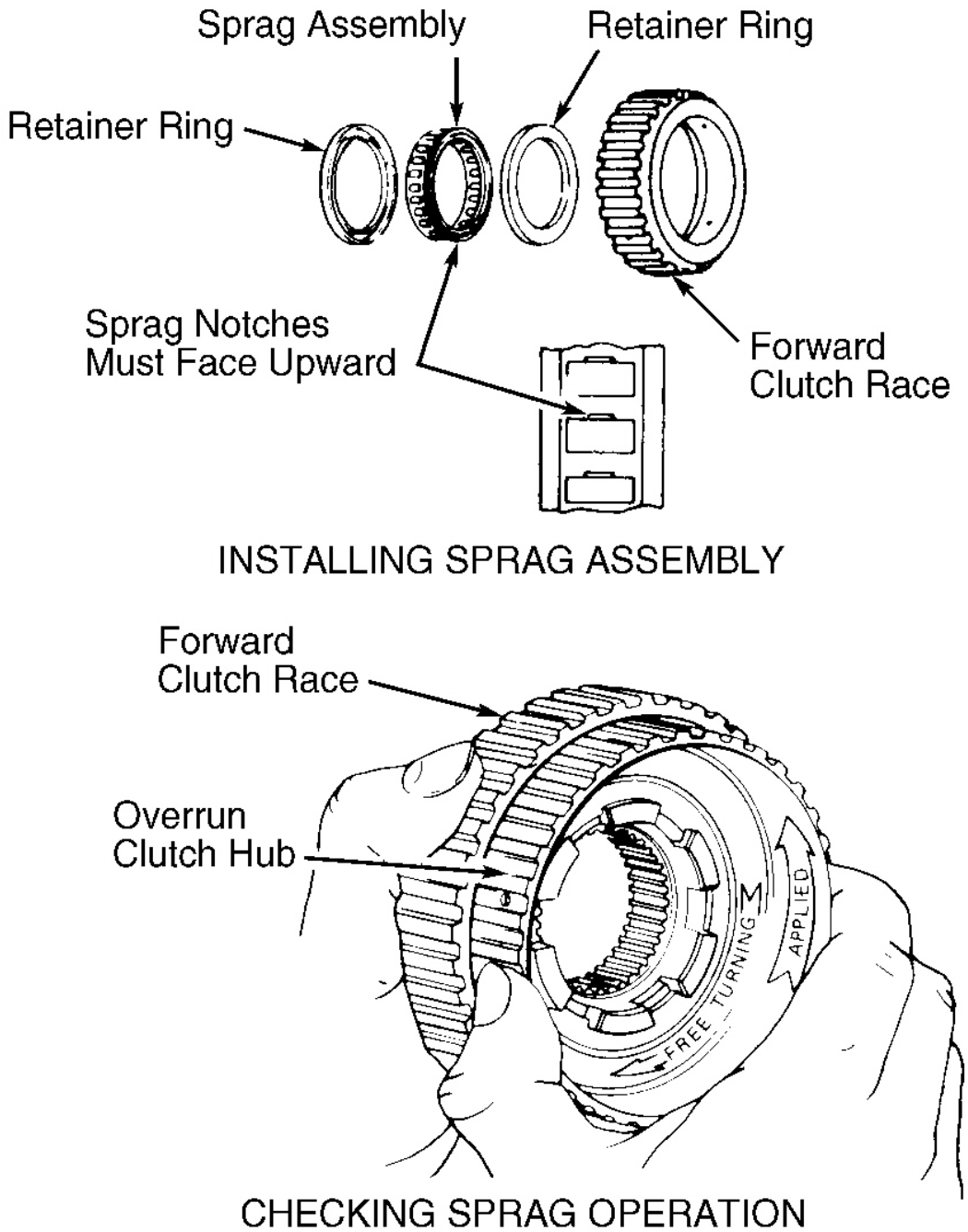

Fig. 58: Installing & Checking Forward Clutch Sprag Assembly
Courtesy of GENERAL MOTORS CORP.

cardiagn.com

LOW-REVERSE SUPPORT

CAUTION: Note direction roller clutch is installed in support. Roller clutch must be installed in proper direction to provide lockup of inner race when rotated.

Disassembly & Inspection

Remove inner race and snap ring. Remove roller clutch assembly. Check inner race for damage and surface finish. See **Fig. 59** . Inspect roller and springs for damage and distortion. Inspect support for loose cam, cracks and damaged surface finish. Replace damaged parts as necessary.

Reassembly

1. Install roller clutch assembly in low-reverse support. See **Fig. 59** . Place support in case with hub facing downward. Install inner race. Rotate inner race while pushing downward. Use care not to damage roller and springs during installation.
2. Ensure inner race is fully seated. Bottom tangs will be flush with carrier hub when fully seated. Inner race should rotate clockwise and lock counterclockwise with clutch hub downward. Insert support retainer spring into case between case lug and open notch in support.

cardiagn.com

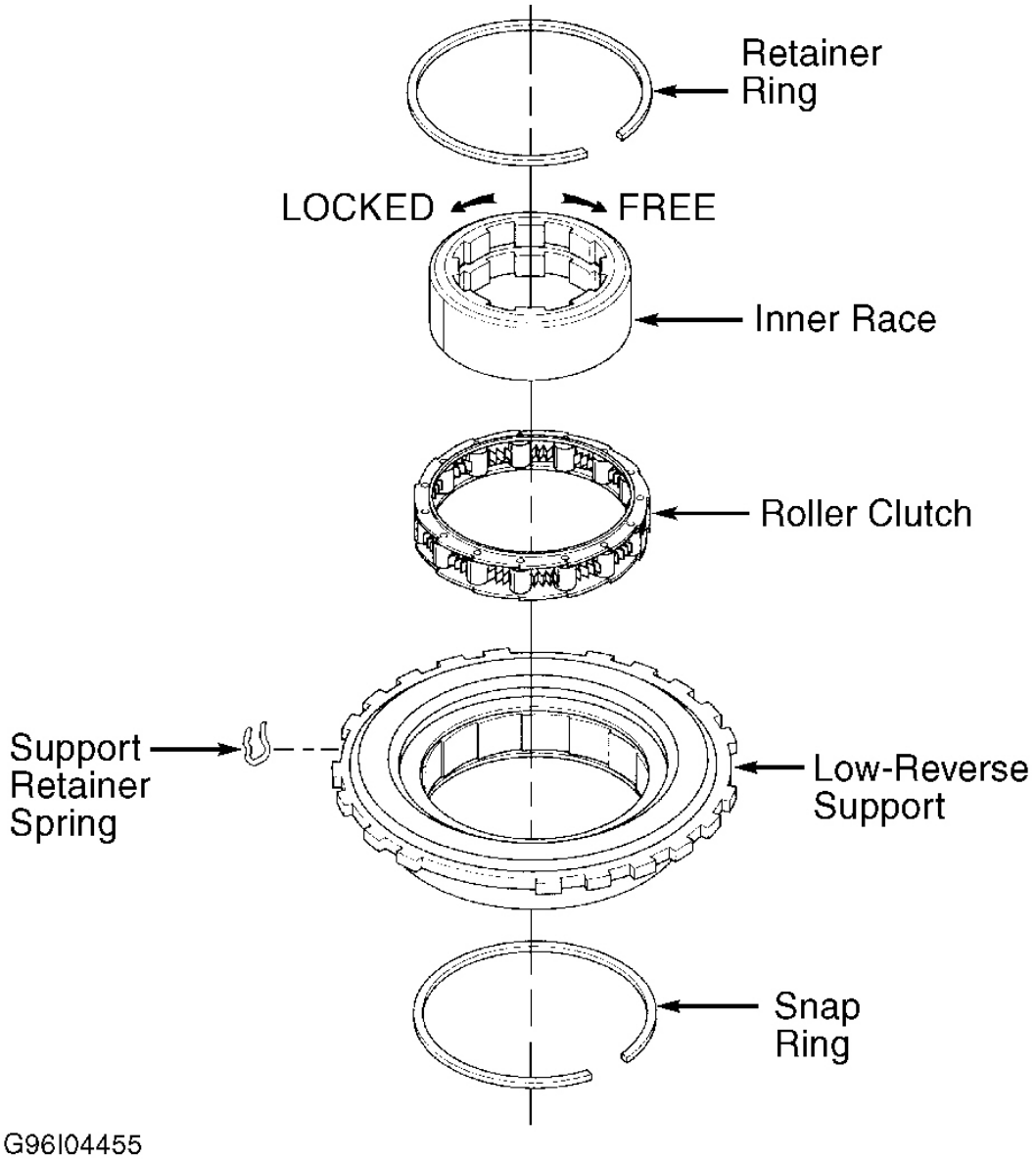

Fig. 59: Exploded View Of Low-Reverse Clutch Assembly
Courtesy of GENERAL MOTORS CORP.

2-4 SERVO ASSEMBLY

Disassembly

1. Remove 4th apply piston and housing from 2nd apply piston assembly. Remove return spring from apply pin. Install Piston Compressor (J-22269-01) on 2nd apply piston. See

cardiagn.com

Fig. 61 .

2. Compress 2nd servo apply piston assembly. Remove retainer ring. Separate 2nd apply piston, spring and retainer. Remove retainer ring, washer and spring from apply pin, and remove pin. Remove all oil seal rings. See **Fig. 60** .

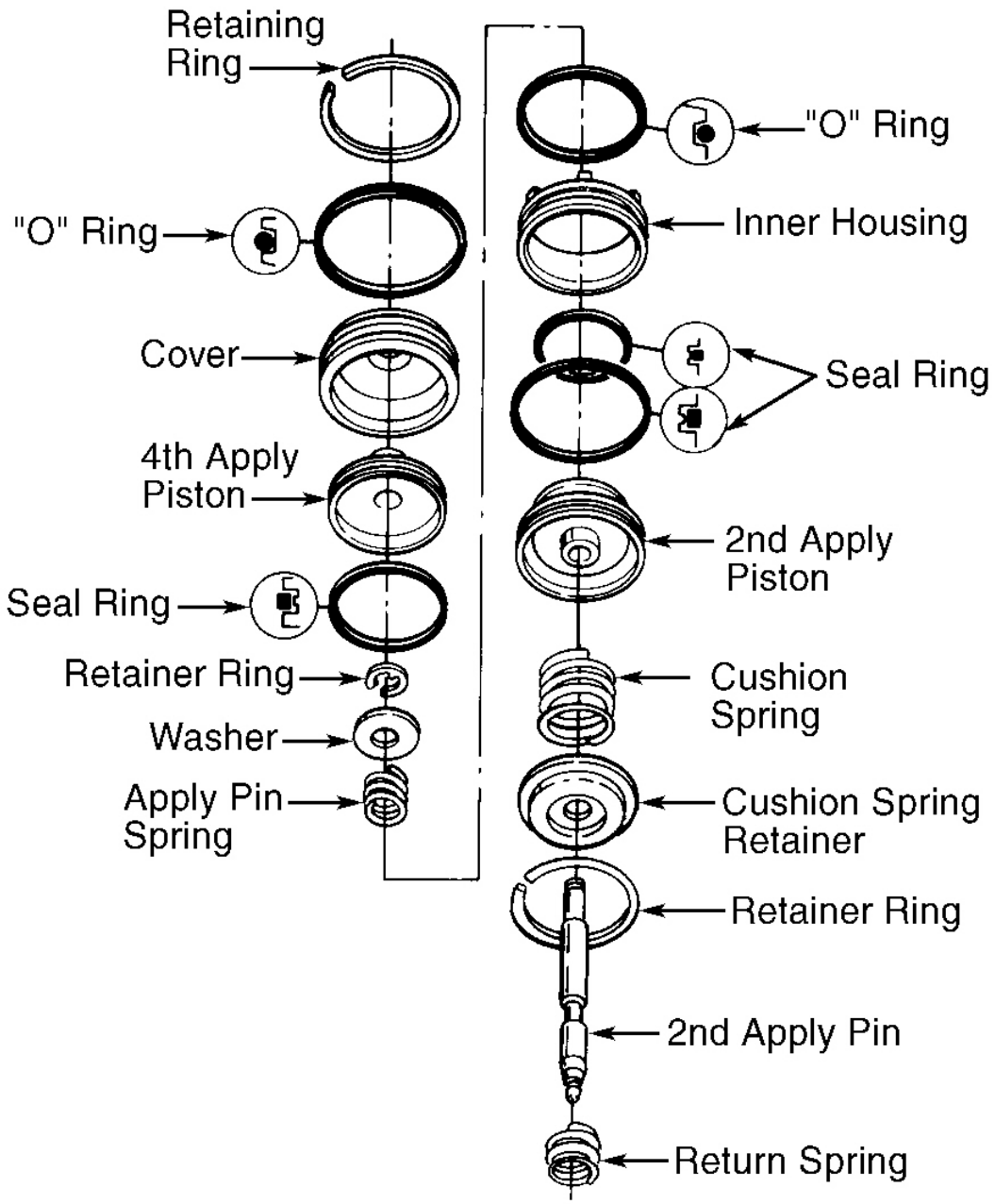

G96E04444

cardiagn.com

Fig. 60: Exploded View Of 2-4 Servo Assembly
Courtesy of GENERAL MOTORS CORP.

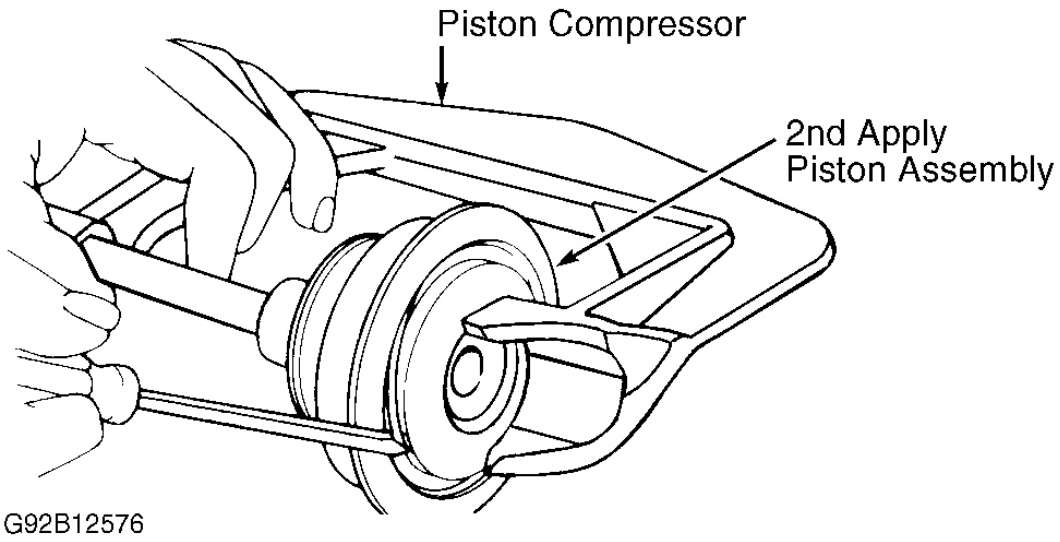

Fig. 61: Compressing 2nd Apply Piston
Courtesy of GENERAL MOTORS CORP.

Inspection

Inspect all pistons for porosity and damage. Check for ring groove damage and servo bore in case for any wear which may cut servo seals. Check all springs and oil seal rings for distortion and damage.

Reassembly

Different servo piston housings and 2nd apply pistons are used for different applications. If servo piston housing or 2nd apply piston is replaced, inside dimension of parts must be checked. Measure inside diameter of piston housing and 2nd apply piston. Dimension must be same as original. To reassemble, reverse disassembly procedure. Coat seals with petroleum jelly before assembly.

VALVE BODY

CAUTION: Valve springs can be tightly compressed. Use care when removing retainers and plugs. Personal injury could result.

cardiagn.com

Disassembly

1. Remove the manual valve (340). See **Fig. 62** .
2. Remove the forward accumulator cover bolts (364) and the forward accumulator cover (363). Remove the forward accumulator spring (356), forward accumulator piston (354), and the forward accumulator pin (355). Remove the low overrun valve spring (362) and the low overrun valve (361). Remove the coiled spring pin (360) and the bore plug (359). Remove the forward abuse valve spring (358) and the forward abuse valve (357). See **Fig. 63** .
3. Remove the solenoid retainer (395) and the 1-2 shift solenoid (367A). Remove the 1-2 shift valve (366) and the 1-2 shift valve spring (365). See **Fig. 64** .
4. Remove the solenoid retainer (395) and the 2-3 shift solenoid (367B). Remove the 2-3 shuttle valve (369) and the 2-3 shift valve (368). See **Fig. 65** .
5. Remove the coiled spring pin (360). Remove the 1-2 accumulator valve sleeve (372). Remove the 1-2 accumulator valve (371) and the 1-2 accumulator valve spring (370). See **Fig. 66** .
6. Remove the solenoid retainer bolt (364A) and the solenoid retainer (378). Remove the pressure control solenoid (377). Compress the actuator feed limit valve spring (375). Remove the bore plug retainer (395) and release the spring slowly. Remove the bore plug (376). Remove the actuator feed limit valve spring (375) and the actuator feed limit valve (374). See **Fig. 67** .
7. Remove the solenoid retainer (395) and the 3-2 control solenoid (394). Remove the 3-2 control valve (391) and the 3-2 control valve spring (392). See **Fig. 68** .
8. Remove the bore plug retainer (395) and the bore plug (381). Remove the 3-2 downshift valve spring (390) and the 3-2 downshift valve (389). Remove the coiled spring pin (360) and the bore plug (359). Remove the reverse abuse valve spring (388) and the reverse abuse valve (387). See **Fig. 69** .
9. Remove the bore plug retainer (395) and the bore plug (381). Remove the 3-4 shift valve spring (386) and the 3-4 shift valve (385). See **Fig. 70** .
10. Remove the bore plug retainer (395) and the bore plug (381). Remove the regulator apply valve (380) and the regulator apply spring (397) and the isolator valve (398). See **Fig. 71** .
11. Remove the bore plug retainer (395) and the bore plug (381). Remove the 3-4 relay valve (384) and the 4-3 sequence valve (383) and the 4-3 sequence valve spring (382). See **Fig. 72** .

Inspection

Inspect valves and sleeves for scoring and cracks. Ensure valves move freely in bores. Inspect

cardiagn.com

valve body for cracks and scored bores. Inspect machined surfaces for damage. Inspect springs for damaged coils. Replace damaged parts as necessary.

Reassembly

NOTE: Lubricate all parts with Dexron(R)-III automatic transmission fluid before installation.

NOTE: For Reassembly procedures, reverse the disassembly of the valve body in this section. See VALVE BODY

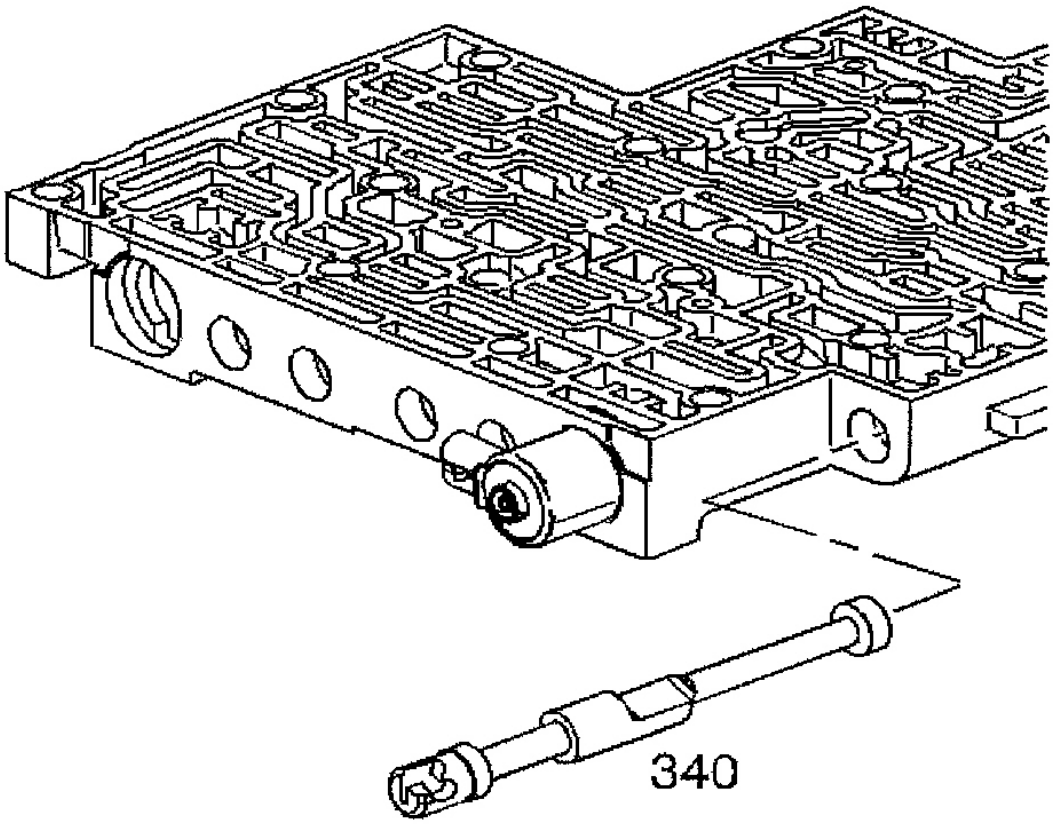

Fig. 62: Removing/Installing Manual Valve
Courtesy of GENERAL MOTORS CORP.

cardiagn.com

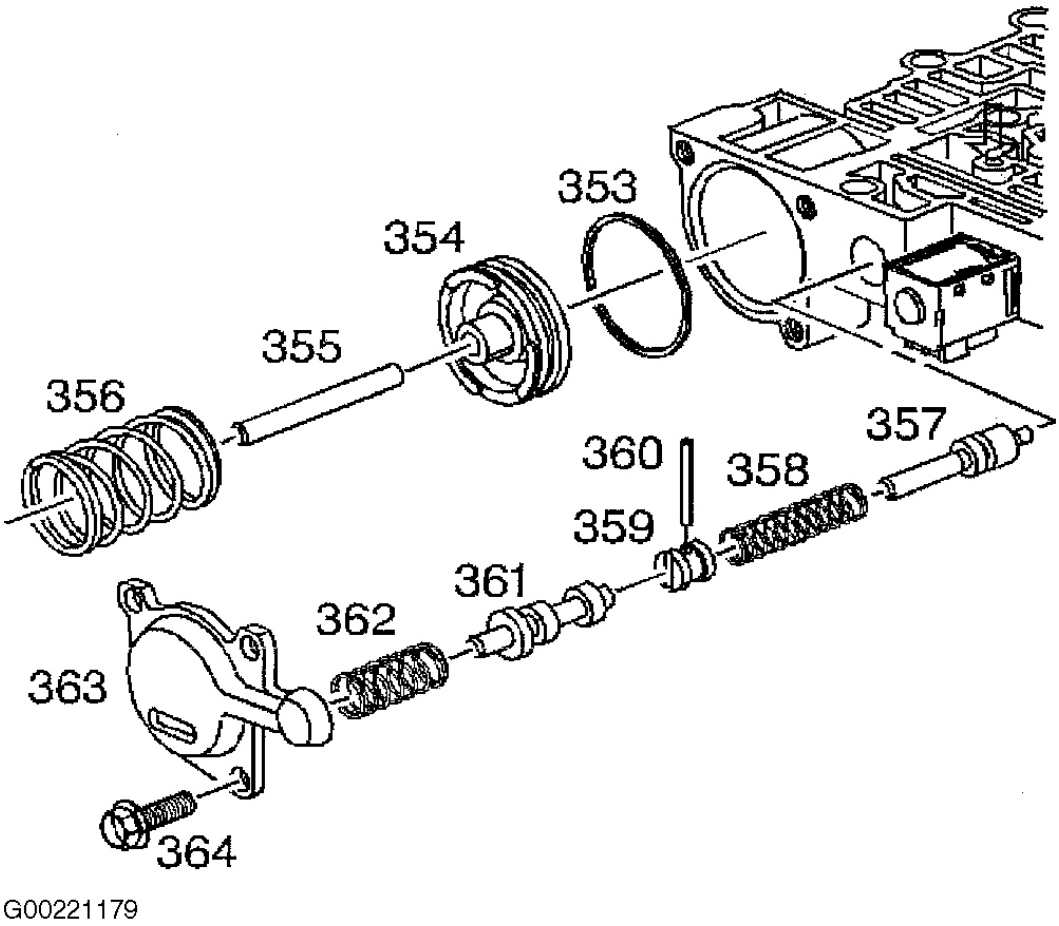

Fig. 63: Removing/Installing Forward Accumulator & Overrun Assembly
Courtesy of GENERAL MOTORS CORP.

cardiagn.com

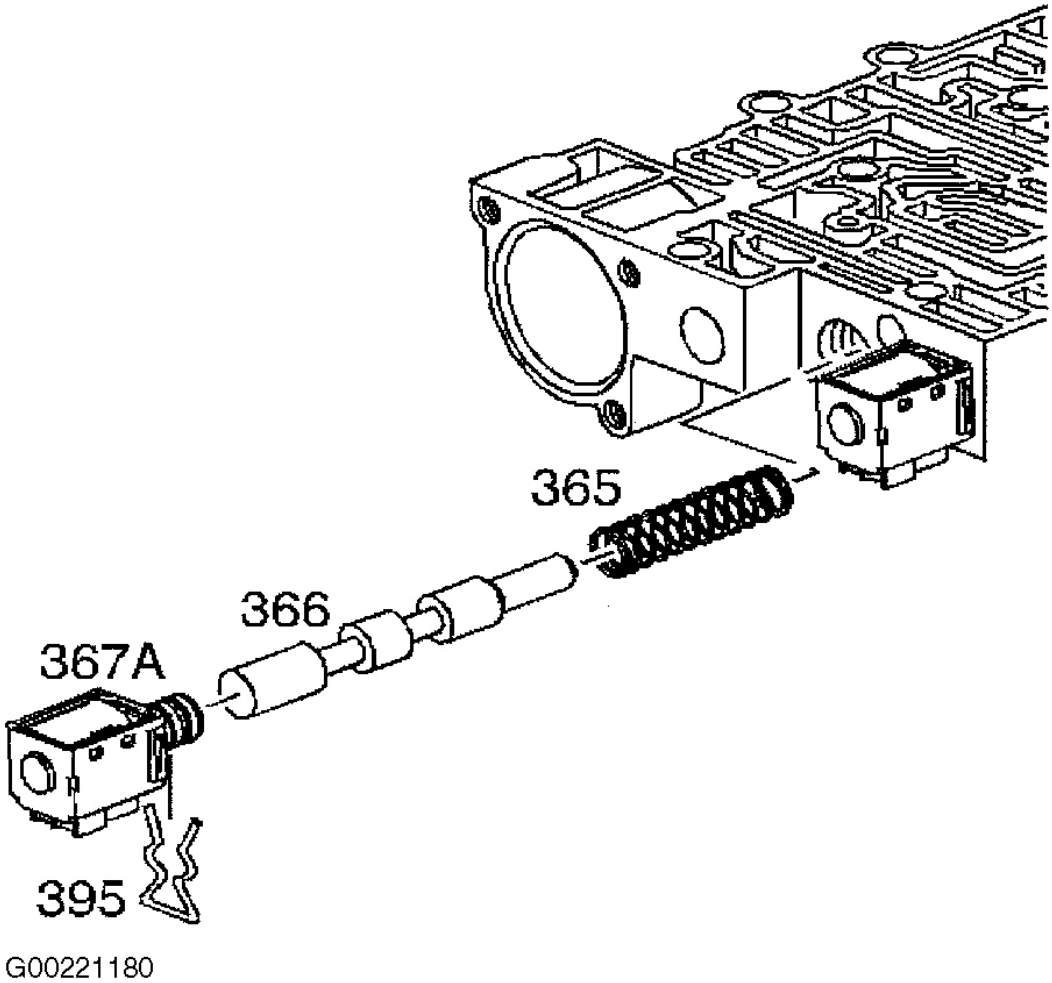

Fig. 64: Removing/Installing 1-2 Shift Solenoid Assembly
Courtesy of GENERAL MOTORS CORP.

cardiagn.com

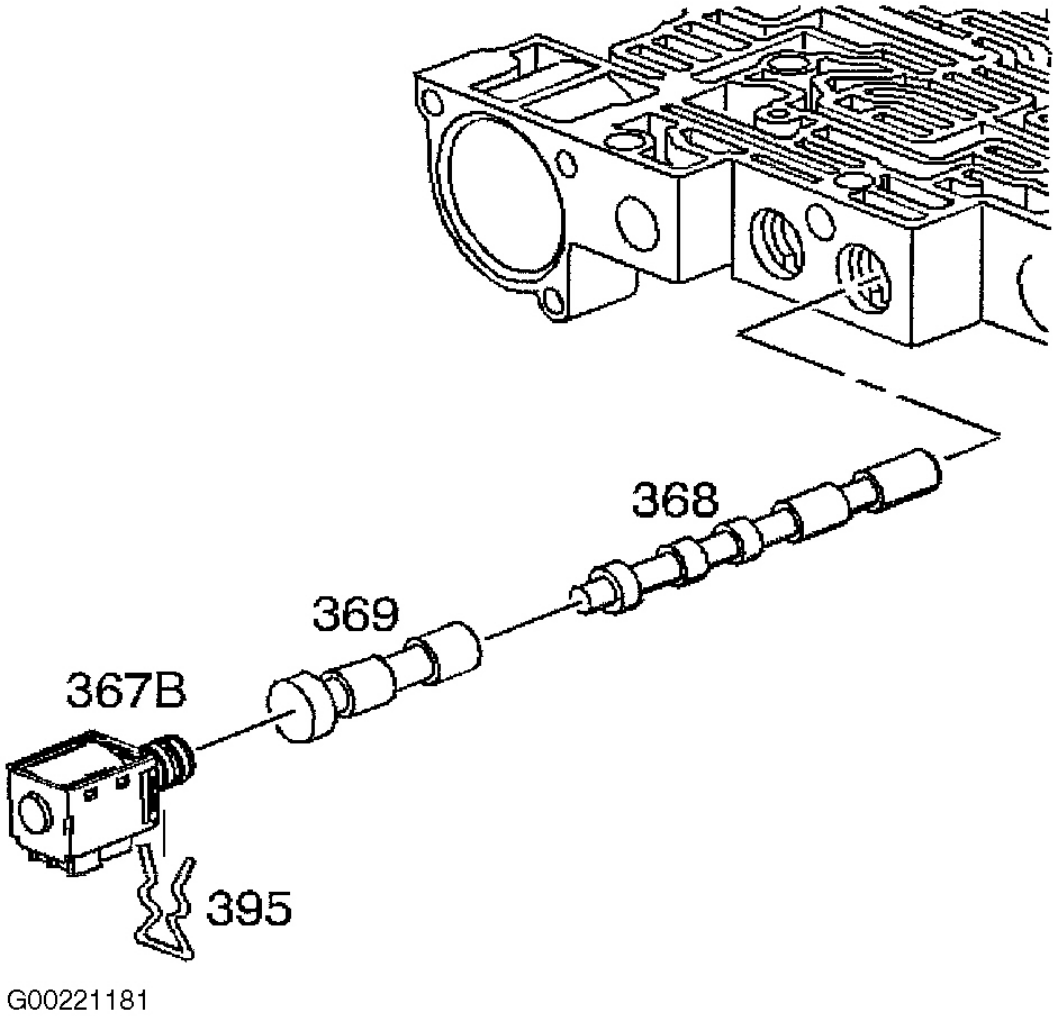

Fig. 65: Removing/Installing 2-3 Shift Solenoid Assembly
Courtesy of GENERAL MOTORS CORP.

cardiagn.com

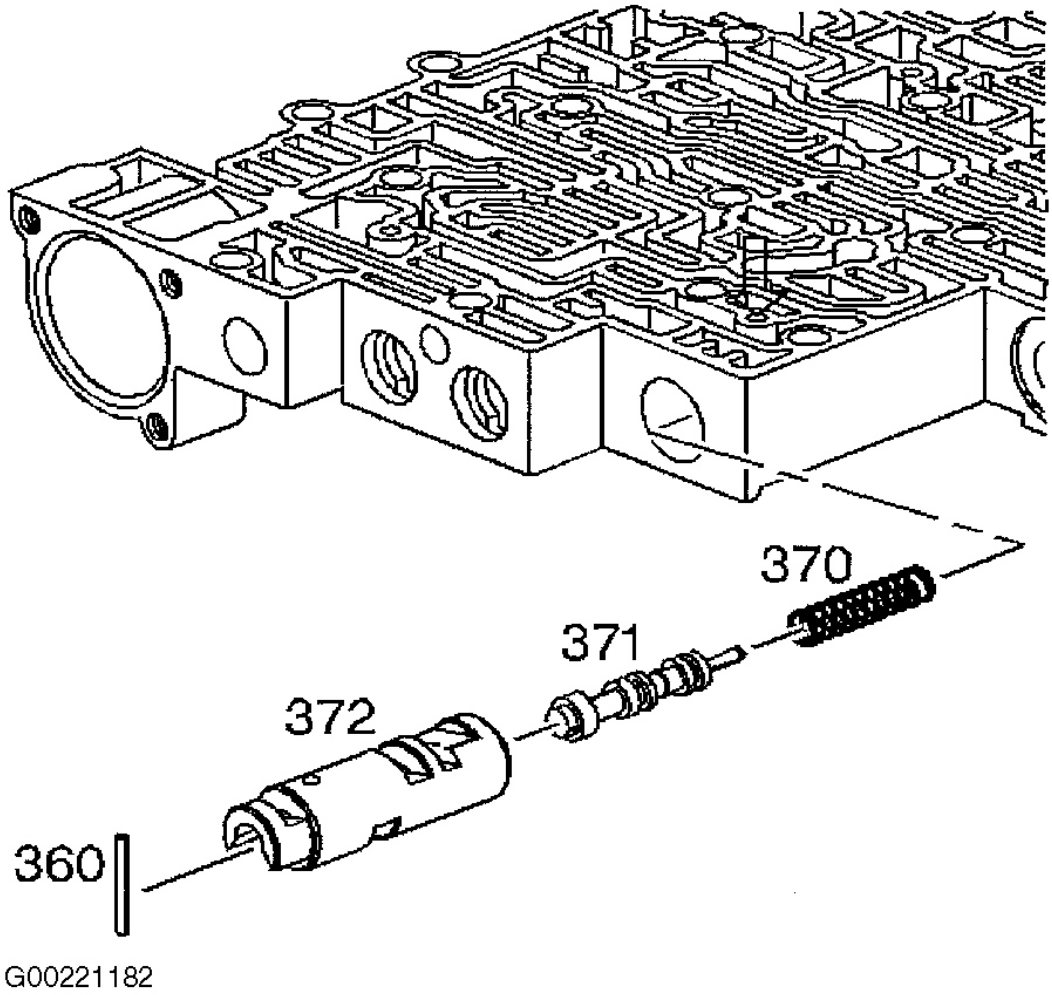

Fig. 66: Removing/Installing 1-2 Accumulator Assembly
Courtesy of GENERAL MOTORS CORP.

cardiagn.com

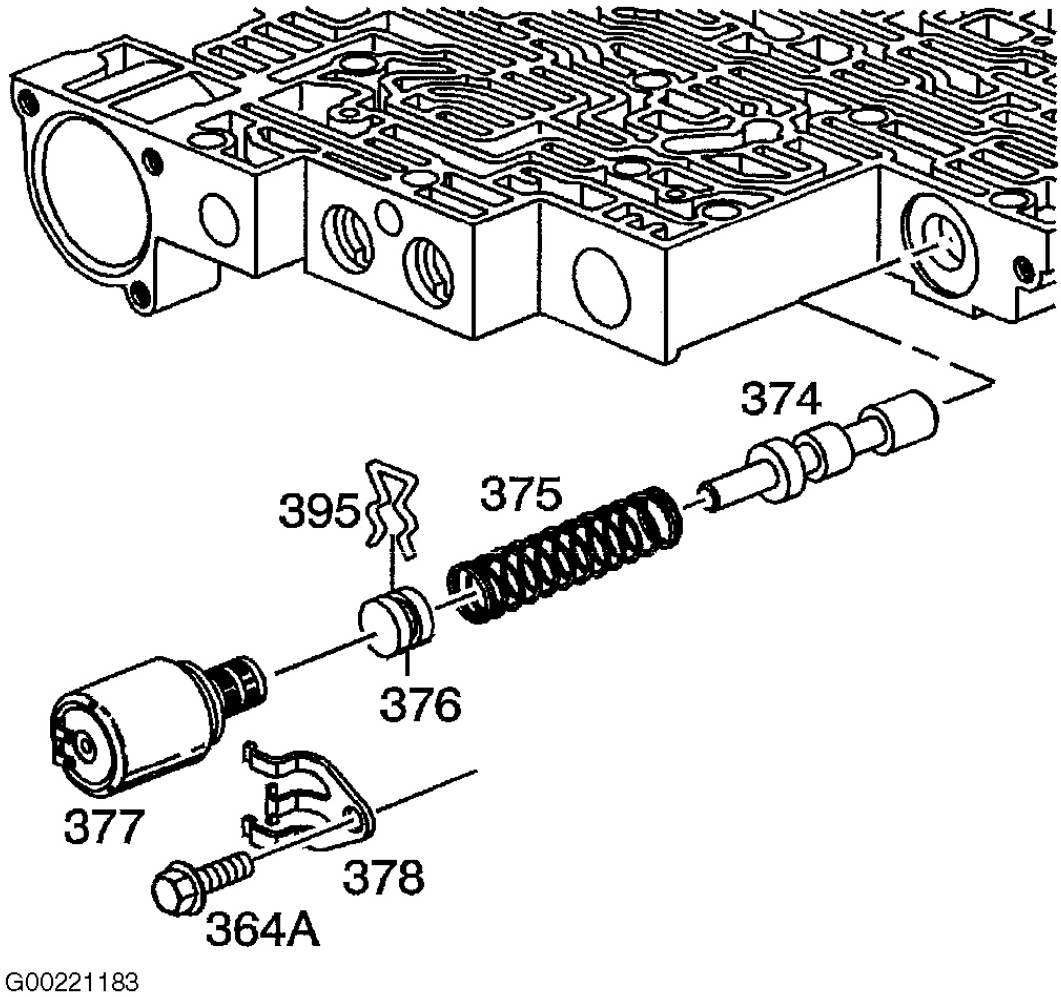

Fig. 67: Removing/Installing Pressure Control Solenoid
Courtesy of GENERAL MOTORS CORP.

cardiagn.com

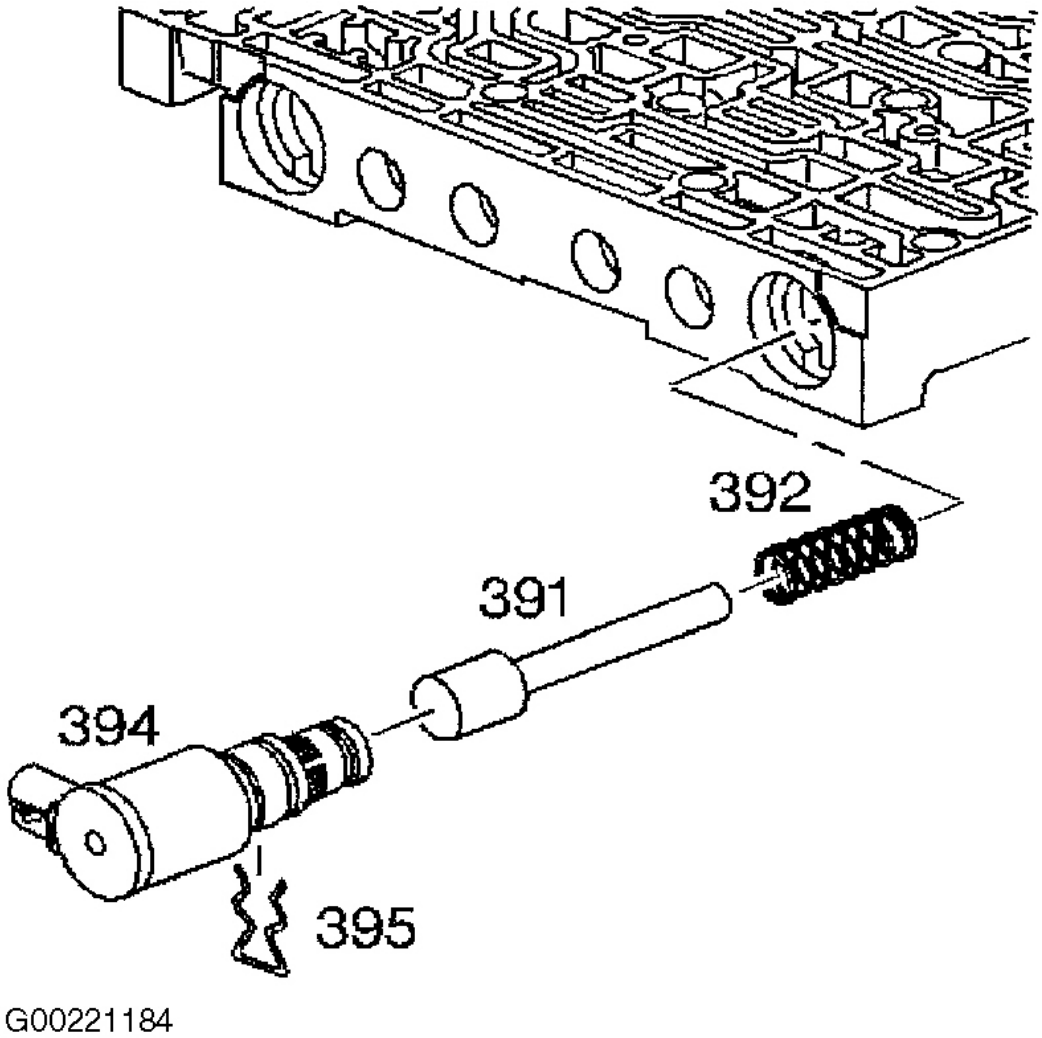

Fig. 68: Removing/Installing 3-2 Control Solenoid Assembly
Courtesy of GENERAL MOTORS CORP.

cardiagn.com

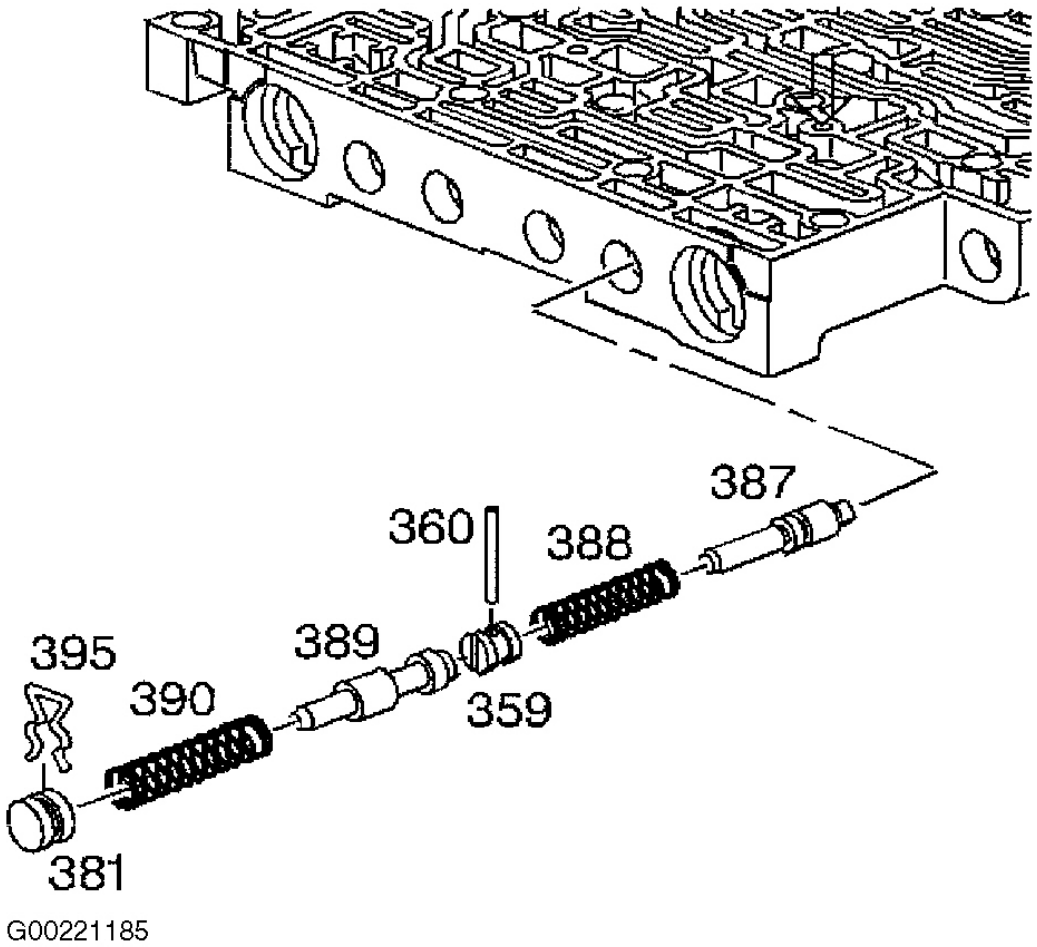

Fig. 69: Removing/Installing 3-2 Downshift Valve Assembly
Courtesy of GENERAL MOTORS CORP.

cardiagn.com

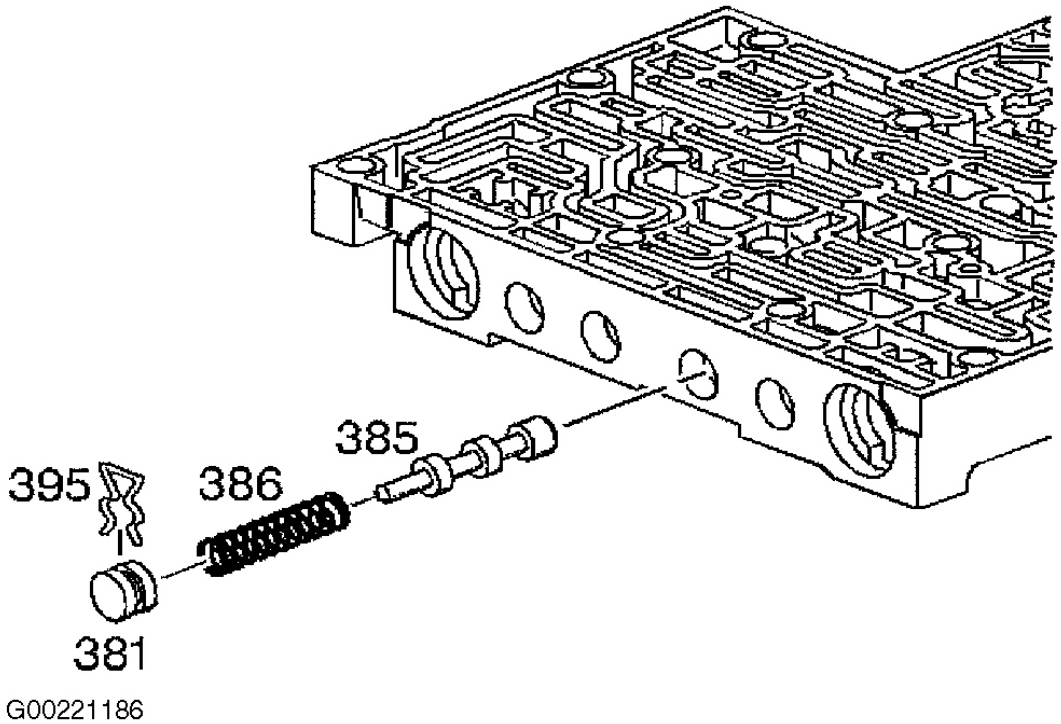

Fig. 70: Removing/Installing 3-4 Shift Valve Assembly
Courtesy of GENERAL MOTORS CORP.

cardiagn.com

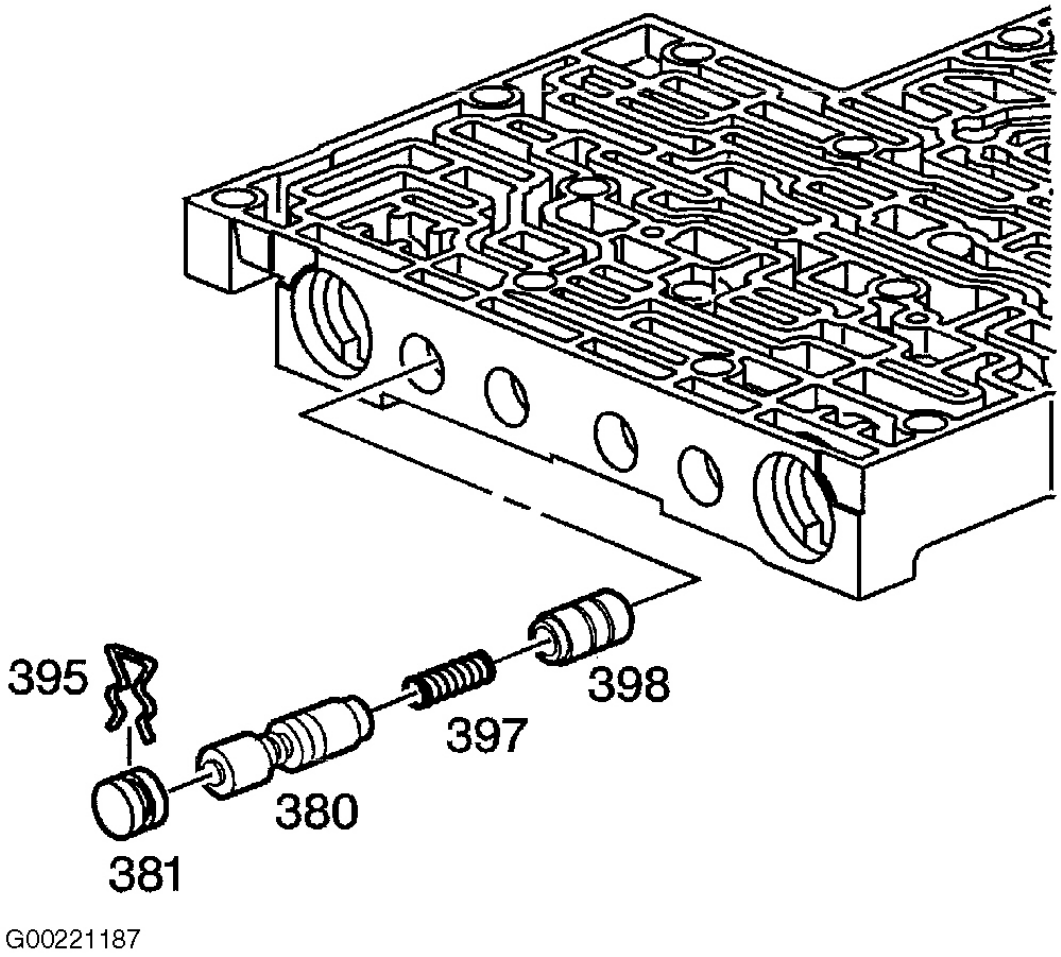

Fig. 71: Removing/Installing Regulator Apply Valve Assembly
Courtesy of GENERAL MOTORS CORP.

cardiagn.com

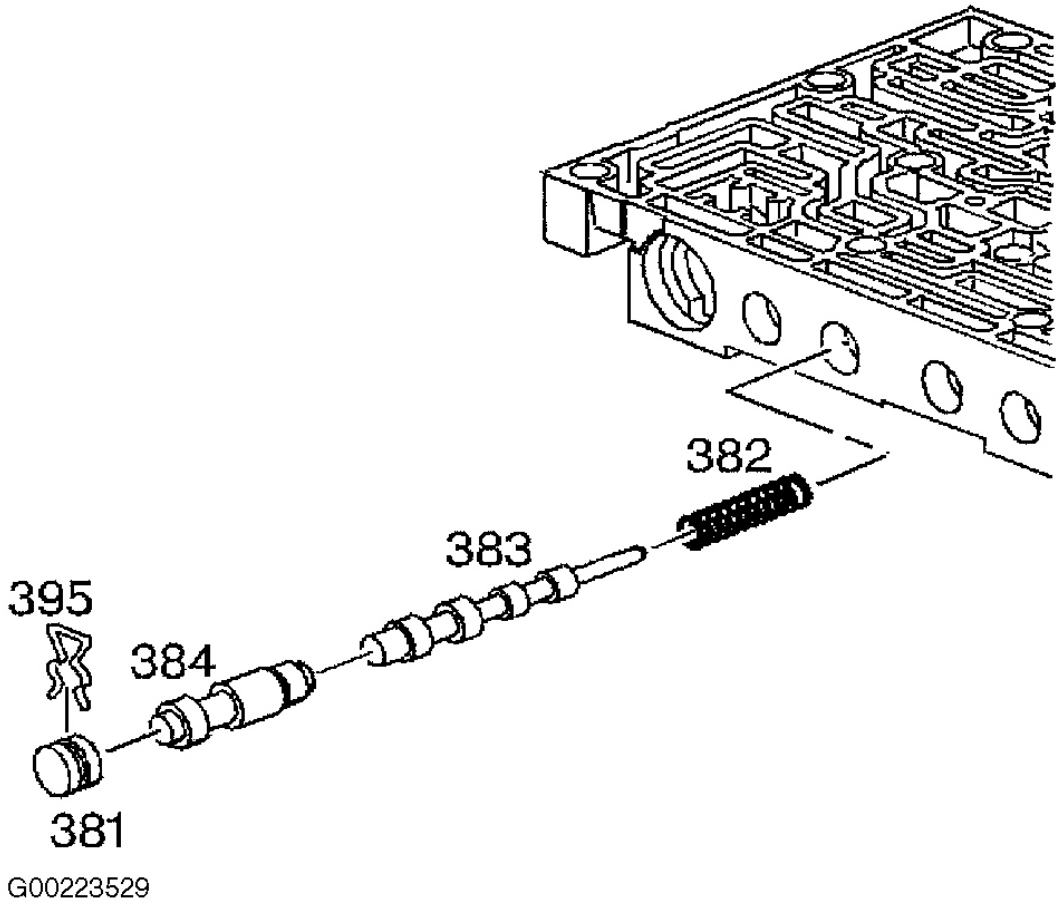

Fig. 72: Removing/Installing 3-4 Relay Valve & 4-3 Sequence Valve
Courtesy of GENERAL MOTORS CORP.

TRANSMISSION CASE

Cleaning & Inspection

Clean transmission case and dry with compressed air. Inspect case assembly for damage, cracks and damaged bolt hole threads. Inspect valve body surface for flatness and land damage. Check case oil passages for restrictions and blockage. Blow compressed air through all case passages. See **Fig. 73** . Inspect case internal clutch plate lugs for damage and wear. Inspect servo and accumulator bores for damage. Inspect all snap ring grooves for damage.

cardiagn.com

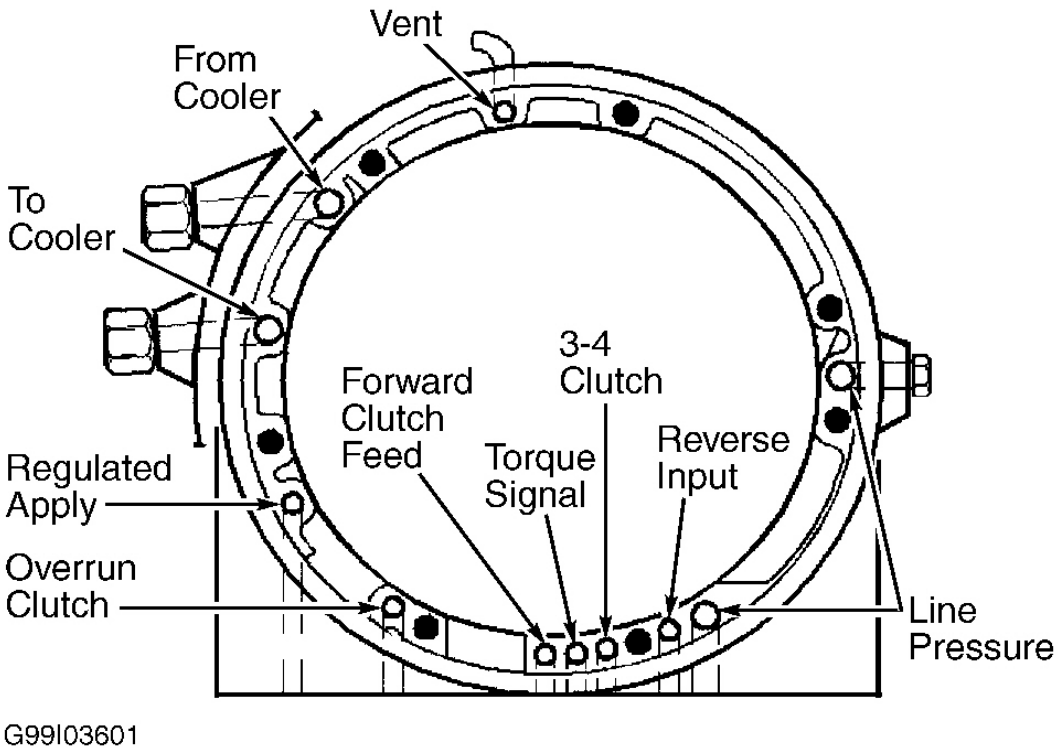

Fig. 73: Identifying Transmission Case Fluid Passages
Courtesy of GENERAL MOTORS CORP.

REACTION & INPUT GEAR SETS, LOW-REVERSE CLUTCH & SUPPORT

Cleaning & Inspection

1. Clean all parts and dry with compressed air. Inspect reaction and input carriers for pinion gear damage, excessive wear and improper staking of pinion pins. Inspect carrier bearings for heat damage, flatness and roller condition. Place output shaft sleeve inside reaction carrier and input carrier.
2. Rotate sleeve and note smoothness of bearing operation. Replace carrier assembly if roughness is felt. Check pinion gear end play on reaction and input carriers. See **Fig. 74** .
3. Pinion gear end play should be .008-.024" (.20-.61 mm). Inspect internal reaction gear and support for cracks and damaged splines. Inspect low-reverse clutch plates for wear and signs of excessive heat.
4. Inspect low-reverse clutch piston for roughness or damage in seal ring area. Inspect retainer ring and spring assembly for damage. Inspect sun and internal gears and supports for spline

cardiagn.com

and bushing wear and damage. Replace damaged parts as necessary.

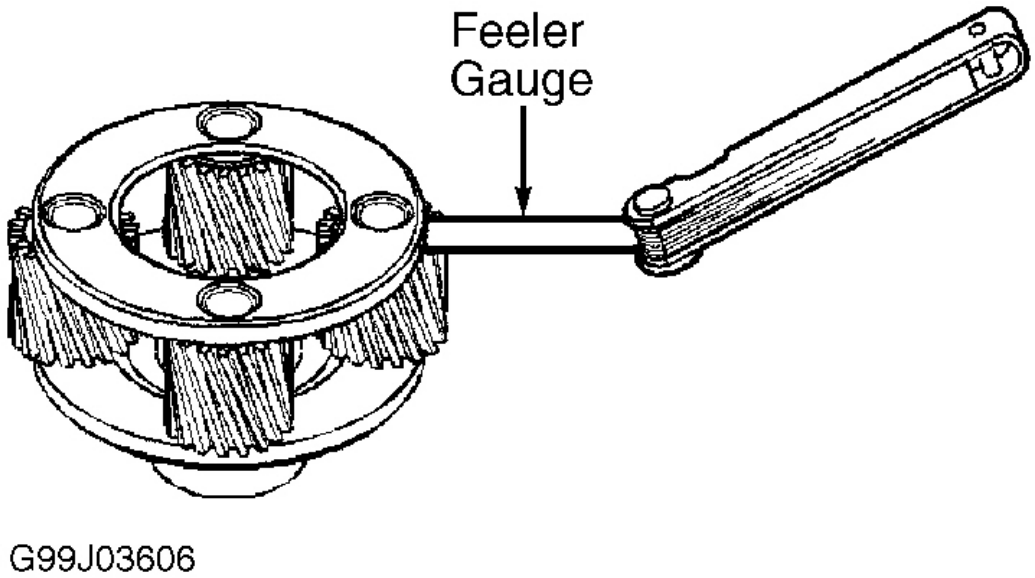

Fig. 74: Measuring Input Carrier Pinion Gear End Play
Courtesy of GENERAL MOTORS CORP.

MISCELLANEOUS CASE COMPONENTS

Cleaning & Inspection

Clean all parts and dry with compressed air. Inspect 1-2 and 3-4 accumulator parts for damage to pistons or housing. Inspect for flatness and condition of accumulator, oil passage plate and gasket. Inspect wiring harness leads and connectors for damage. Inspect speed sensor rotor teeth for damage and distortion.

TRANSMISSION REASSEMBLY

NOTE: To identify bushing, seal, thrust bearing and thrust washer locations and direction, refer to appropriate illustration. See Fig. 85 and Fig. 86 .

LOW-REVERSE CLUTCH

cardiagn.com

1. Place transmission in a vertical position. Install seals on low-reverse clutch piston. Apply petroleum jelly to seals. Align and install piston with notch in bottom of transmission case (695). Ensure piston is fully seated and parking pawl aligns with opening in piston wall. See **Fig. 75** . Install the low and reverse clutch spring assembly (694). Using the Clutch Spring Compressor (J23327-1), compress the low and reverse clutch spring assembly (694). Using the Snap Ring Remover and Installer (J36850), install the low and reverse clutch retainer ring (693). See **Fig. 76** .
2. Coat bearing assembly with petroleum jelly. Install bearing assembly on case hub with outside bearing race toward case hub. Install internal reaction gear and support. Install bearing assembly onto support with outside bearing race toward support. Install oil deflector (if equipped) and reaction carrier assembly in case. See **Fig. 28** .
3. Place waved plate on work bench. Install 5 composition plates and 4 steel plates alternately, starting with composition plate. Install low-reverse support. Apply light pressure to low-reverse support. Do not flatten waved plate. Measure height of clutch pack from work bench to top of low-reverse support. See **Fig. 77** .
4. Using height dimension, determine proper selective spacer plate to be used. See **SPACER PLATE SELECTION** table.

SPACER PLATE SELECTION

Measured Clutch Pack Height - In. (mm) (1)	Identification	Plate Thickness - In. (mm)
1.084-1.105 (27.53-28.07)	None	.066-.072 (1.67-1.85)
1.105-1.125 (28.07-28.58)	"0"	.046-.052 (1.17-1.31)
1.064-1.084 (27.03-27.53)	"1"	.087-.092 (2.19-2.34)
(1) Clutch pack height is measured without spacer plate in position.		

5. Place spacer plate between waved plate and first composition plate with identification facing upward. Measure overall height of clutch pack. Overall height should be 1.15-1.18" (29.2-29.9 mm). Install low-reverse clutch pack into transmission case. Ensure clutch plates align with splines of reaction carrier. Ensure steel plates are properly indexed in transmission case. See **Fig. 78** .
6. Install low-reverse support in case with hub downward. Install inner race by pushing

cardiagn.com

downward while rotating until it is fully engaged. Bottom tangs will be flush with hub when fully installed. Install spring retainer in case between case lug and open notch in support. Install low-reverse snap ring. See **Fig. 79**

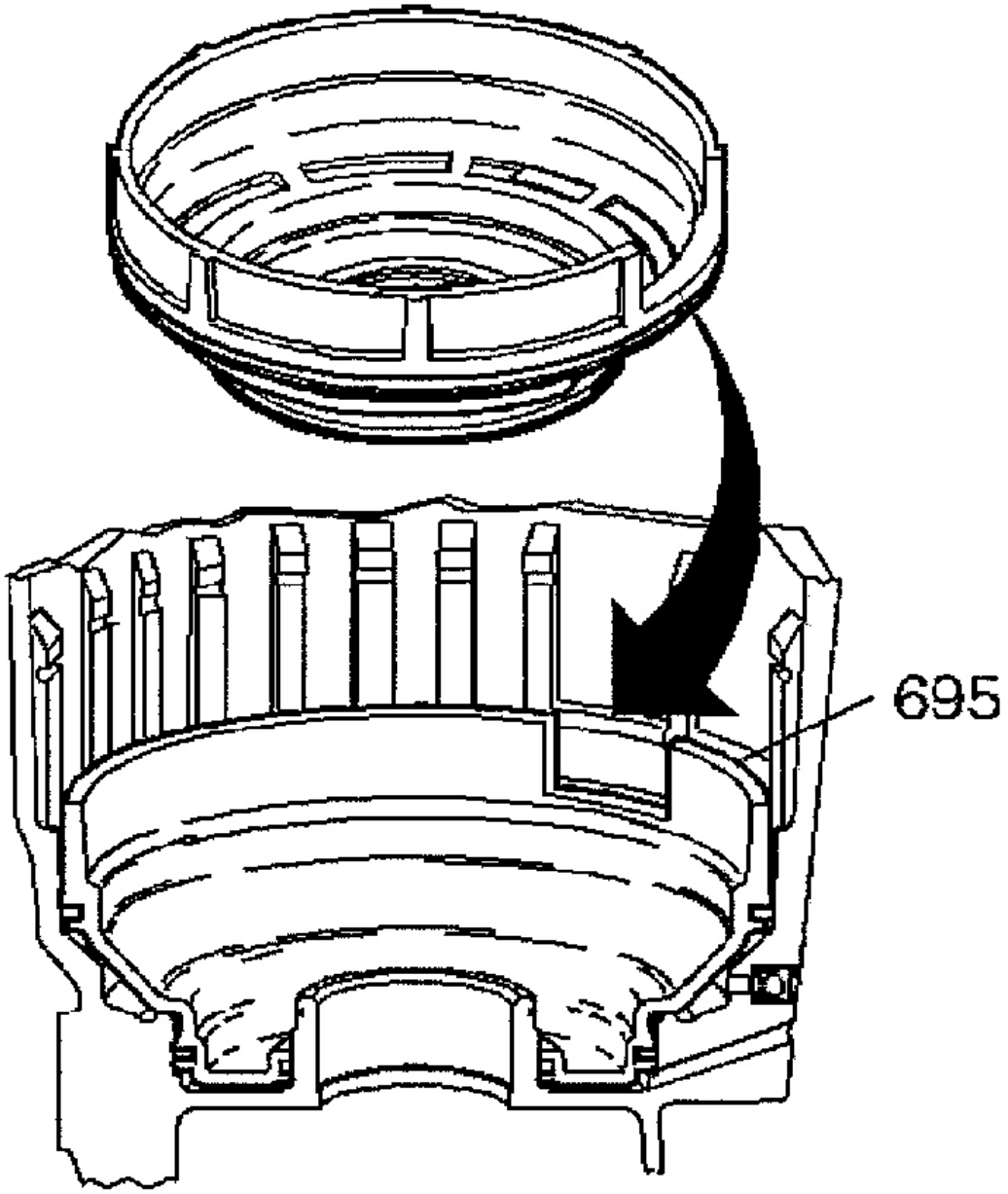

G00223530

cardiagn.com

Fig. 75: Installing Low-Reverse Clutch Piston
Courtesy of GENERAL MOTORS CORP.

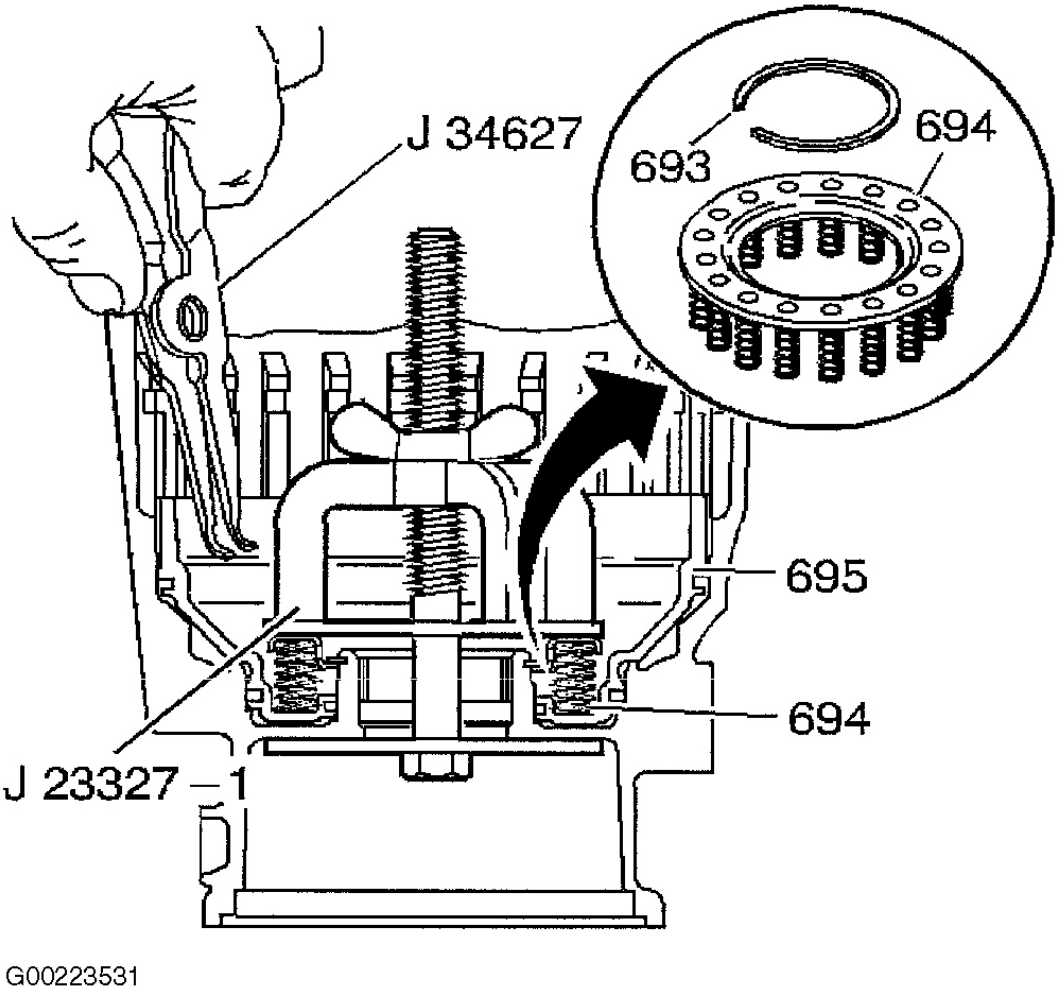

Fig. 76: Installing Low-Reverse Clutch Spring Assembly
Courtesy of GENERAL MOTORS CORP.

cardiagn.com

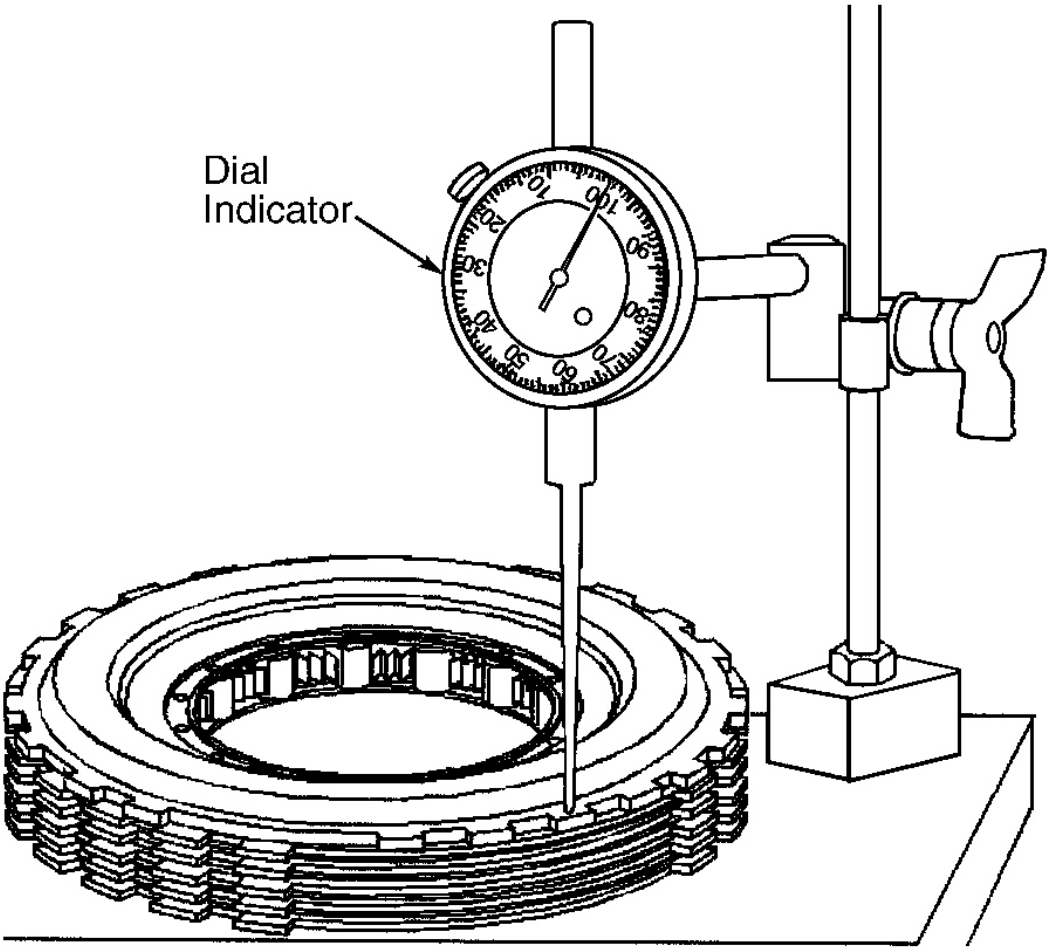

Fig. 77: Measuring Low-Reverse Clutch Pack Stack Height
Courtesy of GENERAL MOTORS CORP.

cardiagn.com

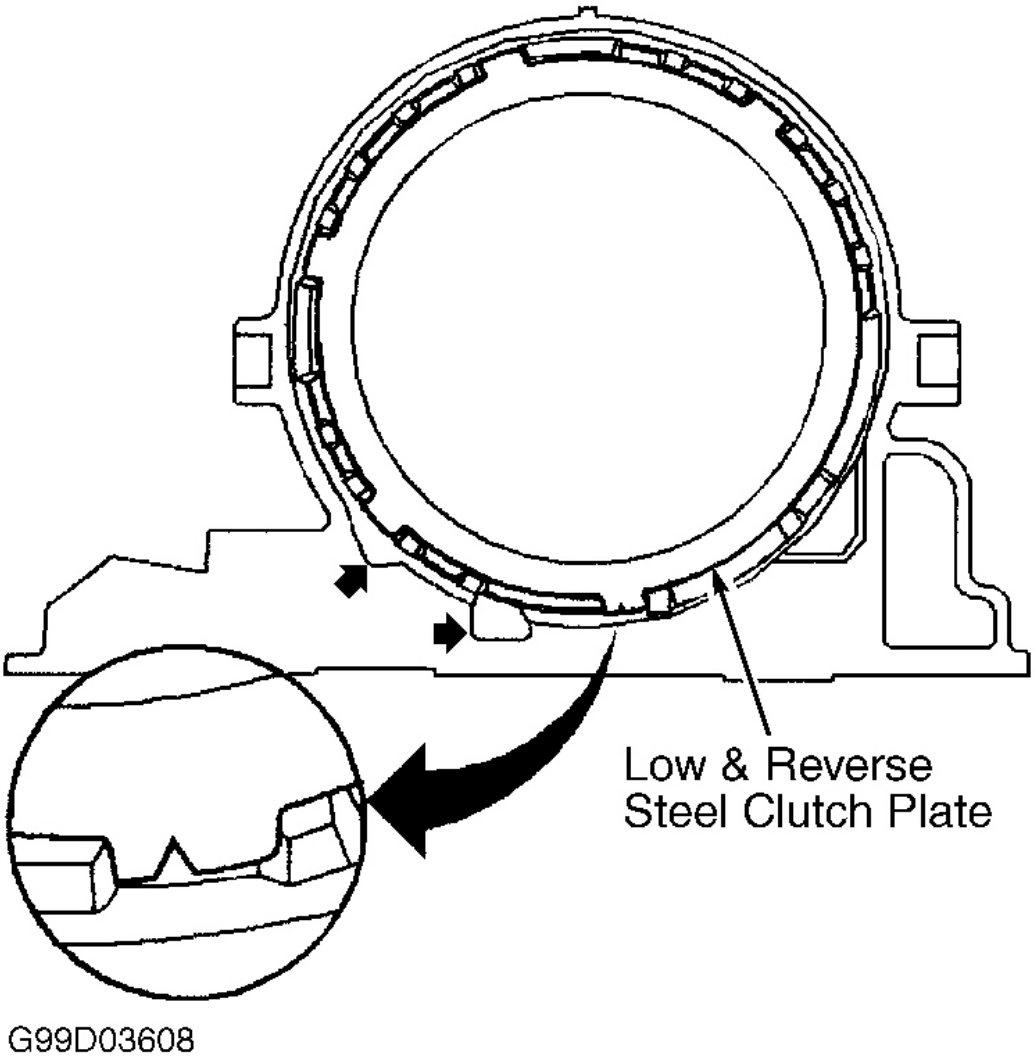

Fig. 78: Installing Low-Reverse Clutch Steel Plates
Courtesy of GENERAL MOTORS CORP.

cardiagn.com

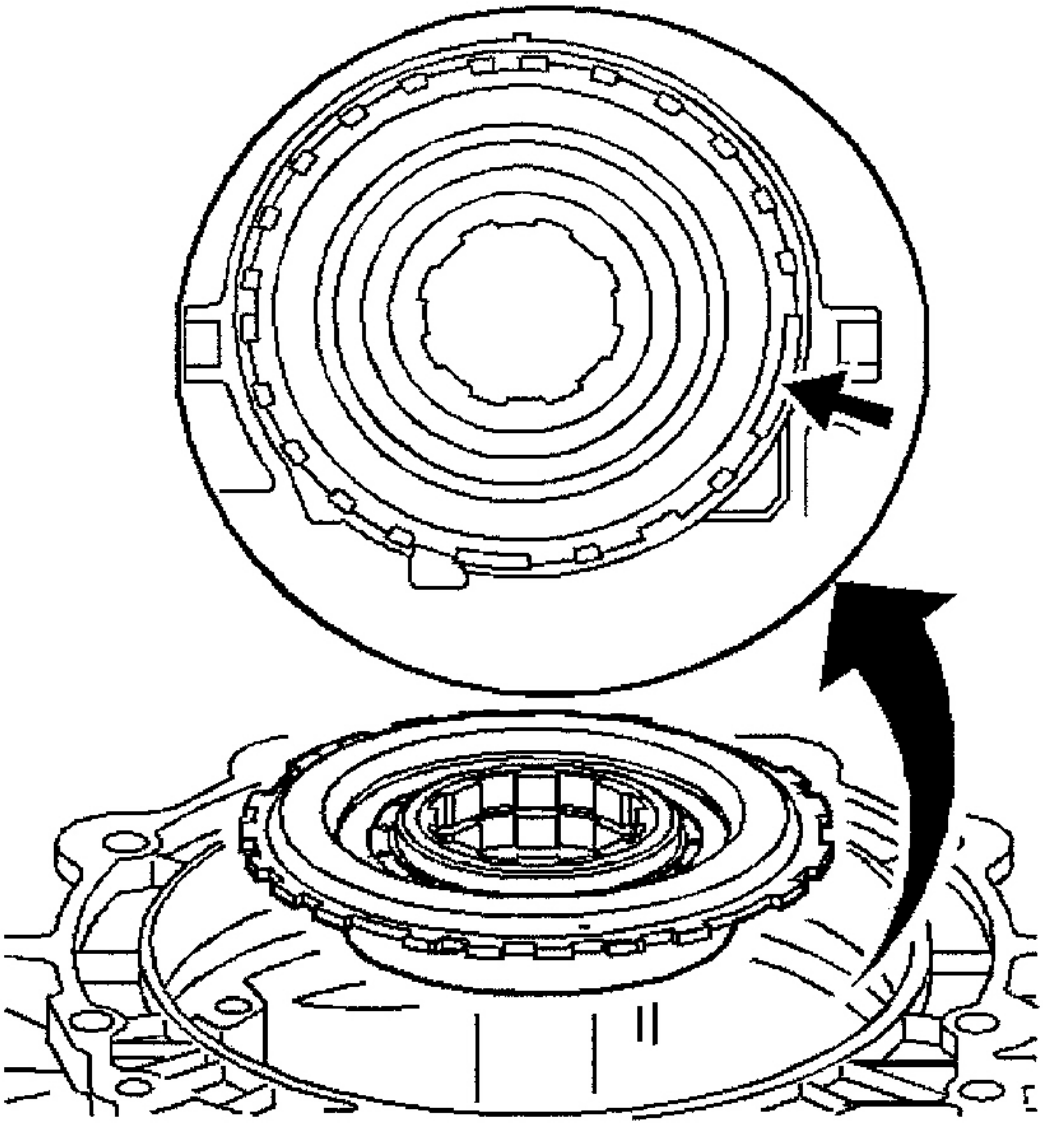

G00223532

Fig. 79: Installing Low-Reverse Clutch Support
Courtesy of GENERAL MOTORS CORP.

REACTION & INPUT GEAR SETS

1. Install retainer ring on reaction sun gear (if removed). Install sun gear into reaction carrier. Install thrust washer on low-reverse clutch race. Install reaction sun gear shell on reaction sun gear.

cardiagn.com

2. Install thrust washer on reaction sun gear shell. Ensure thrust washer tangs engage on gear shell. Install input internal gear and reaction carrier shaft in sun gear shell. Carrier shaft splines must engage with reaction carrier. See **Fig. 28** .
3. Install thrust washer on reaction carrier shaft. Outer race must face toward reaction carrier shaft. Install output shaft in transmission. Ensure output shaft engages with all parts.
4. Install Output Shaft Support (J-29837-A). See **Fig. 7** . Adjust support so output shaft is positioned upward as far as possible. Install input carrier (planetary) assembly with hub end down on output shaft. Install NEW retainer ring on output shaft. Remove output shaft support. Install input sun gear, indexing gear end with input carrier pinions.

REVERSE INPUT ASSEMBLY & INPUT CLUTCH

1. Install the selective thrust washer (616) on the input housing (621). Install the stator shaft/selective washer bearing assembly (615) on the input housing (621). The black race on the bearing goes toward the oil pump. Install the reverse input clutch assembly (605) on the input housing (621). Index the reverse input clutch plates with the input clutch hub. Make certain all clutch plates are fully engaged. See **Fig. 80** .
2. Install reverse and input clutch assemblies in transmission case as an assembly. Align 3-4 clutch plates of input assembly with input internal gear. Assembly is fully seated when reverse input clutch housing is just below oil pump face of case. See **Fig. 81** .

cardiagn.com

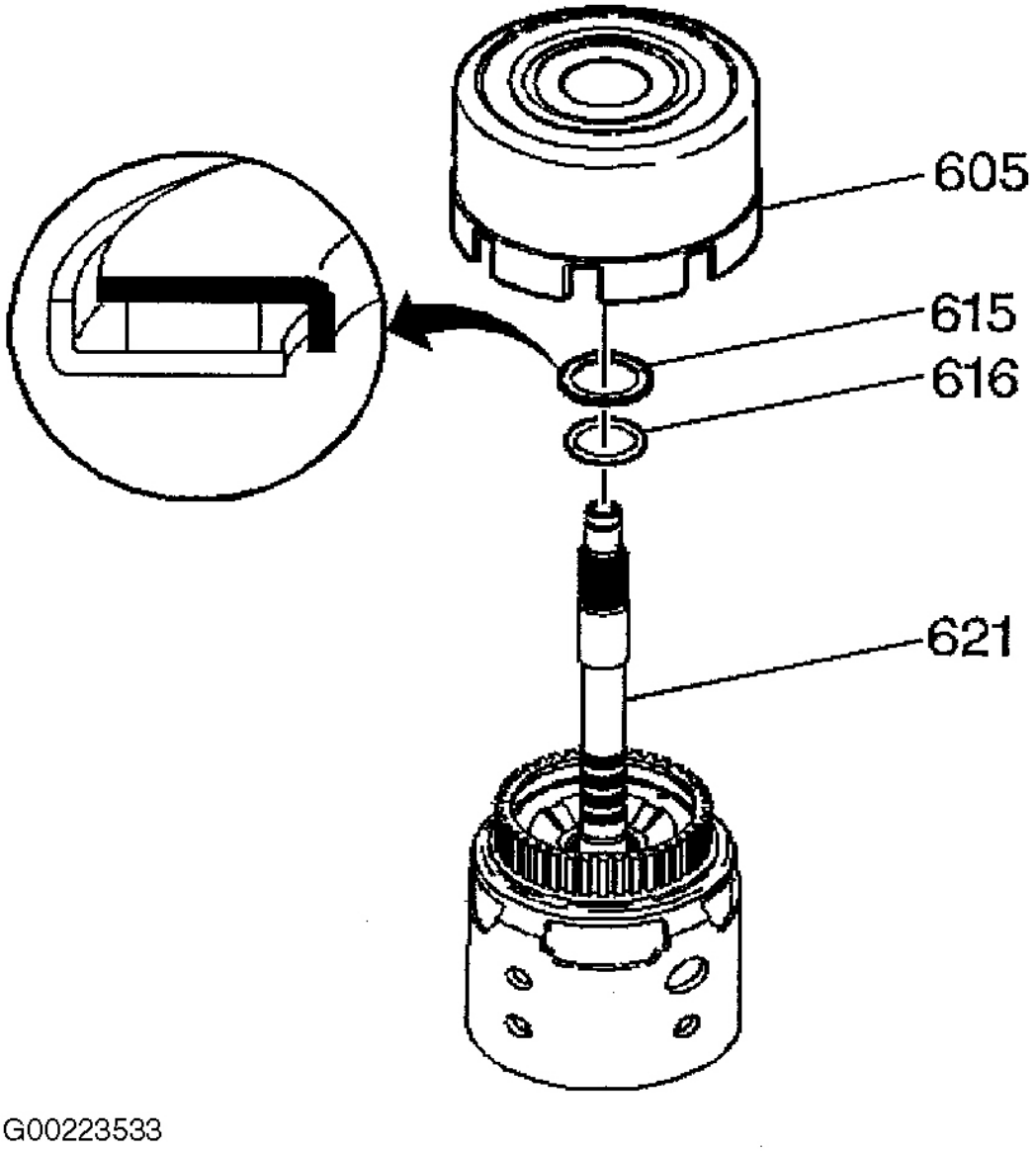

Fig. 80: Installing Reverse & Input Clutches Components
Courtesy of GENERAL MOTORS CORP.

cardiagn.com

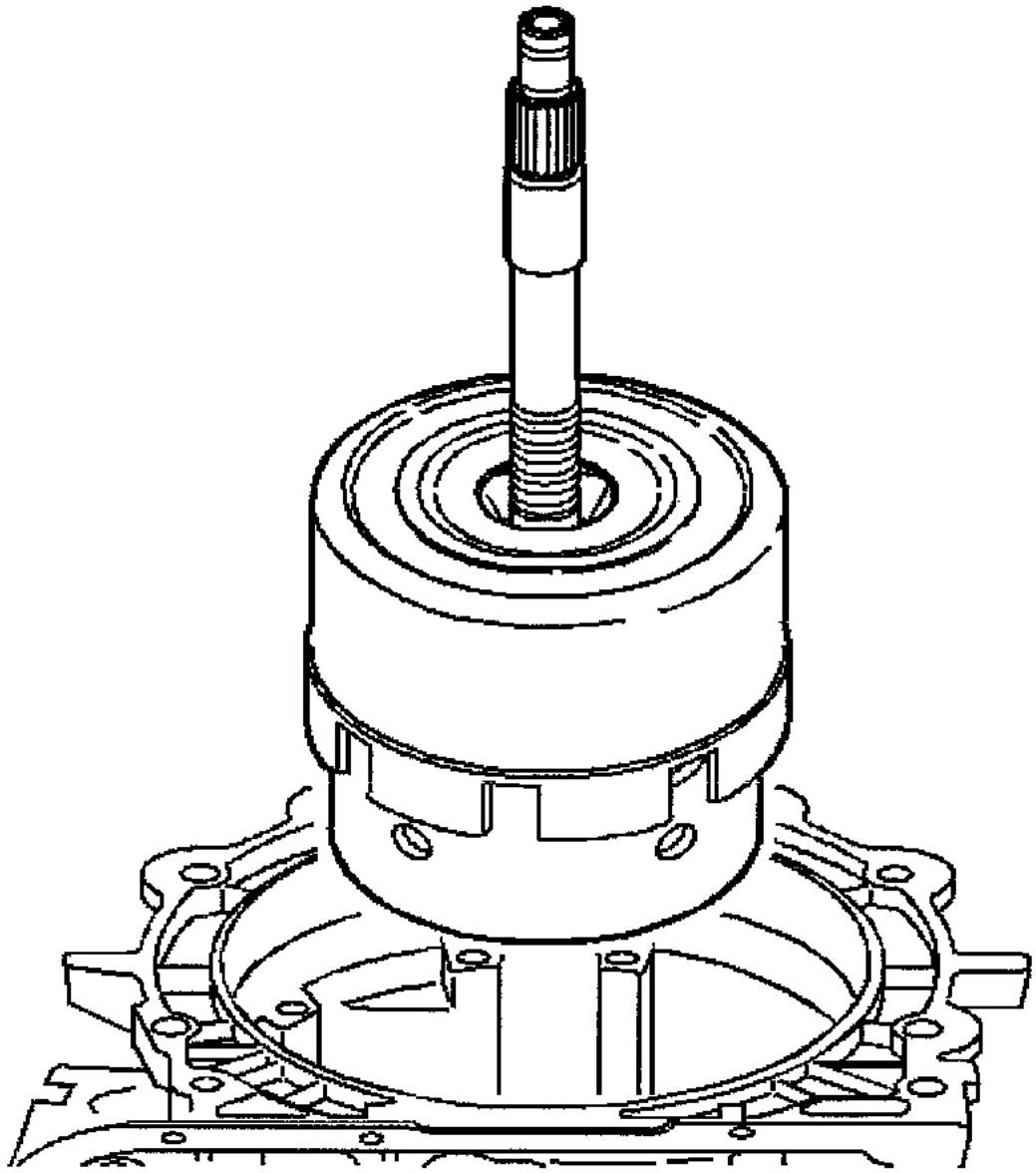

Fig. 81: Installing Reverse & Input Clutches Into Transmission Case
Courtesy of GENERAL MOTORS CORP.

OIL PUMP ASSEMBLY

1. Ensure turbine shaft seals on input shaft have been sized using Seal Sizer (J-36418-2A). See

cardiagn.com

Fig. 50 . Install aligning pins in 2 opposing pump bolt holes in transmission case. Ensure thrust washer is installed on rear of oil pump. Thrust washer can be retained using petroleum jelly.

2. Remove input shaft Seal Sizer (J-36418-2A). Remove Stator Shaft Seal Sizer (J39855-2). Install oil pump into case, aligning filter and pressure regulator holes with holes in case. Install retaining bolts. Tighten bolts to specification. See **TORQUE SPECIFICATIONS** . Place transmission in a horizontal position.
3. Turbine shaft should rotate by hand. If turbine shaft will not rotate, loosen pump retaining bolts and attempt to rotate shaft again. If shaft now turns, reverse and input assemblies have not been indexed properly or some other assembly problem has occurred, such as thrust washer not positioned properly.
4. Check transmission end play. See **TRANSMISSION END PLAY CHECK** . Transmission end play should be .005-.036" (.13-.91 mm). Install torque converter. Ensure converter hub is aligned with oil pump. Install torque converter retaining strap to hold converter.

2-4 BAND & SERVO ASSEMBLY

1. Install 2-4 band in case. Align band anchor pin end with case pin hole. Install band anchor pin in case. See **Fig. 25** . Ensure band anchor pin aligns with end of 2-4 band.
2. Install 2-4 servo assembly into case, and index apply pin on band end. Check for proper engagement of apply pin on band end. Recheck 2-4 servo apply pin selection to ensure correct pin is installed.
3. Remove 4th apply piston and return spring. See **Fig. 60** . Remove retainer ring, washer, apply pin spring and 2nd apply pin. Install Piston Compressor (J-22269-01) on 2nd apply piston. See **Fig. 61** .
4. Remove retainer ring, cushion spring and spring retainer. Install Band Apply Pin Tool (J-33037) and apply pin. See **Fig. 82** . Apply 100 INCH lbs. (11 N.m) torque.
5. White line on band apply tool should be within gauge slot if pin length is correct. If White line is not within gauge slot, inspect 2-4 band and reverse input drum for wear and damage during disassembly.
6. Servo pin length must be checked during reassembly. Servo pin is preset and must not be readjusted. Different length servo pins are available. See **SERVO PIN SPECIFICATIONS** table. Select proper length servo pin. Reassemble 2-4 servo. Install servo cover and "O" ring. Compress cover and install cover retaining ring. Index ends of retaining ring with slot in case.

SERVO PIN SPECIFICATIONS

Identification Grooves	Pin Length - In. (mm)

cardiagn.com

1	2.59-2.60 (65.8-66.0)
2	2.65-2.66 (67.3-67.5)
None	2.70-2.71 (68.6-68.8)

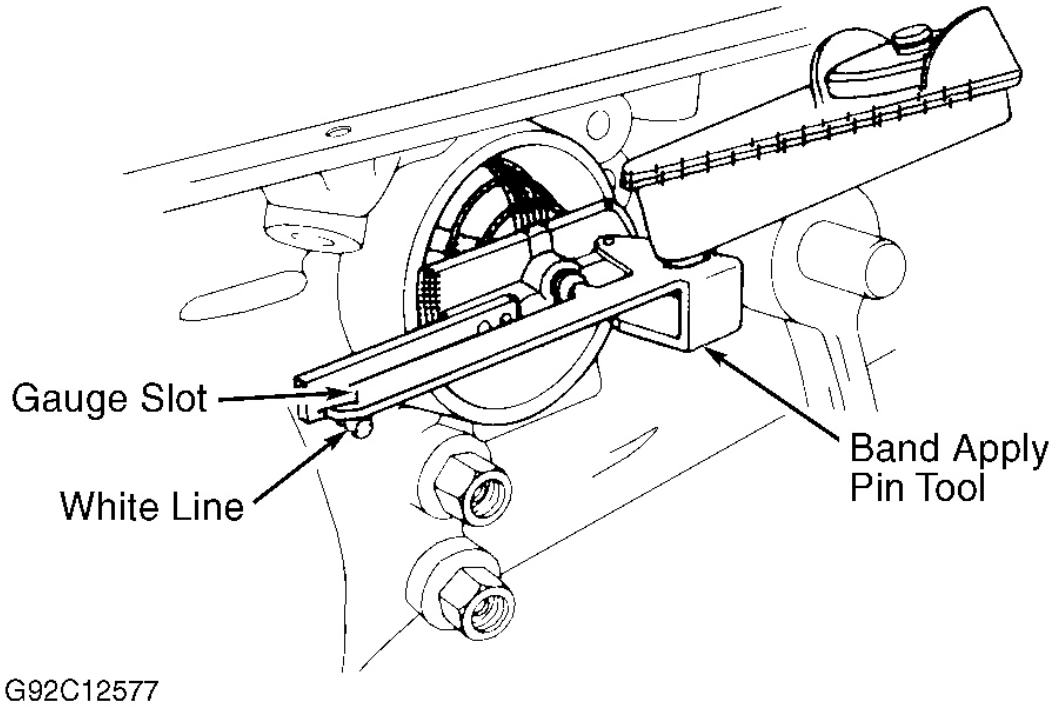

Fig. 82: Measuring Servo Pin Length
Courtesy of GENERAL MOTORS CORP.

TRANSMISSION END PLAY CHECK

1. Install Pump Remover/End Play Fixture (J-24773-A) and End Play Adapter (J-25022-A) on end of turbine shaft. See **Fig. 83** . Clamp dial indicator on long bolt with indicator tip on end play fixture. Zero dial indicator.
2. Pull up on end play fixture. Measure transmission end play. Transmission end play should be .005-.036" (.13-.91 mm). If transmission end play is not within specification, selective thrust washer must be changed between oil pump and input housing. See **Fig. 28** . Install appropriate thrust washer, and recheck end play. See **OIL PUMP THRUST WASHER SPECIFICATIONS** table.

OIL PUMP THRUST WASHER SPECIFICATIONS

cardiagn.com

ID No.	Thickness - In. (mm)
67	.074-.078 (1.88-1.98)
68	.080-.084 (2.03-2.13)
69	.087-.091 (2.21-2.31)
70	.094-.098 (2.39-2.49)
71	.100-.104 (2.54-2.64)
72	.107-.111 (2.72-2.82)
73	.113-.118 (2.87-3.00)
74	.120-.124 (3.05-3.15)

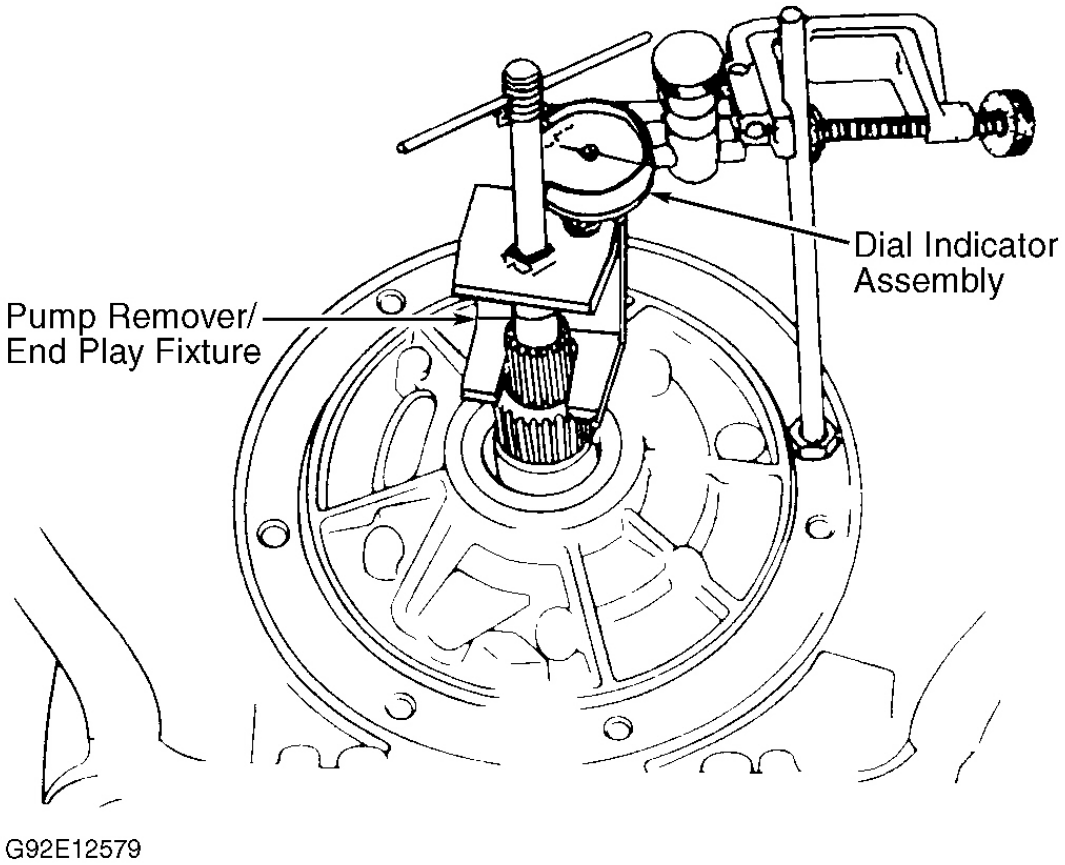

Fig. 83: Measuring Transmission End Play
Courtesy of GENERAL MOTORS CORP.

VALVE BODY, 1-2 & 3-4 ACCUMULATORS

cardiagn.com

CAUTION: If spacer plate and gasket replacement is required, ensure NEW spacer plate and gasket are identical to those removed.

1. Install 3-4 accumulator piston pin in case. Install 3-4 piston seal on piston. Install 3-4 accumulator piston on pin. Legs of piston must face valve body.
2. Install 3-4 accumulator spring. Install oil screens in proper locations. See **Fig. 84** . See **Fig. 17** for check ball and filter installation locations. Install alignment pins in transmission case to aid spacer plate and valve body installation. Install spacer plate gasket and spacer plate. Install spacer plate support.
3. Install 1-2 accumulator spring, oil seal ring and 1-2 accumulator piston. Install accumulator cover and bolts. Tighten bolts to specification. See **TORQUE SPECIFICATIONS** .
4. Coat check balls with petroleum jelly. Install check balls in proper locations in valve body. See **Fig. 16** and **Fig. 17** . Install manual valve link. Ensure manual valve link is properly seated in manual valve. See **Fig. 15** . Improper positioning may prevent vehicle operation in "D" range.

NOTE: Improper positioning of throttle valve link will result in erratic shift points or high oil pressure.

5. Install valve body and retaining bolts. Ensure correct length and location of bolts. See **Fig. 14** . Install detent spring. Install detent spring bolt. Install transmission fluid pressure manual valve position switch. Install TCC solenoid. Install valve body bolts that secure wiring harness. Tighten all valve body bolts to specification. See **TORQUE SPECIFICATIONS** .
6. Install TCC PWM solenoid. Install retainer clip. Install electrical connectors to switches and solenoids. See **Fig. 8** . Install oil filter and "O" ring. Install transmission oil pan.

cardiagn.com

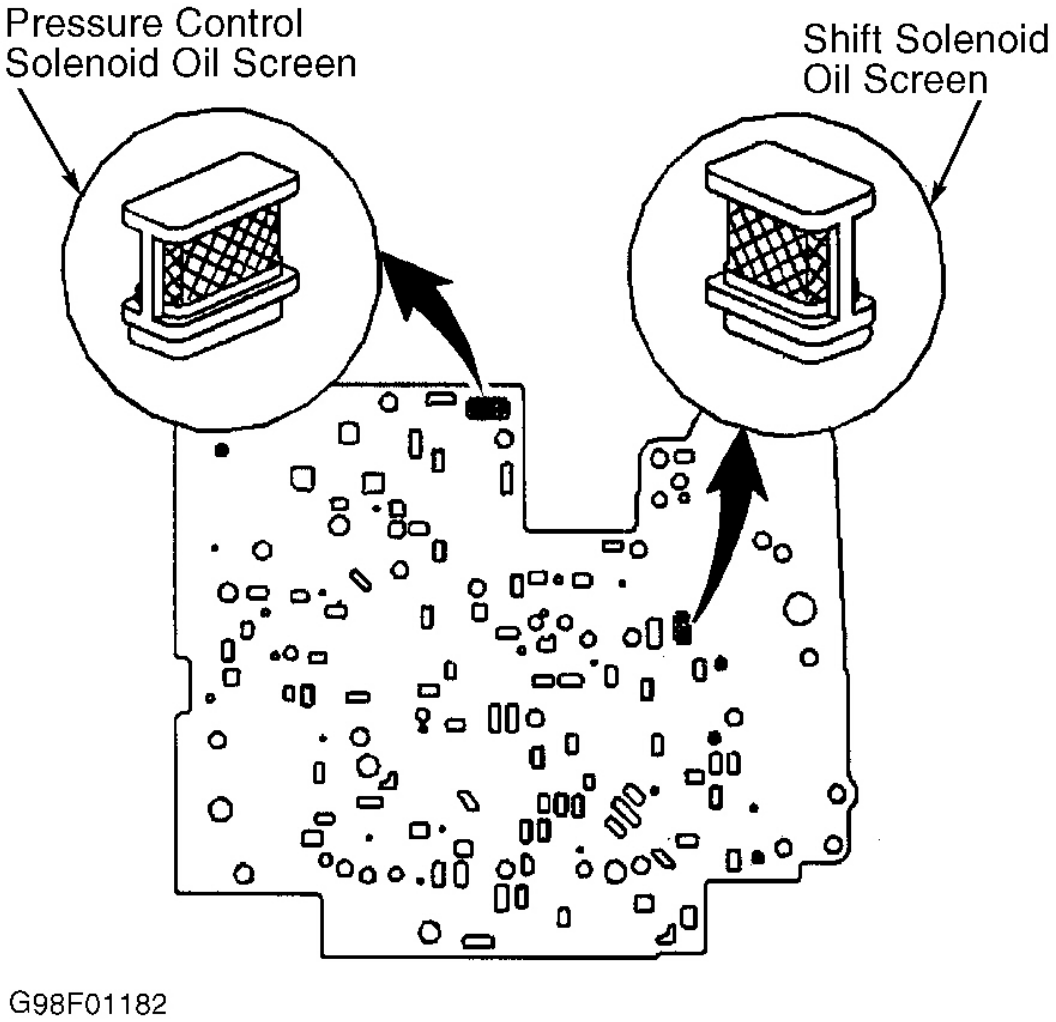

Fig. 84: Locating Oil Screens
Courtesy of GENERAL MOTORS CORP.

EXTENSION HOUSING

1. Install speed sensor rotor retaining clip on output shaft. Install "O" ring in output shaft sleeve. Install output shaft sleeve on output shaft. DO NOT position output shaft sleeve past machined surface of output shaft. Install seal ring on extension housing.
2. Position extension housing on transmission case. Install retaining bolts. Install oil seal in extension housing. Install speed sensor assembly. Install retainer and bolt. Tighten bolt to specification. Install outside electrical connector. Install PNP switch and manual shift lever. See PARK/NEUTRAL POSITION SWITCH under REMOVAL & INSTALLATION.

cardiagn.com

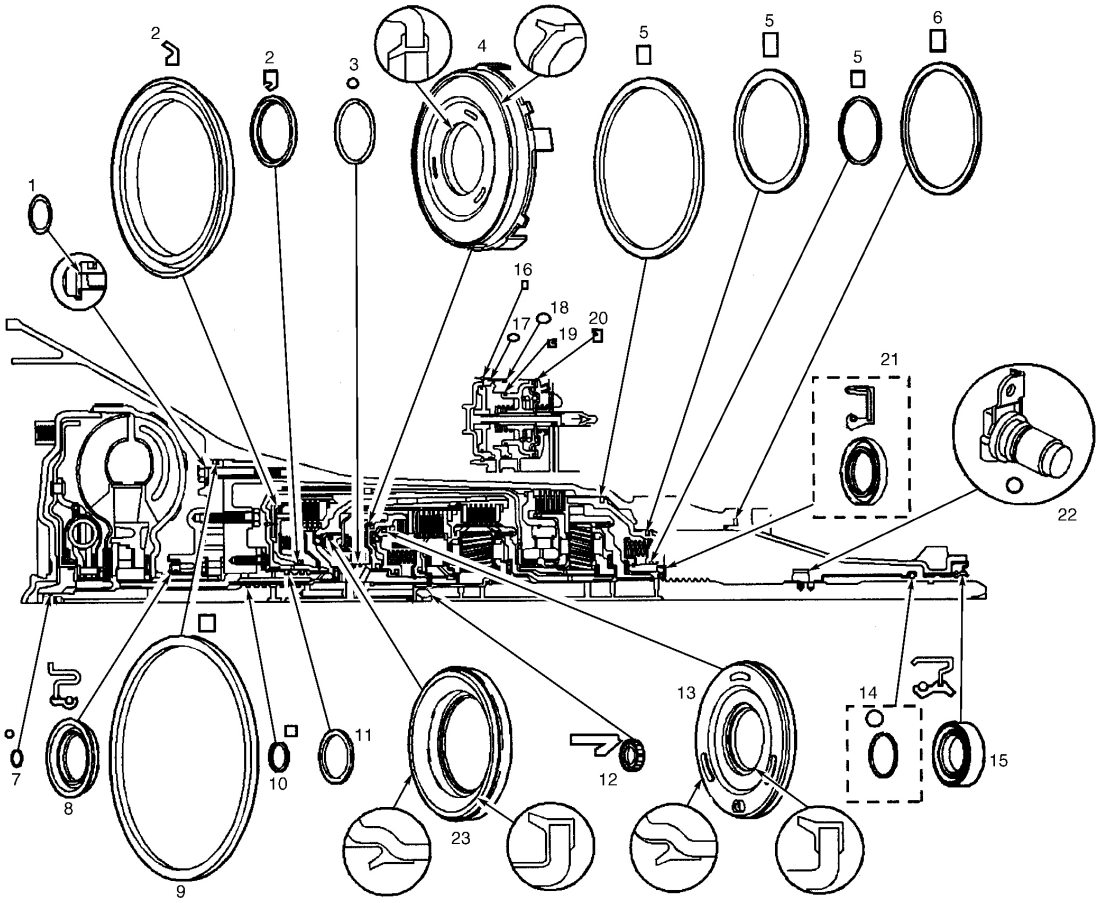

1. Pump-To-Case Bolt "O" Ring
2. Reverse Input Clutch Seals
3. Input-To-Forward Housing "O" Ring Seal
4. Forward Clutch Seals
5. Low-Reverse Clutch Seals
6. Case Seal
7. Turbine Shaft Selective Washer "O" Ring Seal
8. Oil Seal Assembly
9. Pump-To-Case Oil Seal
10. Solid Oil Seal Ring
11. Stator Shaft Oil Seal Ring
12. Input Housing-To-Output Shaft Seal
13. Overrun Clutch Seals
14. Output Shaft Seal
15. Case Extension Oil Seal Assembly
16. 4th Apply Piston Oil Seal Ring
17. 2-4 Servo Cover "O" Ring Seal
18. "O" Ring Seal
19. 2nd Apply Piston Inner Oil Seal Ring
20. 2nd Apply Piston Inner Oil Seal Ring
21. Case Oil Seal Assembly (Corvette)
22. Speed Sensor "O" Ring Seal
23. 3rd & 4th Clutch Seals

G98H01183

Fig. 85: Identifying 4L60-E Oil Seal Locations
Courtesy of GENERAL MOTORS CORP.

cardiagn.com

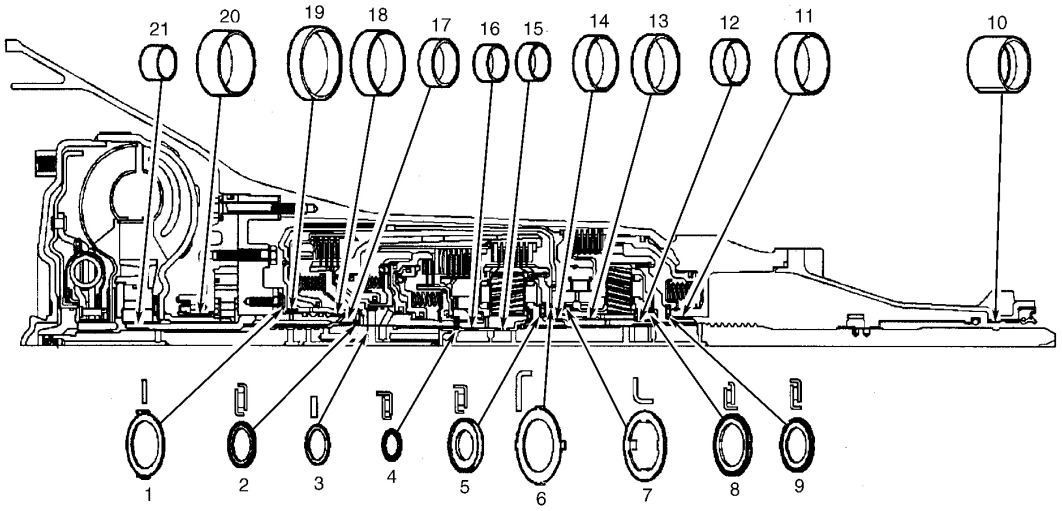

1. Pump-To-Drum Thrust Washer
2. Stator Shaft/Selective Washer Thrust Bearing
3. Selective Thrust Washer
4. Input Sun Gear Thrust Bearing
5. Input Carrier-To-Reaction Shaft Thrust Bearing
6. Reaction Shaft/Shell Thrust Washer
7. Race/Reaction Shell Thrust Washer
8. Reaction Carrier Support Thrust Bearing
9. Reaction Gear Support-To-Case Thrust Bearing
10. Case Extension Bushing
11. Case Bushing
12. Reaction Carrier Shaft Bushing (Rear)
13. Reaction Gear Bushing
14. Reaction Carrier Shaft Bushing (Front)
15. Input Sun Gear Bushing (Rear)
16. Input Sun Gear Bushing (Front)
17. Stator Shaft Bushing (Rear)
18. Reverse Input Clutch Bushing (Rear)
19. Reverse Input Clutch Bushing (Front)
20. Oil Pump Body Bushing
21. Stator Shaft Bushing (Front)

G98J01184

Fig. 86: Identifying 4L60-E Bushing, Thrust Bearing & Thrust Washer Locations
Courtesy of GENERAL MOTORS CORP.

TORQUE SPECIFICATIONS

TORQUE SPECIFICATIONS

Application	Ft. Lbs. (N.m)
Converter Housing Bolt (Except Corvette)	55 (75)
Detent Spring-To-Valve Body Bolt	20 (27)
Extension Housing Bolt	35 (48)
Manual Shaft-To-Detent Lever Nut	25 (34)
Oil Cooler Pipe Connector	30 (41)
Oil Cooler Pipe Fitting	30 (41)
Oil Pan Drain Plug	
Corvette	24 (32)
Except Corvette	30 (40)
Oil Pump Cover-To-Body Bolt	20 (27)
Oil Pump-To-Case Bolt	24 (32)
Park Bracket-To-Case Bolt	25 (34)

cardiagn.com

Torque Converter-To-Flexplate Bolt	44 (60)
Transmission Case Extension Bolt (Corvette)	16 (22)
	INCH Lbs. (N.m)
Accumulator Cover-To-Case Bolt	124 (14)
Forward Accumulator Cover-To-Valve Body Bolt	124 (14)
Line Pressure Plug	124 (14)
Oil Pan-To-Case Bolt	124 (14)
Oil Passage Cover Bolt	124 (14)
PC Solenoid Bracket-To-Valve Body Bolt	124 (14)
Speed Sensor Bolt	124 (14)
TCC Solenoid Assembly-To-Case Bolt	124 (14)
TFP Manual Valve Position Switch-To-Valve Body Bolt	124 (14)
Valve Body-To-Case Bolt (1)	124 (14)
(1) Tighten valve body bolts in a spiral pattern starting in center of valve body.	

TRANSMISSION SPECIFICATIONS

TRANSMISSION SPECIFICATIONS

Application	In. (mm)
Clearance	
Forward Clutch (1)	
W/9.650" (245 mm) Converter	.030-.069 (.76-1.75)
W/11.732" (298 mm) Converter	.034-.074 (.86-1.88)
W/11.811" (300 mm) Converter	.034-.074 (.86-1.88)
Reverse Input Clutch	.040-.076 (1.02-1.93)
3-4 Clutch	.035-.083 (.89-2.11)
End Play	
Reaction & Input Planetary Pinion Gear	.008-.024 (.20-.61)
Torque Converter	
9.650" (245 mm)	0-.015 (0-.38)
10.157" (258 mm)	.004-.020 (.10-.50)
11.732" (298 mm)	0-.019 (0-.48)
11.811" (300 mm)	.004-.020 (.10-.50)
Transmission	.005-.036 (.13-.91)

cardiagn.com

Height (Low-Reverse Clutch)	1.15-1.18 (29.2-29.9)
(1) Forward clutch clearance specification for transmissions equipped with 258 mm torque converter is not available from manufacturer.	

cardiagn.com