2006 Cadillac STS/STS-V Owner Manual

Seats and Restraint Systems 1-1
Front Seats 1-2
Rear Seats 1-7
Safety Belts 1-8
Child Restraints 1-26
Airbag System 1-48
Restraint System Check 1-63

Features and Controls 2-1
Keys 2-3
Doors and Locks 2-12
Windows 2-17
Theft-Deterrent Systems 2-20
Starting and Operating Your Vehicle 2-24
Mirrors 2-41
OnStar® System 2-45
Universal Home Remote System 2-47
Storage Areas 2-51
Sunroof 2-52
Vehicle Personalization 2-53

Instrument Panel 3-1
Instrument Panel Overview 3-4
Climate Controls 3-48
Warning Lights, Gages, and Indicators 3-57
Driver Information Center (DIC) 3-73
Audio System(s) 3-94

Driving Your Vehicle 4-1
Your Driving, the Road, and Your Vehicle 4-2
Towing 4-37

Service and Appearance Care 5-1
Service 5-3
Fuel 5-5
Checking Things Under the Hood 5-10
All-Wheel Drive 5-51
Rear Axle 5-52
Front Axle 5-53
Bulb Replacement 5-54
Windshield Replacement 5-56
Windshield Wiper Blade Replacement 5-56
Tires 5-57
Appearance Care 5-94
Vehicle Identification 5-103
Electrical System 5-104
Capacities and Specifications 5-116

Maintenance Schedule 6-1
Maintenance Schedule 6-2

Customer Assistance and Information 7-1
Customer Assistance and Information 7-2
Reporting Safety Defects 7-13

Index 1

GENERAL MOTORS, GM, the GM Emblem, CADILLAC, the CADILLAC Crest & Wreath, and the name STS are registered trademarks of General Motors Corporation.

This manual includes the latest information at the time it was printed. We reserve the right to make changes in the product after that time without notice. For vehicles first sold in Canada, substitute the name “General Motors of Canada Limited” for Cadillac Motor Car Division whenever it appears in this manual.

Keep this manual in the vehicle, so it will be there if it is needed while you are on the road. If the vehicle is sold, leave this manual in the vehicle.

Litho in U.S.A.
Part No. 06STS A First Printing

Canadian Owners

A French language copy of this manual can be obtained from your dealer or from:

Helm, Incorporated
P.O. Box 07130
Detroit, MI 48207

How to Use This Manual

Many people read the owner manual from beginning to end when they first receive their new vehicle. If this is done, it can help you learn about the features and controls for the vehicle. Pictures and words work together in the owner manual to explain things.

Index

A good place to quickly locate information about the vehicle is the Index in the back of the manual. It is an alphabetical list of what is in the manual and the page number where it can be found.

©2005 General Motors Corporation. All Rights Reserved.

Safety Warnings and Symbols

There are a number of safety cautions in this book. We use a box and the word CAUTION to tell about things that could hurt you if you were to ignore the warning.

> ⚠ **CAUTION:**
>
> **These mean there is something that could hurt you or other people.**

In the caution area, we tell you what the hazard is. Then we tell you what to do to help avoid or reduce the hazard. Please read these cautions. If you do not, you or others could be hurt.

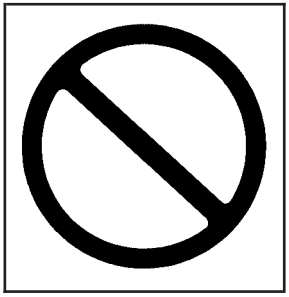

You will also find a circle with a slash through it in this book. This safety symbol means “Do Not,” “Do Not do this” or “Do Not let this happen.”

Vehicle Damage Warnings

Also, in this manual you will find these notices:

Notice: **These mean there is something that could damage your vehicle.**

A notice tells about something that can damage the vehicle. Many times, this damage would not be covered by your vehicle's warranty, and it could be costly. But the notice will tell what to do to help avoid the damage.

When you read other manuals, you might see CAUTION and NOTICE warnings in different colors or in different words.

There are also warning labels on the vehicle. They use the same words, CAUTION or NOTICE.

Vehicle Symbols

The vehicle has components and labels that use symbols instead of text. Symbols are shown along with the text describing the operation or information relating to a specific component, control, message, gage, or indicator.

If you need help figuring out a specific name of a component, gage, or indicator, reference the following topics:

- Seats and Restraint Systems in Section 1
- Features and Controls in Section 2
- Instrument Panel Overview in Section 3
- Climate Controls in Section 3
- Warning Lights, Gages, and Indicators in Section 3
- Audio System(s) in Section 3
- Engine Compartment Overview in Section 5

These are some examples of symbols that may be found on the vehicle:

CAUTION POSSIBLE INJURY	LATCH BOTH LAP AND SHOULDER BELTS TO PROTECT OCCUPANT DO NOT TWIST SAFETY BELT WHEN ATTACHING		MASTER LIGHTING SWITCH	ENGINE COOLANT TEMP	TIRE PRESSURE
PROTECT EYES BY SHIELDING	FASTEN SEAT BELTS	AIRBAG	TURN SIGNALS	BATTERY CHARGING SYSTEM	FUSE BOX ACCESS
CAUSTIC BATTERY ACID COULD CAUSE BURNS	MOVE SEAT FULLY REARWARD SECURE CHILD SEAT	DO NOT INSTALL A REAR-FACING CHILD RESTRAINT IN THIS SEATING POSITION	PARKING LAMPS	BRAKE	ENGINE COOLANT FAN
AVOID SPARKS OR FLAMES	PULL BELT OUT COMPLETELY THEN SECURE CHILD SEAT	DO NOT INSTALL A FORWARD-FACING CHILD RESTRAINT IN THIS SEATING POSITION	HAZARD WARNING FLASHER	COOLANT	FUEL
SPARK OR FLAME COULD EXPLODE BATTERY	POWER WINDOW	DOOR LOCK UNLOCK	DAYTIME RUNNING LAMPS	ENGINE OIL PRESSURE	OWNER'S MANUAL
			FOG LAMPS	ANTI-LOCK BRAKES	SERVICE MANUAL

NOTES

Section 1 Seats and Restraint Systems

Front Seats 1-2
Power Seats 1-2
Power Lumbar 1-2
Heated Seats 1-3
Heated and Ventilated Seats 1-4
Power Reclining Seatback 1-5
Head Restraints 1-6

Rear Seats 1-7
Heated Seats 1-7
Rear Seat Pass-Through Door 1-7

Safety Belts 1-8
Safety Belts: They Are for Everyone 1-8
Questions and Answers About Safety Belts 1-12
How to Wear Safety Belts Properly 1-13
Driver Position 1-13
Shoulder Belt Height Adjustment 1-20
Safety Belt Use During Pregnancy 1-20
Right Front Passenger Position 1-21
Rear Seat Passengers 1-21
Rear Safety Belt Comfort Guides 1-23
Safety Belt Pretensioners 1-25
Safety Belt Extender 1-26

Child Restraints 1-26
Older Children 1-26
Infants and Young Children 1-29
Child Restraint Systems 1-32
Where to Put the Restraint 1-36
Lower Anchors and Tethers for Children (LATCH) 1-37
Securing a Child Restraint in a Rear Seat Position 1-43
Securing a Child Restraint in the Right Front Seat Position 1-45

Airbag System 1-48
Where Are the Airbags? 1-51
When Should an Airbag Inflate? 1-55
What Makes an Airbag Inflate? 1-56
How Does an Airbag Restrain? 1-56
What Will You See After an Airbag Inflates? 1-57
Passenger Sensing System 1-58
Servicing Your Airbag-Equipped Vehicle 1-62
Adding Equipment to Your Airbag-Equipped Vehicle 1-62

Restraint System Check 1-63
Checking the Restraint Systems 1-63
Replacing Restraint System Parts After a Crash 1-64

Front Seats

Power Seats

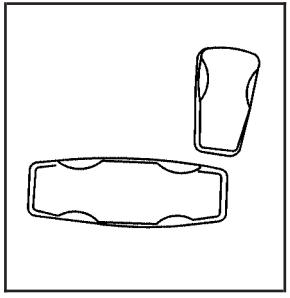

The power seat controls are located on the outboard sides of the front seat cushions.

- Move the front of the horizontal control up or down to adjust the front portion of the cushion.
- Move the rear of the horizontal control up or down to adjust the rear portion of the cushion.
- Slide the horizontal control forward or rearward to move the entire seat forward or rearward.
- Press the vertical control rearward to recline the seatback. Press the vertical control forward to raise the seatback. See *Power Reclining Seatback on page 1-5*.

If your vehicle has the memory feature, you can program and recall memory settings for seat positions. See *Memory Seat, Mirrors and Steering Wheel on page 2-70*.

Power Lumbar

Your vehicle's seats may be equipped with power lumbar.

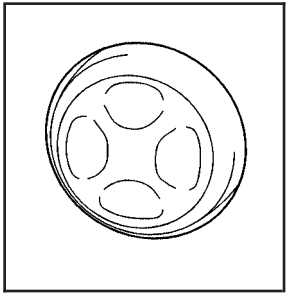

You can increase or decrease lumbar support in an area of the lower seatback with this control, located on the outboard sides of the front seat(s).

To increase support, press and hold the front of the control. To decrease support, press and hold the rear of the control. Let go of the control when the lower seatback reaches the desired level of support.

To raise the position of the lumbar support, press and hold the top of the control. To lower the position of lumbar support, press and hold the bottom of the control. Let go of the control when the lower seatback reaches the desired level of support.

Your vehicle may have a memory function which allows seat settings to be saved and recalled. See *Memory Seat, Mirrors and Steering Wheel on page 2-70* for more information.

Heated Seats

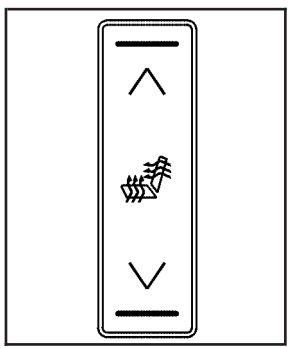

Your vehicle may have heated front seats. The buttons are located on the climate control panel.

(Heated Seat and Seatback): This button is for the heated seat and seatback. Press the up arrow once to turn on the heated seat at the highest setting. Press the down arrow once to turn on the heated seat at the lowest setting.

Pressing the up or down arrows a second time will raise or lower the setting. To turn off the heated seat keep pressing the down arrow until the indicator for heated seat on the climate control display is off.

A light bar in the climate control display shows the setting: high, medium, or low. The longest bar shows the high range and the shortest bar shows the low range.

The heated seat will automatically shut off when the vehicle is turned off.

Heated and Ventilated Seats

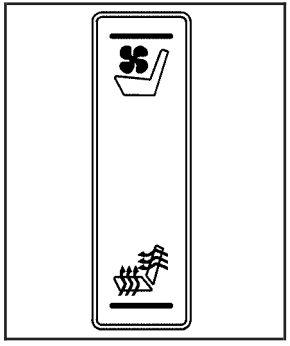

Your vehicle may have heated and ventilated front seats. The buttons are located on the climate control panel.

(Heated Seat and Seatback): This part of the button is for the heated seat and seatback.

(Ventilated Seat): This part of the button is for the ventilated seat.

There are three settings for each feature. A light bar in the climate control display shows the setting; high, medium or low. The longest bar shows the high range and the shortest bar shows the low range.

Pressing either the heated seat or ventilated part of the seat button will start that feature at the highest setting. Each time you press the button, the feature will decrease one setting.

To turn the feature off, keep pressing the button until the display lights turn off.

The heated or ventilated seats will automatically shut off when the vehicle is turned off.

Power Reclining Seatback

The vertical power seat control described earlier allows the seatback to recline. See *Power Seats on page 1-2* for more information.

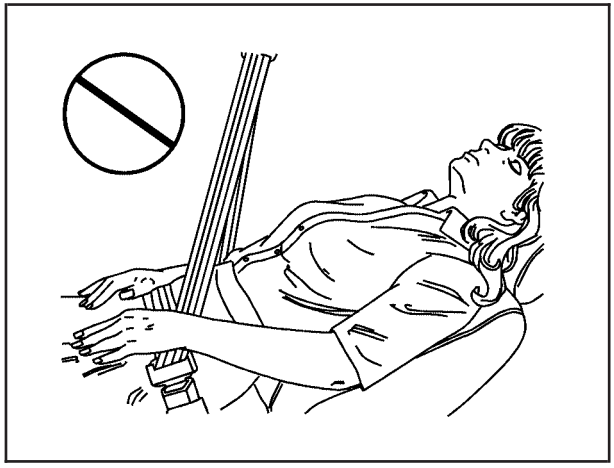

Do no have a seatback reclined if your vehicle is moving.

⚠ CAUTION:

Sitting in a reclined position when your vehicle is in motion can be dangerous. Even if you buckle up, your safety belts cannot do their job when you are reclined like this.

The shoulder belt cannot do its job because it will not be against your body. Instead, it will be in front of you. In a crash, you could go into it, receiving neck or other injuries.

The lap belt cannot do its job either. In a crash, the belt could go up over your abdomen. The belt forces would be there, not at your pelvic bones. This could cause serious internal injuries.

For proper protection when the vehicle is in motion, have the seatback upright. Then sit well back in the seat and wear your safety belt properly.

Head Restraints

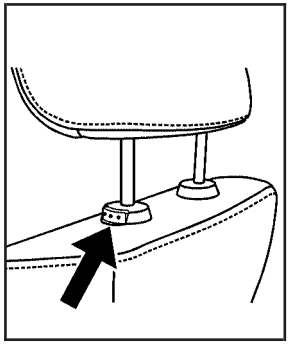

The front and rear head restraints lock into place when raised. To release the head restraint and lower it, press the tab located at the base of the restraint.

The front head restraints also tilt forward and rearward.

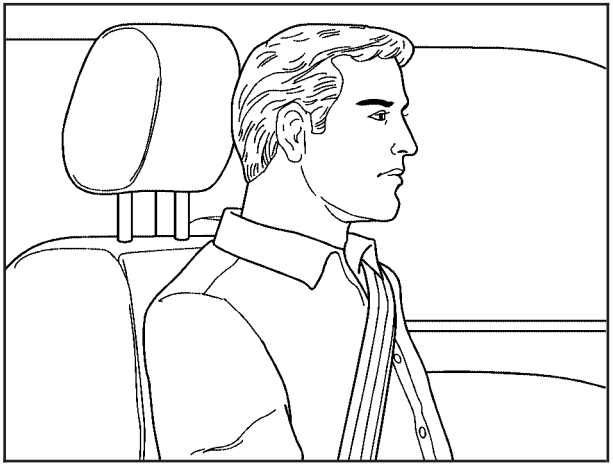

Adjust your head restraint so that the top of the restraint is closest to the top of your head. This position reduces the chance of a neck injury in a crash.

Rear Seats

Heated Seats

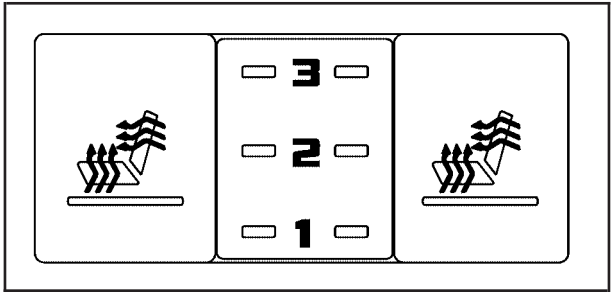

Your vehicle may have this feature. The buttons used to control the heated rear seats are located on the back of the center console. The engine must be running for the heated seat feature to work.

(Heated Seat and Seatback): Press this button to turn the heated seat feature on. When you press the button, the feature will turn on at the highest setting. Each time you press the button, the feature will go down one temperature setting. A light next to the button will indicate the setting; 3 is the highest, 1 is the lowest. To turn the feature off, keep pressing the button until the indicator light goes off.

The heated rear seats will shut off automatically when the ignition is turned off.

Rear Seat Pass-Through Door

Your vehicle has a pass-through door that provides access to the trunk from the rear seats. See “Rear Seat Pass-Through Door” under *Trunk on page 2-14*.

Safety Belts

Safety Belts: They Are for Everyone

This part of the manual tells you how to use safety belts properly. It also tells you some things you should not do with safety belts.

⚠ CAUTION:

Do not let anyone ride where he or she cannot wear a safety belt properly. If you are in a crash and you are not wearing a safety belt, your injuries can be much worse. You can hit things inside the vehicle or be ejected from it. You can be seriously injured or killed. In the same crash, you might not be, if you are buckled up. Always fasten your safety belt, and check that your passengers' belts are fastened properly too.

⚠ CAUTION:

It is extremely dangerous to ride in a cargo area, inside or outside of a vehicle. In a collision, people riding in these areas are more likely to be seriously injured or killed. Do not allow people to ride in any area of your vehicle that is not equipped with seats and safety belts. Be sure everyone in your vehicle is in a seat and using a safety belt properly.

Your vehicle has indicators to remind you and your passengers to buckle your safety belts. See *Safety Belt Reminder Light on page 3-59* and *Passenger Safety Belt Reminder Light on page 3-60*.

In most states and in all Canadian provinces, the law says to wear safety belts. Here is why: *They work*.

You never know if you will be in a crash. If you do have a crash, you do not know if it will be a bad one.

A few crashes are mild, and some crashes can be so serious that even buckled up, a person would not survive. But most crashes are in between. In many of them, people who buckle up can survive and sometimes walk away. Without belts they could have been badly hurt or killed.

After more than 30 years of safety belts in vehicles, the facts are clear. In most crashes buckling up does matter...a lot!

Why Safety Belts Work

When you ride in or on anything, you go as fast as it goes.

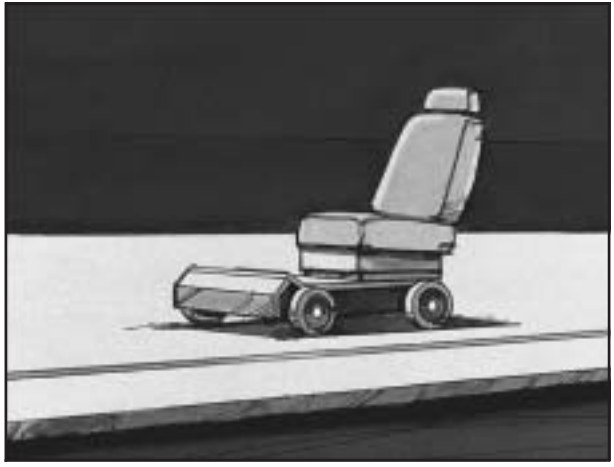

Take the simplest vehicle. Suppose it is just a seat on wheels.

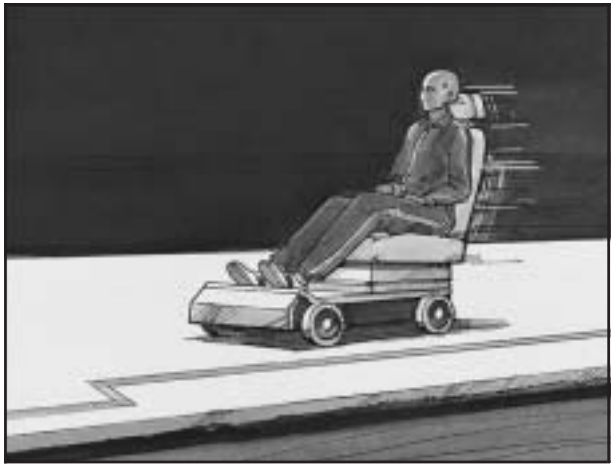

Put someone on it.

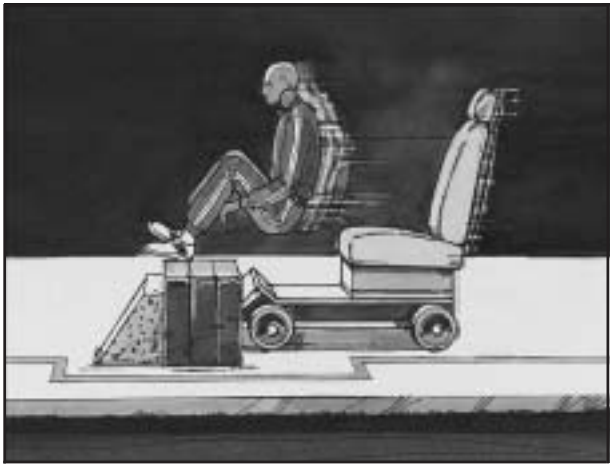

Get it up to speed. Then stop the vehicle.
The rider does not stop.

The person keeps going until stopped by something. In a real vehicle, it could be the windshield...

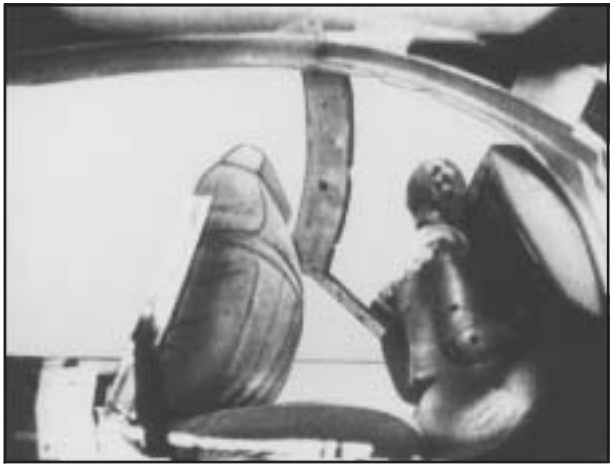

or the instrument panel...

or the safety belts!

With safety belts, you slow down as the vehicle does. You get more time to stop. You stop over more distance, and your strongest bones take the forces. That is why safety belts make such good sense.

Questions and Answers About Safety Belts

Q: Will I be trapped in the vehicle after an accident if I am wearing a safety belt?

A: You *could* be — whether you are wearing a safety belt or not. But you can unbuckle a safety belt, even if you are upside down. And your chance of being conscious during and after an accident, so you *can* unbuckle and get out, is *much* greater if you are belted.

Q: If my vehicle has airbags, why should I have to wear safety belts?

A: Airbags are in many vehicles today and will be in most of them in the future. But they are supplemental systems only; so they work *with* safety belts — not instead of them. Every airbag system ever offered for sale has required the use of safety belts. Even if you are in a vehicle that has airbags, you still have to buckle up to get the most protection. That is true not only in frontal collisions, but especially in side and other collisions.

Q: If I am a good driver, and I never drive far from home, why should I wear safety belts?

A: You may be an excellent driver, but if you are in an accident — even one that is not your fault — you and your passengers can be hurt. Being a good driver does not protect you from things beyond your control, such as bad drivers.

Most accidents occur within 25 miles (40 km) of home. And the greatest number of serious injuries and deaths occur at speeds of less than 40 mph (65 km/h).

Safety belts are for everyone.

How to Wear Safety Belts Properly

This part is only for people of adult size.

Be aware that there are special things to know about safety belts and children. And there are different rules for smaller children and babies. If a child will be riding in your vehicle, see *Older Children on page 1-26* or *Infants and Young Children on page 1-29*. Follow those rules for everyone's protection.

First, you will want to know which restraint systems your vehicle has.

We will start with the driver position.

Driver Position

Lap-Shoulder Belt

The driver has a lap-shoulder belt. Here is how to wear it properly.

1. Close and lock the door.
2. Adjust the seat so you can sit up straight. To see how, see "Seats" in the Index.

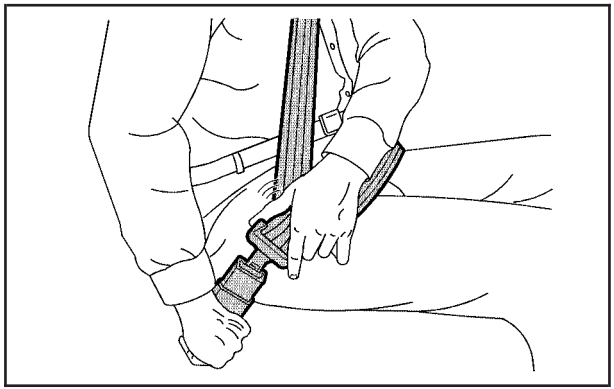

3. Pick up the latch plate and pull the belt across you. Do not let it get twisted.

   The shoulder belt may lock if you pull the belt across you very quickly. If this happens, let the belt go back slightly to unlock it. Then pull the belt across you more slowly.

4. Push the latch plate into the buckle until it clicks.

   Pull up on the latch plate to make sure it is secure. If the belt is not long enough, see *Safety Belt Extender on page 1-26*.

   Make sure the release button on the buckle is positioned so you would be able to unbuckle the safety belt quickly if you ever had to.

5. Move the shoulder belt height adjuster to the height that is right for you. See *Shoulder Belt Height Adjustment on page 1-20*.

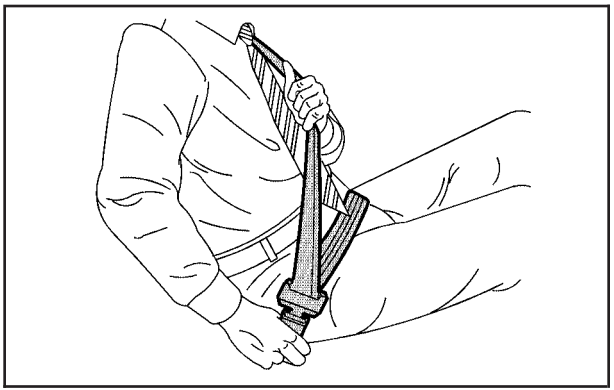

6. To make the lap part tight, pull up on the shoulder belt.

7. This safety belt has a feature that will reduce the tension of the safety belt on the occupant's shoulder if the vehicle is on. To set this feature, gently pull on the belt, or lean forward and then sit back. The belt will retract and rest lightly against the occupant.

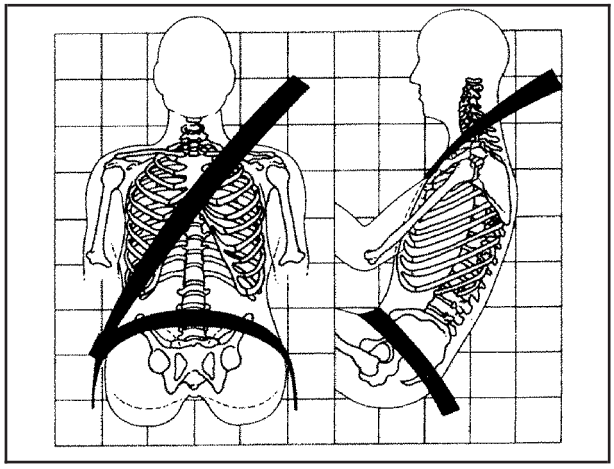

The lap part of the belt should be worn low and snug on the hips, just touching the thighs. In a crash, this applies force to the strong pelvic bones. And you would be less likely to slide under the lap belt. If you slid under it, the belt would apply force at your abdomen. This could cause serious or even fatal injuries. The shoulder belt should go over the shoulder and across the chest. These parts of the body are best able to take belt restraining forces.

The safety belt locks if there is a sudden stop or crash, or if you pull the belt very quickly out of the retractor.

Q: What is wrong with this?

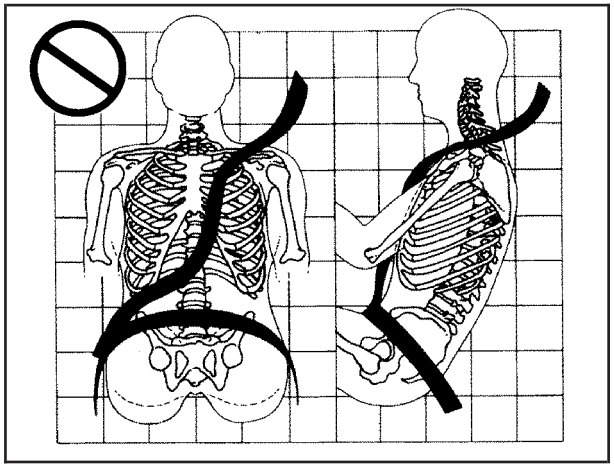

A: The shoulder belt is too loose. It will not give nearly as much protection this way.

⚠ CAUTION:

You can be seriously hurt if your shoulder belt is too loose. In a crash, you would move forward too much, which could increase injury. The shoulder belt should fit against your body.

Q: What is wrong with this?

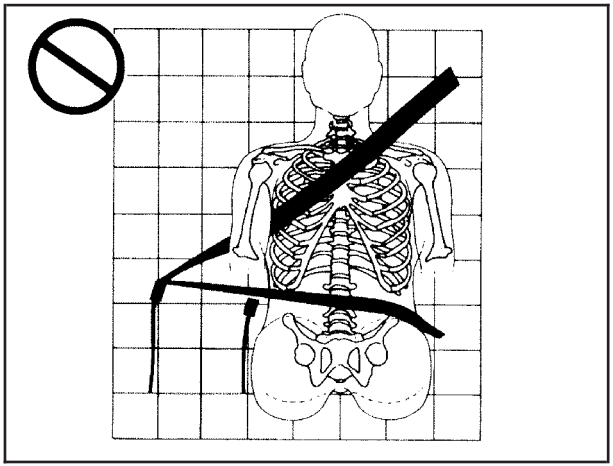

A: The belt is buckled in the wrong place.

⚠ CAUTION:

You can be seriously injured if your belt is buckled in the wrong place like this. In a crash, the belt would go up over your abdomen. The belt forces would be there, not at the pelvic bones. This could cause serious internal injuries. Always buckle your belt into the buckle nearest you.

Q: What is wrong with this?

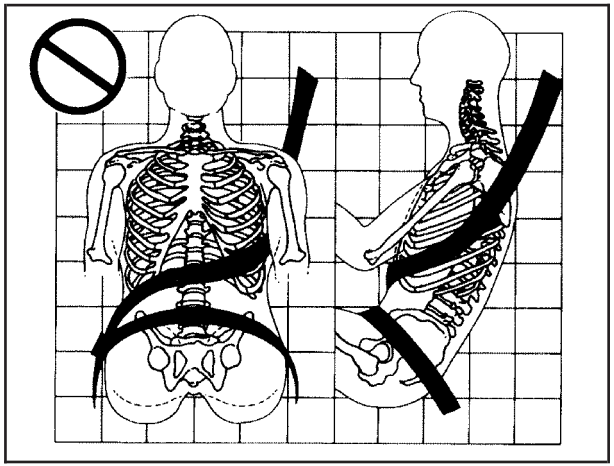

A: The shoulder belt is worn under the arm.
It should be worn over the shoulder at all times.

⚠ CAUTION:

You can be seriously injured if you wear the shoulder belt under your arm. In a crash, your body would move too far forward, which would increase the chance of head and neck injury. Also, the belt would apply too much force to the ribs, which are not as strong as shoulder bones. You could also severely injure internal organs like your liver or spleen.

Q: What is wrong with this?

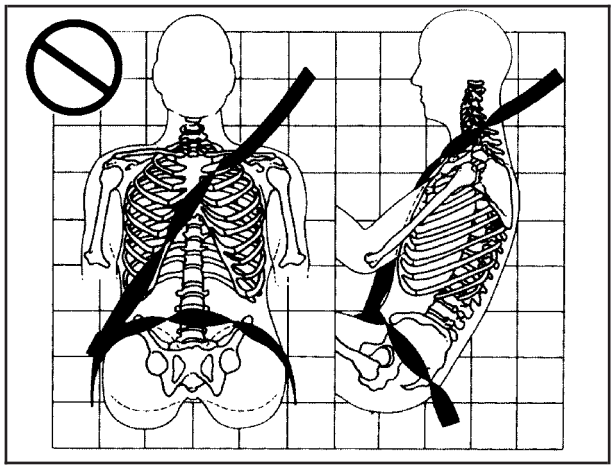

A: The belt is twisted across the body.

⚠ CAUTION:

You can be seriously injured by a twisted belt. In a crash, you would not have the full width of the belt to spread impact forces. If a belt is twisted, make it straight so it can work properly, or ask your dealer to fix it.

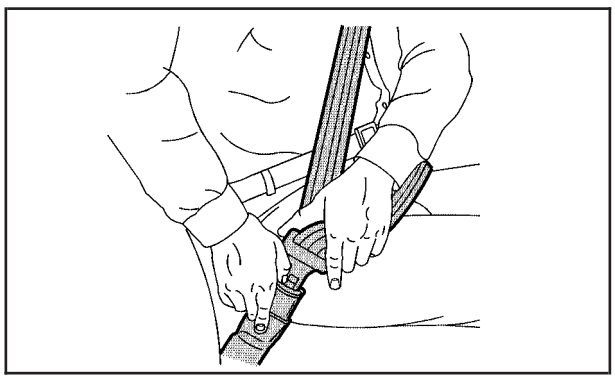

To unlatch the belt, just push the button on the buckle. When the seatbelt is unbuckled or when the vehicle is turned off, the tension reducer will deactivate. The belt should go back out of the way.

Before you close the door, be sure the belt is out of the way. If you slam the door on it, you can damage both the belt and your vehicle.

Shoulder Belt Height Adjustment

Before you begin to drive, move the shoulder belt height adjuster to the height that is right for you.

Adjust the height so that the shoulder portion of the belt is centered on your shoulder. The belt should be away from your face and neck, but not falling off your shoulder.

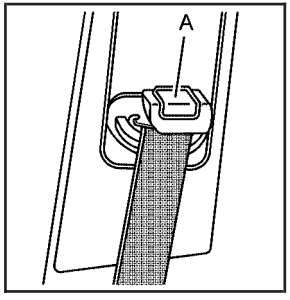

To move it down, press the release button (A) and move the height adjuster to the desired position. You can move the height adjuster up just by pushing up on the shoulder belt guide.

After you move the height adjuster to where you want it, try to move it down without pressing the release button to make sure it has locked into position.

Safety Belt Use During Pregnancy

Safety belts work for everyone, including pregnant women. Like all occupants, they are more likely to be seriously injured if they do not wear safety belts.

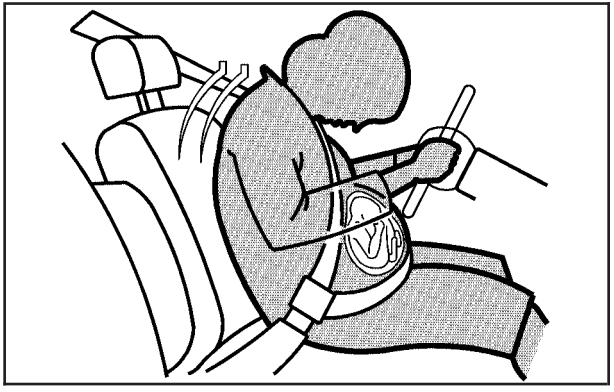

A pregnant woman should wear a lap-shoulder belt, and the lap portion should be worn as low as possible, below the rounding, throughout the pregnancy.

The best way to protect the fetus is to protect the mother. When a safety belt is worn properly, it is more likely that the fetus will not be hurt in a crash. For pregnant women, as for anyone, the key to making safety belts effective is wearing them properly.

Right Front Passenger Position

To learn how to wear the right front passenger's safety belt properly, see *Driver Position on page 1-13*.

The right front passenger's safety belt works the same way as the driver's safety belt — except for one thing. If you ever pull the shoulder portion of the belt out all the way, you will engage the child restraint locking feature. If this happens, just let the belt go back all the way and start again.

Rear Seat Passengers

It is very important for rear seat passengers to buckle up! Accident statistics show that unbelted people in the rear seat are hurt more often in crashes than those who are wearing safety belts.

Rear passengers who are not safety belted can be thrown out of the vehicle in a crash. And they can strike others in the vehicle who are wearing safety belts.

Lap-Shoulder Belt

All rear seat positions have lap-shoulder belts. Here is how to wear one properly.

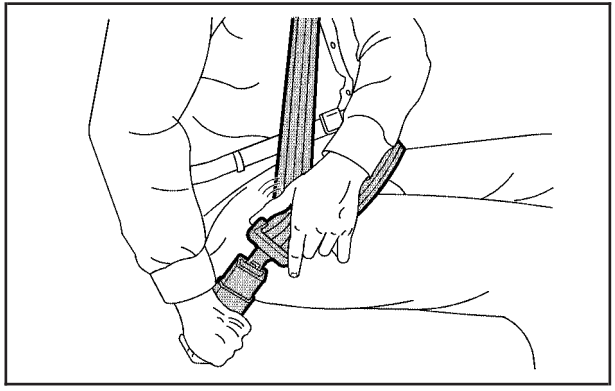

1. Pick up the latch plate and pull the belt across you. Do not let it get twisted.

   The shoulder belt may lock if you pull the belt across you very quickly. If this happens, let the belt go back slightly to unlock it. Then pull the belt across you more slowly.

2. Push the latch plate into the buckle until it clicks.

   Pull up on the latch plate to make sure it is secure.

   When the shoulder belt is pulled out all the way, it will lock. If it does, let it go back all the way and start again.

   If the belt is not long enough, see *Safety Belt Extender on page 1-26*.

   Make sure the release button on the buckle is positioned so you would be able to unbuckle the safety belt quickly if you ever had to.

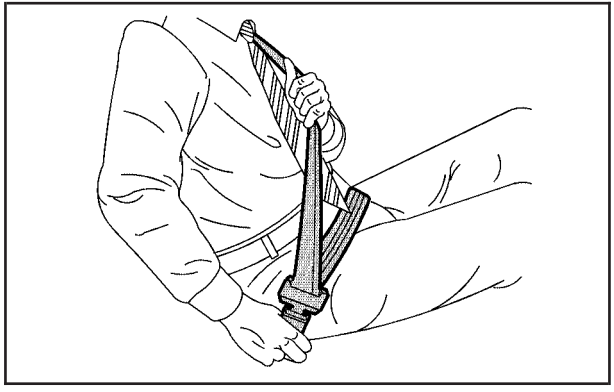

3. To make the lap part tight, pull up on the shoulder part.

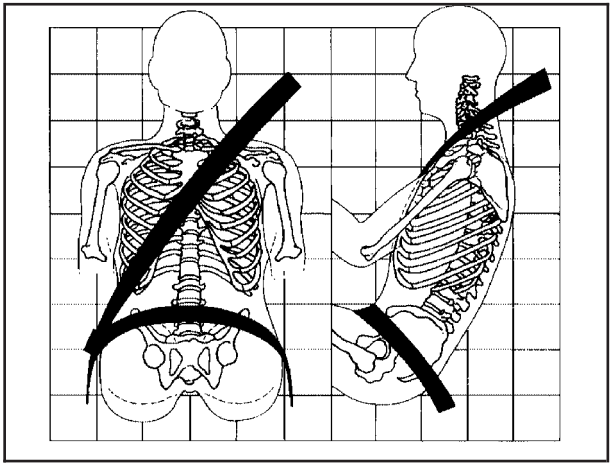

The lap part of the belt should be worn low and snug on the hips, just touching the thighs. In a crash, this applies force to the strong pelvic bones. And you would be less likely to slide under the lap belt. If you slid under it, the belt would apply force at your abdomen. This could cause serious or even fatal injuries. The shoulder belt should go over the shoulder and across the chest. These parts of the body are best able to take belt restraining forces.

The safety belt locks if there is a sudden stop or a crash, or if you pull the belt very quickly out of the retractor.

⚠ CAUTION:

You can be seriously hurt if your shoulder belt is too loose. In a crash, you would move forward too much, which could increase injury. The shoulder belt should fit against your body.

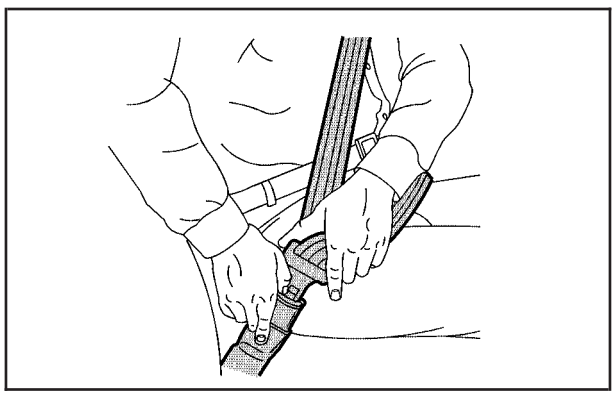

To unlatch the belt, push the button on the buckle.

Rear Safety Belt Comfort Guides

Rear shoulder belt comfort guides may provide added safety belt comfort for older children who have outgrown booster seats and for some adults. When installed on a shoulder belt, the comfort guide positions the belt away from the neck and head.

There is one guide for each outboard passenger position in the rear seat. Here is how to install a comfort guide and use the safety belt:

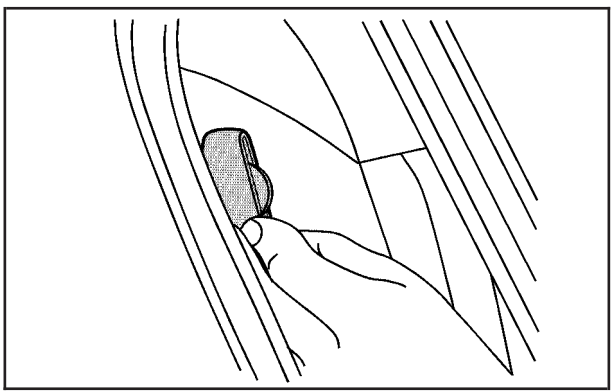

1. Pull the elastic cord out from between the edge of the seatback and the interior body to remove the guide from its storage clip.

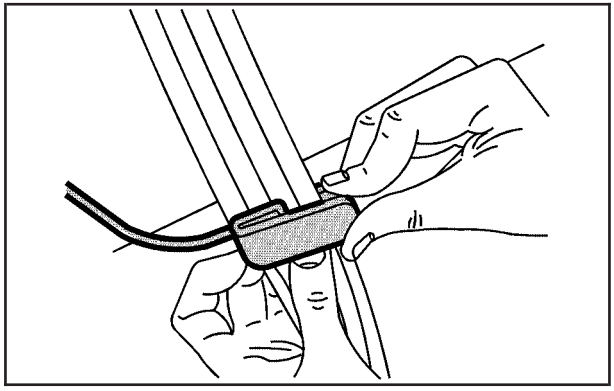

2. Slide the guide under and past the belt. The elastic cord must be under the belt. Then, place the guide over the belt, and insert the two edges of the belt into the slots of the guide.

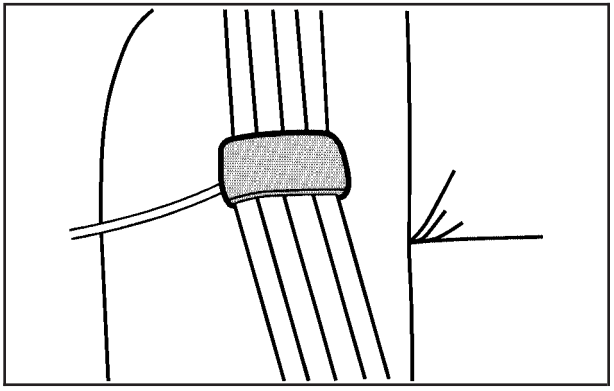

3. Be sure that the belt is not twisted and it lies flat. The elastic cord must be under the belt and the guide on top.

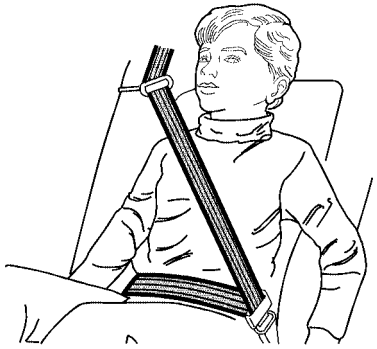

⚠ CAUTION:

A safety belt that is not properly worn may not provide the protection needed in a crash. The person wearing the belt could be seriously injured. The shoulder belt should go over the shoulder and across the chest. These parts of the body are best able to take belt restraining forces.

4. Buckle, position, and release the safety belt as described in *Rear Seat Passengers on page 1-21*. Make sure that the shoulder belt crosses the shoulder.

To remove and store the comfort guides, squeeze the belt edges together so that you can take them out of the guides. Pull the guide upward to expose its storage clip, and then slide the guide onto the clip. Turn the guide and clip inward and slide them in between the seatback and the interior body, leaving only the loop of the elastic cord exposed.

Safety Belt Pretensioners

Your vehicle has safety belt pretensioners for the driver and right front passenger. Although you cannot see them, they are located on the buckle end of the safety belts. They help the safety belts reduce a person's forward movement in a moderate to severe frontal and near frontal crash.

Pretensioners work only once. If they activate in a crash, you will need to get new ones, and probably other new parts for your safety belt system. See *Replacing Restraint System Parts After a Crash on page 1-64*.

Safety Belt Extender

If the vehicle's safety belt will fasten around you, you should use it.

But if a safety belt is not long enough, your dealer will order you an extender. It is free. When you go in to order it, take the heaviest coat you will wear, so the extender will be long enough for you. To help avoid personal injury, do not let someone else use it, and use it only for the seat it is made to fit. The extender has been designed for adults. Never use it for securing child seats. To wear it, just attach it to the regular safety belt. For more information, see the instruction sheet that comes with the extender.

Child Restraints

Older Children

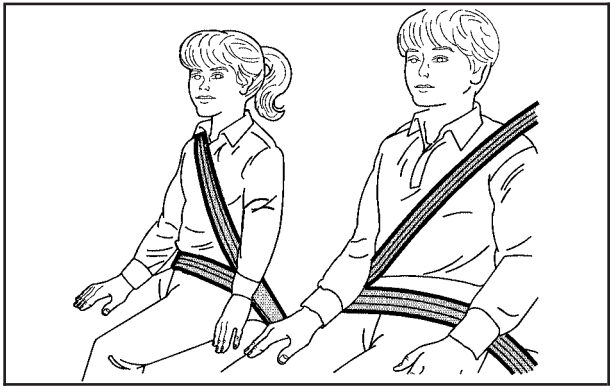

Older children who have outgrown booster seats should wear the vehicle's safety belts.

Q: What is the proper way to wear safety belts?

A: An older child should wear a lap-shoulder belt and get the additional restraint a shoulder belt can provide. The shoulder belt should not cross the face or neck. The lap belt should fit snugly below the hips, just touching the top of the thighs. It should never be worn over the abdomen, which could cause severe or even fatal internal injuries in a crash.

Accident statistics show that children are safer if they are restrained in the rear seat.

In a crash, children who are not buckled up can strike other people who are buckled up, or can be thrown out of the vehicle. Older children need to use safety belts properly.

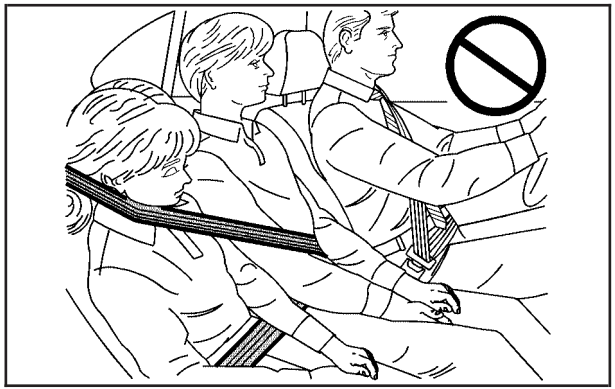

⚠ CAUTION:

Never do this.

Here two children are wearing the same belt. The belt can not properly spread the impact forces. In a crash, the two children can be crushed together and seriously injured. A belt must be used by only one person at a time.

Q: What if a child is wearing a lap-shoulder belt, but the child is so small that the shoulder belt is very close to the child's face or neck?

A: If the child is sitting in a seat next to a window, move the child toward the center of the vehicle. Also see *Rear Safety Belt Comfort Guides on page 1-23*. If the child is sitting in the center rear seat passenger position, move the child toward the safety belt buckle. In either case, be sure that the shoulder belt still is on the child's shoulder, so that in a crash the child's upper body would have the restraint the belts provide.

⚠ CAUTION:

Never do this.

Here a child is sitting in a seat that has a lap-shoulder belt, but the shoulder part is behind the child. If the child wears the belt in this way, in a crash the child might slide under the belt. The belt's force would then be applied right on the child's abdomen. That could cause serious or fatal injuries.

Wherever the child sits, the lap portion of the belt should be worn low and snug on the hips, just touching the child's thighs. This applies belt force to the child's pelvic bones in a crash.

Infants and Young Children

Everyone in a vehicle needs protection! This includes infants and all other children. Neither the distance traveled nor the age and size of the traveler changes the need, for everyone, to use safety restraints.
In fact, the law in every state in the United States and in every Canadian province says children up to some age must be restrained while in a vehicle.

Every time infants and young children ride in vehicles, they should have the protection provided by appropriate restraints. Young children should not use the vehicle's adult safety belts alone, unless there is no other choice. Instead, they need to use a child restraint.

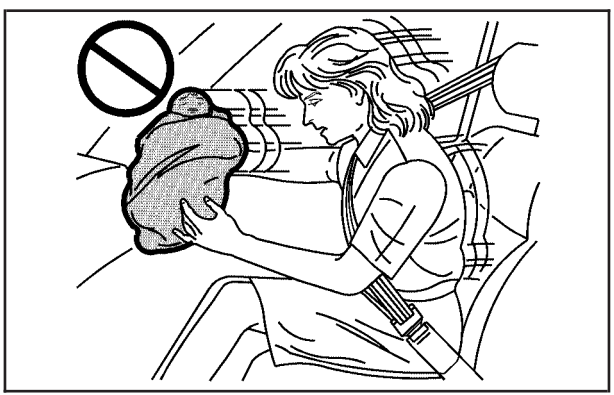

⚠ CAUTION:

People should never hold a baby in their arms while riding in a vehicle. A baby does not weigh much — until a crash. During a crash a baby will become so heavy it is not possible to hold it. For example, in a crash at only 25 mph (40 km/h), a 12 lb (5.5 kg) baby will suddenly become a 240 lb (110 kg) force on a person's arms. A baby should be secured in an appropriate restraint.

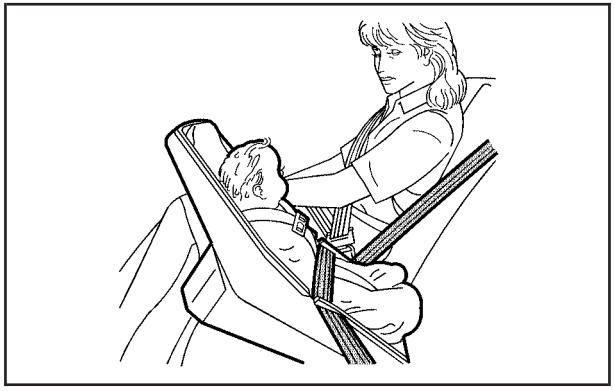

⚠ CAUTION:

Children who are up against, or very close to, any airbag when it inflates can be seriously injured or killed. Airbags plus lap-shoulder belts offer protection for adults and older children, but not for young children and infants. Neither the vehicle's safety belt system nor its airbag system is designed for them. Young children and infants need the protection that a child restraint system can provide.

Q: What are the different types of add-on child restraints?

A: Add-on child restraints, which are purchased by the vehicle's owner, are available in four basic types. Selection of a particular restraint should take into consideration not only the child's weight, height and age but also whether or not the restraint will be compatible with the motor vehicle in which it will be used.

For most basic types of child restraints, there are many different models available. When purchasing a child restraint, be sure it is designed to be used in a motor vehicle. If it is, the restraint will have a label saying that it meets federal motor vehicle safety standards.

The restraint manufacturer's instructions that come with the restraint, state the weight and height limitations for a particular child restraint. In addition, there are many kinds of restraints available for children with special needs.

⚠ CAUTION:

Newborn infants need complete support, including support for the head and neck. This is necessary because a newborn infant's neck is weak and its head weighs so much compared with the rest of its body. In a crash, an infant in a rear-facing seat settles into the restraint, so the crash forces can be distributed across the strongest part of an infant's body, the back and shoulders. Infants always should be secured in appropriate infant restraints.

⚠ CAUTION:

The body structure of a young child is quite unlike that of an adult or older child, for whom the safety belts are designed. A young child's hip bones are still so small that the vehicle's regular safety belt may not remain low on the hip bones, as it should. Instead, it may settle up around the child's abdomen. In a crash, the belt would apply force on a body area that is unprotected by any bony structure. This alone could cause serious or fatal injuries. Young children always should be secured in appropriate child restraints.

Child Restraint Systems

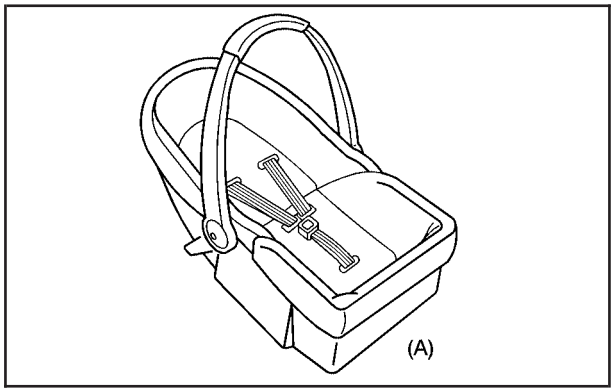

An infant car bed (A), a special bed made for use in a motor vehicle, is an infant restraint system designed to restrain or position a child on a continuous flat surface. Make sure that the infant's head rests toward the center of the vehicle.

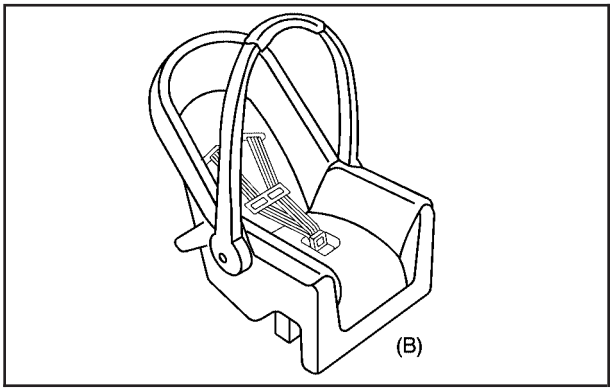

A rear-facing infant seat (B) provides restraint with the seating surface against the back of the infant. The harness system holds the infant in place and, in a crash, acts to keep the infant positioned in the restraint.

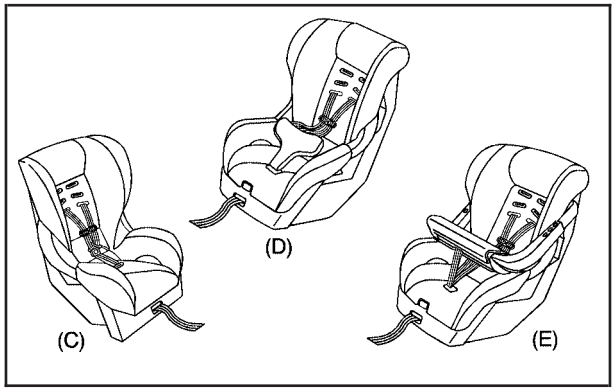

A forward-facing child seat (C-E) provides restraint for the child's body with the harness and also sometimes with surfaces such as T-shaped or shelf-like shields.

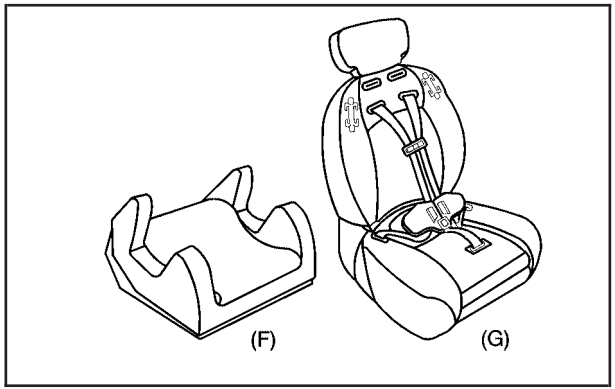

A booster seat (F-G) is a child restraint designed to improve the fit of the vehicle's safety belt system. Some booster seats have a shoulder belt positioner, and some high-back booster seats have a five-point harness. A booster seat can also help a child to see out the window.

Q: How Should I Use a Child Restraint?

A: A child restraint system is any device designed for use in a motor vehicle to restrain, seat, or position children. A built-in child restraint system is a permanent part of the motor vehicle. An add-on child restraint system is a portable one, which is purchased by the vehicle's owner. To help reduce injuries, an add-on child restraint must be secured in the vehicle. With built-in or add-on child restraints, the child has to be secured within the child restraint.

When choosing an add-on child restraint, be sure the child restraint is designed to be used in a vehicle. If it is, it will have a label saying that it meets federal motor vehicle safety standards. Then follow the instructions for the restraint. You may find these instructions on the restraint itself or in a booklet, or both.

Securing an Add-on Child Restraint in the Vehicle

⚠ CAUTION:

A child can be seriously injured or killed in a crash if the child restraint is not properly secured in the vehicle. Make sure the child restraint is properly installed in the vehicle using the vehicle's safety belt or LATCH system, following the instructions that came with that restraint, and also the instructions in this manual.

To help reduce the chance of injury, the child restraint must be secured in the vehicle. Child restraint systems must be secured in vehicle seats by lap belts or the lap belt portion of a lap-shoulder belt, or by the LATCH system. See *Lower Anchors and Tethers for Children (LATCH) on page 1-37* for more information. A child can be endangered in a crash if the child restraint is not properly secured in the vehicle.

When securing an add-on child restraint, refer to the instructions that come with the restraint which may be on the restraint itself or in a booklet, or both, and to this manual. The child restraint instructions are important, so if they are not available, obtain a replacement copy from the manufacturer.

Keep in mind that an unsecured child restraint can move around in a collision or sudden stop and injure people in the vehicle. Be sure to properly secure any child restraint in your vehicle — even when no child is in it.

Securing the Child Within the Child Restraint

There are several systems for securing the child within the child restraint. One system, the three-point harness, has straps that come down over each of the infant's shoulders and buckle together at the crotch. The five-point harness system has two shoulder straps, two hip straps, and a crotch strap. A shield may take the place of hip straps. A T-shaped shield has shoulder straps that are attached to a flat pad which rests low against the child's body. A shelf- or armrest-type shield has straps that are attached to a wide, shelf-like shield that swings up or to the side.

⚠ CAUTION:

A child can be seriously injured or killed in a crash if the child is not properly secured in the child restraint. Make sure the child is properly secured, following the instructions that came with that restraint.

Because there are different systems, it is important to refer to the instructions that come with the restraint. A child can be endangered in a crash if the child is not properly secured in the child restraint.

Where to Put the Restraint

Accident statistics show that children are safer if they are restrained in the rear rather than the front seat. General Motors recommends that child restraints be secured in a rear seat, including an infant riding in a rear-facing infant seat, a child riding in a forward-facing child seat and an older child riding in a booster seat.

Your vehicle has a rear seat that will accommodate a rear-facing child restraint. A label on your sun visor says, “Never put a rear-facing child seat in the front.” This is because the risk to the rear-facing child is so great, if the airbag deploys.

⚠ CAUTION:

A child in a rear-facing child restraint can be seriously injured or killed if the right front passenger’s airbag inflates. This is because the back of the rear-facing child restraint would be very close to the inflating airbag.

Even though the passenger sensing system is designed to turn off the passenger’s frontal airbag if the system detects a rear-facing child restraint, no system is fail-safe, and no one can guarantee that an airbag will not deploy under some unusual circumstance, even though it is turned off. General Motors recommends that rear-facing child restraints be secured in the rear seat, even if the airbag is off.

If you need to secure a forward-facing child restraint in the right front seat, always move the front passenger seat as far back as it will go. It is better to secure the child restraint in a rear seat.

Wherever you install a child restraint, be sure to secure the child restraint properly.

Keep in mind that an unsecured child restraint can move around in a collision or sudden stop and injure people in the vehicle. Be sure to properly secure any child restraint in your vehicle — even when no child is in it.

Lower Anchors and Tethers for Children (LATCH)

Your vehicle has the LATCH system. The LATCH system holds a child restraint during driving or in a crash. This system is designed to make installation of a child restraint easier. The LATCH system uses anchors in the vehicle and attachments on the child restraint that are made for use with the LATCH system.

Make sure that a LATCH-compatible child restraint is properly installed using the anchors, or use the vehicle's safety belts to secure the restraint, following the instructions that came with that restraint, and also the instructions in this manual.

When installing a child restraint with a top tether, you must also use either the lower anchors or the safety belts to properly secure the child restraint. A child restraint must never be attached using only the top tether and anchor.

In order to use the LATCH system in your vehicle, you need a child restraint equipped with LATCH attachments. The child restraint manufacturer will provide you with instructions on how to use the child restraint and its attachments. The following explains how to attach a child restraint with these attachments in your vehicle.

Your vehicle has lower anchors and top tether anchors. Your child restraint may have lower attachments and a top tether.

Not all vehicle seating positions or child restraints have lower anchors and attachments or top tether anchors and attachments.

Lower Anchors

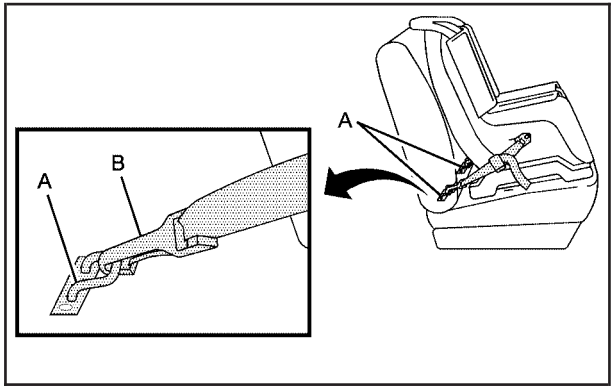

Lower anchors (A) are metal bars built into the vehicle. There are two lower anchors for each LATCH seating position that will accommodate a child restraint with lower attachments (B).

Top Tether Anchor

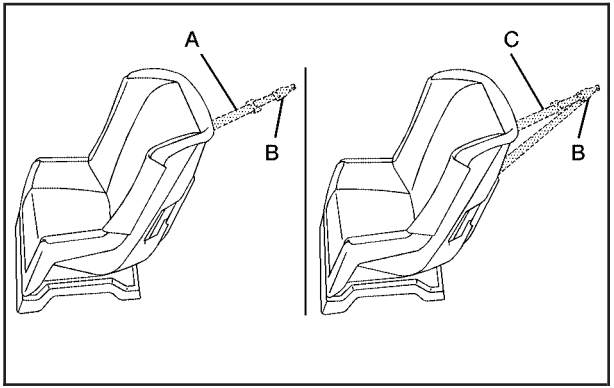

A top tether (A, C) anchors the top of the child restraint to the vehicle. A top tether anchor is built into the vehicle. The top tether attachment (B) on the child restraint connects to the top tether anchor in the vehicle in order to reduce the forward movement and rotation of the child restraint during driving or in a crash.

Your child restraint may have a single tether (A) or a dual tether (C). Either will have a single attachment (B) to secure the top tether to the anchor.

Some top tether-equipped child restraints are designed for use with or without the top tether being attached. Others require the top tether always to be attached. In Canada, the law requires that forward-facing child restraints have a top tether, and that the tether be attached. In the United States, some child restraints also have a top tether. Be sure to read and follow the instructions for your child restraint.

If the child restraint does not have a top tether, one can be obtained, in kit form, for many child restraints. Ask the child restraint manufacturer whether or not a kit is available.

Lower Anchor and Top Tether Anchor Locations

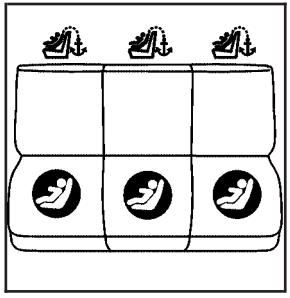

Rear Seat

(Lower Anchor): Seating positions with two lower anchors.

(Top Tether Anchor): Seating positions with top tether anchors.

To assist you in locating the lower anchors, each seating position with lower anchors has two labels, near the crease between the seatback and the seat cushion, showing where the anchors are located.

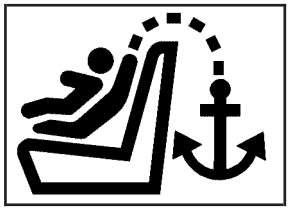

To assist you in locating the top tether anchors, the top tether anchor symbol is located on the trim cover.

The top tether anchors are located under the trim covers on the rear seatback filler panel. Be sure to use an anchor located on the same side of the vehicle as the seating position where the child restraint will be placed.

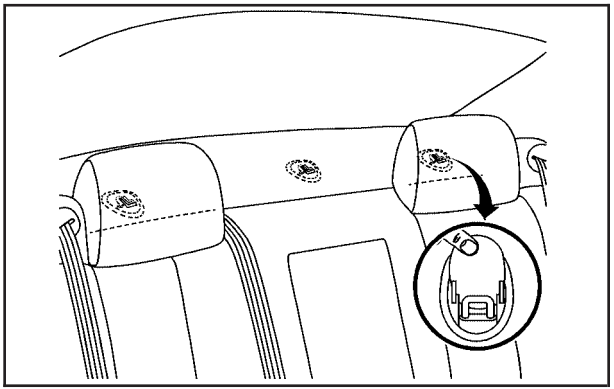

Do not secure a child restraint in the right front passenger's position if a national or local law requires that the top tether be attached, or if the instructions that come with the child restraint say that the top tether must be attached. There is no place to attach the top tether in this position.

Accident statistics show that children are safer if they are restrained in the rear rather than the front seat. See *Where to Put the Restraint on page 1-36* for additional information.

Securing a Child Restraint Designed for the LATCH System

⚠ CAUTION:

If a LATCH-type child restraint is not attached to anchors, the restraint will not be able to protect the child correctly. In a crash, the child could be seriously injured or killed. Make sure that a LATCH-type child restraint is properly installed using the anchors, or use the vehicle's safety belts to secure the restraint, following the instructions that came with that restraint, and also the instructions in this manual.

⚠ CAUTION:

Each top tether anchor and lower anchor in the vehicle is designed to hold only one child restraint. Attaching more than one child restraint to a single anchor could cause the anchor or attachment to come loose or even break during a crash. A child or others could be injured if this happens. To help prevent injury to people and damage to your vehicle, attach only one child restraint per anchor.

1. Find the lower anchors, if equipped, for the desired seating position.
2. If the desired seating position does not have lower anchors, see *Securing a Child Restraint in a Rear Seat Position on page 1-43* for instructions on installing the child restraint using the safety belts.
3. Put the child restraint on the seat.
4. Attach and tighten the lower attachments on the child restraint to the lower anchors, if equipped, in the vehicle. The child restraint instructions will show you how.

5. If the child restraint is forward-facing, attach and tighten the top tether to the top tether anchor. Refer to the child restraint instructions and the following steps:

   5.1. Find the top tether anchor.

   5.2. Open the top tether anchor trim cover to expose the anchor.

   5.3. If you have an adjustable head restraint, raise the head restraint.

   5.4. Route, attach and tighten the top tether according to your child restraint instructions and the following instructions:

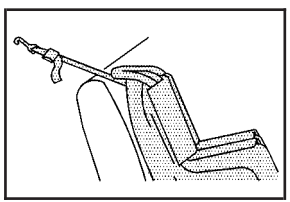

If the position you are using does not have a head restraint and you are using a single tether, route the tether over the seatback.

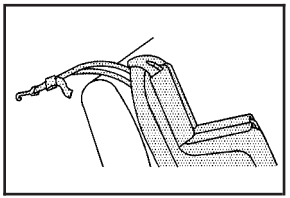

If the position you are using does not have a head restraint and you are using a dual tether, route the tether over the seatback.

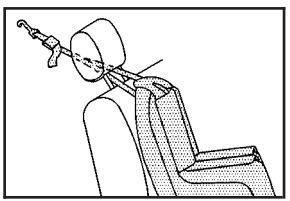

If the position you are using has an adjustable head restraint and you are using a dual tether, route the tether under the head restraint and in between the head restraint posts.

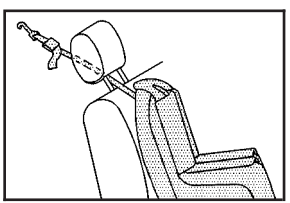

If the position you are using has an adjustable head restraint and you are using a single tether, route the tether under the head restraint and in between the head restraint posts.

6. Push and pull the child restraint in different directions to be sure it is secure.

Securing a Child Restraint in a Rear Seat Position

If your child restraint is equipped with the LATCH system, see *Lower Anchors and Tethers for Children (LATCH) on page 1-37*.

If your child restraint does not have the LATCH system, you will be using the lap-shoulder belt to secure the child restraint in this position. Be sure to follow the instructions that came with the child restraint. Secure the child in the child restraint when and as the instructions say.

1. Put the child restraint on the seat.
2. Pick up the latch plate, and run the lap and shoulder portions of the vehicle's safety belt through or around the restraint. The child restraint instructions will show you how.

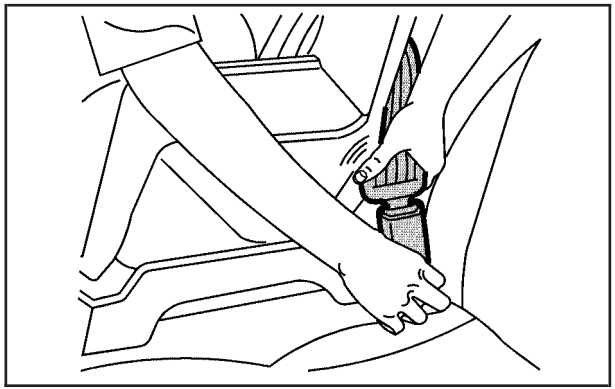

3. Buckle the belt. Make sure the release button is positioned so you would be able to unbuckle the safety belt quickly if you ever had to.

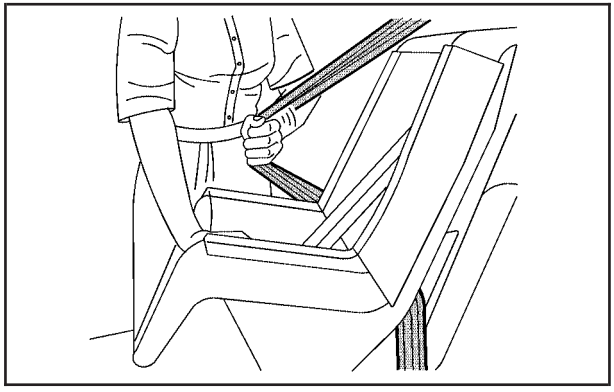

4. Pull the rest of the shoulder belt all the way out of the retractor to set the lock.

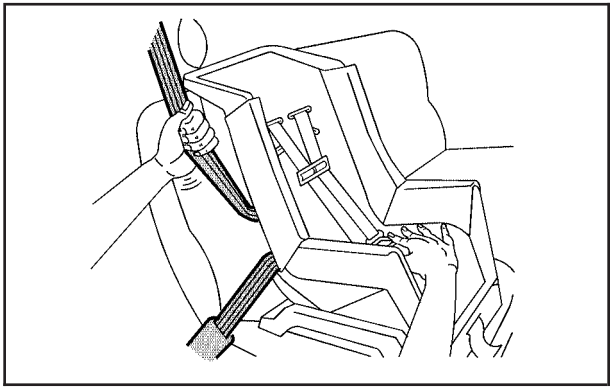

5. To tighten the belt, push down on the child restraint, pull the shoulder portion of the belt to tighten the lap portion of the belt and feed the shoulder belt back into the retractor. If you are using a forward-facing child restraint, you may find it helpful to use your knee to push down on the child restraint as you tighten the belt.
6. If your child restraint manufacturer recommends using a top tether, attach and tighten the top tether to the top tether anchor. Refer to the instructions that came with the child restraint and see *Lower Anchors and Tethers for Children (LATCH) on page 1-37*.
7. Push and pull the child restraint in different directions to be sure it is secure.

To remove the child restraint, if the top tether is attached to the top tether anchor, disconnect it. Unbuckle the vehicle's safety belt and let it go back all the way. The safety belt will move freely again and be ready to work for an adult or larger child passenger.

Securing a Child Restraint in the Right Front Seat Position

Your vehicle has a right front passenger airbag. A rear seat is a safer place to secure a forward-facing child restraint. See *Where to Put the Restraint on page 1-36*.

In addition, your vehicle has a passenger sensing system. The passenger sensing system is designed to turn off the right front passenger's frontal airbag when an infant in a rear-facing infant seat or a small child in a forward-facing child restraint or booster seat is detected. See *Passenger Sensing System on page 1-58* and *Passenger Airbag Status Indicator on page 3-61* for more information on this including important safety information.

A label on your sun visor says, "Never put a rear-facing child seat in the front." This is because the risk to the rear-facing child is so great, if the airbag deploys.

⚠ CAUTION:

A child in a rear-facing child restraint can be seriously injured or killed if the right front passenger's airbag inflates. This is because the back of the rear-facing child restraint would be very close to the inflating airbag.

Even though the passenger sensing system is designed to turn off the passenger's frontal airbag if the system detects a rear-facing child restraint, no system is fail-safe, and no one can guarantee that an airbag will not deploy under some unusual circumstance, even though it is turned off. We recommend that rear-facing child restraints be secured in the rear seat, even if the airbag is off.

If you need to secure a forward-facing child restraint in the right front seat position, move the seat as far back as it will go before securing the forward-facing child restraint. See *Power Seats on page 1-2*.

If your child restraint is equipped with the LATCH system, see *Lower Anchors and Tethers for Children (LATCH) on page 1-37*.

There is no top tether anchor in the right front passenger's position. Do not secure a child seat in this position if a national or local law requires that the top tether be anchored, or if the instructions that come with the child restraint say that the top tether must be anchored. See *Lower Anchors and Tethers for Children (LATCH) on page 1-37* if your child restraint has a top tether.

You will be using the lap-shoulder belt to secure the child restraint in this position. Be sure to follow the instructions that came with the child restraint. Secure the child in the child restraint when and as the instructions say.

1. Your vehicle has a right front passenger's frontal airbag. See *Passenger Sensing System on page 1-58*. General Motors recommends that rear-facing child restraints be secured in a rear seat, even if the airbag is off. If your child restraint is forward-facing, move the seat as far back as it will go before securing the child restraint in this seat. See *Power Seats on page 1-2*.

   When the passenger sensing system has turned off the right front passenger's frontal airbag, the off indicator in the passenger airbag status indicator should light and stay lit when the vehicle is running. See *Passenger Airbag Status Indicator on page 3-61*.

2. Put the child restraint on the seat.
3. Pick up the latch plate, and run the lap and shoulder portions of the vehicle's safety belt through or around the restraint. The child restraint instructions will show you how.

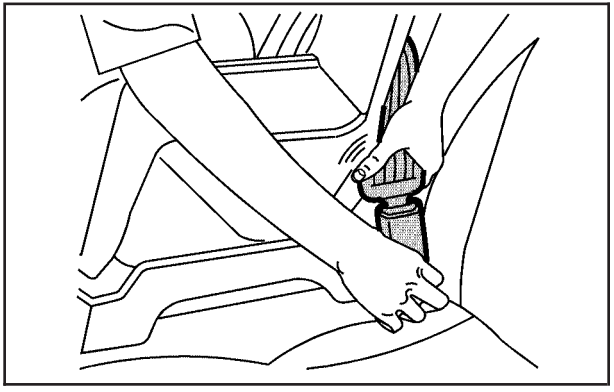

4. Buckle the belt. Make sure the release button is positioned so you would be able to unbuckle the safety belt quickly if you ever had to.

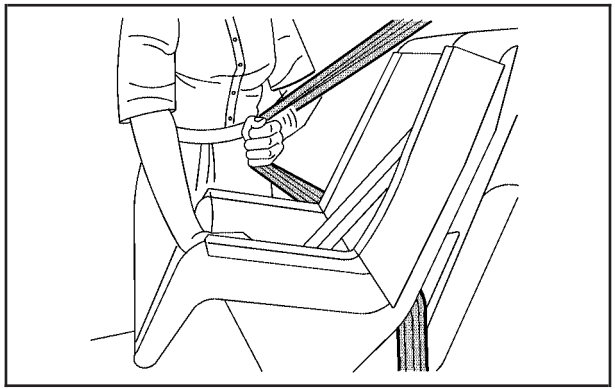

5. Pull the rest of the shoulder belt all the way out of the retractor to set the lock.

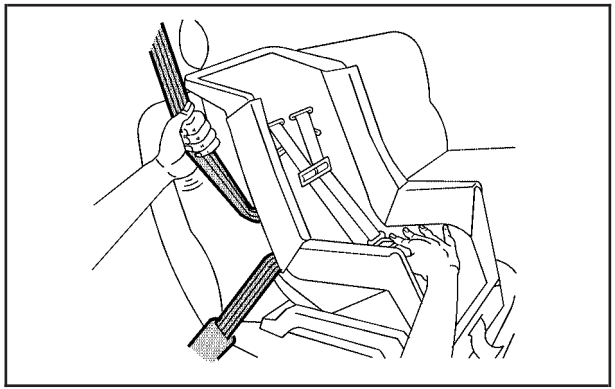

6. To tighten the belt, push down on the child restraint, pull the shoulder portion of the belt to tighten the lap portion of the belt and feed the shoulder belt back into the retractor. If you are using a forward-facing child restraint, you may find it helpful to use your knee to push down on the child restraint as you tighten the belt. You should not be able to pull more of the belt from the retractor once the lock has been set.
7. Push and pull the child restraint in different directions to be sure it is secure.
8. If the airbag is off, the off indicator in the overhead console will be lit and stay lit when the vehicle is running.

If a child restraint has been installed and the on indicator is lit, turn the vehicle off. Remove the child restraint from the vehicle and reinstall the child restraint.

If after reinstalling the child restraint and restarting the vehicle, the on indicator is still lit, check to make sure that the vehicle's seatback is not pressing the child restraint into the seat cushion. If this happens, slightly recline the vehicle's seatback and adjust the seat cushion if possible. Also make sure the child restraint is not trapped under the vehicle head restraint. If this happens, adjust the head restraint.

A thick layer of additional material such as a blanket, or aftermarket equipment such as seat covers heaters or massagers, located between the seat cushion and the child restraint or small occupant, can affect how the passenger sensing system operates. Remove any additional material from the seat cushion before reinstalling/securing the child restraint or small occupant.

If the on indicator is still lit, secure the child in the child restraint in a rear seat position in the vehicle and check with your dealer.

To remove the child restraint, just unbuckle the vehicle's safety belt and let it go back all the way. The safety belt will move freely again and be ready to work for an adult or larger child passenger.

Airbag System

Your vehicle has six airbags:

- A frontal airbag for the driver and another frontal airbag for the right front passenger,
- a seat-mounted side impact airbag for the driver and another for the right front passenger,
- a roof-mounted side impact airbag for the driver and passenger directly behind the driver, and
- a roof-mounted side impact airbag for the right front passenger and the person seated directly behind that passenger.

Frontal airbags are designed to help reduce the risk of injury from the force of an inflating airbag. But these airbags must inflate very quickly to do their job and comply with federal regulations.

Here are the most important things to know about the airbag system:

⚠ CAUTION:

You can be severely injured or killed in a crash if you are not wearing your safety belt — even if you have airbags. Wearing your safety belt during a crash helps reduce your chance of hitting things inside the vehicle or being ejected from it. Airbags are "supplemental restraints" to the safety belts. All airbags are designed to work with safety belts but do not replace them.

Frontal airbags for the driver and right front passenger are designed to deploy in moderate to severe frontal and near frontal crashes. They are not designed to inflate in rollover, rear crashes, or in many side crashes. And, for some unrestrained occupants, frontal airbags may provide less protection in frontal crashes than more forceful airbags have provided in the past.

CAUTION: (Continued)

CAUTION: (Continued)

Seat-mounted side impact airbags and roof-mounted side impact airbags are designed to inflate in moderate to severe crashes where something hits the side of your vehicle. They are not designed to inflate in frontal, in rollover or in rear crashes. Everyone in your vehicle should wear a safety belt properly — whether or not there is an airbag for that person.

⚠ CAUTION:

Both frontal and side impact airbags inflate with great force, faster than the blink of an eye. If you are too close to an inflating airbag, as you would be if you were leaning forward, it could seriously injure you. Safety belts help keep you in position for airbag inflation before and during a crash. Always wear your safety belt even with frontal airbags. The driver should sit as far back as possible while still maintaining control of the vehicle. Occupants should not lean on or sleep against the door.

⚠ CAUTION:

Anyone who is up against, or very close to, any airbag when it inflates can be seriously injured or killed. Airbags plus lap-shoulder belts offer the best protection for adults, but not for young children and infants. Neither the vehicle's safety belt system nor its airbag system is designed for them. Young children and infants need the protection that a child restraint system can provide. Always secure children properly in your vehicle. To read how, see *Older Children on page 1-26* or *Infants and Young Children on page 1-29*.

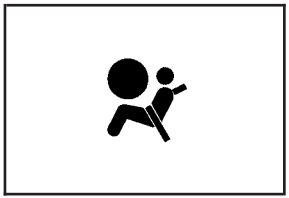

There is an airbag readiness light on the instrument panel, which shows the airbag symbol.

The system checks the airbag electrical system for malfunctions. The light tells you if there is an electrical problem. See *Airbag Readiness Light on page 3-60* for more information.

Where Are the Airbags?

The driver's frontal airbag is in the middle of the steering wheel.

The right front passenger's frontal airbag is in the instrument panel on the passenger's side.

The seat-mounted side impact airbag for the driver is in the side of the driver's seatback closest to the door.

The seat-mounted side impact airbag for the right front passenger is in the side of the passenger's seatback closest to the door.

The roof-mounted side impact airbag for the driver and the person seated directly behind the driver is in the ceiling above the side windows.

The roof-mounted side impact airbag for the right front passenger and the person seated directly behind that passenger is in the ceiling above the side windows.

⚠ CAUTION:

If something is between an occupant and an airbag, the airbag might not inflate properly or it might force the object into that person causing severe injury or even death. The path of an inflating airbag must be kept clear. Do not put anything between an occupant and an airbag, and do not attach or put anything on the steering wheel hub or on or near any other airbag covering. Never secure anything to the roof of your vehicle by routing the rope or tie-down through any door or window opening. If you do, the path of an inflating airbag will be blocked. Do not let seat covers block the inflation path of a side impact airbag. The path of an inflating airbag must be kept clear.

When Should an Airbag Inflate?

The driver's and right front passenger's frontal airbags are designed to inflate in moderate to severe frontal or near-frontal crashes. But they are designed to inflate only if the impact exceeds a predetermined deployment threshold. Deployment thresholds take into account a variety of desired deployment and non-deployment events and are used to predict how severe a crash is likely to be in time for the airbags to inflate and help restrain the occupants. Whether your frontal airbags will or should deploy is not based on how fast your vehicle is traveling. It depends largely on what you hit, the direction of the impact and how quickly your vehicle slows down.

In addition, your vehicle has "dual stage" frontal airbags, which adjust the restraint according to crash severity. Your vehicle is equipped with an electronic frontal sensor, which helps the sensing system distinguish between a moderate frontal impact and a more severe frontal impact. For moderate frontal impacts, these airbags inflate at a level less than full deployment. For more severe frontal impacts, full deployment occurs. If the front of your vehicle goes straight into a wall that does not move or deform, the threshold level for the reduced deployment is about 12 to 16 mph (19 to 26 km/h), and the threshold level for a full deployment is about 18 to 24 mph (28.5 to 38.5 km/h). (The threshold level can vary, however, with specific vehicle design, so that it can be somewhat above or below this range.)

Frontal airbags may inflate at different crash speeds. For example:

- If the vehicle hits a stationary object, the airbags could inflate at a different crash speed than if the vehicle hits a moving object.
- If the vehicle hits an object that deforms, the airbags could inflate at a different crash speed than if the vehicle hits an object that does not deform.
- If the vehicle hits a narrow object (like a pole) the airbags could inflate at a different crash speed than if the vehicle hits a wide object (like a wall).
- If the vehicle goes into an object at an angle the airbags could inflate at a different crash speed than if the vehicle goes straight into the object.

The frontal airbags (driver and right front passenger) are not intended to inflate during vehicle rollovers, rear impacts, or in many side impacts.

The side impact airbags are intended to inflate in moderate to severe side crashes. A side impact airbag will inflate if the crash severity is above the system's designed "threshold level." The threshold level can vary with specific vehicle design. Side impact airbags are not intended to inflate in frontal or near-frontal impacts, rollovers or rear impacts. A side impact airbag is intended to deploy on the side of the vehicle that is struck.

In any particular crash, no one can say whether an airbag should have inflated simply because of the damage to a vehicle or because of what the repair costs were. For frontal airbags, inflation is determined by what the vehicle hits, the angle of the impact, and how quickly the vehicle slows down in frontal and near-frontal impacts. For side impact airbags, inflation is determined by the location and severity of the impact.

What Makes an Airbag Inflate?

In an impact of sufficient severity, the airbag sensing system detects that the vehicle is in a crash. The sensing system triggers a release of gas from the inflator, which inflates the airbag. The inflator, airbag and related hardware are all part of the airbag modules inside the steering wheel, instrument panel, the side of the front seatbacks closest to the door and the ceiling of the vehicle, near the side windows.

How Does an Airbag Restrain?

In moderate to severe frontal or near frontal collisions, even belted occupants can contact the steering wheel or the instrument panel. In moderate to severe side collisions, even belted occupants can contact the inside of the vehicle. The airbag supplements the protection provided by safety belts. Airbags distribute the force of the impact more evenly over the occupant's upper body, stopping the occupant more gradually. But the frontal airbags would not help you in many types of collisions, including rollovers, rear impacts, and many side impacts, primarily because an occupant's motion is not toward the airbag. Side impact airbags would not help you in many types of collisions, including many frontal or near frontal collisions, and rear impacts, primarily because an occupant's motion is not toward those airbags. Airbags should never be regarded as anything more than a supplement to safety belts, and then only in moderate to severe frontal or near-frontal collisions for the driver's and right front passenger's frontal airbags, and only in moderate to severe side collisions for side impact airbags.

What Will You See After an Airbag Inflates?

After the frontal and seat-mounted side impact airbags inflate, they quickly deflate, so quickly that some people may not even realize the airbags inflated. Roof-mounted side impact airbags are designed to deflate more slowly and may still be at least partially inflated minutes after the vehicle comes to rest. Some components of the airbag module — the steering wheel hub for the driver's airbag, the instrument panel for the right front passenger's bag, the side of the seatback closest to the door for the seat-mounted side impact airbags and the area along the ceiling of your vehicle near the side windows — may be hot for a short time. The parts of the bag that come into contact with you may be warm, but not too hot to touch. There will be some smoke and dust coming from the vents in the deflated airbags. Airbag inflation does not prevent the driver from seeing out of the windshield or being able to steer the vehicle, nor does it stop people from leaving the vehicle.

⚠ CAUTION:

When an airbag inflates, there is dust in the air. This dust could cause breathing problems for people with a history of asthma or other breathing trouble. To avoid this, everyone in the vehicle should get out as soon as it is safe to do so. If you have breathing problems but cannot get out of the vehicle after an airbag inflates, then get fresh air by opening a window or a door. If you experience breathing problems following an airbag deployment, you should seek medical attention.

Your vehicle has a feature that will automatically unlock the doors, turn the interior lamps on, turn the hazard warning flashers on, and turn off the climate control system, when the airbags inflate (if battery power is available). You can lock the doors, turn the interior lamps off, turn the hazard warning flashers off and turn the climate control system on by using the controls for those features.

In many crashes severe enough to inflate the airbag, windshields are broken by vehicle deformation. Additional windshield breakage may also occur from the right front passenger airbag.

- Airbags are designed to inflate only once. After an airbag inflates, you will need some new parts for your airbag system. If you do not get them, the airbag system will not be there to help protect you in another crash. A new system will include airbag modules and possibly other parts. The service manual for your vehicle covers the need to replace other parts.
- Your vehicle is equipped with a crash sensing and diagnostic module which records information after a crash. See *Vehicle Data Collection and Event Data Recorders on page 7-8*.
- Let only qualified technicians work on your airbag system. Improper service can mean that an airbag system will not work properly. See your dealer for service.

Passenger Sensing System

Your vehicle has a passenger sensing system for the right front passenger position. The passenger airbag status indicator will be visible when the vehicle is running. The words ON and OFF or the symbol for on and off, will be visible in the overhead console during the system check. When the system check is complete, either the word ON or the word OFF, or the symbol for on or the symbol for off will be visible. See *Passenger Airbag Status Indicator on page 3-61*.

Passenger Airbag Status Indicator – United States

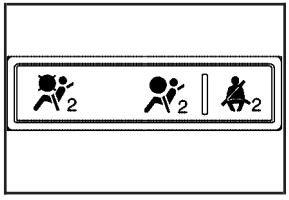

Passenger Airbag Status Indicator – Canada

The passenger sensing system will turn off the right front passenger's frontal airbag under certain conditions. The driver's airbag and the side airbags are not part of the passenger sensing system.

The passenger sensing system works with sensors that are part of the right front passenger's seat. The sensors are designed to detect the presence of a properly-seated occupant and determine if the passenger's frontal airbag should be enabled (may inflate) or not.

Accident statistics show that children are safer if they are restrained in the rear rather than the front seat. General Motors recommends that child restraints be secured in a rear seat, including an infant riding in a rear-facing infant seat, a child riding in a forward-facing child seat and an older child riding in a booster seat.

Your vehicle has a rear seat that will accommodate a rear-facing child restraint. A label on your sun visor says, "Never put a rear-facing child seat in the front." This is because the risk to the rear-facing child is so great, if the airbag deploys.

⚠ CAUTION:

A child in a rear-facing child restraint can be seriously injured or killed if the right front passenger's airbag inflates. This is because the back of the rear-facing child restraint would be very close to the inflating airbag.

Even though the passenger sensing system is designed to turn off the passenger's frontal airbag if the system detects a rear-facing child restraint, no system is fail-safe, and no one can guarantee that an airbag will not deploy under some unusual circumstance, even though it is turned off. General Motors recommends that rear-facing child restraints be secured in the rear seat, even if the airbag is off.

If you need to secure a forward-facing child restraint in the right front seat, always move the front passenger seat as far back as it will go. It is better to secure the child restraint in a rear seat.

The passenger sensing system is designed to turn off the right front passenger's frontal airbag if:

- the right front passenger seat is unoccupied
- the system determines that an infant is present in a rear-facing infant seat
- the system determines that a small child is present in a forward-facing child restraint
- the system determines that a small child is present in a booster seat
- a right front passenger takes his/her weight off of the seat for a period of time
- the right front passenger seat is occupied by a smaller person, such as a child who has outgrown child restraints
- or if there is a critical problem with the airbag system or the passenger sensing system.

When the passenger sensing system has turned off the passenger's frontal airbag, the off indicator in the overhead console will light and stay lit to remind you that the airbag is off. See *Passenger Airbag Status Indicator on page 3-61*.

If a child restraint has been installed and the on indicator is lit, turn the vehicle off. Remove the child restraint from the vehicle and reinstall the child restraint following the child restraint manufacturer's directions and refer to *Securing a Child Restraint in the Right Front Seat Position on page 1-45*.

If after reinstalling the child restraint and restarting the vehicle, the on indicator is still lit, check to make sure that the vehicle's seatback is not pressing the child restraint into the seat cushion. If this happens, slightly recline the vehicle's seatback and adjust the seat cushion if possible. Also make sure the child restraint is not trapped under the vehicle head restraint. If this happens, adjust the head restraint.

If the on indicator is still lit, secure the child in the child restraint in a rear seat position in the vehicle and check with your dealer.

The passenger sensing system is designed to enable (may inflate) the right front passenger's frontal airbag anytime the system senses that a person of adult size is sitting properly in the right front passenger's seat. When the passenger sensing system has allowed the airbag to be enabled, the on indicator will light and stay lit to remind you that the airbag is active.

For some children who have outgrown child restraints and for very small adults, the passenger sensing system may or may not turn off the right front passenger's frontal airbag, depending upon the person's seating posture and body build. Everyone in your vehicle who has outgrown child restraints should wear a safety belt properly — whether or not there is an airbag for that person.

If a person of adult-size is sitting in the right front passenger's seat, but the off indicator is lit, it could be because that person is not sitting properly in the seat. If this happens, turn the vehicle off and ask the person to place the seatback in the fully upright position, then sit upright in the seat, centered on the seat cushion, with the person's legs comfortably extended. Restart the vehicle and have the person remain in this position for about two minutes. This will allow the system to detect that person and then enable the passenger's airbag.

⚠ CAUTION:

If the airbag readiness light in the instrument panel cluster ever comes on and stays on, it means that something may be wrong with the airbag system. If this ever happens, have the vehicle serviced promptly, because an adult-size person sitting in the right front passenger's seat may not have the protection of the frontal airbag. See *Airbag Readiness Light on page 3-60* for more on this, including important safety information.

A thick layer of additional material such as a blanket, or aftermarket equipment such as seat covers, seat heaters and seat massagers can affect how well the passenger sensing system operates. Remove any additional material from the seat cushion before reinstalling or securing the child restraint or small occupant. You may want to consider not using seat covers or other aftermarket equipment if your vehicle has the passenger sensing system. See *Adding Equipment to Your Airbag-Equipped Vehicle on page 1-62* for more information about modifications that can affect how the system operates.

Servicing Your Airbag-Equipped Vehicle

Airbags affect how your vehicle should be serviced. There are parts of the airbag system in several places around your vehicle. Your dealer and the service manual have information about servicing your vehicle and the airbag system. To purchase a service manual, see *Service Publications Ordering Information on page 7-14*.

⚠ CAUTION:

For up to 20 seconds after the ignition key is turned off and the battery is disconnected, an airbag can still inflate during improper service. You can be injured if you are too close to an airbag when it inflates. Avoid wires wrapped with yellow tape, yellow coverings or yellow connectors. They are probably part of the airbag systems. Be sure to follow proper service procedures, and make sure the person performing work for you is qualified to do so.

The airbag system does not need regular maintenance.

Adding Equipment to Your Airbag-Equipped Vehicle

Q: Is there anything I might add to the front or sides of the vehicle that could keep the airbags from working properly?

A: Yes. If you add things that change your vehicle's frame, bumper system, front end or side sheet metal or height, they may keep the airbag system from working properly. Also, the airbag system may not work properly if you relocate any of the airbag sensors. If you have any questions about this, you should contact Customer Assistance before you modify your vehicle. The phone numbers and addresses for Customer Assistance are in Step Two of the Customer Satisfaction Procedure in this manual. See *Customer Satisfaction Procedure on page 7-2*

Q: Because I have a disability, I have to get my vehicle modified. How can I find out whether this will affect my airbag system?

A: Changing or moving any parts of the front seats, safety belts, the airbag sensing and diagnostic module (located under the center console), or the overhead console can affect the operation of the airbag system. If you have questions, call Customer Assistance. The phone numbers and addresses for Customer Assistance are in Step Two of the Customer Satisfaction Procedure in this manual. See *Customer Satisfaction Procedure on page 7-2*.

Restraint System Check

Checking the Restraint Systems

Now and then, make sure the safety belt reminder light and all your belts, buckles, latch plates, retractors and anchorages are working properly. Look for any other loose or damaged safety belt system parts. If you see anything that might keep a safety belt system from doing its job, have it repaired.

Torn or frayed safety belts may not protect you in a crash. They can rip apart under impact forces. If a belt is torn or frayed, get a new one right away.

Also look for any opened or broken airbag covers, and have them repaired or replaced. (The airbag system does not need regular maintenance.)

Notice: **If you damage the covering for the driver's or the right front passenger's airbag, or the airbag covering on the driver's and right front passenger's seatback, or the side impact airbag covering on the ceiling near the side windows, the bag may not work properly. You may have to replace the airbag module in the steering wheel, both the airbag module and the instrument panel for the right front passenger's airbag, the airbag module and seatback for the driver's and right front passenger's seat-mounted side impact airbags, or side impact airbag module and ceiling covering for the roof-mounted side impact airbag. Do not open or break the airbag coverings.**

Replacing Restraint System Parts After a Crash

⚠ CAUTION:

A crash can damage the restraint systems in your vehicle. A damaged restraint system may not properly protect the person using it, resulting in serious injury or even death in a crash. To help make sure your restraint systems are working properly after a crash, have them inspected and any necessary replacements made as soon as possible.

If you have had a crash, do you need new belts or LATCH system parts?

After a very minor collision, nothing may be necessary. But if the belts were stretched, as they would be if worn during a more severe crash, then you need new parts.

If the LATCH system was being used during a more severe crash, you may need new LATCH system parts.

If belts are cut or damaged, replace them. Collision damage also may mean you will need to have LATCH system, safety belt or seat parts repaired or replaced. New parts and repairs may be necessary even if the belt or LATCH system was not being used at the time of the collision.

If an airbag inflates, you will need to replace airbag system parts. See the part on the airbag system earlier in this section.

If the frontal airbags inflate, you will also need to replace the driver's and right front passenger's safety belt buckle assembly. Be sure to do so. Then the new buckle assembly will be there to help protect you in a collision.

After a crash you may need to replace the driver and front passenger's safety belt buckle assemblies, even if the frontal airbags have not deployed. The driver and front passenger's safety belt buckle assemblies contain the safety belt pretensioners. Have your safety belt pretensioners checked if your vehicle has been in a collision, or if your airbag readiness light stays on after you start your vehicle or while you are driving. See *Airbag Readiness Light on page 3-60*.

Section 2 Features and Controls

Keys 2-3
Keyless Access System 2-4
Keyless Access System Operation 2-5

Doors and Locks 2-12
Door Locks 2-12
Power Door Locks 2-12
Programmable Automatic Door Locks 2-13
Rear Door Security Locks 2-13
Lockout Protection 2-14
Trunk 2-14

Windows 2-17
Power Windows 2-18
Sun Visors 2-20

Theft-Deterrent Systems 2-20
Theft-Deterrent System 2-21
Valet Lockout Switch 2-23

Starting and Operating Your Vehicle 2-24
New Vehicle Break-In 2-24
Ignition Positions 2-24
Retained Accessory Power (RAP) 2-25
Starting the Engine 2-25
Engine Coolant Heater 2-27
Automatic Transmission Operation (STS) 2-28
Automatic Transmission Operation (STS-V) 2-32
Parking Brake 2-35
Shifting Into Park (P) 2-36
Shifting Out of Park (P) 2-38
Parking Over Things That Burn 2-38
Engine Exhaust 2-39
Running the Engine While Parked 2-40

Mirrors 2-41
Automatic Dimming Rearview Mirror with Intellibeam™ and OnStar® 2-41
Automatic Dimming Rearview Mirror 2-41
Automatic Dimming Rearview Mirror with OnStar® 2-41
Automatic Dimming Rearview Mirror with OnStar® and Compass 2-42
Outside Power Heated Mirrors 2-43
Outside Automatic Dimming Mirror 2-44
Outside Convex Mirror 2-44
Outside Parallel Park Assist Mirror 2-44

Section 2 Features and Controls

OnStar® System 2-45
Universal Home Remote System 2-47
Universal Home Remote System Operation 2-48
Storage Areas 2-51
Glove Box 2-51
Cupholder(s) 2-51
Center Console Storage Area 2-51
Convenience Net 2-51
Sunroof 2-52
Vehicle Personalization 2-53
Memory Seat, Mirrors and Steering Wheel 2-70

Keys

⚠ CAUTION:

Leaving children unattended in a vehicle is dangerous, but it is even more dangerous if the keyless access transmitter is also left in the vehicle. A child or others could be badly injured or even killed.

They could operate the power windows or other controls or even make the vehicle move.

Do not leave the keyless access transmitter in a vehicle with children.

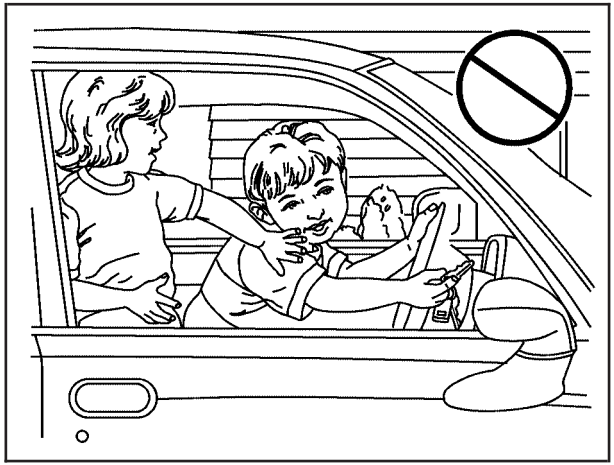

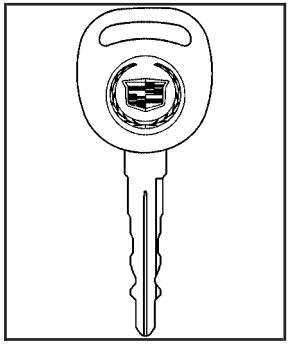

There is one key for the driver's door, glove box and rear seat pass-through door. See "Rear Seat Pass-Through Door" under *Trunk on page 2-14* for more information.

Your vehicle has a Keyless Access System with pushbutton start. See *Ignition Positions on page 2-24* for information on starting the vehicle.

Notice: **If you ever lose your transmitter(s) and/or key, it could be difficult to get into your vehicle. You may even have to damage your vehicle to get in. Be sure you have a spare transmitter and/or key.**

In an emergency, contact Cadillac Roadside Assistance. See *Roadside Service on page 7-5*.

If your vehicle is equipped with the OnStar® system, OnStar® may be able to send a command to unlock your vehicle if needed. If the vehicle battery is dead, OnStar® will be unable to unlock the vehicle. See *OnStar® System on page 2-45* for more information.

Keyless Access System

Your vehicle has a Keyless Access System that operates on a radio frequency subject to Federal Communications Commission (FCC) Rules and with Industry Canada.

This device complies with Part 15 of the FCC Rules. Operation is subject to the following two conditions:

1. This device may not cause harmful interference.
2. This device must accept any interference received, including interference that may cause undesired operation.

This device complies with RSS-210 of Industry Canada. Operation is subject to the following two conditions:

1. This device may not cause interference.
2. This device must accept any interference received, including interference that may cause undesired operation of the device.

Changes or modifications to this system by other than an authorized service facility could void authorization to use this equipment.

If you ever notice a decrease in the keyless access transmitter range, try doing one of the following:

- Check the distance. You may be too far from your vehicle. You may need to stand closer during rainy or snowy weather.
- Check the location. Other vehicles or objects may be blocking the signal. Take a few steps to the left or right, hold the transmitter higher, and try again.
- Check to determine if battery replacement is necessary. See “Battery Replacement” under *Keyless Access System Operation on page 2-5*.
- Check to make sure that an electronic device such as a cellular phone or lap top computer is not causing interference.
- If you are still having trouble, see your dealer or a qualified technician for service.

Keyless Access System Operation

Your vehicle has a Keyless Access System that lets you lock and unlock your vehicle’s doors, open the trunk lid, remotely start the engine, and locate your vehicle, or sound your vehicle’s alarm from a distance as much as much as 30 feet (10 m) away.

The Keyless Access System also lets you lock and unlock the vehicle’s doors and access the trunk without removing the remote transmitter from your pocket, purse, briefcase, etc. The system operates when the transmitter is located within 3 feet (1 m) of the door or trunk of your vehicle. See “Keyless Doors Unlock” and “Keyless Ft (Front) Door Unlock” under *Vehicle Personalization on page 2-53*.

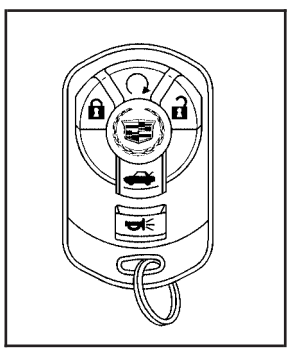

Your vehicle comes with two transmitters.

(Lock): Press this button to lock the doors. The lock status light on the front doors will turn on for five seconds and the turn signal indicators will flash. If this button is pressed twice, the doors will lock, the status light on the door will turn on for five seconds, the turn signal indicators will flash twice, and the horn will sound once.

If the engine is off, the windows may be closed from outside the vehicle using the lock button on the keyless access transmitter. Press and hold the lock button for more than two seconds to close any open window(s) on your vehicle. If any window is unable to close completely, it will reverse and the horn will chirp. See "Anti-Pinch Feature" under *Power Windows on page 2-18* for more information.

You can program your vehicle so the turn signal indicators will not flash and the horn will not sound when pressing the lock button on the keyless access transmitter. For more information see "Lights Flash at Lock" and "Horn Chirps at Lock" under *Vehicle Personalization on page 2-53*.

(Remote Start): Pressing this button operates the remote start feature. See "Remote Vehicle Start" at the end of this section for more detailed information.

(Unlock): Press this button once to unlock the driver's door. The turn signal indicators will flash twice. Press the unlock button twice within five seconds to unlock all the doors. If it is dark enough outside, your interior lamps will come on.

You can program your vehicle so the turn signal indicators will not flash and the fog lamps and reverse lamps remain on steady for approximately 20 seconds when the keyless access transmitter is used to unlock the vehicle. See "Lights Flash at Lock" and "Ext. (Exterior) Lights at Unlock" under *Vehicle Personalization on page 2-53*.

If your vehicle has the memory feature you can program and recall memory settings when you press the unlock button on the keyless access transmitter. See *Memory Seat, Mirrors and Steering Wheel on page 2-70* for more information.

(Trunk): Press this button to open the trunk while the engine is turned off or the shift lever is in PARK (P).

(Vehicle Locator/Panic Alarm): Press and release this button to locate your vehicle. The horn will chirp three times and the turn signal lamps will flash three times. Press and hold the button for three seconds to sound the panic alarm. The horn will chirp and the turn signal lamps will flash for 30 seconds. Press and release the button again to cancel the panic alarm.

Matching Transmitter(s) to Your Vehicle

Each Keyless Access System is coded to allow only transmitters programmed to your vehicle to work. If a transmitter is lost or stolen, a replacement can be purchased and programmed through your GM dealer. Your GM dealer can reprogram your vehicle so lost or stolen transmitters no longer work with your vehicle. Each vehicle can have a maximum of four transmitters matched to it.

To match a new transmitter to your vehicle when you have a recognized transmitter, do the following. Two recognized transmitters are required for Canadian owners.

1. The vehicle must be off.
2. Have the recognized transmitter and the new, unrecognized transmitter(s) with you.
3. Insert the vehicle key into the key lock cylinder located on the outside of the driver's door.
4. Turn the key to the unlock position five times within five seconds.
5. The Driver Information Center (DIC) will display READY FOR FOB #X, where X can be 2, 3 or 4.

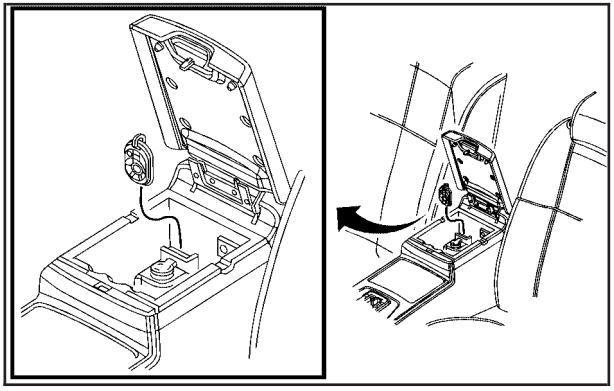

6. Place the new, unrecognized transmitter into the transmitter pocket with the transmitter buttons facing the front of the vehicle. The transmitter pocket is inside the center console storage area located between the driver and front passenger seats.
7. Once the transmitter is programmed, a beep will sound. The DIC will display READY FOR #X, where X can be 3 or 4, or MAX # FOBS LEARNED.
8. Remove the transmitter from the transmitter pocket and press the unlock button on the keyless access transmitter two times.

The Canadian immobilizer standard requires Canadian owners to see their GM dealer for matching new transmitters when a recognized transmitter is not available. United States Owners are permitted to match a new transmitter to their vehicle when a recognized transmitter is not available. The procedure will require three, ten minute cycles to complete the matching process. Do the following:

1. The vehicle must be off.

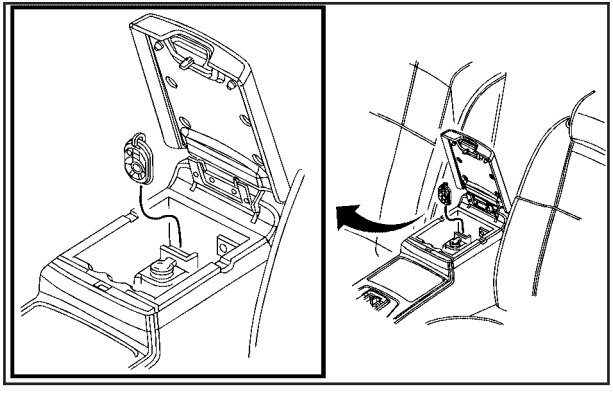

2. Place the new, unrecognized transmitter into the transmitter pocket with the transmitter buttons facing the front of the vehicle. The transmitter pocket is inside the center console storage area located between the driver and front passenger seats.
3. Insert the vehicle key into the key lock cylinder located on the driver's door.
4. Turn the key to the unlock position five times within five seconds.
5. The DIC message will display OFF/ACC TO LEARN.
6. Press the OFF/ACC button (ignition switch).
7. The DIC will read WAIT 10 MINUTES and will count down to zero, one minute at a time.
8. The DIC will display OFF/ACC TO LEARN again.
9. Press the OFF/ACC button (ignition switch) again.
10. The DIC will again read WAIT 10 MINUTES and will count down to zero, one minute at a time.
11. The DIC will display OFF/ACC TO LEARN again.
12. Press the OFF/ACC button (ignition switch) again.
13. The DIC will again read WAIT 10 MINUTES and will count down to zero, one minute at a time.
14. A beep will sound and the DIC will read READY FOR FOB #1. At this time, all previously known transmitters have been erased.
15. Once the transmitter is recognized and programmed, a beep will sound and the DIC will display READY FOR FOB #2.
16. Remove the keyless access transmitter and press the unlock button twice to initialize it.

If you have additional transmitters to program, this process can be repeated until four transmitters have been programmed. The DIC will then display MAX # FOBS LEARNED and will exit the programming mode.

When you are done programming transmitters, press the unlock button on each keyless access transmitter twice. After performing this process, transmitters previously programmed will no longer work with your vehicle and must be reprogrammed.

Battery Replacement

Under normal use, the battery in your keyless access transmitter should last about three years.

You can tell the battery is weak if the transmitter will not work at the normal range in any location. If you have to get close to your vehicle before the transmitter works, it is probably time to change the battery. The DIC may display KEY FOB BATTERY LOW.

A weak battery may also cause the DIC to display NO FOBS DETECTED when you try to start the vehicle. If this happens, place the transmitter in the center console storage area transmitter pocket with the buttons facing to the front of the vehicle. Then, with the vehicle in PARK (P) or NEUTRAL (N), press the brake pedal and the start button. See *Starting the Engine on page 2-25*, for additional information about your vehicle's electronic keyless ignition with push button start. Although this will start the vehicle, it is recommended that you replace the transmitter battery as soon as possible.

Notice: **When replacing the battery, use care not to touch any of the circuitry. Static from your body transferred to these surfaces may damage the transmitter.**

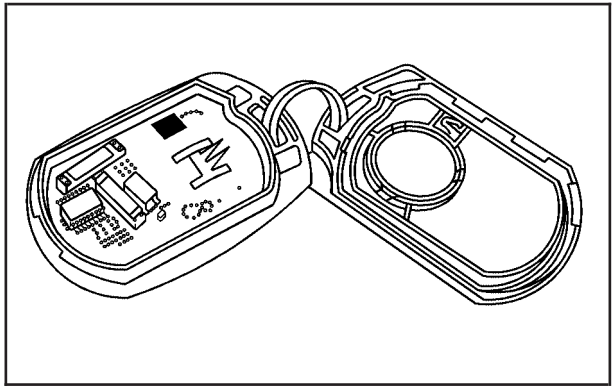

To replace the battery, do the following:

1. Insert a coin or similar object into the slot on the back of the transmitter and carefully pry apart the front and back.
2. Carefully pull the battery out of the transmitter.

3. Put the new battery in the transmitter, positive (+) side down. Use a battery type CR2032 or equivalent.
4. Reassemble the transmitter. Make sure to put it together so water will not get inside the transmitter.
5. Test the transmitter.

Remote Vehicle Start

This feature allows you to start the engine from outside the vehicle.

(Remote Start): To start the vehicle using the remote start feature, do the following:

1. Aim the remote keyless access transmitter at the vehicle.
2. Press the transmitter's lock button, release it, and then immediately press and hold the transmitter's remote start button for at least three seconds or until the vehicle's turn signal lamps flash. The vehicle's doors will be locked.
3. When the vehicle starts, the parking lamps will turn on and remain on while the vehicle is running.
4. Repeat Steps 1 and 2 while the engine is still running to add 10 minutes of engine running.

If the vehicle is left running it will automatically shut off after 10 minutes unless a time extension has been done. To manually shut off a remote start, do any of the following:

- Aim the keyless access transmitter at the vehicle and press the remote start button until the parking lamps turn off.
- Turn on the hazard warning flashers.
- Press the OFF/ACC button (ignition switch). See *Ignition Positions on page 2-24*.
- Turn on the valet lockout switch. See *Valet Lockout Switch on page 2-23*.

When you enter the vehicle during a remote start, press the brake pedal and press the start button on the keyless ignition switch to transition from remote start operation to normal vehicle operation.

Before the remote vehicle start system can be operated with the keyless access transmitter it must be activated. The remote start system is turned on through the vehicle personalization system.

You can also program the remote vehicle start system to start up the vehicle's automatic climate control system. If this feature is turned on, the system monitors the outside temperature and turns on the rear window defogger, front window defogger, and heated or ventilated seats, if equipped. See "Personal Settings Menu" under *Vehicle Personalization on page 2-53*.

Laws in some local communities may restrict the use of remote starters, for example, requiring a person using remote start to have the vehicle in view when doing so. Check local regulations for any requirements on remote starting of vehicles.

Do not use the remote start feature if your vehicle is low on fuel. Your vehicle may run out of fuel.

The remote start feature provides two separate starts, each with 10 minutes of engine running. If you press the remote start button on the keyless access transmitter again before the first 10 minutes of engine running time has expired, 10 minutes is added to the remaining minutes. For example, if the remote start button is pressed again after five minutes of the engine run time, 10 minutes is added and you now have 15 minutes with the engine running. Once two remote starts or 20 minutes of the engine running have been provided, the vehicle must be started using the keyless access with pushbutton start feature, if the engine needs to be restarted. See *Starting the Engine on page 2-25* for more information regarding the keyless ignition.

The remote start feature will not operate if any of the following occur:

- The check engine light is displayed. See “Check Engine Light” under *Malfunction Indicator Lamp on page 3-67*.
- The valet lockout switch is on.
- The keyless access transmitter is in the vehicle.
- The vehicle’s hood is open.
- The vehicle personalization feature is not enabled.
- An unauthorized vehicle entry or a vehicle theft was attempted.

Your keyless access transmitter, with the remote start button, provides an increased range of operation. However, the range may be less while the vehicle is running. As a result, you may need to be closer to your vehicle to turn it off than you were to turn it on.

There are other conditions which can affect the performance of the transmitter, see *Keyless Access System on page 2-4*.

Doors and Locks

Door Locks

⚠ CAUTION:

Unlocked doors can be dangerous.

- **Passengers — especially children — can easily open the doors and fall out of a moving vehicle. When a door is locked, the handle will not open it. You increase the chance of being thrown out of the vehicle in a crash if the doors are not locked. So, wear safety belts properly and lock the doors whenever you drive.**
- **Young children who get into unlocked vehicles may be unable to get out. A child can be overcome by extreme heat and can suffer permanent injuries or even death from heat stroke. Always lock your vehicle whenever you leave it.**
- **Outsiders can easily enter through an unlocked door when you slow down or stop your vehicle. Locking your doors can help prevent this from happening.**

There are several ways to lock and unlock your vehicle.

From the outside, press the lock or unlock button on the keyless access transmitter. When you have your transmitter with you, you may also unlock and open the door by pulling the door handle. You do not have to press the unlock button on the transmitter. Entry occurs when the door handle is pulled and the vehicle recognizes your transmitter. See *Vehicle Personalization on page 2-53* for information on how to program the keyless access feature.

From the inside, use the power door lock switches located on each front door. See *Power Door Locks on page 2-12* for more information. The rear passenger doors have manual door lock knobs located at the top of the door panel near the window. Push down the knob to lock the door. Pull up the knob to unlock the door.

Power Door Locks

The power door lock switches are located on the front doors.

(Unlock): Press the side of the switch with the unlock symbol to unlock the doors.

(Lock): Press the side of the switch with the lock symbol to lock the doors.

Programmable Automatic Door Locks

Your vehicle was programmed from the factory so that when the doors are closed, the ignition is on and the shift lever is moved out of PARK (P), all the doors will lock.

The front doors can still be opened from the inside while the doors are locked. If a rear passenger needs to exit the vehicle, have that person use the manual knob or use the power door lock switch on either front door. When the door is closed again, it will not lock automatically. Use the manual knob or the power door lock switch to lock the door.

The doors were also programmed from the factory to unlock every time the shift lever is moved back into PARK (P).

The power door locks can be programmed through the radio display. The radio display allows you to choose various lock and unlock settings. For more information on programming, see *Vehicle Personalization on page 2-53*.

Rear Door Security Locks

Your vehicle is equipped with rear door security locks that prevent passengers from opening the rear doors on your vehicle from the inside.

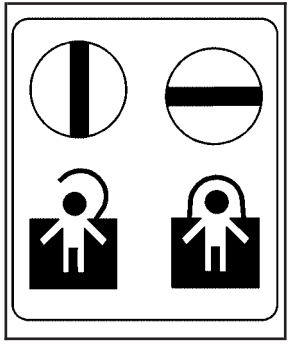

The rear door security locks are located on the inside edge of each rear door. You must open the rear doors to access them.

To use these locks, do the following:

1. Insert your key into the slot next to the rear door security lock label and turn it to engage the lock.
2. Close the door.
3. Repeat the steps for the other rear door.

The rear doors on your vehicle cannot be opened from the inside when this feature is in use.

When you want to open a rear door when the security lock is on, do the following:

1. Unlock the door using the remote keyless entry transmitter, the front door power lock switch or by lifting the rear door manual lock.
2. Then open the door from the outside.

To cancel the rear door security lock, do the following:

1. Unlock the door and open it from the outside.
2. Insert your key into the slot next to the rear door security lock label and turn it to disengage the lock.
3. Repeat the steps for the other lock.

The rear door locks will now work normally.

Lockout Protection

Your vehicle can be programmed to sound the horn three times and unlock the driver's door when all doors are closed and there is a keyless access transmitter inside the interior of the vehicle. When the driver's door is reopened, the key in reminder chime will sound continuously. The vehicle will remain locked only when at least one transmitter has been removed from the vehicle and both doors are closed. See *Vehicle Personalization on page 2-53*.

Trunk

⚠ CAUTION:

It can be dangerous to drive with the trunk lid open because carbon monoxide (CO) gas can come into your vehicle. You cannot see or smell CO. It can cause unconsciousness and even death. If you must drive with the trunk lid open or if electrical wiring or other cable connections must pass through the seal between the body and the trunk lid:

- **Make sure all other windows are shut.**
- **Turn the fan on your heating or cooling system to its highest speed and select the control setting that will force outside air into your vehicle. See Climate Control System.**
- **If you have air outlets on or under the instrument panel, open them all the way.**

See *Engine Exhaust on page 2-39*.

Trunk Lid Release

There are several ways to release the trunk lid.

- **(Trunk Lid Release):** Press this button located on the driver's door. The vehicle must be in PARK (P) or NEUTRAL (N) and the valet mode turned off. To disable valet mode, see *Valet Lockout Switch on page 2-23*.
- Press the trunk lid release button on the keyless access transmitter. See *Keyless Access System Operation on page 2-5*. The vehicle must be in PARK (P) or NEUTRAL (N) and the valet mode turned off.

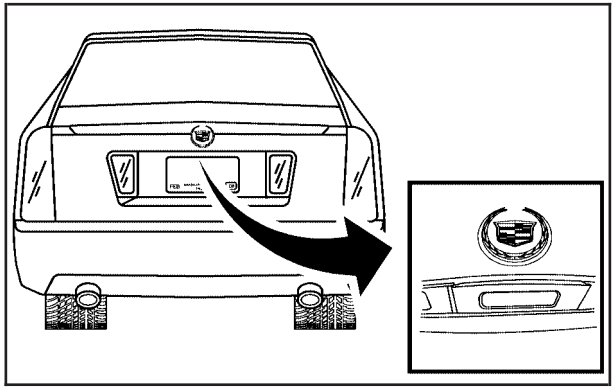

- Squeeze the trunk release button located on the rear of the trunk lid above the license plate, as long as you have your keyless access transmitter with you. Entry occurs when the button is being pressed and the vehicle recognizes the transmitter. The vehicle must be in PARK (P) and the valet mode turned off.

If your vehicle has lost battery power, you can still access the trunk by unlocking and lowering the rear seat pass-through door and pulling the emergency trunk release handle.

Rear Seat Pass-Through Door

This feature allows you to access the trunk without opening the trunk lid. If the vehicle ever loses power, the trunk can be accessed and opened through this door.

To open the door, do the following:

1. Pull the rear seat armrest down.
2. If the door is locked, insert the key into the lock and turn it counterclockwise.
3. Press the button above the lock.
4. Lower the door.

To open the trunk lid, pull the emergency trunk release handle located in the trunk on the other side of the door opening. See “Emergency Trunk Release Handle” following.

Emergency Trunk Release Handle

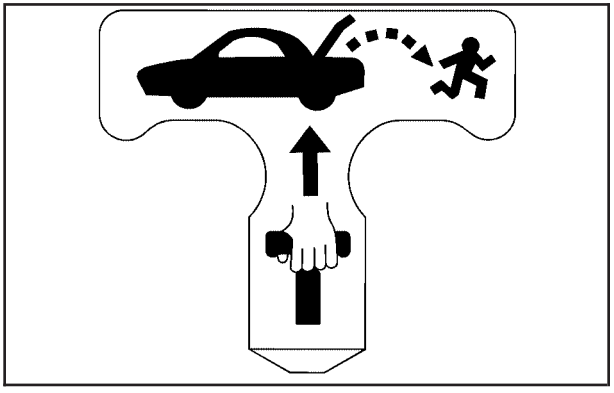

Notice: **Do not use the emergency trunk release handle as a tie-down or anchor point when securing items in the trunk as it could damage the handle. The emergency trunk release handle is only intended to aid a person trapped in a latched trunk, enabling them to open the trunk from the inside.**

There is a glow-in-the-dark trunk release handle located inside the trunk near the back of the rear seats. This handle will glow following exposure to light. Pull down the release handle to open the trunk from the inside of the vehicle.

Windows

⚠ CAUTION:

Leaving children, helpless adults, or pets in a vehicle with the windows closed is dangerous. They can be overcome by the extreme heat and suffer permanent injuries or even death from heat stroke. Never leave a child, a helpless adult, or a pet alone in a vehicle, especially with the windows closed in warm or hot weather.

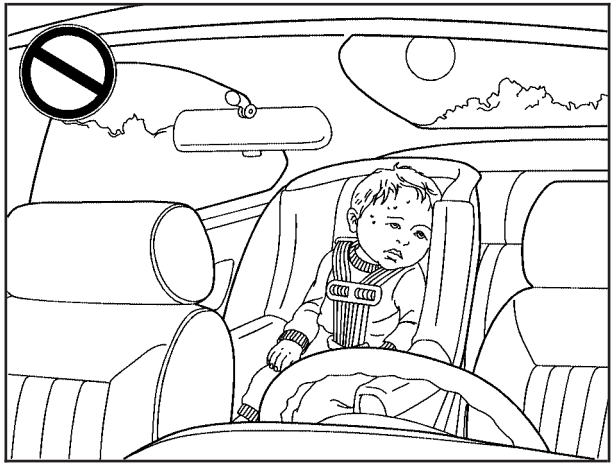

Power Windows

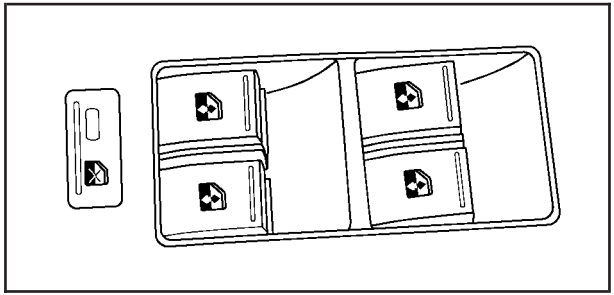

The power window switches are located on the armrest near each window. Press the front of the switch to the first position to open the window to the desired level. Lift up the front of the switch to the first position to close the window.

Your vehicle has Retained Accessory Power (RAP) that allows you to use the power windows once the engine has been turned off. For more information, see *Retained Accessory Power (RAP) on page 2-25*.

Express-Down Window

This feature is on all windows. It allows you to lower the window all the way without continuously pressing the switch.

Press the front of the switch to the second position and release. If you want to stop the window as it is lowering, briefly pull up the switch.

Express-Up Window

This feature is on all windows. It allows you to raise the window all the way without continuously lifting the switch. Lift the front of the switch briefly to activate the express-up feature. If you want to stop the window as it is raising, briefly press the switch.

Programming the Power Windows

If the battery on your vehicle has been recharged, disconnected, or is not working, you will need to reprogram each window for the express-up feature to work.

To program each window, follow these steps:

1. With the ignition on or in ACC, or while RAP is active, close all doors.
2. Press and hold the power window switch until the window has fully opened.
3. Continue holding the switch for approximately two seconds.
4. Pull up the power window switch until the window is fully closed.

The window is now programmed. Repeat the process for all windows.

Express Window Anti-Pinch Feature

If any object is in the path of the window when the express-up is active, the window will stop at the obstruction and auto-reverse to a preset factory position. Weather conditions such as severe icing may also cause the window to auto-reverse. The window will return to normal operation once the obstruction or condition is removed.

Express Window Anti-Pinch Override

⚠ CAUTION:

If express override is activated, the window will not reverse automatically. You or others could be injured and the window could be damaged. Before you use express override, make sure that all people and obstructions are clear of the window path.

In an emergency, the anti-pinch feature can be overridden in a supervised mode. Hold the window switch all the way up in the express position. The window will rise for as long as the switch is held. Once the switch is released, the express mode is re-activated.

In this mode, the window can still close on an object in its path. Use care when using the override mode.

Window Lockout

(Window Lockout): The rear window lockout button is located on the driver's door armrest near the window switches. Press this button to disable the rear window controls. The light on the button will illuminate, indicating that the feature is in use. The rear windows can be raised or lowered using the driver's window switches when the lockout feature is on. To restore power to the rear windows, press the button again. The light on the button will go out.

The front passenger window can be programmed to be disabled using the window lockout button. See *Vehicle Personalization on page 2-53*.

Secure Car Feature

The windows can be closed by pressing the lock button on the keyless access transmitter. See *Keyless Access System Operation on page 2-5* for more information. The window, if down, will express-up. If any window was unable to completely close, it will reverse and the horn will chirp. See "Anti-Pinch Feature" previously. The engine must be off to operate this feature.

Sun Visors

Swing down the visor or detach it from the center mount and move to the side to block out glare. The visors also have side-to-side slide capability for greater coverage.

Lighted Visor Vanity Mirrors

Pull the visor down and lift the cover. Move the slide switch up or down to brighten or dim the lamp.

Theft-Deterrent Systems

Vehicle theft is big business, especially in some cities. Although your vehicle has a number of theft-deterrent features, we know that nothing we put on it can make it impossible to steal.

Theft-Deterrent System

Your vehicle has a theft-deterrent alarm system.

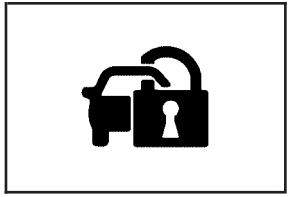

The security light is located on the instrument panel cluster.

If the ignition is off and a door is open, the security light will flash, reminding you to arm the theft-deterrent system.

To arm the system, do one of the following:

- Press the lock button on the keyless access transmitter. If the door is closed when the lock button is pressed, the security light will stay illuminated for 30 seconds. After the security light goes off, the theft-deterrent system is armed. Pressing the lock button twice will arm the system immediately.

  If the vehicle is locked using the keyless access transmitter and the trunk lid, hood or a door is open or not closed completely, the security light will flash for 60 seconds and then turn off. At this time, the theft-deterrent system is armed but the alarm will not sound if the trunk lid, hood or door that was not closed completely is tampered with or opened. The alarm will sound for the trunk lid, hood or a door that was completely closed at the time the vehicle was locked using the keyless access transmitter.

- Open the door. Lock the door with the power door lock switch or lock button on the keyless access transmitter. The security light should flash. Close the door. The security light will stop flashing and stay on. After 30 seconds the light should turn off, the theft-deterrent system is armed.

- Passive Arming, if activated through the vehicle personalization feature, will arm the system automatically after you close the door and take at least one keyless access transmitter with you. The security light will turn on. After 60 seconds the light should turn off. The theft-deterrent system is armed. See *Vehicle Personalization on page 2-53*.

If a door, hood, or the trunk is opened without the keyless access transmitter, the horn will sound for 30 seconds and the lamps will flash for two minutes. The vehicle cannot be started without a keyless access transmitter.

The Theft-Deterrent system will not arm if:

- The key is used to lock the driver's door.
- The driver's door is locked using the power door lock switch after the doors are closed.

If the vehicle is locked using the keyless access transmitter and the trunk lid, hood or a door is open or not closed completely, the security light will flash for 60 seconds and then turn off. At this time, the theft-deterrent system is armed but the alarm will not sound if the trunk lid, hood or door that was not closed completely is tampered with or opened. The alarm will sound for the trunk lid, hood or a door that was completely closed at the time the vehicle was locked using the keyless access transmitter.

The vehicle can be programmed to automatically unlock the doors and disarm the theft-deterrent system when you approach the vehicle and the keyless access transmitter is with you. See *Vehicle Personalization on page 2-53*.

Pressing the unlock button on the keyless access transmitter or using the key to unlock the driver's door disarms the theft-deterrent system. Unlocking a door any other way while the system is armed will activate the alarm.

Testing the Alarm

1. From inside the vehicle, roll down the window, then get out of the vehicle, keeping the door open.
2. From outside of the vehicle, with the door open, lock the vehicle using the power door lock switch or the keyless access transmitter and close the door. Wait approximately 30 seconds until the security light goes off.
3. Reach in and open the door using the inside door handle. The horn will sound and the exterior lamps will flash.

You can turn off the alarm by pressing the unlock button on the keyless access transmitter or by starting the car.

If the alarm does not sound when it should, check to see if the horn works. The horn fuse may be blown. To replace the fuse, see *Fuses and Circuit Breakers on page 5-105*. If the fuse does not need to be replaced, you may need to have your vehicle serviced.

To reduce the possibility of theft, always arm the Theft-Deterrent system when leaving your vehicle.

Valet Lockout Switch

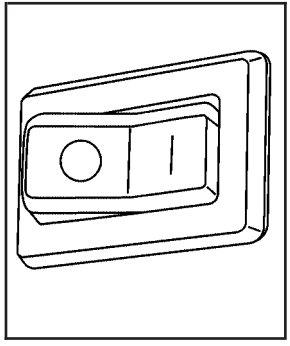

The valet lockout switch is located inside the glove box.

◯ **(Off):** Press the left side of the valet lockout switch to turn the lockout feature off. When the lockout feature is off, you can open the trunk using either the keyless access transmitter or the trunk release button located on the driver's door.

| **(On):** Press the right side of the valet lockout switch to turn the lockout feature on. When the lockout feature is turned on, the trunk cannot be unlocked with the keyless access transmitter or the trunk release button located on the driver's door. If the valet lockout feature is on it will also disable the remote start feature and the Universal Home Remote transmitter, if equipped.

Locking the glove box with your key will also help to secure your vehicle.

See *Keyless Access System Operation on page 2-5* and *Trunk on page 2-14* for additional information.

Starting and Operating Your Vehicle

New Vehicle Break-In

Notice: **Your vehicle does not need an elaborate break-in. But it will perform better in the long run if you follow these guidelines:**

- **Do not drive at any one constant speed, fast or slow, for the first 500 miles (805 km). Do not make full-throttle starts. Avoid downshifting to brake, or slow, the vehicle.**
- **Avoid making hard stops for the first 200 miles (322 km) or so. During this time your new brake linings are not yet broken in. Hard stops with new linings can mean premature wear and earlier replacement. Follow this breaking-in guideline every time you get new brake linings.**
- **Do not tow a trailer during break-in. See *Towing a Trailer (STS Only) on page 4-40* for the trailer towing capabilities of your vehicle and more information.**

Following break-in, engine speed and load can be gradually increased.

Ignition Positions

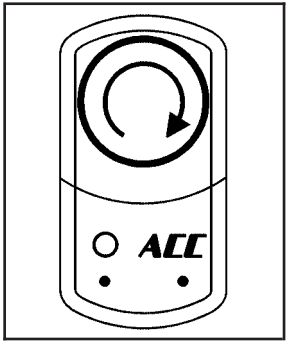

Your vehicle has an electronic keyless ignition with pushbutton start.

(START): Press this button while your foot is on the brake to start the engine. The shifter must be in PARK (P) or NEUTRAL (N) to start the engine and the keyless access transmitter must be in the vehicle for the ignition to work.

◯ **ACC (OFF/ACCESSORY):** When this button is pressed, the engine will turn off even if the shifter is not in PARK (P). If the shifter is in PARK (P), the ignition mode will change to RAP, if all doors are closed. The ignition mode will change to OFF, if a front door is opened. See *Retained Accessory Power (RAP) on page 2-25* for more information. If the shifter is not in PARK (P), the ignition mode will change to ACC. See *Shifting Into Park (P) on page 2-36*.

When the engine is off, press this button to place the vehicle in accessory mode. ACCESSORY ACTIVE will display on the Driver Information Center (DIC). This mode allows you to use things like the radio and the windshield wipers while the engine is off. Use accessory mode if you must have your vehicle in motion while the engine is off, for example, if your vehicle is being towed. If the door is open while in accessory mode, the key in reminder chime will sound continuously.

If the push-button start is not working, your vehicle may be near a strong radio antenna signal causing interference to the keyless access system. See *DIC Warnings and Messages on page 3-79* for more information.

After being in ACC for about 20 minutes, the vehicle will automatically enter RAP or will turn off, depending on if the doors are opened or closed.

Retained Accessory Power (RAP)

The following accessories on your vehicle may be used for up to 20 minutes after the engine is turned off:

- Radio
- Power Windows
- Audio Steering Wheel Controls

Power to these accessories stops after 20 minutes or if one of the front doors is opened. If you want power for another 20 minutes, close all the doors and press the OFF/ACCESSORY button to place the vehicle in accessory mode. Press the button again and the vehicle will return to RAP.

Starting the Engine

Move your shift lever to PARK (P) or NEUTRAL (N). Your engine will not start in any other position — that is a safety feature. To restart when you are already moving, use NEUTRAL (N) only.

The keyless access transmitter must be in the vehicle for the ignition to work.

Notice: **Do not try to shift to PARK (P) if your vehicle is moving. If you do, you could damage the transmission. Shift to PARK (P) only when your vehicle is stopped.**

1. With your foot on the brake pedal, press the START button located on the instrument panel. If there is not a keyless access transmitter present, the DIC will display NO FOB DETECTED. See *DIC Warnings and Messages on page 3-79* for more information. When the engine begins cranking, let go of the button. The idle speed will go down as your engine gets warm.

   If the battery in the keyless access transmitter is weak, the DIC will display FOB BATTERY LOW. You can still drive the vehicle. See “Battery Replacement” under *Keyless Access System Operation on page 2-5* for more information.

Notice: **Holding the button in for longer than 15 seconds at a time will cause the vehicle’s battery to be drained much sooner. This can also cause damage to the starter motor. Wait 15 seconds between each try to avoid draining your vehicle’s battery or damaging the starter.**

2. If the engine does not start and no DIC message is displayed, wait 15 seconds before trying again.

Notice: **Your engine is designed to work with the electronics in your vehicle. If you add electrical parts or accessories, you could change the way the engine operates. Before adding electrical equipment, check with your dealer. If you do not, your engine might not perform properly. Any resulting damage would not be covered by your vehicle’s warranty.**

Stopping Your Engine

Move the shift lever to PARK (P) and press the ACC button located on the instrument panel. If the shifter is not in PARK (P), the vehicle will go into the accessory mode, the engine will turn off and the DIC will display SHIFT TO PARK. When the shifter is moved to PARK (P), the vehicle will go into the RAP mode, if all doors are closed. The ignition mode will change to OFF, if a front door is opened. See *Retained Accessory Power (RAP) on page 2-25* for more information.

If the keyless access transmitter is not detected while going to off, the DIC will display NO FOB – OFF OR RUN?.

See *DIC Warnings and Messages on page 3-79* for more information.

Engine Coolant Heater

Your vehicle may be equipped with an engine coolant heater.

In very cold weather, 0°F (–18°C) or colder, the engine coolant heater can help. You will get easier starting and better fuel economy during engine warm-up.

Usually, the coolant heater should be plugged in a minimum of four hours prior to starting your vehicle. At temperatures above 32°F (0°C), use of the coolant heater is not required. Your vehicle may also have an internal thermostat in the plug end of the cord. This will prevent operation of the engine coolant heater when the temperature is at or above 0°F (–18°C) as noted on the cord.

To Use the Engine Coolant Heater

1. Turn off the engine.
2. Open the hood and unwrap the electrical cord.
   For the 3.6L V6 engine, the cord is located in the engine compartment on the passenger's side of the vehicle in front of the fuse block.
   For the 4.6L V8 engine, the cord is located in the engine compartment on the driver's side of the vehicle near the inner fender and above the strut.
   For the 4.4L V8 engine, the cord is located in the front of the engine compartment, on the passenger's side of the vehicle. The plug will be inside the upper grille cutout.
3. You must remove the plastic cap to access the plug.
4. Plug it into a normal, grounded 110-volt AC outlet.

⚠ CAUTION:

Plugging the cord into an ungrounded outlet could cause an electrical shock. Also, the wrong kind of extension cord could overheat and cause a fire. You could be seriously injured. Plug the cord into a properly grounded three-prong 110-volt AC outlet. If the cord will not reach, use a heavy-duty three-prong extension cord rated for at least 15 amps.

5. Before starting the engine, be sure to unplug and store the cord as it was before to keep it away from moving engine parts. If you do not, it could be damaged.

How long should you keep the coolant heater plugged in? The answer depends on the outside temperature, the kind of oil you have, and some other things. Instead of trying to list everything here, we ask that you contact your dealer in the area where you will be parking your vehicle. The dealer can give you the best advice for that particular area.

Automatic Transmission Operation (STS)

The shift lever is located on the center console between the front seats.

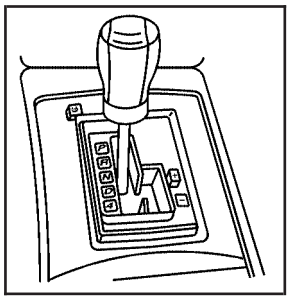

There are several different positions for the shift lever.

PARK (P): This position locks the rear wheels. It is the best position to use when you start the engine because your vehicle cannot move easily.

⚠ CAUTION:

It is dangerous to get out of your vehicle if the shift lever is not fully in PARK (P) with the parking brake firmly set. Your vehicle can roll.

Do not leave your vehicle when the engine is running unless you have to. If you have left the engine running, the vehicle can move suddenly. You or others could be injured. To be sure your vehicle will not move, even when you are on fairly level ground, always set your parking brake and move the shift lever to PARK (P). See *Shifting Into Park (P) on page 2-36*. If you are pulling a trailer, see *Towing a Trailer (STS Only) on page 4-40*.

Ensure the shift lever is fully in PARK (P) before starting the engine. Your vehicle has an automatic transmission shift lock control system. You must fully apply your regular brakes before you can shift from PARK (P) when the ignition is on. If you cannot shift out of PARK (P), ease pressure on the shift lever. Push the shift lever all the way into PARK (P) while pressing the button on the shift lever as you maintain brake application. Then move the shift lever into the gear you wish. See *Shifting Out of Park (P) on page 2-38*.

Notice: **Shifting to REVERSE (R) while your vehicle is moving forward could damage the transmission. The repairs would not be covered by your warranty. Shift to REVERSE (R) only after your vehicle is stopped.**

REVERSE (R): Use this gear to back up.

At low vehicle speeds, you can also use REVERSE (R) to rock your vehicle back and forth to get out of snow, ice or sand without damaging your transmission. See *If Your Vehicle is Stuck in Sand, Mud, Ice or Snow on page 4-31* for additional information.

NEUTRAL (N): In this position, the engine does not connect with the wheels. To restart when you are already moving, use NEUTRAL (N) only. You can also use NEUTRAL (N) when your vehicle is being towed.

⚠ CAUTION:

Shifting into a drive gear while your engine is running at high speed is dangerous. Unless your foot is firmly on the brake pedal, your vehicle could move very rapidly. You could lose control and hit people or objects. Do not shift into a drive gear while your engine is running at high speed.

Notice: **Shifting out of PARK (P) or NEUTRAL (N) with the engine running at high speed may damage the transmission. The repairs would not be covered by your warranty. Be sure the engine is not running at high speed when shifting your vehicle.**

AUTOMATIC OVERDRIVE (D): This position is for normal driving. If you need more power for passing, and you are:

- Going less than 35 mph (55 km/h), push the accelerator pedal about halfway down.
- Going about 35 mph (55 km/h) or more, push the accelerator all the way down.

  The transmission will shift down to a lower gear and have more power.

Notice: **Spinning the tires or holding the vehicle in one place on a hill using only the accelerator pedal may damage the transmission. If you are stuck, do not spin the tires. When stopping on a hill, use the brakes to hold the vehicle in place.**

FOURTH (4): This position is also used for normal driving. However, it offers more power and lower fuel economy than AUTOMATIC OVERDRIVE (D).

Here are examples for using FOURTH (4) instead of AUTOMATIC OVERDRIVE (D):

- When driving on hilly, winding roads.
- When going down a steep hill.

This position may also offer improved trailer towing performance in certain driving conditions.

Driver Shift Control (DSC)

Notice: **If you drive your vehicle at high RPMs without upshifting while using Driver Shift Control (DSC), you could damage your vehicle. Always upshift when necessary while using DSC.**

Your automatic transmission has a Driver Shift Control (DSC) feature that allows you to change gears similar to a manual transmission. To use the DSC feature:

1. Slide the shift lever over from AUTOMATIC OVERDRIVE (D) to the right into the DSC area.

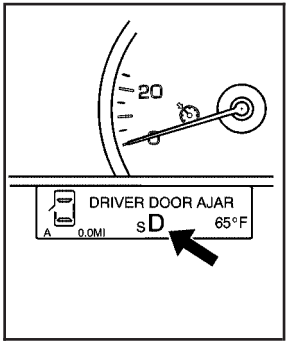

When the transmission is in DSC mode the sport symbol in the Driver Information Center (DIC) will come on.

If you do not move the shift lever forward or rearward, the vehicle will be in sport mode. When you are in the sport mode the vehicle will still shift automatically. While driving in sport mode, the transmission may remain in a gear longer than it would in normal driving mode based on braking, throttle input and vehicle lateral acceleration.

2. Press the shift lever forward to upshift or rearward to downshift.

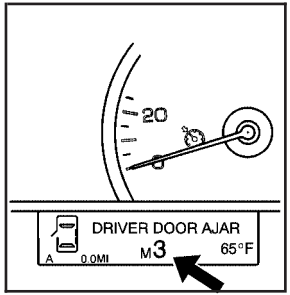

The DIC will show the requested gear range when moving the shift lever forward or rearward. See *Driver Information Center (DIC) on page 3-73* for more information on the DIC.

While using the DSC feature the vehicle will have firmer shifting and increased performance. You can use this for sport driving or when climbing/descending hills to stay in gear longer or to down shift for more power or engine braking.

The transmission will only allow you to shift into gears appropriate for the vehicle speed and engine Revolutions Per Minute (RPM). The transmission will not automatically shift to the next higher gear if the engine rpm is too high.

If shifting is prevented for any reason, the currently selected gear will flash multiple times in the DIC, indicating that the transmission has not shifted gears.

The transmission will allow you to shift to the gear selected and will automatically downshift when the vehicle comes to a stop. This will allow for more power during take-off and passing.

When accelerating your vehicle from a stop in snowy and icy conditions, you may want to shift into second gear. A higher gear allows you to gain more traction on slippery surfaces.

Automatic Transmission Operation (STS-V)

The shift lever is located on the center console between the front seats.

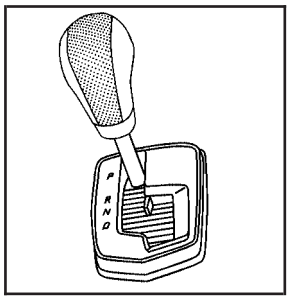

There are several different positions for the shift lever.

PARK (P): This position locks the rear wheels. It is the best position to use when you start the engine because your vehicle cannot move easily.

⚠ CAUTION:

It is dangerous to get out of your vehicle if the shift lever is not fully in PARK (P) with the parking brake firmly set. Your vehicle can roll.

Do not leave your vehicle when the engine is running unless you have to. If you have left the engine running, the vehicle can move suddenly. You or others could be injured. To be sure your vehicle will not move, even when you are on fairly level ground, always set your parking brake and move the shift lever to PARK (P). See *Shifting Into Park (P) on page 2-36*. If you are pulling a trailer, see *Towing a Trailer (STS Only) on page 4-40*.

Ensure the shift lever is fully in PARK (P) before starting the engine. Your vehicle has an automatic transmission shift lock control system. You must fully apply your regular brakes before you can shift from PARK (P) when the vehicle is running. If you cannot shift out of PARK (P), ease pressure on the shift lever. Push the shift lever all the way into PARK (P) while pressing the button on the shift lever as you maintain brake application. Then move the shift lever into the gear you wish. See *Shifting Out of Park (P) on page 2-38*.

Notice: **Shifting to REVERSE (R) while your vehicle is moving forward could damage the transmission. The repairs would not be covered by your warranty. Shift to REVERSE (R) only after your vehicle is stopped.**

REVERSE (R): Use this gear to back up.

At low vehicle speeds, you can also use REVERSE (R) to rock your vehicle back and forth to get out of snow, ice, or sand without damaging your transmission. See *If Your Vehicle is Stuck in Sand, Mud, Ice or Snow on page 4-31* for additional information.

NEUTRAL (N): In this position, the engine does not connect with the wheels. To restart when you are already moving, use NEUTRAL (N) only. You can also use NEUTRAL (N) when your vehicle is being towed.

⚠ CAUTION:

Shifting into a drive gear while your engine is running at high speed is dangerous. Unless your foot is firmly on the brake pedal, your vehicle could move very rapidly. You could lose control and hit people or objects. Do not shift into a drive gear while your engine is running at high speed.

Notice: **Shifting out of PARK (P) or NEUTRAL (N) with the engine running at high speed may damage the transmission. The repairs would not be covered by your warranty. Be sure the engine is not running at high speed when shifting your vehicle.**

AUTOMATIC OVERDRIVE (D): This position is for normal driving. If you need more power for passing, and you are:

- Going less than 35 mph (55 km/h), push the accelerator pedal about halfway down.
- Going about 35 mph (55 km/h) or more, push the accelerator all the way down.
  The transmission will shift down to a lower gear and have more power.

Driver Shift Control (DSC)

Notice: **If you drive your vehicle at high RPMs without upshifting while using Driver Shift Control (DSC), you could damage your vehicle. Always upshift when necessary while using DSC.**

Your automatic transmission has a Driver Shift Control (DSC) feature that allows you to change gears similar to a manual transmission. To use the DSC feature:

1. Slide the shift lever over from AUTOMATIC OVERDRIVE (D) to the right into the DSC area.

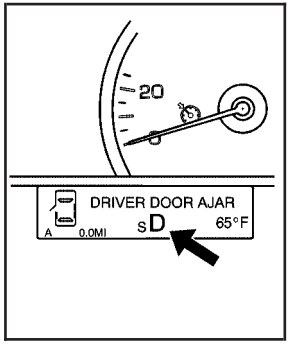

When the transmission is in DSC mode the sport symbol in the Driver Information Center (DIC) will come on.

If you do not move the shift lever forward or rearward, the vehicle will be in sport mode. When you are in the sport mode the vehicle will still shift automatically. While driving in sport mode, the transmission may remain in a gear longer than it would in normal driving mode based on braking, throttle input, and vehicle lateral acceleration.

2. Press the shift lever forward to upshift or rearward to downshift.

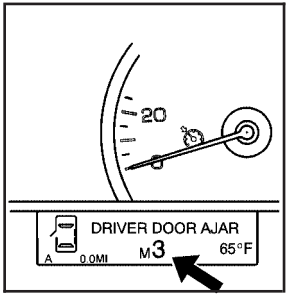

The DIC will show the requested gear range when moving the shift lever forward or rearward. See *Driver Information Center (DIC) on page 3-73* for more information on the DIC.

While using the DSC feature the vehicle will have firmer shifting and increased performance. You can use this for sport driving or when climbing/descending hills to stay in gear longer or to down shift for more power or engine braking.

The transmission will only allow you to shift into gears appropriate for the vehicle speed and engine Revolutions Per Minute (RPM). The transmission will not automatically shift to the next higher gear if the engine rpm is too high.

If shifting is prevented for any reason, the currently selected gear will flash multiple times, indicating that the transmission has not shifted gears.

The transmission will allow you to shift to the gear selected and will automatically downshift when the vehicle comes to a stop. This will allow for more power during take-off and passing.

When accelerating your vehicle from a stop in snowy and icy conditions, you may want to shift into second gear. A higher gear allows you to gain more traction on slippery surfaces.

Parking Brake

The parking brake pedal is located on the lower portion of the instrument panel to the left of the steering wheel.

This vehicle has a push-to-release parking brake pedal. To set the parking brake, hold the regular brake pedal down with your right foot and push the parking brake pedal down with your left foot.

If the ignition is on, the brake system warning light on the instrument panel cluster should come on. If it does not, you need to have your vehicle serviced. See *Brake System Warning Light on page 3-64* for more information.

To release the parking brake, hold the brake pedal down with your right foot and push the parking brake pedal with your left foot. When you lift your left foot, the parking brake pedal will follow it to the released position.

Notice: **Driving with the parking brake on can overheat the brake system and cause premature wear or damage to brake system parts. Verify that the parking brake is fully released and the brake warning light is off before driving.**

A warning chime will sound if the parking brake is set, the ignition is on and the vehicle begins to move. To stop the chime, fully release the parking brake.

If you are towing a trailer and parking on a hill, see *Towing a Trailer (STS Only) on page 4-40* for more information.

Shifting Into Park (P)

⚠ CAUTION:

It can be dangerous to get out of your vehicle if the shift lever is not fully in PARK (P) with the parking brake firmly set. Your vehicle can roll. If you have left the engine running, the vehicle can move suddenly. You or others could be injured. To be sure your vehicle will not move, even when you are on fairly level ground, use the steps that follow. If you are pulling a trailer, see *Towing a Trailer (STS Only) on page 4-40*.

To shift into PARK (P), use the following steps:

1. Hold the brake pedal down with your right foot.
2. Move the shift lever into PARK (P) by pressing the button on the front of the shift lever while pushing the lever all the way toward the front of the vehicle. Release the button.
3. With your right foot still holding the brake pedal down, set the parking brake with your left foot. See *Parking Brake on page 2-35* for more information.
4. Turn the ignition off.

Leaving Your Vehicle With the Engine Running

⚠ CAUTION:

It can be dangerous to leave your vehicle with the engine running. Your vehicle could move suddenly if the shift lever is not fully in PARK (P) with the parking brake firmly set. And, if you leave the vehicle with the engine running, it could overheat and even catch fire. You or others could be injured. Do not leave your vehicle with the engine running.

If you have to leave your vehicle with the engine running, be sure your vehicle is in PARK (P) and your parking brake is firmly set before you leave it. After you have moved the shift lever into PARK (P), hold the regular brake pedal down. Then, see if you can move the shift lever away from PARK (P) without first pushing the button on the shift lever. If you can, it means that the shift lever was not fully locked into PARK (P).

Torque Lock

If you are parking on a hill and you do not shift your transmission into PARK (P) properly, the weight of the vehicle may put too much force on the parking pawl in the transmission. You may find it difficult to pull the shift lever out of PARK (P). This is called “torque lock.” To prevent torque lock, set the parking brake and then shift into PARK (P) properly before you leave the driver’s seat. To find out how, see “Shifting Into PARK (P)” listed previously.

If torque lock does occur, you may need to have another vehicle push yours a little uphill to take some of the pressure from the parking pawl in the transmission, so you can pull the shift lever out of PARK (P).

Shifting Out of Park (P)

Your vehicle has an automatic transmission shift lock control system. You have to fully apply your regular brake before you can shift from PARK (P) when the vehicle is running. See *Automatic Transmission Operation (STS) on page 2-28* or *Automatic Transmission Operation (STS-V) on page 2-32*.

If you cannot shift out of PARK (P), ease pressure on the shift lever – push the shift lever all the way into PARK (P) and release the shift lever button as you maintain brake application. Then press the shift lever button and move the shift lever into the gear you wish.

If you ever hold the brake pedal down but still cannot shift out of PARK (P), try this:

1. Press the ACC button twice to place the ignition in accessory mode.
2. Apply and hold the brake until the end of Step 4.
3. Shift to NEUTRAL (N).
4. Start the engine and then shift to the drive gear you want.
5. Have your vehicle inspected by your dealer as soon as possible.

Parking Over Things That Burn

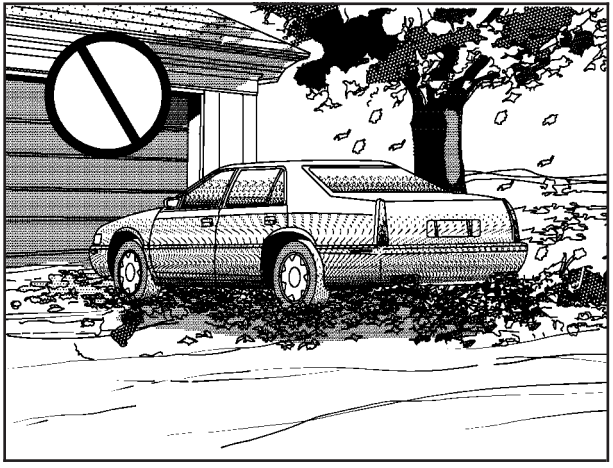

⚠ CAUTION:

Things that can burn could touch hot exhaust parts under your vehicle and ignite. Do not park over papers, leaves, dry grass, or other things that can burn.

Engine Exhaust

⚠ CAUTION:

Engine exhaust can kill. It contains the gas carbon monoxide (CO), which you cannot see or smell. It can cause unconsciousness and death.

You might have exhaust coming in if:

- **Your exhaust system sounds strange or different.**
- **Your vehicle gets rusty underneath.**
- **Your vehicle was damaged in a collision.**

CAUTION: (Continued)

CAUTION: (Continued)

- **Your vehicle was damaged when driving over high points on the road or over road debris.**
- **Repairs were not done correctly.**
- **Your vehicle or exhaust system had been modified improperly.**

If you ever suspect exhaust is coming into your vehicle:

- **Drive it only with all the windows down to blow out any CO; and**
- **Have your vehicle fixed immediately.**

Running the Engine While Parked

It is better not to park with the engine running. But if you ever have to, here are some things to know.

⚠ CAUTION:

Idling the engine with the climate control system off could allow dangerous exhaust into your vehicle. See the earlier caution under *Engine Exhaust on page 2-39*.

Also, idling in a closed-in place can let deadly carbon monoxide (CO) into your vehicle even if the climate control fan is at the highest setting. One place this can happen is a garage. Exhaust — with CO — can come in easily. NEVER park in a garage with the engine running.

Another closed-in place can be a blizzard. See *Winter Driving on page 4-27*.

⚠ CAUTION:

It can be dangerous to get out of your vehicle if the shift lever is not fully in PARK (P) with the parking brake firmly set. Your vehicle can roll. Do not leave your vehicle when the engine is running unless you have to. If you have left the engine running, the vehicle can move suddenly. You or others could be injured. To be sure your vehicle will not move, even when you are on fairly level ground, always set your parking brake after you move the shift lever to PARK (P).

Follow the proper steps to be sure your vehicle will not move. See *Shifting Into Park (P) on page 2-36*.

If you are parking on a hill and if you are pulling a trailer, also see *Towing a Trailer (STS Only) on page 4-40*.

Mirrors

Automatic Dimming Rearview Mirror with Intellibeam™ and OnStar®

Your vehicle may have an Intellibeam™ inside rearview mirror with OnStar® controls. For more information about OnStar®, see *OnStar® System on page 2-45*.

To turn on and enable Intellibeam™, press and release the Intellibeam™ button on the inside rear view mirror. If the vehicle has the IntelliBeam™ Intelligent High-Beam Headlamp Control System, the on/off button can also be used to turn off or reset this system. See "IntelliBeam™ Intelligent High-Beam Headlamp Control System" under *Headlamps on page 3-31*.

Automatic Dimming Rearview Mirror

Your vehicle may have an automatic dimming rearview mirror.

⏻ **(On/Off):** Press and hold the button, located on the lower left side of the mirror face, for about three seconds to turn the automatic dimming feature on or off. The indicator light will illuminate when this feature is active. The automatic dimming feature is active each time the vehicle is started.

Automatic Dimming Rearview Mirror with OnStar®

Your vehicle may have an automatic dimming rearview mirror that also contains OnStar® controls. For more information on OnStar®, see *OnStar® System on page 2-45*.

Mirror Operation

⏻ **(On/Off):** Press and hold the button, located on the lower left side of the mirror face, for about three seconds to turn the automatic dimming feature on or off. The indicator light will illuminate when this feature is active. The automatic dimming feature is active each time the vehicle is started.

Cleaning the Mirror

When cleaning the mirror, use a paper towel or similar material dampened with glass cleaner. Do not spray glass cleaner directly on the mirror as that may cause the liquid cleaner to enter the mirror housing.

Automatic Dimming Rearview Mirror with OnStar® and Compass

Your vehicle may have an automatic dimming rearview mirror with a compass display. The mirror also contains OnStar® controls. For more information see *OnStar® System on page 2-45*.

The mirror includes an eight-point compass display in the upper right corner of the mirror face. When on, the compass automatically calibrates as the vehicle is driven.

Mirror Operation

⏻ **(On/Off):** Press and hold the button, located on the lower left side of the mirror face, for about three seconds to turn the automatic dimming feature on or off. The indicator light will illuminate when this feature is active. The automatic dimming feature is active each time the vehicle is started.

Compass Operation

Press the on/off button once to turn the compass on or off.

When the ignition and the compass feature are on, the compass will show two character boxes for about two seconds. After two seconds, the mirror will display the compass heading.

Compass Calibration

If after two seconds, the display does not show a compass heading (for example, N for North), there may be a strong magnetic field interfering with the compass. Such interference may be caused by a magnetic antenna mount, magnetic note pad holder or a similar magnetic item. If the letter C should ever appear in the compass window, the compass may need calibration.

The mirror can be calibrated by driving the vehicle in circles at 5 mph (8 km/h) or less until the display reads a direction.

The compass can be placed in calibration mode manually by pressing and holding the on/off button until a C is shown in the compass display.

Compass Variance

The zone is set to zone eight upon leaving the factory. It will be necessary to adjust the compass to compensate for compass variance if you live outside zone eight. Under certain circumstances, as during a long distance cross-country trip, it will be necessary to adjust for compass variance. Compass variance is the difference between earth's magnetic north and true geographic north. If not adjusted to account for compass variance, your compass could give false readings.

To adjust for compass variance do the following:

1. Find the current location and variance zone number on the following zone map.

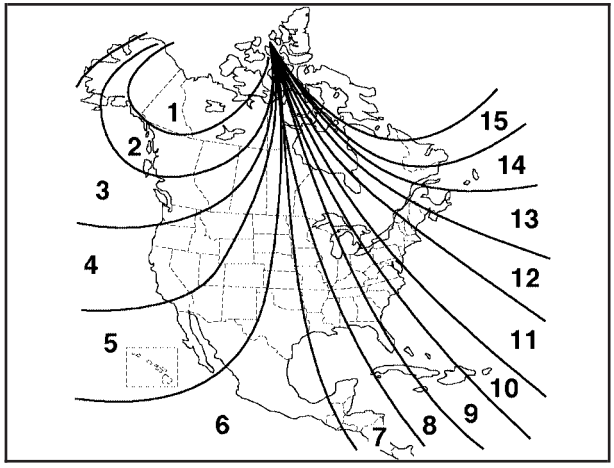

2. Press and hold the on/off button until a zone number appears in the display.
3. Once the zone number appears in the display, press the on/off button quickly until the correct zone number appears in the display. Stop pressing the button and the mirror will return to normal operation. If C appears in the compass window, the compass may need calibration. See *Compass Calibration* listed previously.

Cleaning the Mirror

When cleaning the mirror, use a paper towel or similar material dampened with glass cleaner. Do not spray glass cleaner directly on the mirror as that may cause the liquid cleaner to enter the mirror housing.

Outside Power Heated Mirrors

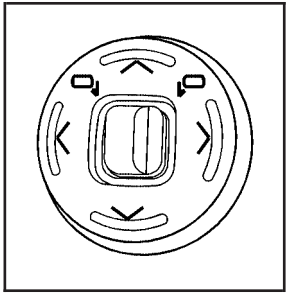

The power mirror control is on the driver's door armrest and controls the driver's side and passenger's side mirrors.

Move the selector switch left or right to choose the driver's side or passenger's side mirror. Use the arrows located on the control pad to adjust the position of each mirror. Adjust each mirror so you can see the side of your vehicle and the area behind your vehicle.

Return the selector switch to the center position when finished adjusting. This will prevent unwanted mirror movement in case the control pad is accidentally bumped while driving.

The preferred mirror positions can be stored with the memory option. See *Memory Seat, Mirrors and Steering Wheel on page 2-70*.

The mirrors can be manually folded inward to prevent damage when going through car washes or confined spaces. To fold, push the mirror toward the vehicle. To return the mirror to its original position, push outward. Be sure to return both mirrors to their original unfolded position before driving.

When the rear window defogger is turned on, both outside rear view mirrors are heated to help clear them of ice, snow, or condensation. See “Rear Window Defogger” under *Dual Climate Control System on page 3-48*.

Outside Automatic Dimming Mirror

The driver’s side mirror will adjust for the glare of headlamps behind you. This feature is controlled by the on and off settings on the automatic dimming rearview mirror.

Outside Convex Mirror

⚠ CAUTION:

A convex mirror can make things (like other vehicles) look farther away than they really are. If you cut too sharply into the right lane, you could hit a vehicle on your right. Check your inside mirror or glance over your shoulder before changing lanes.

The passenger’s side mirror is convex. A convex mirror’s surface is curved so more can be seen from the driver’s seat. This mirror does not have a dimming feature.

Outside Parallel Park Assist Mirror

This feature assists the driver by improving rear obstacle detection and is useful in viewing the curb when parallel parking.

Press the left or right mirror symbol on the selector control to choose the driver or passenger outside mirror. When the vehicle is shifted into REVERSE (R), the selected mirror will tilt to a factory programmed position.

If further mirror adjustment is needed press the arrows located on the outside mirror control pad. If the outside mirror selector switch is in the middle position, neither outside mirror will move.

When the vehicle is shifted out of REVERSE (R), and a five-second delay has occurred, the mirror will return to its original position. The delay prevents movement of the mirror if multiple gear transitions REVERSE (R) to AUTOMATIC OVERDRIVE (D) to REVERSE (R) occur during a parallel parking maneuver.

OnStar® System

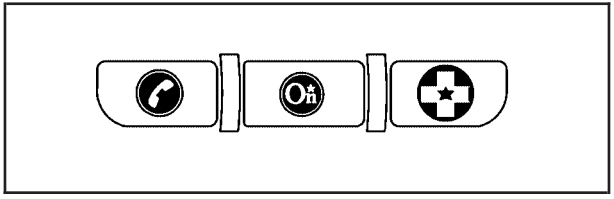

OnStar® uses global positioning system (GPS) satellite technology, wireless communications, and live advisors to provide you with a wide range of safety, security, information, and convenience services. If your airbags deploy, the system is designed to make an automatic call to OnStar® Emergency where we can request emergency services be sent to your location. If you lock your keys in the car, call OnStar® at 1-888-4-ONSTAR and they can send a signal to unlock your doors. if you need roadside assistance, press the OnStar® button and they will get you the help you need.

A complete OnStar® User's Guide and the Terms and Conditions of the OnStar® Subscription Service Agreement are included in the vehicle's glove box literature. For more information, visit www.onstar.com or www.onstar.ca. Contact OnStar® at 1-888-4-ONSTAR (1-888-466-7827), or press the OnStar® button to speak to an OnStar® advisor 24 hours a day, 7 days a week.

Terms and conditions of the Subscription Service Agreement can be found at www.onstar.com or www.onstar.ca.

OnStar® Services

The Directions and Connections® Plan is included on new vehicles for the first year from the date of purchase. You can extend this plan beyond the first year to meet your needs. For more information, press the OnStar® button to speak with an advisor.

Directions and Connections Plan

- Advanced Automatic Collision Notification
- Automatic Notification of Airbag Deployment
- Emergency Services
- Roadside Assistance
- Stolen Vehicle Tracking
- AccidentAssist
- Remote Door Unlock/Vehicle Alert
- Remote Diagnostics
- Online Concierge
- Driving Directions
- RideAssist
- Information and Convenience Services

OnStar® Personal Calling

As an OnStar® subscriber, the Personal Calling capability allows you to make hands-free calls using a wireless system that is integrated into the vehicle. Calls can be placed nationwide using simple voice commands with no additional contracts and no additional roaming charges. To find out more about OnStar® Personal Calling, refer to the OnStar® User's Guide in the vehicle's glove box, visit www.onstar.com or www.onstar.ca, or speak to an OnStar® advisor by pressing the OnStar® button or calling 1-888-4-ONSTAR (1-888-466-7827).

OnStar® Virtual Advisor

Your vehicle may have Virtual Advisor. It is a feature of OnStar® Personal Calling that uses your minutes to access weather, local traffic reports and sports updates. By pressing the phone button and giving a few simple voice commands, you can browse through the various topics. Customize your information profile at www.myonstar.com. See the OnStar® user's guide for more information.

OnStar® Steering Wheel Controls

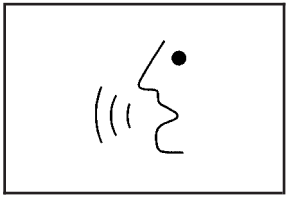

Your vehicle may be equipped with a Talk/Mute button that can be used to interact with OnStar®. See the Audio Steering Wheel Control section for your specific vehicle operation.

When calling into voice mail systems or to dial directory numbers, press this button once, wait for the response, say the number(s) to be dialed, wait for the number(s) to be repeated and then say "dial."

See the OnStar® User's Guide for more information.

Universal Home Remote System

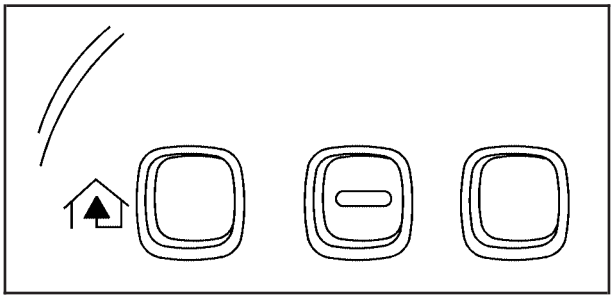

The Universal Home Remote System, a combined universal transmitter and receiver, provides a way to replace up to three hand-held transmitters used to activate devices such as gate operators, garage door openers, entry door locks, security systems, and home lighting.

The Universal Home Remote transmitter will be disabled, and will not work, if the valet lockout switch is on. See *Valet Lockout Switch on page 2-23*.

If your vehicle is equipped with the Universal Home Remote Transmitter, it complies with Part 15 of the FCC Rules. Operation is subject to the following two conditions: (1) this device may not cause harmful interference, and (2) this device must accept any interference received, including interference that may cause undesired operation.

This device complies with RSS-210 of Industry Canada. Operation is subject to the following two conditions: (1) this device may not cause interference, and (2) this device must accept any interference, including interference that may cause undesired operation of the device.

Changes and modifications to this system by other than an authorized service facility could void authorization to use this equipment.

Universal Home Remote System Operation

Do not use the Universal Home Remote with any garage door opener that does not have the “stop and reverse” feature. This includes any garage door opener model manufactured before April 1, 1982. If you have a newer garage door opener with rolling codes, please be sure to follow Steps 6 through 8 to complete the programming of your Universal Home Remote Transmitter.

Read the instructions completely before attempting to program the Universal Home Remote. Because of the steps involved, it may be helpful to have another person available to assist you in the programming steps.

Keep the original hand-held transmitter for use in other vehicles as well as for future Universal Home Remote programming. It is also recommended that upon the sale of the vehicle, the programmed Universal Home Remote buttons should be erased for security purposes. See “Erasing Universal Home Remote Buttons” later in this section or, for assistance, see *Customer Assistance Offices on page 7-4*.

Be sure that people and objects are clear of the garage door or gate operator you are programming. When programming a garage door, it is advised to park outside of the garage.

It is recommended that a new battery be installed in your hand-held transmitter for quicker and more accurate transmission of the radio-frequency signal.

Programming Universal Home Remote

Follow these steps to program up to three channels:

1. Press and hold down the two outside Universal Home Remote buttons, releasing only when the Universal Home Remote indicator light begins to flash, after 20 seconds. Do not hold down the buttons for longer than 30 seconds and do not repeat this step to program a second and/or third hand-held transmitter to the remaining two Universal Home Remote buttons.
2. Position the end of your hand-held transmitter about 1 to 3 inches (3 to 8 cm) away from the Universal Home Remote buttons while keeping the indicator light in view.
3. Simultaneously press and hold both the desired Universal Home Remote button and the hand-held transmitter button. Do not release the buttons until Step 4 has been completed.

   Some entry gates and garage door openers may require you to substitute Step 3 with the procedure noted in “Gate Operator and Canadian Programming” later in this section.
4. The indicator light will flash slowly at first and then rapidly after Universal Home Remote successfully receives the frequency signal from the hand-held transmitter. Release both buttons.

5. Press and hold the newly-trained Universal Home Remote button and observe the indicator light.

   If the indicator light stays on constantly, programming is complete and your device should activate when the Universal Home Remote button is pressed and released.

   To program the remaining two Universal Home Remote buttons, begin with Step 2 under “Programming Universal Home Remote.” Do not repeat Step 1 as this will erase all of the programmed channels.

   If the indicator light blinks rapidly for two seconds and then turns to a constant light, continue with Steps 6 through 8 following to complete the programming of a rolling-code equipped device, most commonly, a garage door opener.

6. Locate in the garage, the garage door opener receiver (motor-head unit). Locate the “Learn” or “Smart” button. This can usually be found where the hanging antenna wire is attached to the motor-head unit.

7. Firmly press and release the “Learn” or “Smart” button. The name and color of the button may vary by manufacturer.

   You will have 30 seconds to start Step 8.

8. Return to the vehicle. Firmly press and hold the programmed Universal Home Remote button for two seconds, then release. Repeat the press/hold/release sequence a second time, and depending on the brand of the garage door opener, or other rolling code device, repeat this sequence a third time to complete the programming.

   The Universal Home Remote should now activate your rolling-code equipped device.

To program the remaining two Universal Home Remote buttons, begin with Step 2 of “Programming Universal Home Remote.” You do not want to repeat Step 1, as this will erase all previous programming from the Universal Home Remote buttons.

Gate Operator and Canadian Programming

Canadian radio-frequency laws require transmitter signals to time out or quit after several seconds of transmission. This may not be long enough for Universal Home Remote to pick up the signal during programming. Similarly, some U.S. gate operators are manufactured to time out in the same manner.

If you live in Canada, or you are having difficulty programming a gate operator or garage door opener by using the “Programming Universal Home Remote” procedures, regardless of where you live, replace Step 3 under “Programming Universal Home Remote” with the following:

Continue to press and hold the Universal Home Remote button while you press and release every two seconds (cycle) the hand-held transmitter button until the frequency signal has been successfully accepted by the Universal Home Remote. The Universal Home Remote indicator light will flash slowly at first and then rapidly. Proceed with Step 4 under “Programming Universal Home Remote” to complete.

Using Universal Home Remote

Press and hold the appropriate Universal Home Remote button for at least half of a second. The indicator light will come on while the signal is being transmitted.

Erasing Universal Home Remote Buttons

To erase programming from the three Universal Home Remote buttons do the following:

1. Press and hold down the two outside buttons until the indicator light begins to flash, after 20 seconds. Do not hold the two outside buttons for longer than 30 seconds.
2. Release both buttons.

The Universal Home Remote is now in the train (learning) mode and can be programmed at any time beginning with Step 2 under “Programming Universal Home Remote” shown earlier in this section.

Individual buttons cannot be erased, but they can be reprogrammed. See “Reprogramming a Single Universal Home Remote Button” following this section.

Reprogramming a Single Universal Home Remote Button

To program a device to Universal Home Remote using a Universal Home Remote button previously trained, follow these steps:

1. Press and hold the desired Universal Home Remote button. Do not release the button.
2. The indicator light will begin to flash after 20 seconds. While still holding the Universal Home Remote button, proceed with Step 2 under “Programming Universal Home Remote” shown earlier in this section.

For additional information on Universal Home Remote, see *Customer Assistance Offices on page 7-4*.

Storage Areas

Glove Box

To open the glove box, lift up on the lever. The glove box has a light inside.

Cupholder(s)

Your vehicle has two cupholders in the center console area.

Center Console Storage Area

Your vehicle has a center console storage area located between the front seats. It includes storage areas, and accessory power outlet(s) on the rear of the console.

Convenience Net

If your vehicle has a convenience net, the convenience net attaches to the floor or back wall of the rear of the vehicle using six anchor points. The net can be used like a hammock across the rear of the vehicle or hooked on the floor. Put small loads, like grocery bags, behind the net. It can help keep them from falling over during sharp turns or quick starts and stops.

The net is not for larger, heavier loads. Store them in the rear of the vehicle as far forward as you can.

Sunroof

The vehicle may have a power sunroof.

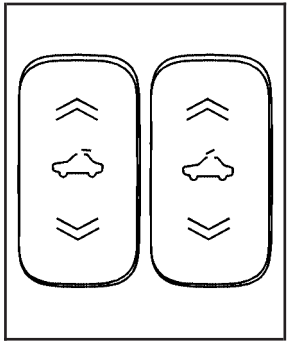

The switches that operate the sunroof are located on the overhead console.

To open or close the sunroof, the ignition must be ON or Retained Accessory Power (RAP) must be active. See *Retained Accessory Power (RAP) on page 2-25*.

Express Open: The express open feature will operate from the closed or partially open position. To express open the power sunroof, fully press the driver's side switch rearward once. To stop the sunroof glass in a desired position other than to the express-open position, press the switch again, in either direction, to stop the movement. If the sunshade is in the closed position, it will open with the sunroof, or it can be opened manually.

Vent Open: To open the power sunroof to the vent position from the closed position, press and hold the passenger's side sunroof switch forward. The rear of the sunroof panel will tilt upward to the full vent position. The sunshade must be opened manually.

Express Close: The express close feature will operate from the open or partially open position. To express close the power sunroof, fully press the driver's side switch forward once. To stop the sunroof glass in a desired position other than closed, press the switch again in either direction. The sunshade must be closed manually.

Close: To close the power sunroof, operate the controls according to one of the following:

- From the open position, press and hold the driver's side sunroof switch forward. The sunshade must be closed manually.
- From the vent position, press and hold the passenger's side sunroof switch rearward.

Anti-Pinch: If an object is in the path of the sunroof while it is closing, the anti-pinch feature will detect the object and stop the sunroof from closing at the point of the obstruction. The sunroof will then return to the full-open or vent position. To close the sunroof once it has re-opened, refer to the two options previously described under the "Close" feature instructions.

Vehicle Personalization

Your vehicle has personalization that allows you to program certain features to a preferred setting for up to two drivers. The back of the keyless access transmitters are labelled 1 or 2. Additional keyless access transmitters programmed to the vehicle, as 3 and/or 4, do not have a number on the back and are not capable of being personalized. The number of programmable features varies depending upon which vehicle options are purchased.

On all vehicles, features such as climate control settings, radio and XM™ preset settings, exterior lighting at unlock and remote lock unlock confirmation, and language have already been programmed for your convenience. Your vehicle also has an automatic door locking feature that is always on. You cannot turn the automatic door locking feature off. See *Programmable Automatic Door Locks on page 2-13*.

Some vehicles have additional features that can be programmed including the seat, steering column, and outside rearview mirror position.

If your vehicle has the base audio system, the following information explains the vehicle personalization on your vehicle.

If your vehicle has the Navigation system, see “Personalization” in the Index of the Navigation System manual for information on vehicle personalization.

If your vehicle has the ability to program additional personalization features, the driver’s preferences are recalled by pressing any button on the keyless access transmitter, 1 or 2, by selecting Driver 1 or 2 on the radio display, or when a valid keyless access transmitter is detected upon opening the driver’s door.

If more than one valid keyless access transmitter is detected upon opening the driver’s door, the driver preferences for the lowest driver number will be recalled.

Certain features can be programmed not to recall until the ignition is turned off.

To change feature preferences, use the following procedure.

Entering the Personal Settings Menu

To enter the feature programming mode, use the following procedure:

1. Be sure the ignition is either on, in ACC position, or in RAP and place the transmission in PARK (P) or the vehicle speed is less than 6 mph (9 km/h).
2. Press any button on the appropriate keyless access transmitter to identify yourself as Driver 1 or Driver 2.

3. Turn on the radio by pressing the power/volume knob.
4. Press the CNFG radio button or the tune/select knob located on the right side of the radio to enter the radio's main menu.
5. Turn the tune/select knob and scroll to SETUP.
6. Press the tune/select knob to enter the SETUP menu.
7. Turn the tune/select knob and scroll to PERSONAL SETTINGS MENU, then press the tune/select knob to turn the feature on. A check mark appears after this selection when it is turned on and the entire list of personalization features will appear.
8. Turn the tune/select knob and scroll to the feature you want to change, then press the tune/select knob to turn the feature on or off. If the feature is turned on, a check mark will appear next to the feature name.

   Some features have submenus that show additional features that can be turned on or off. After entering a submenu, turn the tune/select knob and scroll to the feature you want to change, then press the tune/select knob to turn the feature on or off.

Personal Settings Menu Items

The PERSONAL SETTINGS MENU must be selected with a check mark to program the personalization features. If it is not selected, press the tune/select knob until the check mark appears. If it is selected, the entire list of features will be available to program.

DRIVER GREETING

This feature allows you to type in a customized name or greeting that will appear on the display whenever the corresponding keyless access transmitter, 1 or 2, is used or Driver 1 or Driver 2 is selected on the radio display.

If a customized name or greeting is not programmed, the system will show Driver 1 or Driver 2 to correspond with the numbers on the back of the keyless access transmitters. In this case, the customized driver greeting feature is factory shipped as off.

To turn the driver greeting feature on and to program a customized name or greeting, use the following procedure:

1. Enter the PERSONAL SETTINGS MENU by following the instructions listed previously under "Entering the Personal Settings Menu."
2. Turn the tune/select knob until DRIVER GREETING is highlighted.

3. Press the tune/select knob to turn on the DRIVER GREETING feature.

   You will see a cursor on the screen.

4. Turn the tune/select knob until you reach the first letter you want; the letter will be highlighted. There is a complete alphabet with both upper and lower case letters and the numbers zero through nine. Also included are spaces and other non-letter characters such as the ampersand (&).

5. Press the tune/select knob once to select the letter. The letter will then appear on the display and the cursor will advance to the next letter.

   If you make a mistake, press the F5 button, located on the radio, repeatedly to cycle back through all of the characters until you reach the character you wish to change. Then turn the tune/select knob until the letter you want is highlighted and press the tune/select knob to select the new letter.

6. Repeat Steps 4 and 5 until the name or greeting you want is complete. You can program up to 16 characters.

The name or greeting you programmed is now set. You can either exit the programming mode by following the instructions later in this section or program the next feature available on your vehicle by pressing the F6 (BACK) button, located on the radio, to return to the PERSONAL SETTINGS MENU. You will now see a check mark next to the driver greeting menu item, which means that the driver greeting feature is on and a customized driver greeting is being used.

To turn off the customized driver greeting, and go back to displaying either Driver 1 or Driver 2, use the following procedure:

1. Enter the PERSONAL SETTINGS MENU by following the instructions listed previously under “Entering the Personal Settings Menu.”

2. Turn the tune/select knob until DRIVER GREETING is highlighted.

3. Press the tune/select knob to turn on the DRIVER GREETING feature. The check mark will be cleared and the customized driver greeting is off.

The only way to correct a customized driver greeting once you have exited the screen to spell the name, is to turn the driver greeting feature off, and then turn it back on.

KEY FOB REMINDER

This feature chirps the horn three times when the driver's door is closed and there is a keyless access transmitter left inside of the vehicle. This will only occur when the vehicle is off.

Programmable Modes

Mode 1: ON

Mode 2: OFF

Before your vehicle was shipped from the factory, it was programmed to Mode 1. The mode to which the vehicle was programmed may have been changed since it left the factory.

To program the vehicle to a different mode, use the following procedure:

1. Enter the PERSONAL SETTINGS MENU by following the instructions listed previously under "Entering the Personal Settings Menu."
2. Turn the tune/select knob until KEY FOB REMINDER is highlighted.
3. Press the tune/select knob to switch back and forth between on and off.
   When the mode is turned on, a check mark will appear next to the feature name.

The mode you selected is now set. You can either exit the programming mode by following the instructions later in this section or program the next feature available on your vehicle.

REMOTE START

If your vehicle has this feature, it allows you to choose the features you would like to have activated when you engage the remote start on your vehicle. These features include the climate control system, the rear defogger, and the seat temperature, if your vehicle has this feature. Activating these features helps provide a more comfortable vehicle upon entry. See "Remote Vehicle Start" under *Keyless Access System Operation on page 2-5* for more information.

Mode 1: ON

Mode 2: OFF

Before your vehicle was shipped from the factory, it was programmed to Mode 1. The mode to which the vehicle was programmed may have been changed since it left the factory.

To program the vehicle to a different mode, use the following procedure:

1. Enter the PERSONAL SETTINGS MENU by following the instructions listed previously under "Entering the Personal Settings Menu."
2. Turn the tune/select knob until REMOTE START is highlighted.
3. Press the tune/select knob to switch back and forth between on and off.

When REMOTE START is on, a check mark will appear next to the feature name. You can then choose to activate any or all of the following features by turning the tune/select knob to highlight the feature, then pressing the knob to turn it on.

CLIMATE CONTROL: The climate control system will engage when the vehicle is started using the remote start feature. It will be at the same climate control setting that was last used by the driver using that keyless entry transmitter.

REAR WINDOW DEFOG: If this feature is active, the rear defogger will engage when the vehicle is started using the remote start feature.

SEAT TEMP (Temperature) CONTROL: If your vehicle has this feature and this feature is active, the seats will be heated or cooled when the vehicle is started using the remote start feature.

The mode you selected is now set. You can either exit the programming mode by following the instructions later in this section or program the next feature available on your vehicle by pressing the F6 (BACK) button, located on the radio, to return to the PERSONAL SETTINGS MENU.

REMOTE RECALL MEMORY

If your vehicle has the optional memory package, you will have this feature. When this feature is turned on, you can recall any previously programmed seat position and mirror position when the unlock button on the keyless access transmitter is pressed.

Programmable Modes

Mode 1: ON

Mode 2: OFF

Before your vehicle was shipped from the factory, it was programmed to Mode 2 with the exception of recall seat to driver position which is on. The mode to which the vehicle was programmed may have been changed since it left the factory.

To program the vehicle to a different mode, use the following procedure:

1. Enter the PERSONAL SETTINGS MENU by following the instructions listed previously under “Entering the Personal Settings Menu.”
2. Turn the tune/select knob until REMOTE RECALL MEMORY is highlighted.
3. Press the tune/select knob to switch back and forth between on and off.

   When the mode is turned on, a check mark will appear next to the feature name.

If this feature is selected, START BUTTON RECALL cannot be selected.

The mode you selected is now set. You can either exit the programming mode by following the instructions later in this section or program the next feature available on your vehicle.

START BUTTON RECALL

If your vehicle has the optional memory package, you will have this feature. When this feature is turned on, you can recall any previously programmed seat, mirror, and steering column position when the start button on the ignition is pressed.

Programmable Modes

Mode 1: ON

Mode 2: OFF

Before your vehicle was shipped from the factory, it was programmed to Mode 2. The mode to which the vehicle was programmed may have been changed since it left the factory.

To program the vehicle to a different mode, use the following procedure:

1. Enter the PERSONAL SETTINGS MENU by following the instructions listed previously under “Entering the Personal Settings Menu.”
2. Turn the tune/select knob until START BUTTON RECALL is highlighted.
3. Press the tune/select knob to switch back and forth between on and off.

   When the mode is turned on, a check mark will appear next to the feature name.

If this feature is selected, REMOTE RECALL MEMORY cannot be selected.

The mode you selected is now set. You can either exit the programming mode by following the instructions later in this section or program the next feature available on your vehicle.

AUTO EXIT SEAT

If your vehicle has the optional memory package, you will have this feature. When this feature is turned on, you can recall any previously programmed exit position for the driver’s seat when the vehicle is off, the shift lever is in PARK (P), and the driver’s door is opened.

Programmable Modes

Mode 1: ON

Mode 2: OFF

Before your vehicle was shipped from the factory, it was programmed to Mode 2. The mode to which the vehicle was programmed may have been changed since it left the factory.

To program the vehicle to a different mode, use the following procedure:

1. Enter the PERSONAL SETTINGS MENU by following the instructions listed previously under “Entering the Personal Settings Menu.”
2. Turn the tune/select knob until AUTO EXIT SEAT is highlighted.
3. Press the tune/select knob to switch back and forth between on and off.

   When the mode is turned on, a check mark will appear in the box next to the feature name.

The mode you selected is now set. You can either exit the programming mode by following the instructions later in this section or program the next feature available on your vehicle.

AUTO EXIT COLUMN

If your vehicle has the optional memory package, you will have this feature. When this feature is turned on, you can recall any previously programmed exit position for the steering column when the vehicle is off, the shift lever is in PARK (P), and the driver’s door is opened.

Programmable Modes

Mode 1: ON

Mode 2: OFF

Before your vehicle was shipped from the factory, it was programmed to Mode 2. The mode to which the vehicle was programmed may have been changed since it left the factory.

To program the vehicle to a different mode, use the following procedure:

1. Enter the PERSONAL SETTINGS MENU by following the instructions listed previously under “Entering the Personal Settings Menu.”
2. Turn the tune/select knob until AUTO EXIT COLUMN is highlighted.
3. Press the tune/select knob to switch back and forth between on and off.

   When the mode is turned on, a check mark will appear in the box next to the feature name.

The mode you selected is now set. You can either exit the programming mode by following the instructions later in this section or program the next feature available on your vehicle.

LIGHTS FLASH AT UNLOCK

This feature allows the exterior lamps to flash when the keyless access transmitter is used to unlock the vehicle. All doors must be closed for this feature to work, and the lamps will not flash if the parking lamps or headlamps are on.

If LIGHTS FLASH AT UNLOCK is turned on and either KEYLESS FT DOOR UNLOCK or KEYLESS DOORS UNLOCK is turned on, the exterior lamps will flash when the doors are passively unlocked. See “KEYLESS FT (Front) DOOR UNLOCK” and “KEYLESS DOORS UNLOCK” later in this section for more information.

Programmable Modes

Mode 1: ON

Mode 2: OFF

Before your vehicle was shipped from the factory, it was programmed to Mode 1. The mode to which the vehicle was programmed may have been changed since it left the factory.

To program the vehicle to a different mode, use the following procedure:

1. Enter the PERSONAL SETTINGS MENU by following the instructions listed previously under “Entering the Personal Settings Menu.”
2. Turn the tune/select knob until LIGHTS FLASH AT UNLOCK is highlighted.
3. Press the tune/select knob to switch back and forth between on and off.

   When the mode is turned on, a check mark will appear next to the feature name.

The mode you selected is now set. You can either exit the programming mode by following the instructions later in this section or program the next feature available on your vehicle.

LIGHTS FLASH AT LOCK

This feature allows the exterior lamps to flash once when the keyless access transmitter is used to lock the vehicle. All doors must be closed for this feature to work, and the lamps will not flash if the parking lamps or headlamps are on.

If LIGHTS FLASH AT LOCK is turned on and either KEYLESS FT DOOR UNLOCK or KEYLESS DOORS UNLOCK is turned on, the exterior lamps will flash when the doors are passively unlocked. See “KEYLESS FT (Front) DOOR UNLOCK” and “KEYLESS DOORS UNLOCK” later in this section for more information.

Programmable Modes

Mode 1: ON

Mode 2: OFF

Before your vehicle was shipped from the factory, it was programmed to Mode 1. The mode to which the vehicle was programmed may have been changed since it left the factory.

To program the vehicle to a different mode, use the following procedure:

1. Enter the PERSONAL SETTINGS MENU by following the instructions listed previously under “Entering the Personal Settings Menu.”
2. Turn the tune/select knob until LIGHTS FLASH AT LOCK is highlighted.
3. Press the tune/select knob to switch back and forth between on and off.

   When the mode is turned on, a check mark will appear next to the feature name.

You can select this feature by itself, or you can combine it with Horn Chirps At Lock so that both the exterior lamps flash and the horn chirps when you lock your vehicle.

The mode you selected is now set. You can either exit the programming mode by following the instructions later in this section or program the next feature available on your vehicle.

EXT. (Exterior) LIGHTS AT UNLOCK

This feature turns on the exterior lamps when the keyless access transmitter is used to unlock the vehicle. The lamps will remain on for about 20 seconds unless a door is opened, the ignition is in ACC, on, or START, or the keyless access transmitter is used to lock the vehicle.

Programmable Modes

Mode 1: ON

Mode 2: OFF

Before your vehicle was shipped from the factory, it was programmed to Mode 1. The mode to which the vehicle was programmed may have been changed since it left the factory.

To program the vehicle to a different mode, use the following procedure:

1. Enter the PERSONAL SETTINGS MENU by following the instructions listed previously under “Entering the Personal Settings Menu.”
2. Turn the tune/select knob until EXT. LIGHTS AT UNLOCK is highlighted.
3. Press the tune/select knob to switch back and forth between on and off.

   When the mode is turned on, a check mark will appear next to the feature name.

The mode you selected is now set. You can either exit the programming mode by following the instructions later in this section or program the next feature available on your vehicle.

HORN CHIRPS AT LOCK

This feature sounds the horn once when the keyless access transmitter is used to lock the vehicle. All doors must be closed for this feature to work.

Programmable Modes

Mode 1: ON

Mode 2: OFF

Before your vehicle was shipped from the factory, it was programmed to Mode 2. The mode to which the vehicle was programmed may have been changed since it left the factory.

To program the vehicle to a different mode, use the following procedure:

1. Enter the PERSONAL SETTINGS MENU by following the instructions listed previously under “Entering the Personal Settings Menu.”
2. Turn the tune/select knob until HORN CHIRPS AT LOCK is highlighted.
3. Press the tune/select knob to switch back and forth between on and off.
   When the mode is turned on, a check mark will appear next to the feature name.

The mode you selected is now set. You can either exit the programming mode by following the instructions later in this section or program the next feature available on your vehicle.

TWILIGHT DELAY

This feature allows you to set the amount of time you want the exterior lamps to remain on after you exit the vehicle.

Programmable Modes

Mode 1: 0:00 seconds (off)

Mode 2: 0:05 seconds

Mode 3: 0:15 seconds

Mode 4: 0:30 seconds

Mode 5: 1:30 minutes

Mode 6: 2:00 minutes

Mode 7: 3:00 minutes

Mode 8: 4:00 minutes

Before your vehicle was shipped from the factory, it was programmed to Mode 2. The mode to which the vehicle was programmed may have been changed since the vehicle left the factory.

To determine the mode to which the vehicle is programmed or to program the vehicle to a different mode, use the following procedure:

1. Enter the PERSONAL SETTINGS MENU by following the instructions listed previously under “Entering the Personal Settings Menu.”
2. Turn the tune/select knob until TWILIGHT DELAY is highlighted.
3. Press the tune/select knob to scroll through the available delay settings and set your selection.

   If you choose Mode 1, the exterior lamps will not illuminate when you exit the vehicle. Only one mode can be selected at a time.

The mode you selected is now set. You can either exit the programming mode by following the instructions later in this section or program the next feature available on your vehicle.

DRIVER UNLOCK AT OFF

This feature allows the driver’s door to automatically unlock when the ignition is turned off.

Programmable Modes

Mode 1: ON

Mode 2: OFF

Before your vehicle was shipped from the factory, it was programmed to Mode 2. The mode to which the vehicle was programmed may have been changed since it left the factory.

To program the vehicle to a different mode, use the following procedure:

1. Enter the PERSONAL SETTINGS MENU by following the instructions listed previously under “Entering the Personal Settings Menu.”
2. Turn the tune/select knob until DRIVER UNLOCK AT OFF is highlighted.
3. Press the tune/select knob to switch between on and off.

   When the mode is turned on, a check mark will appear next to the feature name.

The mode you selected is now set. You can either exit the programming mode by following the instructions later in this section or program the next feature available on your vehicle.

DOORS UNLOCK AT OFF

This feature allows all of the doors to automatically unlock when the ignition is turned off.

Programmable Modes

Mode 1: ON

Mode 2: OFF

Before your vehicle was shipped from the factory, it was programmed to Mode 2. The mode to which the vehicle was programmed may have been changed since it left the factory.

To program the vehicle to a different mode, use the following procedure:

1. Enter the PERSONAL SETTINGS MENU by following the instructions listed previously under “Entering the Personal Settings Menu.”
2. Turn the tune/select knob until DOORS UNLOCK AT OFF is highlighted.
3. Press the tune/select knob to switch between on and off.

   When the mode is turned on, a check mark will appear next to the feature name.

The mode you selected is now set. You can either exit the programming mode by following the instructions later in this section or program the next feature available on your vehicle.

DRIVER UNLOCK IN PARK

The feature allows the driver’s door to automatically unlock when the transmission is shifted into PARK (P).

Programmable Modes

Mode 1: ON

Mode 2: OFF

Before your vehicle was shipped from the factory, it was programmed to Mode 2. The mode to which the vehicle was programmed may have been changed since it left the factory.

To program the vehicle to a different mode, use the following procedure:

1. Enter the PERSONAL SETTINGS MENU by following the instructions listed previously under “Entering the Personal Settings Menu.”
2. Turn the tune/select knob until DRIVER UNLOCK IN PARK is highlighted.
3. Press the tune/select knob to switch back and forth between on and off.

   When the mode is turned on, a check mark will appear next to the feature name.

The mode you selected is now set. You can either exit the programming mode by following the instructions later in this section or program the next feature available on your vehicle.

DOORS UNLOCK IN PARK

The feature allows all of the doors to automatically unlock when the transmission is shifted into PARK (P).

Programmable Modes

Mode 1: ON

Mode 2: OFF

Before your vehicle was shipped from the factory, it was programmed to Mode 1. The mode to which the vehicle was programmed may have been changed since it left the factory.

To program the vehicle to a different mode, use the following procedure:

1. Enter the PERSONAL SETTINGS MENU by following the instructions listed previously under “Entering the Personal Settings Menu.”
2. Turn the tune/select knob until DOORS UNLOCK IN PARK is highlighted.
3. Press the tune/select knob to switch back and forth between on and off.

   When the mode is turned on, a check mark will appear next to the feature name.

The mode you selected is now set. You can either exit the programming mode by following the instructions later in this section or program the next feature available on your vehicle.

KEYLESS FT (Front) DOOR UNLOCK

This feature automatically unlocks the appropriate front door when you approach the vehicle with your keyless access transmitter and pull the respective door handle. See *Door Locks on page 2-12* for more information.

Programmable Modes

Mode 1: ON

Mode 2: OFF

Before your vehicle was shipped from the factory, it was programmed to Mode 2. The mode to which the vehicle was programmed may have been changed since it left the factory.

To program the vehicle to a different mode, use the following procedure:

1. Enter the PERSONAL SETTINGS MENU by following the instructions listed previously under “Entering the Personal Settings Menu.”
2. Turn the tune/select knob until KEYLESS FT DOOR UNLOCK is highlighted.
3. Press the tune/select knob to switch back and forth between on and off.

   When the mode is turned on, a check mark will appear next to the feature name.

The mode you selected is now set. You can either exit the programming mode by following the instructions later in this section or program the next feature available on your vehicle.

KEYLESS DOORS UNLOCK

This feature automatically unlocks all of the doors when you approach the vehicle with your keyless access transmitter and pull either front door handle. See *Door Locks on page 2-12* for more information.

Programmable Modes

Mode 1: ON

Mode 2: OFF

Before your vehicle was shipped from the factory, it was programmed to Mode 1. The mode to which the vehicle was programmed may have been changed since it left the factory.

To program the vehicle to a different mode, use the following procedure:

1. Enter the PERSONAL SETTINGS MENU by following the instructions listed previously under “Entering the Personal Settings Menu.”
2. Turn the tune/select knob until KEYLESS DOORS UNLOCK is highlighted.
3. Press the tune/select knob to switch back and forth between on and off.
   When the mode is turned on, a check mark will appear next to the feature name.

The mode you selected is now set. You can either exit the programming mode by following the instructions later in this section or program the next feature available on your vehicle.

LOCK DELAY

This feature delays the locking of the vehicle’s doors for eight seconds after a power door lock switch or the lock button on the keyless access transmitter is pressed. The eight second delay occurs after the last door is closed. If the keyless access transmitter is left inside of the vehicle, the doors will not lock.

Programmable Modes

Mode 1: ON

Mode 2: OFF

Before your vehicle was shipped from the factory, it was programmed to Mode 1. The mode to which the vehicle was programmed may have been changed since it left the factory.

To program the vehicle to a different mode, use the following procedure:

1. Enter the PERSONAL SETTINGS MENU by following the instructions listed previously under “Entering the Personal Settings Menu.”
2. Turn the tune/select knob until LOCK DELAY is highlighted.

3. Press the tune/select knob to switch back and forth between on and off.

   When the mode is turned on, a check mark will appear next to the feature name.

The mode you selected is now set. You can either exit the programming mode by following the instructions later in this section or program the next feature available on your vehicle.

KEYLESS LOCK DELAY

This feature allows you to select whether the doors automatically lock when the ignition is turned off, the keyless access transmitter has been removed from the interior of the vehicle, and the doors have been closed for 10 seconds. If a keyless access transmitter is left inside of the vehicle, the doors will not lock.

Programmable Modes

Mode 1: ON

Mode 2: OFF

Before your vehicle was shipped from the factory, it was programmed to Mode 2. The mode to which the vehicle was programmed may have been changed since it left the factory.

To program the vehicle to a different mode, use the following procedure:

1. Enter the PERSONAL SETTINGS MENU by following the instructions listed previously under “Entering the Personal Settings Menu.”
2. Turn the tune/select knob until KEYLESS LOCK DELAY is highlighted.
3. Press the tune/select knob to switch back and forth between on and off.

   When the mode is turned on, a check mark will appear next to the feature name.

The mode you selected is now set. You can either exit the programming mode by following the instructions later in this section or program the next feature available on your vehicle.

FRONT PASS (Passenger) WINDOW LOCK

This feature allows you to choose whether or not to have the front passenger window deactivated as part of the window lockout button. If you would like the front passenger window to be deactivated when the window lockout button is pushed, turn this feature on. If this feature is left off, the window lockout button located on the door will deactivate only the rear windows. See *Power Windows on page 2-18* for more information.

Programmable Modes

Mode 1: ON

Mode 2: OFF

Before your vehicle was shipped from the factory, it was programmed to Mode 2. The mode to which the vehicle was programmed may have been changed since it left the factory.

To program the vehicle to a different mode, use the following procedure:

1. Enter the PERSONAL SETTINGS MENU by following the instructions listed previously under “Entering the Personal Settings Menu.”
2. Turn the tune/select knob until FRONT PASS WINDOW LOCK is highlighted.
3. Press the tune/select knob to switch back and forth between on and off.

   When the mode is turned on, a check mark will appear next to the feature name.

The mode you selected is now set. You can either exit the programming mode by following the instructions later in this section or program the next feature available on your vehicle.

CHIME VOLUME HIGH

This feature allows you to adjust the volume level of the vehicle’s warning chimes. The chime volume cannot be turned off, only adjusted.

Programmable Modes

Mode 1: NORMAL

Mode 2: HIGH

Before your vehicle was shipped from the factory, it was programmed to Mode 1. The mode to which the vehicle was programmed may have been changed since it left the factory.

To program the vehicle to a different mode, use the following procedure:

1. Enter the PERSONAL SETTINGS MENU by following the instructions listed previously under “Entering the Personal Settings Menu.”
2. Turn the tune/select knob until CHIME VOLUME HIGH is highlighted.
3. Press the tune/select knob to switch back and forth between the normal and high settings. A check mark indicates that the chime volume is set to HIGH.

The mode you selected is now set. You can either exit the programming mode by following the instructions later in this section or program the next feature available on your vehicle.

SUSPENSION MODE

If your vehicle has this feature, you can select between performance or touring modes. Performance mode is used where road conditions or personal preference demand more control. This setting provides more “feel” or response to road conditions. Touring mode is used for normal city and highway driving. This setting provides a smooth, soft ride.

Programmable Modes

Mode 1: PERFORMANCE

Mode 2: TOURING

Before your vehicle was shipped from the factory, it was programmed to Mode 2. The mode to which the vehicle was programmed may have been changed since it left the factory.

To program the vehicle to a different mode, use the following procedure:

1. Enter the PERSONAL SETTINGS MENU by following the instructions listed previously under “Entering the Personal Settings Menu.”
2. Turn the tune/select knob until SUSPENSION MODE is highlighted.
3. Press the tune/select knob to enter the SUSPENSION MODE submenu.
4. Turn the tune/select knob to highlight TOURING or PERFORMANCE.
5. Press the tune/select knob to select the setting.

The mode you selected is now set. You can either exit the programming mode by following the instructions later in this section or program the next feature available on your vehicle by pressing the F6 (BACK) button, located on the radio, to return to the PERSONAL SETTINGS MENU.

Exiting the Personal Settings Menu

Once you have finished making your selections on the base audio system, you will automatically return to the main audio screen after 15 seconds. You can also press the F6 (BACK) button, located on the radio, to return to the main audio screen.

Memory Seat, Mirrors and Steering Wheel

If your vehicle has the memory feature, you can program and recall memory settings for the following features for up to two drivers:

- The driver's seat position
- The outside rearview mirrors position
- The telescopic steering column position

The following settings and presets are set automatically:

- The language, radio and XM™ presets, tone, volume, playback mode (AM/FM or CD), last displayed stations, and compact disc position
- The last climate control setting
- The Head-Up Display (HUD) position, if your vehicle has this feature
- Other personalization settings, for example, remote start settings

  See *Vehicle Personalization on page 2-53*.

For vehicles with the base audio system, memory features are programmed and recalled through the radio from the DRIVER SELECTION and the DRIVER EXIT SETTINGS submenus. See "Entering the Driver Selection Submenu" and "Entering the Driver Exit Settings Submenu" later in this section for more information on recalling and programming the memory settings using the base audio system.

For vehicles with the Navigation system, memory features are programmed and recalled through the navigation display. See "Personalization" in the Index of the Navigation System manual for more information on programming and recalling the memory settings using the Navigation system.

For vehicles with the Navigation system, you can also recall the memory features by using voice recognition, if your vehicle has this feature. See "Voice Recognition" in the Index of the Navigation System manual for more information.

Entering the Driver Selection Submenu

To enter the memory programming mode for your driver settings, use the following procedure:

1. Be sure the ignition is either on, in ACC position, or in RAP and place the transmission in PARK (P) or the vehicle speed is less than 6 mph (9 km/h).
2. Press any button on the appropriate keyless access transmitter to identify yourself as Driver 1 or Driver 2.
3. Turn on the radio by pressing the power/volume knob.
4. Press the CNFG radio button to enter the main menu of the radio.
5. Turn the tune/select knob and scroll to SETUP.
6. Press the tune/select knob to enter the SETUP menu.
7. Turn the tune/select knob and scroll to DRIVER SELECTION.
8. Press the tune/select knob to enter the DRIVER SELECTION submenu. The following items will appear:
   - DRIVER 1
   - DRIVER 2
   - RECALL DRIVER SETTINGS
   - STORE DRIVER SETTINGS

Driver Selection Submenu Items

DRIVER 1/DRIVER 2

The numbers on the back of each keyless access transmitter correspond to DRIVER 1 and DRIVER 2. If you would like to recall or store driver settings for the driver that does not correspond to the number on the back of the keyless access transmitter that you are using, use the following procedure:

1. Enter the memory programming mode for your driver settings by following the instructions listed previously under “Entering the Driver Selection Submenu.”
2. From the DRIVER SELECTION submenu, turn the tune/select knob to highlight the driver number that you want, either DRIVER 1 or DRIVER 2.
3. Set your choice by pressing in the tune/select knob.

If you would like to recall driver settings for the selected driver, see “RECALL DRIVER SETTINGS” later in this section.

If you would like to store driver settings for the selected driver, see “STORE DRIVER SETTINGS” later in this section.

If you would like to recall exit settings for the selected driver, see “RECALL EXIT SETTINGS” later in this section.

If you would like to store exit settings for the selected driver, see “STORE EXIT SETTINGS” later in this section.

RECALL DRIVER SETTINGS

To recall driver settings, use the following procedure:

1. Enter the memory programming mode for your driver settings by following the instructions listed previously under “Entering the Driver Selection Submenu.”
2. From the DRIVER SELECTION submenu, turn the tune/select knob to scroll to RECALL DRIVER SETTINGS and press in the knob.

   If the vehicle is in PARK (P), one beep will sound and your previously saved driving position will then be recalled.

   If the vehicle is not in PARK (P), three beeps will sound and your previously saved driving position will not be recalled.

A memory recall can be stopped by pressing any memory seat or mirror position button.

If you would like the stored driving positions to be recalled when unlocking your vehicle with the keyless access transmitter or when starting your vehicle, see “REMOTE RECALL MEMORY” or “START BUTTON RECALL” under *Vehicle Personalization on page 2-53*.

STORE DRIVER SETTINGS

To store driver settings, use the following procedure:

1. Adjust your settings for the driver’s seat, the outside rearview mirrors, and the steering column to a comfortable driving position.
2. Enter the memory programming mode for your driver settings by following the instructions listed previously under “Entering the Driver Selection Submenu.”
3. From the DRIVER SELECTION submenu, turn the tune/select knob to scroll to STORE DRIVER SETTINGS and press in the knob. Two beeps will sound to confirm that your driver settings are saved.
4. Set the HUD position, if your vehicle has this feature, the climate control temperature, fan speed and mode settings, the radio presets, tone, volume, playback mode (AM/FM, XM™, or CD), and compact disc position.

   Your memory settings are now programmed. Any changes that are made to the HUD, audio system, and climate controls while driving will be automatically stored when the ignition is turned off.
5. Repeat the procedure for a second driver by programming the other driver number.

Entering the Driver Exit Settings Submenu

To enter the memory programming mode for your exit settings, use the following procedure:

1. Be sure the ignition is either on, in ACC position, or in RAP and place the transmission in PARK (P) or the vehicle speed is less than 6 mph (9 km/h).
2. Press any button on the appropriate keyless access transmitter to identify yourself as Driver 1 or Driver 2.
3. Turn on the radio by pressing the power/volume knob.
4. Press the CNFG radio button to enter the main menu of the radio.
5. Turn the tune/select knob and scroll to SETUP.
6. Press the tune/select knob to enter the SETUP menu.
7. Turn the tune/select knob and scroll to DRIVER EXIT SETTINGS.
8. Press the tune/select knob to enter the DRIVER EXIT SETTINGS submenu. The following items will appear:
   - RECALL EXIT SETTINGS
   - STORE EXIT SETTINGS

Driver Exit Settings Submenu Items

RECALL EXIT SETTINGS

To recall exit settings, use the following procedure:

1. Enter the memory programming mode for your exit settings by following the instructions listed previously under “Entering the Driver Exit Settings Submenu.”
2. From the DRIVER EXIT SETTINGS submenu, turn the tune/select knob to scroll to RECALL EXIT SETTINGS and press in the knob.

   If the vehicle is in PARK (P), one beep will sound and your previously saved exit position will then be recalled.

   If the vehicle is not in PARK (P), three beeps will sound and your previously saved exit position will not be recalled.

   A memory recall can be stopped by pressing any memory seat or mirror position button.

If you would like the stored exit positions to be recalled when your vehicle is in PARK (P), the vehicle is off, and the driver’s door is opened, see “AUTO EXIT SEAT” and “AUTO EXIT COLUMN” under *Vehicle Personalization on page 2-53*.

STORE EXIT SETTINGS

To store exit settings, use the following procedure:

1. Adjust your settings for the driver's seat, the outside rearview mirrors, and the steering column to a comfortable exit position.
2. Enter the memory programming mode for your exit settings by following the instructions listed previously under "Entering the Driver Exit Settings Submenu."
3. From the DRIVER EXIT SETTINGS submenu, turn the tune/select knob to scroll to STORE EXIT SETTINGS and press in the knob. Two beeps will sound to confirm that your new exit settings are saved.
4. Repeat the procedure for a second driver by programming the other driver number.

Section 3 Instrument Panel

Instrument Panel Overview 3-4
Hazard Warning Flashers 3-6
Other Warning Devices 3-6
Horn 3-6
Power Tilt Wheel and Telescopic Steering Column 3-6
Heated Steering Wheel 3-7
Turn Signal/Multifunction Lever 3-7
Turn and Lane-Change Signals 3-8
Headlamp High/Low-Beam Changer 3-8
Forward Collision Alert (FCA) System 3-9
Flash-to-Pass 3-12
Windshield Wipers 3-13
Rainsense™ II Wipers 3-14
Windshield Washer 3-15
Headlamp Washer 3-15
Cruise Control 3-16
Adaptive Cruise Control 3-19
Headlamps 3-31
Wiper Activated Headlamps 3-35
Headlamps on Reminder 3-35
Daytime Running Lamps (DRL) 3-35
Fog Lamps 3-37
Twilight Sentinel® 3-37
Exterior Lighting Battery Saver 3-38
Instrument Panel Brightness 3-39
Entry Lighting 3-39
Parade Dimming 3-39
Reading Lamps 3-40
Battery Load Management 3-40
Inadvertent Power Battery Saver 3-40
Head-Up Display (HUD) 3-40
Ultrasonic Rear Parking Assist (URPA) 3-44
Accessory Power Outlet(s) 3-46
Ashtray(s) and Cigarette Lighter 3-47

Climate Controls 3-48
Dual Climate Control System 3-48
Outlet Adjustment 3-54
Rear Climate Control System 3-54
Passenger Compartment Air Filter 3-55

Warning Lights, Gages, and Indicators 3-57
Instrument Panel Cluster 3-58
Speedometer and Odometer 3-59
Tachometer 3-59
Safety Belt Reminder Light 3-59

Section 3 Instrument Panel

Passenger Safety Belt Reminder Light 3-60
Airbag Readiness Light 3-60
Passenger Airbag Status Indicator 3-61
Charging System Light 3-63
Brake System Warning Light 3-64
Anti-Lock Brake System Warning Light 3-65
Low Tire Pressure Warning Light 3-65
Traction Control System (TCS)
Warning Light 3-66
Engine Coolant Temperature Warning Light 3-66
Engine Coolant Temperature Gage 3-67
Malfunction Indicator Lamp 3-67
Oil Pressure Light 3-70
Security Light 3-71
Fog Lamp Light 3-71
Lights On Reminder 3-71
Cruise Control Light 3-72
Highbeam On Light 3-72
Fuel Gage 3-72

Driver Information Center (DIC) 3-73
DIC Controls and Displays 3-74
DIC Warnings and Messages 3-79
Other Messages 3-93

Audio System(s) 3-94
Setting the Time 3-95
Radio with CD 3-96
Navigation/Radio System 3-115
Radio Personalization 3-115
Theft-Deterrent Feature 3-119
Audio Steering Wheel Controls 3-119
Radio Reception 3-120
Care of Your CDs 3-121
Care of the CD Player 3-122
Diversity Antenna System 3-122
XM™ Satellite Radio Antenna System 3-122

NOTES

Instrument Panel Overview

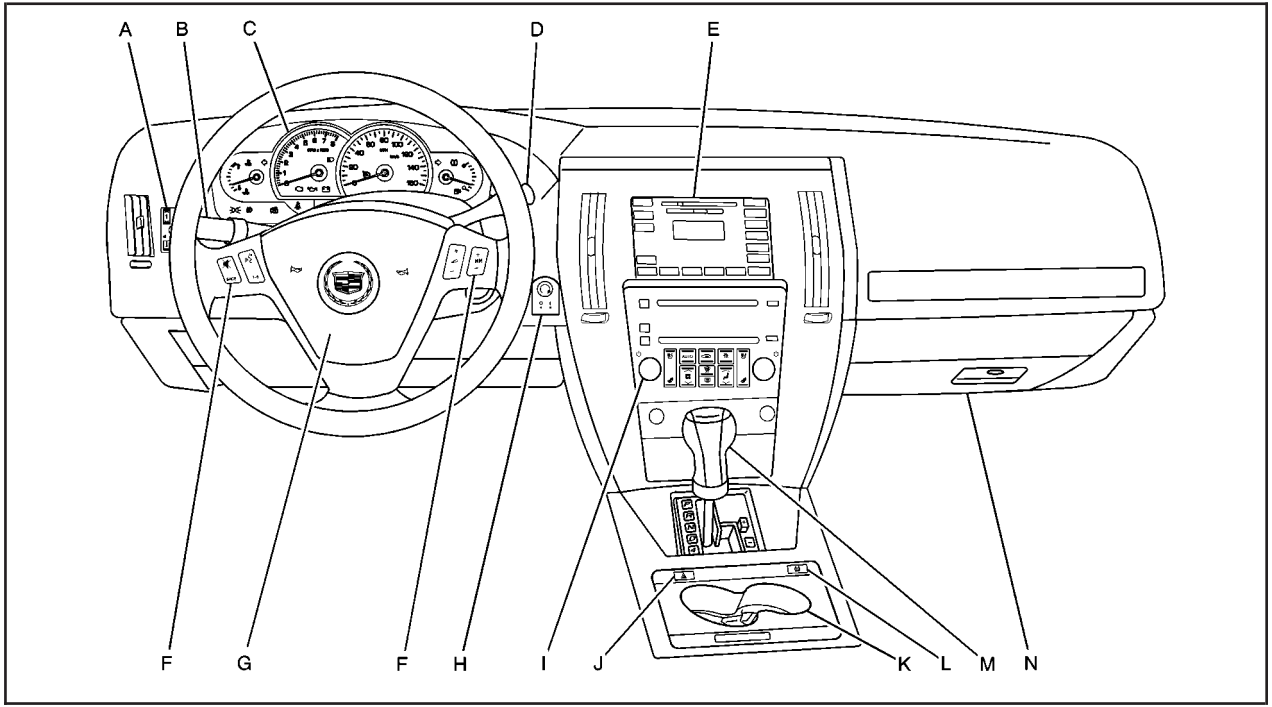

The main components of your instrument panel are the following:

A. Instrument Panel Brightness Control. See *Instrument Panel Brightness on page 3-39*. Driver Information Center (DIC) Buttons. See *DIC Controls and Displays on page 3-74*. HUD Controls (If Equipped). See *Head-Up Display (HUD) on page 3-40*.

B. Turn Signal/Multifunction Lever. See *Turn Signal/Multifunction Lever on page 3-7*. Headlamp Controls. See *Headlamps on page 3-31*. Cruise Control. See *Cruise Control on page 3-16*. Adaptive Cruise Control (If Equipped). See *Adaptive Cruise Control on page 3-19*. Forward Collision Alert (FCA) (If Equipped). See *Forward Collision Alert (FCA) System on page 3-9*.

C. Instrument Panel Cluster. See *Instrument Panel Cluster on page 3-58*.

D. Windshield Wiper/Washer Lever. See *Windshield Wipers on page 3-13*.

E. Navigation/Radio System. See *Audio System(s) on page 3-94* and *Navigation/Radio System on page 3-115*.

F. Audio Steering Wheel Controls (If Equipped). See *Audio Steering Wheel Controls on page 3-119*. Adaptive Cruise Control Gap Button (If Equipped). See *Adaptive Cruise Control on page 3-19*. Heated Steering Wheel Button (If Equipped). See *Heated Steering Wheel on page 3-7*.

G. Horn. See *Horn on page 3-6*.

H. Ignition Switch. See *Ignition Positions on page 2-24*.

I. Climate Control System. See *Dual Climate Control System on page 3-48*.

J. Hazard Warning Flasher Button. See *Hazard Warning Flashers on page 3-6*.

K. Cupholders. See *Cupholder(s) on page 2-51*.

L. Traction Control System Button. See *Traction Control System (TCS) on page 4-9*.

M. Shift Lever. See *Automatic Transmission Operation (STS) on page 2-28* or *Automatic Transmission Operation (STS-V) on page 2-32*.

N. Glove Box. See *Glove Box on page 2-51*.

Hazard Warning Flashers

Your hazard warning flashers let you warn others. They also let police know you have a problem. Your front and rear turn signal lamps will flash on and off.

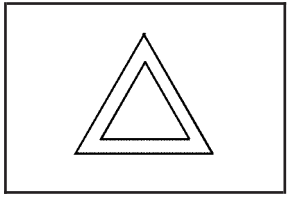

The hazard warning flasher button is located on the console, near the shift lever. See *Instrument Panel Overview on page 3-4*.

Your hazard warning flashers work no matter what position your key is in, and even if the key is not in.

Press the button to make the front and rear turn signal lamps flash on and off. Press the button again to turn the flashers off.

When the hazard warning flashers are on, your turn signals will not work.

Other Warning Devices

If you carry reflective triangles, you can set them up at the side of the road about 300 feet (100 m) behind your vehicle.

Horn

Press near or on the horn symbols on your steering wheel pad to sound the horn.

Power Tilt Wheel and Telescopic Steering Column

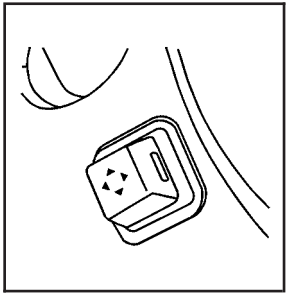

The power tilt wheel control is located on the outboard side of the steering column.

To operate the power tilt feature, push the control up and the steering wheel will tilt up. Push the control down and the steering wheel will go down.

If the power tilt control is pressed up or down and held in that position, there will be a slight movement and a slight pause followed by a continuous movement in the direction the control is being pressed. This allows very fine control of the steering wheel position. If the control is bumped, the steering wheel moves approximately one degree in the direction commanded.

Push the control forward and the steering wheel moves toward the front of the vehicle. Push the control rearward and the steering wheel moves toward the rear of the vehicle. To set the memory position, see *Vehicle Personalization on page 2-53* and *Memory Seat, Mirrors and Steering Wheel on page 2-70*.

Heated Steering Wheel

Your vehicle may have a heated steering wheel.

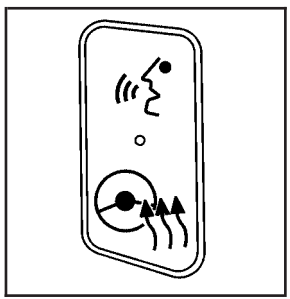

The button for this feature is located on the steering wheel.

Press the bottom of the button to turn the heated steering wheel on or off. A light on the button will display while the feature is on.

The steering wheel will take about three minutes to reach its maximum temperature.

Turn Signal/Multifunction Lever

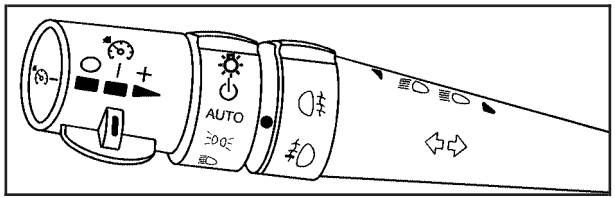

The lever on the left side of the steering column includes the following:

- Turn and Lane-Change Signals. See *Turn and Lane-Change Signals on page 3-8*.
- Headlamps. See *Headlamps on page 3-31*.
- Headlamp High/Low-Beam Changer. See *Headlamp High/Low-Beam Changer on page 3-8*.
- Flash-To-Pass Feature. See *Flash-to-Pass on page 3-12*.
- Fog Lamps. See *Fog Lamps on page 3-37*.
- Cruise Control. See *Cruise Control on page 3-16*.
- Adaptive Cruise Control (If Equipped). See *Adaptive Cruise Control on page 3-19*.
- Forward Collision Alert (FCA) (If Equipped). See *Forward Collision Alert (FCA) System on page 3-9*.

Turn and Lane-Change Signals

To signal a turn, move the lever all the way up or down. The lever returns automatically when the turn is complete.

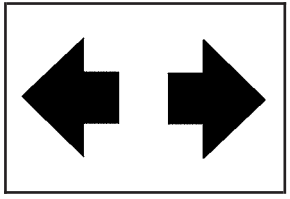

An arrow on the instrument panel cluster will flash in the direction of the turn or lane change.

Raise or lower the lever until the arrow starts to flash to signal a lane change. Hold it there until the lane change is complete. The lever returns to its original position when it's released.

Arrows that flash rapidly when signaling for a turn or lane change may be caused by a burned-out signal bulb. Other driver's won't see the signal.

Replace burned-out bulbs to help avoid possible accidents. Check the fuse and for burned-out bulbs if the arrow fails to work when signaling a turn. See *Fuses and Circuit Breakers on page 5-105* for more information.

Turn Signal On Chime

If the turn signal is left on for about 1 mile (1.6 km), a warning chime will sound and the Turn Signal On message will appear on the Driver Information Center (DIC) display. See "Turn Signal On" under *DIC Warnings and Messages on page 3-79* for more information.

Headlamp High/Low-Beam Changer

Push forward on the turn signal/multifunction lever to change the headlamps from low to high beam. Pull the lever back and then release it to change from high to low beam.

If you turn the vehicle off with the high beams on, the next time you start your vehicle the low beams will be on.

To re-activate high beams, pull lever toward you and then push it forward again.

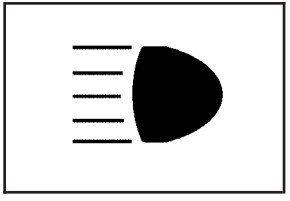

This light on the instrument panel cluster will be on, indicating high-beam usage.

Forward Collision Alert (FCA) System

If your vehicle has this feature, be sure to read this entire section before using it.

The system operates on a radio frequency subject to Federal Communications Commission (FCC) Rules and with Industry Canada.

This device complies with Part 15 of the FCC Rules. Operation is subject to the following two conditions:

1. This device may not cause interference, and
2. This device must accept any interference received, including interference that may cause undesired operation of the device.

This device complies with RSS-210 of Industry Canada. Operation is subject to the following two conditions:

1. This device may not cause interference, and
2. This device must accept any interference received, including interference that may cause undesired operation of the device.

Changes or modifications to this system by other than an authorized service facility could void authorization to use this equipment.

The Forward Collision Alert (FCA) system provides an audible and visual warning if you approach a vehicle too rapidly. FCA also provides a visual warning with no audible warning if you are following another vehicle much too closely. FCA uses the Adaptive Cruise Control radar to detect a vehicle directly ahead, in your path, within a distance of 328 ft (100 m) and operates at speeds above 20 mph (32 km/h).

⚠ CAUTION:

FCA is only a warning system and does not apply the brakes. When you are approaching a vehicle or object too rapidly or when you are following a vehicle too closely that is ahead of you, FCA may not provide you with enough time to avoid a collision. FCA is not designed to warn the driver of pedestrians or animals. Your complete attention is always required while driving and you should be ready to take action and apply the brakes. For more information, see *Defensive Driving on page 4-2*.

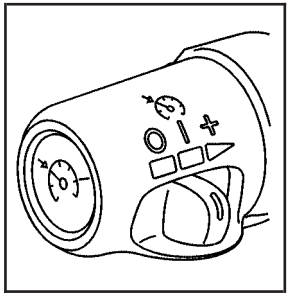

The Forward Collision Alert (FCA) controls are located on the end of the multifunction lever.

○ **(Off):** This position turns the system off.

| **(On):** This position turns the system on.

To enable FCA, move the Adaptive Cruise Control switch to on. To disable FCA, move the switch to off.

Make sure the Head-Up Display is on and properly adjusted. If the HUD is not on, FCA will not be enabled and you will not be provided with FCA audible and visual warnings. See *Head-Up Display (HUD) on page 3-40* for more information.

⚠ CAUTION:

- **On winding roads, FCA may not detect a vehicle ahead. You could crash into a vehicle ahead of you. Do not rely on FCA on winding roads.**
- **When weather limits visibility, such as in fog, rain, or snow, FCA performance is limited. There may not be enough warning distance to the vehicle in front of you. Do not rely on FCA in low visibility conditions.**

⚠ CAUTION:

When FCA is enabled, the Adaptive Cruise Control switch is on. If you press another Adaptive Cruise Control button, you might go into cruise when you do not want to. You could be startled and even lose control. Be careful not to press adaptive cruise buttons unless you want to use cruise control.

Warning the Driver

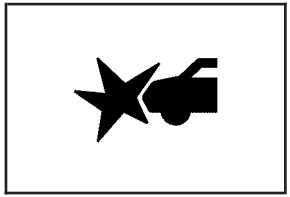

The alert symbol will flash on the HUD and a warning beep will sound when driver action may be required.

The driver warning is active when:

- You are approaching a vehicle too quickly.
- You are following a vehicle ahead much too closely.

See *Defensive Driving on page 4-2* for more information.

Detecting the Vehicle Ahead

The vehicle ahead symbol will only appear on the HUD when a vehicle ahead of you is detected in your path. If this symbol does not appear, or disappears briefly, FCA will not respond to vehicles you may see ahead. The symbol may disappear on curves, highway exit ramps, or hills. Also, when another vehicle enters the same lane as you, the FCA system will not detect the vehicle until it is completely in your driving lane.

⚠ CAUTION:

When the Adaptive Cruise Control radar is blocked by snow, ice, or dirt, it may not detect a vehicle ahead. FCA may not help you avoid a collision under these conditions. Do not use FCA when the radar is blocked by snow, ice, or dirt. Keep your radar clean. See "Cleaning the System" under *Adaptive Cruise Control on page 3-19*.

⚠ CAUTION:

FCA may not detect and warn soon enough to stationary or slow-moving vehicles or other objects ahead of you. You could crash into an object ahead of you. Do not rely on FCA when approaching stationary or slow-moving vehicles or other objects.

Unnecessary Warnings

FCA may occasionally provide an unnecessary warning to guard rails, signs, and other stationary objects. This is normal operation, your vehicle does not need service.

Other Messages

There are three messages that may appear on the Driver Information Center (DIC). They are CLEAN RADAR, RADAR CRUISE NOT READY and SERVICE RADAR CRUISE. See *DIC Warnings and Messages on page 3-79*.

Cleaning the System

The radar can become blocked by snow, ice, or dirt. If so, you may need to turn off the engine and clean the lens. See “Cleaning the System” under *Adaptive Cruise Control on page 3-19*.

Flash-to-Pass

This feature allows you to use the high-beam headlamps to signal the driver in front of you that you want to pass.

Pull and hold the turn signal/multifunction lever toward you to use this feature. When you do, the following will occur:

- If the headlamps are off, in low-beam or in Daytime Running Lamps (DRL) mode, the high-beam headlamps will turn on. They’ll stay on as long as you hold the lever there. Release the lever to turn them off.
- If the headlamps are in high-beam mode, they will switch to low beam. To return to high-beam, push the lever away from you.

Windshield Wipers

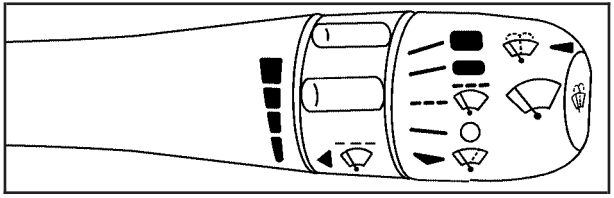

The lever on the right side of the steering column operates the windshield wipers.

(Mist): Pull the lever down and release it for a single wiping cycle. The lever will return to its original position. For more cycles, hold the lever down before releasing it.

(Off): Put the lever in this position to turn off the wipers.

(Delay): Put the lever in this position to set a delay between wipes. Turn the delay adjustment band to set the length of the delay.

(Delay Adjustment): Use this band to set the length of the delay between wipes when using the delay feature. The closer you move the band toward mist, the longer the delay. The windshield wiper lever must be in delay for this feature to work.

(Low Speed): Put the lever in this position for slow, steady wiping cycles.

(High Speed): Put the lever in this position for rapid wiping cycles.

If the windshield wipers are in use for about six seconds while you are driving, the exterior lamps will come on automatically if the exterior lamp control is in AUTO. See *Wiper Activated Headlamps on page 3-35* for more information.

Be sure to clear ice and snow from the wiper blades before using them. If they're frozen to the windshield, gently loosen or thaw them. If the blades do become damaged, install new blades. For more information, see *Windshield Wiper Blade Replacement on page 5-56*.

Heavy snow or ice can overload the wiper motor. A circuit breaker will stop the motor until it cools down. Clear away snow or ice to prevent an overload.

Your vehicle (STS-V only) is equipped with a feature that disables the wiper system when the hood is open and your vehicle is stopped. Opening the hood will automatically park the wipers if they are not parked. This prevents the wipers from interfering with hood operation. Be sure the hood is not opened when you require the vehicle's wipers out of the park position, such as when changing the wiper blades.

Rainsense™ II Wipers

If your vehicle has this feature, the moisture sensor is mounted on the interior side of the windshield behind the rearview mirror. It is used to automatically operate the wipers by monitoring the amount of moisture build-up on the windshield. Wipes occur as needed to clear the windshield depending on driving conditions and the sensitivity setting. In light rain or snow, fewer wipes will occur. In heavy rain or snow, wipes will occur more frequently. The Rainsense™ wipers operate in a delay mode as well as a continuous low or high speed as needed. If the system is left on for long periods of time, occasional wipes may occur without any moisture on the windshield. This is normal and indicates that the Rainsense™ system is activated.

To activate the Rainsense™ system, turn the wiper band to delay mode and select one of the four sensitivity levels indicated on the wiper stalk. The position closest to off is the lowest sensitivity setting, level one. This allows more rain or snow to collect on the windshield between wipes. Turning the wiper band away from you to higher sensitivity levels increases the sensitivity of the system and frequency of wipes. The highest sensitivity setting, level four, is closest to low. A single wipe will occur each time you turn the wiper stalk to a higher sensitivity level to indicate that the sensitivity level has been increased.

Notice: **Going through an automatic car wash with the wipers on can damage them. Turn the wipers off when going through an automatic car wash.**

The mist and wash cycles operate as normal and are not affected by the Rainsense™ function. The Rainsense™ system can be overridden at any time by manually turning the wiper band to low or high speed.

When Rainsense™ is active, the headlamps will turn on automatically. The headlamps will turn off again once the wipers turn off if it is light enough outside. If it is dark, they will remain on. See *Wiper Activated Headlamps on page 3-35*.

Notice: **Do not place stickers or other items on the exterior glass surface directly in front of the moisture sensor. Doing this could cause the moisture sensor to malfunction.**

Windshield Washer

(Washer Fluid): The lever on the right side of the steering column also controls the windshield washer. There is a button at the end of the lever. To spray washer fluid on the windshield, press the button and hold it. The washer will spray until you release the button. The wipers will continue to clear the window for about six seconds after the button is released and then stop or return to your preset speed.

⚠ CAUTION:

In freezing weather, do not use your washer until the windshield is warmed. Otherwise the washer fluid can form ice on the windshield, blocking your vision.

If the fluid in the windshield washer fluid reservoir is low, the message CHECK WASHER FLUID will appear on the Driver Information Center (DIC) display. It will take 60 seconds after the bottle is refilled for this message to turn off. For information on the correct washer fluid mixture to use, see *Windshield Washer Fluid on page 5-41* and *Recommended Fluids and Lubricants on page 6-12*.

Headlamp Washer

Your vehicle may have headlamp washers. The headlamp washers clear debris from the headlamp lenses.

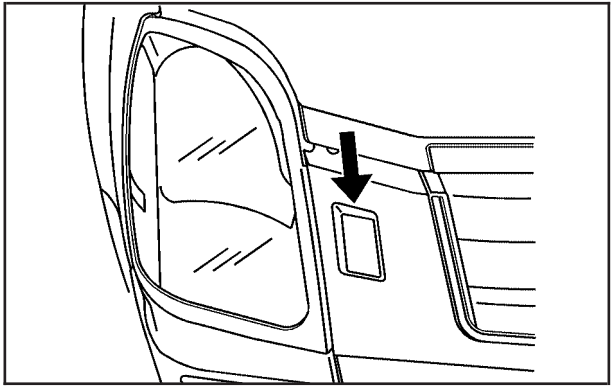

The headlamp washers are located to the inside of the headlamps.

To wash the headlamps, press the washer button located at the end of the windshield wiper lever. Headlamps will be washed when the washer button is pressed if two minutes have elapsed since the last washer button press. If two minutes have not elapsed, the headlamps will be washed every fourth washer button press.

The headlamps must be on to be washed. If the headlamps are off, only the windshield will be washed when the washer button is pressed. If the washer fluid is low, the headlamp washers will not work.

See *Windshield Washer on page 3-15* for additional information.

Cruise Control

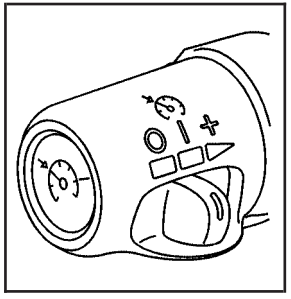

These controls are located on the end of the multifunction lever.

○ **(Off):** This position turns the system off.

| **(On):** This position activates the system.

+ (Resume/Accelerate): Push the lever to this symbol to make the vehicle resume to a previously set speed or to accelerate when cruise is already active.

– (Set/Decrease): Press this button to set the speed or to decrease the speed when cruise is already active.

With cruise control, you can maintain a speed of about 25 mph (40 km/h) or more without keeping your foot on the accelerator. This can really help on long trips. Cruise control does not work at speeds below about 25 mph (40 km/h).

If you apply your brakes, the cruise control will shut off.

⚠ CAUTION:

Cruise control can be dangerous where you cannot drive safely at a steady speed. So, do not use your cruise control on winding roads or in heavy traffic.

Cruise control can be dangerous on slippery roads. On such roads, fast changes in tire traction can cause needless wheel spinning, and you could lose control. Do not use cruise control on slippery roads.

If your vehicle is in cruise control when the traction control system begins to limit wheel spin, the cruise control will automatically disengage. See *Traction Control System (TCS) on page 4-9* and *StabiliTrak® System on page 4-11*. When road conditions allow you to safely use it again, you may turn the cruise control back on.

Setting Cruise Control

⚠ CAUTION:

If you leave your cruise control on when you are not using cruise, you might hit a button and go into cruise when you do not want to. You could be startled and even lose control. Keep the cruise control switch off until you want to use cruise control.

1. Move the cruise control switch to on.
2. Get up to the speed you want.
3. Press in the set button at the end of the lever and release it.
4. Take your foot off the accelerator pedal.

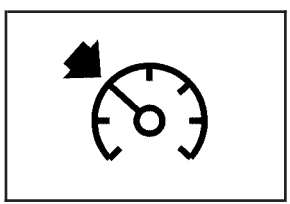

This light on the instrument panel cluster will come on while cruise control is on.

Resuming a Set Speed

Suppose you set your cruise control at a desired speed and then you apply the brake. This, of course, disengages the cruise control. But you don't need to reset it.

Once you're going about 25 mph (40 km/h) or more, you can move the cruise control switch briefly from on to resume/accelerate.

You'll go right back up to your chosen speed and stay there.

If you hold the switch at resume/accelerate the vehicle will keep going faster until you release the switch or apply the brake. So unless you want to go faster, don't hold the switch at resume/accelerate.

Increasing Speed While Using Cruise Control

There are two ways to go to a higher speed:

- Use the accelerator pedal to get to the higher speed. Press the set button at the end of the lever, then release the button and the accelerator pedal. You'll now cruise at the higher speed.
- Move the cruise switch from on to resume/accelerate. Hold it there until you get up to the speed you want, and then release the switch. To increase your speed in very small amounts, move the switch briefly to resume/accelerate. Each time you do this, your vehicle will go about 1 mph (1.6 km/h) faster.

If using the accelerator pedal and the set button at end of the lever to increase cruise set speed, your new set speed must be at least 5 mph higher than current speed for this method to work. If it is not 5 mph higher, switch cruise switch off, then on, and then reset your speed using the set button.

Reducing Speed While Using Cruise Control

There are two ways to reduce your speed while using cruise control:

- Press in the button at the end of the lever until you reach the lower speed you want, then release it.
- To slow down in very small amounts, briefly press the set button. Each time you do this, you'll go about 1 mph (1.6 km/h) slower.

Passing Another Vehicle While Using Cruise Control

Use the accelerator pedal to increase your speed. When you take your foot off the pedal, your vehicle will slow down to the cruise control speed you set earlier.

Using Cruise Control on Hills

How well your cruise control will work on hills depends upon your speed, load and the steepness of the hills. When going up steep hills, you may have to step on the accelerator pedal to maintain your speed. When going downhill, you may have to brake to keep your speed down. Applying the brake will take you out of cruise control. If you need to apply the brake due to the grade of the downhill slope, you may not want to attempt to use your cruise control feature.

Ending Cruise Control

To end a cruise control session, step lightly on the brake pedal.

Stepping on the brake pedal will end the current cruise control session only. Move the cruise control switch to off to turn off the system completely.

Erasing Speed Memory

When you turn off the cruise control or the ignition, your cruise control set speed memory is erased.

Adaptive Cruise Control

If your vehicle has this feature, be sure to read this entire section before using it.

The system operates on a radio frequency subject to Federal Communications Commission (FCC) Rules and with Industry Canada.

This device complies with Part 15 of the FCC Rules. Operation is subject to the following two conditions:

1. This device may not cause interference, and
2. This device must accept any interference received, including interference that may cause undesired operation of the device.

This device complies with RSS-210 of Industry Canada. Operation is subject to the following two conditions:

1. This device may not cause interference, and
2. This device must accept any interference received, including interference that may cause undesired operation of the device.

Changes or modifications to this system by other than an authorized service facility could void authorization to use this equipment.

Adaptive Cruise Control is an enhancement to traditional cruise control and is not a safety system. It allows you to keep cruise control engaged in moderate traffic conditions without having to constantly reset your cruise control. Adaptive Cruise Control uses radar to detect a vehicle directly ahead in your path, within a distance of 328 ft (100 m), and operates at speeds above 25 mph (40 km/h). When it is engaged by the driver, the system can apply limited braking or acceleration of the vehicle, automatically, to maintain a selected follow distance to the vehicle ahead. The vehicle's braking during Adaptive Cruise Control is comparable to a person applying moderate pressure to the vehicle's brake pedal.

To disengage Adaptive Cruise Control, apply the brake. If no vehicle is in your path, your vehicle will react like traditional cruise control.

⚠ CAUTION:

Adaptive Cruise Control will not apply hard braking or bring the vehicle to a complete stop. It will not respond to stopped vehicles, pedestrians or animals. When you are approaching a vehicle or object, Adaptive Cruise Control may not have time to slow your vehicle enough to avoid a collision. Your complete attention is always required while driving and you should be ready to take action and apply the brakes. For more information, see *Defensive Driving on page 4-2*.

⚠ CAUTION:

- **On winding roads, Adaptive Cruise Control may not detect a vehicle ahead. You could crash into a vehicle ahead of you. Do not use Adaptive Cruise Control on winding roads.**
- **Adaptive Cruise Control may not have time to slow your vehicle enough to avoid a crash when you are driving in conditions where vehicles may suddenly slow or stop ahead of you, enter your lane, or cross your vehicle's path. If you are driving in these conditions, do not use Adaptive Cruise Control. The warning beep and alert symbol may indicate that you are driving in conditions where Adaptive Cruise Control should not be used. See "Alerting the Driver" in this section.**

CAUTION: (Continued)

CAUTION: (Continued)

- **On slippery roads, fast changes in tire traction can cause needless wheel spinning, and you could lose control. Do not use cruise control on slippery roads.**
- **When weather limits visibility, such as when in fog, rain, or snow conditions, Adaptive Cruise Control performance is limited. There may not be enough distance to adapt to the changing traffic conditions. Do not use cruise control when visibility is low.**

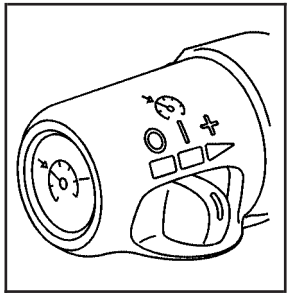

The Adaptive Cruise controls are located on the end of the multifunction lever.

○ **(Off):** This position turns the system off.

| **(On):** This position turns the system on.

+ **(Resume/Increase):** Push the switch to this symbol to make the vehicle resume to a previously set speed or to increase the set speed when Adaptive Cruise Control is already active.

(Set/Decrease): Press this button to set the speed or to decrease the set speed when Adaptive Cruise Control is already active.

Engaging Adaptive Cruise Control With the Set Button

⚠ CAUTION:

If you leave your Adaptive Cruise Control switch on when you are not using cruise, you might hit a button and go into cruise when you do not want to. You could be startled and even lose control. Keep the Adaptive Cruise Control switch off until you want to use cruise control.

⚠ CAUTION:

If you operate Adaptive Cruise Control without your Head-up Display (HUD) properly adjusted, your Adaptive Cruise Control settings may not be visible. You could forget your settings and be startled by Adaptive Cruise Control response and even lose control. Keep your HUD on and properly adjusted when using Adaptive Cruise Control.

The set speed is selected by the driver. This is the speed you will travel if there is no vehicle detected in your path.

To set Adaptive Cruise Control, do the following:

1. Make sure the Head-Up Display (HUD) is on and properly adjusted. You cannot engage Adaptive Cruise Control unless the HUD is on. See *Head-Up Display (HUD) on page 3-40* for more information.
2. Move the switch to on.
3. Get up to the speed you want.
4. Press in the set button at the end of the lever and release it.
5. Take your foot off the accelerator pedal.

Once Adaptive Cruise Control is set, it may immediately apply the brakes if it detects a vehicle ahead is too close or moving slower than your vehicle.

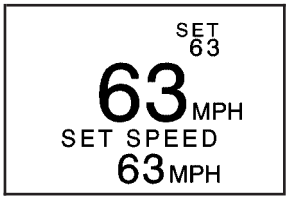

United States version shown, Canada similar

This symbol will appear on the Head-Up Display (HUD) to indicate that Adaptive Cruise Control is active. The number indicates the set speed.

See *Head-Up Display (HUD) on page 3-40* for more information.

Make sure the set speed is visible on the HUD so you know the speed your vehicle will accelerate to if a vehicle is not detected in your path. Keep in mind speed limits, surrounding traffic speeds and weather conditions when adjusting your set speed.

If your vehicle is in Adaptive Cruise Control when the traction control system begins to limit wheel spin, the Adaptive Cruise Control will automatically disengage. See *Traction Control System (TCS) on page 4-9* and *StabiliTrak® System on page 4-11*. When road conditions allow you to safely use it again, you may turn the Adaptive Cruise Control back on.

Increasing Set Speed While Using Adaptive Cruise Control

There are two ways to increase the set speed:

- Use the accelerator to get to the higher speed. Press the set button at the end of the lever, then release the button and the accelerator pedal. You will now cruise at the higher speed.
- Move the Adaptive Cruise Control switch from on to resume/increase. Hold it there until the desired set speed is displayed in the HUD, then release the switch. To increase your set speed in very small amounts, move the switch briefly to resume/increase. Each time you do this, your vehicle set speed will increase by 1 mph (1.6 km/h).

Your vehicle will not reach the set speed until the system determines there is not a vehicle in front of you. At that point, your vehicle speed will increase to the set speed.

Decreasing Set Speed While Using Adaptive Cruise Control

Press in the set/decrease button on the end of the lever until you reach the lower speed you want, then release it.

To slow down in very small amounts, briefly press the set/decrease button. Each time you do this, your set speed will be 1 mph (1.6 km/h) slower.

Resuming a Set Speed

Suppose you set your Adaptive Cruise Control at a desired speed and then you apply the brake. This will disengage the Adaptive Cruise Control. But you do not need to reset it.

Once you are going about 25 mph (40 km/h) or more, move the Adaptive Cruise Control switch briefly from on to resume/increase. Adaptive Cruise Control will be engaged with the previously chosen set speed.

Selecting the Follow Distance (GAP)

When the system detects a slower moving vehicle, it will adjust your vehicle's speed and maintain the follow distance (gap) you select.

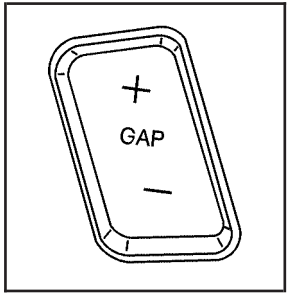

Use the GAP button on the steering wheel to adjust the follow distance.

Press the top of the button to increase the distance or the bottom of the button to decrease the distance. The first button press will show you the current follow distance setting on the HUD. Your current follow distance setting will be maintained until you change it.

There are six follow distances to choose from. The follow distance selection ranges from near to far (one second to two seconds follow time). The distance maintained for a selected follow distance will vary based on vehicle speed. The faster the vehicle speed the further back you will follow. Consider traffic and weather conditions when selecting the follow distance. The range of selectable distances may not be appropriate for all drivers and driving conditions. If you prefer to travel at a follow distance farther than Adaptive Cruise Control allows, disengage the system and drive manually.

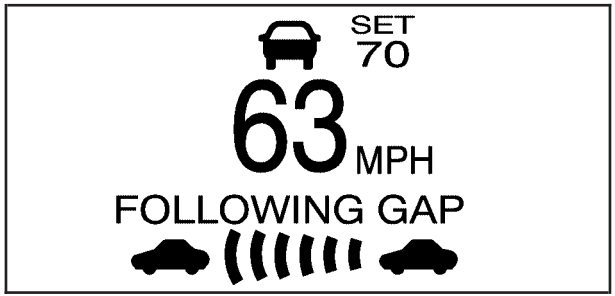

United States version shown, Canada similar

A graphic on the HUD indicates the selected follow distance. This picture shows a maximum follow distance. The vehicles will move closer together as you select a smaller follow distance.

Alerting the Driver

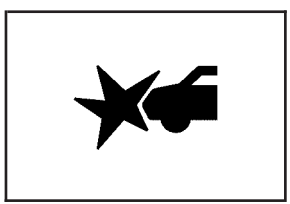

The alert symbol will flash on the HUD and a warning beep will sound when driver action is required.

Driver action is required when:

- Adaptive Cruise Control cannot apply sufficient braking because you are approaching a vehicle too rapidly.
- The vehicle speed drops below about 20 mph (32 km/h).
- A temporary condition prohibits Adaptive Cruise Control from operating. See *DIC Warnings and Messages on page 3-79* for more information.
- A malfunction is detected in the system. See *DIC Warnings and Messages on page 3-79* for more information.

See *Defensive Driving on page 4-2*.

⚠ CAUTION:

Adaptive Cruise Control has only limited braking ability to slow your vehicle. In some cases, Adaptive Cruise Control may not have time to slow your vehicle enough to avoid a collision. Be ready to take action and apply the brakes yourself. See *Defensive Driving on page 4-2*.

Approaching and Following a Vehicle

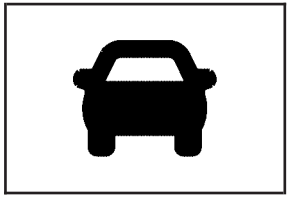

The vehicle ahead symbol will only appear on the HUD when a vehicle ahead is detected in your path.

If this symbol does not appear, or disappears briefly, Adaptive Cruise Control will not respond to vehicles you may see ahead.

⚠ CAUTION:

When the Adaptive Cruise Control radar is blocked by snow, ice, or dirt, it may not detect a vehicle ahead. Adaptive Cruise Control may not have time to slow your vehicle enough to avoid a collision. Do not use Adaptive Cruise Control when the radar is blocked by snow, ice, or dirt. Keep your radar clean. See "Cleaning the System" later in this section.

Adaptive Cruise Control will, automatically, slow your vehicle down when approaching a slower moving vehicle. It will then adjust your speed to follow the vehicle in front at the selected follow distance. Your speed will increase or decrease to follow the vehicle in front of you but will not exceed the set speed. It may apply limited braking, if necessary. When braking is active, your brake lights will come on. It may feel or sound different than if you were applying the brakes yourself. This is normal.

Stationary or Very Slow-Moving Objects

⚠ CAUTION:

Adaptive Cruise Control may not detect and react to stationary or slow-moving vehicles or other objects ahead of you. You could crash into an object ahead of you. Do not use Adaptive Cruise Control when approaching stationary or slow-moving vehicles or other objects.

⚠ CAUTION:

Adaptive Cruise Control may not detect and react to stationary or slow-moving vehicles or other objects ahead of you. Your vehicle may accelerate toward objects, such as a stopped vehicle that suddenly appears after the lead vehicle changes lanes. Your complete attention is always required while driving and you should be ready to take action and apply the brakes.

Low-Speed Deactivation

If your speed falls below 20 mph (32 km/h) while following a vehicle ahead, Adaptive Cruise Control will begin to disengage. The driver alert symbol on the HUD will flash and the warning beep will sound. The driver must take action since Adaptive Cruise Control will not slow the vehicle to a stop.

Deactivation When Head-Up Display is Turned Off

If you turn the HUD off when Adaptive Cruise Control is engaged, it will begin to disengage. A warning beep will sound and the message RADAR CRUISE NOT READY will appear on the Driver Information Center (DIC). See *DIC Warnings and Messages on page 3-79* for additional information. If Adaptive Cruise Control was braking when the HUD is turned off, the braking will continue briefly.

Passing a Vehicle/Adaptive Cruise Control Override

If you need to increase speed to pass a vehicle, use the accelerator pedal. While you are doing this, the system will not automatically apply the brakes. A PEDAL APPLIED ACC OVERRIDE message will appear on the HUD. See *Head-Up Display (HUD) on page 3-40* for additional information. Once you pass the vehicle and remove your foot from the accelerator pedal, Adaptive Cruise Control will return to normal operation and be able to apply the brakes, if needed.

⚠ CAUTION:

If you rest your foot on the accelerator pedal, the system will not automatically apply the brakes. You could crash into a vehicle ahead of you. Do not rest your foot on the accelerator pedal when using Adaptive Cruise Control.

Curves in the Road

⚠ CAUTION:

Due to Adaptive Cruise Control limitations in curves, it may respond to a vehicle in another lane, or may not have time to react to a vehicle in your lane. You could crash into a vehicle ahead of you, or lose control of your vehicle. Give extra attention in curves and be ready to use the brakes if necessary. Select an appropriate speed while driving in curves.

Adaptive Cruise Control may operate differently in a sharp curve. It may reduce your speed if the curve is too sharp.

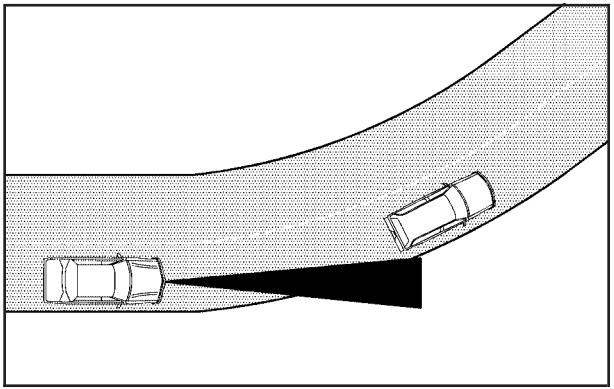

When following a vehicle and entering a curve, Adaptive Cruise Control could lose track of the vehicle in your lane and accelerate your vehicle. When this happens, the vehicle ahead symbol will not appear on the HUD.

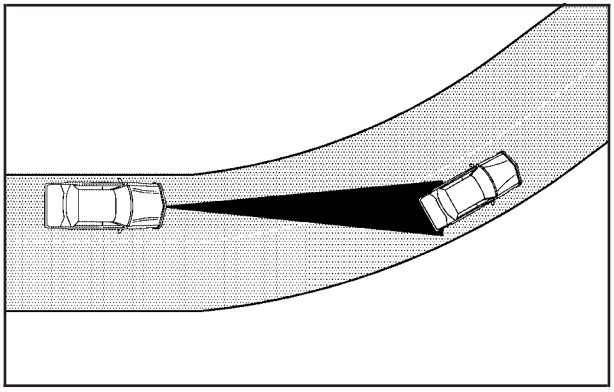

Adaptive Cruise Control may detect a vehicle that is not in your lane and apply the brakes.

Adaptive Cruise Control may, occasionally, provide a driver alert and/or braking that you consider unnecessary. It could respond to signs, guardrails and other stationary objects when entering or exiting a curve. This is normal operation. Your vehicle does not need service.

Highway Exit Ramps

⚠ CAUTION:

Adaptive Cruise Control may lose track of the vehicle ahead and accelerate up to your set speed while entering or on highway exit ramps. You could be startled by this acceleration and even lose control of the vehicle. Disengage Adaptive Cruise Control before entering a highway exit ramp. Do not use Adaptive Cruise Control while entering or on exit ramps.

Other Vehicle Lane Changes

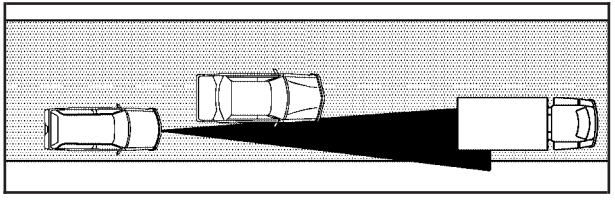

If another vehicle enters the same lane as you, Adaptive Cruise Control will not detect the vehicle until it is completely in the lane. Be ready to take action and apply the brakes yourself.

Using Adaptive Cruise Controls on Hills and When Towing a Trailer

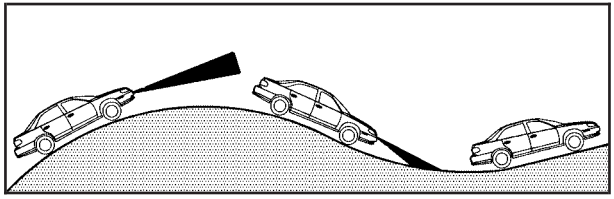

How well Adaptive Cruise Control will work on hills and when towing a trailer depends on your speed, vehicle load, traffic conditions and the steepness of the hills. It may not detect a vehicle in your lane while driving on hills. When going up steep hills, you may want to use the accelerator pedal to maintain your speed. When going downhill when towing a trailer, you may want to brake to keep your speed down. Applying the brake disengages the system. You may choose not to use Adaptive Cruise Control on steep hills when towing a trailer.

Disengaging Adaptive Cruise Control

To disengage the system, apply the brake pedal or move the Adaptive Cruise Control switch to off. Adaptive Cruise Control information will not appear on the HUD when the system is not engaged.

Erasing Set Speed Memory

When you turn the Adaptive Cruise Control switch or the ignition off, the set speed memory is erased.

Other Messages

There are three messages that may appear on the DIC. They are SERVICE RADAR CRUISE, RADAR CRUISE NOT READY and CLEAN RADAR. These messages will appear to indicate a problem with the Adaptive Cruise Control. See *DIC Warnings and Messages on page 3-79* for more information.

Cleaning the System

The radar can become blocked by snow, ice or dirt. If so, you may need to turn off the engine and clean the lens. Remember, do not use Adaptive Cruise Control in icy conditions, or when visibility is low, such as in fog, rain or snow.

The emblem/lens is located in the center of the grille.

To clean the emblem/lens, wipe the surface with a soft cloth. After cleaning the emblem/lens, engage the Adaptive Cruise Control. If you are unable to do so, see your dealer.

Headlamps

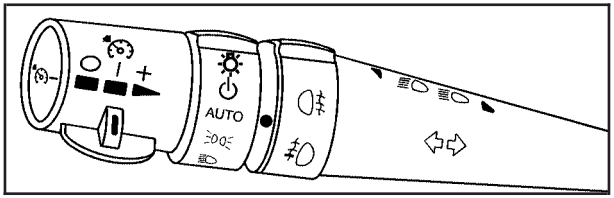

The exterior lamp control is located in the middle of the turn signal/multifunction lever.

(Exterior Lamp Control): Turn the control with this symbol on it to operate the exterior lamps.

The exterior lamp control has four positions:

(On/Off): Turn the control to this position to turn off all lamps and automatic lighting features including Daytime Running Lamps and Intellibeam™.

This is a “momentary” switch that will spring back to the AUTO position when released. An AUTOMATIC LIGHTS ON message will appear on the DIC when automatic lights are enabled or an AUTOMATIC LIGHTS OFF message will appear on the DIC when the automatic lights are disabled.

AUTO (Automatic): Turn the control to this position to put the headlamps in automatic mode. AUTO mode, if enabled, will turn the exterior lamps on and off depending upon how much light is available outside of the vehicle.

Due to the “momentary” switch design, your automatic lights may be disabled even if you are in AUTO position.

To enable automatic lighting do any of the following:

- Turn the headlamp control from AUTO to off and release the switch. It will return back to the AUTO position by itself.
- Turn the headlamp control from the parking lamp position to AUTO.
- Turn the headlamp control from the headlamp position to AUTO.

To disable automatic lighting do any of the following:

- Turn the headlamp control from AUTO to off and release the switch. It will return back to the AUTO position by itself.
- Turn the headlamp control from AUTO to the parking lamp position.
- Turn the headlamp control from AUTO to the headlamp position.

Disabling automatic lighting will disable the automatic headlamp operation, DRL, and Intellibeam™ High-Beams (if equipped).

(Parking Lamps): Turn the control to this position to turn on the parking lamps together with the following:

- Sidemarker Lamps
- Taillamps
- License Plate Lamps
- Instrument Panel Lights

(Headlamps): Turn the control to this position to turn on the headlamps, together with the previously listed lamps and lights.

Intellibeam™ Intelligent High-Beam Headlamp Control System

If your vehicle has this feature, be sure to read this entire section before using it.

Intellibeam™ is an enhancement to your vehicle's headlamp system. Using a digital light sensor on your rearview mirror, this system will turn the vehicle's high-beam headlamps on and off according to surrounding traffic conditions.

The Intellibeam™ system will turn your high-beam headlamps on when it is dark enough, there is no other traffic present, and the Intellibeam™ system is enabled.

Turning On and Enabling Intellibeam™

AUTO (Intellibeam™ On/Off): Press and release the Intellibeam™ button on the inside rear view mirror. The Intellibeam™ indicator on the mirror turn on to let you know the system has been turned on. Once the system has been turned on, it will remain on each time the vehicle is started. Additionally, the Intellibeam™ system must be enabled.

To enable the Intellibeam™ System, turn the exterior lamp control to AUTO, with the turn signal/multifunction lever in its neutral position. The High-Beam On Light will appear on the instrument panel cluster when the high-beams are on. See *Highbeam On Light on page 3-72*. Your vehicle is equipped with variable intensity high-beams. The high-beam indicator on the instrument panel will illuminate as soon as the high-beams start to come on, and will remain on until the high-beams have completely turned off. All Intellibeam™ equipped vehicles, however, will quickly turn off the high-beams if the system detects the sudden presence of vehicle lights ahead.

Driving with Intellibeam™

Intellibeam™ will only activate your high-beams when driving over 20 mph (32 km/h).

The high-beam headlamps will remain on, under the control of Intellibeam™, until any of the following situations occur:

- The system detects an approaching vehicle's headlamps.
- The system detects a preceding vehicle's taillamps.
- The outside light is bright enough that high-beam headlamps are not required.
- The high-beam headlamps are manually turned on or you use the flash-to-pass feature. See *Headlamp High/Low-Beam Changer on page 3-8* and *Flash-to-Pass on page 3-12*.

  When either of these conditions occur, the Intellibeam™ feature will be temporarily disabled until the high-beam stalk is returned to the neutral position. If either of these conditions occur and Intellibeam™ already has the high-beam headlamps on, the Intellibeam™ feature will be disabled and the Intellibeam™ light in the mirror will turn off.
- The exterior lamp control is turned to any setting except AUTO.

  When this occurs, Intellibeam™ will be disabled until the control is turned back to the AUTO position and the AUTOMATIC LIGHTS ON message is displayed on the DIC.
- The Intellibeam™ system is turned off at the inside rearview mirror.
- The vehicle's speed drops below 15 mph (24 km/h).

Intellibeam™ may not turn off the high-beams if the system cannot detect other vehicle's lamps because of any of the following:

- The others vehicle's lamp(s) are missing, damaged, obstructed from view or otherwise undetected.
- The other vehicle's lamp(s) are covered with dirt, snow and/or road spray.
- The other vehicle's lamp(s) cannot be detected due to dense exhaust, smoke, fog, snow, road spray, mist or other airborne obstructions.
- Your vehicle's windshield is dirty, cracked or obstructed by something that blocks the view of the Intellibeam™ light sensor.

- Your vehicle's windshield is covered with ice, dirt, haze or other obstructions.
- Your vehicle is loaded such that the front end of the vehicle points upward, causing the Intellibeam™ sensor to aim high and not detect headlamps and taillamps.
- You are driving on winding or hilly roads.

You may need to manually disable or cancel the high-beam headlamps by turning the low-beam headlamps on, if any of the above conditions exist.

Disabling and Resetting Intellibeam™ at the Rearview Mirror

Intellibeam™ can be disabled and reset to the original factory setting by using the controls on the inside rearview mirror.

AUTO (Intellibeam™ On/Off): To disable the system, press this button on the inside rearview mirror. The Intellibeam™ indicator will turn off and the will not come back on until the Intellibeam™ button is pressed again.

When Intellibeam™ has turned on the high-beams, pull or push the high-beam stalk. This will disable Intellibeam™. The Intellibeam™ indicator on the mirror will turn off. To re-enable Intellibeam™, press the Intellibeam™ button on the mirror.

A different sensitivity setting is available for dealer diagnostics. This is done by pushing and holding this button for 20 seconds until the light flashes three times. If you accidentally activate this, the vehicle's setting will automatically be reset each time the ignition is turned off and then on again; otherwise, refer to the text above for resetting the system.

Cleaning the Intellibeam™ Light Sensor

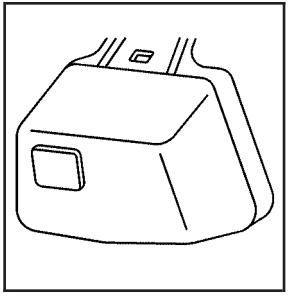

The light sensor is located on the inside of the vehicle in front of the inside rearview mirror.

Clean the light sensor window, periodically, using glass cleaner on a soft cloth. Gently wipe the sensor window. Do not spray glass cleaner directly on the surface of the sensor window.

Wiper Activated Headlamps

This feature activates the headlamps and parking lamps after the windshield wipers have been in use for about six seconds. For this feature to work, automatic lighting must be enabled. See *Headlamps on page 3-31* for additional information.

When the ignition is turned off, the wiper-activated headlamps will immediately turn off. They will also turn off if the windshield wiper control is turned off.

Headlamps on Reminder

A warning chime will sound if the exterior lamp control is left on in either the headlamp or parking lamp position and the driver's door is opened with the ignition off. See *Lights On Reminder on page 3-71* for additional information.

Daytime Running Lamps (DRL)

Daytime Running Lamps (DRL) can make it easier for others to see the front of your vehicle during the day. DRL can be helpful in many different driving conditions, but they can be especially helpful in the short periods after dawn and before sunset. Fully functional daytime running lamps are required on all vehicles first sold in Canada.

The DRL system will make the turn signal lamps come on when the following conditions are met:

- It is still daylight and the ignition is on,
- the automatic lights are enabled, and
- the transmission is not in PARK (P).

When DRL are on, only your front turn signal lamps will be on. No other exterior lamps will be on when the DRL are being used. Your instrument panel will not be lit.

When the automatic lights are enabled and it is dark enough outside, the DRL will turn off and the low-beam headlamps will turn on. When it is bright enough outside, the low-beam headlamps will go off, and the DRL will turn back on. If you start your vehicle in a dark garage, the automatic headlamp system will come on immediately. Once you leave the garage, it will take about one minute for the automatic headlamp system to change to DRL if it is light outside. During that delay, your instrument panel cluster may not be as bright as usual. Make sure your instrument panel brightness lever is in the full bright position. See *Instrument Panel Brightness on page 3-39*.

To operate your vehicle with the DRL off, turn the exterior lamp control off and then do one of the following:

- Turn the exterior lamp control to the parking lamp position.
- Turn the exterior lamp control to the headlamp position.
- Turn the exterior lamp control from AUTO to off and back to AUTO.

An AUTOMATIC LIGHTS OFF message will appear on the DIC, showing that automatic lighting has been disabled.

As with any vehicle, you should turn on the regular headlamp system when you need it.

Light Sensor

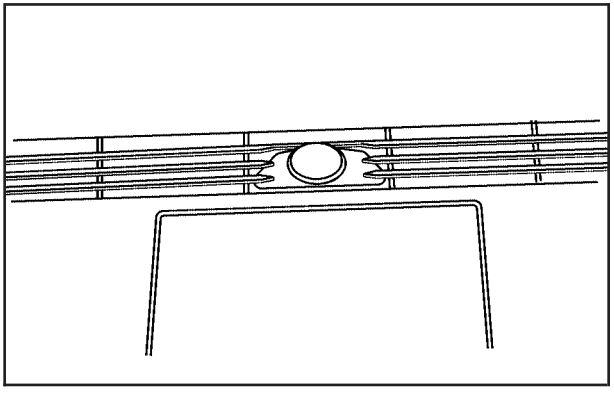

The light sensor for the DRL is located on top of the instrument panel. If you cover the sensor, it will read dark, and the exterior lamps may come on when you do not need them.

Fog Lamps

Use the fog lamps for better vision in foggy or misty conditions.

The fog lamp controls are located on the turn signal/multifunction lever.

(Fog Lamps): The band with this symbol is used to turn the front fog lamps on and off.

The parking lamps must be on for the fog lamps to work.

To turn the fog lamps on, turn the fog lamp band on the lever up to the dot and release it. The band will return to its original position.

To turn the fog lamps off, turn the fog lamp band up to the dot and release it. The band will return to its original position, and the fog lamps will turn off. If you turn on the high-beam headlamps, the fog lamps will also turn off. They'll turn back on again when you switch back to low-beam headlamps.

Some localities have laws that require the headlamps to be on along with the fog lamps.

Twilight Sentinel®

Twilight Sentinel® can turn your lamps on and off for you.

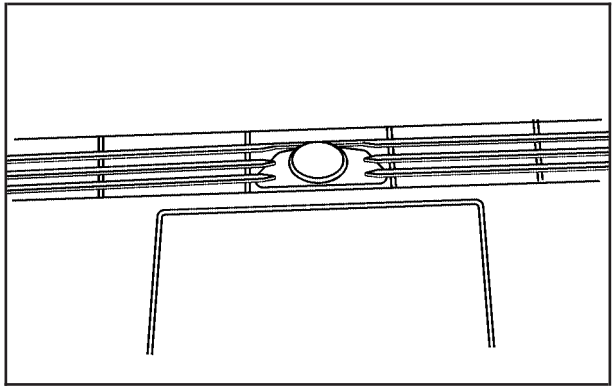

A light sensor on top of the instrument panel makes the Twilight Sentinel® work, so be sure it is not covered.

With Twilight Sentinel® you will see the following happen:

- When it is dark enough outside, the front turn signal lamps (DRL) will go off, and the headlamps and parking lamps will come on. The other lamps that come on with headlamps will also come on.
- When it is bright enough outside, the headlamps will go off, and the front turn signal lamps (DRL) will come on, as long as the exterior lamp switch is in the off position.

If you start your vehicle in a dark garage, the automatic headlamp system will come on immediately. Once you leave the garage, it will take approximately one minute for the automatic headlamp system to change to DRL if it is light outside. During that delay, your instrument panel cluster may not be as bright as usual. Make sure your instrument panel brightness control is in full bright position. See *Instrument Panel Brightness on page 3-39* for more information.

You can idle the vehicle with the lamps off, even when it is dark outside. First set the parking brake while the ignition is in OFF/ACC. Then start the vehicle. The lamps will stay off until you release the parking brake.

Twilight Sentinel® also provides exterior illumination as you leave the vehicle. If Twilight Sentinel® has turned on the lamps when you turn off the ignition, your lamps will remain on until:

- The exterior lamp switch is moved from off to the parking lamp position, or
- a delay time that you select has elapsed.

See *Vehicle Personalization on page 2-53* to select the delay time that you want. You can also select no delay time.

If you turn off the ignition with the exterior lamp switch in the parking lamp or headlamp position, the Twilight Sentinel® delay will not occur. The lamps will turn off as soon as the switch is turned off.

As with any vehicle, you should turn on the regular headlamp system when you need it.

Exterior Lighting Battery Saver

If the parking lamps or headlamps have been left on, the exterior lamps will turn off about 10 minutes after the ignition is turned off. This protects against draining the battery in case you have accidentally left the headlamps or parking lamps on. The battery saver does not work if the headlamps are turned on after the ignition is turned off.

If you need to leave the lamps on for more than 10 minutes, use the exterior lamp control to turn the lamps back on.

Instrument Panel Brightness

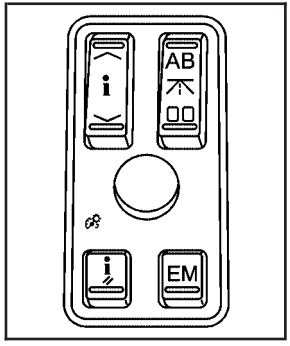

Base Level Shown, Uplevel Similar

This feature controls the brightness of the instrument panel lights.

Press in the center knob on the DIC control panel until the knob pops out. Then turn the knob clockwise to brighten the lights or counterclockwise to dim them. If you turn the knob completely clockwise, the interior lamps will turn on.

Entry Lighting

The entry lighting system turns on the reading and dome lamps and the backlighting to the exterior lamp control when a door is opened or if you press the remote keyless entry transmitter unlock button. If activated by the transmitter, the lighting will remain active for about 25 seconds. The entry lighting system uses the light sensor; it must be dark outside in order for the lamps to turn on. The lamps turn off about 25 seconds after the last door is closed. They will dim to off if the ignition is on, or immediately deactivate if the power locks are activated.

Parade Dimming

This feature prohibits dimming of the instrument panel displays and backlighting during daylight hours when the key is in the ignition and the headlamps are on. This feature operates with the light sensor and is fully automatic. When the light sensor reads darkness outside and the parking lamps are active, the instrument panel displays can be adjusted by turning the instrument panel brightness knob. See *Instrument Panel Brightness on page 3-39* for additional information.

Reading Lamps

The reading lamps are located on the overhead console. These lamps come on automatically when any door is opened.

For manual operation, press the button next to each lamp to turn it on. Press it again to turn the lamp off.

If the reading lamps are left on, they automatically shut off 10 minutes after the ignition has been turned off.

Battery Load Management

The battery load management feature is designed to monitor the vehicle's electrical load and determine when the battery is in a heavy discharge condition. During times of high electrical loading, the engine may idle at a higher revolutions per minute (rpm) setting than normal to make sure the battery charges. High electrical loads may occur when several of the following are on: headlamps, high beams, fog lamps, rear window defogger, the climate control fan at high speeds, heated seats and engine cooling fans.

If the battery continues to discharge, even with the engine idling at a higher rpm setting, some electrical loads will automatically be reduced. When this occurs, the rear window defogger may take slightly longer to clear the glass and the fan may cut back to a lower speed. For more battery saving information, see "Battery Saver Active Message" under *DIC Warnings and Messages on page 3-79*.

Inadvertent Power Battery Saver

This feature is designed to protect your vehicle's battery against drainage from the interior lamps, trunk lamp, glove box lamp, or the garage door opener. When the ignition is turned off, the power to these features will automatically turn off after 10 minutes (three minutes if a new car has 15 miles (24 km) or less). Power will be restored for an additional 10 minutes if any door is opened, the trunk is opened or the courtesy lamp switch is turned on.

Head-Up Display (HUD)

⚠ CAUTION:

If the HUD image is too bright, or too high in your field of view, it may take you more time to see things you need to see when it is dark outside. Be sure to keep the HUD image dim and placed low in your field of view.

If equipped, the Head-Up Display (HUD) allows you to see some of the driver information that appears on your instrument panel cluster on the windshield.

The information may be displayed in English or metric units and appears as an image focused out toward the front of your vehicle. To change from English to metric units, see *DIC Controls and Displays on page 3-74*.

The HUD consists of the following information:

- Speedometer
- Turn Signal Indicators
- High-Beam Indicator Symbol
- Driver Shift Control Transmission Feature, see *Automatic Transmission Operation (STS) on page 2-28* or *Automatic Transmission Operation (STS-V) on page 2-32*
- Check Gages Icon
- Adaptive Cruise Control Features and Indicators (If Equipped), see *Adaptive Cruise Control on page 3-19*
- Forward Collision Alert Features and Indicators (If Equipped), see *Forward Collision Alert (FCA) System on page 3-9*
- Radio Features

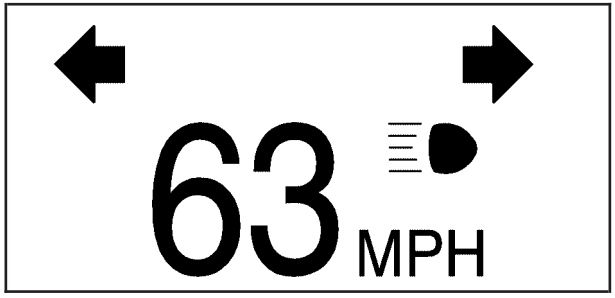

United States version shown, Canada similar

Be sure to continue scanning your displays, controls and driving environment just as you would in a vehicle without HUD. If you never look at your instrument panel cluster, you may not see something important, such as a warning light. Under important warning conditions, the CHECK GAGES message will display in the HUD. View your Driver Information Center (DIC) for more information.

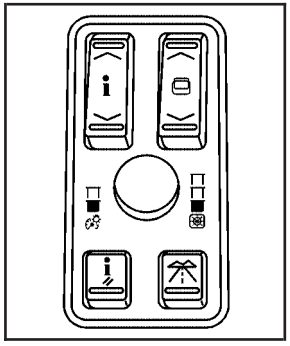

The HUD controls are located to the left of the steering wheel on the DIC control panel.

(Head-Up Display): Press this button to change the position of the HUD on the windshield. Press the top part of the button to move the HUD image up. Press the bottom part of the button to move the HUD image down.

You can also adjust the brightness of the HUD image. Press the knob on the center of the DIC control panel in until it pops out and then pull the knob until is completely extended. Turn the knob clockwise or counter-clockwise to increase or decrease the brightness. If you turn the knob all the way to the left, the HUD image will turn off.

To adjust the HUD so you can see it properly, do the following:

1. Adjust the seat to a comfortable driving position. If you change your seat position later, you may have to re-adjust your HUD.
2. Start your engine and press the top or bottom of the HUD button to center the HUD image in your view.

   The HUD image can only be adjusted up and down, not side-to-side.
3. Turn the knob on the DIC control panel to adjust the brightness of the HUD image.

The brightness of the HUD image is determined by the light conditions in the direction your vehicle is facing and where you have the HUD set. If you are facing a dark object or a heavily shaded area, your HUD may anticipate that you are entering a dark area and may begin to dim.

To turn the HUD image off, turn the knob counter-clockwise.

Polarized sunglasses could make the HUD image harder to see.

As light shines out from the HUD, it is possible for light to shine back in. In rare occurrences, when the sun is at a specific angle and position, the sun's rays can shine back into the HUD. When this occurs, the display device within the HUD will be temporarily illuminated. The event will end when the vehicle's angle to the sun changes.

Clean the inside of the windshield as needed to remove any dirt or film that reduces the sharpness or clarity of the HUD image.

To clean the HUD, spray household glass cleaner on a soft, clean cloth. Wipe the HUD lens gently, then dry it.

Notice: **When cleaning, be careful not to scratch the HUD or camera lenses. Do not spray glass cleaner directly on the HUD lens because the cleaner could leak inside the unit and cause damage.**

If the ignition is on and you cannot see the HUD image, check to see if:

- Something is covering the HUD unit.
- The brightness is adjusted properly.
- The HUD image is adjusted to the proper height.
- Ambient light in the direction your vehicle is facing is low.
- A fuse is blown. See *Fuses and Circuit Breakers on page 5-105*.

Keep in mind that your windshield is part of the HUD system. See *Windshield Replacement on page 5-56*.

The following Adaptive Cruise Control message may appear in the HUD:

PEDAL APPLIED ACC OVERRIDE: This message indicates that you are pressing your foot on the accelerator pedal and overriding Adaptive Cruise Control. While you are doing this, the system will not automatically apply the brakes. Once you remove your foot from the accelerator pedal, Adaptive Cruise Control will return to normal operation and be able to apply the brakes, if needed.

You may also see an Adaptive Cruise Control active symbol, alert symbol or vehicle ahead symbol. See *Adaptive Cruise Control on page 3-19* for more information.

Ultrasonic Rear Parking Assist (URPA)

The Ultrasonic Rear Parking Assist (URPA) system is designed to help you park while the vehicle is in REVERSE (R). It operates only at very low speeds, less than 3 mph (5 km/h). URPA can help make parking easier and help you avoid colliding with objects such as parked vehicles. The URPA system can detect objects up to 5 feet (1.5 m) behind the vehicle, and tell you how close these objects are from your rear bumper.

⚠ CAUTION:

Even with the Ultrasonic Rear Park Assist system, the driver must check carefully before backing up. The system does not operate above typical backing speeds of 3 mph (5 km/h) while parking. And, the system does not detect objects that are more than 5 feet (1.5 meters) behind the vehicle.

CAUTION: (Continued)

CAUTION: (Continued)

So, unless you check carefully behind you before and when you back up, you could strike children, pedestrians, bicyclists or pets behind you, and they could be injured or killed.

Whether or not you are using rear park assist, always check carefully behind your vehicle before you back up and then watch closely as you do.

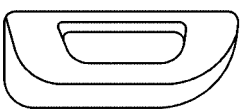

The URPA display is located inside the vehicle, above the rear window. It has three color-coded lights that can be seen through the rearview mirror or by turning around.

How the System Works

URPA comes on automatically when the shift lever is moved into REVERSE (R) and the vehicle speed is less than 3 mph (5 km/h). When the system turns on, the three lights on the display will illuminate for one and a half seconds to let you know that the system is working. If your vehicle is moving in REVERSE (R) at a speed greater than 3 mph (5 km/h), the red light will flash to remind you that the system does not work at a speed greater than 3 mph (5 km/h).

If an object is detected at a REVERSE (R) speed of less than 3 mph (5 km/h), one of the following will occur:

Description	English	Metric
Amber light	5 ft	1.5 m
Amber/amber lights	40 in	1.0 m
Amber/amber/red lights & continuous chime	20 in	0.5 m
Amber/amber/red lights flashing & continuous chime	1 ft	0.3 m

A chime will sound the first time an object is detected between 20 inches (0.5 m) and 5 feet (1.5 m) away.

URPA cannot detect objects that are above trunk level. In order for the rear sensors to recognize an object, it must be within detection range behind the vehicle.

When the System Does Not Seem to Work Properly

The light may flash red when the vehicle is in REVERSE (R), if the ultrasonic sensors are not kept clean. So be sure to keep your rear bumper free of mud, dirt, snow, ice and slush. Other conditions that may affect system performance include things like the vibrations from a jackhammer or the compression of air brakes on a very large truck. If after cleaning the rear bumper and then driving forward at least 15 mph (25 km/h), the display continues to flash red, see your dealer.

If a trailer was attached to your vehicle, or a bicycle or an object was hanging out of your trunk during your last drive cycle, the light may also flash red. The light will continue to flash whenever in REVERSE (R) until your vehicle is driven forward at least 15 mph (25 km/h) without any obstructions behind the vehicle.

For cleaning instructions, see *Washing Your Vehicle on page 5-98*.

Accessory Power Outlet(s)

Your vehicle is equipped with accessory power outlets. The outlets can be used to plug in electrical equipment such as a cellular telephone, CB radio, etc.

Your vehicle has one outlet in front of the center console, one in the center console lid and there may be an additional outlet in the rear of the center console.

Your vehicle may have a small cap that must be removed to access the accessory power outlet. If it does, when not using the outlet be sure to cover it with the protective cap.

Notice: **Leaving electrical equipment on for extended periods will drain the battery. Always turn off electrical equipment when not in use and do not plug in equipment that exceeds the maximum amperage rating.**

Certain accessory power plugs may not be compatible to the accessory power outlet and could result in blown vehicle or adapter fuses. If you experience a problem, see your dealer for additional information on the accessory power outlets.

Notice: **Adding any electrical equipment to your vehicle may damage it or keep other components from working as they should. The repairs would not be covered by your warranty. Do not use equipment exceeding maximum amperage rating. Check with your dealer before adding electrical equipment.**

Follow the proper installation instructions that are included with any electrical equipment you install.

Notice: **Improper use of the power outlet can cause damage not covered by your warranty. Do not hang any type of accessory or accessory bracket from the plug because the power outlets are designed for accessory power plugs only.**

Ashtray(s) and Cigarette Lighter

Your vehicle may have an ashtray and cigarette lighter.

Notice: **If you put papers, pins, or other flammable items in the ashtray, hot cigarettes or other smoking materials could ignite them and possibly damage your vehicle. Never put flammable items in the ashtray.**

Ashtray

The ashtray is located under the climate control panel on the center console. Press on the door to release the ashtray. The ashtray will automatically slide open for use.

To empty the ashtray with the ashtray in full open position, locate the release button to the right of the ash receiver and slide it to the right (in the direction of the arrow). The ash reciever will unlock and lift slightly and can then be easily removed from the housing. To replace the ash receiver, place it into position in the ashtray housing and push down firmly until it locks into place.

There may also be ashtrays in the rear doors.

Cigarette Lighter

Notice: **Holding a cigarette lighter in while it is heating will not allow the lighter to back away from the heating element when it is hot. Damage from overheating may occur to the lighter or heating element, or a fuse could be blown. Do not hold a cigarette lighter in while it is heating.**

The cigarette lighter is located next to the ashtray. The vehicle does not have any cigarette lighters for the rear seat passengers.

To activate the cigarette lighter, push it into the heating element and let go. When the lighter is ready it will pop back out by itself.

Climate Controls

Dual Climate Control System

With this system you can control the heating, cooling and ventilation for your vehicle.

Automatic Operation

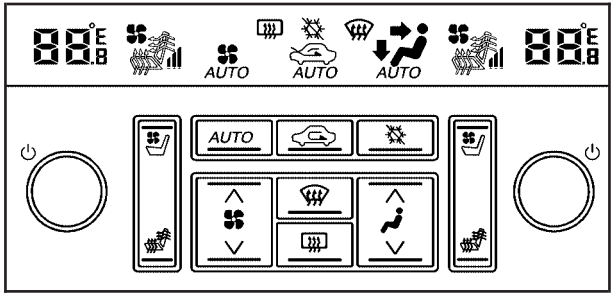

Vehicles With Heated and Ventilated Seats Shown, Vehicles Without Similar

AUTO (Automatic): When this button is pressed and the temperature is set, the system will automatically control the inside temperature, the air delivery mode, the air conditioning compressor, and the fan speed. AUTO will appear on the display next to the fan, mode indicators, and recirculation indicator if your vehicle is equipped with the optional air quality sensor.

1. Press the AUTO button.
2. Adjust the temperature to a comfortable setting, generally, between 70°F (21°C) and 80°F (27°C).

   Choosing the coldest or warmest temperature setting will not cause the system to heat or cool any faster. If you set the system at the warmest temperature setting, the system will try to continuously heat the vehicle and will not adjust the system down as the vehicle warms up.

   In cold weather, the system may start at reduced fan speeds to avoid blowing cold air into your vehicle until warmer air is available. The system will start out blowing air at the floor but may change modes, automatically, as the vehicle warms up to maintain the chosen temperature setting. The length of time needed for warm up will depend on the outside temperature and the length of time that has elapsed since your vehicle was last driven.
3. Wait for the system to regulate. This may take from 10 to 30 minutes. Then adjust the temperature, if necessary.

You can switch from English to metric units through the Driver Information Center (DIC). See *DIC Controls and Displays on page 3-74*.

The air-conditioning system removes moisture from the air, so you may notice water dripping underneath your vehicle while idling or after turning off the engine. This is normal.

Manual Operation

(Mode): Pressing the mode switch and changing the mode cancels automatic operation and allows the operator to manually select the air delivery location. Press AUTO to return to automatic operation.

The outboard air outlets will always receive airflow regardless of the mode selected. See *Outlet Adjustment on page 3-54* to change this airflow from the outboard outlets.

To change the current mode, select one of the following:

(Vent): This mode directs air to the instrument panel outlets.

(Bi-Level): This mode directs approximately half of the air to the instrument panel outlets, and then directs most of the remaining air to the floor outlets. In automatic operation, cooler air is directed to the upper outlets and warmer air to the floor outlets.

(Floor): This mode directs most of the air to the floor outlets with some air directed to the outboard outlets, and a little air directed to the windshield and side windows.

The mode switch can also be used to select the defog mode. Information on defogging and defrosting can be found later in this section.

(Fan): Press this switch to increase or decrease the fan speed. Pressing this switch cancels automatic operation and allows the operator to manually select the amount of airflow. Press AUTO to return to automatic operation.

If the airflow seems low when the fan speed is at the highest setting, the passenger compartment air filter may need to be replaced. For more information, see *Passenger Compartment Air Filter on page 3-55* and *Scheduled Maintenance on page 6-4*.

(Recirculation): This button controls the air source for the climate control system. If you are in AUTO mode, pressing this button once will choose recirculation. This mode keeps outside air from coming in the vehicle and recirculates the air in the vehicle. It can be used to prevent outside air and odors from entering your vehicle or to help cool the air inside your vehicle more quickly.

Recirculation is not available in the defrost mode and will shut off when defog mode is selected. Both of these features are designed to limit fogging in your vehicle. If recirculation is selected during defog mode, it will automatically turn off after 10 minutes to limit problems with fogging.

In some conditions, using recirculation for long periods of time may cause the air inside your vehicle to become too dry or stuffy. To prevent this from happening, after the air in your vehicle has cooled, select AUTO to return to automatic climate control operation or push the recirculation button again to select outside air.

Pressing this button a second time selects outside air.

(Outside Air): This mode forces the system to pull air from outside the vehicle. It can be used to bring fresh air into the vehicle.

Air Quality Sensor: Your vehicle may be equipped with an optional air quality sensor to help limit the climate control system from pulling in some harmful exhaust fumes from older, poorly running or diesel-equipped vehicles that are driving near you. This sensor, when active, will monitor the air quality in front of your vehicle and switch to air recirculation when poor quality air is detected outside your vehicle. You can activate the air quality sensor on your vehicle (if equipped) by pressing the AUTO button on your climate control. The word AUTO will be shown in the center of the climate control display under the outline shape of a vehicle. When the air quality sensor senses poor quality air, the recirculation graphic will be shown as long as the sensor senses poor quality air.

Under some conditions, the air quality sensor system will not operate. In cold weather, the system may not be active (even if the AUTO indication is displayed) because of concerns of fogging your windows, which may occur by activating recirculation mode. Also, the air quality sensor system will not remain in recirculation mode for extended periods of time that could cause stuffy or very dry conditions in the vehicle. Following a poorly running vehicle for an extended period of time may not keep recirculation active indefinitely.

The air quality sensor will not activate due to organic odors, like skunk, and may not activate on many chemical-related odors. If you wish to limit these types of odors, you may choose to manually select recirculation. Your vehicle may also be equipped with a charcoal filter that can limit many odors from being pulled into your vehicle. This filter, like your engines air cleaner filter, will need to be changed periodically. See *Scheduled Maintenance on page 6-4*. The air quality sensor system does not protect against carbon monoxide (CO), which you cannot see or smell. See *Engine Exhaust on page 2-39*.

(Power Driver's Temperature): Press the power button located on the driver's side of the climate control panel to turn the entire climate control system on or off. Turn the knob to increase or decrease the temperature inside your vehicle.

(Power Passenger's Temperature): Press the power button located on the passenger's side of the climate control panel to turn the passenger's climate control system on if they wish to have a different setting than the driver. Turn the knob to increase or decrease the temperature for the front passenger. Turning the passenger's side power button off will not shut off the climate control system for the passenger. The system will be set to the same setting as the driver.

(Ventilated Seat): Press this button (if equipped) to turn on the ventilated seat for the driver's or passenger's side. See *Heated and Ventilated Seats on page 1-4*.

(Heated Seat): Press this button (if equipped) to turn on the heated seat and seatback for the driver's or passenger's side. See *Heated and Ventilated Seats on page 1-4*.

(Air Conditioning): Press this button to manually turn off the air conditioning compressor. Press AUTO to return to automatic operation or press the A/C OFF button again. To limit fogging on the windshield, the air conditioning compressor cannot be in off in defrost mode.

Sensors

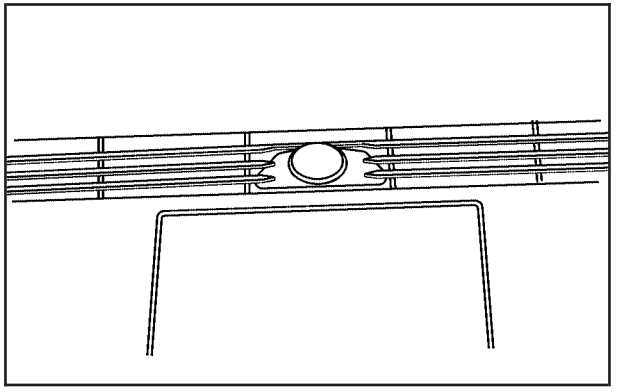

There is a solar sensor located on the instrument panel, near the windshield.

There is also an interior temperature sensor located next to the steering wheel on the instrument panel.

These sensors monitor the solar radiation and the air inside your vehicle, then use the information to maintain the selected temperature by initiating needed adjustments to the temperature, the fan speed and the air delivery system. The system may also supply cooler air to the side of the vehicle facing the sun. The recirculation mode may also be activated, as necessary. Do not cover the sensors or the automatic climate control system will not work properly.

Defogging and Defrosting

Fog on the inside of windows is a result of high humidity (moisture) condensing on the cool window glass. This can be minimized if the climate control system is used properly. There are two modes to clear fog from your windshield. Use the defog mode to clear the windows of fog or moisture and warm the passengers. Use the defrost mode to remove fog or frost from the windshield more quickly.

(Mode): Press this button until defog appears on the display.

(Defog): This mode directs the air between the windshield and floor outlets with some air supplied to the outboard panel outlets and side window defogging outlets. When you select this mode, the system turns off recirculation and runs the air-conditioning compressor unless the outside temperature is at or below freezing. The recirculation mode is cancelled when you enter defog mode. If you select recirculation while in defog mode, it will be cancelled after 10 minutes.

If you have fogging on the side windows, remain in defog or defrost mode until they clear.

(Defrost): Pressing the defrost button directs most of the air to the windshield, with some air directed to the side windows and outboard panel outlets. In this mode, the system will automatically turn off recirculation and run the air-conditioning compressor, unless the outside temperature is at or below freezing. Recirculation cannot be selected while in the defrost mode.

This mode may also cause the fan speed and air temperature to increase.

Rear Window Defogger

The rear window defogger uses a warming grid to remove fog or frost from the rear window.

The rear window defogger will only work when the ignition is in ON or during remote start, if programmed. See “Personal Settings Menu” under *Vehicle Personalization on page 2-53* for additional information.

(Rear Window Defogger): Press this button to turn the rear window defogger on or off. Be sure to clear as much snow from the rear window as possible.

The rear window defogger will turn off about 10 minutes after the button is pressed, or if the vehicle’s speed is above 30 mph (48 km/h), the rear defogger will stay on continuously. If turned on again, the defogger will only run for about five minutes before turning off. The defogger can also be turned off by pressing the button again or by turning off the engine.

The heated outside rearview mirrors will heat to help clear fog or frost from the surface of the mirror when the rear window defogger button is on.

Notice: **Do not use a razor blade or sharp object to clear the inside rear window. Do not adhere anything to the defogger grid lines in the rear glass. These actions may damage the rear defogger. Repairs would not be covered by your warranty.**

Outlet Adjustment

Use the lever located in the center of each outlet to change the direction of the airflow, either side-to-side or up and down. Use the thumbwheels to open or close the outlets to adjust the airflow.

Turn the thumbwheel to the right to open the outlets completely and allow the maximum amount of air to enter your vehicle. Turn the thumbwheel to the left to close the outlets and minimize the amount of air entering the vehicle.

Operation Tips

- Clear away any ice, snow or leaves from the air inlets at the base of the windshield that may block the flow of air into your vehicle.
- Use of non-GM approved hood deflectors may adversely affect the performance of the system.
- Keep the path under the front seats clear of objects to help circulate the air inside of your vehicle more effectively.
- If the airflow seems low when the fan speed is at the highest setting, the passenger compartment air filter may need to be replaced. For more information, see *Passenger Compartment Air Filter on page 3-55*.

Rear Climate Control System

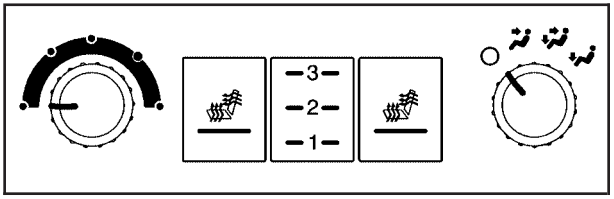

Your vehicle has a rear climate control system. The base model includes air outlets in the rear of the center console for cooling and under-seat air outlets for heating. The temperature, quantity, and air delivery location is controlled automatically by the front climate control system.

Some vehicles are equipped with an optional climate control panel for the rear passenger, located on the back of the center console.

The left knob controls the temperature of the air to the rear passengers. Turning the knob to the left will make the air cooler. Turning the knob to the right will make the air warmer.

The right knob controls the air delivery to the rear passengers. Turning the knob all the way to the left will shut off airflow to the rear passengers. Operating with the rear air delivery off may make the entire vehicle warm or cool less quickly. It may also increase the air rush sound of the front system.

◯ **(Off):** This is the off position.

(Vent): This mode directs all the rear passenger airflow to the outlets in the console. This is the normal position for cool down conditions.

(Bi-Level): This mode directs airflow to the console outlets and the floor.

(Floor): This mode directs all of the airflow to the floor. This is the normal position for warm up conditions.

The amount of airflow to the rear passengers is controlled automatically by the front climate control system, regardless of optional equipment. Airflow to the rear system will be turned off when defrost is selected on the front climate control panel to direct air to clear the windshield.

Vehicles equipped with a rear climate control panel, also, have heated rear seats. There are two buttons, each with three indicator lights, located between the two climate control knobs on the rear climate control panel, to control the rear heated seats. See *Heated Seats on page 1-7* for additional information.

Be sure to keep the area under the front seats clear of any objects so the air in your vehicle can circulate effectively.

Passenger Compartment Air Filter

Your vehicle may be equipped with a passenger compartment air filter. There are two types of filters available. There is a standard dust filter that traps small particles including pollen. There is, also, a dust/odor filter available that traps dust and pollen and also uses a charcoal element to help reduce many offensive odors from entering your vehicle. Like your vehicle's engine air cleaner/filter, it will need to be changed periodically. For information on how often to change the passenger compartment air filter, see *Scheduled Maintenance on page 6-4*.

Notice: **Driving without a passenger compartment air filter in place can cause water and small particles, like paper and leaves, to be pulled into your climate control system which may cause damage to it. Make sure you always replace the old filter with a new one.**

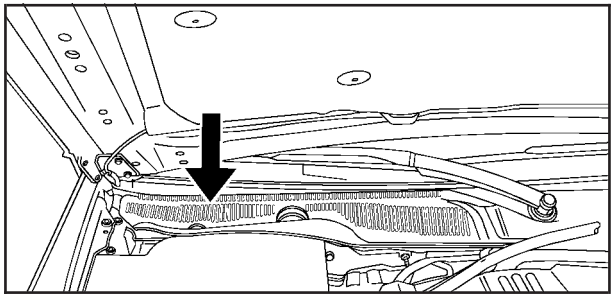

The access panel for the passenger compartment air filter is located under the hood near the windshield, on the passenger's side of the vehicle. See *Engine Compartment Overview on page 5-12* for more information on location. See *Doing Your Own Service Work on page 5-4* for information on doing your own service work.

To access the passenger compartment air filter, do the following:

1. Pull back the rubber hood seal from the edge of the leaf screen vent cover.
2. Remove the three fasteners that hold the filter access cover in place and slide the cover off.
3. To access the filter, remove the black plastic water deflector by lifting the outboard edge of the deflector to release the retention tab.
4. Lift the inboard edge of the deflector to release the retention tab.
5. Lift and slide the water deflector toward the inboard side and remove it.

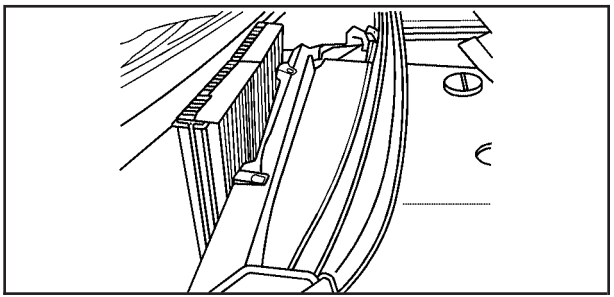

6. The top edge of the filter should be visible. Reach in and lift the filter out, pulling upward and toward the front of the vehicle.
7. Insert the new air filter by sliding it back into place. Make sure the arrow on the filter is pointing toward the passenger compartment.

Reverse steps 1 through 3 to reinstall the water deflector, filter cover and the hood seal.

Warning Lights, Gages, and Indicators

This part describes the warning lights and gages that may be on your vehicle. The pictures will help you locate them.

Warning lights and gages can signal that something is wrong before it becomes serious enough to cause an expensive repair or replacement. Paying attention to your warning lights and gages could also save you or others from injury.

Warning lights come on when there may be or is a problem with one of your vehicle's functions. As you will see in the details on the next few pages, some warning lights come on briefly when you start the engine just to let you know they're working. If you are familiar with this section, you should not be alarmed when this happens.

Gages can indicate when there may be or is a problem with one of your vehicle's functions. Often gages and warning lights work together to let you know when there's a problem with your vehicle.

When one of the warning lights comes on and stays on when you are driving, or when one of the gages shows there may be a problem, check the section that tells you what to do about it. Follow this manual's advice. Waiting to do repairs can be costly – and even dangerous. So please get to know your warning lights and gages. They're a big help.

Your vehicle also has a Driver Information Center (DIC) that works along with the warning lights and gages. See *Driver Information Center (DIC) on page 3-73* for more information.

Instrument Panel Cluster

The instrument panel cluster is designed to let you know at a glance how your vehicle is running. You will know how fast you are going, how much fuel you are using and many of the other things you will need to know to drive safely and economically.

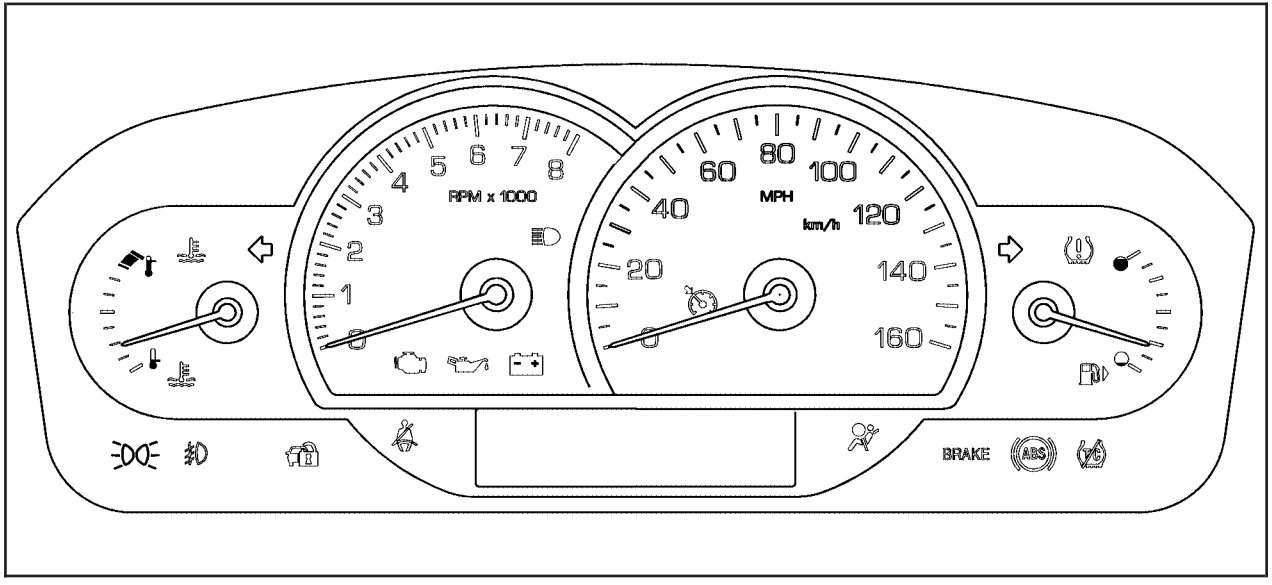

United States Uplevel version shown, Canada and base similar

Speedometer and Odometer

Your speedometer lets you see your speed in both miles per hour (mph) and kilometers per hour (km/h). See “MPH (km)” under *DIC Controls and Displays on page 3-74* for more information.

The odometer mileage can be checked without the vehicle running. Your vehicle’s odometer works together with the driver information center. You can set a Trip A and a Trip B odometer. See “Trip Information” under *DIC Controls and Displays on page 3-74* for more information.

If your vehicle ever needs a new odometer installed, the new one will be set to the correct mileage total of the old odometer.

Tachometer

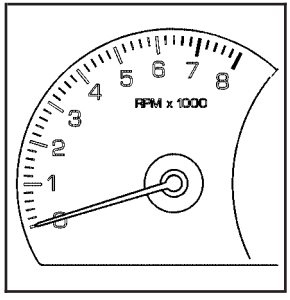

This gage indicates the engine speed in revolutions per minute (rpm).

Safety Belt Reminder Light

When the ignition button is pressed to START, a chime will be provided for several seconds to remind people to buckle their safety belts. The driver safety belt light will also be provided and stay on for several seconds, then it will flash for several more. You should buckle your seat belt.

This chime and light will be repeated if the driver remains unbuckled and the vehicle is in motion.

If the driver’s belt is buckled, neither the chime nor the light will be provided.

Passenger Safety Belt Reminder Light

Several seconds after the ignition button is pressed to START, a chime will sound for several seconds to remind the front passenger to buckle their safety belt. This would only occur if the passenger airbag is enabled. See *Passenger Sensing System on page 1-58* for more information. The passenger safety belt light will also come on and stay on for several seconds, then it will flash for several more.

This chime and light will be repeated if the passenger remains unbuckled and the vehicle is in motion.

If the passenger's safety belt is buckled, neither the chime nor the light will come on.

Airbag Readiness Light

There is an airbag readiness light on the instrument panel, which shows the airbag symbol. The system checks the airbag's electrical system for malfunctions. The light tells you if there is an electrical problem. The system check includes the airbag sensors, the airbag modules, the wiring and the diagnostic module. For more information on the airbag system, see *Airbag System on page 1-48*.

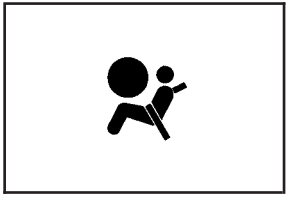

This light will come on when you start your vehicle, and it will flash for a few seconds. Then the light should go out. This means the system is ready.

If the airbag readiness light stays on after you start the vehicle or comes on when you are driving, your airbag system may not work properly. Have your vehicle serviced right away.

⚠ CAUTION:

If the airbag readiness light stays on after you start your vehicle, it means the airbag system may not be working properly. The airbags in your vehicle may not inflate in a crash, or they could even inflate without a crash. To help avoid injury to yourself or others, have your vehicle serviced right away if the airbag readiness light stays on after you start your vehicle.

The airbag readiness light should flash for a few seconds when you turn the vehicle on. If the light does not come on then, have it fixed so it will be ready to warn you if there is a problem.

If there is a problem with the airbag system in your vehicle, the Service airbag message will appear on the DIC display. See *DIC Warnings and Messages on page 3-79* for more information.

Passenger Airbag Status Indicator

Your overhead console has a passenger airbag status indicator.

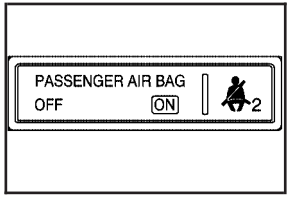

Passenger Airbag Status Indicator – United States

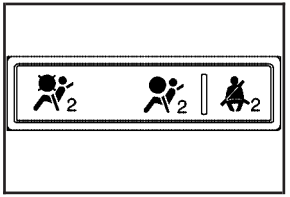

Passenger Airbag Status Indicator – Canada

The indicator next to the passenger airbag status indicator lights is the passenger safety belt reminder light. See *Passenger Safety Belt Reminder Light on page 3-60* for more information on that indicator.

When the vehicle is running, the passenger airbag status indicator will light ON and OFF, or the symbol for on and off, for several seconds as a system check. Then, after several more seconds, the status indicator will light either ON or OFF, or either the on or off symbol to let you know the status of the right front passenger's frontal airbag.

If the word ON or the on symbol is lit on the passenger airbag status indicator, it means that the right front passenger's frontal airbag is enabled (may inflate).

⚠ CAUTION:

If the on indicator comes on when you have a rear-facing child restraint installed in the right front passenger's seat, it means that the passenger sensing system has not turned off the passenger's frontal airbag. A child in a rear-facing child restraint can be seriously injured or killed if the right front passenger's airbag inflates. This is because the back of the rear-facing child restraint would be very close to the inflating airbag. Do not use a rear-facing child restraint in the right front passenger's seat if the airbag is turned on.

Your vehicle has a rear seat that will accommodate a rear-facing child restraint. A label on your sun visor says, "Never put a rear-facing child seat in the front." This is because the risk to the rear-facing child is so great, if the airbag deploys.

⚠ CAUTION:

Even though the passenger sensing system is designed to turn off the passenger's frontal airbag if the system detects a rear-facing child restraint, no system is failsafe, and no one can guarantee that an airbag will not deploy under some unusual circumstance, even though it is turned off. We recommend that rear-facing child restraints be secured in the rear seat, even if the airbag is off.

If the word OFF or the off symbol is lit on the airbag status indicator, it means that the passenger sensing system has turned off the right front passenger's frontal airbag. See *Passenger Sensing System on page 1-58* for more on this, including important safety information.

If, after several seconds, all status indicator lights remain on, or if there are no lights at all, there may be a problem with the lights or the passenger sensing system. See your dealer for service.

⚠ CAUTION:

If the off indicator and the airbag readiness light ever come on together, it means that something may be wrong with the airbag system. If this ever happens, have the vehicle serviced promptly, because an adult-size person sitting in the right front passenger seat may not have the protection of the frontal airbag. See *Airbag Readiness Light on page 3-60*.

Charging System Light

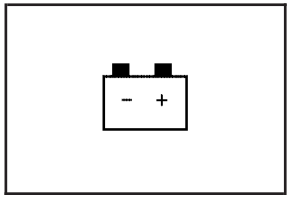

When you turn the engine on, this light will come on briefly to show that the generator and battery charging systems are working properly.

If this light stays on, your vehicle needs service. You should take your vehicle to the dealer at once. To save your battery until you get there, turn off all accessories. See *DIC Controls and Displays on page 3-74* for more information.

Brake System Warning Light

Your vehicle's hydraulic brake system is divided into two parts. If one part isn't working, the other part can still work and stop you. For good braking, though, you need both parts working well.

If the warning light comes on, there is a brake problem. Have your brake system inspected right away.

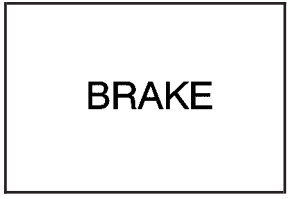

United States

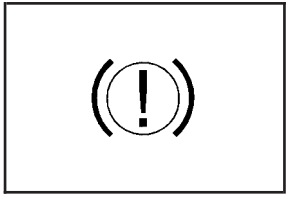

Canada

This light should come on briefly when you turn the engine on. If it does not come on then, have it fixed so it will be ready to warn you if there is a problem.

When the ignition is on, the brake system warning light will also come on when you set your parking brake. The light will stay on if your parking brake does not release fully. If it stays on after your parking brake is fully released, it means you have a brake problem.

If the light comes on while you are driving, pull off the road and stop carefully. You may notice that the pedal is harder to push, or the pedal may go closer to the floor. It may take longer to stop. If the light is still on, have the vehicle towed for service. See *Towing Your Vehicle on page 4-37*.

⚠ CAUTION:

Your brake system may not be working properly if the brake system warning light is on. Driving with the brake system warning light on can lead to an accident. If the light is still on after you have pulled off the road and stopped carefully, have the vehicle towed for service.

Anti-Lock Brake System Warning Light

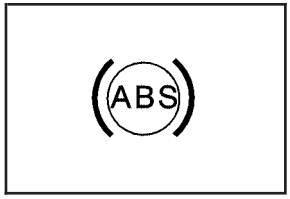

With the anti-lock brake system, the light will come on when your engine is started and may stay on for several seconds. That is normal.

If the ABS warning light comes on and stays on, there may be a problem with the antilock portion of the brake system. If the red BRAKE light is not on, you still have brakes, but you do not have antilock brakes. See *Brake System Warning Light on page 3-64*.

If the light stays on, press the ignition button to OFF/ACC. If the light comes on when you are driving, stop as soon as possible and turn the ignition off. Then start the engine again to reset the system. If the light still stays on, or comes on again while you are driving, your vehicle needs service. If the regular brake system warning light is not on, you still have brakes, but you do not have anti-lock brakes. If the regular brake system warning light is also on, you do not have anti-lock brakes and there is a problem with your regular brakes. See *Brake System Warning Light on page 3-64*.

Low Tire Pressure Warning Light

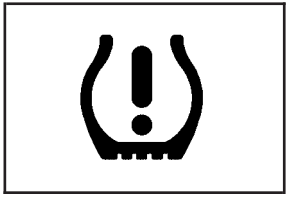

This light will come on briefly as you start the engine, for vehicles equipped with the Tire Pressure Monitor System.

It will then come on only when a flat or low tire pressure condition exists.

See *Tire Pressure Monitor System on page 5-67* for more information.

Traction Control System (TCS) Warning Light

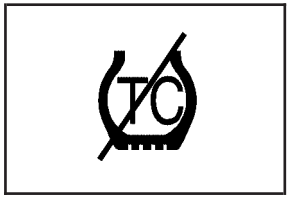

If the TC (traction control) warning light comes on and stays on, there may be a problem with the traction control system.

The TC (traction control) warning light will come on briefly when you turn the engine on. If it does not come on then, have it fixed so it will be ready to warn you if there is a problem.

The light will also come on if you turn the traction control system off using the TC (traction control) on/off button located on the console.

If the TC (traction control) warning light stays on or comes on while you are driving, pull off the road as soon as possible and stop carefully. Turn your engine off and then restart it. If the light still stays on or comes back on again while you are driving, your vehicle needs service. Have the traction control system inspected as soon as possible. See *Traction Control System (TCS) on page 4-9* and *StabiliTrak® System on page 4-11* for more information.

Also see *Competitive Driving Mode (STS-V) on page 4-10* for more information.

Engine Coolant Temperature Warning Light

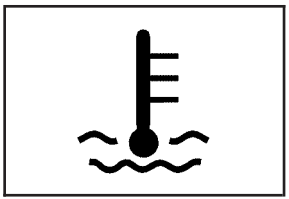

The engine coolant temperature warning light will come on when the engine is very hot.

This light will also come on briefly when the vehicle is started.

If the light does not go out or comes on and stays on while driving, there may be a problem with the cooling system. Driving with engine coolant temperature light on could cause your vehicle to overheat, see *Overheated Engine Protection Operating Mode on page 5-32*. See *Engine Overheating on page 5-31* and *DIC Warnings and Messages on page 3-79* for more information.

Engine Coolant Temperature Gage

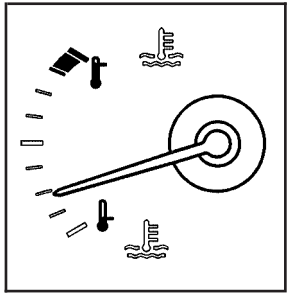

This gage shows the engine coolant temperature.

It can be used to see when your engine has warmed up and to make sure your cooling system is operating properly. If the gage pointer moves into the shaded area, the engine coolant is too hot and the engine coolant temperature warning light will come on. See *Engine Overheating on page 5-31* for more information.

Malfunction Indicator Lamp

Check Engine Light

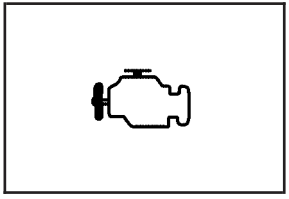

Your vehicle is equipped with a computer which monitors operation of the fuel, ignition, and emission control systems.

This system is called OBD II (On-Board Diagnostics-Second Generation) and is intended to assure that emissions are at acceptable levels for the life of the vehicle, helping to produce a cleaner environment. The Check Engine light comes on to indicate that there is a problem and service is required. Malfunctions often will be indicated by the system before any problem is apparent. This may prevent more serious damage to your vehicle. This system is also designed to assist your service technician in correctly diagnosing any malfunction.

Notice: **If you keep driving your vehicle with this light on, after awhile, your emission controls may not work as well, your fuel economy may not be as good, and your engine may not run as smoothly. This could lead to costly repairs that may not be covered by your warranty.**

Notice: **Modifications made to the engine, transmission, exhaust, intake, or fuel system of your vehicle or the replacement of the original tires with other than those of the same Tire Performance Criteria (TPC) can affect your vehicle's emission controls and may cause this light to come on. Modifications to these systems could lead to costly repairs not covered by your warranty. This may also result in a failure to pass a required Emission Inspection/Maintenance test. See *Accessories and Modifications on page 5-3*.**

This light should come on briefly, as a check to show you it is working, as you start the engine. If the light does not come on, have it repaired. This light will also come on during a malfunction in one of two ways:

- **Light Flashing** — A misfire condition has been detected. A misfire increases vehicle emissions and may damage the emission control system on your vehicle. Diagnosis and service may be required.
- **Light On Steady** — An emission control system malfunction has been detected on your vehicle. Diagnosis and service may be required.

If the Light Is Flashing

The following may prevent more serious damage to your vehicle:

- Reducing vehicle speed
- Avoiding hard accelerations
- Avoiding steep uphill grades

If the light stops flashing and remains on steady, see "If the Light Is On Steady" following.

If the light continues to flash, when it is safe to do so, stop the vehicle. Find a safe place to park your vehicle. Turn the engine off, wait at least 10 seconds and restart the engine. If the light remains on steady, see "If the Light Is On Steady" following. If the light is still flashing, follow the previous steps, and see your dealer for service as soon as possible.

If the Light Is On Steady

You also may be able to correct the emission system malfunction by considering the following:

Did you recently put fuel into your vehicle?

If so, reinstall the fuel cap, making sure to fully install the cap. See *Filling the Tank on page 5-8*. The diagnostic system can determine if the fuel cap has been left off or improperly installed. A loose or missing fuel cap will allow fuel to evaporate into the atmosphere. A few driving trips with the cap properly installed should turn the light off.

Did you just drive through a deep puddle of water?

If so, your electrical system may be wet. The condition will usually be corrected when the electrical system dries out. A few driving trips should turn the light off.

Have you recently changed brands of fuel?

If so, be sure to fuel your vehicle with quality fuel. See *Gasoline Octane on page 5-5*. Poor fuel quality will cause your engine not to run as efficiently as designed. You may notice this as stalling after start-up, stalling when you put the vehicle into gear, misfiring, hesitation on acceleration, or stumbling on acceleration. (These conditions may go away once the engine is warmed up.) This will be detected by the system and cause the light to turn on.

If you experience one or more of these conditions, change the fuel brand you use. It will require at least one full tank of the proper fuel to turn the light off.

If none of the above steps have made the light turn off, your dealer can check the vehicle. Your dealer has the proper test equipment and diagnostic tools to fix any mechanical or electrical problems that may have developed.

Emissions Inspection and Maintenance Programs

Some state/provincial and local governments have or may begin programs to inspect the emission control equipment on your vehicle. Failure to pass this inspection could prevent you from getting a vehicle registration.

Here are some things you need to know to help your vehicle pass an inspection:

Your vehicle will not pass this inspection if the Check Engine light is on or not working properly.

To perform a Check Engine light bulb check with the keyless ignition, make sure the transmitter fob is in the passenger compartment. See *Ignition Positions on page 2-24*. Press the bottom of the ACC button on the instrument panel and hold the button down for five seconds. The instrument panel, including the Check Engine light, will light up and the ignition will be on, but the engine will not start — if you press the bottom of the ACC button only briefly, less than five seconds, the accessory mode will be turned on, but not the ignition. After the bulb check, be sure to press and release the ACC button again to turn the ignition off and avoid draining the vehicle's battery.

Your vehicle will not pass this inspection if the OBD (on-board diagnostic) system determines that critical emission control systems have not been completely diagnosed by the system. The vehicle would be considered not ready for inspection. This can happen if you have recently replaced your battery or if your battery has run down. The diagnostic system is designed to evaluate critical emission control systems during normal driving. This may take several days of routine driving. If you have done this and your vehicle still does not pass the inspection for lack of OBD system readiness, your GM dealer can prepare the vehicle for inspection.

Oil Pressure Light

⚠ CAUTION:

Do not keep driving if the oil pressure is low. If you do, your engine can become so hot that it catches fire. You or others could be burned. Check your oil as soon as possible and have your vehicle serviced.

Notice: **Lack of proper engine oil maintenance may damage the engine. The repairs would not be covered by your warranty. Always follow the maintenance schedule in this manual for changing engine oil.**

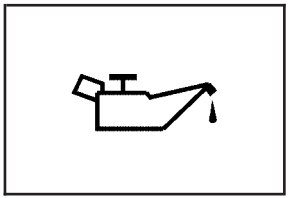

If equipped, this light tells you if there could be a problem with your engine oil pressure.

This light will come on briefly when you start your engine. That is a check to be sure the light works. If it does not come on, be sure to have it fixed so it will be there to warn you if something goes wrong.

When the light comes on and stays on, it means that oil is not flowing through your engine properly. You could be low on oil and you might have some other system problem.

Security Light

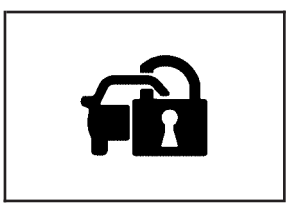

For information regarding this light, see *Theft-Deterrent System on page 2-21*.

Fog Lamp Light

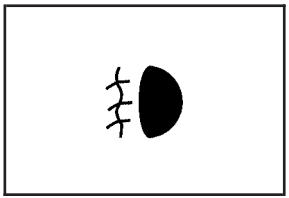

The fog lamps light will come on when the fog lamps are in use.

The light will go out when the fog lamps are turned off. See *Fog Lamps on page 3-37* for more information.

Lights On Reminder

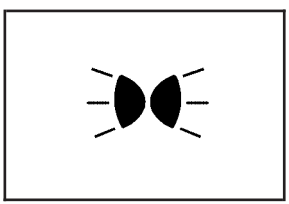

This light comes on whenever the parking lamps are on.

See *Headlamps on Reminder on page 3-35* for more information.

Cruise Control Light

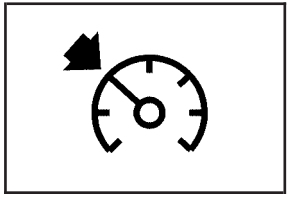

This light comes on whenever you set your cruise control.

The light will go out when the cruise control is turned off. See *Cruise Control on page 3-16* and *Adaptive Cruise Control on page 3-19* for more information.

Highbeam On Light

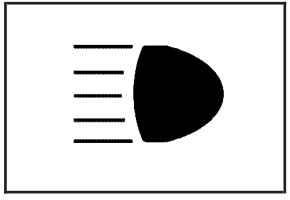

This light comes on whenever the high-beam headlamps are on.

See “Intellibeam™ Intelligent High-Beam Headlamp Control System” under *Headlamps on page 3-31* and *Headlamp High/Low-Beam Changer on page 3-8* for more information.

Fuel Gage

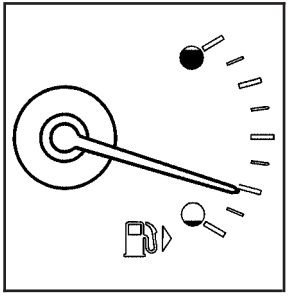

The fuel gage shows approximately how much fuel is in the tank. It works only when the engine is on.

If the fuel supply gets low, the Full Level Low message will appear on the DIC and a single chime will sound. See *DIC Warnings and Messages on page 3-79* for more information.

Here are a few concerns some owners have had about the fuel gage. All of these situations are normal and do not indicate that anything is wrong with the fuel gage:

- At the gas station the gas pump shuts off before the gage reads full.
- The gage may change when you turn, stop quickly or accelerate quickly.
- It takes a little more or less fuel to fill the tank than the gage indicated. For example, the gage may have indicated that the tank was half full, but it actually took a little more or less than half the tank’s capacity to fill the tank.

Driver Information Center (DIC)

The Driver Information Center (DIC) gives you the status of many of your vehicle's systems. The DIC is also used to display warning/status messages. All messages will appear in the DIC display located at the bottom of the instrument panel cluster, below the tachometer and speedometer. The DIC buttons are located on the instrument panel, to the left of the steering wheel.

The DIC comes on when the ignition is on. After a short delay, the DIC will display the current driver and the information that was last displayed before the engine was turned off.

The top line of the DIC display shows the vehicle system information and the warning/status messages. The bottom line of the DIC display shows either the odometer, the trip odometer A or the trip odometer B information on the left side. Only one odometer can appear at a time. See "Trip Information" under *DIC Controls and Displays on page 3-74* for information on changing the display to show the odometer or trip odometer information. The bottom line of the DIC display also shows the outside temperature on the right side and the shift lever position indicator in the center. See *Automatic Transmission Operation (STS) on page 2-28* or *Automatic Transmission Operation (STS-V) on page 2-32* for more information on the shift lever positions.

When the sport mode is active, an S will appear next to the shift position indicator on the center of the DIC display. When the manual mode is active, an M will appear on the DIC display. When the normal mode is active, only the shift position indicator will appear. While the Driver Shift Control (DSC) feature is active, the DIC will change to show the selected gear. See "Driver Shift Control (DSC)" under *Automatic Transmission Operation (STS) on page 2-28* or *Automatic Transmission Operation (STS-V) on page 2-32* for more information.

If a problem is detected, a warning message will appear on the display. Be sure to take any message that appears on the display seriously and remember that clearing the message will only make the message disappear, not correct the problem.

DIC Controls and Displays

The Driver Information Center (DIC) has different modes which can be accessed by pressing the four DIC buttons located on the instrument panel, to the left of the steering wheel.

DIC Buttons (Base Level)

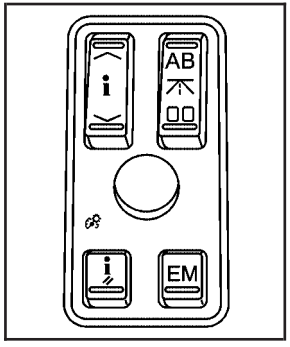

If your vehicle does not have a Head-Up Display (HUD), these are the buttons for your DIC.

∧ i ∨ (Information): Press the top or bottom of this button to scroll through the available vehicle information displays which include digital speed display, if your vehicle has this feature, fuel range, fuel economy, fuel used, average speed, timer, battery voltage, tire pressure, if your vehicle has a tire pressure monitor (TPM) system, and engine oil life, if your vehicle has this feature.

If you have an STS-V, the DIC also has additional vehicle information displays which include engine boost, engine oil temperature, oil pressure, and transmission fluid temperature.

See “MPH (km)” later in this section for more information on the digital speed display.

AB 00 (Trip Information): Press the top of this button to scroll through the odometer, trip odometer A and trip odometer B. Press and hold the bottom of this button to reset each trip odometer back to zero.

i // (Reset): Press this button to reset certain DIC features and to acknowledge DIC warning messages and clear them from the DIC display.

EM (English/Metric): Press this button to change the display from English to metric.

DIC Buttons (Uplevel)

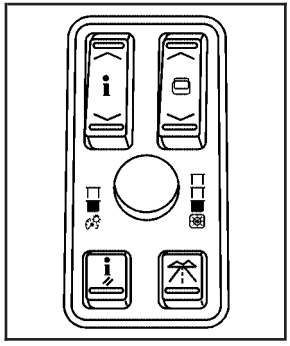

If your vehicle has a HUD, these are the buttons for your DIC.

∧ i ∨ **(Information):** Press the top or bottom of this button to scroll through the available vehicle information displays which include digital speed display, if your vehicle has this feature, fuel range, fuel economy, fuel used, average speed, timer, battery voltage, tire pressure, if your vehicle has a tire pressure monitor (TPM) system, engine oil life, if your vehicle has this feature, and display units. See “MPH (km)” later in this section for more information on the digital speed display.

∧ ▭ ∨ **(Head-Up Display):** Press this button to change the position of the HUD on the windshield. Press the top part of the button to move the HUD image up. Press the bottom part of the button to move the HUD image down.

To adjust the brightness of the HUD image, see *Head-Up Display (HUD) on page 3-40*.

For information on adjusting the instrument panel brightness, see *Instrument Panel Brightness on page 3-39*.

i // **(Reset):** Press this button to reset certain DIC features and to acknowledge DIC warning messages and clear them from the DIC display.

(Trip Information): Press this button to scroll through the odometer, trip odometer A and trip odometer B. To reset each trip odometer, either press the reset button or press and hold the trip information button until the trip odometer displayed returns to zero.

Information Display Menu Items

The following display menu items can be displayed by pressing the information button.

MPH (km/h)

If your vehicle has this display, it shows the vehicle's speed digitally in either miles per hour (mph) or kilometers per hour (km/h).

MILES RANGE (km RANGE)

This display shows the approximate number of remaining miles (mi) or kilometers (km) you can drive without refilling your fuel tank. This estimate is based on the current driving conditions and will change if the driving conditions change. For example, if you are driving in traffic making frequent stops, the display may read one number, but if you enter the freeway, the number may change even though you still have the same amount of fuel in the fuel tank. This is because different driving conditions produce different fuel economies. Generally, freeway driving produces better fuel economy than city driving.

Once the range drops below approximately 40 miles (64 km) remaining, the display will show LOW RANGE.

If your vehicle is low on fuel, the Fuel Level Low message will be displayed. See "Fuel Level Low" under *DIC Warnings and Messages on page 3-79* for more information.

MPG AVG (L/100 km AVG)

This display shows the approximate average miles per gallon (mpg) or liters per 100 kilometers (L/100 km). This number is calculated based on the number of mpg (L/100 km) recorded since the last time this display was reset. To reset MPG AVG, press the reset button. The display will return to zero.

MPG INST (L/100 km INST)

This display shows the current fuel economy. This number reflects only the fuel economy that the vehicle has right now and will change frequently as driving conditions change. Unlike average fuel economy, this display cannot be reset.

GAL FUEL USED (L FUEL USED)

This display shows the number of gallons (gal) or liters (L) of fuel used since the last reset of this display. To reset GAL FUEL USED, press the reset button. The display will return to zero.

AVG MPH (AVG km/h)

This display shows the average speed of the vehicle in miles per hour (mph) or kilometers per hour (km/h). This average is calculated based on the various vehicle speeds recorded since the last reset of this display. To reset AVG MPH, press the reset button. The display will return to zero.

TIMER OFF

This display can be used like a stopwatch. You can record the time it takes to travel from one point to another. To access the timer, press the information button until 00:00:00 TIMER OFF displays. To turn on the timer, press the reset button until TIMER ON displays. The timer will then start. To turn off the timer, press the reset button again until TIMER OFF displays. The timer will stop and display the end timing value. To reset the timer, press and hold the reset button after the timer has been stopped. The display will return to zero.

BATTERY VOLTS

This display shows the current battery voltage. If the voltage is in the normal range, the value will display. For example, the display may read 13.2 BATTERY VOLTS. If the voltage is low, the display will have LOW after it. If the voltage is high, the display will have HIGH after it. Your vehicle's charging system regulates voltage based on the state of the battery. The battery voltage may fluctuate when viewing this information on the DIC. This is normal. See *Charging System Light on page 3-63* for more information.

If there is a problem with the battery charging system, the DIC may display a message. See *DIC Warnings and Messages on page 3-79* for more information.

Tire Pressure

If your vehicle has a tire pressure monitor (TPM) system, this display shows the air pressure of each road tire in either pounds per square inch (psi) or kilopascals (kPa). If the tire pressure is normal, the value will display. If the tire pressure is low, LOW will appear on the display with the value. If the tire pressure is high, HIGH will appear on the display with the value. Press the information button to scroll through the following displays:

LF TIRE: This display shows the air pressure in the driver's side front tire.

RF TIRE: This display shows the air pressure in the passenger's side front tire.

LR TIRE: This display shows the air pressure in the driver's side rear tire.

RR TIRE: This display shows the air pressure in the passenger's side rear tire.

If the tire pressure display shows dashes instead of a value, there may be a problem with your vehicle. If this consistently occurs, see your GM dealer for service.

ENGINE OIL LIFE

If your vehicle has this display, it shows the estimated oil life remaining. If you see 99% ENGINE OIL LIFE on the display, that means that 99% of the current oil life remains.

When the oil life is depleted, the CHANGE ENGINE OIL SOON message will appear on the display. You should change your oil as soon as possible. In addition to the engine oil life system monitoring the oil life, additional maintenance is recommended in the Maintenance Schedule in this manual. See *Scheduled Maintenance on page 6-4* and *Engine Oil on page 5-18*.

After an oil change, reset the ENGINE OIL LIFE display. To reset, see *Engine Oil Life System on page 5-24*. The display will show 100% ENGINE OIL LIFE after it has been reset. Also clear the CHANGE ENGINE OIL SOON message from the display.

ENGLISH DISPLAY UNITS (METRIC DISPLAY UNITS)

This display allows you to select between English and metric units of measurement if your vehicle has the uplevel DIC. Press the reset button to switch between English and metric units.

Blank Line

This display shows no information.

ENGINE BOOST (STS-V Only)

This display shows a graphic that indicates the amount of boost the engine is receiving in either pounds per square inch (psi) or kilopascals (kPa).

ENGINE OIL TEMPERATURE (STS-V Only)

This display shows the engine oil temperature in either degrees Fahrenheit (°F) or degrees Celsius (°C).

OIL PRESSURE (STS-V Only)

This display shows the oil pressure in either pounds per square inch (psi) or kilopascals (kPa).

TRANS (Transmission) FLUID TEMP (Temperature) (STS-V Only)

This display shows the transmission fluid temperature in either degrees Fahrenheit (°F) or degrees Celsius (°C).

Trip Information Display Menu Items

The following display menu items can be displayed by pressing the trip Information button.

Odometer

Press the trip information button until the odometer appears on the DIC display. The odometer shows the total distance the vehicle has been driven in either miles (mi) or kilometers (km).

Trip Odometer

Press the trip information button until trip odometer A or B appears on the DIC display. The trip odometer shows the current distance traveled since the last reset for each trip odometer in either miles (mi) or kilometers (km). Both odometers can be used at the same time.

For base level vehicles, each trip odometer can be reset to zero separately by pressing and holding the bottom of the trip information button while the desired trip odometer is displayed. For uplevel vehicles, reset each trip odometer by pressing the reset button or by pressing and holding the trip information button while the desired trip odometer is displayed.

DIC Warnings and Messages

These messages will appear if there is a problem detected in one of your vehicle's systems. The text messages are the same for both the base audio and Navigation systems unless otherwise indicated.

You must acknowledge a message to clear it from the screen for further use. To clear a message, press the reset button.

Be sure to take any message that appears on the screen seriously and remember that clearing the message will only make the message disappear, not the problem.

AUTOMATIC LIGHTS OFF

This message will display when the automatic headlamps are turned off. See *Headlamps on page 3-31* for more information.

AUTOMATIC LIGHTS ON

This message will display when the automatic headlamps are turned on. See *Headlamps on page 3-31* for more information.

BATTERY NOT CHARGING SERVICE CHARGING SYS (System)

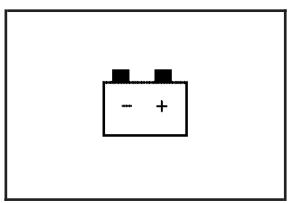

This symbol appears with the BATTERY NOT CHARGING SERVICE CHARGING SYS message.

This message will display when a problem with the charging system has been detected. Have your vehicle serviced by your GM dealer.

BATTERY SAVER ACTIVE

This message will display when the system detects that the battery voltage is dropping beyond a reasonable level. The battery saver system will start reducing certain features of the vehicle that you may not be able to notice. At the point that the features are disabled, this message is displayed. It means that the vehicle is trying to save the charge in the battery.

Turn off all unnecessary accessories to allow the battery to recharge.

The normal battery voltage range is 11.5 to 15.5 volts. You can monitor battery voltage on the DIC by pressing the information button until you find BATTERY VOLTS.

BATTERY VOLTAGE HIGH

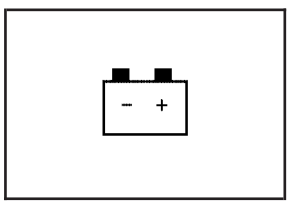

This symbol appears with the BATTERY VOLTAGE HIGH message.

This message will display when the electrical charging system is overcharging the battery. When the system detects that the battery voltage is above approximately 16 volts, this message will be displayed.

To reduce the charging overload, use the vehicle's accessories. Turn on the exterior lamps and radio, set the climate control on AUTO and the fan speed on the highest setting, and turn the rear window defogger on.

The normal battery voltage range is 11.5 to 15.5 volts when the engine is running. You can monitor battery voltage on the DIC by pressing the information button until you find BATTERY VOLTS.

BATTERY VOLTAGE LOW

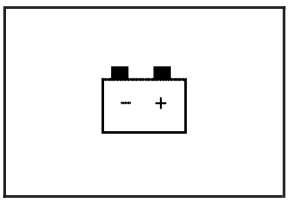

This symbol appears with the BATTERY VOLTAGE LOW message.

When this message displays, the electrical system is charging less than 10 volts or the battery has been drained.

If this message appears immediately after starting the engine, it is possible that the generator can still recharge the battery. The battery should recharge while driving but may take a few hours to do so. Consider using an auxiliary charger to boost the battery after returning home or to a final destination. Make sure you follow the manufacturer's instructions.

If this message appears while driving or after starting your vehicle and stays on, have it checked immediately to determine the cause of this problem.

To help the generator recharge the battery quickly, you can reduce the load on the electrical system by turning off the accessories.

The normal battery voltage range is 11.5 to 15.5 volts. You can monitor battery voltage on the DIC by pressing the information button until you find BATTERY VOLTS.

CHANGE ENGINE OIL SOON

When this message displays, it means that service is required for your vehicle. See your GM dealer. See *Engine Oil on page 5-18* and *Scheduled Maintenance on page 6-4* for more information.

When you reset the CHANGE ENGINE OIL SOON message by clearing it from the display, you still must reset the engine oil life system separately. For more information on resetting the engine oil life system, see *Engine Oil Life System on page 5-24*.

CHECK BRAKE FLUID

This message will display if the ignition is on to inform the driver that the brake fluid level is low. Have the brake system serviced by your GM dealer as soon as possible. See *Brake System Warning Light on page 3-64* for more information.

CHECK COOLANT LEVEL

This message will display when there is a low level of engine coolant. Have the cooling system serviced by your GM dealer as soon as possible. See *Engine Coolant on page 5-27* for more information.

CHECK GAS CAP

When this message displays, the gas cap has not been fully tightened. You should recheck the gas cap to ensure that it is on and tightened properly.

CHECK OIL LEVEL

This message will display when the oil level is low. See *Engine Oil on page 5-18* for more information on checking your engine oil.

CHECK TIRE PRESSURE

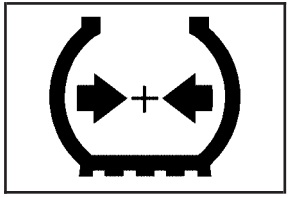

This symbol appears with the CHECK TIRE PRESSURE message.

If your vehicle has a Tire Pressure Monitor (TPM) system, this message will display when one or more of the vehicle's tires are low or high. See *DIC Controls and Displays on page 3-74* for information on checking your vehicle's tire pressures.

CHECK WASHER FLUID

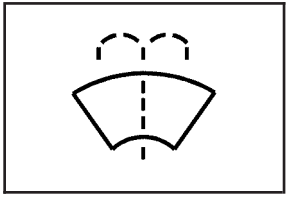

This symbol appears with the CHECK WASHER FLUID message.

When this message displays, it means that your vehicle is low on windshield washer fluid. You should refill the tank as soon as possible. See *Windshield Washer Fluid on page 5-41* for more information.

CLEAN RADAR

When this message displays, it means that the Adaptive Cruise Control system is disabled because the radar is blocked and cannot detect vehicles in your path. It may also activate during heavy rain or due to road spray. To clean the system, see "Cleaning the System" under *Adaptive Cruise Control on page 3-19*.

COMPETITIVE DRIVING (STS-V Only)

When this message displays, it means that the competitive driving mode is turned on with the traction control button. The TC (traction control) light will be on when the competitive driving mode is on. The traction control system will not operate while in competitive driving mode. You should adjust your driving accordingly. See *Competitive Driving Mode (STS-V) on page 4-10* for more information.

DRIVER DOOR AJAR

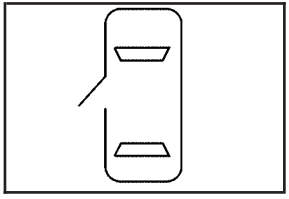

This symbol appears with the DRIVER DOOR AJAR message.

When this message displays, it means that the driver's door was not closed completely. You should make sure that the driver's door is closed completely.

ENGINE COOLANT HOT IDLE ENGINE

Notice: **If you drive your vehicle while the engine is overheating, severe engine damage may occur. If an overheat warning appears on the instrument panel cluster and/or DIC, stop the vehicle as soon as possible. Do not increase the engine speed above normal idling speed. See *Engine Overheating on page 5-31* for more information.**

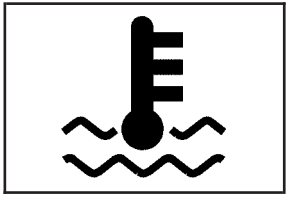

This symbol appears with the ENGINE COOLANT HOT IDLE ENGINE message.

This message will display when the engine coolant temperature is too hot. Stop and allow the vehicle to idle until it cools down. See *Engine Coolant Temperature Warning Light on page 3-66*.

See *Overheated Engine Protection Operating Mode on page 5-32* for information on driving to a safe place in an emergency.

ENGINE HOT – AC (Air Conditioning) OFF

This message will display when the engine coolant becomes hotter than the normal operating temperature. See *Engine Coolant Temperature Gage on page 3-67*. To avoid added strain on a hot engine, the air conditioning compressor is automatically turned off. When the coolant temperature returns to normal, the air conditioning compressor will turn back on. You can continue to drive your vehicle.

If this message continues to appear, have the system repaired by your GM dealer as soon as possible to avoid damage to your engine.

ENGINE OVERHEATED STOP ENGINE

Notice: **If you drive your vehicle while the engine is overheating, severe engine damage may occur. If an overheat warning appears on the instrument panel cluster and/or DIC, stop the vehicle as soon as possible. Do not increase the engine speed above normal idling speed. See *Engine Overheating on page 5-31* for more information.**

This message will display when the engine has overheated. Immediately look for a safe place to pull your vehicle over and turn the engine off right away to avoid severe engine damage. See *Engine Overheating on page 5-31* and *Overheated Engine Protection Operating Mode on page 5-32*. A chime will also sound when this message is displayed.

ENGINE POWER REDUCED

This message informs you that the engine power is being reduced to protect the engine from damage. There could be several malfunctions that might cause this message. Have your vehicle serviced by your GM dealer as soon as possible.

FUEL LEVEL LOW

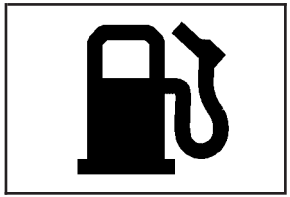

This symbol appears with the FUEL LEVEL LOW message.

When this message displays, it means that your vehicle is low on fuel. You should refill the tank as soon as possible. A single chime will sound when this message is displayed.

HOOD AJAR

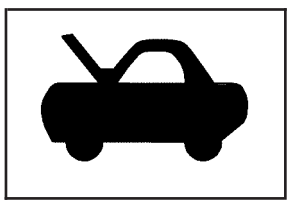

This symbol appears with the HOOD AJAR message.

When this message displays, it means that the hood was not closed completely. You should make sure that the hood is completely closed.

ICE POSSIBLE

This message will display when the outside temperature is cold enough to create icy road conditions.

KEY FOB BATTERY LOW

When this message displays, it means that the battery in your keyless access transmitter is low. Replace the battery in the transmitter. See “Battery Replacement” under *Keyless Access System Operation on page 2-5*.

LEFT REAR DOOR AJAR

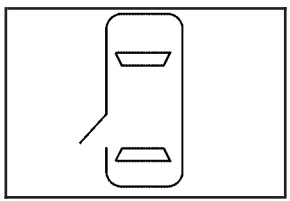

This symbol appears with the LEFT REAR DOOR AJAR message.

When this message displays, it means that the driver’s side rear door was not closed completely. You should make sure that the door is closed completely.

NO FOBS DETECTED

This message is displayed if the vehicle does not detect the presence of a keyless access transmitter when you have attempted to start the vehicle or a vehicle door has just closed. The following conditions may cause this message to appear:

- Driver-added equipment plugged into the accessory power outlet on the center console is causing interference. Examples of these devices are cell phones and cell phone chargers, two-way radios, power inverters, or similar items. Try moving the keyless access transmitter away from these devices when starting the vehicle. In addition, PDA devices and remote garage and gate openers may also generate Electromagnetic Interference (EMI) that may interfere with the keyless access transmitter. Do not carry the keyless access transmitter in the same pocket or bag as these devices.
- The vehicle is experiencing Electromagnetic Interference (EMI). Some locations, such as airports, automatic toll booths, and some gas stations, have EMI fields which may interfere with your keyless access transmitter.

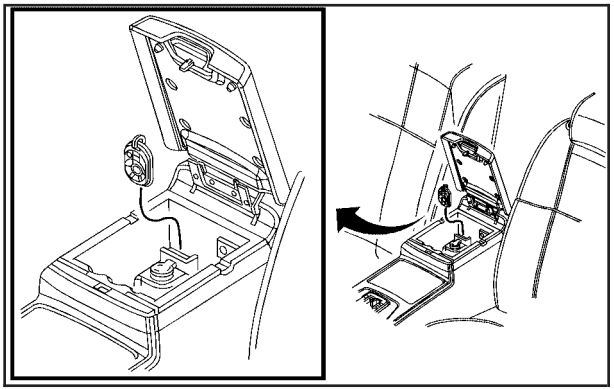

If moving the transmitter to different locations within the vehicle does not help, place the transmitter in the center console transmitter pocket with the buttons facing forward and then press the START button.

NO FOB OFF OR RUN?

When this message displays, it means that the keyless access transmitter is not detected inside the vehicle while you are trying to turn the ignition off. Your vehicle may be near a strong radio antenna signal causing the keyless access system to be jammed. The vehicle will remain in ACC until OFF or START has been pressed or 10 minutes has expired. If you turn the ignition off and you cannot find the keyless access transmitter, you will not be able to restart the vehicle. The keyless access transmitter needs to be inside of the vehicle in order for the vehicle to start. See *Starting the Engine on page 2-25* for more information.

OIL PRESSURE LOW STOP ENGINE

Notice: **If you drive your vehicle while the engine oil pressure is low, severe engine damage may occur. If a low oil pressure warning appears on the instrument panel cluster and/or DIC, stop the vehicle as soon as possible. Do not drive the vehicle until the cause of the low oil pressure is corrected. See *Engine Oil on page 5-18* for more information.**

A multiple chime will sound when this message is displayed. See *Engine Oil on page 5-18* for more information.

PASSENGER DOOR AJAR

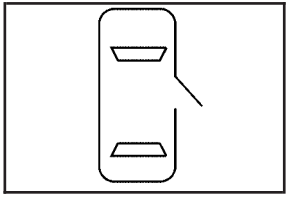

This symbol appears with the PASSENGER DOOR AJAR message.

When this message displays, it means that the passenger's side front door was not closed completely. You should make sure that the door is closed completely.

PRESS START AND BRAKE TO START ENGINE

When this message displays, it means that you need to press down on the brake pedal while pressing the start button on the electronic keyless ignition when trying to start your vehicle. See *Starting the Engine on page 2-25* for more information.

RADAR CRUISE NOT READY

When this message displays, it means that the Adaptive Cruise Control system will not activate due to a temporary condition. Your vehicle does not require service. This message will also display when either of the following conditions occurs:

- The driver turns off the head-up display (HUD) while the Adaptive Cruise Control is engaged.
- The driver attempts to engage the Adaptive Cruise Control while the HUD is off.

If this message appears when you attempt to activate the system, continue driving for several minutes and then try activating the system again.

RIGHT REAR DOOR AJAR

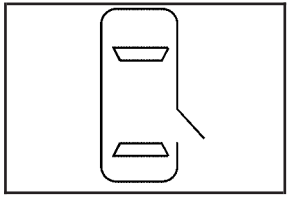

This symbol appears with the RIGHT REAR DOOR AJAR message.

When this message displays, it means that the passenger's side rear door was not closed completely. You should check to make sure that the door is closed completely.

SERVICE AC (Air Conditioning) SYSTEM

This message will display when the electronic sensors that control the air conditioning and heating systems are no longer working. Have the climate control system serviced by your GM dealer if you notice a drop in heating and air conditioning efficiency.

SERVICE AIR BAG

This message will display when there is a problem with the airbag system. Have your vehicle serviced by your GM dealer immediately. See *Airbag Readiness Light on page 3-60* for more information.

SERVICE BRAKE ASSIST

This message will display when a problem with the panic brake assist system has been detected. Have your vehicle serviced by your GM dealer.

SERVICE RADAR CRUISE

When this message displays, it means that the Adaptive Cruise Control system is disabled and needs service. See your GM dealer.

SERVICE STABILITY SYS (System)

Your vehicle may have a vehicle stability enhancement system called StabiliTrak®.

See *StabiliTrak® System on page 4-11*. The SERVICE STABILITY SYS message will display if there has been a problem detected with StabiliTrak®.

If the SERVICE STABILITY SYS message comes on while you are driving, pull off the road as soon as possible and stop carefully. Try resetting the system by turning the ignition off then back on. If the SERVICE STABILITY SYS message still stays on or comes back on again while you are driving, your vehicle needs service. Have the StabiliTrak® System inspected by your GM dealer as soon as possible.

SERVICE STEERING SYS (System)

Your vehicle may have a speed variable assist steering system. See *Steering on page 4-12*.

The SERVICE STEERING SYS message will display if a problem is detected with the speed variable assist steering system. When this message is displayed, you may notice that the effort required to steer the vehicle increases or feels “heavier,” but you will still be able to steer the vehicle.

SERVICE SUSPENSION SYS (System)

This message will display when the suspension system is not operating properly. Have your vehicle serviced by your GM dealer.

SERVICE TIRE MONITOR

If your vehicle has a Tire Pressure Monitor (TPM) system, this message will display if the TPM system is not working properly. Have your vehicle serviced by your GM dealer as soon as possible.

SERVICE THEFT SYSTEM

This message will display when there is a problem with the hood open and closed switches. The switches may need to be replaced. When this message is displayed, the theft-deterrent system will still be protecting the interior of the vehicle, however, the hood area will not be protected at this time. Also, the remote start function will not work when this message appears. See your GM dealer for service.

SERVICE TRANSMISSION

This message will display when there is a problem with the transmission of your vehicle. Have your vehicle serviced by your GM dealer.

SERVICE VEHICLE SOON

This message will display when a non-emissions related malfunction occurs. Have your vehicle serviced by your GM dealer as soon as possible.

SPEED LIMITED TO XXX

This message will display when your vehicle speed is limited to XXX, mph in English mode and km/h in Metric mode, because the vehicle detects a problem in the suspension system. Have your vehicle serviced by your GM dealer.

STABILITY SYS (System) ACTIVE

The STABILITY SYS ACTIVE message will display any time StabiliTrak® is actively assisting you with directional control of the vehicle. Slippery road conditions may exist when this message is displayed, so adjust your driving accordingly. This message may stay on for a few seconds after StabiliTrak® stops assisting you with directional control of the vehicle. See *StabiliTrak® System on page 4-11* for more information.

STABILITY SYS (System) NOT READY

The STABILITY SYS NOT READY message will display if StabiliTrak® is not ready. Two conditions may cause this message to display.

The first condition may be that the vehicle needs to be driven in a straight line until the sensors are centered. Once the sensors are centered, the StabiliTrak® system will be ready and the STABILITY SYS READY message will display.

The second condition that may cause this message to display is when you first start your vehicle and drive away during cold winter weather. This is normal. The system needs to warm up. You can acknowledge this message by pressing the reset button.

The StabiliTrak® performance is affected until the STABILITY SYS READY message is displayed in the DIC. See *StabiliTrak® System on page 4-11* for more information.

STABILITY SYS (System) OFF

The STABILITY SYS OFF message will display any time you turn off StabiliTrak® using the TC (traction control) on/off button. See *Traction Control System (TCS) on page 4-9* for more information. When this message has been displayed, StabiliTrak® is no longer available to assist you with directional control of the vehicle. Adjust your driving accordingly. See *StabiliTrak® System on page 4-11* for more information.

STABILITY SYS (System) READY

The STABILITY SYS READY message will display any time you turn back on StabiliTrak® using the TC (traction control) on/off button. See *Traction Control System (TCS) on page 4-9* for more information. When this message has been displayed, StabiliTrak® is ready to assist you with directional control of the vehicle if needed. See *StabiliTrak® System on page 4-11* for more information.

STARTING DISABLED THEFT PROBLEM

This message will display when incorrect conditions exist within the theft-deterrent system. See your GM dealer for service.

STARTING DISABLED THROTTLE PROBLEM

This message will display when your vehicle's throttle system is not functioning properly. Have your vehicle serviced by your GM dealer.

THEFT ATTEMPTED

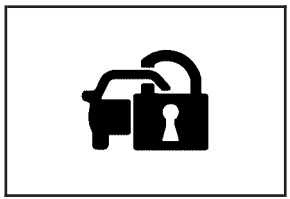

This symbol appears with the THEFT ATTEMPTED message.

This message will display if the theft-deterrent system has detected a break-in attempt while you were away from your vehicle.

TRACTION ACTIVE

This message will display when the traction control system is actively limiting wheel spin. Slippery road conditions may exist if this message is displayed, so adjust your driving accordingly. The message will stay on for a few seconds after the traction control system stops limiting wheel spin. See *Traction Control System (TCS) on page 4-9* for more information.

TRANS (Transmission) HOT IDLE ENGINE

This message will display when the transmission fluid in your vehicle is too hot. Stop the vehicle and allow it to idle until the transmission cools down or until this message is removed.

TRUNK OPEN

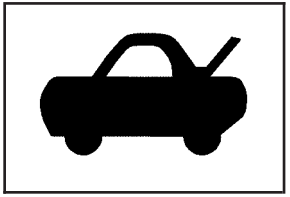

This symbol appears with the TRUNK OPEN message.

When this message displays, it means that the trunk was not closed completely. You should make sure that the trunk is closed completely.

TURN SIGNAL ON

If you drive your vehicle for more than about 1 mile (1.6 km) with a turn signal on, this message will display as a reminder to turn off the turn signal. A multiple chime will sound when this message is displayed.

Other Messages

Here are more messages that you can receive on your Driver Information Center (DIC). To acknowledge a message and read another message that may have come on at the same time, press the reset button.

- ACCESSORY ACTIVE

  See *Ignition Positions on page 2-24*.

- KNOWN FOB

  See “Matching Transmitter(s) to Your Vehicle” under *Keyless Access System Operation on page 2-5*.

- MAX # FOBS LEARNED

  See “Matching Transmitter(s) to Your Vehicle” under *Keyless Access System Operation on page 2-5*.

- OFF/ACC (Accessory) TO LEARN

  See “Matching Transmitter(s) to Your Vehicle” under *Keyless Access System Operation on page 2-5*.

- READY FOR FOB X

  See “Matching Transmitter(s) to Your Vehicle” under *Keyless Access System Operation on page 2-5*.

- SHIFT TO PARK

  See *Starting the Engine on page 2-25* and *Shifting Into Park (P) on page 2-36*.

- WAIT XX MIN (Minutes)

  See “Matching Transmitter(s) to Your Vehicle” under *Keyless Access System Operation on page 2-5*.

Audio System(s)

Driving without distraction is a necessity for a safer driving experience. See *Defensive Driving on page 4-2*. By taking a few moments to read this manual and get familiar with your vehicle's audio system, you can use it with less effort, as well as take advantage of its features. While your vehicle is parked, set up your audio system by presetting your favorite radio stations, setting the tone and adjusting the speakers. Then, when driving conditions permit, you can tune to your favorite stations using the presets and steering wheel controls (if equipped).

⚠ CAUTION:

This system provides you with a far greater access to audio stations and song listings. Giving extended attention to entertainment tasks while driving can cause a crash and you or others can be injured or killed. Always keep your eyes on the road and your mind on the drive — avoid engaging in extended searching while driving.

Keeping your mind on the drive is important for safe driving. For more information, see *Defensive Driving on page 4-2*. Get familiar with your vehicle's audio system so you can use it with less effort and take full advantage of its features.

Here are some ways in which you can help avoid distraction while driving.

While your vehicle is parked:

- Familiarize yourself with all of its controls.
- Familiarize yourself with its operation.
- Set up your audio system by presetting your favorite radio stations, setting the tone, and adjusting the speakers. Then, when driving conditions permit, you can tune to your favorite radio stations using the presets and steering wheel controls (if equipped).

Notice: **Before adding any sound equipment to your vehicle, such as an audio system, CD player, CB radio, mobile telephone, or two-way radio, make sure that it can be added by checking with your dealer. Also, check federal rules covering mobile radio and telephone units. If sound equipment can be added, it is very important to do it properly. Added sound equipment may interfere with the operation of your vehicle's engine, radio, or other systems, and even damage them. Your vehicle's systems may interfere with the operation of sound equipment that has been added.**

Notice: **The chime signals related to seat belts, parking brake, and other functions of your vehicle operate through the GM radio/entertainment system. If that equipment is replaced or additional equipment is added to your vehicle, the chimes may not work. Make sure that replacement or additional equipment is compatible with your vehicle before installing it. See *Accessories and Modifications on page 5-3*.**

Figure out which audio system is in your vehicle, find out what your audio system can do, and how to operate all of its controls.

Your vehicle has a feature called Retained Accessory Power (RAP). With RAP, the audio system can be played even after the ignition is turned off. See *Retained Accessory Power (RAP) on page 2-25* for more information.

Setting the Time

1. Press the tune/select knob (the right knob) to enter the main menu.
2. Turn the tune/select knob until SET CLOCK appears on the display.
3. Press the tune/select knob to select SET CLOCK.
4. Turn the tune/select knob to adjust the time.
5. Press the tune/select knob to update the time. VEHICLE TIME UPDATED will appear on the display.

If the CLOCK/RADIO DISP is configured into one of the configurable keys, pressing the key will switch the display back to the clock set function. The time and date will always appear on the radio display. See “Configurable Radio Display Keys” under *Radio with CD on page 3-96* for more information on configuring the keys.

Setting the Date

1. Press the tune/select knob (the right knob) to enter the main menu.
2. Turn the tune/select knob until SET DATE appears on the display.
3. Press the tune/select knob to select SET DATE.
4. Turn the tune/select knob to adjust the date.
5. Press the tune/select knob to update the time. VEHICLE DATE UPDATED will appear on the display.

If the DATE is configured into one of the configurable keys, pressing the key will switch the display back to the date set function. The time and date will always appear on the radio display. See “Configurable Radio Display Keys” under *Radio with CD on page 3-96* for more information on configuring the keys.

Radio with CD

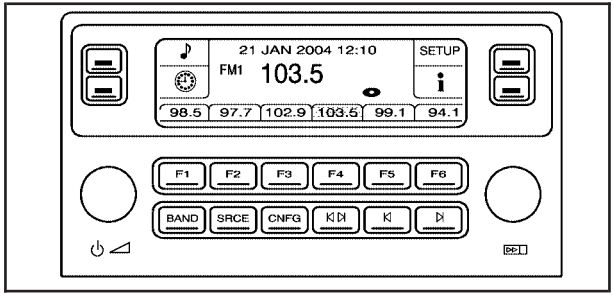

Radio with CD shown, Radio with Six-Disc CD similar

Radio Data System (RDS)

The audio system has a Radio Data System (RDS). RDS features are available for use only on FM stations that broadcast RDS information.

With RDS, the radio can do the following:

- Seek to stations broadcasting the selected type of programming
- Receive announcements concerning local and national emergencies
- Display messages from radio stations
- Seek to stations with traffic announcements

This system relies upon receiving specific information from these stations and will only work when the information is available. In rare cases, a radio station may broadcast incorrect information that will cause the radio features to work improperly. If this happens, contact the radio station.

While the radio is tuned to an RDS station, the station name or call letters will appear on the display instead of the frequency. RDS stations may also provide the time of day, a program type (PTY) for current programming, and the name of the program being broadcast.

XM™ Satellite Radio Service

XM™ is a satellite radio service that is based in the 48 contiguous United States and in Canada (if available). XM™ offers over 100 coast to coast channels including music, news, sports, talk, and children's programming. XM™ provides digital quality audio and text information, including song title and artist name. A service fee is required in order to receive the XM™ service. For more information, contact XM™ at www.xmradio.com or call 1-800-852-XMXM (9696).

i (Information): Press this button while in XM mode to retrieve three different categories of information related to the current song or channel: Artist, Song Title, Category or PTY. To view this information, perform the following:

1. Press the tune/select knob to enter the main menu.
2. Turn the tune/select knob until INFO appears on the display.
3. Press the tune/select knob to select INFO. The display will change to show the additional XM information.
4. Press the BACK (F6) button to exit the display. To return to the original display, repeatedly press the BACK (F6) button or wait for the display to time out.

Playing the Radio

(Power): Press this knob to turn the system on and off.

(Volume): Turn this knob to increase or to decrease the volume.

SRCE (Source): Press this button to select a source, either radio or CD. The CD must be loaded to select the source and to play. CD will appear on the display if a CD is loaded. If a CD is not loaded, the display will not change from the radio source.

Finding a Station

BAND: Press this button to select FM1, FM2, AM, or XM1 or XM2 (if equipped).

(Tune): Turn this knob to select radio stations.

(Seek): Press the left single arrow button to go to the previous station and stay there. Press the right single arrow button to go to the next station and stay there. The sound will mute while seeking.

The radio will only seek stations with a strong signal that are in the selected band.

(Scan): Press the double arrow scan button to enter scan mode. SCAN will appear on the display. Press this button to scan to the next station. The radio will go to a station, play for 5 seconds, then go on to the next station. Press this button again to stop scanning.

To scan preset stations, press and hold the double arrow scan button for more than two seconds until you hear a beep and PSCAN appears on the display. The radio will go to the first preset station, play for 5 seconds, then go on to the next preset station. Press this button again to stop scanning presets.

The radio will only scan stations with a strong signal that are in the selected band.

LOCAL/DISTANT Selection: With this feature you can set the radio to search for local stations or stations that are further away for a larger selection. To set this feature to LOCAL or DISTANT, perform the following steps:

1. Press the tune/select knob to enter the main menu.
2. Turn the tune/select knob until SEEK LOCAL or SEEK DISTANT appears on the display.
3. Press the tune/select knob to select either LOCAL or DISTANT.
4. Press the BACK (F6) button to exit the display. To return to the original display, repeatedly press the BACK (F6) button or wait for the display to time out.

To search for stations, press the single arrow buttons. If the system is set to LOCAL, SEEK will appear on the display and seek to stations with strong signals only. If the system is set to DISTANT, D-SEEK will appear on the display and seek to stations with weak and strong signals.

Setting Preset Stations

Up to 30 stations (six FM1, six FM2, and six AM, six XM1 and six XM2 (if equipped)), can be programmed on the six numbered pushbuttons, by performing the following steps:

1. Turn the radio on.
2. Press BAND to select FM1, FM2, or AM, or XM1 or XM2.
3. Tune in the desired station.
4. Press and hold one of the six numbered pushbuttons for two seconds until you hear a beep. The set preset station number will appear on the display above the pushbutton that it is set to. Whenever that numbered pushbutton is pressed for less than two seconds, the station that was set will return.
5. Repeat the steps for each pushbutton.

   To set the preset stations with an equalization setting, DSP setting, or a PTY setting, see each of these features later in this section. When a preset station is selected, once one of these additional settings is selected, the preset station will remember each setting and it will remain active, until the setting is selected off for that preset station.

AUTOSTORE PRESETS: To set the preset stations automatically, perform the following steps:

1. Turn the radio on.
2. Press BAND to select FM1, FM2, or AM.
3. Press the tune/select knob to enter the main menu.
4. Turn the tune/select knob until AUTOSTORE PRESETS appears on the display.

5. Press the tune/select knob to select. AUTOSTORE will appear on the display. The radio will automatically search the band and select and store the six radio stations with the strongest signal. The stations will be stored by signal strength, not sequential order. The set preset station number will appear on the display above the pushbutton that it is set to. Whenever that numbered pushbutton is pressed for less than two seconds, the station that was set will return.
6. Press the BACK (F6) button to exit the display. To return to the original display, repeatedly press the BACK (F6) button or wait for the display to time out.

When battery power is removed and later applied, you will not have to reset your radio presets.

PRESETS HOME/AWAY: This feature gives you the ability to store two different kinds of station presets. HOME can be used for stations available where you live and AWAY can be for stations available outside of your local broadcasting area. To set preset stations for home and away perform the following steps:

1. Press the tune/select knob to enter the main menu.
2. Turn the tune/select knob until PRESETS HOME/AWAY appears on the display.
3. Press the tune/select knob to select. HOME or AWAY will appear on the display.
4. Press the BACK (F6) button to exit the display. To return to the original display, repeatedly press the BACK (F6) button or wait for the display to time out.

Follow the manual or automatic steps previously listed for setting the preset pushbuttons for both home and away.

Setting the Tone (Bass/Treble)

To adjust the bass, midrange, and treble, perform the following steps:

1. Press the tune/select knob to enter the main menu.
2. Press the tune/select knob to scroll through the settings.
3. Turn the tune/select knob to increase or to decrease the bass, midrange, or treble. If a station is weak or noisy, decrease the treble.
4. Press the tune/select knob to set the adjustment.
5. Press the BACK (F6) button to exit the display. To return to the original display repeatedly press the BACK (F6) button or wait for the display to time out.

AUDIO EQUALIZER: This feature allows you to select customized equalization settings. To choose an equalization setting (EQ0 through EQ5), perform the following steps:

1. Press the tune/select knob to enter the main menu.
2. Turn the tune/select knob until EQUALIZER appears on the display.
3. Press the tune/select knob to set the equalization setting. The equalization setting will appear on the display.
4. Press the BACK (F6) button to exit the display. To return to the original display, repeatedly press the BACK (F6) button or wait for the display to time out.

The equalization settings are preset to EQ0 (Normal), EQ1 (Pop), EQ2 (Rock), EQ3 (Jazz), EQ4 (Talk), and EQ5 (Country).

Adjusting the Speakers (Balance/Fade)

To adjust the balance or fade, perform the following steps:

1. Press the tune/select knob to enter the main menu.
2. Turn the tune/select knob until BASS-MID-TREBLE appears on the display.
3. Press the tune/select knob to enter the tone settings.
4. Press the tune/select knob to scroll to BALANCE or FADER.
5. Turn the tune/select knob to adjust the BALANCE to the right or the left speakers and the FADER to the front or the rear speakers.
6. Press the tune/select knob to set the adjustment.
7. Press the BACK (F6) button to exit the display. To return to the original display, repeatedly press the BACK (F6) button or wait for the display to time out.

EQ0 will not appear on the display when in this mode.

RDS Messages

ALERT: Alert warns of local and national emergencies. When, an alert announcement comes on the current radio station or a related network station, ALERT will appear on the display. You will hear the announcement, even if the volume is low or a CD is playing. If a CD is playing, play will stop during the announcement. Alert announcements cannot be turned off. If the radio tunes to a related network station for the announcement, it will return to the original station when the announcement is finished.

ALERT will not be affected by tests of the emergency broadcast system. This feature is not supported by all RDS stations.

MSG (Message): If the current RDS station has a message, MSG will appear on the display. The message may display the artist, song title, call in phone numbers, etc. If the entire message does not appear on the display, parts of the message will appear every three seconds until the message is completed. Once the completed message has been displayed, MSG will disappear from the display until another new message is received.

To display the last message, perform the following steps:

1. Press the tune/select knob to enter the main menu.
2. Turn the tune/select knob until RECALL RDS MESSAGE appears on the display.
3. Press the tune/select knob. The message will appear on the display.

Once the message has been displayed, MSG will disappear from the display until another new message is received.

TP (Traffic Program): TP will appear on the display when the radio detects a signal from an RDS station that has traffic announcement broadcast capability.

TA (Traffic Announcement): If TA appears on the display, the tuned radio station broadcasts traffic announcements and when a traffic announcement comes on the tuned station you will hear it.

If the station does not broadcast traffic announcements, when TA is turned on it will seek to a station that does. When a station that broadcasts traffic announcements is found, the radio will stop seeking and TA will appear on the display. If no station is found that broadcasts traffic announcements, No Traffic will appear on the display.

The radio will play traffic announcements if the volume is low. The radio will interrupt the play of a CD if the last tuned station broadcasts traffic announcements.

To turn TA on or off, perform the following steps:

1. Press the tune/select knob to enter the main menu.
2. Turn the tune/select knob until TRAFFIC ANNOUNCE appears on the display.
3. Press the tune/select knob to select ON or OFF. An X will appear in the box when TA is selected on.
4. Press the BACK (F6) button to exit the display. To return to the original display, repeatedly press the BACK (F6) button or wait for the display to time out.

Activating Program Type (PTY) Stations (RDS and XM™)

PTY allows you to search for stations with specific types of music. The selectable PTYs are POP, EASY, TALK, CNTRY (Country), CLASS (Classical), and JAZZ.

To activate program types, perform the following steps:

1. Press the tune/select knob to enter the main menu.
2. Turn the tune/select knob until PROGRAM TYPE MODE appears on the display.
3. Press the tune/select knob to select ON or OFF. An X will appear in the box when PTY is selected on.
4. Press the BACK (F6) button to exit the display. To return to the original display, repeatedly press the BACK (F6) button or wait for the display to time out.

Once program type is activated the PTYs will appear on the display above the pushbuttons, in place of the preset stations (if programmed). Press the pushbutton for the PTY that you would like to listen to. Not all stations support PTYs. The radio may not go to all of the stations with that music type when pressing the pushbutton.

AF (Alternate Frequency): Alternate frequency allows the radio to switch to a stronger station with the same program type.

To turn AF on or off, perform the following steps:

1. Press the tune/select knob to enter the main menu.
2. Turn the tune/select knob until ALTERNATE FREQ. appears on the display.
3. Press the tune/select knob to select AF OFF, AF ON, or AF REG. An X will appear in the box when AF is selected on.
4. Press the BACK (F6) button to exit the display. To return to the original display, repeatedly press the BACK (F6) button or wait for the display to time out.

Radio Message

THEFTLOCK: This message is displayed when the THEFTLOCK® system has been activated. Take the vehicle to the dealer for service.

XM™ Radio Messages

Radio Display Message	Condition	Action Required
XL (Explicit Language Channels)	XL on the radio display, after the channel name, indicates content with explicit language.	These channels, or any others, can be blocked at a customer's request, by calling 1-800-852-XMXM (9696).
XM Updating	Updating encryption code	The encryption code in the receiver is being updated, and no action is required. This process should take no longer than 30 seconds.
No XM Signal	Loss of signal	The system is functioning correctly, but the vehicle is in a location that is blocking the XM signal. When the vehicle is moved into an open area, the signal should return.
Loading XM	Acquiring channel audio (after 4 second delay)	The audio system is acquiring and processing audio and text data. No action is needed. This message should disappear shortly.
Channel Off Air	Channel not in service	This channel is not currently in service. Tune in to another channel.
Channel Unavail	Channel no longer available	This previously assigned channel is no longer assigned. Tune to another station. If this station was one of the presets, choose another station for that preset button.
No Artist Info	Artist Name/Feature not available	No artist information is available at this time on this channel. The system is working properly.

XM™ Radio Messages (cont'd)

Radio Display Message	Condition	Action Required
No Title Info	Song/Program Title not available	No song title information is available at this time on this channel. The system is working properly.
No CAT Info	Category Name not available	No category information is available at this time on this channel. The system is working properly.
Not Found	No channel available for the chosen category	There are no channels available for the selected category. The system is working properly.
No Information	No Text/Informational message available	No text or informational messages are available at this time on this channel. The system is working properly.
XM Lock	Theft lock active	The XM receiver in your vehicle may have previously been in another vehicle. For security purposes, XM receivers cannot be swapped between vehicles. If this message is received after having your vehicle serviced, check with your GM dealer.
XM Radio ID	Radio ID label (channel 0)	If tuned to channel 0, this message will alternate with the XM Radio 8 digit radio ID label. This label is needed to activate the service.
Unknown	Radio ID not known (should only be if hardware failure)	If this message is received when tuned to channel 0, there may be a receiver fault. Consult with your GM dealer.
Check XM Receiver	Hardware failure	If this message does not clear within a short period of time, the receiver may have a fault. Consult with your GM dealer.

Using the Single CD Player

Insert a CD partway into the slot, label side up. The player will pull it in. If the ignition and the radio are on, the CD will begin playing. A CD may be loaded with the radio off, but it will not start playing until the radio is on.

If the ignition or radio is turned off with a CD in the player, it will stay in the player. When the ignition or radio is turned on, the CD will start to play where it stopped, if it was the last selected audio source.

When the CD is inserted, CD will appear on the display. As each new track starts to play, the track number will appear on the display.

The CD player can play the smaller 3 inch (8 cm) single CDs with an adapter ring. Full-size CDs and the smaller CDs are loaded in the same manner.

If playing a CD-R, the sound quality may be reduced due to CD-R quality, the method of recording, the quality of the music that has been recorded, and the way the CD-R has been handled. There may be an increase in skipping, difficulty in finding tracks, and/or difficulty in loading and ejecting. If these problems occur, check the bottom surface of the CD. If the surface of the CD is damaged, such as cracked, broken, or scratched, the CD will not play properly. If the surface of the CD is soiled, see “Care of Your CDs” later in this section.

If there is no apparent damage, try a known good CD.

Do not add any label to a CD, it could get caught in the CD player. If a CD is recorded on a personal computer and a description label is needed, try labeling the top of the recorded CD with a soft marker instead.

Notice: **If you add any label to a CD, insert more than one CD into the slot at a time, or attempt to play scratched or damaged CDs, you could damage the CD player. When using the CD player, use only CDs in good condition without any label, load one CD at a time, and keep the CD player and the loading slot free of foreign materials, liquids, and debris.**

If an error appears on the display, see “CD Messages” later in this section.

When a CD is inserted, the CD functions will appear on the display above the pushbuttons, in place of the preset stations (if programmed).

F1 ≪ (Reverse): Press this pushbutton to go to the previous track. Press and hold this pushbutton to reverse quickly within a track. Release the pushbutton to play the passage. The elapsed time of the track will appear on the display.

F2 ≫ (Forward): Press this pushbutton to go to the next track. Press and hold this pushbutton to advance quickly within a track. Release the pushbutton to play the passage. The elapsed time of the track will appear on the display.

F3 RDM (Random): Press this pushbutton to listen to the tracks in random, rather than sequential, order. RANDOM will appear on the display. Press RDM again to turn off random play. RANDOM will disappear from the display.

F4 RPT (Repeat): Press this pushbutton to hear a track over again. REPEAT will appear on the display. Press RPT again to turn off repeat play. REPEAT will disappear from the display.

F6 DISP (Display): Press this pushbutton to display the time of the track. Press this pushbutton again to remove the time of the track from the display.

⏮ ⏭ **(Seek):** Press the left single arrow button to go to the previous or press the right single arrow button to go to the next track on the CD.

⏮ ⏭ **(Scan):** Press the double arrow button to listen to each track for 10 seconds. The CD will go to a track, play for 10 seconds, then go on to the next track. Press this button again to stop scanning.

SRCE (Source): Press this button to select a source, either radio or CD. The CD must be loaded to select the source and to play. CD will appear on the display if a CD is loaded. If a CD is not loaded, the display will not change from the radio source.

⏏ **(Eject):** Press this button to stop a CD when it is playing or to eject a CD when it is not playing. Eject may be activated with the ignition and the radio off.

Using the Six-Disc CD Changer

The CD player can play the smaller 3 inch (8 cm) single CDs with an adapter ring. Full-size CDs and the smaller CDs are loaded in the same manner.

If playing a CD-R, the sound quality may be reduced due to CD-R quality, the method of recording, the quality of the music that has been recorded, and the way the CD-R has been handled. There may be an increase in skipping, difficulty in finding tracks, and/or difficulty in loading and ejecting. If these problems occur, check the bottom surface of the CD. If the surface of the CD is damaged, such as cracked, broken, or scratched, the CD will not play properly. If the surface of the CD is soiled, see “Care of Your CDs” later in this section.

If there is no apparent damage, try a known good CD.

Do not add any label to a CD, it could get caught in the CD player. If a CD is recorded on a personal computer and a description label is needed, try labeling the top of the recorded CD with a soft marker instead.

Notice: **If you add any label to a CD, insert more than one CD into the slot at a time, or attempt to play scratched or damaged CDs, you could damage the CD player. When using the CD player, use only CDs in good condition without any label, load one CD at a time, and keep the CD player and the loading slot free of foreign materials, liquids, and debris.**

If an error appears on the display, see “CD Messages” later in this section.

When a CD is inserted, the CD functions will appear on the display above the pushbuttons, in place of the preset stations (if programmed).

(Load): Press this button to load CDs into the CD player. This CD player will hold up to six CDs.

To insert one CD, do the following:

1. The ignition and the radio can be on or off.
2. Press and release the load button. Please Wait will appear on the display.
3. Load the CD, when INSERT appears on the display, insert a CD partway into the slot, label side up. The player will pull the CD in.

When a CD is inserted, CD will appear on the display, the number of the CD and the track number will appear on the display if the radio is on.

If the radio is on, the CD will begin to play automatically.

To insert multiple CDs, do the following:

1. The ignition and the radio can be on or off.
2. Press and hold the load button for two seconds. Please Wait will appear on the display and you will hear a beep.
3. Load the CD, when INSERT appears on the display, insert a CD partway into the slot, label side up. The player will pull the CD in.

   Do not load a CD until INSERT appears on the display. The CD player will take up to six CDs. Do not try to load more than six. If you want to load less than six CDs, load the desired amount. The CD player will time out when it does not receive any more CDs and the last CD loaded will begin to play.

If the radio is on, the last CD loaded will begin to play automatically.

F1 DISC↓ (Down): Press this pushbutton to go to the previous CD.

F2 DISC↑ (Up): Press this pushbutton to go to the next CD.

F3 CD REV ≪ (Reverse): Press this pushbutton to go to the previous track. Press and hold this pushbutton to reverse quickly within the track. Release this pushbutton to play the passage. The elapsed time of the track will appear on the display.

F4 CD FWD ≫ (Forward): Press this pushbutton to go to the next track. Press and hold this pushbutton to advance quickly within the track. Release this pushbutton to play the passage. The elapsed time of the track will appear on the display.

F5 MODE: Press this pushbutton to select from NORMAL, RPT TRCK (Repeat Track), RPT DISC (Repeat CD), RDM TRCK (Random Track), and RDM ALL (Random All CDs).

- **NORMAL:** Sets the system for normal play of the CD(s). NORMAL will not appear on the display when in this mode.
- **RPT TRCK (Repeat Track):** Repeats the track over again. RPT TRCK will appear on the display. Press the MODE pushbutton again to turn off repeat play. RPT TRCK will disappear from the display.
- **RPT DISC (Repeat CD):** Repeats the CD over again. RPT DISC will appear on the display. Press the MODE pushbutton again to turn off repeat play. RPT DISC will disappear from the display.
- **RDM TRCK (Random Track):** Plays the tracks on the current CD in random, rather than sequential, order. RDM TRCK will appear on the display. Press the MODE pushbutton again to turn off random play. RDM TRCK will disappear from the display.
- **RDM ALL (Random All CDs):** Plays all of the CDs loaded in random, rather than sequential, order. RDM ALL will appear on the display. Press the MODE pushbutton again to turn off random play. RDM ALL will disappear from the display.

F6 DISP (Display): Press this pushbutton to display the time of the track. Press this pushbutton again to display CD PLAY MODE.

⏮ ⏭ **(Seek):** Press the left single arrow button to go to the previous or press the right single arrow button to go to the next track on the CD.

⏮ ⏭ **(Scan):** Press this double arrow button to listen to each track for 10 seconds. The CD will go to a track, play for 10 seconds, then go on to the next track. Press this button again to stop scanning.

SRCE (Source): Press this button to select a source, either radio or CD. The CD must be loaded to select the source and to play. CD will appear on the display if a CD is loaded. If a CD is not loaded, the display will not change from the radio source.

⏏ **(Eject):** Press this button to eject the CD that is currently playing, or press and hold this button to eject all of the CDs loaded. You will hear a beep. Eject may be activated with the ignition or radio off.

Using an MP3 CD

MP3 Format

If you burn your own MP3 disc on a personal computer:

- Make sure the MP3 files are recorded on a CD-R disc.
- Make sure to finalize the disc when burning an MP3 disc, using multiple sessions. It is usually better to burn the disc all at once.
- Files can be recorded with a variety of fixed or variable bit rates. Song title, artist name, and album will be available for display by the radio when recorded using ID3 tags version 1 and 2.
- Do not mix standard audio and MP3 files on one disc.
- Make sure playlists have a.pls, or.m3u, or.rmp extension, other file extensions may not work.

The player will be able to read and play a maximum of 50 folders, 50 playlists, 10 sessions, and 255 files. Long file, folder, or playlist names or a combination of a large number of files and folders or playlists may cause the player to be unable to play up to the maximum number of files, folders, playlists, or sessions.

If you wish to play large numbers of files, folders, playlists or sessions minimize the length of the file, folder or playlist name. You can also play an MP3 CD that was recorded using no file folders. The system can support up to 11 folders in depth, though, keep the depth of the folders to a minimum in order to keep down the complexity and confusion in trying to locate a particular folder during playback. If a CD contains more than the maximum of 50 folders, 50 playlists, 10 sessions, and 255 files the player will let you access and navigate up to the maximum, but all items over the maximum will be ignored.

Root Directory

The root directory will be treated as a folder. If the root directory has compressed audio files, the directory will be displayed as F1 ROOT. All files contained directly under the root directory will be accessed prior to any root directory folders. However, playlists (Px) will always be accessed before root folders or files.

Empty Directory or Folder

If a root directory or a folder exists somewhere in the file structure that contains only folders/subfolders and no compressed files directly beneath them, the player will advance to the next folder in the file structure that contains compressed audio files and the empty folder will not be displayed or numbered.

No Folder

When the CD contains only compressed files, the files will be located under the root folder. The next and previous folder functions will have no function on a CD that was recorded without folders or playlists. When displaying the name of the folder the radio will display ROOT.

When the CD contains only playlists and compressed audio files, but no folders, all files will be located under the root folder. The folder down and the folder up buttons will search playlists (Px) first and then go to the root folder. When the radio displays the name of the folder the radio will display ROOT.

Order of Play

Tracks will be played in the following order:

- Play will begin from the first track in the first playlist and will continue sequentially through all tracks in each playlist. When the last track of the last playlist has been played, play will continue from the first track of the first playlist.
- If the CD does not contain any playlists, then play will begin from the first track under the root directory. When all tracks from the root directory have been played, play will continue from files according to their numerical listing. After playing the last track from the last folder, play will begin again at the first track of the first folder or root directory.

When play enters a new folder, the display will not automatically show the new folder name. The new track name will appear on the display.

File System and Naming

The song name that will be displayed will be the song name that is contained in the ID3 tag. If the song name is not present in the ID3 tag, then the radio will display the file name without the extension (such as .mp3) as the track name.

Track names longer than 32 characters or 4 pages will be shortened. The display will not show parts of words on the last page of text and the extension of the filename will not be displayed.

Preprogrammed Playlists

You can access preprogrammed playlists which were created by WinAmp™, MusicMatch™, or Real Jukebox™ software, however, you will not have editing capability. These playlists will be treated as special folders containing compressed audio song files.

Playing an MP3

Insert a CD partway into the slot, label side up. The player will pull it in, and LOADING CD will appear on the display. The CD should begin playing and the CD symbol will appear on the display. If the ignition and the radio are on, the CD will begin playing. A CD may be loaded with the radio off, but it will not start playing until the radio is on.

If the ignition or radio is turned off with a CD in the player it will stay in the player. When the ignition or radio is turned on, the CD will start to play where it stopped, if it was the last selected audio source.

As each new track starts to play, the track number will appear on the display.

The CD player can play the smaller 3 inch (8 cm) single CDs with an adapter ring. Full-size CDs and the smaller CDs are loaded in the same manner.

If playing a CD-R, the sound quality may be reduced due to CD-R quality, the method of recording, the quality of the music that has been recorded, and the way the CD-R has been handled. There may be an increase in skipping, difficulty in finding tracks, and/or difficulty in loading and ejecting. If these problems occur, check the bottom surface of the CD. If the surface of the CD is damaged, such as cracked, broken, or scratched, the CD will not play properly. If the surface of the CD is soiled, see “Care of Your CDs” later in this section.

If there is no apparent damage, try a known good CD.

Do not add any label to a CD, it could get caught in the CD player. If a CD is recorded on a personal computer and a description label is needed, try labeling the top of the recorded CD with a soft marker instead.

Notice: **If you add any label to a CD, insert more than one CD into the slot at a time, or attempt to play scratched or damaged CDs, you could damage the CD player. When using the CD player, use only CDs in good condition without any label, load one CD at a time, and keep the CD player and the loading slot free of foreign materials, liquids, and debris.**

If an error appears on the display, see “CD Messages” later in this section.

F1 ◀◀ (Previous Folder): Press this pushbutton to go to the first track in the previous folder.

Press and hold this pushbutton to reverse quickly within a track. Release this pushbutton to play the passage. REV and the elapsed time of the track will appear on the display.

Pressing this button while in folder random mode will take you to the previous folder and random the tracks in that folder.

F2 ▶▶ (Next Folder): Press this pushbutton to go to the first track in the next folder.

Press and hold this pushbutton to advance quickly within a track. Release this pushbutton to play the passage. FWD and the elapsed time of the track will appear on the display.

Pressing this button while in folder random mode will take you to the next folder and random the tracks in that folder.

F3 RDM (Random): To play the tracks on the CD in random, rather than sequential order, press and release this pushbutton until RDM TRCK appears on the display. Once all of the tracks in the current folder or playlist have been played, the system will move on to the next folder or playlist and play all of the tracks in random order.

To play the tracks in the current folder in random, rather than sequential order, press and release this pushbutton until RDM FLDR appears on the display. This feature will not work with playlists.

When in random, pressing and releasing either single seek arrow will take you to the next or previous random track.

Press and release this pushbutton until NORMAL appears on the display to turn random play off.

F4 RPT (Repeat): To repeat the current track, press and release this pushbutton until RPT TRCK appears on the display.

To repeat the tracks in the current folder, press and release this pushbutton until RPT FLDR appears on the display.

Press and release this pushbutton until NORMAL appears on the display to turn repeated play off.

F6 DISP (Display): Press this pushbutton to switch between the elapsed time of the track and the MP3 playback information.

⏮ ⏭ **(Seek):** Press the left arrow to go to the start of the previous track. Press the right arrow to go to the start of the next track. Pressing either arrow for more than two seconds will search the previous or next tracks at two tracks per second. Release the button to stop searching and to play the track.

⏮ ⏭ **(Scan):** Press the double arrow button to scan the tracks in each folder. The radio will go to the next track, play for 10 seconds, then go on to the next track. Press this button again to stop scanning.

▷▷| **(Tune):** Turning the tune knob will fast track reverse or advance through the tracks in all folders or playlists. The track number and file name will appear on the display for each track. Turning this knob while in random will fast track reverse or advance the tracks in sequential order.

i (Information): Press this button, while an MP3 CD is loaded, to view the Title, Artist, Album, or Folder names. To view this information, perform the following:

1. Press the tune/select knob to enter the main menu.
2. Turn the tune/select knob until INFO appears on the display.
3. Press the tune/select knob to select INFO. The display will change to show the additional MP3 information.
4. Press one of the following pushbuttons to view that specific information.
   - **F1 TTLE (Title):** To display the title name.
   - **F2 ATST (Artist):** To display the artist name.
   - **F3 ALBM (Album):** To display the album name.
   - **F4 FLDR (Folder):** To display the folder name.
5. Press the BACK (F6) button to exit the display. To return to the original display, repeatedly press the BACK (F6) button or wait for the display to time out.

SRCE (Source): Press this button to select a source, either radio or CD. The CD must be loaded to select the source and to play. CD will appear on the display if a CD is loaded. If a CD is not loaded, the display will not change from the radio source.

⏏ **(Eject):** Press this button to stop a CD when it is playing or to eject a CD when it is not playing. Eject may be activated with the ignition and the radio off.

CD Messages

If the CD comes out, it could be for one of the following reasons:

- If it is very hot. When the temperature returns to normal, the CD should play.
- If you are driving on a very rough road. When the road becomes smoother, the CD should play.
- The CD is dirty, scratched, wet, or upside down.
- The air is very humid. If so, wait about an hour and try again.
- The format of the CD may not be compatible. See “MP3 Format” earlier in this section.
- There may have been a problem while burning the CD.
- The label may be caught in the CD player.

If the CD is not playing correctly, for any other reason, try a known good CD.

If any error occurs repeatedly or if an error cannot be corrected, contact your GM dealer. If the radio displays an error message, write it down and provide it to your GM dealer when reporting the problem.

Configurable Radio Display Keys

This feature allows you to customize the four keys that are located on each side of the radio display to make it easier to adjust the radio features and other non-radio related features are also available for customization.

To program the configurable radio display keys, perform the following steps:

1. Press the tune/select knob to enter the main menu.
2. Turn the tune/select knob until SETUP appears on the display.
3. Press the tune/select knob to enter into SETUP.
4. Turn the tune/select knob until CONFIGURE DISPLAY KEYS appears on the display.
5. Press the tune/select knob to enter into CONFIGURE DISPLAY KEYS.
6. Turn the tune/select knob to select which of the four configurable keys you would like to change. The currently assigned feature will be shown.
7. Press the tune/select knob to select the configurable key to change.

8. Turn the tune/select knob to find the feature that you would like to store to the key.
9. Press the tune/select knob when you have found the feature to be stored. The display will update, by showing the symbol of the feature that you selected next to the configurable key.
10. Repeat the previous steps for each configurable key.

Once a feature is programmed to a key, the feature will not appear on the display when programming the remaining configurable keys. The configurable keys can be changed at any time.

Navigation/Radio System

Your vehicle may have a navigation radio system.

The navigation system has built-in features intended to minimize driver distraction. Technology alone, no matter how advanced, can never replace your own judgment. See the navigation system manual for some tips to help you reduce distractions while driving.

Radio Personalization

Accessing the Radio's Main Menu (Base Audio System)

There are two different procedures for accessing the radio's main menu depending upon whether or not your vehicle has the Navigation system.

To access the main menu of the radio, do one of the following:

- Using the Base audio system, press the CNFG button located on the radio or press the tune/select knob located on the right side of the radio. Then turn the tune/select knob clockwise or counterclockwise to scroll through the menu items.
- If your vehicle has the Navigation system, see the Navigation System manual supplied with your vehicle for more information on accessing the main menu and for descriptions of the menu items for the Navigation system.

The main menu for the Base audio system consists of the following menu items:

- BASS - MID - TREBLE
- BALANCE - FADER
- EQ EQUALIZER
- H/A (HOME/AWAY) PRESETS
- AUTOSTORE PRESETS
- CAT CATEGORY
- TA TRAFFIC ANNOUNCE
- RECALL RDS (Radio Data System) MESSAGE
- AF ALTERNATE FREQ. (Frequency)
- SEEK LOCAL/DISTANT
- SET CLOCK
- SET DATE
- INFO (Information)
- LANG LANGUAGE
- SETUP

Radio Main Menu Item Descriptions (Base Audio System)

The following descriptions are for the Base audio system. For information pertaining to the Navigation audio system, see “Audio System” in the Index of the Navigation System manual supplied with your vehicle.

BASS - MID (Midrange) - TREBLE: This menu item allows you to adjust the levels for the bass, midrange and treble features of the audio system. See “Setting the Tone (Bass/Treble)” under *Radio with CD on page 3-96* for more information.

BALANCE - FADER: This menu item allows you to adjust the levels for the balance and fader features of the audio system. See “Adjusting the Speakers (Balance/Fade)” under *Radio with CD on page 3-96* for more information.

EQ (Equalizer): This menu item allows you to choose among five preset equalizations for the audio system. See “Audio Equalizer” under *Radio with CD on page 3-96* for more information.

H/A (Home/Away) PRESETS: This menu item allows you to switch back and forth between your home and away preset radio stations. See “Presets Home/Away” under *Radio with CD on page 3-96* for more information.

AUTOSTORE PRESETS: This menu item allows you to automatically store radio stations with the strongest signals as presets. See “Autostore Presets” under *Radio with CD on page 3-96* for more information.

CAT (Category): This menu item allows you to select radio stations based on preset categories. See “Activating Program Type (PTY) Stations” under *Radio with CD on page 3-96* for more information.

TA (Traffic Announcement): This menu item allows you to turn the TA feature on and off. See “TA (Traffic Announcement)” under *Radio with CD on page 3-96* for more information.

RECALL RDS MESSAGE: This menu item allows you to view an RDS radio station message broadcast by a radio station. See “MSG (Message)” under *Radio with CD on page 3-96* for more information.

AF (Alternate Frequency): This menu item allows you to turn the AF feature on and off. See “Activating Program Type (PTY) Stations (RDS and XM™)” under *Radio with CD on page 3-96* for more information.

SEEK LOCAL/DISTANT: This feature instructs the audio system to seek only local radio stations with the strongest signal or to seek all radio stations with a strong signal in a large area. Use LOCAL when you are in urban areas where there are several strong radio station signals and you want to limit the number of stations to those with the strongest signals only. Use DISTANT when you are in rural areas where there are fewer radio station signals available.

See “Local/Distant Selection” under *Radio with CD on page 3-96* for more information.

SET CLOCK: Use this menu item to set the time.

See *Setting the Time on page 3-95* for more information.

SET DATE: Use this menu item to set the date.

See *Setting the Time on page 3-95* for more information.

i (Information): This menu item is used to display XM™ satellite radio service and CD MP3 playback information. See “**i (Information)” under** *Radio with CD on page 3-96* for more information.

LANG (Language): To change the language displayed on the radio, select LANGUAGE by pressing the tune/select knob. Turn the tune/select knob to scroll through the following available languages:

- ENGLISH
- GERMAN
- FRENCH
- SPANISH
- JAPANESE

To make your selection, press the tune/select knob. If you accidentally select a language that you did not want, ENGLISH is always at the top of the language list.

SETUP: When you select this menu item, the following submenu is available:

- PERSONAL SETTINGS MENU
- DRIVER SELECTION
- DRIVER EXIT SETTINGS
- CONFIGURE DISPLAY KEYS

SETUP Submenu Items

The following choices are available for programming using the Base audio system.

PERSONAL SETTINGS MENU

This item turns the entire list of personalization features on or off. This item allows you to program certain features to a preferred setting for up to two people. The number of available features varies depending upon which options are purchased. When this item is on, a check mark will appear after it. For more information on the PERSONAL SETTINGS MENU item, see *Vehicle Personalization on page 2-53*.

DRIVER SELECTION

When you select this item, the following submenu appears:

- DRIVER 1
- DRIVER 2
- RECALL DRIVER SETTINGS
- STORE DRIVER SETTINGS

For more information on the DRIVER SELECTION submenu item, see “Recalling Driver Settings” and “Storing Driver Settings” under *Memory Seat, Mirrors and Steering Wheel on page 2-70*.

DRIVER EXIT SETTINGS

When you select this item, the following submenu appears:

- RECALL EXIT SETTINGS
- STORE EXIT SETTINGS

For more information on the DRIVER EXIT SETTINGS submenu item, see “Recalling Exit Settings” and “Storing Exit Settings” under *Memory Seat, Mirrors and Steering Wheel on page 2-70*.

CONFIGURE DISPLAY KEYS (Base Audio System)

This item allows you to customize the functions of the four configurable keys located to the left and right of the audio display. See “Configurable Radio Display Keys” under *Radio with CD on page 3-96* for programming information.

Theft-Deterrent Feature

THEFTLOCK® is designed to discourage theft of your vehicle’s radio. The feature works automatically by learning a portion of the Vehicle Identification Number (VIN). If the radio is moved to a different vehicle, it will not operate. If the radio is removed from your vehicle, the original VIN in the radio can be used to trace the radio back to your vehicle.

With THEFTLOCK® activated, the radio will not operate if stolen.

Audio Steering Wheel Controls

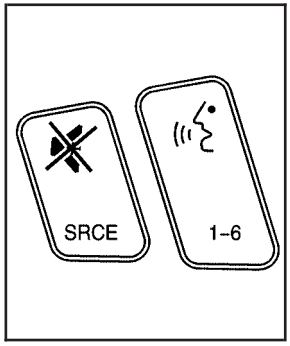

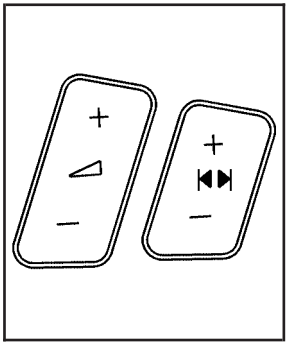

The audio steering wheel controls may be different depending on your vehicle’s options. Some audio controls can be adjusted at the steering wheel. They include the following:

(Mute): Press this button to silence the system. Press this button again, or any other radio button, to turn the sound on.

SRCE (Source): Press this button to switch between FM1, FM2, AM, or XM1 or XM2 (if equipped), radio, or CD.

(OnStar®/Voice Recognition): If your vehicle has the Radio with CD or Radio with Six-Disc CD audio system, press this button to interact with the OnStar system. See the *OnStar® System on page 2-45* in this manual for more information.

If your vehicle has the navigation system, press this button to initiate voice recognition. See “Voice Recognition” in the Navigation System manual for more information. You may be able to interact with the OnStar system using this button. See the *OnStar® System on page 2-45* in this manual for more information.

1-6 (Preset Stations): Press this button to play stations that are programmed on the radio preset pushbuttons. The radio will only seek preset stations with a strong signal that are in the selected band.

When a CD is playing, press this button to go to the next track.

When a CD is playing in the six-disc CD changer, press this button to go to the next available CD, if multiple CDs are loaded.

+ — (Volume): Press this button to increase or to decrease the volume.

+ — (Seek): Press either arrow to go to the next or the previous radio station and stay there. The radio will only seek stations with a strong signal that are in the selected band.

When a CD is playing, press the minus sign to go to the start of the current track, if more than 10 seconds have played. Press the plus sign to go to the next track. If either the minus or the plus button are pressed more than once, the player will continue moving backward or forward through the CD.

Press and hold the SEEK plus or minus button, until you hear a beep. The CD will fast forward or fast reverse through the CD. Press either button again to play the passage.

If you have the navigation system, some of the audio steering wheel controls work when a DVD is playing in the navigation radio. See the Navigation System manual for more information.

Radio Reception

You may experience frequency interference and static during normal radio reception if items such as cellphone chargers, vehicle convenience accessories, and external electronic devices are plugged into the accessory power outlet. If there is interference or static, unplug the item from the accessory power outlet.

AM

The range for most AM stations is greater than for FM, especially at night. The longer range can cause station frequencies to interfere with each other. For better radio reception, most AM radio stations will boost the power levels during the day, and then reduce these levels during the night. Static can also occur when things like storms and power lines interfere with radio reception. When this happens, try reducing the treble on your radio.

FM Stereo

FM stereo will give the best sound, but FM signals will reach only about 10 to 40 miles (16 to 65 km). Tall buildings or hills can interfere with FM signals, causing the sound to fade in and out.

XM™ Satellite Radio Service

XM™ Satellite Radio Service gives digital radio reception from coast-to-coast in the 48 contiguous United States, and in Canada (if available). Just as with FM, tall buildings or hills can interfere with satellite radio signals, causing the sound to fade in and out. In addition, traveling or standing under heavy foliage, bridges, garages, or tunnels may cause loss of XM signal for a period of time. The radio may display NO XM SIGNAL to indicate interference.

Cellular Phone Usage

Cellular phone usage may cause interference with your vehicle's radio. This interference may occur when making or receiving phone calls, charging the phone's battery, or simply having the phone on. This interference is an increased level of static while listening to the radio. If static is received while listening to the radio, unplug the cellular phone and turn it off.

Care of Your CDs

Handle CDs carefully. Store them in their original cases or other protective cases and away from direct sunlight and dust. The CD player scans the bottom surface of the disc. If the surface of a CD is damaged, such as cracked, broken, or scratched, the CD will not play properly or not at all. If the surface of a CD is soiled, take a soft, lint free cloth or dampen a clean, soft cloth in a mild, neutral detergent solution mixed with water, and clean it. Make sure the wiping process starts from the center to the edge.

Do not touch the bottom side of a CD while handling it; this could damage the surface. Pick up CDs by grasping the outer edges or the edge of the hole and the outer edge.

Care of the CD Player

The use of CD lens cleaners for CD players is not advised, due to the risk of contaminating the internal lens of the CD optics with lubricants.

Diversity Antenna System

The AM-FM antenna is integrated with the rear window defogger, located in the rear window. Make sure that the inside surface of the rear window is not scratched and that the grid lines on the glass are not damaged. If the inside surface is damaged, it could interfere with radio reception.

Notice: **Do not apply aftermarket glass tinting with metallic film. The metallic film in some tinting materials will interfere with or distort the incoming radio reception. Any damage caused to your antenna due to metallic tinting materials will not be covered by your warranty.**

Notice: **Do not try to clear frost or other material from the inside of the rear window with a razor blade or anything else that is sharp, as this may damage the rear window defogger grid and affect your radio's ability to pick up stations clearly. The repairs would not be covered by your warranty.**

If static is heard on the radio, when the rear window defogger is turned on, it could mean that a defogger grid line has been damaged. If this is true, the grid line must be repaired.

If adding an aftermarket cellular telephone to your vehicle, and the antenna needs to be attached to the glass, make sure that the grid lines for the AM-FM antennas are not damaged. Make sure the cellular telephone antenna does not touch a grid line.

XM™ Satellite Radio Antenna System

The XM™ Satellite Radio antenna is located on the roof of your vehicle. Keep this antenna clear of snow and ice build up for clear radio reception.

If your vehicle has a sunroof, the performance of the XM™ system may be affected if the sunroof is open.

Loading items onto the roof of your vehicle can interfere with the performance of the XM™ system. Make sure the XM™ Satellite Radio antenna is not obstructed.

Section 4 Driving Your Vehicle

Your Driving, the Road, and Your Vehicle 4-2
Defensive Driving 4-2
Drunken Driving 4-3
Control of a Vehicle 4-6
Braking 4-6
Anti-Lock Brake System (ABS) 4-7
Braking in Emergencies 4-9
Traction Control System (TCS) 4-9
Competitive Driving Mode (STS-V) 4-10
Magnetic Ride Control 4-11
Limited-Slip Rear Axle 4-11
StabiliTrak® System 4-11
Panic Brake Assist 4-12
All-Wheel Drive (AWD) System 4-12
Steering 4-12
Off-Road Recovery 4-15
Passing 4-15
Loss of Control 4-17
Competitive Driving 4-18
Driving at Night 4-18
Driving in Rain and on Wet Roads 4-20
City Driving 4-22
Freeway Driving 4-23
Before Leaving on a Long Trip 4-24
Highway Hypnosis 4-25
Hill and Mountain Roads 4-25
Winter Driving 4-27
If Your Vehicle is Stuck in Sand, Mud, Ice or Snow 4-31
Rocking Your Vehicle to Get It Out 4-32
Loading Your Vehicle 4-32

Towing 4-37
Towing Your Vehicle 4-37
Recreational Vehicle Towing 4-38
Towing a Trailer (STS Only) 4-40

Your Driving, the Road, and Your Vehicle

Defensive Driving

The best advice anyone can give about driving is: Drive defensively.

Please start with a very important safety device in your vehicle: Buckle up. See *Safety Belts: They Are for Everyone on page 1-8*.

⚠ CAUTION:

Defensive driving really means "Be ready for anything." On city streets, rural roads, or expressways, it means "Always expect the unexpected." Assume that pedestrians or other drivers are going to be careless and make

CAUTION: (Continued)

CAUTION: (Continued)

mistakes. Anticipate what they might do and be ready. Rear-end collisions are about the most preventable of accidents. Yet they are common. Allow enough following distance. Defensive driving requires that a driver concentrate on the driving task. Anything that distracts from the driving task makes proper defensive driving more difficult and can even cause a collision, with resulting injury. Ask a passenger to help do these things, or pull off the road in a safe place to do them. These simple defensive driving techniques could save your life.

Drunken Driving

Death and injury associated with drinking and driving is a national tragedy. It is the number one contributor to the highway death toll, claiming thousands of victims every year.

Alcohol affects four things that anyone needs to drive a vehicle:

- Judgment
- Muscular Coordination
- Vision
- Attentiveness

Police records show that almost half of all motor vehicle-related deaths involve alcohol. In most cases, these deaths are the result of someone who was drinking and driving. In recent years, more than 16,000 annual motor vehicle-related deaths have been associated with the use of alcohol, with more than 300,000 people injured.

Many adults — by some estimates, nearly half the adult population — choose never to drink alcohol, so they never drive after drinking. For persons under 21, it is against the law in every U.S. state to drink alcohol. There are good medical, psychological, and developmental reasons for these laws.

The obvious way to eliminate the leading highway safety problem is for people never to drink alcohol and then drive. But what if people do? How much is “too much” if someone plans to drive? It is a lot less than many might think. Although it depends on each person and situation, here is some general information on the problem.

The Blood Alcohol Concentration (BAC) of someone who is drinking depends upon four things:

- The amount of alcohol consumed
- The drinker’s body weight
- The amount of food that is consumed before and during drinking
- The length of time it has taken the drinker to consume the alcohol

According to the American Medical Association, a 180 lb (82 kg) person who drinks three 12 ounce (355 ml) bottles of beer in an hour will end up with a BAC of about 0.06 percent. The person would reach the same BAC by drinking three 4 ounce (120 ml) glasses of wine or three mixed drinks if each had 1-1/2 ounces (45 ml) of liquors like whiskey, gin, or vodka.

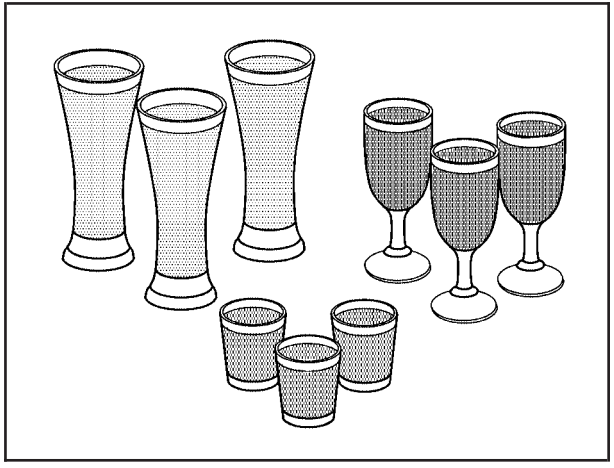

It is the amount of alcohol that counts. For example, if the same person drank three double martinis (3 ounces or 90 ml of liquor each) within an hour, the person's BAC would be close to 0.12 percent. A person who consumes food just before or during drinking will have a somewhat lower BAC level.

There is a gender difference, too. Women generally have a lower relative percentage of body water than men. Since alcohol is carried in body water, this means that a woman generally will reach a higher BAC level than a man of her same body weight will when each has the same number of drinks.

The law in most U.S. states, and throughout Canada, sets the legal limit at 0.08 percent. In some other countries, the limit is even lower. For example, it is 0.05 percent in both France and Germany. The BAC limit for all commercial drivers in the United States is 0.04 percent.

The BAC will be over 0.10 percent after three to six drinks (in one hour). Of course, as we have seen, it depends on how much alcohol is in the drinks, and how quickly the person drinks them.

But the ability to drive is affected well below a BAC of 0.10 percent. Research shows that the driving skills of many people are impaired at a BAC approaching 0.05 percent, and that the effects are worse at night. All drivers are impaired at BAC levels above 0.05 percent.

Statistics show that the chance of being in a collision increases sharply for drivers who have a BAC of 0.05 percent or above. A driver with a BAC level of 0.06 percent has doubled his or her chance of having a collision. At a BAC level of 0.10 percent, the chance of this driver having a collision is 12 times greater; at a level of 0.15 percent, the chance is 25 times greater!

The body takes about an hour to rid itself of the alcohol in one drink. No amount of coffee or number of cold showers will speed that up. “I will be careful” is not the right answer. What if there is an emergency, a need to take sudden action, as when a child darts into the street? A person with even a moderate BAC might not be able to react quickly enough to avoid the collision.

There is something else about drinking and driving that many people do not know. Medical research shows that alcohol in a person’s system can make crash injuries worse, especially injuries to the brain, spinal cord, or heart. This means that when anyone who has been drinking — driver or passenger — is in a crash, that person’s chance of being killed or permanently disabled is higher than if the person had not been drinking.

⚠ CAUTION:

Drinking and then driving is very dangerous. Your reflexes, perceptions, attentiveness, and judgment can be affected by even a small amount of alcohol. You can have a serious — or even fatal — collision if you drive after drinking. Please do not drink and drive or ride with a driver who has been drinking. Ride home in a cab; or if you are with a group, designate a driver who will not drink.

Control of a Vehicle

You have three systems that make your vehicle go where you want it to go. They are the brakes, the steering, and the accelerator. All three systems have to do their work at the places where the tires meet the road.

Sometimes, as when you are driving on snow or ice, it is easy to ask more of those control systems than the tires and road can provide. That means you can lose control of your vehicle. See *Traction Control System (TCS) on page 4-9* and *StabiliTrak® System on page 4-11*.

Adding non-GM accessories can affect your vehicle's performance. See *Accessories and Modifications on page 5-3*.

Braking

See *Brake System Warning Light on page 3-64*.

Braking action involves perception time and reaction time.

First, you have to decide to push on the brake pedal. That is perception time. Then you have to bring up your foot and do it. That is reaction time.

Average reaction time is about three-fourths of a second. But that is only an average. It might be less with one driver and as long as two or three seconds or more with another. Age, physical condition, alertness, coordination, and eyesight all play a part. So do alcohol, drugs, and frustration. But even in three-fourths of a second, a vehicle moving at 60 mph (100 km/h) travels 66 feet (20 m). That could be a lot of distance in an emergency, so keeping enough space between your vehicle and others is important.

And, of course, actual stopping distances vary greatly with the surface of the road, whether it is pavement or gravel; the condition of the road, whether it is wet, dry, or icy; tire tread; the condition of your brakes; the weight of the vehicle; and the amount of brake force applied.

Avoid needless heavy braking. Some people drive in spurts — heavy acceleration followed by heavy braking — rather than keeping pace with traffic. This is a mistake. Your brakes may not have time to cool between hard stops. Your brakes will wear out much faster if you do a lot of heavy braking. If you keep pace with the traffic and allow realistic following distances, you will eliminate a lot of unnecessary braking. That means better braking and longer brake life.

If your engine ever stops while you are driving, brake normally but do not pump your brakes. If you do, the pedal may get harder to push down. If your engine stops, you will still have some power brake assist. But you will use it when you brake. Once the power assist is used up, it may take longer to stop and the brake pedal will be harder to push.

Adding non-GM accessories can affect your vehicle's performance. See *Accessories and Modifications on page 5-3*.

Anti-Lock Brake System (ABS)

Your vehicle has anti-lock brakes. ABS is an advanced electronic braking system that will help prevent a braking skid.

When you start your engine and begin to drive away, your anti-lock brake system will check itself. You may hear a momentary motor or clicking noise while this test is going on, and you may even notice that your brake pedal moves a little. This is normal.

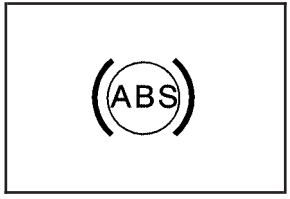

If there is a problem with the anti-lock brake system, this warning light will stay on. See *Anti-Lock Brake System Warning Light on page 3-65*.

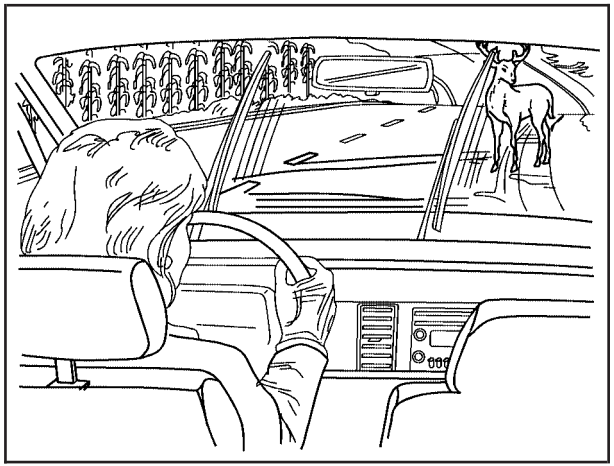

Let us say the road is wet and you are driving safely. Suddenly, an animal jumps out in front of you. You slam on the brakes and continue braking. Here is what happens with ABS:

A computer senses that wheels are slowing down. If one of the wheels is about to stop rolling, the computer will separately work the brakes at each wheel.

The anti-lock system can change the brake pressure faster than any driver could. The computer is programmed to make the most of available tire and road conditions. This can help you steer around the obstacle while braking hard.

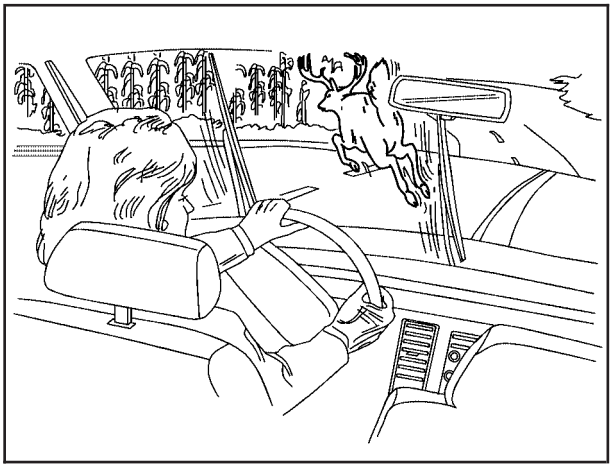

As you brake, your computer keeps receiving updates on wheel speed and controls braking pressure accordingly.

Remember: Anti-lock does not change the time you need to get your foot up to the brake pedal or always decrease stopping distance. If you get too close to the vehicle in front of you, you will not have time to apply your brakes if that vehicle suddenly slows or stops. Always leave enough room up ahead to stop, even though you have anti-lock brakes.

Using Anti-Lock

Do not pump the brakes. Just hold the brake pedal down firmly and let anti-lock work for you. You may hear the anti-lock pump or motor operate, and feel the brake pedal pulsate, but this is normal.

Braking in Emergencies

With anti-lock brakes, you can steer and brake at the same time. In many emergencies, steering can help you more than even the very best braking.

Traction Control System (TCS)

Your vehicle has a traction control system that limits wheel spin. This is especially useful in slippery road conditions. On a rear-wheel-drive vehicle, the system operates if it senses that one or both of the rear wheels are spinning or beginning to lose traction. On an All-Wheel-Drive (AWD) vehicle, the system will operate if it senses that any of the wheels are spinning or beginning to lose traction. When this happens, the system brakes the spinning wheel(s) and/or reduces engine power to limit wheel spin.

You may feel or hear the system working, but this is normal.

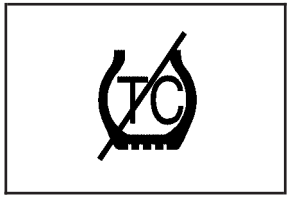

This warning light will come on to let you know if there's a problem with your traction control system.

See *Traction Control System (TCS) Warning Light on page 3-66*. When this warning light is on, the system will not limit wheel spin. Adjust your driving accordingly.

The traction control system automatically comes on whenever you start your vehicle. To limit wheel spin, especially in slippery road conditions, you should always leave the system on. But you can turn the traction control system off if you ever need to.

Notice: **Do not repeatedly brake or accelerate heavily when the TCS is off. You could damage your vehicle's driveline.**

When the TCS is switched off on AWD and STS-V vehicles, you may still feel the system working. This is normal and necessary with the AWD hardware on your vehicle.

You should turn the system off if your vehicle ever gets stuck in sand, mud or snow and rocking the vehicle is required. See *Rocking Your Vehicle to Get It Out on page 4-32* and *If Your Vehicle is Stuck in Sand, Mud, Ice or Snow on page 4-31* for more information. See also *Winter Driving on page 4-27* for information on using TCS when driving in snowy or icy conditions.

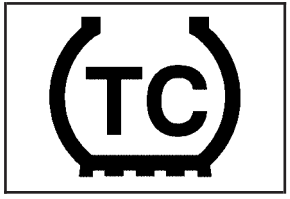

To turn the system off, press the TC (traction control) button located near the shift lever.

If you press the TC button once, the traction control system will turn off and the traction control system warning light will come on. Press the TC button again to turn the system back on. If you press and hold the TC button for five seconds, the StabiliTrak® system and the traction control system will turn off. Press the TC button again to turn StabiliTrak® back on. For more information, see *StabiliTrak® System on page 4-11*.

Adding non-GM accessories can affect your vehicle's performance. See *Accessories and Modifications on page 5-3* for more information.

Competitive Driving Mode (STS-V)

The driver can select this optional handling mode by pressing the Traction Control button, located near the shift lever, twice within five seconds. Competitive driving mode allows the driver to have control of the power applied to the rear wheels, while the StabiliTrak® system helps steer the vehicle by selective brake application. In competitive mode, the levels at which StabiliTrak® is engaged have been modified to better suit a performance driving environment. When the traction control warning light is on, the Traction Control System will not be operating. Adjust your driving accordingly.

When you press the Traction Control button again, the Traction Control System will be on. The traction engaged symbol will be displayed temporarily in the DIC and a chime will be heard. See *DIC Warnings and Messages on page 3-79* for more information.

Magnetic Ride Control

Your vehicle may have Magnetic Ride Control that automatically adjusts the ride of your vehicle. Automatic ride control is achieved through a computer used to control and monitor the suspension system. The controller receives input from various sensors to determine the proper system response. If the controller detects a problem within the system, the DIC will display a SERVICE SUSPENSION SYS message. See *DIC Warnings and Messages on page 3-79* for more information. See your dealer for service.

Limited-Slip Rear Axle

Your limited-slip rear axle can give you additional traction on snow, mud, ice, sand or gravel. It works like a standard axle most of the time, but when one of the rear wheels has no traction and the other does, this feature will allow the wheel with traction to move the vehicle.

StabiliTrak® System

Your vehicle is equipped with a vehicle stability enhancement system called StabiliTrak®. It is an advanced computer controlled system that assists you with directional control of the vehicle in difficult driving conditions.

StabiliTrak® activates when the computer senses a discrepancy between your intended path and the direction the vehicle is actually traveling. StabiliTrak® selectively applies braking pressure at any one of the vehicle's brakes to help steer the vehicle in the direction which you are steering.

When the system activates, a STABILITY SYS ACTIVE message will be displayed on the Driver Information Center. See *DIC Warnings and Messages on page 3-79*. You may also hear a noise or feel vibration in the brake pedal. This is normal. Continue to steer the vehicle in the direction you want it to go.

If there is a problem detected with StabiliTrak®, a SERVICE STABILITY SYS message will be displayed on the Driver Information Center. See *DIC Warnings and Messages on page 3-79*. When this message is displayed, the system is not operational. Driving should be adjusted accordingly.

StabiliTrak® comes on automatically whenever you start your vehicle. To help assist you with directional control of the vehicle, you should always leave the system on. You can turn StabiliTrak® off if you ever need to through the TC (traction control) on/off button. See *Traction Control System (TCS) on page 4-9*.

If your vehicle is in cruise control when the StabiliTrak® activates, the cruise control will automatically disengage. When road conditions allow you to safely use it again, you may reengage the cruise control. See *Cruise Control on page 3-16* or *Adaptive Cruise Control on page 3-19* for more information.

Panic Brake Assist

Your vehicle has a panic brake assist system that monitors the intention of the driver while braking. If the system senses that the driver has applied hard/fast pressure to the brake pedal, the system will generate additional pressure, making it easier for the driver to maintain brake application. When this happens the brake pedal will feel easier to push. Just hold the brake pedal down firmly and let the system work for you. You may feel the brakes vibrate, or you may notice some noise but this is normal. The brakes will return to normal operation after the brake pedal has been released.

All-Wheel Drive (AWD) System

If your vehicle is equipped with this feature, engine power is sent to all four wheels all the time.

This is like four-wheel drive, but it is fully automatic.

Steering

Power Steering

If you lose power steering assist because the engine stops or the system is not functioning, you can steer but it will take much more effort.

Speed Variable Assist Steering

Your vehicle has a steering system that continuously adjusts the effort you feel when steering at all vehicle speeds. It provides ease when parking, yet a firm, solid feel at highway speeds.

Steering Tips

It is important to take curves at a reasonable speed.

A lot of the “driver lost control” accidents mentioned on the news happen on curves. Here is why:

Experienced driver or beginner, each of us is subject to the same laws of physics when driving on curves. The traction of the tires against the road surface makes it possible for the vehicle to change its path when you turn the front wheels. If there is no traction, inertia will keep the vehicle going in the same direction. If you have ever tried to steer a vehicle on wet ice, you will understand this.

The traction you can get in a curve depends on the condition of your tires and the road surface, the angle at which the curve is banked, and your speed. While you are in a curve, speed is the one factor you can control.

Suppose you are steering through a sharp curve. Then you suddenly accelerate. Both control systems — steering and acceleration — have to do their work where the tires meet the road. Adding the sudden acceleration can demand too much of those places. You can lose control. See *Traction Control System (TCS) on page 4-9* and *StabiliTrak® System on page 4-11*.

What should you do if this ever happens? Ease up on the accelerator pedal, steer the vehicle the way you want it to go, and slow down.

Since your vehicle is equipped with StabiliTrak®, the system may be active. See *DIC Warnings and Messages on page 3-79* and *StabiliTrak® System on page 4-11*.

Speed limit signs near curves warn that you should adjust your speed. Of course, the posted speeds are based on good weather and road conditions. Under less favorable conditions you will want to go slower.

If you need to reduce your speed as you approach a curve, do it before you enter the curve, while your front wheels are straight ahead.

Try to adjust your speed so you can “drive” through the curve. Maintain a reasonable, steady speed. Wait to accelerate until you are out of the curve, and then accelerate gently into the straightaway.

To help you steer in the direction you want to go, during certain sharp or sudden cornering maneuvers, gear selection is controlled. This will maximize the available drive wheel torque and minimize the transmission response time and shift activity. During this kind of maneuver, the transmission shifts automatically as vehicle speed changes.

Adding non-GM accessories can affect your vehicle’s performance. See *Accessories and Modifications on page 5-3*.

Steering in Emergencies

There are times when steering can be more effective than braking. For example, you come over a hill and find a truck stopped in your lane, or a car suddenly pulls out from nowhere, or a child darts out from between parked cars and stops right in front of you. You can avoid these problems by braking — if you can stop in time. But sometimes you cannot; there is not room. That is the time for evasive action — steering around the problem.

Your vehicle can perform very well in emergencies like these. First apply your brakes.

See *Braking on page 4-6*. It is better to remove as much speed as you can from a possible collision. Then steer around the problem, to the left or right depending on the space available.

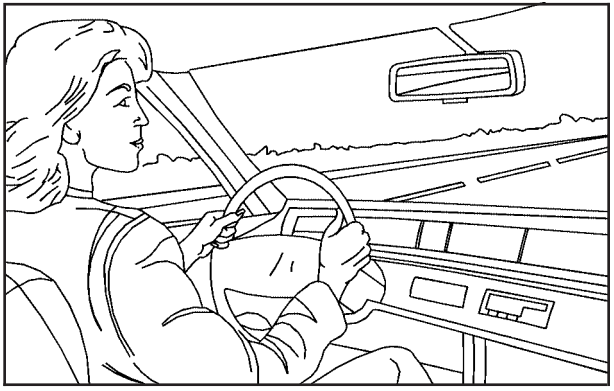

An emergency like this requires close attention and a quick decision. If you are holding the steering wheel at the recommended 9 and 3 o'clock positions, you can turn it a full 180 degrees very quickly without removing either hand. But you have to act fast, steer quickly, and just as quickly straighten the wheel once you have avoided the object.

The fact that such emergency situations are always possible is a good reason to practice defensive driving at all times and wear safety belts properly.

Off-Road Recovery

You may find that your right wheels have dropped off the edge of a road onto the shoulder while you are driving.

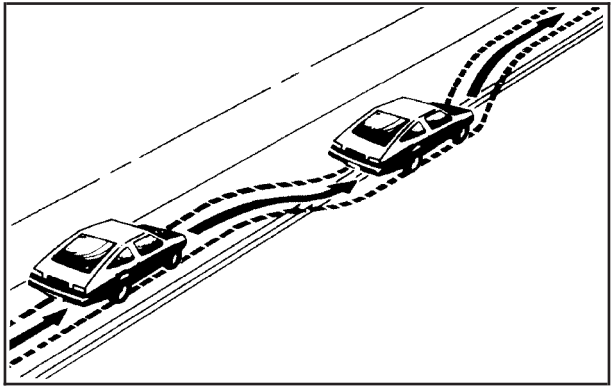

If the level of the shoulder is only slightly below the pavement, recovery should be fairly easy. Ease off the accelerator and then, if there is nothing in the way, steer so that your vehicle straddles the edge of the pavement. You can turn the steering wheel up to one-quarter turn until the right front tire contacts the pavement edge. Then turn your steering wheel to go straight down the roadway.

Passing

The driver of a vehicle about to pass another on a two-lane highway waits for just the right moment, accelerates, moves around the vehicle ahead, then goes back into the right lane again. A simple maneuver?

Not necessarily! Passing another vehicle on a two-lane highway is a potentially dangerous move, since the passing vehicle occupies the same lane as oncoming traffic for several seconds. A miscalculation, an error in judgment, or a brief surrender to frustration or anger can suddenly put the passing driver face to face with the worst of all traffic accidents — the head-on collision.

So here are some tips for passing:

- Drive ahead. Look down the road, to the sides and to crossroads for situations that might affect your passing patterns. If you have any doubt whatsoever about making a successful pass, wait for a better time.
- Watch for traffic signs, pavement markings and lines. If you can see a sign up ahead that might indicate a turn or an intersection, delay your pass. A broken center line usually indicates it is all right to pass, providing the road ahead is clear. Never cross a solid line on your side of the lane or a double solid line, even if the road seems empty of approaching traffic.

- Do not get too close to the vehicle you want to pass while you are awaiting an opportunity. For one thing, following too closely reduces your area of vision, especially if you are following a larger vehicle. Also, you will not have adequate space if the vehicle ahead suddenly slows or stops. Keep back a reasonable distance.
- When it looks like a chance to pass is coming up, start to accelerate but stay in the right lane and do not get too close. Time your move so you will be increasing speed as the time comes to move into the other lane. If the way is clear to pass, you will have a running start that more than makes up for the distance you would lose by dropping back. And if something happens to cause you to cancel your pass, you need only slow down and drop back again and wait for another opportunity.
- If other vehicles are lined up to pass a slow vehicle, wait your turn. But take care that someone is not trying to pass you as you pull out to pass the slow vehicle. Remember to glance over your shoulder and check the blind spot.
- Check your mirrors, glance over your shoulder, and start your left lane change signal before moving out of the right lane to pass. When you are far enough ahead of the passed vehicle to see its front in your inside mirror, activate your right lane change signal and move back into the right lane. Remember that your passenger side outside mirror is convex. The vehicle you just passed may seem to be farther away from you than it really is.
- Try not to pass more than one vehicle at a time on two-lane roads. Reconsider before passing the next vehicle.
- Do not overtake a slowly moving vehicle too rapidly. Even though the brake lamps are not flashing, it may be slowing down or starting to turn.
- If you are being passed, make it easy for the following driver to get ahead of you. Perhaps you can ease a little to the right.

Loss of Control

Let us review what driving experts say about what happens when the three control systems — brakes, steering, and acceleration — do not have enough friction where the tires meet the road to do what the driver has asked.

In any emergency, do not give up. Keep trying to steer and constantly seek an escape route or area of less danger.

Skidding

In a skid, a driver can lose control of the vehicle. Defensive drivers avoid most skids by taking reasonable care suited to existing conditions, and by not overdriving those conditions. But skids are always possible.

The three types of skids correspond to your vehicle's three control systems. In the braking skid, your wheels are not rolling. In the steering or cornering skid, too much speed or steering in a curve causes tires to slip and lose cornering force. And in the acceleration skid, too much throttle causes the driving wheels to spin.

A cornering skid is best handled by easing your foot off the accelerator pedal.

Remember: Any traction control system helps avoid only the acceleration skid. If your traction control system is off, then an acceleration skid is also best handled by easing your foot off the accelerator pedal.

If your vehicle starts to slide, ease your foot off the accelerator pedal and quickly steer the way you want the vehicle to go. If you start steering quickly enough, your vehicle may straighten out. Always be ready for a second skid if it occurs.

With StabiliTrak®, you may see the STABILITY SYS ACTIVE message on the Driver Information Center. See *DIC Warnings and Messages on page 3-79*.

Of course, traction is reduced when water, snow, ice, gravel, or other material is on the road. For safety, you will want to slow down and adjust your driving to these conditions. It is important to slow down on slippery surfaces because stopping distance will be longer and vehicle control more limited.

While driving on a surface with reduced traction, try your best to avoid sudden steering, acceleration, or braking, including engine braking by shifting to a lower gear. Any sudden changes could cause the tires to slide. You may not realize the surface is slippery until your vehicle is skidding. Learn to recognize warning clues — such as enough water, ice, or packed snow on the road to make a mirrored surface — and slow down when you have any doubt.

Remember: Any Anti-Lock Brake System (ABS) helps avoid only the braking skid.

Competitive Driving

See your warranty book before using your vehicle for competitive driving.

Notice: **If you use your vehicle for racing or other competitive driving, the engine may use more oil than it would with normal use. Low oil levels can damage the engine. Be sure to check the oil level often during racing or other competitive driving and keep the level at or near the upper mark that shows the proper operating range on the engine oil dipstick. For information on how to add oil, see** ***Engine Oil on page 5-18*****.**

Driving at Night

Night driving is more dangerous than day driving. One reason is that some drivers are likely to be impaired — by alcohol or drugs, with night vision problems, or by fatigue.

Here are some tips on night driving.

- Drive defensively.
- Do not drink and drive.
- Adjust the inside rearview mirror to reduce the glare from headlamps behind you.
- Since you cannot see as well, you may need to slow down and keep more space between you and other vehicles.
- Slow down, especially on higher speed roads. Your vehicle's headlamps can light up only so much road ahead.
- In remote areas, watch for animals.
- If you are tired, pull off the road in a safe place and rest.

No one can see as well at night as in the daytime. But as we get older these differences increase. A 50-year-old driver may require at least twice as much light to see the same thing at night as a 20-year-old.

What you do in the daytime can also affect your night vision. For example, if you spend the day in bright sunshine you are wise to wear sunglasses. Your eyes will have less trouble adjusting to night. But if you are driving, do not wear sunglasses at night. They may cut down on glare from headlamps, but they also make a lot of things invisible.

You can be temporarily blinded by approaching headlamps. It can take a second or two, or even several seconds, for your eyes to re-adjust to the dark. When you are faced with severe glare, as from a driver who does not lower the high beams, or a vehicle with misaimed headlamps, slow down a little. Avoid staring directly into the approaching headlamps.

Keep the windshield and all the glass on your vehicle clean — inside and out. Glare at night is made much worse by dirt on the glass. Even the inside of the glass can build up a film caused by dust. Dirty glass makes lights dazzle and flash more than clean glass would, making the pupils of your eyes contract repeatedly.

Remember that the headlamps light up far less of a roadway when you are in a turn or curve. Keep your eyes moving; that way, it is easier to pick out dimly lighted objects. Just as the headlamps should be checked regularly for proper aim, so should your eyes be examined regularly. Some drivers suffer from night blindness — the inability to see in dim light — and are not even aware of it.

Driving in Rain and on Wet Roads

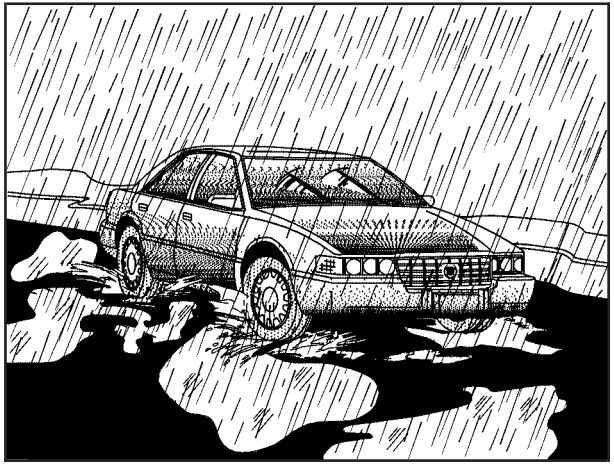

Rain and wet roads can mean driving trouble. On a wet road, you cannot stop, accelerate, or turn as well because your tire-to-road traction is not as good as on dry roads. And, if your tires do not have much tread left, you will get even less traction. It is always wise to go slower and be cautious if rain starts to fall while you are driving. The surface may get wet suddenly when your reflexes are tuned for driving on dry pavement.

The heavier the rain, the harder it is to see. Even if your windshield wiper blades are in good shape, a heavy rain can make it harder to see road signs and traffic signals, pavement markings, the edge of the road, and even people walking.

It is wise to keep your windshield wiping equipment in good shape and keep your windshield washer fluid reservoir filled with washer fluid. Replace your windshield wiper inserts when they show signs of streaking or missing areas on the windshield, or when strips of rubber start to separate from the inserts.

⚠ CAUTION:

Wet brakes can cause accidents. They will not work as well in a quick stop and may cause pulling to one side. You could lose control of the vehicle.

After driving through a large puddle of water or a car wash, apply your brake pedal lightly until your brakes work normally.

Driving too fast through large water puddles or even going through some car washes can cause problems, too. The water may affect your brakes. Try to avoid puddles. But if you cannot, try to slow down before you hit them.

Hydroplaning

Hydroplaning is dangerous. So much water can build up under your tires that they can actually ride on the water. This can happen if the road is wet enough and you are going fast enough. When your vehicle is hydroplaning, it has little or no contact with the road.

Hydroplaning does not happen often. But it can if your tires do not have much tread or if the pressure in one or more is low. It can happen if a lot of water is standing on the road. If you can see reflections from trees, telephone poles, or other vehicles, and raindrops dimple the water's surface, there could be hydroplaning.

Hydroplaning usually happens at higher speeds. There just is not a hard and fast rule about hydroplaning. The best advice is to slow down when it is raining.

Driving Through Deep Standing Water

Notice: **If you drive too quickly through deep puddles or standing water, water can come in through your engine's air intake and badly damage your engine. Never drive through water that is slightly lower than the underbody of your vehicle. If you cannot avoid deep puddles or standing water, drive through them very slowly.**

Driving Through Flowing Water

⚠ CAUTION:

Flowing or rushing water creates strong forces. If you try to drive through flowing water, as you might at a low water crossing, your vehicle can be carried away. As little as six inches of flowing water can carry away a smaller vehicle. If this happens, you and other vehicle occupants could drown. Do not ignore police warning signs, and otherwise be very cautious about trying to drive through flowing water.

Some Other Rainy Weather Tips

- Besides slowing down, allow some extra following distance. And be especially careful when you pass another vehicle. Allow yourself more clear room ahead, and be prepared to have your view restricted by road spray.
- Have good tires with proper tread depth. See *Tires on page 5-57*.

City Driving

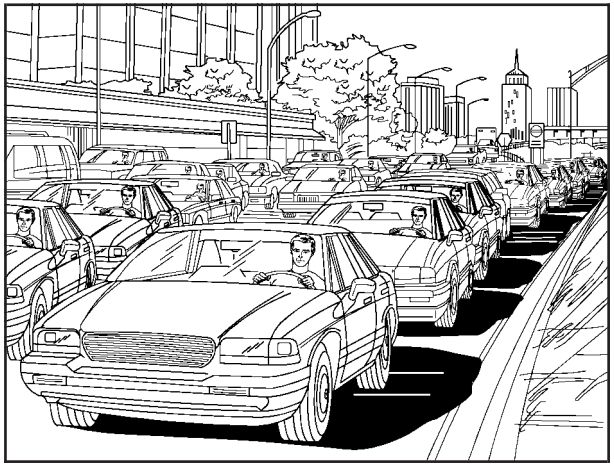

One of the biggest problems with city streets is the amount of traffic on them. You will want to watch out for what the other drivers are doing and pay attention to traffic signals.

Here are ways to increase your safety in city driving:

- Know the best way to get to where you are going. Get a city map and plan your trip into an unknown part of the city just as you would for a cross-country trip.
- Try to use the freeways that rim and crisscross most large cities. You will save time and energy. See *Freeway Driving on page 4-23*.
- Treat a green light as a warning signal. A traffic light is there because the corner is busy enough to need it. When a light turns green, and just before you start to move, check both ways for vehicles that have not cleared the intersection or may be running the red light.

Freeway Driving

Mile for mile, freeways — also called thruways, parkways, expressways, turnpikes, or superhighways — are the safest of all roads. But they have their own special rules.

The most important advice on freeway driving is: Keep up with traffic and keep to the right. Drive at the same speed most of the other drivers are driving. Too-fast or too-slow driving breaks a smooth traffic flow. Treat the left lane on a freeway as a passing lane.

At the entrance, there is usually a ramp that leads to the freeway. If you have a clear view of the freeway as you drive along the entrance ramp, you should begin to check traffic. Try to determine where you expect to blend with the flow. Try to merge into the gap at close to the prevailing speed. Switch on your turn signal, check your mirrors, and glance over your shoulder as often as necessary. Try to blend smoothly with the traffic flow.

Once you are on the freeway, adjust your speed to the posted limit or to the prevailing rate if it is slower. Stay in the right lane unless you want to pass.

Before changing lanes, check your mirrors. Then use your turn signal.

Just before you leave the lane, glance quickly over your shoulder to make sure there is not another vehicle in your blind spot.

Once you are moving on the freeway, make certain you allow a reasonable following distance.

Expect to move slightly slower at night.

When you want to leave the freeway, move to the proper lane well in advance. If you miss your exit, do not, under any circumstances, stop and back up. Drive on to the next exit.

The exit ramp can be curved, sometimes quite sharply. The exit speed is usually posted. Reduce your speed according to your speedometer, not to your sense of motion. After driving for any distance at higher speeds, you may tend to think you are going slower than you actually are.

Before Leaving on a Long Trip

Make sure you are ready. Try to be well rested. If you must start when you are not fresh — such as after a day's work — do not plan to make too many miles that first part of the journey. Wear comfortable clothing and shoes you can easily drive in.

Is your vehicle ready for a long trip? If you keep it serviced and maintained, it is ready to go. If it needs service, have it done before starting out. Of course, you will find experienced and able service experts in GM dealerships all across North America. They will be ready and willing to help if you need it.

Here are some things you can check before a trip:

- *Windshield Washer Fluid:* Is the reservoir full? Are all windows clean inside and outside?
- *Wiper Blades:* Are they in good shape?
- *Fuel, Engine Oil, Other Fluids:* Have you checked all levels?
- *Lamps:* Are they all working? Are the lenses clean?
- *Tires:* They are vitally important to a safe, trouble-free trip. Is the tread good enough for long-distance driving? Are the tires all inflated to the recommended pressure?
- *Weather Forecasts:* What is the weather outlook along your route? Should you delay your trip a short time to avoid a major storm system?
- *Maps:* Do you have up-to-date maps?

Highway Hypnosis

Is there actually such a condition as highway hypnosis? Or is it just plain falling asleep at the wheel? Call it highway hypnosis, lack of awareness, or whatever.

There is something about an easy stretch of road with the same scenery, along with the hum of the tires on the road, the drone of the engine, and the rush of the wind against the vehicle that can make you sleepy. Do not let it happen to you! If it does, your vehicle can leave the road in less than a second, and you could crash and be injured.

What can you do about highway hypnosis? First, be aware that it can happen.

Then here are some tips:

- Make sure your vehicle is well ventilated, with a comfortably cool interior.
- Keep your eyes moving. Scan the road ahead and to the sides. Check your rearview mirrors and your instruments frequently.
- If you get sleepy, pull off the road into a rest, service, or parking area and take a nap, get some exercise, or both. For safety, treat drowsiness on the highway as an emergency.

Hill and Mountain Roads

Driving on steep hills or mountains is different from driving in flat or rolling terrain.

If you drive regularly in steep country, or if you are planning to visit there, here are some tips that can make your trips safer and more enjoyable.

- Keep your vehicle in good shape. Check all fluid levels and also the brakes, tires, cooling system, and transmission. These parts can work hard on mountain roads.

⚠ CAUTION:

If you do not shift down, your brakes could get so hot that they would not work well. You would then have poor braking or even none going down a hill. You could crash. Shift down to let your engine assist your brakes on a steep downhill slope.

⚠ CAUTION:

Coasting downhill in NEUTRAL (N) or with the ignition off is dangerous. Your brakes will have to do all the work of slowing down. They could get so hot that they would not work well.

CAUTION: (Continued)

CAUTION: (Continued)

You would then have poor braking or even none going down a hill. You could crash. Always have your engine running and your vehicle in gear when you go downhill.

- Know how to go down hills. The most important thing to know is this: let your engine do some of the slowing down. Shift to a lower gear when you go down a steep or long hill.
- Know how to go uphill. You may want to shift down to a lower gear. The lower gears help cool your engine and transmission, and you can climb the hill better.
- Stay in your own lane when driving on two-lane roads in hills or mountains. Do not swing wide or cut across the center of the road. Drive at speeds that let you stay in your own lane.
- As you go over the top of a hill, be alert. There could be something in your lane, like a stalled car or an accident.
- You may see highway signs on mountains that warn of special problems. Examples are long grades, passing or no-passing zones, a falling rocks area, or winding roads. Be alert to these and take appropriate action.

Winter Driving

Here are some tips for winter driving:

- Have your vehicle in good shape for winter.
- You may want to put winter emergency supplies in your trunk.

Also see *Tires on page 5-57*.

Include an ice scraper, a small brush or broom, a supply of windshield washer fluid, a rag, some winter outer clothing, a small shovel, a flashlight, a red cloth, and a couple of reflective warning triangles. And, if you will be driving under severe conditions, include a small bag of sand, a piece of old carpet, or a couple of burlap bags to help provide traction. Be sure you properly secure these items in your vehicle.

Driving on Snow or Ice

Most of the time, those places where the tires meet the road probably have good traction.

However, if there is snow or ice between the tires and the road, you can have a very slippery situation. You will have a lot less traction, or grip, and will need to be very careful.

What is the worst time for this? Wet ice. Very cold snow or ice can be slick and hard to drive on. But wet ice can be even more trouble because it may offer the least traction of all. You can get wet ice when it is about freezing, 32°F (0°C), and freezing rain begins to fall. Try to avoid driving on wet ice until salt and sand crews can get there.

Whatever the condition — smooth ice, packed, blowing, or loose snow — drive with caution.

Traction control improves your ability to accelerate when driving on a slippery road. Even though your vehicle has the Traction Control System (TCS), you will want to slow down and adjust your driving to the road conditions. Under certain conditions, you may want to turn the TCS off, such as when driving through deep snow and loose gravel, to help maintain vehicle motion at lower speeds. See *Traction Control System (TCS) on page 4-9*, *StabiliTrak® System on page 4-11*, *Rocking Your Vehicle to Get It Out on page 4-32*, and “Winter Tires” under *Tires on page 5-57*.

Your Anti-Lock Brake System (ABS) improves your vehicle's stability when you make a hard stop on a slippery road. Even though you have ABS, you will want to begin stopping sooner than you would on dry pavement. See *Anti-Lock Brake System (ABS) on page 4-7*.

- Allow greater following distance on any slippery road.
- Watch for slippery spots. The road might be fine until you hit a spot that is covered with ice. On an otherwise clear road, ice patches may appear in shaded areas where the sun cannot reach, such as around clumps of trees, behind buildings, or under bridges. Sometimes the surface of a curve or an overpass may remain icy when the surrounding roads are clear. If you see a patch of ice ahead of you, brake before you are on it. Try not to brake while you are actually on the ice, and avoid sudden steering maneuvers.

If You Are Caught in a Blizzard

If you are stopped by heavy snow, you could be in a serious situation. You should probably stay with your vehicle unless you know for sure that you are near help and you can hike through the snow. Here are some things to do to summon help and keep yourself and your passengers safe:

- Turn on your hazard flashers.
- Tie a red cloth to your vehicle to alert police that you have been stopped by the snow.
- Put on extra clothing or wrap a blanket around you. If you do not have blankets or extra clothing, make body insulators from newspapers, burlap bags, rags, floor mats — anything you can wrap around yourself or tuck under your clothing to keep warm.

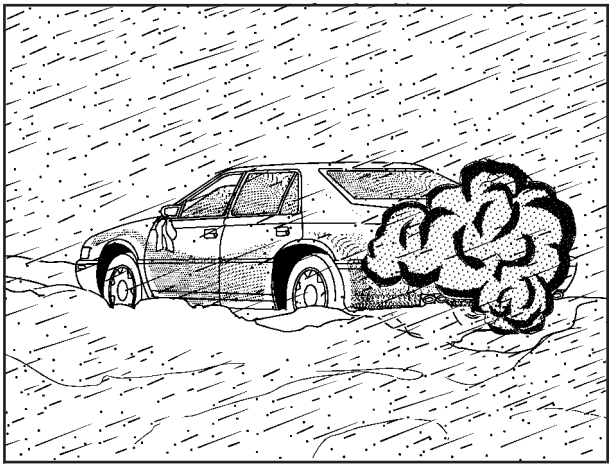

You can run the engine to keep warm, but be careful.

⚠ CAUTION:

Snow can trap exhaust gases under your vehicle. This can cause deadly CO (carbon monoxide) gas to get inside. CO could overcome you and kill you. You cannot see it or smell it, so you might not know it is in your vehicle. Clear away snow from around the base of your vehicle, especially any that is blocking your exhaust pipe. And check around again from time to time to be sure snow does not collect there.

Open a window just a little on the side of the vehicle that is away from the wind. This will help keep CO out.

Run your engine only as long as you must. This saves fuel. When you run the engine, make it go a little faster than just idle. That is, push the accelerator slightly. This uses less fuel for the heat that you get and it keeps the battery charged. You will need a well-charged battery to restart the vehicle, and possibly for signaling later on with your headlamps. Let the heater run for a while.

Then, shut the engine off and close the window almost all the way to preserve the heat. Start the engine again and repeat this only when you feel really uncomfortable from the cold. But do it as little as possible. Preserve the fuel as long as you can. To help keep warm, you can get out of the vehicle and do some fairly vigorous exercises every half hour or so until help comes.

If Your Vehicle is Stuck in Sand, Mud, Ice or Snow

In order to free your vehicle when it is stuck, you will need to spin the wheels, but you do not want to spin your wheels too fast. The method known as rocking can help you get out when you are stuck, but you must use caution.

⚠ CAUTION:

If you let your tires spin at high speed, they can explode, and you or others could be injured. And, the transmission or other parts of the vehicle can overheat. That could cause an engine compartment fire or other damage. When you are stuck, spin the wheels as little as possible. Do not spin the wheels above 35 mph (55 km/h) as shown on the speedometer.

Notice: **Spinning your wheels can destroy parts of your vehicle as well as the tires. If you spin the wheels too fast while shifting your transmission back and forth, you can destroy your transmission.**

For more information about using tire chains on your vehicle, see *Tire Chains on page 5-78*.

Rocking Your Vehicle to Get It Out

First, turn your steering wheel left and right. That will clear the area around your front wheels. You should turn your traction control system off. See *Traction Control System (TCS) on page 4-9*. Then shift back and forth between REVERSE (R) and a forward gear, spinning the wheels as little as possible. Release the accelerator pedal while you shift, and press lightly on the accelerator pedal when the transmission is in gear. By slowly spinning your wheels in the forward and reverse directions, you will cause a rocking motion that may free your vehicle. If that does not get you out after a few tries, you may need to be towed out. If you do need to be towed out, see *Towing Your Vehicle on page 4-37*.

Loading Your Vehicle

It is very important to know how much weight your vehicle can carry. This weight is called the vehicle capacity weight and includes the weight of all occupants, cargo, and all nonfactory-installed options. Two labels on your vehicle show how much weight it may properly carry, the Tire and Loading Information label and the Certification label.

⚠ CAUTION:

Do not load your vehicle any heavier than the Gross Vehicle Weight Rating (GVWR), or either the maximum front or rear Gross Axle Weight Rating (GAWR). If you do, parts on your vehicle can break, and it can change the way your vehicle handles. These could cause you to lose control and crash. Also, overloading can shorten the life of your vehicle.

Tire and Loading Information Label

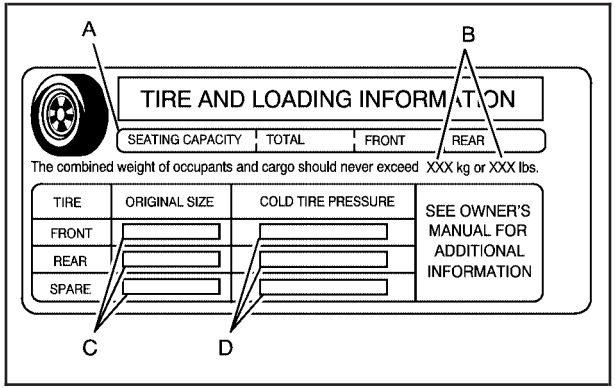

Label Example

A vehicle specific Tire and Loading Information label is attached to the vehicle's center pillar (B-pillar). With the driver's door open, you will find the label attached below the door lock post (striker). The tire and loading information label shows the number of occupant seating positions (A), and the maximum vehicle capacity weight (B) in kilograms and pounds.

The Tire and Loading Information label also shows the tire size of the original equipment tires (C) and the recommended cold tire inflation pressures (D). For more information on tires and inflation see *Tires on page 5-57* and *Inflation - Tire Pressure on page 5-65*.

There is also important loading information on the Certification label. It tells you the Gross Vehicle Weight Rating (GVWR) and the Gross Axle Weight Rating (GAWR) for the front and rear axle; see "Certification Label" later in this section.

Steps for Determining Correct Load Limit

1. Locate the statement "The combined weight of occupants and cargo should never exceed XXX kg or XXX lbs" on your vehicle's placard.
2. Determine the combined weight of the driver and passengers that will be riding in your vehicle.
3. Subtract the combined weight of the driver and passengers from XXX kg or XXX lbs.

4. The resulting figure equals the available amount of cargo and luggage load capacity. For example, if the “XXX” amount equals 1400 lbs and there will be five 150 lb passengers in your vehicle, the amount of available cargo and luggage load capacity is 650 lbs (1400 – 750 (5 x 150) = 650 lbs).
5. Determine the combined weight of luggage and cargo being loaded on the vehicle. That weight may not safely exceed the available cargo and luggage load capacity calculated in Step 4.
6. If your vehicle will be towing a trailer, the load from your trailer will be transferred to your vehicle. Consult this manual to determine how this reduces the available cargo and luggage load capacity of your vehicle.

   If your vehicle can tow a trailer, see *Towing a Trailer (STS Only) on page 4-40* for important information on towing a trailer, towing safety rules, and trailering tips.

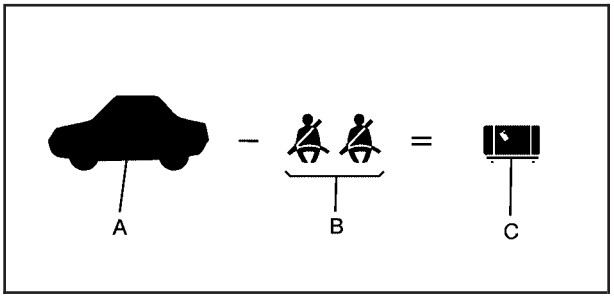

Example 1

Item	Description	Total
A	Vehicle Capacity Weight for Example 1 =	1,000 lbs (453 kg)
B	Subtract Occupant Weight 150 lbs (68 kg) × 2 =	300 lbs (136 kg)
C	Available Occupant and Cargo Weight =	700 lbs (317 kg)

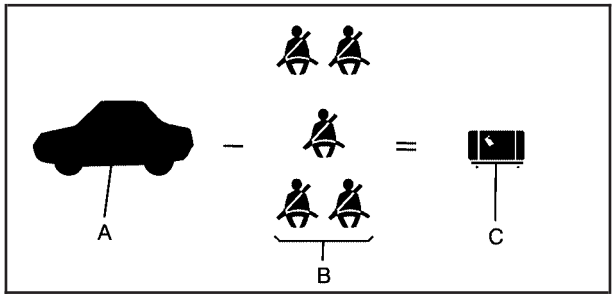

Example 2

Item	Description	Total
A	Vehicle Capacity Weight for Example 2 =	1,000 lbs (453 kg)
B	Subtract Occupant Weight 150 lbs (68 kg) × 5 =	750 lbs (340 kg)
C	Available Cargo Weight =	250 lbs (113 kg)

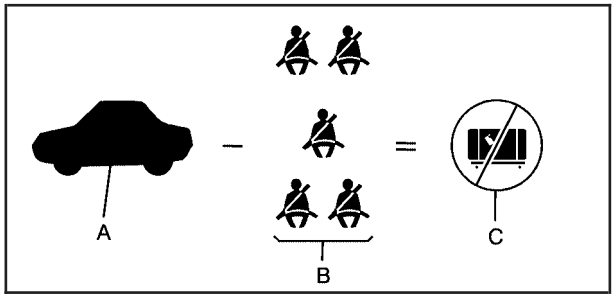

Example 3

Item	Description	Total
A	Vehicle Capacity Weight for Example 3 =	1,000 lbs (453 kg)
B	Subtract Occupant Weight 200 lbs (91 kg) × 5 =	1,000 lbs (453 kg)
C	Available Cargo Weight =	0 lbs (0 kg)

Refer to your vehicle's Tire and Loading Information label for specific information about your vehicle's capacity weight and seating positions. The combined weight of the driver, passengers, and cargo should never exceed your vehicle's capacity weight.

Certification Label

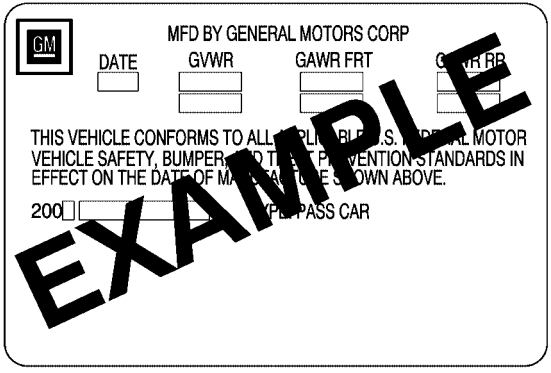

A vehicle specific Certification label is attached to the rear edge of the driver's door, and tells you the gross weight capacity of your vehicle, called the Gross Vehicle Weight Rating (GVWR). The GVWR includes the weight of the vehicle, all occupants, fuel, cargo, and tongue weight, if pulling a trailer. The Certification label also tells you the maximum weights for the front and rear axles, called the Gross Axle Weight Rating (GAWR). To find out the actual loads on your front and rear axles, you need to go to a weigh station and weigh your vehicle. Your dealer can help you with this.

Never exceed the GVWR for your vehicle, or the Gross Axle Weight Rating (GAWR) for either the front or rear axle.

And, if you do have a heavy load, you should spread it out. Do not carry more than 141 lbs (64 kg) in your trunk.

⚠ CAUTION:

Do not load your vehicle any heavier than the Gross Vehicle Weight Rating (GVWR), or either the maximum front or rear Gross Axle Weight Rating (GAWR). If you do, parts on your vehicle can break, and it can change the way your vehicle handles. These could cause you to lose control and crash. Also, overloading can shorten the life of your vehicle.

Notice: **Overloading your vehicle may cause damage. Repairs would not be covered by your warranty. Do not overload your vehicle.**

If you put things inside your vehicle, like suitcases, tools, packages, or anything else, they will go as fast as the vehicle goes. If you have to stop or turn quickly, or if there is a crash, they will keep going.

⚠ CAUTION:

Things you put inside your vehicle can strike and injure people in a sudden stop or turn, or in a crash.

- **Put things in the trunk of your vehicle. In a trunk, put them as far forward as you can. Try to spread the weight evenly.**
- **Never stack heavier things, like suitcases, inside the vehicle so that some of them are above the tops of the seats.**
- **Do not leave an unsecured child restraint in your vehicle.**
- **When you carry something inside the vehicle, secure it whenever you can.**

Automatic Level Control

This feature keeps the rear of your vehicle level as the load changes. It is automatic, you do not need to adjust anything.

Towing

Towing Your Vehicle

Consult your dealer or a professional towing service if you need to have your disabled vehicle towed. See *Roadside Service on page 7-5*.

If you want to tow your vehicle behind another vehicle for recreational purposes (such as behind a motorhome), see Recreational Vehicle Towing following.

Recreational Vehicle Towing

Recreational vehicle towing means towing your vehicle behind another vehicle – such as behind a motorhome. The two most common types of recreational vehicle towing are known as “dinghy towing” (towing your vehicle with all four wheels on the ground) and “dolly towing” (towing your vehicle with two wheels on the ground and two wheels up on a device known as a “dolly”).

With the proper preparation and equipment, many vehicles can be towed in these ways. See “Dinghy Towing” and “Dolly Towing,” following.

Here are some important things to consider before you do recreational vehicle towing:

- What is the towing capacity of the towing vehicle? Be sure you read the tow vehicle manufacturer’s recommendations.
- How far will you tow? Some vehicles have restrictions on how far and how long they can tow.
- Do you have the proper towing equipment? See your dealer or trailering professional for additional advice and equipment recommendations.
- Is your vehicle ready to be towed? Just as you would prepare your vehicle for a long trip, you will want to make sure your vehicle is prepared to be towed. See *Before Leaving on a Long Trip on page 4-24*.

Dinghy Towing

Notice: **If you tow your vehicle with all four wheels on the ground, the drivetrain components could be damaged. The repairs would not be covered by your warranty. Do not tow your vehicle with all four wheels on the ground.**

Your vehicle was not designed to be towed with all four wheels on the ground. If your vehicle must be towed, you should use a dolly. See “Dolly Towing” later in this section for more information.

Dolly Towing (Rear-Wheel-Drive Vehicles) (STS Only)

Notice: **Dolly towing or dinghy towing your vehicle may cause damage because of reduced ground clearance. Always tow your vehicle using the dolly towing or dinghy towing procedure listed in this section or put your vehicle on a flatbed truck.**

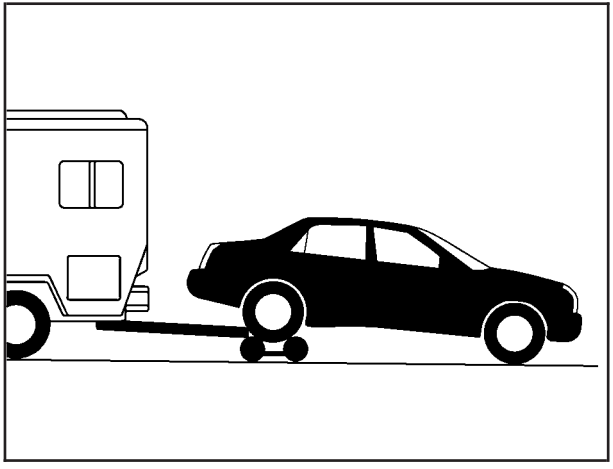

If your vehicle is a rear-wheel drive, it can be towed using a dolly.

To tow your vehicle using a dolly, follow these steps:

1. Put the rear wheels on the dolly.
2. Put the vehicle in PARK (P).
3. Set the parking brake and then remove the key.
4. Clamp the steering wheel in a straight-ahead position with a clamping device designed for towing.
5. Release the parking brake.

Dolly Towing (STS-V)

Notice: **Dolly towing or dinghy towing your vehicle may cause damage because of reduced ground clearance. Always put your vehicle on a flatbed truck.**

If you have an STS-V, it can only be towed on a flat-bed trailer.

Dolly Towing (All-Wheel-Drive Vehicles)

Notice: **Towing an all-wheel-drive vehicle with all four wheels on the ground, or even with only two of its wheels on the ground, will damage drivetrain components. Do not tow an all-wheel-drive vehicle if any of its wheels will be on the ground.**

If you have an All-Wheel Drive (AWD) vehicle, it can only be towed on a flat-bed trailer.

Towing a Trailer (STS Only)

⚠ CAUTION:

If you do not use the correct equipment and drive properly, you can lose control when you pull a trailer. For example, if the trailer is too heavy, the brakes may not work well — or even at all. You and your passengers could be seriously injured. You may also damage your vehicle; the resulting repairs would not be covered by your warranty. Pull a trailer only if you have followed all the steps in this section. Ask your dealer for advice and information about towing a trailer with your vehicle.

Your vehicle can tow a trailer if it is equipped with the proper trailer towing equipment. To identify the trailering capacity of your vehicle, you should read the information in “Weight of the Trailer” that appears later in this section. Trailering is different than just driving your vehicle by itself. Trailering means changes in handling, durability and fuel economy. Successful, safe trailering takes correct equipment, and it has to be used properly. That is the reason for this part. In it are many time-tested, important trailering tips and safety rules. Many of these are important for your safety and that of your passengers. So please read this section carefully before you pull a trailer.

Load-pulling components such as the engine, transmission, wheel assemblies and tires are forced to work harder against the drag of the added weight. The engine is required to operate at relatively higher speeds and under greater loads, generating extra heat. What is more, the trailer adds considerably to wind resistance, increasing the pulling requirements.

If You Do Decide To Pull a Trailer

If you do, here are some important points:

- There are many different laws, including speed limit restrictions, having to do with trailering. Make sure your rig will be legal, not only where you live but also where you will be driving. A good source for this information can be state or provincial police.
- Consider using a sway control. You can ask a hitch dealer about sway controls.

- Do not tow a trailer at all during the first 1,000 miles (1 600 km) your new vehicle is driven. Your engine, axle or other parts could be damaged.
- Then, during the first 500 miles (800 km) that you tow a trailer, do not drive over 50 mph (80 km/h) and do not make starts at full throttle. This helps your engine and other parts of your vehicle wear in at the heavier loads.
- Obey speed limit restrictions when towing a trailer. Do not drive faster than the maximum posted speed for trailers, or no more than 55 mph (90 km/h), to save wear on your vehicle's parts.

Three important considerations have to do with weight:

- the weight of the trailer
- the weight of the trailer tongue
- and the total weight on your vehicle's tires

Weight of the Trailer

How heavy can a trailer safely be? It should never weigh more than 1,000 lbs (450 kg). These are total maximum weights including the load. But even that can be too heavy.

The STS-V is not rated or designed to tow any trailer.

It depends on how you plan to use your rig. For example, speed, altitude, road grades, outside temperature and how much your vehicle is used to pull a trailer are all important. It can also depend on any special equipment that you have on your vehicle, and the amount of tongue weight the vehicle can carry. See "Weight of the Trailer Tongue" later in this section for more information.

Maximum trailer weight is calculated assuming only the driver is in the tow vehicle and it has all the required trailering equipment. The weight of additional optional equipment, passengers and cargo in the tow vehicle must be subtracted from the maximum trailer weight.

You can ask your dealer for our trailering information or advice, or you can write us at:

Cadillac Customer Assistance Center
Cadillac Motor Car Division
P.O. Box 33169
Detroit, MI 48232-5169

In Canada, write to:

General Motors of Canada Limited
Customer Communication Centre, 163-005
1908 Colonel Sam Drive
Oshawa, Ontario L1H 8P7

Weight of the Trailer Tongue

The tongue load (A) of any trailer is an important weight to measure because it affects the total or gross weight of your vehicle. The Gross Vehicle Weight (GVW) includes the curb weight of the vehicle, any cargo you may carry in it, and the people who will be riding in the vehicle. And if you tow a trailer, you must add the tongue load to the GVW because your vehicle will be carrying that weight, too. See *Loading Your Vehicle on page 4-32* for more information about your vehicle's maximum load capacity.

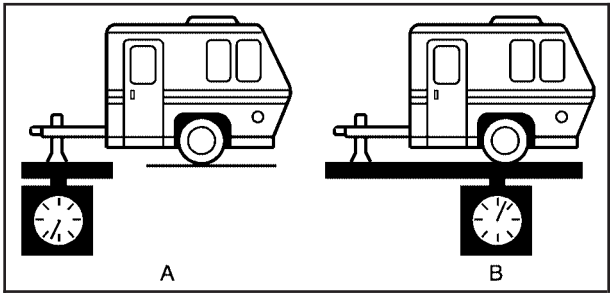

If you are using a weight-carrying hitch or a weight-distributing hitch, the trailer tongue (A) should weigh 10 to 15 percent of the total loaded trailer weight (B).

After you have loaded your trailer, weigh the trailer and then the tongue, separately, to see if the weights are proper. If they are not, you may be able to get them right simply by moving some items around in the trailer.

Total Weight on Your Vehicle's Tires

Be sure your vehicle's tires are inflated to the upper limit for cold tires. You will find these numbers on the Tire and Loading Information. See *Loading Your Vehicle on page 4-32*. Then be sure you do not go over the GVW limit for your vehicle, including the weight of the trailer tongue.

Hitches

It is important to have the correct hitch equipment. Crosswinds, large trucks going by and rough roads are a few reasons why you will need the right hitch. Here are some rules to follow:

- The rear bumper on your vehicle is not intended for hitches. Do not attach rental hitches or other bumper-type hitches to it. Use only a frame-mounted hitch that does not attach to the bumper.
- Will you have to make any holes in the body of your vehicle when you install a trailer hitch? If you do, then be sure to seal the holes later when you remove the hitch. If you do not seal them, deadly carbon monoxide (CO) from your exhaust can get into your vehicle. See *Engine Exhaust on page 2-39*. Dirt and water can, too.

Trailer Brakes

Because you have anti-lock brakes, do not try to tap into your vehicle's hydraulic brake system. If you do, both brake systems will not work well, or at all.

Be sure to read and follow the instructions for the trailer brakes so you will be able to maintain them properly.

Driving with a Trailer

Towing a trailer requires a certain amount of experience. Before setting out for the open road, you will want to get to know your rig. Acquaint yourself with the feel of handling and braking with the added weight of the trailer. And always keep in mind that the vehicle you are driving is now a good deal longer and not nearly as responsive as your vehicle is by itself.

Before you start, check the trailer hitch and platform (and attachments), safety chains, electrical connector, lamps, tires and mirror adjustment. If the trailer has electric brakes, start your vehicle and trailer moving and then apply the trailer brake controller by hand to be sure the brakes are working. This lets you check your electrical connection at the same time.

During your trip, check occasionally to be sure that the load is secure, and that the lamps and any trailer brakes are still working.

Following Distance

Stay at least twice as far behind the vehicle ahead as you would when driving your vehicle without a trailer. This can help you avoid situations that require heavy braking and sudden turns.

Passing

You will need more passing distance up ahead when you are towing a trailer. And, because you are a good deal longer, you will need to go much farther beyond the passed vehicle before you can return to your lane.

Backing Up

Hold the bottom of the steering wheel with one hand. Then, to move the trailer to the left, just move that hand to the left. To move the trailer to the right, move your hand to the right. Always back up slowly and, if possible, have someone guide you.

Making Turns

Notice: **Making very sharp turns while trailering could cause the trailer to come in contact with the vehicle. Your vehicle could be damaged. Avoid making very sharp turns while trailering.**

When you are turning with a trailer, make wider turns than normal. Do this so your trailer will not strike soft shoulders, curbs, road signs, trees or other objects. Avoid jerky or sudden maneuvers. Signal well in advance.

Turn Signals When Towing a Trailer

When you tow a trailer, your vehicle may need a different turn signal flasher and/or extra wiring. Check with your dealer. The arrows on your instrument panel will flash whenever you signal a turn or lane change. Properly hooked up, the trailer lamps will also flash, telling other drivers you are about to turn, change lanes or stop.

When towing a trailer, the arrows on your instrument panel will flash for turns even if the bulbs on the trailer are burned out. Thus, you may think drivers behind you are seeing your signal when they are not. It is important to check occasionally to be sure the trailer bulbs are still working.

Driving on Grades

Reduce speed and shift to a lower gear *before* you start down a long or steep downgrade. If you do not shift down, you might have to use your brakes so much that they would get hot and no longer work well.

Climbing grades steeper than four percent at temperatures above 90° F (32° C) with a loaded vehicle and trailer is not recommended. The cooling system may temporarily overheat. See *Engine Overheating on page 5-31*.

Parking on Hills

⚠ CAUTION:

You really should not park your vehicle, with a trailer attached, on a hill. If something goes wrong, your rig could start to move. People can be injured, and both your vehicle and the trailer can be damaged.

But if you ever have to park your rig on a hill, here is how to do it:

1. Apply your regular brakes, but do not shift into PARK (P). When parking uphill, turn the wheels away from the curb. When parking downhill, turn the wheels into the curb.
2. Have someone place chocks behind the trailer wheels.
3. When the wheel chocks are in place, release the regular brakes until the chocks absorb the load.
4. Reapply the regular brakes. Then shift into PARK (P) firmly and apply your parking brake.
5. Release the regular brakes.

When You Are Ready to Leave After Parking on a Hill

1. Apply your regular brakes and hold the pedal down while you:
   - start your engine
   - shift into a gear, and
   - release the parking brake.
2. Let up on the brake pedal.
3. Drive slowly until the trailer is clear of the chocks.
4. Stop and have someone pick up and store the chocks.

Maintenance When Trailer Towing

Your vehicle will need service more often when you are pulling a trailer. See the Maintenance Schedule for more on this. Things that are especially important in trailer operation are automatic transmission fluid (do not overfill), engine oil, drive belt, cooling system and brake system. Each of these is covered in this manual, and the Index will help you find them quickly. If you are trailering, it is a good idea to review this information before you start your trip.

Check periodically to see that all hitch nuts and bolts are tight.

Engine Cooling When Trailer Towing

Your cooling system may temporarily overheat during severe operating conditions. See *Engine Overheating on page 5-31*.

Section 5 Service and Appearance Care

Service 5-3
Accessories and Modifications 5-3
California Proposition 65 Warning 5-3
Doing Your Own Service Work 5-4
Adding Equipment to the Outside of Your Vehicle 5-5

Fuel 5-5
Gasoline Octane 5-5
Gasoline Specifications 5-6
California Fuel 5-6
Additives 5-6
Fuels in Foreign Countries 5-7
Filling the Tank 5-8
Filling a Portable Fuel Container 5-10

Checking Things Under the Hood 5-10
Hood Release 5-11
Engine Compartment Overview 5-12
Engine Oil 5-18
Engine Oil Life System 5-24
Engine Air Cleaner/Filter 5-25
Automatic Transmission Fluid 5-27
Engine Coolant 5-27
Coolant Surge Tank Pressure Cap 5-31
Engine Overheating 5-31
Overheated Engine Protection Operating Mode 5-32
Cooling System 5-33
Power Steering Fluid 5-40
Windshield Washer Fluid 5-41
Brakes 5-42
Battery 5-45
Jump Starting 5-46

All-Wheel Drive 5-51

Rear Axle 5-52

Front Axle 5-53

Bulb Replacement 5-54
High Intensity Discharge (HID) Lighting 5-54
Halogen Bulbs 5-54
Back-Up Lamps 5-54

Windshield Replacement 5-56

Windshield Wiper Blade Replacement 5-56

Tires 5-57
Tire Sidewall Labeling 5-59
Tire Terminology and Definitions 5-61
Run-Flat Tires (STS-V) 5-64
Inflation - Tire Pressure 5-65
Tire Pressure Monitor System 5-67
Tire Inspection and Rotation 5-70
When It Is Time for New Tires 5-72
Buying New Tires 5-72
Different Size Tires and Wheels 5-74

Section 5 Service and Appearance Care

Uniform Tire Quality Grading 5-75
Wheel Alignment and Tire Balance 5-76
Wheel Replacement 5-76
Tire Chains 5-78
Lifting Your Vehicle (STS-V) 5-79
If a Tire Goes Flat 5-81
Changing a Flat Tire (STS Only) 5-83
Removing the Spare Tire and Tools (STS Only) 5-85
Removing the Flat Tire and Installing the Spare Tire (STS Only) 5-86
Storing a Flat or Spare Tire and Tools (STS Only) 5-92
Compact Spare Tire (STS Only) 5-93

Appearance Care 5-94
Cleaning the Inside of Your Vehicle 5-94
Fabric/Carpet 5-96
Leather 5-96
Instrument Panel, Vinyl, and Other Plastic Surfaces 5-97
Wood Panels 5-97
Speaker Covers 5-97
Care of Safety Belts 5-97
Weatherstrips 5-97
Washing Your Vehicle 5-98
Cleaning Exterior Lamps/Lenses 5-98
Finish Care 5-98
Windshield and Wiper Blades 5-99
Aluminum or Chrome-Plated Wheels 5-99
Tires 5-100
Sheet Metal Damage 5-100
Finish Damage 5-101
Underbody Maintenance 5-101
Chemical Paint Spotting 5-101
Vehicle Care/Appearance Materials 5-102

Vehicle Identification 5-103
Vehicle Identification Number (VIN) 5-103
Service Parts Identification Label 5-103

Electrical System 5-104
Add-On Electrical Equipment 5-104
Headlamp Wiring 5-104
Windshield Wiper Fuses 5-104
Power Windows and Other Power Options 5-105
Fuses and Circuit Breakers 5-105
Underhood Fuse Block 5-106
Rear Underseat Fuse Block 5-110

Capacities and Specifications 5-116

Service

Your dealer knows your vehicle best and wants you to be happy with it. We hope you will go to your dealer for all your service needs. You will get genuine GM parts and GM-trained and supported service people.

We hope you will want to keep your GM vehicle all GM. Genuine GM parts have one of these marks:

ACDelco®

GM Parts®

GM® Goodwrench

GM® Accessories

Accessories and Modifications

When you add non-GM accessories to your vehicle they can affect your vehicle's performance and safety, including such things as, braking, stability, ride and handling, emissions systems, aerodynamics, durability, and electronic systems like antilock brakes, traction control and stability control. Some of these accessories may even cause malfunction or damage not covered by warranty.

GM Accessories are designed to complement and function with other systems on your vehicle. Your GM dealer can accessorize your vehicle using genuine GM Accessories. When you go to your GM dealer and ask for GM Accessories, you will know that GM-trained and supported service technicians will perform the work using genuine GM Accessories.

California Proposition 65 Warning

Most motor vehicles, including this one, contain and/or emit chemicals known to the State of California to cause cancer and birth defects or other reproductive harm. Engine exhaust, many parts and systems (including some inside the vehicle), many fluids, and some component wear by-products contain and/or emit these chemicals.

Doing Your Own Service Work

⚠ CAUTION:

You can be injured and your vehicle could be damaged if you try to do service work on a vehicle without knowing enough about it.

- **Be sure you have sufficient knowledge, experience, the proper replacement parts, and tools before you attempt any vehicle maintenance task.**
- **Be sure to use the proper nuts, bolts, and other fasteners. English and metric fasteners can be easily confused. If you use the wrong fasteners, parts can later break or fall off. You could be hurt.**

If you want to do some of your own service work, you will want to use the proper service manual. It tells you much more about how to service your vehicle than this manual can. To order the proper service manual, see *Service Publications Ordering Information on page 7-14*.

Your vehicle has an airbag system. Before attempting to do your own service work, see *Servicing Your Airbag-Equipped Vehicle on page 1-62*.

You should keep a record with all parts receipts and list the mileage and the date of any service work you perform. See *Maintenance Record on page 6-16*.

Adding Equipment to the Outside of Your Vehicle

Things you might add to the outside of your vehicle can affect the airflow around it. This may cause wind noise and affect windshield washer performance. Check with your dealer before adding equipment to the outside of your vehicle.

Fuel

The 8th digit of your vehicle identification number (VIN) shows the code letter or number that identifies your engine. You will find the VIN at the top left of the instrument panel. See *Vehicle Identification Number (VIN) on page 5-103*.

Gasoline Octane

If your vehicle has the 3.6L V6 engine (VIN Code 7), use regular unleaded gasoline with a posted octane rating of 87 or higher. For best performance or trailer towing, you may choose to use middle grade 89 octane unleaded gasoline. If the octane rating is less than 87, you may notice an audible knocking noise when you drive, commonly referred to as spark knock. If this occurs, use a gasoline rated at 87 octane or higher as soon as possible. If you are using gasoline rated at 87 octane or higher and you hear heavy knocking, your engine needs service.

If your vehicle has the 4.6L V8 engine (VIN Code A), use premium unleaded gasoline with a posted octane rating of 91 or higher. You may also use regular unleaded gasoline rated at 87 octane or higher, but your vehicle's acceleration may be slightly reduced, and you may notice a slight audible knocking noise, commonly referred to as spark knock. If the octane is less than 87, you may notice a heavy knocking noise when you drive. If this occurs, use a gasoline rated at 87 octane or higher as soon as possible. Otherwise, you might damage your engine. If you are using gasoline rated at 87 octane or higher and you hear heavy knocking, your engine needs service.

If your vehicle has the 4.4L V8 engine (VIN Code D), use premium unleaded gasoline with a posted octane rating of 91 or higher. For best performance, use premium unleaded gasoline with a posted octane rating of 93. In an emergency, you can use regular unleaded gasoline with an octane rating of 87 or higher. If 87 octane fuel is used, do not perform any aggressive driving maneuvers such as wide open throttle applications. You may also hear audible spark knock during acceleration. Refill your tank with premium fuel as soon as possible to avoid damaging your engine. If you are using gasoline rated at 91 octane or higher and you hear heavy knocking, your engine needs service.

Gasoline Specifications

At a minimum, gasoline should meet ASTM specification D 4814 in the United States or CAN/CGSB-3.5 in Canada. Some gasolines may contain an octane-enhancing additive called methylcyclopentadienyl manganese tricarbonyl (MMT). General Motors recommends against the use of gasolines containing MMT. See *Additives on page 5-6* for additional information.

California Fuel

If your vehicle is certified to meet California Emissions Standards, it is designed to operate on fuels that meet California specifications. See the underhood emission control label. If this fuel is not available in states adopting California emissions standards, your vehicle will operate satisfactorily on fuels meeting federal specifications, but emission control system performance may be affected. The malfunction indicator lamp may turn on and your vehicle may fail a smog-check test. See *Malfunction Indicator Lamp on page 3-67*. If this occurs, return to your authorized GM dealer for diagnosis. If it is determined that the condition is caused by the type of fuel used, repairs may not be covered by your warranty.

Additives

To provide cleaner air, all gasolines in the United States are now required to contain additives that will help prevent engine and fuel system deposits from forming, allowing your emission control system to work properly. In most cases, you should not have to add anything to your fuel. However, some gasolines contain only the minimum amount of additive required to meet U.S. Environmental Protection Agency regulations.

To help keep fuel injectors and intake valves clean, or if your vehicle experiences problems due to dirty injectors or valves, look for gasoline that is advertised as TOP TIER Detergent Gasoline. Also, your GM dealer has additives that will help correct and prevent most deposit-related problems.

Gasolines containing oxygenates, such as ethers and ethanol, and reformulated gasolines may be available in your area. General Motors recommends that you use these gasolines if they comply with the specifications described earlier. However, E85 (85% ethanol) and other fuels containing more than 10% ethanol must not be used in vehicles that were not designed for those fuels.

Notice: **Your vehicle was not designed for fuel that contains methanol. Do not use fuel containing methanol. It can corrode metal parts in your fuel system and also damage the plastic and rubber parts. That damage would not be covered under your warranty.**

Some gasolines that are not reformulated for low emissions may contain an octane-enhancing additive called methylcyclopentadienyl manganese tricarbonyl (MMT); ask the attendant where you buy gasoline whether the fuel contains MMT. General Motors recommends against the use of such gasolines. Fuels containing MMT can reduce the life of spark plugs and the performance of the emission control system may be affected. The malfunction indicator lamp may turn on. If this occurs, return to your authorized GM dealer for service.

Fuels in Foreign Countries

If you plan on driving in another country outside the United States or Canada, the proper fuel may be hard to find. Never use leaded gasoline or any other fuel not recommended in the previous text on fuel. Costly repairs caused by use of improper fuel would not be covered by your warranty.

To check the fuel availability, ask an auto club, or contact a major oil company that does business in the country where you will be driving.

Filling the Tank

⚠ CAUTION:

Fuel vapor burns violently and a fuel fire can cause bad injuries. To help avoid injuries to you and others, read and follow all the instructions on the pump island. Turn off your engine when you are refueling. Do not smoke if you are near fuel or refueling your vehicle. Keep sparks, flames, and smoking materials away from fuel. Do not leave the fuel pump unattended when refueling your vehicle — this is against the law in some places. Keep children away from the fuel pump; never let children pump fuel.

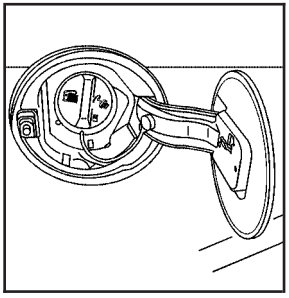

The tethered fuel cap is located behind a hinged fuel door on the passenger's side of the vehicle.

To open the fuel door, apply pressure in the center of the rear edge of the fuel door and it will pop open.

To remove the fuel cap, turn it slowly counterclockwise. The fuel cap has a spring in it; if the cap is released too soon, it will spring back to the right.

While refueling, hang the tethered fuel cap from the hook on the fuel door.

⚠ CAUTION:

If you spill fuel and then something ignites it, you could be badly burned. Fuel can spray out on you if you open the fuel cap too quickly. This spray can happen if your tank is nearly full, and is more likely in hot weather. Open the fuel cap slowly and wait for any hiss noise to stop. Then unscrew the cap all the way.

Be careful not to spill fuel. Do not top off or overfill the tank, and wait a few seconds after you have finished pumping before removing the nozzle. Clean fuel from painted surfaces as soon as possible. See *Washing Your Vehicle on page 5-98*.

When replacing the fuel cap, turn it clockwise until it clicks. Make sure the cap is fully installed. The diagnostic system can determine if the fuel cap has been left off or improperly installed. This would allow fuel to evaporate into the atmosphere. See *Malfunction Indicator Lamp on page 3-67*.

The CHECK GAS CAP message will appear on the Driver Information Center (DIC) display if the fuel cap is not reinstalled properly. See *DIC Warnings and Messages on page 3-79* for more information.

⚠ CAUTION:

If a fire starts while you are refueling, do not remove the nozzle. Shut off the flow of fuel by shutting off the pump or by notifying the station attendant. Leave the area immediately.

Notice: **If you need a new fuel cap, be sure to get the right type. Your dealer can get one for you. If you get the wrong type, it may not fit properly. This may cause your malfunction indicator lamp to light and may damage your fuel tank and emissions system. See *Malfunction Indicator Lamp on page 3-67*.**

Filling a Portable Fuel Container

⚠ CAUTION:

Never fill a portable fuel container while it is in your vehicle. Static electricity discharge from the container can ignite the gasoline vapor. You can be badly burned and your vehicle damaged if this occurs. To help avoid injury to you and others:

- **Dispense gasoline only into approved containers.**
- **Do not fill a container while it is inside a vehicle, in a vehicle's trunk, pickup bed, or on any surface other than the ground.**
- **Bring the fill nozzle in contact with the inside of the fill opening before operating the nozzle. Contact should be maintained until the filling is complete.**
- **Do not smoke while pumping gasoline.**

Checking Things Under the Hood

⚠ CAUTION:

An electric fan under the hood can start up and injure you even when the engine is not running. Keep hands, clothing and tools away from any underhood electric fan.

⚠ CAUTION:

Things that burn can get on hot engine parts and start a fire. These include liquids like fuel, oil, coolant, brake fluid, windshield washer and other fluids, and plastic or rubber. You or others could be burned. Be careful not to drop or spill things that will burn onto a hot engine.

Hood Release

To open the hood, do the following:

1. Pull the hood release lever with this symbol on it. It is located inside the vehicle on the lower left side of the instrument panel.

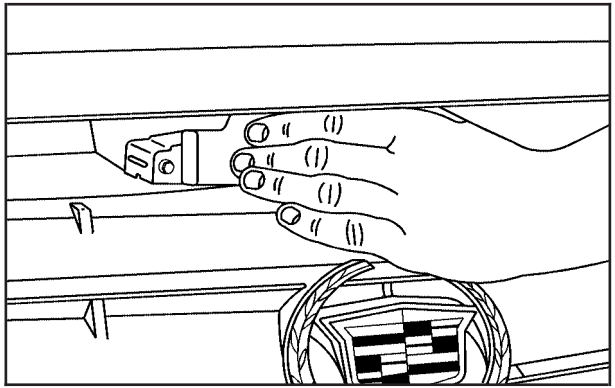

2. Then go to the front of the vehicle and find the secondary hood release lever. The lever is located under the front edge of the grille near the center. Move the release lever to the side and raise the hood.

Before closing the hood, be sure all the filler caps are on properly. Then pull the hood down and close it firmly.

Engine Compartment Overview

Your vehicle may be equipped with front compartment underhood sight shields, which surround the vehicle's engine cover. These sight shields will need to be removed in order to access some of the underhood components in your vehicle. To remove the sight shields, turn the fasteners on each shield to the left until they pop out. Then remove the fasteners and lift the shields up and away from the tower to tower brace.

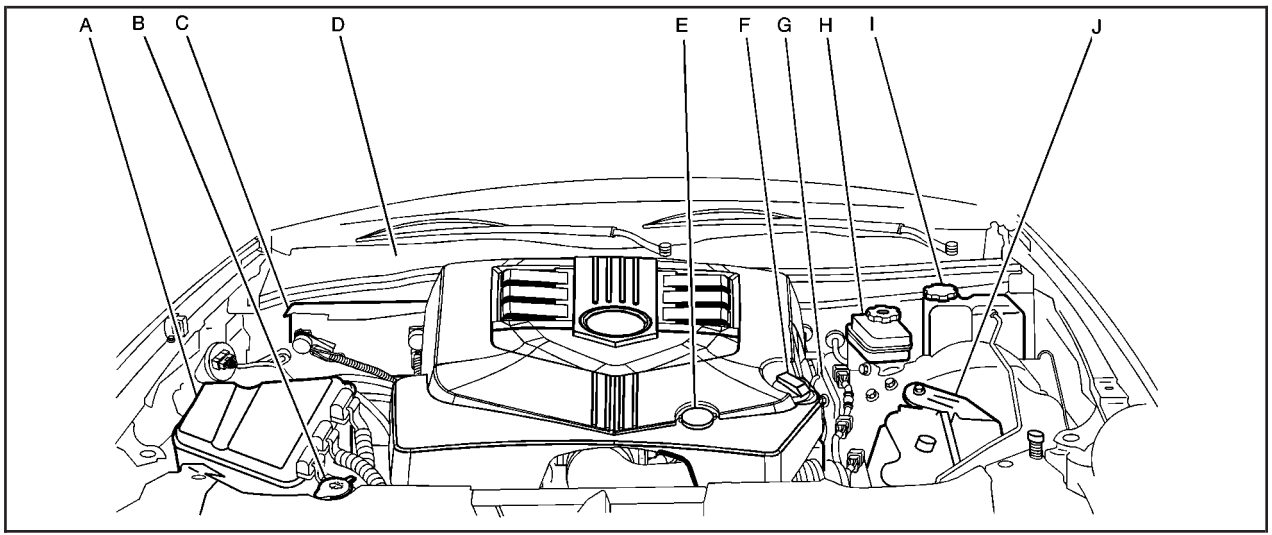

3.6L V6 Engine

After you have removed the sight shields (if equipped) on the 3.6L V6 engine, here is what you will see:

A. Underhood Fuse Block. See *Underhood Fuse Block on page 5-106*.

B. Windshield Washer Fluid Reservoir. See “Adding Washer Fluid” under *Windshield Washer Fluid on page 5-41*.

C. Battery. See *Battery on page 5-45*.

D. Passenger Compartment Air Filter. See *Passenger Compartment Air Filter on page 3-55*.

E. Power Steering Fluid Reservoir. See *Power Steering Fluid on page 5-40*.

F. Engine Oil Fill Cap. See “When to Add Engine Oil” under *Engine Oil on page 5-18*.

G. Engine Oil Dipstick (Out of View). See “Checking Engine Oil” under *Engine Oil on page 5-18*.

H. Brake Master Cylinder Reservoir. See “Brake Fluid” under *Brakes on page 5-42*.

I. Engine Coolant Surge Tank and Pressure Cap. See *Coolant Surge Tank Pressure Cap on page 5-31* and *Cooling System on page 5-33*.

J. Engine Air Cleaner/Filter. See *Engine Air Cleaner/Filter on page 5-25*.

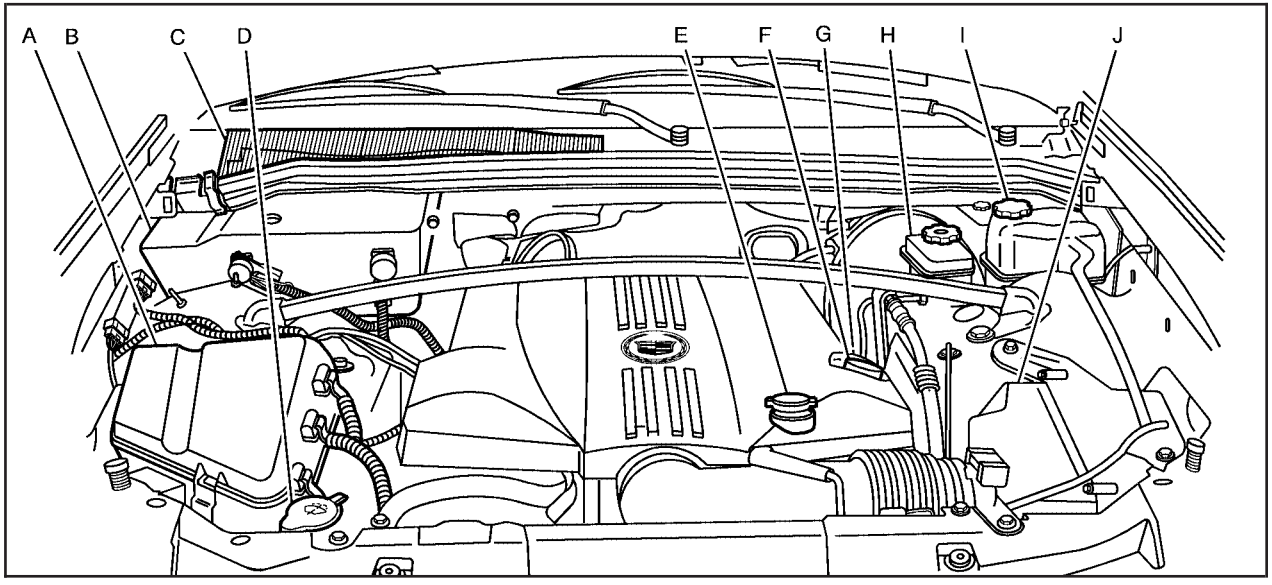

4.6L V8 Engine

After you have removed the sight shields (if equipped) on the 4.6L V8 engine, here is what you will see:

A. Underhood Fuse Block. See *Underhood Fuse Block on page 5-106*.

B. Battery. See *Battery on page 5-45*.

C. Passenger Compartment Air Filter. See *Passenger Compartment Air Filter on page 3-55*.

D. Windshield Washer Fluid Reservoir. See “Adding Washer Fluid” under *Windshield Washer Fluid on page 5-41*.

E. Power Steering Fluid Reservoir. See *Power Steering Fluid on page 5-40*.

F. Engine Oil Fill Cap. See “When to Add Engine Oil” under *Engine Oil on page 5-18*.

G. Engine Oil Dipstick (Out of View). See “Checking Engine Oil” under *Engine Oil on page 5-18*.

H. Brake Master Cylinder Reservoir. See “Brake Fluid” under *Brakes on page 5-42*.

I. Engine Coolant Surge Tank and Pressure Cap. See *Coolant Surge Tank Pressure Cap on page 5-31* and *Cooling System on page 5-33*.

J. Engine Air Cleaner/Filter. See *Engine Air Cleaner/Filter on page 5-25*.

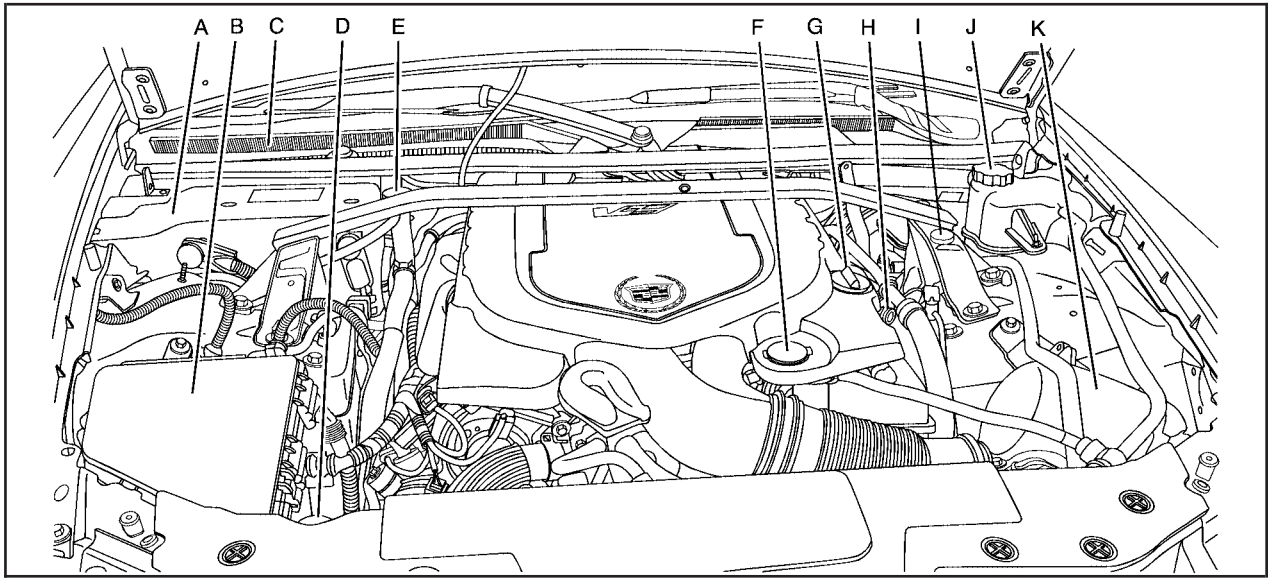

4.4L V8 STS-V Engine

After you have removed the sight shields (if equipped) on the 4.4L V8 STS-V engine, here is what you will see:

A. Battery. See *Battery on page 5-45*.

B. Underhood Fuse Block. See *Underhood Fuse Block on page 5-106*.

C. Passenger Compartment Air Filter. See *Passenger Compartment Air Filter on page 3-55*.

D. Windshield Washer Fluid Reservoir. See “Adding Washer Fluid” under *Windshield Washer Fluid on page 5-41*.

E. Intercooler System Pressure Cap. See *Engine Coolant on page 5-27*.

F. Power Steering Fluid Reservoir. See *Power Steering Fluid on page 5-40*.

G. Engine Oil Fill Cap. See “When to Add Engine Oil” under *Engine Oil on page 5-18*.

H. Engine Oil Dipstick (Out of View). See “Checking Engine Oil” under *Engine Oil on page 5-18*.

I. Brake Master Cylinder Reservoir. See “Brake Fluid” under *Brakes on page 5-42*.

J. Engine Coolant Surge Tank and Pressure Cap. See *Coolant Surge Tank Pressure Cap on page 5-31* and *Cooling System on page 5-33*.

K. Engine Air Cleaner/Filter. See *Engine Air Cleaner/Filter on page 5-25*.

If your vehicle is equipped with front compartment underhood sight shields, before closing the hood be sure to reinstall the sight shields. To reinstall the shields, locate the tabs on the left and right sides and insert them into the openings in the tower to tower brace. Then insert the fasteners into the top of the shield and push the fasteners back into place.

Engine Oil

Checking Engine Oil

It is a good idea to check your engine oil every time you get fuel. In order to get an accurate reading, the oil must be warm and the vehicle must be on level ground.

The engine oil dipstick handle is a yellow loop. See *Engine Compartment Overview on page 5-12* for the location of the engine oil dipstick.

1. Turn off the engine and give the oil several minutes to drain back into the oil pan. If you do not do this, the oil dipstick might not show the actual level.
2. Pull out the dipstick and clean it with a paper towel or cloth, then push it back in all the way. Remove it again, keeping the tip down, and check the level.

When to Add Engine Oil

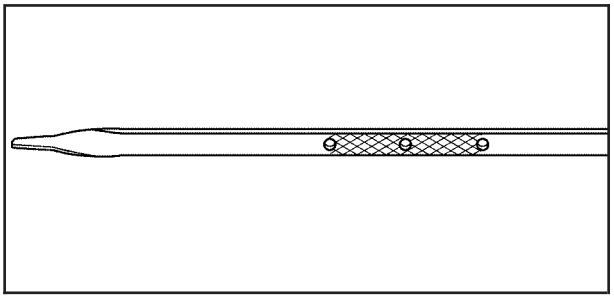

V6 Engine

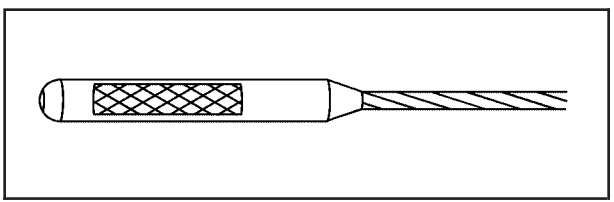

V8 Engine

If the oil is below the cross-hatched area at the tip of the dipstick, you will need to add at least one quart/liter of oil. But you must use the right kind. This section explains what kind of oil to use. For engine oil crankcase capacity, see *Capacities and Specifications on page 5-116*.

Notice: **Do not add too much oil. If the engine has so much oil that the oil level gets above the cross-hatched area that shows the proper operating range, the engine could be damaged.**

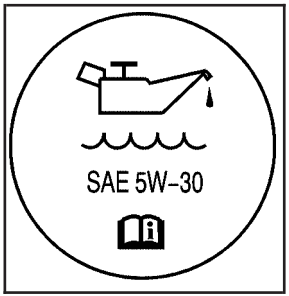

V6 Engine

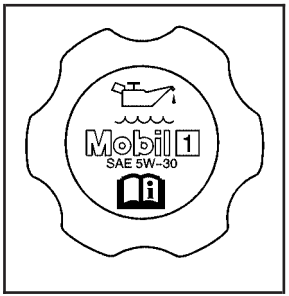

V8 Engine

See *Engine Compartment Overview on page 5-12* for the location of the engine oil fill cap.

Be sure to add enough oil to put the level somewhere in the proper operating range. Push the dipstick all the way back in when you are through.

What Kind of Engine Oil to Use
For V6 Engine Vehicles Only

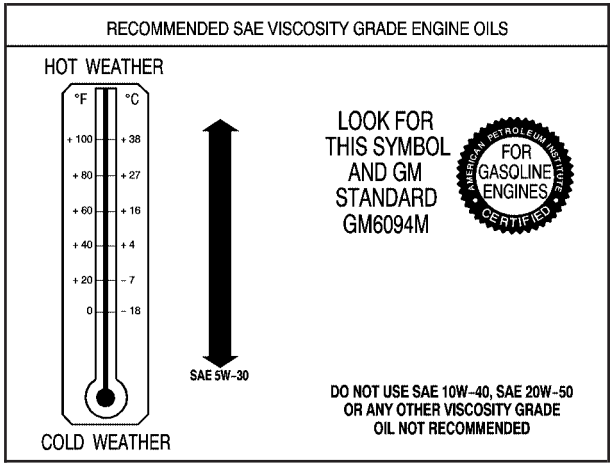

Look for two things:

- GM6094M

  Your vehicle's engine requires oil meeting GM Standard GM6094M. You should look for and use only an oil that meets GM Standard GM6094M.

- SAE 5W-30

  As shown in the viscosity chart, SAE 5W-30 is best for your vehicle.

  These numbers on an oil container show its viscosity, or thickness. Do not use other viscosity oils such as SAE 20W-50.

Oils meeting these requirements should also have the starburst symbol on the container. This symbol indicates that the oil has been certified by the American Petroleum Institute (API).

You should look for this information on the oil container, and use *only* those oils that are identified as meeting GM Standard GM6094M and have the starburst symbol on the front of the oil container.

Notice: **Use only engine oil identified as meeting GM Standard GM6094M and showing the American Petroleum Institute Certified For Gasoline Engines starburst symbol. Failure to use the recommended oil can result in engine damage not covered by your warranty.**

GM Goodwrench® oil meets all the requirements for your vehicle.

If you are in an area of extreme cold, where the temperature falls below –20°F (–29°C), it is recommended that you use either an SAE 5W-30 synthetic oil or an SAE 0W-30 oil. Both will provide easier cold starting and better protection for your engine at extremely low temperatures.

For V8 Engine Vehicles Only

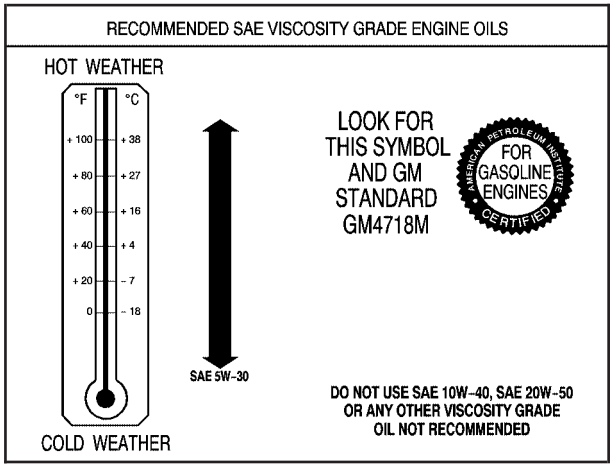

Look for two things:

- GM4718M

  Your vehicle's engine requires a special oil meeting GM Standard GM4718M. Oils meeting this standard may be identified as synthetic. However, not all *synthetic* oils will meet this GM standard. You should look for and use only an oil that meets GM Standard GM4718M.

Notice: **If you use oils that do not have the GM4718M Standard designation, you can cause engine damage not covered by your warranty.**

- SAE 5W-30

  As shown in the viscosity chart, SAE 5W-30 is best for your vehicle.

  These numbers on an oil container show its viscosity, or thickness. Do not use other viscosity oils such as SAE 20W-50.

Oils meeting these requirements should also have the starburst symbol on the container. This symbol indicates that the oil has been certified by the American Petroleum Institute (API).

You should look for this on the oil container, and use *only* those oils that are identified as meeting GM Standard GM4718M and have the starburst symbol on the front of the oil container.

Your vehicle's engine is filled at the factory with a Mobil 1® synthetic oil, which meets all requirements for your vehicle.

Substitute Engine Oil: When adding oil to maintain engine oil level, oil meeting GM Standard GM4718M may not be available. You can add substitute oil designated SAE 5W-30 with the starburst symbol at all temperatures. Substitute oil not meeting GM Standard GM4718M should not be used for an oil change.

Engine Oil Additives

Do not add anything to your oil. The recommended oils with the starburst symbol that meet GM standards are all you will need for good performance and engine protection.

Engine Oil Life System

When to Change Engine Oil

Your vehicle has a computer system that lets you know when to change the engine oil and filter. This is based on engine revolutions and engine temperature, and not on mileage. Based on driving conditions, the mileage at which an oil change will be indicated can vary considerably. For the oil life system to work properly, you must reset the system every time the oil is changed.

Notice: **If your vehicle is an STS-V model, the engine uses a special oil filter. The use of any other engine oil filter could lead to filter failure and result in severe engine damage. Damage caused by use of the wrong engine oil filter would not be covered by your new vehicle warranty.**

When the system has calculated that oil life has been diminished, it will indicate that an oil change is necessary. A CHANGE ENGINE OIL SOON message in the DIC will come on. See *DIC Warnings and Messages on page 3-79*. Change your oil as soon as possible within the next 600 miles (1 000 km). It is possible that, if you are driving under the best conditions, the oil life system may not indicate that an oil change is necessary for over a year. However, your engine oil and filter must be changed at least once a year and at this time the system must be reset. Your dealer has GM-trained service people who will perform this work using genuine GM parts and reset the system. It is also important to check your oil regularly and keep it at the proper level.

If the system is ever reset accidentally, you must change your oil at 3,000 miles (5 000 km) since your last oil change. Remember to reset the oil life system whenever the oil is changed.

How to Reset the Engine Oil Life System

The Engine Oil Life System calculates when to change your engine oil and filter based on vehicle use. Anytime your oil is changed, reset the system so it can calculate when the next oil change is required. If a situation occurs where you change your oil prior to a CHANGE ENGINE OIL SOON message in the DIC being turned on, reset the system.

After the oil has been changed, the CHANGE ENGINE OIL SOON message must be reset. To reset the message use the following procedure:

1. Press the up or down arrow to scroll the DIC to show OIL LIFE.
2. Once the XXX% ENGINE OIL LIFE menu item is highlighted, press and hold the RESET button until the percentage shows 100%.

   If the percentage does not return to 100% or if the CHANGE ENGINE OIL SOON message comes back on when you start your vehicle, the engine oil life system has not reset. Repeat the procedure.

What to Do with Used Oil

Used engine oil contains certain elements that may be unhealthy for your skin and could even cause cancer. Do not let used oil stay on your skin for very long. Clean your skin and nails with soap and water, or a good hand cleaner. Wash or properly dispose of clothing or rags containing used engine oil. See the manufacturer's warnings about the use and disposal of oil products.

Used oil can be a threat to the environment. If you change your own oil, be sure to drain all the oil from the filter before disposal. Never dispose of oil by putting it in the trash, pouring it on the ground, into sewers, or into streams or bodies of water. Instead, recycle it by taking it to a place that collects used oil. If you have a problem properly disposing of your used oil, ask your dealer, a service station or a local recycling center for help.

Engine Air Cleaner/Filter

4.6L V8 Engine shown, 3.6L V6 Engine similar

The engine air cleaner/filter is in the engine compartment on the driver's side of the vehicle, near the front. See *Engine Compartment Overview on page 5-12* for more information on locating the air cleaner/filter.

When to Inspect the Engine Air Cleaner/Filter

Inspect the air cleaner/filter at the Maintenance II intervals and replace it at the first oil change after each 50,000 mile (83 000 km) interval. See *Scheduled Maintenance on page 6-4* for more information. If you are driving in dusty/dirty conditions, inspect the filter at each engine oil change.

How to Inspect the Engine Air Cleaner/Filter

To inspect the air cleaner/filter remove the filter from the vehicle and lightly shake the filter to release loose dust and dirt. If the filter remains caked with dirt, a new filter is required.

To inspect or replace the filter in the 3.6L V6 or 4.6L V8 engines, do the following:

1. Remove the two screws located on the top of the cover.
2. Disconnect the coolant recovery hose so that it is not going across the top of the engine air cleaner/filter.
3. Loosen the clamp and remove the duct from the passenger's side of the engine air cleaner/filter.
4. The two sides of the airbox are hinged at the bottom. Open the airbox by pushing the top of the airbox cover toward the engine.
5. Remove the air filter by lifting it straight up through the opening in the airbox.
6. Inspect or replace the engine air cleaner/filter. See *Normal Maintenance Replacement Parts on page 6-14* for the correct part number for the filter.
7. Reinstall the cover by reversing Steps 1 through 4.

If your vehicle has the 4.4L V8 STS-V engine, there is a special procedure for checking and changing the air cleaner/filter. Because this procedure is difficult, you should have this done at the dealership service department. Contact your dealer for additional information or the procedure can be found in the service manual. To purchase a service manual, see *Service Publications Ordering Information on page 7-14*.

⚠ CAUTION:

Operating the engine with the air cleaner/filter off can cause you or others to be burned. The air cleaner not only cleans the air; it helps to stop flames if the engine backfires. If it is not there and the engine backfires, you could be burned. Do not drive with it off, and be careful working on the engine with the air cleaner/filter off.

Notice: **If the air cleaner/filter is off, a backfire can cause a damaging engine fire. And, dirt can easily get into your engine, which will damage it. Always have the air cleaner/filter in place when you are driving.**

Automatic Transmission Fluid

It is not necessary to check the transmission fluid level. A transmission fluid leak is the only reason for fluid loss. If a leak occurs, take your vehicle to the dealership service department and have it repaired as soon as possible.

Change the fluid and filter at the intervals listed in *Additional Required Services on page 6-6*, and be sure to use the transmission fluid listed in *Recommended Fluids and Lubricants on page 6-12*.

Notice: **Use of the incorrect automatic transmission fluid may damage your vehicle, and the damages may not be covered by your warranty. Always use the automatic transmission fluid listed in *Recommended Fluids and Lubricants on page 6-12*.**

Engine Coolant

The cooling system in your vehicle is filled with DEX-COOL® engine coolant. This coolant is designed to remain in your vehicle for five years or 150,000 miles (240 000 km), whichever occurs first, if you add only DEX-COOL® extended life coolant.

The following explains your cooling system and how to add coolant when it is low. If you have a problem with engine overheating, see *Engine Overheating on page 5-31*.

A 50/50 mixture of clean, drinkable water and DEX-COOL® coolant will:

- Give freezing protection down to –34°F (–37°C).
- Give boiling protection up to 265°F (129°C).
- Protect against rust and corrosion.
- Help keep the proper engine temperature.
- Let the warning lights and gages work as they should.

Notice: **Using coolant other than DEX-COOL® may cause premature engine, heater core, or radiator corrosion. In addition, the engine coolant may require changing sooner, at the first maintenance service after each 25,000 miles (41 500 km) or 24 months, whichever occurs first. Any repairs would not be covered by your warranty. Always use DEX-COOL® (silicate-free) coolant in your vehicle.**

What to Use

Use a mixture of one-half clean, drinkable water and one-half DEX-COOL® coolant which will not damage aluminum parts. If you use this coolant mixture, you do not need to add anything else.

⚠ CAUTION:

Adding only plain water to your cooling system can be dangerous. Plain water, or some other liquid such as alcohol, can boil before the proper coolant mixture will. Your vehicle's coolant warning system is set for the proper coolant mixture. With plain water or the wrong mixture, your engine could get too hot but you would not get the overheat warning. Your engine could catch fire and you or others could be burned. Use a 50/50 mixture of clean, drinkable water and DEX-COOL® coolant.

Notice: **If you use an improper coolant mixture, your engine could overheat and be badly damaged. The repair cost would not be covered by your warranty. Too much water in the mixture can freeze and crack the engine, radiator, heater core and other parts.**

If you have to add coolant more than once or twice a year, have your dealer check your cooling system.

Notice: **If you use extra inhibitors and/or additives in your vehicle's cooling system, you could damage your vehicle. Use only the proper mixture of the engine coolant listed in this manual for the cooling system. See *Recommended Fluids and Lubricants on page 6-12* for more information.**

Checking Coolant

The coolant surge tank and pressure cap are located on the driver's side of the vehicle, toward the rear of the engine compartment. See *Engine Compartment Overview on page 5-12* for more information on location.

⚠ CAUTION:

Turning the surge tank pressure cap when the engine and radiator are hot can allow steam and scalding liquids to blow out and burn you badly. Never turn the surge tank pressure cap — even a little — when the engine and radiator are hot.

The vehicle must be on a level surface. When your engine is cold, the coolant level should be at the FULL COLD/FROID line on the side of the surge tank. Follow the arrow from the top of the tank down the side to the horizontal mark.

If the CHECK COOLANT LEVEL message in the Driver Information Center (DIC) comes on and stays on, it means you are low on engine coolant. See *DIC Warnings and Messages on page 3-79* for more information.

Checking Intercooler System Coolant (4.4L V8 STS-V Engine Only)

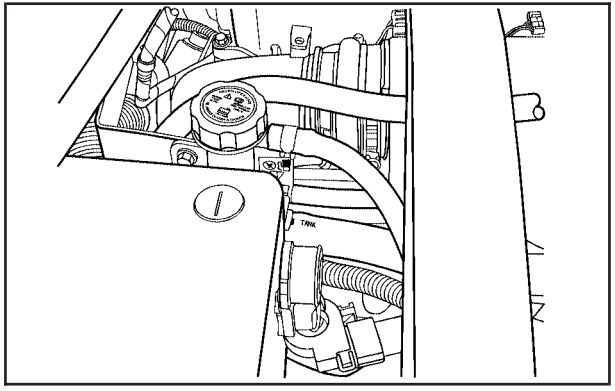

See *Engine Compartment Overview on page 5-12* for the location of the intercooler system pressure cap.

Notice: **This vehicle has a specific coolant fill procedure. Failure to follow this procedure could cause your engine to overheat and be severely damaged.**

Park the vehicle on a level surface and turn off the engine. When the engine is cold, the coolant level should be at or above the FULL COLD line. The FULL COLD line has an arrow pointing to it.

Adding Coolant

If you need more coolant, add the proper DEX-COOL® coolant mixture at the intercooler fill neck, but only when the engine is cool. See *Cooling System on page 5-33* for instructions on how to add coolant to the intercooler fill neck.

⚠ CAUTION:

You can be burned if you spill coolant on hot engine parts. Coolant contains ethylene glycol, and it will burn if the engine parts are hot enough. Do not spill coolant on a hot engine.

When replacing a pressure cap, make sure it is hand-tight and fully seated.

Coolant Surge Tank Pressure Cap

Notice: **If the pressure cap is not tightly installed, coolant loss and possible engine damage may occur. Be sure the cap is properly and tightly secured.**

The coolant surge tank pressure cap must be fully installed on the coolant surge tank. See *Engine Compartment Overview on page 5-12* for more information on location.

Engine Overheating

You will find an ENGINE COOLANT HOT IDLE ENGINE, an ENGINE OVERHEATED STOP ENGINE and a CHECK COOLANT LEVEL message displayed in the Driver Information Center (DIC). See *DIC Warnings and Messages on page 3-79* for more information.

There is also a coolant temperature gage and a coolant warning light on the instrument panel. See *Engine Coolant Temperature Gage on page 3-67* and *Engine Coolant Temperature Warning Light on page 3-66* for more information.

If Steam Is Coming From Your Engine

⚠ CAUTION:

Steam from an overheated engine can burn you badly, even if you just open the hood. Stay away from the engine if you see or hear steam coming from it. Just turn it off and get everyone away from the vehicle until it cools down. Wait until there is no sign of steam or coolant before you open the hood.

If you keep driving when your engine is overheated, the liquids in it can catch fire. You or others could be badly burned. Stop your engine if it overheats, and get out of the vehicle until the engine is cool.

See *Overheated Engine Protection Operating Mode on page 5-32* for information on driving to a safe place in an emergency.

Notice: **If your engine catches fire because you keep driving with no coolant, your vehicle can be badly damaged. The costly repairs would not be covered by your warranty. See *Overheated Engine Protection Operating Mode on page 5-32* for information on driving to a safe place in an emergency.**

If No Steam Is Coming From Your Engine

An overheat warning, along with a CHECK COOLANT LEVEL message, can indicate a serious problem.

If you get an engine overheat warning with no CHECK COOLANT LEVEL message, but see or hear no steam, the problem may not be too serious. Sometimes the engine can get a little too hot when you:

- Climb a long hill on a hot day.
- Stop after high-speed driving.
- Idle for long periods in traffic.
- Tow a trailer.

If you get the overheat warning with no sign of steam, try this for a minute or so:

1. In heavy traffic, let the engine idle in NEUTRAL (N) while stopped. If it is safe to do so, pull off the road, shift to PARK (P) or NEUTRAL (N) and let the engine idle.
2. Set the climate controls to the highest heat setting and fan speed and open the windows, as necessary.

If you no longer have the overheat warning, you can drive. Just to be safe, drive slower for about 10 minutes. If the warning does not come back on, you can drive normally.

If the warning continues and you have not stopped, pull over, stop, and park your vehicle right away.

If there is still no sign of steam, you can idle the engine for three minutes while you are parked. If you still have the warning, turn off the engine and get everyone out of the vehicle until it cools down. Also, see “Overheated Engine Protection Operating Mode” later in this section.

You may decide not to lift the hood but to get service help right away.

Overheated Engine Protection Operating Mode

This operating mode allows your vehicle to be driven to a safe place in an emergency. Should an overheated engine condition exist, an overheat protection mode which alternates firing groups of cylinders helps prevent engine damage. In this mode, you will notice a loss in power and engine performance. A low coolant and/or engine overheat warning will indicate that an overheat condition exists. Driving extended miles (km) and/or towing a trailer in the overheat protection mode should be avoided.

Notice: **After driving in the overheated engine protection operating mode, to avoid engine damage, allow the engine to cool before attempting any repair. The engine oil will be severely degraded. Repair the cause of coolant loss and change the oil. See *Engine Oil on page 5-18*.**

Cooling System

When you decide it is safe to lift the hood, here is what you will see:

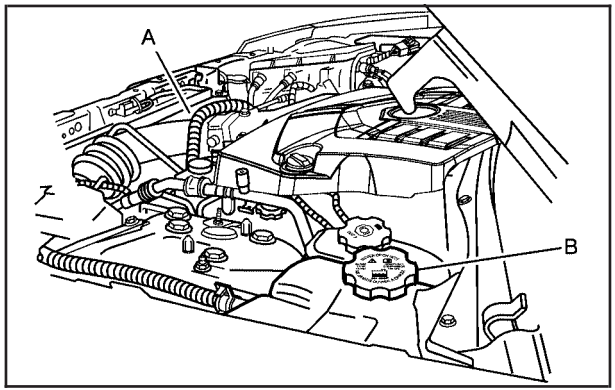

3.6L V6 Engine shown, 4.6L V8 and 4.4L V8 STS-V Engines similar

A. Electric Engine Cooling Fans

B. Coolant Surge Tank and Pressure Cap

Some vehicles may be equipped with an engine driven fan, as well as the electric pusher fans (A) which are located behind the vehicle's grille.

⚠ CAUTION:

An electric engine cooling fan under the hood can start up even when the engine is not running and can injure you. Keep hands, clothing and tools away from any underhood electric fan.

If the coolant inside the coolant surge tank is boiling, do not do anything else until it cools down. The vehicle should be parked on a level surface.

When the engine is cold, the coolant level should be at or slightly above the FULL COLD/FROID line on the side of the coolant surge tank. If it is not, you may have a leak at the pressure cap or in the radiator hoses, heater hoses, radiator, water pump, or somewhere else in the cooling system.

⚠ CAUTION:

Heater and radiator hoses, and other engine parts, can be very hot. Do not touch them. If you do, you can be burned.

Do not run the engine if there is a leak. If you run the engine, it could lose all coolant. That could cause an engine fire, and you could be burned. Get any leak fixed before you drive the vehicle.

If there seems to be no leak, with the engine on, check to see if the electric engine cooling fans are running. If the engine is overheating, both fans should be running. If they are not, your vehicle needs service.

Notice: **Engine damage from running your engine without coolant is not covered by your warranty. See *Overheated Engine Protection Operating Mode on page 5-32* for information on driving to a safe place in an emergency.**

Notice: **Using coolant other than DEX-COOL® may cause premature engine, heater core or radiator corrosion. In addition, the engine coolant may require changing sooner, at 30,000 miles (50 000 km) or 24 months, whichever occurs first. Any repairs would not be covered by your warranty. Always use DEX-COOL® (silicate-free) coolant in your vehicle.**

How to Add Coolant to the Coolant Surge Tank

If you have not found a problem yet, check to see if coolant is visible in the surge tank. If coolant is visible but the coolant level is not at the FULL COLD/FROID line on the side of the coolant surge tank, add a 50/50 mixture of clean, drinkable water and DEX-COOL® coolant at the coolant surge tank, but be sure the cooling system, including the coolant surge tank pressure cap, is cool before you do it. See *Engine Coolant on page 5-27* for more information.

⚠ CAUTION:

Steam and scalding liquids from a hot cooling system can blow out and burn you badly. They are under pressure, and if you turn the coolant surge tank pressure cap — even a little — they can come out at high speed. Never turn the cap when the cooling system, including the coolant surge tank pressure cap, is hot. Wait for the cooling system and coolant surge tank pressure cap to cool if you ever have to turn the pressure cap.

⚠ CAUTION:

Adding only plain water to your cooling system can be dangerous. Plain water, or some other liquid such as alcohol, can boil before the proper coolant mixture will. Your vehicle's coolant warning system is set for the proper coolant mixture. With plain water or the wrong mixture, your engine could get too hot but you would not get the overheat warning. Your engine could catch fire and you or others could be burned. Use a 50/50 mixture of clean, drinkable water and DEX-COOL® coolant.

Notice: **In cold weather, water can freeze and crack the engine, radiator, heater core and other parts. Use the recommended coolant and the proper coolant mixture.**

⚠ CAUTION:

You can be burned if you spill coolant on hot engine parts. Coolant contains ethylene glycol and it will burn if the engine parts are hot enough. Do not spill coolant on a hot engine.

If no coolant is visible in the surge tank, add coolant as follows:

1. You can remove the coolant surge tank pressure cap when the cooling system, including the coolant surge tank pressure cap and upper radiator hose, is no longer hot. Turn the pressure cap slowly counterclockwise about one-quarter of a turn. If you hear a hiss, wait for that to stop. A hiss means there is still some pressure left.

2. Then keep turning the pressure cap slowly, and remove it.

3. Fill the coolant surge tank with the proper DEX-COOL® coolant mixture, to slightly above the FULL COLD/FROID line on the side of the coolant surge tank.

4. With the coolant surge tank pressure cap off, start the engine and let it run until you can feel the upper radiator hose getting hot. The upper radiator hose is the largest of the hoses which comes out of the radiator, on the passenger's side of the vehicle. Watch out for the engine cooling fans.

   By this time, the coolant level inside the coolant surge tank may be lower. If the level is lower, add more of the proper mixture to the coolant surge tank until the level reaches the FULL COLD/FROID line on the side of the coolant surge tank.

5. Then replace the pressure cap. Be sure the pressure cap is hand-tight and fully seated.

Start the engine and allow it to warm up. If the CHECK COOLANT LEVEL message does not appear on the Driver Information Center (DIC), the coolant is at the proper fill level. If the CHECK COOLANT LEVEL message does appear, repeat Steps 1 to 3 then reinstall the pressure cap, or see your GM dealer.

How to Add Coolant to the Intercooler System Fill Neck (4.4L V8 STS-V Engine Only)

If you have not found a problem yet, turn the engine off and allow it to cool down, then check to see if coolant is visible within the horizontal tube section of the fill neck. If coolant is not visible, add a 50/50 mixture of clean, drinkable water and DEX-COOL® coolant to the fill neck. Be sure the Intercooler System, including the Intercooler System pressure cap, is cool before doing so. See *Engine Coolant on page 5-27* for more information.

⚠ CAUTION:

Turning the Intercooler System pressure cap when the engine and intercooler are hot can allow steam and scalding liquids to blow out and burn you badly. Never turn the Intercooler System pressure cap, even a little, when the engine and intercooler are hot.

⚠ CAUTION:

Adding only plain water to your cooling system can be dangerous. Plain water, or some other liquid such as alcohol, can boil before the proper coolant mixture will. Your vehicle's coolant warning system is set for the proper coolant mixture. With plain water or the wrong mixture, your engine could get too hot but you would not get the overheat warning. Your engine could catch fire and you or others could be burned. Use a 50/50 mixture of clean, drinkable water and DEX-COOL® coolant.

Notice: **In cold weather, water can freeze and crack the engine, radiator, heater core and other parts. Use the recommended coolant and the proper coolant mixture.**

⚠ CAUTION:

You can be burned if you spill coolant on hot engine parts. Coolant contains ethylene glycol and it will burn if the engine parts are hot enough. Do not spill coolant on a hot engine.

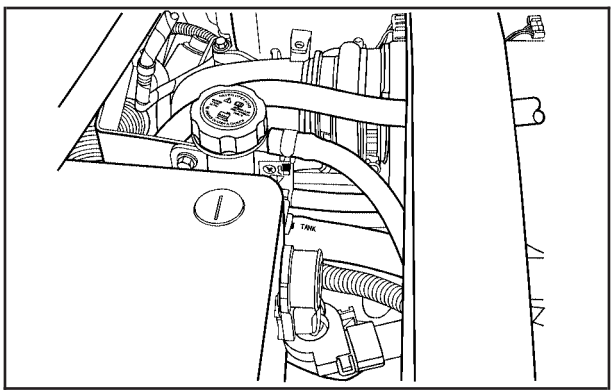

1. You can remove the Intercooler System pressure cap when the Intercooler System, including the upper intercooler hoses, are no longer hot. Turn the pressure cap slowly counterclockwise about one-quarter of a turn. If you hear a hiss, wait for that to stop. This will allow any pressure still left to be vented.
2. Then keep turning the pressure cap slowly, and remove it.
3. Add the proper DEX-COOL® coolant mixture to the fill neck, until the coolant reaches the COLD FILL line on the fill neck.
4. With the Intercooler System pressure cap off, start the engine and let it run for a couple of minutes. Then turn the engine off. By this time, the coolant level inside the fill neck may be lower. If the level drops to where coolant is no longer visible in the horizontal tube section of the fill neck, with the engine off add more of the DEX-COOL® coolant mixture to the fill neck until the level is again visible in the horizontal tube section.
5. Then replace the pressure cap. Be sure the pressure cap is hand-tight and fully seated.

   If the coolant is not at the proper level when the system cools down again, see your dealer.

Power Steering Fluid

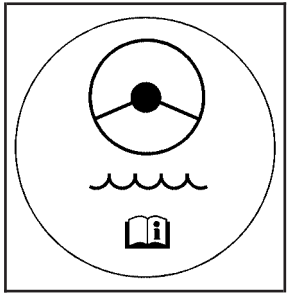

See *Engine Compartment Overview on page 5-12* for reservoir location.

When to Check Power Steering Fluid

It is not necessary to regularly check power steering fluid unless you suspect there is a leak in the system or you hear an unusual noise. A fluid loss in this system could indicate a problem. Have the system inspected and repaired.

How to Check Power Steering Fluid

To check the power steering fluid, do the following:

1. Turn the key off and let the engine compartment cool down.
2. Wipe the cap and the top of the reservoir clean.
3. Unscrew the cap and wipe the dipstick with a clean rag.
4. Replace the cap and completely tighten it.
5. Remove the cap again and look at the fluid level on the dipstick.

The level should be within the HOT mark. If necessary, add only enough fluid to bring the level within the mark.

What to Use

To determine what kind of fluid to use, see *Recommended Fluids and Lubricants on page 6-12*. Always use the proper fluid. Failure to use the proper fluid can cause leaks and damage hoses and seals.

Windshield Washer Fluid

What to Use

When you need windshield washer fluid, be sure to read the manufacturer's instructions before use. If you will be operating your vehicle in an area where the temperature may fall below freezing, use a fluid that has sufficient protection against freezing.

Adding Washer Fluid

The CHECK WASHER FLUID message will appear on the Driver Information Center (DIC) when the fluid level is low. See *DIC Warnings and Messages on page 3-79* for more information.

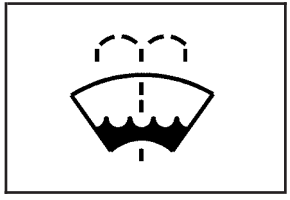

Open the cap with the washer symbol on it. Add washer fluid until the tank is full. See *Engine Compartment Overview on page 5-12* for reservoir location.

Notice:

- **When using concentrated washer fluid, follow the manufacturer's instructions for adding water.**
- **Do not mix water with ready-to-use washer fluid. Water can cause the solution to freeze and damage your washer fluid tank and other parts of the washer system. Also, water does not clean as well as washer fluid.**
- **Fill your washer fluid tank only three-quarters full when it is very cold. This allows for expansion if freezing occurs, which could damage the tank if it is completely full.**
- **Do not use engine coolant (antifreeze) in your windshield washer. It can damage your washer system and paint.**

Brakes

Brake Fluid

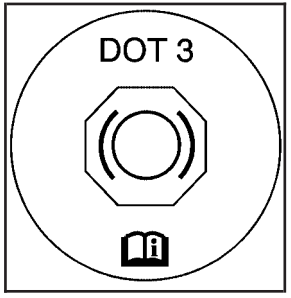

Your brake master cylinder reservoir is filled with DOT-3 brake fluid. See *Engine Compartment Overview on page 5-12* for reservoir location and access.

There are only two reasons why the brake fluid level in the reservoir might go down. The first is that the brake fluid goes down to an acceptable level during normal brake lining wear. When new linings are put in, the fluid level goes back up. The other reason is that fluid is leaking out of the brake system. If it is, you should have your brake system fixed, since a leak means that sooner or later your brakes will not work well, or will not work at all.

So, it is not a good idea to top off your brake fluid. Adding brake fluid will not correct a leak. If you add fluid when your linings are worn, then you will have too much fluid when you get new brake linings. You should add or remove brake fluid, as necessary, only when work is done on the brake hydraulic system.

⚠ CAUTION:

If you have too much brake fluid, it can spill on the engine. The fluid will burn if the engine is hot enough. You or others could be burned, and your vehicle could be damaged. Add brake fluid only when work is done on the brake hydraulic system.

If the ignition is on and the brake fluid is low, the CHECK BRAKE FLUID message will be displayed in the Driver Information Center (DIC). See *DIC Warnings and Messages on page 3-79*.

What to Add

When you do need brake fluid, use only DOT-3 brake fluid. Use new brake fluid from a sealed container only. See *Recommended Fluids and Lubricants on page 6-12*.

Always clean the brake fluid reservoir cap and the area around the cap before removing it. This will help keep dirt from entering the reservoir.

⚠ CAUTION:

With the wrong kind of fluid in your brake system, your brakes may not work well, or they may not even work at all. This could cause a crash. Always use the proper brake fluid.

Notice:

- **Using the wrong fluid can badly damage brake system parts. For example, just a few drops of mineral-based oil, such as engine oil, in your brake system can damage brake system parts so badly that they will have to be replaced. Do not let someone put in the wrong kind of fluid.**
- **If you spill brake fluid on your vehicle's painted surfaces, the paint finish can be damaged. Be careful not to spill brake fluid on your vehicle. If you do, wash it off immediately. See *Washing Your Vehicle on page 5-98*.**

Brake Wear

Your vehicle has four-wheel disc brakes.

Disc brake pads have built-in wear indicators that make a high-pitched warning sound when the brake pads are worn and new pads are needed. The sound may come and go or be heard all the time your vehicle is moving, except when you are pushing on the brake pedal firmly.

⚠ CAUTION:

The brake wear warning sound means that soon your brakes will not work well. That could lead to an accident. When you hear the brake wear warning sound, have your vehicle serviced.

Notice: **Continuing to drive with worn-out brake pads could result in costly brake repair.**

Some driving conditions or climates may cause a brake squeal when the brakes are first applied or lightly applied. This does not mean something is wrong with your brakes.

Properly torqued wheel nuts are necessary to help prevent brake pulsation. When tires are rotated, inspect brake pads for wear and evenly tighten wheel nuts in the proper sequence to GM torque specifications.

Brake linings should always be replaced as complete axle sets.

Brake Pedal Travel

See your dealer if the brake pedal does not return to normal height, or if there is a rapid increase in pedal travel. This could be a sign of brake trouble.

Brake Adjustment

Every time you apply the brakes, with or without the vehicle moving, your brakes adjust for wear.

Replacing Brake System Parts

The braking system on a vehicle is complex. Its many parts have to be of top quality and work well together if the vehicle is to have really good braking. Your vehicle was designed and tested with top-quality GM brake parts. When you replace parts of your braking system — for example, when your brake linings wear down and you need new ones put in — be sure you get new approved replacement parts. If you do not, your brakes may no longer work properly. For example, if someone puts in brake linings that are wrong for your vehicle, the balance between your front and rear brakes can change — for the worse. The braking performance you have come to expect can change in many other ways if someone puts in the wrong replacement brake parts.

Battery

Your vehicle has a maintenance free battery. When it is time for a new battery, get one that has the replacement number shown on the original battery's label. We recommend an ACDelco® replacement battery. See *Engine Compartment Overview on page 5-12* for battery location and access.

Warning: Battery posts, terminals, and related accessories contain lead and lead compounds, chemicals known to the State of California to cause cancer and reproductive harm. Wash hands after handling.

Vehicle Storage

If you are not going to drive your vehicle for 25 days or more, remove the black, negative (–) cable from the battery. This will help keep your battery from running down.

⚠ CAUTION:

Batteries have acid that can burn you and gas that can explode. You can be badly hurt if you are not careful. See *Jump Starting on page 5-46* for tips on working around a battery without getting hurt.

Jump Starting

If your vehicle's battery has run down, you may want to use another vehicle and some jumper cables to start your vehicle. Be sure to use the following steps to do it safely.

⚠ CAUTION:

Batteries can hurt you. They can be dangerous because:

- **They contain acid that can burn you.**
- **They contain gas that can explode or ignite.**
- **They contain enough electricity to burn you.**

If you do not follow these steps exactly, some or all of these things can hurt you.

Notice: **Ignoring these steps could result in costly damage to your vehicle that would not be covered by your warranty.**

Trying to start your vehicle by pushing or pulling it will not work, and it could damage your vehicle.

1. Check the other vehicle. It must have a 12-volt battery with a negative ground system.

Notice: **If the other vehicle's system is not a 12-volt system with a negative ground, both vehicles can be damaged. Only use vehicles with 12-volt systems with negative grounds to jump start your vehicle.**

2. Get the vehicles close enough so the jumper cables can reach, but be sure the vehicles are not touching each other. If they are, it could cause a ground connection you do not want. You would not be able to start your vehicle and the bad grounding could damage the electrical systems.

   To avoid the possibility of the vehicles rolling, set the parking brake firmly on both vehicles involved in the jump start procedure. Put an automatic transmission in PARK (P) or a manual transmission in NEUTRAL before setting the parking brake.

Notice: **If you leave your radio or other accessories on during the jump starting procedure, they could be damaged. The repairs would not be covered by your warranty. Always turn off your radio and other accessories when jump starting your vehicle.**

3. Turn off the ignition on both vehicles. Unplug unnecessary accessories plugged into the cigarette lighter or the accessory power outlets. Turn off the radio and all lamps that are not needed. This will avoid sparks and help save both batteries. And it could save the radio!

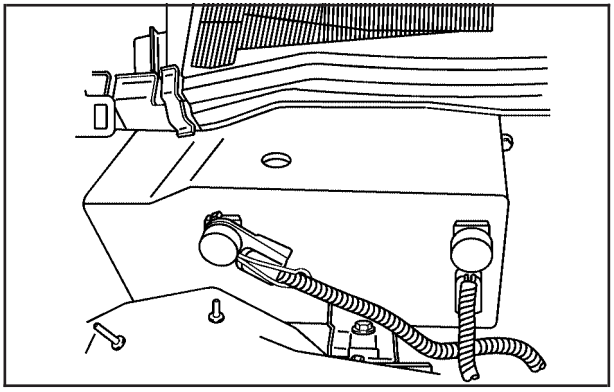

4. Open the hoods and locate the positive (+) and negative (–) terminal locations of the other vehicle, as well as the positive (+) terminal location on your vehicle's battery. See *Engine Compartment Overview on page 5-12* for more information on the location of the battery.

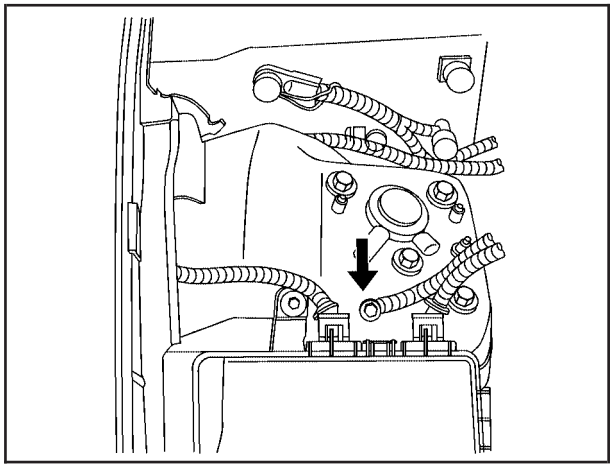

Your vehicle has a remote negative (–) ground location, as shown in the illustration. It is located between the battery and the underhood fuse block. You should always use this remote ground location, instead of the terminal on the battery.

Notice: **If you connect a negative cable to the ECM, ECM mounting bracket, or any cables that attach to the ECM bracket, you may damage the ECM. Always attach the negative cable to your vehicle's remote negative ground location, instead of the ECM, ECM bracket, or any cables attached to the ECM bracket.**

⚠ CAUTION:

An electric fan can start up even when the engine is not running and can injure you. Keep hands, clothing and tools away from any underhood electric fan.

⚠ CAUTION:

Using a match near a battery can cause battery gas to explode. People have been hurt doing this, and some have been blinded. Use a flashlight if you need more light.

Be sure the battery has enough water. You do not need to add water to the battery installed in your new vehicle. But if a battery has filler caps, be sure the right amount of fluid is there. If it is low, add water to take care of that first. If you do not, explosive gas could be present.

Battery fluid contains acid that can burn you. Do not get it on you. If you accidentally get it in your eyes or on your skin, flush the place with water and get medical help immediately.

⚠ CAUTION:

Fans or other moving engine parts can injure you badly. Keep your hands away from moving parts once the engine is running.

5. Check that the jumper cables do not have loose or missing insulation. If they do, you could get a shock. The vehicles could be damaged too.

   Before you connect the cables, here are some basic things you should know. Positive (+) will go to positive (+) or to a remote positive (+) terminal if the vehicle has one. Negative (–) will go to a heavy, unpainted metal engine part or to a remote negative (–) terminal if the vehicle has one.

   Do not connect positive (+) to negative (–) or you will get a short that would damage the battery and maybe other parts too. And do not connect the negative (–) cable to the negative (–) terminal on the dead battery because this can cause sparks.

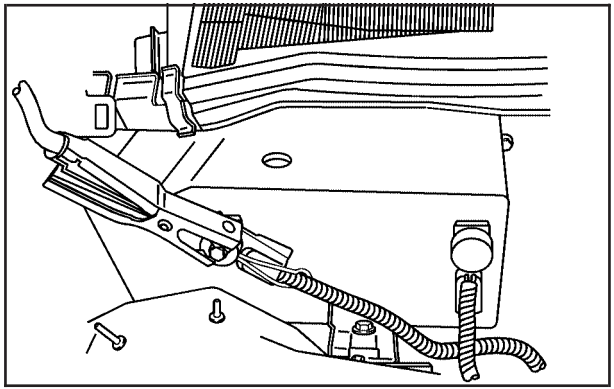

6. Connect the red positive (+) cable to the positive (+) terminal of the dead battery. Use a remote positive (+) terminal if the vehicle has one.
7. Do not let the other end touch metal. Connect it to the positive (+) terminal of the good battery. Use a remote positive (+) terminal if the vehicle has one.
8. Now connect the black negative (–) cable to the negative terminal of the good battery. Use a remote negative (–) terminal if the vehicle has one.

   Do not let the other end touch anything until the next step. The other end of the negative (–) cable does not go to the dead battery. It goes to a heavy, unpainted metal engine part or to a remote negative (–) terminal on the vehicle with the dead battery.
9. Connect the other end of the negative (–) cable at least 18 inches (45 cm) away from the dead battery, but not near engine parts that move. The electrical connection is just as good there, and the chance of sparks getting back to the battery is much less.

   Use a remote negative (–) terminal if the vehicle has one. Your vehicle's remote negative (–) ground location is for this purpose.
10. Now start the vehicle with the good battery and run the engine for a while.
11. Try to start the vehicle that had the dead battery. If it will not start after a few tries, it probably needs service.

Notice: **If the jumper cables are connected or removed in the wrong order, electrical shorting may occur and damage the vehicle. The repairs would not be covered by your warranty. Always connect and remove the jumper cables in the correct order, making sure that the cables do not touch each other or other metal.**

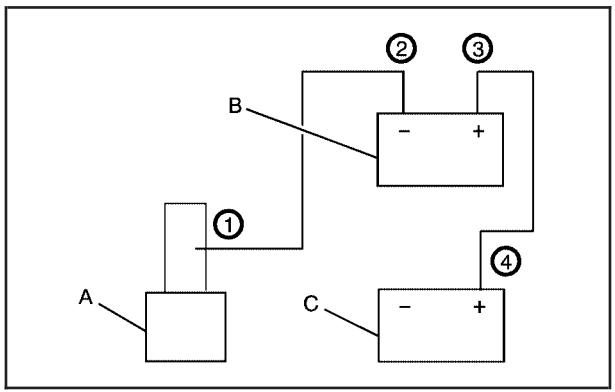

Jumper Cable Removal

A. Heavy, Unpainted Metal Engine Part or Remote Negative (–) Terminal

B. Good Battery or Remote Positive (+) and Remote Negative (–) Terminals

C. Dead Battery or Remote Positive (+) Terminal

To disconnect the jumper cables from both vehicles, do the following:

1. Disconnect the black negative (–) cable from the vehicle that had the dead battery.
2. Disconnect the black negative (–) cable from the vehicle with the good battery.
3. Disconnect the red positive (+) cable from the vehicle with the good battery.
4. Disconnect the red positive (+) cable from the other vehicle.

All-Wheel Drive

If your vehicle is equipped with all-wheel-drive, this is an additional system that needs lubrication.

Transfer Case

When to Check Lubricant

It is not necessary to regularly check the transfer case fluid unless you suspect there is a leak or you hear an unusual noise. A fluid loss could indicate a problem. Have it inspected and repaired.

How to Check Lubricant

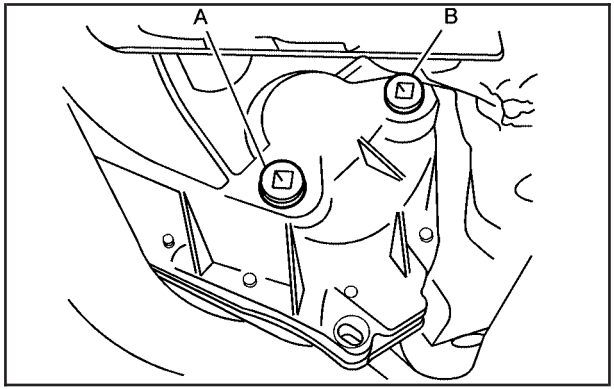

A. Drain Plug B. Fill Plug

To get an accurate reading, the vehicle should be on a level surface.

If the level is below the bottom of the filler plug hole, located on the transfer case, you'll need to add some lubricant. Add enough lubricant to raise the level to the bottom of the filler plug hole. Use care not to overtighten the plug.

What to Use

Refer to the Maintenance Schedule to determine what kind of lubricant to use. See *Recommended Fluids and Lubricants on page 6-12*.

Rear Axle

When to Check Lubricant

It is not necessary to regularly check rear axle fluid unless you suspect there is a leak or you hear an unusual noise. A fluid loss could indicate a problem. Have it inspected and repaired.

How to Check Lubricant

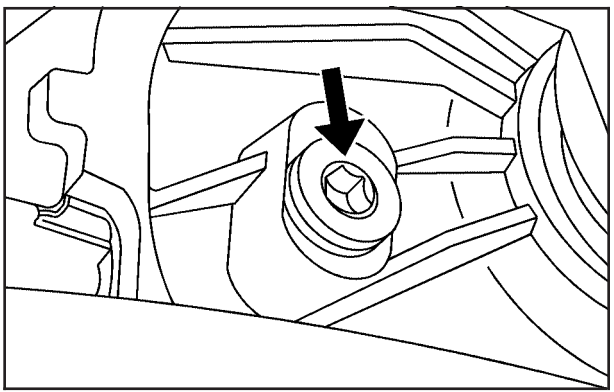

To get an accurate reading, the vehicle should be on a level surface.

If the level is below the bottom of the filler plug hole, located on the rear axle, you'll need to add some lubricant. Add enough lubricant to raise the level to the bottom of the filler plug hole.

What to Use

Refer to the Maintenance Schedule to determine what kind of lubricant to use. See *Recommended Fluids and Lubricants on page 6-12*.

Front Axle

When to Check and Change Lubricant

It is not necessary to regularly check the front axle fluid unless you suspect there is a leak or you hear an unusual noise. A fluid loss could indicate a problem. Have it inspected and repaired.

How to Check Lubricant

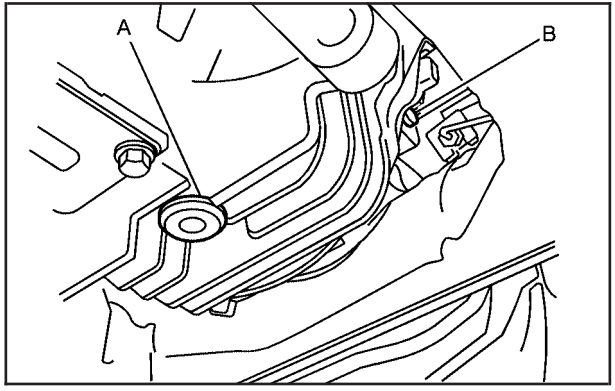

A. Drain Plug B. Filler Plug

To get an accurate reading, the vehicle should be on a level surface.

If the level is below the bottom of the filler plug hole, located on the front axle, you may need to add some lubricant.

What to Use

Refer to the Maintenance Schedule to determine what kind of lubricant to use. See *Recommended Fluids and Lubricants on page 6-12*.

Bulb Replacement

For the proper type of replacement bulbs, see *Replacement Bulbs on page 5-55*.

For any bulb changing procedure not listed in this section, contact your dealer.

High Intensity Discharge (HID) Lighting

⚠ CAUTION:

The low beam high intensity discharge lighting system operates at a very high voltage. If you try to service any of the system components, you could be seriously injured. Have your dealer or a qualified technician service them.

Your vehicle may have HID headlamps and fog lamps. After your vehicle's HID headlamp or fog lamp bulb has been replaced, you may notice that the beam is a slightly different shade than it was originally. This is normal.

Halogen Bulbs

⚠ CAUTION:

Halogen bulbs have pressurized gas inside and can burst if you drop or scratch the bulb. You or others could be injured. Be sure to read and follow the instructions on the bulb package.

Back-Up Lamps

To replace a back-up lamp bulb, do the following:

1. Open the trunk. See *Trunk on page 2-14* for more information.

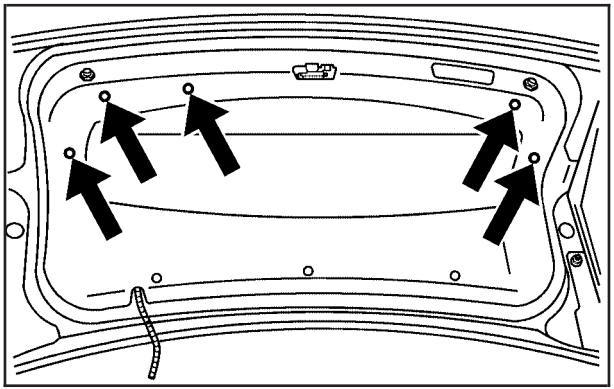

2. Pull out the push pins holding down the top portion of the cloth cover.
3. Fold the cover down slightly and locate the lamp assembly.
4. Turn the socket counterclockwise and pull it straight out to remove it from the lamp assembly.
5. Pull the old bulb straight out and reinstall the new bulb.
6. Reverse the steps to reinstall.

Replacement Bulbs

Exterior Lamp	Bulb Number
Back-up	3157K

For replacement bulbs not listed here, contact your dealer.

Windshield Replacement

Keep in mind that your windshield is part of the Head-Up Display (HUD) system. If you ever have to get your windshield replaced, be sure to get one that is designed for HUD or your HUD image may look blurred or out of focus.

Windshield Wiper Blade Replacement

Windshield wiper blades should be inspected for wear or cracking. See *Scheduled Maintenance on page 6-4*.

It's a good idea to clean or replace the wiper blade assembly on a regular basis or when worn. For proper windshield wiper blade length and type, see *Normal Maintenance Replacement Parts on page 6-14*.

STS-V models will automatically move the windshield wipers to the park position if the hood is open. Make sure the hood is closed before replacing your windshield wiper blades.

To replace the wiper blade assembly, do the following:

1. Pull the windshield wiper assembly away from the windshield.

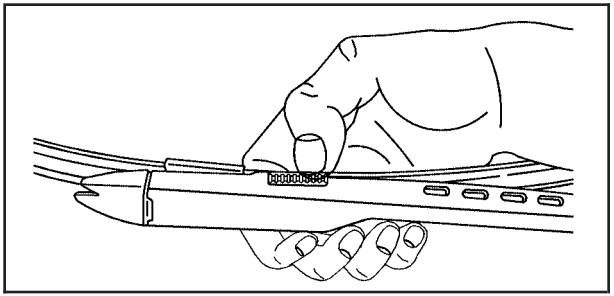

2. Squeeze the tabs on each side of the wiper blade assembly and slide the assembly off the end of the wiper arm.

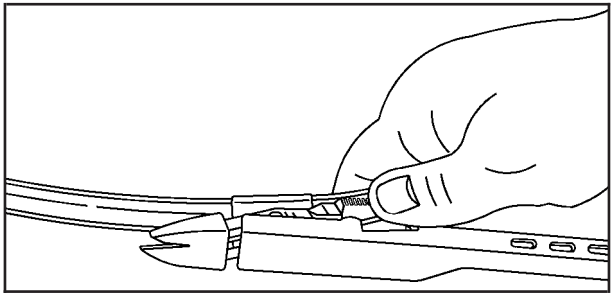

3. Replace the blade assembly with a new one.

   Allowing the wiper blade arm to touch the windshield when no wiper blade is installed could damage the windshield. Any damage that occurs would not be covered by your warranty. Do not allow the wiper blade arm to touch the windshield.

4. Repeat the steps for the other wiper.

Tires

Your new vehicle comes with high-quality tires made by a leading tire manufacturer. If you ever have questions about your tire warranty and where to obtain service, see your GM Warranty booklet for details. For additional information refer to the tire manufacturer's booklet included with your vehicle's Owner's Manual.

⚠ CAUTION:

- **Poorly maintained and improperly used tires are dangerous.**
- **Overloading your tires can cause overheating as a result of too much friction. You could have an air-out and a serious accident. See *Loading Your Vehicle on page 4-32*.**
- **Underinflated tires pose the same danger as overloaded tires. The resulting accident could cause serious injury. Check all tires frequently to maintain the recommended pressure. Tire pressure should be checked when your tires are cold.**
- **Overinflated tires are more likely to be cut, punctured, or broken by a sudden impact — such as when you hit a pothole. Keep tires at the recommended pressure.**
- **Worn, old tires can cause accidents. If your tread is badly worn, or if your tires have been damaged, replace them.**

See *Inflation - Tire Pressure on page 5-65* for inflation pressure adjustment for high speed driving.

Low-Profile Performance Tires

If your vehicle has P255/45R18 99Y size tires on the front wheels and P275/40R19 100Y size tires on the rear wheels, they are classified as low-profile performance tires. These tires are designed for very responsive driving on wet or dry pavement. You may also notice more road noise with low-profile performance tires and that they tend to wear faster. These performance tires are not rated as all-season tires. Winter tires are recommended for snow or ice covered roads.

Notice: **If your vehicle has low-profile tires, they are more susceptible to damage from road hazards or curb impact than standard profile tires. Tire and/or wheel assembly damage can occur when coming into contact with road hazards like, potholes, or sharp edged objects, or when sliding into a curb. Your GM warranty does not cover this type of damage. Keep tires set to the correct inflation pressure and, when possible avoid contact with curbs, potholes, and other road hazards.**

Winter Tires

If you expect to drive on snow or ice covered roads often, you may want to get winter tires for your vehicle. All season tires provide good overall performance on most surfaces but they may not offer the traction you would like or the same level of performance as winter tires on snow or ice covered roads.

See your dealer for details regarding winter tire availability and proper tire selection. Also, see *Buying New Tires on page 5-72*.

If you choose to use winter tires:

- Use tires of the same brand and tread type on all four wheel positions.
- Use only radial ply tires of the same size, load range, and speed rating as the original equipment tires.

Winter tires with the same speed rating as your original equipment tires may not be available for H, V, W, Y and ZR speed rated tires. If you choose winter tires with a lower speed rating, never exceed the tire's maximum speed capability.

Tire Sidewall Labeling

Useful information about a tire is molded into its sidewall. The examples below show a typical passenger vehicle tire and a compact spare tire sidewall.

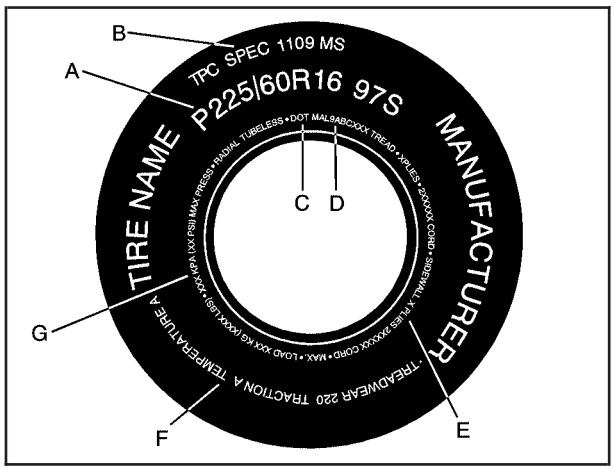

Passenger (P-Metric) Tire Example

(A) Tire Size: The tire size is a combination of letters and numbers used to define a particular tire's width, height, aspect ratio, construction type, and service description. See the "Tire Size" illustration later in this section for more detail.

(B) TPC Spec (Tire Performance Criteria Specification): Original equipment tires designed to GM's specific tire performance criteria have a TPC specification code molded onto the sidewall. GM's TPC specifications meet or exceed all federal safety guidelines.

(C) DOT (Department of Transportation): The Department of Transportation (DOT) code indicates that the tire is in compliance with the U.S. Department of Transportation Motor Vehicle Safety Standards.

(D) Tire Identification Number (TIN): The letters and numbers following DOT (Department of Transportation) code is the Tire Identification Number (TIN). The TIN shows the manufacturer and plant code, tire size, and date the tire was manufactured. The TIN is molded onto both sides of the tire, although only one side may have the date of manufacture.

(E) Tire Ply Material: The type of cord and number of plies in the sidewall and under the tread.

(F) Uniform Tire Quality Grading (UTQG): Tire manufacturers are required to grade tires based on three performance factors: treadwear, traction, and temperature resistance. For more information see *Uniform Tire Quality Grading on page 5-75*.

(G) Maximum Cold Inflation Load Limit: Maximum load that can be carried and the maximum pressure needed to support that load.

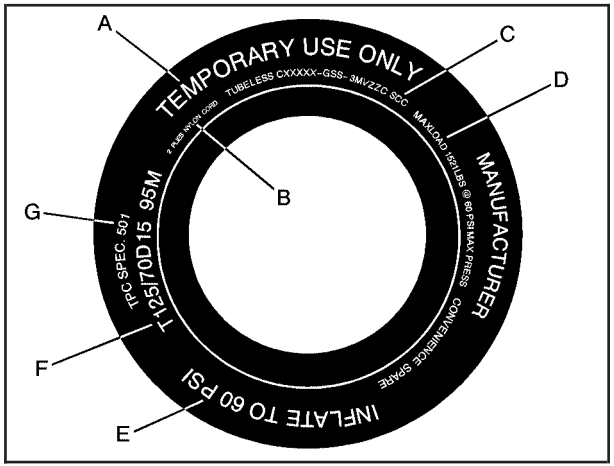

Compact Spare Tire Example

(A) Temporary Use Only: The compact spare tire or temporary use tire has a tread life of approximately 3,000 miles (5 000 km) and should not be driven at speeds over 65 mph (105 km/h). The compact spare tire is for emergency use when a regular road tire has lost air and gone flat. If your vehicle has a compact spare tire, see *Compact Spare Tire (STS Only) on page 5-93* and *If a Tire Goes Flat on page 5-81*.

(B) Tire Ply Material: The type of cord and number of plies in the sidewall and under the tread.

(C) Tire Identification Number (TIN): The letters and numbers following the DOT (Department of Transportation) code is the Tire Identification Number (TIN). The TIN shows the manufacturer and plant code, tire size, and date the tire was manufactured. The TIN is molded onto both sides of the tire, although only one side may have the date of manufacture.

(D) Maximum Cold Inflation Load Limit: Maximum load that can be carried and the maximum pressure needed to support that load.

(E) Tire Inflation: The temporary use tire or compact spare tire should be inflated to 60 psi (420 kPa). For more information on tire pressure and inflation see *Inflation - Tire Pressure on page 5-65*.

(F) Tire Size: A combination of letters and numbers define a tire's width, height, aspect ratio, construction type and service description. The letter T as the first character in the tire size means the tire is for temporary use only.

(G) TPC Spec (Tire Performance Criteria Specification): Original equipment tires designed to GM's specific tire performance criteria have a TPC specification code molded onto the sidewall. GM's TPC specifications meet or exceed all federal safety guidelines.

Tire Size

The following illustration shows an example of a typical passenger vehicle tire size.

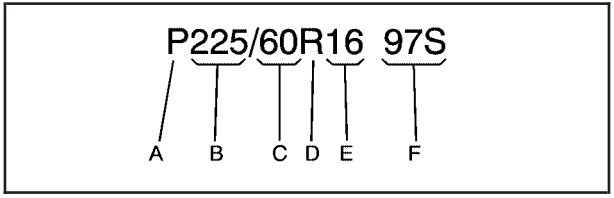

(A) Passenger (P-Metric) Tire: The United States version of a metric tire sizing system. The letter P as the first character in the tire size means a passenger vehicle tire engineered to standards set by the U.S. Tire and Rim Association.

(B) Tire Width: The three-digit number indicates the tire section width in millimeters from sidewall to sidewall.

(C) Aspect Ratio: A two-digit number that indicates the tire height-to-width measurements. For example, if the tire size aspect ratio is 60, as shown in item C of the illustration, it would mean that the tire's sidewall is 60 percent as high as it is wide.

(D) Construction Code: A letter code is used to indicate the type of ply construction in the tire. The letter R means radial ply construction; the letter D means diagonal or bias ply construction; and the letter B means belted-bias ply construction.

(E) Rim Diameter: Diameter of the wheel in inches.

(F) Service Description: These characters represent the load range and speed rating of the tire. The load index represents the load carry capacity a tire is certified to carry. The load index can range from 1 to 279. The speed rating is the maximum speed a tire is certified to carry a load. Speed ratings range from A to Z.

Tire Terminology and Definitions

Air Pressure: The amount of air inside the tire pressing outward on each square inch of the tire. Air pressure is expressed in pounds per square inch (psi) or kilopascal (kPa).

Accessory Weight: This means the combined weight of optional accessories. Some examples of optional accessories are, automatic transmission, power steering, power brakes, power windows, power seats, and air conditioning.

Aspect Ratio: The relationship of a tire's height to its width.

Belt: A rubber coated layer of cords that is located between the plies and the tread. Cords may be made from steel or other reinforcing materials.

Bead: The tire bead contains steel wires wrapped by steel cords that hold the tire onto the rim.

Bias Ply Tire: A pneumatic tire in which the plies are laid at alternate angles less than 90 degrees to the centerline of the tread.

Cold Inflation Pressure: The amount of air pressure in a tire, measured in pounds per square inch (psi) or kilopascals (kPa) before a tire has built up heat from driving. See *Inflation - Tire Pressure on page 5-65*.

Curb Weight: This means the weight of a motor vehicle with standard and optional equipment including the maximum capacity of fuel, oil and coolant, but without passengers and cargo.

DOT Markings: A code molded into the sidewall of a tire signifying that the tire is in compliance with the U.S. Department of Transportation (DOT) motor vehicle safety standards. The DOT code includes the Tire Identification Number (TIN), an alphanumeric designator which can also identify the tire manufacturer, production plant, brand and date of production.

GVWR: Gross Vehicle Weight Rating, see *Loading Your Vehicle on page 4-32*.

GAWR FRT: Gross Axle Weight Rating for the front axle, see *Loading Your Vehicle on page 4-32*.

GAWR RR: Gross Axle Weight Rating for the rear axle, see *Loading Your Vehicle on page 4-32*.

Intended Outboard Sidewall: The side of an asymmetrical tire, that must always face outward when mounted on a vehicle.

Kilopascal (kPa): The metric unit for air pressure.

Light Truck (LT-Metric) Tire: A tire used on light duty trucks and some multipurpose passenger vehicles.

Load Index: An assigned number ranging from 1 to 279 that corresponds to the load carrying capacity of a tire.

Maximum Inflation Pressure: The maximum air pressure to which a cold tire may be inflated. The maximum air pressure is molded onto the sidewall.

Maximum Load Rating: The load rating for a tire at the maximum permissible inflation pressure for that tire.

Maximum Loaded Vehicle Weight: The sum of curb weight; accessory weight; vehicle capacity weight; and production options weight.

Normal Occupant Weight: The number of occupants a vehicle is designed to seat multiplied by 150 lbs (68 kg). See *Loading Your Vehicle on page 4-32*.

Occupant Distribution: Designated seating positions.

Outward Facing Sidewall: The side of an asymmetrical tire that has a particular side that faces outward when mounted on a vehicle. The side of the tire that contains a whitewall, bears white lettering or bears manufacturer, brand, and/or model name molding that is higher or deeper than the same moldings on the other sidewall of the tire.

Passenger (P-Metric) Tire: A tire used on passenger cars and some light duty trucks and multipurpose vehicles.

Recommended Inflation Pressure: Vehicle manufacturer's recommended tire inflation pressure and shown on the tire placard. See *Inflation - Tire Pressure on page 5-65* and *Loading Your Vehicle on page 4-32*.

Radial Ply Tire: A pneumatic tire in which the ply cords that extend to the beads are laid at 90 degrees to the centerline of the tread.

Rim: A metal support for a tire and upon which the tire beads are seated.

Sidewall: The portion of a tire between the tread and the bead.

Speed Rating: An alphanumeric code assigned to a tire indicating the maximum speed at which a tire can operate.

Traction: The friction between the tire and the road surface. The amount of grip provided.

Tread: The portion of a tire that comes into contact with the road.

Treadwear Indicators: Narrow bands, sometimes called "wear bars," that show across the tread of a tire when only 1/16 inch (1.6 mm) of tread remains. See *When It Is Time for New Tires on page 5-72*.

UTQGS (Uniform Tire Quality Grading Standards): A tire information system that provides consumers with ratings for a tire's traction, temperature, and treadwear. Ratings are determined by tire manufacturers using government testing procedures. The ratings are molded into the sidewall of the tire. See *Uniform Tire Quality Grading on page 5-75*.

Vehicle Capacity Weight: The number of designated seating positions multiplied by 150 lbs (68 kg) plus the rated cargo load. See *Loading Your Vehicle on page 4-32*.

Vehicle Maximum Load on the Tire: Load on an individual tire due to curb weight, accessory weight, occupant weight, and cargo weight.

Vehicle Placard: A label permanently attached to a vehicle showing the vehicle's capacity weight and the original equipment tire size and recommended inflation pressure. See "Tire and Loading Information Label" under *Loading Your Vehicle on page 4-32*.

Run-Flat Tires (STS-V)

If your vehicle has run-flat tires, there is no spare tire and no tire changing equipment. Your vehicle also has a Tire Pressure Monitor System (TPMS) which will alert you if there is a loss of tire pressure in any of the tires. See *Tire Pressure Monitor System on page 5-67*.

⚠ CAUTION:

When the low tire warning light is displayed on the instrument panel cluster, your vehicle's handling capabilities will be reduced during severe maneuvers. If you drive too fast, you could lose control of your vehicle. You or others could be injured. Do not drive over 55 mph (90 km/h) when the low tire warning light is displayed. Drive cautiously and check your tire pressures as soon as you can.

If a tire goes flat, you will not need to stop on the side of the road to change the tire. You can just keep on driving. The vehicle's run-flat tires can operate effectively with no air pressure for up to 50 miles (80 km) at speeds up to 55 mph (90 km/h). The shorter the distance you drive and the slower the speed, the greater the chance that the tire will not have to be replaced. When a tire is filled with air, it provides a cushion between the road and the wheel. Because you will not have this cushion when driving on a deflated run-flat tire, try to avoid potholes that could damage your wheel and require replacement of it.

Some road hazards can damage a tire beyond repair. This damage could occur even before you have driven on the tire in a deflated condition. When a tire has been damaged, or if you have driven any distance on a deflated run-flat tire, check with an authorized run-flat tire service center, as soon as possible, to determine whether the tire can be repaired or should be replaced. To maintain your vehicle's run-flat feature, all replacement tires must be self-supporting tires. To locate the nearest GM or authorized run-flat servicing facility, call Roadside Service. See *Roadside Service on page 7-5* for details.

⚠ CAUTION:

Run-flat tires are constructed differently than other tires and could explode during improper service. You or others could be injured or killed if you attempt to repair, replace, dismount, or mount a run-flat tire. Let only an authorized run-flat service center repair, replace, dismount, and mount run-flat tires.

The valve stems on your vehicle's run-flat tires have sensors that are part of the Tire Pressure Monitor System (TPMS). These sensors contain batteries which are designed to last for 10 years under normal driving conditions. See your GM dealer, if the TPMS sensors or a wheel ever need replacement.

Notice: **Using liquid sealants can damage the tire valves and tire pressure monitor sensors in your vehicle's run-flat tires. This damage would not be covered by warranty. Do not use liquid sealants in your vehicle's run-flat tires.**

Inflation - Tire Pressure

Tires need the correct amount of air pressure to operate effectively.

Notice: **Do not let anyone tell you that under-inflation or over-inflation is all right. It is not. If your tires do not have enough air (under-inflation), you can get the following:**

- **Too much flexing**
- **Too much heat**
- **Tire overloading**
- **Premature or irregular wear**
- **Poor handling**
- **Reduced fuel economy**

If your tires have too much air (over-inflation), you can get the following:

- **Unusual wear**
- **Poor handling**
- **Rough ride**
- **Needless damage from road hazards**

A Tire and Loading Information label is attached to the vehicle's center pillar, below the driver's door latch. This label lists your vehicle's original equipment tires and shows the correct inflation pressures for your tires when they are cold. The recommended cold tire inflation pressure, shown on the label, is the minimum amount of air pressure needed to support your vehicle's maximum load carrying capacity.

For additional information regarding how much weight your vehicle can carry, and an example of the tire and loading information label, see *Loading Your Vehicle on page 4-32*. How you load your vehicle affects vehicle handling and ride comfort, never load your vehicle with more weight than it was designed to carry.

When to Check

Check your tires once a month or more. Do not forget to check the compact spare tire, it should be at 60 psi (420 kPa). For additional information regarding the compact spare tire, see *Compact Spare Tire (STS Only) on page 5-93*.

How to Check

Use a good quality pocket-type gage to check tire pressure. You cannot tell if your tires are properly inflated simply by looking at them. Radial tires may look properly inflated even when they're under-inflated. Check the tire's inflation pressure when the tires are cold. Cold means your vehicle has been sitting for at least three hours or driven no more than 1 mile (1.6 km).

Remove the valve cap from the tire valve stem. Press the tire gage firmly onto the valve to get a pressure measurement. If the cold tire inflation pressure matches the recommended pressure on the Tire and Loading Information label, no further adjustment is necessary. If the inflation pressure is low, add air until you reach the recommended amount.

If you overfill the tire, release air by pushing on the metal stem in the center of the tire valve. Re-check the tire pressure with the tire gage.

Be sure to put the valve caps back on the valve stems. They help prevent leaks by keeping out dirt and moisture.

High Speed Operation

⚠ CAUTION:

Driving at high speeds, 100 mph (160 km/h) or higher, puts an additional strain on tires. Sustained high-speed driving causes excessive heat build up and can cause sudden tire failure. You could have a crash and you or others could be killed. Some high-speed rated tires require inflation pressure adjustment for high speed operation. When speed limits and road conditions are such that a vehicle can be driven at high speeds, make sure the tires are rated for high speed operation, in excellent condition, and set to the correct cold tire inflation pressure for the vehicle load.

If you will be driving at high speeds, speeds of 100 mph (160 km/h) or higher, where it is legal, set the cold inflation pressure to the maximum inflation pressure shown on the tire sidewall, or 38 psi (265 kPa), whichever is lower. See the example following. When you end this high-speed driving, return the tires to the cold inflation pressure shown on the Tire and Loading Information label. See *Loading Your Vehicle on page 4-32*.

Example:

You will find the maximum load and inflation pressure molded on the tire's sidewall, in small letters, near the rim flange. It will read something like this: Maximum load 690 kg (1521 lbs) 300 kPa (44 psi) Max. Press.

For this example, you would set the inflation pressure for high-speed driving at 38 psi (265 kPa).

Tire Pressure Monitor System

The Tire Pressure Monitor System (TPMS) uses radio and sensor technology to check tire pressure levels. If your vehicle has this feature, sensors are mounted onto each tire and wheel assembly, except the compact spare tire and wheel. Tire pressure readings are sent to a receiver located in the vehicle once every 60 seconds while the vehicle is being driven, and once every 60 minutes if the vehicle is stationary for more than 15 minutes.

Using the Driver Information Center (DIC), tire pressure levels may be viewed by the driver. For additional information and details about the DIC operation and displays see *DIC Controls and Displays on page 3-74* and *DIC Warnings and Messages on page 3-79*.

If a low tire pressure condition is detected, the TPM system will display the CHECK TIRE PRESSURE warning message on the DIC and, at the same time, illuminate the low tire pressure warning symbol, on the instrument panel cluster.

Each tire, including the spare (if provided), should be checked monthly when cold and inflated to the inflation pressure recommended by the vehicle manufacturer on the vehicle placard or tire inflation pressure label.

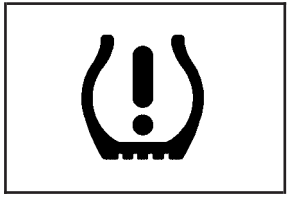

When the low tire pressure telltale is illuminated, one or more of your tires is significantly under-inflated.

You should stop and check your tires as soon as possible, and inflate them to the proper pressure. Driving on a significantly under-inflated tire causes the tire to overheat and can lead to tire failure. Under-inflation also reduces fuel efficiency and tire tread life, and may affect the vehicle's handling and stopping ability.

A Tire and Loading Information Label, attached to your vehicle, shows the size of your vehicle's original equipment tires and the correct inflation pressure for your vehicle's tires when they are cold. See *Loading Your Vehicle on page 4-32* for an example of the tire and loading information label and its location on your vehicle. Also see *Inflation - Tire Pressure on page 5-65*.

Your vehicle's TPMS can alert you about a low tire pressure condition but it does not replace normal tire maintenance. See *Tire Inspection and Rotation on page 5-70* and *Tires on page 5-57*.

Notice: **Do not use a tire sealant if your vehicle has Tire Pressure Monitors. The liquid sealant can damage the tire pressure monitor sensors.**

TPM Sensor Identification Codes

Each TPMS sensor has a unique identification code. Any time you replace one or more of the TPMS sensors or rotate your vehicle's tires, the identification codes will need to be matched to the new tire/wheel position. The sensors are matched, to the tire/wheel positions, in the following order: driver's side front tire, passenger's side front tire, passenger's side rear tire, and driver's side rear tire using a TPMS diagnostic tool. See your GM dealer for service.

The TPMS sensors may also be matched to each tire/wheel position by increasing or decreasing the tire's air pressure. If using this method to match TPMS sensors, the complete procedure outlined below must be performed within 15 minutes of the vehicle being stationary.

You will have one minute to match the first tire/wheel position, and five minutes overall, to match all four tire/wheel positions. If it takes longer than one minute, to match the first tire and wheel, or more than five minutes to match all four tire/wheel positions the matching process stops and you will need to start over.

The TPM matching process is outlined below:

1. Set the parking brake.
2. Press the push-button ignition switch to OFF/ACC.
3. Using the Keyless Access transmitter, lock and unlock the vehicle's doors.
4. Press the lock and unlock buttons, at the same time, on the Keyless Access transmitter. A single horn chirp will sound, indicating that the TPMS system is ready, and the sensor matching process can begin.
5. Start with the driver's side front tire.
6. Remove the valve cap from the valve stem. Activate the TPMS sensor by increasing or decreasing the tire's air pressure for five seconds, or until a horn chirp sounds. The horn chirp, which may take up to 30 seconds to sound, confirms that the sensor identification code has been matched to this tire position. To decrease the tire's air-pressure use the pointed end of the valve cap, a pencil-style air pressure gauge, or a key.
7. Proceed to the passenger's side front tire, and repeat the procedure in Step 6.
8. Proceed to the passenger's side rear tire, and repeat the procedure in Step 6.
9. Proceed to the driver's side rear tire, and repeat the procedure in Step 6.
10. After hearing the confirming single horn chirp for the driver's side rear tire, a double horn chirp will sound to signal the tire matching mode is no longer active. Press the push-button ignition switch to OFF/ACC.
11. Set all four tires to the recommended air pressure level as indicated on the tire and loading information label.
12. Put the valve caps back on the valve stems.

The spare tire does not have a TPMS sensor. If you replace one of the road tires with the spare, the SERVICE TIRE MONITOR message will be displayed on the DIC screen. This message should go off once you re-install the road tire containing the TPM sensor. The SERVICE TIRE MONITOR message is also displayed when the TPMS system is malfunctioning. One or more missing or inoperable TPMS sensors will cause the SERVICE TIRE MONITOR message to be displayed. See your GM dealer for service.

This device complies with Part 15 of the FCC Rules. Operation is subject to the following two conditions:

1. This device may not cause interference.
2. This device must accept any interference received, including interference that may cause undesired operation.

This device complies with RSS-210 of Industry Canada. Operation is subject to the following two conditions:

1. This device may not cause interference.
2. This device must accept any interference received, including interference that may cause undesired operation of the device.

Changes or modifications to this system by other than an authorized service facility could void authorization to use this equipment.

Tire Inspection and Rotation

Tire rotation is not recommended if your vehicle has the following performance tire combinations:

- P235/50R17 size tires on the front wheels and P255/45R17 size tires on the rear wheels.
- P235/50R18 size tires on the front wheels and P255/45R18 size tires on the rear wheels.
- P255/45R18 size tires on the front wheels and P275/40R19 size tires on the rear wheels.

Different tire sizes should not be rotated front to rear. Each tire and wheel should only be used in the original front or rear position it is in.

Tire rotation is recommended if your vehicle is equipped with P235/50R17 size tires on all four wheel positions or 255/45ZR18 size tires on all four wheel positions. These tires should be rotated every 5,000 to 8,000 miles (8 000 to 13 000 km).

Any time you notice unusual wear, rotate your tires as soon as possible and check wheel alignment. Also check for damaged tires or wheels. See *When It Is Time for New Tires on page 5-72* and *Wheel Replacement on page 5-76* for more information.

The purpose of regular rotation is to achieve more uniform wear for all tires on the vehicle. The first rotation is the most important. See *Scheduled Maintenance on page 6-4*.

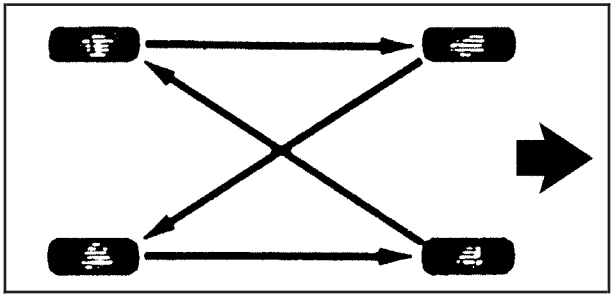

When rotating P235/50R17 size tires or 255/45ZR18 size tires, always use the correct rotation pattern shown here.

If your vehicle has a compact spare tire, do not include the compact spare tire in the tire rotation.

After the tires have been rotated, adjust the front and rear inflation pressures as shown on the Tire and Loading Information label.

Vehicles that have the Tire Pressure Monitor System (TPMS) will need to have the TPMS sensors reset after a tire rotation, see *Tire Pressure Monitor System on page 5-67*.

Make certain that all wheel nuts are properly tightened. See “Wheel Nut Torque” under *Capacities and Specifications on page 5-116*.

⚠ CAUTION:

Rust or dirt on a wheel, or on the parts to which it is fastened, can make wheel nuts become loose after a time. The wheel could come off and cause an accident. When you change a wheel, remove any rust or dirt from places where the wheel attaches to the vehicle. In an emergency, you can use a cloth or a paper towel to do this; but be sure to use a scraper or wire brush later, if needed, to get all the rust or dirt off. See *Changing a Flat Tire (STS Only) on page 5-83*.

When It Is Time for New Tires

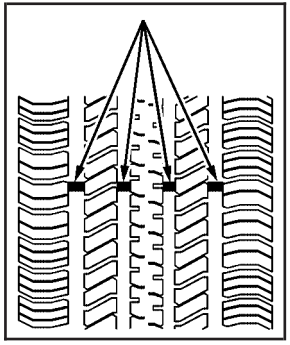

One way to tell when it is time for new tires is to check the treadwear indicators, which will appear when your tires have only 1/16 inch (1.6 mm) or less of tread remaining.

You need a new tire if any of the following statements are true:

- You can see the indicators at three or more places around the tire.
- You can see cord or fabric showing through the tire's rubber.
- The tread or sidewall is cracked, cut, or snagged deep enough to show cord or fabric.
- The tire has a bump, bulge, or split.
- The tire has a puncture, cut or other damage that cannot be repaired well because of the size or location of the damage.

Buying New Tires

GM has developed and matched specific tires for your vehicle. The original equipment tires installed on your vehicle, when it was new, were designed to meet General Motors Tire Performance Criteria Specification (TPC Spec) system rating. If you need replacement tires, GM strongly recommends that you get tires with the same TPC Spec rating. This way, your vehicle will continue to have tires that are designed to give the same performance and vehicle safety, during normal use, as the original tires.

GM's exclusive TPC Spec system considers over a dozen critical specifications that impact the overall performance of your vehicle, including brake system performance, ride and handling, traction control, and tire pressure monitoring performance. GM's TPC Spec number is molded onto the tire's sidewall by the tire manufacturer. If the tires have an all-season tread design, the TPC Spec number will be followed by an MS for mud and snow. See *Tire Sidewall Labeling on page 5-59* for additional information.

The optional 18-inch performance tires, size 255/45ZR18 99Y, used on some vehicles, meet the General Motors Tire Performance Criteria Specification (TPC Spec) rating but the TPC Spec code has not been molded onto the tire's sidewall. If your vehicle has these tires, and you need to replace them, you can still get these TPC Spec rated tires by asking your GM dealer.

Your GM dealer can order these tires by part number. This way, your vehicle will continue to give the proper endurance, handling, traction, and ride as the original tires.

Winter tires with the same speed rating as your original equipment tires may not be available for H, V, W, Y and ZR speed rated tires. If you choose snow tires with a lower speed rating, never exceed the tire's maximum speed capability.

⚠ CAUTION:

Mixing tires could cause you to lose control while driving. If you mix tires of different sizes (other than those originally installed on your vehicle), brands, or types (radial and bias-belted tires), the vehicle may not handle properly, and you could have a crash. Using tires of different sizes (other than those originally installed on your vehicle), brands, or types may also cause damage to your vehicle.

CAUTION: (Continued)

CAUTION: (Continued)

Be sure to use the correct size, brand, and type of tires on all wheels. It is all right to drive with your vehicle's compact spare temporarily, it was developed for use on your vehicle. See *Compact Spare Tire (STS Only) on page 5-93*.

⚠ CAUTION:

If you use bias-ply tires on your vehicle, the wheel rim flanges could develop cracks after many miles of driving. A tire and/or wheel could fail suddenly, causing a crash. Use only radial-ply tires with the wheels on your vehicle.

If you must replace your vehicle's tires with those that do not have a TPC Spec number, make sure they are the same size, load range, speed rating, and construction type (radial and bias-belted tires) as your vehicle's original tires.

Vehicles that have a tire pressure monitoring system may give an inaccurate low-pressure warning if non-TPC Spec rated tires are installed on it. Non-TPC Spec rated tires may give a low-pressure warning that is higher or lower than the proper warning level you would get with TPC Spec rated tires. See *Tire Pressure Monitor System on page 5-67*.

Your vehicle's original equipment tires are listed on the Tire and Loading Information Label. This label is attached to the vehicle's center pillar (B-pillar). See *Loading Your Vehicle on page 4-32*, for more information about the Tire and Loading Information Label and its location on your vehicle.

Vehicles that have performance tires P235/50R17 95V (front axle) and P255/45R17 98V (rear axle) are mounted on wheels with different rim widths. The front axle tires are mounted on rims 7.5 inches (19.05 cm) wide and the rear axle tires require wheels with a minimum rim width of 8 inches (20.32 cm). The original equipment wheels designed for P255/45R17 98V size tires are etched with the words REAR ONLY. When replacing P255/45R17 98V size tires have them mounted on wheels with a minimum width of 8 inches (20.32 cm) and marked REAR ONLY. See *Wheel Replacement on page 5-76*.

Different Size Tires and Wheels

If you add wheels or tires that are a different size than your original equipment wheels and tires, this may affect the way your vehicle performs, including its braking, ride and handling characteristics, stability and resistance to rollover. Additionally, if your vehicle has electronic systems such as, antilock brakes; traction control; and electronic stability control, the performance of these systems can be affected.

⚠ CAUTION:

If you add different sized wheels, your vehicle may not provide an acceptable level of performance and safety if tires not recommended for those wheels are selected. You may increase the chance that you will crash and suffer serious injury. Only use GM specific wheel and tire systems developed for your vehicle, and have them properly installed by a GM certified technician.

See *Buying New Tires on page 5-72* and *Accessories and Modifications on page 5-3* for additional information.

Uniform Tire Quality Grading

Quality grades can be found where applicable on the tire sidewall between tread shoulder and maximum section width. For example:

Treadwear 200 Traction AA Temperature A

The following information relates to the system developed by the United States National Highway Traffic Safety Administration, which grades tires by treadwear, traction and temperature performance. (This applies only to vehicles sold in the United States.) The grades are molded on the sidewalls of most passenger car tires. The Uniform Tire Quality Grading system does not apply to deep tread, winter-type snow tires, space-saver or temporary use spare tires, tires with nominal rim diameters of 10 to 12 inches (25 to 30 cm), or to some limited-production tires.

While the tires available on General Motors passenger cars and light trucks may vary with respect to these grades, they must also conform to federal safety requirements and additional General Motors Tire Performance Criteria (TPC) standards.

Treadwear

The treadwear grade is a comparative rating based on the wear rate of the tire when tested under controlled conditions on a specified government test course. For example, a tire graded 150 would wear one and a half (1.5) times as well on the government course as a tire graded 100. The relative performance of tires depends upon the actual conditions of their use, however, and may depart significantly from the norm due to variations in driving habits, service practices and differences in road characteristics and climate.

Traction – AA, A, B, C

The traction grades, from highest to lowest, are AA, A, B, and C. Those grades represent the tire's ability to stop on wet pavement as measured under controlled conditions on specified government test surfaces of asphalt and concrete. A tire marked C may have poor traction performance. Warning: The traction grade assigned to this tire is based on straight-ahead braking traction tests, and does not include acceleration, cornering, hydroplaning, or peak traction characteristics.

Temperature – A, B, C

The temperature grades are A (the highest), B, and C, representing the tire's resistance to the generation of heat and its ability to dissipate heat when tested under controlled conditions on a specified indoor laboratory test wheel. Sustained high temperature can cause the material of the tire to degenerate and reduce tire life, and excessive temperature can lead to sudden tire failure. The grade C corresponds to a level of performance which all passenger car tires must meet under the Federal Motor Vehicle Safety Standard No. 109. Grades B and A represent higher levels of performance on the laboratory test wheel than the minimum required by law.

Warning: The temperature grade for this tire is established for a tire that is properly inflated and not overloaded. Excessive speed, underinflation, or excessive loading, either separately or in combination, can cause heat buildup and possible tire failure.

Wheel Alignment and Tire Balance

The tires and wheels on your vehicle were aligned and balanced carefully at the factory to give you the longest tire life and best overall performance. Adjustments to wheel alignment and tire balancing will not be necessary on a regular basis. However, if you notice unusual tire wear or your vehicle pulling to one side or the other, the alignment may need to be checked. If you notice your vehicle vibrating when driving on a smooth road, your tires and wheels may need to be rebalanced. See your dealer for proper diagnosis.

Wheel Replacement

Replace any wheel that is bent, cracked or badly rusted or corroded. If wheel nuts keep coming loose, the wheel, wheel bolts and wheel nuts should be replaced. If the wheel leaks air, replace it (except some aluminum wheels, which can sometimes be repaired). See your dealer if any of these conditions exist.

Your dealer will know the kind of wheel you need.

Each new wheel should have the same load-carrying capacity, diameter, width, offset and be mounted the same way as the one it replaces.

If you need to replace any of your wheels, wheel bolts or wheel nuts, replace them only with new GM original equipment parts. This way, you will be sure to have the right wheel, wheel bolts and wheel nuts for your vehicle.

⚠ CAUTION:

Using the wrong replacement wheels, wheel bolts or wheel nuts on your vehicle can be dangerous. It could affect the braking and handling of your vehicle, make your tires lose air and make you lose control. You could have a collision in which you or others could be injured. Always use the correct wheel, wheel bolts and wheel nuts for replacement.

Notice: **The wrong wheel can also cause problems with bearing life, brake cooling, speedometer or odometer calibration, headlamp aim, bumper height, vehicle ground clearance and tire or tire chain clearance to the body and chassis.**

See *Changing a Flat Tire (STS Only) on page 5-83* for more information.

Used Replacement Wheels

⚠ CAUTION:

Putting a used wheel on your vehicle is dangerous. You cannot know how it has been used or how far it has been driven. It could fail suddenly and cause a crash. If you have to replace a wheel, use a new GM original equipment wheel.

Tire Chains

⚠ CAUTION:

If your vehicle has P255/45R17, P255/45R18, P275/40R19, or 255/45ZR18 size tires, do not use tire chains, as there is not enough clearance.

Tire chains used on a vehicle without the proper amount of clearance can cause damage to the brakes, suspension, or other vehicle parts. The area damaged by the tire chains could cause you to lose control of your vehicle and you or others may be injured in a crash.

Use another type of traction device only if its manufacturer recommends it for use on your vehicle and tire size combination and road conditions. Follow that manufacturer's

CAUTION: (Continued)

CAUTION: (Continued)

instructions. To help avoid damage to your vehicle, drive slowly, readjust, or remove the device if it is contacting your vehicle, and do not spin your vehicle's wheels.

If you do find traction devices that will fit, install them on the rear tires only.

Notice: **If your vehicle has P235/50R17 95S size tires, use tire chains only where legal and only when you must. Use only SAE Class S-type chains that are the proper size for your tires. Install them on the rear tires and tighten them as tightly as possible with the ends securely fastened. Drive slowly and follow the chain manufacturer's instructions. If you can hear the chains contacting your vehicle, stop and retighten them. If the contact continues, slow down until it stops. Driving too fast or spinning the wheels with chains on will damage your vehicle.**

Lifting Your Vehicle (STS-V)

⚠ CAUTION:

Lifting a vehicle can cause an injury. The vehicle can slip off the jack and roll over you or other people. You and they could be badly injured. Find a level place to lift your vehicle. To help prevent the vehicle from moving:

1. **Hold the brake pedal down with your right foot.**
2. **Move the shift lever in PARK (P) by pressing the button on the front of the shift lever while pushing the lever all the way toward the front of the vehicle. Release the button.**
3. **With your right foot still holding the brake pedal down, set the parking brake with your left foot.**
4. **Turn off the engine.**

To be even more certain the vehicle will not move, you can put blocks in front of and behind the wheels. Also, see *Shifting Into Park (P) on page 2-36* and *Parking Brake on page 2-35* for additional information.

⚠ CAUTION:

Getting under a vehicle when it is jacked up is dangerous. If the vehicle slips off the jack, you could be badly injured or killed. Never get under a vehicle when it is supported only by a jack.

⚠ CAUTION:

Raising your vehicle with the jack improperly positioned can damage the vehicle and even make the vehicle fall. To help avoid personal injury and vehicle damage, be sure to place the jack in the proper location before raising the vehicle.

If you ever use a jack to lift your vehicle, follow the instructions that came with the jack, and be sure to use the correct lifting points to avoid damaging your vehicle.

Notice: **Lifting your vehicle improperly can damage your vehicle and result in costly repairs not covered by your warranty. To lift your vehicle properly, follow the advice in this part.**

To help prevent vehicle damage:

- **Be sure the jack you are using meets the weight standards for your vehicle and is in good working order.**
- **Be sure to place a block or pad between the jack and the vehicle.**
- **Make sure the jack you are using only contacts the jacking location lift points and is not leaning on any other vehicle components such as the rocker panels, the floor pan, or the stone guard moldings.**
- **Lift only in the areas shown in the following pictures.**

Lifting From the Front

The front lifting points can be accessed from either side of your vehicle, behind the front tires.

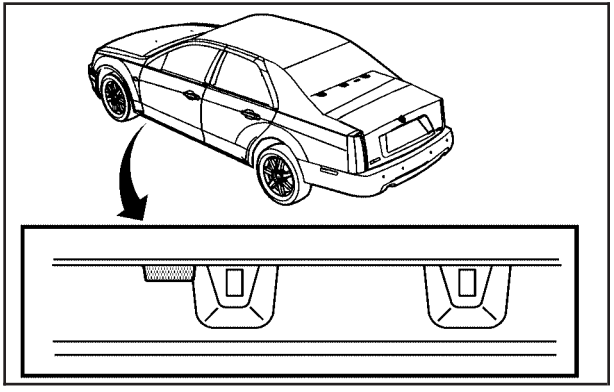

1. Locate the front lifting points using the diagram above. The front lifting location is about 15 inches (37 cm) from the rear edge of the front wheel well.
2. Be sure to place a block or pad between the jack and the vehicle.
3. Lift the vehicle with the jack, making sure the jack is centered on the front lifting point.

Lifting From the Rear

The rear lifting points can be accessed from either side of your vehicle, in front of the rear tires.

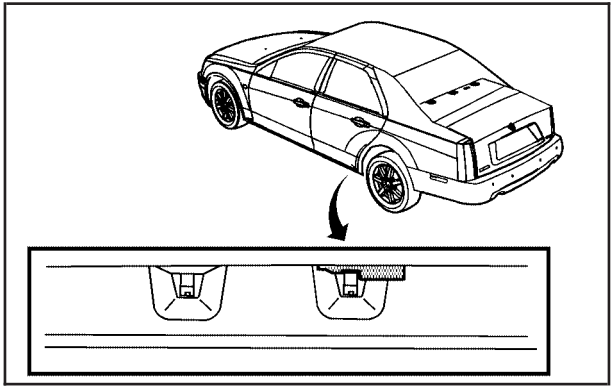

1. Locate the rear lifting points using the diagram above. The rear lifting location is about 7 inches (17 cm) from the front edge of the rear wheel well.
2. Be sure to place a block or pad between the jack and the vehicle.
3. Lift the vehicle with the jack, making sure the jack is centered on the rear lifting point.

See *Doing Your Own Service Work on page 5-4*.

If a Tire Goes Flat

It is unusual for a tire to blowout while you are driving, especially if you maintain your tires properly. See *Tires on page 5-57*. If air goes out of a tire, It is much more likely to leak out slowly. But if you should ever have a blowout, here are a few tips about what to expect and what to do:

If a front tire fails, the flat tire will create a drag that pulls the vehicle toward that side. Take your foot off the accelerator pedal and grip the steering wheel firmly. Steer to maintain lane position, and then gently brake to a stop well out of the traffic lane.

A rear blowout, particularly on a curve, acts much like a skid and may require the same correction you would use in a skid. In any rear blowout, remove your foot from the accelerator pedal. Get the vehicle under control by steering the way you want the vehicle to go. It may be very bumpy and noisy, but you can still steer. Gently brake to a stop, well off the road if possible.

If a tire goes flat, and your vehicle has a spare tire, see *Changing a Flat Tire (STS Only) on page 5-83*. This information shows you how to use your vehicle's tire changing equipment and how to change a flat tire safely.

⚠ CAUTION:

Lifting a vehicle and getting under it to do maintenance or repairs is dangerous without the appropriate safety equipment and training. The jack provided with your vehicle is designed only for changing a flat tire. If it is used for anything else, you or others could be badly injured or killed if the vehicle slips off the jack. Use the jack provided with your vehicle only for changing a flat tire.

Run-Flat Tires (STS-V)

If your vehicle has run-flat tires, there is no spare tire and no tire changing equipment. Run-flat tires can operate effectively with no air pressure for a limited distance and speed. Your vehicle also has a Tire Pressure Monitor (TPM) which will alert you if there is a loss of tire pressure in any of the tires. These tires perform so well without any air pressure that a Tire Pressure Monitor (TPM) is used to alert you when there is a low tire condition.

⚠ CAUTION:

When the low tire warning light is displayed on the instrument panel cluster, your vehicle's handling capabilities will be reduced during severe maneuvers. If you drive too fast, you could lose control of your vehicle. You or others could be injured. Do not drive over 55 mph (90 km/h) when the low tire warning light is displayed. Drive cautiously and check your tire pressures as soon as you can.

See *Run-Flat Tires (STS-V) on page 5-64* and *Tire Pressure Monitor System on page 5-67*, for additional information.

⚠ CAUTION:

Special tools and procedures are required to service a run-flat tire. If these special tools and procedures are not used you or others could be injured and your vehicle could be damaged. Always be sure the proper tools and procedures, as described in the service manual, are used.

To order a service manual see *Service Publications Ordering Information on page 7-14*.

Changing a Flat Tire (STS Only)

If you have an STS-V model, there is no spare tire and no tire changing equipment. Your vehicle is equipped with run-flat tires. See *Run-Flat Tires (STS-V) on page 5-64* for more information. If you have an STS model, follow the directions for changing a flat tire in this section.

If a tire goes flat, avoid further tire and wheel damage by driving slowly to a level place. Turn on your vehicle's hazard warning flashers. See *Hazard Warning Flashers on page 3-6* for more information.

⚠ CAUTION:

Changing a tire can be dangerous. The vehicle can slip off the jack and roll over or fall on you or other people. You and they could be badly injured or even killed. Find a level place to change your tire. To help prevent the vehicle from moving:

1. **Set the parking brake firmly.**
2. **Put the shift lever in PARK (P).**
3. **Turn off the engine and do not restart while the vehicle is raised.**
4. **Do not allow passengers to remain in the vehicle.**

To be even more certain the vehicle will not move, you should put blocks at the front and rear of the tire farthest away from the one being changed. That would be the tire, on the other side, at the opposite end of the vehicle.

When your vehicle has a flat tire, use the following example as a guide to assist you in the placement of wheel blocks.

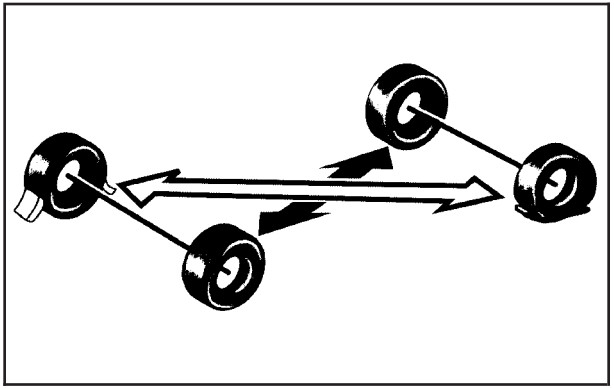

The following information will tell you next how to use the jack and change a tire.

Removing the Spare Tire and Tools (STS Only)

The equipment you will need is located in the trunk. To gain access to the compact spare tire and jacking equipment, do the following:

1. Open the trunk. See *Trunk on page 2-14* for more information.
2. Remove the compact spare tire cover.

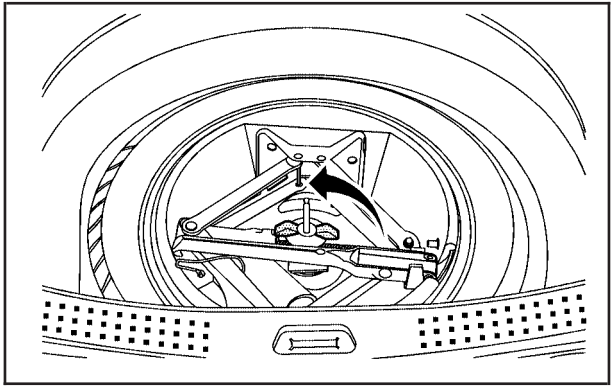

3. Turn the nut holding the jack counterclockwise and remove it. Then remove the jack and wheel wrench.
4. Remove the compact spare tire. See *Compact Spare Tire (STS Only) on page 5-93* for more information about the compact spare tire.

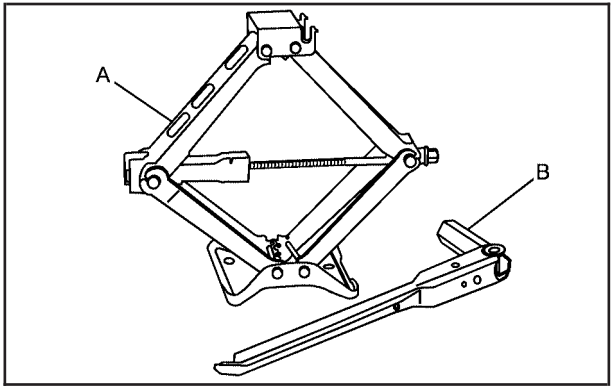

The tools you will be using include the jack (A) and the wheel wrench (B).

Removing the Flat Tire and Installing the Spare Tire (STS Only)

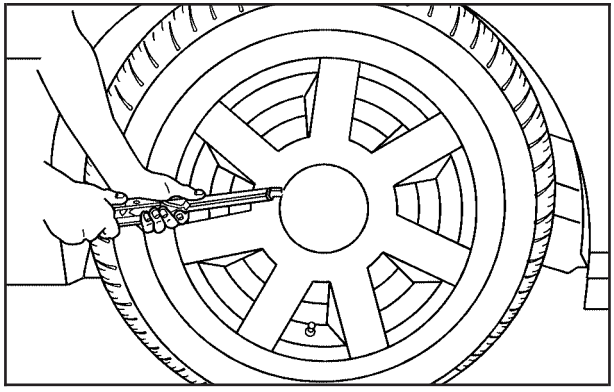

1. If your vehicle has wheel covers, use the flat end of the wheel wrench to remove the covers. Turn the wheel wrench clockwise to gently pry off the wheel cover. Be careful not to scratch the aluminum wheel edge and do not try to remove the wheel cover with your hands.

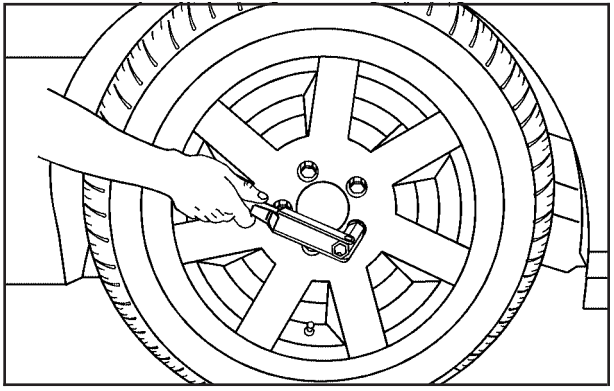

2. Loosen the wheel nuts, but do not remove them yet, using the wheel wrench. Turn the handle about 180 degrees, then flip the handle back to the starting position. This avoids taking the wrench off the lug nut for each turn.

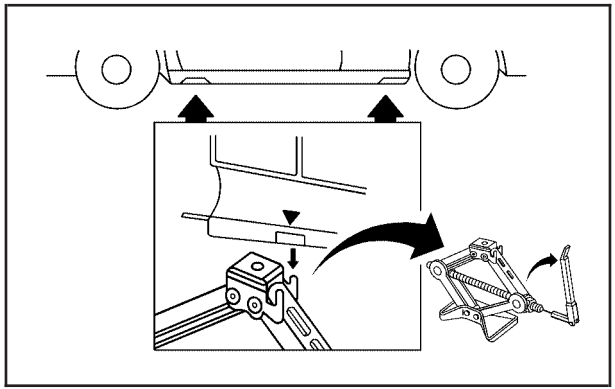

3. Find the vehicle's jacking location using the diagram above and corresponding hoisting notches located in the plastic molding on the vehicle's frame. The notches in the plastic molding are marked with a triangle shape to help you find them.
4. Attach the wheel wrench to the jack.

⚠ CAUTION:

Getting under a vehicle when it is jacked up is dangerous. If the vehicle slips off the jack you could be badly injured or killed. Never get under a vehicle when it is supported only by a jack.

⚠ CAUTION:

Raising your vehicle with the jack improperly positioned can damage the vehicle and even make the vehicle fall. To help avoid personal injury and vehicle damage, be sure to fit the jack lift head into the proper location before raising the vehicle.

⚠ CAUTION:

Lifting a vehicle and getting under it to do maintenance or repairs is dangerous without the appropriate safety equipment and training. The jack provided with your vehicle is designed only for changing a flat tire. If it is used for anything else, you or others could be badly injured or killed if the vehicle slips off the jack. Use the jack provided with your vehicle only for changing a flat tire.

Notice: **If you position the jack under the rocker molding and attempt to raise the vehicle, you could break the molding and/or cause other damage to your vehicle. Always position the jack so that when the jack head is raised, it will fit firmly in the notch located inboard from the rocker molding.**

5. Turn the wheel wrench counterclockwise to lower the jack lift head until the jack fits under the vehicle.

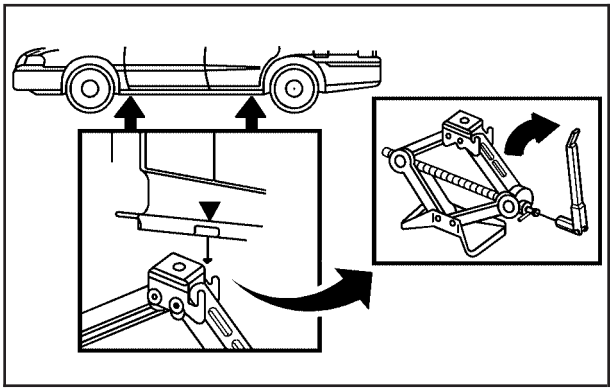

6. Raise the jack by turning the wheel wrench clockwise until the slots in the jack head fit into the metal flange located behind the triangle on the plastic molding as shown.
7. Put the compact spare tire near you.

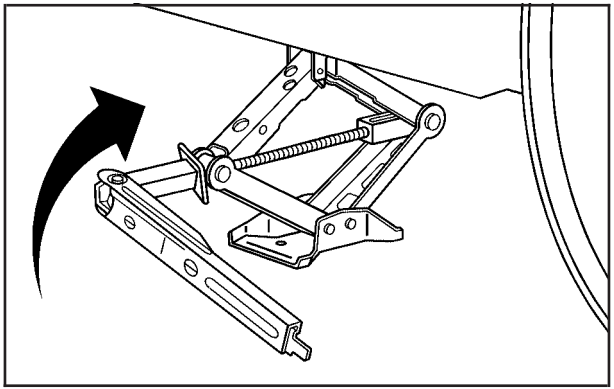

8. Raise the vehicle by turning the wheel wrench clockwise. Raise the vehicle far enough off the ground for the compact spare tire to fit under the vehicle.

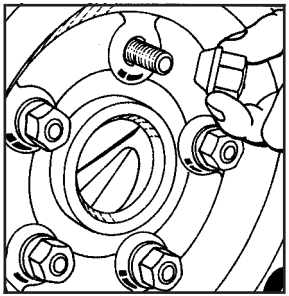

9. Remove all the wheel nuts and take off the flat tire.

⚠ CAUTION:

Rust or dirt on the wheel, or on the parts to which it is fastened, can make the wheel nuts become loose after a time. The wheel could come off and cause an accident. When you change a wheel, remove any rust or dirt from the places where the wheel attaches to the vehicle. In an emergency, you can use a cloth or a paper towel to do this; but be sure to use a scraper or wire brush later, if needed, to get all the rust or dirt off.

⚠ CAUTION:

Never use oil or grease on studs or nuts. If you do, the nuts might come loose. Your wheel could fall off, causing a serious accident.

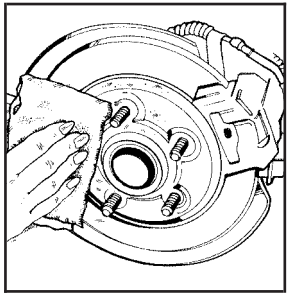

10. Remove any rust or dirt from the wheel bolts, mounting surfaces, and spare wheel.

11. Install the spare tire.
12. Put the wheel nuts back on with the rounded end of the nuts toward the wheel.
13. Tighten each wheel nut by turning it clockwise with your hand until the wheel is held against the hub.

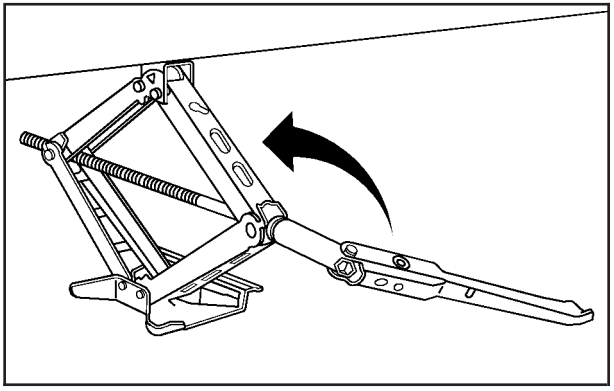

14. Lower the vehicle by turning the wheel wrench counterclockwise. Lower the jack completely.

⚠ CAUTION:

Incorrect wheel nuts or improperly tightened wheel nuts can cause the wheel to come loose and even come off. This could lead to an accident. Be sure to use the correct wheel nuts. If you have to replace them, be sure to get new GM original equipment wheel nuts. Stop somewhere as soon as you can and have the nuts tightened with a torque wrench to the proper torque specification. See *Capacities and Specifications on page 5-116* for wheel nut torque specification.

Notice: **Improperly tightened wheel nuts can lead to brake pulsation and rotor damage. To avoid expensive brake repairs, evenly tighten the wheel nuts in the proper sequence and to the proper torque specification. See *Capacities and Specifications on page 5-116* for the wheel nut torque specification.**

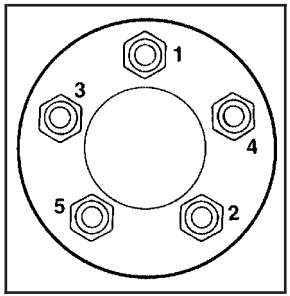

15. Tighten the wheel nuts firmly in a crisscross sequence as shown.

Notice: **Wheel covers will not fit on your compact spare. If you try to put a wheel cover on the compact spare, you could damage the cover or the spare.**

Do not try to put a wheel cover on your compact spare tire. It will not fit. Store the wheel cover in the trunk until you have the flat tire repaired or replaced.

Storing a Flat or Spare Tire and Tools (STS Only)

⚠ CAUTION:

Storing a jack, a tire, or other equipment in the passenger compartment of the vehicle could cause injury. In a sudden stop or collision, loose equipment could strike someone. Store all these in the proper place.

Full-Size Tire and Tools

After you have put the compact spare tire on your vehicle, you will need to do the following to store the flat tire in your trunk.

1. Open the trunk. See *Trunk on page 2-14*.
2. Store the jack and wheel wrench in the jack container in the trunk.

   When storing the jack, in the container, it must be raised until the screw end is flush with the edge of the jack.
3. Store the flat tire as far forward in the trunk as possible.

The compact spare is for temporary use only. Replace the compact spare tire with a full-size tire as soon as you can.

Compact Spare Tire and Tools

Use the following diagram as a guide for storing the compact spare tire and tools in the trunk:

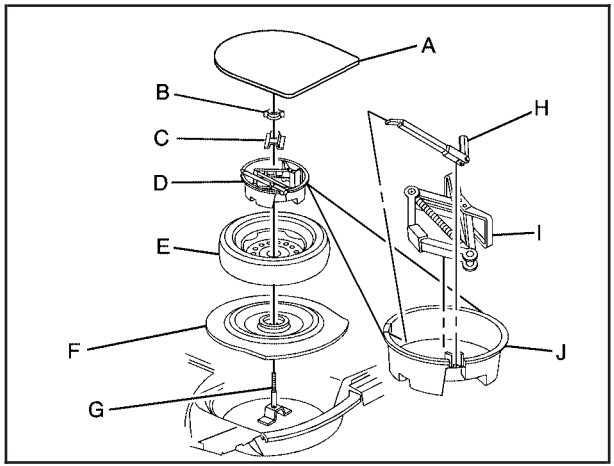

A. Compact Spare Tire Cover
B. Plastic Wing Nut
C. Retainer
D. Jack Container with Wheel Wrench and Jack
E. Compact Spare Tire
F. Foam Insert
G. Bolt
H. Wheel Wrench
I. Jack
J. Jack Container

1. Open the trunk. See *Trunk on page 2-14*.
2. Ensure the foam insert (F) is in place in the trunk area.
3. Reinstall the compact spare tire (E) with the valve stem up, and line up the wheel nut hole with the bolt (G) or wheel center and place on the compartment floor.
4. Insert the jack container (J) with wheel wrench (H) and jack (I) into the center of the compact spare tire making sure to line up the wheel nut hole with the bolt (G) on the compartment floor.
5. Secure the tire and wheel with the retainer (C) and wing nut (B).
6. Reinstall the compact spare tire cover (A).

Compact Spare Tire (STS Only)

Although the compact spare tire was fully inflated when the vehicle was new, it can lose air after a time. Check the inflation pressure regularly. It should be 60 psi (420 kPa).

After installing the compact spare on the vehicle, you should stop as soon as possible and make sure the spare tire is correctly inflated. The compact spare is made to perform well at speeds up to 65 mph (105 km/h) for distances up to 3,000 miles (5 000 km), so you can finish your trip and have the full-size tire repaired or replaced where you want. You must calibrate the tire inflation monitor system after installing or removing the compact spare. See *Tire Pressure Monitor System on page 5-67*. The system may not work correctly when the compact spare is installed on the vehicle. Of course, it's best to replace the spare with a full-size tire as soon as you can. The spare will last longer and be in good shape in case you need it again.

Notice: **When the compact spare is installed, do not take your vehicle through an automatic car wash with guide rails. The compact spare can get caught on the rails. That can damage the tire and wheel, and maybe other parts of your vehicle.**

Do not use the compact spare on other vehicles.

And do not mix the compact spare tire or wheel with other wheels or tires. They will not fit. Keep the spare tire and its wheel together.

Notice: **Tire chains will not fit your compact spare. Using them can damage your vehicle and can damage the chains too. Do not use tire chains on your compact spare.**

Appearance Care

Cleaning the Inside of Your Vehicle

Your vehicle's interior will continue to look its best if it is cleaned often. Although not always visible, dust and dirt can accumulate on your upholstery. Dirt can damage carpet, fabric, leather, and plastic surfaces. Regular vacuuming is recommended to remove particles from your upholstery. It is important to keep your upholstery from becoming and remaining heavily soiled. Soils should be removed as quickly as possible. Your vehicle's interior may experience extremes of heat that could cause stains to set rapidly.

Lighter colored interiors may require more frequent cleaning. Use care because newspapers and garments that transfer color to your home furnishings may also transfer color to your vehicle's interior.

When cleaning your vehicle's interior, only use cleaners specifically designed for the surfaces being cleaned. Permanent damage may result from using cleaners on surfaces for which they were not intended. Use glass cleaner only on glass. Remove any accidental over-spray from other surfaces immediately. To prevent over-spray, apply cleaner directly to the cleaning cloth.

Notice: **If you use abrasive cleaners when cleaning glass surfaces on your vehicle, you could scratch the glass and/or cause damage to the integrated radio antenna and the rear window defogger. When cleaning the glass on your vehicle, use only a soft cloth and glass cleaner.**

Many cleaners contain solvents that may become concentrated in your vehicle's breathing space. Before using cleaners, read and adhere to all safety instructions on the label. While cleaning your vehicle's interior, maintain adequate ventilation by opening your vehicle's doors and windows.

Dust may be removed from small buttons and knobs using a small brush with soft bristles.

Your GM dealer has a product for cleaning your vehicle's glass. Should it become necessary, you can also obtain a product from your GM dealer to remove odors from your vehicle's upholstery.

Do not clean your vehicle using the following cleaners or techniques:

- Never use a knife or any other sharp object to remove a soil from any interior surface.
- Never use a stiff brush. It can cause damage to your vehicle's interior surfaces.
- Never apply heavy pressure or rub aggressively with a cleaning cloth. Use of heavy pressure can damage your interior and does not improve the effectiveness of soil removal.
- Use only mild, neutral-pH soaps. Avoid laundry detergents or dishwashing soaps with degreasers. Using too much soap will leave a residue that leaves streaks and attracts dirt. For liquid cleaners, about 20 drops per gallon (3.78 L) of water is a good guide.
- Do not heavily saturate your upholstery while cleaning.
- Damage to your vehicle's interior may result from the use of many organic solvents such as naptha, alcohol, etc.

Fabric/Carpet

Use a vacuum cleaner with a soft brush attachment frequently to remove dust and loose dirt. A canister vacuum with a beater bar in the nozzle may only be used on floor carpet and carpeted floor mats. For soils, always try to remove them first with plain water or club soda. Before cleaning, gently remove as much of the soil as possible using one of the following techniques:

- For liquids: gently blot the remaining soil with a paper towel. Allow the soil to absorb into the paper towel until no more can be removed.
- For solid dry soils: remove as much as possible and then vacuum.

To clean, use the following instructions:

1. Saturate a lint-free, clean white cloth with water or club soda.
2. Wring the cloth to remove excess moisture.
3. Start on the outside edge of the soil and gently rub toward the center. Continue cleaning, using a clean area of the cloth each time it becomes soiled.
4. Continue to gently rub the soiled area until the cleaning cloth remains clean.
5. If the soil is not completely removed, use a mild soap solution and repeat the cleaning process that was used with plain water.

If any of the soil remains, a commercial fabric cleaner or spot lifter may be necessary. When a commercial upholstery cleaner or spot lifter is to be used, test a small hidden area for colorfastness first. If the locally cleaned area gives any impression that a ring formation may result, clean the entire surface.

After the cleaning process has been completed, a paper towel can be used to blot excess moisture from the fabric or carpet.

Leather

A soft cloth dampened with water may be used to remove dust. If a more thorough cleaning is necessary, a soft cloth dampened with a mild soap solution can be used. Allow the leather to dry naturally. Do not use heat to dry. Never use steam to clean leather. Never use spot lifters or spot removers on leather. Many commercial leather cleaners and coatings that are sold to preserve and protect leather may permanently change the appearance and feel of your leather and are not recommended. Do not use silicone or wax-based products, or those containing organic solvents to clean your vehicle’s interior because they can alter the appearance by increasing the gloss in a non-uniform manner. Never use shoe polish on your leather.

Instrument Panel, Vinyl, and Other Plastic Surfaces

A soft cloth dampened with water may be used to remove dust. If a more thorough cleaning is necessary, a clean soft cloth dampened with a mild soap solution can be used to gently remove dust and dirt. Never use spot lifters or removers on plastic surfaces. Many commercial cleaners and coatings that are sold to preserve and protect soft plastic surfaces may permanently change the appearance and feel of your interior and are not recommended. Do not use silicone or wax-based products, or those containing organic solvents to clean your vehicle's interior because they can alter the appearance by increasing the gloss in a non-uniform manner.

Some commercial products may increase gloss on your instrument panel. The increase in gloss may cause annoying reflections in the windshield and even make it difficult to see through the windshield under certain conditions.

Wood Panels

Use a clean cloth moistened in warm, soapy water (use mild dish washing soap). Dry the wood immediately with a clean cloth.

Speaker Covers

Vacuum around a speaker cover gently, so that the speaker will not be damaged. Clean spots with just water and mild soap.

Care of Safety Belts

Keep belts clean and dry.

⚠ CAUTION:

Do not bleach or dye safety belts. If you do, it may severely weaken them. In a crash, they might not be able to provide adequate protection. Clean safety belts only with mild soap and lukewarm water.

Weatherstrips

Silicone grease on weatherstrips will make them last longer, seal better, and not stick or squeak. Apply silicone grease with a clean cloth. During very cold, damp weather frequent application may be required. See *Recommended Fluids and Lubricants on page 6-12*.

Washing Your Vehicle

The paint finish on the vehicle provides beauty, depth of color, gloss retention, and durability.

The best way to preserve the vehicle's finish is to keep it clean by washing it often with lukewarm or cold water.

Do not wash the vehicle in the direct rays of the sun. Use a car washing soap. Do not use strong soaps or chemical detergents. Be sure to rinse the vehicle well, removing all soap residue completely. GM-approved cleaning products can be obtained from your dealer. See *Vehicle Care/Appearance Materials on page 5-102*. Do not use cleaning agents that are petroleum based, or that contain acid or abrasives. All cleaning agents should be flushed promptly and not allowed to dry on the surface, or they could stain. Dry the finish with a soft, clean chamois or an all-cotton towel to avoid surface scratches and water spotting.

High pressure car washes may cause water to enter the vehicle.

Cleaning Exterior Lamps/Lenses

Use only lukewarm or cold water, a soft cloth and a car washing soap to clean exterior lamps and lenses. Follow instructions under *Washing Your Vehicle on page 5-98*.

Finish Care

Occasional waxing or mild polishing of the vehicle by hand may be necessary to remove residue from the paint finish. GM-approved cleaning products can be obtained from your dealer. See *Vehicle Care/Appearance Materials on page 5-102*.

Notice: **Machine compounding or aggressive polishing on a basecoat/clearcoat paint finish may damage it. Use only non-abrasive waxes and polishes that are made for a basecoat/clearcoat paint finish on your vehicle.**

The vehicle has a "basecoat/clearcoat" paint finish. The clearcoat gives more depth and gloss to the colored basecoat. Always use waxes and polishes that are non-abrasive and made for a basecoat/clearcoat paint finish.

Foreign materials such as calcium chloride and other salts, ice melting agents, road oil and tar, tree sap, bird droppings, chemicals from industrial chimneys, etc., can damage the vehicle's finish if they remain on painted surfaces. Wash the vehicle as soon as possible. If necessary, use non-abrasive cleaners that are marked safe for painted surfaces to remove foreign matter.

Exterior painted surfaces are subject to aging, weather, and chemical fallout that can take their toll over a period of years. To help keep the paint finish looking new, keep the vehicle in a garage or covered whenever possible.

Windshield and Wiper Blades

If the windshield is not clear after using the windshield washer, or if the wiper blade chatters when running, wax, sap, or other material may be on the blade or windshield.

Clean the outside of the windshield with a glass cleaning liquid or powder and water solution. The windshield is clean if beads do not form when it is rinsed with water.

Grime from the windshield will stick to the wiper blades and affect their performance. Clean the blade by wiping vigorously with a cloth soaked in full-strength windshield washer solvent. Then rinse the blade with water.

Check the wiper blades and clean them as necessary; replace blades that look worn.

Aluminum or Chrome-Plated Wheels

The vehicle may be equipped with either aluminum or chrome-plated wheels.

Keep the wheels clean using a soft clean cloth with mild soap and water. Rinse with clean water. After rinsing thoroughly, dry with a soft clean towel. A wax may then be applied.

Notice: **If you use strong soaps, chemicals, abrasive polishes, cleaners, brushes, or cleaners that contain acid on aluminum or chrome-plated wheels, you could damage the surface of the wheel(s). The repairs would not be covered by your warranty. Use only GM-approved cleaners on aluminum or chrome-plated wheels.**

The surface of these wheels is similar to the painted surface of your vehicle. Do not use strong soaps, chemicals, abrasive polishes, abrasive cleaners, cleaners with acid, or abrasive cleaning brushes on them because you could damage the surface. Do not use chrome polish on aluminum wheels.

Notice: **Using chrome polish on aluminum wheels could damage the wheels. The repairs would not be covered by your warranty. Use chrome polish on chrome wheels only.**

Use chrome polish only on chrome-plated wheels, but avoid any painted surface of the wheel, and buff off immediately after application.

Notice: **If you drive your vehicle through an automatic car wash that has silicone carbide tire cleaning brushes, you could damage the aluminum or chrome-plated wheels. The repairs would not be covered by your warranty. Never drive a vehicle equipped with aluminum or chrome-plated wheels through an automatic car wash that uses silicone carbide tire cleaning brushes.**

Do not take your vehicle through an automatic car wash that has silicone carbide tire cleaning brushes. These brushes can also damage the surface of these wheels.

Tires

To clean the tires, use a stiff brush with tire cleaner.

Notice: **Using petroleum-based tire dressing products on your vehicle may damage the paint finish and/or tires. When applying a tire dressing, always wipe off any overspray from all painted surfaces on your vehicle.**

Sheet Metal Damage

If the vehicle is damaged and requires sheet metal repair or replacement, make sure the body repair shop applies anti-corrosion material to parts repaired or replaced to restore corrosion protection.

Original manufacturer replacement parts will provide the corrosion protection while maintaining the warranty.

Finish Damage

Any stone chips, fractures or deep scratches in the finish should be repaired right away. Bare metal will corrode quickly and may develop into major repair expense.

Minor chips and scratches can be repaired with touch-up materials available from your GM dealer. Larger areas of finish damage can be corrected in your GM dealer's body and paint shop.

Underbody Maintenance

Chemicals used for ice and snow removal and dust control can collect on the underbody. If these are not removed, corrosion and rust can develop on the underbody parts such as fuel lines, frame, floor pan, and exhaust system even though they have corrosion protection.

At least every spring, flush these materials from the underbody with plain water. Clean any areas where mud and debris can collect. Dirt packed in close areas of the frame should be loosened before being flushed. Your dealer or an underbody car washing system can do this for you.

Chemical Paint Spotting

Some weather and atmospheric conditions can create a chemical fallout. Airborne pollutants can fall upon and attack painted surfaces on the vehicle. This damage can take two forms: blotchy, ring-shaped discolorations, and small, irregular dark spots etched into the paint surface.

Although no defect in the paint job causes this, GM will repair, at no charge to the owner, the surfaces of new vehicles damaged by this fallout condition within 12 months or 12,000 miles (20 000 km) of purchase, whichever occurs first.

Vehicle Care/Appearance Materials

Description	Usage
Polishing Cloth Wax-Treated	Interior and exterior polishing cloth.
Tar and Road Oil Remover	Removes tar, road oil, and asphalt.
Chrome Cleaner and Polish	Use on chrome or stainless steel.
White Sidewall Tire Cleaner	Removes soil and black marks from whitewalls.
Vinyl Cleaner	Cleans vinyl.
Glass Cleaner	Removes dirt, grime, smoke and fingerprints.
Chrome and Wire Wheel Cleaner	Removes dirt and grime from chrome wheels and wire wheel covers.
Finish Enhancer	Removes dust, fingerprints, and surface contaminants. Spray on and wipe off.

Description	Usage
Swirl Remover Polish	Removes swirl marks, fine scratches, and other light surface contamination.
Cleaner Wax	Removes light scratches and protects finish.
Foaming Tire Shine Low Gloss	Cleans, shines, and protects in one step. No wiping necessary.
Wash Wax Concentrate	Medium foaming shampoo. Cleans and lightly waxes. Biodegradable and phosphate free.
Spot Lifter	Quickly removes spots and stains from carpets, vinyl, and cloth upholstery.
Odor Eliminator	Odorless spray odor eliminator used on fabrics, vinyl, leather and carpet.

Vehicle Identification

Vehicle Identification Number (VIN)

This is the legal identifier for your vehicle. It appears on a plate in the front corner of the instrument panel, on the driver's side. You can see it if you look through the windshield from outside your vehicle. The VIN also appears on the Vehicle Certification and Service Parts labels and the certificates of title and registration.

Engine Identification

The eighth character in the VIN is the engine code. This code will help you identify your vehicle's engine, specifications, and replacement parts.

Service Parts Identification Label

You will find this label on your spare tire cover. It is very helpful if you ever need to order parts. On this label, you will find the following:

- VIN
- Model designation
- Paint information
- Production options and special equipment

Be sure that this label is not removed from the vehicle.

Electrical System

Add-On Electrical Equipment

Notice: **Don't add anything electrical to your vehicle unless you check with your dealer first. Some electrical equipment can damage your vehicle and the damage wouldn't be covered by your warranty. Some add-on electrical equipment can keep other components from working as they should.**

Your vehicle has an airbag system. Before attempting to add anything electrical to your vehicle, see *Servicing Your Airbag-Equipped Vehicle on page 1-62*.

Headlamp Wiring

The headlamp wiring has an individual fuse. An electrical overload will cause the lamps to go on and off, or in some cases to remain off. If this happens, have the headlamp wiring checked right away.

Windshield Wiper Fuses

The windshield wiper motor is protected by an internal circuit breaker. If the wiper motor overheats due to heavy snow, the wipers will stop until the motor cools and will then restart.

Power Windows and Other Power Options

Circuit breakers protect the power windows and power seats. When the current load is too heavy, the circuit breaker opens and closes, protecting the circuit until the problem is fixed or goes away.

Fuses and Circuit Breakers

The wiring circuits in your vehicle are protected from short circuits by a combination of fuses, circuit breakers and fusible thermal links. This greatly reduces the chance of fires caused by electrical problems.

Look at the silver-colored band inside the fuse. If the band is broken or melted, replace the fuse. Be sure you replace a bad fuse with a new one of the identical size and rating. If a fuse should blow, see your dealer for service immediately.

If you ever have a problem on the road and don't have a spare fuse, you can borrow one that has the same amperage. Just pick some feature of your vehicle that you can get along without – like the radio or cigarette lighter – and use its fuse, if it is the correct amperage. Replace it as soon as you can.

The fuses are located in three fuse blocks. One is located in the engine compartment, on the passenger's side of the vehicle, and the other two are located under the rear seat on both the driver's and passenger's side of the vehicle.

Underhood Fuse Block

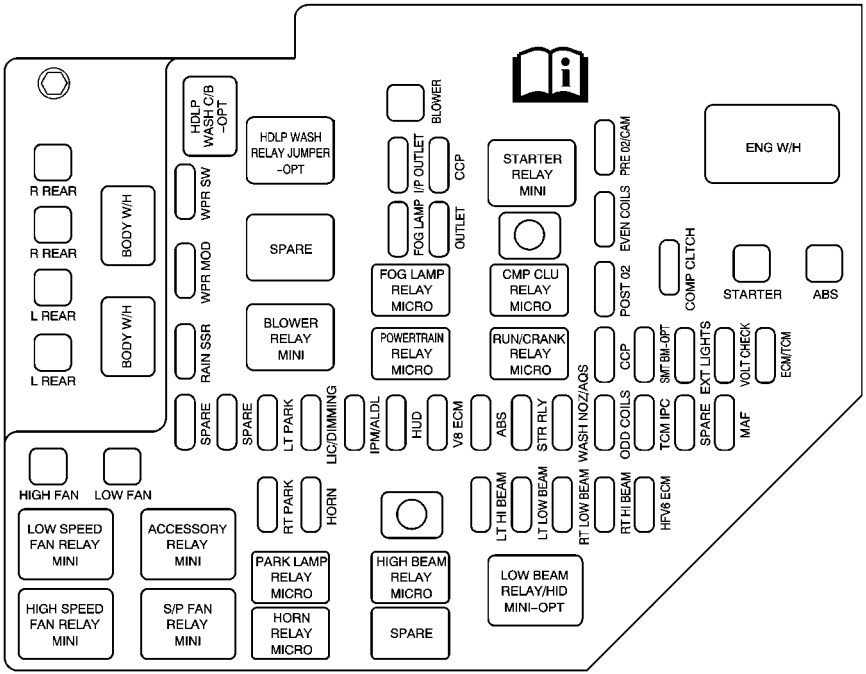

The underhood fuse block is located in the front of the engine compartment on the passenger's side of the vehicle. See *Engine Compartment Overview on page 5-12* for more information on location, and removal procedure for the front compartment underhood sights shields.

To access the fuses, push in the tabs located on each side of the fuse block cover. Then, lift the cover off.

Fuses	Usage
BLOWER	Blower Motor
R REAR	Passenger's Side Rear Fuse Block
I/P OUTLET	Front Accessory Power Outlet
CCP	Climate Control, Headlamp Leveling
PRE 02/CAM	Oxygen Sensor, Camshaft Phasers
ENG W/H	Engine Wiring Harness
R REAR	Passenger's Side Rear Fuse Block
WPR SW	Wiper/Washer Switch
BODY W/H	Body Wiring Harness
FOG LAMP	Fog Lamps
OUTLET	Rear Accessory Power Outlet

Fuses	Usage
EVEN COILS	Even Ignition Coils, Even Fuel Injectors
L REAR	Driver's Side Rear Fuse Block
WPR MOD	Wiper Module
POST 02	Oxygen Sensor
COMP CLTCH	Air Conditioner Compressor Clutch
STARTER	Starter Solenoid
ABS	Anti-lock Brake Pump
L REAR	Driver's Side Rear Fuse Block
BODY W/H	Body Wiring Harness
RAIN SSR	Rain Sensor, Headlamp Washer, Tire Pressure Monitor
CCP	Climate Control
SMT BM-OPT	Intellibeam™ Relay (Option)
EXT LIGHTS	Low Beam Relay, High Beam Relay, Park Lamp Relay
VOLT CHECK	Instrument Panel Module

Fuses	Usage
ECM/TCM	Engine Control Module, Transmission Control Module, Easy Key Module, Instrument Panel Cluster
SPARE	Spare
SPARE	Spare
LT PARK	Driver's Side Park Lamp, Driver's Side Taillamp
LIC DIMMING	License Plate, Instrument Panel Dimming
IPM ALDL	Instrument Panel Module Assembly Line Data Link Connector
HUD	Heads-Up Display, Column Lock Module
V8 ECM	V8 Engine Control Module, Evap. Solenoid
ABS	Anti-lock Brake Controller
STR RLY	Starter Relay
WASH NOZ/AQS	Heated Washer Nozzles, Air Quality Sensor

Fuses	Usage
ODD COILS	Odd Ignition Coils, Odd Fuel Injectors
TCM IPC	Transmission Control Module, Instrument Panel, Engine Control
SPARE	Spare
MAF	Mass Air Flow Sensor
HIGH FAN	Cooling Fan - High Speed
LOW FAN	Cooling Fan - Low Speed
RT PARK	Passenger's Side Park Lamp, Right Taillamp
HORN	Horn
LT HI BEAM	Driver's Side Headlamp High Beam
LT LOW BEAM	Driver's Side Headlamp Low Beam
RT LOW BEAM	Passenger's Side Headlamp Low Beam
RT HI BEAM	Right Headlamp High Beam
HFV6 ECM	High Feature V6 Engine Control Module

Relays	Usage
HDLP WASH RELAY JUMPER -OPT	Headlamp Washer
STARTER RELAY MINI	Starter
SPARE	Spare
FOG LAMP RELAY MICRO	Fog Lamps
CMP CLU RELAY MICRO	Air Conditioning Compressor Clutch
BLOWER RELAY MINI	Front Blower Motor
POWERTRAIN RELAY MICRO	Engine Controls
RUN/CRANK RELAY MICRO	Ignition 1, Starter, Washer Nozzle, Air Quality, Anti-lock Brake System, Climate Control Panel, Transmission Control Module, Instrument Panel Cluster, Mass Airflow Sensor, Engine Control Module
LOW SPEED FAN RELAY MINI	Cooling Fan Low Speed

Relays	Usage
ACCESSORY RELAY MINI	Ignition 3, Rain Sensor, Headlamp Washer, Windshield Wiper/Washer Module, Infotainment (Export Only)
PARK LAMP RELAY MICRO	Parking Lamps, Instrument Panel Dimming, Rear License Plate Lamps
HIGH BEAM RELAY MICRO	Headlamp High Beam
LOW BEAM RELAY/HID MINI-OPT	Low Beam/High Intensity Discharge
HIGH SPEED FAN RELAY MINI	Cooling Fan High Speed
S/P FAN RELAY MINI	Cooling Fan Series/Parallel
HORN RELAY MICRO	Horn
SPARE	Spare

Circuit Breakers	Usage
HDLP WASH C/B-OPT	Headlamp Washer (Option)

Rear Underseat Fuse Block

Removing the Rear Seat Cushion

Notice: **If you touch the exposed wires with the metal on the seat cushion, you could cause a short that could damage the battery and or wires. Avoid contact between the rear seat and the fuse center whenever you remove or reinstall the rear seat. Do not remove covers from any of the covered parts, and do not store anything under the seats.**

To remove the rear seat cushion, do the following:

1. Pull up on the front of the cushion to release the front hooks.
2. Pull the cushion up and out toward the front of the vehicle.

To reinstall the rear seat cushion, do the following:

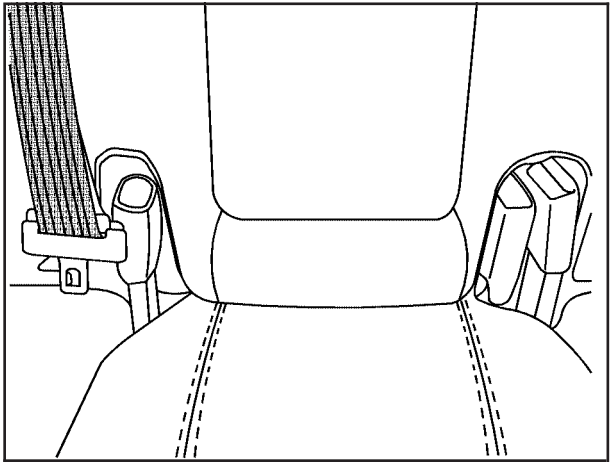

⚠ CAUTION:

A safety belt that is not properly routed through the seat cushion or is twisted will not provide the protection needed in a crash. If the safety belt has not been routed through the seat cushion at all, it will not be there to work for the next passenger. The person sitting in that position could be badly injured. After reinstalling the seat cushion, always check to be sure that the safety belts are properly routed and are not twisted.

1. Buckle the center passenger position safety belt, then route the safety belts through the proper slots in the seat cushion. Do not let the safety belts get twisted.
2. Slide the rear of the cushion up and under the seatback so the rear-locating guides hook into the wire loops on the back frame.
3. With the seat cushion lowered, push rearward and then press down on the seat cushion until the spring locks on both ends engage.
4. Check to make sure the safety belts are properly routed and that no portion of any safety belt is trapped under the seat. Also make sure the seat cushion is secured.

Rear Underseat Fuse Block

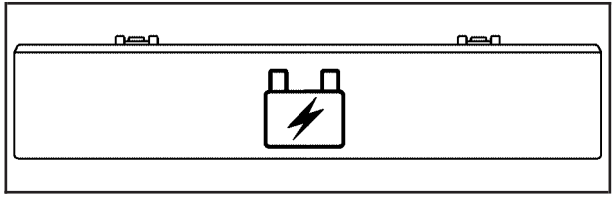

There is a fuse block located under the rear seat on the driver's side and passenger's side of the vehicle. The rear seat cushion must be removed to access the fuse blocks. See "Removing the Rear Seat Cushion" listed previously in this section.

To access the fuses, push in the two tabs, then lift the cover off.

Your vehicle may not have all the fuses listed below.

Driver's Side

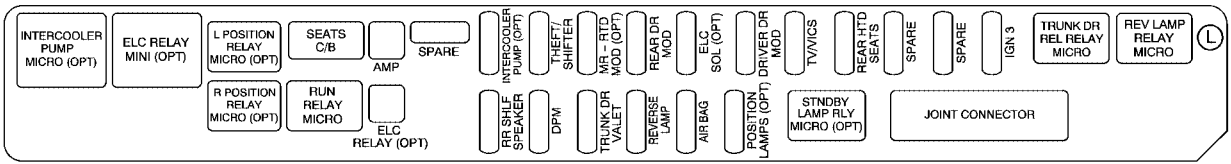

Fuses	Usage
AMP	Amplifier
INTERCOOLER PUMP (OPT)	Intercooler Pump (Option)
THEFT/ SHIFTER	Theft Sensors, Auto Shifter, Power Sounder
MR-RTD MOD (OPT)	Magnetic Ride Control Module (Option)
REAR DR MOD	Rear Door Modules
ELC SOL (OPT)	Automatic Level Control, Exhaust Solenoid (Option)
DRIVER DR MOD	Driver Door Module
TV/VICS	Infotainment (Export Only)

Fuses	Usage
REAR HTD SEATS	Rear Heated Seats
SPARE	Spare
SPARE	Spare
IGN3	Front Passenger Heated Seat, Auto Shifter, Occupant Protection
RR SHLF SPEAKER	Rear Shelf Speaker
DPM	Memory Seat, Lumbar
TRUNK DR VALET	Trunk Release, Valet Lockout Switch
REVERSE LAMP	Reverse Lamps, Rear Parking Aid, Inside Rearview Mirror

Fuses	Usage
AIR BAG	Airbag
POSITION LAMPS (OPT)	Rear Taillamps
JOINT CONNECTOR	Joint Connector

Relays	Usage
INTERCOOLER PUMP MICRO (OPT)	Intercooler Pump (Option)
ELC RELAY MINI (OPT)	Automatic Level Control Compressor (Option)
L POSITION RELAY MICRO	Left Rear Taillamp, Position Lamps (Option)
TRUNK DR REL RELAY MICRO	Trunk Release Motor
REV LAMP RELAY MICRO	Reverse Lamps, Rear Parking Aid, Inside Rearview Mirror

Relays	Usage
R POSITION RELAY MICRO	Right Rear Taillamp, Position Lamps (Option)
RUN RELAY MICRO	Ignition 3
ELC RELAY (OPT)	Automatic Level Control (Option)
STNDBY LAMP RLY MICRO (OPT)	Rear Taillamps, Position Lamps (Option)

Circuit Breakers	Usage
SEATS C/B	Power Seat

Diodes	Usage
SPARE	Spare

Passenger's Side

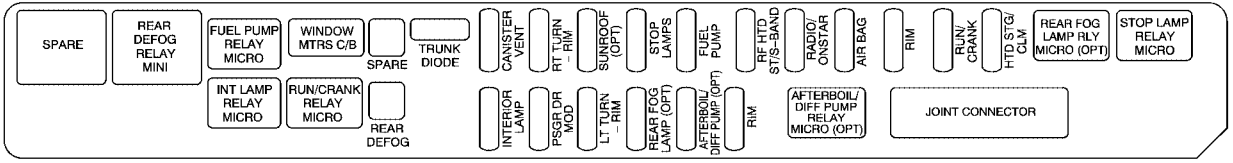

Fuses	Usage
SPARE	Spare
CANISTER VENT	Canister Vent Solenoid
RT TURN-RIM	Right Turn Signal
SUNROOF (OPT)	Sunroof Module (Option)
STOP LAMPS	Stoplamps
FUEL PUMP	Fuel Pump
RF HTD ST/S-BAND	Front Passenger Heated Seat, S-Band™ Antenna
RADIO/ ONSTAR	Radio/OnStar®

Fuses	Usage
AIR BAG	Airbags
RIM	Battery to Rear Integration Module
RUN/CRANK	Ignition 1, Fog Lamps, Compressor Clutch, Engine Run/Crank Relays
HTD STG/CLM	Heated Steering Wheel, Column Lock Module
REAR DEFOG	Rear Defogger
INTERIOR LAMP	Interior Lamps
PSG DR MOD	Front Passenger Door Module
LT TURN-RIM	Left Turn Signal

Fuses	Usage
REAR FOG LAMP (OPT)	Rear Fog Lamps (Option)
AFTERBOIL/ DIFF PUMP (OPT)	After Boil, Rear Differential Cooling Pump
RIM	Ignition to Rear Integration Module
JOINT CONNECTOR	Joint Connector

Relays	Usage
SPARE	Spare
REAR DEFOG RELAY MINI	Rear Defog
FUEL PUMP RELAY MICRO	Fuel Pump
REAR FOG LAMP RLY MICRO (OPT)	Rear Fog Lamps (Option)

Relays	Usage
STOP LAMP RELAY MICRO	Stoplamps
INT LAMP RELAY MICRO	Interior Lamps
RUN/CRANK RELAY MICRO	Ignition 1
AFTERBOIL/ DIFF PUMP RELAY MICRO (OPT)	After Boil, Rear Differential Cooling Pump (Option)

Circuit Breakers	Usage
WINDOW MTRS C/B	Power Window Motors Circuit Breaker

Diodes	Usage
TRUNK DIODE	Trunk Release

Capacities and Specifications

The following approximate capacities are given in English and metric conversions. See *Recommended Fluids and Lubricants on page 6-12* for more information.

Application	Capacities	
	English	Metric
Cooling System		
3.6L V6	11.7 qt	11.1 L
4.4L V8 (V-Series)	13.4 qt	12.7 L
4.6L V8	12.5 qt	11.8 L
Intercooler System 4.4L Engine	2.6 qt	2.5 L
Engine Oil with Filter		
3.6L V6	6.0 qt	5.7 L
4.4L V8 (V-Series)	9.0 qt	8.5 L
4.6L V8	8.0 qt	7.6 L
Fuel Tank	17.4 gal	66.2 L
Transmission		
5-Speed Automatic	9.5 qt	9.0 L
6-Speed Automatic (V-Series)	6.5 qt	6.2 L
Wheel Nut Torque	100 lb ft	140 N•m
All capacities are approximate. When adding, be sure to fill to the approximate level as recommended in this manual. Recheck the fluid level after filling.		

Engine Specifications

Engine	VIN Code	Transmission	Spark Plug Gap
3.6L HFV6	7	Automatic	0.044 inches (1.1 mm)
4.4L DOHC V8 (V-Series)	D	Automatic	0.040 inches (1.0 mm)
4.6L DOHC V8	A	Automatic	0.040 inches (1.0 mm)

STS-V Engine Data

Engine	Horsepower	Torque	Displacement	Compression Ratio
4.4L V8 (LC3)	440 hp (328 kW) @ 6400 rpm	430 lb ft (583 Nm) @ 3600 rpm	4.4L	9.0:1

NOTES

Section 6 Maintenance Schedule

Maintenance Schedule 6-2
Introduction 6-2
Maintenance Requirements 6-2
Your Vehicle and the Environment 6-2
Using the Maintenance Schedule 6-2
Scheduled Maintenance 6-4
Additional Required Services 6-6
Maintenance Footnotes 6-7
Owner Checks and Services 6-8
At Each Fuel Fill 6-9
At Least Once a Month 6-9
At Least Once a Year 6-10
Recommended Fluids and Lubricants 6-12
Normal Maintenance Replacement Parts 6-14
Engine Drive Belt Routing (STS-V) 6-15
Maintenance Record 6-16

Maintenance Schedule

Introduction

Important: Keep engine oil at the proper level and change as recommended.

Have you purchased the GM Protection Plan? The Plan supplements your new vehicle warranties. See your Warranty and Owner Assistance booklet or your dealer for details.

Maintenance Requirements

Notice: **Maintenance intervals, checks, inspections, replacement parts, and recommended fluids and lubricants as prescribed in this manual are necessary to keep your vehicle in good working condition. Any damage caused by failure to follow scheduled maintenance may not be covered by warranty.**

Your Vehicle and the Environment

Proper vehicle maintenance not only helps to keep your vehicle in good working condition, but also helps the environment. All recommended maintenance is important. Improper vehicle maintenance can even affect the quality of the air we breathe. Improper fluid levels or the wrong tire inflation can increase the level of emissions from your vehicle. To help protect our environment, and to keep your vehicle in good condition, be sure to maintain your vehicle properly.

Using the Maintenance Schedule

We at General Motors want to help you keep your vehicle in good working condition. But we do not know exactly how you will drive it. You may drive very short distances only a few times a week. Or you may drive long distances all the time in very hot, dusty weather. You may use your vehicle in making deliveries. Or you may drive it to work, to do errands, or in many other ways.

Because of all the different ways people use their vehicles, maintenance needs vary. You may need more frequent checks and replacements. So please read the following and note how you drive. If you have any questions on how to keep your vehicle in good condition, see your GM Goodwrench® dealer.

This schedule is for vehicles that:

- carry passengers and cargo within recommended limits. You will find these limits on the tire and loading information label. See *Loading Your Vehicle on page 4-32*.
- are driven on reasonable road surfaces within legal driving limits.
- use the recommended fuel. See *Gasoline Octane on page 5-5*.

The services in *Scheduled Maintenance on page 6-4* should be performed when indicated. See *Additional Required Services on page 6-6* and *Maintenance Footnotes on page 6-7* for further information.

⚠ CAUTION:

Performing maintenance work on a vehicle can be dangerous. In trying to do some jobs, you can be seriously injured. Do your own maintenance work only if you have the required know-how and the proper tools and equipment for the job. If you have any doubt, see your GM Goodwrench® dealer to have a qualified technician do the work.

Some maintenance services can be complex. So, unless you are technically qualified and have the necessary equipment, you should have your GM Goodwrench® dealer do these jobs.

When you go to your GM Goodwrench® dealer for your service needs, you will know that GM-trained and supported service technicians will perform the work using genuine GM parts.

If you want to purchase service information, see *Service Publications Ordering Information on page 7-14*.

Owner Checks and Services on page 6-8 tells you what should be checked, when to check it, and what you can easily do to help keep your vehicle in good condition.

The proper replacement parts, fluids, and lubricants to use are listed in *Recommended Fluids and Lubricants on page 6-12* and *Normal Maintenance Replacement Parts on page 6-14*. When your vehicle is serviced, make sure these are used. All parts should be replaced and all necessary repairs done before you or anyone else drives the vehicle. We recommend the use of genuine GM parts.

Scheduled Maintenance

When the CHANGE ENGINE OIL SOON message in the Driver Information Center (DIC) comes on, it means that service is required for your vehicle. Have your vehicle serviced as soon as possible within the next 600 miles (1 000 km). It is possible that, if you are driving under the best conditions, the engine oil life system may not indicate that vehicle service is necessary for over a year. However, your engine oil and filter must be changed at least once a year and at this time the system must be reset. Your GM Goodwrench® dealer has GM-trained service technicians who will perform this work using genuine GM parts and reset the system.

If the engine oil life system is ever reset accidentally, you must service your vehicle within 3,000 miles (5 000 km) since your last service. Remember to reset the oil life system whenever the oil is changed. See *Engine Oil Life System on page 5-24* for information on the Engine Oil Life System and resetting the system.

When the CHANGE ENGINE OIL SOON message appears, certain services, checks, and inspections are required. Required services are described in the following for “Maintenance I” and “Maintenance II.” Generally, it is recommended that your first service be Maintenance I, your second service be Maintenance II, and that you alternate Maintenance I and Maintenance II thereafter. However, in some cases, Maintenance II may be required more often.

Maintenance I — Use Maintenance I if the CHANGE ENGINE OIL SOON message comes on within 10 months since the vehicle was purchased or Maintenance II was performed.

Maintenance II — Use Maintenance II if the previous service performed was Maintenance I. Always use Maintenance II whenever the message comes on 10 months or more since the last service or if the message has not come on at all for one year.

Scheduled Maintenance

Service	Maintenance I	Maintenance II
Change engine oil and filter. See *Engine Oil on page 5-18*. Reset oil life system. See *Engine Oil Life System on page 5-24*. *An Emission Control Service.*	•	•
Visually check for any leaks or damage. *See footnote (k).*	•	•
Inspect engine air cleaner filter. If necessary, replace filter. See *Engine Air Cleaner/Filter on page 5-25*. *See footnote (m).*		•
Check tires for inflation pressures and wear. See *Tires on page 5-57*. If tire rotation is recommended for your vehicle, rotate tires. See *Tire Inspection and Rotation on page 5-70* and “Tire Wear Inspection” in *At Least Once a Month on page 6-9*.	•	•
Inspect brake system. *See footnote (a).*	•	•
Check engine coolant and windshield washer fluid levels. If you have the 4.4L V8 supercharged engine, check intercooler fluid level. Add fluid as needed.	•	•
Perform any needed additional services. See “Additional Required Services” in this section.	•	•
Inspect suspension and steering components. *See footnote (b).*		•
Inspect engine cooling system. *See footnote (c).*		•
Inspect wiper blades. *See footnote (d).*		•
Inspect restraint system components. *See footnote (e).*		•
Lubricate body components. *See footnote (f).*		•
Check transmission fluid level and add fluid as needed.		•
Replace passenger compartment air filter. *See footnote (g).*		•

Additional Required Services

The following services should be performed at the first maintenance service (I or II) after the indicated miles (kilometers) shown for each item.

Additional Required Services

Service and Miles (Kilometers)	25,000 (41 500)	50,000 (83 000)	75,000 (125 000)	100,000 (166 000)	125,000 (207 500)	150,000 (240 000)
Inspect fuel system for damage or leaks.	•	•	•	•	•	•
Inspect exhaust system for loose or damaged components.	•	•	•	•	•	•
Replace engine air cleaner filter. See *Engine Air Cleaner/Filter on page 5-25*.		•		•		
Change automatic transmission fluid and filter (severe service). *See footnote (h).*		•		•		•
Change automatic transmission fluid and filter (normal service).				•		
For all-wheel-drive vehicles used for trailer towing: Change transfer case fluid.		•		•		•
Throttle body service. *An Emission Control Service. See footnotes † and (l).*	•	•	•	•	•	•
Replace spark plugs. *An Emission Control Service.*				•		

Additional Required Services (cont'd)

Service and Miles (Kilometers)	25,000 (41 500)	50,000 (83 000)	75,000 (125 000)	100,000 (166 000)	125,000 (207 500)	150,000 (240 000)
Engine cooling system service (or every five years, whichever occurs first). *An Emission Control Service. See footnote (j).*						•
Inspect engine accessory drive belt. *An Emission Control Service. See footnote (n).*						•

Maintenance Footnotes

† *The U.S. Environmental Protection Agency or the California Air Resources Board has determined that the failure to perform this maintenance item will not nullify the emission warranty or limit recall liability prior to the completion of the vehicle's useful life. We, however, urge that all recommended maintenance services be performed at the indicated intervals and the maintenance be recorded.*

(a) *Visually inspect brake lines and hoses for proper hook-up, binding, leaks, cracks, chafing, etc. Inspect disc brake pads for wear and rotors for surface condition. Inspect other brake parts, including calipers, parking brake, etc.*

(b) *Visually inspect front and rear suspension and steering system for damaged, loose, or missing parts or signs of wear. Inspect power steering lines and hoses for proper hook-up, binding, leaks, cracks, chafing, etc.*

(c) *Visually inspect hoses and have them replaced if they are cracked, swollen, or deteriorated. Inspect all pipes, fittings, and clamps; replace with genuine GM parts as needed. To help ensure proper operation, a pressure test of the cooling system and pressure cap and cleaning the outside of the radiator and air conditioning condenser is recommended at least once a year.*

(d) *Visually inspect wiper blades for wear or cracking. Replace wiper blades that appear worn or damaged or that streak or miss areas of the windshield.*

(e) *Make sure the safety belt reminder light and all your belts, buckles, latch plates, retractors, and anchorages are working properly. Look for any other loose or damaged safety belt system parts. If you see anything that might keep a safety belt system from doing its job, have it repaired. Have any torn or frayed safety belts replaced. Also look for any opened or broken airbag coverings, and have them repaired or replaced. The airbag system does not need regular maintenance.*

(f) *Lubricate all key lock cylinders. Lubricate all hinges and latches, including those for the hood, rear compartment, glove box door, and console door. More frequent lubrication may be required when exposed to a corrosive environment. Applying silicone grease on weatherstrips with a clean cloth will make them last longer, seal better, and not stick or squeak.*

(g) *If you drive regularly under dusty conditions, the filter may require replacement more often.*

(h) *Change automatic transmission fluid and filter if the vehicle is mainly driven under one or more of these conditions:*

- *In heavy city traffic where the outside temperature regularly reaches 90°F (32°C) or higher.*
- *In hilly or mountainous terrain.*
- *When doing frequent trailer towing.*
- *Uses such as limousine service.*
- *Uses such as high performance operation.*

(j) *Drain, flush, and refill cooling system. This service can be complex; you should have your dealer perform this service. See Engine Coolant on page 5-27 for what to use. Inspect hoses. Clean radiator, condenser, pressure cap, and filler neck. Pressure test the cooling system and pressure cap.*

(k) *A fluid loss in any vehicle system could indicate a problem. Have the system inspected and repaired and the fluid level checked. Add fluid if needed.*

(l) *Inspect throttle body bore and valve plates for deposits. Open the throttle valve and inspect all surfaces. Clean as required.*

(m) *If you drive regularly under dusty conditions, inspect the filter at each engine oil change.*

(n) *Visually inspect belt for fraying, excessive cracks, or obvious damage. Replace belt if necessary.*

Owner Checks and Services

These owner checks and services should be performed at the intervals specified to help ensure the safety, dependability and emission control performance of your vehicle. Your GM Goodwrench® dealer can assist you with these checks and services.

Be sure any necessary repairs are completed at once. Whenever any fluids or lubricants are added to your vehicle, make sure they are the proper ones, as shown in *Recommended Fluids and Lubricants on page 6-12*.

At Each Fuel Fill

It is important to perform these underhood checks at each fuel fill.

Engine Oil Level Check

Check the engine oil level and add the proper oil if necessary. See *Engine Oil on page 5-18* for further details.

Notice: **It is important to check your oil regularly and keep it at the proper level. Failure to keep your engine oil at the proper level can cause damage to your engine not covered by your warranty.**

Engine Coolant Level Check

Check the engine coolant level and add DEX-COOL® coolant mixture if necessary. See *Engine Coolant on page 5-27* for further details.

Intercooler Coolant Level Check (4.4L Supercharged Engine)

Check the coolant level and add DEX-COOL® coolant mixture if necessary. See *Engine Coolant on page 5-27* for further details.

Windshield Washer Fluid Level Check

Check the windshield washer fluid level in the windshield washer fluid reservoir and add the proper fluid if necessary.

At Least Once a Month

Tire Inflation Check

Visually inspect your vehicle's tires and make sure they are inflated to the correct pressures. Do not forget to check the spare tire. See *Tires on page 5-57* for further details. Check to make sure the spare tire is stored securely. See *Changing a Flat Tire (STS Only) on page 5-83*.

Tire Wear Inspection

Tire rotation is recommended if your vehicle has the same size tires at all four wheel positions and may be required for high mileage highway drivers prior to the Engine Oil Life System service notification. Check the tires for wear and, if necessary, rotate the tires. See *Tire Inspection and Rotation on page 5-70*.

At Least Once a Year

Starter Switch Check

⚠ CAUTION:

When you are doing this inspection, the vehicle could move suddenly. If the vehicle moves, you or others could be injured.

1. Before you start, be sure you have enough room around the vehicle.
2. Firmly apply both the parking brake and the regular brake. See *Parking Brake on page 2-35*.

   Do not use the accelerator pedal, and be ready to turn off the engine immediately if it starts.
3. Try to start the engine in each gear. The vehicle should start only in PARK (P) or NEUTRAL (N). If the vehicle starts in any other position, contact your GM Goodwrench® dealer for service.

Automatic Transmission Shift Lock Control System Check

⚠ CAUTION:

When you are doing this inspection, the vehicle could move suddenly. If the vehicle moves, you or others could be injured.

1. Before you start, be sure you have enough room around the vehicle. It should be parked on a level surface.
2. Firmly apply the parking brake. See *Parking Brake on page 2-35*.

   Be ready to apply the regular brake immediately if the vehicle begins to move.
3. With the engine off and without applying the regular brake, try to move the shift lever out of PARK (P) with normal effort. If the shift lever moves out of PARK (P), contact your GM Goodwrench® dealer for service.

Parking Brake and Automatic Transmission Park (P) Mechanism Check

⚠ CAUTION:

When you are doing this check, your vehicle could begin to move. You or others could be injured and property could be damaged. Make sure there is room in front of your vehicle in case it begins to roll. Be ready to apply the regular brake at once should the vehicle begin to move.

Park on a fairly steep hill, with the vehicle facing downhill. Keeping your foot on the regular brake, set the parking brake.

- To check the parking brake's holding ability: With the engine running and transmission in NEUTRAL (N), slowly remove foot pressure from the regular brake pedal. Do this until the vehicle is held by the parking brake only.
- To check the PARK (P) mechanism's holding ability: With the engine running, shift to PARK (P). Then release the parking brake followed by the regular brake.

Contact your GM Goodwrench® dealer if service is required.

Underbody Flushing Service

At least every spring, use plain water to flush any corrosive materials from the underbody. Take care to clean thoroughly any areas where mud and other debris can collect.

Recommended Fluids and Lubricants

Fluids and lubricants identified below by name, part number, or specification may be obtained from your dealer.

Usage	Fluid/Lubricant
Engine Oil (V6 Engine)	Engine oil which meets GM Standard GM6094M and displays the American Petroleum Institute (API) Certified for Gasoline Engines starburst symbol. GM Goodwrench® oil meets all the requirements for your vehicle. To determine the proper viscosity for your vehicle's engine, see *Engine Oil on page 5-18*.
Engine Oil (V8 Engine)	The engine requires a special engine oil meeting GM Standard GM4718M. Oils meeting this standard may be identified as synthetic, and should also be identified with the American Petroleum Institute (API) Certified for Gasoline Engines starburst symbol. However, not all synthetic API oils with the starburst symbol will meet this GM standard. You should look for and use only oil that meets GM Standard GM4718M. GM Goodwrench® oil meets all the requirements for your vehicle. For the proper viscosity, see *Engine Oil on page 5-18*.

Usage	Fluid/Lubricant
Engine Cooling System	50/50 mixture of clean, drinkable water and use only DEX-COOL® Coolant. See *Engine Coolant on page 5-27*.
Intercooler System (4.4L V8 Supercharged engine)	50/50 mixture of clean, drinkable water and use only DEX-COOL® Coolant.
Hydraulic Brake System	Delco® Supreme 11 Brake Fluid or equivalent DOT-3 brake fluid.
Windshield Washer	GM Optikleen® Washer Solvent.
Parking Brake Cable Guides	Chassis Lubricant (GM Part No. U.S. 12377985, in Canada 88901242) or lubricant meeting requirements of NLGI #2, Category LB or GC-LB.
Power Steering System	GM Power Steering Fluid (GM Part No. U.S. 89021184, in Canada 89021186).
Automatic Transmission (6-Speed)	DEXRON®-VI Automatic Transmission Fluid.
Automatic Transmission (5-Speed)	DEXRON®-III Automatic Transmission Fluid. Look for "Approved for the H-Specification" on the label.

Usage	Fluid/Lubricant
Key Lock Cylinders	Multi-Purpose Lubricant, Superlube (GM Part No. U.S. 12346241, in Canada 10953474).
Rear Axle	SAE 75W-90 Synthetic Axle Lubricant (GM Part No. U.S. 12378261, in Canada 10953455) meeting GM Specification 9986115.
Front Axle (All-Wheel Drive)	SAE 75W-90 Synthetic Axle Lubricant (GM Part No. U.S. 12378261, in Canada 10953455) meeting GM Specification 9986115.
Transfer Case (All-Wheel Drive)	DEXRON®-III Automatic Transmission Fluid. Look for “Approved for the H-Specification” on the label.

Usage	Fluid/Lubricant
Hood Latch Assembly, Secondary Latch, Pivots, Spring Anchor, and Release Pawl	Lubriplate Lubricant Aerosol (GM Part No. U.S. 12346293, in Canada 992723) or lubricant meeting requirements of NLGI #2, Category LB or GC-LB.
Hood and Door Hinges	Multi-Purpose Lubricant, Superlube (GM Part No. U.S. 12346241, in Canada 10953474).
Weatherstrip Conditioning	Dielectric Silicone Grease (GM Part No. U.S. 12345579, in Canada 992887).

Normal Maintenance Replacement Parts

Replacement parts identified below by name, part number, or specification can be obtained from your GM dealer.

Part	GM Part Number	ACDelco® Part Number
Engine Air Cleaner/Filter Element	25735595	A2944C
Engine Oil Filter		
3.6L V6	25177917	PF2129
4.4L V8 (V-Series)	89017527[1]	PF26[1]
4.6L V8	89017342	PF61
Passenger Compartment Air Filter	88957450	CF13C
Spark Plugs		
3.6L V6	12597464	41-990
4.4L V8 (V-Series)	12592619	41-991
4.6L V8	12571533	41-986
Windshield Wiper Blade (Structureless)		
Driver's Side – 22 inches (56.5 cm)	88958361	—
Passenger's Side – 21 inches (53.0 cm)	88958359	—

[1]***Notice:*** **If your vehicle is an STS-V model, the engine uses a special oil filter. The use of any other engine oil filter could lead to filter failure and result in severe engine damage. Damage caused by use of the wrong engine oil filter would not be covered by your new vehicle warranty.**

Engine Drive Belt Routing (STS-V)

4.4L V8 Engine

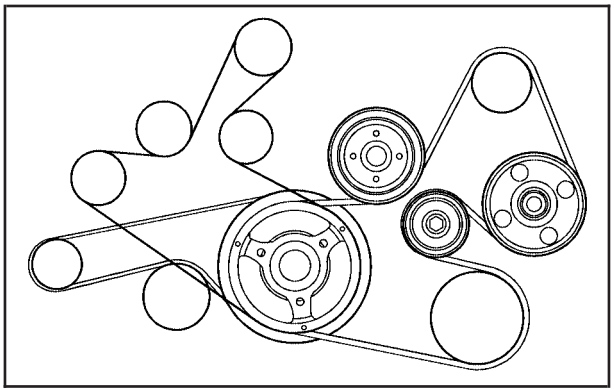

Maintenance Record

After the scheduled services are performed, record the date, odometer reading, who performed the service, and the type of services performed in the boxes provided. See *Maintenance Requirements on page 6-2*. Any additional information from *Owner Checks and Services on page 6-8* can be added on the following record pages. You should retain all maintenance receipts.

Maintenance Record

Date	Odometer Reading	Serviced By	Maintenance I or Maintenance II	Services Performed

Maintenance Record (cont'd)

Date	Odometer Reading	Serviced By	Maintenance I or Maintenance II	Services Performed

Maintenance Record (cont'd)

Date	Odometer Reading	Serviced By	Maintenance I or Maintenance II	Services Performed

Section 7 Customer Assistance and Information

Customer Assistance and Information 7-2
Customer Satisfaction Procedure 7-2
Online Owner Center 7-3
Customer Assistance for Text Telephone (TTY) Users 7-4
Customer Assistance Offices 7-4
GM Mobility Reimbursement Program 7-5
Roadside Service 7-5
Courtesy Transportation 7-7
Vehicle Data Collection and Event Data Recorders 7-8
Collision Damage Repair 7-10
Reporting Safety Defects 7-13
Reporting Safety Defects to the United States Government 7-13
Reporting Safety Defects to the Canadian Government 7-13
Reporting Safety Defects to General Motors 7-14
Service Publications Ordering Information 7-14

Customer Assistance and Information

Customer Satisfaction Procedure

Your satisfaction and goodwill are important to your dealer and to Cadillac. Normally, any concerns with the sales transaction or the operation of your vehicle will be resolved by your dealer's sales or service departments. Sometimes, however, despite the best intentions of all concerned, misunderstandings can occur. If your concern has not been resolved to your satisfaction, the following steps should be taken:

STEP ONE: Discuss your concern with a member of dealership management. Normally, concerns can be quickly resolved at that level. If the matter has already been reviewed with the sales, service or parts manager, contact the owner of the dealership or the general manager.

STEP TWO: If after contacting a member of dealership management, it appears your concern cannot be resolved by the dealership without further help, contact the Cadillac Customer Assistance Center, 24 hours a day, by calling 1-800-458-8006. In Canada, contact the Canadian Cadillac Customer Communication Centre by calling 1-888-446-2000.

We encourage you to call the toll-free number in order to give your inquiry prompt attention. Please have the following information available to give the Customer Assistance Representative:

- Vehicle Identification Number (VIN). This is available from the vehicle registration or title, or the plate at the top left of the instrument panel and visible through the windshield.
- Dealership name and location.
- Vehicle delivery date and present mileage.

When contacting Cadillac, please remember that your concern will likely be resolved at a dealer's facility. That is why we suggest you follow Step One first if you have a concern.

STEP THREE: Both General Motors and your dealer are committed to making sure you are completely satisfied with your new vehicle. However, if you continue to remain unsatisfied after following the procedure outlined in Steps One and Two, you should file with the BBB Auto Line Program to enforce any additional rights you may have. Canadian owners refer to your Warranty and Owner Assistance Information booklet for information on the Canadian Motor Vehicle Arbitration Plan (CAMVAP).

The BBB Auto Line Program is an out of court program administered by the Council of Better Business Bureaus to settle automotive disputes regarding vehicle repairs or the interpretation of the New Vehicle Limited Warranty. Although you may be required to resort to this informal dispute resolution program prior to filing a court action, use of the program is free of charge and your case will generally be heard within 40 days. If you do not agree with the decision given in your case, you may reject it and proceed with any other venue for relief available to you.

You may contact the BBB Auto Line Program using the toll-free telephone number or write them at the following address:

BBB Auto Line Program
Council of Better Business Bureaus, Inc.
4200 Wilson Boulevard
Suite 800
Arlington, VA 22203-1838

Telephone: 1-800-955-5100

This program is available in all 50 states and the District of Columbia. Eligibility is limited by vehicle age, mileage and other factors. General Motors reserves the right to change eligibility limitations and/or discontinue its participation in this program.

Online Owner Center

The Owner Center is a resource for your GM ownership needs. Specific vehicle information can be found in one place.

The Online Owner Center allows you to:

- Get e-mail service reminders.
- Access information about your specific vehicle, including tips and videos and an electronic version of this owner's manual (United States only).
- Keep track of your vehicle's service history and maintenance schedule.
- Find GM dealers for service nationwide.
- Receive special promotions and privileges only available to members (United States only).

Refer to the web for updated information.

To register your vehicle, visit www.MyGMLink.com (United States) or My GM Canada within www.gmcanada.com (Canada).

Customer Assistance for Text Telephone (TTY) Users

To assist customers who are deaf, hard of hearing, or speech-impaired and who use Text Telephones (TTYs), Cadillac has TTY equipment available at its Customer Assistance Center. Any TTY user can communicate with Cadillac by dialing: 1-800-833-CMCC (2622). (TTY users in Canada can dial 1-800-263-3830.)

Customer Assistance Offices

Cadillac encourages customers to call the toll-free number for assistance. If a U.S. customer wishes to write to Cadillac, the letter should be addressed to Cadillac's Customer Assistance Center.

United States — Customer Assistance

Cadillac Customer Assistance Center
Cadillac Motor Car Division
P.O. Box 33169
Detroit, MI 48232-5169

1-800-458-8006
1-800-833-2622 (For Text Telephone devices (TTYs))
Roadside Assistance: 1-800-882-1112
Fax Number: 313-381-0022

From Puerto Rico:
1-800-496-9992 (English)
1-800-496-9993 (Spanish)
Fax Number: 313-381-0022

From U.S. Virgin Islands:
1-800-496-9994
Fax Number: 313-381-0022

Canada — Customer Assistance

General Motors of Canada Limited
Canadian Cadillac Customer Communication Centre, 163-005
1908 Colonel Sam Drive
Oshawa, Ontario L1H 8P7

1-888-446-2000
1-800-263-3830 (For Text Telephone devices (TTYs))
Roadside Assistance: 1-800-882-1112

Overseas — Customer Assistance

Please contact the local General Motors Business Unit.

Mexico, Central America and Caribbean Islands/Countries (Except Puerto Rico and U.S. Virgin Islands) — Customer Assistance

General Motors de Mexico, S. de R.L. de C.V.
Customer Assistance Center
Paseo de la Reforma # 2740
Col. Lomas de Bezares
C.P. 11910, Mexico, D.F.
01-800-508-0000
Long Distance: 011-52-53 29 0 800

GM Mobility Reimbursement Program

GM MOBILITY℠

This program, available to qualified applicants, can reimburse you up to $1,000 of the cost of eligible aftermarket adaptive equipment required for your vehicle, such as hand controls or a wheelchair/scooter lift.

The offer is available for a very limited period of time from the date of vehicle purchase/lease. For more details, or to determine your vehicle's eligibility, visit gmmobility.com or call the GM Mobility Assistance Center at 1-800-323-9935. Text telephone (TTY) users, call 1-800-833-9935.

GM of Canada also has a Mobility Program. Call 1-800-GM-DRIVE (463-7483) for details. TTY users call 1-800-263-3830.

Roadside Service

Cadillac's exceptional Roadside Service is more than an auto club or towing service. It provides every Cadillac owner with the advantage of contacting a Cadillac advisor and, where available, a Cadillac trained dealer technician who can provide on-site service.

Each technician travels with a specially equipped service vehicle complete with the necessary Cadillac parts and tools required to handle most roadside repairs.

Cadillac Roadside Service® can be reached by dialing **1-800-882-1112**, 24 hours a day, 365 days a year. This service is provided at no charge for any situation covered by the base warranty coverage and at a nominal charge if the Cadillac is no longer covered by the base warranty. Roadside Service is available only in the United States and Canada.

Cadillac Owner Privileges™

Roadside Service provides several Cadillac Owner Privileges™ at “no charge,” throughout your *Cadillac Warranty Period — 48 months/50,000 miles (80 000 km).*

Emergency Road Service is performed on site for the following situations:

- Towing Service
- Battery Jump Starting
- Lock Out Assistance
- Fuel Delivery
- Flat Tire Change (Covers change only)
- Trip Interruption — If your trip is interrupted due to a warranty failure, incidental expenses may be reimbursed during the 48 months/50,000 miles (80 000 km) warranty period. Items covered are hotel, meals, and rental car.

Roadside Service Availability

Wherever you drive in the United States or Canada, an advisor is available to assist you over the phone. A dealer technician, if available, can travel to your location within a 30 mile (50 km) radius of a participating Cadillac dealership. If beyond this radius, we will arrange to have your car towed to the nearest Cadillac dealership.

Reaching Roadside Service

Dial the toll-free Roadside Service number: **1-800-882-1112**. A Roadside Service Advisor will assist you and request the following information:

- A description of the problem
- Name, home address, home telephone number
- Location of your Cadillac and number you are calling from
- The model year, Vehicle Identification Number (VIN), mileage, and date of delivery

Roadside Service for the Hearing or Speech Impaired

Roadside Service is prepared to assist owners who have hearing difficulties or are speech impaired. Cadillac has installed special telecommunication devices called Text Telephone (TTY) in the Roadside Service Center.

Any customer who has access to a (TTY) or a conventional teletypewriter can communicate with Cadillac by dialing from the United States or Canada **1-888-889-2438** — daily, 24 hours.

Courtesy Transportation

To enhance your ownership experience, we and our participating dealers are proud to offer Courtesy Transportation, a customer support program for new vehicles.

The Courtesy Transportation program is offered to customers in conjunction with the Bumper-to-Bumper coverage provided by the New Vehicle Limited Warranty. Several transportation options are available when warranty repairs are required. This will reduce your inconvenience during warranty repairs.

Scheduling Service Appointments

When your vehicle requires warranty service, you should contact your dealer and request an appointment. By scheduling a service appointment and advising your service consultant of your transportation needs, your dealer can help minimize your inconvenience.

If your vehicle cannot be scheduled into the service department immediately, keep driving it until it can be scheduled for service, unless, of course, the problem is safety-related. If it is, please call your dealership, let them know this, and ask for instructions.

If the dealer requests that you simply drop the vehicle off for service, you are urged to do so as early in the work day as possible to allow for the same day repair.

Transportation Options

Warranty service can generally be completed while you wait. However, if you are unable to wait, GM helps to minimize your inconvenience by providing several transportation options. Depending on the circumstances, your dealer can offer you one of the following:

Shuttle Service

Participating dealers can provide you with shuttle service to get you to your destination with minimal interruption of your daily schedule. This includes one-way or round trip shuttle service to a destination up to 10 miles (16 km) from the dealership.

Public Transportation or Fuel Reimbursement

If your vehicle requires warranty repairs, reimbursement of public transportation expenses may be available, for up to a maximum of five days. In addition, should you arrange transportation through a friend or relative, reimbursement for reasonable fuel expenses may be available, up to a five-day maximum. Claim amounts should reflect actual costs and be supported by original receipts.

Courtesy Rental Vehicle

Your dealer may arrange to provide you with a courtesy rental vehicle or reimburse you for a rental vehicle that you obtain if your vehicle is kept for a warranty repair. Reimbursement will be limited to a maximum amount per day and must be supported by receipts. This requires that you sign and complete a rental agreement and meet state, local and rental vehicle provider requirements. Requirements vary and may include minimum age requirements, insurance coverage, credit card, etc. You are responsible for fuel usage charges and may also be responsible for taxes, levies, usage fees, excessive mileage or rental usage beyond the completion of the repair.

Generally it is not possible to provide a like-vehicle as a courtesy rental.

Additional Program Information

Courtesy Transportation is available during the Bumper-to-Bumper warranty coverage period, but it is not part of the New Vehicle Limited Warranty. A separate booklet entitled *Warranty and Owner Assistance Information* furnished with each new vehicle provides detailed warranty coverage information.

Courtesy Transportation is available only at participating dealers and all program options, such as shuttle service, may not be available at every dealer.

Please contact your dealer for specific information about availability. All Courtesy Transportation arrangements will be administered by appropriate dealer personnel.

Canadian Vehicles: For warranty repairs during the Complete Vehicle Coverage period of the General Motors of Canada New Vehicle Limited Warranty, alternative transportation may be available under the Courtesy Transportation Program. Please consult your dealer for details.

General Motors reserves the right to unilaterally modify, change or discontinue Courtesy Transportation at any time and to resolve all questions of claim eligibility pursuant to the terms and conditions described herein at its sole discretion.

Vehicle Data Collection and Event Data Recorders

Your vehicle, like other modern motor vehicles, has a number of sophisticated computer systems that monitor and control several aspects of the vehicle's performance. Your vehicle uses on-board vehicle computers to monitor emission control components to optimize fuel economy, to monitor conditions for airbag deployment and, if so equipped, to provide anti-lock braking and to help the driver control the vehicle in difficult driving situations.

Some information may be stored during regular operations to facilitate repair of detected malfunctions; other information is stored only in a crash event by computer systems, such as those commonly called event data recorders (EDR).

In a crash event, computer systems, such as the Airbag Sensing and Diagnostic Module (SDM) in your vehicle may record information about the condition of the vehicle and how it was operated, such as data related to engine speed, brake application, throttle position, vehicle speed, safety belt usage, airbag readiness, airbag performance, and the severity of a collision. If your vehicle is equipped with StabiliTrak®, steering performance, including yaw rate, steering wheel angle, and lateral acceleration, is also recorded. This information has been used to improve vehicle crash performance and may be used to improve crash performance of future vehicles and driving safety. Unlike the data recorders on many airplanes, these on-board systems do not record sounds, such as conversation of vehicle occupants.

To read this information, special equipment is needed and access to the vehicle or the device that stores the data is required. GM will not access information about a crash event or share it with others other than:

- with the consent of the vehicle owner or, if the vehicle is leased, with the consent of the lessee,
- in response to an official request of police or similar government office,
- as part of GM's defense of litigation through the discovery process, or
- as required by law.

In addition, once GM collects or receives data, GM may:

- use the data for GM research needs,
- make it available for research where appropriate confidentiality is to be maintained and need is shown, or
- share summary data which is not tied to a specific vehicle with non-GM organizations for research purposes.

Others, such as law enforcement, may have access to the special equipment that can read the information if they have access to the vehicle or the device that stores the data.

If your vehicle is equipped with OnStar®, please check the OnStar® subscription service agreement or manual for information on its operations and data collection.

Collision Damage Repair

If your vehicle is involved in a collision and it is damaged, have the damage repaired by a qualified technician using the proper equipment and quality replacement parts. Poorly performed collision repairs will diminish your vehicle's resale value, and safety performance can be compromised in subsequent collisions.

Collision Parts

Genuine GM Collision parts are new parts made with the same materials and construction methods as the parts with which your vehicle was originally built. Genuine GM Collision parts are your best choice to assure that your vehicle's designed appearance, durability and safety are preserved. The use of Genuine GM parts can help maintain your GM New Vehicle Warranty.

Recycled original equipment parts may also be used for repair. These parts are typically removed from vehicles that were total losses in prior accidents. In most cases, the parts being recycled are from undamaged sections of the vehicle. A recycled original equipment GM part, may be an acceptable choice to maintain your vehicle's originally designed appearance and safety performance, however, the history of these parts is not known. Such parts are not covered by your GM New Vehicle Limited Warranty, and any related failures are not covered by that warranty.

Aftermarket collision parts are also available. These are made by companies other than GM and may not have been tested for your vehicle. As a result, these parts may fit poorly, exhibit premature durability/corrosion problems, and may not perform properly in subsequent collisions. Aftermarket parts are not covered by your GM New Vehicle Limited Warranty, and any vehicle failure related to such parts are not covered by that warranty.

Repair Facility

GM also recommends that you choose a collision repair facility that meets your needs before you ever need collision repairs. Your GM dealer may have a collision repair center with GM-trained technicians and state of the art equipment, or be able to recommend a collision repair center that has GM-trained technicians and comparable equipment.

Insuring Your Vehicle

Protect your investment in your GM vehicle with comprehensive and collision insurance coverage. There are significant differences in the quality of coverage afforded by various insurance policy terms. Many insurance policies provide reduced protection to your GM vehicle by limiting compensation for damage repairs by using aftermarket collision parts. Some insurance companies will not specify aftermarket collision parts. When purchasing insurance, we recommend that you assure your vehicle will be repaired with GM original equipment collision parts. If such insurance coverage is not available from your current insurance carrier, consider switching to another insurance carrier.

If your vehicle is leased, the leasing company may require you to have insurance that assures repairs with Genuine GM Original Equipment Manufacturer (OEM) parts or Genuine Manufacturer replacement parts. Read your lease carefully, as you may be charged at the end of your lease for poor quality repairs.

If an Accident Occurs

Here is what to do if you are involved in an accident.

- Try to relax and then check to make sure you are all right. If you are uninjured, make sure that no one else in your vehicle, or the other vehicle, is injured.
- If there has been an injury, call 911 for help. Do not leave the scene of an accident until all matters have been taken care of. Move your vehicle only if its position puts you in danger or you are instructed to move it by a police officer.
- Give only the necessary and requested information to police and other parties involved in the accident. Do not discuss your personal condition, mental frame of mind, or anything unrelated to the accident. This will help guard against post-accident legal action.
- If you need roadside assistance, call GM Roadside Assistance. See *Roadside Service on page 7-5* for more information.
- If your vehicle cannot be driven, know where the towing service will be taking it. Get a card from the tow truck operator or write down the driver's name, the service's name, and the phone number.
- Remove any valuables from your vehicle before it is towed away. Make sure this includes your insurance information and registration if you keep these items in your vehicle.

- Gather the important information you will need from the other driver. Things like name, address, phone number, driver's license number, vehicle license plate, vehicle make, model and model year, Vehicle Identification Number (VIN), insurance company and policy number, and a general description of the damage to the other vehicle.
- If possible, call your insurance company from the scene of the accident. They will walk you through the information they will need. If they ask for a police report, phone or go to the police department headquarters the next day and you can get a copy of the report for a nominal fee. In some states with "no fault" insurance laws, a report may not be necessary. This is especially true if there are no injuries and both vehicles are driveable.
- Choose a reputable collision repair facility for your vehicle. Whether you select a GM dealer or a private collision repair facility to fix the damage, make sure you are comfortable with them. Remember, you will have to feel comfortable with their work for a long time.
- Once you have an estimate, read it carefully and make sure you understand what work will be performed on your vehicle. If you have a question, ask for an explanation. Reputable shops welcome this opportunity.

Managing the Vehicle Damage Repair Process

In the event that your vehicle requires damage repairs, GM recommends that you take an active role in its repair. If you have a pre-determined repair facility of choice, take your vehicle there, or have it towed there. Specify to the facility that any required replacement collision parts be original equipment parts, either new Genuine GM parts or recycled original GM parts. Remember, recycled parts will not be covered by your GM vehicle warranty.

Insurance pays the bill for the repair, but you must live with the repair. Depending on your policy limits, your insurance company may initially value the repair using aftermarket parts. Discuss this with your repair professional, and insist on Genuine GM parts. Remember if your vehicle is leased you may be obligated to have the vehicle repaired with Genuine GM parts, even if your insurance coverage does not pay the full cost.

If another party's insurance company is paying for the repairs, you are not obligated to accept a repair valuation based on that insurance company's collision policy repair limits, as you have no contractual limits with that company. In such cases, you can have control of the repair and parts choices as long as cost stays within reasonable limits.

Reporting Safety Defects

Reporting Safety Defects to the United States Government

If you believe that your vehicle has a defect which could cause a crash or could cause injury or death, you should immediately inform the National Highway Traffic Safety Administration (NHTSA), in addition to notifying General Motors.

If NHTSA receives similar complaints, it may open an investigation, and if it finds that a safety defect exists in a group of vehicles, it may order a recall and remedy campaign. However, NHTSA cannot become involved in individual problems between you, your dealer, or General Motors.

To contact NHTSA, you may either call the Auto Safety Hotline toll-free at 1-800-424-9393 (or 366-0123 in the Washington, D.C. area) or write to:

NHTSA, U.S. Department of Transportation
Washington, D.C. 20590

You can also obtain other information about motor vehicle safety from the hotline.

Reporting Safety Defects to the Canadian Government

If you live in Canada, and you believe that your vehicle has a safety defect, you should immediately notify Transport Canada, in addition to notifying General Motors of Canada Limited. You may call them at 1-800-333-0510 or write to:

Transport Canada
Place de Ville Tower C
330 Sparks Street
Ottawa, Ontario K1A 0N5

Reporting Safety Defects to General Motors

In addition to notifying NHTSA (or Transport Canada) in a situation like this, we certainly hope you will notify us. Please call us at 1-800-458-8006, or write:

Cadillac Customer Assistance Center
Cadillac Motor Car Division
P.O. Box 33169
Detroit, MI 48232-5169

In Canada, please call us at 1-888-446-2000. Or, write:

Canadian Cadillac Customer Communication Centre, 163-005
General Motors of Canada Limited
1908 Colonel Sam Drive
Oshawa, Ontario L1H 8P7

Service Publications Ordering Information

Service Manuals

Service Manuals have the diagnosis and repair information on engines, transmission, axle suspension, brakes, electrical, steering, body, etc.

Transmission, Transaxle, Transfer Case Unit Repair Manual

This manual provides information on unit repair service procedures, adjustments, and specifications for GM transmissions, transaxles, and transfer cases.

Service Bulletins

Service Bulletins give technical service information needed to knowledgeably service General Motors cars and trucks. Each bulletin contains instructions to assist in the diagnosis and service of your vehicle.

In Canada, information pertaining to Product Service Bulletins can be obtained by contacting your General Motors dealer or by calling 1-800-GM-DRIVE (1-800-463-7483).

Owner's Information

Owner publications are written specifically for owners and intended to provide basic operational information about the vehicle. The owner's manual will include the Maintenance Schedule for all models.

In-Portfolio: Includes a Portfolio, Owner's Manual, and Warranty Booklet.

RETAIL SELL PRICE: $35.00

Without Portfolio: Owner's Manual only.

RETAIL SELL PRICE: $25.00

Current and Past Model Order Forms

Service Publications are available for current and past model GM vehicles. To request an order form, please specify year and model name of the vehicle.

ORDER TOLL FREE: 1-800-551-4123 Monday-Friday 8:00 AM - 6:00 PM Eastern Time

For Credit Card Orders Only (VISA-MasterCard-Discover), visit Helm, Inc. on the World Wide Web at: www.helminc.com

Or you can write to:

Helm, Incorporated
P.O. Box 07130
Detroit, MI 48207

Prices are subject to change without notice and without incurring obligation. Allow ample time for delivery.

Note to Canadian Customers: All listed prices are quoted in U.S. funds. Canadian residents are to make checks payable in U.S. funds.

NOTES

A

Accessories and Modifications 5-3
Accessory Power Outlet(s) 3-46
Adaptive Cruise Control 3-19
Adding Equipment to Your Airbag-Equipped
  Vehicle 1-62
Additives, Fuel 5-6
Add-On Electrical Equipment 5-104
Air Cleaner/Filter, Engine 5-25
Air Conditioning 3-48
Airbag
  Passenger Status Indicator 3-61
  Readiness Light 3-60
Airbag Sensing and Diagnostic Module (SDM) 7-8
Airbag System 1-48
  Adding Equipment to Your Airbag-Equipped
    Vehicle 1-62
  How Does an Airbag Restrain? 1-56
  Passenger Sensing System 1-58
  Servicing Your Airbag-Equipped Vehicle 1-62
  What Makes an Airbag Inflate? 1-56
  What Will You See After an Airbag Inflates? 1-57
  When Should an Airbag Inflate? 1-55
  Where Are the Airbags? 1-51
All-Wheel Drive 5-51
All-Wheel-Drive (AWD) System 4-12
Antenna, Diversity Antenna System 3-122
Antenna, XM™ Satellite Radio
  Antenna System 3-122
Anti-Lock Brake System (ABS) 4-7
Anti-Lock Brake, System Warning Light 3-65
Appearance Care
  Aluminum or Chrome-Plated Wheels 5-99
  Care of Safety Belts 5-97
  Chemical Paint Spotting 5-101
  Cleaning Exterior Lamps/Lenses 5-98
  Cleaning the Inside of Your Vehicle 5-94
  Fabric/Carpet 5-96
  Finish Care 5-98
  Finish Damage 5-101
  Instrument Panel, Vinyl, and Other
    Plastic Surfaces 5-97
  Leather 5-96
  Sheet Metal Damage 5-100
  Speaker Covers 5-97
  Tires 5-100
  Underbody Maintenance 5-101
  Vehicle Care/Appearance Materials 5-102
  Washing Your Vehicle 5-98
  Weatherstrips 5-97
  Windshield and Wiper Blades 5-99
  Wood Panels 5-97
Ashtray(s) 3-47

Audio System(s) 3-94
Audio Steering Wheel Controls 3-119
Care of Your CD Player 3-122
Care of Your CDs 3-121
Diversity Antenna System 3-122
Navigation/Radio System, see
Navigation Manual 3-115
Audio Systems
Radio Personalization 3-115
Audio System(s)
Radio with CD 3-96
Setting the Time 3-95
Theft-Deterrent Feature 3-119
Understanding Radio Reception 3-120
XM™ Satellite Radio Antenna System 3-122
Automatic Transmission
Fluid 5-27
Operation 2-28, 2-32

B

Battery 5-45
Exterior Lighting Battery Saver 3-38
Inadvertent Power Saver 3-40
Load Management 3-40
Before Leaving on a Long Trip 4-24
Brake
Anti-Lock Brake System (ABS) 4-7
Emergencies 4-9
Panic Assist 4-12
Parking 2-35
System Warning Light 3-64
Brakes 5-42
Braking 4-6
Braking in Emergencies 4-9
Break-In, New Vehicle 2-24
Bulb Replacement 5-54
Back-Up Lamps 5-54
Halogen Bulbs 5-54
High Intensity Discharge (HID) Lighting 5-54
Replacement Bulbs 5-55
Buying New Tires 5-72

C

California Fuel 5-6
California Proposition 65 Warning 5-3
Canadian Owners ii
Capacities and Specifications 5-116
Carbon Monoxide 2-14, 2-39, 4-27, 4-40

Care of
Safety Belts 5-97
Your CD Player 3-122
Your CDs 3-121
Center Console Storage Area 2-51
Chains, Tire 5-78
Charging System Light 3-63
Check
Engine Light 3-67
Checking Things Under the Hood 5-10
Chemical Paint Spotting 5-101
Child Restraints
Child Restraint Systems 1-32
Infants and Young Children 1-29
Lower Anchors and Tethers for Children 1-37
Older Children 1-26
Securing a Child Restraint in a Rear Seat Position 1-43
Securing a Child Restraint in the Right Front Seat Position 1-45
Where to Put the Restraint 1-36
Cigarette Lighter 3-47
Cleaning
Aluminum or Chrome-Plated Wheels 5-99
Exterior Lamps/Lenses 5-98
Fabric/Carpet 5-96
Finish Care 5-98
Cleaning (cont.)
Inside of Your Vehicle 5-94
Instrument Panel, Vinyl, and Other Plastic Surfaces 5-97
Leather 5-96
Speaker Covers 5-97
Tires 5-100
Underbody Maintenance 5-101
Washing Your Vehicle 5-98
Weatherstrips 5-97
Windshield and Wiper Blades 5-99
Wood Panels 5-97
Climate Control System
Air Filter, Passenger Compartment 3-55
Dual 3-48
Outlet Adjustment 3-54
Rear 3-54
Collision Damage Repair 7-10
Comfort Guides, Rear Safety Belt 1-23
Compact Spare Tire 5-93
Competitive Driving 4-18
Competitive Driving Mode 4-10
Control of a Vehicle 4-6
Convenience Net 2-51
Coolant
Engine Temperature Gage 3-67
Engine Temperature Warning Light 3-66

Coolant (cont.)
Heater, Engine 2-27
Surge Tank Pressure Cap 5-31
Cooling System 5-33
Cruise Control 3-16
Cruise Control, Adaptive 3-19
Cruise Control, Forward Collision
Alert (FAC) System 3-9
Cruise Control Light 3-72
Cupholder(s) 2-51
Customer Assistance Information
Courtesy Transportation 7-7
Customer Assistance for Text
Telephone (TTY) Users 7-4
Customer Assistance Offices 7-4
Customer Satisfaction Procedure 7-2
GM Mobility Reimbursement Program 7-5
Reporting Safety Defects to General Motors 7-14
Reporting Safety Defects to the
Canadian Government 7-13
Reporting Safety Defects to the United
States Government 7-13
Roadside Service 7-5
Service Publications Ordering Information 7-14

D

Daytime Running Lamps 3-35
Defensive Driving 4-2
Diversity Antenna System 3-122
Doing Your Own Service Work 5-4
Door
Locks 2-12
Power Door Locks 2-12
Programmable Automatic Door Locks 2-13
Rear Door Security Locks 2-13
Driver
Position, Safety Belt 1-13
Driver Information Center (DIC) 3-73
DIC Controls and Displays 3-74
DIC Warnings and Messages 3-79
Other Messages 3-93
Driving
At Night 4-18
City 4-22
Defensive 4-2
Drunken 4-3
Freeway 4-23
Hill and Mountain Roads 4-25
In Rain and on Wet Roads 4-20
Rocking Your Vehicle to Get it Out 4-32
Winter 4-27
Dual Climate Control System 3-48

E

Electrical System
Add-On Equipment 5-104
Fuses and Circuit Breakers 5-105
Headlamp Wiring 5-104
Power Windows and Other Power Options 5-105
Rear Underseat Fuse Block 5-110
Underhood Fuse Block 5-106
Windshield Wiper Fuses 5-104
Engine
Air Cleaner/Filter 5-25
Battery 5-45
Check and Service Engine Soon Light 3-67
Coolant 5-27
Coolant Heater 2-27
Coolant Temperature Gage 3-67
Coolant Temperature Warning Light 3-66
Drive Belt Routing 6-15
Engine Compartment Overview 5-12
Exhaust 2-39
Oil 5-18
Oil Life System 5-24
Overheated Protection Operating Mode 5-32
Overheating 5-31
Starting 2-25
Entry Lighting 3-39
Event Data Recorders (EDR) 7-8
Extender, Safety Belt 1-26
Exterior Lighting Battery Saver 3-38

F

Filter
Engine Air Cleaner 5-25
Finish Damage 5-101
Flash-to-Pass 3-12
Flat Tire 5-81
Flat Tire, Changing 5-83
Flat Tire, Storing 5-92
Fluid
Automatic Transmission 5-27
Power Steering 5-40
Windshield Washer 5-41
Fog Lamp Light 3-71
Fog Lamps 3-37
Forward Collision Alert (FAC) System 3-9
Front Axle 5-53
Fuel 5-5
Additives 5-6
California Fuel 5-6
Filling a Portable Fuel Container 5-10

Fuel (cont.)
Filling Your Tank 5-8
Fuels in Foreign Countries 5-7
Gage 3-72
Gasoline Octane 5-5
Gasoline Specifications 5-6
Fuses
Fuses and Circuit Breakers 5-105
Rear Underseat Fuse Block 5-110
Underhood Fuse Block 5-106
Windshield Wiper 5-104

G

Gage
Engine Coolant Temperature 3-67
Fuel 3-72
Speedometer 3-59
Tachometer 3-59
Garage Door Opener 2-47
Gasoline
Octane 5-5
Specifications 5-6
Glove Box 2-51
GM Mobility Reimbursement Program 7-5

H

Hazard Warning Flashers 3-6
Head Restraints 1-6
Headlamp Wiring 5-104
Headlamps 3-31
Bulb Replacement 5-54
Daytime Running Lamps 3-35
Flash-to-Pass 3-12
Halogen Bulbs 5-54
High Intensity Discharge (HID) Lighting 5-54
High/Low Beam Changer 3-8
On Reminder 3-35
Washer 3-15
Wiper Activated 3-35
Head-Up Display (HUD) 3-40
Heated Seats 1-3, 1-4
Heated Steering Wheel 3-7
Heater 3-48
Highbeam On Light 3-72
Highway Hypnosis 4-25
Hill and Mountain Roads 4-25
Hood
Checking Things Under 5-10
Release 5-11
Horn 3-6
How to Use This Manual ii
How to Wear Safety Belts Properly 1-13

I

Ignition Positions 2-24
Inadvertent Power Battery Saver 3-40
Infants and Young Children, Restraints 1-29
Inflation -- Tire Pressure 5-65
Instrument Panel
  Overview 3-4
Instrument Panel (I/P)
  Brightness 3-39
  Cluster 3-58

J

Jump Starting 5-46

K

Keyless Access System 2-4
Keyless Access System, Operation 2-5
Keys 2-3

L

Labeling, Tire Sidewall 5-59
Lamps
  Battery Load Management 3-40
  Exterior Lighting Battery Saver 3-38
Lamps (cont.)
  Fog 3-37
  Inadvertent Power Battery Saver 3-40
  Reading 3-40
  Twilight Sentinel® 3-37
LATCH System
  Child Restraints 1-37
Lifting Your Vehicle, Tires 5-79
Light
  Airbag Readiness 3-60
  Anti-Lock Brake System Warning 3-65
  Brake System Warning 3-64
  Charging System 3-63
  Cruise Control 3-72
  Engine Coolant Temperature Warning 3-66
  Fog Lamp 3-71
  Highbeam On 3-72
  Lights On Reminder 3-71
  Low Tire Pressure Warning Light 3-65
  Malfunction Indicator 3-67
  Oil Pressure 3-70
  Passenger Airbag Status Indicator 3-61
  Passenger Safety Belt Reminder 3-60
  Safety Belt Reminder 3-59
  Security 3-71
  TCS Warning Light 3-66
  Traction Control System (TCS) Warning 3-66

Lighting
Entry 3-39
Parade Dimming 3-39
Limited-Slip Rear Axle 4-11
Loading Your Vehicle 4-32
Lockout Protection 2-14
Locks
Door 2-12
Lockout Protection 2-14
Power Door 2-12
Programmable Automatic Door Locks 2-13
Rear Door Security Locks 2-13
Loss of Control 4-17
Lumbar
Power Controls 1-2

M

Magnetic Ride Control 4-11
Maintenance Schedule
Additional Required Services 6-6
At Each Fuel Fill 6-9
At Least Once a Month 6-9
At Least Once a Year 6-10
Introduction 6-2
Maintenance Footnotes 6-7
Maintenance Record 6-16
Maintenance Requirements 6-2
Maintenance Schedule (cont.)
Normal Maintenance Replacement Parts 6-14
Owner Checks and Services 6-8
Recommended Fluids and Lubricants 6-12
Scheduled Maintenance 6-4
Using 6-2
Your Vehicle and the Environment 6-2
Malfunction Indicator Light 3-67
Memory Mirrors 2-70
Memory Seat 2-70
Memory Steering Wheel Controls 2-70
Message
DIC Warnings and Messages 3-79
Mirrors
Automatic Dimming Rearview 2-41
Automatic Dimming Rearview Mirror with Intellibeam™ and OnStar® 2-41
Automatic Dimming Rearview with OnStar® 2-41
Automatic Dimming Rearview with OnStar® and Compass 2-42
Manual Rearview Mirror with Compass and Temperature 1-7
Memory 2-70
Outside Automatic Dimming Mirror 2-44
Outside Convex Mirror 2-44
Outside Parallel Park Assist Mirror 2-44
Outside Power Heated Mirrors 2-43
MyGMLink.com 7-3

N

Navigation/Radio System, see
Navigation Manual 3-115
New Vehicle Break-In 2-24
Normal Maintenance Replacement Parts 6-14

O

Odometer 3-59
Off-Road Recovery 4-15
Oil
Engine 5-18
Pressure Light 3-70
Oil, Engine Oil Life System 5-24
Older Children, Restraints 1-26
Online Owner Center 7-3
OnStar® System, see OnStar® Manual 2-45
Other Warning Devices 3-6
Outlet Adjustment 3-54
Outside
Automatic Dimming Mirror 2-44
Convex Mirror 2-44
Parallel Park Assist Mirror 2-44
Power Heated Mirrors 2-43
Overheated Engine Protection Operating Mode 5-32
Owner Checks and Services 6-8
Owners, Canadian ii

P

Panic Brake Assist 4-12
Parade Dimming 3-39
Park Aid 3-44
Park (P)
Shifting Into 2-36
Shifting Out of 2-38
Parking
Assist 3-44
Brake 2-35
Over Things That Burn 2-38
Passenger Airbag Status Indicator 3-61
Passenger Compartment Air Filter 3-55
Passenger Sensing System 1-58
Passing 4-15
Power
Accessory Outlet(s) 3-46
Door Locks 2-12
Electrical System 5-105
Inadvertent Battery Saver 3-40
Lumbar Controls 1-2
Reclining Seatback 1-5
Retained Accessory (RAP) 2-25
Seat 1-2
Steering Fluid 5-40

Power (cont.)
Tilt Wheel and Telescopic Steering Column 3-6
Windows 2-18
Pretensioners, Safety Belt 1-25
Programmable Automatic Door Locks 2-13

Q

Questions and Answers About Safety Belts 1-12

R

Radios 3-94
Care of Your CD Player 3-122
Care of Your CDs 3-121
Navigation/Radio System, see
Navigation Manual 3-115
Radio Personalization 3-115
Radio with CD 3-96
Setting the Time 3-95
Theft-Deterrent 3-119
Understanding Reception 3-120
Rainsense™ II Wipers 3-14
Reading Lamps 3-40
Rear Axle 5-52
Limited-Slip 4-11
Rear Climate Control System 3-54
Rear Door Security Locks 2-13
Rear Heated Seats 1-7
Rear Safety Belt Comfort Guides 1-23
Rear Seat Passengers, Safety Belts 1-21
Rearview Mirror, Automatic Dimming 2-41
Rearview Mirror, Automatic Dimming
with OnStar® 2-41
Rearview Mirror, Automatic Dimming with
OnStar® and Compass 2-42
Rearview Mirror with Compass and
Temperature 1-7
Reclining Seatback, Power 1-5
Recommended Fluids and Lubricants 6-12
Recreational Vehicle Towing 4-38
Removing the Flat Tire and Installing the
Spare Tire 5-86
Removing the Spare Tire and Tools 5-85
Replacement Bulbs 5-55
Replacement, Windshield 5-56
Reporting Safety Defects
Canadian Government 7-13
General Motors 7-14
United States Government 7-13
Restraint System Check
Checking the Restraint Systems 1-63
Replacing Restraint System Parts
After a Crash 1-64

Retained Accessory Power (RAP) 2-25
Right Front Passenger Position, Safety Belts 1-21
Roadside
  Service 7-5
Rocking Your Vehicle to Get it Out 4-32
Routing, Engine Drive Belt 6-15
Run-Flat Tires 5-64
Running the Engine While Parked 2-40

S

Safety Belt
  Passenger Reminder Light 3-60
  Pretensioners 1-25
  Reminder Light 3-59
Safety Belts
  Care of 5-97
  Driver Position 1-13
  How to Wear Safety Belts Properly 1-13
  Questions and Answers About Safety Belts 1-12
  Rear Safety Belt Comfort Guides 1-23
  Rear Seat Passengers 1-21
  Right Front Passenger Position 1-21
  Safety Belt Extender 1-26
  Safety Belt Use During Pregnancy 1-20
  Safety Belts Are for Everyone 1-8
  Shoulder Belt Height Adjuster 1-20
Safety Warnings and Symbols iii
Scheduled Maintenance 6-4
Seats
  Head Restraints 1-6
  Heated and Ventilated Seats 1-4
  Heated Seats 1-3
  Heated Seats - Rear 1-7
  Memory 2-70
  Power Lumbar 1-2
  Power Reclining Seatback 1-5
  Power Seats 1-2
Securing a Child Restraint
  Rear Seat Position 1-43
  Right Front Seat Position 1-45
Security Light 3-71
Service 5-3
  Accessories and Modifications 5-3
  Adding Equipment to the Outside of Your
    Vehicle 5-5
  California Proposition 65 Warning 5-3
  Doing Your Own Work 5-4
  Engine Soon Light 3-67
  Publications Ordering Information 7-14
Servicing Your Airbag-Equipped Vehicle 1-62
Setting the Time 3-95
Sheet Metal Damage 5-100
Shifting Into Park (P) 2-36

Shifting Out of Park (P) 2-38
Shoulder Belt Height Adjuster 1-20
Signals, Turn and Lane-Change 3-8
Spare Tire
  Compact 5-93
  Installing 5-86
  Removing 5-85
  Storing 5-92
Specifications, Capacities 5-116
Speedometer 3-59
StabiliTrak® System 4-11
Starting Your Engine 2-25
Steering 4-12
Steering Wheel Controls, Audio 3-119
Steering Wheel Controls, Memory 2-70
Steering Wheel, Heated 3-7
Steering Wheel, Power Tilt Wheel and
  Telescopic Steering Column 3-6
Storage Areas
  Center Console Storage Area 2-51
  Convenience Net 2-51
  Cupholder(s) 2-51
  Glove Box 2-51
Stuck in Sand, Mud, Ice or Snow 4-31
Sun Visors 2-20
Sunroof 2-52

T

Tachometer 3-59
TCS Warning Light 3-66
Telescopic Steering Column, Power Tilt Wheel 3-6
Theft-Deterrent, Radio 3-119
Theft-Deterrent System 2-21
Theft-Deterrent Systems 2-20
Tires 5-57
  Aluminum or Chrome-Plated Wheels,
    Cleaning 5-99
  Buying New Tires 5-72
  Chains 5-78
  Changing a Flat Tire 5-83
  Cleaning 5-100
  Compact Spare Tire 5-93
  Different Size 5-74
  If a Tire Goes Flat 5-81
  Inflation -- Tire Pressure 5-65
  Inspection and Rotation 5-70
  Installing the Spare Tire 5-86
  Lifting Your Vehicle 5-79
  Pressure Monitor System 5-67
  Removing the Flat Tire 5-86
  Removing the Spare Tire and Tools 5-85
  Run-Flat 5-64

Tires (cont.)
Storing a Flat or Spare Tire and Tools 5-92
Tire Sidewall Labeling 5-59
Tire Terminology and Definitions 5-61
Uniform Tire Quality Grading 5-75
Wheel Alignment and Tire Balance 5-76
Wheel Replacement 5-76
When It Is Time for New Tires 5-72
Towing
Recreational Vehicle 4-38
Towing a Trailer 4-40
Your Vehicle 4-37
Traction
Control System (TCS) 4-9
Control System Warning Light 3-66
Limited-Slip Rear Axle 4-11
Magnetic Ride Control 4-11
StabiliTrak® System 4-11
Transmission
Fluid, Automatic 5-27
Transmission Operation, Automatic 2-28, 2-32
Trunk 2-14
Turn and Lane-Change Signals 3-8
Turn Signal/Multifunction Lever 3-7
Twilight Sentinel® 3-37

U

Ultrasonic Rear Parking Assist (URPA) 3-44
Understanding Radio Reception 3-120
Uniform Tire Quality Grading 5-75
Universal Home Remote System 2-47
Operation 2-48

V

Valet Lockout Switch 2-23
Vehicle
Control 4-6
Damage Warnings iv
Loading 4-32
Symbols iv
Vehicle Data Collection and Event
Data Recorders 7-8
Vehicle Identification
Number (VIN) 5-103
Service Parts Identification Label 5-103
Vehicle Personalization 2-53
Memory Seat, Mirrors and Steering Wheel 2-70
Ventilated Seats 1-4
Ventilation Adjustment 3-54
Visors 2-20

W

Warning Lights, Gages and Indicators 3-57
Warnings
DIC Warnings and Messages 3-79
Hazard Warning Flashers 3-6
Other Warning Devices 3-6
Safety and Symbols iii
Vehicle Damage iv
Wheels
Alignment and Tire Balance 5-76
Different Size 5-74
Replacement 5-76
Where to Put the Restraint 1-36
Windows 2-17
Power 2-18
Windshield
Wiper Blades, Cleaning 5-99
Windshield Replacement 5-56
Windshield Washer 3-15
Fluid 5-41
Windshield Wiper
Blade Replacement 5-56
Fuses 5-104
Rainsense™ II Wipers 3-14
Windshield Wipers 3-13
Winter Driving 4-27
Wiper Activated Headlamps 3-35

X

XM™ Satellite Radio Antenna System 3-122

Y

Your Vehicle and the Environment 6-2