2004 ACCESSORIES & EQUIPMENT

Interior Trim - TSX

DOORS

COMPONENT LOCATION INDEX

Front Door

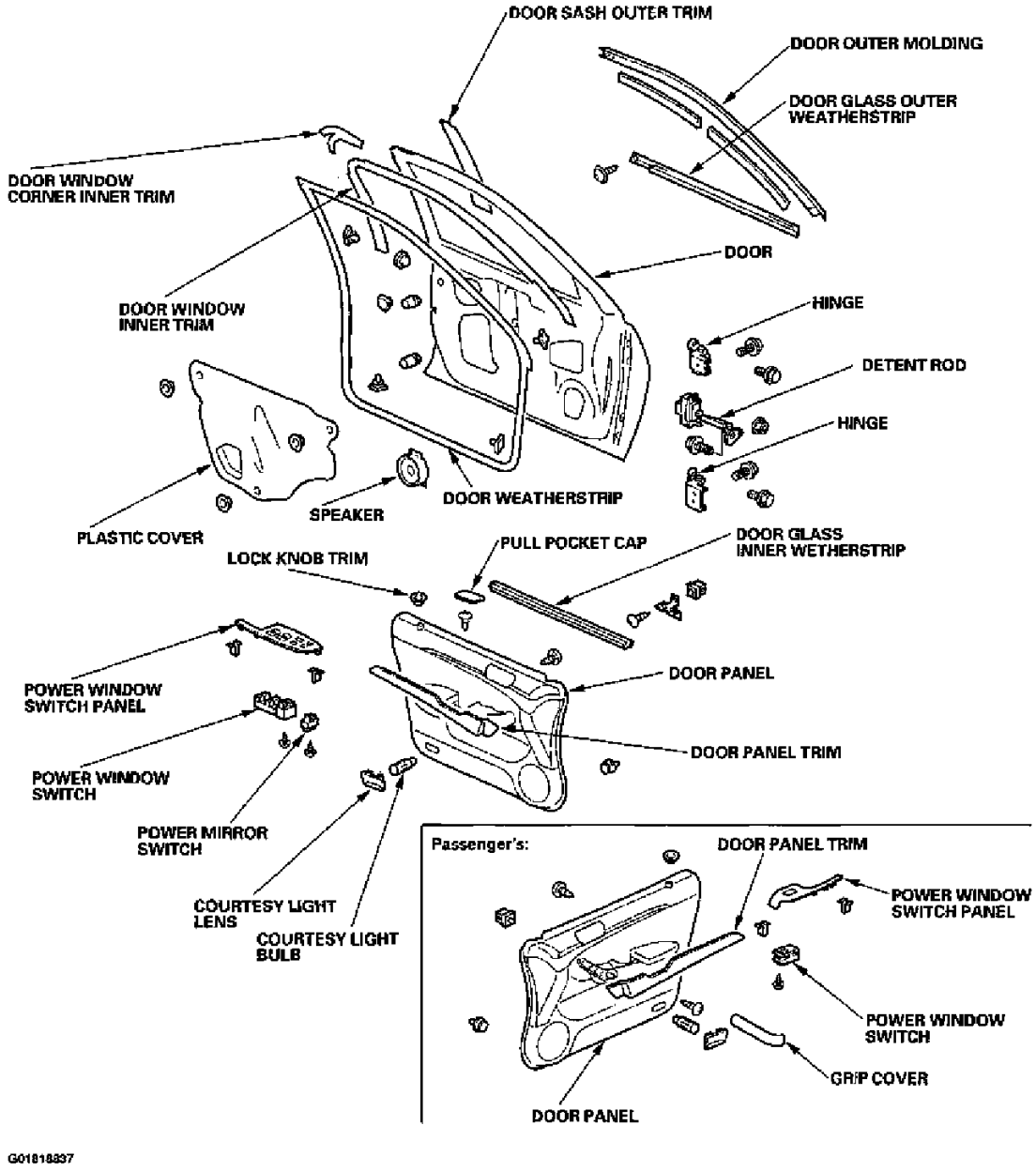

Fig. 1: Locating Front Door Components (1 Of 2)

cardiagn.com

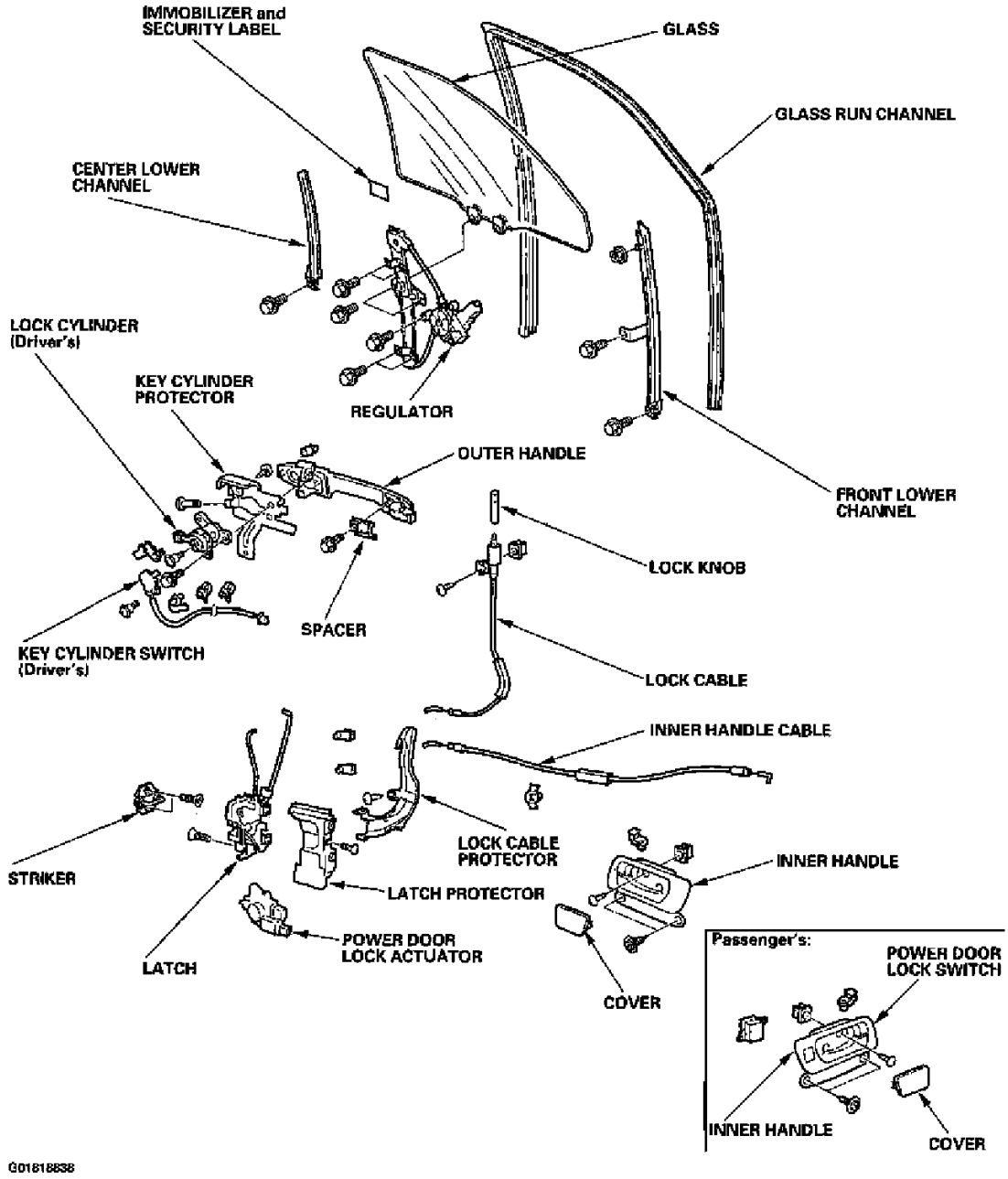

Fig. 2: Locating Front Door Components (2 Of 2)

Rear Door

cardiagn.com

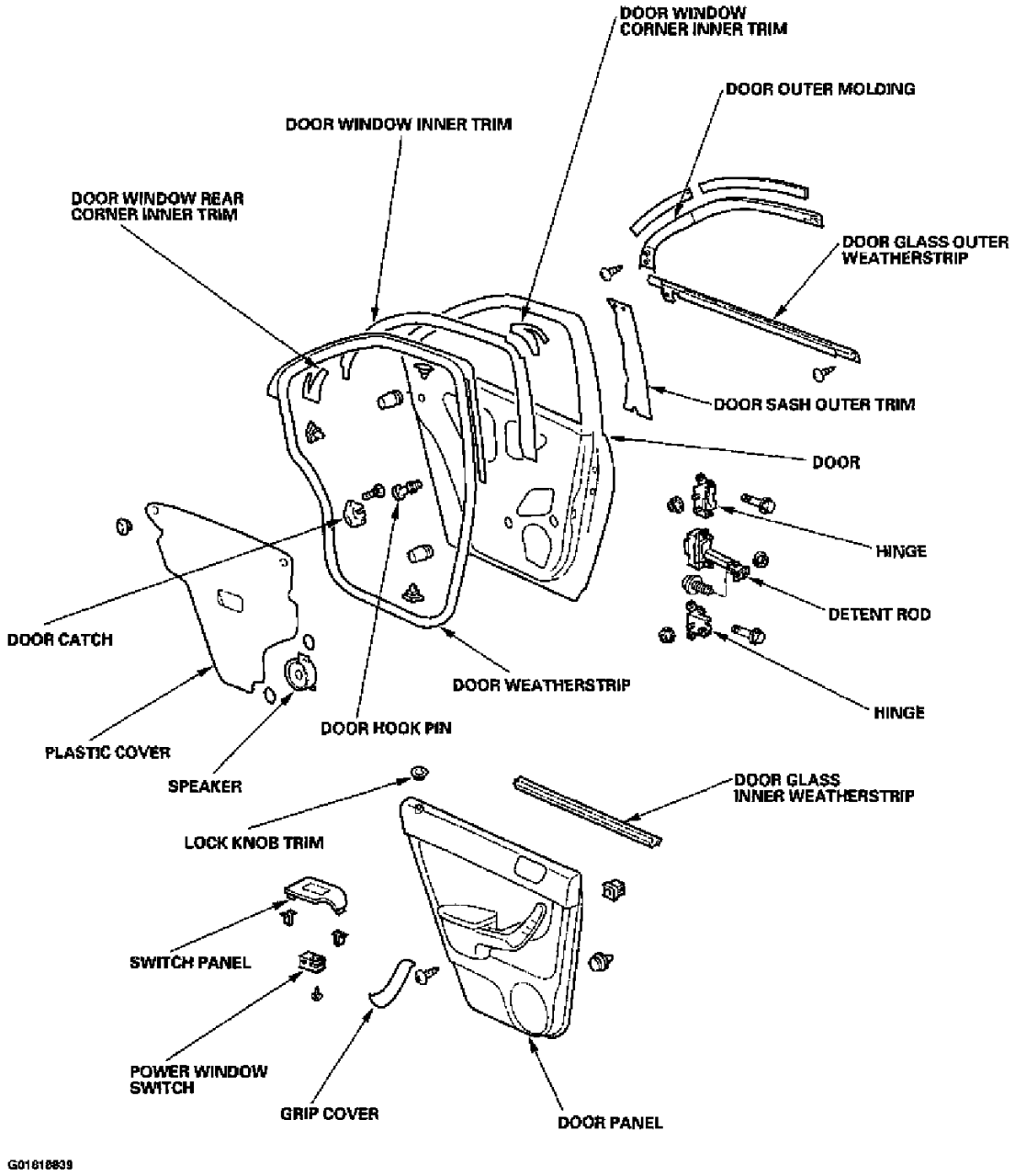

Fig. 3: Locating Rear Door Components (1 Of 2)

cardiagn.com

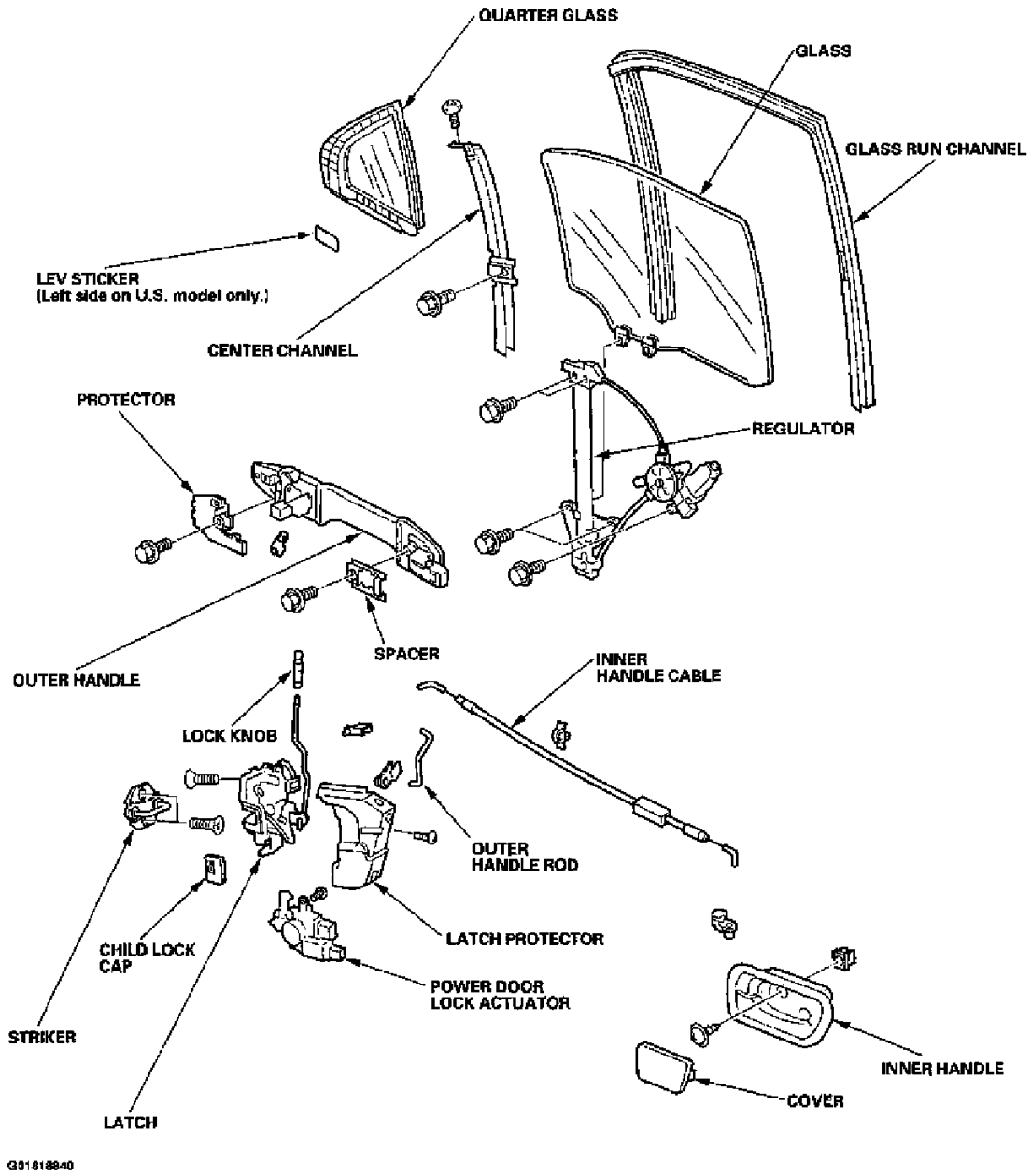

Fig. 4: Locating Rear Door Components (2 Of 2)

FRONT DOOR PANEL REMOVAL/INSTALLATION

Special Tools Required: Trim pad remover, Snap-on A 177A or equivalent, commercially available.

1. Lower the glass fully.
2. Using a flat-tip screwdriver wrapped with protective tape, push on the rear hook (A) and pivot the cover (B) on the front hook (C), then remove the cover and the screw securing the inner handle (D).

cardiagn.com

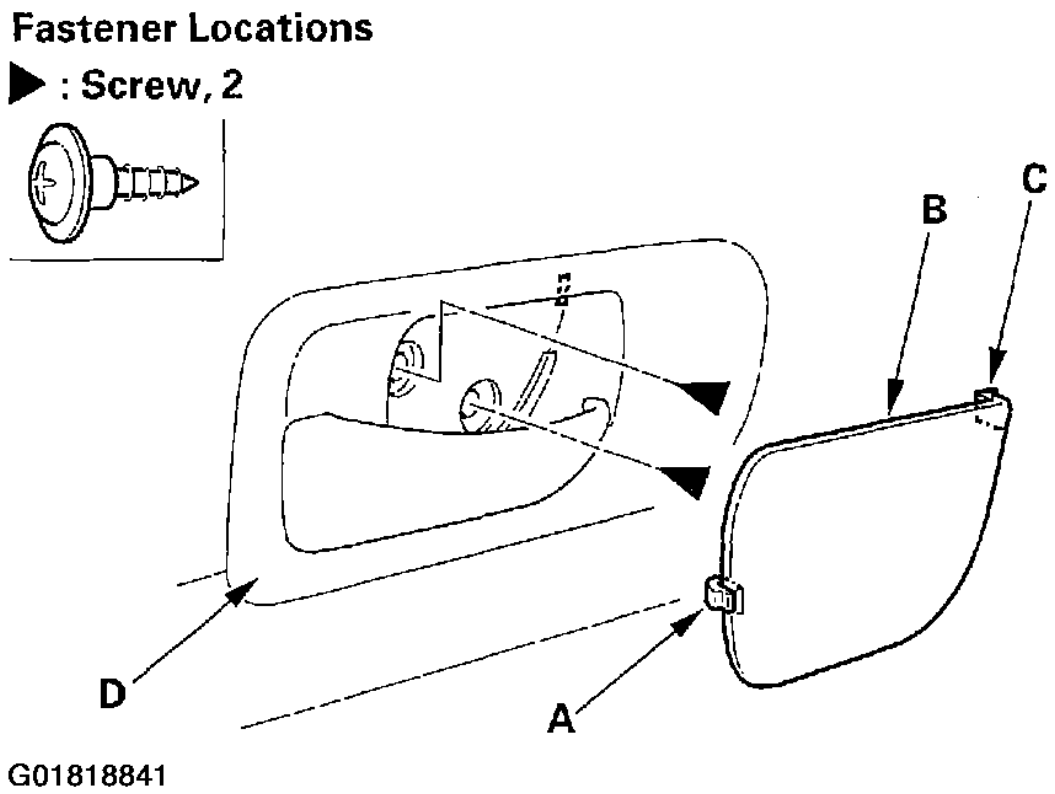

Fig. 5: Removing The Cover And The Screw Securing The Inner Handle

3. Remove the power window switch panel (A).
   a. Pry up on the rear edge (driver's) or front edge (passenger's) of the switch panel with a flat-tip screwdriver wrapped with protective tape to release the rear clip.
   b. Pull out along the edge of the panel to release the hooks (B) and front clip.
   c. Disconnect the power mirror switch connector (C) (driver's) and the power window switch connector (D).

cardiagn.com

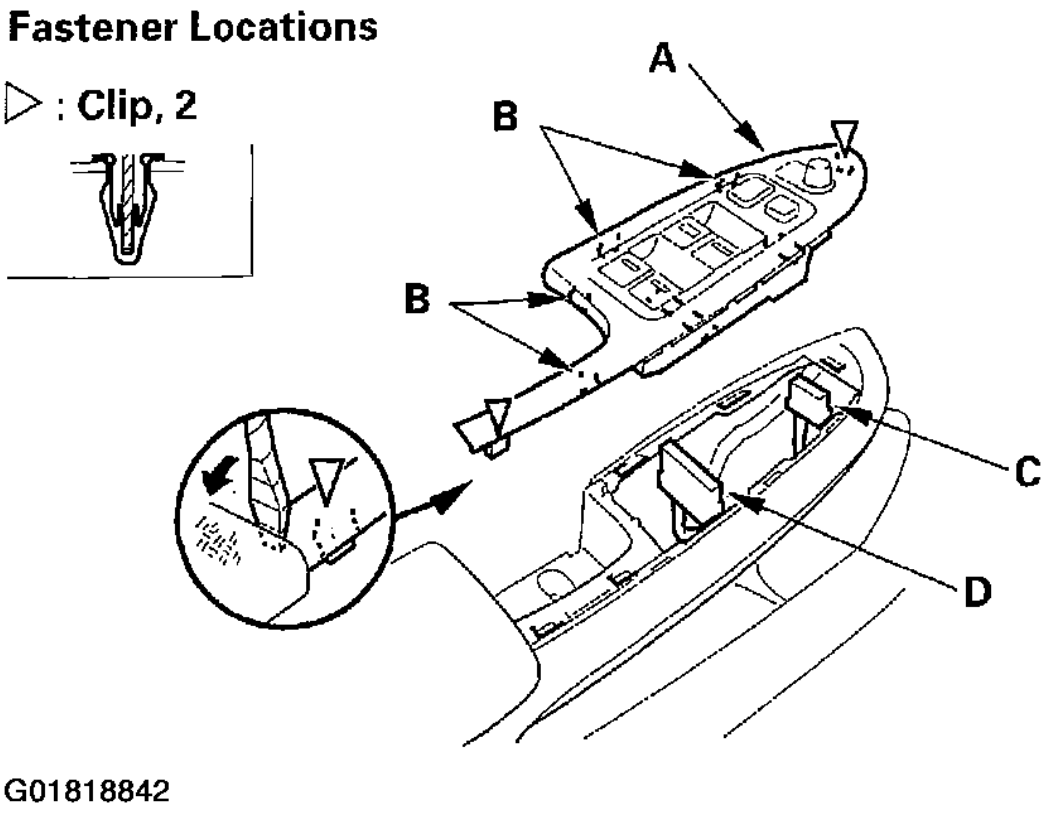

Fig. 6: Removing The Driver's Power Window Switch Panel

cardiagn.com

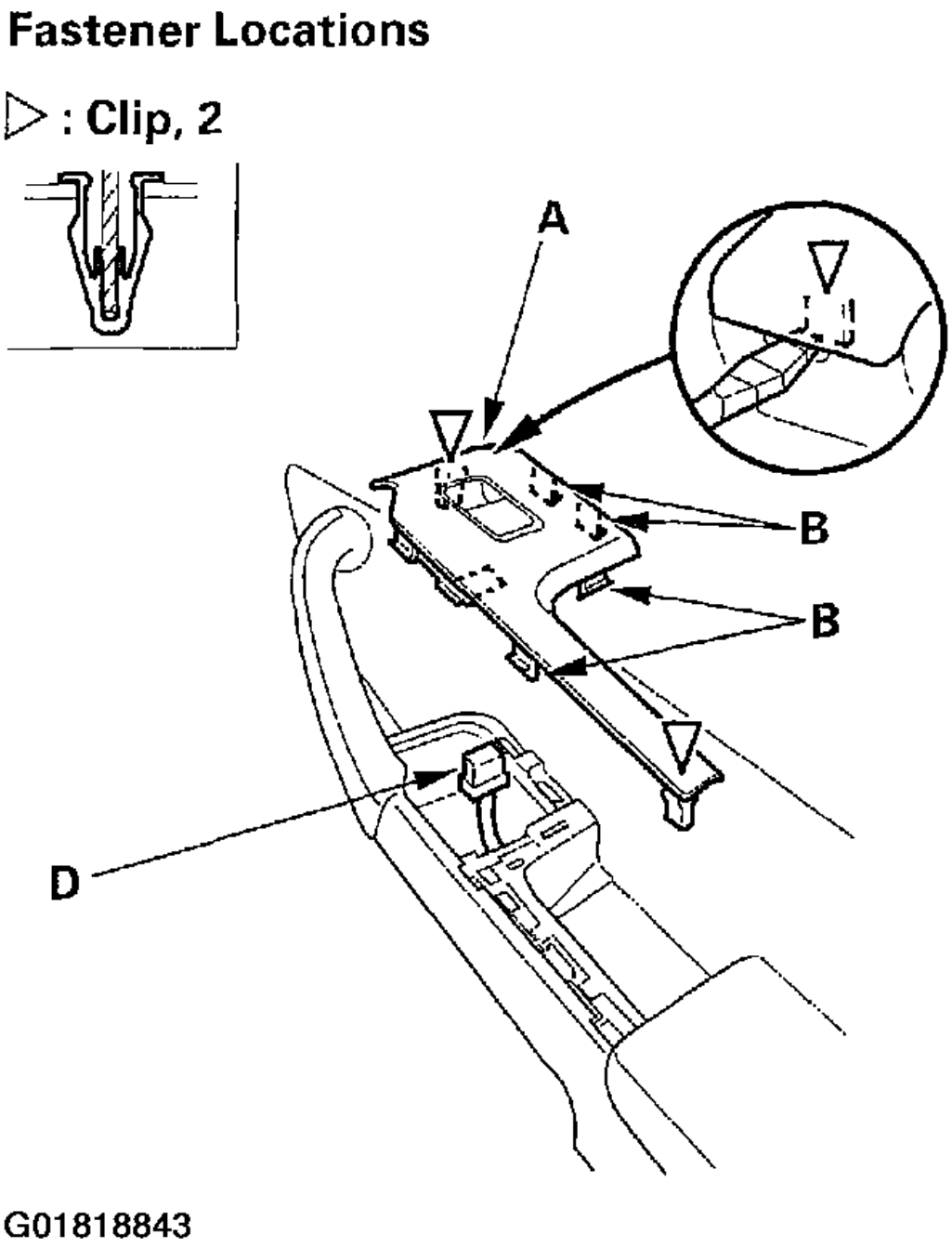

Fig. 7: Removing The Passenger's Power Window Switch Panel (Driver's)

4. Driver's: Remove the screw from under the pull pocket cap (A).

cardiagn.com

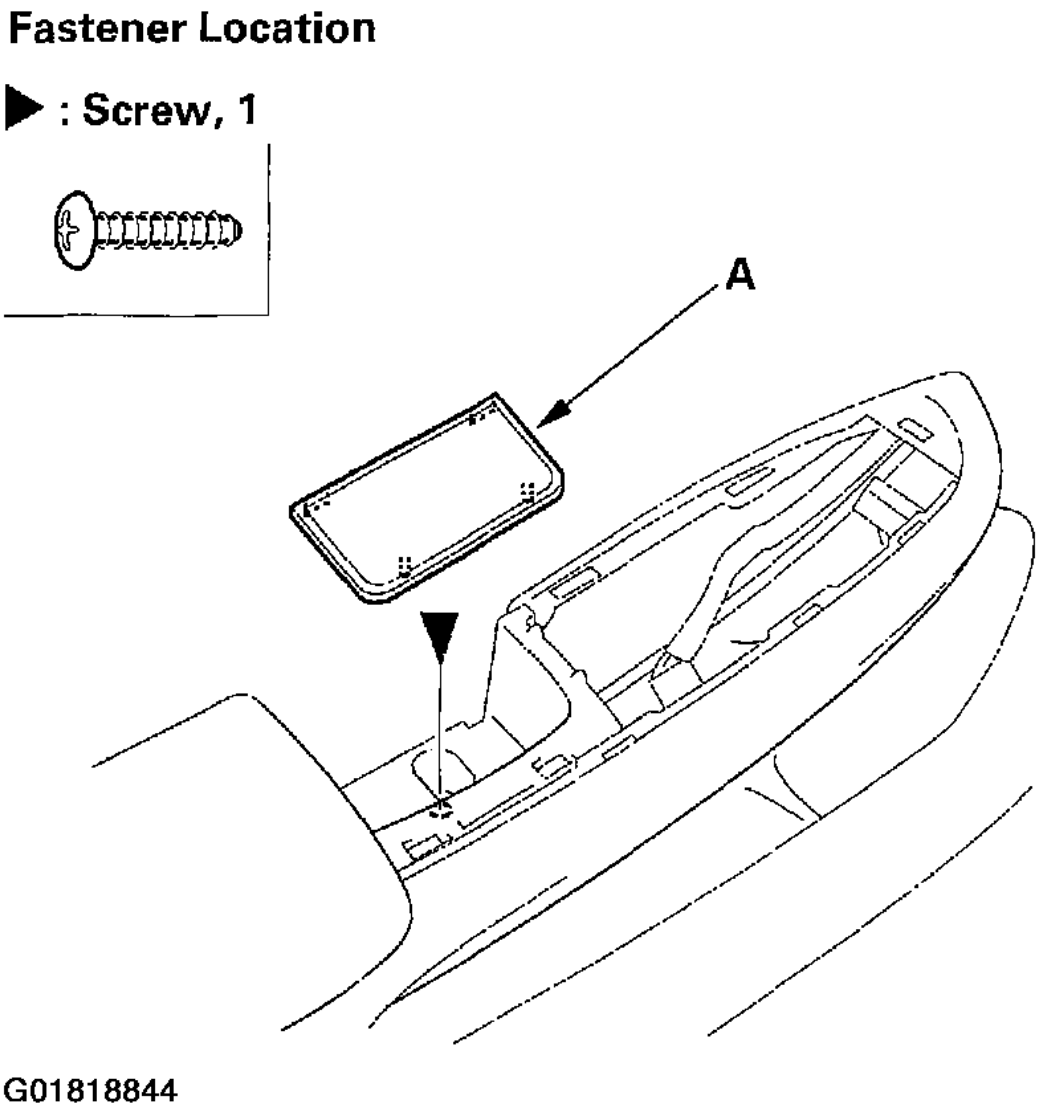

Fig. 8: Removing The Screw From Under The Pull Pocket Cap (Driver's)

5. Passenger's: Pry out the bottom edge of the grip cover (A) with a flat-tip screwdriver wrapped with protective tape to release the hooks (B), then pull out the cover to release the upper hooks (C), and remove the cover.

cardiagn.com

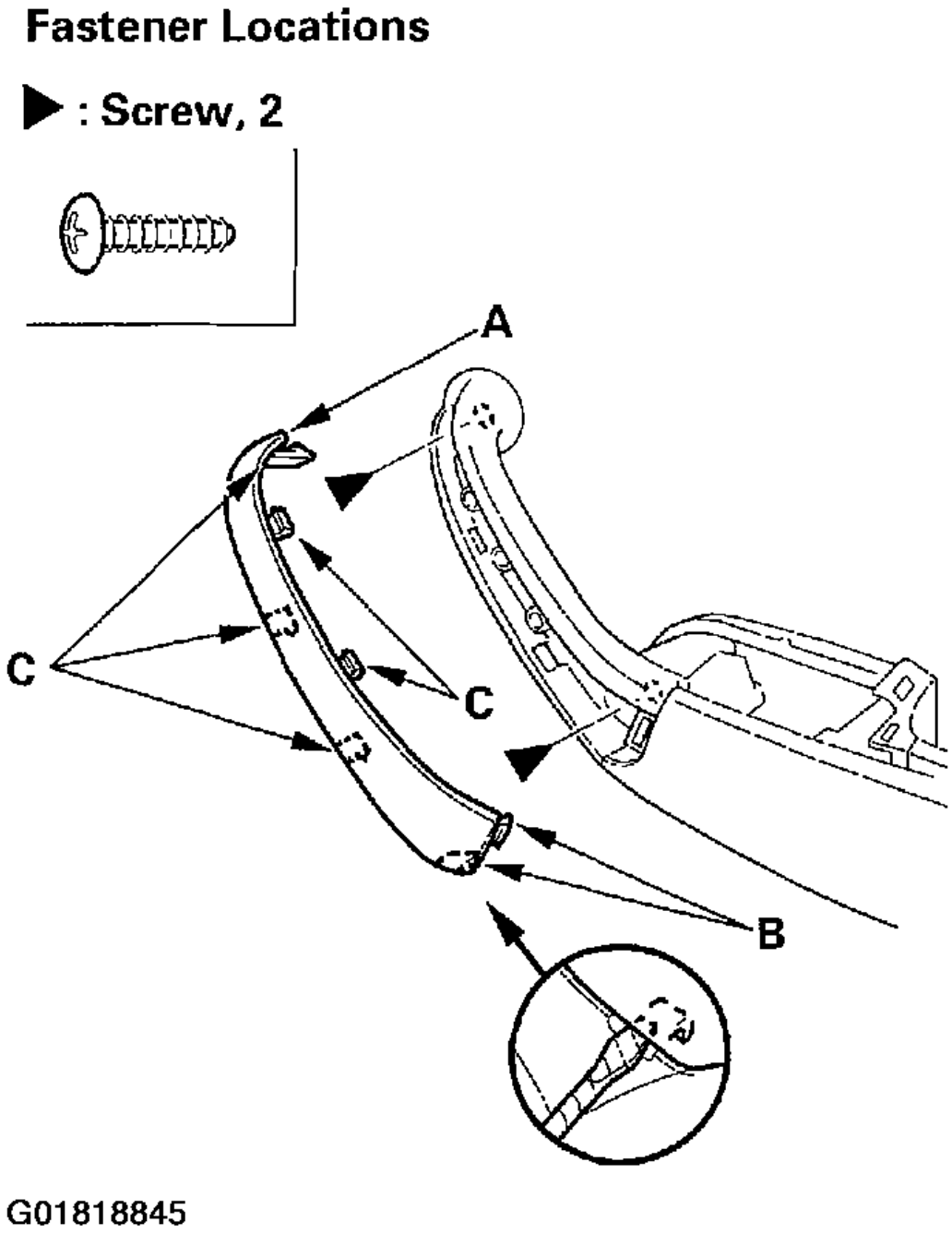

Fig. 9: Removing The Grip Cover (Passenger's)

6. Passenger's: Remove the screws from the grip base (D).
7. Remove the mirror mount cover (see step 2 of **POWER MIRROR REPLACEMENT**).

cardiagn.com

8. Remove the door panel (A) with as little bending as possible to avoid creasing or breaking it.
    a. Start at the bottom edge of the door panel, release the clips that are just above the marks (B) on the edge of the panel with a commercially available trim pad remover (C).
    b. Detach the upper clips.
    c. Starting at the rear, pull the door panel upward, then release the lock knob (D).

cardiagn.com

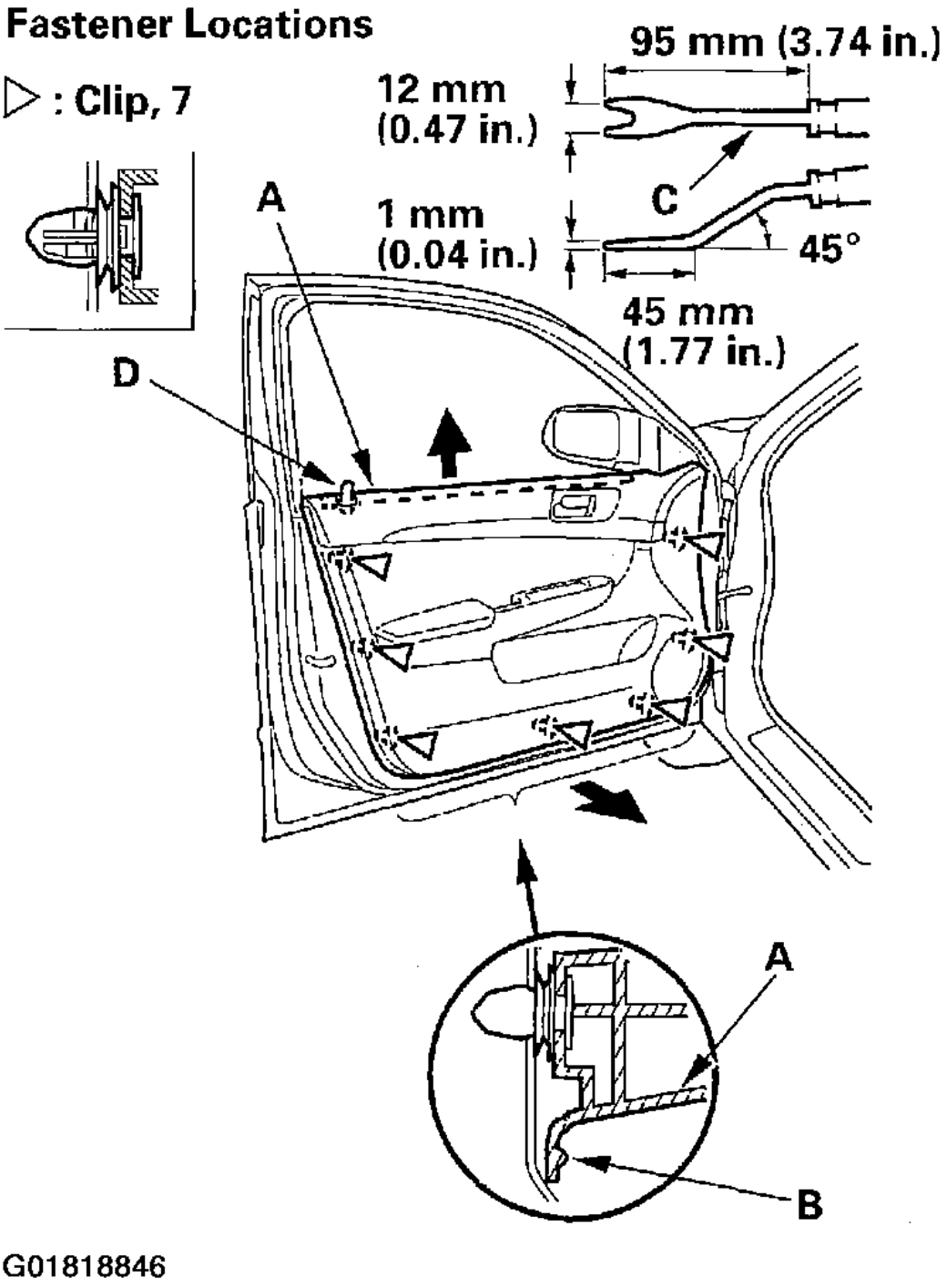

Fig. 10: Removing The Door Panel

9. Disconnect the inner handle cable (A), power door lock switch connector (B) on passenger's door,

cardiagn.com

courtesy light bulb socket (C), and detach the harness clip (D). Passenger's door panel is shown; driver's door panel is similar.

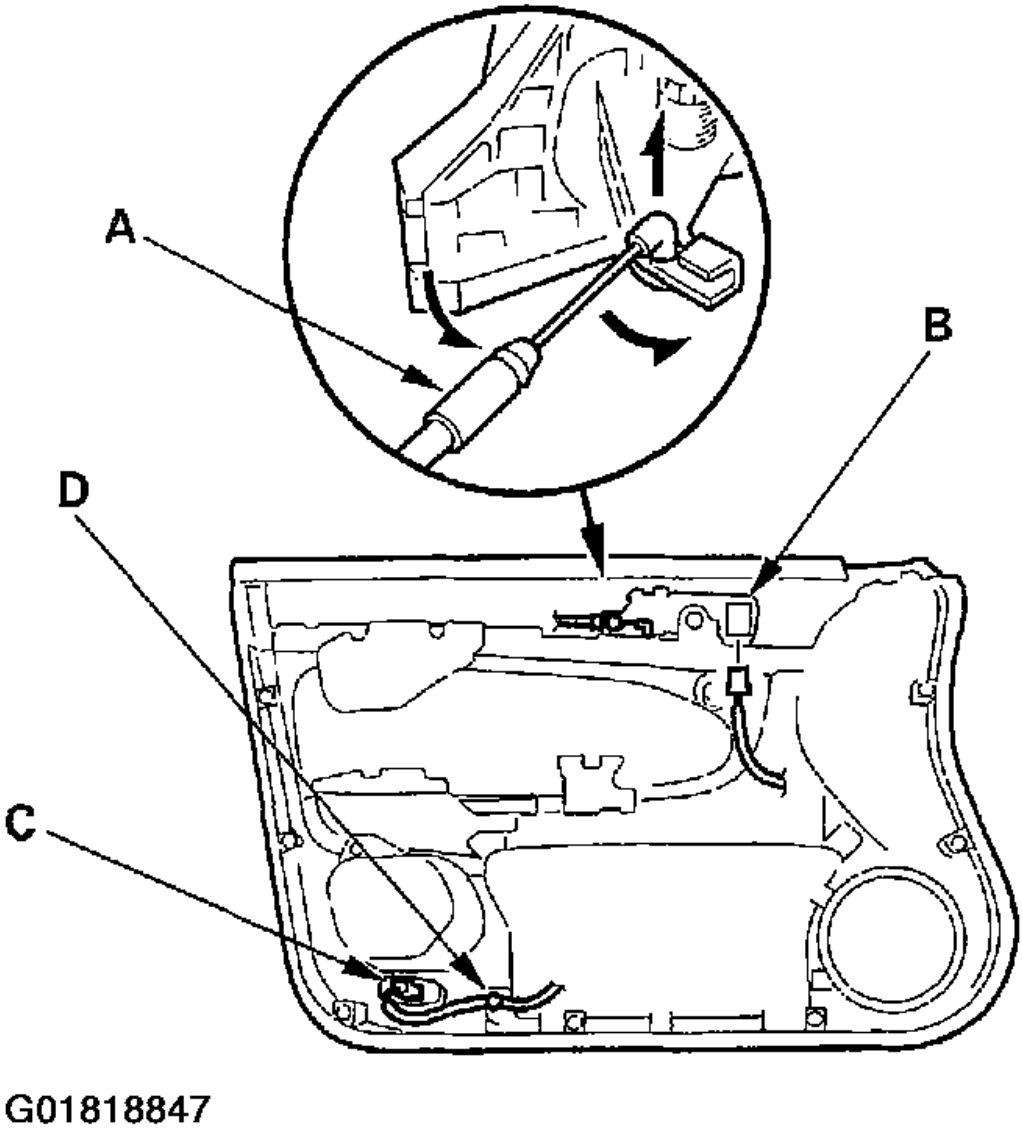

Fig. 11: Disconnecting The Inner Handle Cable, Power Door Lock Switch Connector (Passenger's Door), Courtesy Light Bulb Socket & Detaching The Harness Clip

10. If necessary, remove the door glass inner weatherstrip (A) from the door panel (B) by pulling it down.

cardiagn.com

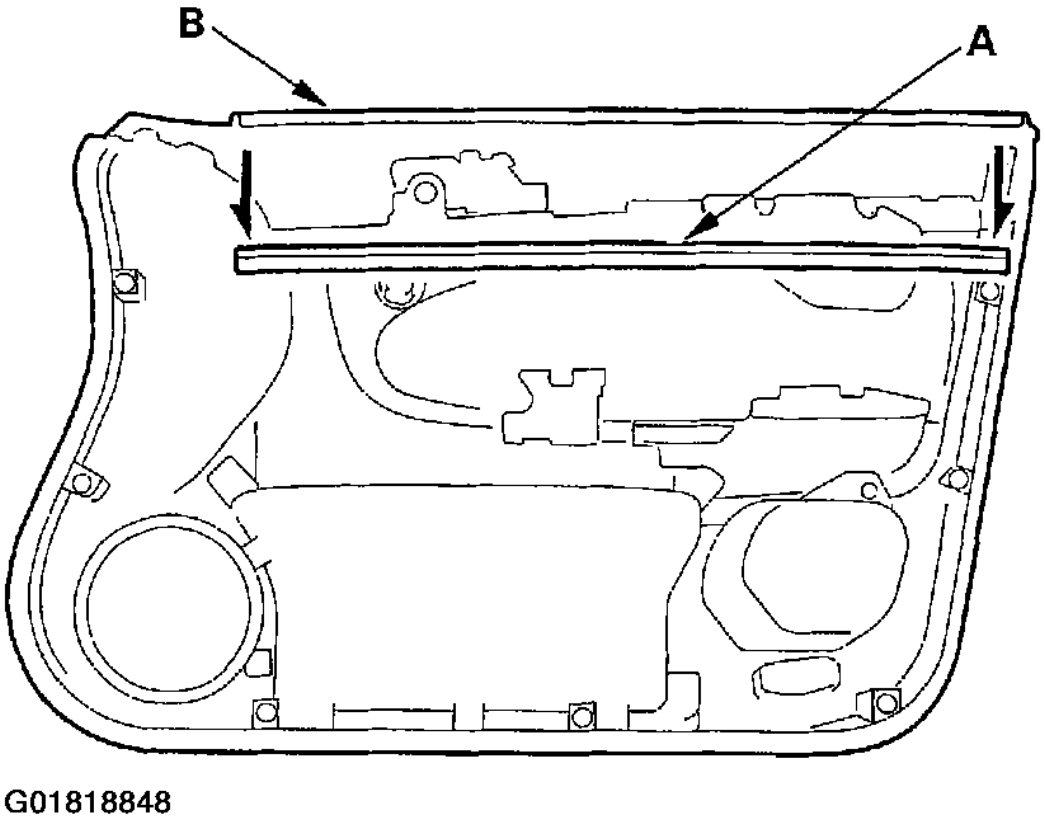

Fig. 12: Removing The Door Glass Inner Weatherstrip From The Door Panel

11. If necessary, remove the inner handle (A).
    a. Carefully peel the edge of the insulator (B) from the back of the door panel as needed.
    b. Remove the screws (C), then remove the door panel trim (D).
    c. Remove the screws (E) from the front of the door panel, then remove the inner handle.

cardiagn.com

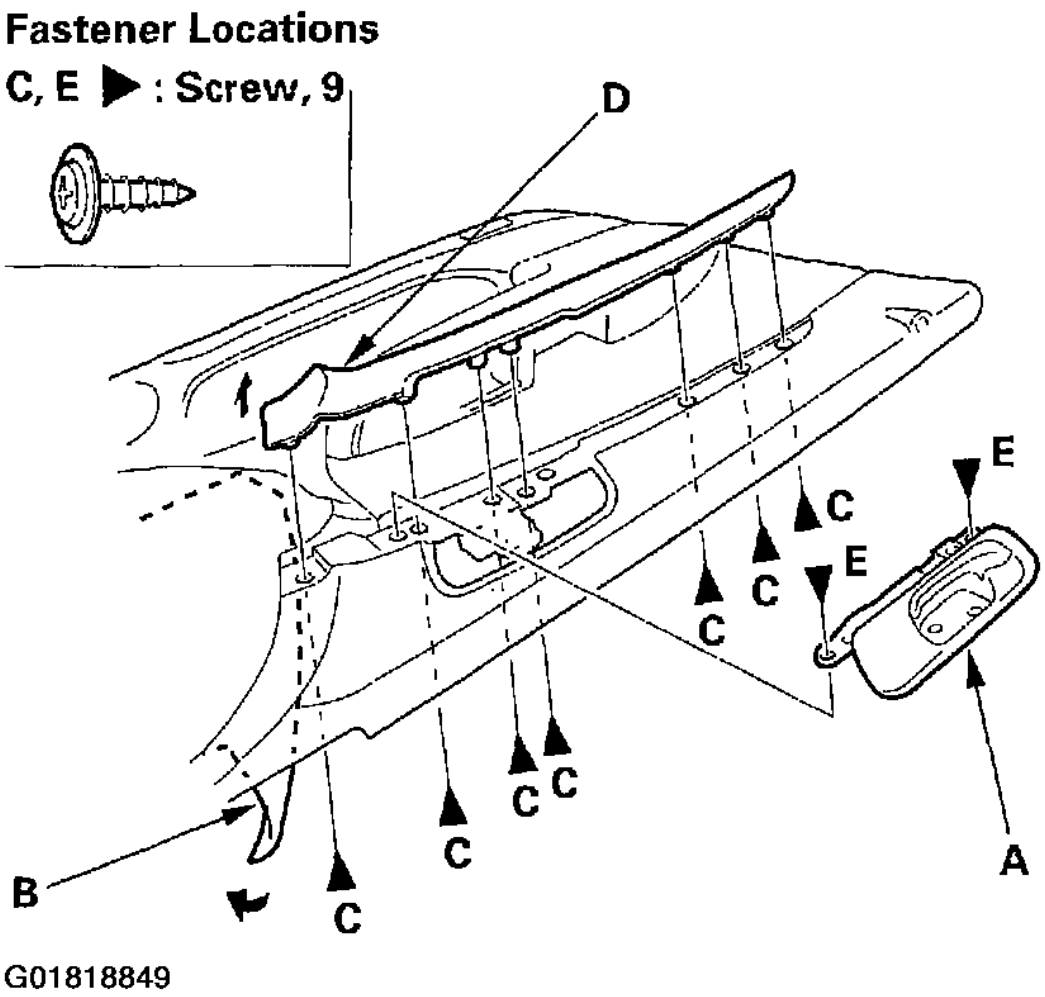

Fig. 13: Removing The Inner Handle

12. Install the door panel in the reverse order of removal, and note these items:
    - Replace any damaged clips.
    - Make sure the connectors are plugged in properly, and the cable and the bulb socket are connected properly.
    - Make sure the window and power door lock operate properly.

FRONT DOOR OUTER HANDLE REPLACEMENT

NOTE: Put on gloves to protect your hands.

1. Remove these items:

cardiagn.com

a. Door panel (see **FRONT DOOR PANEL REMOVAL/INSTALLATION**)
b. Plastic cover, as necessary (see **COMPONENT LOCATION INDEX**)

2. Raise the glass fully.
3. Remove the maintenance hole seal (A), then disconnect the outer handle rod (B).

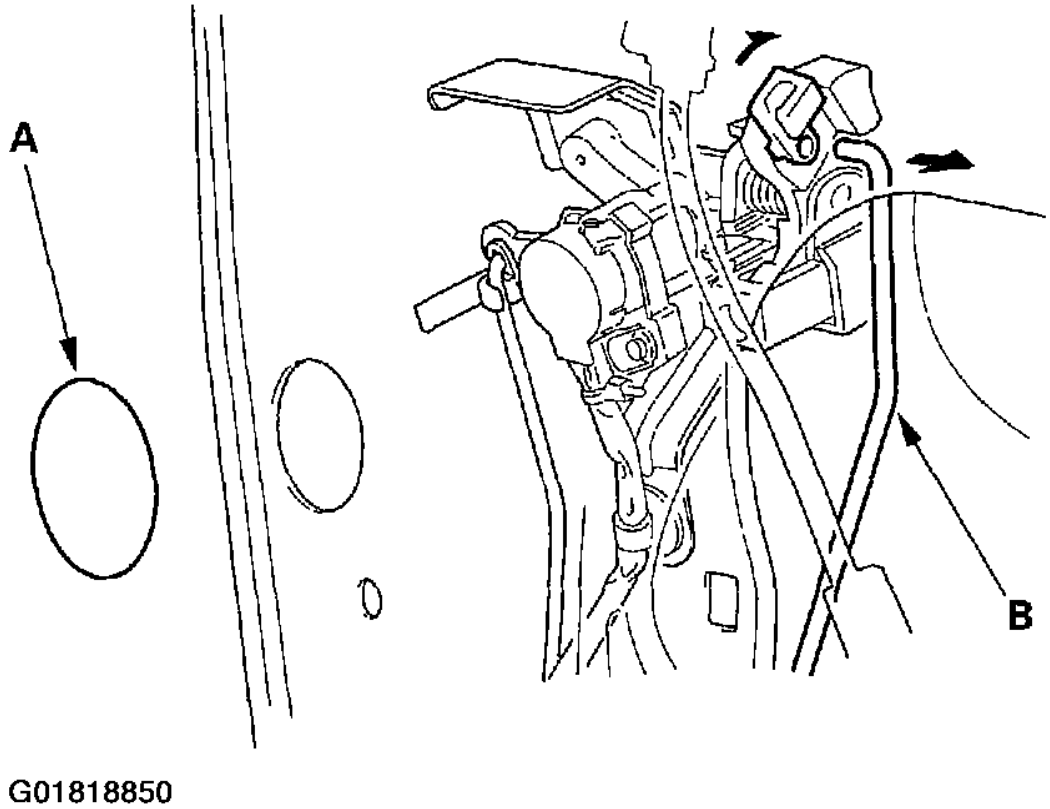

Fig. 14: Removing The Maintenance Hole Seal, Then Disconnecting The Outer Handle Rod

4. Pull the glass run channel (A) away as needed, and remove the bolt, then remove the center lower channel by pulling it downward.

cardiagn.com

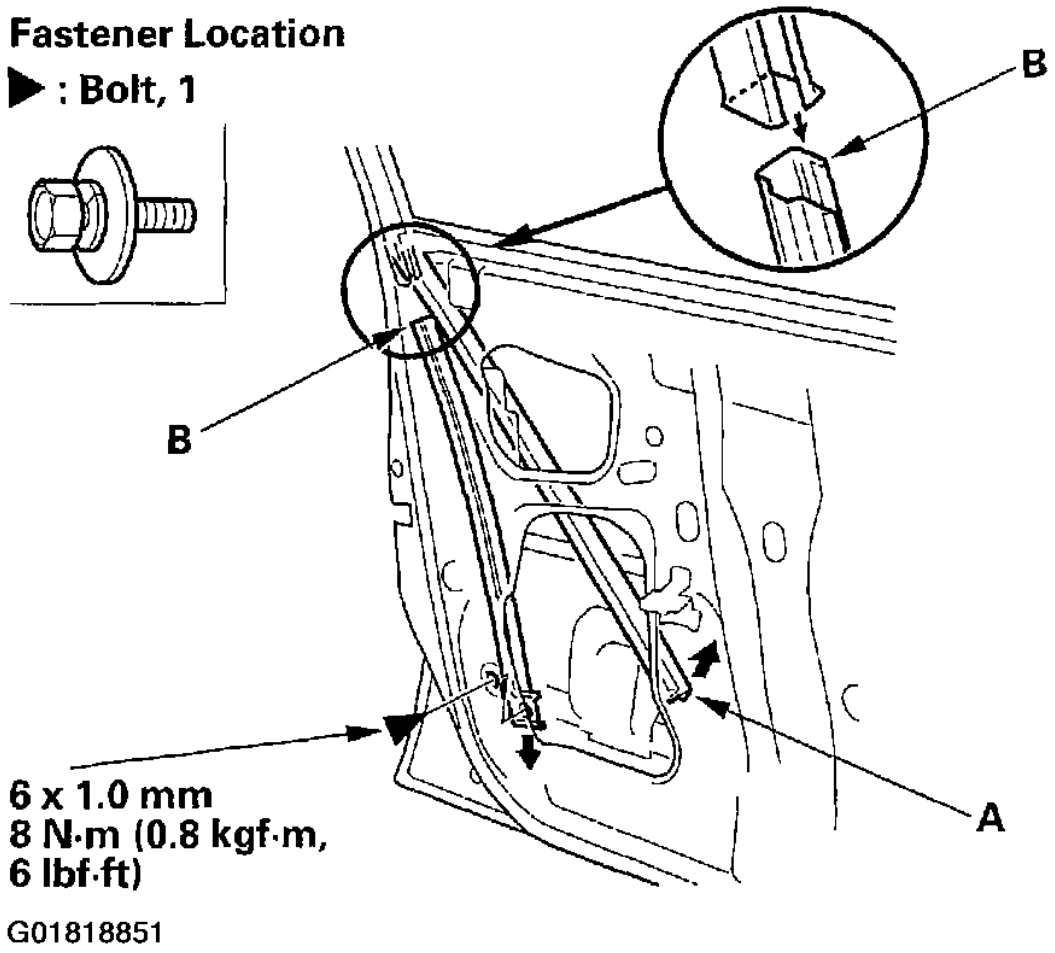

Fig. 15: Pulling The Glass Run Channel Away

5. Disconnect the cylinder rod (A) on driver's side.

cardiagn.com

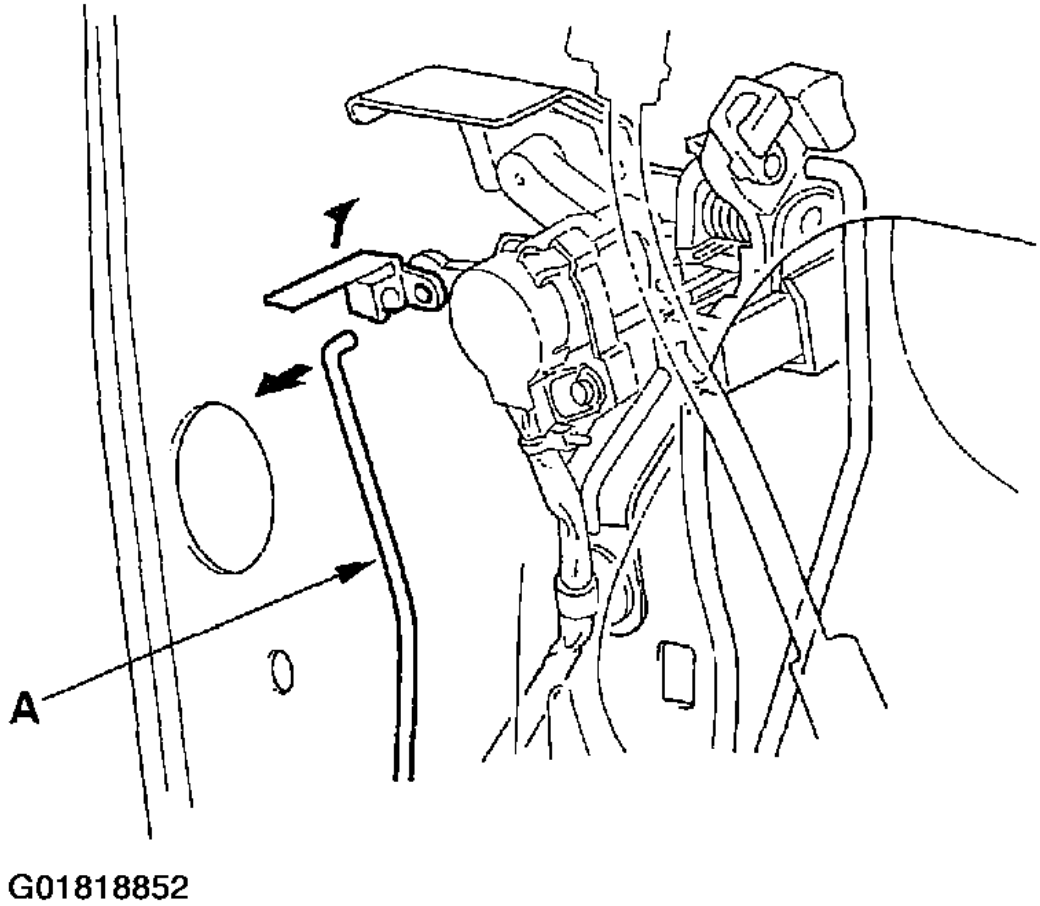

Fig. 16: Disconnecting The Cylinder Rod (Driver's Side)

6. Remove the maintenance cap (A) from the rear of the door, then loosen the screw securing the cylinder protector (B) and the outer handle (C).

cardiagn.com

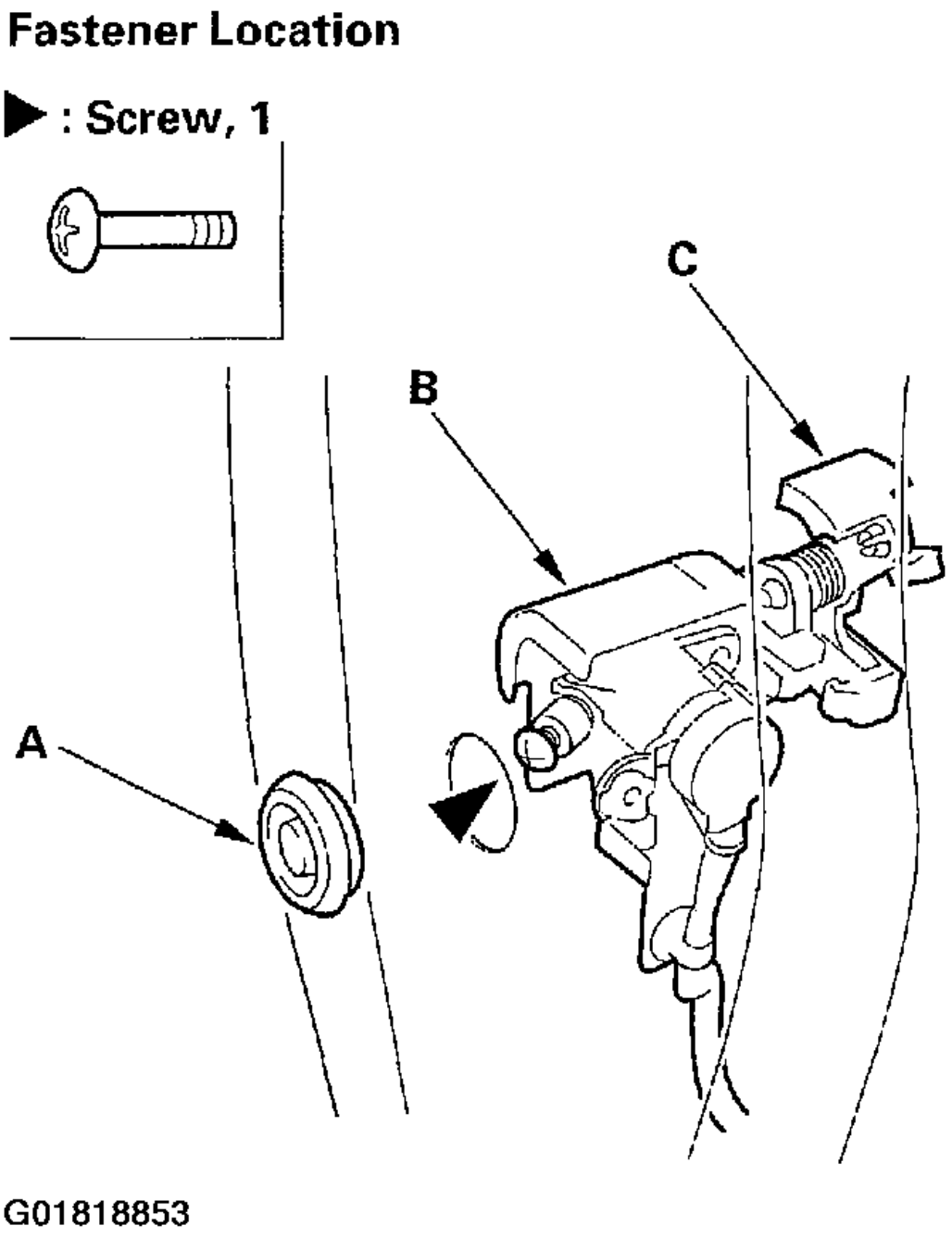

Fig. 17: Loosening The Screw Securing The Cylinder Protector And The Outer Handle

7. Remove the bolt securing the cylinder protector (A), then remove the cylinder switch, lock cylinder (driver's), and cylinder protector as an assembly.

cardiagn.com

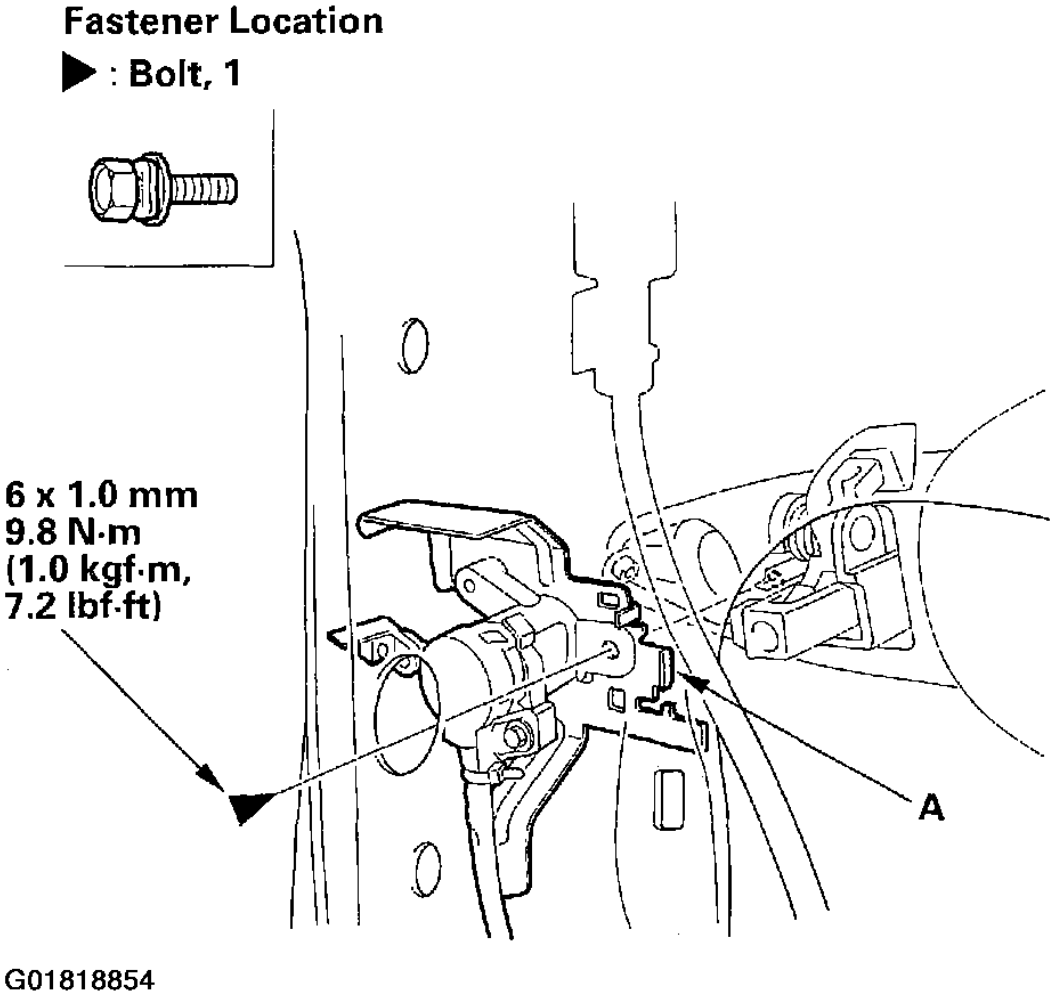

Fig. 18: Removing The Bolt Securing The Cylinder Protector, Then Removing The Cylinder Switch, Lock Cylinder & Cylinder Protector As An Assembly (Driver's)

cardiagn.com

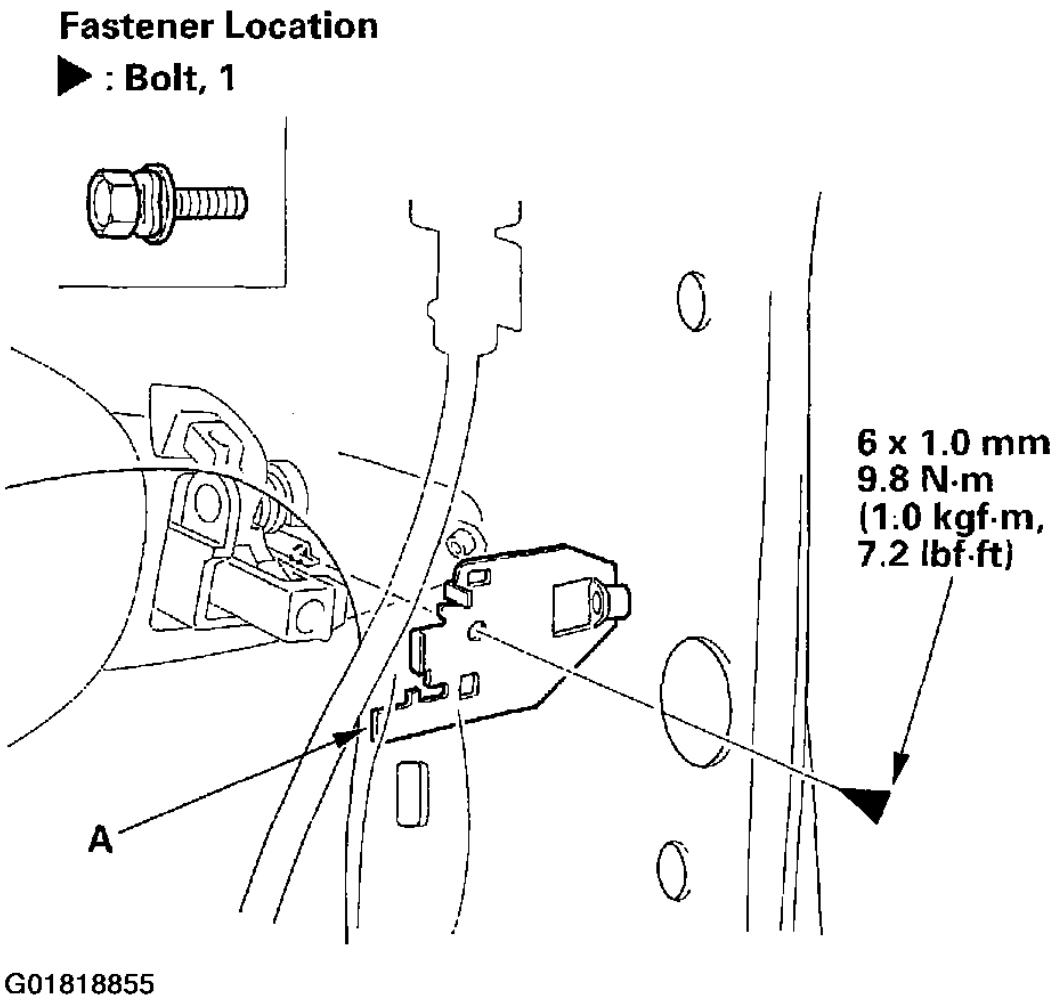

Fig. 19: Removing The Bolt Securing The Cylinder Protector, Then Removing The Cylinder Switch & Cylinder Protector As An Assembly (Passenger's)

8. Driver's: Disconnect the key cylinder switch connector (A), and detach the harness clips (B), then remove the key cylinder switch (C).

cardiagn.com

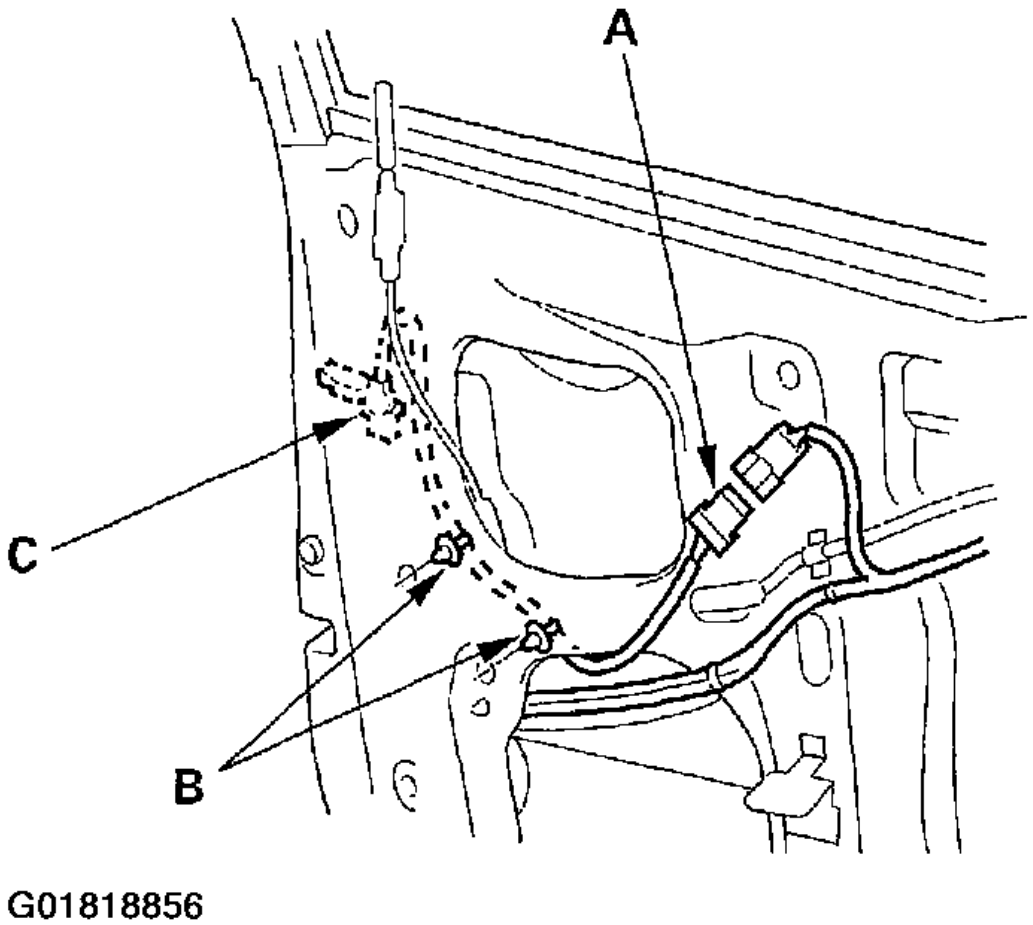

Fig. 20: Removing The Key Cylinder Switch (Driver's)

9. Driver's: Remove the screws (A, B), then separate the lock cylinder (C), key cylinder switch (D), and key cylinder protector (E).

cardiagn.com

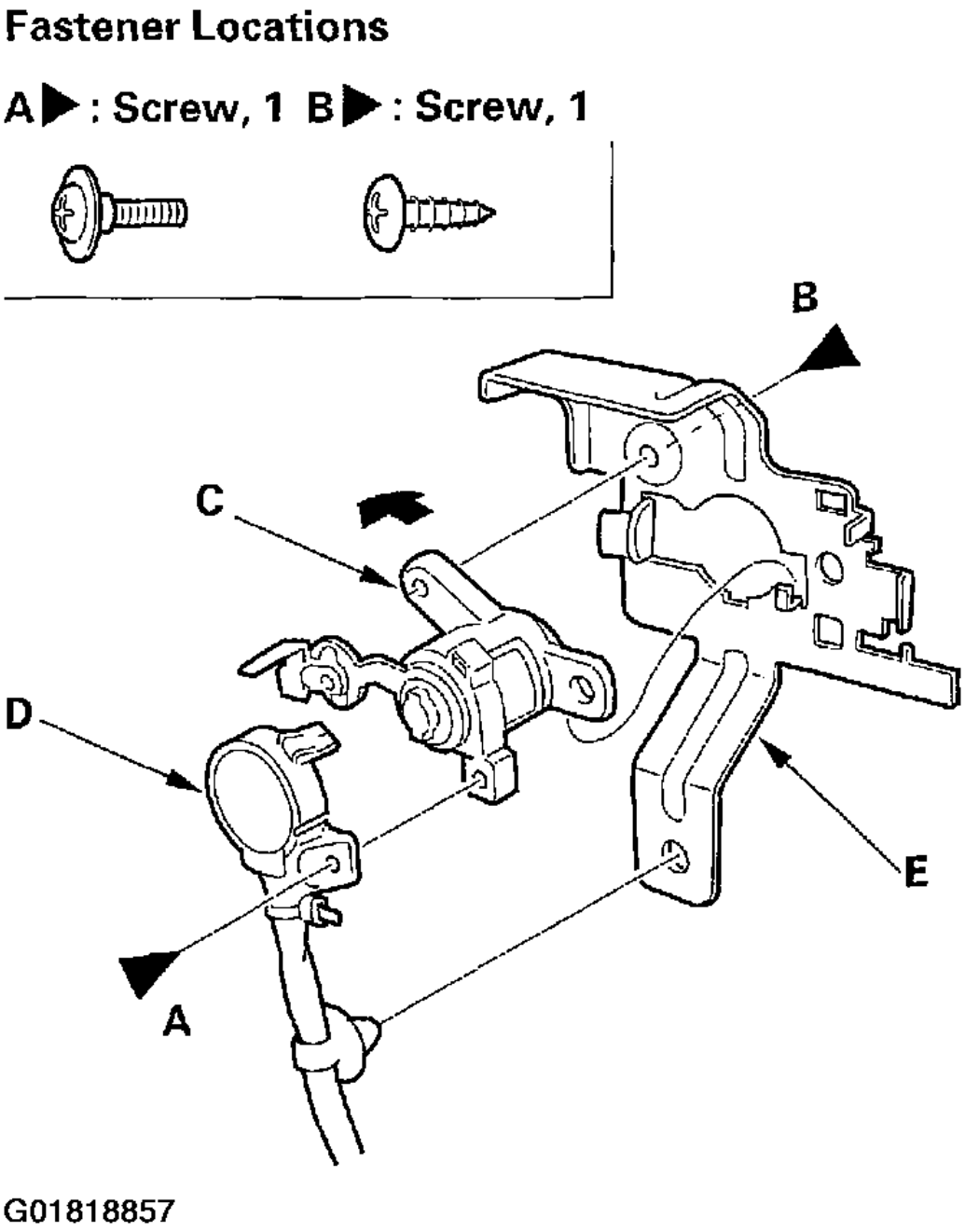

Fig. 21: Separating The Lock Cylinder, Key Cylinder Switch & Key Cylinder Protector (Driver's)

10. Remove the bolt, then remove the spacer (A).

cardiagn.com

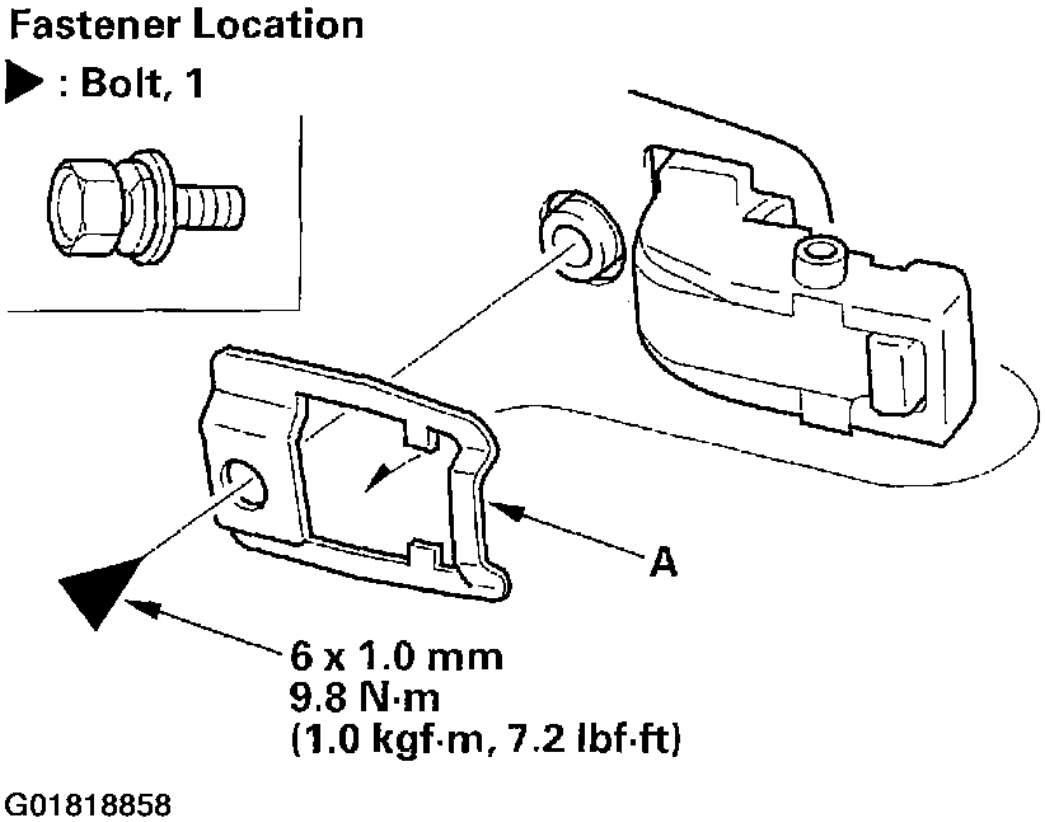

Fig. 22: Removing The Bolt, Then The Spacer

11. While pulling the outer handle (A), remove the handle from the holes in the door panel. Take care not to scratch the door.

cardiagn.com

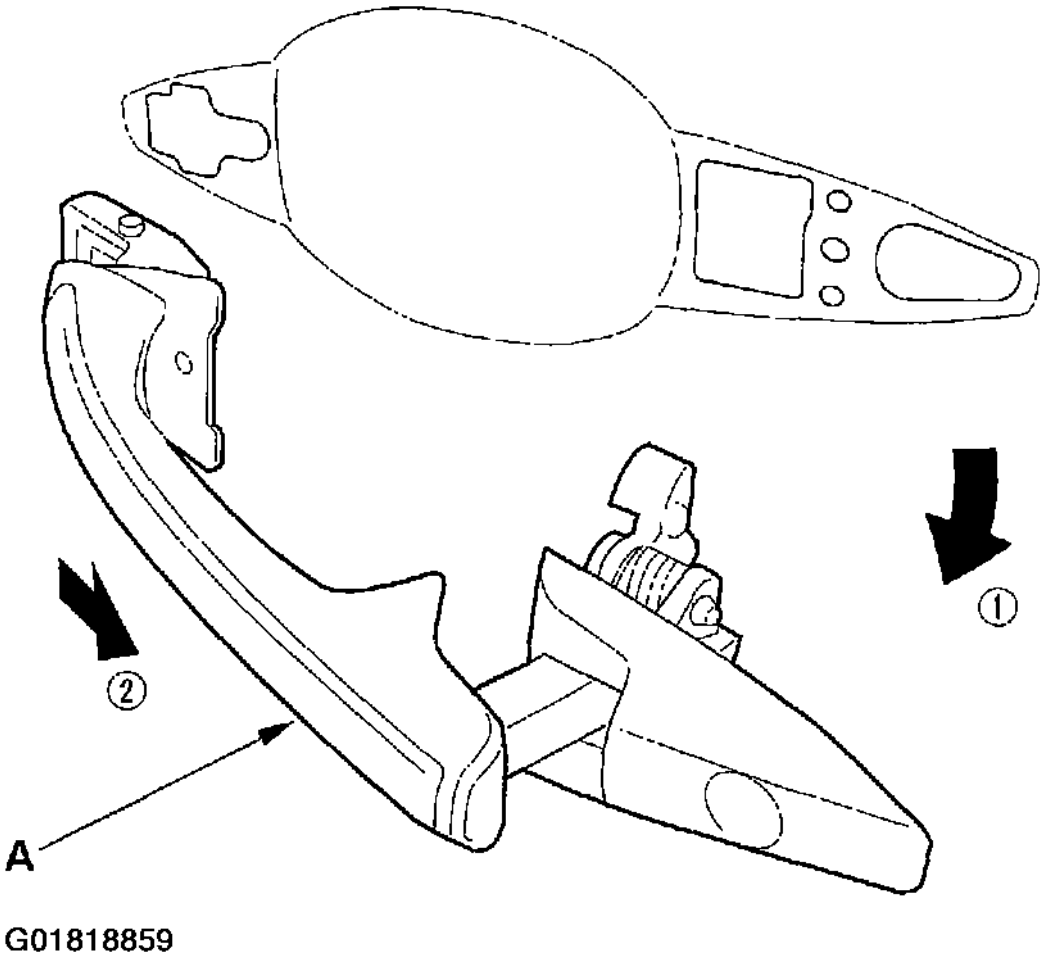

Fig. 23: Removing The Handle From The Holes In The Door Panel

12. Install the handle in the reverse order of removal, and note these items:
    - Make sure the key cylinder switch harness is routed properly.
    - Make sure the key cylinder switch connector is plugged in properly, and each rod is connected securely.
    - Make sure the door key cylinder/door locks operate properly.
    - Make sure the door handle works properly.
    - When reinstalling the door panel, make sure the plastic cover is installed properly and sealed around its outside perimeter to seal out water.

FRONT DOOR LATCH REPLACEMENT

NOTE: Put on gloves to protect your hands.

cardiagn.com

1. Raise the glass fully.
2. Remove these items:
   a. Door panel (see **FRONT DOOR PANEL REMOVAL/INSTALLATION**)
   b. Plastic cover, as necessary (see **COMPONENT LOCATION INDEX**)
   c. Center lower channel (see step 4 of **FRONT DOOR OUTER HANDLE REPLACEMENT**)
3. Disconnect the outer handle rod from the outer handle, and the cylinder rod from the lock cylinder (see step 5 of **FRONT DOOR OUTER HANDLE REPLACEMENT**).
4. Remove the screw securing the lock knob (A).

Fastener Location

▶ : Screw, 1

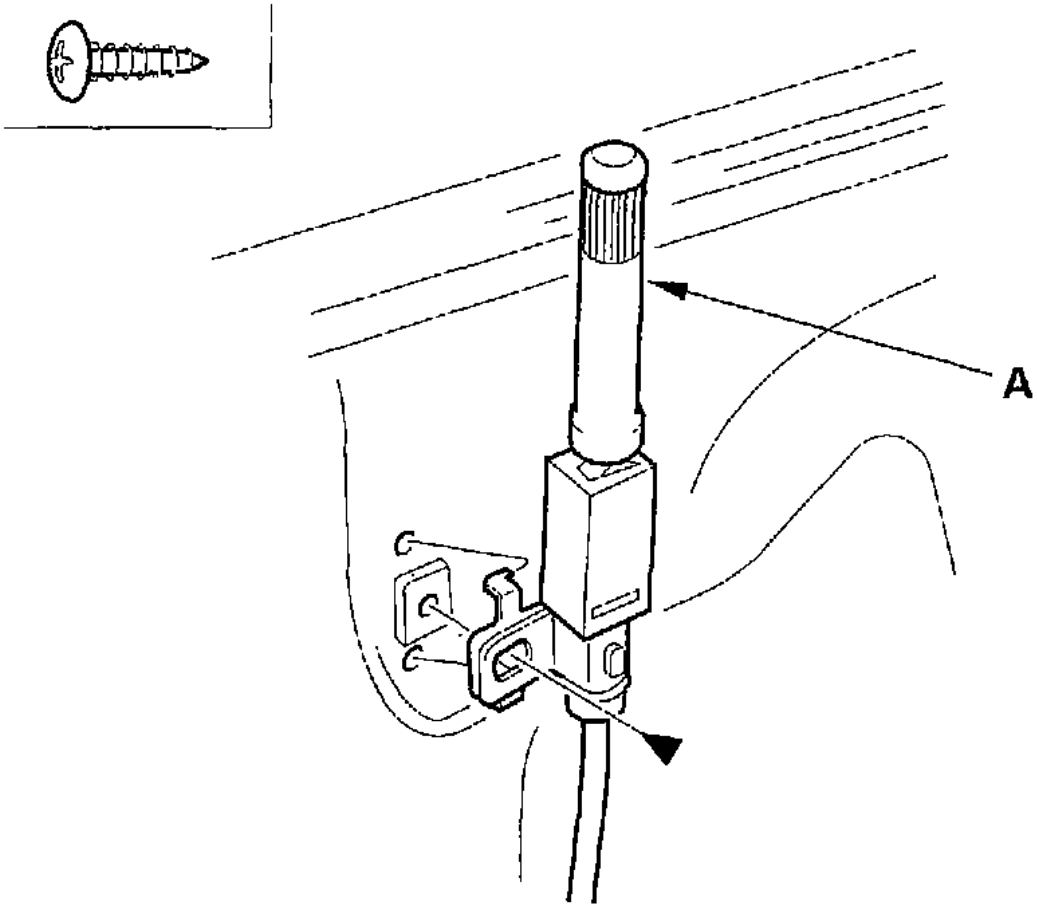

G01818860

cardiagn.com

Fig. 24: Removing The Screw Securing The Lock Knob

5. Disconnect the actuator connectors (A), and detach the inner handle cable clip (B). Remove the screws (C, D) securing the latch (E), and the lock cable protector.

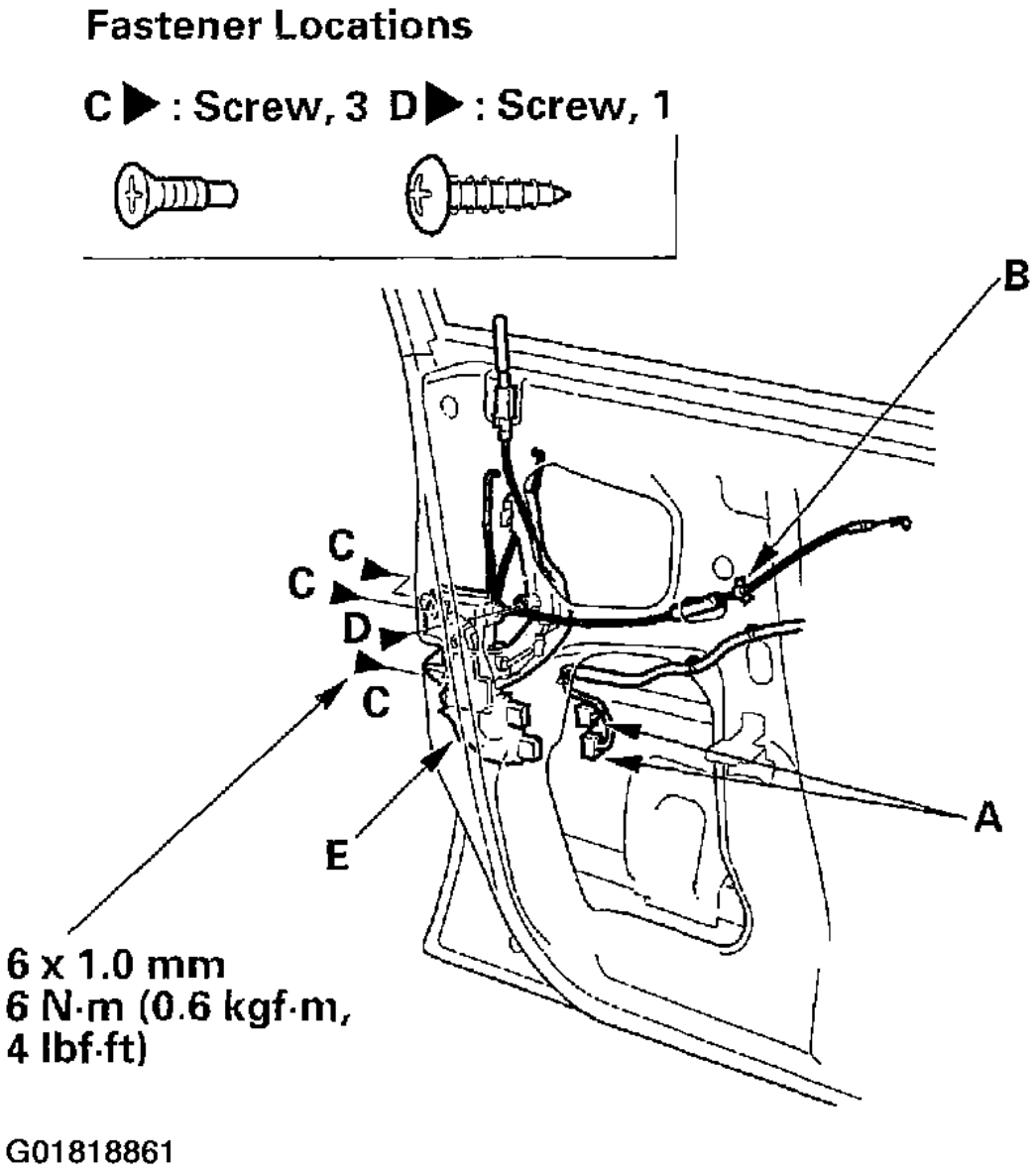

Fig. 25: Disconnecting The Actuator Connectors & Detaching The Inner Handle Cable Clip

6. Release the hooks (A) of the lock cable protector (B) from the door, then remove the latch (C) (with the protector) through the hole in the door. Take care not to bend the outer handle rod (D), cylinder rod (E),

cardiagn.com

lock cable (F), and inner handle cable (G).

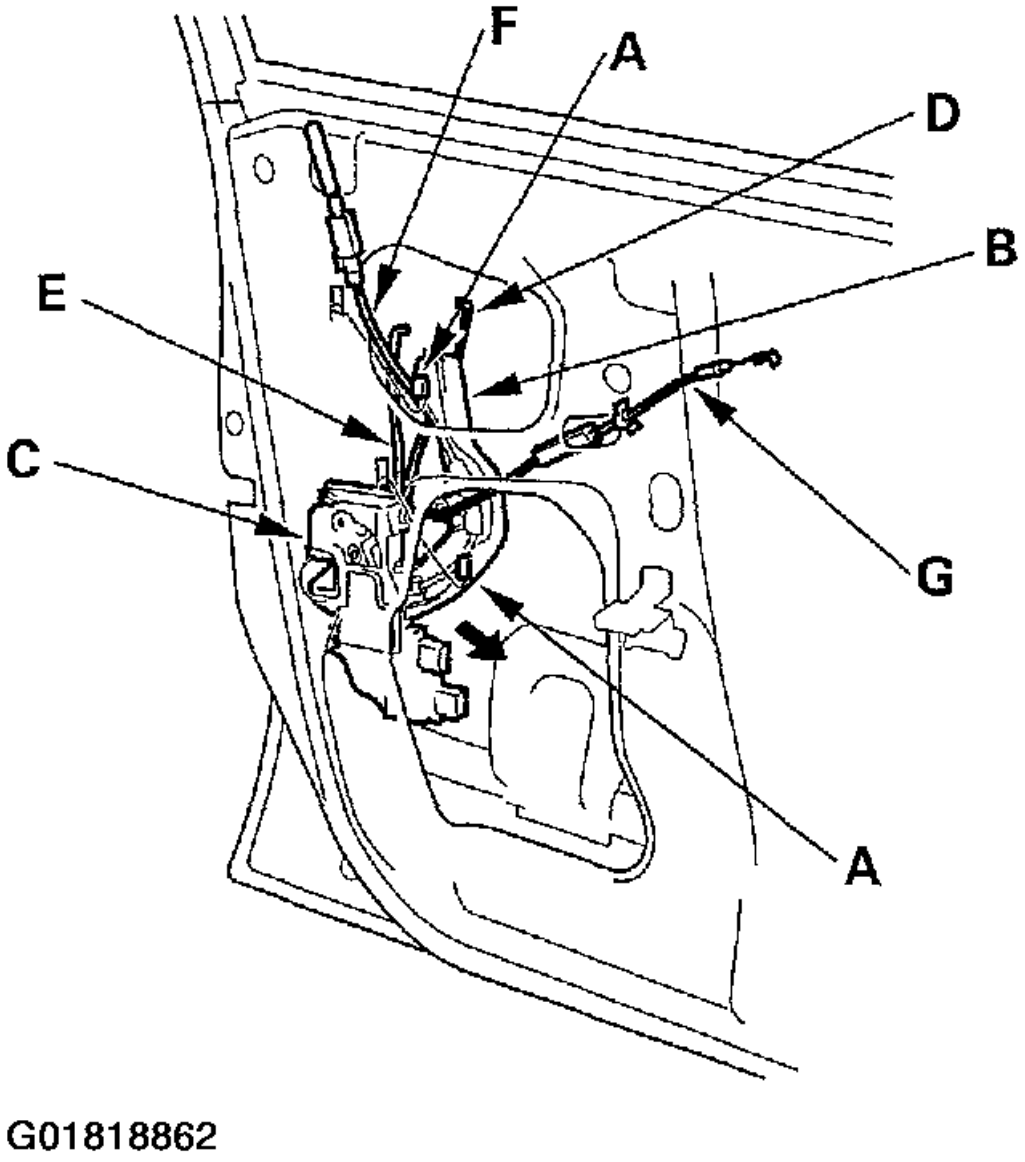

Fig. 26: Removing The Latch

7. Remove the lock cable protector (A) from the latch protector (B) by releasing the hook (C).

cardiagn.com

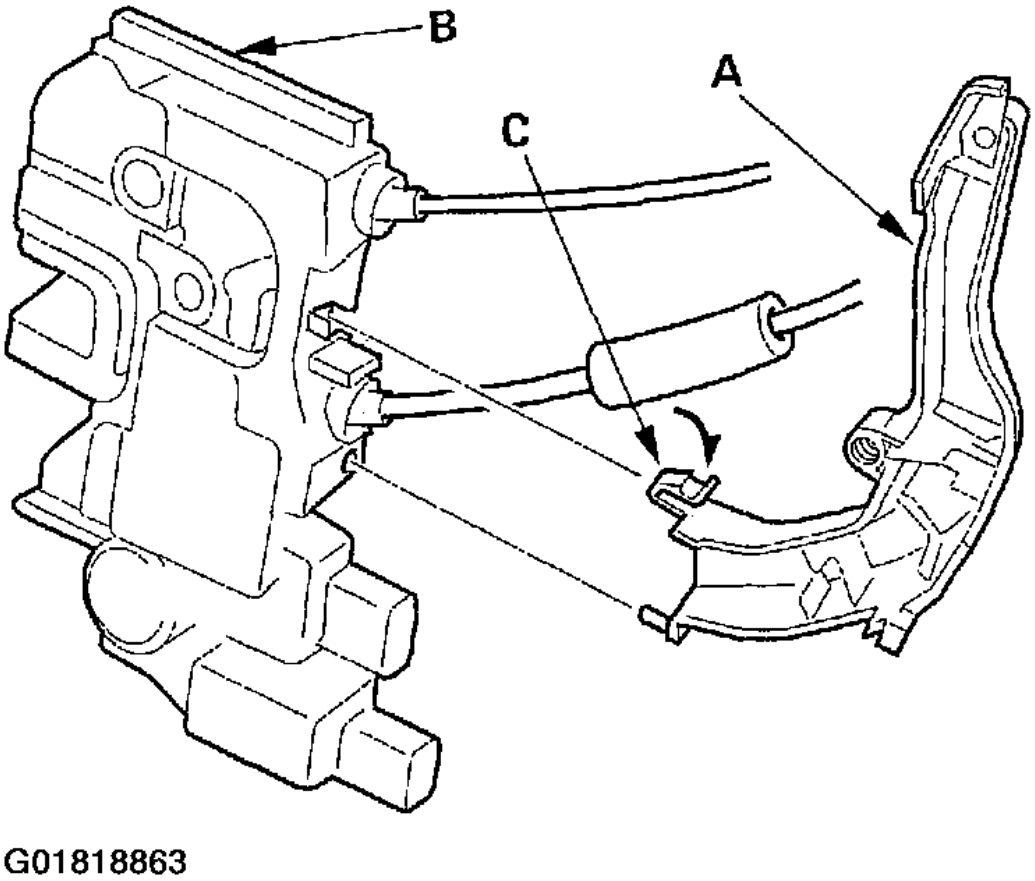

Fig. 27: Removing The Lock Cable Protector

8. Install the latch in the reverse order of removal, and note these items:
   - Make sure the actuator connectors are plugged in properly and each rod is connected securely.
   - Make sure the door locks and opens properly.
   - When reinstalling the door panel, make sure the plastic cover is installed properly and sealed around its outside perimeter to seal out water.

FRONT DOOR GLASS & REGULATOR REPLACEMENT

NOTE: Put on gloves to protect your hands.

1. Remove the door panel (see **FRONT DOOR PANEL REMOVAL/INSTALLATION**).
2. Driver's: Remove the screws, then remove the panel bracket (A).

cardiagn.com

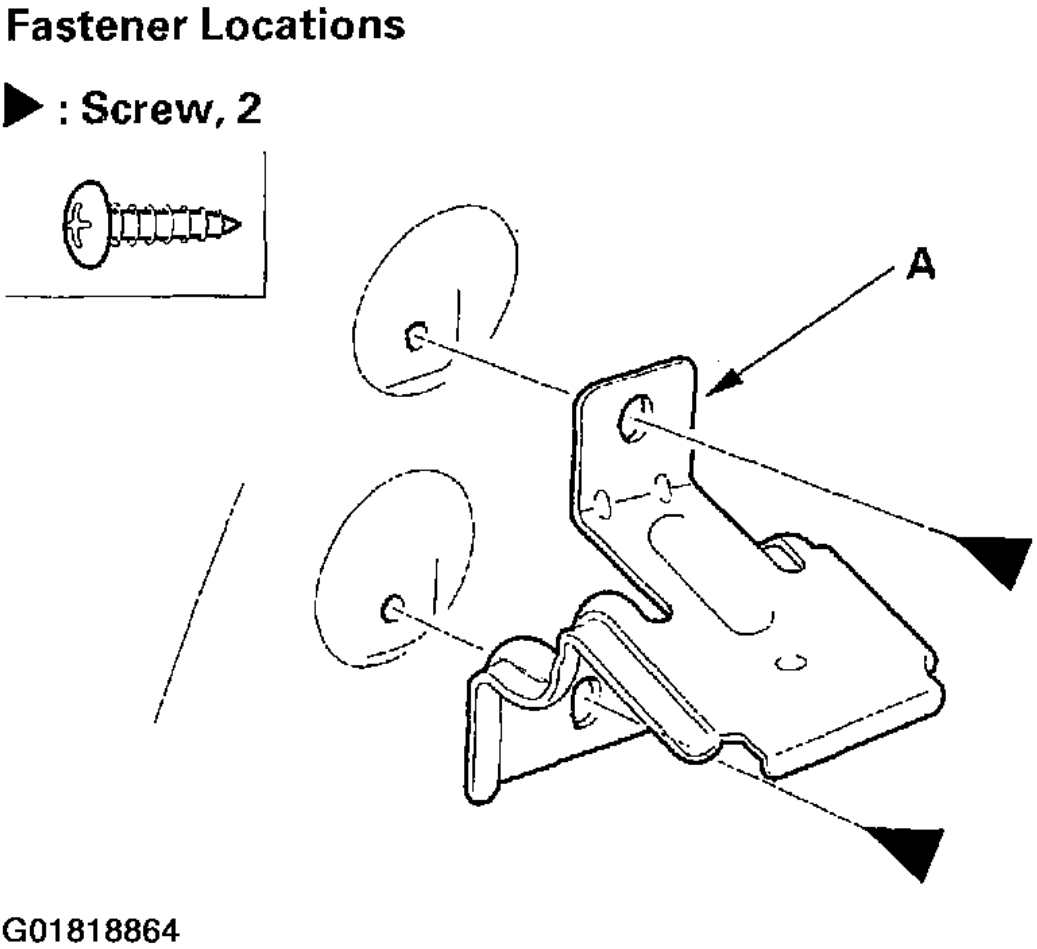

Fig. 28: Removing The Panel Bracket

3. Remove the plastic cover (see **COMPONENT LOCATION INDEX**).
4. Carefully raise the glass (A) until you can see the bolts, then remove them. Carefully pull the glass out through the window slot. Take care not to drop the glass inside the door.

cardiagn.com

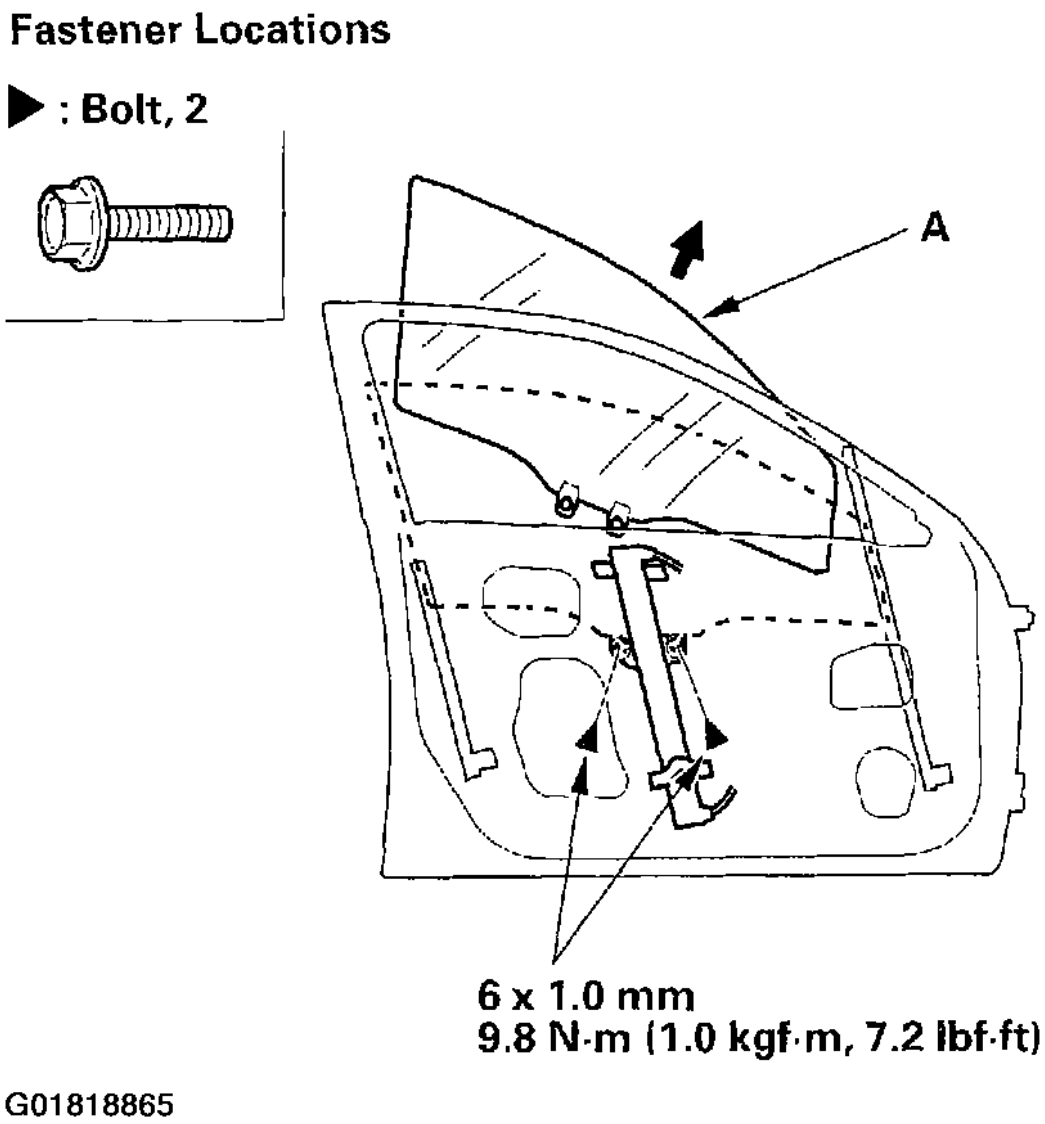

Fig. 29: Carefully Pulling The Glass Out Through The Window Slot

5. Disconnect the connector (A) from the regulator (B).

cardiagn.com

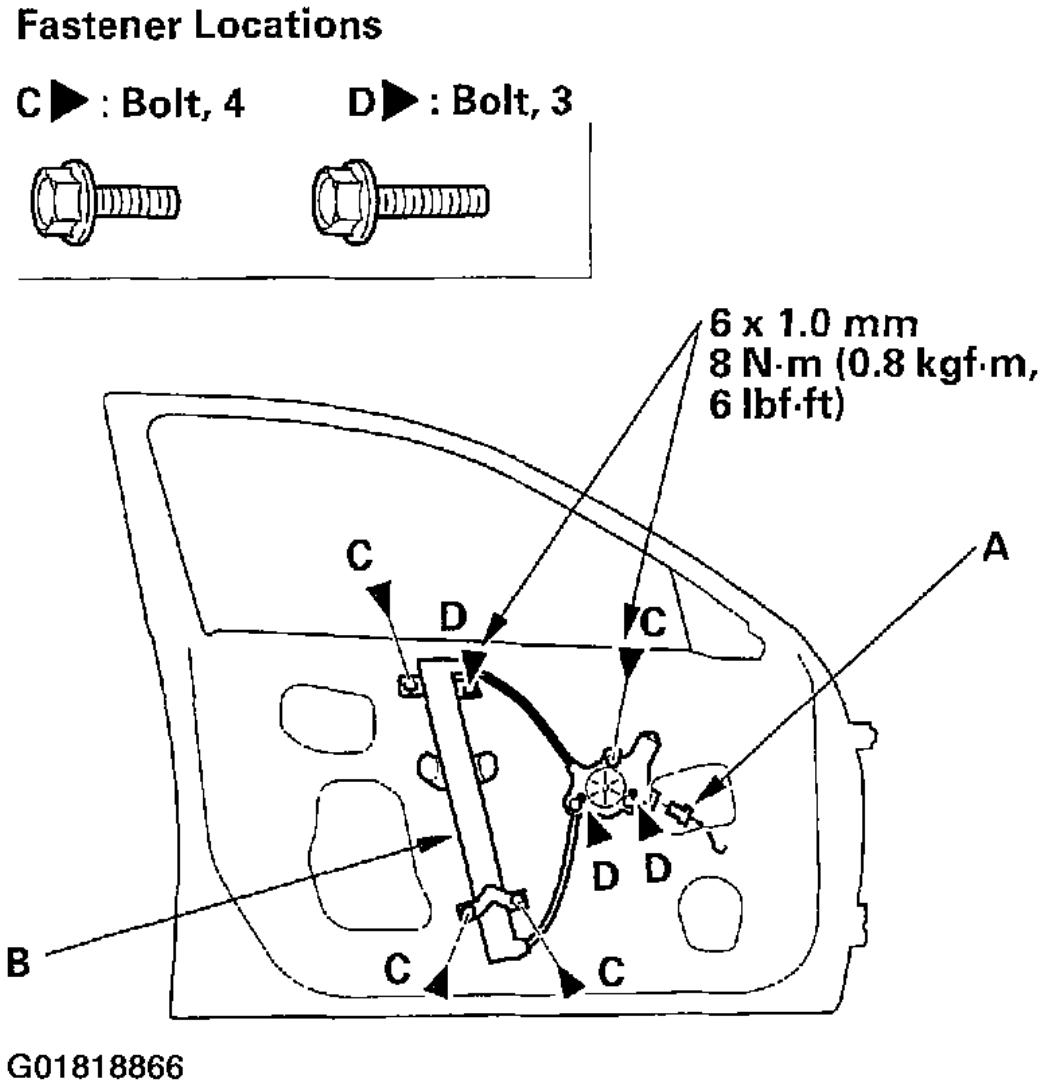

Fig. 30: Removing The Regulator

6. Remove the bolts (C), and loosen the bolts (D), then remove the regulator through the hole in the door.
7. Apply multipurpose grease to all the sliding surfaces of the regulator (A) where shown.

cardiagn.com

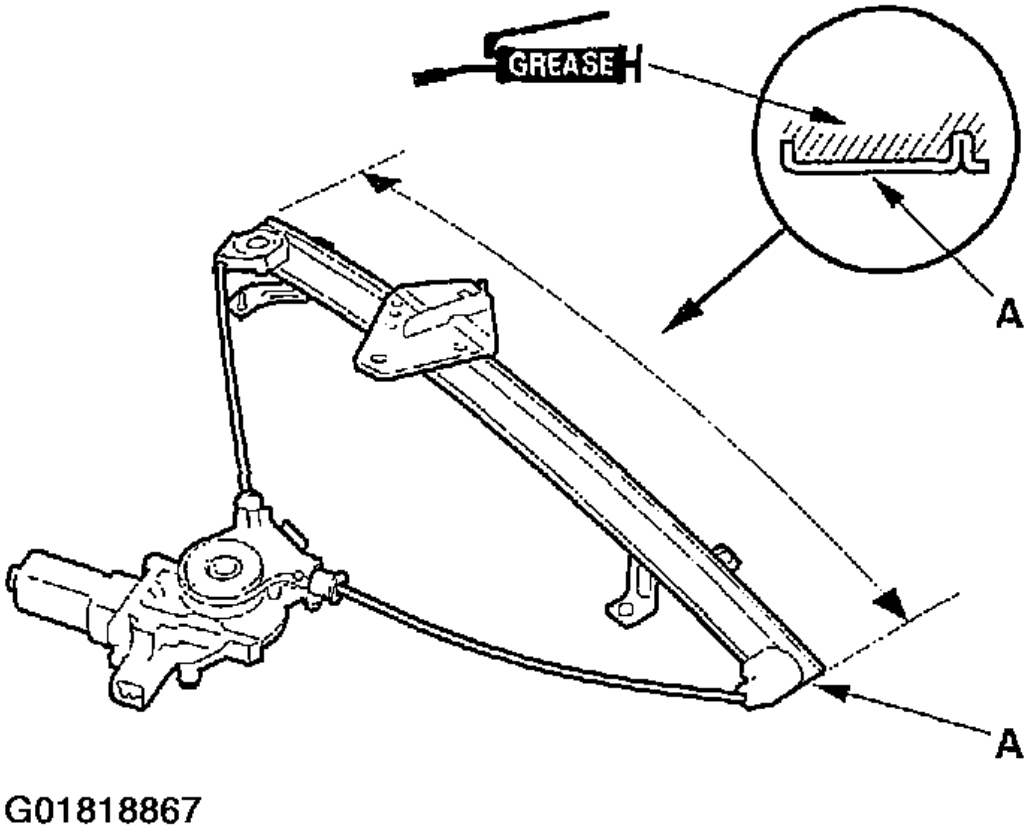

Fig. 31: Applying Multipurpose Grease To The Regulator

8. Install the glass and regulator in the reverse order of removal, and note these items:
   - Roll the glass up and down to see if it moves freely without binding.
   - Make sure that there is no clearance between the glass and glass run channel when the glass is closed.
   - Adjust the position of the glass as necessary (see **FRONT & REAR DOOR GLASS ADJUSTMENT**).
   - Check for water leaks (see step 7 of **FRONT & REAR DOOR GLASS ADJUSTMENT**).
   - Test-drive and check for wind noise and rattles.
   - When reinstalling the door panel, make sure the plastic cover is installed properly and sealed around its outside perimeter to seal out water.
   - Make sure the power door locks, windows and power mirror operate properly.

FRONT DOOR GLASS OUTER WEATHERSTRIP REPLACEMENT

cardiagn.com

NOTE:

- **Once you remove the door glass outer weatherstrip, replace it with a new one because it will bend during removal.**
- **Put on gloves to protect your hands.**
- **Take care not to scratch the door.**
- **When prying with a flat-tip screwdriver, wrap it with protective tape to prevent damage.**

1. Remove these items:
   a. Door panel (see **FRONT DOOR PANEL REMOVAL/INSTALLATION**).
   b. Power mirror (see **POWER MIRROR REPLACEMENT**).
2. Remove the screw from the rear edge of the door.

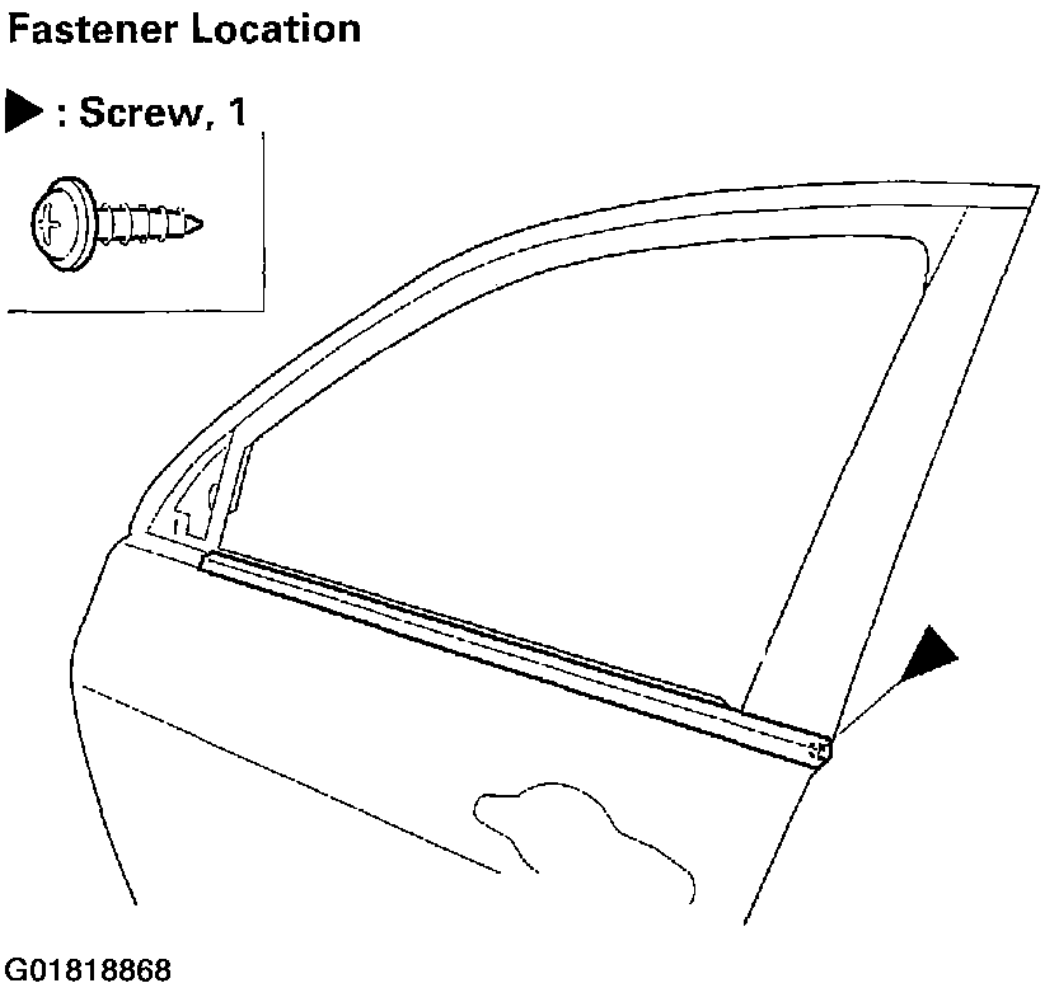

Fig. 32: Removing The Screw From The Rear Edge Of The Door

cardiagn.com

3. Starting at the rear, pull the door glass outer weatherstrip (A) up at each portion where the inner molding (B) catches the inside edge of the window slot, then remove the weatherstrip.

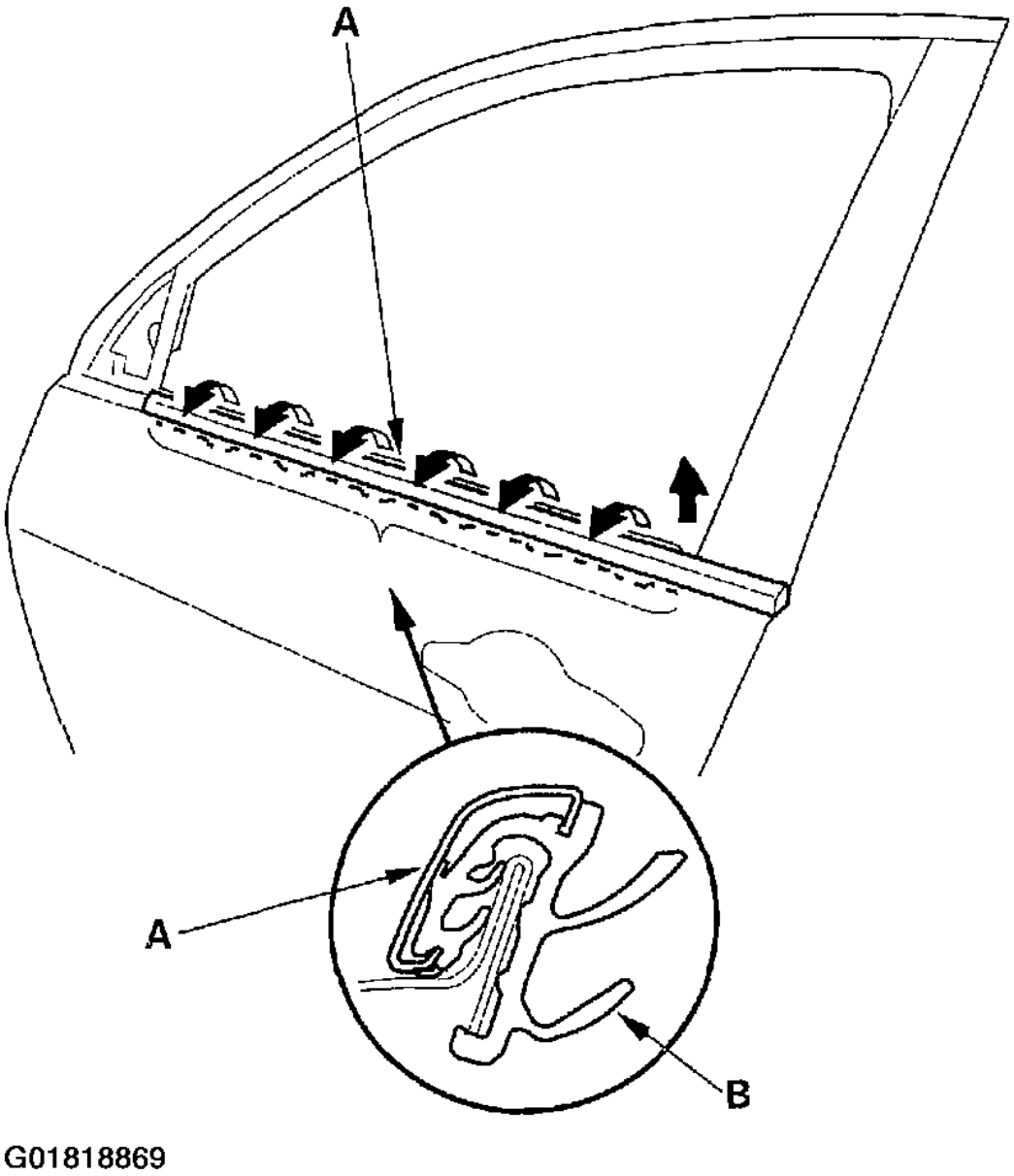

Fig. 33: Removing The Weatherstrip

4. Install a new weatherstrip in the reverse order of removal.

cardiagn.com

FRONT DOOR OUTER MOLDING REPLACEMENT

NOTE:

- **Once you remove the door outer molding, replace it with a new one because it will bend during removal.**
- **Put on gloves to protect your hands.**
- **Take care not to scratch the door.**
- **When prying with a flat-tip screwdriver, wrap it with protective tape to prevent damage.**

1. Remove the power mirror (see **POWER MIRROR REPLACEMENT**). To prevent scratching the power mirror and door, wrap the power mirror with a shop towel. Disconnecting the power mirror connector is not required.
2. Remove the door outer molding (A):
   a. Pry the rear clip with a flat-tip screwdriver.
   b. While removing the upper edge of the door outer molding from the edge of the sash, cut the double-sided adhesive tapes (B) with a utility knife, then remove the molding.

cardiagn.com

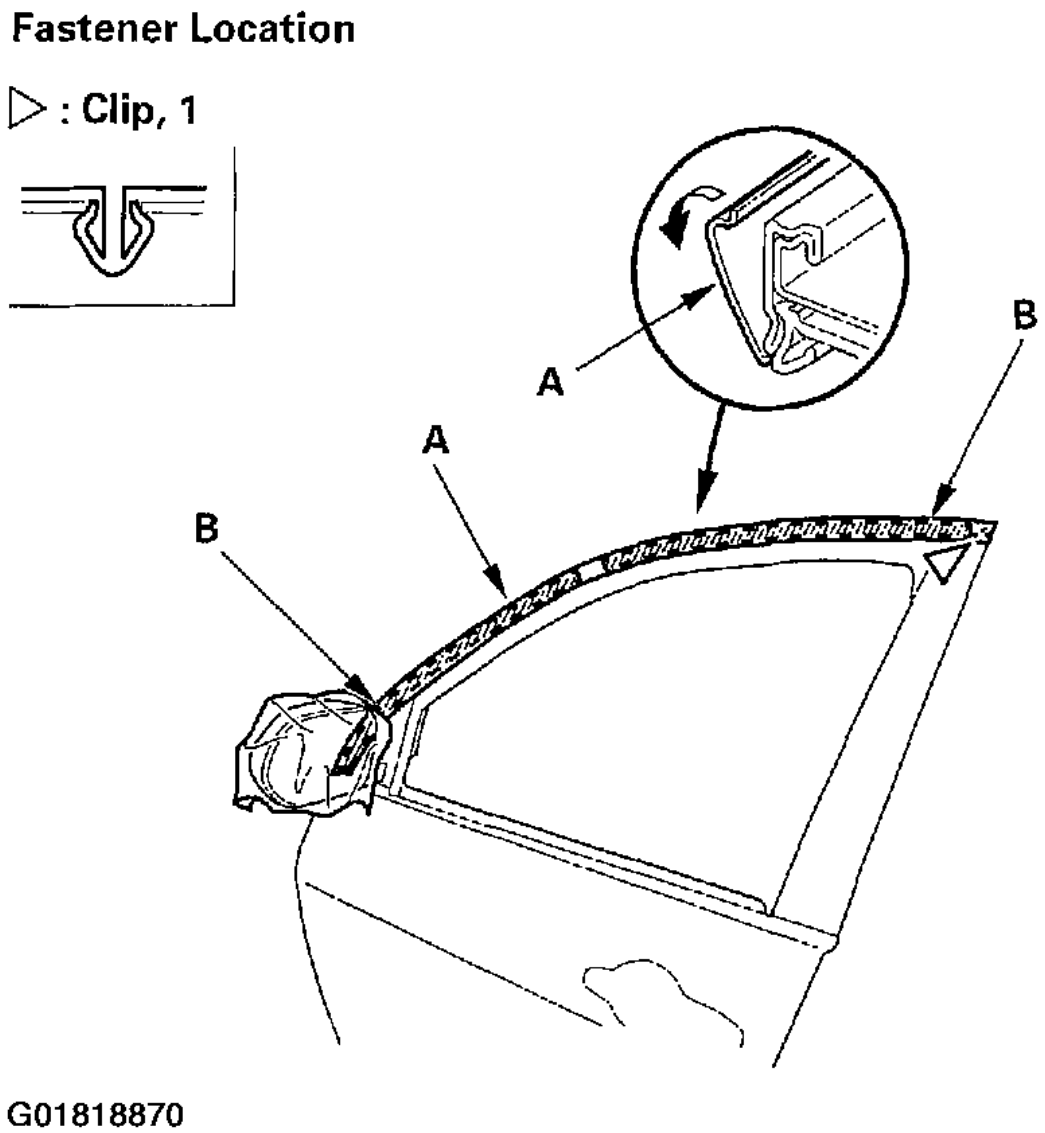

Fig. 34: Removing The Upper Edge Of The Door Outer Molding

3. Scrape off the remaining double-sided adhesive tape from the sash, then clean the sash surface with a sponge dampened in alcohol.
4. Install a new door outer molding in the reverse order of removal, and note these items:
   - Push the clip and the adhesive portions into place securely.
   - Make sure the upper and lower sides of the molding are catching the edges of the sash properly.

FRONT DOOR WEATHERSTRIP REPLACEMENT

cardiagn.com

NOTE:

- **Take care not to scratch the door.**
- **Use a clip remover to remove the clips.**

1. At the A-pillar, remove the door stop mounting bolt (A).

cardiagn.com

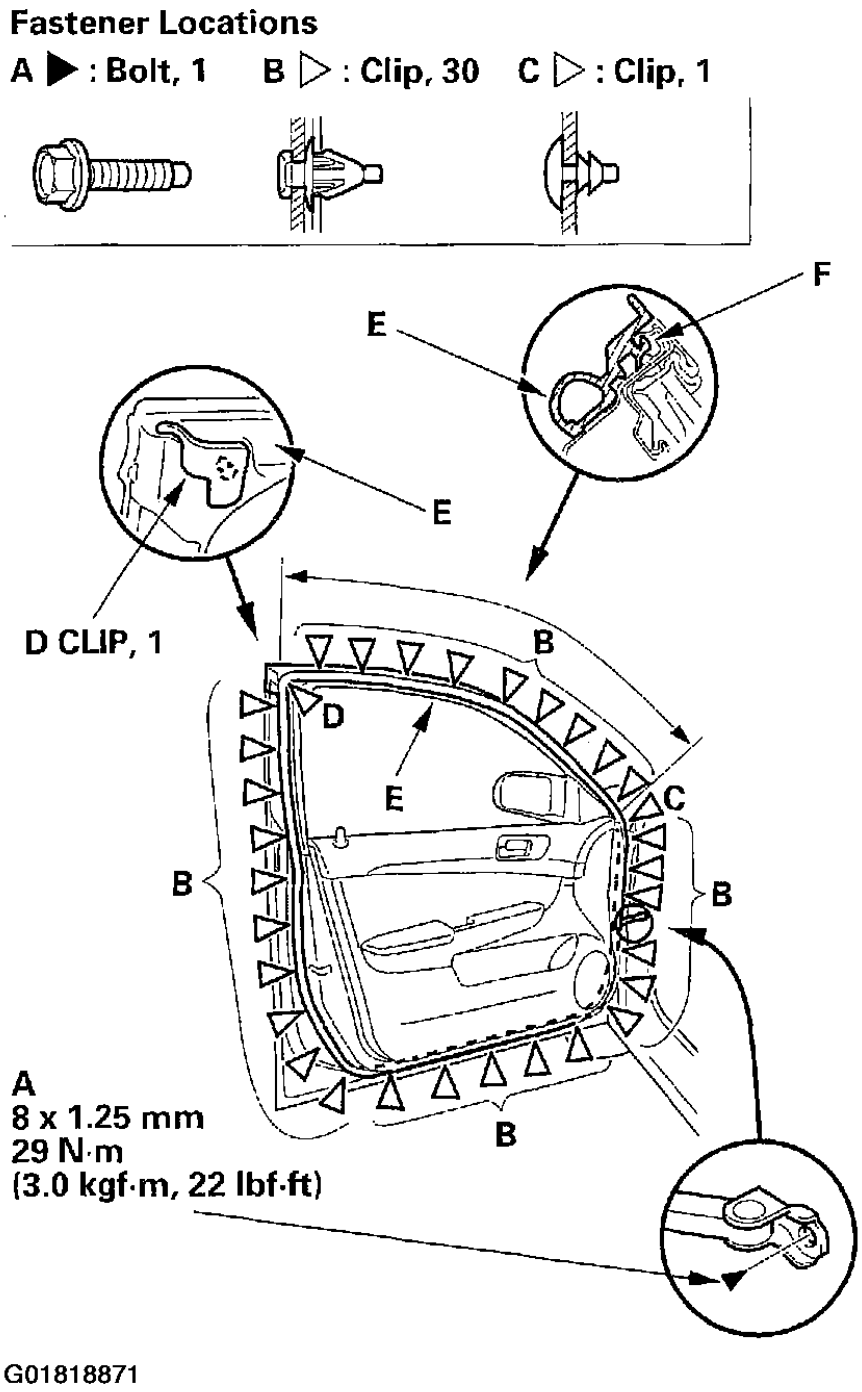

Fig. 35: Removing The Door Weatherstrip

2. Detach the clips (B, C, D), then remove the door weatherstrip (E).
3. Install the weatherstrip in the reverse order of removal and note these items:

cardiagn.com

- Replace any damaged clips.
- Make sure the weatherstrip is installed in the holder (F) securely.
- Apply liquid thread lock to door stop mounting bolt before installation.
- Check for water leaks (see step 7 of **FRONT & REAR DOOR GLASS ADJUSTMENT**).

REAR DOOR PANEL REMOVAL/INSTALLATION

Special Tools Required: Trim pad remover, Snap-on A 177A or equivalent, commercially available.

1. Lower the glass fully.
2. Using a flat-tip screwdriver wrapped with protective tape, push on the rear hook (A) and pivot the cover (B) on the front hook (C), then remove the cover and the screws securing the inner handle (D).

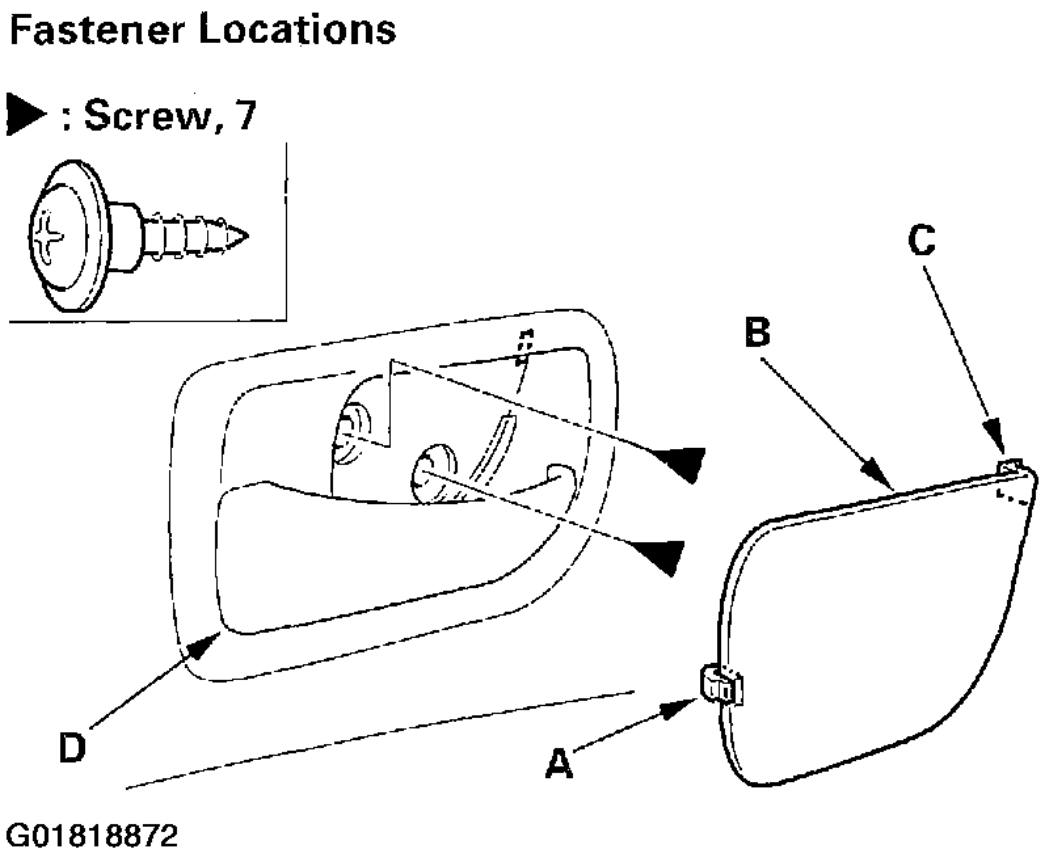

Fig. 36: Removing The Cover And The Screws Securing The Inner Handle

3. Remove the switch panel (A).
   a. Pry up on the front edge of the switch panel with a flat-tip screwdriver wrapped with protective

cardiagn.com

tape to release the front clip.

b. Pull out along the edge of the panel to release the hooks (B) and clip.
c. Disconnect the power window switch connector (C).

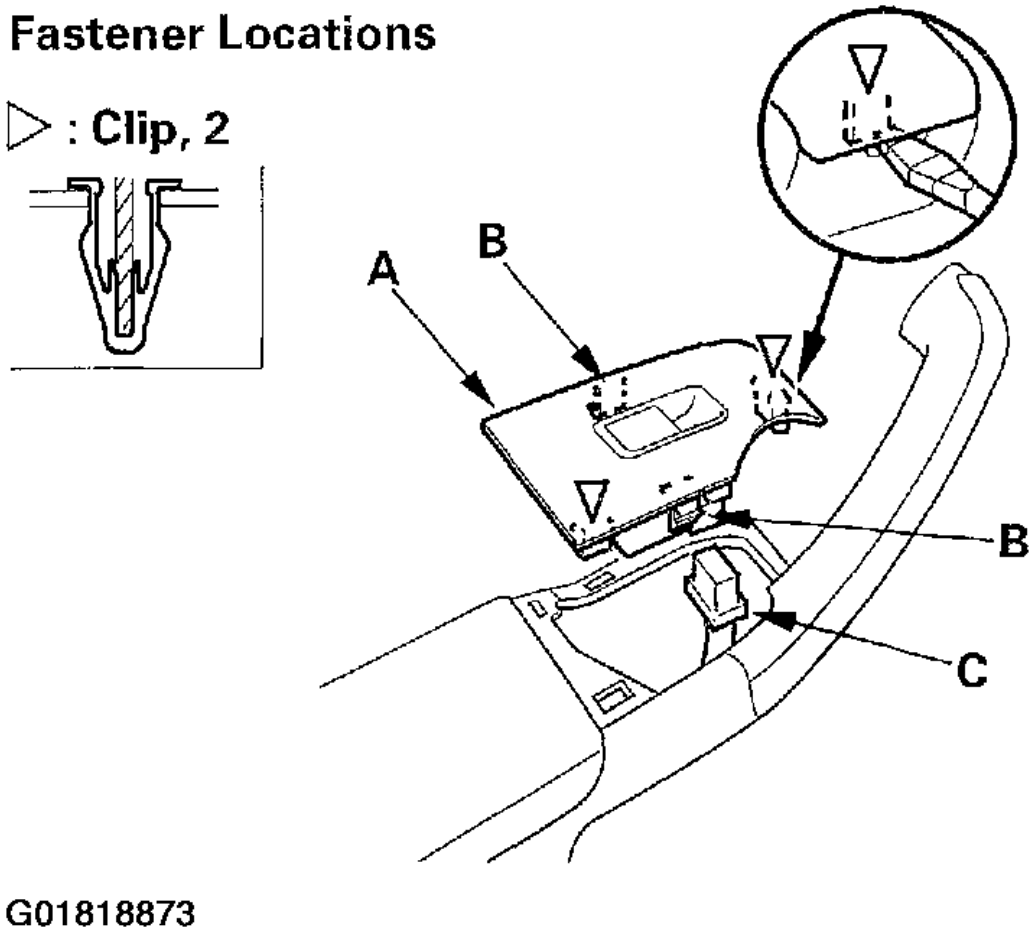

Fig. 37: Removing The Switch Panel

4. Pry out the front lower edge of the grip cover (A) at a gap between the cover and the grip base (B) to release the hooks (C), then pull out the cover to release the upper hooks (D) and remove the cover.

cardiagn.com

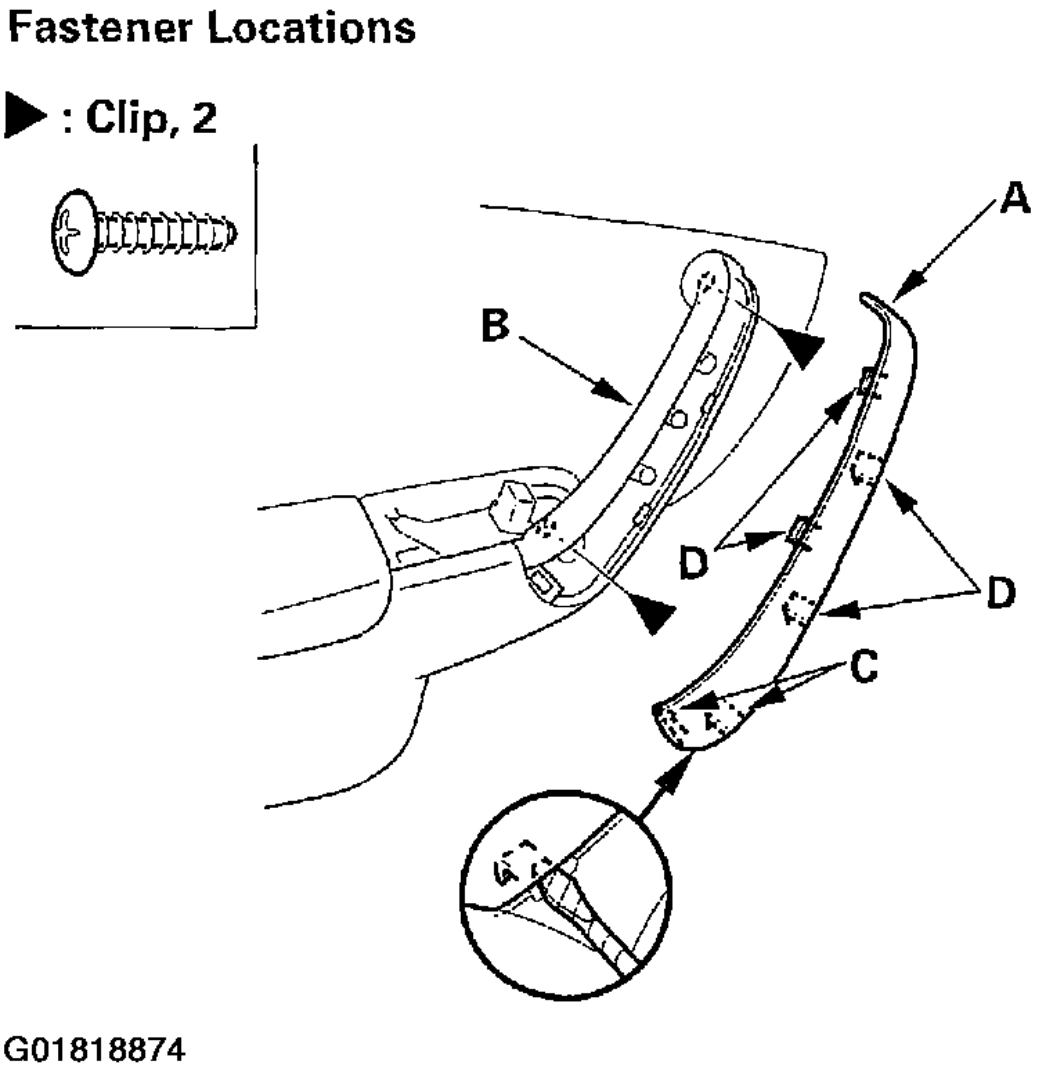

Fig. 38: Removing The Cover

5. Remove the screws from the grip base.
6. Remove the door panel (A) with as little bending as possible to avoid creasing or breaking it.
   a. Start at the bottom edge of the door panel, release the clips (B) that are just above the marks (C) on the edge of the panel with a commercially available trim pad remover (D).
   b. Detach the upper clips (B, E).
   c. Starting at the rear, pull the door panel upward, then release the lock knob (F).

cardiagn.com

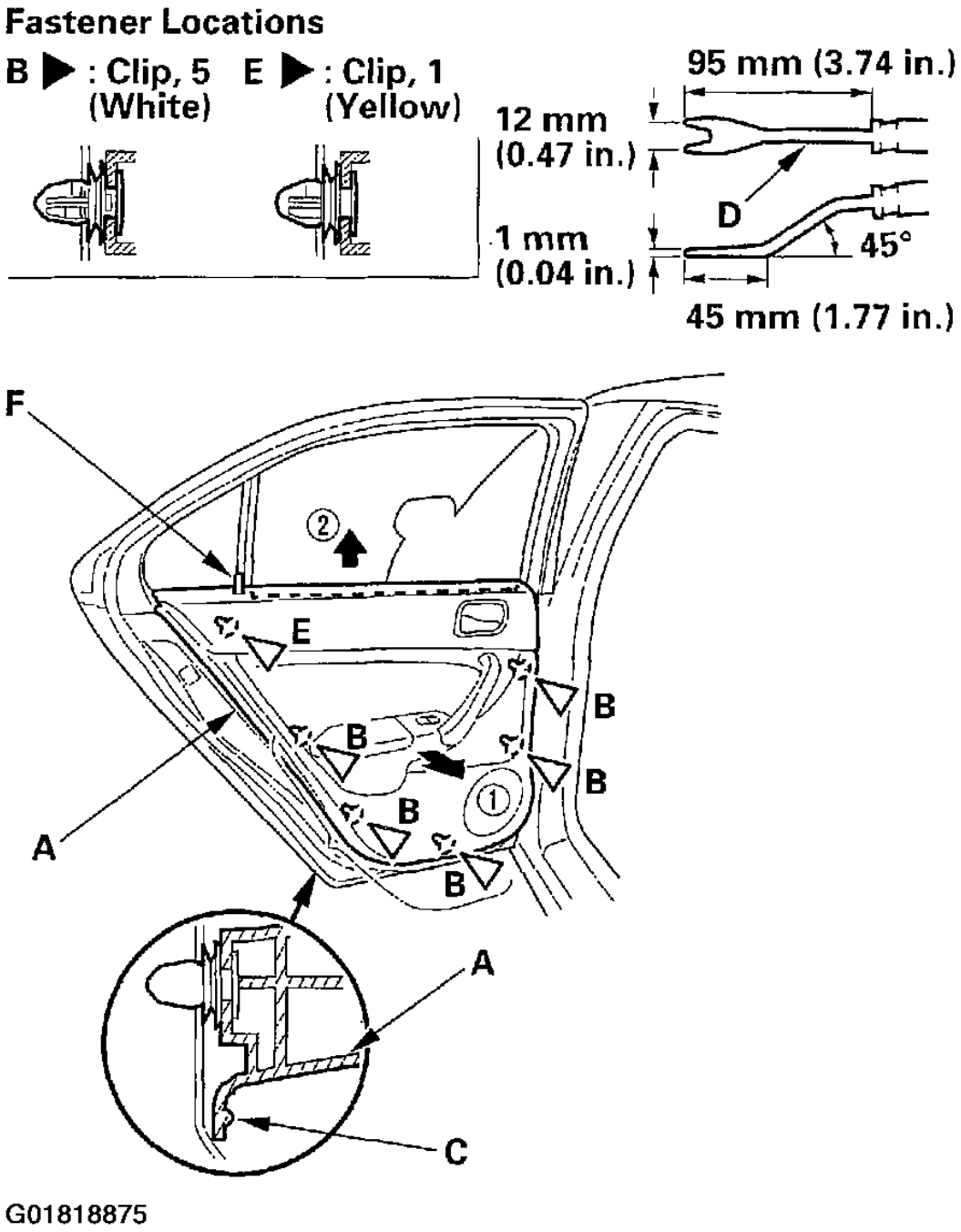

Fig. 39: Removing The Door Panel

7. Disconnect the inner handle cable (A). If necessary, remove the inner handle (B) by releasing the hooks (C, D).

cardiagn.com

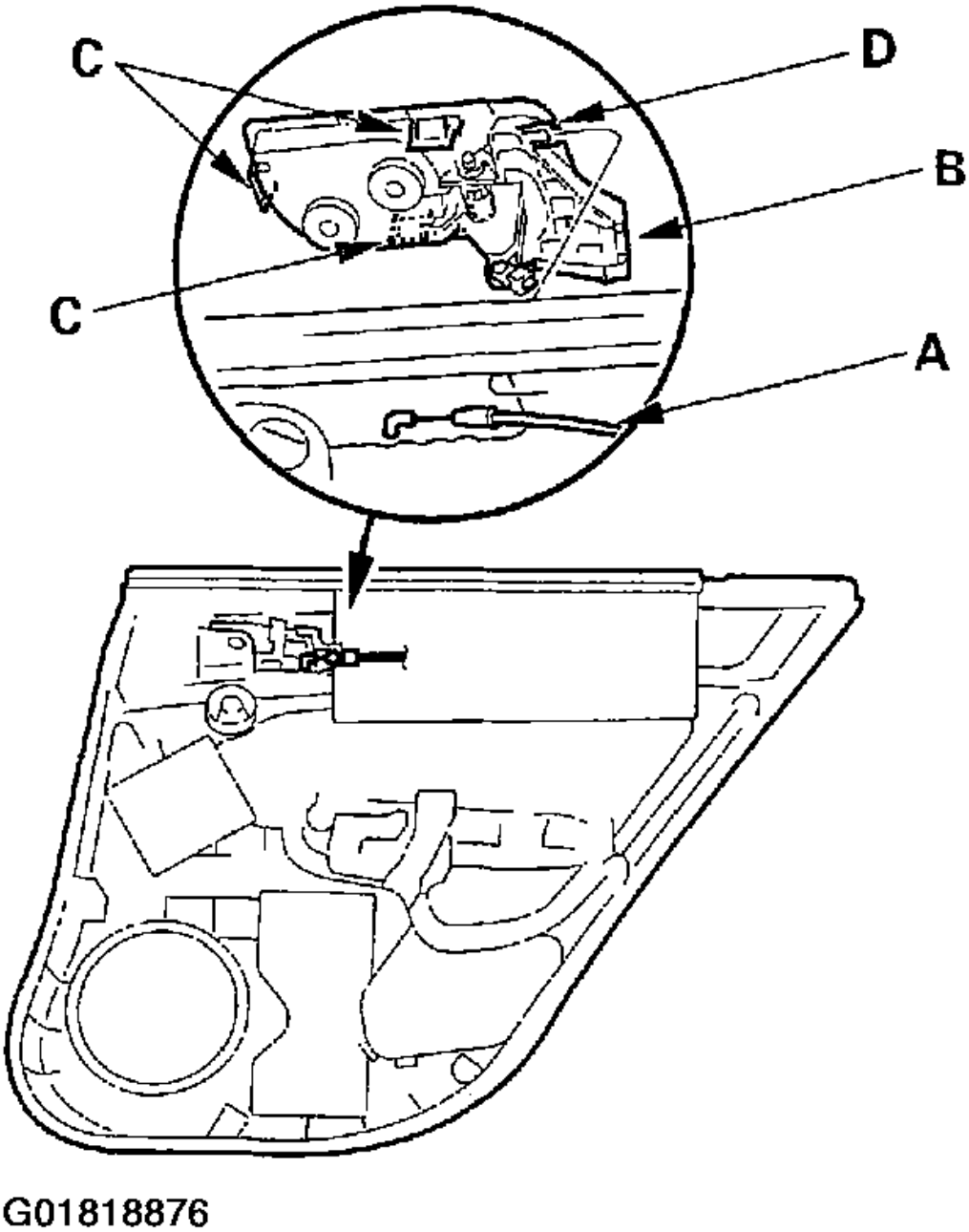

Fig. 40: Removing The Inner Handle Cable

8. If necessary, remove the door glass inner weatherstrip (A) from the door panel (B).

cardiagn.com

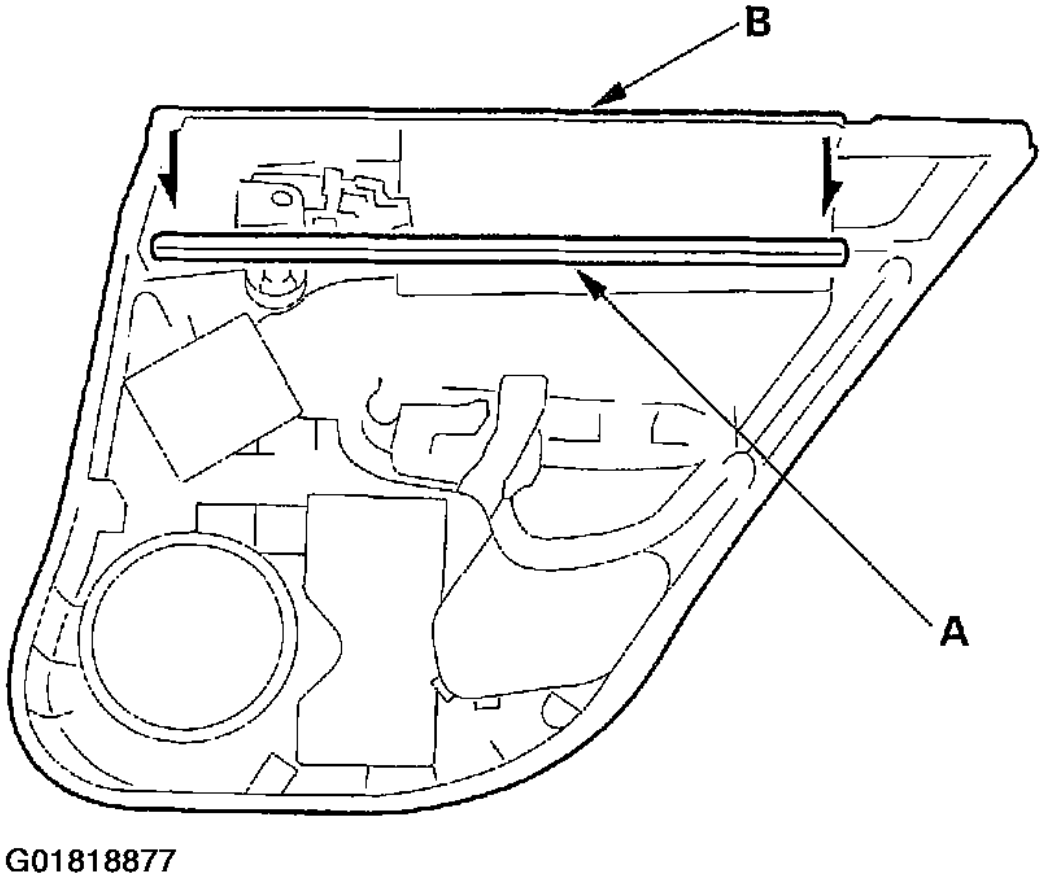

Fig. 41: Removing The Door Glass Inner Weatherstrip From The Door Panel

9. Install the panel in the reverse order of removal, and note these items:
   - Replace any damaged clips.
   - Make sure the connector is plugged in properly and the cable is connected securely.
   - Make sure the window and power door lock operate properly.

REAR DOOR OUTER HANDLE REPLACEMENT

NOTE: Put on gloves to protect your hands.

1. Remove these items:
   a. Door panel (see **REAR DOOR PANEL REMOVAL/INSTALLATION**)
   b. Plastic cover, as necessary (see **COMPONENT LOCATION INDEX**)
2. Raise the glass fully.

cardiagn.com

3. Disconnect the outer handle rod (A) from the latch (B).

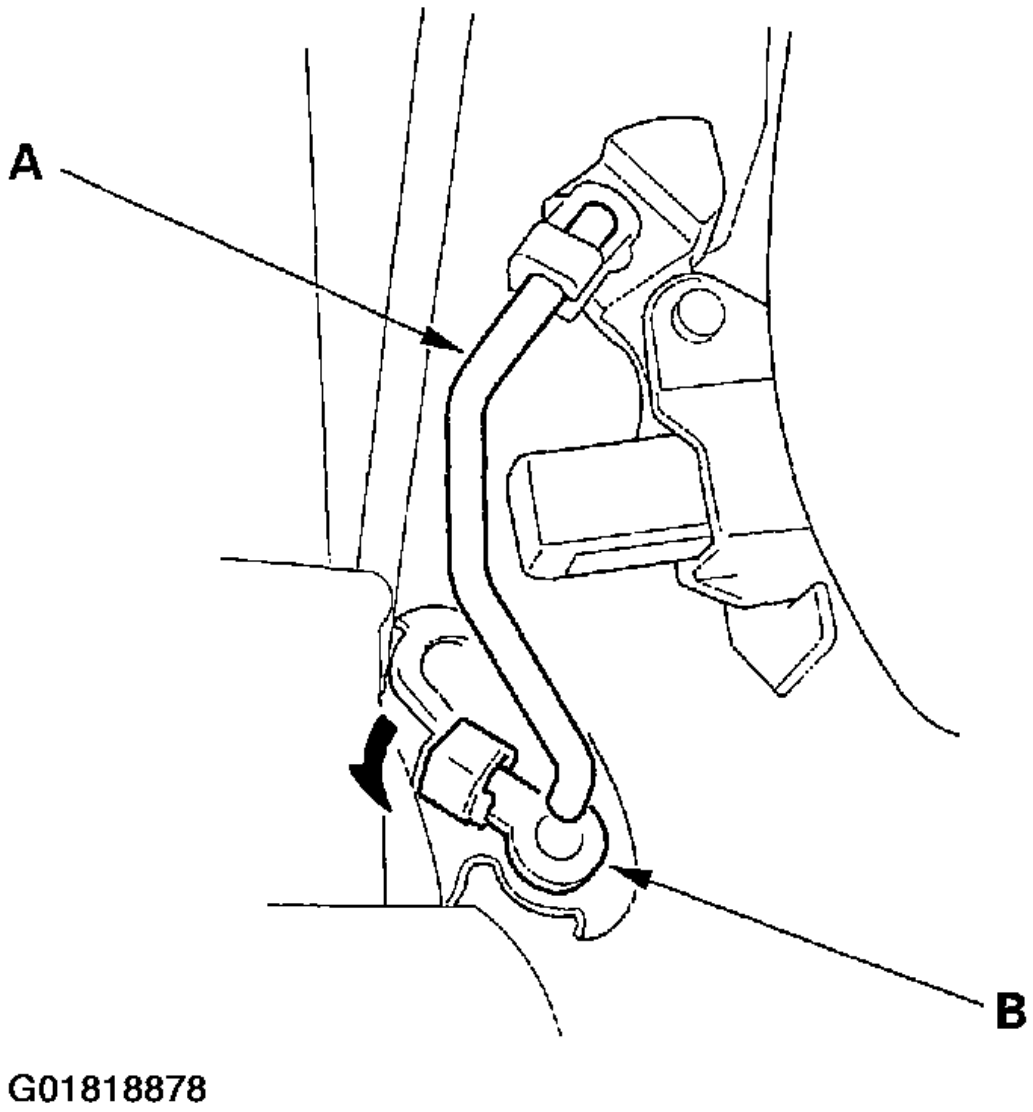

Fig. 42: Disconnecting The Outer Handle Rod

4. Remove the screws securing the latch (A), then lower it.

cardiagn.com

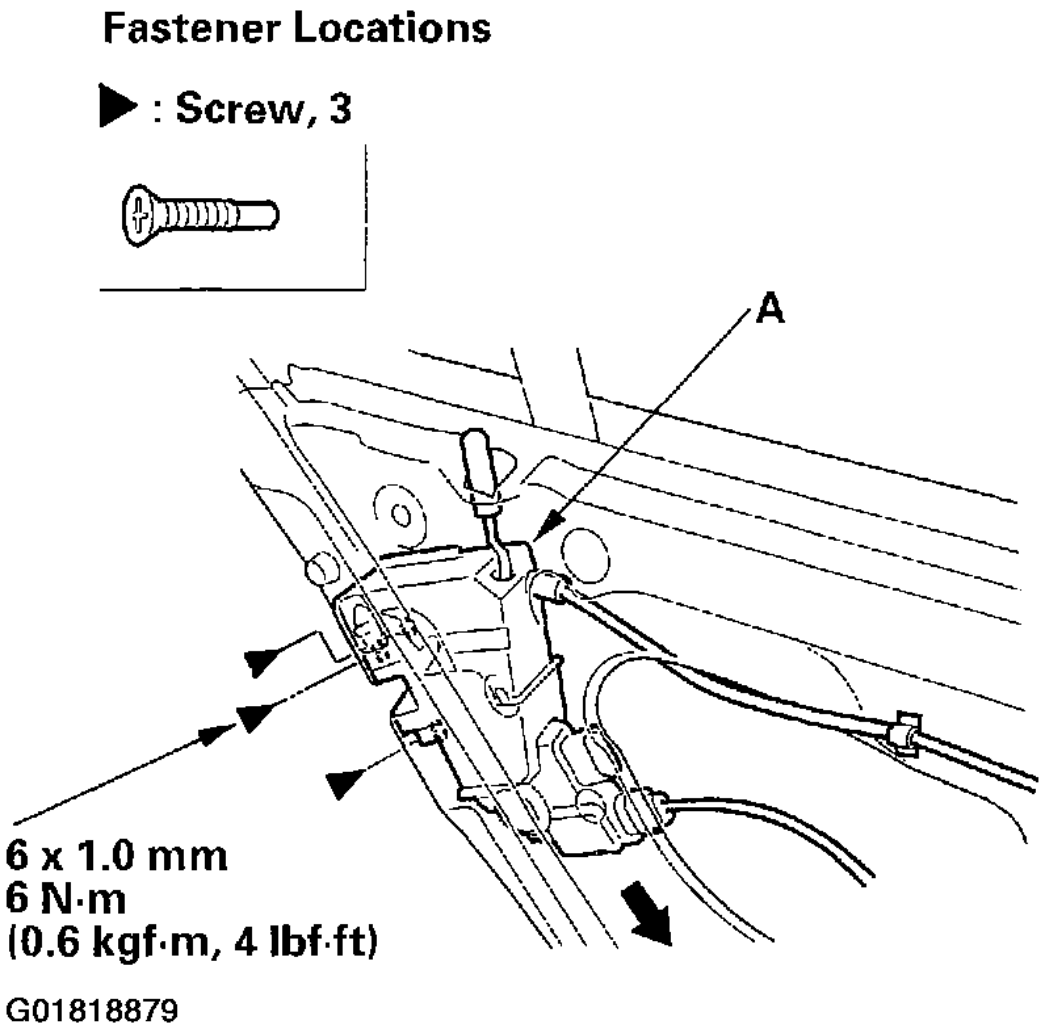

Fig. 43: Removing The Screws Securing The Latch

5. Remove the child lock cap (A) and bolt, then remove the protector (B).

cardiagn.com

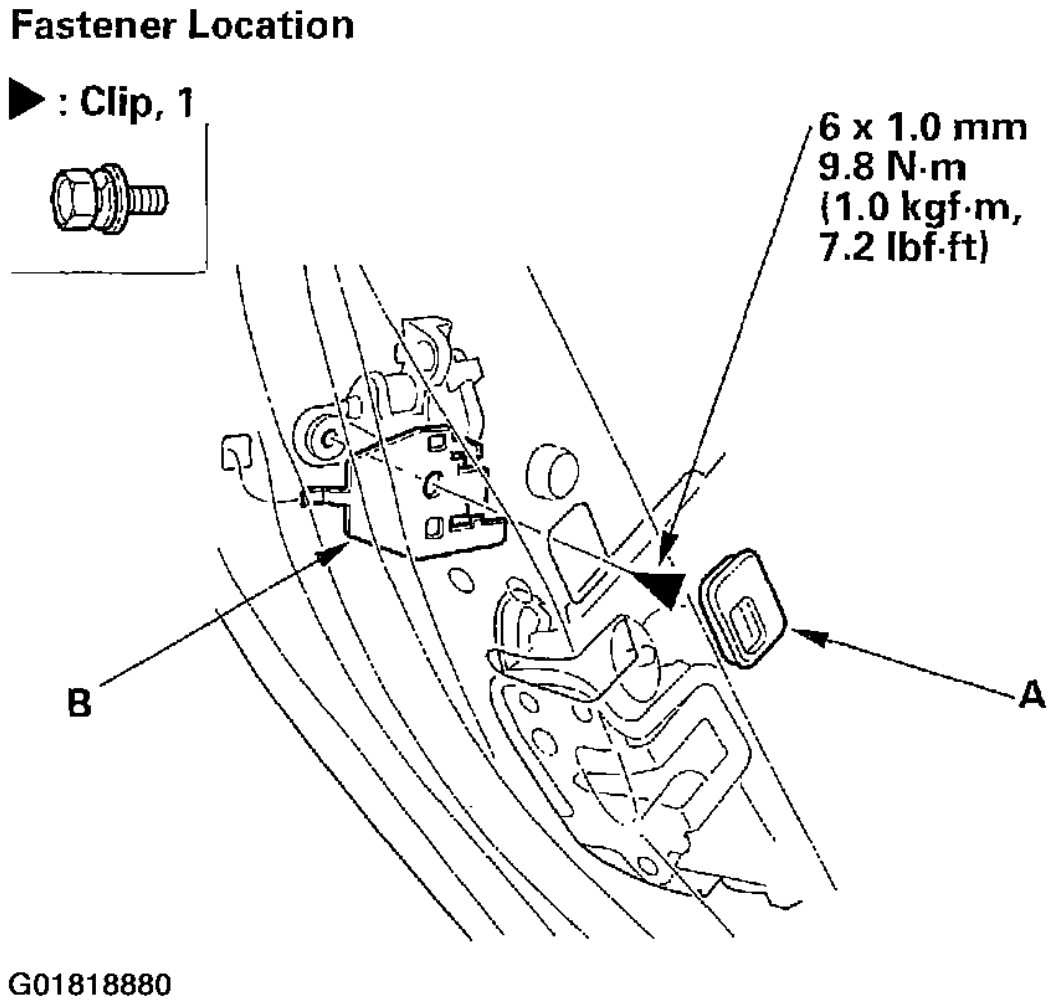

Fig. 44: Removing The Child Lock Cap & Bolt

6. Remove the bolt, then remove the spacer (A).

cardiagn.com

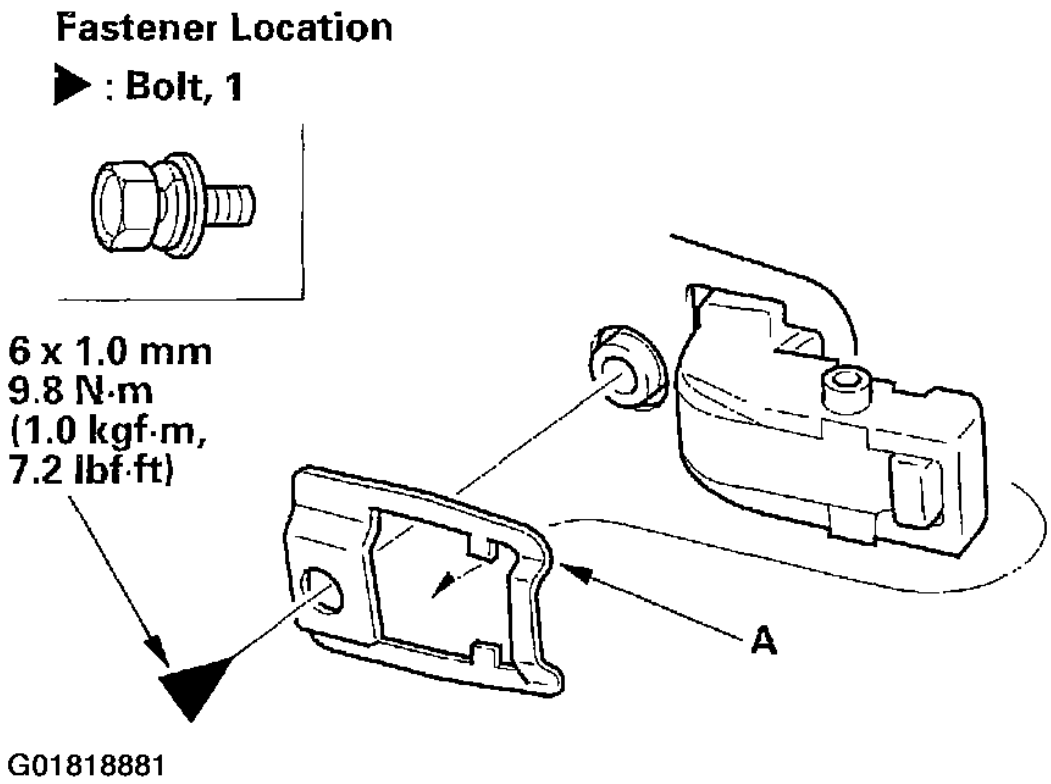

Fig. 45: Removing The Spacer

7. While pulling the outer handle (A), remove the handle from the holes in the door panel. Take care not to scratch the door.

cardiagn.com

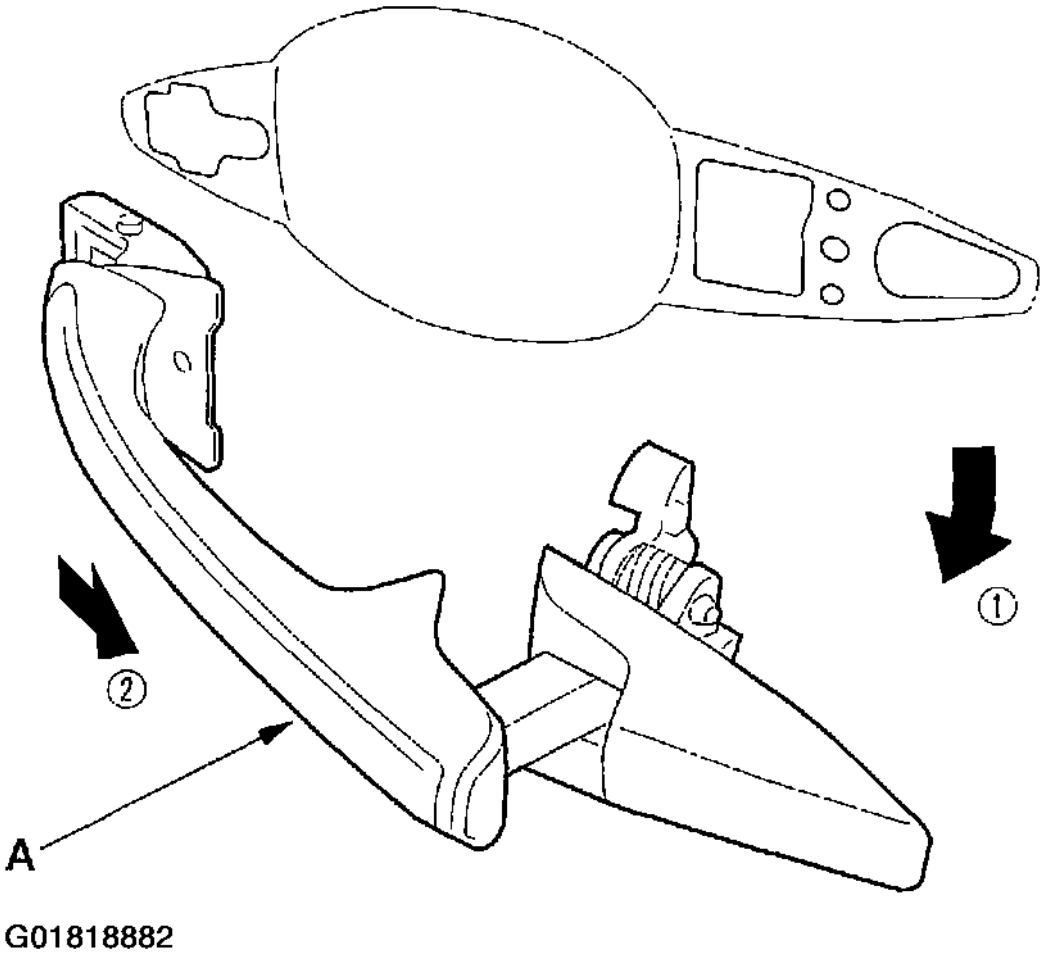

Fig. 46: Removing The Handle From The Holes In The Door Panel

8. Disconnect the outer handle rod (A) from the outer handle (B).

cardiagn.com

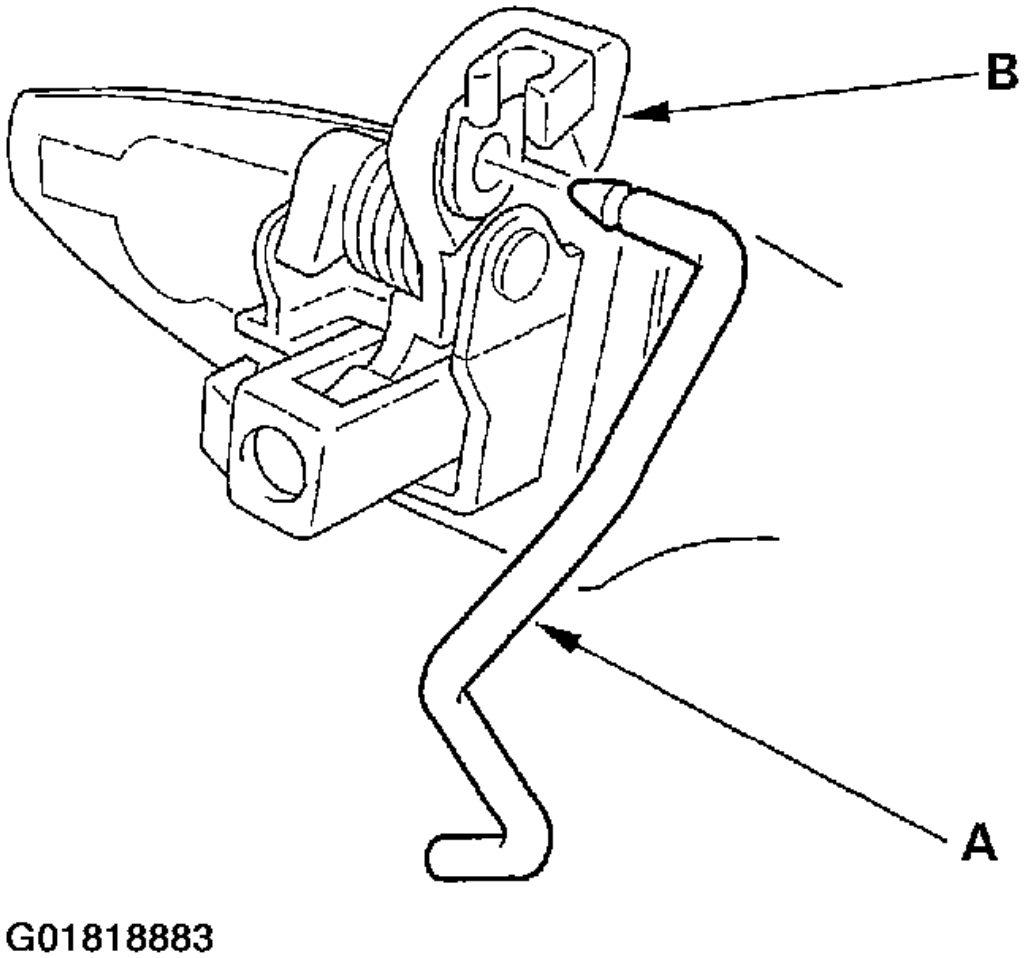

Fig. 47: Disconnecting The Outer Handle Rod

9. Install the handle in the reverse order of removal, and note these items:
   - Make sure the door locks and opens properly.
   - When reinstalling the door panel, make sure the plastic cover is installed properly and sealed around its outside perimeter to seal out water.

REAR DOOR LATCH REPLACEMENT

NOTE: Put on gloves to protect your hands.

1. Remove these items:
   a. Door panel (see **REAR DOOR PANEL REMOVAL/INSTALLATION**)

cardiagn.com

b. Plastic cover, as needed (see **COMPONENT LOCATION INDEX**)

2. Raise the glass fully.
3. Disconnect the outer handle rod from the latch (see step 3 of **REAR DOOR OUTER HANDLE REPLACEMENT**).
4. Disconnect the actuator connector(s) (A). Remove the screws securing the latch.

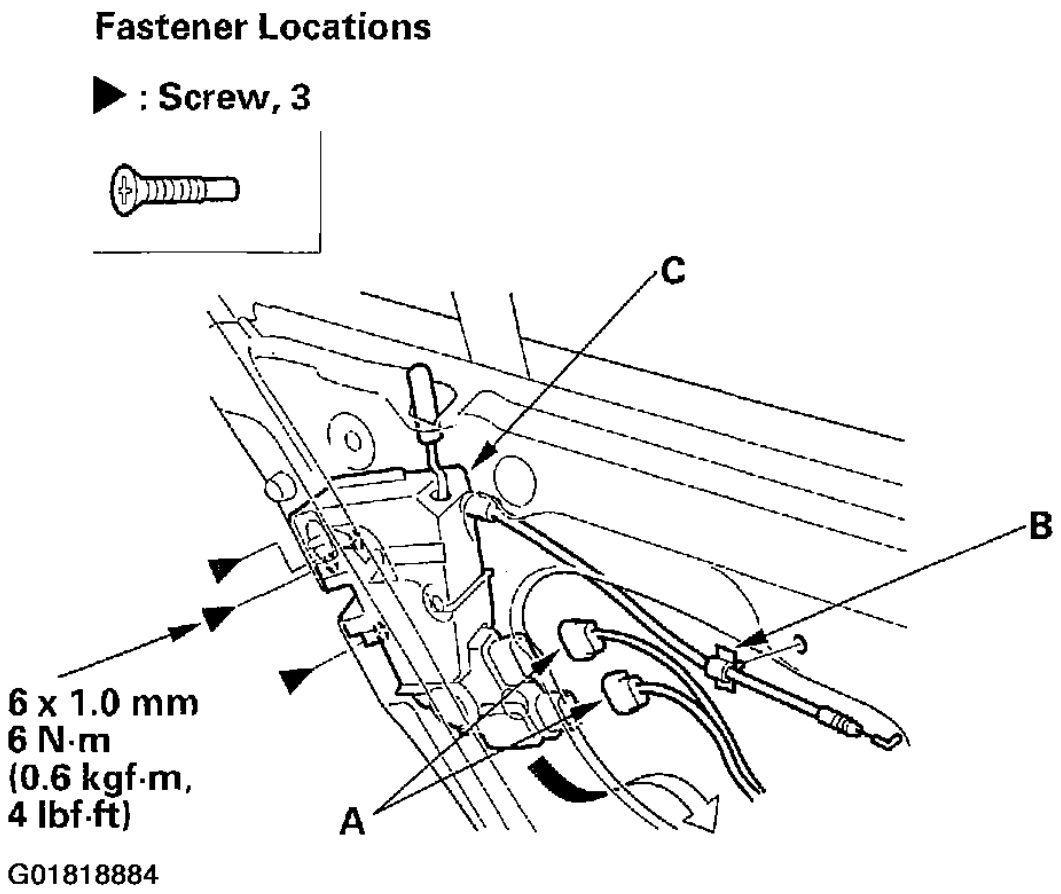

Fig. 48: Removing The Screws Securing The Latch

5. Detach the cable clip (B), then remove the latch (C) through the hole in the door. Take care not to bend the inner handle cable.
6. Install the latch in the reverse order of removal, and note these items:
   - Make sure the actuator connectors are plugged in properly.
   - Make sure the door locks and the window operates properly.
   - When reinstalling the door panel, make sure the plastic cover is installed properly and sealed around its outside perimeter to seal out water.

cardiagn.com

REAR DOOR GLASS & REGULATOR REPLACEMENT

NOTE: Put on gloves to protect your hands.

1. Remove these items:
   a. Door panel (see **REAR DOOR PANEL REMOVAL/INSTALLATION**)
   b. Plastic cover, as necessary (see **COMPONENT LOCATION INDEX**)
2. Carefully move the glass (A) until you can see the bolts, then remove them. Remove the glass from the regulator (B), and carefully lower the glass. Take care not to drop the glass inside the door.

cardiagn.com

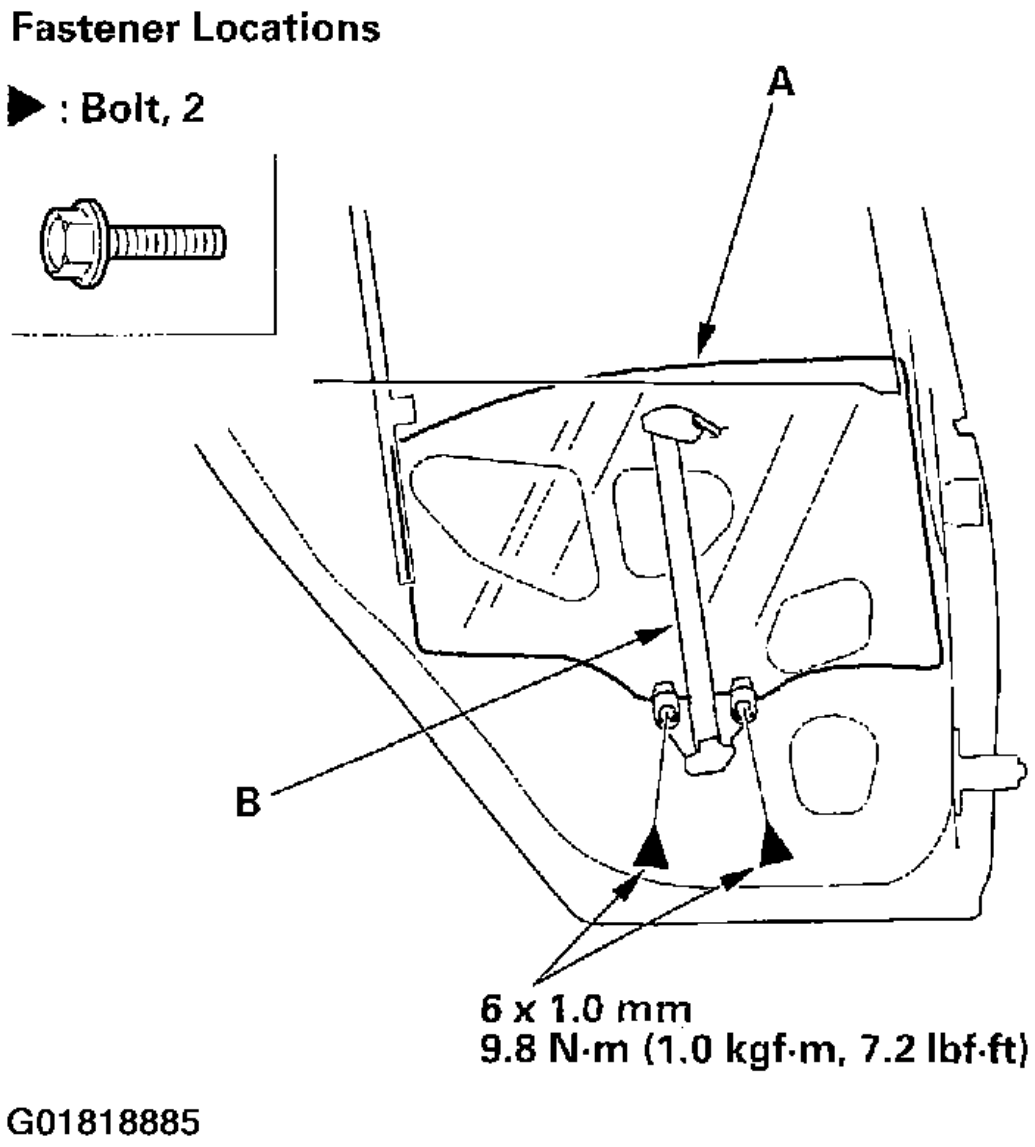

Fig. 49: Removing The Glass From The Regulator

3. Pull the glass run channel (A) away as needed. Pull the door weatherstrip (B) away as needed, then remove the screw (C) with a Torx T15 bit. Remove the bolt (D) securing the center channel (E).

cardiagn.com

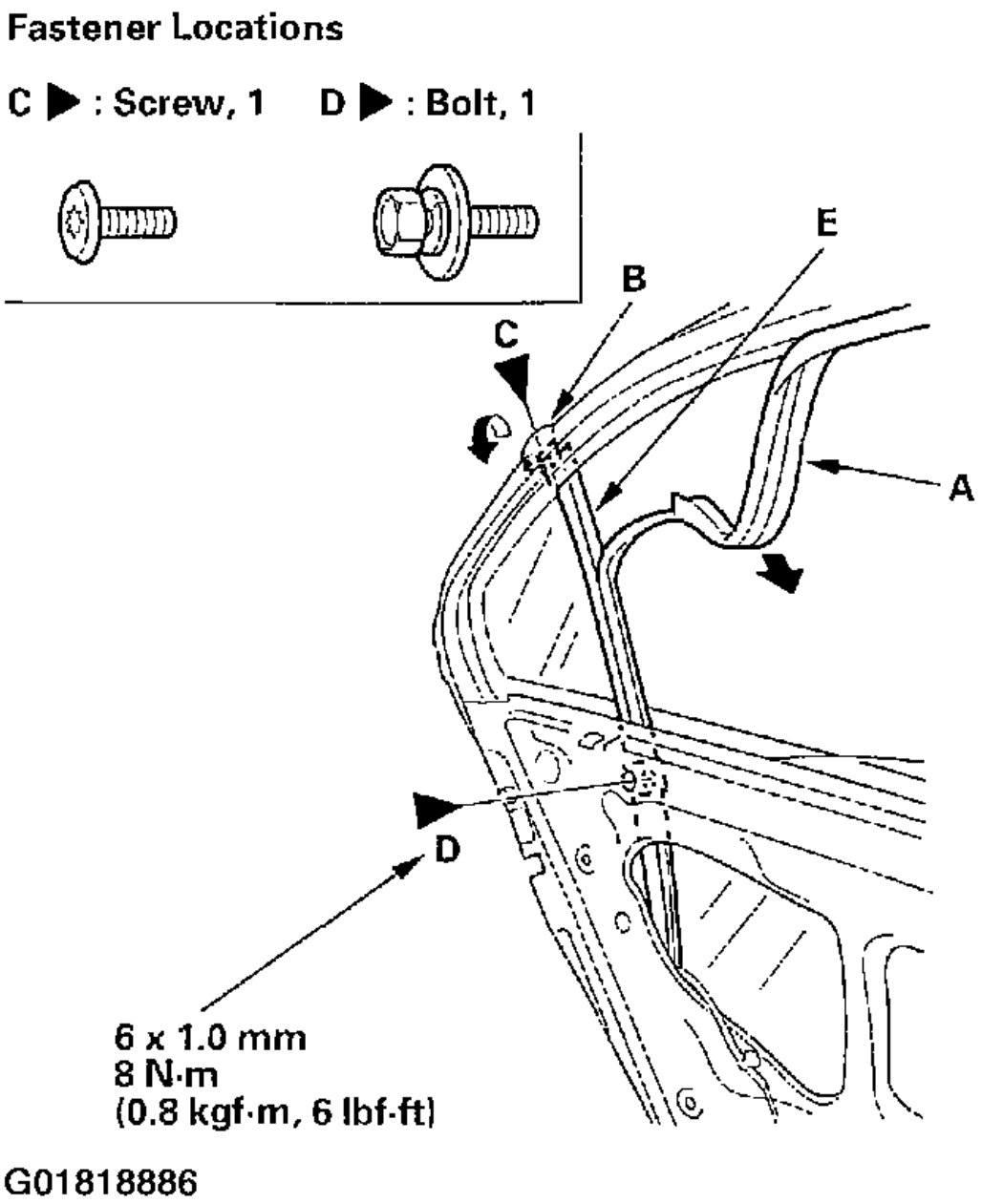

Fig. 50: Pulling The Door Weatherstrip Away

4. Pull the upper portion of the center channel (A) forward to remove it from the door quarter glass seal (B), then pull the glass run channel (C) out from the groove of the center lower channel. Take care not to damage the outer weatherstrip (D).

cardiagn.com

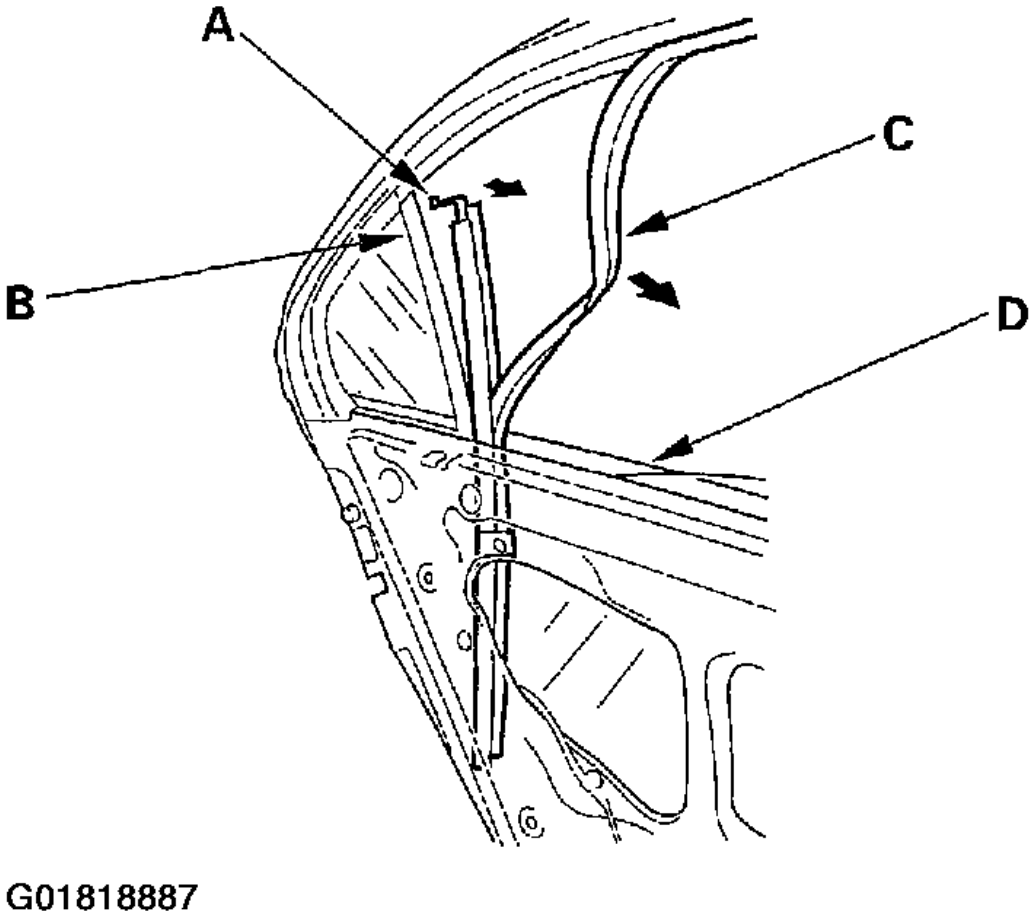

Fig. 51: Pulling The Glass Run Channel Out From The Groove Of The Center Lower Channel

5. Lower the center channel (A) entirely inside the door, then pull out the channel through the hole in the door.

cardiagn.com

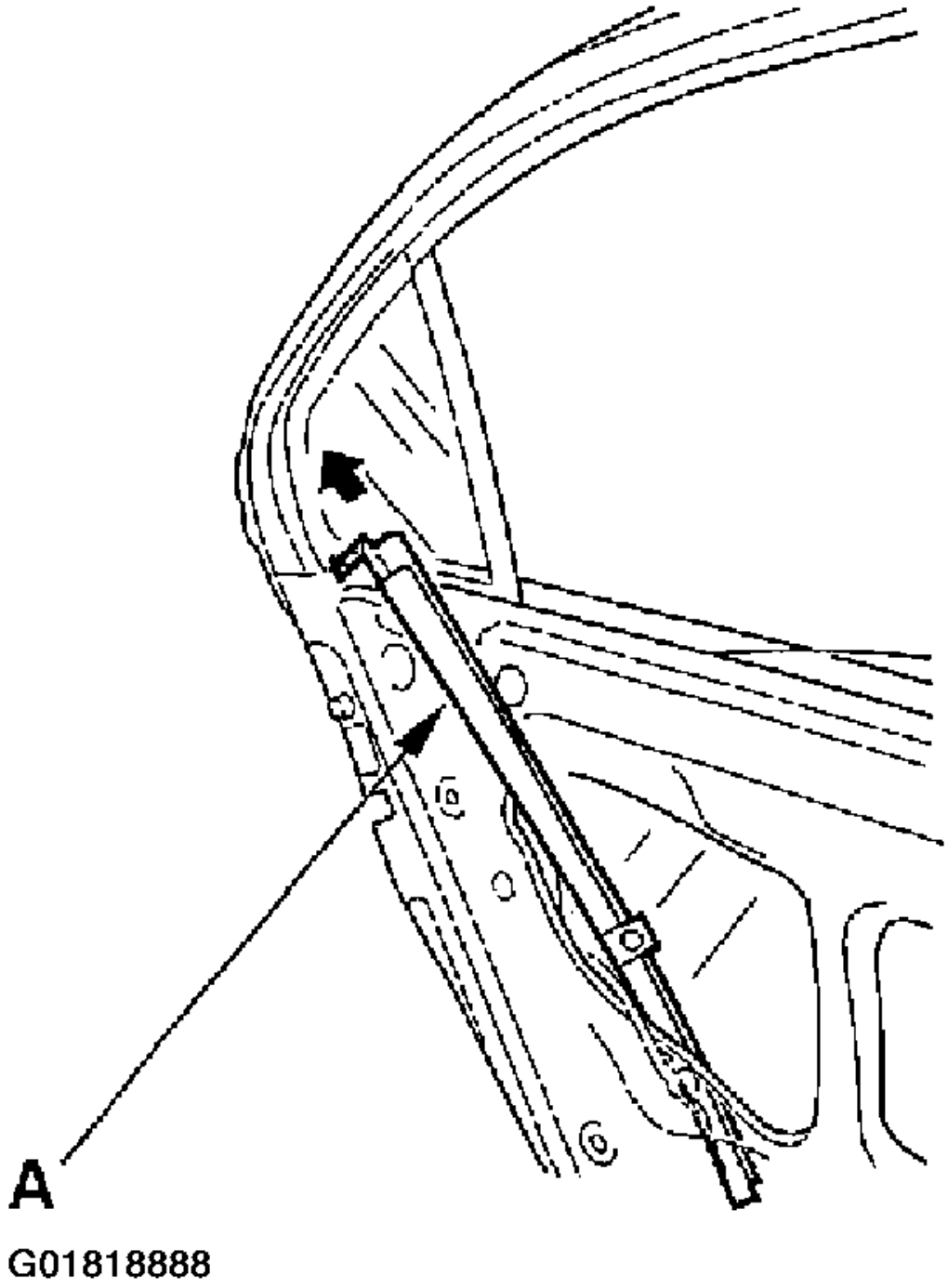

Fig. 52: Removing Glass Run Channel

cardiagn.com

6. Remove the quarter glass (A). Take care not to damage the outer weatherstrip (B).

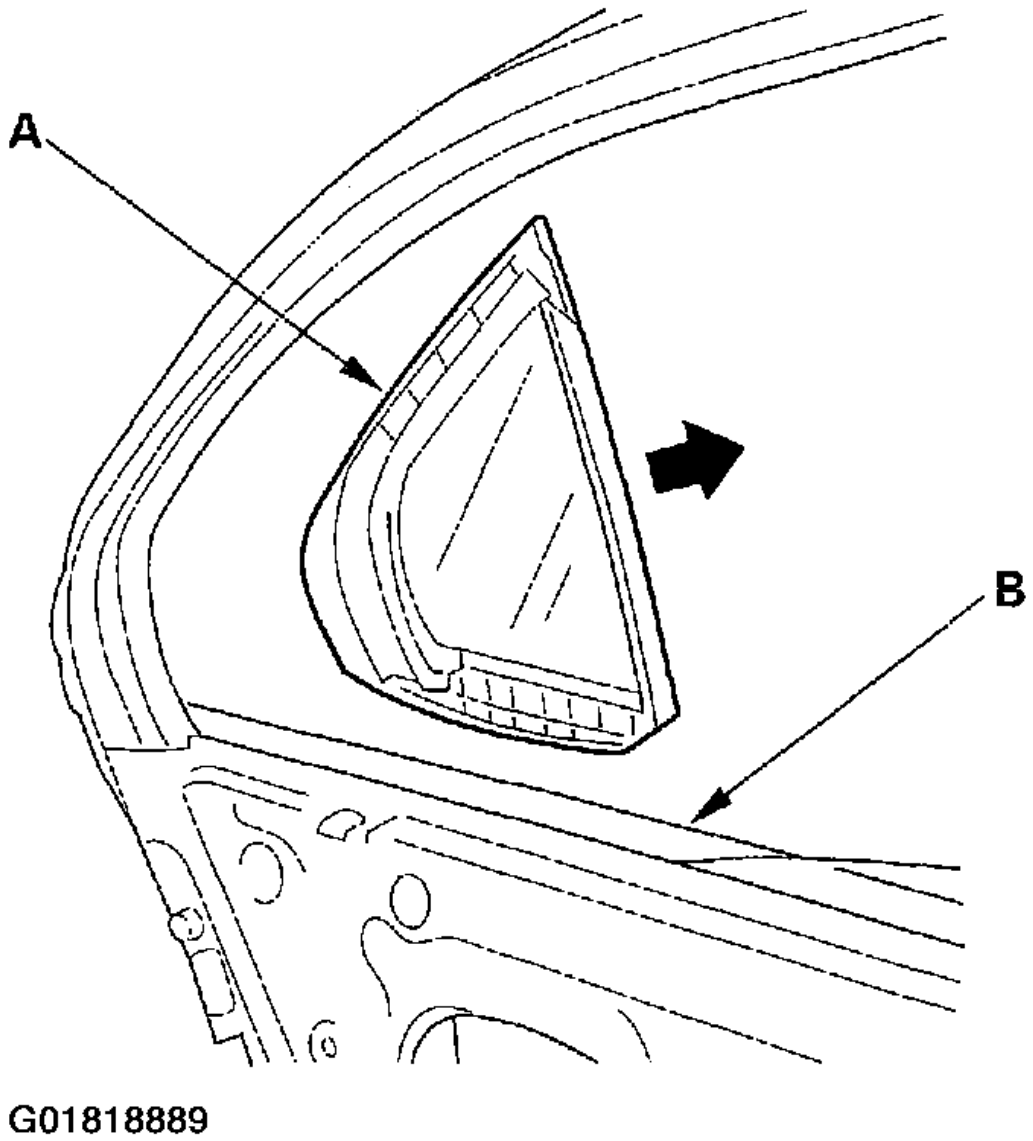

Fig. 53: Removing The Quarter Glass

7. Carefully remove the glass (A) out through the window slot. Take care not to drop the glass inside the door.

cardiagn.com

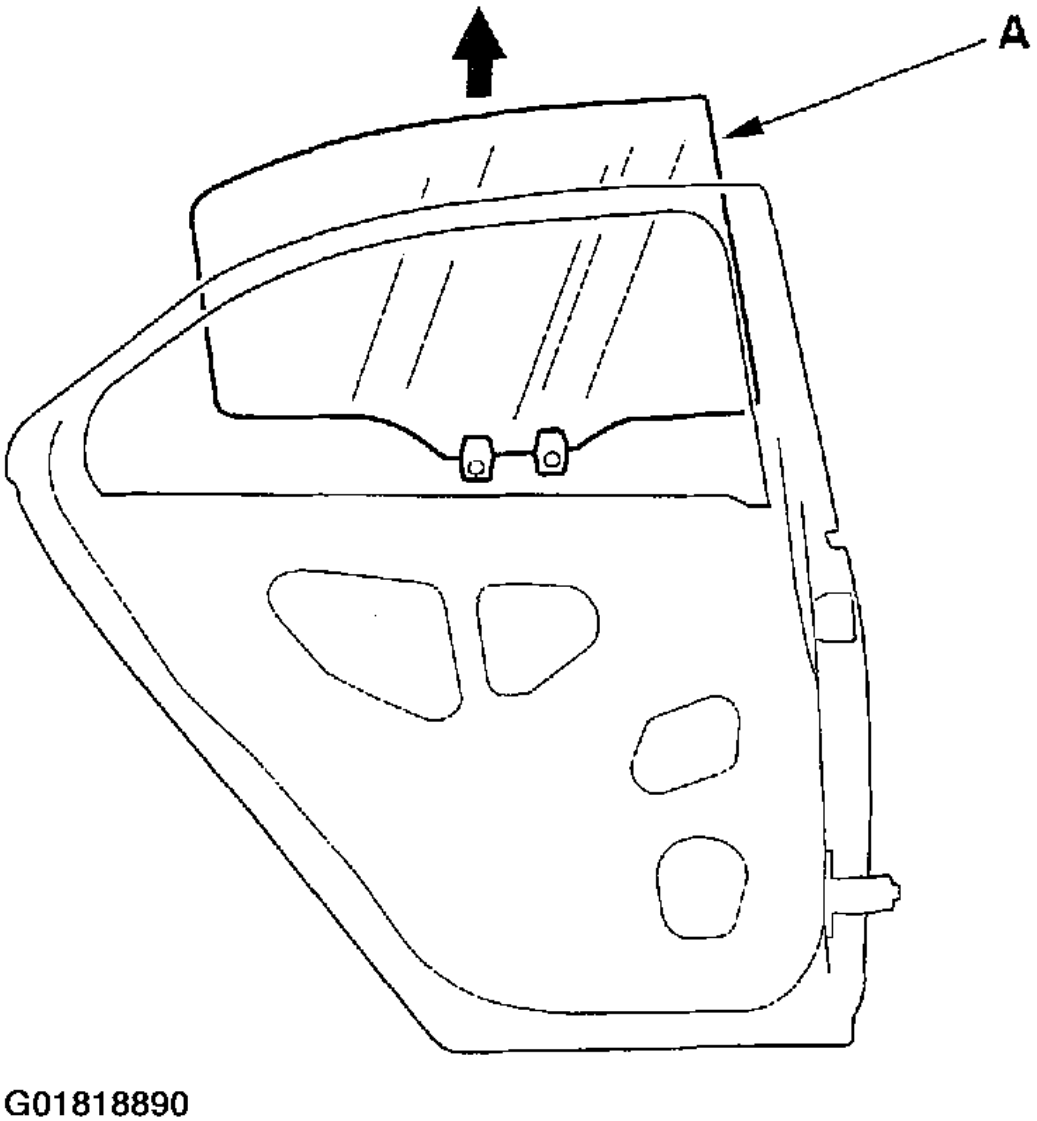

Fig. 54: Removing The Glass

8. Disconnect the connector (A) from the regulator (B).

cardiagn.com

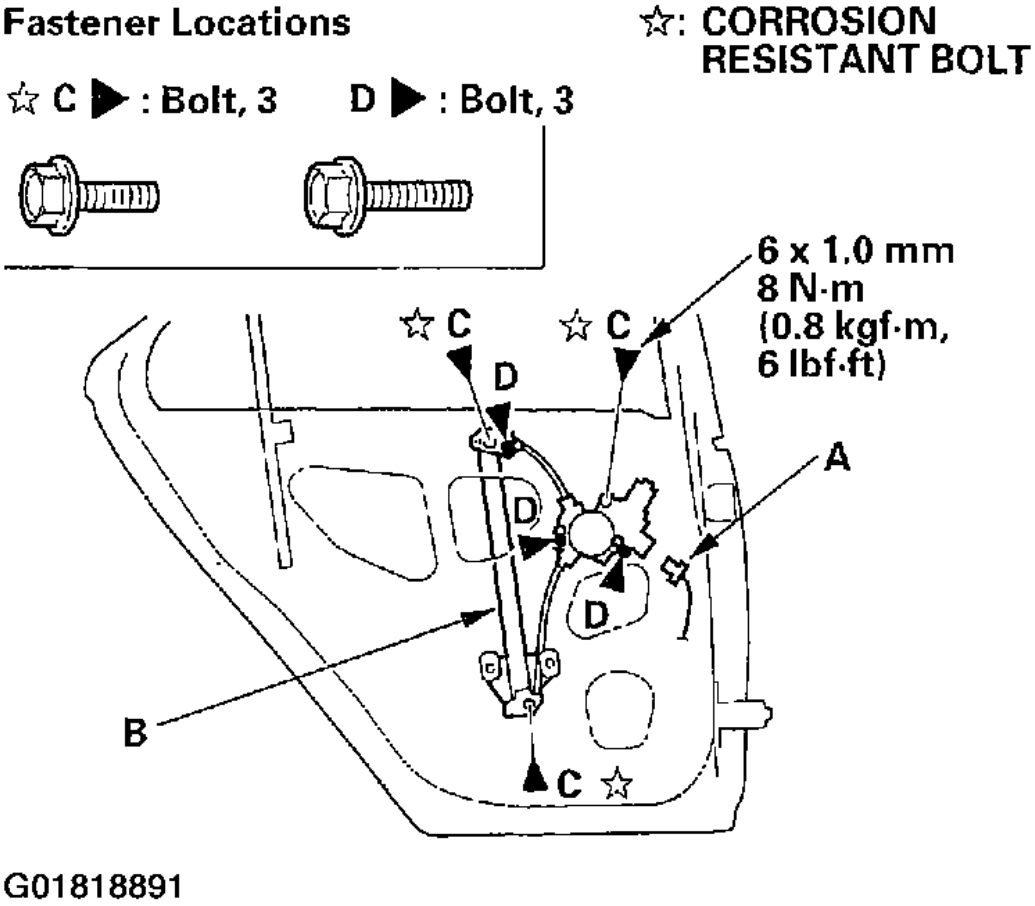

Fig. 55: Removing The Regulator

9. Remove the bolts (C), and loosen the bolts (D), then remove the regulator through the hole in the door.
10. Apply multipurpose grease to all the sliding surfaces of the regulator (A) where shown.

cardiagn.com

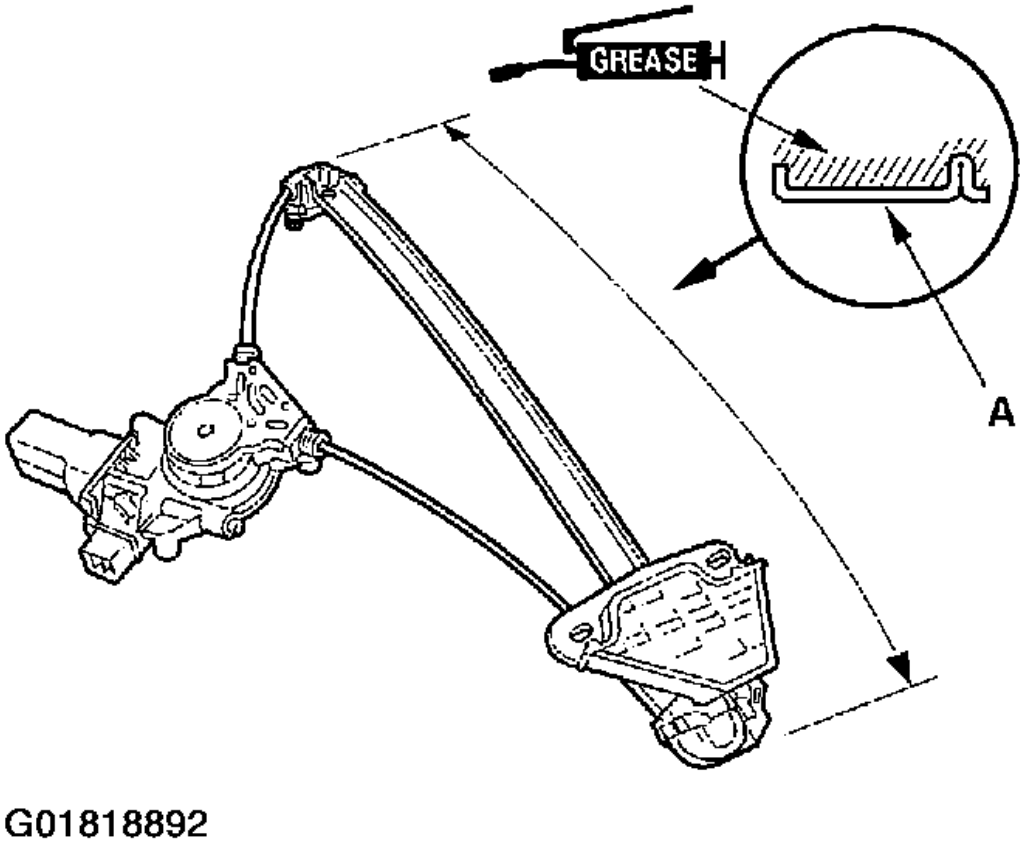

Fig. 56: Applying Multipurpose Grease To The Regulator

11. Install the glass and regulator in the reverse order of removal, and note these items:
    - Never use any kind other than the corrosion resistant bolts where these special bolts were installed in. If other bolts are used, electrolysis may accelerate corrosion around tightening points, resulting in loosening of the joints.
    - Roll the glass up and down to see if it moves freely without binding.
    - Make sure that there is no clearance between the glass and glass run channel when the glass is closed.
    - Adjust the position of the glass as necessary (see **FRONT & REAR DOOR GLASS ADJUSTMENT**).
    - Check for water leaks (see step 7 of **FRONT & REAR DOOR GLASS ADJUSTMENT**).
    - Test-drive and check for wind noise and rattles.
    - When reinstalling the door panel, make sure the plastic cover is installed properly and sealed around its outside perimeter to seal out water.

cardiagn.com

REAR DOOR GLASS OUTER WEATHERSTRIP REPLACEMENT

NOTE:

- **Once you remove the door glass outer weatherstrip, replace it with a new one because it will bend during removal.**
- **Put on gloves to protect your hands.**
- **Take care not to scratch the door.**

1. Remove the door panel (see **REAR DOOR PANEL REMOVAL/INSTALLATION**).
2. Remove the screw (A) from the front edge of the door, and screws (B) fastening the rear portion of the door weatherstrip (C), sash, and the door outer molding (D).

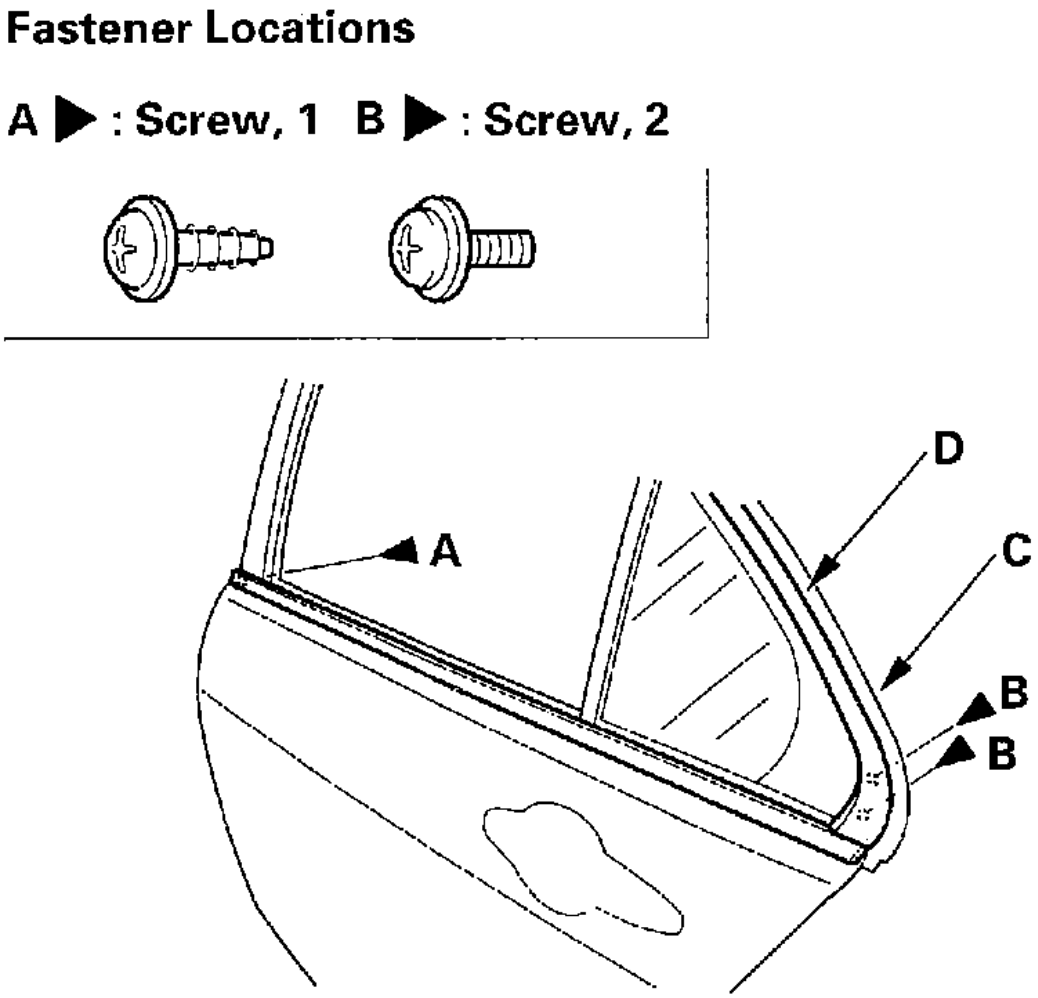

cardiagn.com

Fig. 57: Removing Door Outer Molding Fasteners

3. Starting at the front, pull the door glass outer weatherstrip (A) up at each portion where the inner molding (B) catches the inside edge of the window slot. Take care not to bend the door outer molding (C).

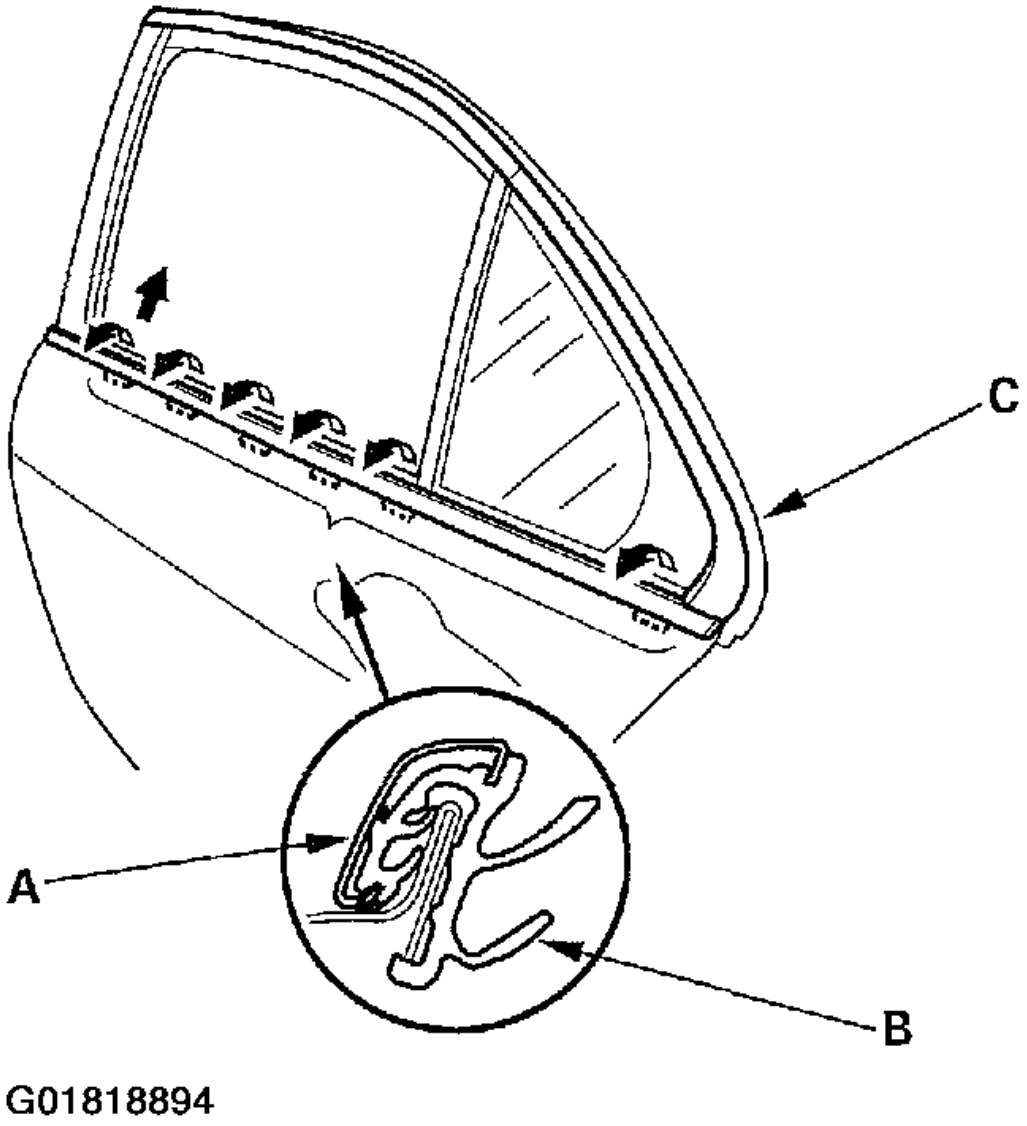

Fig. 58: Removing Door Outer Molding

4. First slide the door glass outer weatherstrip (A) forward slightly, detach the rear clip (B) by pulling the front of the weatherstrip up, then remove the weatherstrip.

cardiagn.com

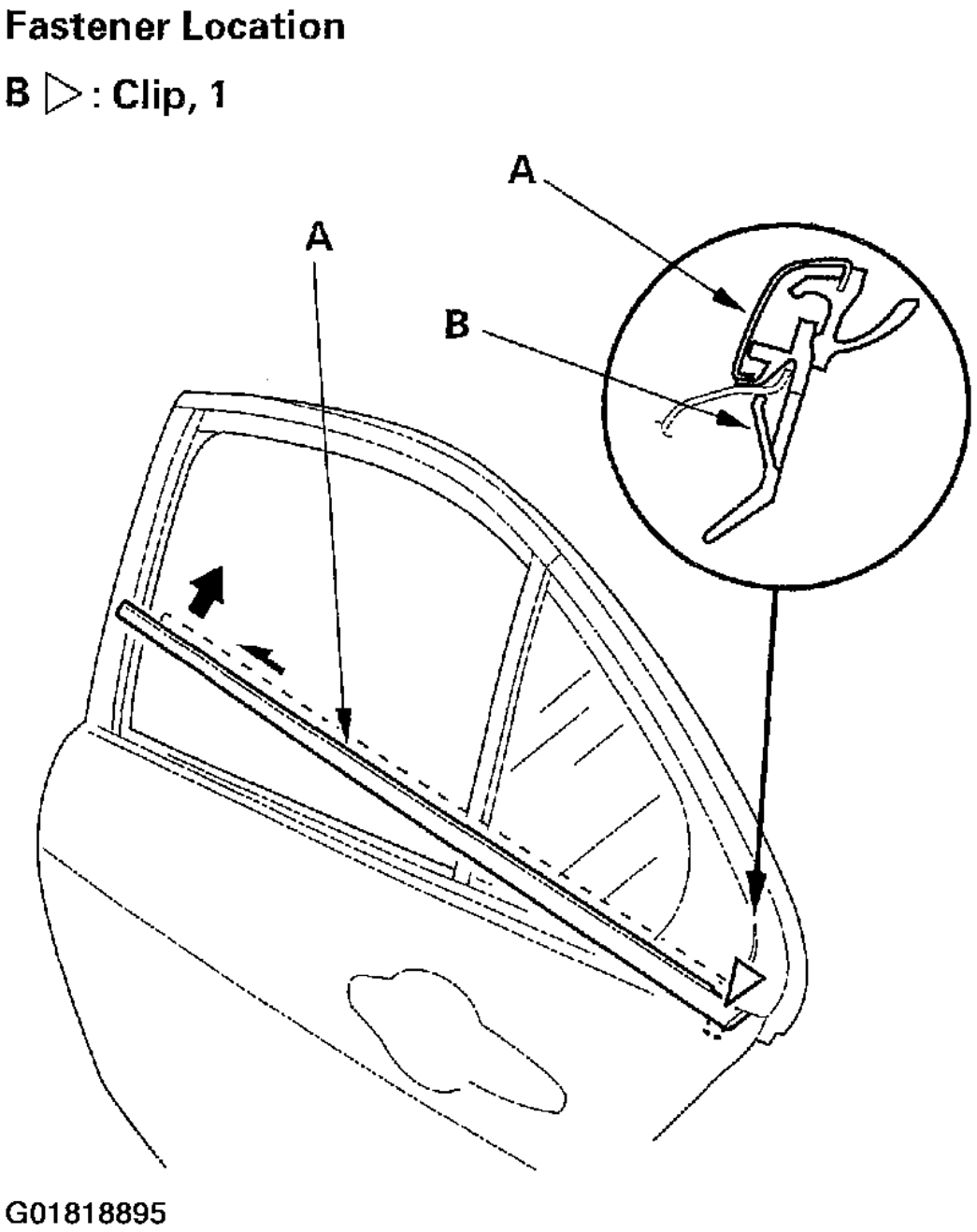

Fig. 59: Removing Door Glass Outer Weatherstrip

5. Install a new weatherstrip in the reverse order of removal.

REAR DOOR OUTER MOLDING REPLACEMENT

cardiagn.com

NOTE:

- **Once you remove the door outer molding, replace it with a new one because it will bend during removal.**
- **Put on gloves to protect your hands.**
- **Take care not to scratch the door.**
- **When prying with a flat-tip screwdriver, wrap it with protective tape to prevent damage.**

1. Remove the screws fastening the rear of the door weatherstrip (A), sash, and the door outer molding (B).

cardiagn.com

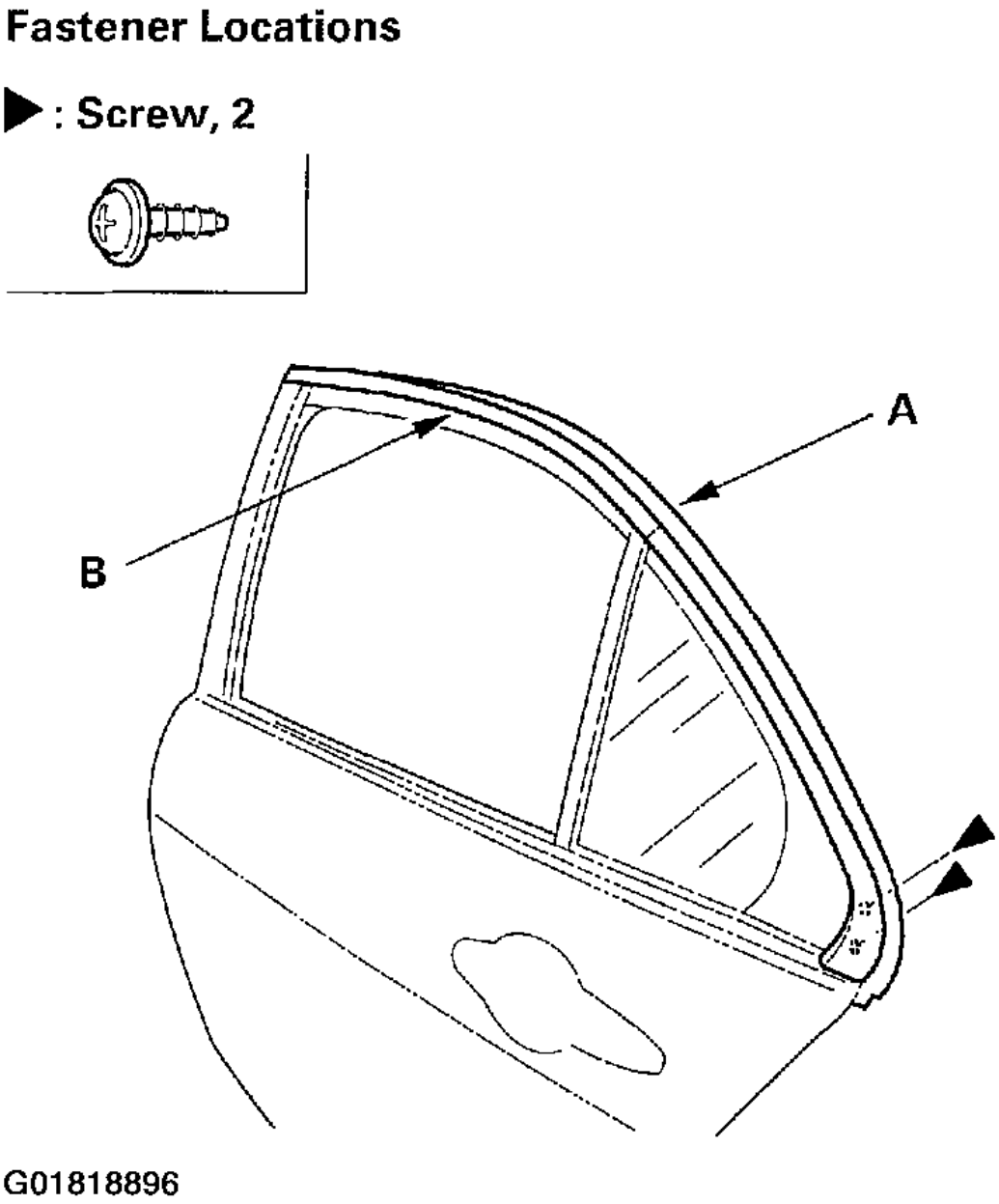

Fig. 60: Removing The Screws Fastening The Rear Of The Door Weatherstrip

2. Pry the front clip with a flat-tip screwdriver.

cardiagn.com

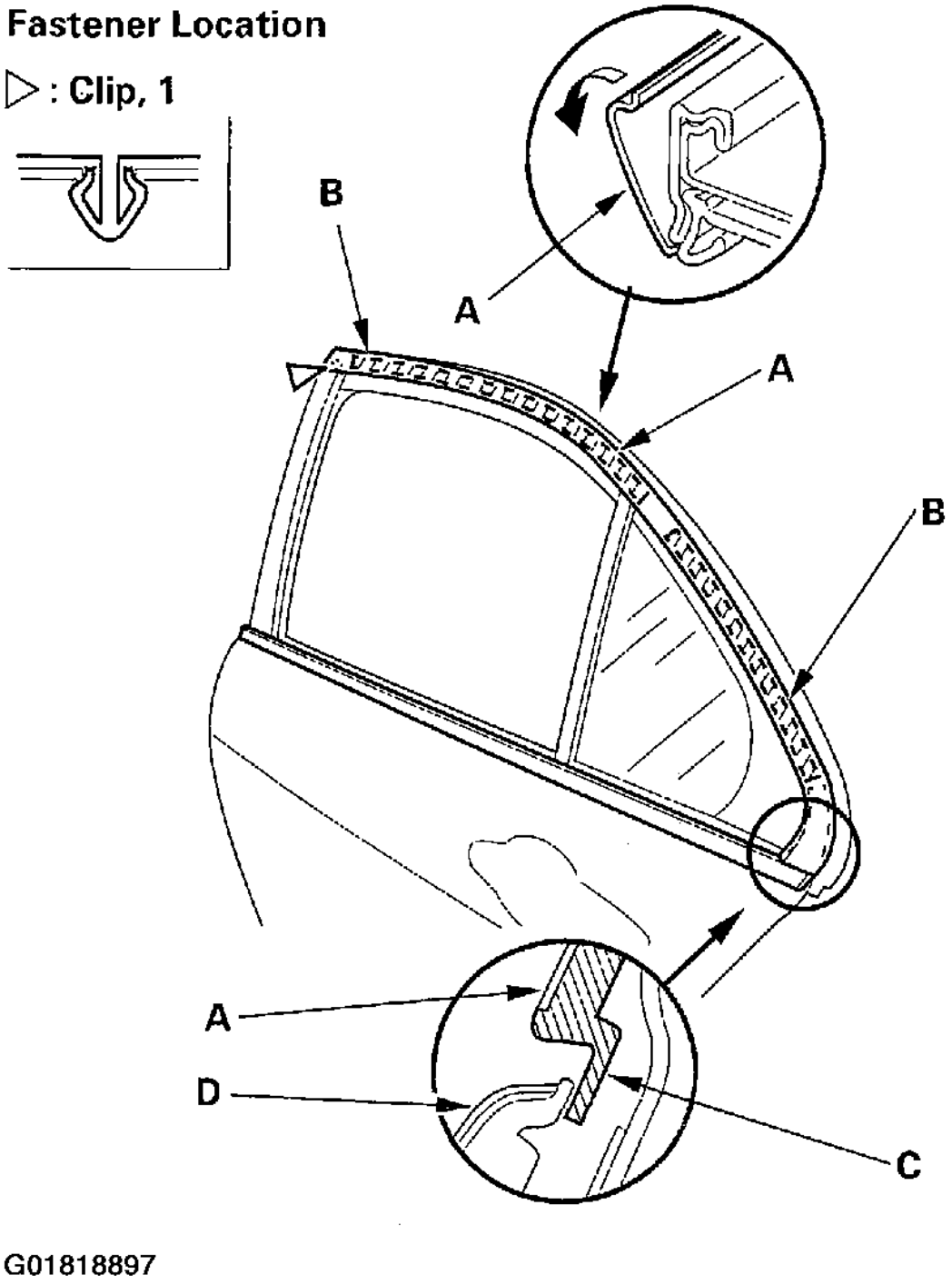

Fig. 61: Prying The Front Clip

3. While removing the upper edge of the door outer molding (A) from the edge of the sash, cut the double-

cardiagn.com

sided adhesive tapes (B) with a utility knife, then remove the molding.

4. Scrape off the remaining double-sided adhesive tape from the sash, then clean the sash surface with a sponge dampened in alcohol.
5. Install new door outer molding in the reverse order of removal, and note these items.
   - Push the clip and the adhesive portions into place securely.
   - Make sure the upper and lower sides of the molding are catching the edges of the sash properly.
   - Make sure the seal (C) at the bottom of the molding is under the door glass outer weatherstrip (D).

REAR DOOR WEATHERSTRIP REPLACEMENT

NOTE:
- **Take care not to scratch the door.**
- **Use a clip remover to remove the clips.**

1. At the B-pillar, remove the door stop mounting bolt (A).

cardiagn.com

Fastener Locations

A ▶: Bolt, 1 B ▶: Screw, 2 C ▷: Clip, 30 D ▷: Clip, 4

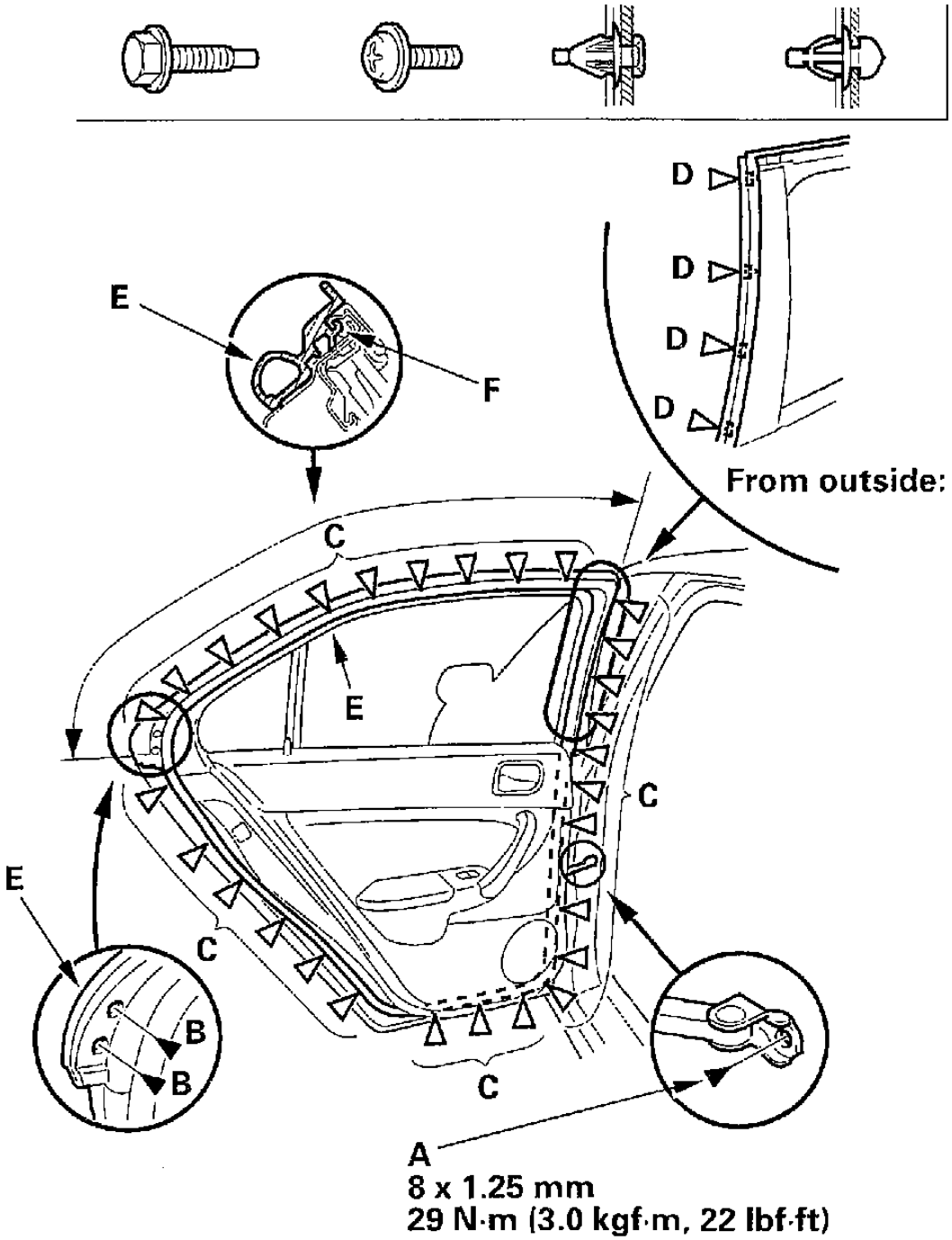

G01818898

cardiagn.com

Fig. 62: Removing The Door Stop Mounting Bolt

2. Remove the screws (B) securing the rear of the door weatherstrip (C).
3. Detach the clip (C, D), then remove the door weatherstrip (E).
4. Install the weatherstrip in the reverse order of removal, and note these items:
   - Replace any damaged clips.
   - Make sure the weatherstrip is installed in the holder (F) securely.
   - Apply liquid thread lock to the door stop mounting bolt before installation.
   - Check for water leaks (see step 7 of **FRONT & REAR DOOR GLASS ADJUSTMENT**).

REAR DOOR HOOK PIN & CATCH REPLACEMENT

1. With a Torx T40 bit, remove the door hook pin (A) from the door.

cardiagn.com

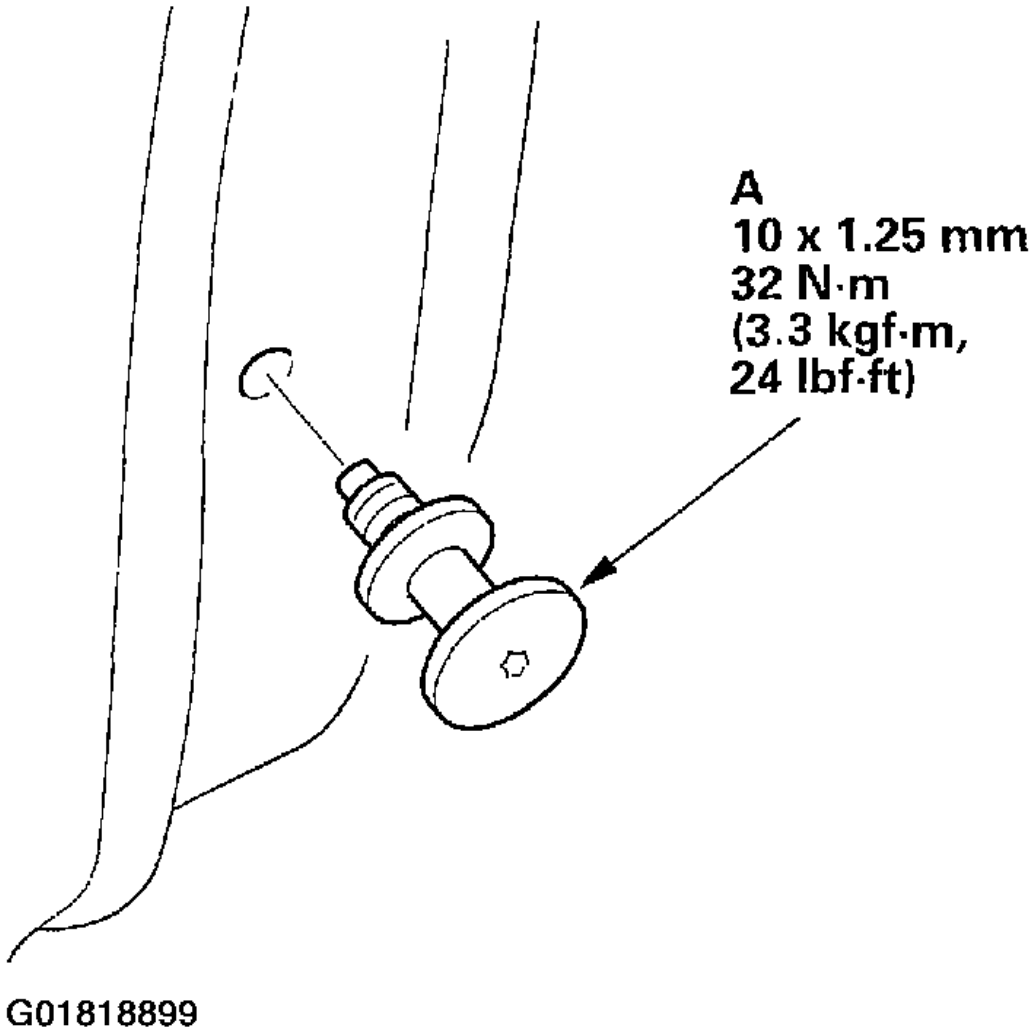

Fig. 63: Removing The Door Hook Pin From The Door

2. With a Torx T40 bit, remove the bolts, then remove the door catch (A) from the body.

cardiagn.com

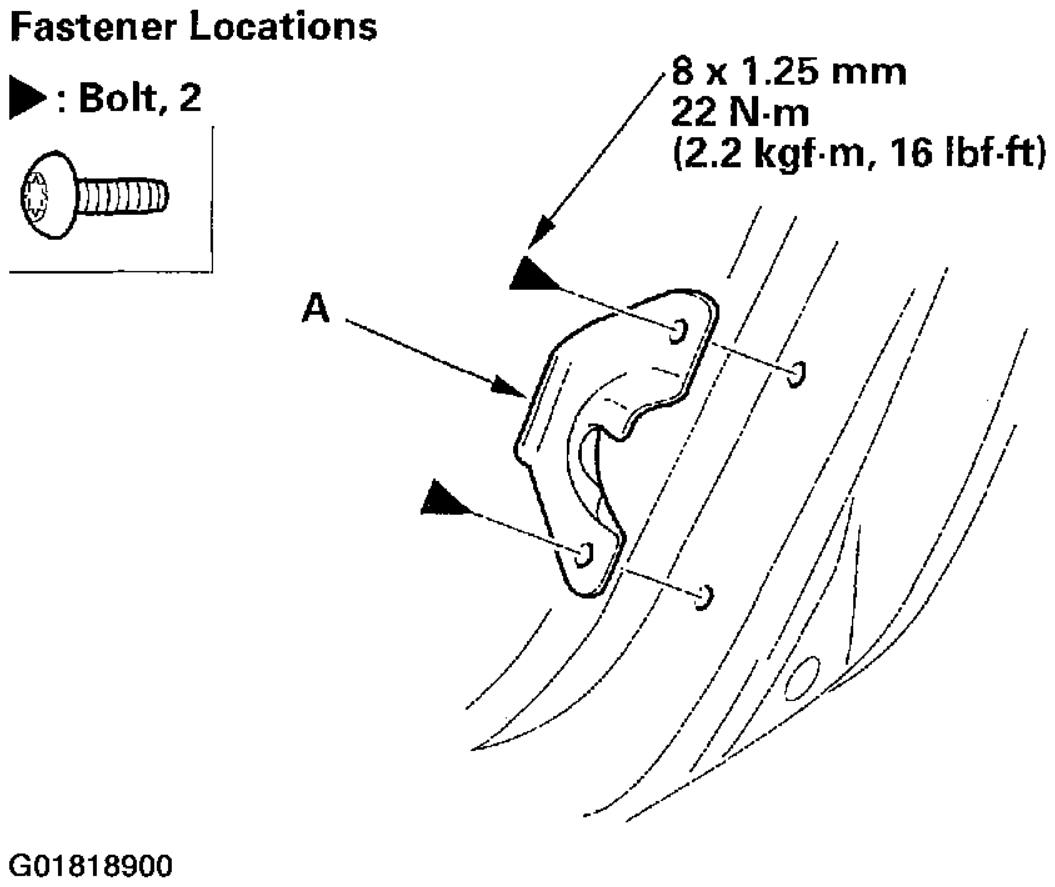

Fig. 64: Removing The Door Catch From The Body

3. Install the hook pin and catch in the reverse order of removal, and apply liquid thread lock to the threads of the door hook pin.

FRONT & REAR DOOR GLASS ADJUSTMENT

NOTE:

- **Check the weatherstrips and glass run channel for damage or deterioration, and replace them if necessary.**
- **Wipe the run channel clean with a shop towel.**
- **Lubricate the run channel with Shin-Etsu grease P/N 08798-9013.**

1. Place the vehicle on a firm, level surface.
2. Remove these items:
   a. Door panel, front door (see **FRONT DOOR PANEL REMOVAL/INSTALLATION**), rear door (see **REAR DOOR PANEL REMOVAL/INSTALLATION**)

cardiagn.com

b. Plastic cover, front door (see **COMPONENT LOCATION INDEX**), rear door (see **COMPONENT LOCATION INDEX**)

3. Carefully move the glass (A) until you can see the glass mounting bolts (B), then loosen them.

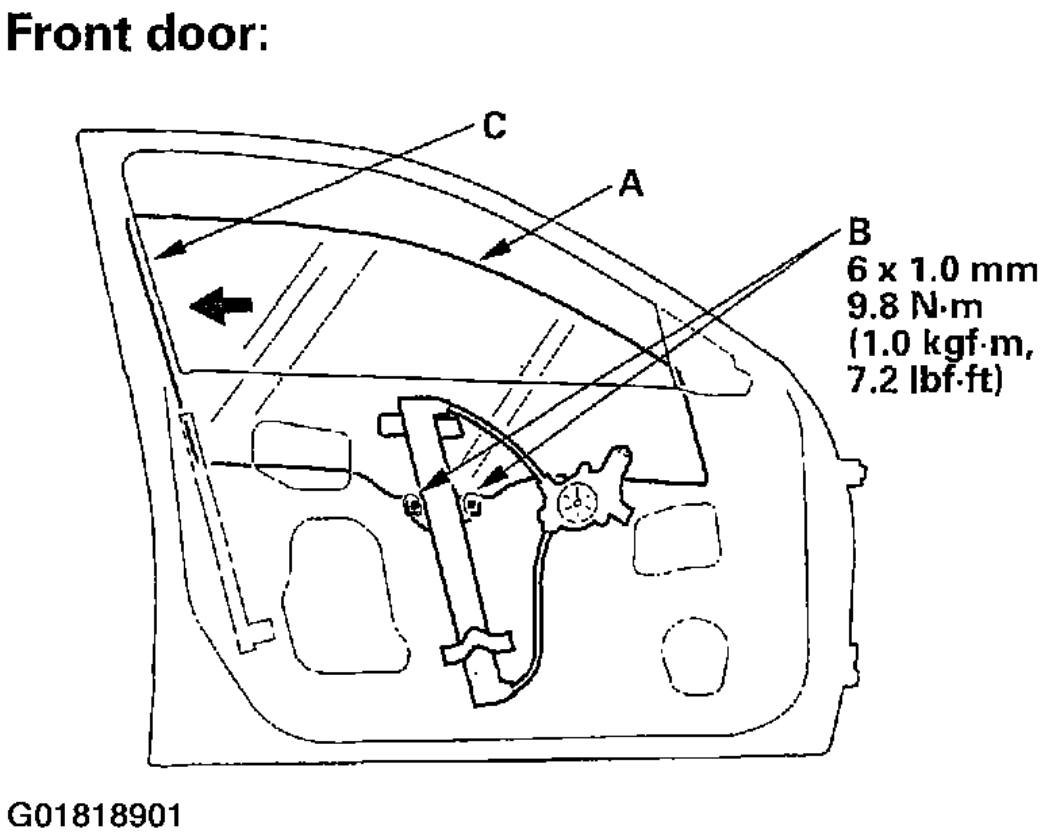

Fig. 65: Loosening Front Door Glass Mounting Bolts

cardiagn.com

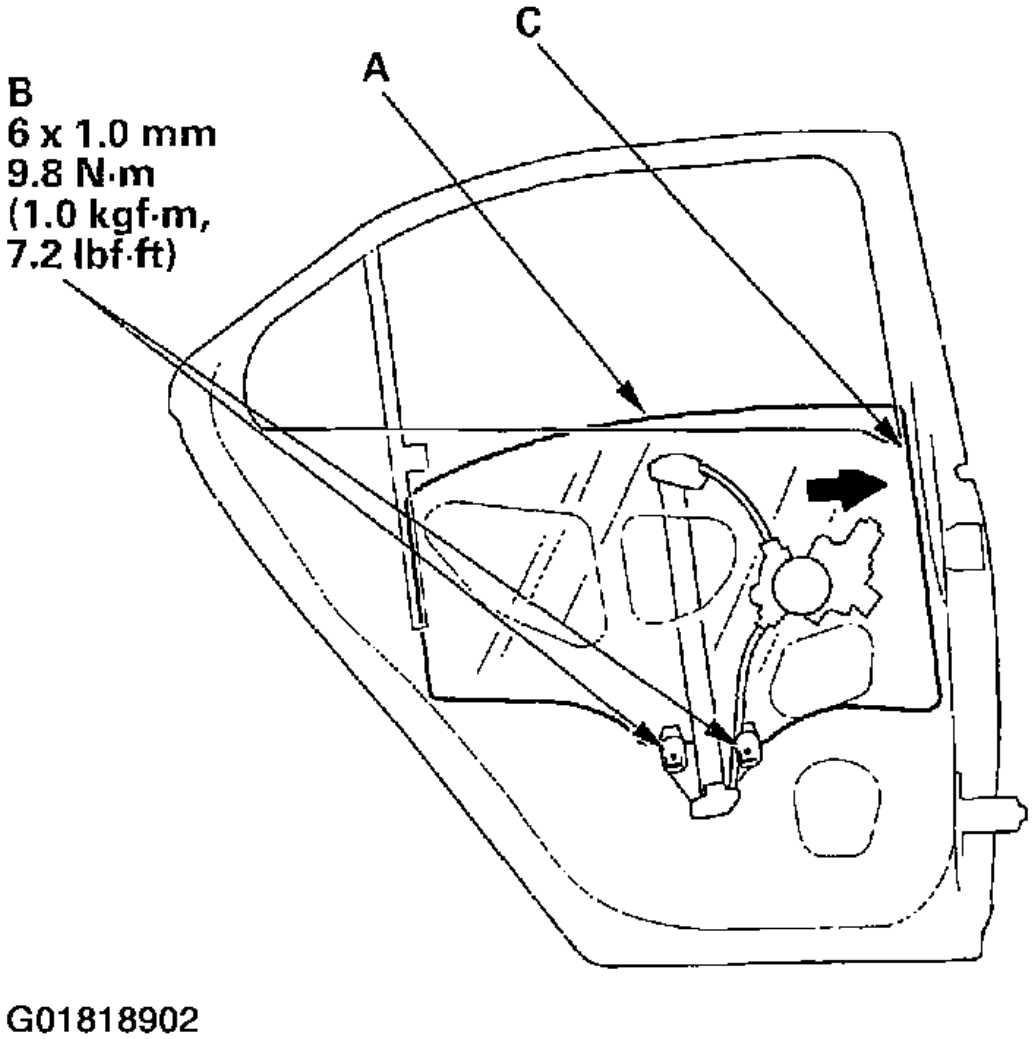

Fig. 66: Loosening Rear Door Glass Mounting Bolts

4. Push the glass (A) against the channel (C), then tighten the glass mounting bolts.
5. Make sure that the glass moves smoothly.
6. Raise the glass fully, and check for gaps. Also check that the glass (A) contacts the glass run channel (B) evenly.

cardiagn.com

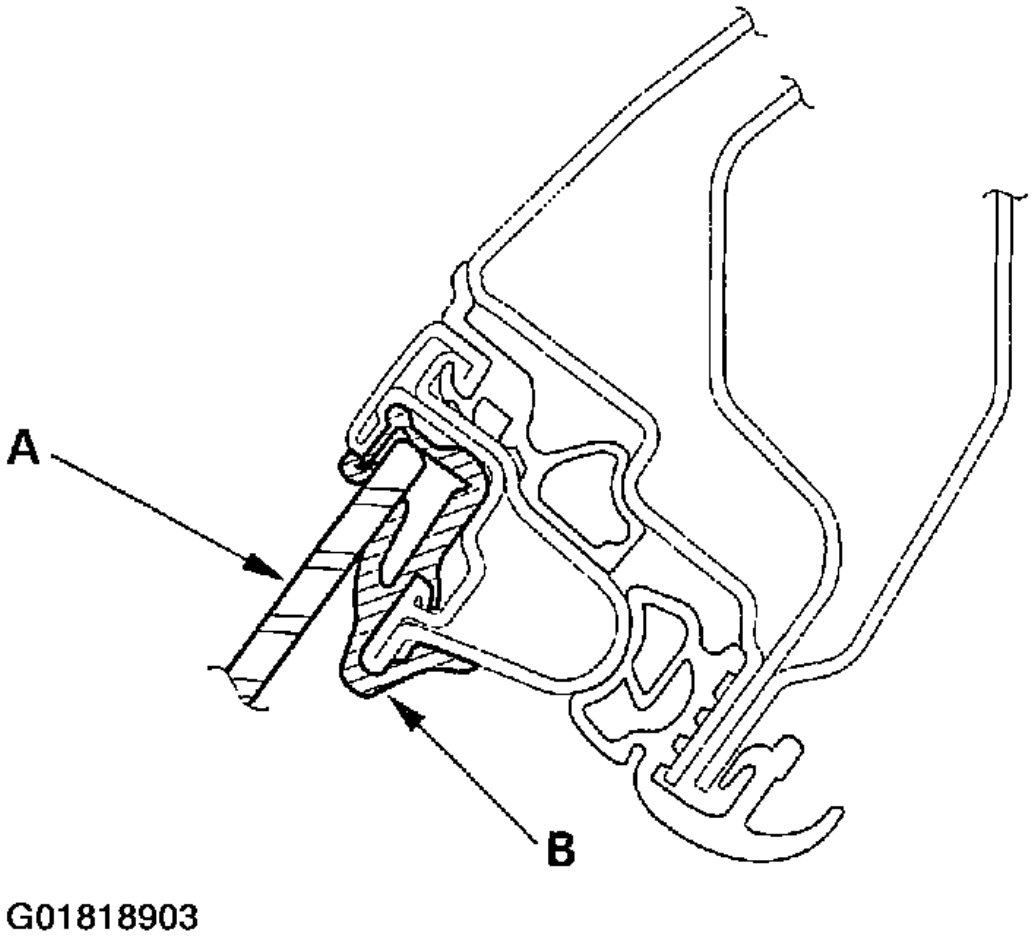

Fig. 67: Checking That The Glass Contacts The Glass Run Channel Evenly

7. Check for water leaks. Run water over the roof and on the sealing area as shown, and note these items:
   - Use a 12 mm (0.47 in.) diameter hose (A).
   - Adjust the rate of water flow as shown (B).
   - Do not use a nozzle.
   - Hold the hose about 300 mm (12 in.) away from the door (C).

cardiagn.com

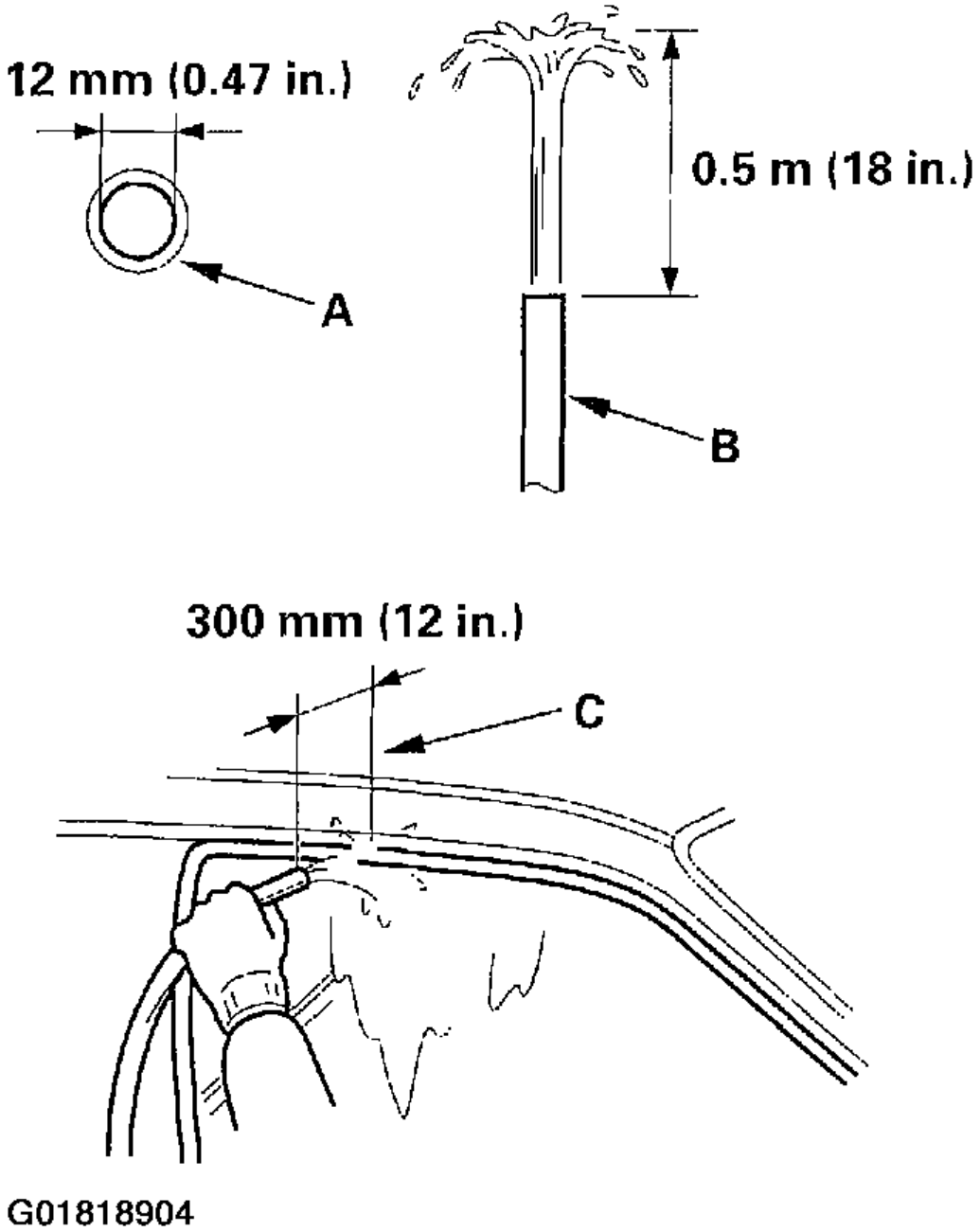

Fig. 68: Checking For Water Leaks

8. Attach the plastic cover, and install the door panel, front door (see **FRONT DOOR PANEL REMOVAL/INSTALLATION**), rear door (see **REAR DOOR PANEL REMOVAL/INSTALLATION**).

cardiagn.com

FRONT & REAR DOOR POSITION ADJUSTMENT

SRS components are located in the B-pillar bottom area. Review the SRS component locations, and the precautions and procedures in the SRS section before performing repairs or service. See **AIR BAG RESTRAINT SYSTEMS** .

NOTE: Check for a flush fit with the body, then check for equal gaps between the front, rear, and bottom door edges and the body. Check that the door and body edges are parallel.

1. Place the vehicle on a firm, level surface when adjusting the doors.
2. Adjust at the hinges (A):
   - On the front door: Remove the front inner fender (see **FRONT INNER FENDER REPLACEMENT**) and front fender fairing (see **FRONT FENDER FAIRING REPLACEMENT**). Loosen the hinge mounting bolts (B) slightly, and move the door backward or forward, up or down as necessary to equalize the gaps.
   - On the rear door: Remove the B-pillar lower trim (see **TRIM REMOVAL/INSTALLATION - DOOR AREA**) and remove the front seat belt and retractor (see **AIR BAG RESTRAINT SYSTEMS**), and the plug seal from the body. Loosen the hinge mounting nuts (C) slightly, and move the door backward or forward, up or down as necessary to equalize the gaps.
   - Place a shop towel (D) on the jack (E) to prevent damage to the door when adjusting the door.

cardiagn.com

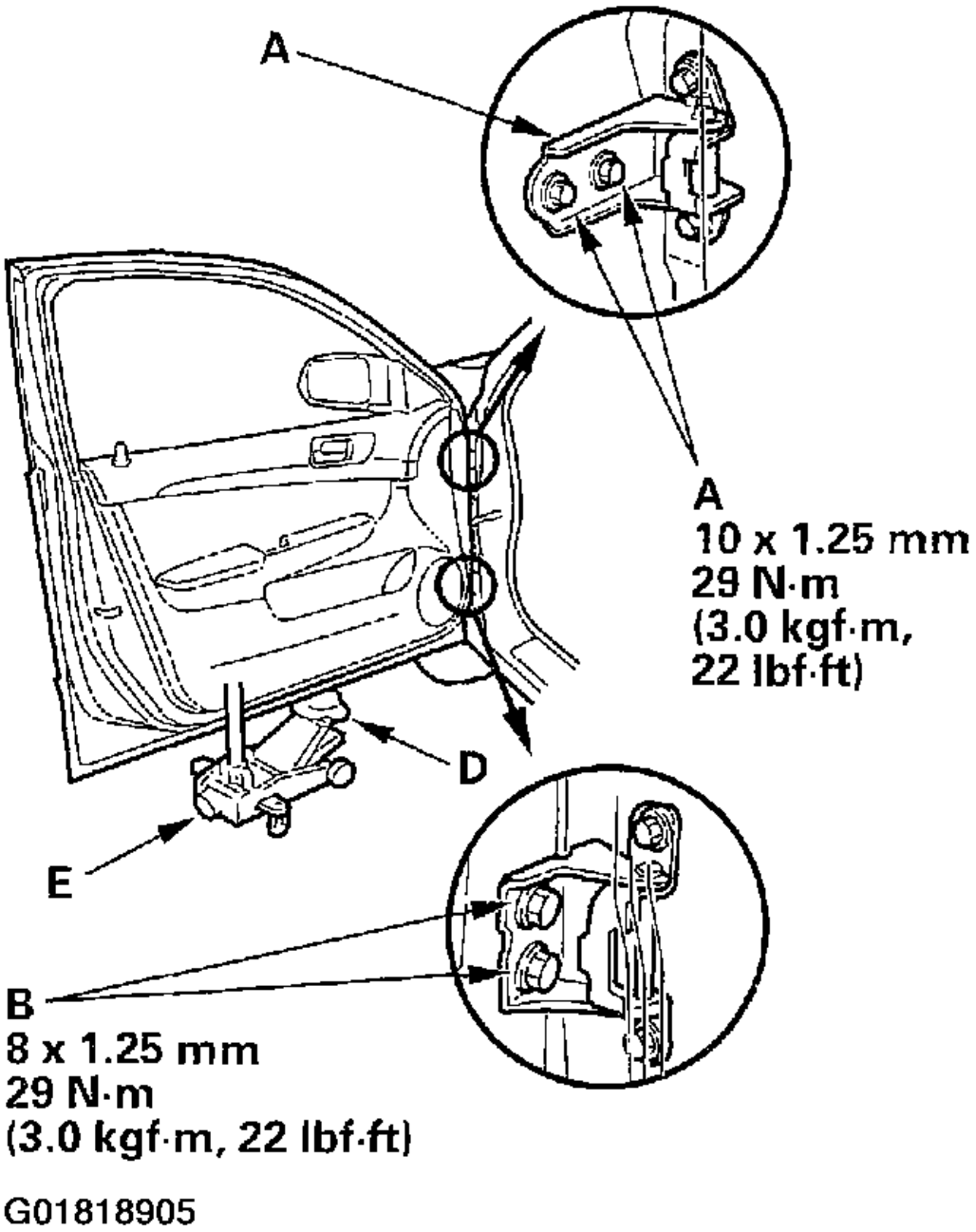

Fig. 69: Adjusting Front Door Position

cardiagn.com

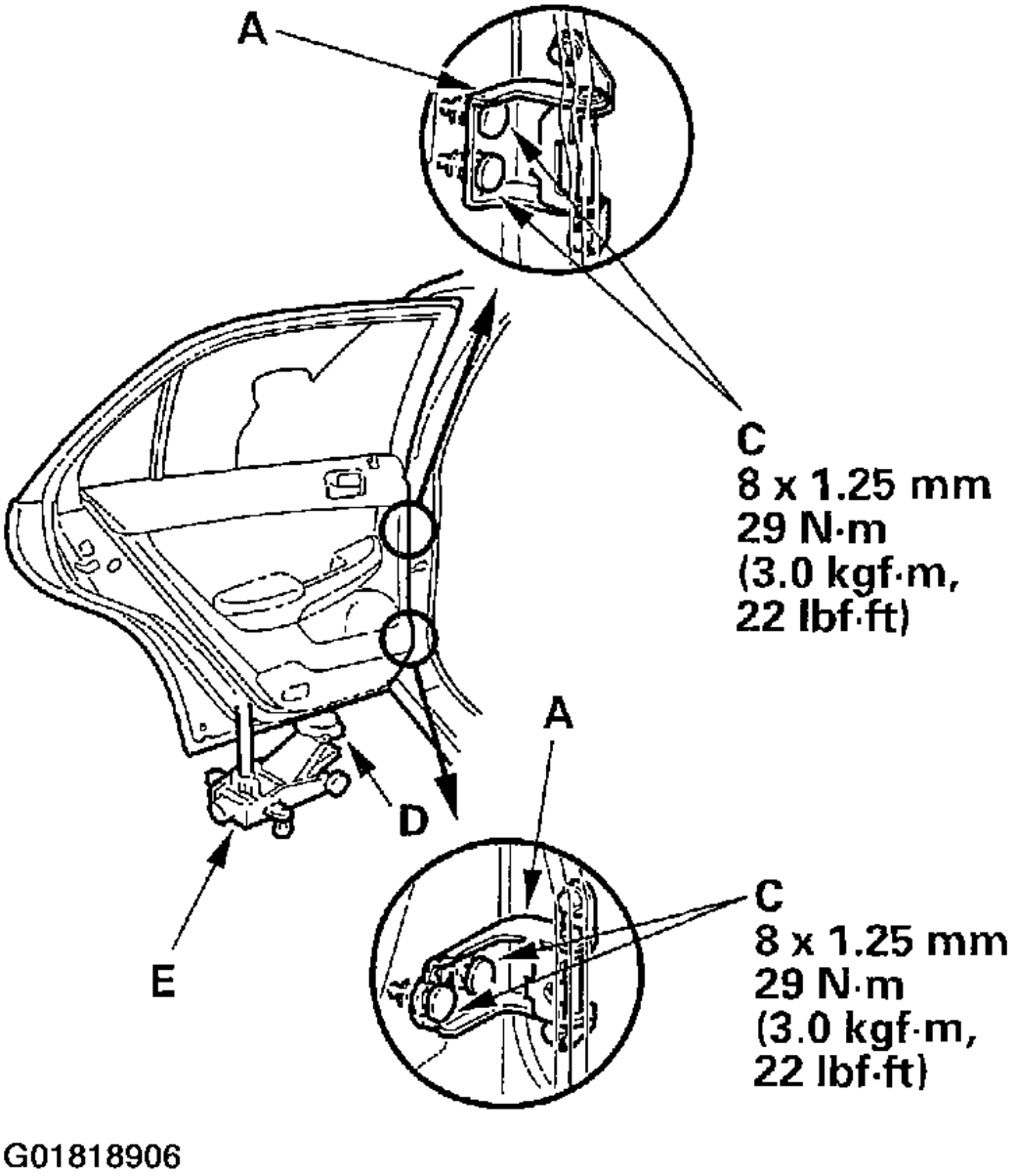

Fig. 70: Adjusting Rear Door Position

3. Make sure that the door and body edges are parallel. If necessary, adjust the door cushions (A) to make the rear of the doors flush with the body.

cardiagn.com

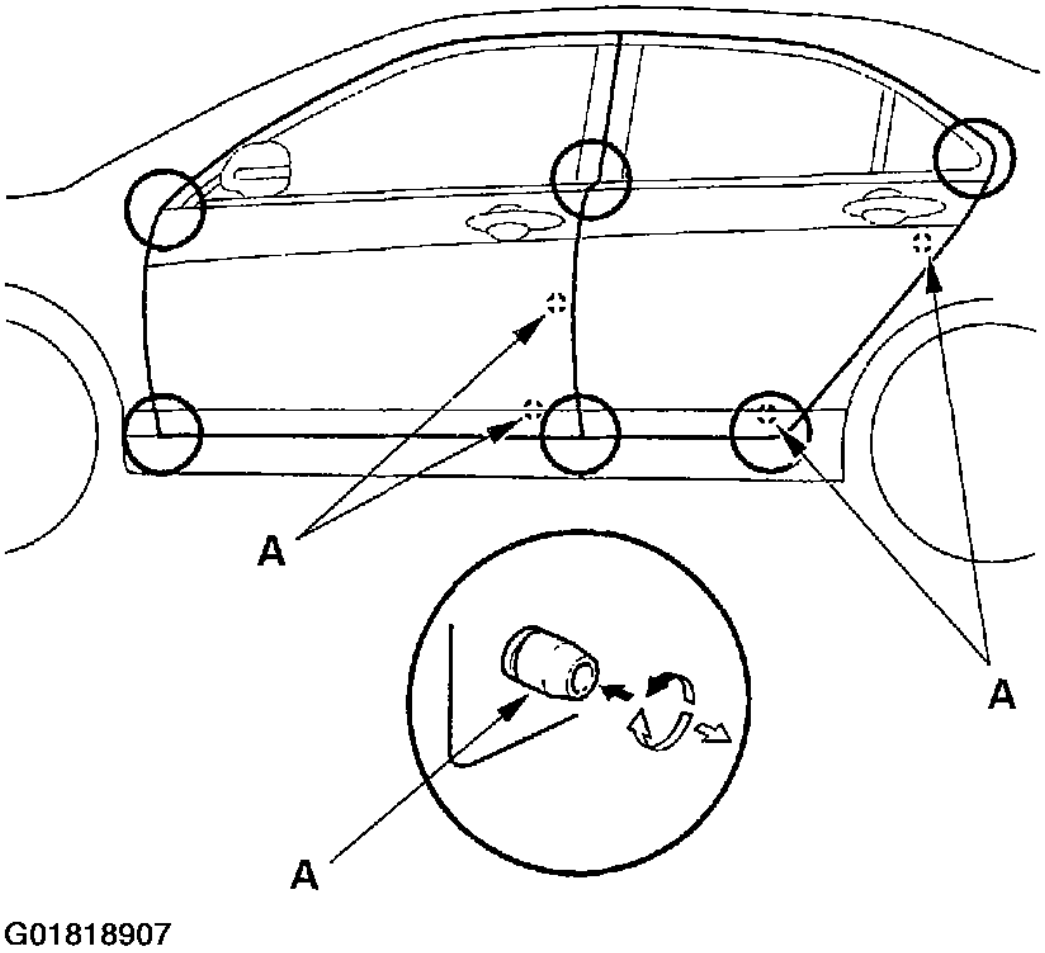

Fig. 71: Ensuring Door & Body Edges Are Parallel

4. Apply touch-up paint to the hinge mounting bolts, and around the hinges.
5. Check for water leaks (see step 7 of **FRONT & REAR DOOR GLASS ADJUSTMENT**).

FRONT & REAR DOOR STRIKER ADJUSTMENT

Make sure the door latches securely without slamming it. If necessary, adjust the striker (A): The striker can be adjusted slightly up or down, and in or out.

1. Loosen but do not remove the screws (B), then insert a shop towel (C) between the body and striker.

cardiagn.com

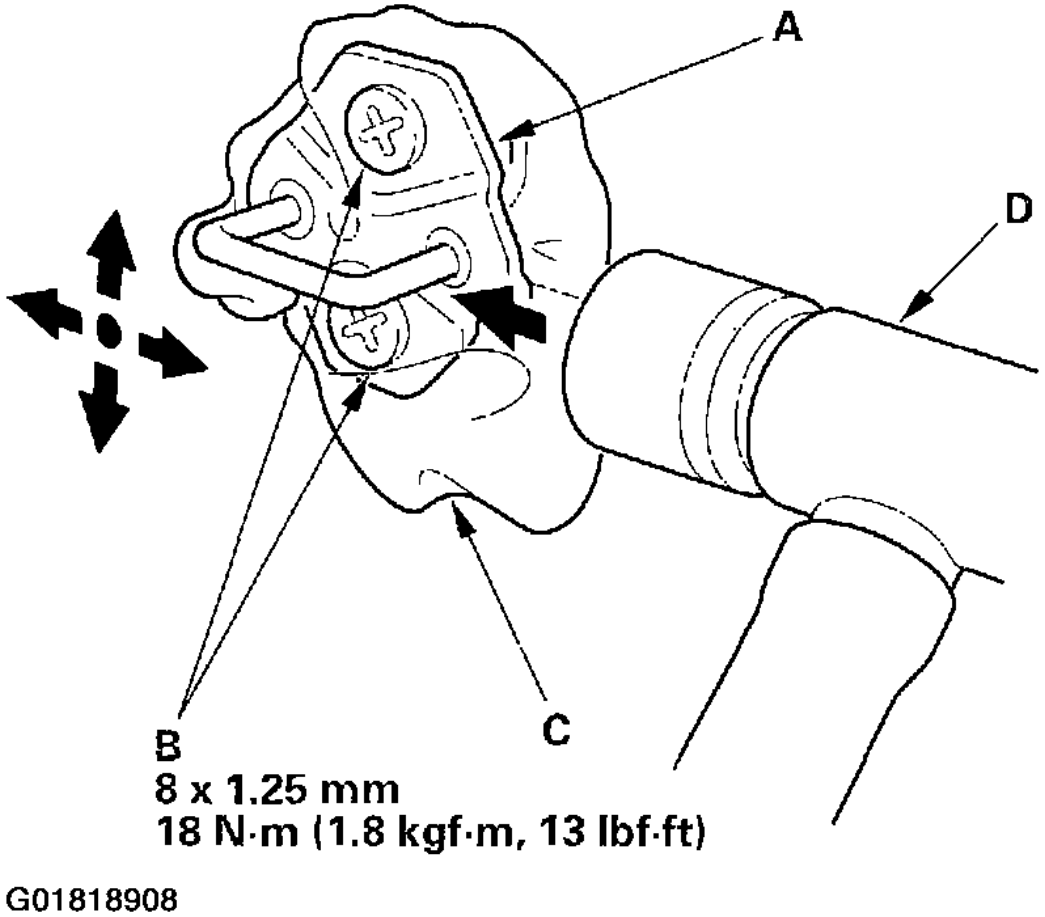

Fig. 72: Adjusting Door Striker

2. Lightly tighten the screws.
3. Wrap the striker with a shop towel, then adjust the striker by tapping it with a plastic hammer (D). Do not hit the striker too hard.
4. Loosen the screws, and remove the shop towel.
5. Lightly tighten the screws.
6. Hold the outer handle out, and push the door against the body to be sure the striker allows a flush fit. If the door latches properly, tighten the screws and recheck.

INTERIOR TRIM

COMPONENT LOCATION INDEX

cardiagn.com

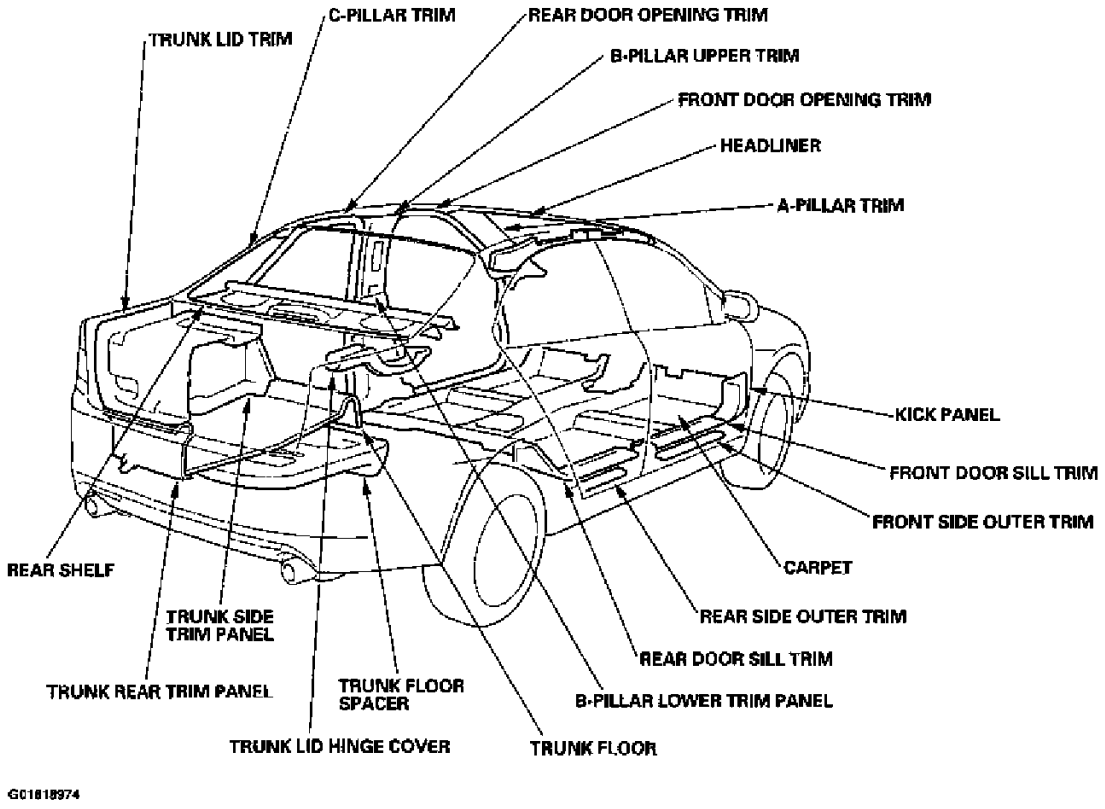

Fig. 73: Locating Interior Trim Components

TRIM REMOVAL/INSTALLATION - DOOR AREA

SRS components are located in this area. Review the SRS component locations and the precautions and procedures in the SRS section before performing repairs or service. See **AIR BAG RESTRAINT SYSTEMS** .

Without Side Curtain Airbag

NOTE:

- **Put on gloves to protect your hands.**
- **When prying with a flat-tip screwdriver, wrap it with protective tape to prevent damage.**
- **Take care not to bend or scratch the trim and panels.**

1. Remove the trim as shown.
2. Install the trim in the reverse order of removal, and note these items:
   - Replace any damaged clips.
   - Make sure the opener cable is connected securely.
   - Push the clip portions into place securely.
   - Apply liquid thread lock to the front seat belt upper anchor bolt before installation.

cardiagn.com

- Before installing the anchor bolts, make sure there are no twists or kinks in the belts.

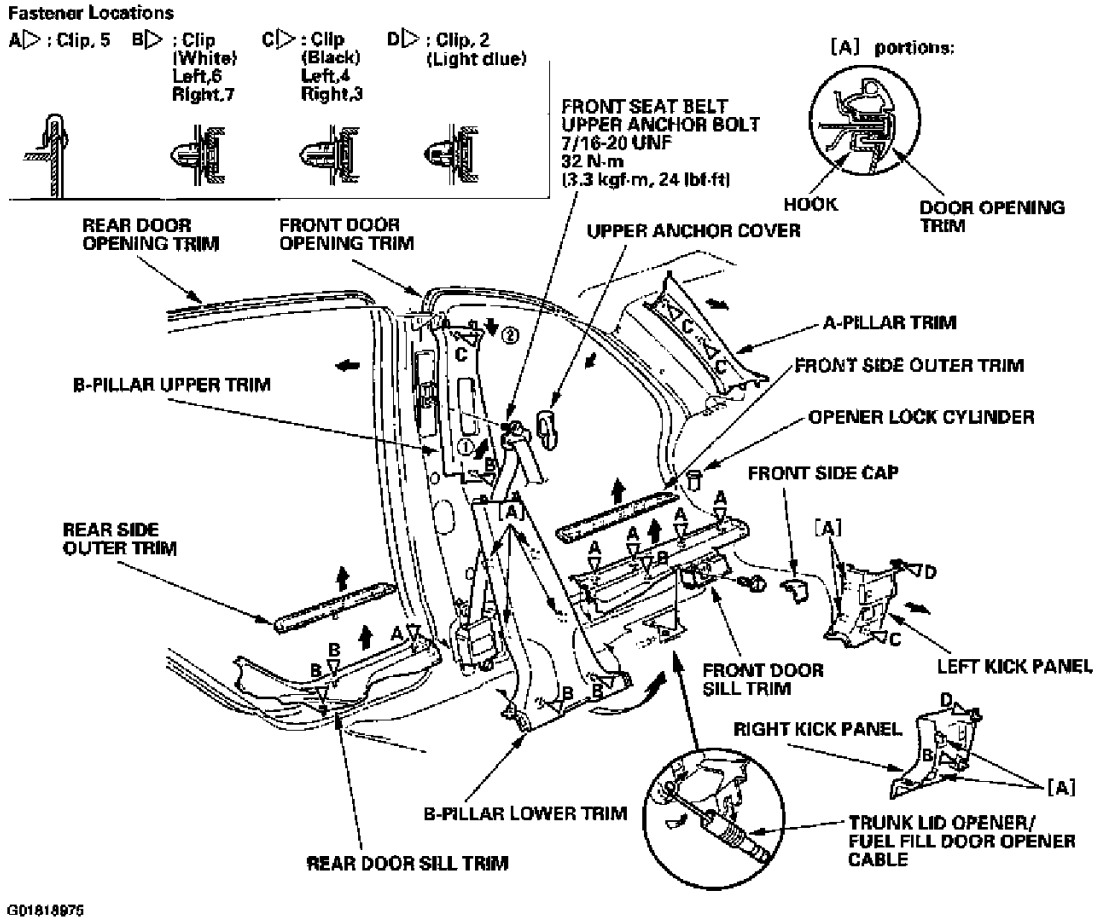

Fig. 74: Removing & Installing Door Area Trim (Without Side Curtain Airbag)

With Side Curtain Airbag

NOTE:

- **Put on gloves to protect your hands.**
- **When prying with a flat-tip screwdriver, wrap it with protective tape to prevent damage.**
- **Take care not to bend or scratch the trim and panels.**

1. Remove the trim as shown.
2. Install the trim in the reverse order of removal, and note these items:
   - If the side curtain airbag have deployed, be sure to check the removed trim pieces for damage before reinstallation (see **AIR BAG RESTRAINT SYSTEMS**), and if necessary, replace them and trim clips with new ones.
   - If the side curtain airbag have not deployed, removed trim pieces should still be checked for

cardiagn.com

damage (see **AIR BAG RESTRAINT SYSTEMS**), and replace them with new ones if necessary.

- Make sure the opener cable is connected securely.
- Make sure the top of the trim overlaps with the headliner correctly (see **AIR BAG RESTRAINT SYSTEMS**).
- Make sure the trim hooks are installed into holes in the side curtain airbag center bracket securely.
- Push the clip portions into place securely.
- Apply liquid thread lock to the front seat belt upper anchor bolt before installation.
- Before installing the anchor bolts, make sure there are no twists or kinks in the belts.

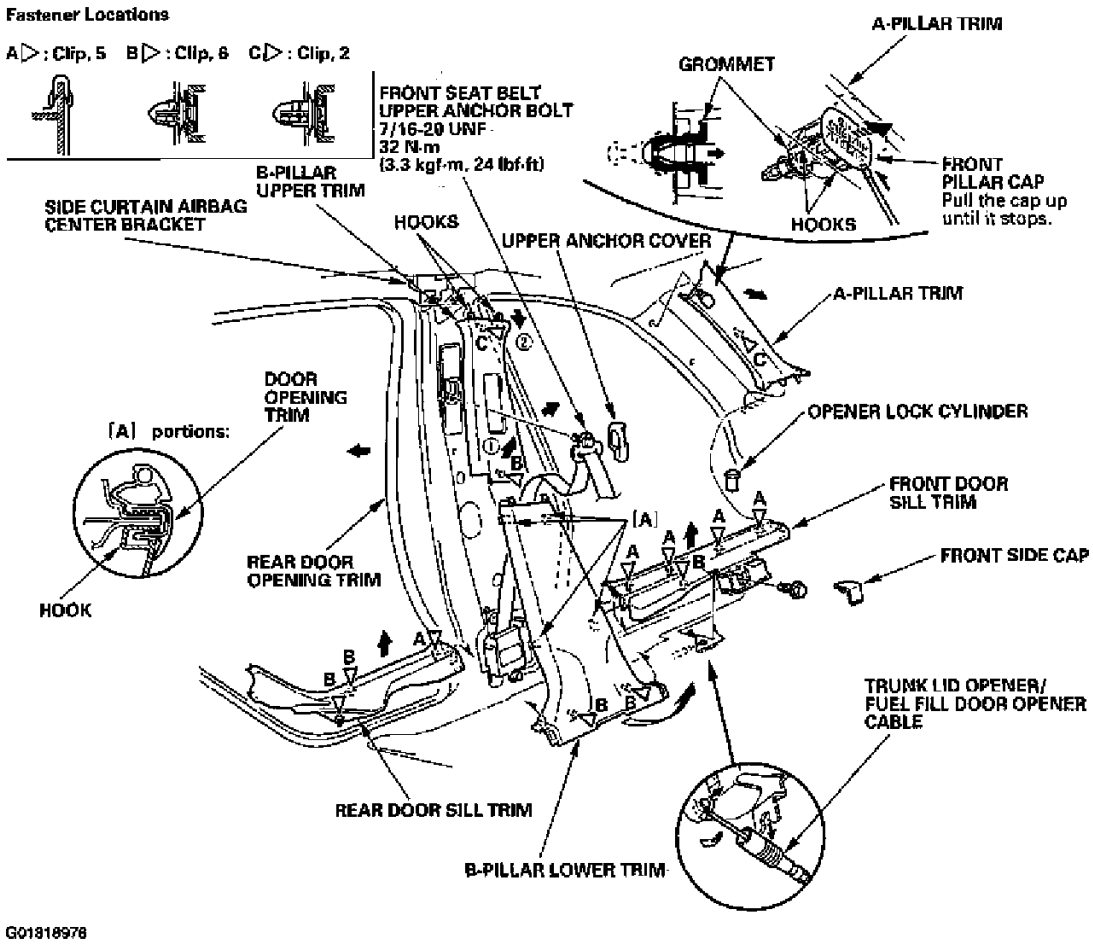

Fig. 75: Removing & Installing Door Area Trim (With Side Curtain Airbag)

TRIM REMOVAL/INSTALLATION - REAR SHELF AREA

SRS components are located in this area. Review the SRS component locations and the precautions and procedures in the SRS section before performing repairs or service. See **AIR BAG RESTRAINT SYSTEMS** .

Without Side Curtain Airbag

cardiagn.com

NOTE:

- **Put on gloves to protect your hands.**
- **When prying with a flat-tip screwdriver, wrap it with protective tape to prevent damage.**
- **Take care not to bend or scratch the trim and panels.**

1. Remove the trim as shown. To remove the high mount brake light, first disconnect the bulb socket.
2. Install the trim in the reverse order of removal, and note these items:
   - Replace any damaged clips.
   - When installing the rear shelf, slip the rear seat belts and center seat belt through the slits and hole in the rear shelf.
   - Make sure the high mount brake light bulb socket is connected securely.

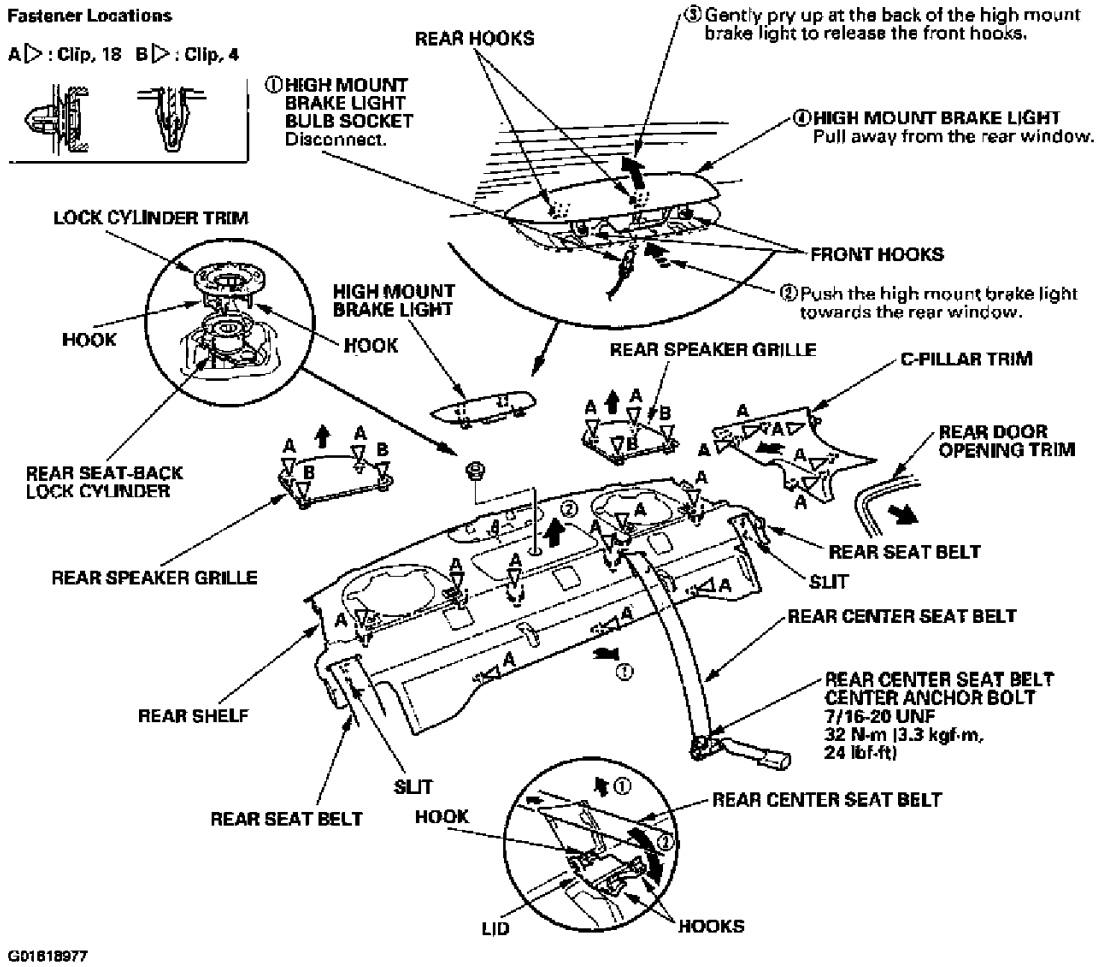

Fig. 76: Removing & Installing Rear Shelf Area Trim (Without Side Curtain Airbag)

C-pillar - With Side Curtain Airbag

cardiagn.com

NOTE:

- **Put on gloves to protect your hands.**
- **When prying with a flat-tip screwdriver, wrap it with protective tape to prevent damage.**
- **Take care not to bend or scratch the trim and panels.**

1. Remove the trim as shown:
2. Install the trim in the reverse order of removal, and note these items:
   - If the side curtain airbag have deployed, be sure to check the removed trim pieces for damage before reinstallation (see **AIR BAG RESTRAINT SYSTEMS**), and if necessary, replace them and the trim clips with new ones.
   - If the side curtain airbag have not deployed, removed trim pieces should still be checked for damage (see **AIR BAG RESTRAINT SYSTEMS**), and replace them with new ones if necessary.
   - Make sure the top of the trim overlaps with the headliner correctly (see **AIR BAG RESTRAINT SYSTEMS**).
   - Push the clip portions into place securely.

cardiagn.com

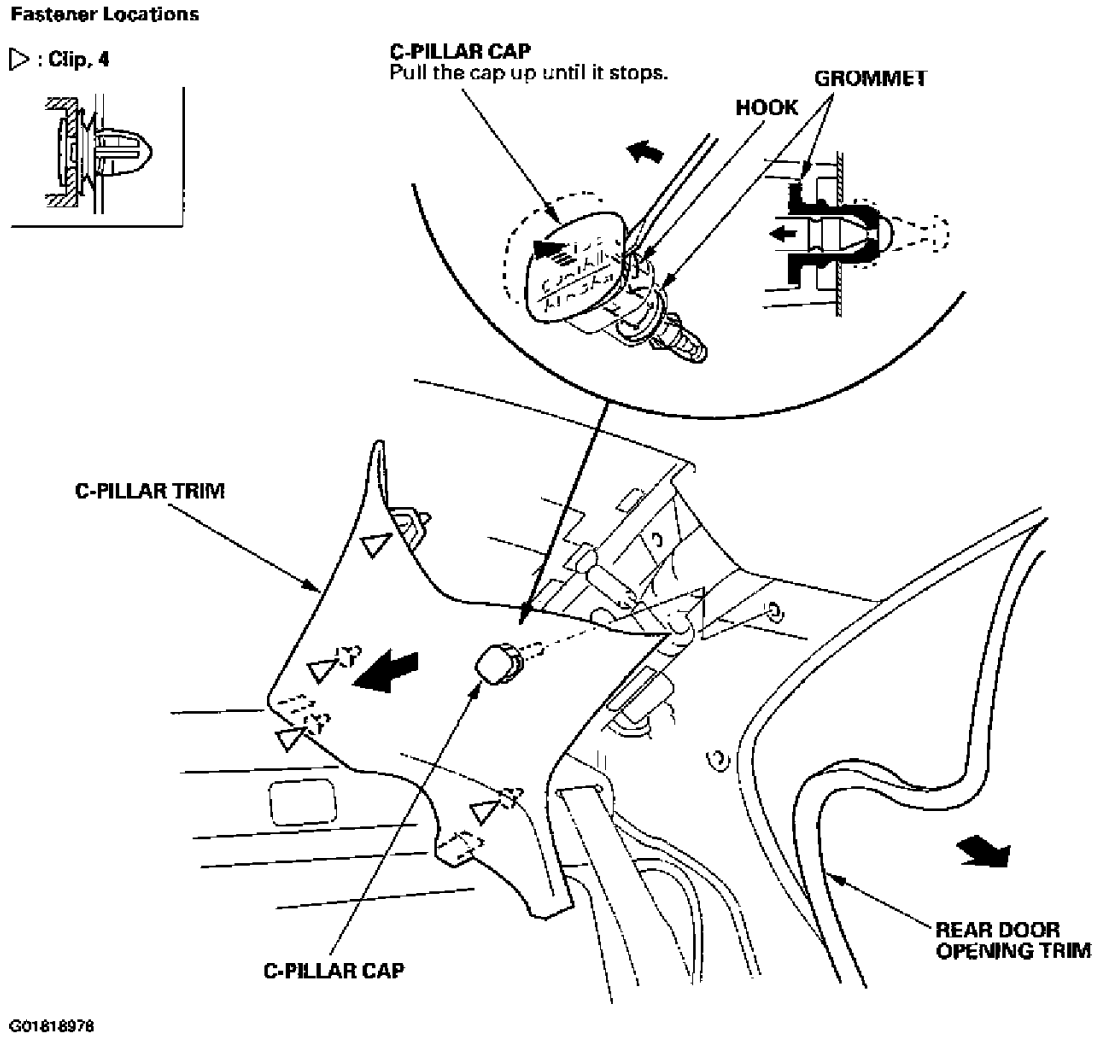

Fig. 77: Removing & Installing C-Pillar Area Trim (With Side Curtain Airbag)

TRIM REMOVAL/INSTALLATION - TRUNK AREA

NOTE:

- **Put on gloves to protect your hands.**
- **When prying with a flat-tip screwdriver, wrap it with protective tape to prevent damage.**
- **Take care not to bend or scratch the trim and panels.**

1. Remove the trim as shown.
2. Install the trim in the reverse order of removal, and replace any damaged clips.

NOTE: **Two clips are located behind the rear seats.**

cardiagn.com

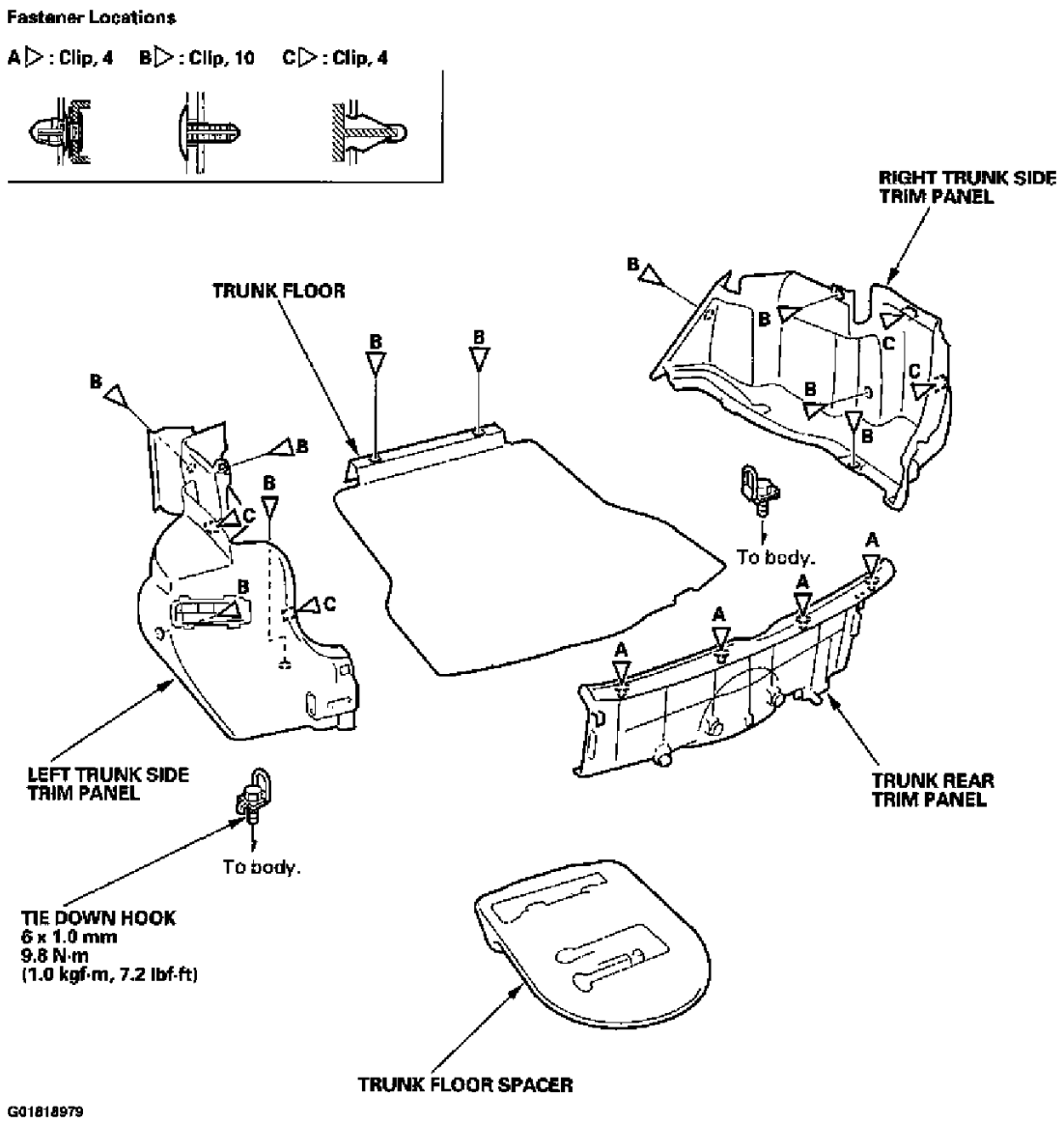

Fig. 78: Removing & Installing Trunk Area Trim

TRIM REMOVAL/INSTALLATION - TRUNK LID

NOTE:

- **Put on gloves to protect your hands.**
- **When prying with a flat-tip screwdriver, wrap it with protective tape to prevent damage.**
- **Take care not to bend or scratch the trim and panels.**

1. Remove the trim as shown.
2. Install the trim in the reverse order of removal, and replace any damaged clips.

cardiagn.com

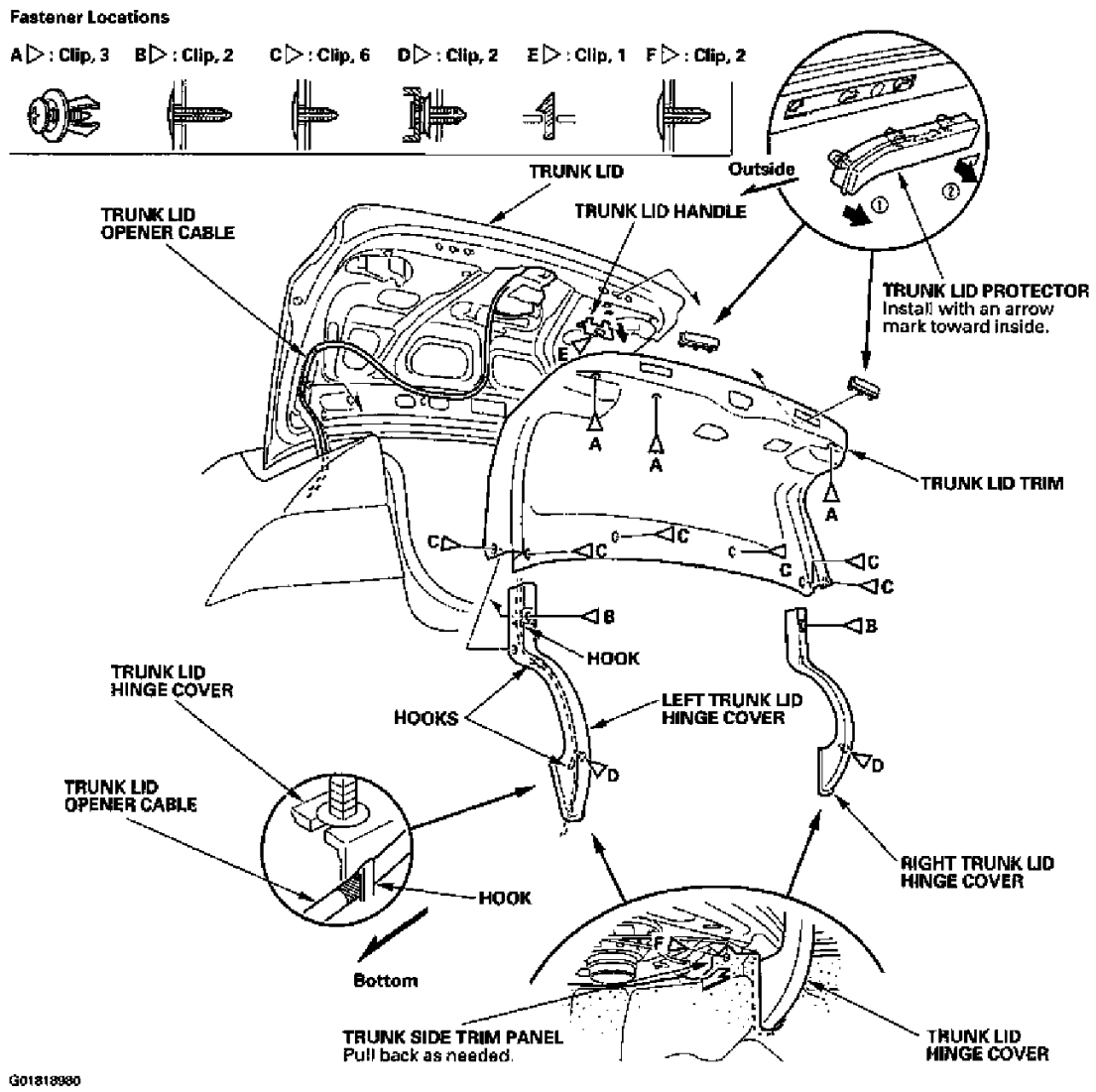

Fig. 79: Removing & Installing Trunk Lid Trim

HEADLINER REMOVAL/INSTALLATION

SRS components are located in this area. Review the SRS component locations and the precautions and procedures in the SRS section before performing repairs or service. See **AIR BAG RESTRAINT SYSTEMS** .

NOTE:

- **When prying with a flat-tip screwdriver, wrap it with protective tape to prevent damage.**
- **Take care not to bend and scratch the headliner.**
- **Be careful not to damage the dashboard and other interior trim.**

1. Remove these items:

cardiagn.com

a. A-pillar trim, both sides (see **TRIM REMOVAL/INSTALLATION - DOOR AREA**)
b. Ceiling light (see **CEILING LIGHT REPLACEMENT**)
c. Front seat belt upper anchor, both sides (see step 6 on **AIR BAG RESTRAINT SYSTEMS**)
d. B-pillar lower trim (see **TRIM REMOVAL/INSTALLATION - DOOR AREA**)
e. B-pillar upper trim, both sides (see **TRIM REMOVAL/INSTALLATION - DOOR AREA**)
f. C-pillar trim, both sides on vehicles without side curtain airbags (see **TRIM REMOVAL/INSTALLATION - REAR SHELF AREA**)
g. C-pillar trim, both side on vehicles with side curtain airbags (see **TRIM REMOVAL/INSTALLATION - REAR SHELF AREA**)

2. From both sides, using a flat-tip screwdriver, release the tabs (A), then remove the sunvisor cap (B) from the bracket (C). Turn the cap, and remove it.

cardiagn.com

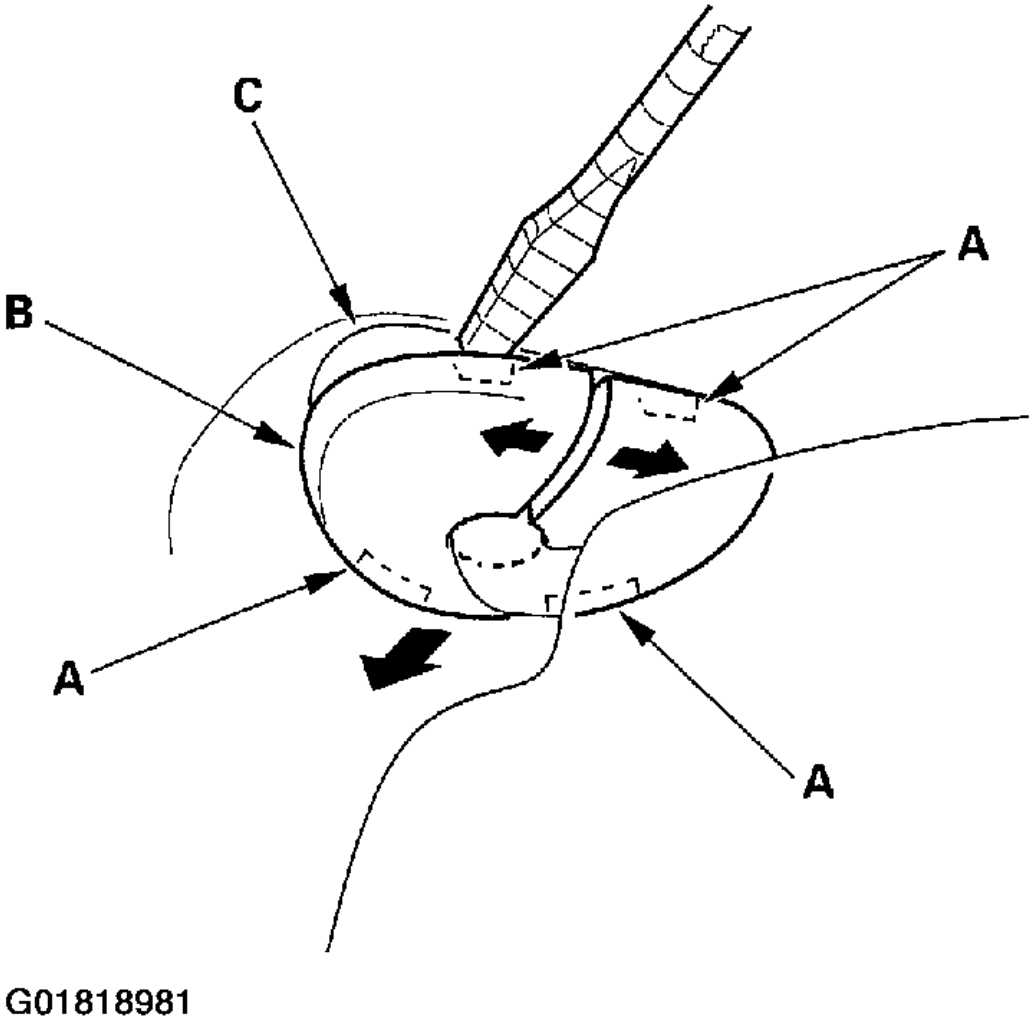

Fig. 80: Removing The Sunvisor Cap

3. From both sides, remove the sunvisor (A) and holder (B).
   a. Remove the self-tapping ET screws.
   b. Remove the sunvisor from the body and holder.
   c. Disconnect the vanity mirror light connector (C).
   d. Using a flat-tip screwdriver, push the hook (D), and turn the holder 90°, then pull it out.

cardiagn.com

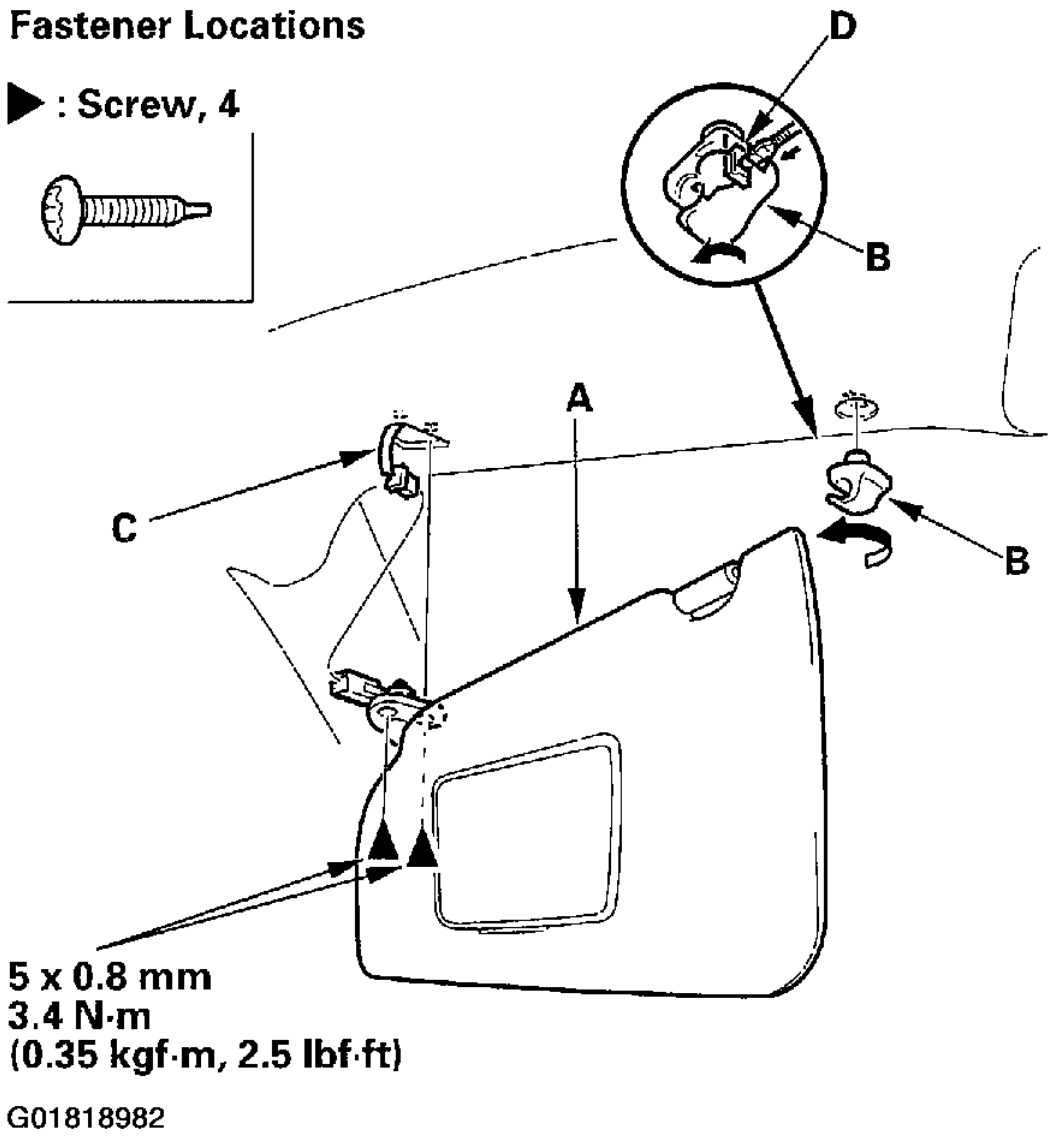

Fig. 81: Removing The Sunvisor

4. Remove the roof console (A).
   a. Remove the lens (B).
   b. Remove the bolts (C, D).
   c. Pull out the roof console, and front individual map light (E). Disconnect the front individual map light connector (F), and ambient light connector (G).

cardiagn.com

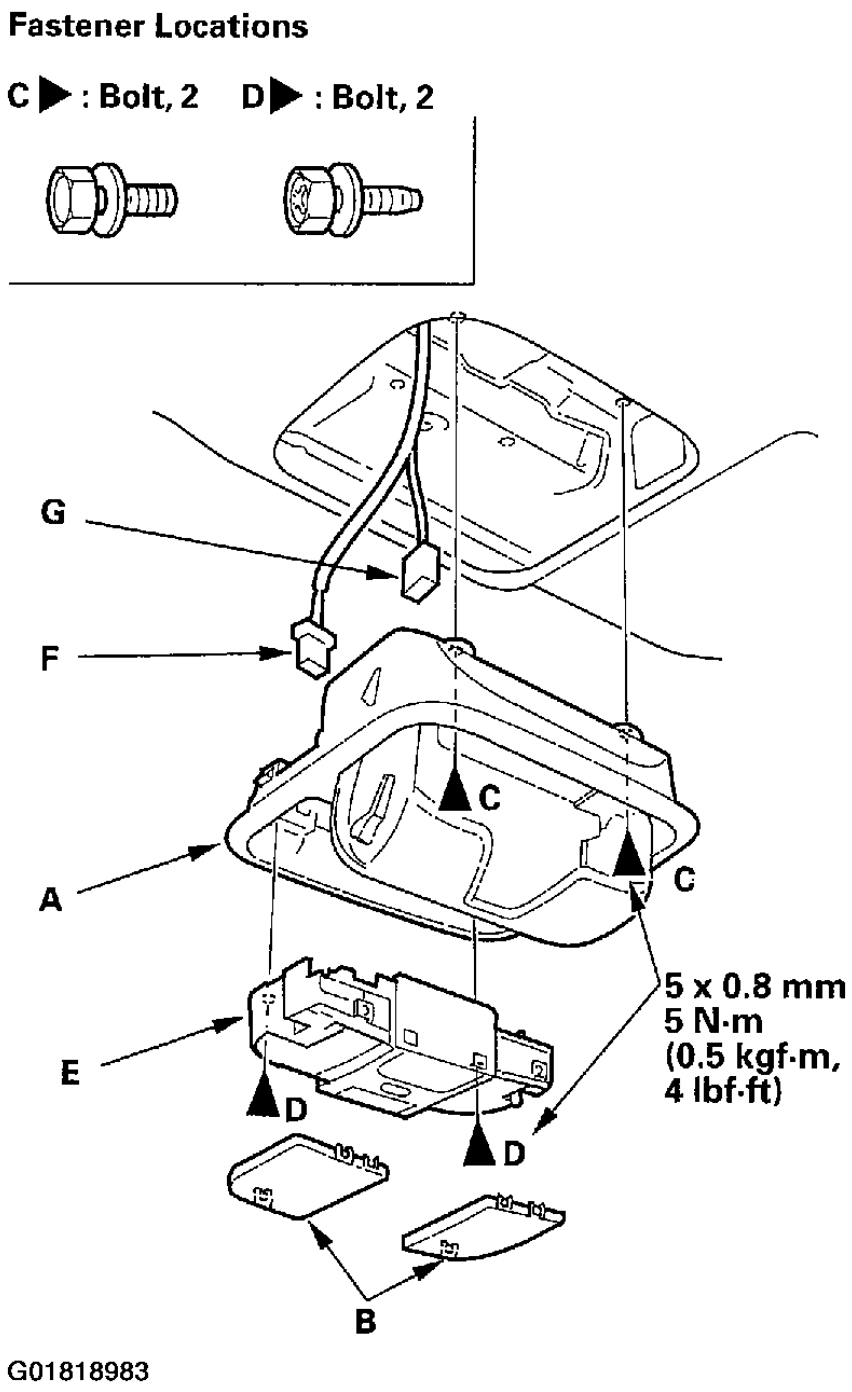

Fig. 82: Removing The Roof Console

5. Lower the grab handle, then pry out the lid (A). Remove the self-tapping ET screws, then remove the grab handle (B). Remove the remaining grab handles.

cardiagn.com

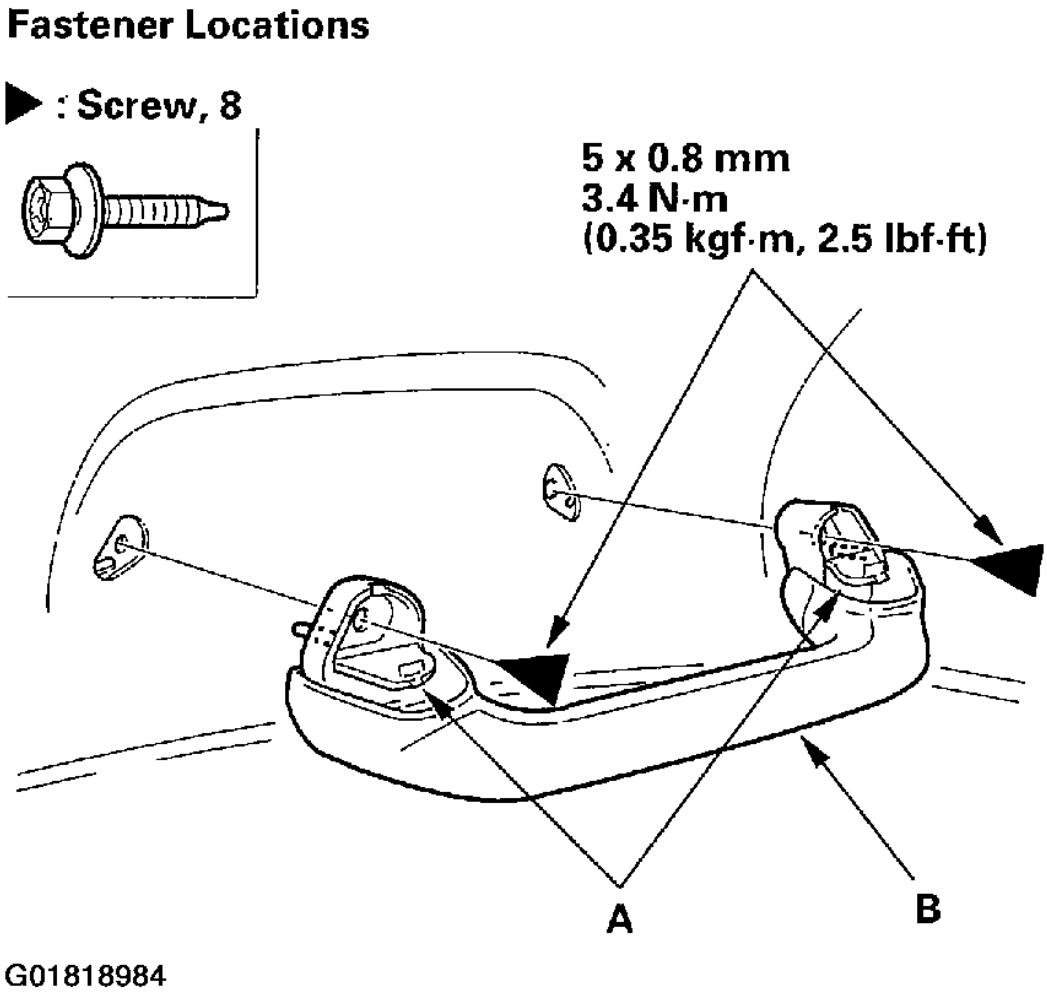

Fig. 83: Removing The Grab Handles

6. Remove the headliner.
   a. Remove the socket plug (A).
   b. Remove the front door opening trim (B) and rear door opening trim (C) from each roof portion.
   c. Detach the clip (D), and release the fasteners (E) by pulling the front portion of the headliner (F) down.
   d. With the help of an assistant, detach the rear clips (G) by pulling the rear portion of the headliner down, release the headliner from the frame (H) by sliding the headliner rearward, and lowering the headliner.
   e. Remove the headliner through the front passenger's door opening.

cardiagn.com

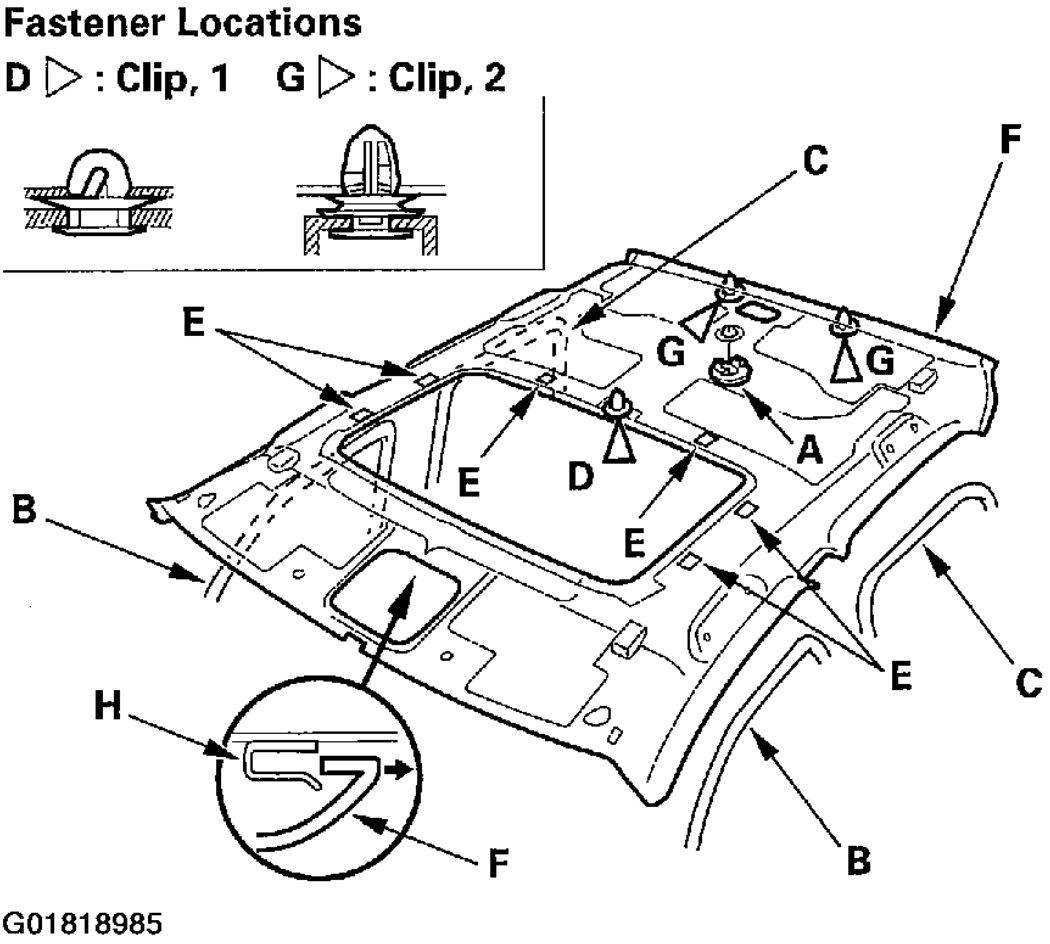

Fig. 84: Removing The Headliner

7. Without side curtain airbag: If necessary, remove the bolts, then remove the front grab handle bracket (A) and rear grab handle bracket (B) from each side by releasing the hooks (C).

cardiagn.com

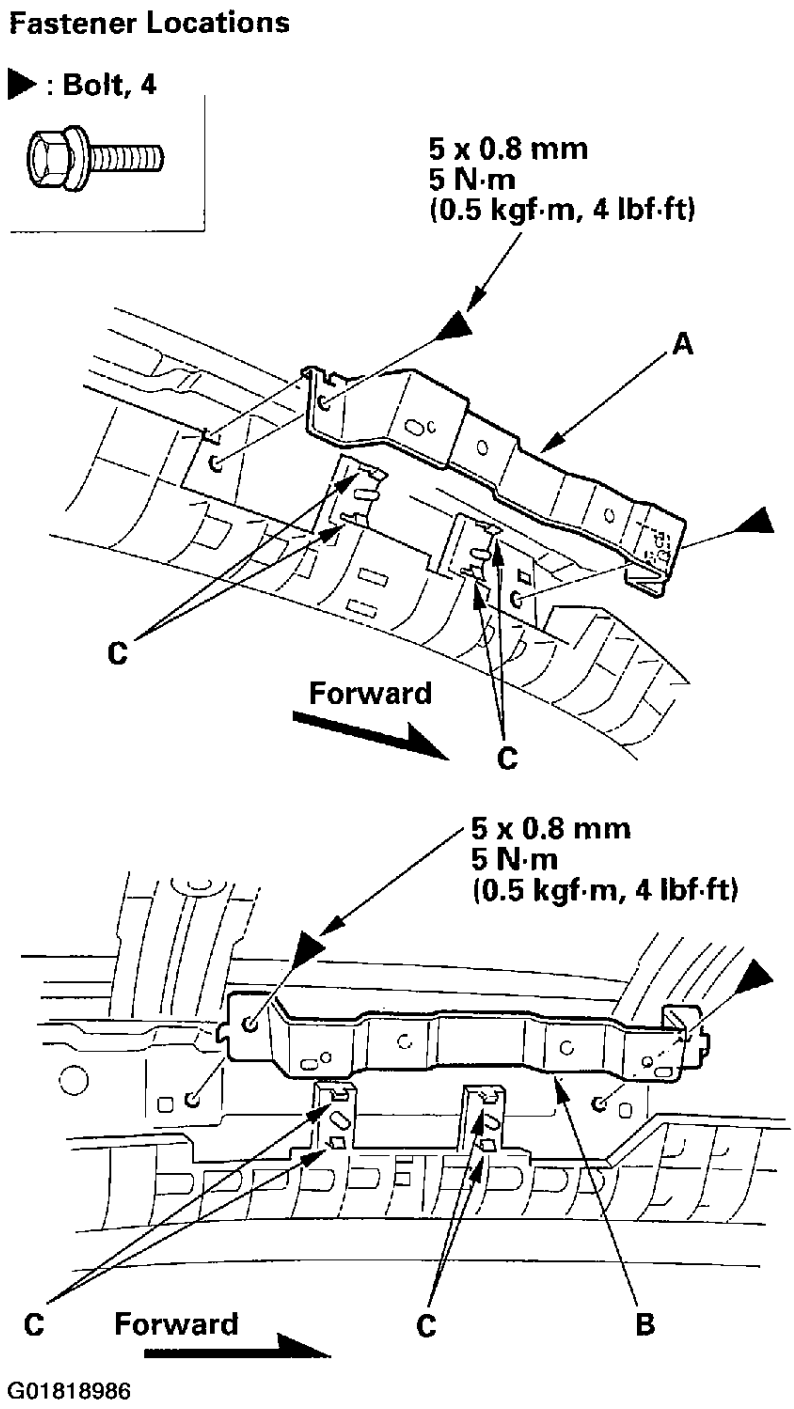

Fig. 85: Removing The Grab Handle Brackets

8. If necessary, detach the hooks (A) and the clip (B), then remove the front roof side pad (C) and rear roof side pad (D).

cardiagn.com

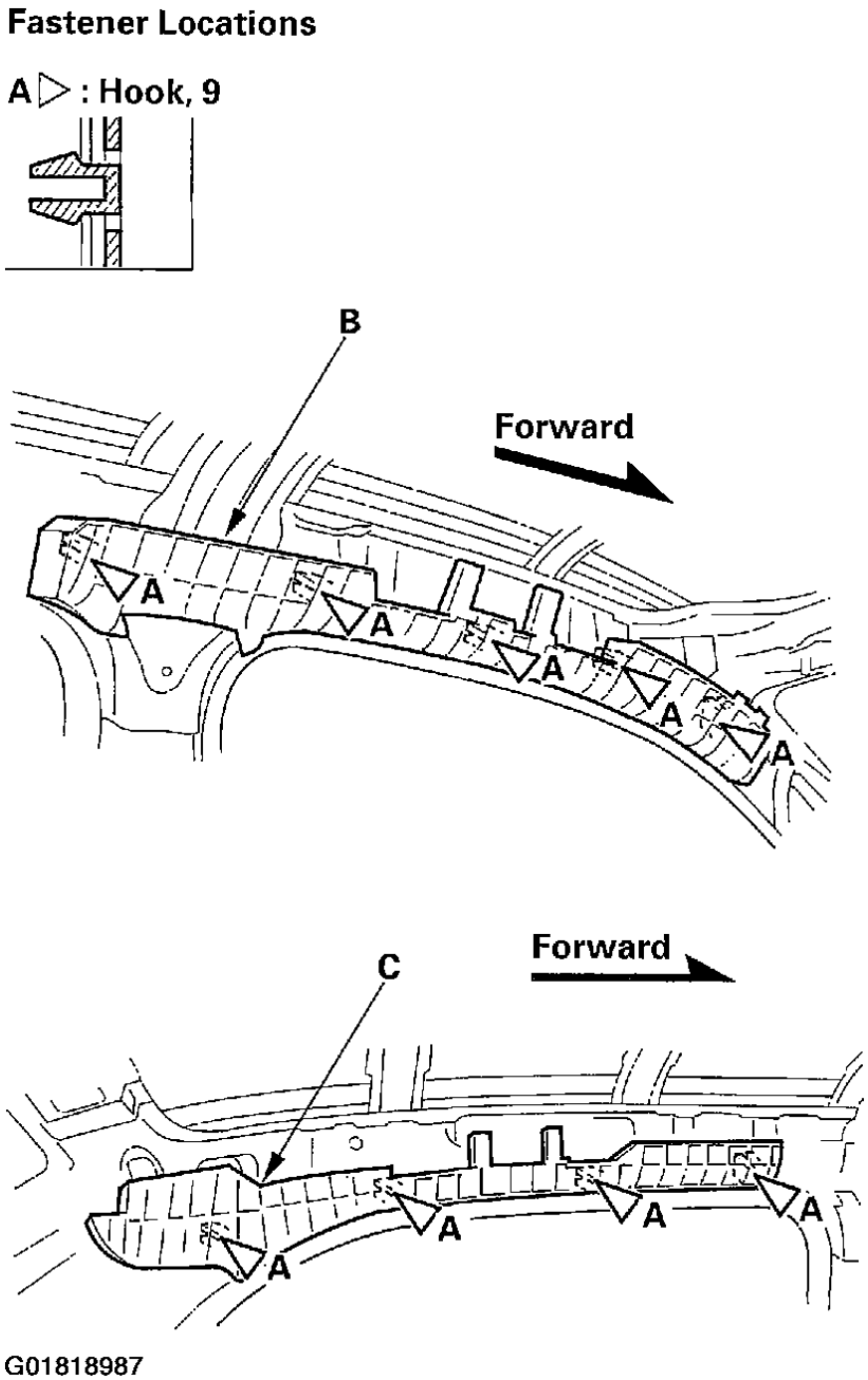

Fig. 86: Removing The Roof Side Pads

9. If necessary, pull down the roof console bracket (A) to release the clip.

cardiagn.com

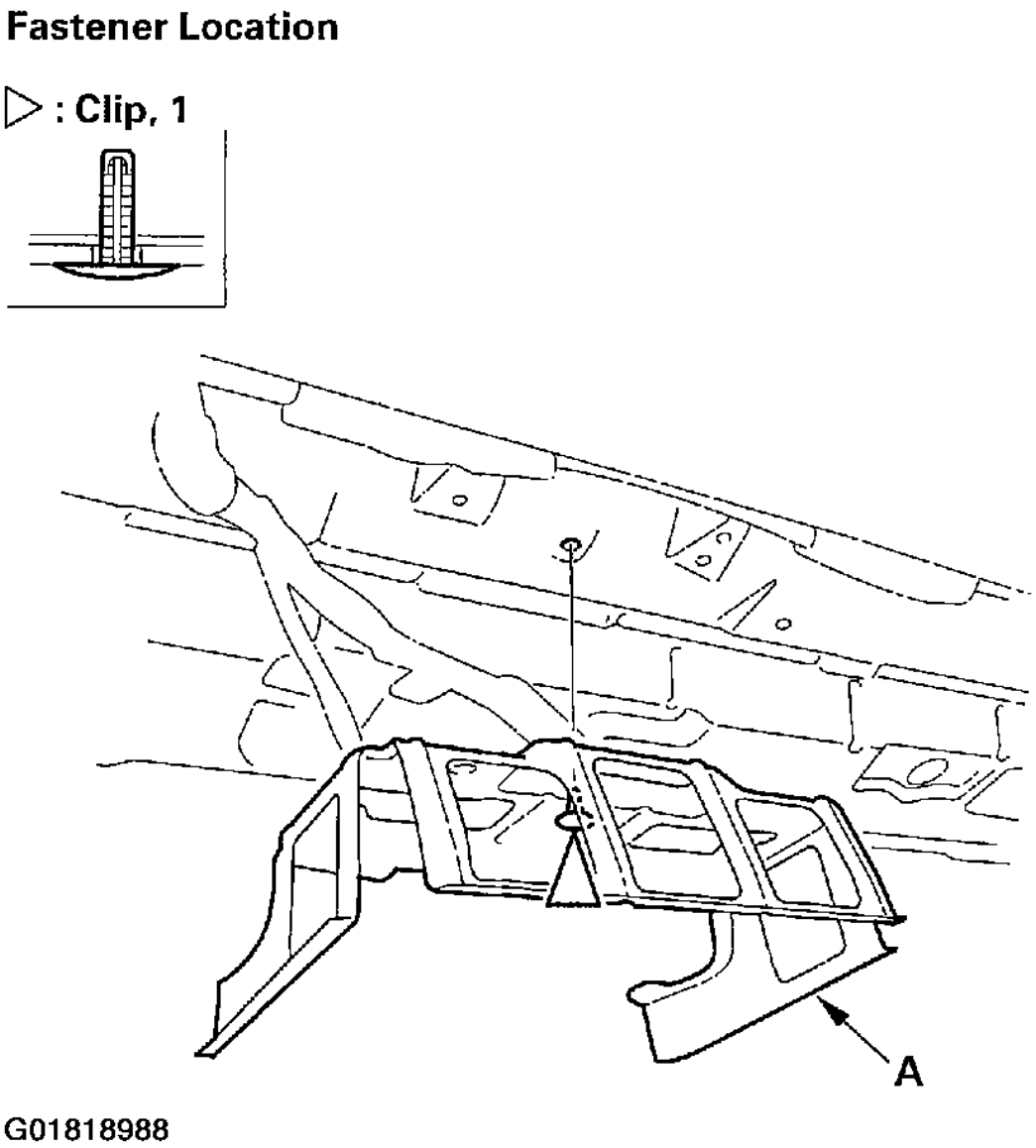

Fig. 87: Pulling Down The Roof Console Bracket To Release The Clip

10. Install the headliner in the reverse order of removal, and note these items:
    - When reinstalling the headliner through the door opening, be careful not to fold or bend it. Also, be careful not to scratch the body.
    - If the threads on a visor and grab handle screws are worn out, use an oversized self-tapping ET screw made specifically for this application:

      Visor: P/N 90137-S30-003

cardiagn.com

Grab handle: P/N 90137-S0A-003

- Check that both sides of the headliner are securely attached to the trim.
- Make sure the top of the pillar trim overlaps with the headliner correctly (see **AIR BAG RESTRAINT SYSTEMS**).

CARPET REPLACEMENT

SRS components are located in this area. Review the SRS component locations and the precautions and procedures in the SRS section before performing repairs or service. See **AIR BAG RESTRAINT SYSTEMS** .

NOTE:

- **Put on gloves to protect your hands.**
- **Take care not to damage, wrinkle or twist the carpet.**
- **Be careful not to damage the dashboard or other interior trim pieces.**

1. If equipped with the side curtain airbag, make sure you have the anti-theft codes for the radio and the navigation system, then write down the frequencies for the preset buttons.
2. If equipped with the side curtain airbag disconnect the negative battery cable, and wait at least 3 minutes before beginning work.
3. Remove these items:
   a. Front seats, both sides (see **FRONT SEAT REMOVAL/INSTALLATION**)
   b. Rear seat cushion (see **REAR SEAT REMOVAL/INSTALLATION**)
   c. Rear seat side bolsters, both sides (see **REAR SEAT REMOVAL/INSTALLATION**)
   d. Kick panels, both sides (see **TRIM REMOVAL/INSTALLATION - DOOR AREA**)
   e. Front door sill trim, both sides (see **TRIM REMOVAL/INSTALLATION - DOOR AREA**)
   f. Rear door sill trim, both sides (see **TRIM REMOVAL/INSTALLATION - DOOR AREA**)
   g. B-pillar lower trim (see **TRIM REMOVAL/INSTALLATION - DOOR AREA**)
   h. Center console (see **CENTER CONSOLE REMOVAL/INSTALLATION**)
   i. Drive's dashboard center lower cover (see step 4 of **DASHBOARD REMOVAL/INSTALLATION**)
   j. Passenger's dashboard center lower cover (see step 5 of **DASHBOARD REMOVAL/INSTALLATION**)
   k. Driver's dashboard under cover (see **DRIVER'S DASHBOARD LOWER COVER REMOVAL/INSTALLATION**)
   l. Passenger's dashboard lower cover (see **PASSENGER'S DASHBOARD LOWER COVER REMOVAL/INSTALLATION**)
   m. Parking brake lever (see **PARKING BRAKE CABLE**)
   n. Stereo Amplifier (see **STEREO AMPLIFIER REPLACEMENT**)
4. Remove the front seat belt lower anchor bolt, both sides (see step 3 on **AIR BAG RESTRAINT SYSTEMS**).
5. Push the knob (A) back to release the hook (B) then pull up the accel pedal (C).

cardiagn.com

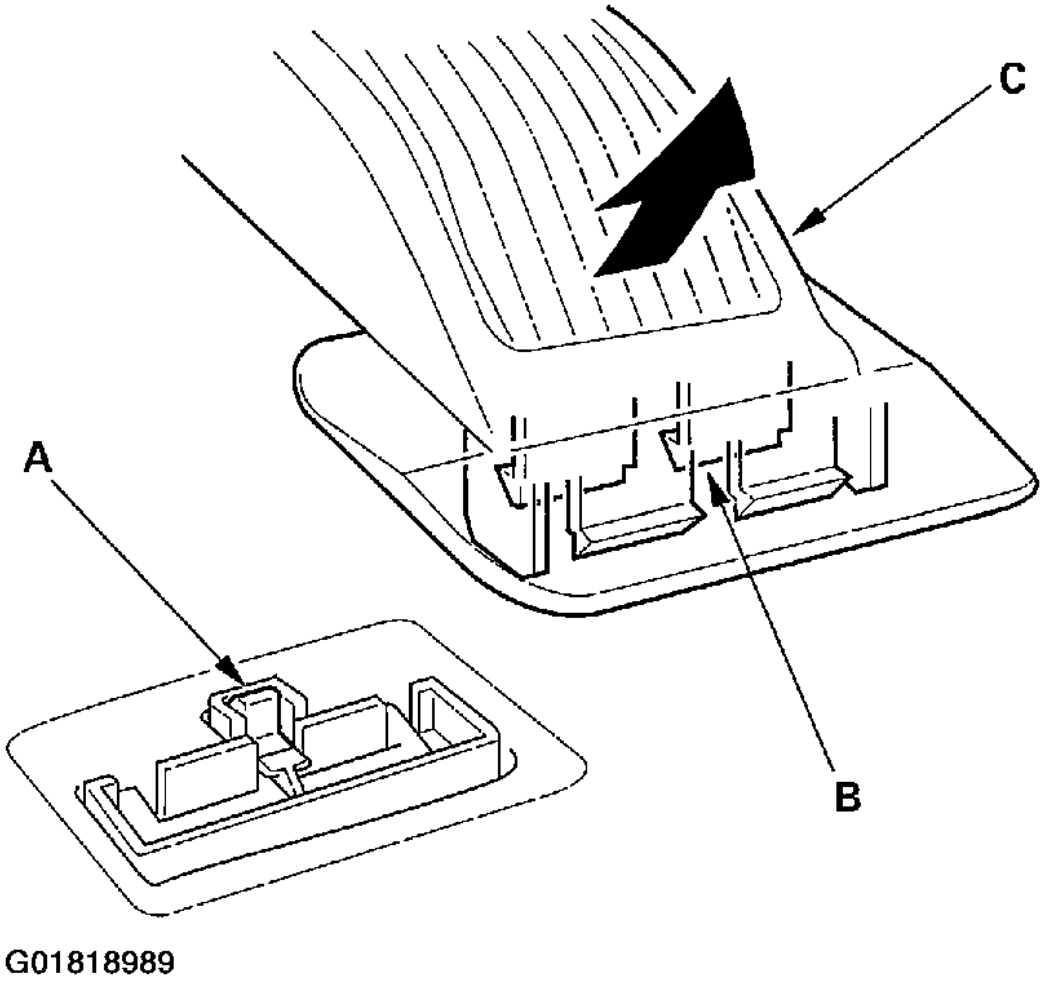

Fig. 88: Pulling Up The Accel Pedal

6. Detach the clips, then remove the footrest (A).

cardiagn.com

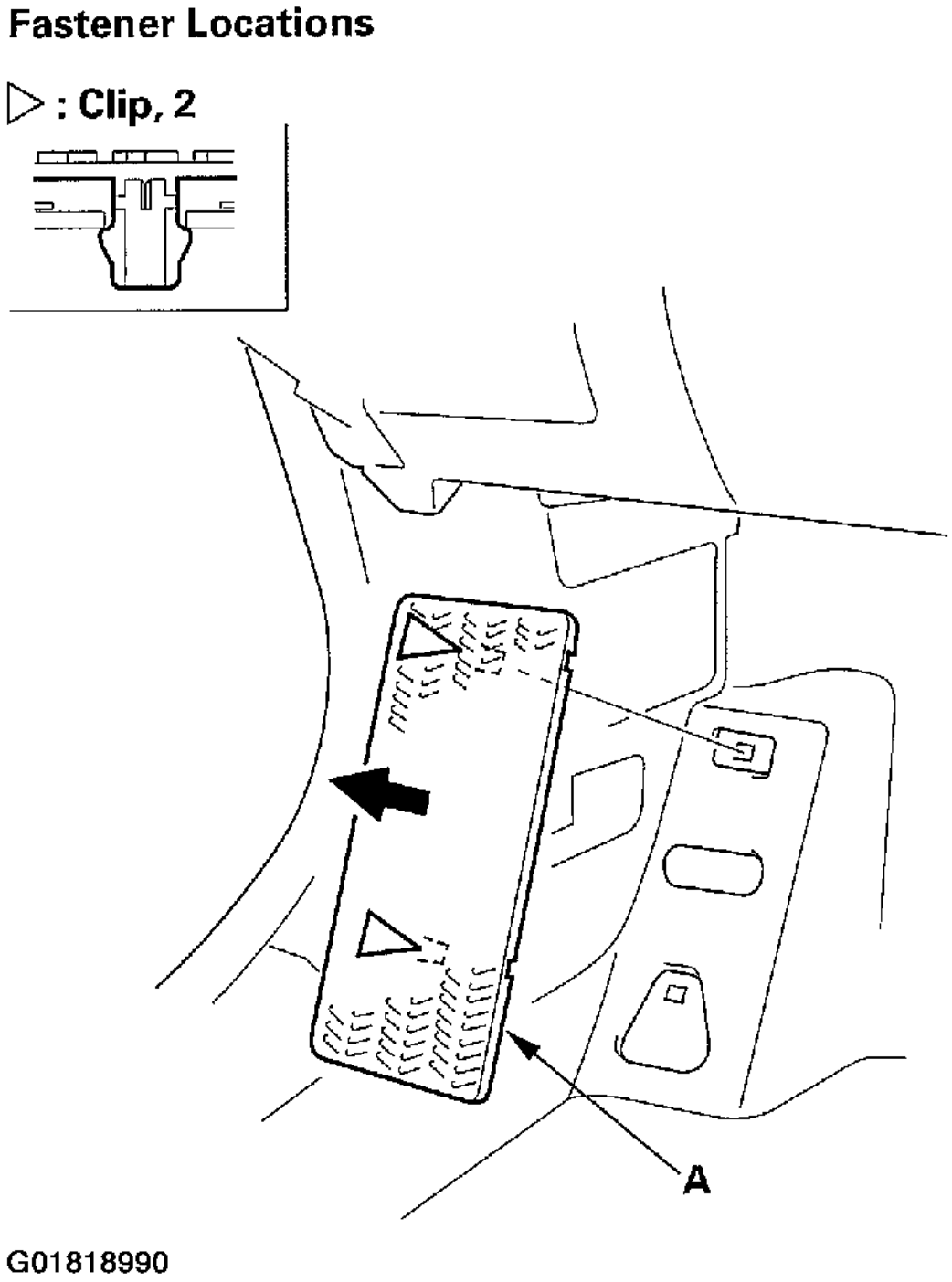

Fig. 89: Removing The Footrest

7. M/T model: Remove the bolts, then remove the center console bracket (A).

cardiagn.com

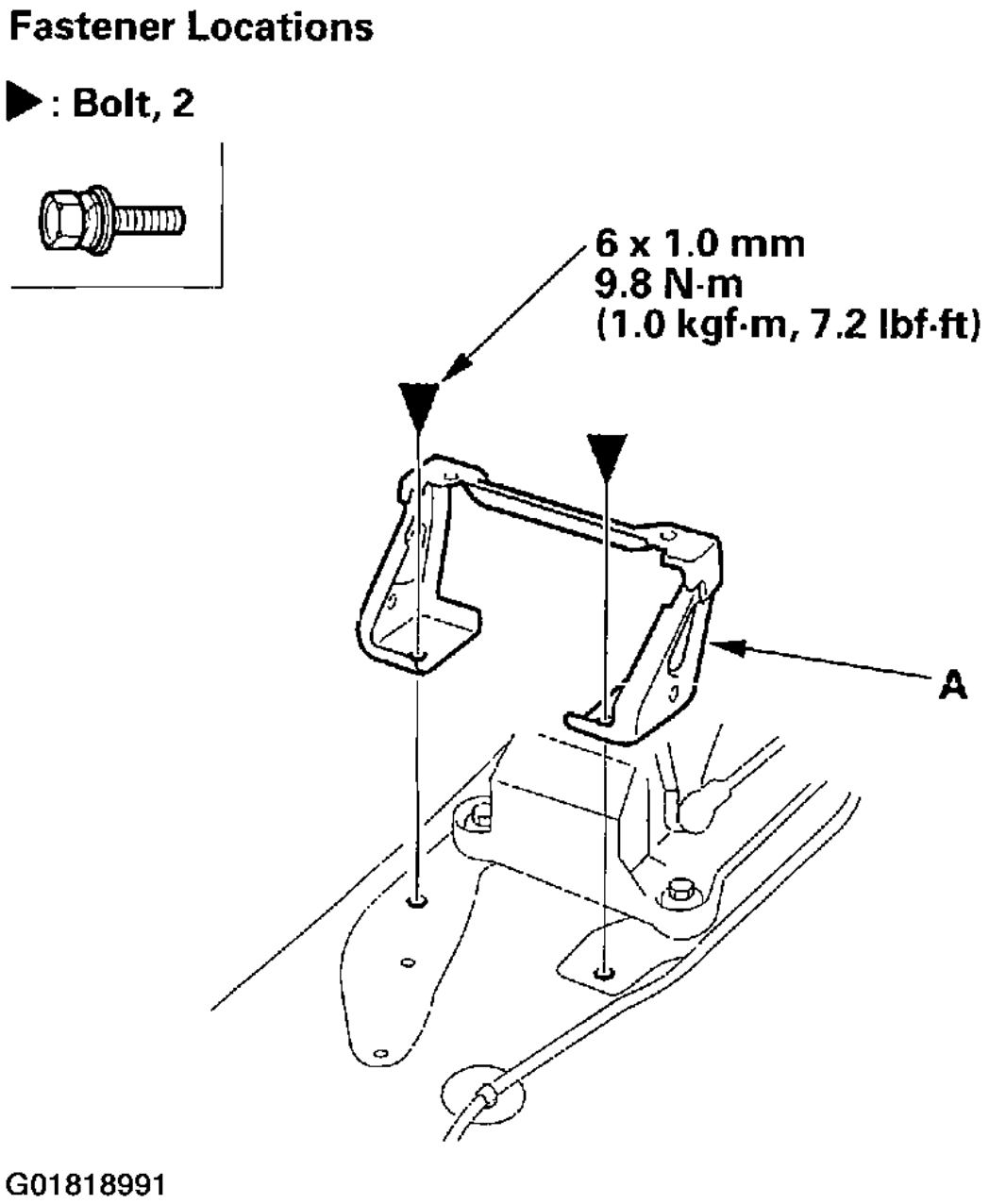

Fig. 90: Removing The Center Console Bracket (M/T)

8. Disconnect the antenna lead (A) and antenna connector (B). If equipped, disconnect the side curtain airbag subharness connector (C), and release the harness clamp (D). Detach the harness clips (E), and on A/T model, harness clips (F).

cardiagn.com

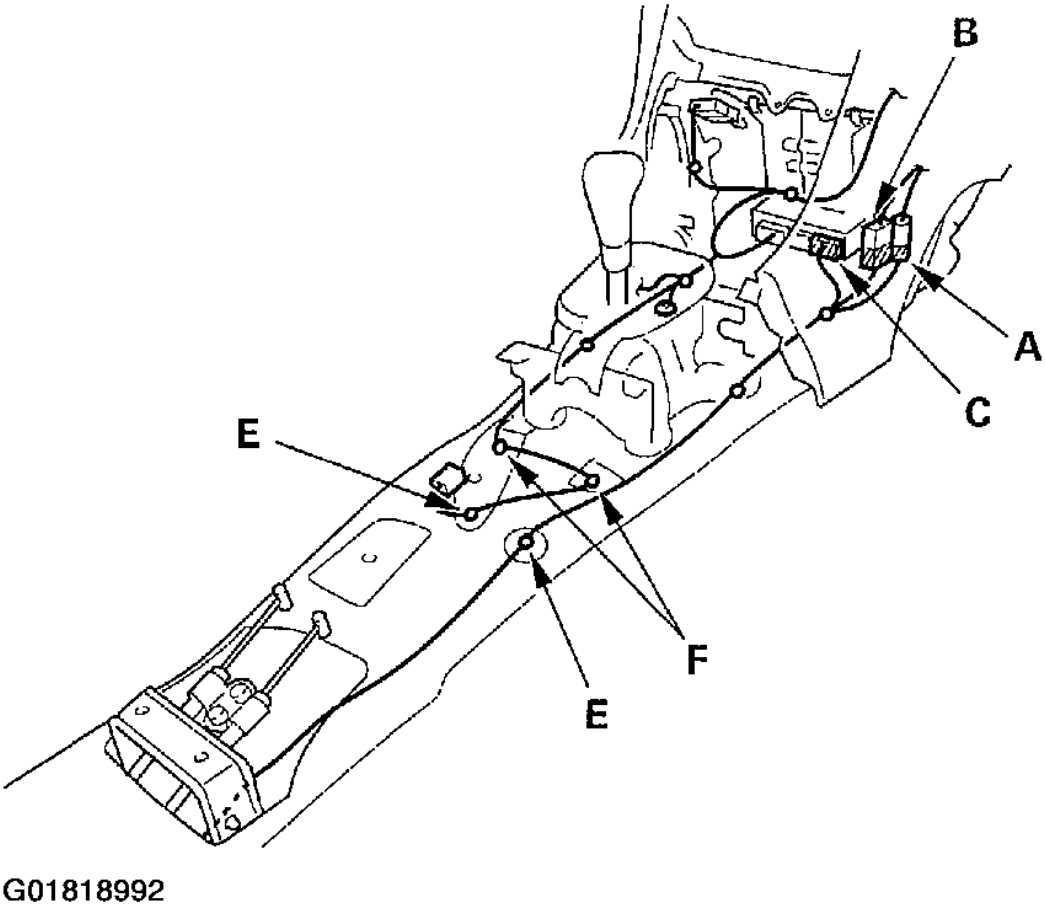

Fig. 91: Removing Connectors & Harnesses (A/T)

cardiagn.com

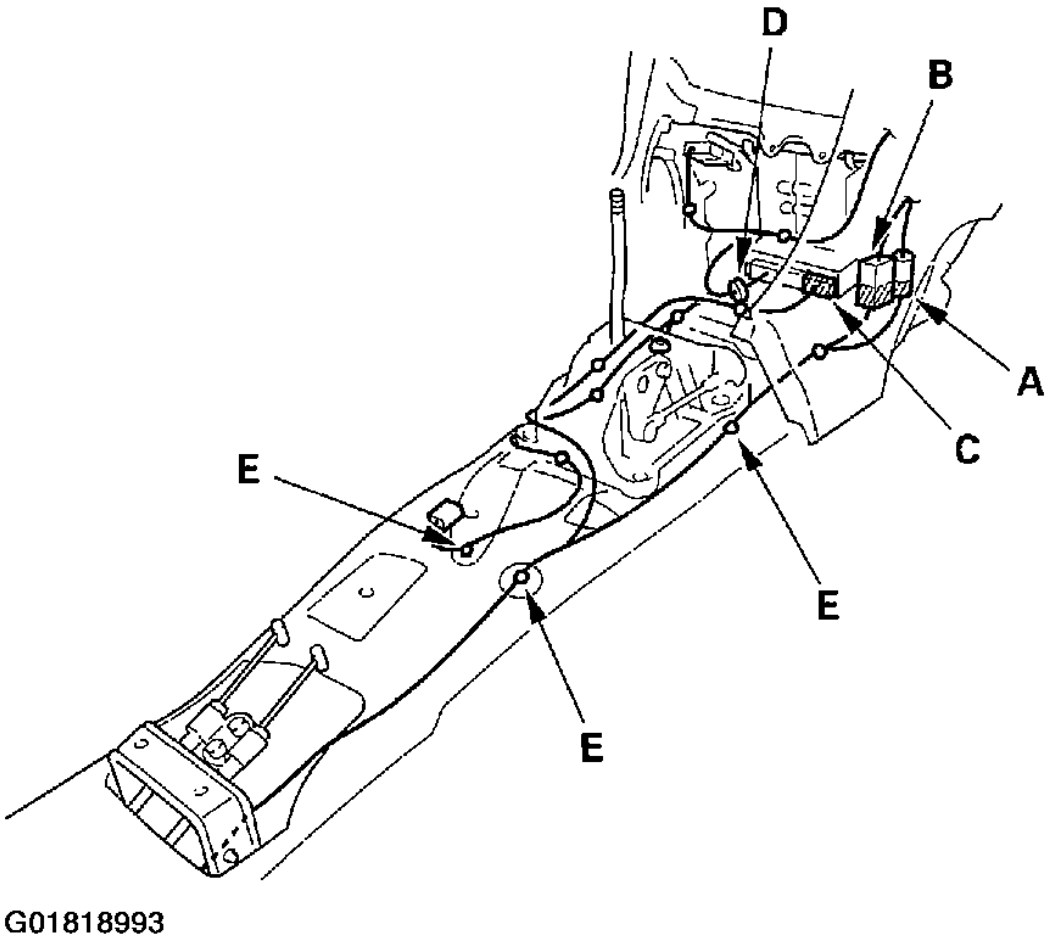

Fig. 92: Removing Connectors & Harnesses (M/T)

9. Remove the bolts securing the change lever bracket or select lever bracket (A).

cardiagn.com

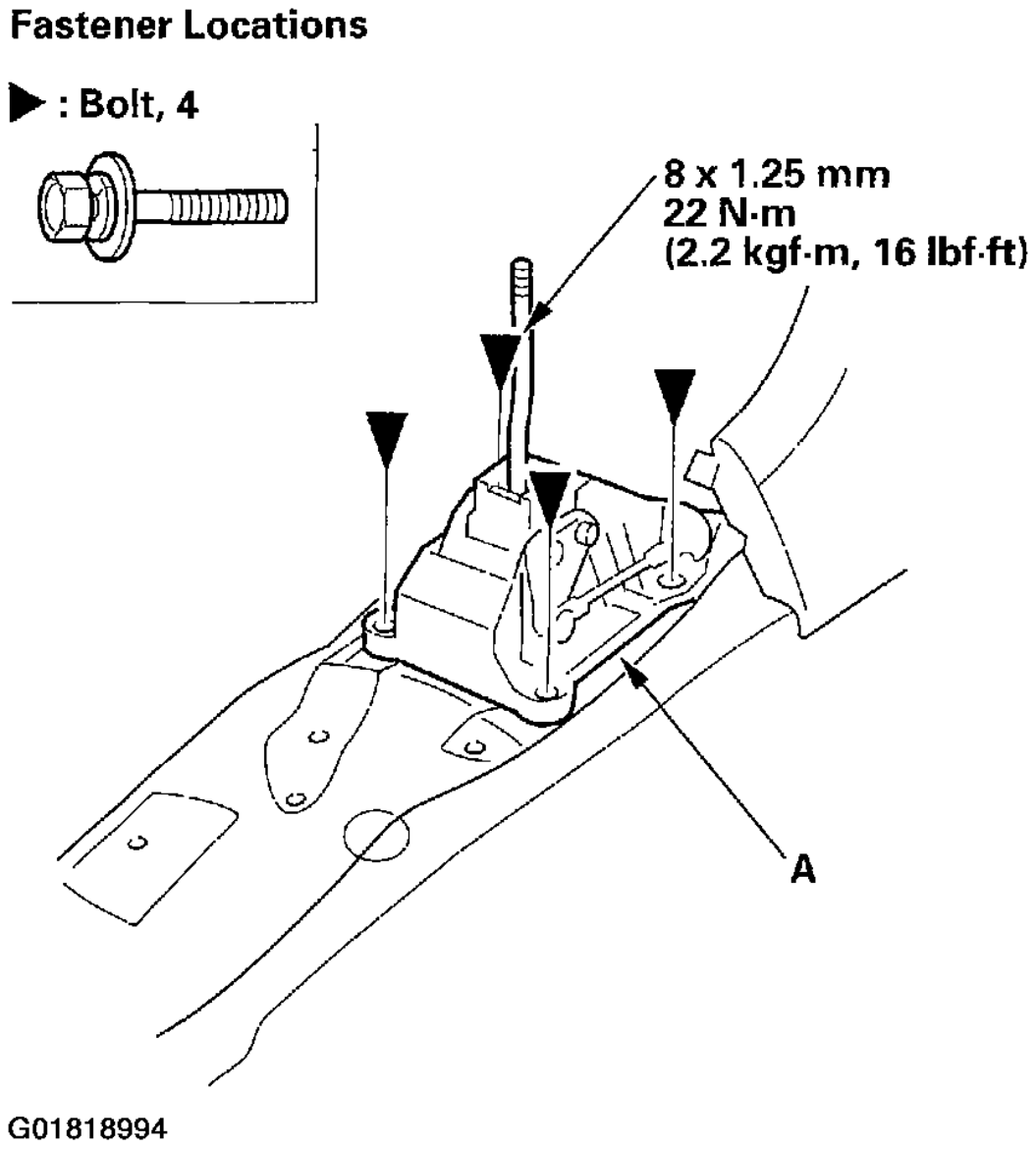

Fig. 93: Removing The Bolts

10. Remove the floor mat holders (A) from the driver's side, and release the clip (B) from middle of the carpet (C).

cardiagn.com

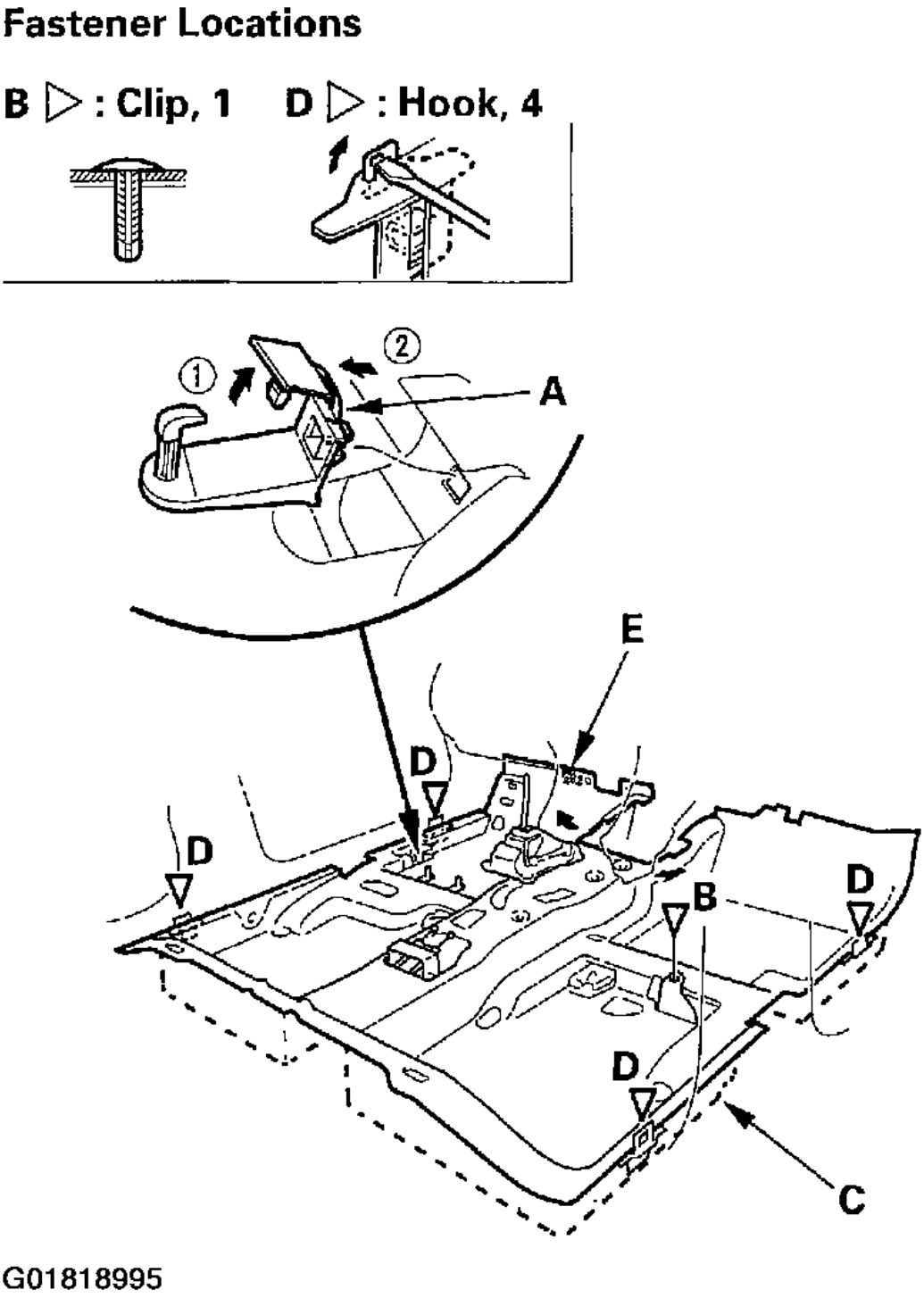

Fig. 94: Removing The Floor Mat Holders & Clip

cardiagn.com

11. Release the hooks (D) with a flat-tip screwdriver by pushing the screwdriver toward the door, then lift upwards. Pull the fastener (E) out, then remove the carpet.
12. Install the carpet in the reverse order of removal, and note these items:
    - Take care not to damage, wrinkle or twist the carpet.
    - Make sure the seat harnesses and antenna lead are routed correctly.
    - Replace the clip if it's damaged.

    With side curtain airbag:
    - Reconnect the negative cable to the battery.
    - Reset the clock.
    - Enter the anti-theft codes for the radio and the navigation system, then enter the customer's radio station presets.
    - Perform the power window control unit reset procedure (see **RESETTING THE POWER WINDOW**).

CONSOLES

CENTER CONSOLE REMOVAL/INSTALLATION

NOTE:
- **When prying with a flat-tip screwdriver, wrap it with protective tape to prevent damage.**
- **Take care not to scratch the front seat, dashboard, and related parts.**

1. M/T model: Loosen the lock nut (A) to remove the shift knob (B).

cardiagn.com

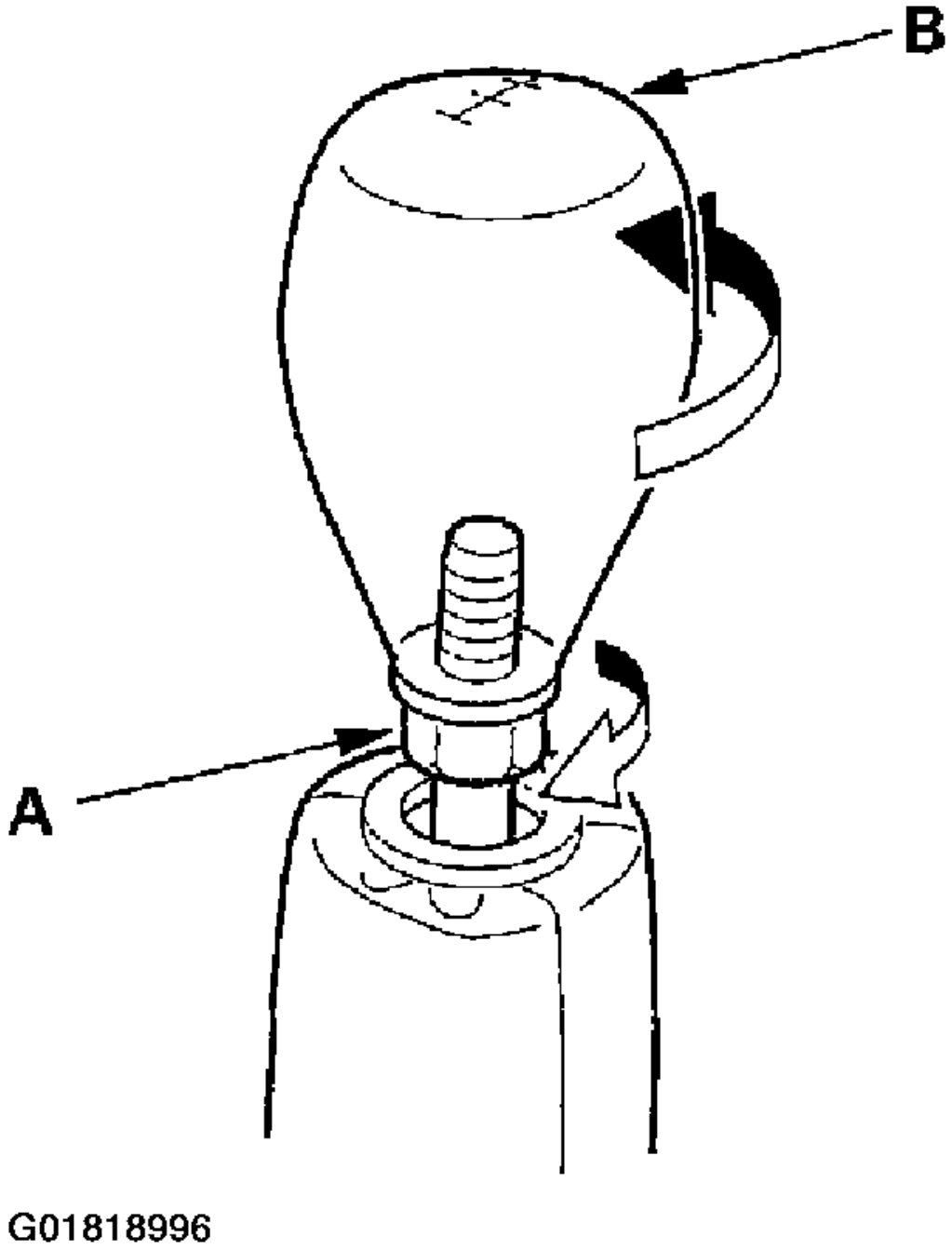

Fig. 95: Removing The Shift Knob (M/T)

2. Starting towards the front of the vehicle detach the clips by pulling the center console panel (A) up. If

cardiagn.com

equipped, disconnect the seat heater switch connectors (B).

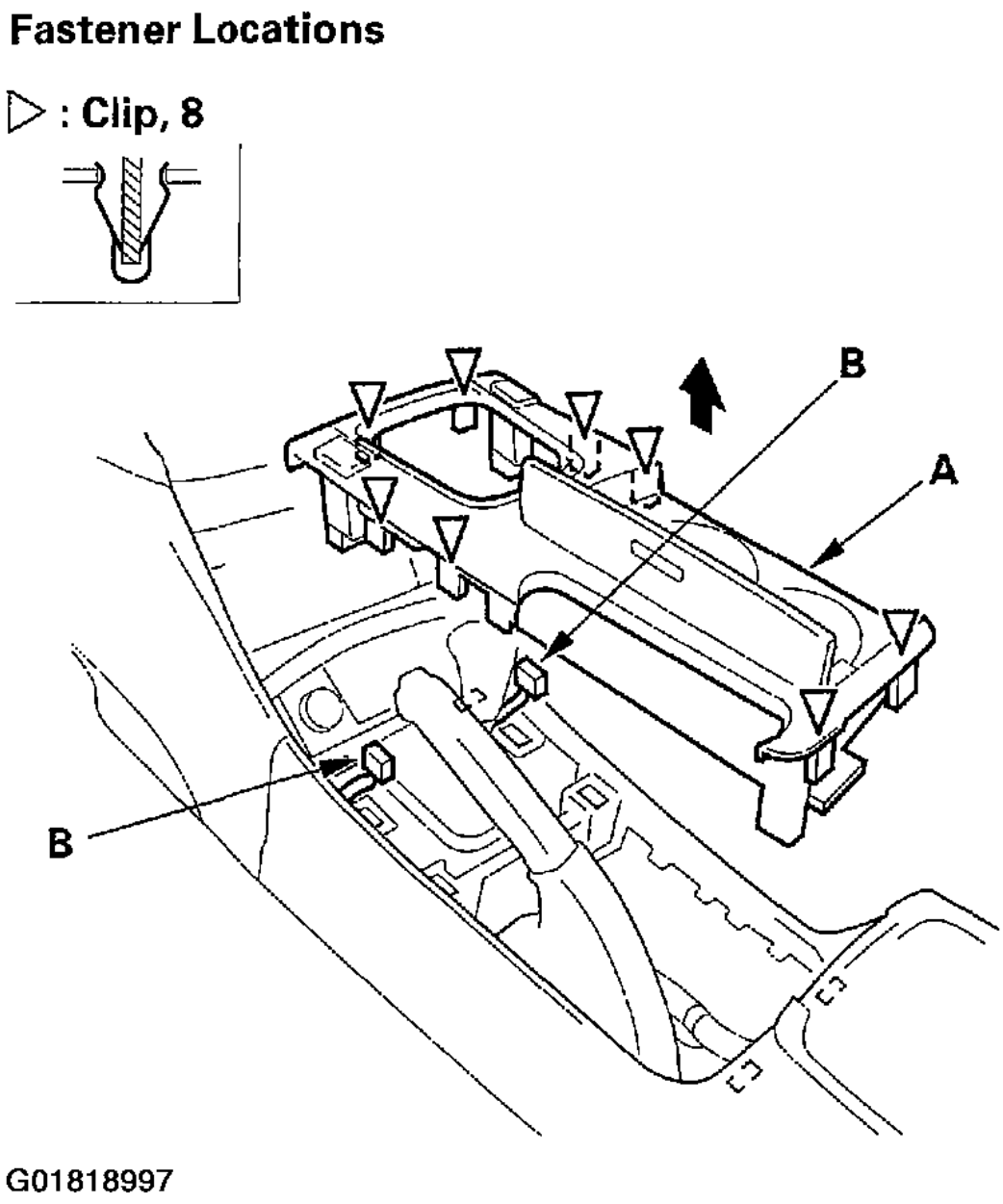

Fig. 96: Detaching The Clips

3. Remove the center upper pocket (A):
   a. Open the lid, then pull at the lower edge the case portion of pocket back by hand to detach the clips. Do not pull the lid portion while removing the center upper pocket. When it is loose, close the lid

cardiagn.com

and remove it.

b. Disconnect the pocket light bulb socket (B) and detach the harness, clips (B).

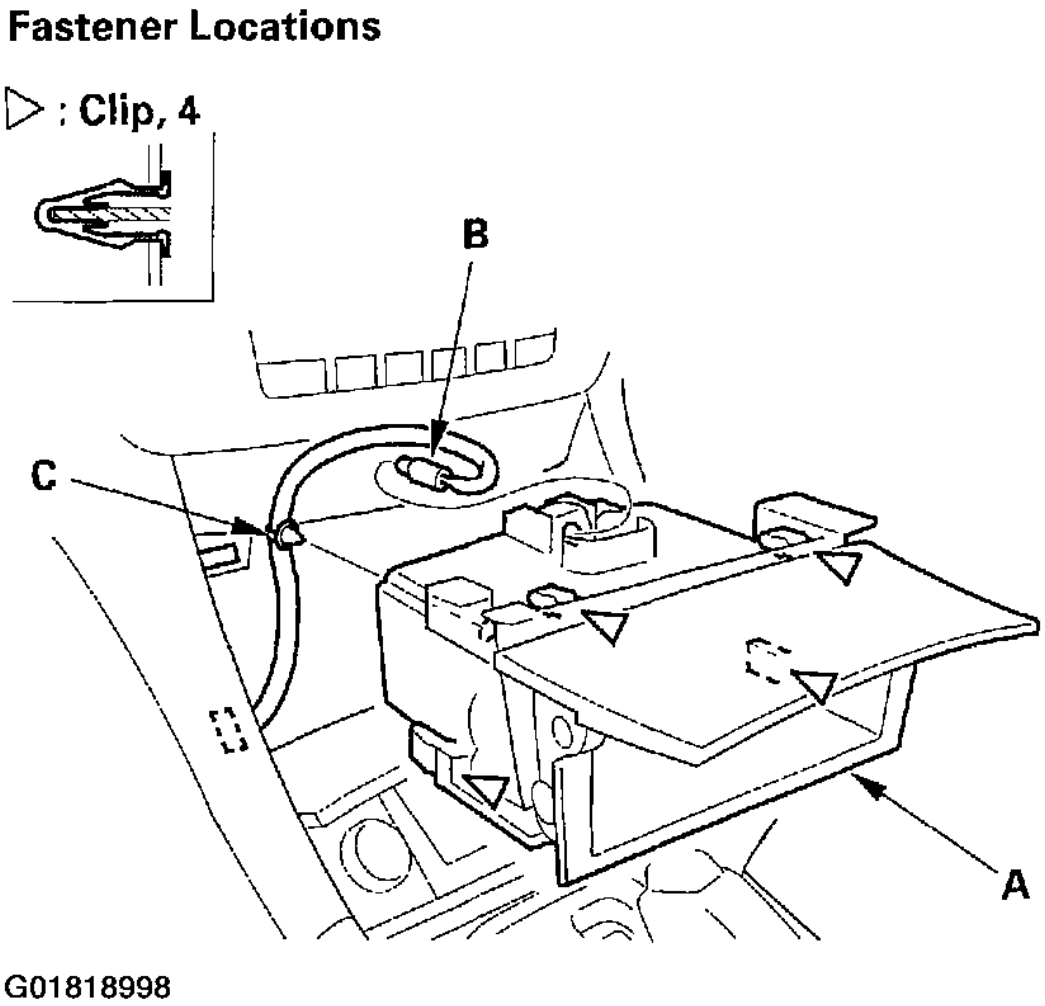

Fig. 97: Removing The Center Upper Pocket

4. Remove the screws, disconnect the front accessory power socket connector (A) and detach the harness clip (B), then remove the center lower pocket (C).

cardiagn.com

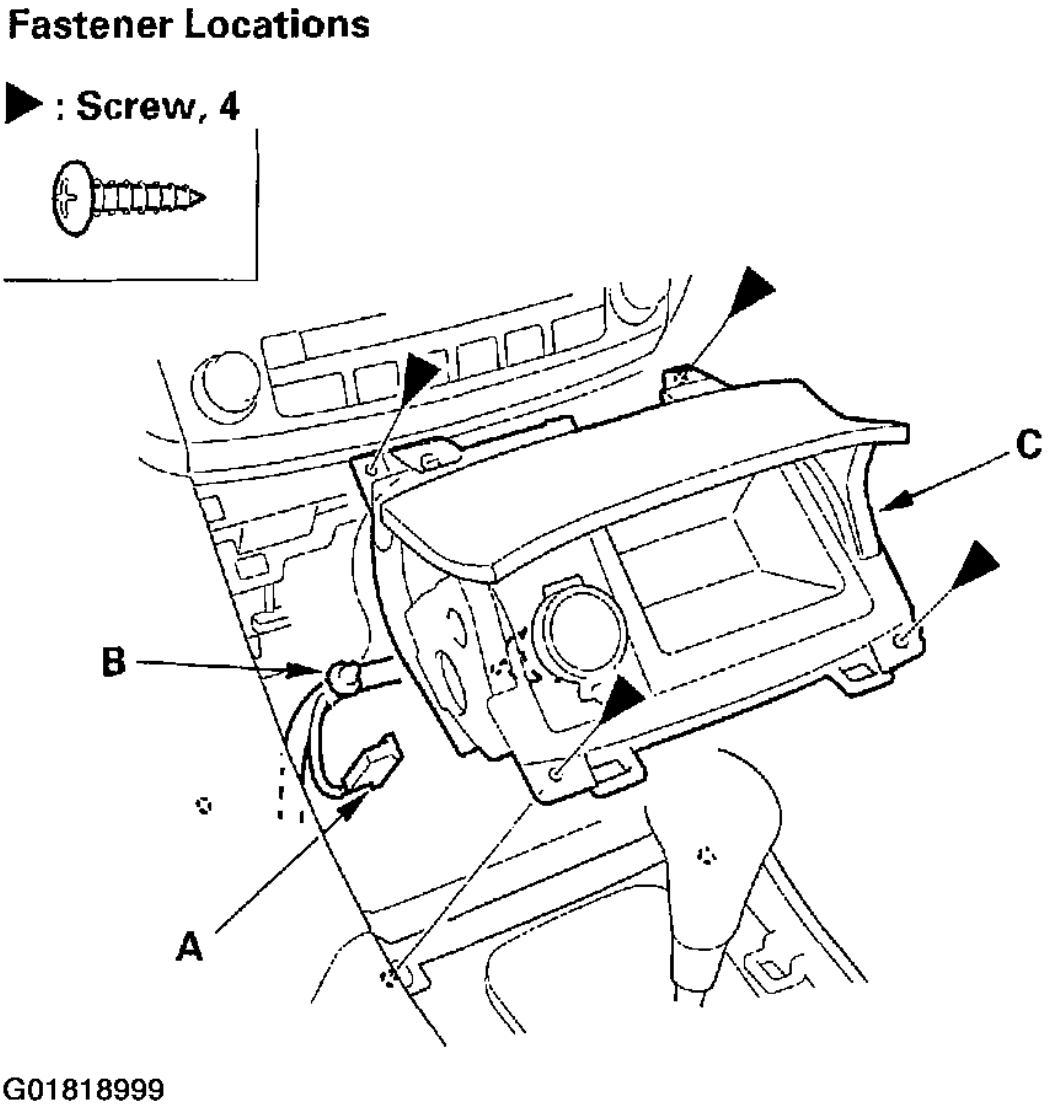

Fig. 98: Removing The Center Lower Pocket

5. Open the console box lid (A) then remove the console mat (B) and screws (C, D).

cardiagn.com

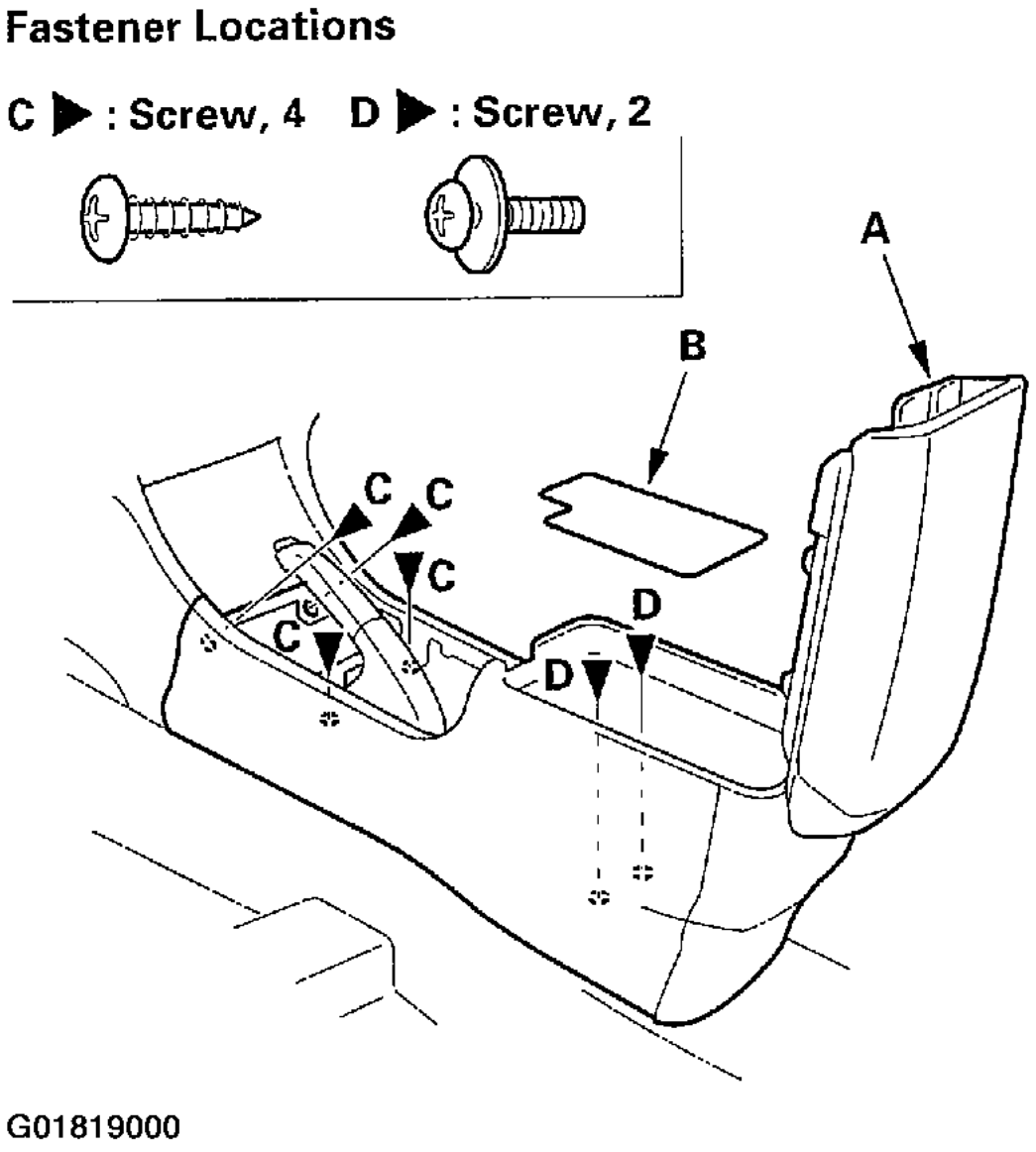

Fig. 99: Removing The Console Mat & Screws

6. Remove the center console (A).
   a. Disconnect the rear accessary power socket connector (B), and detach the clip (C).
   b. Pull up the rear portion of the console up to release the hooks (E), then remove it.

cardiagn.com

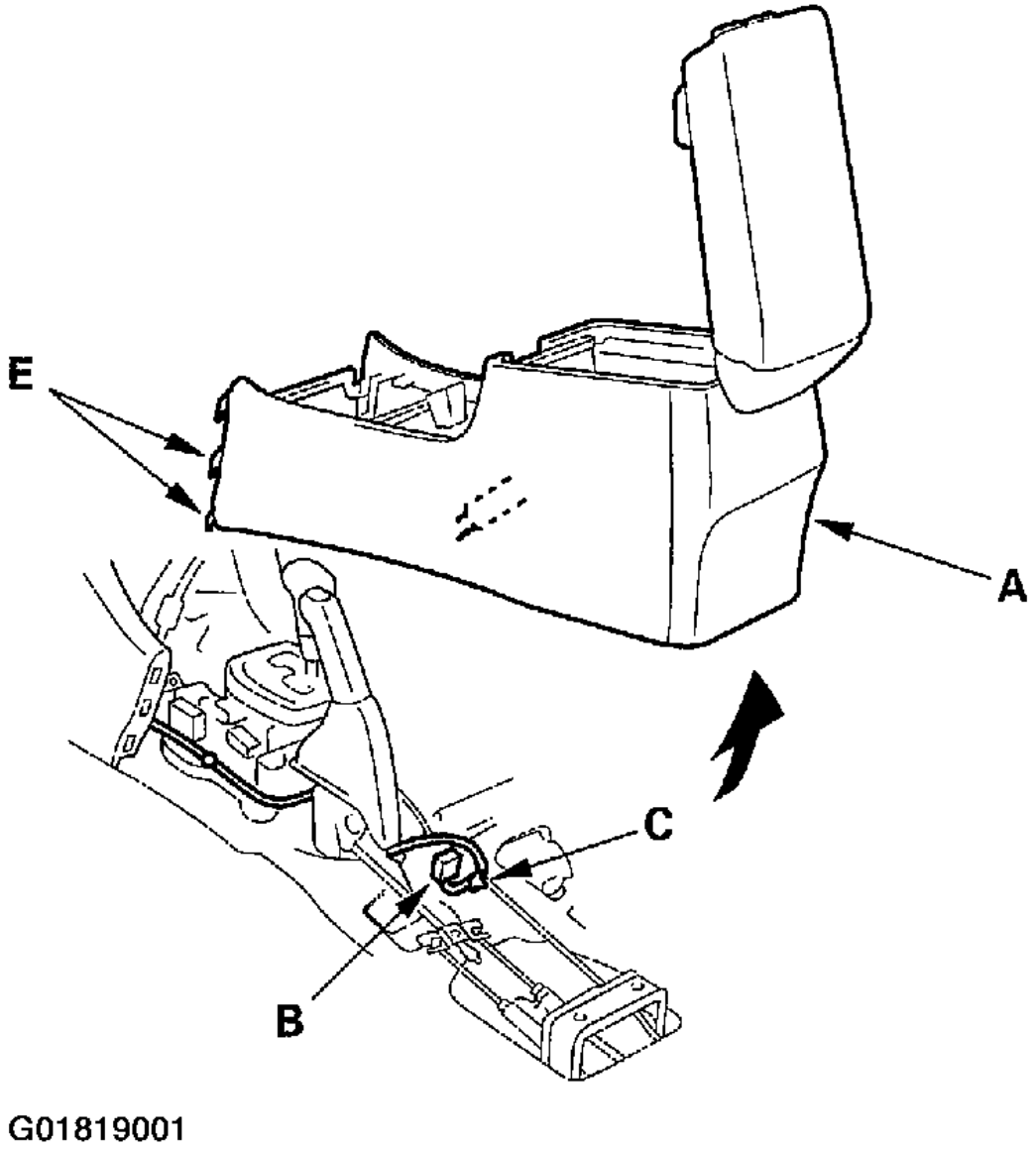

Fig. 100: Removing The Center Console

7. Install the console in the reverse older of removal, and replace any damaged clips.

CENTER CONSOLE REAR COVER REPLACEMENT

NOTE: Take care not to scratch the center console.

1. Remove the center console (see **CENTER CONSOLE REMOVAL/INSTALLATION**).

cardiagn.com

2. Open the armrest (A) and remove the hinge mounting screws, then remove the armrest.

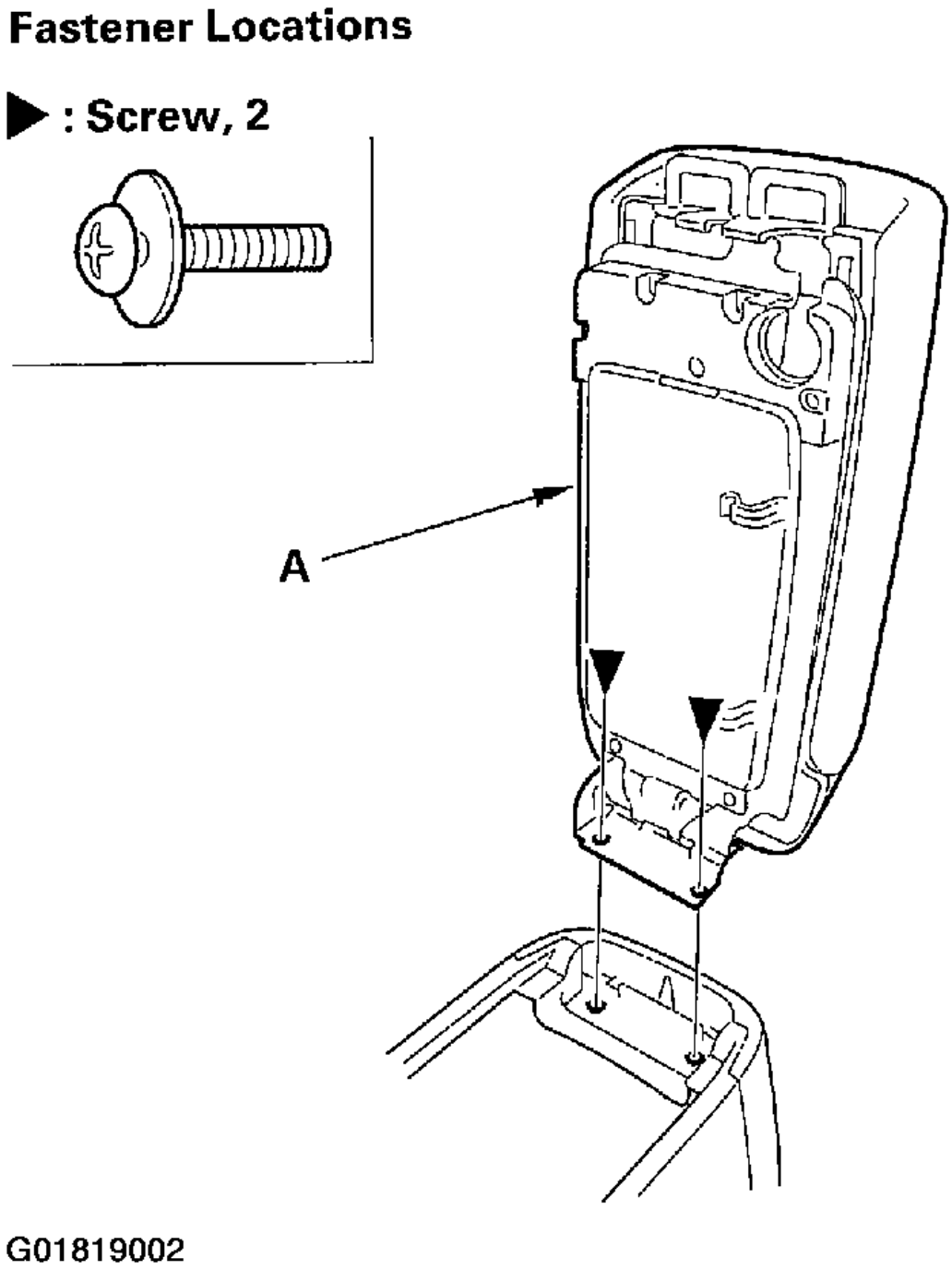

Fig. 101: Removing The Armrest

cardiagn.com

3. Remove the screws (A) and detach the clips (B) then remove the center console rear cover (C).

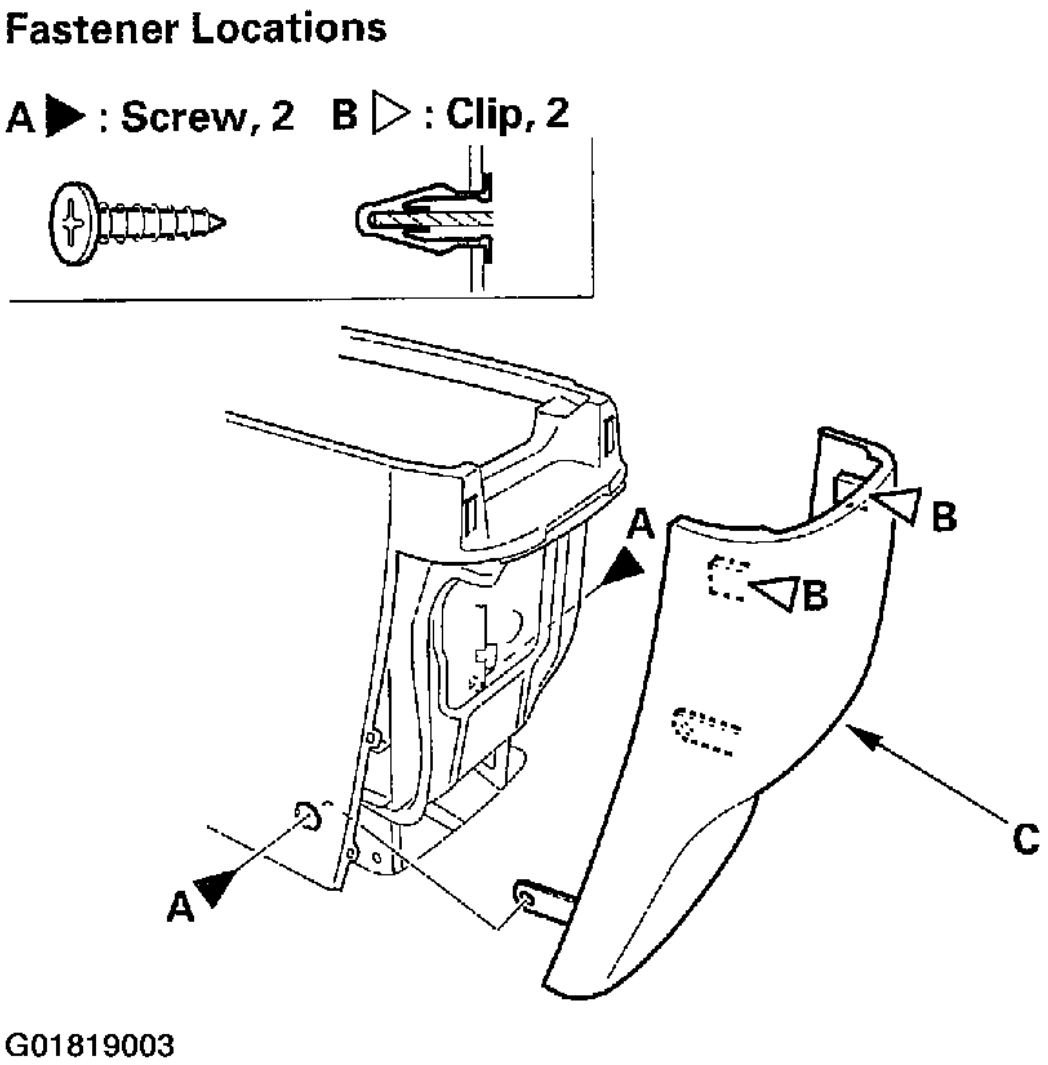

Fig. 102: Removing The Center Console Rear Cover

4. Install the cover the reverse order of removal.

DASHBOARD

DRIVER'S DASHBOARD LOWER COVER REMOVAL/INSTALLATION

NOTE:

- **Take care not to scratch the dashboard and related parts.**

cardiagn.com

- **When prying with a flat-tip screwdriver, wrap it with protective tape to prevent damage.**

1. Adjust the steering column upward.
2. Remove the screw (A). Gently pull out the bottom, then remove the cover of the dashboard lower cover (B) to detach the clips (C) and hooks (D).

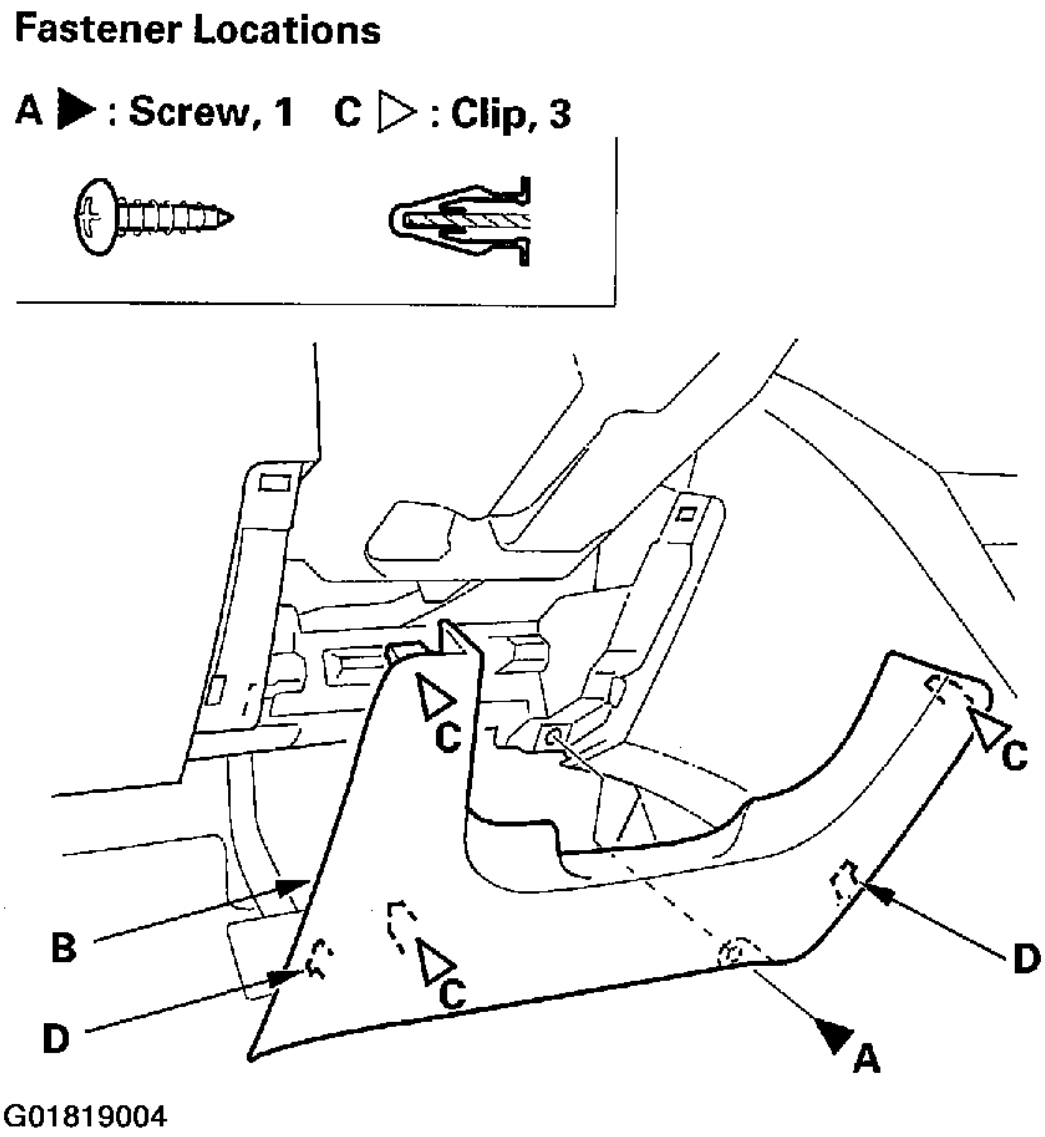

Fig. 103: Removing Driver's Dashboard Lower Cover

3. Install the cover in the reverse order of removal.

cardiagn.com

DRIVER'S DASHBOARD UNDER COVER REMOVAL/INSTALLATION

NOTE: Take care not to scratch the dashboard and related parts.

1. Remove the driver's dashboard under cover (A).
   a. Gently pull down the rear edge to detach the clip.
   b. Pull the cover away to release the pins (B) from the holders (C).

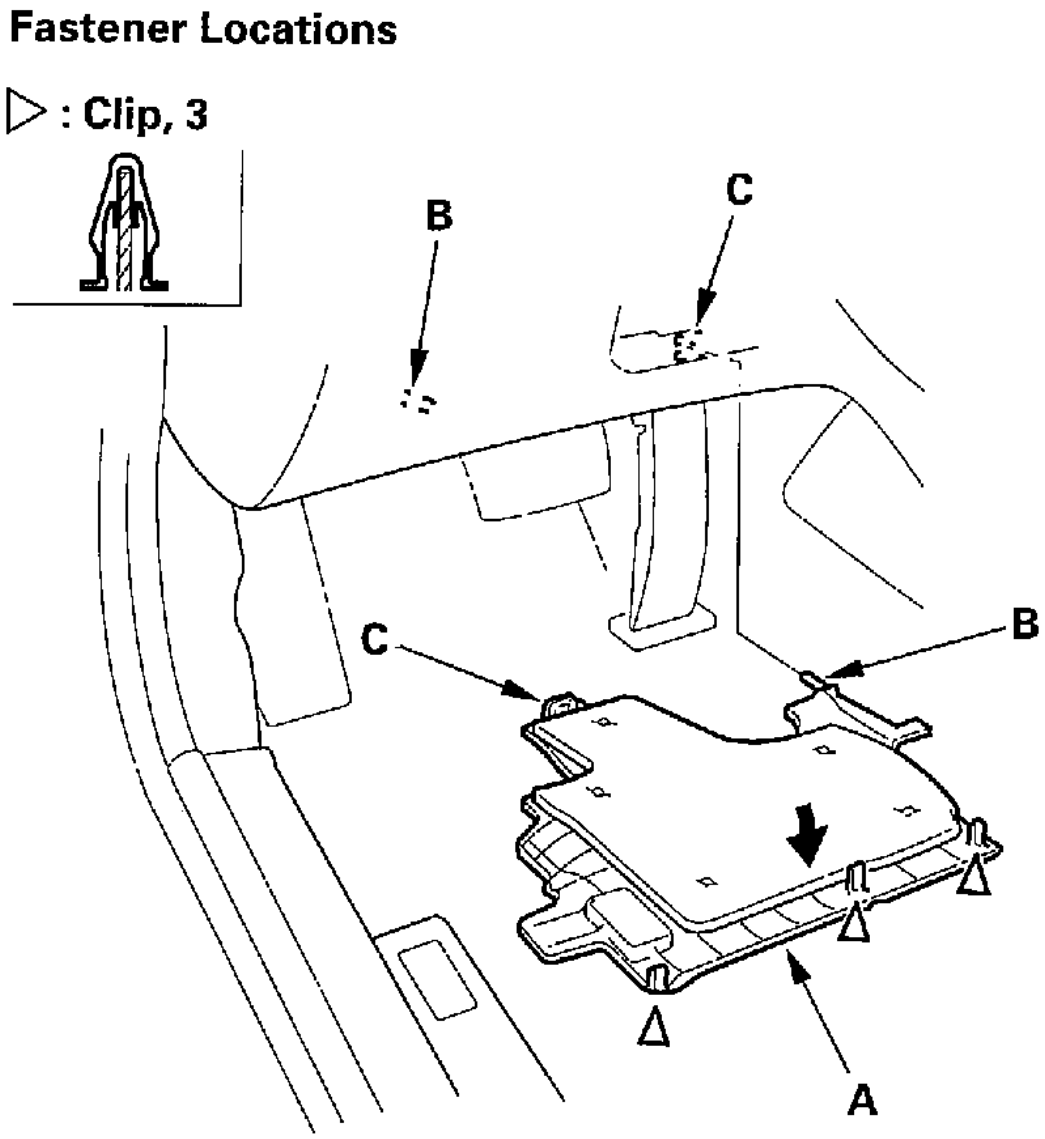

cardiagn.com

Fig. 104: Removing Driver's Dashboard Under Cover

2. Install the cover in the reverse order of removal.

DRIVER'S OUTER DASHBOARD TRIM REMOVAL/INSTALLATION

NOTE: Take care not to scratch the dashboard and related parts.

1. Pry up on the outside edge of the driver's outer dashboard trim (A) with a flat-tip screwdriver wrapped with protective tape to detach the clips, then remove the trim.

cardiagn.com

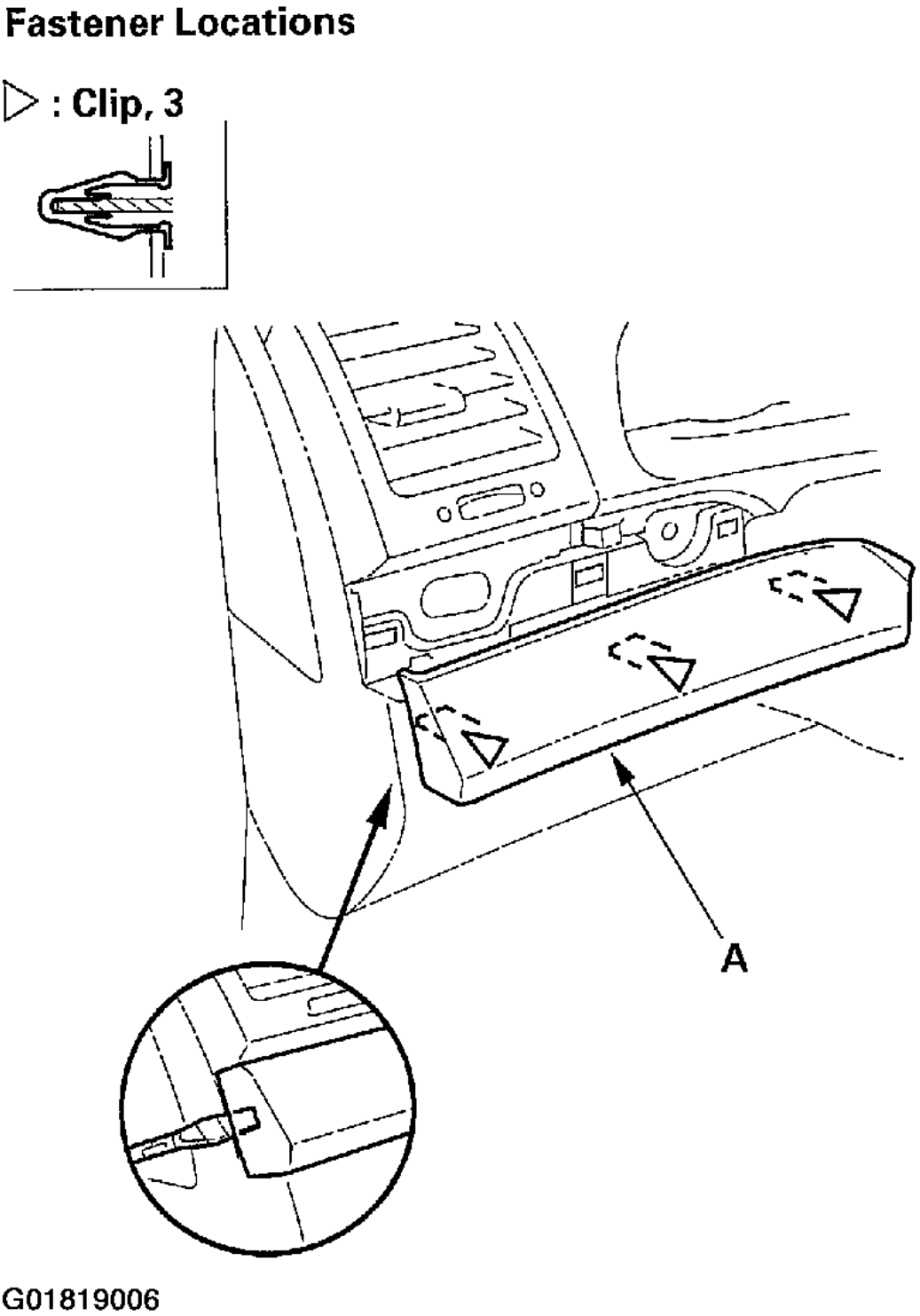

Fig. 105: Removing Driver's Outer Dashboard Trim

cardiagn.com

2. Install the trim in the reverse order of removal, and push the clips into place securely.

DRIVER'S INNER DASHBOARD TRIM REMOVAL/INSTALLATION

NOTE: Take care not to scratch the dashboard and related parts.

1. Remove the driver's inner dashboard trim (A).
   a. Using a flat-tip screwdriver wrapped with protective tape, pry up on the edge of the trim at the notch (B).
   b. Detach the clips.
   c. Disconnect the in-car temperature sensor connector (C) and air hose (D).

cardiagn.com

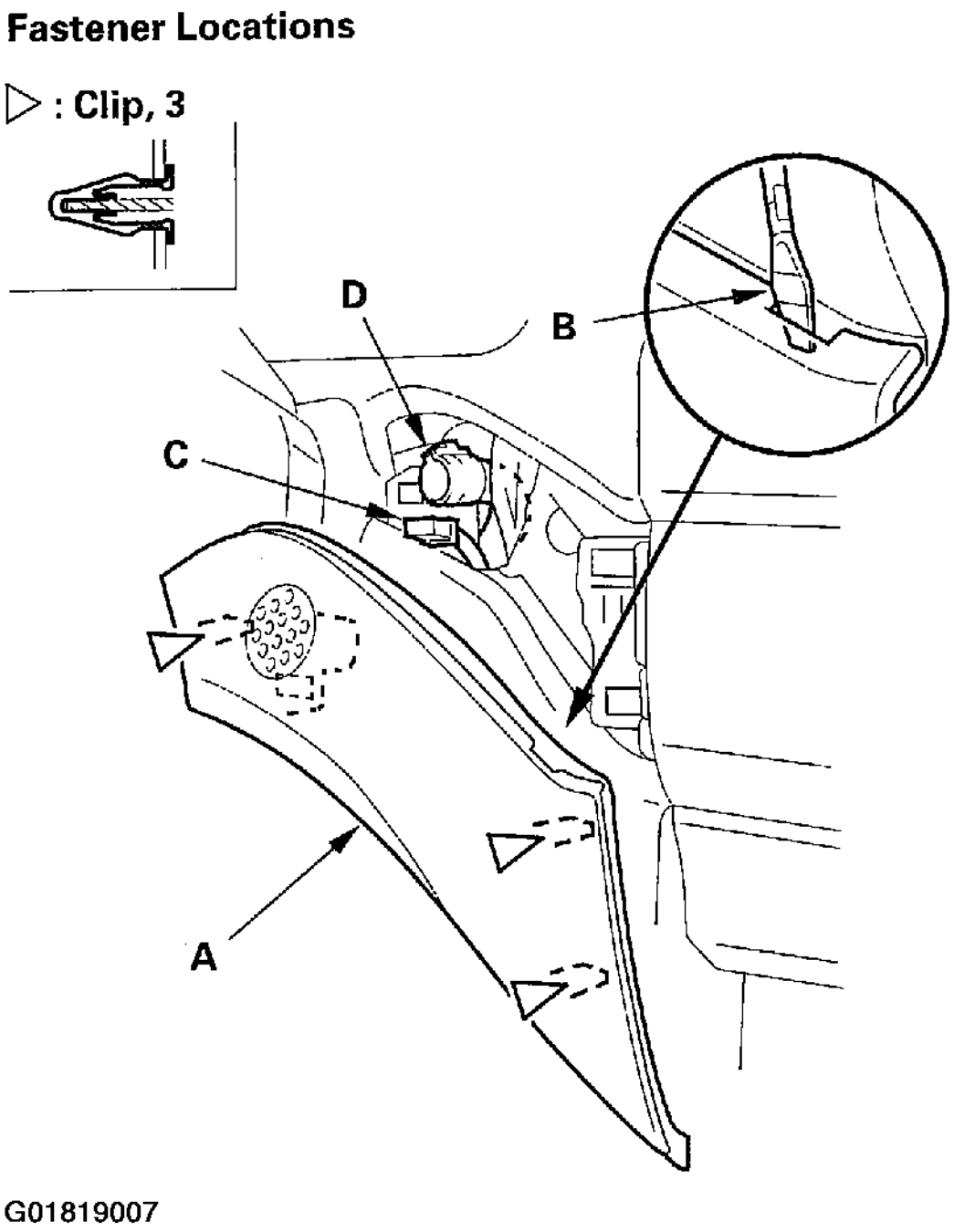

Fig. 106: Removing Driver's Inner Dashboard Trim

2. Install the trim in the reverse order of removal, and make sure the connector is plugged in properly, and the air hose is connected securely.

cardiagn.com

PASSENGER'S DASHBOARD LOWER COVER REMOVAL/INSTALLATION

NOTE: Take care not to scratch the dashboard and related parts.

1. Remove the passenger's dashboard lower cover (A).
   a. Gently pull down the edge nearest the glove box to detach the clips.
   b. Pull the cover away to release the pins (B) from the holders (C).

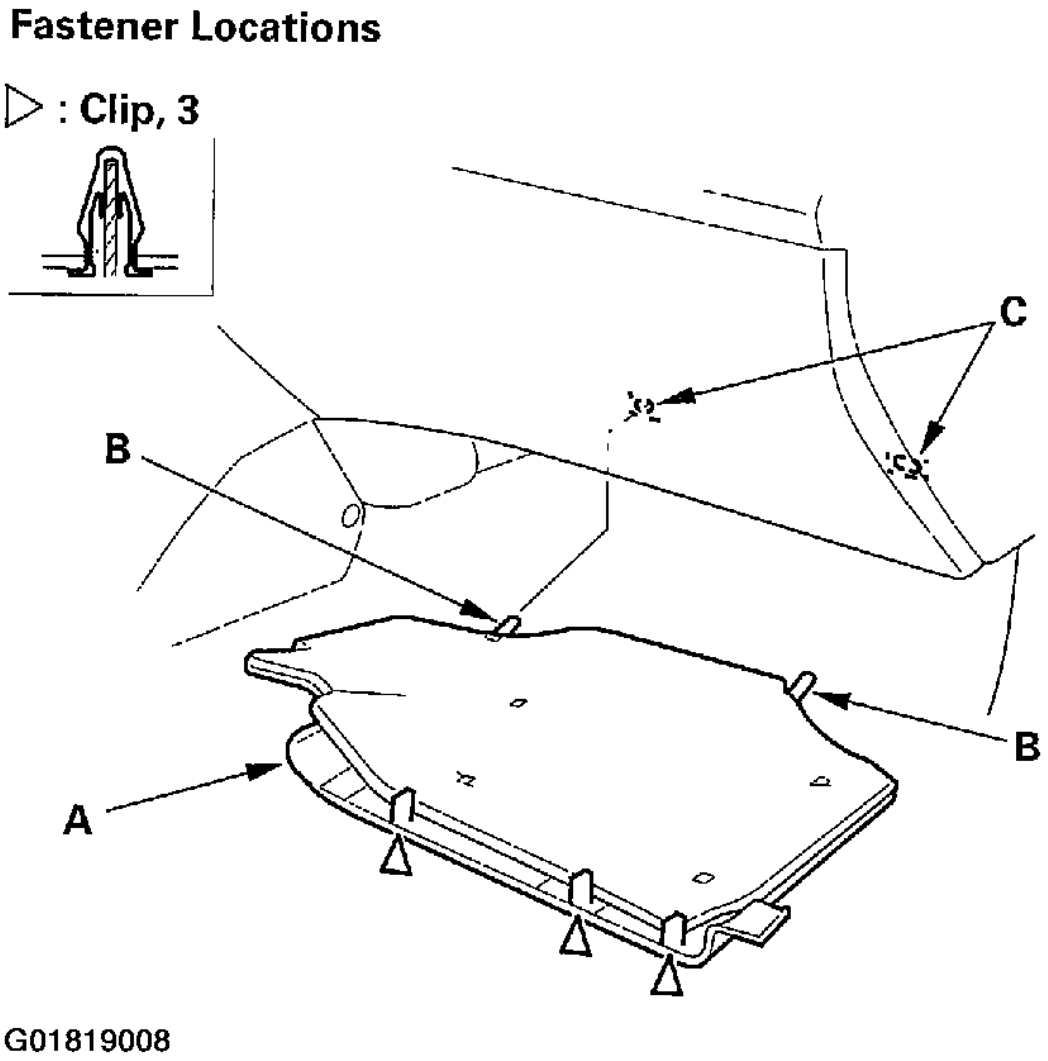

Fig. 107: Removing Passenger's Dashboard Lower Cover

2. Install the cover in the reverse order of removal.

cardiagn.com

GLOVE BOX REMOVAL/INSTALLATION

SRS components are located in this area. Review the SRS component locations and the precautions and procedures in the SRS section before performing repairs or service. See **AIR BAG RESTRAINT SYSTEMS** .

NOTE: Take care not to scratch the dashboard and related parts.

1. Detach the hook (A) of the glove box damper (B), and remove the glove box stop (C) on each side.

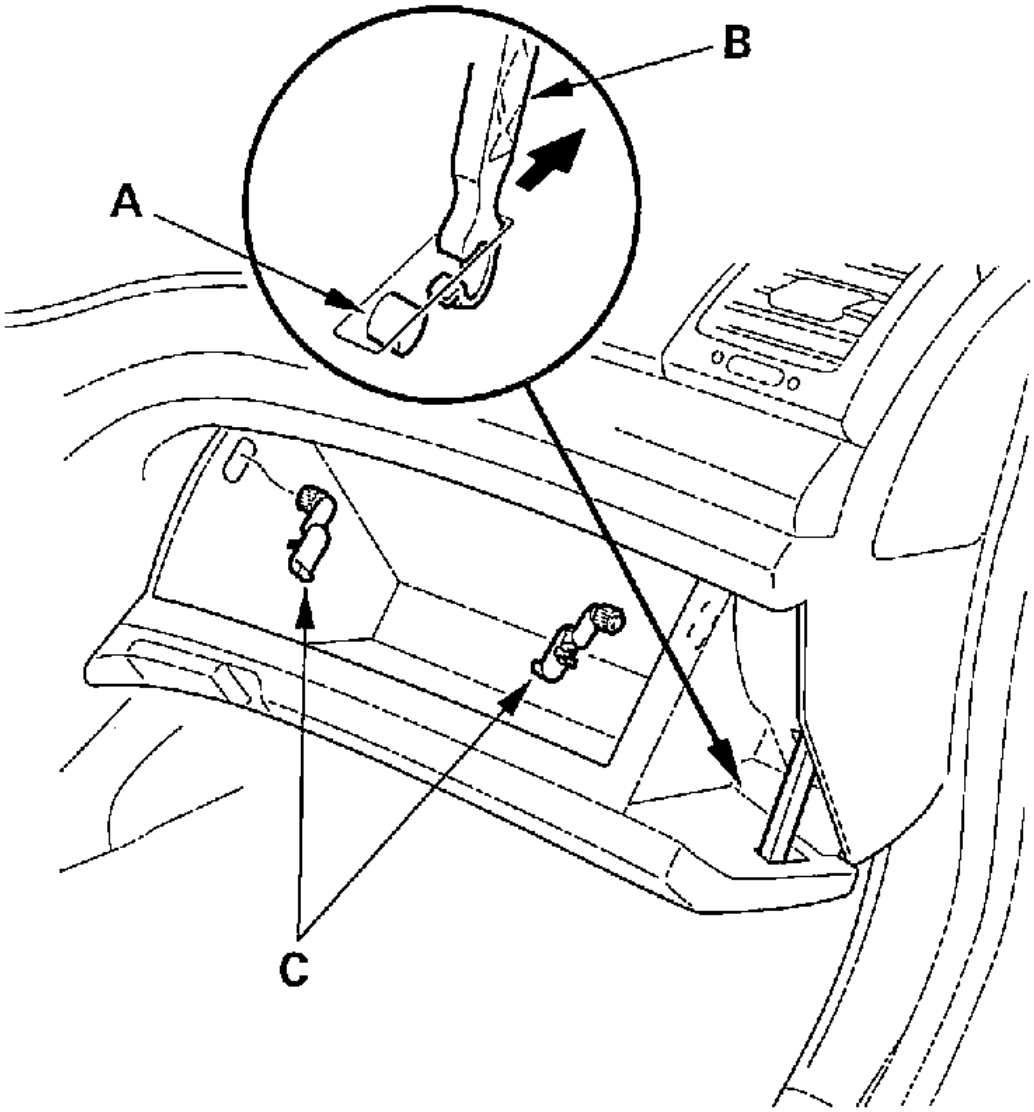

G01819009

cardiagn.com

Fig. 108: Removing Glove Box Stops

2. Disconnect the trunk lid opener main switch connector (A) and detach the harness clip (B).

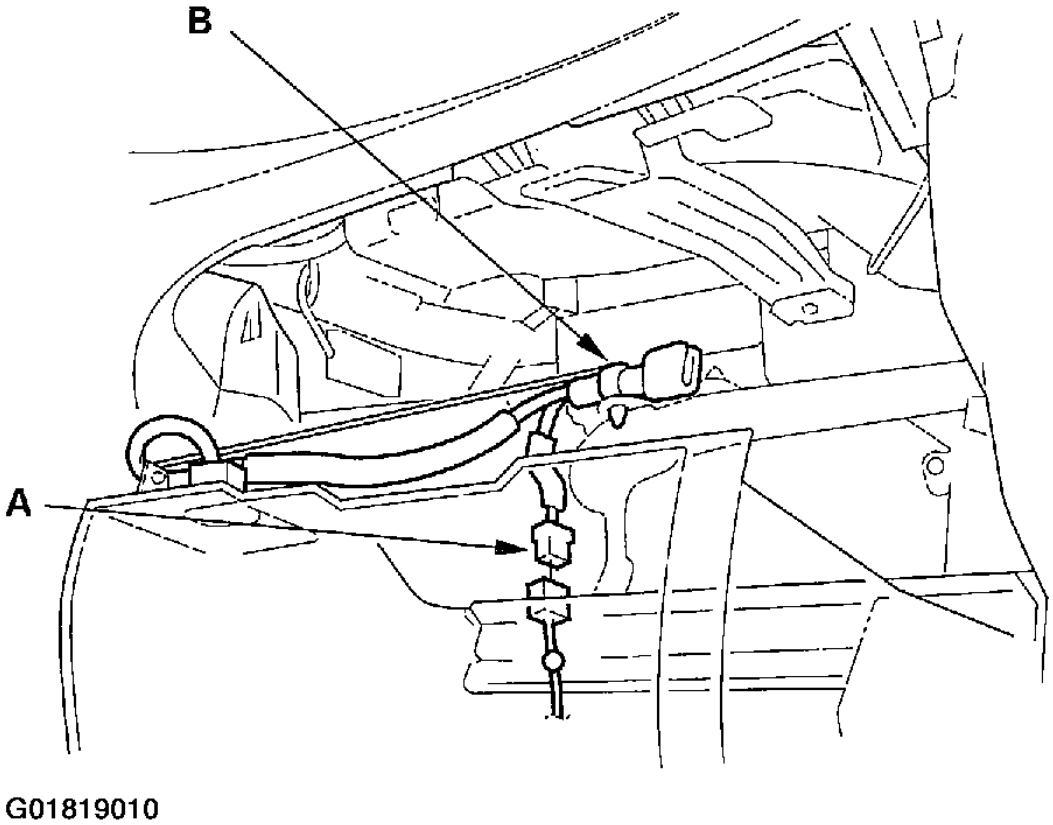

Fig. 109: Disconnecting The Trunk Lid Opener Main Switch Connector

3. While holding the glove box (A), remove the screws, then remove the glove box.

cardiagn.com

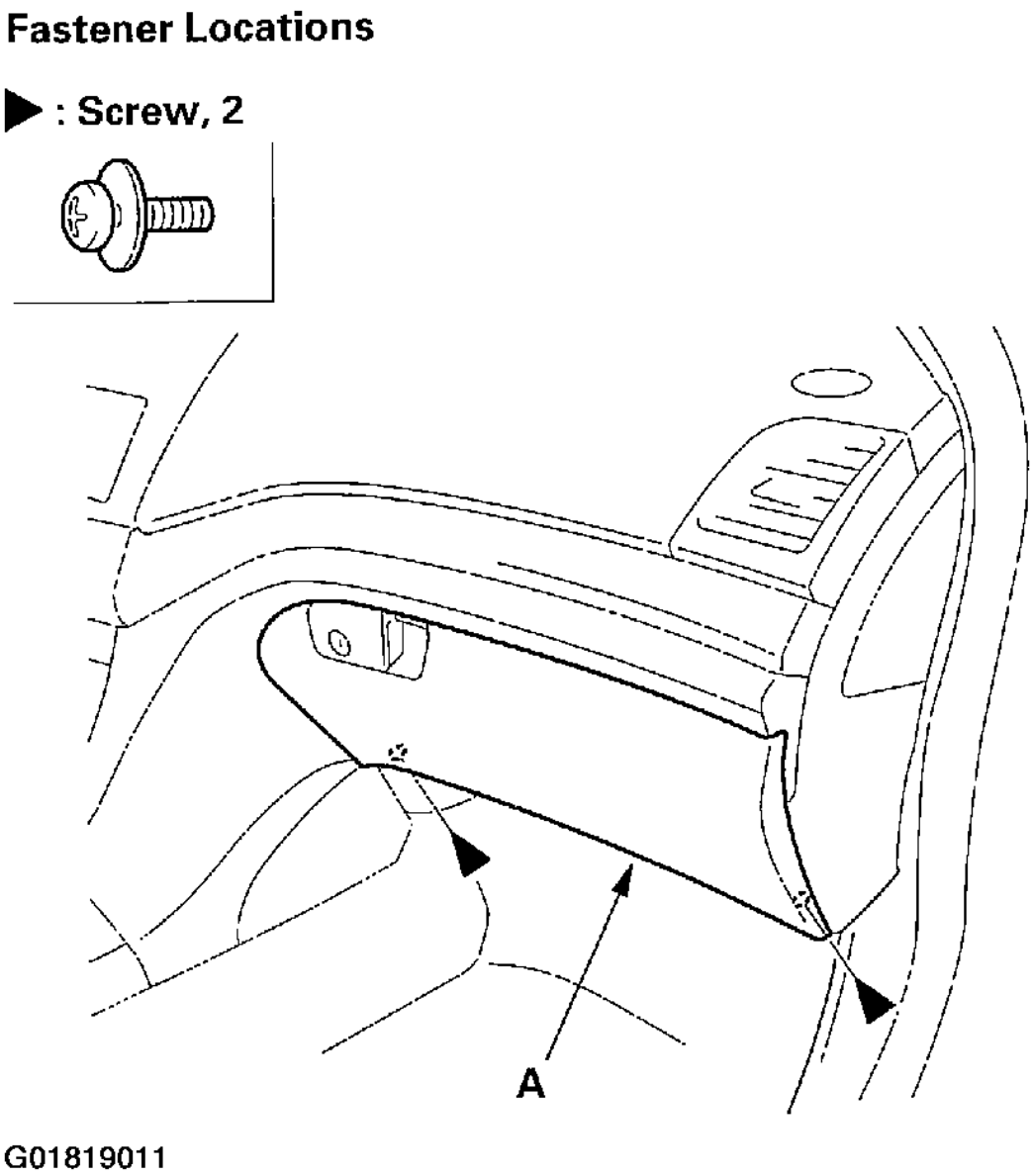

Fig. 110: Removing Glove Box

4. From the inside of the dash, gently push out on the front of the dashboard side cover (A) to release the hooks (B), to remove the cover.

cardiagn.com

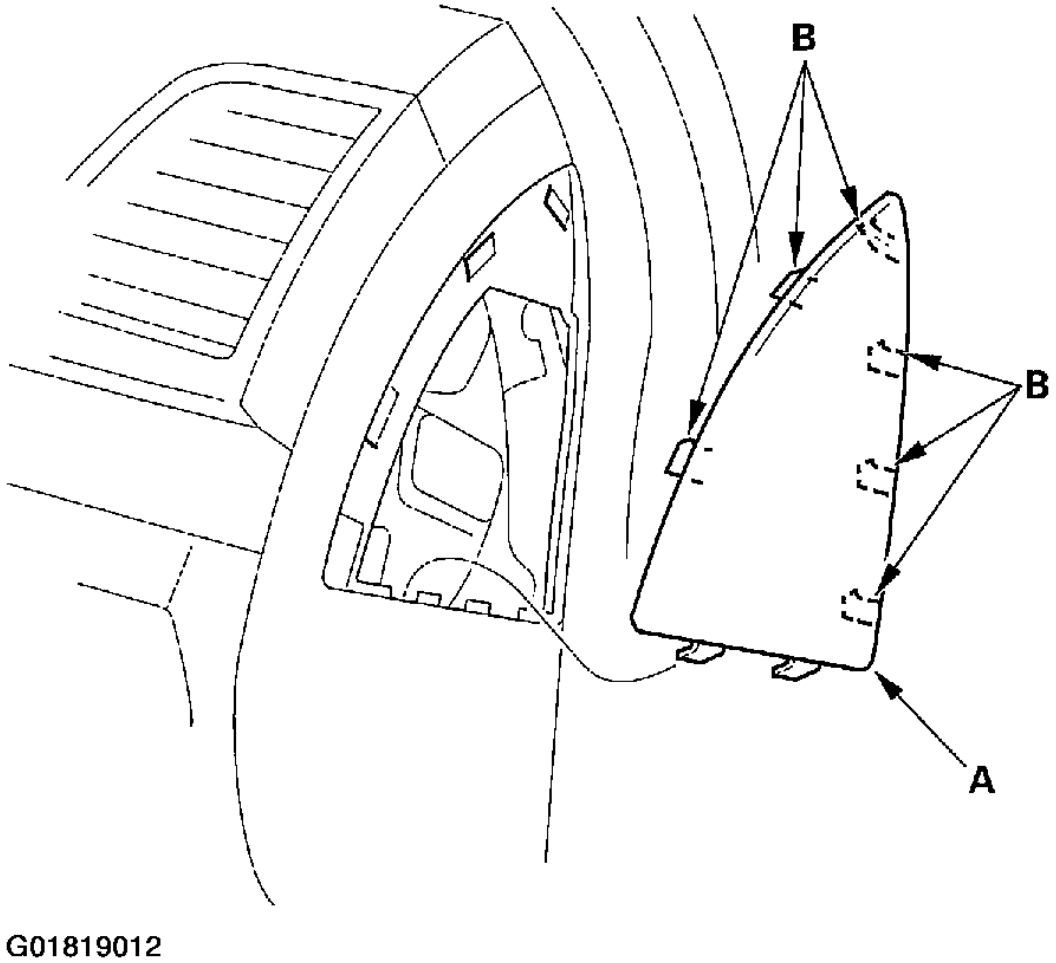

Fig. 111: Removing Dashboard Side Cover

5. Remove the screw, then remove the glove box damper (A).

cardiagn.com

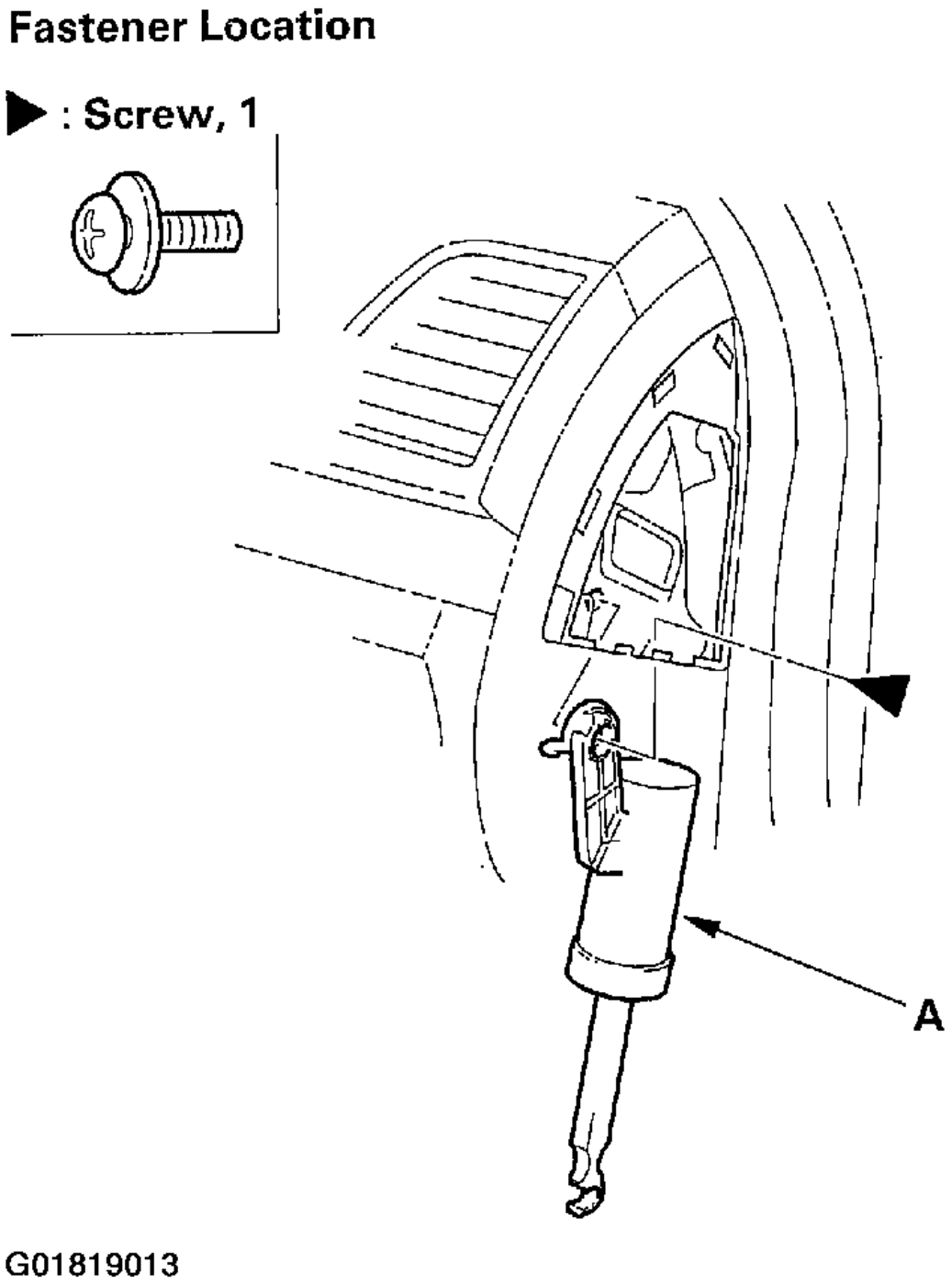

Fig. 112: Removing The Glove Box Damper

6. Install the glove box in the reverse order of removal.

cardiagn.com

GLOVE BOX LOCK CYLINDER REPLACEMENT

NOTE: Take care not to scratch the glove box.

1. Remove the glove box (see **GLOVE BOX REMOVAL/INSTALLATION**).
2. Insert a hooked-shaped tool in under the knob (A) while pulling it, and pull the top of the retainer (B) up.

NOTE: Do not remove the retainer entirely. Leave the other side of it in the original position when removing and installing the lock cylinder.

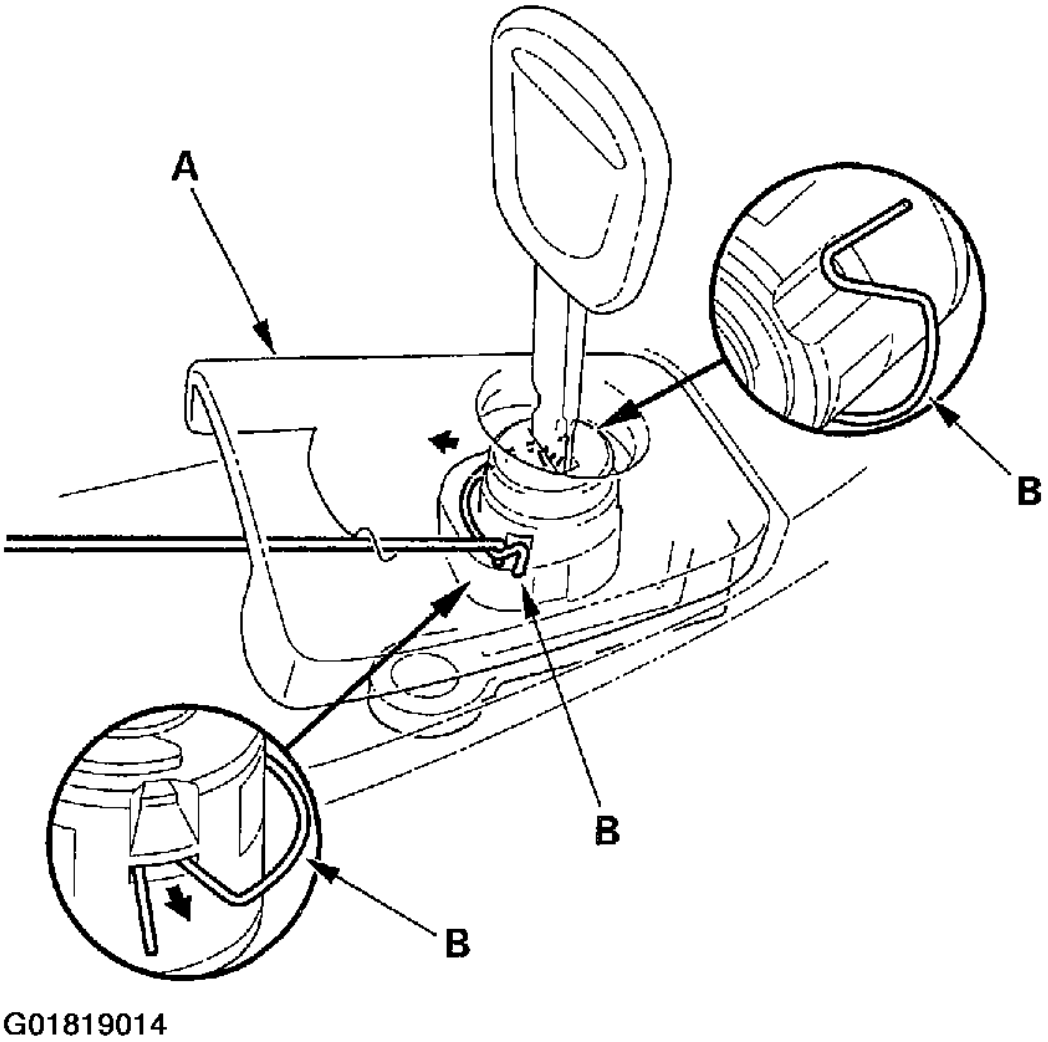

Fig. 113: Pulling The Top Of The Retainer

cardiagn.com

3. Remove the glove box lock cylinder (A).

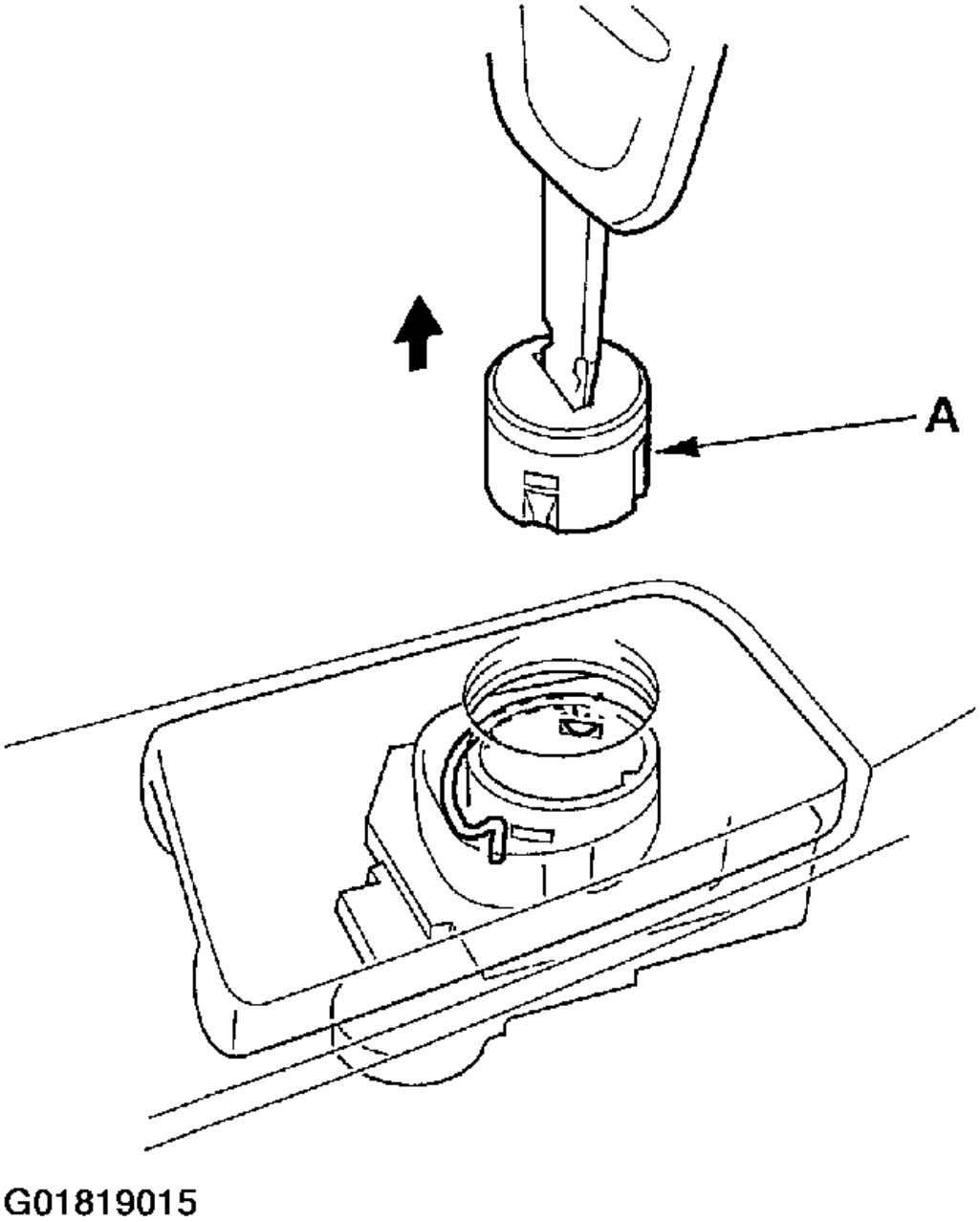

Fig. 114: Removing The Glove Box Lock Cylinder

4. Reinstall the top of the retainer (A) in the original position, then reinstall the lock cylinder (B). Push the

cardiagn.com

cylinder into place securely until the retainer snaps into place.

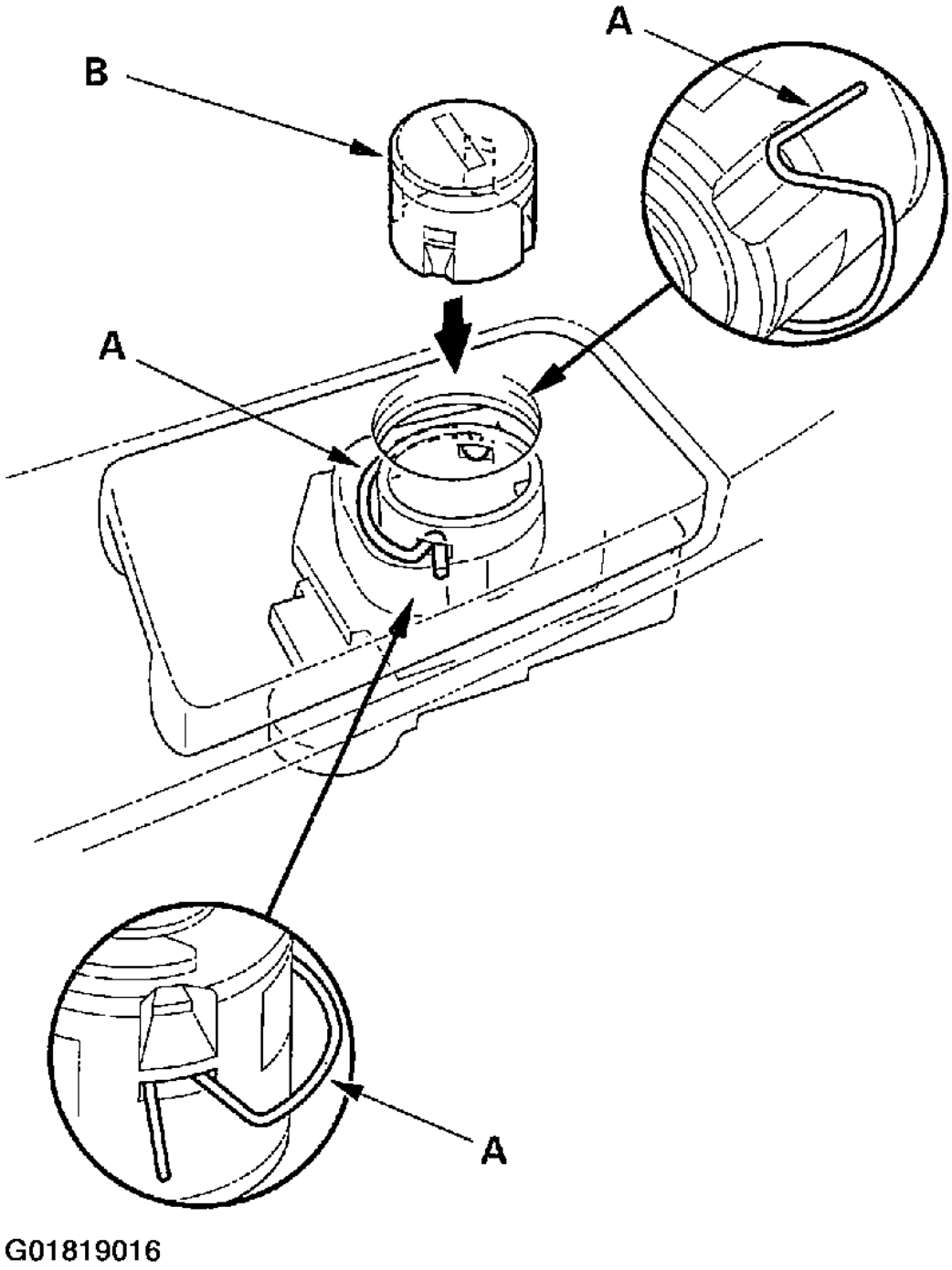

Fig. 115: Installing The Glove Box Lock Cylinder

cardiagn.com

PASSENGER'S DASHBOARD TRIM REMOVAL/INSTALLATION

NOTE: Take care not to scratch the dashboard and related parts.

1. Pry up on the outside edge of the passenger's dashboard trim (A) with a flat-tip screwdriver wrapped with protective tape to detach the clips, then remove the trim.

cardiagn.com

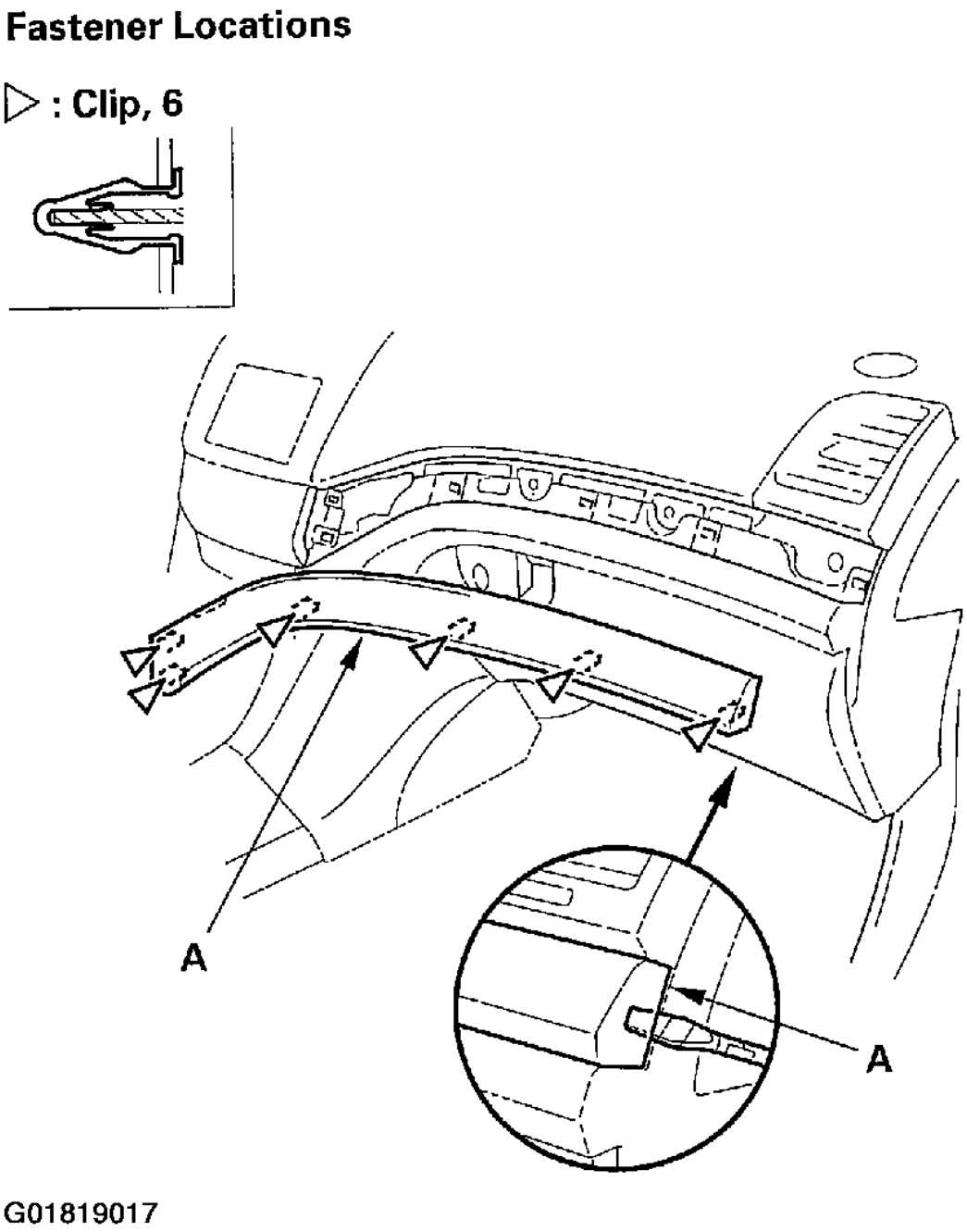

Fig. 116: Removing Passenger's Dashboard Trim

2. Install the trim in the reverse order of removal, and push the clips into place securely.

DASHBOARD CENTER VENT REMOVAL/INSTALLATION

cardiagn.com

Without Navigation System

NOTE:

- **Put on gloves to protect your hands.**
- **Take care not to scratch the dashboard and related parts.**
- **Lay a shop towel under the parts when working on them to protect the face panel from scratches or other damage.**

1. Remove the Audio-HVAC-Display module (see **AUDIO-HVAC DISPLAY MODULE REMOVAL/INSTALLATION**).
2. Remove the screws securing the center vent (A), then remove it.

cardiagn.com

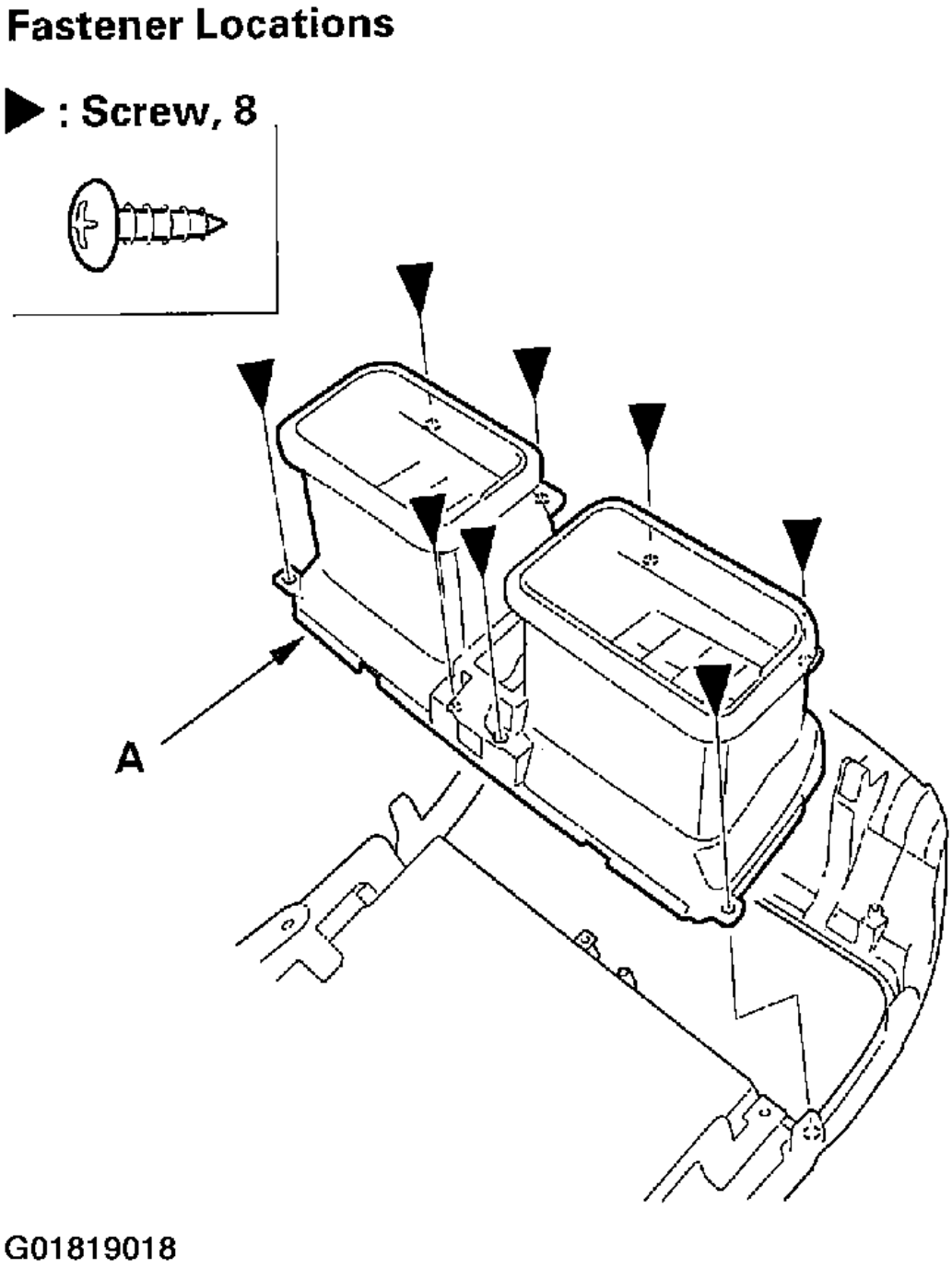

Fig. 117: Removing Center Vent

3. Install the center vent in the reverse order of removal.

cardiagn.com

With Navigation System

NOTE:

- **Put on gloves to protect your hands.**
- **Take care not to scratch the dashboard and related parts.**
- **Lay a shop towel under the parts when working on them to protect the face panel from scratches or other damage.**
- **Do not work in a dusty or dirty place.**
- **Discharge static electricity from your body before and during the work.**
- **Do not touch the circuit board with your bare hands.**
- **Do not work with dirty hands.**
- **Be careful not to fold the flat plate cable.**
- **Do not touch the terminal connector of the flat plate cable with your bare hands. (If you have touched it, wipe it off thoroughly.)**

1. Remove the Audio-HVAC-Display module (see **AUDIO-HVAC DISPLAY MODULE REMOVAL/INSTALLATION**).
2. Remove the audio unit (see **AUDIO-HVAC DISPLAY MODULE REMOVAL/INSTALLATION**).
3. Remove the screws (A, B) securing the center vent (C) and the display unit cover (D).

cardiagn.com

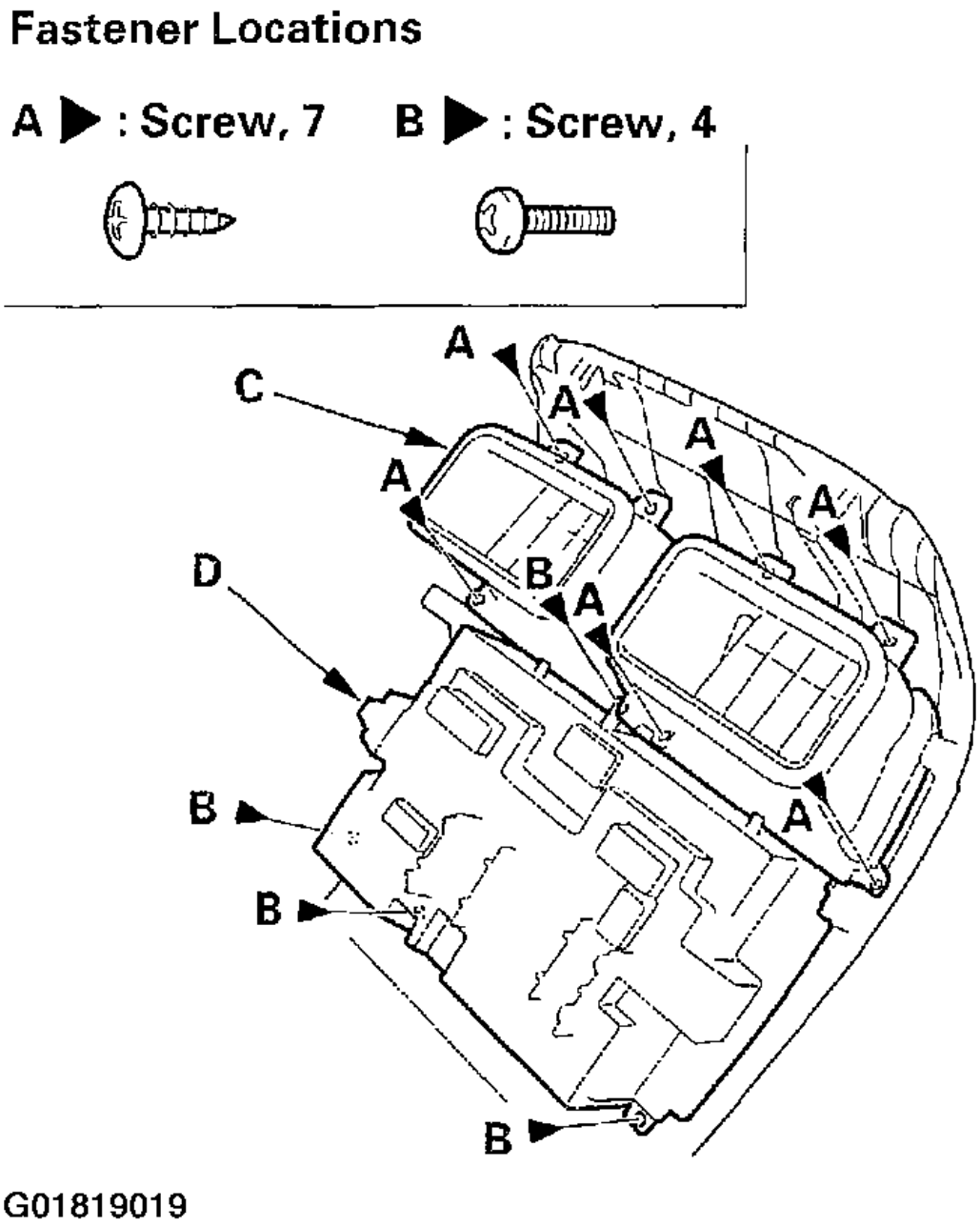

Fig. 118: Removing The Screws

4. Pull up on the top of the display unit cover (A) slightly until the middle mounting portion (B) of the center vent (C) can be removed from under the bracket (D), then remove the center vent from the center panel (E).

cardiagn.com

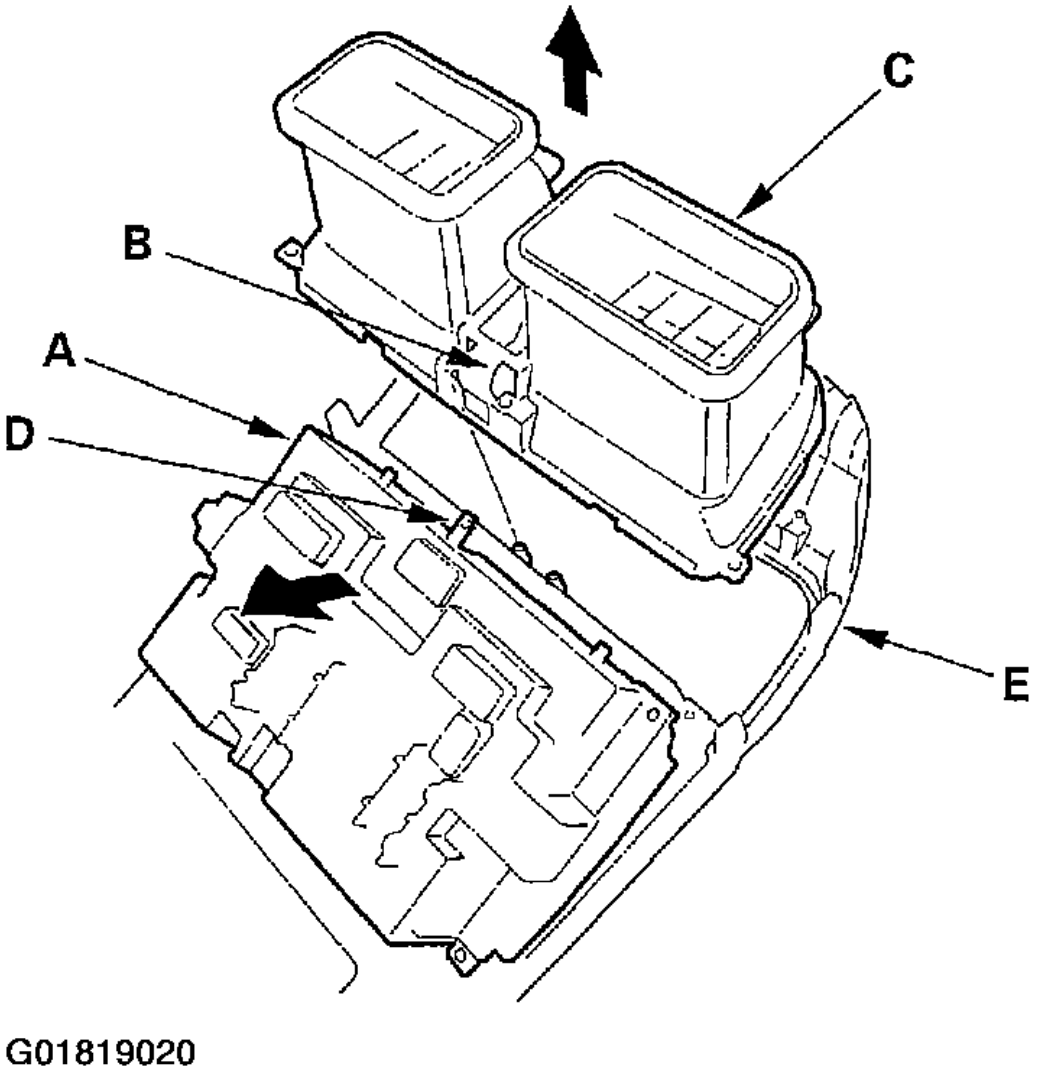

Fig. 119: Removing The Center Vent From The Center Panel

5. Install the center vent in the reverse order of removal.

DASHBOARD SIDE VENT REMOVAL/INSTALLATION

Driver's

NOTE:

- **Take care not to scratch the dashboard and related parts.**
- **Put on gloves to protect your hands.**

cardiagn.com

1. Remove these items:
   a. Driver's outer dashboard trim (see **DRIVER'S OUTER DASHBOARD TRIM REMOVAL/INSTALLATION**)
   b. Switch trim (see **STEERING HANGER BEAM REPLACEMENT**)
2. Push on the lower clips (A) by hand to release them. Then gently press up on the driver's side vent (B) from the bottom to release the outer side clips (C). While gently pressing up on the driver's side vent, pry the driver's side vent towards the door opening to release the tabs (D).

cardiagn.com

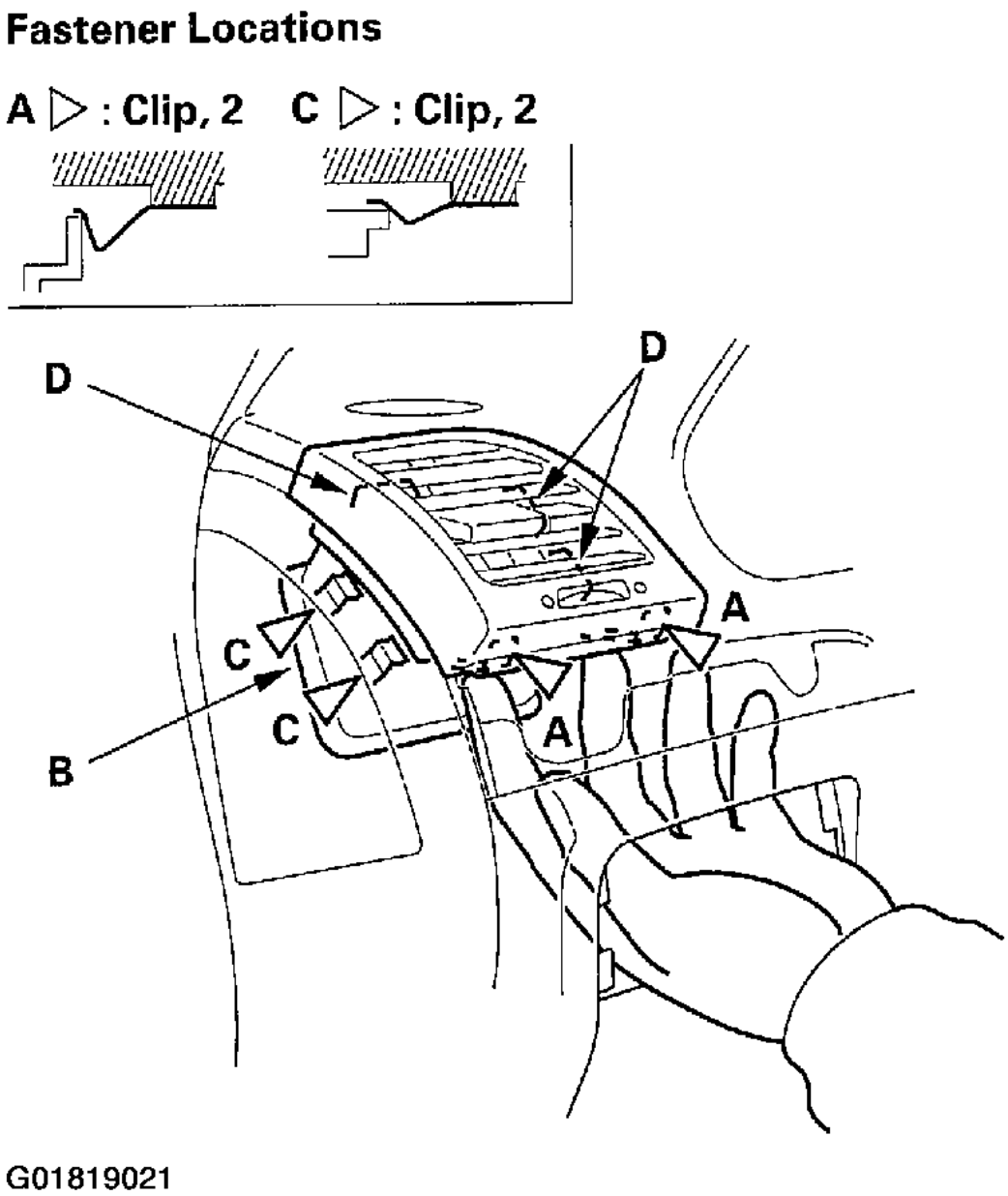

Fig. 120: Removing Driver's Side Vent

3. Reinstall the tab portions of the vent first, then push the clip portions into place securely.

Passenger's

NOTE: Take care not to scratch the dashboard and related parts.

cardiagn.com

1. Remove these items:
   a. Glove box (see **GLOVE BOX REMOVAL/INSTALLATION**)
   b. Passenger's dashboard trim (see **PASSENGER'S DASHBOARD TRIM REMOVAL/INSTALLATION**)
2. Push on the lower clips (A) by hand to release them. Then gently press up on the passenger's side vent (B) from the bottom to release the outer side clips (C). While gently pressing up on the passenger's side vent, pry the passenger's side vent towards the door opening to release the tabs (D).

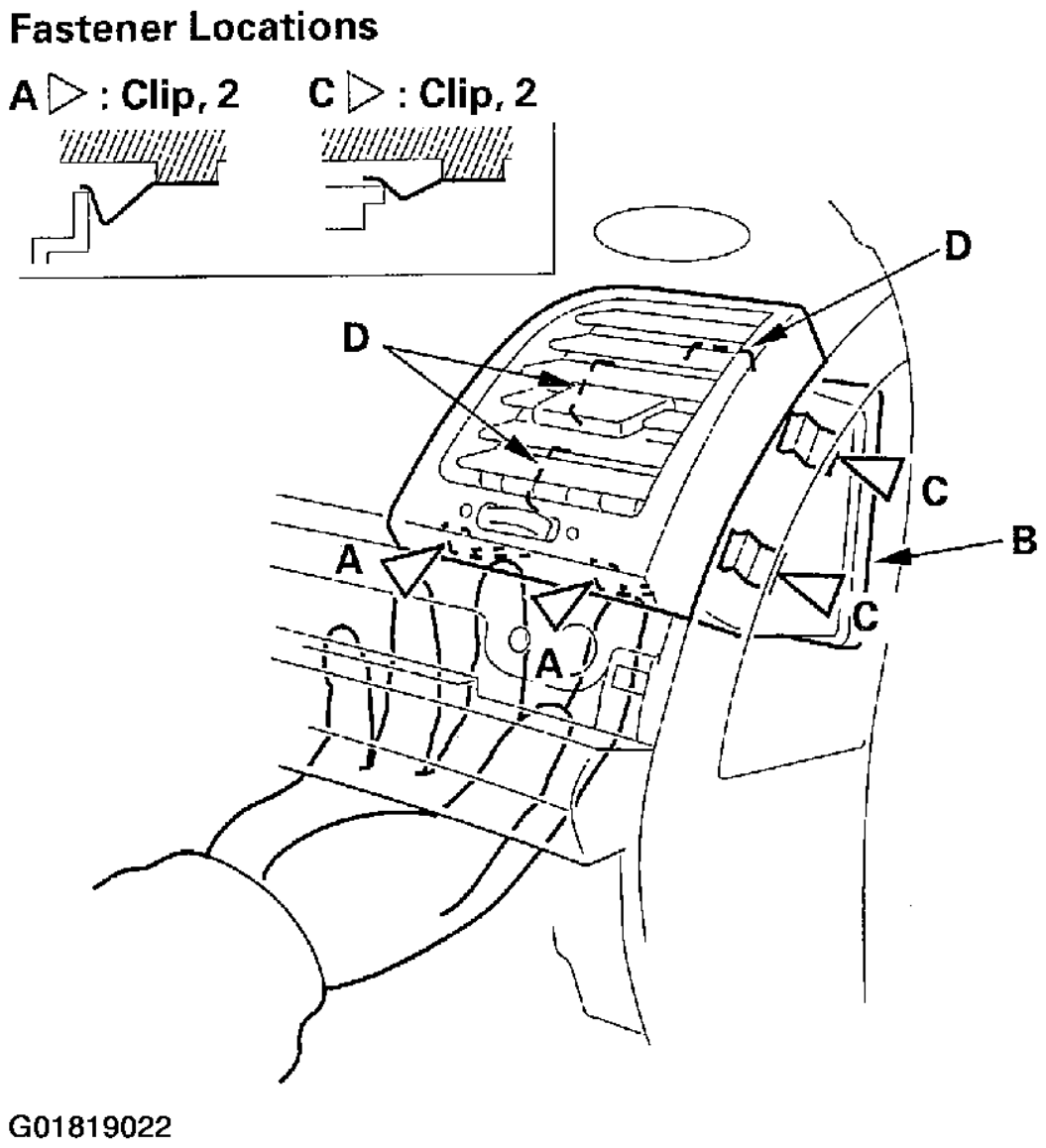

Fig. 121: Removing Passenger's Side Vent

cardiagn.com

3. Reinstall the tab portions of the vent first, then push the clip portions into place securely.

DASHBOARD REMOVAL/INSTALLATION

SRS components are located in this area. Review the SRS component locations and the precautions and procedures in the SRS section before performing repairs or service. See **AIR BAG RESTRAINT SYSTEMS** .

NOTE:

- **When prying with a flat-tip screwdriver, wrap it with protective tape, and apply protective tape around the related parts to prevent damage.**
- **Have an assistant help you when removing and installing the dashboard.**
- **Take care not to scratch the dashboard, body and other related parts.**
- **Put on gloves to protect your hands.**

1. Make sure you have the anti-theft codes for the radio and the navigation system, then write down the frequencies for the preset buttons.
2. Disconnect the negative battery cable, and wait at least 3 minutes before beginning work.
3. Remove these items:
   a. Passenger's seat (see **FRONT SEAT REMOVAL/INSTALLATION**)
   b. Center console (see **CENTER CONSOLE REMOVAL/INSTALLATION**)
   c. Center pocket (see **CENTER CONSOLE REMOVAL/INSTALLATION**)
   d. Driver's dashboard lower cover (see **DRIVER'S DASHBOARD LOWER COVER REMOVAL/INSTALLATION**)
   e. Glove box (see **GLOVE BOX REMOVAL/INSTALLATION**)
   f. Kick panels, both sides (see **TRIM REMOVAL/INSTALLATION - DOOR AREA**)
   g. A-pillar trim, both sides (see **TRIM REMOVAL/INSTALLATION - DOOR AREA**)
   h. Steering column (see **STEERING COLUMN REMOVAL AND INSTALLATION**)
   i. Stereo amplifier (see **STEREO AMPLIFIER REPLACEMENT**)
   j. Shift lever brackets, A/T model (see **SHIFT LEVER**)
   k. SRS control unit (see **AIR BAG RESTRAINT SYSTEMS**)
4. Remove the screw (A) and release the clips (B, C), then remove the driver's center lower cover (D) and the rear vent duct (E).

cardiagn.com

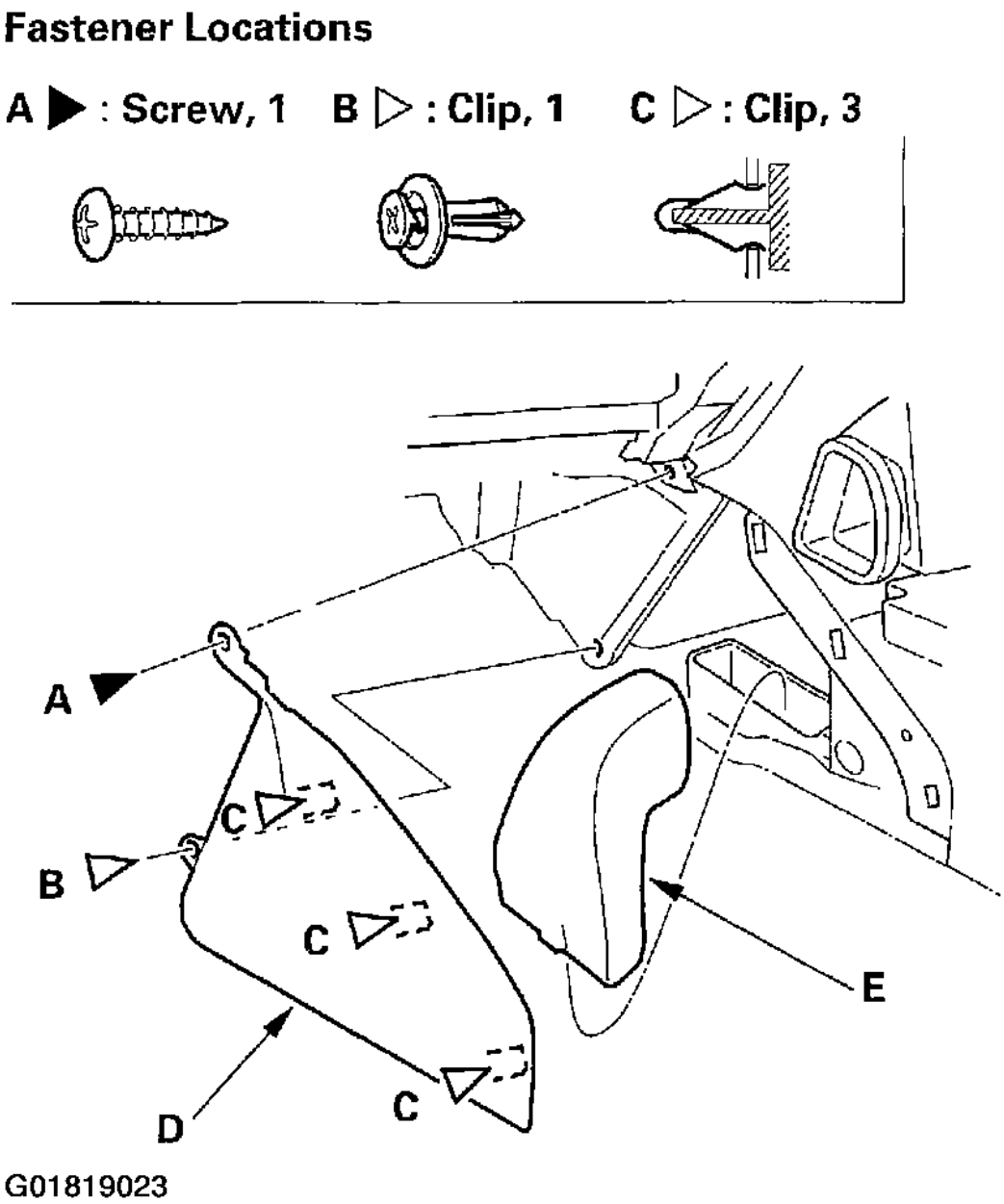

Fig. 122: Removing The Driver's Center Lower Cover & The Rear Vent Duct

5. Release the clips (A, B), then remove the passenger's center lower cover (C) and the rear vent duct (D).

cardiagn.com

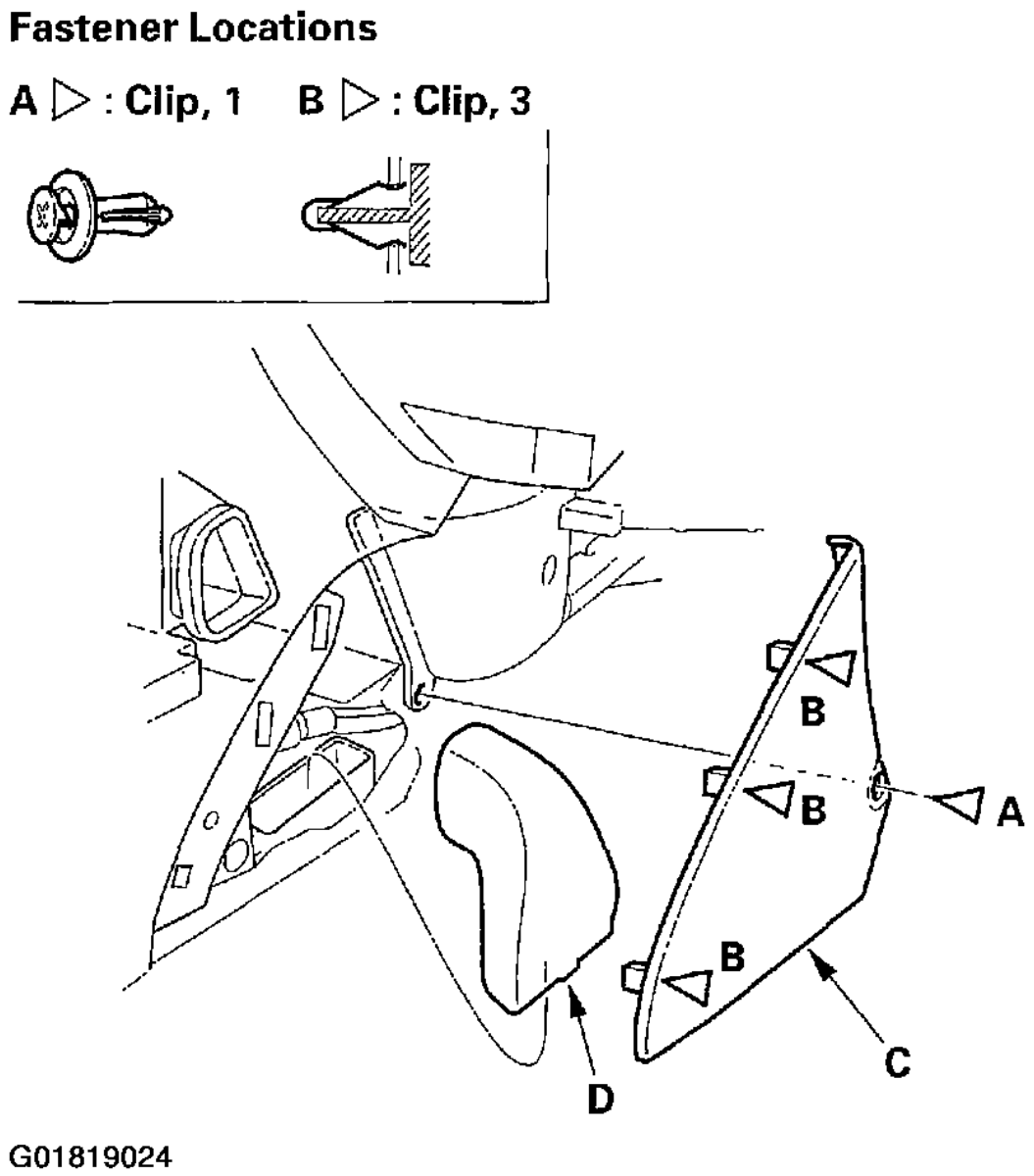

Fig. 123: Removing The Passenger's Center Lower Cover & The Rear Vent Duct

6. Remove the SRS control unit (see **AIR BAG RESTRAINT SYSTEMS**).

Driver's side:

7. From under the dash, disconnect the interior wire harness connector (A), clutch switch connectors (B) (on M/T model), and brake switch connector (C), floor wire harness connectors (D), engine compartment wire harness connectors (E), and disconnect the dashboard wire harness connectors (F) from the under-

cardiagn.com

dash fuse/relay box (G), then release the wire harness clips. Disconnect the air hose (H).

NOTE: **Lift the white wire harness connector locks (I) before trying to remove the connectors from the fuse box.**

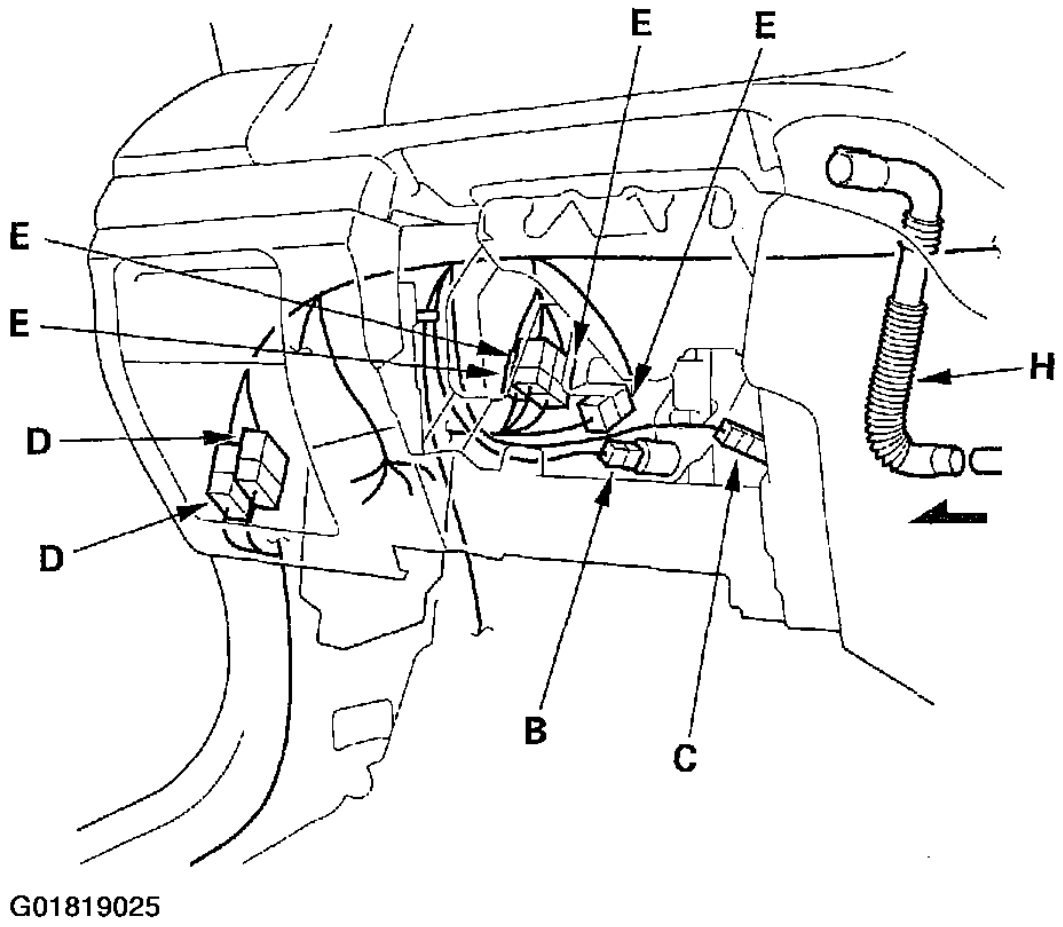

Fig. 124: Disconnecting Driver's Side Under Dash Connectors

cardiagn.com

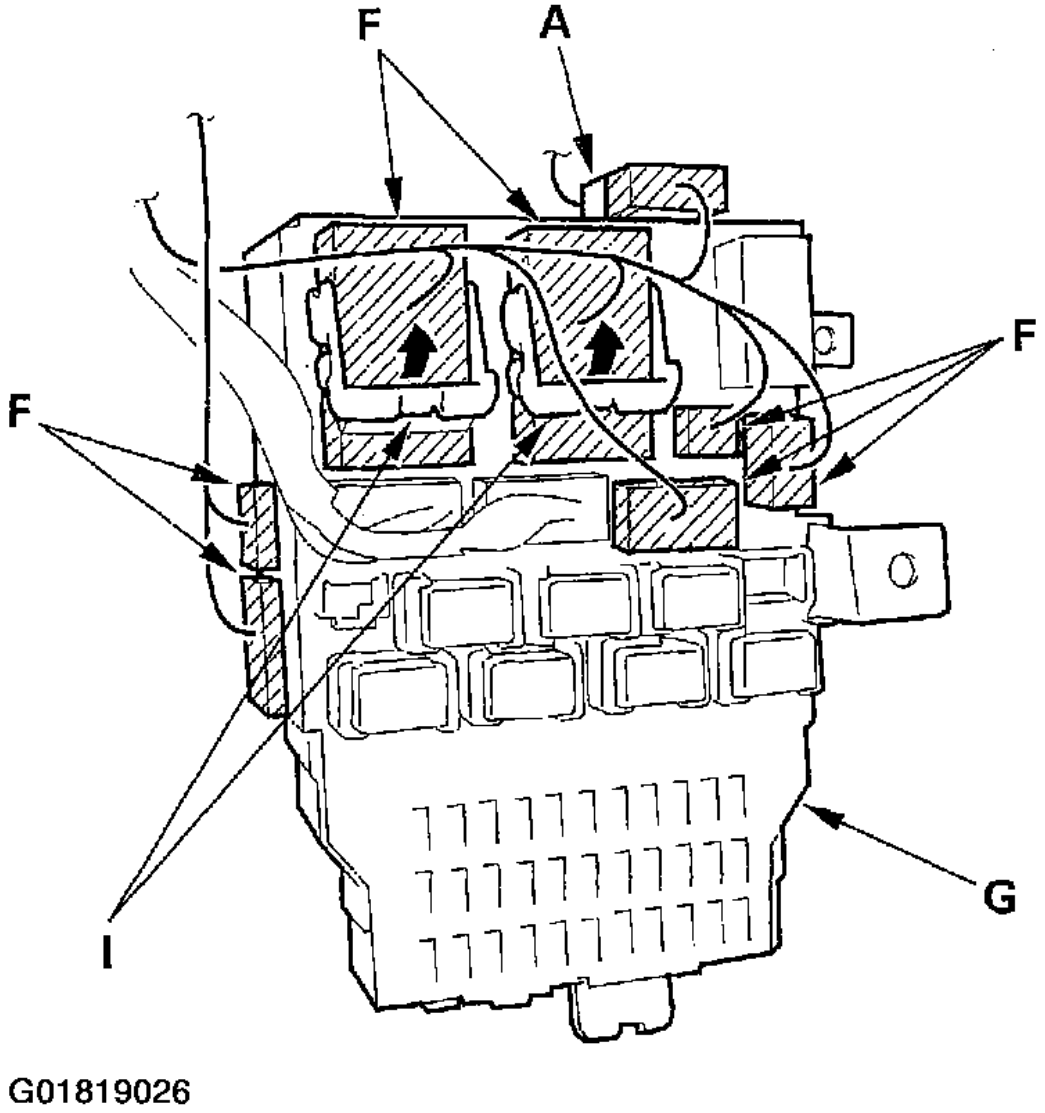

Fig. 125: Disconnecting The Dashboard Wire Harness Connectors From The Under-Dash Fuse/Relay Box

Middle portion (shift lever portion):

8. Disconnect the parking brake switch connector (A), radio antenna connector (B), antenna lead (C), A/C subharness connector (D), then release the wire harness clip (E), and if applicable, release the harness clamp (F). Using a Torx T30 bit, remove the ground bolt (G).

cardiagn.com

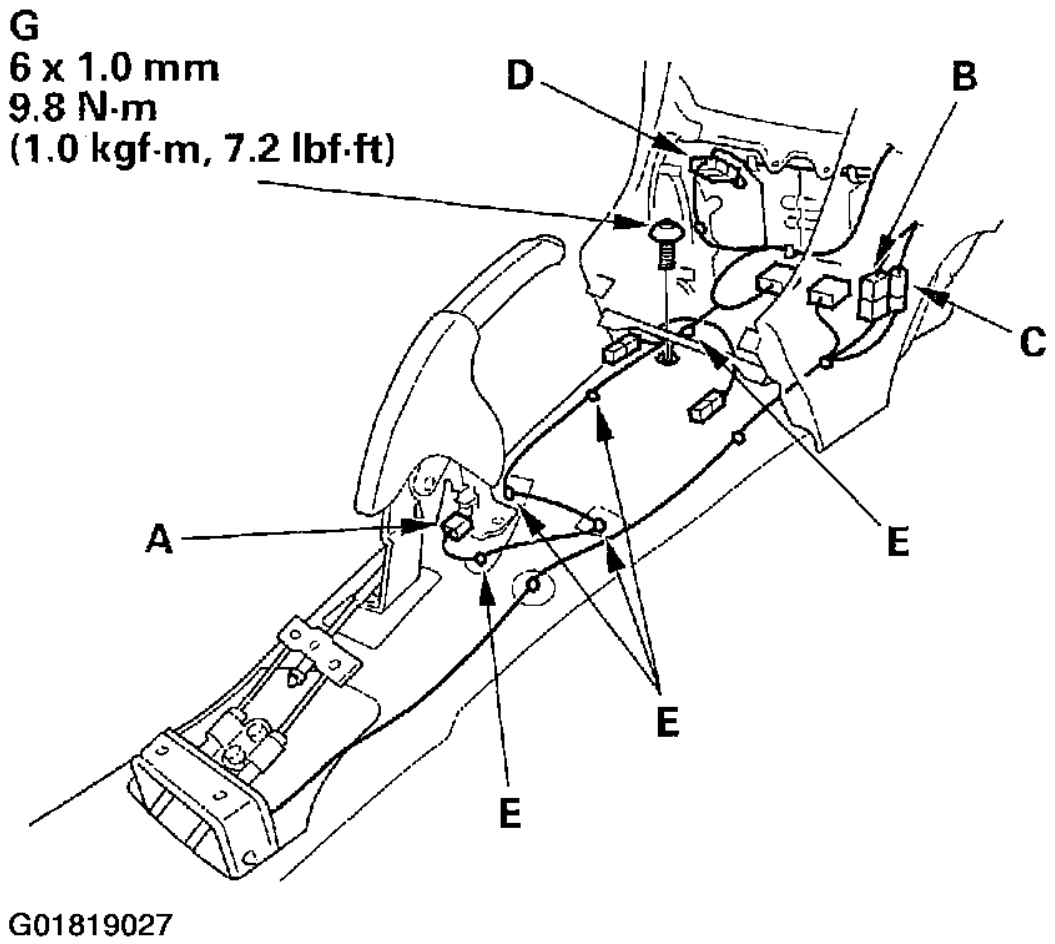

Fig. 126: Disconnecting Middle Portion Under Dash Connectors (Shift Lever Portion - A/T)

cardiagn.com

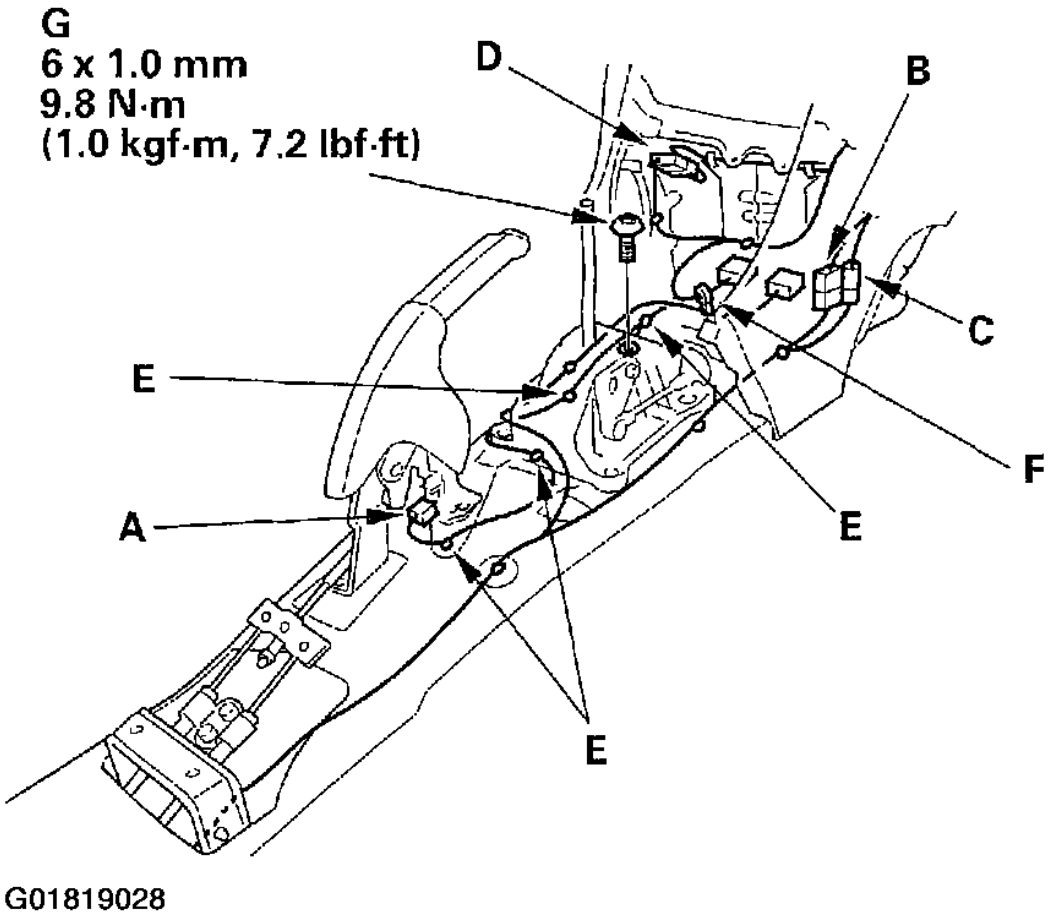

Fig. 127: Disconnecting Middle Portion Under Dash Connectors (Shift Lever Portion - M/T)

Middle portion (passenger's side):

9. From under the dash, disconnect the ECM/PCM connectors (A), power transistor connector (B), and engine wire harness connectors (C), then release the wire harness clips (D).

cardiagn.com

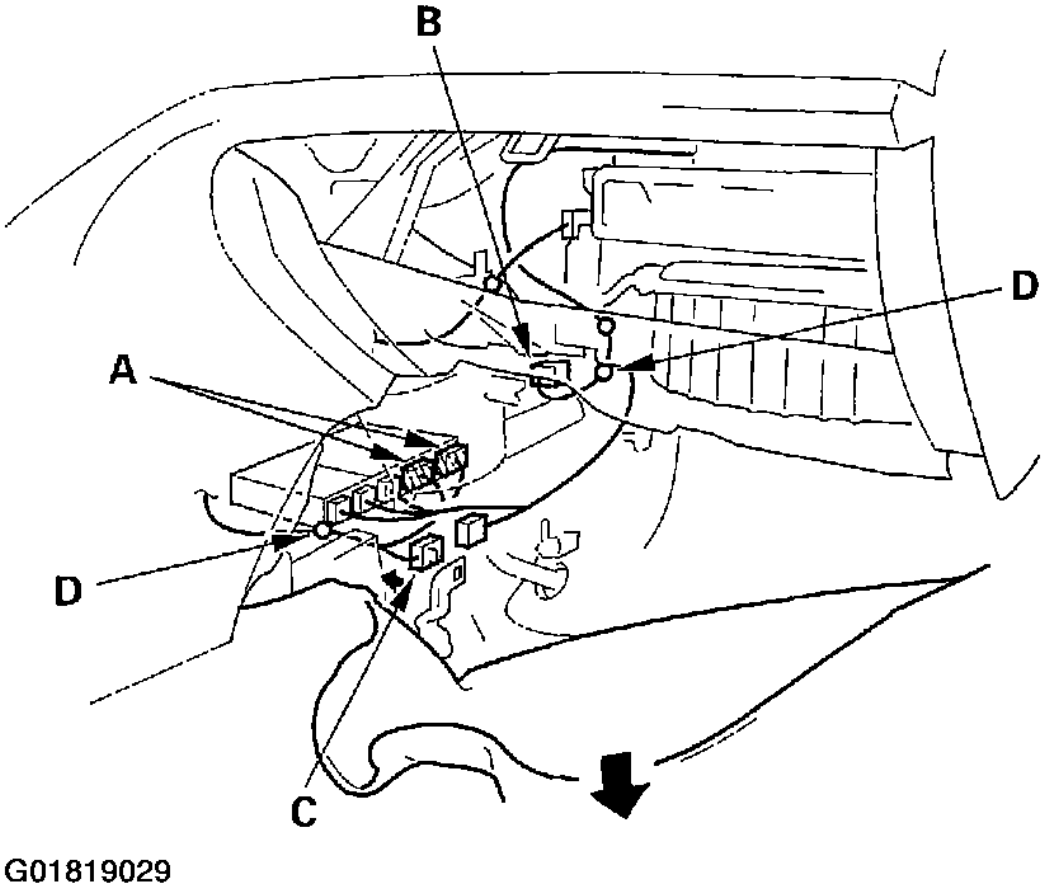

Fig. 128: Disconnecting Middle Portion Under Dash Connectors (Passenger's Side)

Passenger's side:

10. From under the dash, disconnect the passenger's door wire harness connectors (A), floor wire harness connectors (B), interior wire harness connector (C) and blower motor connector (D) and detach the harness clip (E).

cardiagn.com

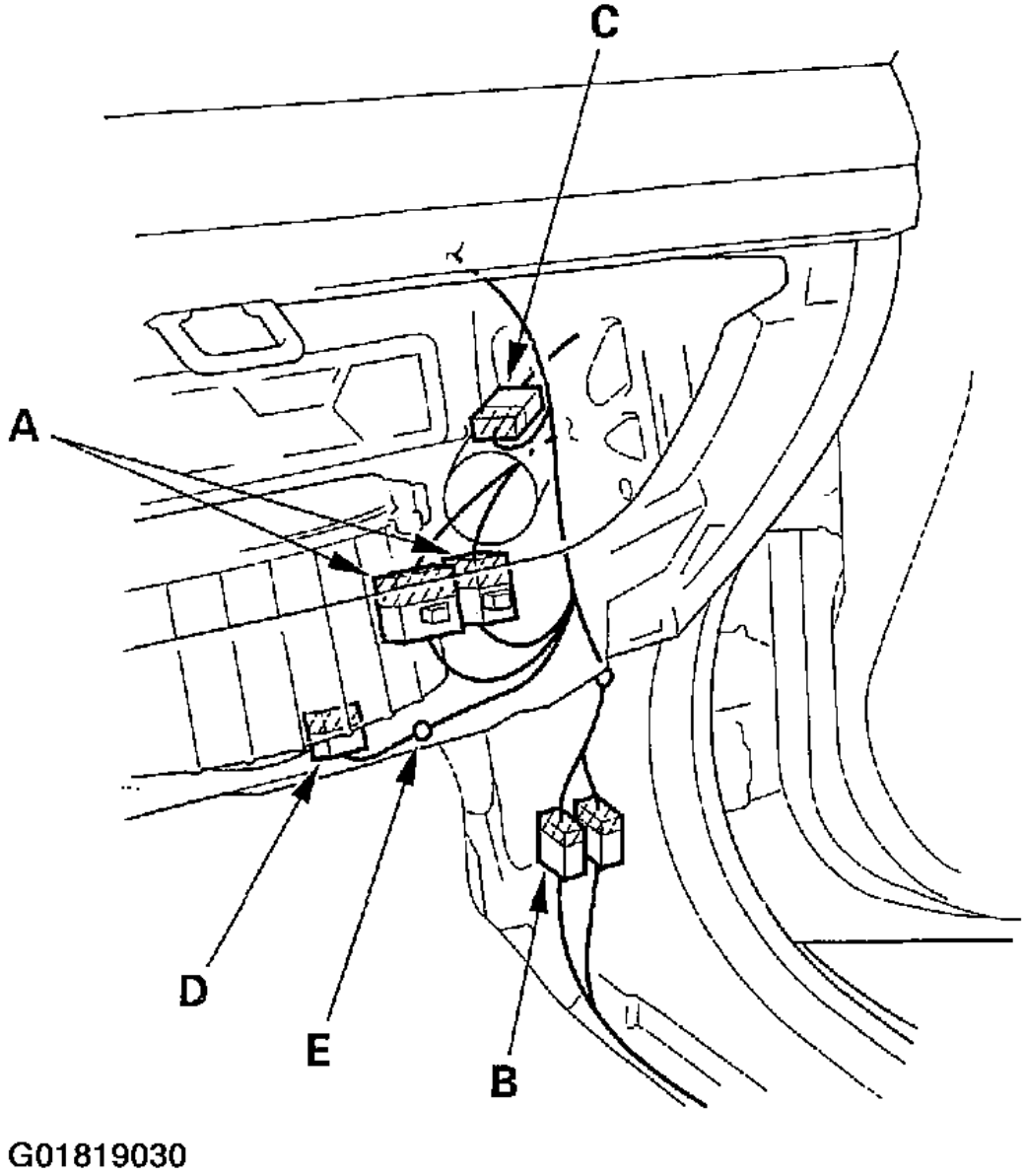

Fig. 129: Disconnecting Passenger's Side Under Dash Connectors

11. Detach all of the harness and connector clips.
12. Remove bolt (A), then remove the brake pedal support member (B).

cardiagn.com

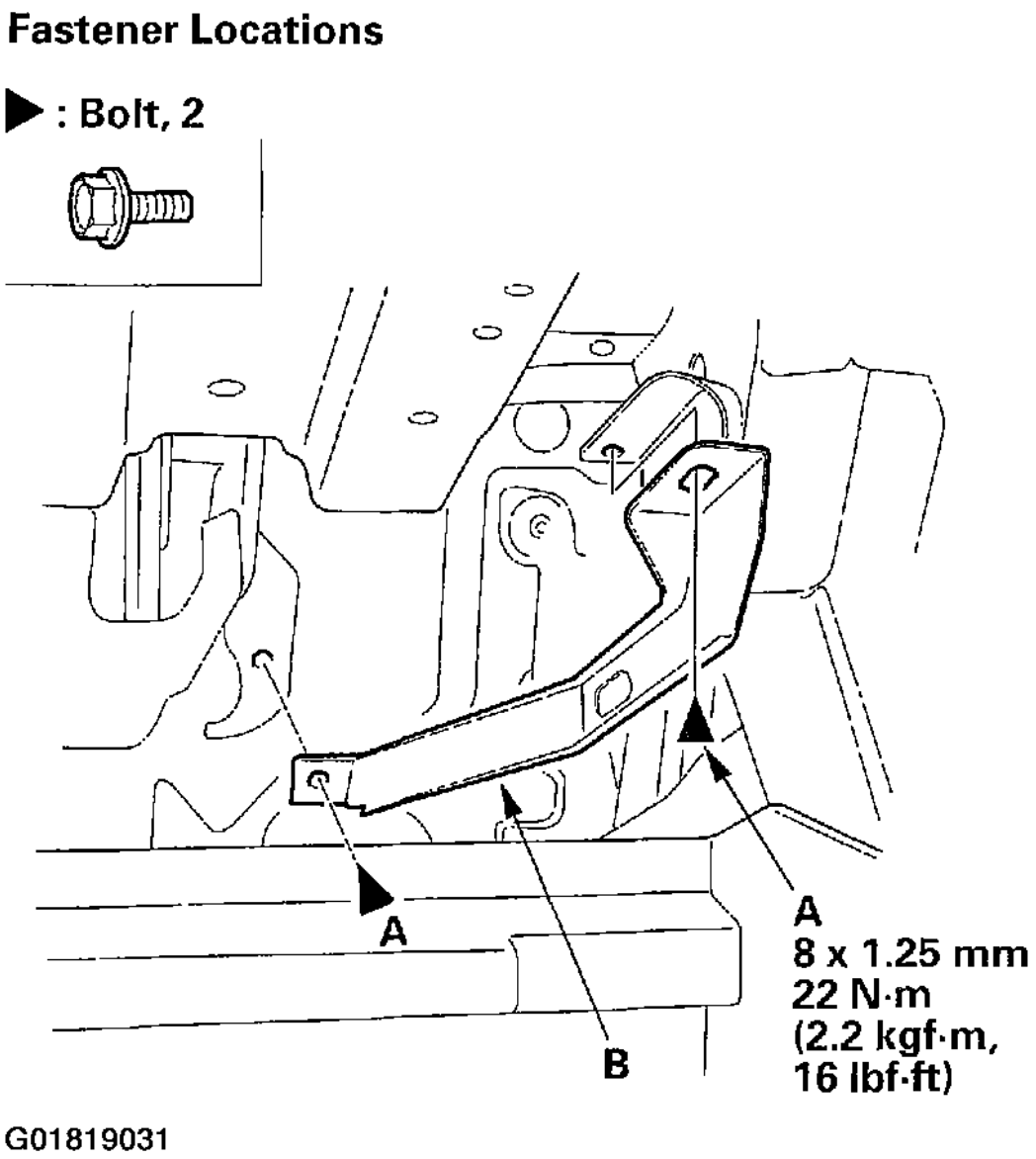

Fig. 130: Removing The Brake Pedal Support Member

13. Cover the parking brake handle to protect it.
14. From outside the driver's door, remove the caps (A), then remove the bolts (B, C, D), and clips (E) and lift up on the dashboard (F) to release it from the guide pins (G, H).

NOTE: **Before removing the dashboard, make sure all the harnesses have been disconnected.**

cardiagn.com

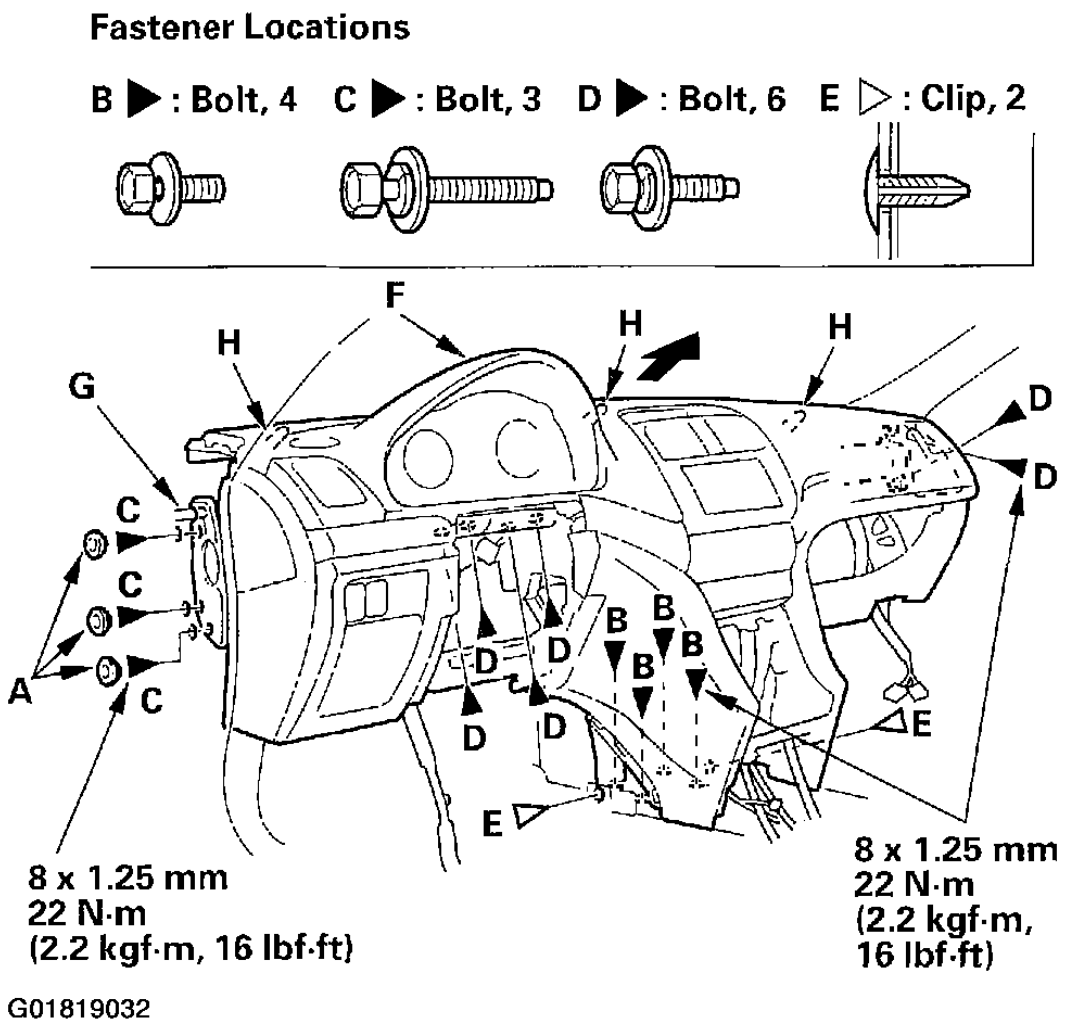

Fig. 131: Removing The Dashboard

15. Carefully remove the dashboard through the front door opening.

NOTE: **Lay the dashboard on the front or rear of the dashboard. Do not lay it on the lower console opening or you may damage it.**

16. Remove the bolt (A), then remove the center bracket (B).

cardiagn.com

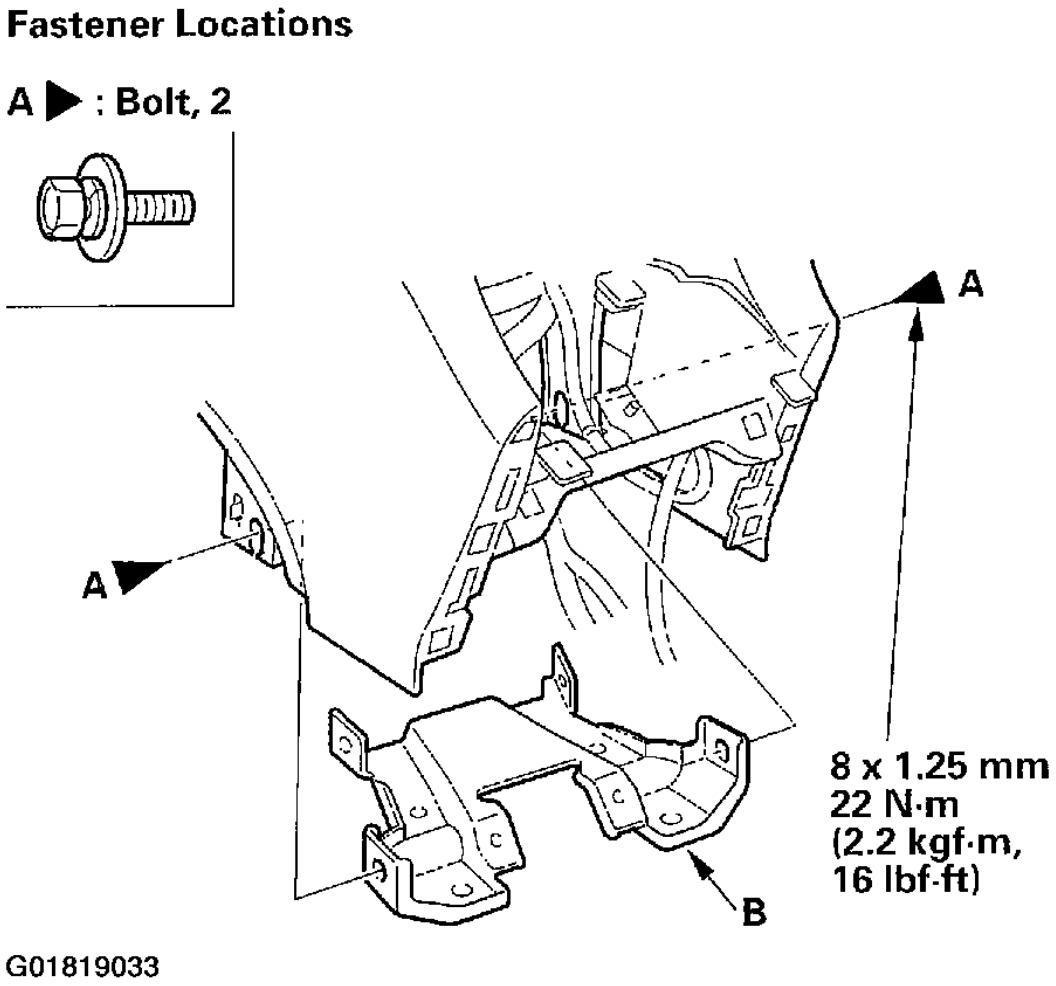

Fig. 132: Removing The Center Bracket

17. Install the dashboard in the reverse order of removal, and note these items:
    - Reinstall the center bracket on the center frame, and slightly tighten the mounting bolts. Reinstall the dashboard on the body. After tightening both dashboard mounting bolts and nut, tighten the center bracket mounting bolts and center frame mounting bolts.
    - Make sure the dashboard fits onto the guide pins correctly.
    - Apply liquid thread lock to the bolts securing the center bracket and the dashboard before reinstallation.
    - Before tightening the bolts, make sure each wire harness is not pinched.
    - Make sure the connectors are plugged in properly, and the antenna lead and air hose are connected properly.
    - Reconnect the negative cable to the battery.
    - Enter the anti-theft codes for the radio and the navigation system, then enter the customer's radio

cardiagn.com

station presets.
- Reset the clock.
- Perform the power window control unit reset procedure (see **RESETTING THE POWER WINDOW**).

STEERING HANGER BEAM REPLACEMENT

NOTE: Put on gloves to protect your hands.

1. Remove the dashboard (see **DASHBOARD REMOVAL/INSTALLATION**).
2. Remove the these items from the dashboard:
   a. Driver's outer dashboard trim (see **DRIVER'S OUTER DASHBOARD TRIM REMOVAL/INSTALLATION**)
   b. Gauge control module (see **GAUGE CONTROL MODULE REPLACEMENT**)
   c. Audio-HVAC-display module (see **AUDIO-HVAC DISPLAY MODULE REMOVAL/INSTALLATION**)
   d. Glove box damper (see **GLOVE BOX REMOVAL/INSTALLATION**)
3. Pull out the switch panel (A) to release the clips, hooks (B) and disconnect the moonroof switch connector (C) and VSA off switch connector (D).

cardiagn.com

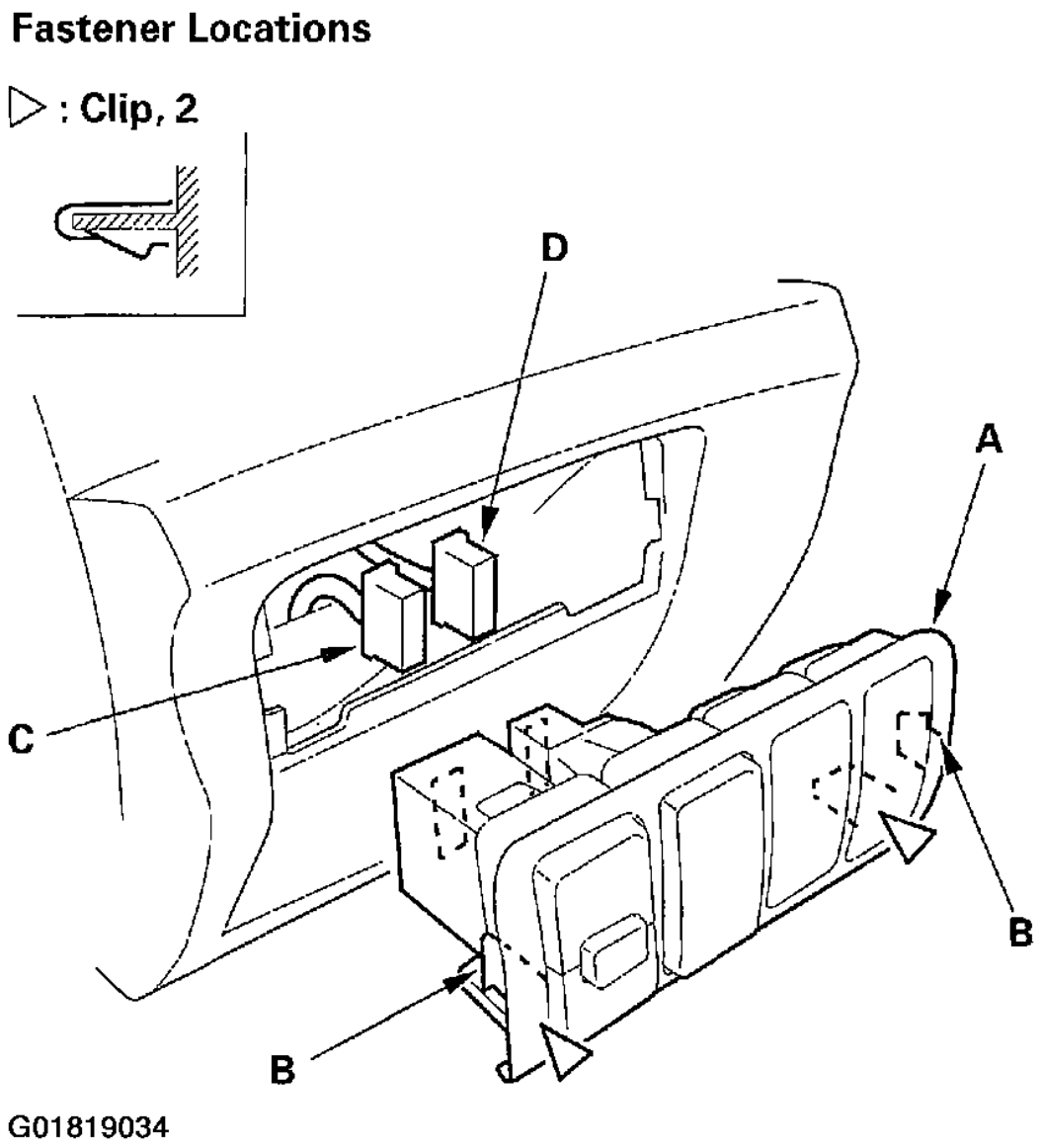

Fig. 133: Removing The Switch Panel

4. On both side, detach the clip, then remove the tweeters (A). Disconnect the tweeter connectors (B).

cardiagn.com

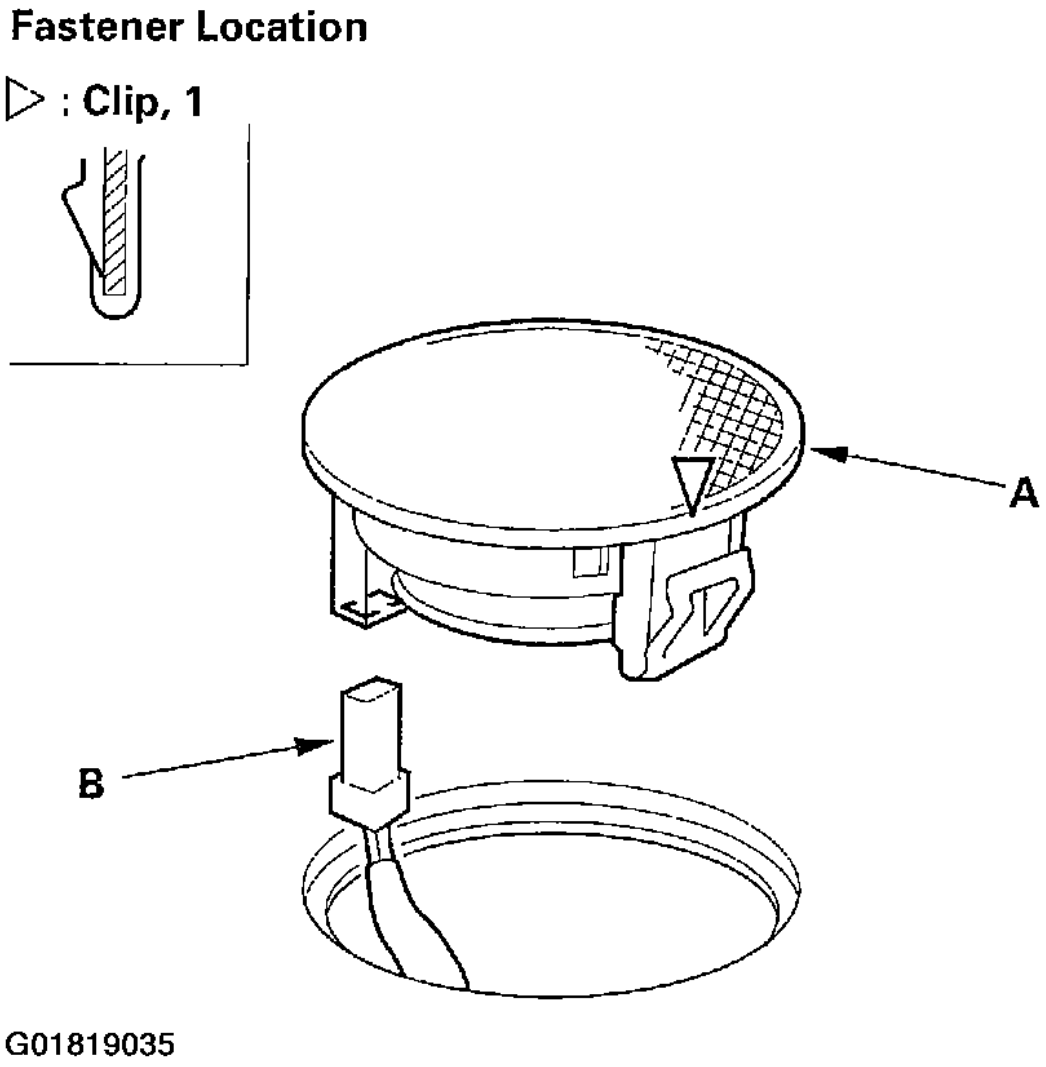

Fig. 134: Removing The Tweeters

5. From the front of the dashboard, detach the harness clips (A, B).

cardiagn.com

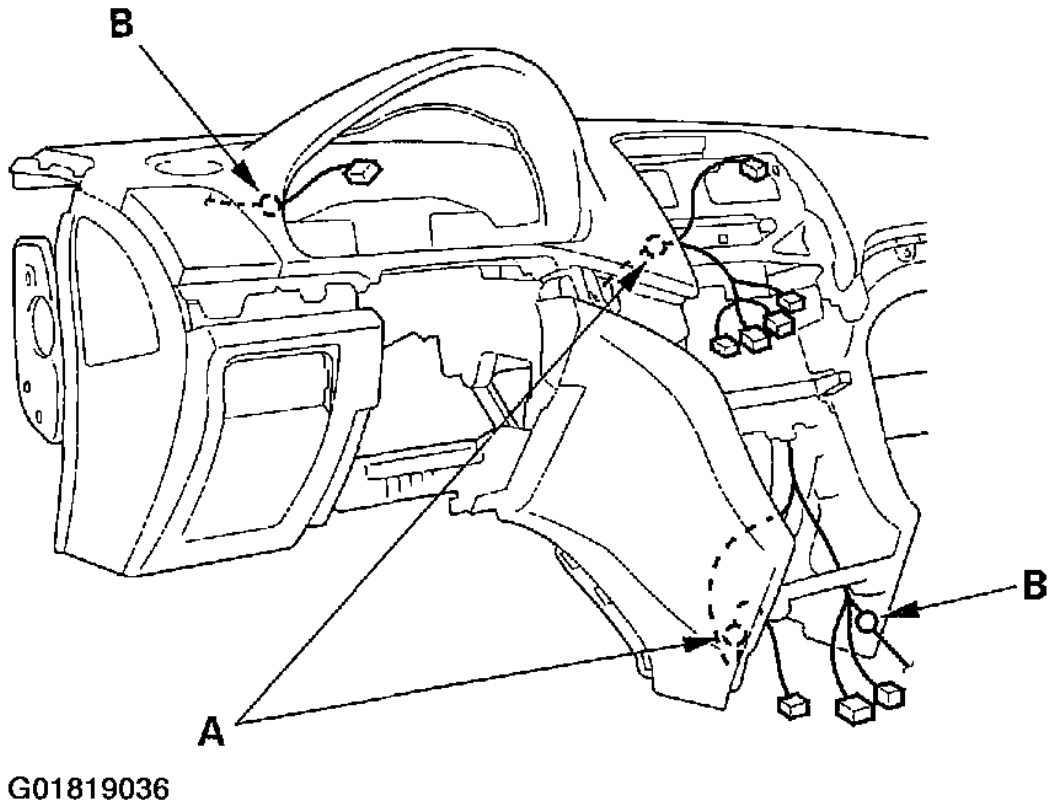

Fig. 135: Detaching The Harness Clips

6. Remove the glove box striker (A).
   a. Remove the screws (B, C) securing the glove box striker.
   b. Disconnect the glove box light bulb socket (D), and detach the harness clips (E, F) from the glove box striker.

cardiagn.com

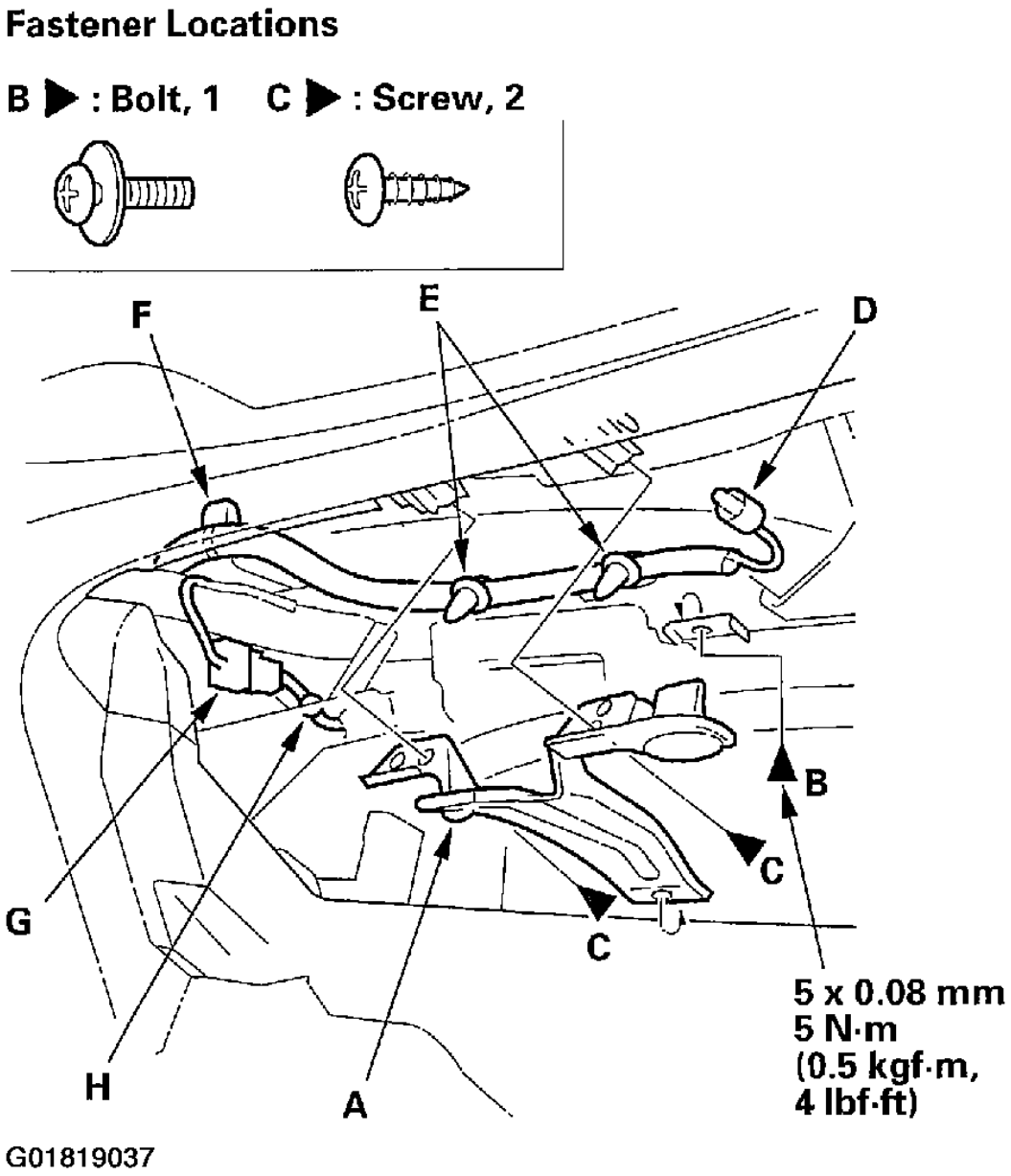

Fig. 136: Removing The Glove Box Striker

7. Disconnect the passenger's airbag connector (G), and detach the harness clip (H).
8. From the back of the dashboard. Disconnect the sunlight sensor connector (A) and peel the cushion tape (B).

cardiagn.com

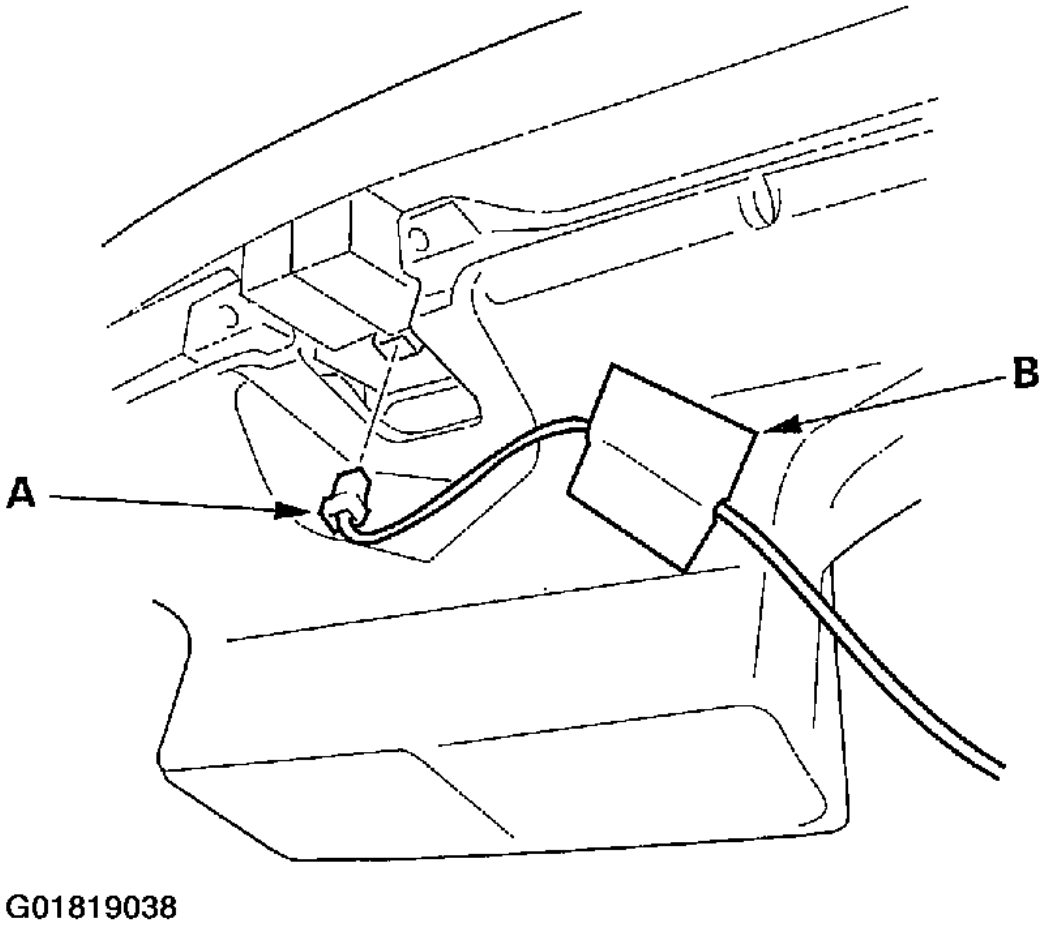

Fig. 137: Disconnecting The Sunlight Sensor Connector

9. From the back of the dashboard, detach the connectors (A) and harness clip (B) on passenger's side.

cardiagn.com

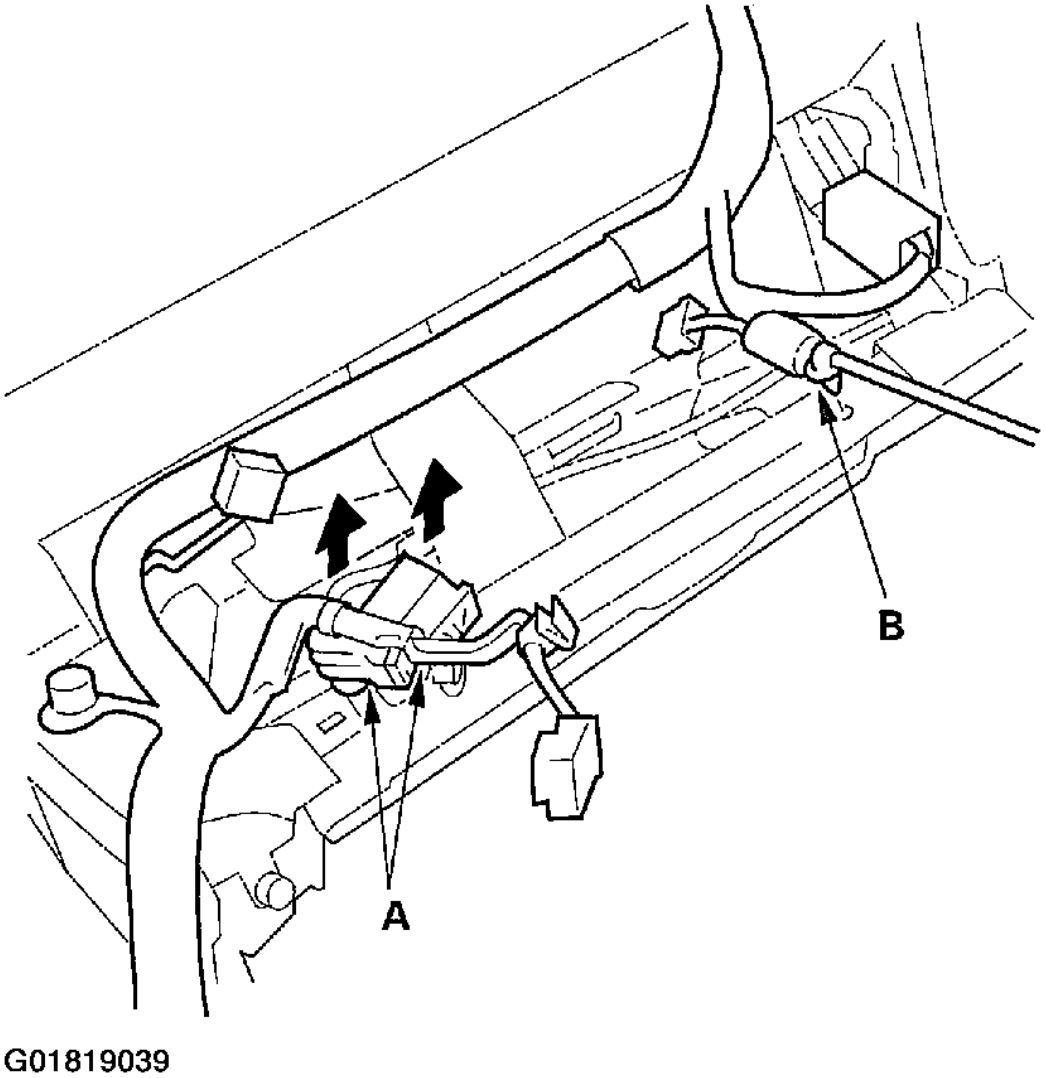

Fig. 138: Detaching The Connectors & Harness Clip On Passenger's Side

10. Remove the bolt securing the passenger's airbag.

cardiagn.com

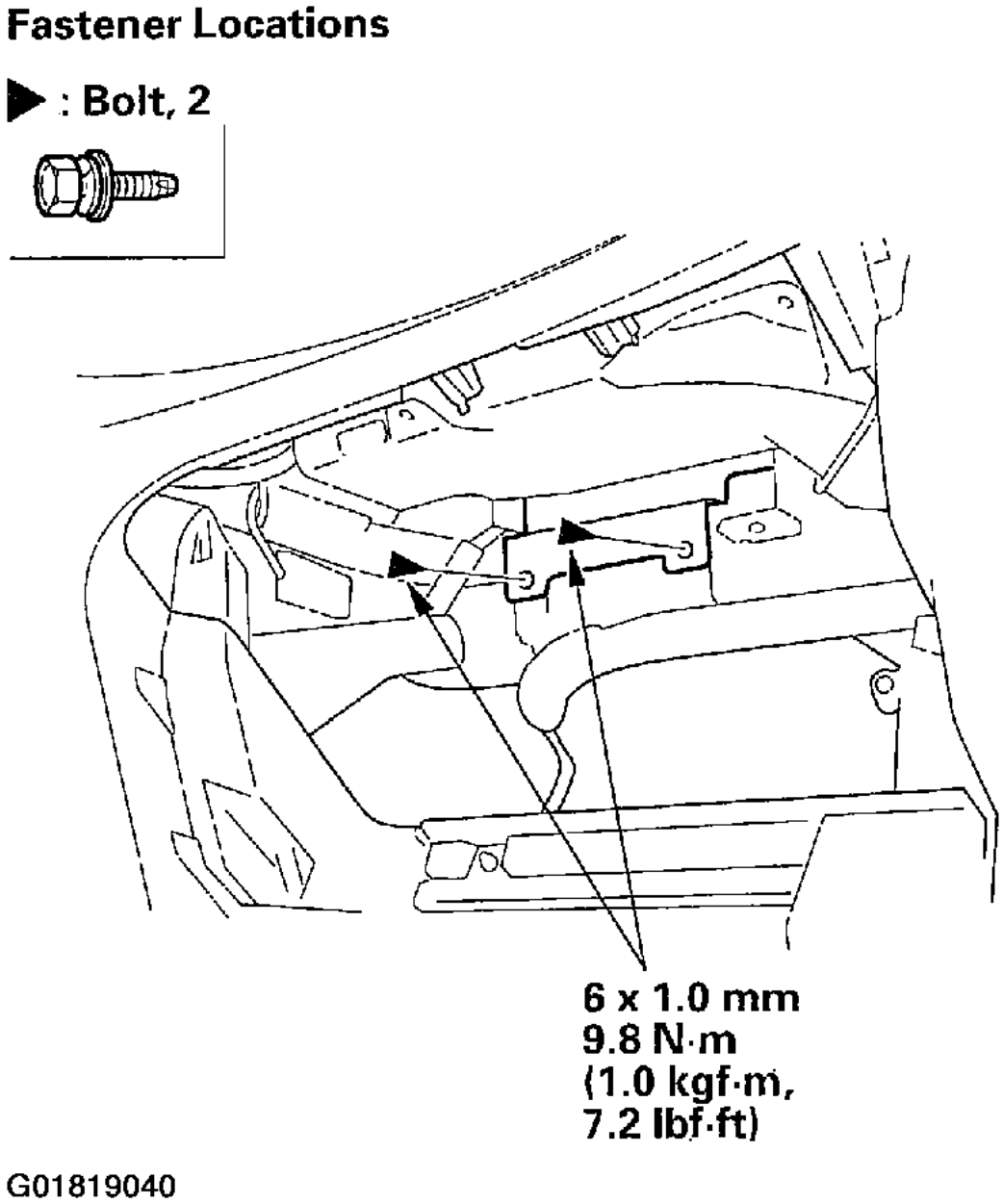

Fig. 139: Removing The Bolt Securing The Passenger's Airbag

11. Remove the screws (A, B) and bolts (C) securing the dashboard (D) and steering hanger beam (E), then separate them.

NOTE: **Some screws and bolts may be difficult to see because they are hidden behind wire harnesses. If the cover does not come off easily, look for a**

cardiagn.com

screw or bolt that you might have missed.

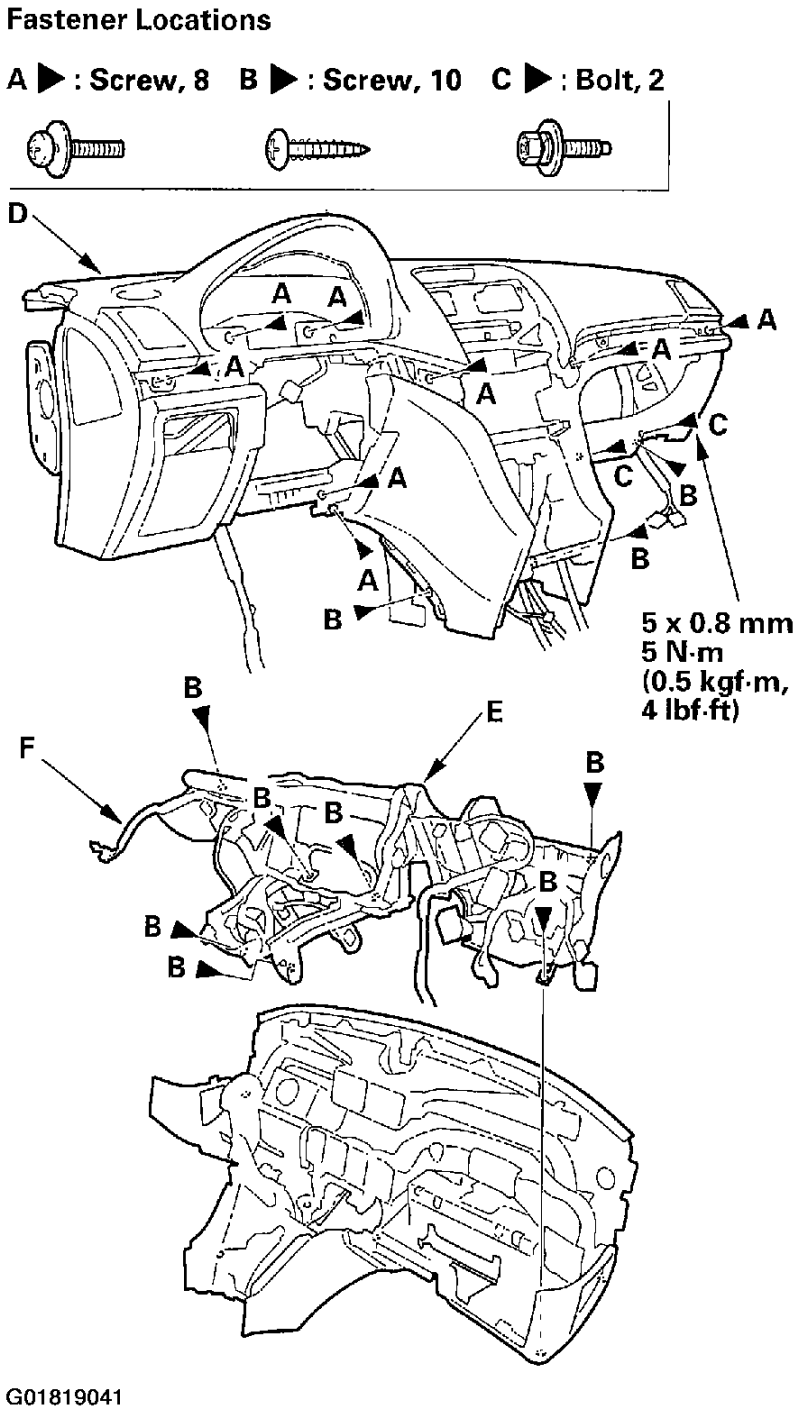

Fig. 140: Removing The Screws & Bolts Securing The Dashboard & Steering Hanger Beam

cardiagn.com

12. Install the beam in the reverse order of removal, and note these items:
    - Make sure the dashboard wire harness (F) is not pinched.
    - Make sure the connectors are plugged in properly.

DASHBOARD UPPER PANEL REMOVAL/INSTALLATION

SRS components are located in this area. Review the SRS component locations and the precautions and procedures in the SRS section before performing repairs or service. See **AIR BAG RESTRAINT SYSTEMS** .

NOTE: Put on gloves to protect your hands.

1. Remove the dashboard (see **DASHBOARD REMOVAL/INSTALLATION**).
2. Remove the these items from the dashboard:
    a. Gauge control module (see **GAUGE CONTROL MODULE REPLACEMENT**)
    b. Audio-HVAC-display module (see **AUDIO-HVAC DISPLAY MODULE REMOVAL/INSTALLATION**)
    c. Side vent, both sides (see **DASHBOARD SIDE VENT REMOVAL/INSTALLATION**)
    d. Tweeter, both sides (see **STEERING HANGER BEAM REPLACEMENT**)
    e. Sun light sensor (see **SUNLIGHT SENSOR REPLACEMENT**)
3. Remove the glove box striker (A).
    a. Remove the screw (B, C), then remove the glove box striker.
    b. Disconnect the glove box light bulb socket (D) and detach the harness clip (E) from glove box striker.

cardiagn.com

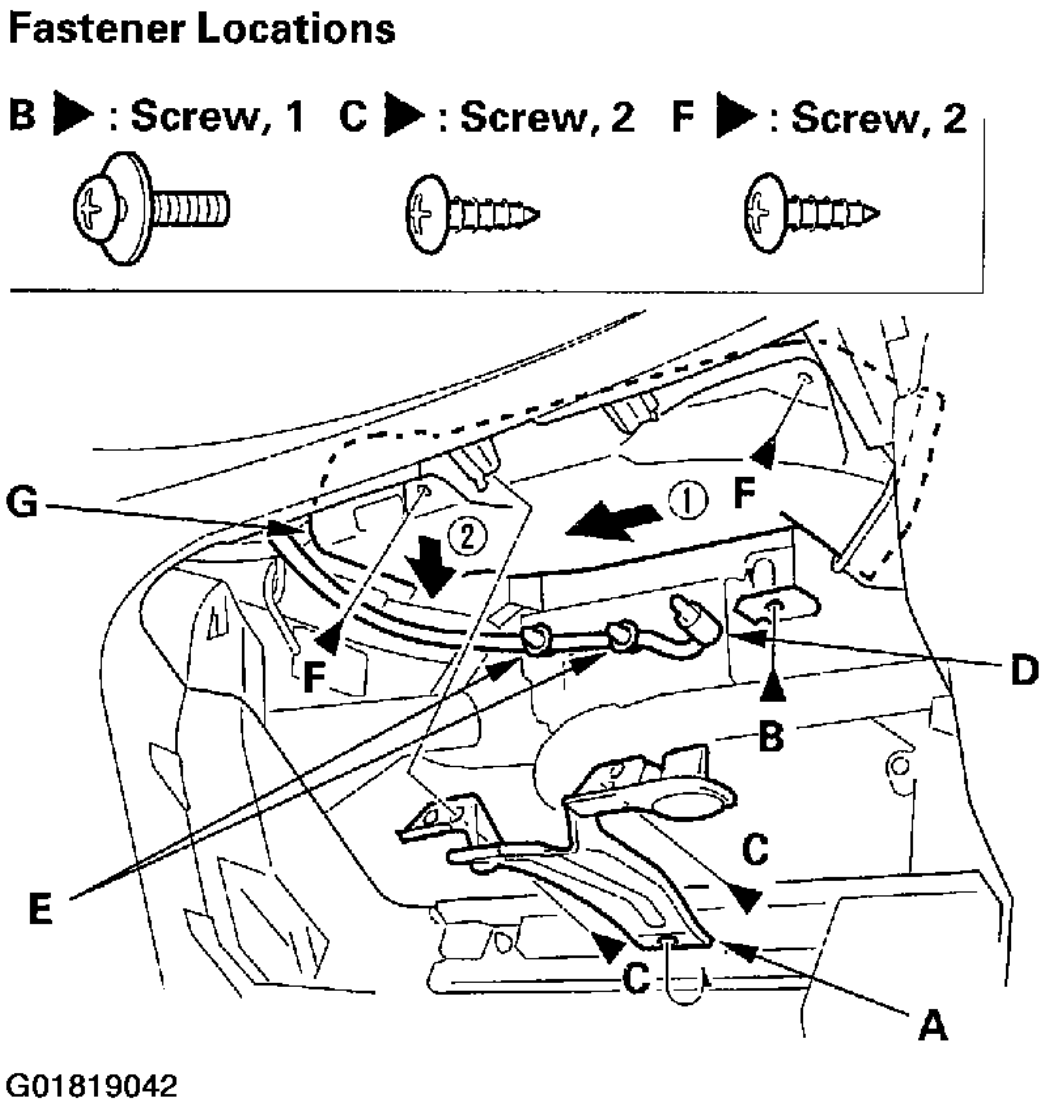

Fig. 141: Removing The Glove Box Striker

4. Remove the screws (F), slide the passenger's A/C duct inside, then lower the duct to remove it.
5. Remove the passenger's airbag (see **AIR BAG RESTRAINT SYSTEMS**).
6. Remove the screws (A, B, C).

NOTE: **Some screws and bolts may be difficult to see because they are hidden behind wire harnesses. If the cover dose not come off easily, look for a screw or bolt that you might have missed.**

cardiagn.com

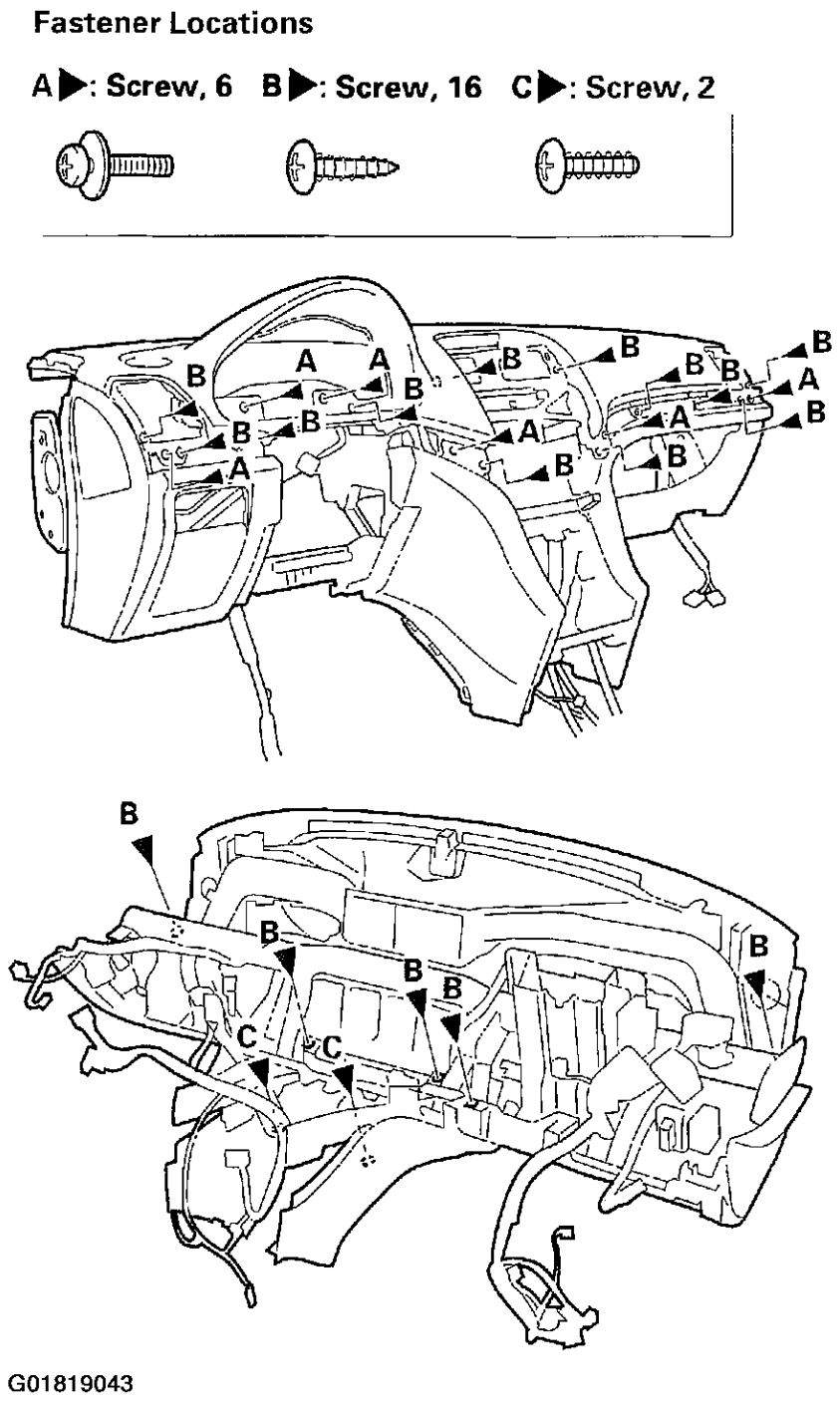

Fig. 142: Removing The Screws

7. Release the hooks (A), then remove the upper panel (B).

cardiagn.com

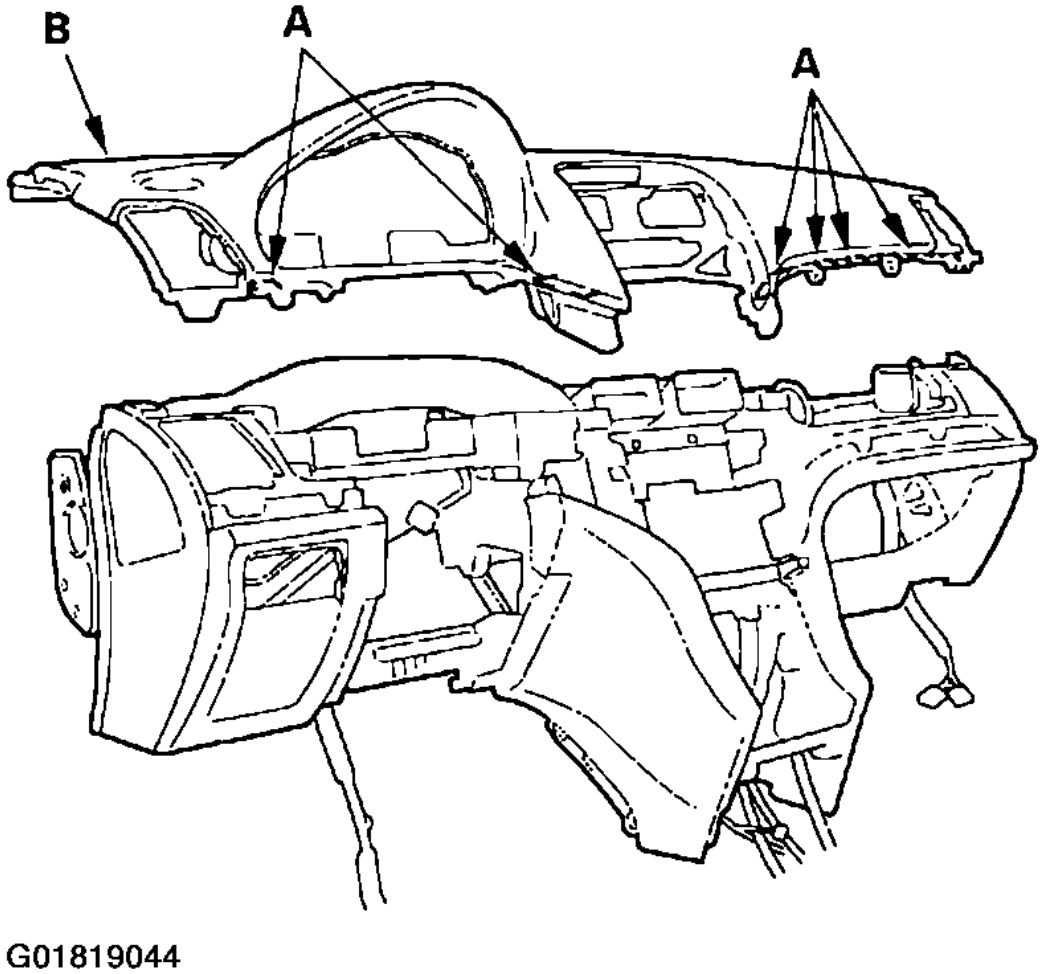

Fig. 143: Removing The Upper Panel

8. Remove the screws, then remove the front vent duct (A) and side defogger vent trim (B).

cardiagn.com

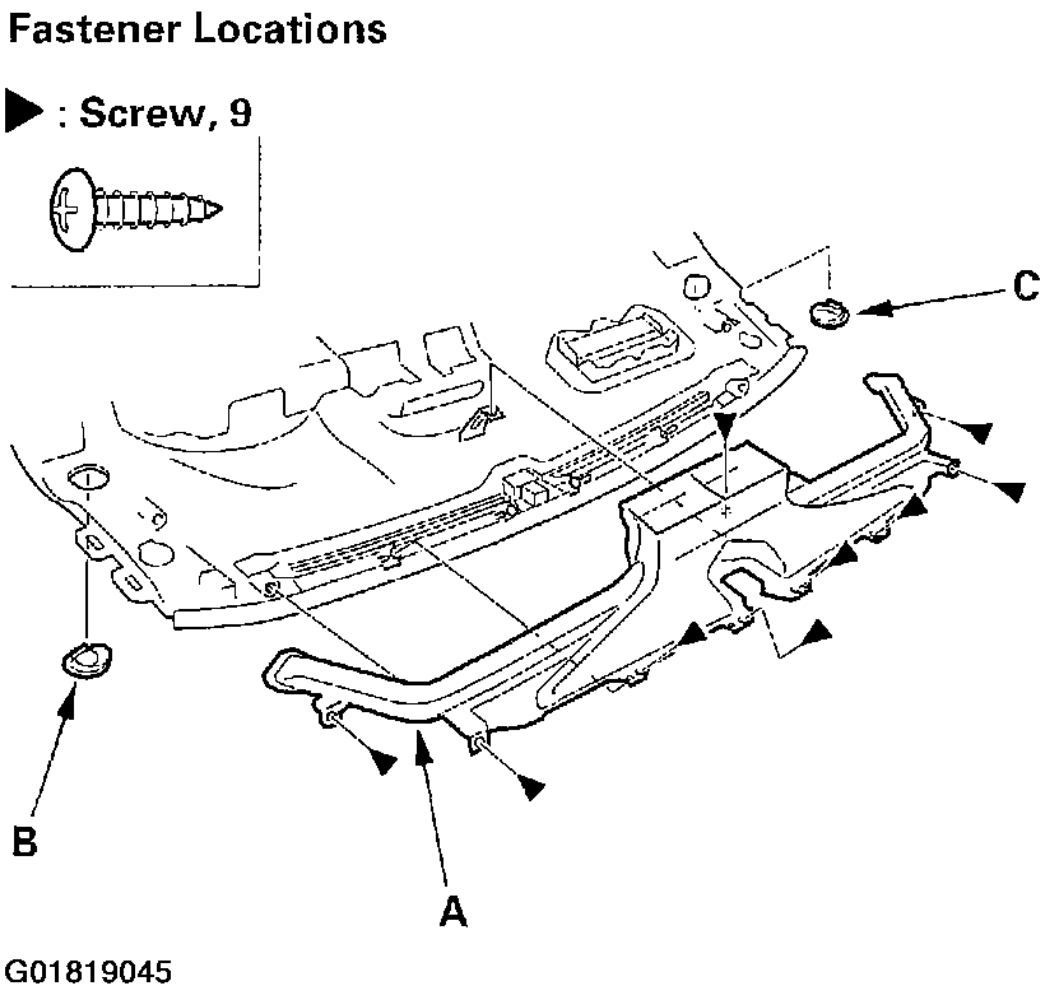

Fig. 144: Removing The Front Vent Duct & Side Defogger Vent Trim

9. Install the upper panel in the reverse order of removal.

cardiagn.com