SERVICE MANUAL

KORANDO

FOREWORD

This manual includes procedure for maintenance, adjustment, service operation and removal and installation of components.

All information, illustrations and specifications contained in this manual are based on the latest product information available at the time of manual approval.

The right is reserved to make changes at any time without notice.

DAEWOO MOTOR CO., LTD.

INCHON, KOREA

SECTION INDEX

FRONT MATTER	0A
GENERAL INFORMATION	0B
ENGINE	1
SUSPENSION	2
DRIVE LINE/AXLE	3
BRAKES	4
TRANSMISSION	5
STEERING	6
HVAC (HEATING, VENTILATION, AND AIR CONDITIONING)	7
RESTRAINTS	8
BODY AND ACCESSORIES	9

Downloaded from www.Manualslib.com manuals search engine

PERSONAL INJURY CAUTION

Appropriate service methods and proper repair procedure are essential for the safe, reliable operation of all motor vehicles, as well as for the personal safety of the person doing the repair. There are many variations in procedures, techniques, tools and parts for servicing vehicles, as well as in the skills of the people doing the work. This manual cannot possibly anticipate all such variations and provide advice or precautions for each. Anyone who deviates from the instructions provided in this manual must ensure their own safety and preserve the safety and integrity of the vehicle. The following list contains general precautions that should always be followed while working on a vehicle.

- ***Safety stands are required whenever a procedure calls for underbody work.***
- ***Do not smoke when you work on a vehicle.***
- ***To prevent serious burns, do not touch any hot metal parts.***
- ***Set the parking brake when you work on the vehicle.***
- ***Turn the ignition switch OFF unless a procedure states otherwise.***
- ***The engine may operate only in a well-ventilated area.***
- ***Avoid moving parts when the engine is running.***
- ***Safety glasses must be worn for eye protection.***

Downloaded from www.Manualslib.com manuals search engine

KORANDO
Service Manual

FOREWORD

This manual includes procedures for maintenance, adjustment, service operations, and removal and installation of components for the KORANDO vehicle.

When reference is made in this manual to a brand name, number, or specific tool, an equivalent product may be used in place of the recommended item.

All information, illustrations and specifications contained in this manual are based on the latest product information available at the time of publication approval. The right is reserved to make changes at any time without notice.

Daewoo Motor Company, Limited
Overseas Technical Service Department
391-9 Chong Chon-2 Dong, Pu Pyung-Gu,
Inchon, Korea
Tel : 82-32-509-4161 ~ 4164
Fax : 82-32-509-4160
E-mail : m8610452@dwmc.co.kr
m9610883@dwmc.co.kr

Daewoo Motor Company, Limited
All rights Reserved

No part of this publication may be reproduced, stored in any retrieval system or transmitted, in any form or by any means, including but not limited to electronic, mechanical, photocopying, recording or otherwise, without the prior written permission of Daewoo Motor Company, Limited

Downloaded from www.Manualslib.com manuals search engine

TABLE OF CONTENTS

Section 0A **Front Matter**

Section 0B **General Information**

Section 1 **Engine**

Section 1A1	M162	General Engine Information
Section 1B1	M162	Engine Mechanical
Section 1D1	M162	Engine Cooling
Section 1E1	M162	Engine Electrical
Section 1F1	M162	Engine Controls
Section 1G1	M162	Engine Intake & Exhaust
Section 1A2	M161	General Engine Information
Section 1B2	M161	Engine Mechanical
Section 1D2	M161	Engine Cooling
Section 1E2	M161	Engine Electrical
Section 1F2	M161	Engine Controls
Section 1G2	M161	Engine Intake & Exhaust
Section 1A3	OM600	General Engine Information
Section 1B3	OM600	Engine Mechanical
Section 1D3	OM600	Engine Cooling
Section 1E3	OM600	Engine Electrical
Section 1F3	OM600	Engine Controls
Section 1G3	OM600	Engine Intake & Exhaust

Section 2 **Suspension**

Section 2A	Suspension Diagnosis
Section 2B	Wheel Alignment
Section 2C	Front Suspension
Section 2D	Rear Suspension
Section 2E	Tires and Wheels

Section 3 **Drive Line / Axle**

Section 3A	Front Drive Axle
Section 3C	Propeller Shaft
Section 3D	Rear Drive Axle

Section 4 **Brakes**

Section 4A	Hydraulic Brakes
Section 4B	Master Cylinder
Section 4C	Power Booster
Section 4D	Front Disc Brakes
Section 4E	Rear Disc Brakes
Section 4F	Antilock Brake System
Section 4G	Parking Brakes

Section 5 **Transmission**

Section 5A	Automatic Transmission
Section 5B	Manual Transmission
Section 5C	Clutch
Section 5D1	Transfer Case (Part Time 4480)
Section 5D2	Transfer Case (TOD)

Section 6 **Steering**

Section 6A	Power Steering System
Section 6E	Steering Wheel and Column

Section 7 **HVAC (Heating, Ventilation & Air Conditioning)**

Section 7B/C	Manual Control/Semiauto Temperature Control Heationg, Ventilation, and Air Conditioning System
Section 7D	Full Automatic Temperature Control Heationg, Ventilation, and Air Conditioning System

Section 8 **Restraints**

Section 8A	Seat Belts
Section 8B	Supplemental Restraint System (SRS)

Section 9 **Body and Accessories**

Section 9A	Body Wiring System
Section 9B	Lighting Systems
Section 9D	Wipers/Washer Systems
Section 9E	Instrumentation/Driver Information
Section 9F	Audio
Section 9H	Seats
Section 9L	Glass and Mirrors
Section 9N	Front and Under Body
Section 9O	Bumpers and Fenders
Section 9P	Doors
Section 9Q	Roof
Section 9R	Body Front End
Section 9T	Remote Keless Entry and Anti-Theft System
Section 9U	Control Units and System
Section 9V	Switches
Section 9W	Immobilizer System

Downloaded from www.Manualslib.com manuals search engine

KORANDO
SERVICE MANUAL

ISSUED BY
OVERSEAS TECH. SERVICE
DAEWOO MOTOR CO., LTD.

391-9 CHONG CHON-2DONG, PU PYUNG-GU,
INCHON, KOREA

TELEPHONE : 82-32-509-4161~4164
FACSIMILE : 82-32-509-4160

Downloaded from www.Manualslib.com manuals search engine

ENGINE

CONTENTS

SECTION 1A1	M162	GENERAL ENGINE INFORMATION
SECTION 1B1	M162	ENGINE MECHANICAL
SECTION 1D1	M162	ENGINE COOLING
SECTION 1E1	M162	ENGINE ELECTRICAL
SECTION 1F1	M162	ENGINE CONTROLS
SECTION 1G1	M162	ENGINE INTAKE & EXHAUST
SECTION 1A2	M161	GENERAL ENGINE INFORMATION
SECTION 1B2	M161	ENGINE MECHANICAL
SECTION 1D2	M161	ENGINE COOLING
SECTION 1E2	M161	ENGINE ELECTRICAL
SECTION 1F2	M161	ENGINE CONTROLS
SECTION 1G2	M161	ENGINE INTAKE & EXHAUST
SECTION 1A3	OM600	GENERAL ENGINE INFORMATION
SECTION 1B3	OM600	ENGINE MECHANICAL
SECTION 1D3	OM600	ENGINE COOLING
SECTION 1E3	OM600	ENGINE ELECTRICAL
SECTION 1F3	OM600	ENGINE CONTROLS
SECTION 1G3	OM600	ENGINE INTAKE & EXHAUST

Downloaded from www.Manualslib.com manuals search engine

SUSPENSION

CONTENTS

SECTION 2A SUSPENSION DIAGNOSIS

SECTION 2B WHEEL ALIGNMENT

SECTION 2C FRONT SUSPENSION

SECTION 2D REAR SUSPENSION

SECTION 2E TIRES AND WHEELS

Downloaded from www.Manualslib.com manuals search engine

DRIVE LINE / AXLE

CONTENTS

SECTION 3A FRONT DRIVE AXLE

SECTION 3C PROPELLER SHAFT

SECTION 3D REAR DRIVE AXLE

Downloaded from www.Manualslib.com manuals search engine

BRAKE

CONTENTS

SECTION 4A HYDRAULIC BRAKES

SECTION 4B MASTER CYLINDER

SECTION 4C POWER BOOSTER

SECTION 4D FRONT DISC BRAKES

SECTION 4E REAR DISC BRAKES

SECTION 4F ANTILOCK BRAKE SYSTEM

SECTION 4G PARKING BRAKE

Downloaded from www.Manualslib.com manuals search engine

TRANSMISSION

CONTENTS

SECTION 5A AUTOMATIC TRANSMISSION

SECTION 5B MANUAL TRANSMISSION

SECTION 5C CLUTCH

SECTION 5D1 TRANSFER CASE (PART TIME 4408)

SECTION 5D2 TRANSFER CASE (TOD)

Downloaded from www.Manualslib.com manuals search engine

STEERING

CONTENTS

SECTION 6A POWER STEERING SYSTEM

SECTION 6E STEERING WHEEL AND COLUMN

Downloaded from www.Manualslib.com manuals search engine

HVAC (HEATING, VENTILATION & AIR CONDITIONING)

CONTENTS

SECTION 7B/C MANUAL CONTROL/SEMIAUTO TEMPERATURE CONTROL HEATING, VENTILATION, AND AIR CONDITIONING SYSTEM

SECTION 7D FULL AUTOMATIC TEMPERATURE CONTROL HEATING, VENTILATION, AND AIR CONDITIONING SYSTEM

Downloaded from www.Manualslib.com manuals search engine

RESTRAINTS

CONTENTS

SECTION 8A SEAT BELTS

SECTION 8B SUPPLEMENTAL RESTRAINT SYSTEM (SRS)

Downloaded from www.Manualslib.com manuals search engine

BODY AND ACCESSORIES

CONTENTS

SECTION 9A BODY WIRING SYSTEM
SECTION 9B LIGHTING SYSTEM
SECTION 9C HORNS
SECTION 9D WIPERS/WASHER SYSTEM
SECTION 9E INSTRUMENTATION/DRIVER INFORMATION
SECTION 9F AUDIO SYSTEM
SECTION 9G INTERIOR TRIM
SECTION 9H SEATS
SECTION 9L GLASS AND MIRRORS
SECTION 9M EXTERIOR TRIM
SECTION 9N FRAME AND UNDERBODY
SECTION 9O BUMPERS AND FASCIAS
SECTION 9P DOORS
SECTION 9Q ROOF
SECTION 9R BODY FRONT END
SECTION 9T REMOTE KEYLESS ENTRY AND ANTI-THEFT SYSTEM
SECTION 9U CONTROL UNITS AND SYSTEM
SECTION 9V SWITCHES
SECTION 9W IMMOBILIZER SYSTEM

Downloaded from www.Manualslib.com manuals search engine

SECTION 0B

GENERAL INFORMATION

TABLE OF CONTENTS

Specifications 0B-1
Technical Data 0B-1
Vehicle Dimensions and Weights 0B-5
Standard Bolts Specifications 0B-6
Maintenance and Repair 0B-7
Maintenance and Lubrication 0B-7
Normal Vehicle Use 0B-7
Explanation of Scheduled Maintenance Services 0B-7
Scheduled Maintenance Charts (Gasoline Engine) 0B-8
Scheduled Maintenance Charts (Diesel Engine) 0B-10
Owner Inspections and Services 0B-12
While Operating the Vehicle 0B-12
At Each Fuel Fill 0B-12
At Least Twice A Month 0B-12
At Least Monthly 0B-12
At Least Twice a Year 0B-12
Each Time The Oil is Changed 0B-13
At Least Annually 0B-13
Recommended Fluids and Lubricants 0B-14
General Description and System Operation 0B-15
General Repair Instructions 0B-15
Vehicle Identification Number System 0B-16
Vehicle Lifting Procedures 0B-19

SPECIFICATIONS

TECHNICAL DATA

Performance-Manual Transaxle

Application	661LA	662NA	662LA	2.0L DOCH	2.3L DOCH	3.2L DOCH
Maximum Speed (Km/h)	140	137	148	154	165	176
Minimum Turning Radius (m)	5.8	5.8	5.8	5.8	5.8	5.8

Performance-Autumatic Transaxle

Application	661LA	662NA	662LA	2.3L DOCH	3.2L DOCH
Maximum Speed (Km/h)	140	137	140	160	170
Minimum Turning Radius (m)	5.8	5.8	5.8	5.8	5.8

Downloaded from www.Manualslib.com manuals search engine

Engine

Application	661LA	662NA	662LA	2.0L DOCH	2.3L DOCH	3.2L DOCH
Engine Type	4Cylinder DIESEL	5Cylinder DIESEL	5Cylinder DIESEL	4Cylinder GASOLINE	4Cylinder GASOLINE	6Cylinder GASOLINE
Bore (mm)	89	89	89	89.9	90.9	89.9
Stroke (mm)	92.4	92.4	92.4	78.7	88.4	84
Total Displacement (cc)	2299	2874	2874	1998	2295	3199
Compression Ratio	22:1	22:1	22:1	9.6:1	10.4:1	10:1
Maximum Power (ps/rpm)	101/4000	95/4000	120/4000	135/5500	149/5500	222/5500
Maximum Torque (kg.m/rpm)	21.5/2400	19.6/2400	25.5/2400	19.3/4000	22.4/4000	31.6/3750

Ignition System

Application	2.0L DOHC	2.3L DOHC	3.2L DOHC
Ignition Type	Distributorless ignition		
Ignition Timing (BOTH)	6°± 2°	6°± 2°	8°± 2°
Ignition Sequence	1-3-4-2	1-3-4-2	1-5-3-6-2-4
Spark Plug Gap (mm)	0.8 ± 0.1	0.8 ± 0.1	0.8 ± 0.1
Spark Plug Maker	Bosch, Chapion, Beru		
Spark Plug Type	F8DC4(BOSCH) C11YCC(CHAMPION) 14F8DU4(BERU)		

Clutch - Manual Type

Application	661LA	662NA	662LA	2.0L DOHC	2.3L DOHC	3.2L DOHC
Type	Single Dry Diaphram					
Outside Diameter (mm)	225	225	240	225	225	240
Inside Diameter (mm)	150	150	150	150	150	155
Thickness	9.2	9.2	9.2	9.2	9.2	9.3
Fluid	Common use :Brake Fluid					

Manual Transmission

Application	661LA	662NA	662LA	2.0L DOHC	2.3L DOHC	3.2L DOHC
Maker	TREMEC	TREMEC	TREMEC	TREMEC	TREMEC	TREMEC
Type or Model	T5	T5	T5	T5	T5	T5
Gear Ratio : 1st	3.969	3.969	3.969	3.969	3.969	3.969
2nd	2.341	2.341	2.341	2.341	2.341	2.341
3rd	1.457	1.457	1.457	1.457	1.457	1.457
4th	1.000	1.000	1.000	1.000	1.000	1.000
5th	0.851	0.851	0.851	0.851	0.851	0.851
Reverse	3.705	3.705	3.705	3.705	3.705	3.705
Final Drive Ratio	4.55	4.55	4.27	4.89	4.55	3.73
Oil Capacity (L)	3.4	3.4	3.4	3.4	3.4	3.4

Downloaded from www.Manualslib.com manuals search engine

Auto Transmission

Application	661LA	662LA	2.3L DOHC	3.2L DOHC
Maker	BTRA	BTRA	BTRA	BTRA
Type or Model	M74 4WD	M74 4WD	M74 4WD	M74 4WD
Gear Ratio : 1st	2.741	2.741	2.741	2.741
2nd	1.508	1.508	1.508	1.508
3rd	1.000	1.000	1.000	1.000
4th	0.708	0.708	0.708	0.708
Reverse	2.429	2.429	2.429	2.429
Final Drive Ratio	5.38	4.89	5.86	4.89
Oil Capacity (L)	9	9	9	9

Brake

Application		Specifications
Booster Size	non-ABS	8inch + 9inch
	ABS 5.0	7inch + 8inch
	ABS 5.3	8inch + 9inch
Master Cylinder Diameter (mm)		f25.4
Booster Ratio		5.6 : 1
Front Brake : Disc Type		Ventilated
Rear Brake : Disc Type		Solid

Tire and Wheel

Application	Specifications
Standard Tire Size	P235/75 R15, 255/70 R15
Standard Wheel Size	7JJ ´ 15
Inflation Pressure At Full Lode	
P235 / 75 : Front	30 Psi
Rear	30 Psi
P255 / 75 : Front	30 Psi
Rear	30 Psi

Steering System

Application	Specifications
Gear Type	RACK & PINION
Wheel Alignment:	
Front : Toe-in	0 - 4 mm
Front : Caster	2°30' ± 30'
Front : Camber	0° ± 30'
Oil Capacity	1L

Downloaded from www.Manualslib.com manuals search engine

Suspension

Application	Specifications
Front Type	Double Wishbone
Rear Type	5 - Link

Fuel System

Application	Specifications
Fuel Pump Type	Electric Motor Pump
Fuel Capacity	70 L

Lubricating System

Lubricating Type	661LA	662NA	662LA	2.0L DOHC	2.3L DOHC	3.2L DOHC
Oil Pump Type	External Gear pump					
Oil Filter Type	Combination(Full & Part)			Full Flow		
Oil Capacity (L) (Including Oil Filter)	8.0	9.0	9.5	7.2	7.5	8.2

Cooling System

Cooling Type	661LA	662NA	662LA	2.0L DOHC	2.3L DOHC	3.2L DOHC
Coolant Capacity (L)	9.5-10	10.5	10.5 - 11	10.5	10.5	11.3
Radiator Type	Forced Circulation					
Water Pump Type	Centrifugal					

Electric System

Application	661LA	662NA	662LA	2.0L DOHC	2.3L DOHC	3.2L DOHC
Battery (MF)	12V - 90AH					
Generator	75A	75A	75A	75A	115A	115A
Starter	2.2kw	2.2kw	2.2kw	1.2kw	1.2kw	1.7kw

Downloaded from www.Manualslib.com manuals search engine

VEHICLE DIMENSIONS AND WEIGHTS

Vehicle Dimensions

Application	Application
Overall Length (mm)	4330
Overall Width (mm)	1841
Overall Height (mm)	1840
Wheel Base (mm)	2840
Tread : Front (mm)	1510
Rear (mm)	1520

Vehicle Weights

Application	661LA	662NA	662LA	2.0L DOHC	2.3L DOHC	3.2L DOHC
Manual : Curb Weight (kg)	1790	1810	1830	1790	1790	1840
Gross Vehicle Weight (kg)	2515	2515	2515	2515	2515	2515
Automatic : Curb Weight (kg)	1810	1815	1850	-	1810	1860
Gross Vehicle Weight (kg)	2515	2515	2515	-	2515	2515
Passenger Capacity	5	5	5	5	5	5

Downloaded from www.Manualslib.com manuals search engine

STANDARD BOLTS SPECIFICATIONS

Bolt*	Torque (N·m / lb-in)					
	Standard			Limit		
	4T	7T	9T	4T	7T	9T
M3 ´ 0.5	0.5 N·m (4.5 lb-in)	0.9 N·m (8 lb-in)	1.3 N·m (12 lb-in)	0.7 N·m (6.3 lb-in)	1.2 N·m (11 lb-in)	17 N·m (15 lb-in)
M4 ´ 0.7	1.2 N·m (11 lb-in)	2.0 N·m (18 lb-in)	3.0 N·m (27 lb-in)	1.6 N·m (14 lb-in)	2.6 N·m (23 lb-in)	4.0 N·m (36 lb-in)
M5 ´ 0.8	2.4 N·m (22 lb-in)	4.0 N·m (36 lb-in)	5.6 N·m (50 lb-in)	3.1 N·m (28 lb-in)	5.2 N·m (47 lb-in)	7.6 N·m (68 lb-in)
M6 ´ 1.0	4.0 N·m (36 lb-in)	6.7 N·m (60 lb-in)	9.7 N·m (87 lb-in)	5.4 N·m (49 lb-in)	9.0 N·m (81 lb-in)	12.7 N·m (114 lb-in)
M8 ´ 1.25	8.6 N·m (77 lb-in)	15.7 N·m (12 lb-in)	22.5 N·m (17 lb-in)	12.7 N·m (9 lb-in)	20.6 N·m (15.2 lb-in)	30.4 N·m (22 lb-in)
M10 ´ 1.25	18.6 N·m (14 lb-in)	32.3 N·m (24 lb-in)	46.0 N·m (34 lb-in)	25.5 N·m (19 lb-in)	42.1 N·m (31 lb-in)	60.8 N·m (31 lb-in)
M10 ´ 1.5	18.6 N·m (14 lb-in)	30.4 N·m (22 lb-in)	44.1 N·m (33 lb-in)	24.5 N·m (18 lb-in)	41.2 N·m (30 lb-in)	58.8 N·m (44 lb-in)
M12 ´ 1.25	34.3 N·m (25lb-in)	56.8 N·m (42 lb-in)	82.3 N·m (61 lb-in)	45.0 N·m (33 lb-in)	75.5 N·m (56 lb-in)	107.8 N·m (80 lb-in)
M12 ´ 1.75	32.3 N·m (24 lb-in)	53.9 N·m (40 lb-in)	77.4 N·m (57 lb-in)	43.1 N·m (32 lb-in)	71.5 N·m (53 lb-in)	98.0 N·m (73 lb-in)
M14 ´ 1.5	54.0 N·m (40 lb-in)	89.2 N·m (66 lb-in)	127.4 N·m (94 lb-in)	71.6 N·m (53 lb-in)	117.6 N·m (87 lb-in)	166.6 N·m (123 lb-in)
M16 ´ 1.5	81.3 N·m (60 lb-in)	107.8 N·m (80 lb-in)	196.0 N·m (145 lb-in)	107.8 N·m (80 lb-in)	186.2 N·m (138 lb-in)	264.6 N·m (196 lb-in)
M18 ´ 1.5	117.6 N·m (87 lb-in)	196.0 N·m (145 lb-in)	284.2 N·m (210 lb-in)	156.8 N·m (116 lb-in)	264.6 N·m (196 lb-in)	372.4 N·m (276 lb-in)
M20 ´ 1.5	166.6N·m (123 lb-in)	274.4 N·m (203 lb-in)	392.0 N·m (290 lb-in)	215.6 N·m (160 lb-in)	362.6 N·m (268 lb-in)	519.4 N·m (384 lb-in)
M22 ´ 0.5	225.4N·m (167 lb-in)	372.4 N·m (276 lb-in)	529.2 N·m (392 lb-in)	294.0 N·m (218 lb-in)	490.0 N·m (362 lb-in)	705.6 N·m (522 lb-in)
M24 ´ 1.5	284.2 N·m (210 lb-in)	480.2 N·m (355 lb-in)	686.0 N·m (508 lb-in)	382.2 N·m (283 lb-in)	637.0 N·m (471 lb-in)	921.2 N·m (682 lb-in)
M24 ´ 2.0	274.4 N·m (203 lb-in)	460.6 N·m (341 lb-in)	666.4 N·m (493 lb-in)	372.4 N·m (276 lb-in)	617.4 N·m (457 lb-in)	891.8 N·m (660 lb-in)

*Diameter ´ pitch in millimeters

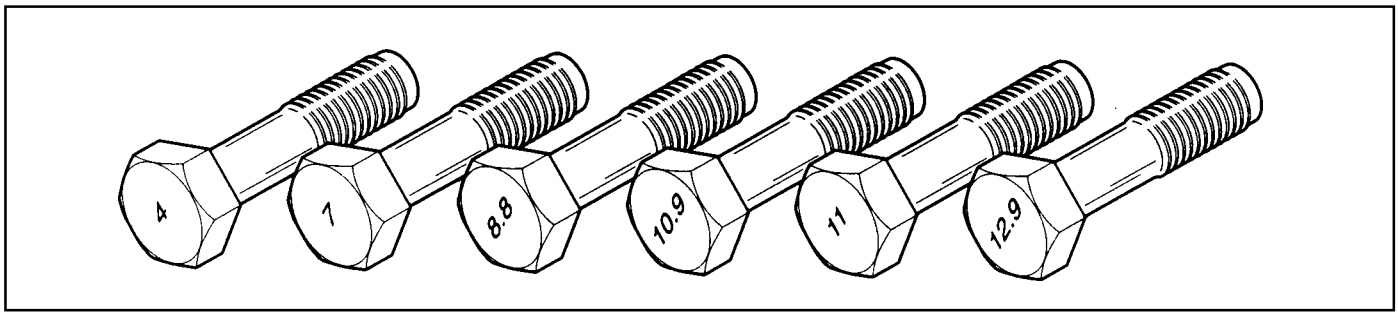

Downloaded from www.Manualslib.com manuals search engine

MAINTENANCE AND REPAIR

MAINTENANCE AND LUBRICATION

NORMAL VEHICLE USE

The maintenance instructions contained in the maintenance schedule are based on the assumption that the vehicle will be used for the following reasons:

- To carry passengers and cargo within the limitation of the tire inflation prassure. Refer to “Tire and Wheel” in section 2E.
- To be driven on reasonable road surfaces and within legal operating limits.

EXPLANATION OF SCHEDULED MAINTENANCE SERVICES

The services listed in the maintenance schedule are further explained below. When the following maintenance services are performed, make sure all the parts are replaced and all the necessary repairs are done before driving the vehicle. Always use the proper fluid and lubricants.

Engine Oil and Oil Filter Change

Always use above the API SH grade or recommended engine oil.

Engine Oil Viscosity

Engine oil viscosity (thickness) has an effect on fuel economy and cold weather operation. Lower viscosity engine oils can provide better fuel economy and cold weather performance; however, higher temperature weather conditions require higher viscosity engine oils for satisfactory lubrication. Using oils of any viscosity other than those viscosities recommended could result in engine damage.

Cooling System Service

Drain, flush and refill the system with new coolant. Refer to “Recommended Fluids And Lubricants” in this section.

Air Cleaner Element Replacement

Clean the air cleaner element every.

- Gasoline Engine : 15,000km (10,000 miles)
- Diesel Engine : 10,000km (6,000 miles)

Replace the air cleaner element every .

- Gasoline Engine : 60,000km (36,000 miles)
- Diesel Engine : 30,000km (18,000 miles)

Replace the air cleaner more often under dusty conditions

Fuel Filter Replacement

Replace the engine fuel filter every.

- Gasoline Engine : 60,000km (36,000 miles)
- Diesel Engine : 45,000km (24,000 miles)

Spark Plug Replacement

Replace spark plugs with same type.

- Type : BOSCH : F8DC4
  BERU : 14F-8DU4
  Champion : C11YCC
- Gap : 0.8 ± 0.1 mm

Spark Plug Wire Replacement

Clean wires and inspect them for burns, cracks or other damage. Check the wire boot fit at the Distributor and at the spark plugs. Replace the wires as needed.

Brake System Service

Check the disc brake pads or the drum brake linings. Check the pad and the lining thickness carefully.

Tire and Wheel Inspection and Rotation

Check the tires for abnormal wear or damage. To equalize wear and obtain maximum tire life, rotate the tires. If irregular or premature wear exists, check the wheel alignment and check for damaged wheels. While the tires and wheels are removed, inspect the brakes.

Tire Rotation (Left-hand Drive Type)

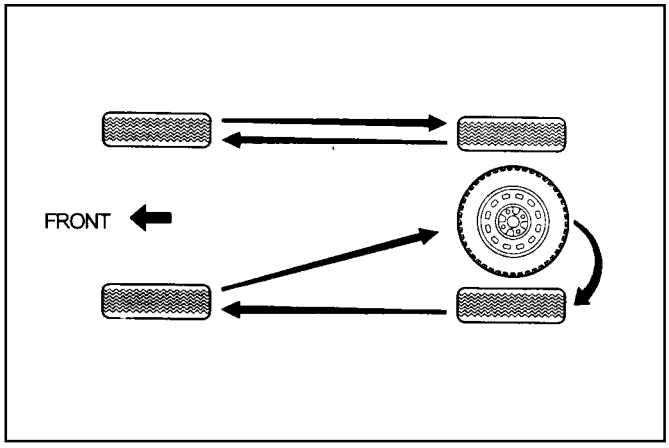

Downloaded from www.Manualslib.com manuals search engine

SCHEDULED MAINTENANCE CHARTS (GASOLINE ENGINE)

Engine

MAINTENANCE INTERVAL / MAINTENANCE ITEM	Kilometers or time in months, whichever comes first									
	x1,000 km	1	15	30	45	60	75	90	105	120
	Months	-	12	24	36	48	60	72	84	96
Drive belt		I	I	I	I	I	I	I	I	I
Engine oil & filter	(1) (3)	I	R	R	R	R	R	R	R	R
Cooling system hose & connections		I	I	I	I	I	I	I	I	I
Engine coolant	(3)	I	I	I	I	R	I	I	I	R
Fuel filter	(2)	-	-	-	-	R	-	-	-	R
Fuel line & connections		I	I	I	I	I	I	I	I	I
Air cleaner	(2)		I	I	I	R		I	I	R
Ignition timing			I	I	I	I	I	I	I	I
Spark plugs		-	I	R	I	R	I	R	I	R
Charcoal canister & vapor lines		-	-	-	I	-	-	I	-	-

Chart Symbols:

I - Inspect these items and their related parts. If necessary, correct, clean, replenish, adjust or replace.
R - Replace or change.

(1) If vehicle is operated under severe condition : short distance driving, extensive idling or driving in dusty condition. Change engine oil and the filter every 7,500 km or 6 months, whichever comes first.
(2) More frequent maintenance is required if under dusty driving condition.
(3) Refer to “Recommended fluids and lubricants”.

Downloaded from www.Manualslib.com manuals search engine

Chassis and Body

MAINTENANCE INTERVAL / MAINTENANCE ITEM	Kilometers or time in months, whichever comes first									
	x1,000 km	1	15	30	45	60	75	90	105	120
	Months	-	12	24	36	48	60	72	84	96
Exhaust pipes & mountings		-	I	I	I	I	I	I	I	I
Brake/Clutch fluid	(3)(4)	-	I	R	I	R	I	R	I	R
Parking brake/Brake pads F & R	(5)	-	I	I	I	I	I	I	I	I
Brake line & connections (including booster)		I	I	I	I	I	I	I	I	I
Manual transmission oil	(3)	I	I	I	R	I	I	R	I	I
Clutch & brake pedal free play		-	I	I	I	I	I	I	I	I
Front & Rear Differential Fluid	(3)	I	I	I	R	I	I	R	I	I
Transfer case fluid		I	I	I	R	I	I	R	I	I
Automatic transmission fluid (MB W4A040)	(6)	I	I	I	R	I	I	R	I	
Automatic transmission fluid (BTRA M74)		I	I	I	I	I	I	I	I	I
Chassis & underbody bolts & nuts tight/secure		I	I	I	I	I	I	I	I	I
Tyre condition & inflation pressure		I	I	I	I	I	I	I	I	I
Wheel alignment	(7)	Inspect & ADJUST when abnormal condition is noted								
Steering wheel & linkage			I	I	I	I	I	I	I	I
Power steering fluid & lines*	(3)		I	I	I	I	I	I	I	I
Drive shaft boots			I	I	I	I	I	I	I	I
Seat belts, buckles & anchors		I	I	I	I	I	I	I	I	I
Lubricate locks, hinges & bonnet latch			I	I	I	I	I	I	I	I

Chart Symbols :

I - Inspect these items and their related parts. If necessary, correct, clean, replenish, adjust or replace.

R - Replace or change.

(3) Refer to “Recommended fluids and lubricants”.

(4) Change the brake / clutch fluid every 15,000 km if the vehicle is mainly driven under severe conditions:
- Driving in hilly or mountainous terrain, or
- Towing a trailer frequently

(5) More frequent maintenance is required if under severe condition : short distance driving, extensive idling, frequent low - speed operation in stop-and-go traffic or driving in dusty condition.

(6) Change automatic transaxle fluid and filter every 75,000 km if the vehicle is mainly driven under severe conditions.
- In heavy city traffic where the outside temperature regularly reaches 32°C (90°F) or higher, or
- In hilly or mountainous terrain, or
- When doing frequent trailer towing, or
- Uses such as found in taxi, police or delivery service.

(7) If necessary, rotate and balance wheels.

Downloaded from www.Manualslib.com manuals search engine

SCHEDULED MAINTENANCE CHARTS (DIESEL ENGINE)

Engine

MAINTENANCE INTERVAL / MAINTENANCE ITEM	x1,000 km	1	10	20	30	40	50	60	70	80	90	100
	Months	-	6	12	18	24	30	36	42	48	54	60
Drive belt		I	I	I	I	I	I	I	I	I	I	I
Engine oil & fillter	(1) (3)	R	R	R	R	R	R	R	R	R	R	R
Cooling system hose & connections				I	I	I	I	I	I	I	I	I
Engine coolant	(3)			I				R				I
Fuel filter	(2)					R					R	
Fuel line & connections		I	I	I	I	I	I	I	I	I	I	I
Glow plug				I		I		I		R		I
Pre - fuel filter			I	I	I	I	I	I	I	I	I	I
Air cleaner	(2)		I	I	R	I	I	R	I	I	R	I
Ignition timing (see NOTE 1)			I	I	I	I	I	I	I	I	I	I

NOTE 1 : Injection Timing :
Adjust as required :
- When excessive smoke is visible (black or white)
- Poor performance/economy

Chart Symbols:

I - Inspect these items and their related parts. If necessary, correct, clean, replenish, adjust or replace.

R - Replace or change.

(1) If vehicle is operated under severe condition : short distance driving, extensive idling or driving in dusty condition, change engine oil every 5,000km or 3 months, whichever comes first.

(2) More frequent maintenance is required if under dusty driving conditing.

(3) Refer to “Recommended fluids and lubricants”.

Downloaded from www.Manualslib.com manuals search engine

Chassis and Body

MAINTENANCE INTERVAL / MAINTENANCE ITEM	Kilometers or time in months, whichever comes first											
	x1,000 km	1	10	20	30	40	50	60	70	80	90	100
	Months	-	6	12	18	24	30	36	42	48	54	60
Exhaust pipes & mountings			I	I	I	I	I	I	I	I	I	I
Brake/clutch fluid	(3) (4)	I	I	I	R	I	I	R	I	I	R	I
Parking brake/Brake pads (F & R)	(5)		I	I	I	I	I	I	I	I	I	I
Brake line & connections (including booster)			I	I	I	I	I	I	I	I	I	I
Manual transmission fluid	(3)		I	I	I	I	R	I	I	I	I	R
Clutch & brake pedal free play			I	I	I	I	I	I	I	I	I	I
F & R Differential fluid	(3)	I	I	I	I	I	R	I	I	I	I	R
Transfer case fluid	(3)		I	I	I	I	R	I	I	I	I	R
Automatic transmission fluid (BTRA M74)	(6)		I	I	I	I	I	I	I	I	I	I
Chassis & underbody bolts & nuts tight/secure		I	I	I	I	I	I	I	I	I	I	I
Tyre condition & inflation pressure		I	I	I	I	I	I	I	I	I	I	I
Wheel alignment	(7)	Inspect & ADJUST when abnormal condition is noted										
Steering wheel & linkage			I	I	I	I	I	I	I	I	I	I
Power steering fluid & lines*	(3)		I	I	I	I	I	I	I	I	I	I
Drive shaft boots		I	I	I	I	I	I	I	I	I	I	I
Seat belts, buckles & anchors		I	I	I	I	I	I	I	I	I	I	I
Lubricate locks, hinges & bonnet latch		I	I	I	I	I	I	I	I	I	I	I

Chart Symbols :

I - Inspect these items and their related parts. If necessary, correct, clean, replenish, adjust or replace.

R - Replace or change.

(3) Refer to “Recommended fluids and lubricants”.

(4) Change the brake / clutch fluid more regularly if the vehicle is mainly driven under severe conditions :
- Driving in hilly or mountainous terrain, or
- Towing a trailer frequently

(5) More frequent maintenance is required if under severe condition : short distance driving, extensive idling, frequent low - speed operation in stop-and-go traffic or driving in dusty condition.

(6) Change automatic transmission fluid every 70,000 km if the vehicle is mainly driven under severe conditions.
- In heavy city traffic where the outside temperature regularly reaches 32°C (90°F) or higher, or
- In hilly or mountainous terrain, or
- When doing frequent trailer towing, or
- Uses such as found in taxi, police or delivery service.

(7) If necessary, rotate and balance wheels.

Downloaded from www.Manualslib.com manuals search engine

OWNER INSPECTIONS AND SERVICES

WHILE OPERATING THE VEHICLE

Horn Operation

Blow the horn occasionally to make sure it works. Check all the button locations.

Brake System Operation

Be alert for abnormal sounds, increased brake pedal travel or repeated puling to one side when braking. Also, if the brake warning light goes on, or flashes, something may be wrong with part of the brake system.

Exhaust System Operation

Be alert to any changes in the sound of the system or the smell of the fumes. These are signs that the system may be leaking or overheating. Have the system inspected and repaired immediately.

Tires, Wheels and Alignment Operation

Be alert to any vibration of the steering wheel or the seats at normal highway speeds. This may mean a wheel needs to be balanced. Also, a pull right or left on a straight, level road may show the need for a tire pressure adjustment or a wheel alignment.

Steering System Operation

Be alert to changes in the steering action. An inspection is needed when the steering wheel is hard to turn or has too much free play, or is unusual sounds are noticed when turning or parking.

Headlight Aim

Take note of the light pattern occasionally. Adjust the headlights if the beams seem improperly aimed.

AT EACH FUEL FILL

A fluid loss in any (except windshield washer) system may indicate a problem. Have the system inspected and repaired immediately.

Engine Oil Level

Check the oil level and add oil if necessary. The best time to check the engine oil level is when the oil is warm.

1. After stopping the engine, wait a few minutes for the oil to drain back to the oil pan.
2. Pull out the oil level indicator (dip stick).
3. Wipe it clean, and push the oil level indicator back down all the way.
4. Pull out the oil level indicator and look at the oil level on it.
5. Add oil, if needed, to keep the oil level above the lower mark. Avoid overfilling the engine, since this may cause engine damage.
6. Push the indicator all the way back down into the engine after taking the reading.

If you check the oil level when the oil is cold, do not run the engine first. The cold oil will not drain back to the pan fast enough to give a true oil level reading.

Engine Coolant Level and Condition

Check the coolant level in the coolant reservoir tank and add coolant if necessary. Inspect the coolant. Replace dirty or rusty coolant.

Windshield Washer Fluid Level

Check the washer fluid level in the reservoir. Add fluid if necessary.

AT LEAST TWICE A MONTH

Tire And Wheel Inspection and Pressure Check

Check the tire for abnormal wear or damage. Also check for damaged wheels. Check the tire pressure when the tires are cold (check the spare also, unless it is a stowaway). Maintain the recommended pressures. Refer to “Tire and Wheel” is in section 0B.

AT LEAST MONTHLY

Light Operation

Check the operation of the license plate light, the headlights (including the high beams), the parking lights, the fog lights, the taillight, the brake lights, the turn signals, the backup lights and the hazard warning flasher.

Fluid Leak Check

Periodically inspect the surface beneath the vehicle for water, oil, fuel or other fluids, after the vehicle has been parked for a while. Water dripping from the air conditioning system after use is normal. If you notice fuel leaks or fumes, find the cause and correct it at once.

AT LEAST TWICE A YEAR

Power Steering System Reservoir Level

Check the power steering fluid level. Keep the power steering fluid at the proper level. Refer to *Section 6A, Power Steering System.*

Brake Master Cylinder Reservoir Level

Check the fluid and keep it at the proper level. A low fluid level can indicate worn disc brake pads which may need to be serviced. Check the breather hole in the reservoir cover to be free from dirt and check for an open passage.

Downloaded from www.Manualslib.com manuals search engine

Weather-Strip Lubrication

Apply a thin film silicone grease using a clean cloth.

EACH TIME THE OIL IS CHANGED

Brake System Inspection

This inspection should be done when the wheels are removed for rotation. Inspect the lines and the hoses for proper hookup, binding, leaks, cracks, chafing, etc. Inspect the disc brake pads for wear. Inspect the rotors for surface condition. Inspect other brake parts, the parking brake, etc., at the same time. Inspect the brakes more often if habit or conditions result in frequent braking.

Steering, Suspension and Front Drive Axle Boot And Seal Inspection

Inspect the front and rear suspension and the steering system for damaged, loose or missing parts, signs of wear or lack of lubrication. Inspect the power steering line and the hoses for proper hookup, binding, leaks, cracks, chafing, etc. Clean and inspect the drive axle boot and seals for damage, tears or leakage. Replace the seals if necessary.

Exhaust System Inspection

Inspect the complete system (including the catalytic converter if equipped). Inspect the body near the exhaust system. Look for broken, damaged, missing, or out-of-position parts as well as open seams, holes, loose connections, or other conditions which could cause heat buildup in the floor pan or could let exhaust fumes seep into the trunk or passenger compartment.

Throttle Linkage Inspection

Inspect the throttle linkage for interference or binding, damaged, or missing parts. Lubricate all linkage joints and throttle cable joints, the intermediate throttle shaft bearing, the return spring at throttle valve assembly, and the accelerator pedal sliding face with suitable grease. Check the throttle cable for free movements.

Engine Drive Belts

Inspect all belts for cracks, fraying, wear and proper tension. Adjust or replace the belts as needed.

Hood Latch Operation

When opening the hood, note the operation of the secondary latch. It should keep the hood from opening all the way when the primary latch is released. The hood must close firmly.

AT LEAST ANNUALLY

Lap and Shoulder Belts Condition and Operation

Inspect the belt system including: the webbing, the buckles, the latch plates, the retractor, the guide loops and the anchors.

Movable Head Restraint Operation

On vehicles with movable head restraints, the restraints must stay in the desired position.

Spare Tire and Jack Storage

Be alert to rattles in the rear of the vehicle. The spare tire, all the jacking equipment, and the tools must be securely stowed at all times. Oil the jack ratchet or the screw mechanism after each use.

Key Lock Service

Lubricate the key lock cylinder.

Body Lubrication Service

Lubricate all the body door hinges including the hood, the fuel door, the rear compartment hinges and the latches, the glove box and the console doors, and any folding seat hardware.

Underbody Flushing

Flushing the underbody will remove any corrosive materials used for ice and snow removal and dust control. At least every spring clean the underbody. First, loosen the sediment packed in closed areas of the vehicle. Then flush the underbody with plain water.

Engine Cooling System

Inspect the coolant and freeze protection fluid. If the fluid is dirty or rusty, drain, flush and refill the engine cooling system with new coolant. Keep the coolant at the proper mixture in order to ensure proper freeze protection, corrosion protection and engine operating temperature. Inspect the hoses. Replace the cracked, swollen, or deteriorated hoses. Tighten the clamps. Clean the outside of the radiator and the air conditioning condenser. Wash the filler cap and the neck. Pressure test the cooling system and the cap in order to help ensure proper operation.

Downloaded from www.Manualslib.com manuals search engine

RECOMMENDED FLUIDS AND LUBRICANTS

Usage		Capacity	Fluid/Lubricant
Engine Oil (Change with filter)	3.2L DOHC	8.2 L	Quality class - API ; SH grade or above ACEA ; A2 or A3 MB sheet ; 229.1 Viscosity - MB sheet ; 224.1
	2.3L DOHC	7.5 L	
	662LA	9.5 L	Quality class - API ; CG grade or above ACEA ; B2 or B3 MB sheet ; 228.1, 228.3, 228.5, 229.1 Viscosity - MB sheet ; 224.1
	661LA	8.0 L	
Engine Coolant	3.2L DOHC	11.3 L	ALUTEC P-78
	2.3L DOHC	10.5 L	
	662LA	10.5 - 11.0 L	
	661LA	9.5 - 10.0 L	
Brake / Clutch Fluid		Approx. 0.5L level must be maintained between MAX & MIN level	DOT-3 & SAE J 1703
Power Steering System		1.0 L	ATF DEXRON-II
Parking Brake Cable		As required	Grease
Hood Latch Assembly		As required	Grease
Hood and Door Hinges Fuel Door Hinge Rear Compartment Lid Hinges		As required	Spray type grease
Weatherstrips		As required	Silicone grease

Downloaded from www.Manualslib.com manuals search engine

GENERAL DESCRIPTION AND SYSTEM OPERATION

GENERAL REPAIR INSTRUCTIONS

- If a floor jack is used, the following precautions are recommended.
- Park the vehicle on level ground, “block” the front or rear wheels, set the jack against the frame, raise the vehicle and support it with chassis stands and then perform the service operation.
- Before performing the service operation, disconnect the negative battery cable in order to reduce the chance of cable damaged and burning due to short-cir cuiting.
- Use a cover on the body, the seats and the floor to protect them against damage and contamination.
- Handle brake fluid and antifreeze solution with care as they can cause paint damage.
- The use of proper tools, and the recommended essential and available tools where specified, are important for efficient and reliable performance of the service repairs.
- Use genuine DAEWOO parts.
- Discard used cotter pins, gaskets, O-rings, oil seals, lock washers and self-locking nuts. Prepare new ones for installation. Normal function of these parts cannot be maintained if these parts are reused.
- Keep the disassembled parts neatly in groups to facilitate proper and smooth reassembly.
- Keep attaching bolts and nuts separated, as they vary in hardness and design depending on the position of the installation.
- Clean the parts before inspection or reassembly.
- Also clean the oil parts, etc. Use compressed air to make certain they are free of restrictions.
- Lubricate rotating and sliding faces of parts with oil or grease before installation.
- When necessary, use a sealer on gaskets to prevent leakage.
- Carefully observe all specifications for bolt and nut torques.
- When service operation is completed, make a final check to be sure service was done properly and the problem was corrected.

Downloaded from www.Manualslib.com manuals search engine

VEHICLE IDENTIFICATION NUMBER SYSTEM

*** K P T L 4 B 1 B S V P 000000 ***

12~17.Production Serial Number
: 000001- 999999

11.Plant Code
P : PyongTaek Plant

10.Model Year
V : 1997
W : 1998
X : 1999
Y : 2000

9. Check Digit
S : All area except North America

8. Engine Type
6 : 2295cc, In-line 4Cylinder, Gasoline (E23)
8 : 1998cc, In-line 4Cylinder, Gasoline (E20)
9 : 3199cc, In-line 6Cylinder, Gasoline (E32)
A : 2299cc, In-line 4Cylinder, Diesel (OM661)
B : 2874cc, In-line 5Cylinder, Diesel (OM662)

7. Restraint System
1 : 3-Point Safety Belt, 2 : 2-Point Safety Belt

6. Trim Level
A : Standard, B : Deluxe, C : Super Deluxe

5. Body Type
2: 3-Door, 4: 3-Door Soft Top

4. Line Models
L : Korando, LHD, R : Korando, RHD

3. Vehicle Type
T : Passenger Car, A : Truck

2. Maker Identification : P

1. Nation : K

*. Symbol according to No.

Downloaded from www.Manualslib.com manuals search engine

Manufacturer's Plate

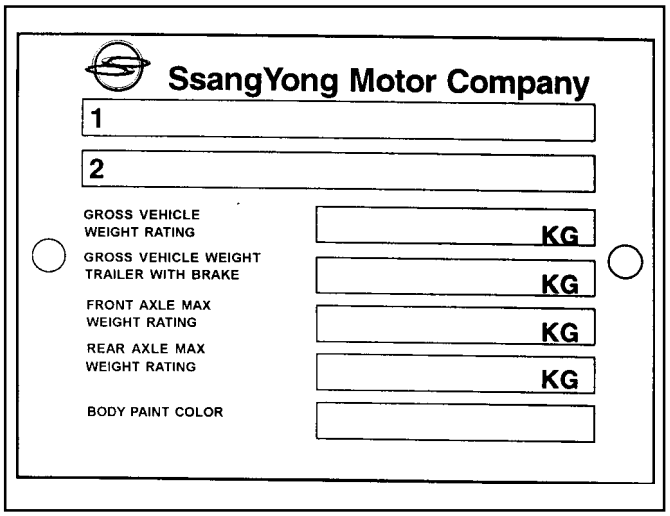

1.Type Approval No. 2.Vehicle Identification No.

Manufacturer's Plate Location

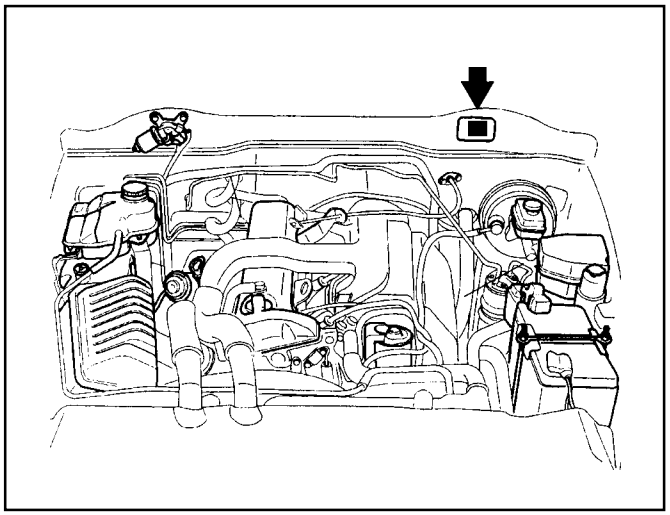

Diesel Engine

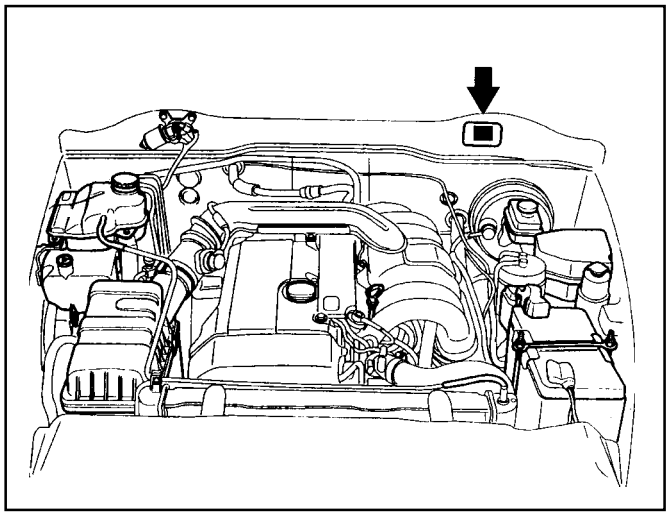

Gasoline Engine

Downloaded from www.Manualslib.com manuals search engine

Gasolind Engine Number

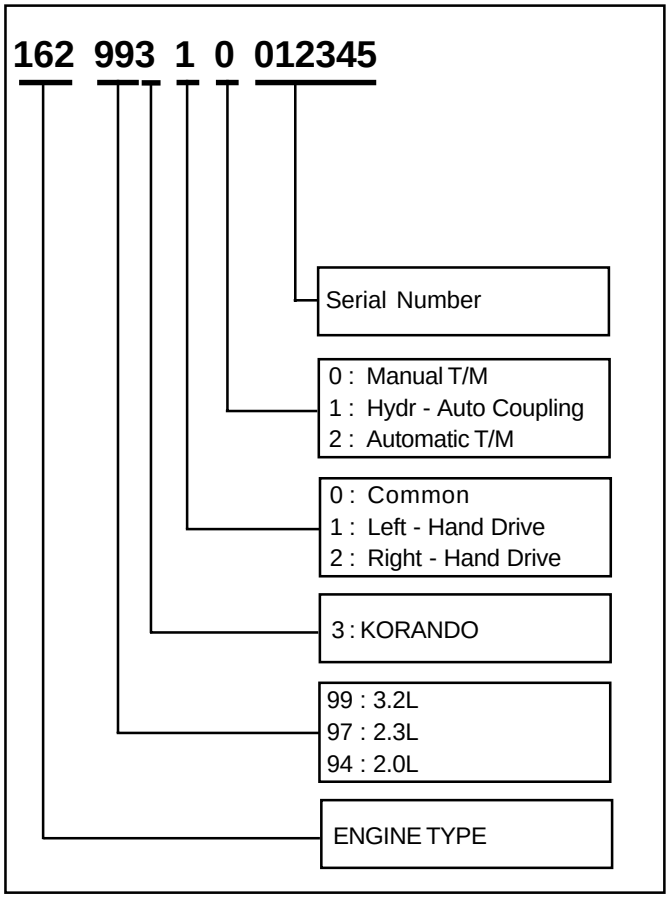

Diesel Engine Number

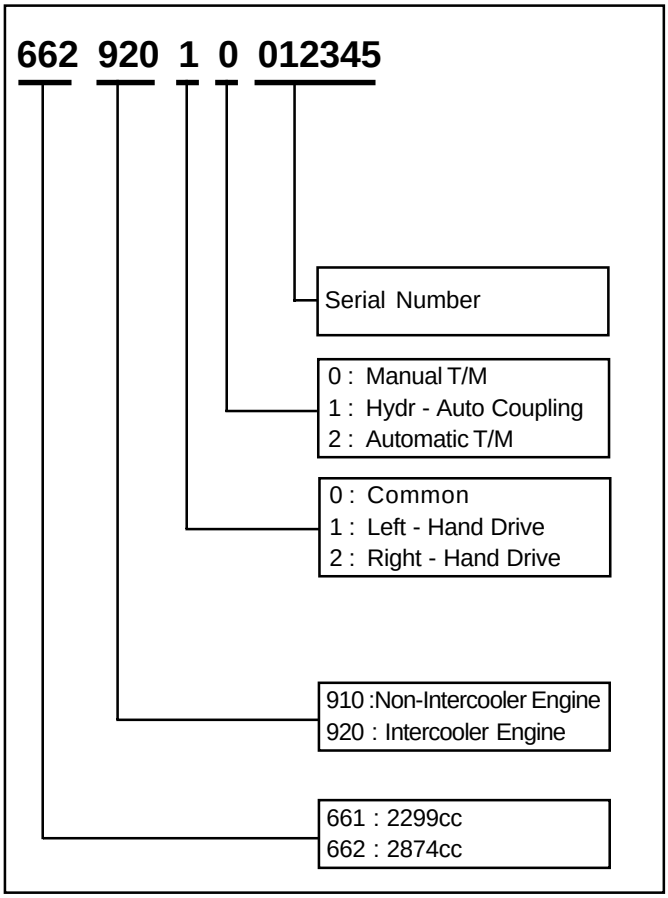

Engine Number Location

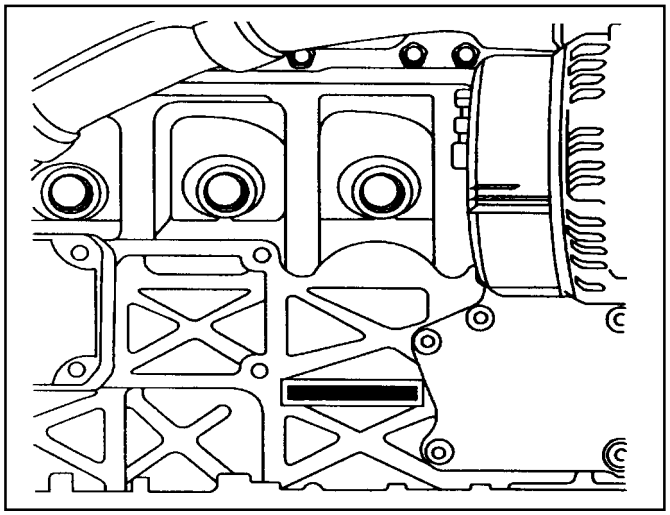

IL6 3200

The engine number is stamped on the lower rear side of the alternator.

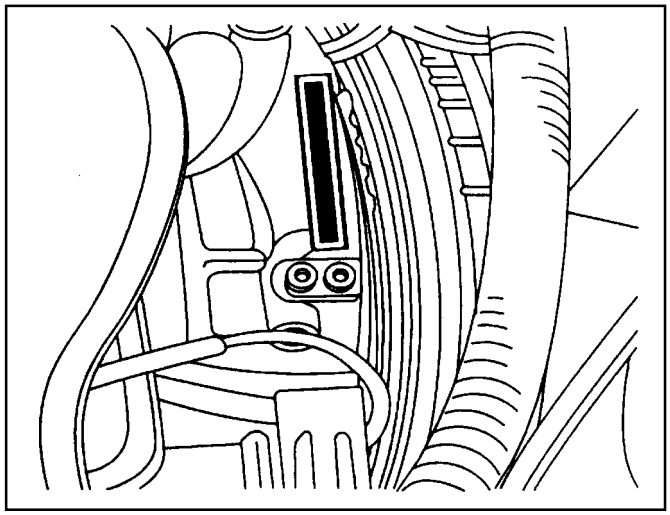

2300 DOHC

The engine number is stamped on the upper rear left-hand side of the cylinder block.

Downloaded from www.Manualslib.com manuals search engine

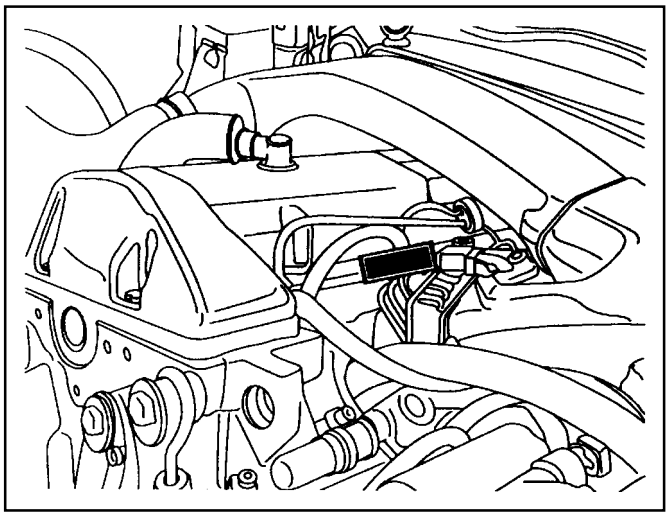

Diesel Engine

The engine number is stamped on the cylinder block in front of injection pump.

VEHICLE LIFTING PROCEDURES

To raise the vehicle, place the liffting equipment only at the points indicated. Failure to use these precise positions may result in permanent vehicle body deformation.

Many dealer service facilities and service stations are equipped with automative hoists that bear upon some parts of the frame in order to lift the vehicle. If any other hoist method is used, use special care to avoid damaging the fuel tank, the filter neck, the exhaust system, or the underbody.

Vehicle Lifting Points

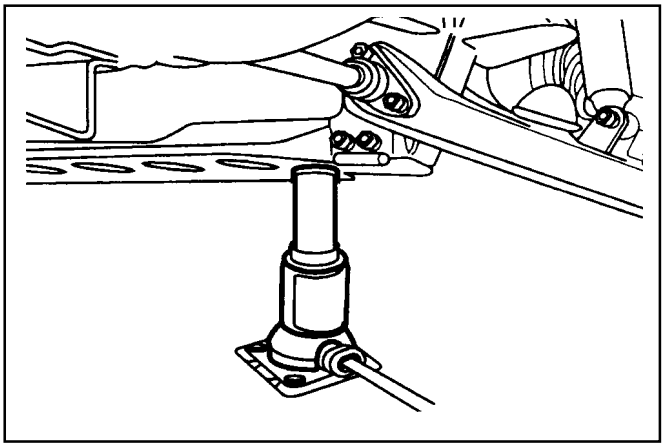

Using Jack
(Rearward of Front Tire)

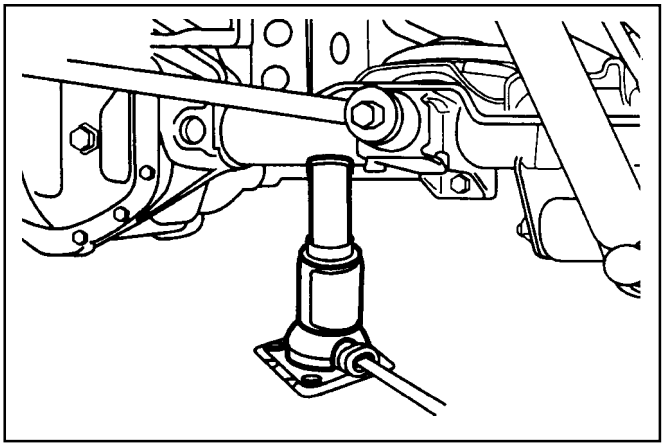

Using Jack
(Forward of Rear Tire)

Downloaded from www.Manualslib.com manuals search engine

SECTION 1

ENGINE

SECTION 1A1(M162 ENGINE)

GENERAL ENGINE INFORMATION

TABLE OF CONTENTS

Specifications 1A1-1
Engine Specifications 1A1-1
Component Locator 1A1-3
Front View 1A1-3
Side View 1A1-4
Performance Curve 1A1-5
E32 Engine 1A1-5
Special Tools 1A1-6
Special Tools Table 1A1-6
Diagnosis 1A1-7
Oil Leak Diagnosis 1A1-7
Engine Cranking at The Front of Crankshaft 1A1-8
Compression Pressure Test 1A1-9
Cylinder Pressure Leakage Test. 1A1-11
General Information 1A1-13
Cleanliness and Care 1A1-13
On-Engine Service 1A1-13

SPECIFICATIONS

ENGINE SPECIFICATIONS

Application			E32 Engine
Engine Model			M162.993
Displacement (CC)			3199
Cylinder (Bore x Stroke) (mm)			89.9 x 84.0
Fuel Injection / Ignition System			MSE 3.62S
Compression Ratio			10 : 1
Number of Cylinders			6
Camshaft Valve Arrangement			DOHC
Camshaft Drive Type			Chain-Driven
Max. Output (ps/rpm)			222 / 5500
Max. Torque (kg•m/rpm)			31.6 / 3750
Firing Order			1-5-3-6-2-4
Ignition Type			Distributorless Double Ignition
Ignition Timing			BTDC 8° ± 2°
Valve Timing	Intake	Open/Close	ATDC 11° / ABDC 34°
	Exhaust	Open/Close	BBDC 31° / BTDC 14°
Valve Clearance Adjustment			Automatic Control

Downloaded from www.Manualslib.com manuals search engine

ENGINE SPECIFICATIONS (Cont'd)

Application	E32 Engine
Idle Speed (rpm)	700 ± 50
Fuel Injection Pressure (kg/cm²)	3 - 4
Oil Capacity (liter)	8.2
Lubrication Type	Forced by Gear Pump
Oil Filter Type	Full Flow with Paper Filter
Fuel	Unleaded Gasoline

MSE 3.62S/3.53S (Motorsteuer Elektronik : German)

MSE : Engine Control Electronic

3.62S : 6 Cylinder Version

3.53S : 4 Cylinder Version

Downloaded from www.Manualslib.com manuals search engine

COMPONENT LOCATOR

FRONT VIEW

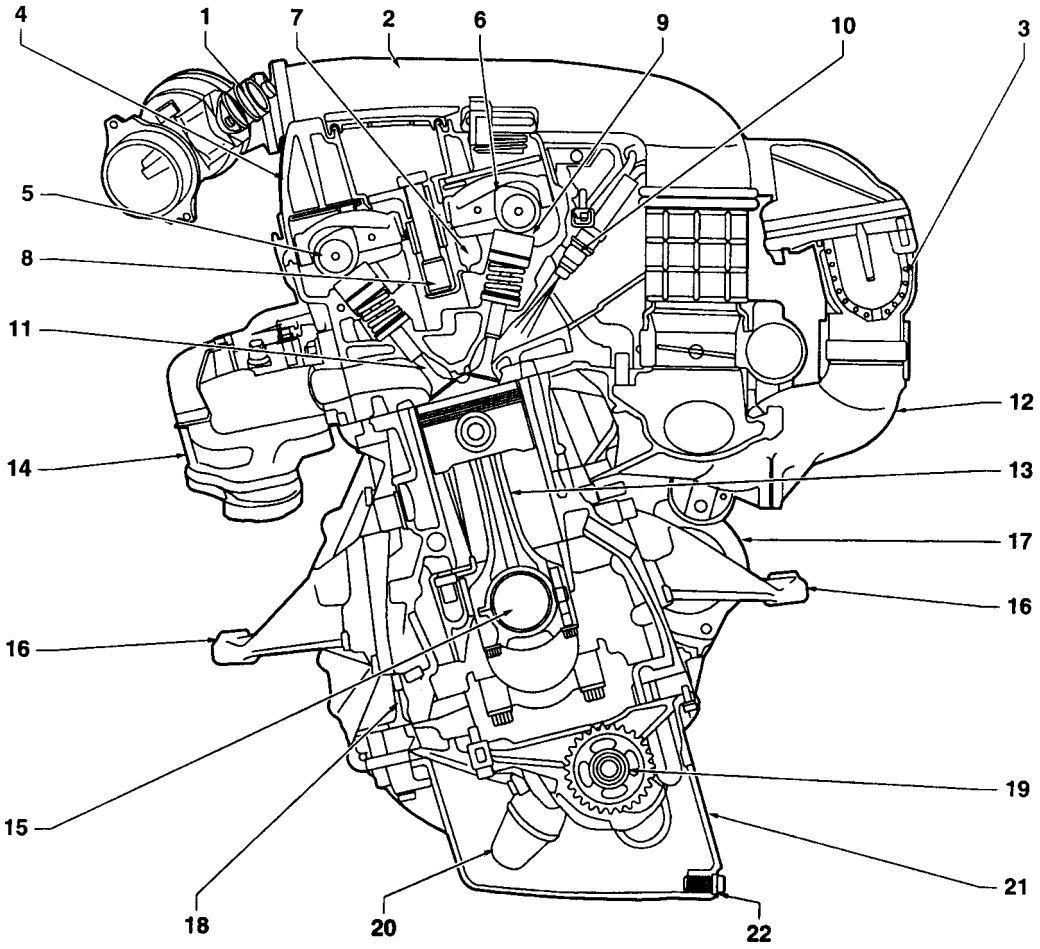

1 HFM Sensor
2 Intake Air Duct
3 Resonance Flap
4 Cylinder Head Cover
5 Exhaust Camshaft
6 Intake Camshaft
7 Cylinder Head
8 Spark Plug Connector
9 Valve Tappet
10 Injector
11 Exhaust Valve
12 Intake Manifold
13 Connecting Rod
14 Exhaust Manifold
15 Crankshaft
16 Engine Mounting Bracket
17 Starter
18 Crankcase
19 Oil Pump Sprocket
20 Oil Strainer
21 Oil Pan
22 Drain Plug

Downloaded from www.Manualslib.com manuals search engine

SIDE VIEW

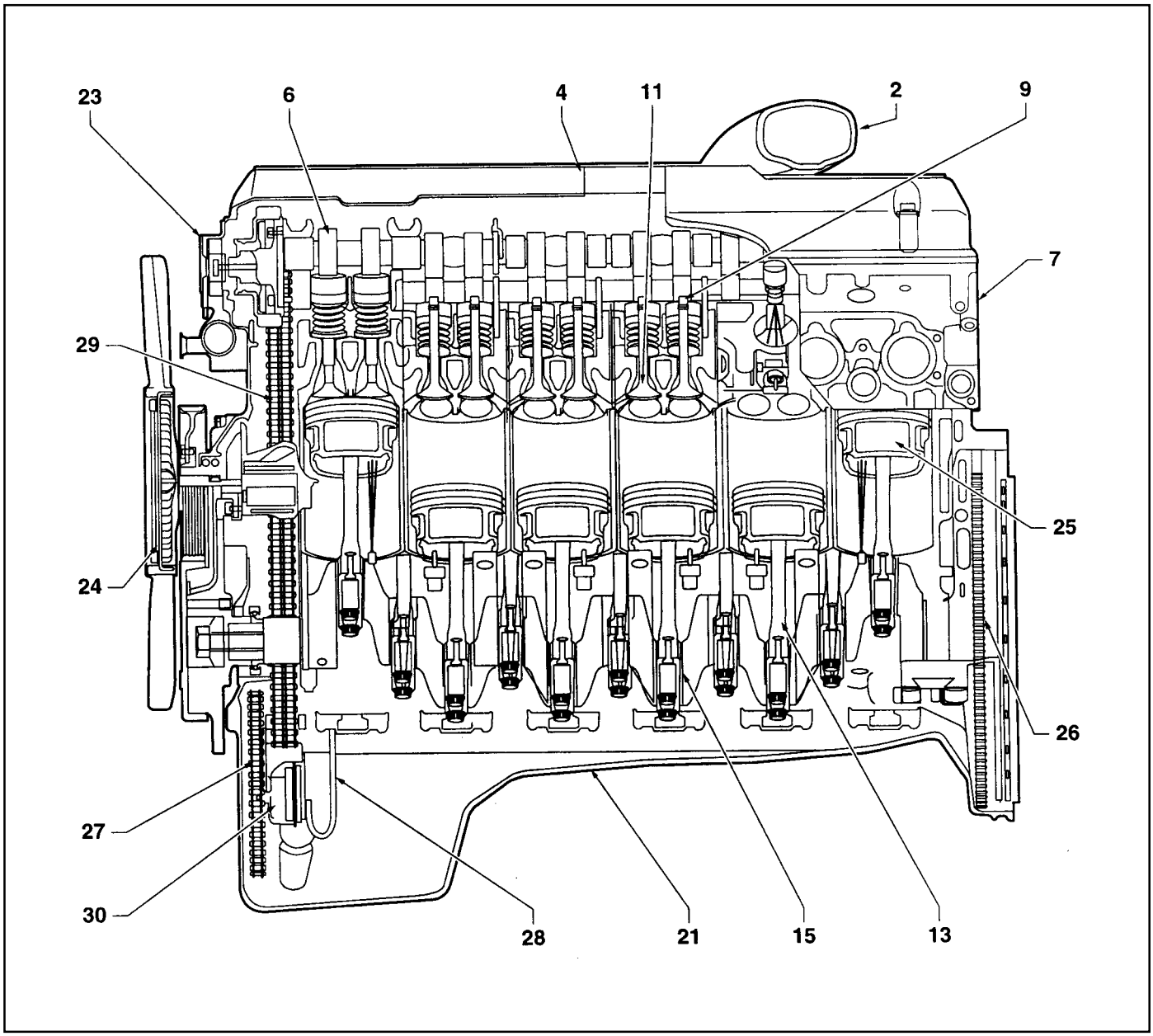

23 Camshaft Adjuster
24 Cooling Fan and Viscous Clutch
25 Piston
26 Flywheel of Drive Plate
27 Oil Pump Drive Chain
28 Oil Return Pipe
29 Timing Chain
30 Oil Pump

Downloaded from www.Manualslib.com manuals search engine

PERFORMANCE CURVE

E32 ENGINE

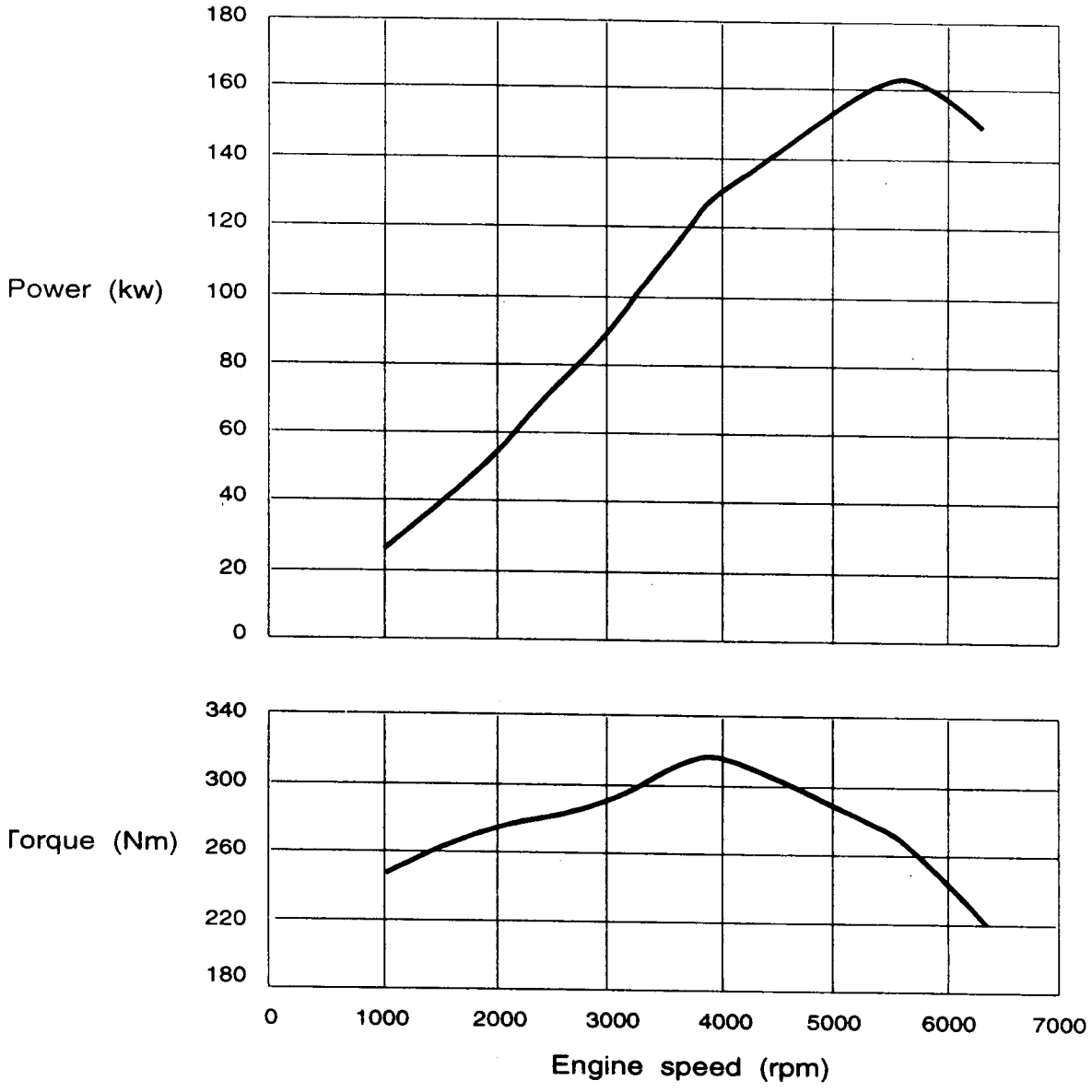

Downloaded from www.Manualslib.com manuals search engine

SPECIAL TOOLS

SPECIAL TOOLS TABLE

	000 589 10 99 01 **Torque Wrench**		**001 589 65 09 00** **Socket**
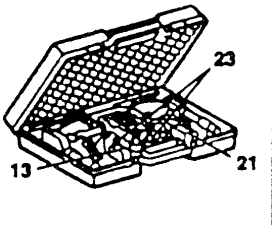	**001 589 76 21 00** **Compression Pressure Tester**	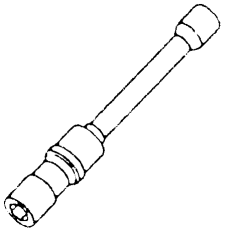	**119 589 01 09 00** **Spark Plug Wrench**

Downloaded from www.Manualslib.com manuals search engine

DIAGNOSIS

OIL LEAK DIAGNOSIS

Most fluid oil leaks are easily located and repaired by visually finding the leak and replacing or repairing the necessary parts. On some occasions a fluid leak may be difficult to locate or repair. The following procedures may help you in locating and repairing most leaks.

Finding the Leak

1. Identify the fluid. Determine whether it is engine oil, automatic transmission fluid, power steering fluid, etc.
2. Identify where the fluid is leaking from.
   - 2.1 After running the vehicle at normal operating temperature, park the vehicle over a large sheet of paper.
   - 2.2 Wait a few minutes.
   - 2.3 You should be able to find the approximate location of the leak by the drippings on the paper.
3. Visually check around the suspected component. Check around all the gasket mating surfaces for leaks. A mirror is useful for finding leaks in areas that are hard to reach.
4. If the leak still cannot be found, it may be necessary to clean the suspected area with a degreaser, steam or spray solvent.
   - 4.1 Clean the area well.
   - 4.2 Dry the area.
   - 4.3 Operate the vehicle for several miles at normal operating temperature and varying speeds.
   - 4.4 After operating the vehicle, visually check the suspected component.
   - 4.5 If you still cannot locate the leak, try using the powder or black light and dye method.

Powder Method

1. Clean the suspected area.
2. Apply an aerosol-type powder (such as foot powder) to the suspected area.
3. Operate the vehicle under normal operating conditoins.
4. Visually inspect the suspected component. You should be able to trace the leak path over the white powder surface to the source.

Black Light and Dye Method

A dye and light kit is available for finding leaks, Refer to the manufacturer's directions when using the kit.

1. Pour the specified amount of dye into the engine oil fill tube.
2. Operate the vehicle normal operating conditions as directed in the kit.
3. Direct the light toward the suspected area. The dyed fluid will appear as a yellow path leading to the source.

Repairing the Leak

Once the origin of the leak has been pinpointed and traced back to its source, the cause of the leak must be determined n order for it to be repaired properly. If a gasket is replaced, but the sealing flange is bent, the new gasket will not repair the leak. The bent flange must be repaired also. Before attempting to repair a leak, check for the following conditions and correct them as they may cause a leak.

Gaskets

- The fluid level/pressure is too high.
- The crankcase ventilation system is malfunctioning.
- The fasteners are tightened improperly or the threads are dirty or damaged.
- The flanges or the sealing surface is warped.
- There are scratches, burrs or other damage to the sealing surface.
- The gasket is damaged or worn.
- There is cracking or porosity of the component.
- An improper seal was used (where applicable).

Seals

- The fluid level/pressure is too high.
- The crankcase ventilation system is malfunctioning.
- The seal bore is damaged (scratched, burred or nicked).
- The seal is damaged or worn.
- Improper installation is evident.
- There are cracks in the components.
- The shaft surface is scratched, nicked or damaged.
- A loose or worn bearing is causing excess seal wear.

Downloaded from www.Manualslib.com manuals search engine

ENGINE CRANKING AT THE FRONT OF CRANKSHAFT

Preceding Work : Removal of cooling fan

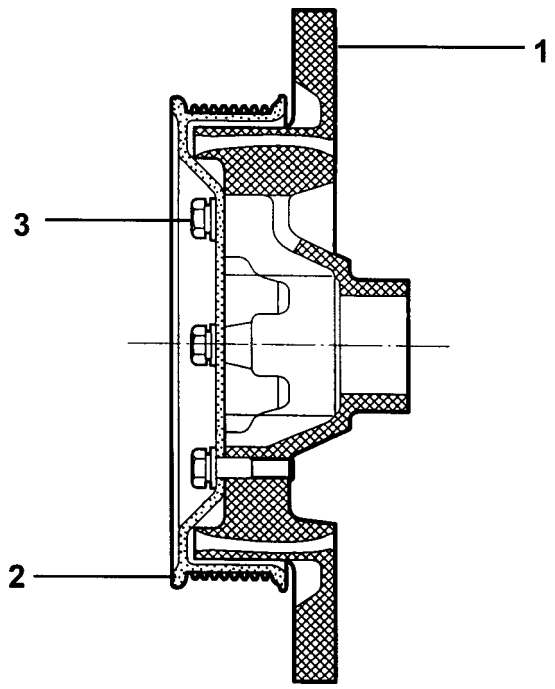

1 Vibration Damper Assembly
2 Crankshaft Pulley
3 Bolt ..... 8.6 ± 0.9 Nm

Notice

- Remove the negative ground cable before proceeding the work.
- Rotate the pulley in normal engine rotating direction when cranking.

Tools Required

000 589 10 99 01 Torque wrench

001 589 65 09 00 Socket

Downloaded from www.Manualslib.com manuals search engine

COMPRESSION PRESSURE TEST

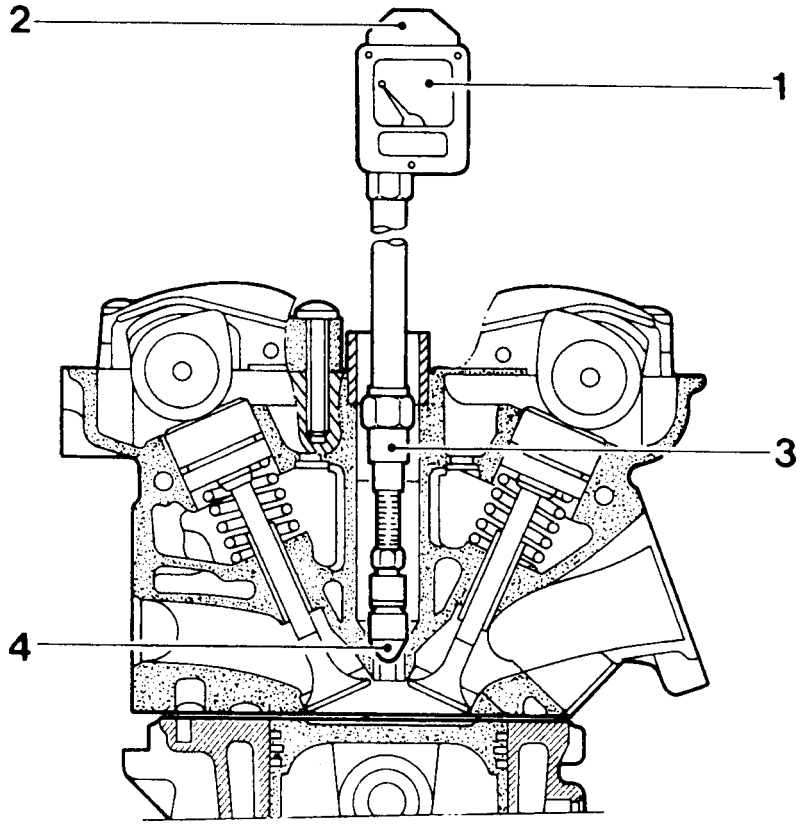

1 Compression Pressure Tester
2 Diagram Sheet
3 Adaptor
4 Sealing Cone

Tools Required

001 589 76 21 00 Compression Pressure Tester

119 589 01 09 00 Spark Plug Wrench

Standard Service Data

Compression Ratio		10 : 1
Normal Engine Temperature		80°C
Normal Compression Pressure	General	Min. 10 bar, Max. 14 bar
	Fuel Optimization	Min. 6 bar, Max. 10 bar
Permissible Pressure Difference Between Individual Cylinders		Max. 1.5 bar

Downloaded from www.Manualslib.com manuals search engine

Measuring Procedure

1. Warm the engine up to normal operating temperature.
2. Remove the spark plugs.
3. Place the diagram sheet to compression pressure tester.
4. Connect the adaptor to compression pressure tester and install it into the spark plug hole.
5. Crank the engine approx. eight revolutions by using the start motor.
6. Compare the measurements of compression pressure tester with the specifications.
7. Measure the compression pressure of the other cylinders in the same way.
8. If measured value is not within the specifications, perform the cylinder pressure leakage test.

Notice

- Discharge the combustion residues in the cylinders before testing the compression pressure.
- Apply the parking brake before cranking the engine.

Downloaded from www.Manualslib.com manuals search engine

CYLINDER PRESSURE LEAKAGE TEST

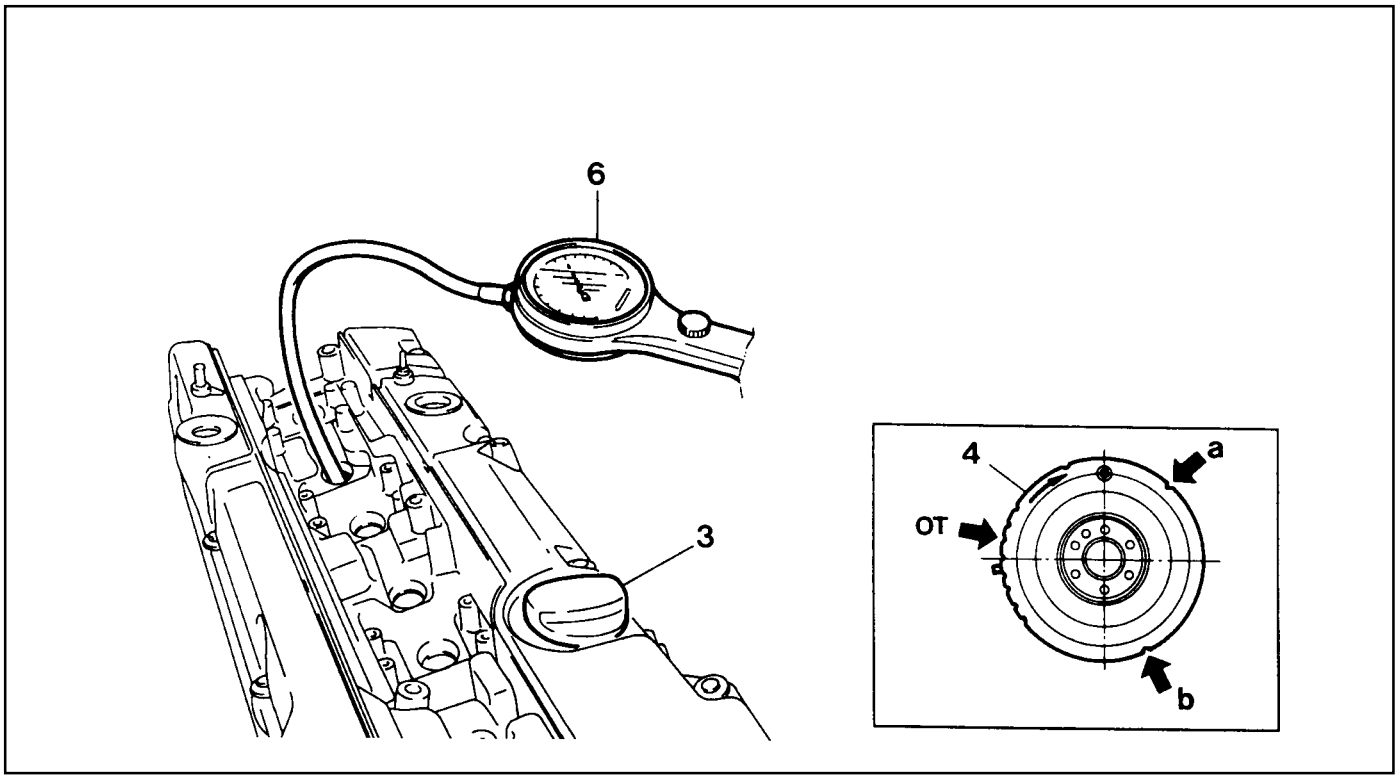

3 Engine Oil Filler Cap
4 Vibration Damper
6 Cylinder Pressure Leakage Tester with Connecting Hose

Permissible Pressure Leakage

At Whole Engine	Max. 25 %
At Valve and Cylinder Head Gasket	Max. 10 %
At Piston and Piston Ring	Max. 20 %

Cylinder Number By Mark On Vibration Damper At TDC

TDC Mark	OT (TDC)	a (120°)	b (240°)
Cylinder Number	1, 6	2, 5	3, 4

Universal Tool

Cylinder Pressure Leakage Tester	Bosch, EFAW 210A Sun, CLT 228

Downloaded from www.Manualslib.com manuals search engine

Leakage Test

1. Warm the engine up to normal operating temperature.
2. Disconnect the negative battery cable.
3. Remove the spark plugs.
4. Check the coolant level by opening the coolant surge tank cap and replenish if insufficient.
5. Open the engine oil filler cap.
6. Connect the tester to air pressure line and adjust the scale of tester.
7. Install the connecting hose to spark plug hole.
8. Position the piston of No.1 cylinder at TDC by rotating the crankshaft.

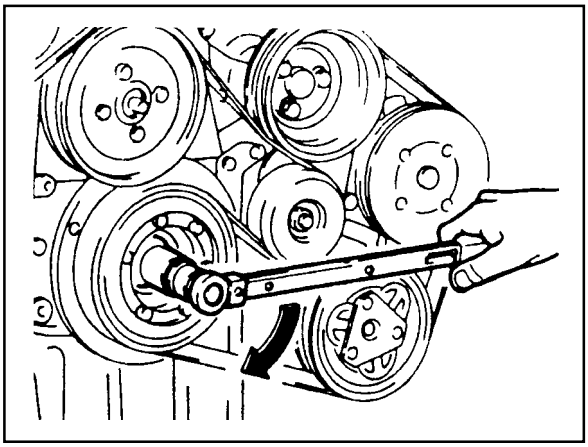

9. Connect the connecting hose to tester and measure the leakage volume after blowing up 5bar of compressed air.

   Notice

   Measure the leakage volume in the completely opening condition of throttle valve by pulling the acceleration cable.
10. Perform the pressure test according to the firing order.

    Notice

    Firing Order : 1 - 5 - 3 - 6 - 2 - 4
11. Compare the leakage pressure with the specifications.

Downloaded from www.Manualslib.com manuals search engine

GENERAL INFORMATION

CLEANLINESS AND CARE

An automobile engine is a combination of many machined, honed, polished and lapped surfaces with tolerances that are measured in the ten-thousanths of an inch. When any internal engine parts are serviced, care and cleanliness are important. A liberal coating of enigne oil should be applied to friction areas during assembly, to protect and lubricate the surfaces on initial operation. Proper cleaning and protection of machined surfaces and friction areas is part of the repair procedure. This is considered standard shop practice even if not specifically stated.

Whenever valve train components are removed for service, they should be kept in order. They should be installed in the same locations, and with the same mating surfaces, as when they were removed.

Battery cables should be disconnected before any major work is performed on the engine. Failure to disconnect cables may result in damage to wire harness or other electrical parts.

ON-ENGINE SERVICE

Caution: Disconnect the negative battery cable before removing or installing any electrical unit, or when a tool or equipment could easily come in contact with exposed electrical terminals. Disconnecting this cable will help prevent personal injury and damage to the vehicle. The ignition must also be in LOCK unless otherwise noted.

Notice: Any time the air cleaner is removed, the intake opening should be covered. This will protect against accidental entrance of foreign material, which could follow the intake passage into the cylinder and cause extensive damage when the engine is started.

Downloaded from www.Manualslib.com manuals search engine

SECTION 1

ENGINE

SECTION 1A2(M161 ENGINE)

GENERAL ENGINE INFORMATION

TABLE OF CONTENTS

Specifications 1A2-1
Engine Specifications 1A2-1
Component Locator 1A2-3
Front View 1A2-3
Side View 1A2-4
Performance Curve 1A2-5
E23 Engine 1A2-5
E20 Engine 1A2-6
Special Tools 1A2-7
Special Tools Table 1A2-7
Diagnosis 1A2-8
Oil Leak Diagnosis 1A2-8
Engine Cranking At The Front of Crankshaft 1A2-9
Compression Pressure Test 1A2-10
Cylinder Pressure Leakage Test 1A2-12
General Information 1A2-14
Cleanliness and Care 1A2-14
On-Engine Service 1A2-14

SPECIFICATIONS

ENGINE SPECIFICATIONS

Application			E23 Engine	E20 Engine
Engine Model			M161.973	M161.943
Displacement (CC)			2295	1998
Cylinder (Bore x Stroke) (mm)			90.9 x 88.4	89.9 x 78.7
Fuel Injection / Ignition System			MSE 3.53S	¬
Compression Ratio			10.4:1	9.6:1
Number of Cylinders			4	¬
Camshaft Valve Arrangement			DOHC	¬
Camshaft Drive Type			Chain-Driven	¬
Max. Output (ps/rpm)			149 / 5500	135 / 5500
Max. Torque (kg•m/rpm)			22.4 / 4000	19.3 / 4000
Firing Order			1-3-4-2	¬
Ignition Type			Distributorless	¬
Ignition Timing			BTDC 6° ± 2°	¬
Valve Timing	Intake	Open/Close	ATDC 19.25° / ABDC 28.76°	ATDC 13.15° / ABDC 13.57°
	Exhaust	Open/Close	BBDC 20.62° / BTDC 15.08°	BBDC 16.58° / BTDC 17.05°
Valve Clearance Adjustment			Automatic Control	¬

Downloaded from www.Manualslib.com manuals search engine

ENGINE SPECIFICATIONS (Cont'd)

Application	E23 Engine	E20 Engine
Idle Speed (rpm)	750 ± 50	¬
Fuel Injection Pressure (kg/cm²)	3.2 - 4.2	¬
Oil Capacity (liter)	7.5	¬
Lubrication Type	Forced by Gear Pump	¬
Oil Filter Type	Full Flow with Paper Filter	¬
Fuel	Unleaded Gasoline	¬

MSE 3.62S/3.53S (Motorsteuer Elektronik : German)

MSE : Engine Control Electronic

3.62S : 6 cylinder version

3.53S : 4 cylinder version

Downloaded from www.Manualslib.com manuals search engine

COMPONENT LOCATOR

FRONT VIEW

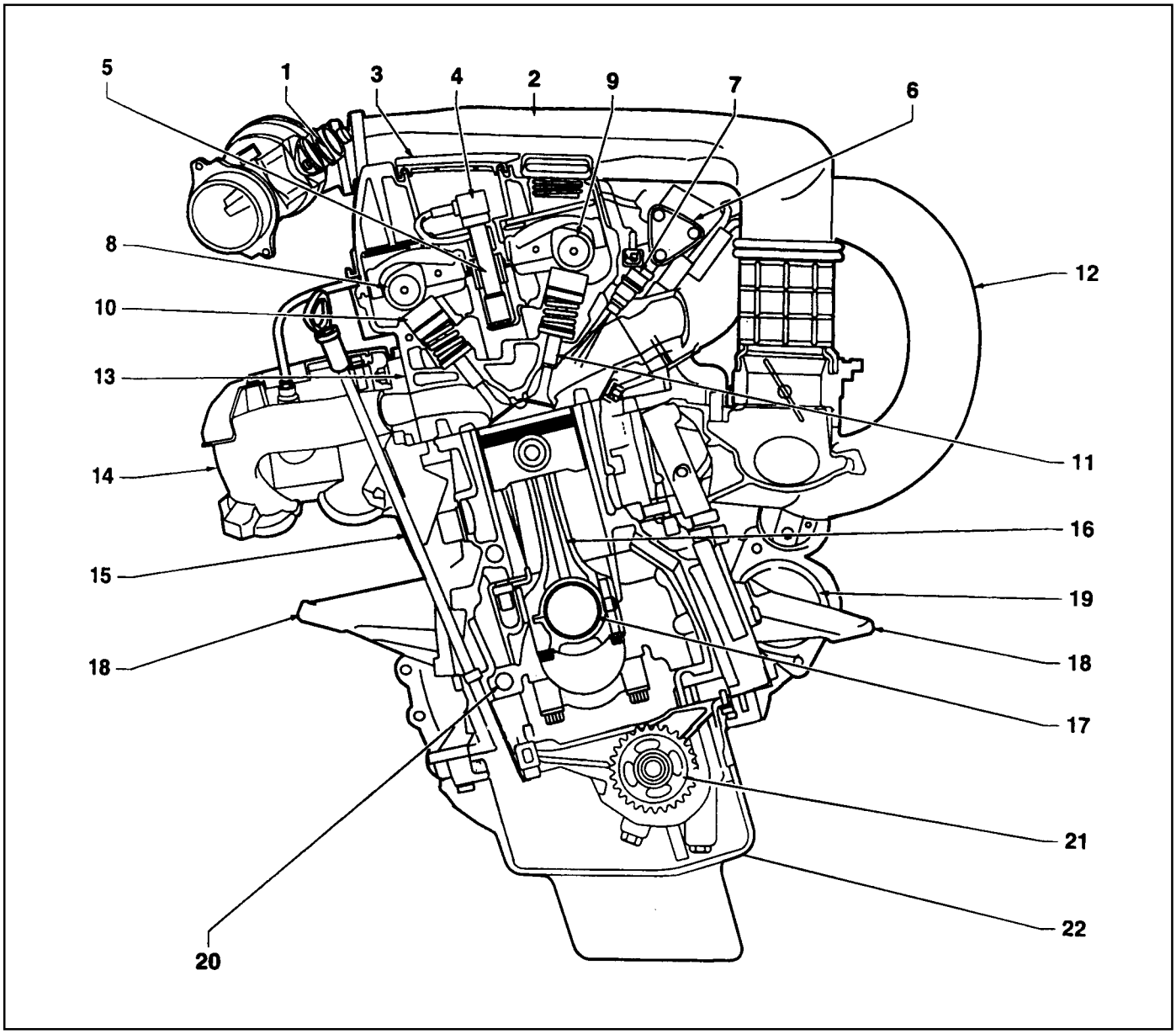

1 HFM Sensor
2 Intake Air Duct
3 Cylinder Head Cover
4 Ignition Coil
5 Spark Plug Connector
6 Fuel Distributor
7 Injector
8 Exhaust Camshaft
9 Intake Camshaft
10 Valve Tappet
11 Intake Valve
12 Intake Manifold
13 Cylinder Head
14 Exhaust Manifold
15 Dipstick Guide Tube and Gauge
16 Connecting Rod
17 Crankshaft
18 Engine Mounting Bracket
19 Starter
20 Crankcase
21 Oil Pump Sprocket
22 Oil Pan

Downloaded from www.Manualslib.com manuals search engine

SIDE VIEW

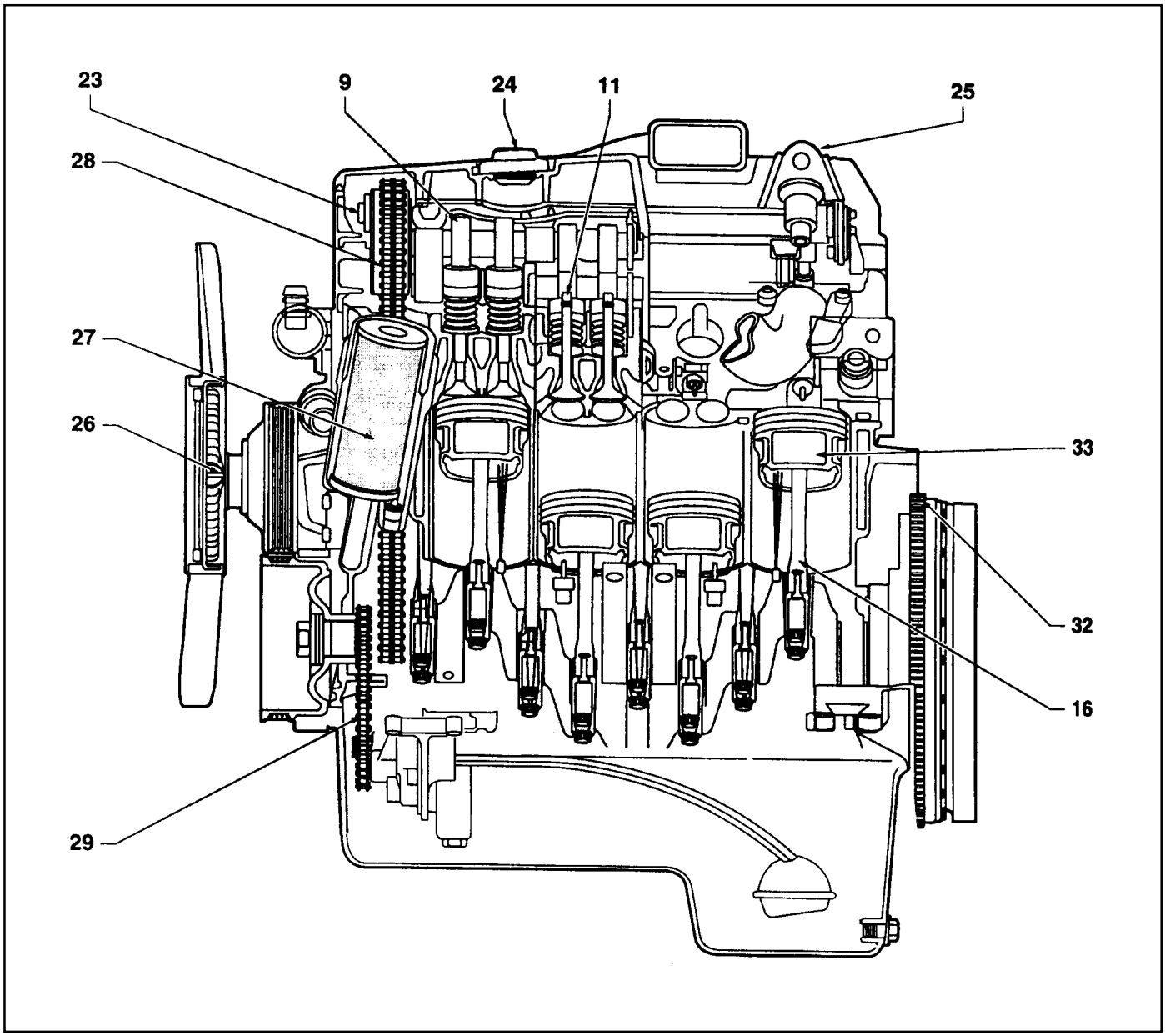

23 Camshaft Adjuster
24 Oil Filler Cap
25 Engine Hanger Bracket
26 Cooling Fan and Viscous Clutch
27 Oil Filter
28 Timing Chain
29 Oil Pump Drive Chain
30 Oil Strainer
31 Oil Pump
32 Ring Gear and Flywheel of Drive Plate
33 Piston

Downloaded from www.Manualslib.com manuals search engine

PERFORMANCE CURVE

E23 ENGINE

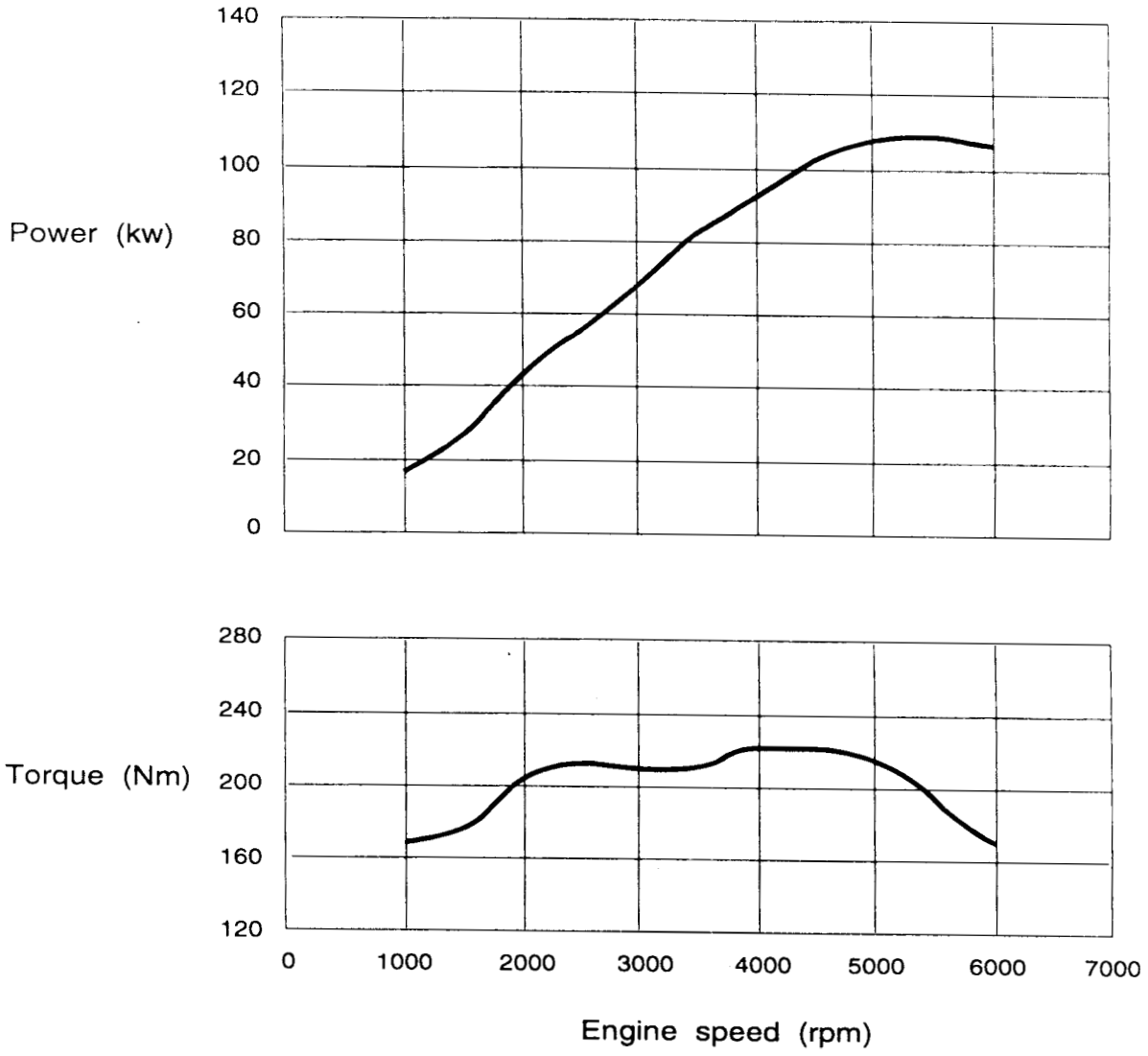

Downloaded from www.Manualslib.com manuals search engine

E20 ENGINE

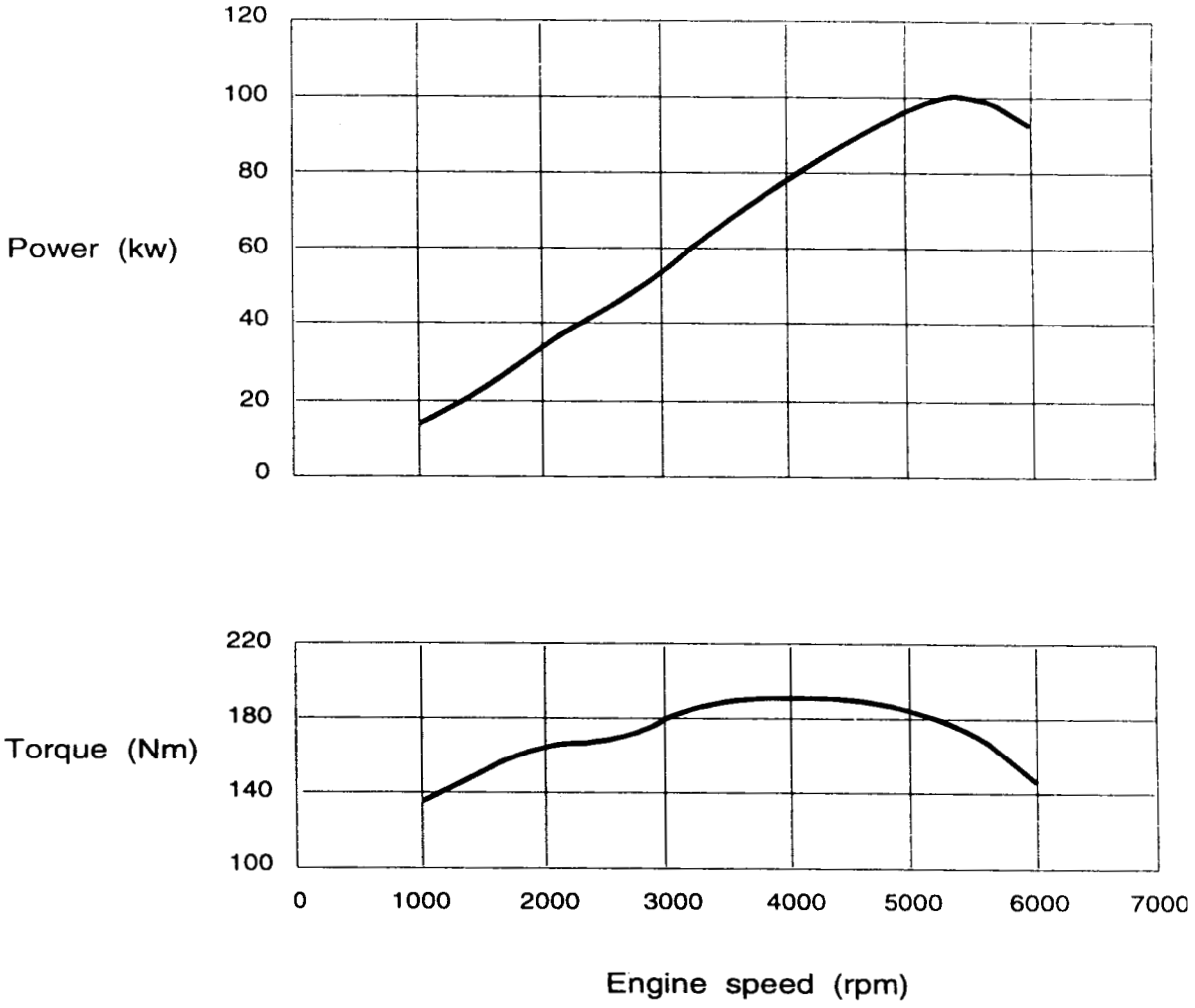

Downloaded from www.Manualslib.com manuals search engine

SPECIAL TOOLS

SPECIAL TOOLS TABLE

	000 589 10 99 01 **Torque Wrench**		**001 589 65 09 00** **Socket**
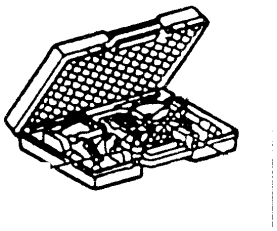	**001 589 76 21 00** **Compression Pressure Tester**	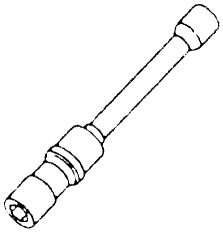	**119 589 01 09 00** **Spark Plug Wrench**

Downloaded from www.Manualslib.com manuals search engine

DIAGNOSIS

OIL LEAK DIAGNOSIS

Most fluid oil leaks are easily located and repaired by visually finding the leak and replacing or repairing the necessary parts. On some occasions a fluid leak may be difficult to locate or repair. The following procedures may help you in locating and repairing most leaks.

Finding the Leak

1. Identify the fluid. Determine whether it is engine oil, automatic transmission fluid, power steering fluid, etc.
2. Identify where the fluid is leaking from.
   - 2.1 After running the vehicle at normal operating temperature, park the vehicle over a large sheet of paper.
   - 2.2 Wait a few minutes.
   - 2.3 You should be able to find the approximate location of the leak by the drippings on the paper.
3. Visually check around the suspected component. Check around all the gasket mating surfaces for leaks. A mirror is useful for finding leaks in areas that are hard to reach.
4. If the leak still cannot be found, it may be necessary to clean the suspected area with a degreaser, steam or spray solvent.
   - 4.1 Clean the area well.
   - 4.2 Dry the area.
   - 4.3 Operate the vehicle for several miles at normal operating temperature and varying speeds.
   - 4.4 After operating the vehicle, visually check the suspected component.
   - 4.5 If you still cannot locate the leak, try using the powder or black light and dye method.

Powder Method

1. Clean the suspected area.
2. Apply an aerosol-type powder (such as foot powder) to the suspected area.
3. Operate the vehicle under normal operating conditoins.
4. Visually inspect the suspected component. You should be able to trace the leak path over the white powder surface to the source.

Black Light and Dye Method

A dye and light kit is available for finding leaks, Refer to the manufacturer's directions when using the kit.

1. Pour the specified amount of dye into the engine oil fill tube.
2. Operate the vehicle normal operating conditions as directed in the kit.
3. Direct the light toward the suspected area. The dyed fluid will appear as a yellow path leading to the source.

Repairing the Leak

Once the origin of the leak has been pinpointed and traced back to its source, the cause of the leak must be determined n order for it to be repaired properly. If a gasket is replaced, but the sealing flange is bent, the new gasket will not repair the leak. The bent flange must be repaired also. Before attempting to repair a leak, check for the following conditions and correct them as they may cause a leak.

Gaskets

- The fluid level/pressure is too high.
- The crankcase ventilation system is malfunctioning.
- The fasteners are tightened improperly or the threads are dirty or damaged.
- The flanges or the sealing surface is warped.
- There are scratches, burrs or other damage to the sealing surface.
- The gasket is damaged or worn.
- There is cracking or porosity of the component.
- An improper seal was used (where applicable).

Seals

- The fluid level/pressure is too high.
- The crankcase ventilation system is malfunctioning.
- The seal bore is damaged (scratched, burred or nicked).
- The seal is damaged or worn.
- Improper installation is evident.
- There are cracks in the components.
- The shaft surface is scratched, nicked or damaged.
- A loose or worn bearing is causing excess seal wear.

Downloaded from www.Manualslib.com manuals search engine

ENGINE CRANKING AT THE FRONT OF CRANKSHAFT

Preceding Work : Removal of cooling fan

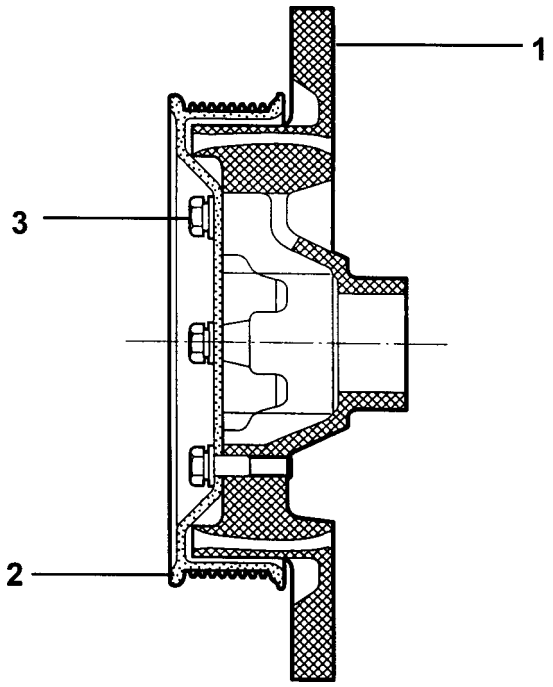

1 Vibration Damper Assembly
2 Crankshaft Pulley
3 Bolt ..... 8.6 ± 0.9 Nm

Notice

- Remove the negative ground cable before proceeding the work.
- Rotate the pulley in normal engine rotating direction when cranking.

Tools Required

000 589 10 99 01 Torque wrench

001 589 65 09 00 Socket

Downloaded from www.Manualslib.com manuals search engine

COMPRESSION PRESSURE TEST

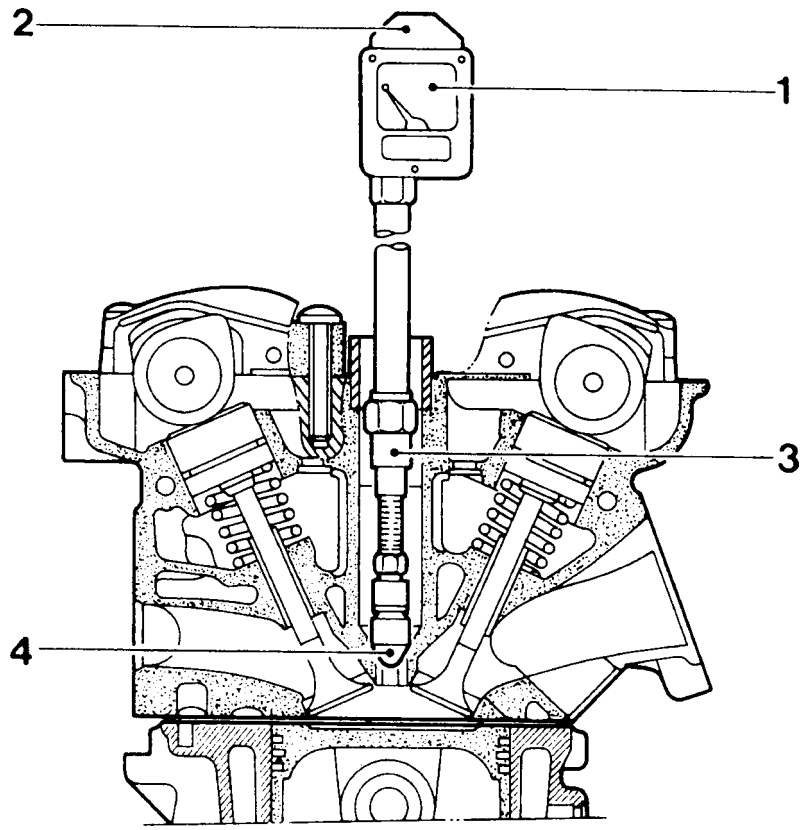

1 Compression Pressure Tester
2 Diagram Sheet
3 Adaptor
4 Sealing Cone

Tools Required

001 589 76 21 00 Compression Pressure Tester

119 589 01 09 00 Spark Plug Wrench

Standard Service Data

Compression Ratio		10.4, 9.6
Normal Engine Temperature		80°C
Normal Compression Pressure	E23 Engine(e = 10.4)	Min. 11 bar, Max. 15 bar
	E20 Engine(e = 9.6)	Min. 10.5 bar, Max. 14 bar
Permissible Pressure Difference Between Individual Cylinders		Max. 1.5 bar

Downloaded from www.Manualslib.com manuals search engine

Measuring Procedure

1. Warm the engine up to normal operating temperature.
2. Remove the spark plugs.
3. Place the diagram sheet to compression pressure tester.
4. Connect the adaptor to compression pressure tester and install it into the spark plug hole.
5. Crank the engine approx. eight revolutions by using the start motor.
6. Compare the measurements of compression pressure tester with the specifications.
7. Measure the compression pressure of the other cylinders in the same way.
8. If measured value is not within the specifications, perform the cylinder pressure leakage test.

Notice

- Discharge the combustion residues in the cylinders before testing the compression pressure.
- Apply the parking brake before cranking the engine.

Downloaded from www.Manualslib.com manuals search engine

CYLINDER PRESSURE LEAKAGE TEST

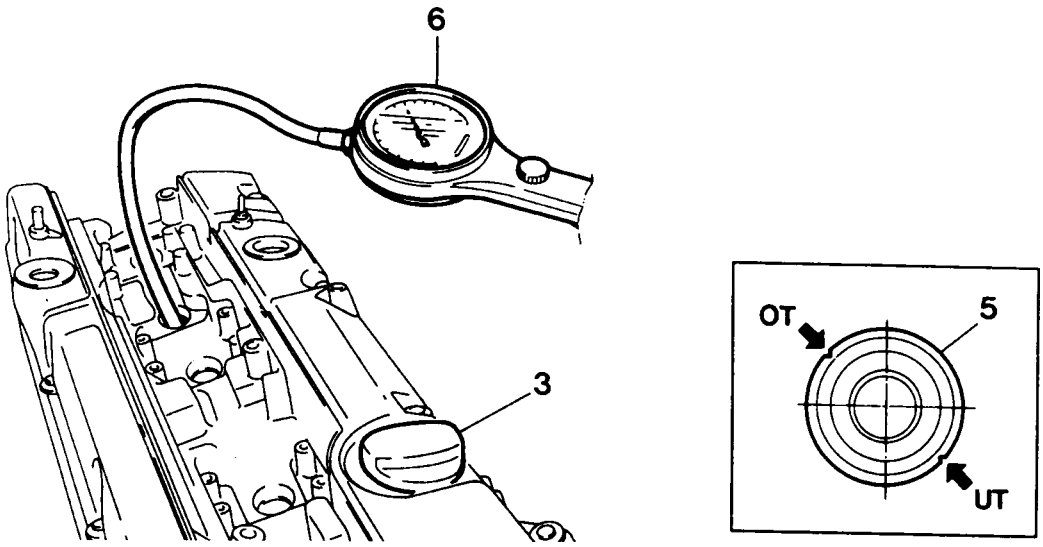

3 Engine Oil Filler Cap
5 Vibration Damper
6 Cylinder Pressure Leakage Tester with Connecting Hose

Permissible Pressure Leakage

At Whole Engine	Max. 25 %
At Valve and Cylinder Head Gasket	Max. 10 %
At Piston and Piston Ring	Max. 20 %

Cylinder Number By Mark On Vibration Damper At TDC

TDC Mark	OT (TDC)	UT (BDC : 180°)
Cylinder Number	1, 4	2, 3

Universal Tool

Cylinder Pressure Leakage Tester	Bosch EF AW 210A Sun, CLT 228

Downloaded from www.Manualslib.com manuals search engine

Leakage Test

1. Warm the engine up to normal operating temperature.
2. Disconnect the negative battery cable.
3. Remove the spark plugs.
4. Check the coolant level by opening the coolant surge tank cap and replenish if insufficient.
5. Open the engine oil filler cap.
6. Connect the tester to air pressure line and adjust the scale of tester.
7. Install the connecting hose to spark plug hole.
8. Position the piston of No.1 cylinder at TDC by rotating the crankshaft.

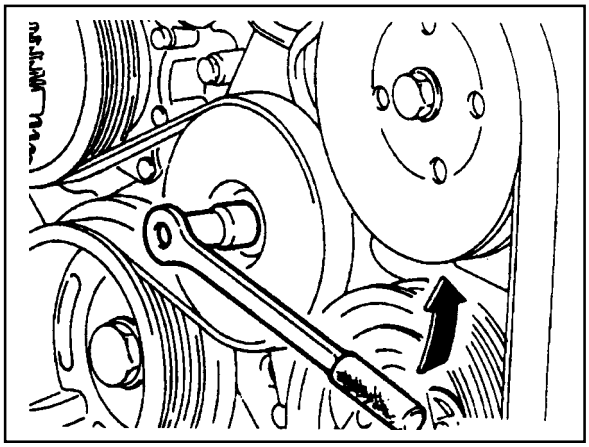

9. Connect the connecting hose to tester and measure the leakage volume after blowing up 5bar of compressed air.

   Notice

   Measure the leakage volume in the completely opening condition of throttle valve by pulling the acceleration cable.
10. Perform the pressure test according to the firing order.

    Notice

    Firing Order : 1 - 3 - 4 - 2
11. Compare the leakage pressure with the specifications.

Downloaded from www.Manualslib.com manuals search engine

GENERAL INFORMATION

CLEANLINESS AND CARE

An automobile engine is a combination of many machined, honed, polished and lapped surfaces with tolerances that are measured in the ten-thousanths of an inch. When any internal engine parts are serviced, care and cleanliness are important. A liberal coating of enigne oil should be applied to friction areas during assembly, to protect and lubricate the surfaces on initial operation. Proper cleaning and protection of machined surfaces and friction areas is part of the repair procedure. This is considered standard shop practice even if not specifically stated.

Whenever valve train components are removed for service, they should be kept in order. They should be installed in the same locations, and with the same mating surfaces, as when they were removed.

Battery cables should be disconnected before any major work is performed on the engine. Failure to disconnect cables may result in damage to wire harness or other electrical parts.

ON-ENGINE SERVICE

Caution: Disconnect the negative battery cable before removing or installing any electrical unit, or when a tool or equipment could easily come in contact with exposed electrical terminals. Disconnecting this cable will help prevent personal injury and damage to the vehicle. The ignition must also be in LOCK unless otherwise noted.

Notice: Any time the air cleaner is removed, the intake opening should be covered. This will protect against accidental entrance of foreign material, which could follow the intake passage into the cylinder and cause extensive damage when the engine is started.

Downloaded from www.Manualslib.com manuals search engine

SECTION 1

ENGINE

SECTION 1A3(OM600 ENGINE)

GENERAL ENGINE INFORMATION

TABLE OF CONTENTS

Specifications 1A3-1
Engine Specifications 1A3-1
Sectional View 1A3-3
OM662LA Engine 1A3-3
OM661LA Engine 1A3-5
Performance Curve 1A3-7
OM662LA Engine 1A3-7
OM661LA Engine 1A3-8
Special Tools 1A3-9
Special Tools Table 1A3-9
Diagnosis 1A3-10
Oil Leak Diagnosis 1A3-10
Compression Pressure Test 1A3-11
Cylinder Pressure Leakage Test 1A3-13
General Information 1A3-15
Cleanliness and Care 1A3-15
On-Engine Service 1A3-15

SPECIFICATIONS

ENGINE SPECIFICATIONS

Application			OM662LA	OM661LA
Engine Type			Four-Stroke Diesel	Four-Stroke Diesel
Displacement (CC)			2874	2299
Cylinder (Bore x Stroke) (mm)			89 x 92.4	89 x 92.4
Fuel Injection / Ignition System			PES 5 M55 C320 RS 168	PES 5 M55 C320 RS 167
Compression Ratio			22:1	22:1
Number of Cylinders			5	4
Camshaft Valve Arrangement			SOHC	SOHC
Camshaft Drive Type			Chain-Drive	Chain-Drive
Max. Output (ps/rpm)			120 / 4000	101 / 4000
Max. Torque (kg•m/rpm)			25.5 / 4000	21.5 / 2400
Firing Order			1-2-4-5-3	1-3-4-2
Injection Timing			BTDC 18°± 10°	BTDC 18°± 10°
Valve Timing (at 2mm lift)	Intake	Open/Close	ATDC 11.33° / ABDC 17°	ATDC 11.33° / ABDC 17°
	Exhaust	Open/Close	BBDC 28° / BTDC 15.25°	BBDC 28° / BTDC 15.25°
Valve Clearance Adjustment			Automatic Control	Automatic Control

Downloaded from www.Manualslib.com manuals search engine

ENGINE SPECIFICATIONS (Cont'd)

Application	OM 662 LA	OM 661 LA
Idle Speed (rpm)	720 - 820	750 - 850
Fuel Injection Pressure (bar)	135 - 143	135 - 143
Oil Capacity (liter)	8.0 - 9.5	6.5 - 8.0
Lubrication Type	Forced by Gear Pump	Forced by Gear Pump
Oil Filter Type	Combined Full-Flow and Partial Flow Filter	Combined Full-Flow and Partial Flow Filter
Fuel	Diesel	Diesel

Downloaded from www.Manualslib.com manuals search engine

SECTIONAL VIEW

OM662LA ENGINE

Front View

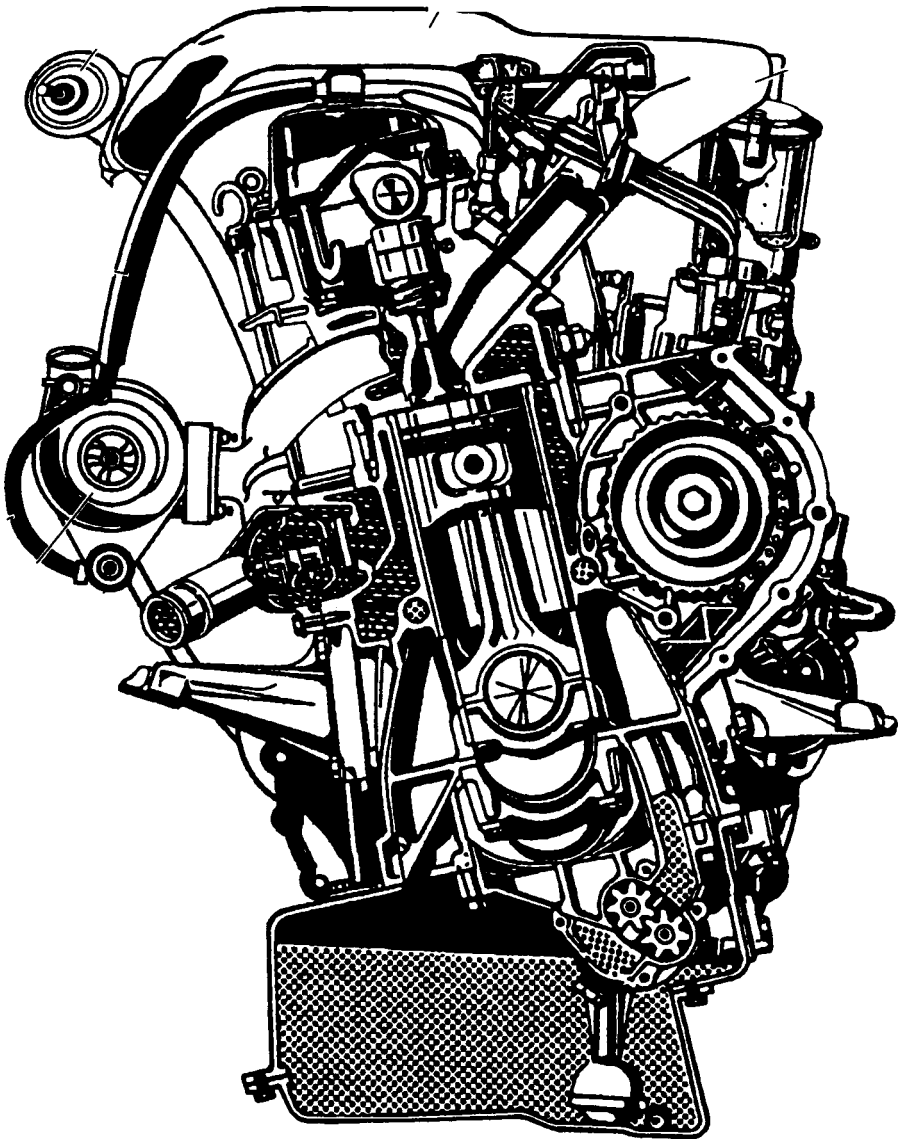

Downloaded from www.Manualslib.com manuals search engine

Side View

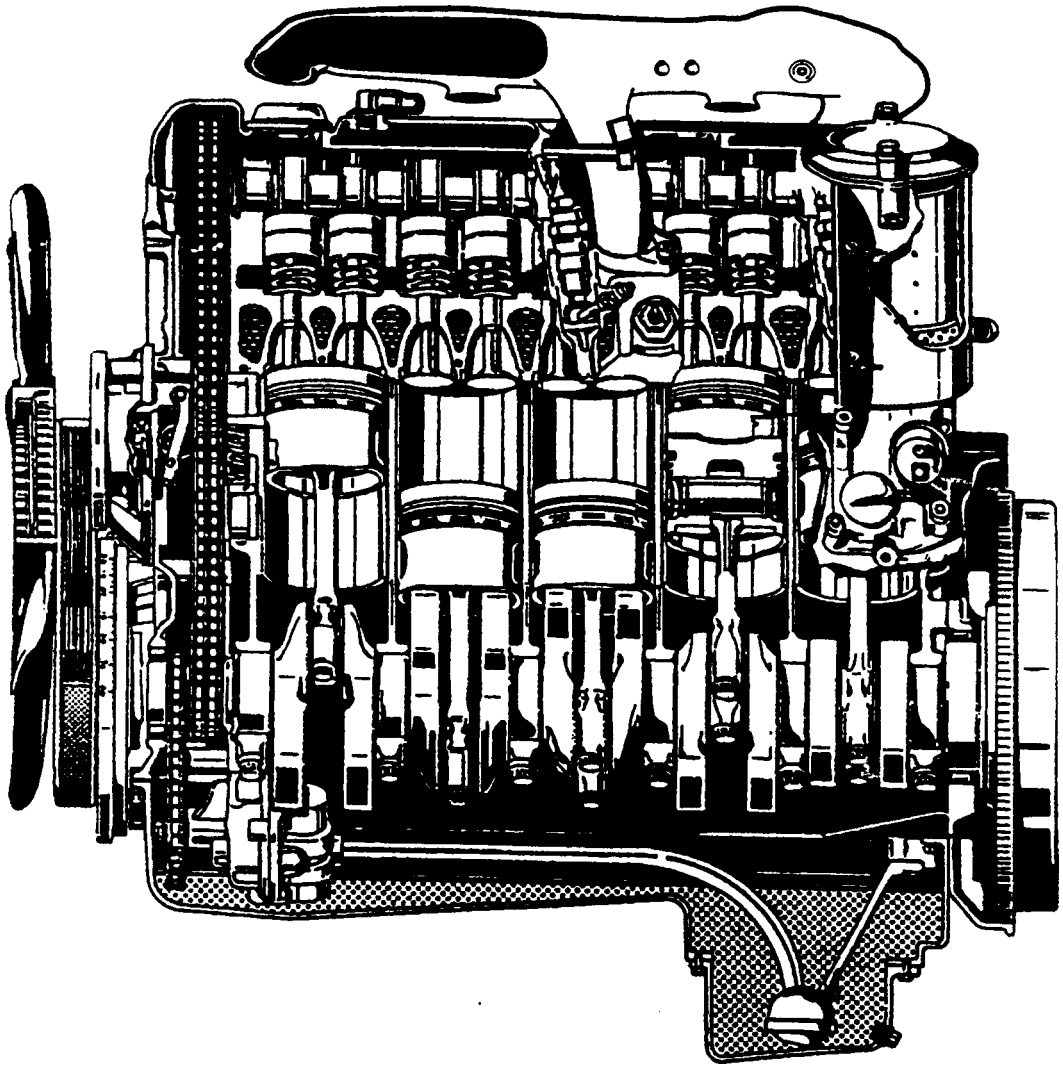

Downloaded from www.Manualslib.com manuals search engine

OM661LA ENGINE

Front View

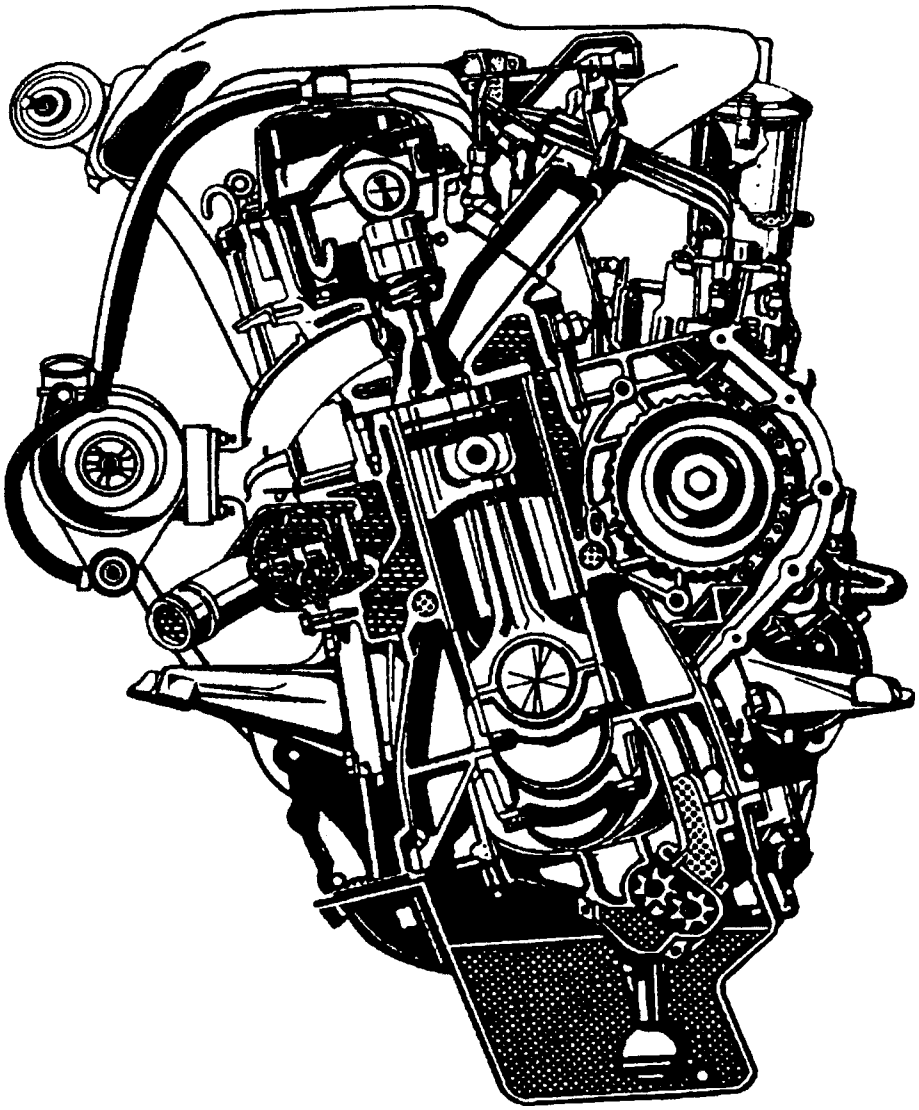

Downloaded from www.Manualslib.com manuals search engine

Side View

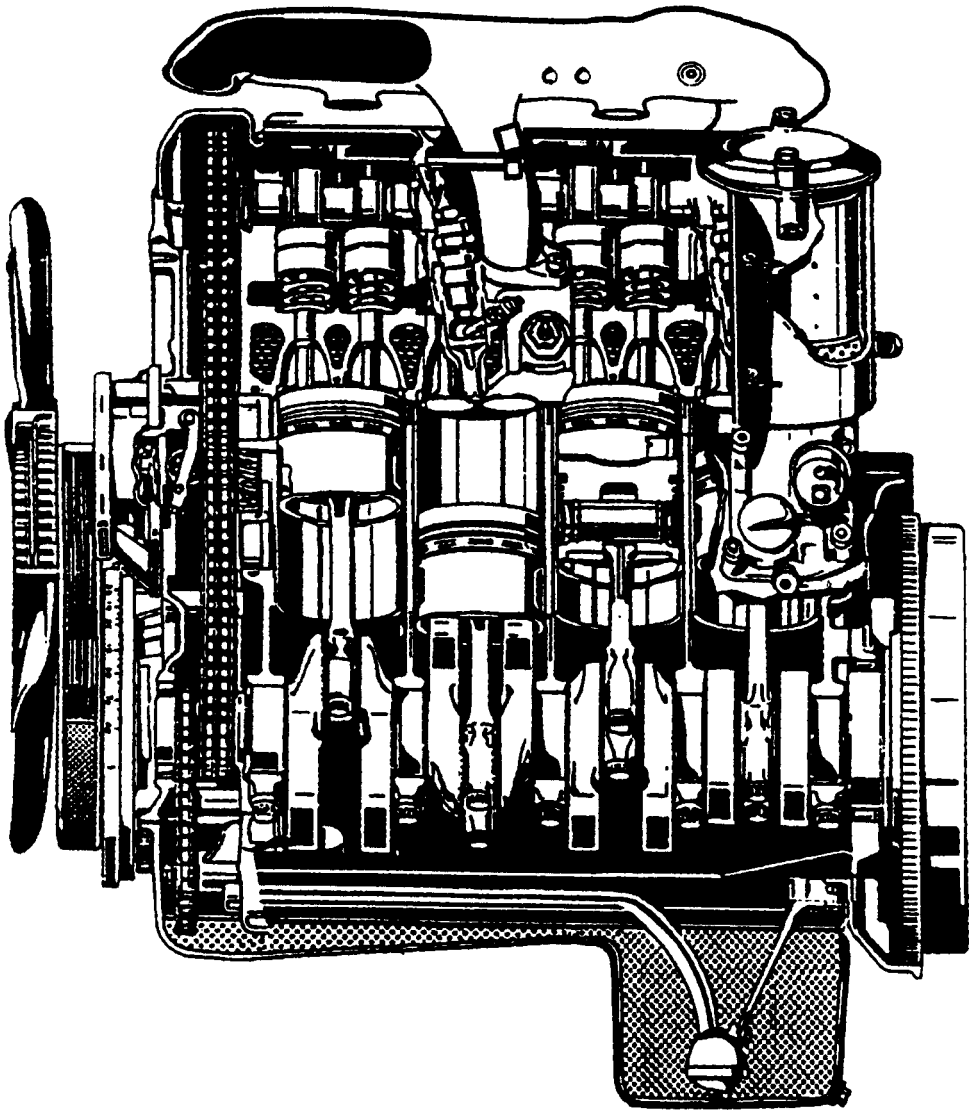

Downloaded from www.Manualslib.com manuals search engine

PERFORMANCE CURVE

OM662LA ENGINE

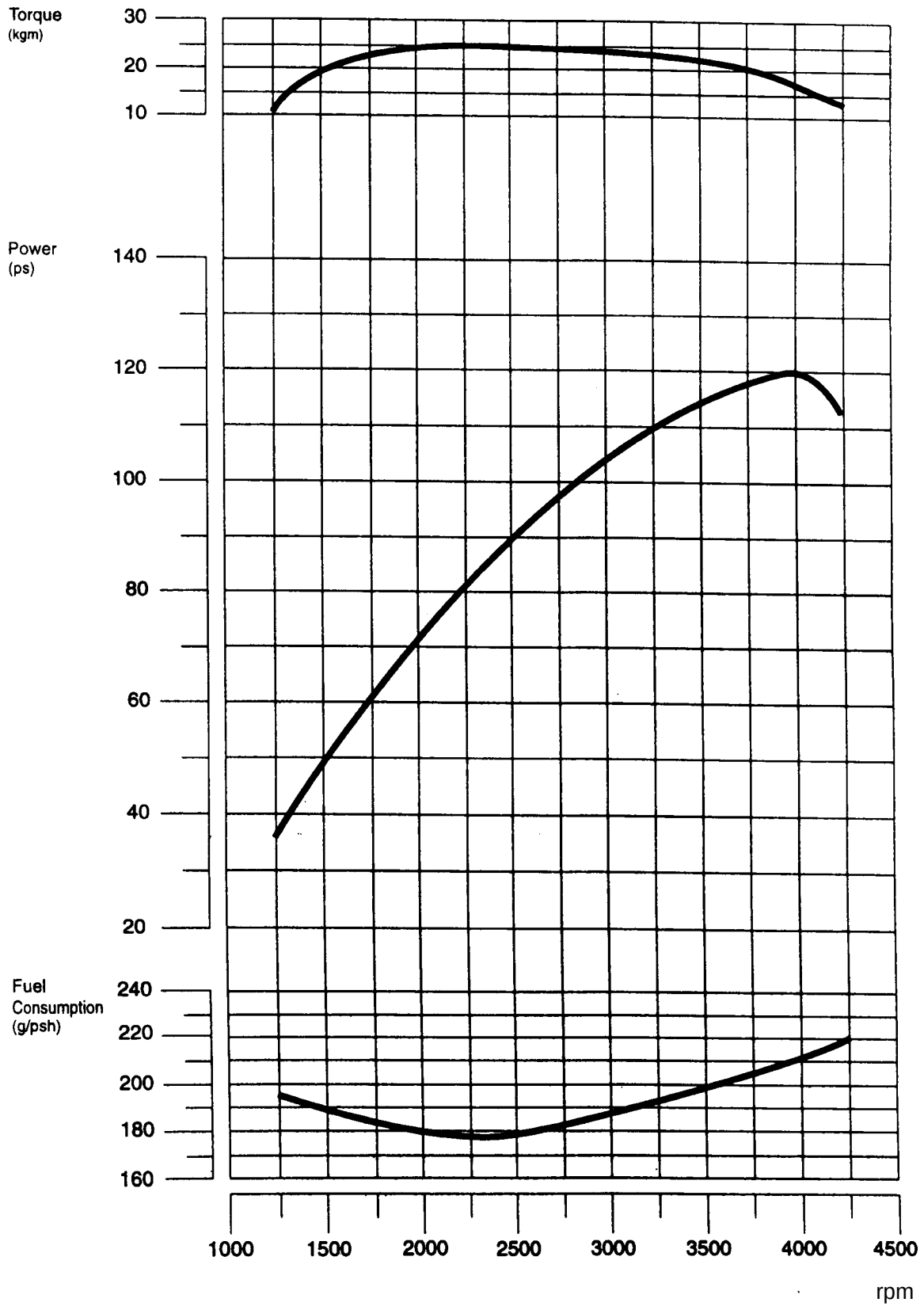

Downloaded from www.Manualslib.com manuals search engine

OM661LA ENGINE

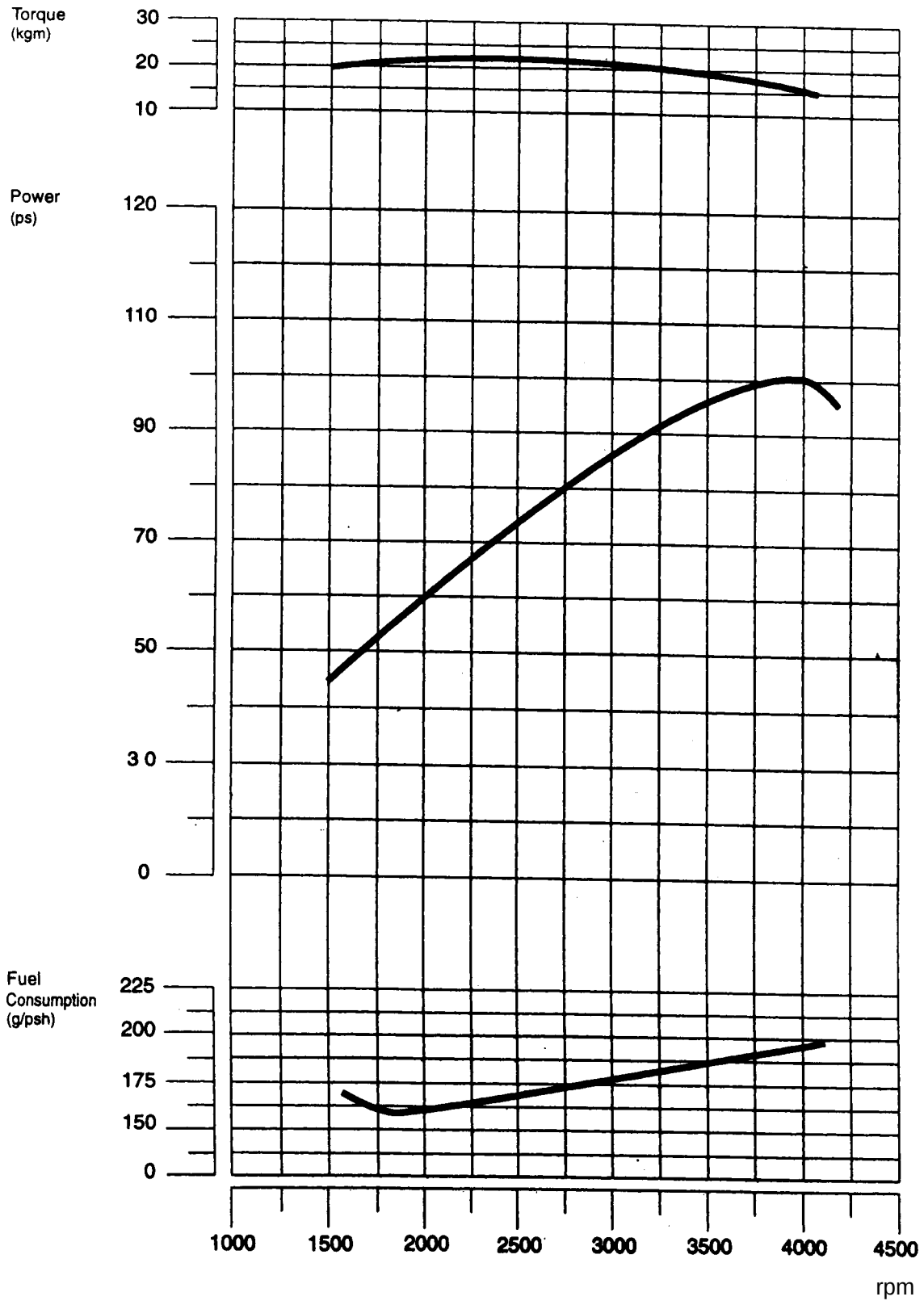

Downloaded from www.Manualslib.com manuals search engine

SPECIAL TOOLS

SPECIAL TOOLS TABLE

	000 589 10 99 01 **Torque Wrench**		**001 589 65 09 00** **Socket**
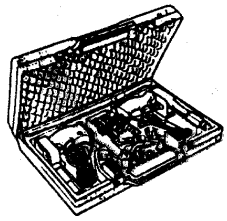	**001 589 76 21 00** **Compression Pressure Tester**	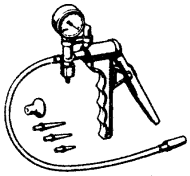	**001 589 73 21 00** **Hand Vacuum Pump**

Downloaded from www.Manualslib.com manuals search engine

DIAGNOSIS

OIL LEAK DIAGNOSIS

Most fluid oil leaks are easily located and repaired by visually finding the leak and replacing or repairing the necessary parts. On some occasions a fluid leak may be difficult to locate or repair. The following procedures may help you in locating and repairing most leaks.

Finding the Leak

1. Identify the fluid. Determine whether it is engine oil, automatic transmission fluid, power steering fluid, etc.
2. Identify where the fluid is leaking from.
   - 2.1 After running the vehicle at normal operating temperature, park the vehicle over a large sheet of paper.
   - 2.2 Wait a few minutes.
   - 2.3 You should be able to find the approximate location of the leak by the drippings on the paper.
3. Visually check around the suspected component. Check around all the gasket mating surfaces for leaks. A mirror is useful for finding leaks in areas that are hard to reach.
4. If the leak still cannot be found, it may be necessary to clean the suspected area with a degreaser, steam or spray solvent.
   - 4.1 Clean the area well.
   - 4.2 Dry the area.
   - 4.3 Operate the vehicle for several miles at normal operating temperature and varying speeds.
   - 4.4 After operating the vehicle, visually check the suspected component.
   - 4.5 If you still cannot locate the leak, try using the powder or black light and dye method.

Powder Method

1. Clean the suspected area.
2. Apply an aerosol-type powder (such as foot powder) to the suspected area.
3. Operate the vehicle under normal operating conditions.
4. Visually inspect the suspected component. You should be able to trace the leak path over the white powder surface to the source.

Black Light and Dye Method

A dye and light kit is available for finding leaks, Refer to the manufacturer's directions when using the kit.

1. Pour the specified amount of dye into the engine oil fill tube.
2. Operate the vehicle normal operating conditions as directed in the kit.
3. Direct the light toward the suspected area. The dyed fluid will appear as a yellow path leading to the source.

Repairing the Leak

Once the origin of the leak has been pinpointed and traced back to its source, the cause of the leak must be determined n order for it to be repaired properly. If a gasket is replaced, but the sealing flange is bent, the new gasket will not repair the leak. The bent flange must be repaired also. Before attempting to repair a leak, check for the following conditions and correct them as they may cause a leak.

Gaskets

- The fluid level/pressure is too high.
- The crankcase ventilation system is malfunctioning.
- The fasteners are tightened improperly or the threads are dirty or damaged.
- The flanges or the sealing surface is warped.
- There are scratches, burrs or other damage to the sealing surface.
- The gasket is damaged or worn.
- There is cracking or porosity of the component.
- An improper seal was used (where applicable).

Seals

- The fluid level/pressure is too high.
- The crankcase ventilation system is malfunctioning.
- The seal bore is damaged (scratched, burred or nicked).
- The seal is damaged or worn.
- Improper installation is evident.
- There are cracks in the components.
- The shaft surface is scratched, nicked or damaged.
- A loose or worn bearing is causing excess seal wear.

Downloaded from www.Manualslib.com manuals search engine

COMPRESSION PRESSURE TEST

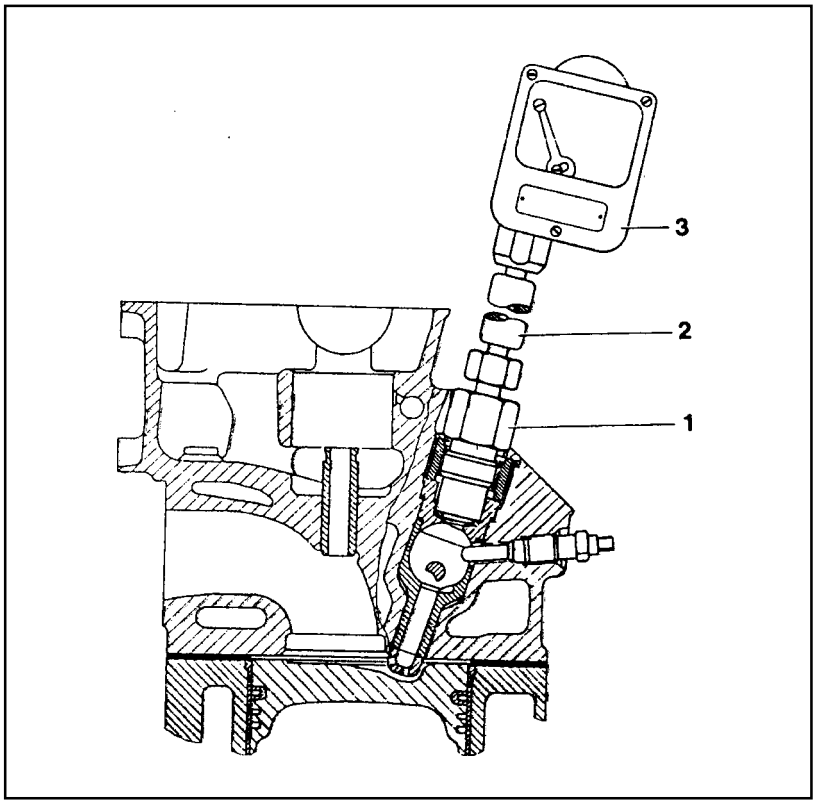

1 Test Adapter
2 Flexible Connector
3 Compression Pressure Recorder

Service Data

Normal Compression Pressure	28bar
Minimum Compression Pressure	Approx.18bar
Permissible Pressure Difference Between Individual Cylinders	Max. 3bar

●Engine at normal operating temperature of 80°C

Tools Required

000 589 65 09 00 Socket

001 589 73 21 00 Hand Vacuum Pump

Downloaded from www.Manualslib.com manuals search engine

Compression Pressure Measurement

Notice

Ensure that no gear is engaged and that the vehicle is protected from rolling.

1. Run the engine to be the coolant temperature 80°C.
2. Remove the fuel injection nozzle.

Socket Wrench Insert 001 589 65 09 00

3. Install the test adapter (1) and connect the flexible connector (2) to the compression pressure recorder.

Compression Pressure Recorder 001 589 76 21 00

4. Disconnect the vacuum line from the stop unit and connect the hand vacuum pump to the stop unit.
5. Pump the hand vacuum pump and make the fuel injection pump in stop position.

Operating Pressure	Approx. 500bar

Hand Vacuum Pump 001 589 73 21 00

6. Using a starter motor, crank the engine 8 revolutions.
7. Measure the remaining cylinder compression pressure in the same manner and compare it with service data.

Notice

If out of standard, do cylinder pressure leakage test.

8. Remove the compression pressure recorder.
9. Install the fuel injection nozzle.

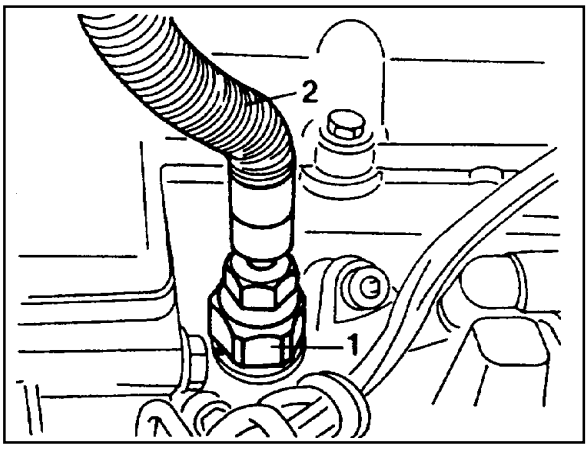

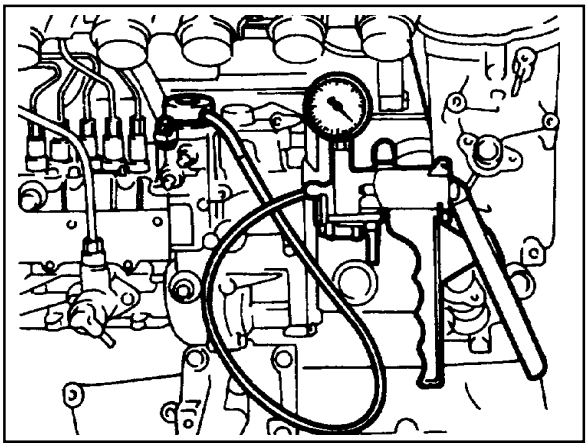

Downloaded from www.Manualslib.com manuals search engine

CYLINDER PRESSURE LEAKAGE TEST

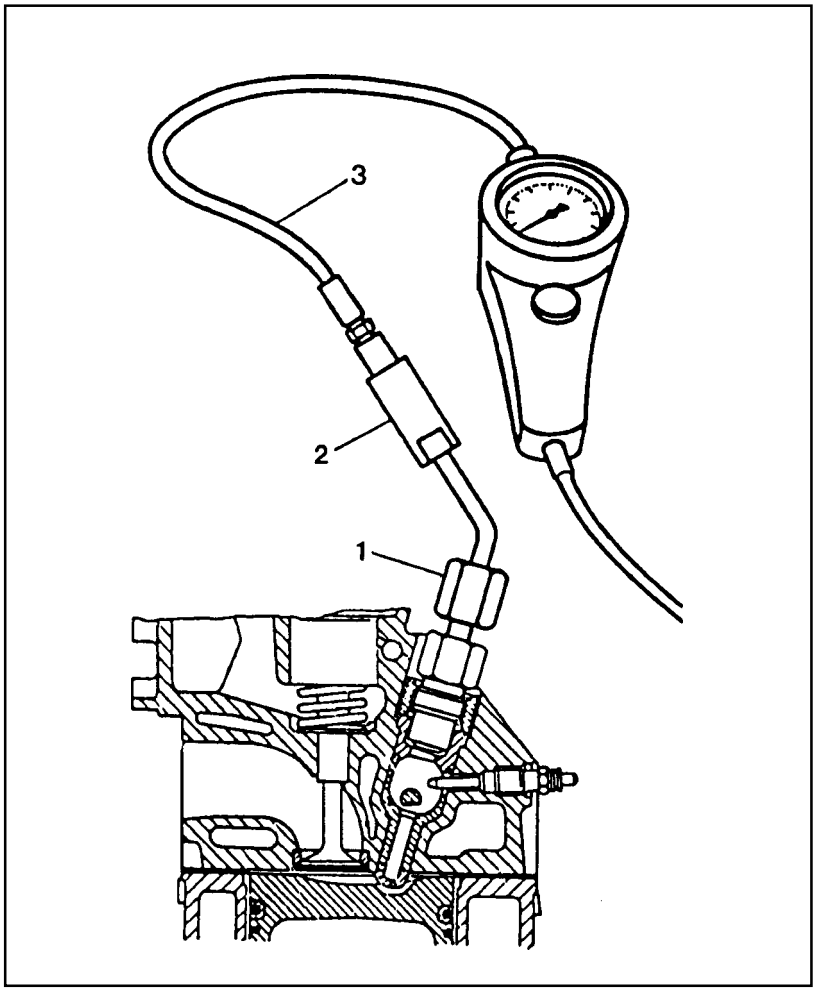

1 Connector
2 Connection Piece
3 Connection Hose

Permissible Pressure Leakage (Engine at Normal Operating Temperature of 80°C)

At Whole Engine	Max. 25 %
At Valve and Cylinder Head Gasket	Max. 10 %
At Piston and Piston Ring	Max. 20 %

Commercial Tools

Cylinder Pressure Leakage tester	BOSCH, EFAW 210 A or SUN CLT 228
Connection Piece	BOSCH order no. 1 687 010 016

Downloaded from www.Manualslib.com manuals search engine

Leakage Test

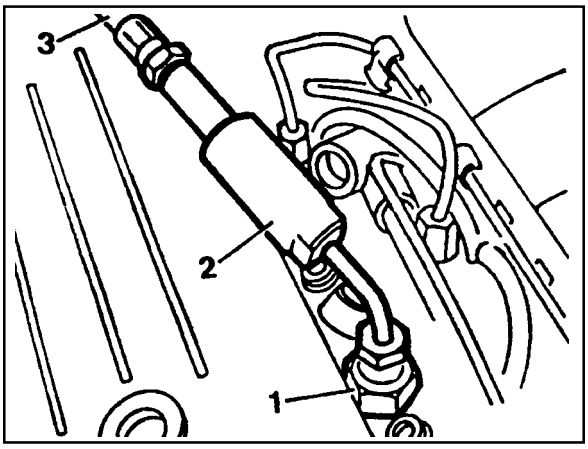

1. Run the engine to be the coolant temperature 80°C.
2. Remove the fuel injection nozzle.
3. Open the coolant subtank cap.
4. Check the coolant level and replenish if necessary.
5. Open the oil filler cap.
6. Remove the air cleaner cover and element.
7. Position the piston at TDC.
8. Install the connector (1) and connection piece (2).
9. Calibrate the tester and connect the connection hose (3)
10. Pressurize with compressed air and compare the pressure changes with permissible pressure leakage.
11. If permissible pressure leakage is out of standard, check followings :
    - Intake and exhaust lines.
    - Sounds in oil filler area.
    - Air bubbles in radiator coolant.
12. Do pressure leakage test for the remaining cylinders according to the firing order.
    - OM 662LA Engine : 1-2-4-5-3
    - OM 661LA Engine : 1-3-4-2
13. Remove the tester.
14. Close the coolant pressure cap and oil filler cap.
15. Install the air cleaner element and cover.
16. Install the fuel injection nozzle.

Downloaded from www.Manualslib.com manuals search engine

GENERAL INFORMATION

CLEANLINESS AND CARE

An automobile engine is a combination of many machined, honed, polished and lapped surfaces with tolerances that are measured in the ten-thousanths of an inch. When any internal engine parts are serviced, care and cleanliness are important. A liberal coating of enigne oil should be applied to friction areas during assembly, to protect and lubricate the surfaces on initial operation. Proper cleaning and protection of machined surfaces and friction areas is part fo the repair procedure. This is considered standard shop practice even if not specifically stated.

Whenever valve train components are removed for service, they should be kept in order. They should be installed in the same locations, and with the same mating surfaces, as when they were removed.

Battery cables should be disconnected before any major work is performed on the engine. Failure to disconnect cables may result in damage to wire harness or other electrical parts.

ON-ENGINE SERVICE

Caution: Disconnect the negative battery cable before removing or installing any electrical unit, or when a tool or equipment could easily come in contact with exposed electrical terminals. Disconnecting this cable will help prevent personal injury and damage to the vehicle. The ignition must also be in LOCK unless otherwise noted.

Notice: Any time the air cleaner is removed, the intake opening should be covered. This will protect against accidental entrance of foreign material, which could follow the intake passage into the cylinder and cause extensive damage when the engine is started.

Downloaded from www.Manualslib.com manuals search engine

SECTION 1B1

M162 ENGINE MECHANICAL

CAUTION: Disconnect the negative battery cable before removing or installing any electrical unit or when a tool or equipment could easily come in contact with exposed electrical terminals. Disconnecting this cable will help prevent personal injury and damage to the vehicle. The ignition must also be in LOCK unless otherwise noted.

TABLE OF CONTENTS

Specifications 1B1-2
Fastener Tightening Specifications 1B1-2
Special Tools 1B1-4
Special Tools Table 1B1-4
Maintenance and Repair 1B1-8
On-Vehicle Service 1B1-8
Engine Assembly 1B1-8
Crankcase Ventilation System 1B1-15
Alternator 1B1-17
Power Steering Pump and A/C Bracket . . . 1B1-18
Hydraulic Engine Mounting Insulator 1B1-21
Poly V-Belt 1B1-24
Tensioning Device 1B1-26
Poly V-Belt Inspection 1B1-28
Cylinder Head Cover 1B1-30
Cylinder Head Front Cover 1B1-32
Cylinder Head 1B1-34
Timing Gear Case Cover 1B1-37
Crankshaft Sealing Rear Cover 1B1-39
Belt Pulley and Vibration Damper 1B1-41
Crankshaft Front Radial Seal 1B1-44
Crankshaft Rear Radial Seal 1B1-45
Crankshaft 1B1-46
Flywheel / Driven Plate 1B1-52
Camshaft Adjuster 1B1-54
Camshaft Sprocket Bolt 1B1-57
Camshaft 1B1-58
Camshaft Timing Position 1B1-63
Valve Spring 1B1-66
Valve Stem Seal 1B1-70
Chain Tensioner 1B1-71
Timing Chain 1B1-74
Tensioning Rail 1B1-79
Cylinder Head Guide Rail 1B1-80
Crankcase Guide Rail 1B1-81
Crankshaft Sprocket 1B1-82
Piston 1B1-84
Connecting Rod 1B1-87
Piston Ring 1B1-89
Oil Pan 1B1-91
Engine Oil and Oil Filter Element 1B1-93
Oil Filter 1B1-95
Oil Pump 1B1-97
Oil Pressure Relief Valve 1B1-99
Oil Non-Return Valve 1B1-100
Oil Dipstick Guide Tube 1B1-101
Unit Repair 1B1-102
Oil Gallery in Crankcase 1B1-102
Oil Gallery in Cylinder Head 1B1-104
Core Plugs in Crankcase 1B1-107
Cylinder Bore 1B1-109
Crankcase Mating Surface 1B1-111
Cylinder Head Mating Surface 1B1-113

Downloaded from www.Manualslib.com manuals search engine

SPECIFICATIONS

FASTENER TIGHTENING SPECIFICATIONS

Application		N·m
Power Steering Hydraulic Lines		35 - 40
A/C High Pressure and Liquid Hose		10 - 15
Radiator Support Menber Bolt		5 - 10
Fuel Supply and Return Hose to Fuel Distributor		21 - 25
Exhaust Manifold and Pipe		30
Propeller Shaft to Transmission		56 - 66
Engine Mounting Nut		50 - 60
Alternator Carrier Bolt		10 - 15
Belt Pulley Bolt		41.5 - 49.5
Steering Pump Bolt		22.5 - 27.5
A/C Bracket Bolt		22.5 - 27.5
Intake Air Duct Bolt		9 - 11
Ignition Cable Cover Bolt		9 - 11
Cylinder Head Cover Bolt		22.5 - 27.5
Camshaft Adjuster Bolt		9 - 11
Cylinder Head Front Cover Bolt		22.5 - 27.5
Flange Bolt in Exhaust Camshaft Sprocket		10 +90°
Cylinder Head Bolt		55 +90° +90°
Cooling Fan Bracket Bolt		22.5 - 27.5
Timing Gear Case Cover Bolt	M8	22.5 - 27.5
	M6	9 - 10
Crankshaft Rear Cover Bolt		9-10
Vibration Damper Center Bolt		200 +90°
Connecting Rod Bearing Cap Bolt		40 +90°
Flywheel Stretch Bolt		45 +90°
Amarture Bolt in Flywheel		35
Ring and Seal Cover Nut in Flywheel		9 - 11
Sprocket Bolt to Exhaust Camshaft		20 +90°
Camshaft Adjuster Flange Bolt		20 +90°
Intake Flange Shaft Bolt		20 / +90°
Exhaust Camshaft Sprocket Bolt		20 / +90°
Camshaft Bearing Cap Bolt		22.5 - 27.5

Downloaded from www.Manualslib.com manuals search engine

FASTENER TIGHTENING SPECIFICATIONS (Cont'd)

Application	N·m
Exhaust Camshaft Sproket Bolt	20 / +90°
Chain Tensioner Screw Plug	40
Chain Tensioner Assembly	72 - 88
Exhaust Camshaft Sprocket to Camshaft	20 / +90°
Oil Pump Sprocket Bolt	25 - 35
Tensioning Device Bolt	22.5 - 27.5
Water Pump Pulley	22.5 - 27.5
Upper Intake Manifold Bolt	22.5 - 27.5
Lower Intake Mainfold Bolt	22.5 - 27.5
Flange Bolt to Exhaust Mainfold	30
Exhaust Mainfold Nut to Stud Bolt	26 - 34
Rivet Nut in Exhuast Mainfold Hole	30
Pre-silencer Bolt	8 - 10
Oil Drain Plug	25
Oil Filter Cover	25
Oil Filter Bolt	22.5 - 27.5
Oil Pump Drive Sprocket Bolt	29 - 35
Oil Pump Mounting Bolt	22.5 - 27.5
Oil Strainer Bracket Bolt	9 - 11
Oil Pressure Relief Valve Screw Plug	50
Oil Dipstick Guide Tube Bolt	9 - 11
Oil Gallery Screw Plug	15

Downloaded from www.Manualslib.com manuals search engine

SPECIAL TOOLS

SPECIAL TOOLS TABLE

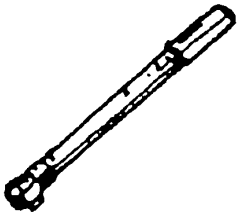	**000 589 10 99 01** **Torque Wrench**	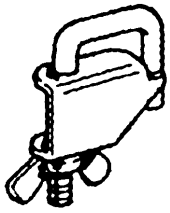	**000 589 40 37 00** **Hose Clamp**
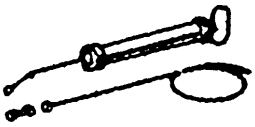	**112 589 00 72 00** **Oil Extractor**	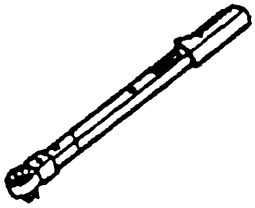	**000 589 72 21 00** **Torque Wrench**
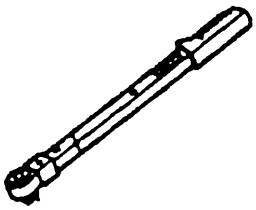	**001 589 66 21 00** **Torque Wrench**	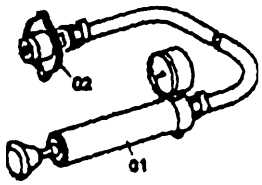	**124 589 15 21 00** **Radiator Cap** **Testing Unit**
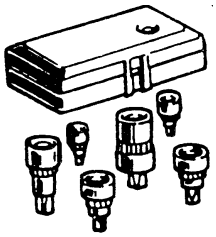	**000 589 01 10 00** **Box Wrench Insert**	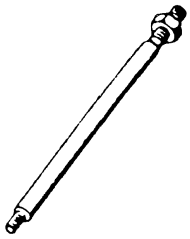	**116 589 02 34 00** **Screw-Fixed Pin**

Downloaded from www.Manualslib.com manuals search engine

SPECIAL TOOLS TABLE (Cont'd)

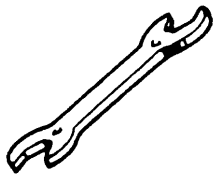	**104 589 01 01 00** **Spanner**	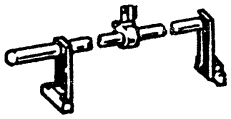	**111 589 01 59 00** **Supporting Bar**
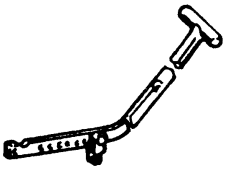	**111 589 18 61 00** **Lever Pusher**		**111 589 25 63 00** **Thrust Piece**
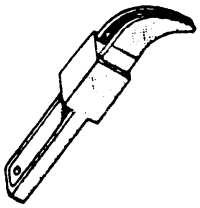	**116 589 06 63 00** **Magnetic Finger**		**104 589 00 37 00** **Pliers**
	119 589 00 43 00 **Drift**	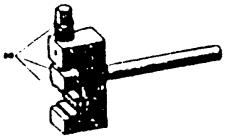	**000 589 58 43 00** **Chain Assembly**

Downloaded from www.Manualslib.com manuals search engine

SPECIAL TOOLS TABLE (Cont'd)

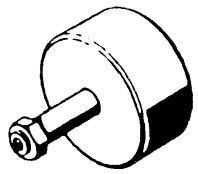	**116 589 20 33 00** **Sliding Hammer**	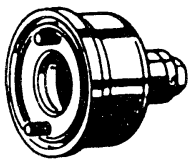	**601 589 03 43 00** **Sleeve**
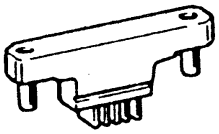	**602 589 00 40 00** **Engine Lock**	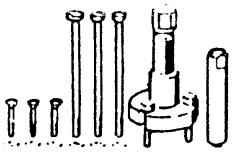	**103 589 00 33 00** **Puller**
	001 589 65 09 00 **Socket Wrench Insert**	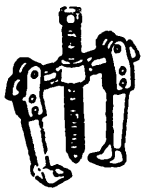	**000 589 88 33 00** **Puller**
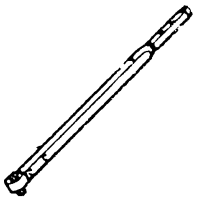	**001 589 74 21 00** **Torque Wrench**	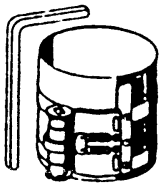	**000 589 04 14 00** **Clamping Strap**

Downloaded from www.Manualslib.com manuals search engine

SPECIAL TOOLS TABLE (Cont'd)

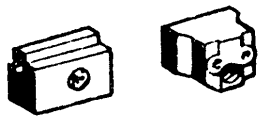	**103 589 01 63 00** **Rivet Set**	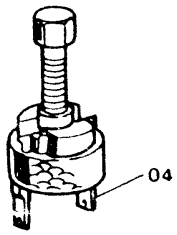	**615 589 01 33 00** **Caulking Bolt**
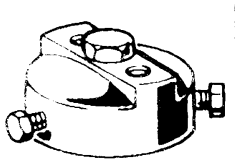	**103 589 02 09 00** **Oil Filter** **Socket Wrench**		**102 589 12 15 00** **Drift**
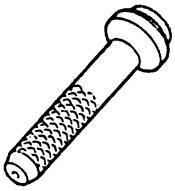	**102 589 00 15 00** **Drift**	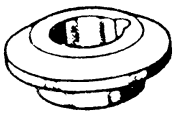	**601 589 03 14 00** **Sleeve**
	000 589 51 37 00 **Clamping Strap**		**001 589 72 21 00** **Torque Wrench**

Downloaded from www.Manualslib.com manuals search engine

MAINTENANCE AND REPAIR

ON-VEHICLE SERVICE

ENGINE ASSEMBLY

Tools Required

000 589 10 99 01 Torque Wrench
000 589 40 37 00 Hose Clamp
112 589 00 72 00 Oil Extractor
000 589 72 21 00 Torque Wrench
001 589 66 21 00 Torque Wrench
124 589 15 21 00 Radiator Cap Testing Unit

Removal & Installation Procedure

1. Disconnect the negative terminal of battery.
2. Remove the hood.
3. Remove the under cover.

Installation Notice

Tightening Torque	28 - 47 Nm

4. Disconnect the coupling of HFM sensor and remove the air cleaner cross pipe.

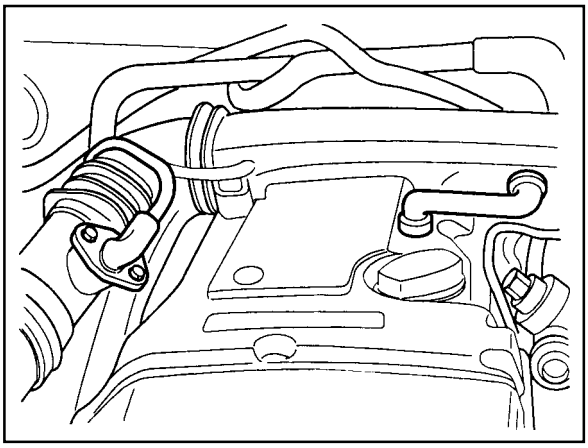

5. Remove the air cleaner cover. Remove the mounting bolts and air cleaner housing and element assembly.

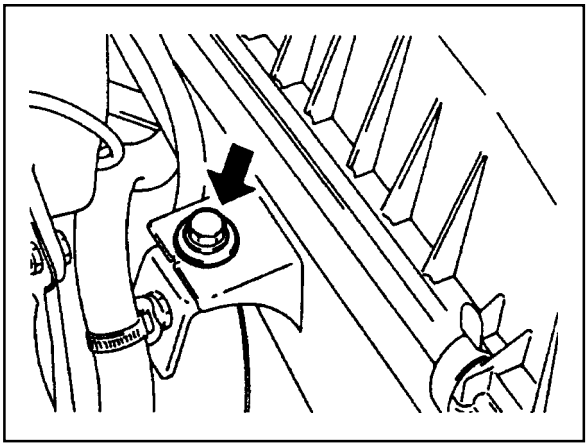

Downloaded from www.Manualslib.com manuals search engine

6. Loosen the radiator drain cock and drain the coolant.

   Notice

   Open the coolant reservoir cap.

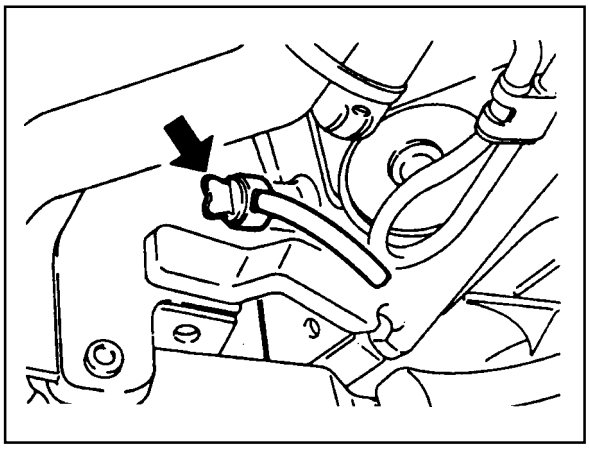

7. Loosen the cylinder block drain plug and then drain the coolant completely.

   Installation Notice

Tightening Torque	30 Nm

   Notice

   Replace the seal before installation of the drain plug.

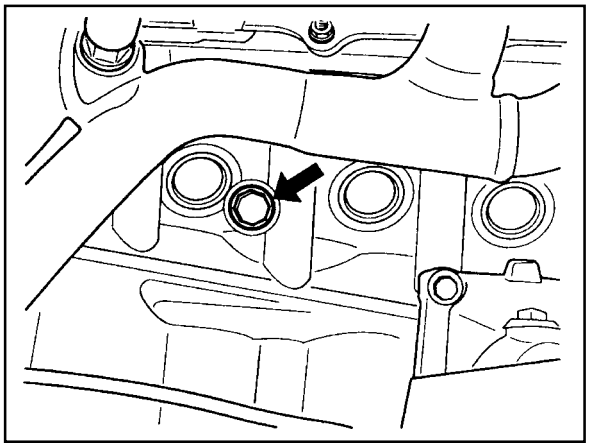

8. Remove the cooling fan shroud.

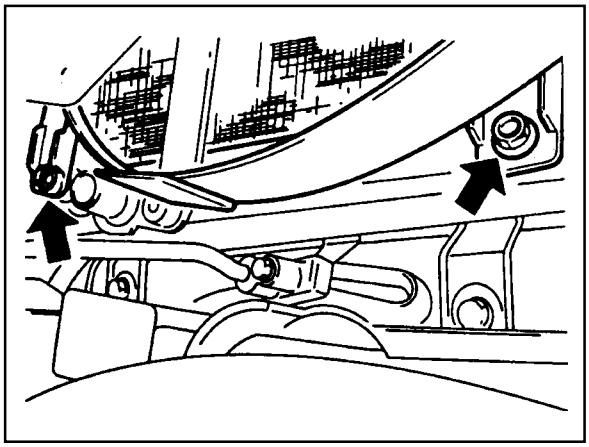

9. Disconnect the each hose from radiator.

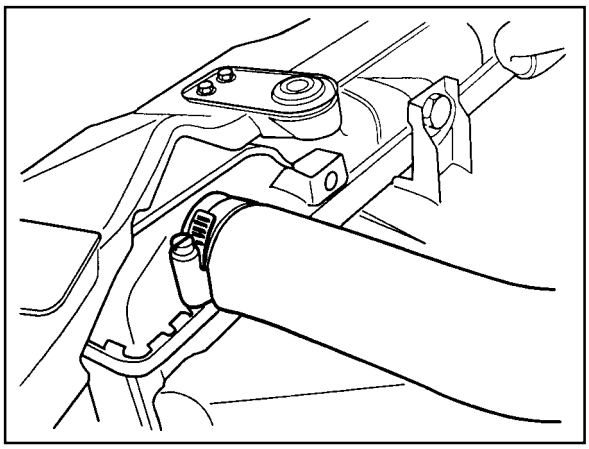

Downloaded from www.Manualslib.com manuals search engine

10. Remove the upper mounting bolts of radiator and then remove the radiator.

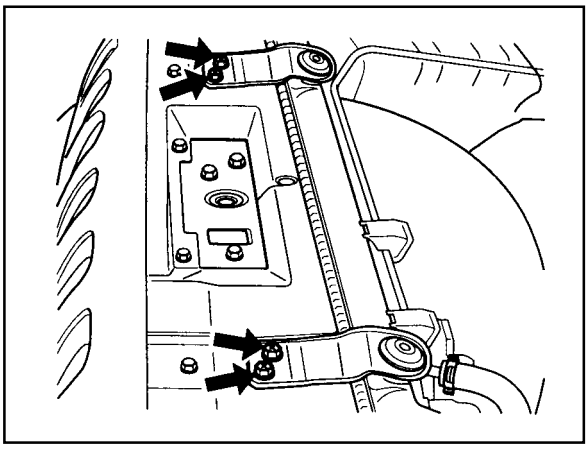

11. Remove the hydraulic pipe of power steering.

    Notice

    Completely drain the oil.

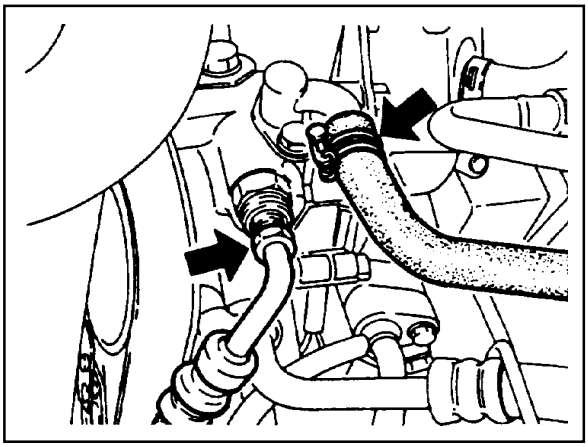

12. Discharge the refrigerant from A/C system, and disconnect the discharge pipe and suction pipe from the compressor.

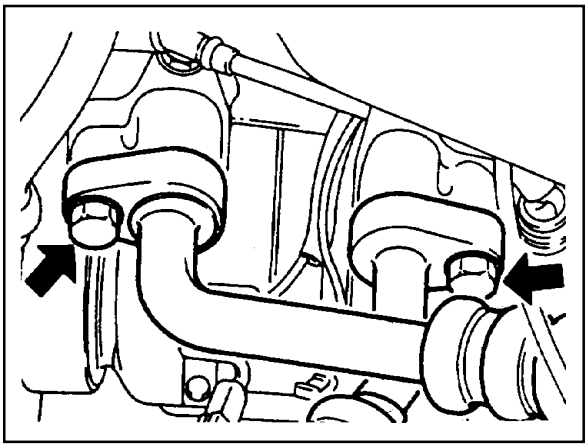

13. Remove the acceleration control cable and automatic transmission pressure cable.

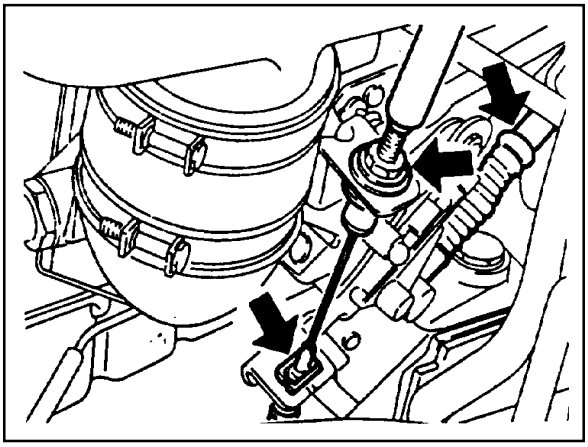

Downloaded from www.Manualslib.com manuals search engine

14. Remove the fuel feed and return line.

Notice

Before removing the fuel lines, release the pressure in the fuel system.

Installation Notice

Tightening Torque	21 - 25 Nm

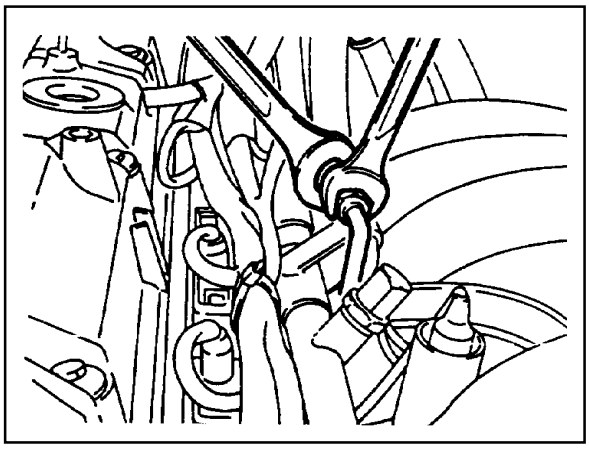

15. Remove the automatic transmission dipstick guide tube.

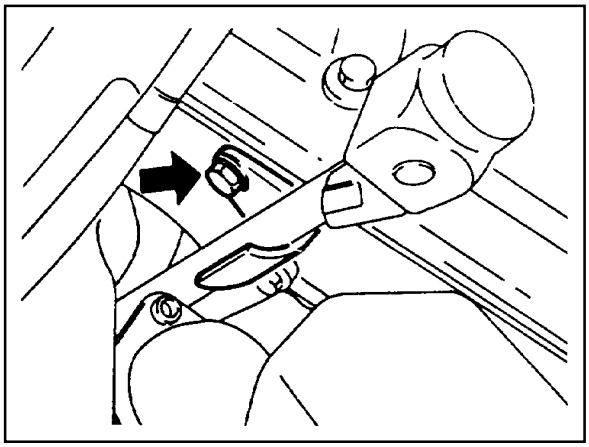

16. Disconnect the wire of alternator.

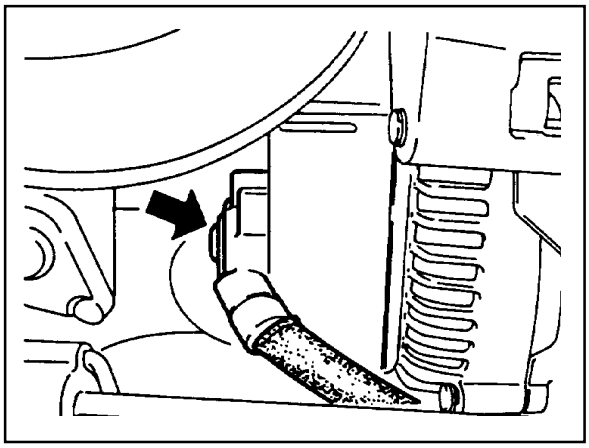

17. Disconnect the wire of starter motor and remove the starter motor.
18. Disconnect the engine main harness ground.

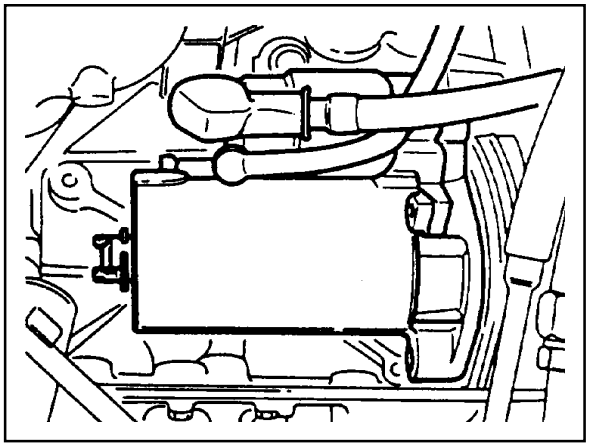

Downloaded from www.Manualslib.com manuals search engine

19. Disconnect the engine ground wire.
20. Disconnect following sensors connector.
    - HFM sensor.
    - Coolant temperature sensor.
    - 2 knock sensors.
    - Camshaft and crankshaft sensors.

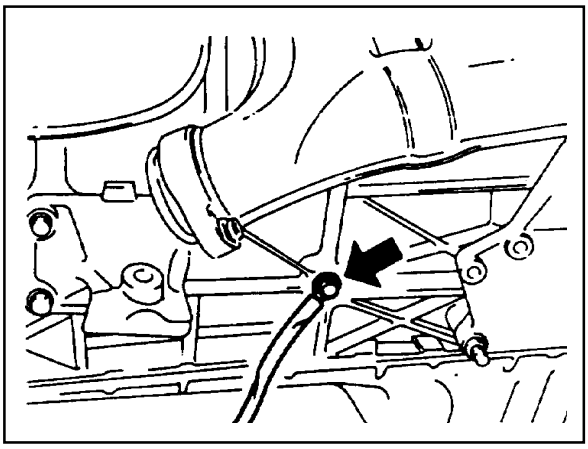

21. After removing the ignition coil cover, disconnect the ignition coil connector.
22. Remove the harness cover and disconnect the 6 injection valve connectors. Disconnect the main harness

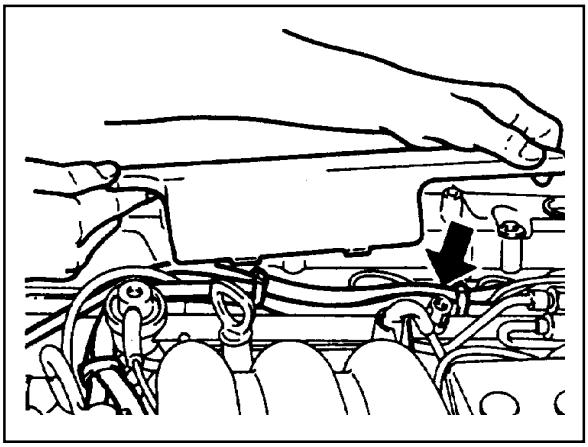

23. Separate the hose toward engine from canister purge solenoid valve.

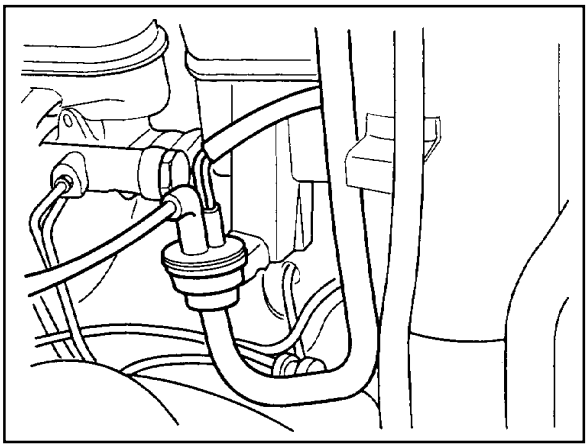

24. Remove the automatic transmission oil cooler line.

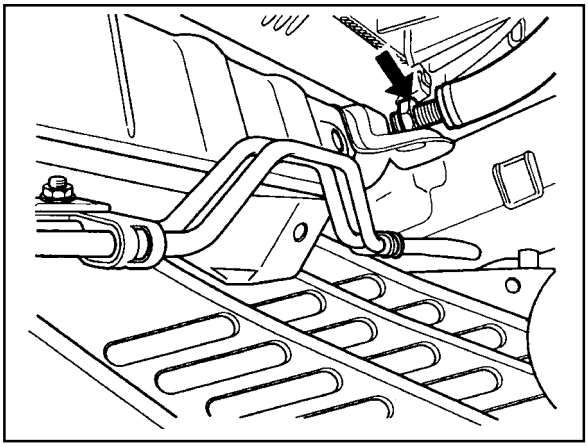

Downloaded from www.Manualslib.com manuals search engine

25. Separate the vacuum hose for brake booster.
26. Separate the other vacuum hoses.

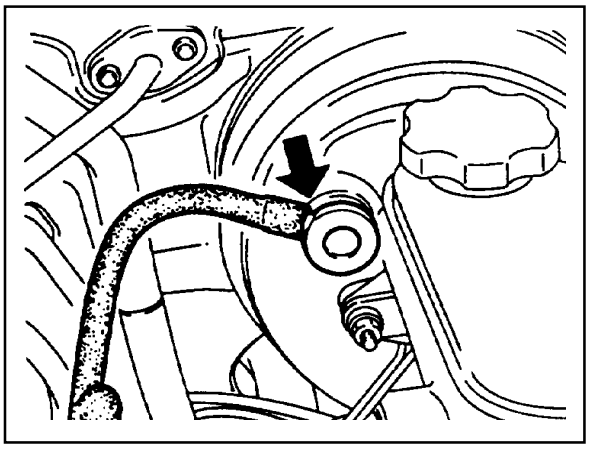

27. Remove the propeller shaft from the front axle.

Installation Notice

Tightening Torque	81 - 89 Nm

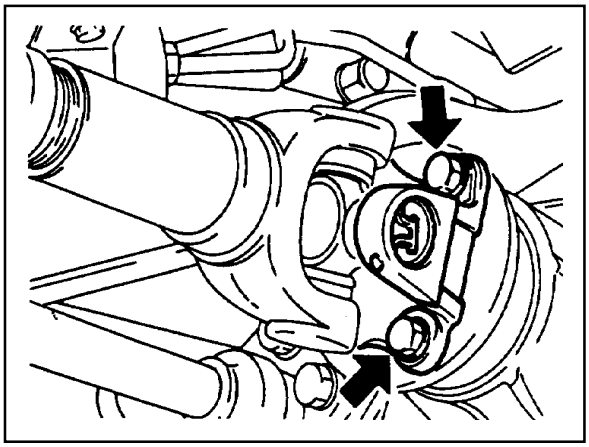

28. By rotating the crankshaft from the front of engine, remove the 6 torque converter mounting bolts from the engine ring gear plate.

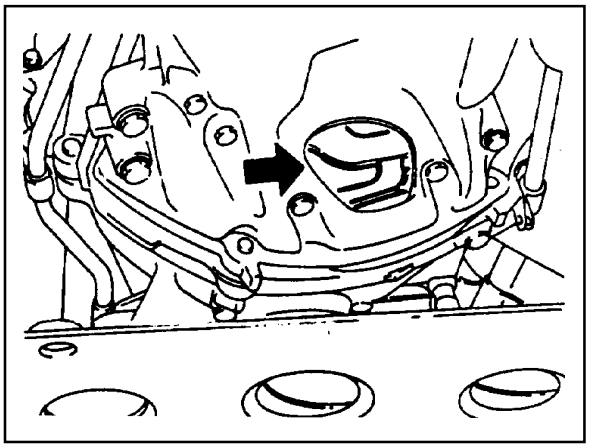

29. Remove the exhaust manifold and exhaust pipe.

Installation Notice

Tightening Torque	30 Nm

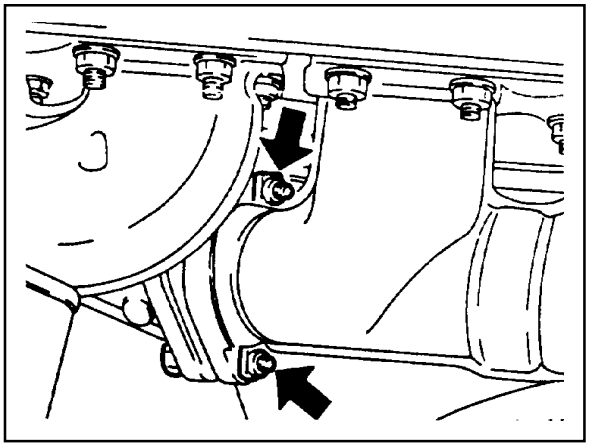

Downloaded from www.Manualslib.com manuals search engine

30. Remove the transmission mounting bolts and separate the transmission from the engine.

Installation Notice

Tightening Torque	65 Nm

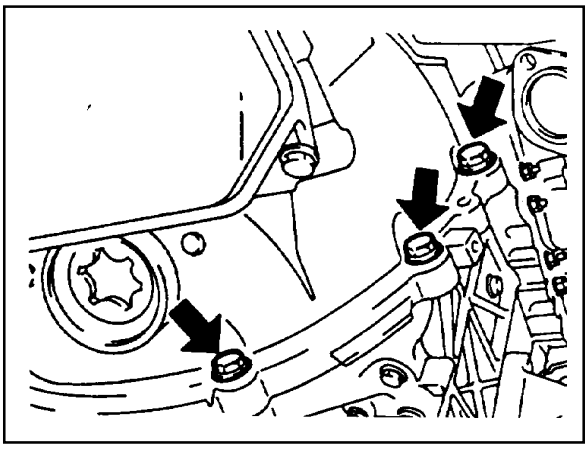

31. Remove the bolts for engine mounting bracket.

Installation Notice

Tightening Torque	50 - 75 Nm

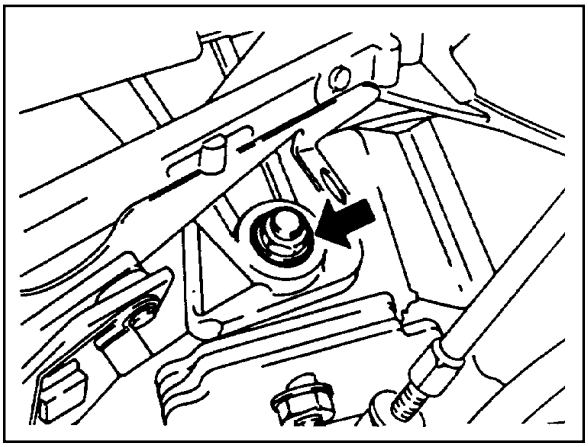

32. Hook the chain to the bracket of engine and by using a hoist or crane, carefully separate the engine assembly from the vehicle.
33. Installation should follow the removal procedure in the reverse order.

Downloaded from www.Manualslib.com manuals search engine

CRANKCASE VENTILATION SYSTEM

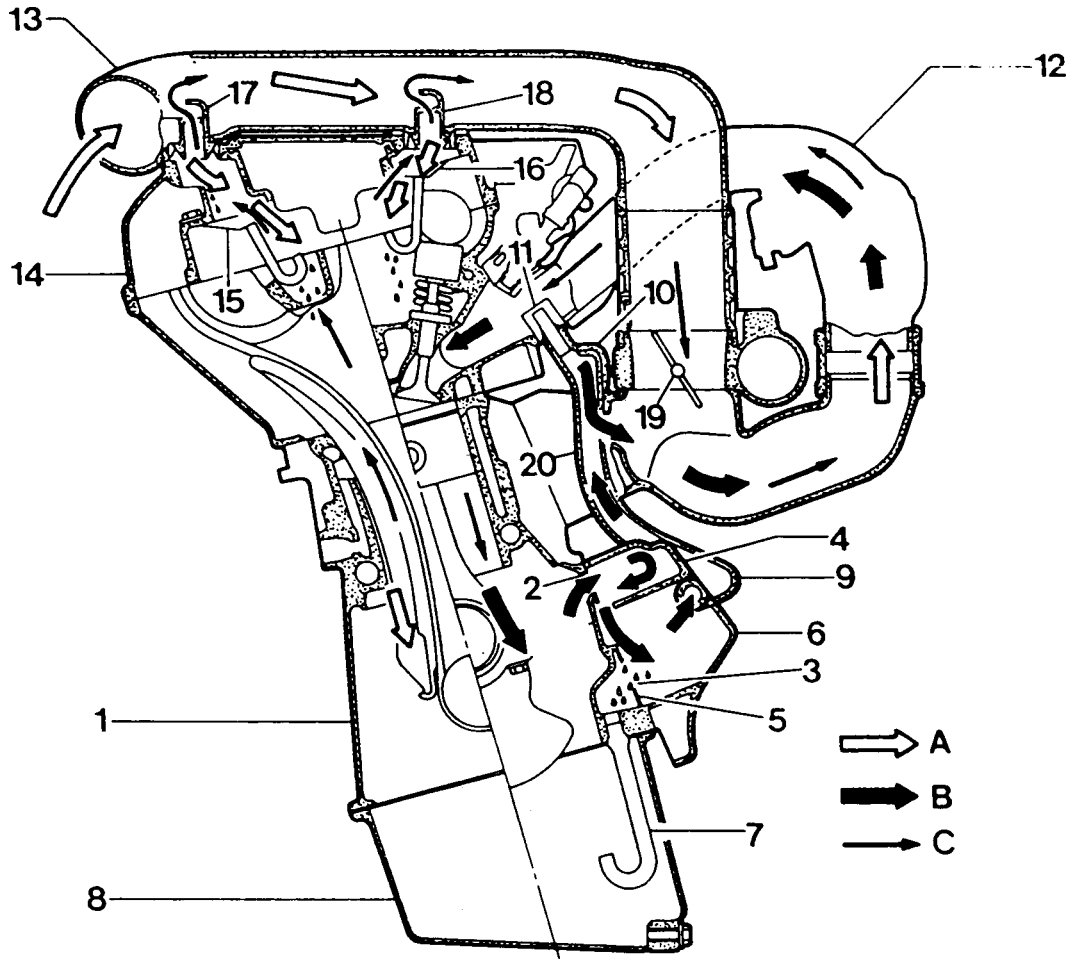

1 Crankcase
2 Air Admission Port in Crankcase
3 Oil Drain Port
4 Filter
5 Gasket
6 A/C Bracket
7 Oil Drain Pipe
8 Oil Pan
9 Air Admission Line
10 Vent Line
11 Restriction Hole (Diameter = 2 mm)
12 Intake Manifold
13 Intake Air Duct (Cross Pipe)
14 Cylinder Head Cover
15 Oil Separator
16 Oil Separator
17 Air Admission and Vent Connection
18 Air Admission and Vent Connection
19 Throttle Valve
20 Vent Line
A Fresh Air
B Blowby Gas in Partial Load
C Blowby Gas in Full Load

Downloaded from www.Manualslib.com manuals search engine

Operation at Idling and Mid-Load

- It show that the throttle valve (19) is closed or very partially opened and the vacuum pressure in intake manifold is high.

  The blowby gas in the crankcase in partial load flows into the intake manifold through the vent line (20) after passing the air conditioner bracket (6) and the filter (4). The air reentered into the intake manifold will be dilluted on the flow through the restriction hole (11) in the vent line (10).

  The circulated engine oil is separated at the air conditioner bracket (6) and then returns into the oil pan through the drain pipe (7).

  The vacuum pressure generated at the crankcase sucks fresh air from intake air line(13) through the air admission and vent connection (17,18).

  The fresh air prevents engine oil from being contami-nated and the air admission and vent connection (17,18) is designed to control the rapid pressure changes in intake air line (13).

Operation at Full-Load

- The throttle valve (19) is fully opened.

  All the blowby gases flow into the intake air duct (13) after passing through the oil separator (15,16) of the cylinder head cover (14) when fully loaded. This dilluted air will be supplied to the combustion chamber through the intake manifold (12).

Downloaded from www.Manualslib.com manuals search engine

ALTERNATOR

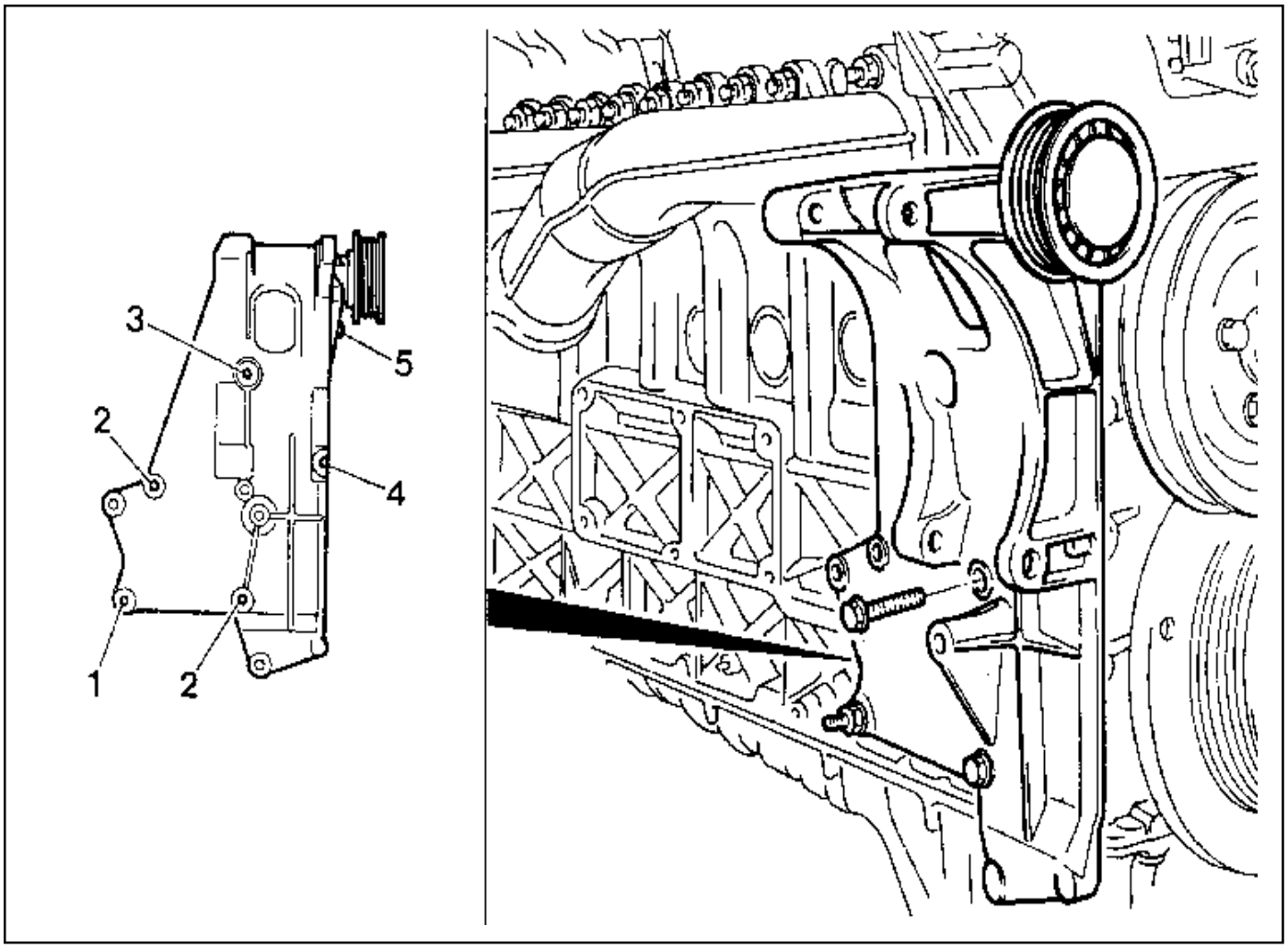

1 Nut (M8) ..... 22.5-27.5 Nm
2 Bolt (M8 x 30, 3 pieces) ..... 22.5-27.5 Nm
3 Bolt (M8 x 40, 1 piece) ..... 22.5-27.5 Nm
4 Bolt (M8 x 70, 1 piece) ..... 22.5-27.5 Nm
5 Bolt (M8 x 75, 1 piece) ..... 22.5-27.5 Nm

Removal & Installation Procedure

1. Remove the drive belt.
2. Remove the alternator.
3. Unscrew the alternator carrier bolts and remove the carrier.

Installation Notice

Tightening Torque	22.5 - 27.5 Nm

4. Installation should follow the removal procedure in the reverse order.

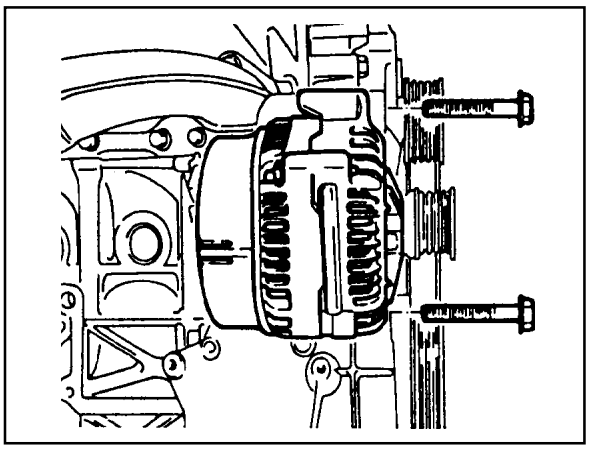

Downloaded from www.Manualslib.com manuals search engine

POWER STEERING PUMP AND A/C BRACKET

Preceding Work : Removal of cooling fan and shroud

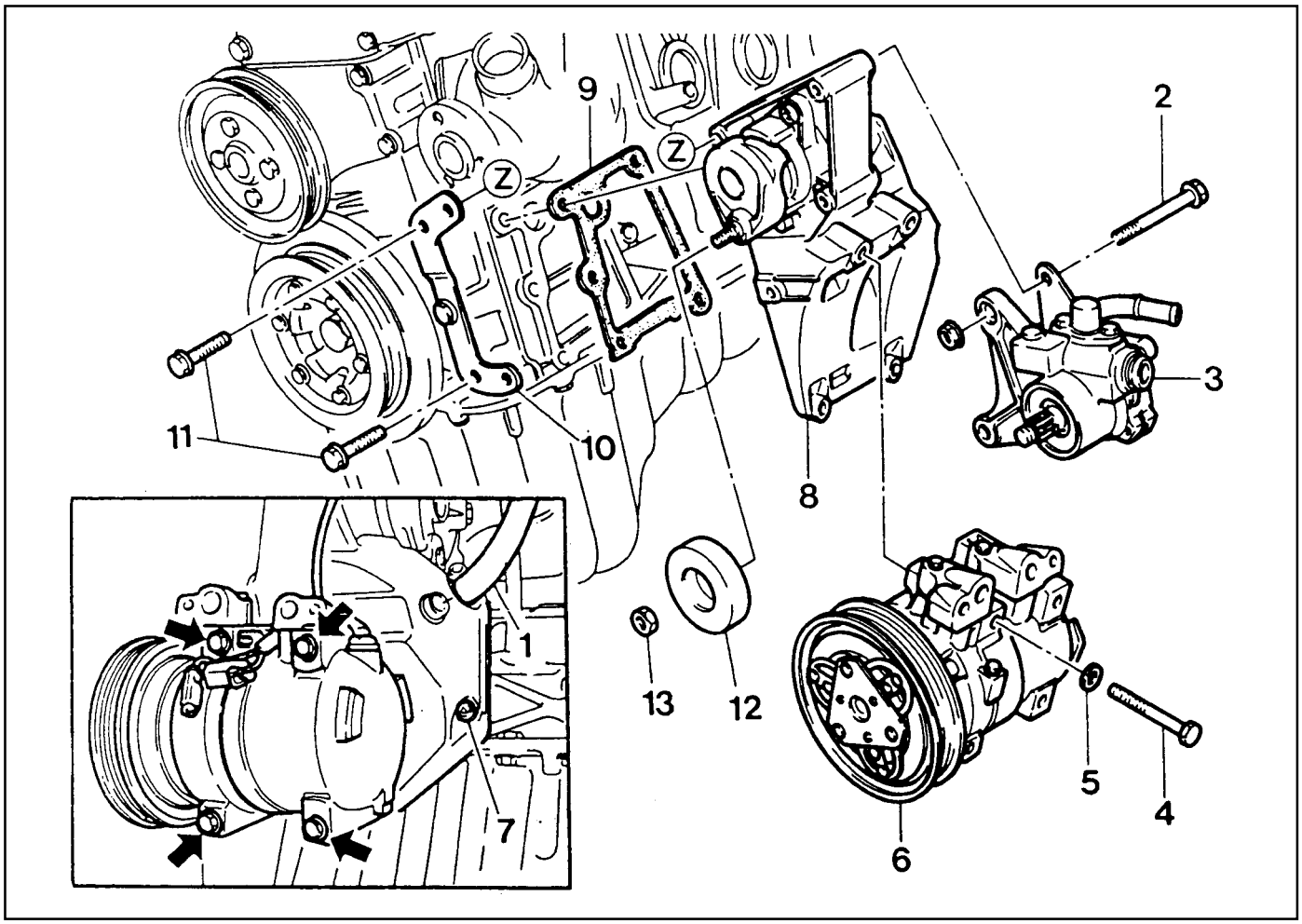

1 Vent Hose
2 Bolt (M8 x 91, 2 pieces) ..... 22.5-27.5 Nm
3 Power Steering Pump
4 Bolt (M8 x 105, 4 pieces) ..... 22.5-27.5 Nm
5 Washer
6 A/C Compressor
7 Bolt (M8 x 40, 3 pieces,
M8 x 95, 2 pieces) ..... 22.5-27.5 Nm
8 A/C Bracket
9 Gasket ..... Replace
10 Bracket
11 Bolt (M8 x 22, 2 pieces) ..... 22.5-27.5 Nm
12 Tensioning Pulley
13 Nut ..... 40.5-49.5 Nm

Downloaded from www.Manualslib.com manuals search engine

Removal & Installation Procedure

1. Remove the belt pulley.

   Installation Notice

Tightening Torque	40.5 - 49.5 Nm

   Notice

   Pull the tensioning pulley clockwise as shown in the figure.

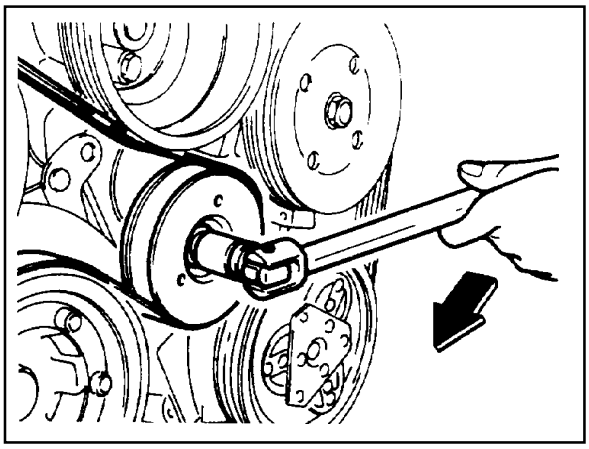

2. Disconnect the hydraulic pipe of the power steering pump and drain the oil.

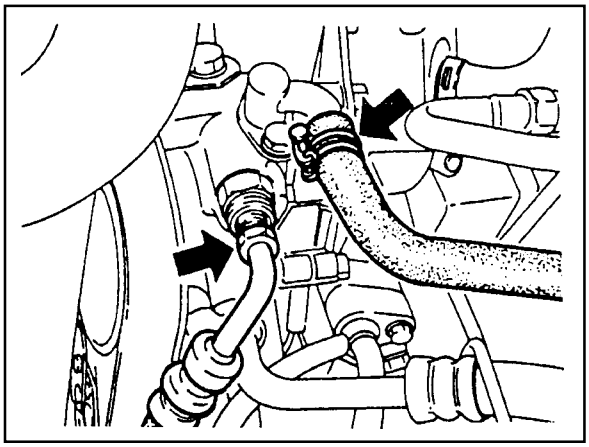

3. Unscrew the bolts (arrows) and remove the steering pump.

   Installation Notice

Tightening Torque	22.5 - 27.5 Nm

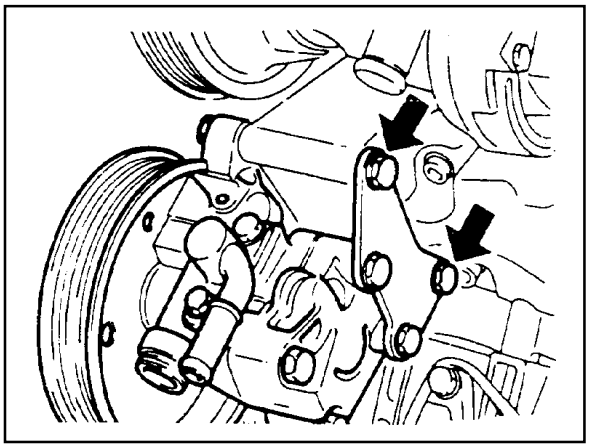

4. Remove the compressor after disconnecting the wiring connector and refrigerant pipe of A/C compressor.

   Notice

   Discharge all the refrigerant before removing the pipes.

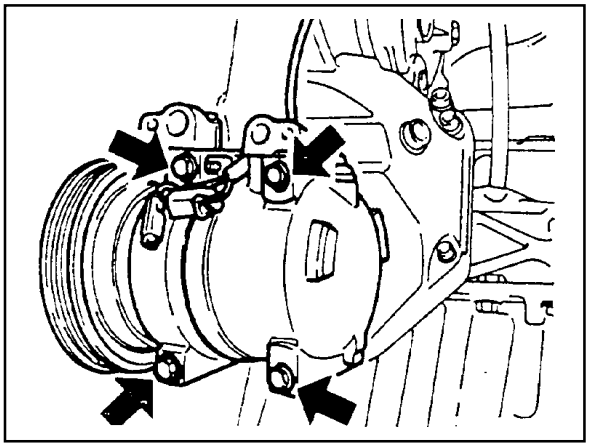

Downloaded from www.Manualslib.com manuals search engine

5. Disconnect the vent hose from the A/C bracket.

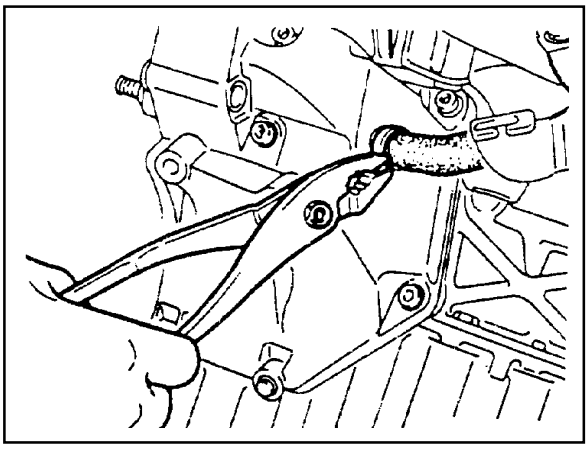

6. Unscrew all the mounting bolts (arrows) and remove the A/C bracket and the gasket.

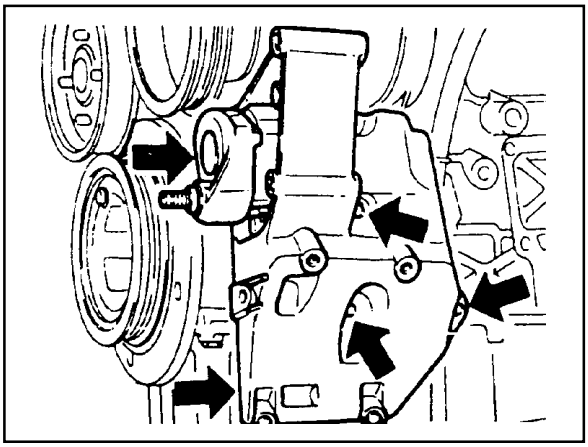

Installation Notice

Tightening Torque	22.5 - 27.5 Nm

7. Clean the sealing surface.
8. Replace the gasket with new one.
9. Installation should follow the removal procedure in the reverse order.
10. Check the oil leakage by operating the engine after installation.

Downloaded from www.Manualslib.com manuals search engine

HYDRAULIC ENGINE MOUNTING INSULATOR

Service Data

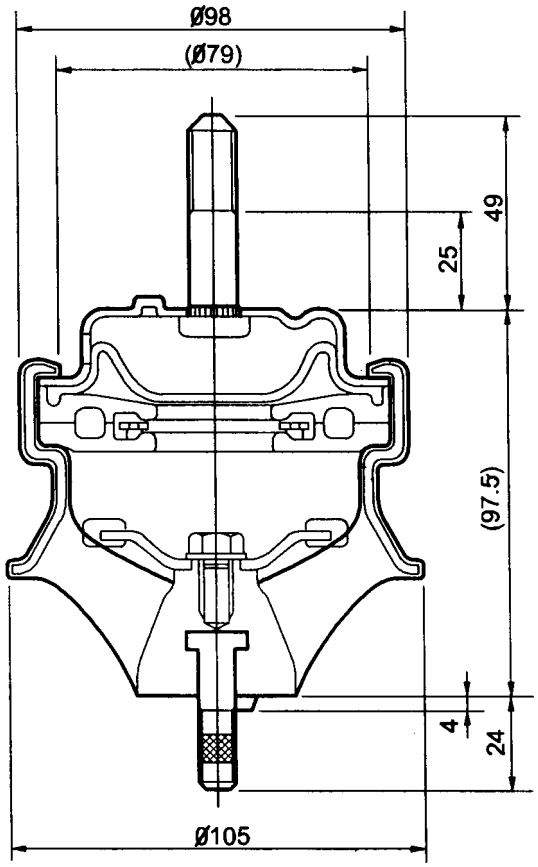

Downloaded from www.Manualslib.com manuals search engine

Sectional View

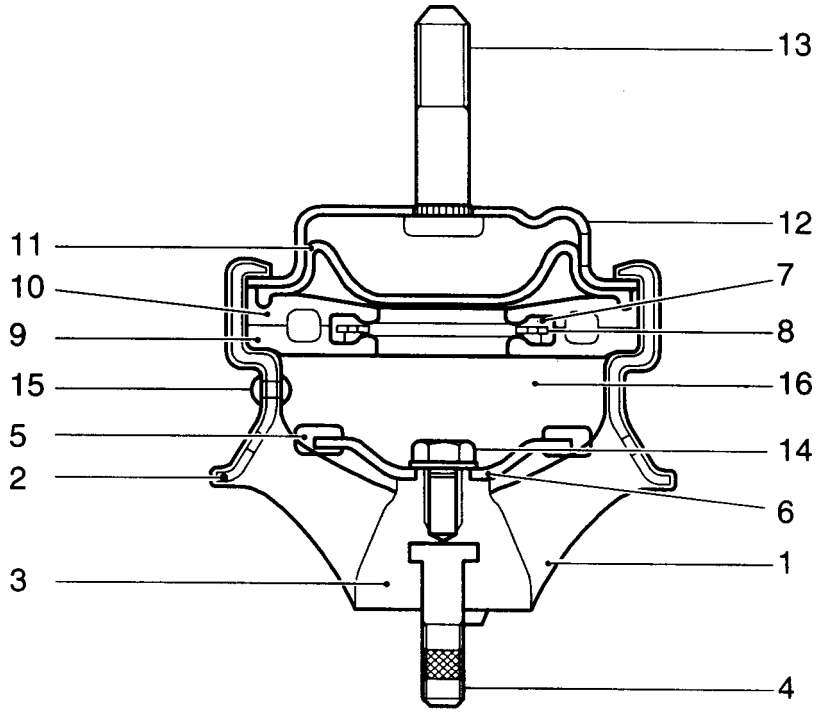

1 Rubber Body
2 Brackek
3 Core
4 Lower Bolt
5 Rubber Plunger
6 Plunger Plate
7 Rubber
8 Plate
9 Lower Orifice
10 Upper Orifice
11 Diaphram
12 Cover Plate
13 Upper Bolt
14 Flange Bolt
15 Rivet
16 Fluid

Downloaded from www.Manualslib.com manuals search engine

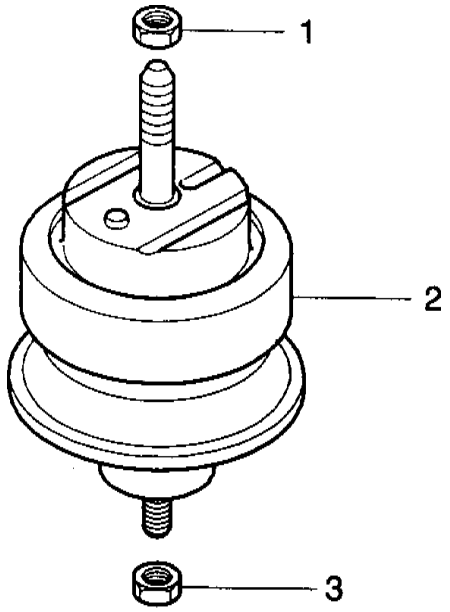

1 Upper Nut
2 Hydraulic Installor ..... 62-93 Nm
3 Lower Nut ..... 28-47 Nm

Removal and Installation Procedure

1. Unscrew the upper nut(1) on engine mounting and remove the engine.

   Installation Notice

Tightening Torque	62 - 93 Nm

2. Unscrew the lower nut(3) and remove the hydraulic engine mounting insulator.

   Installation Notice

Tightening Torque	28 - 47 Nm

   Notice

   If the insulator is spotted with oil, replace the hydraulic insulator assembly.

3. Installation should follow the removal procedure in the reverse order.

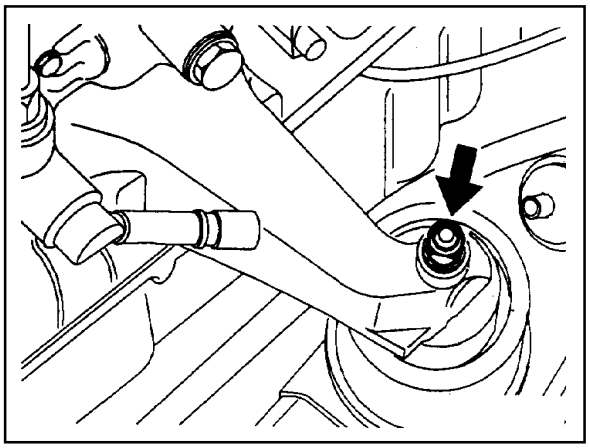

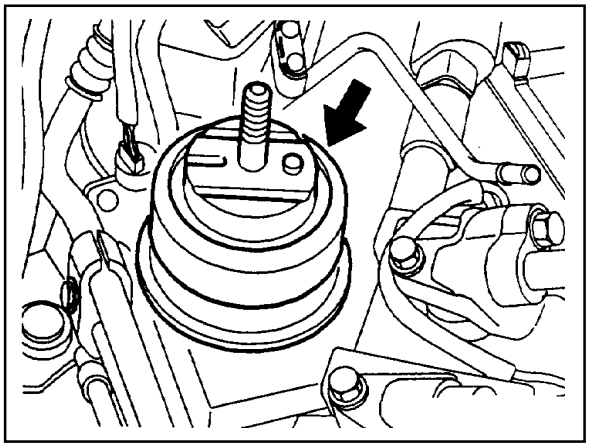

Downloaded from www.Manualslib.com manuals search engine

POLY V-BELT

Preceding Work : Removal of cooling fan

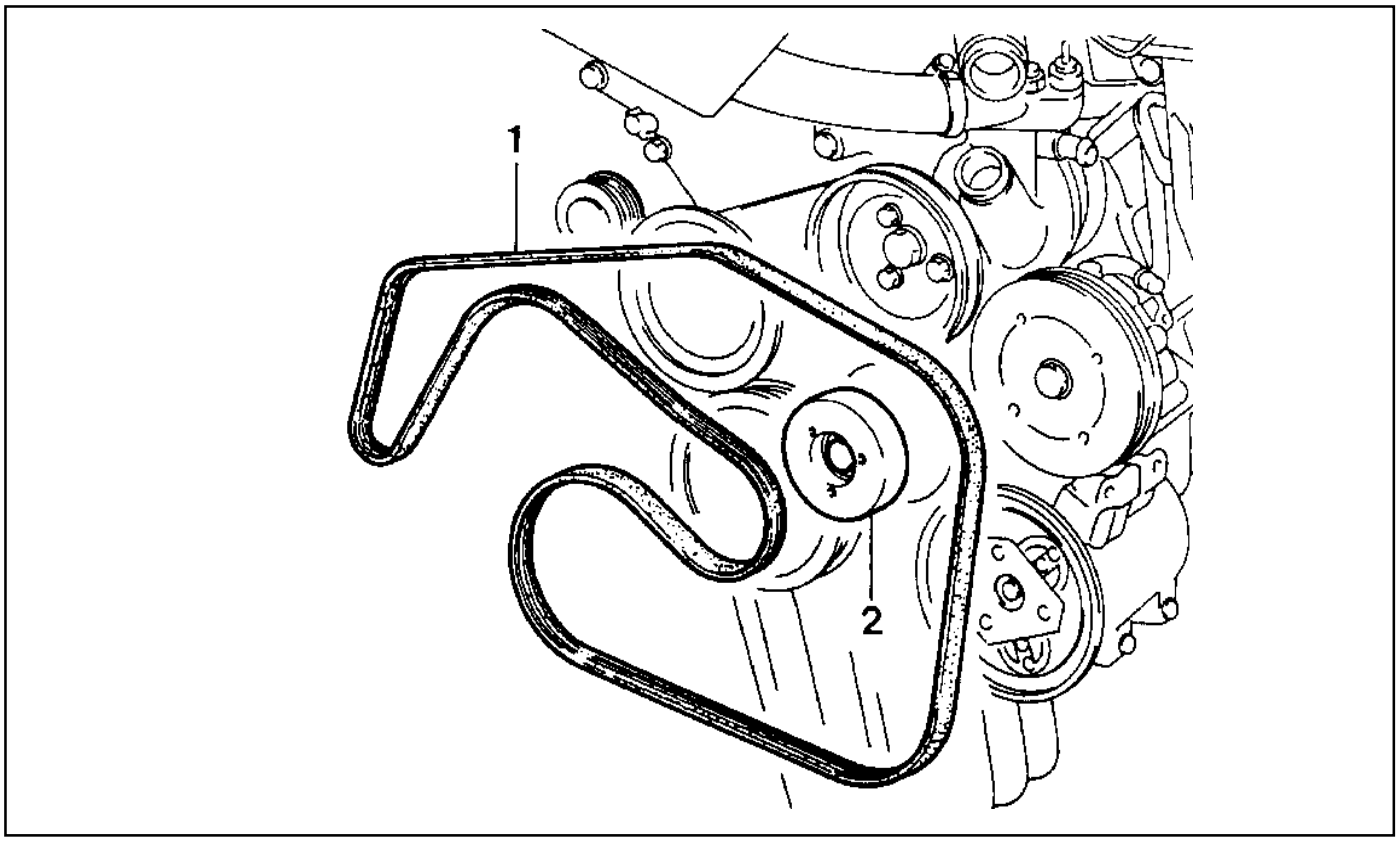

1 Poly V-belt

2 Belt Tensioning Pulley

Removal & Installation Procedure

1. Release the belt tension by turning the belt tensioning pulley nut clockwise.
2. Remove the poly v-belt.

   Notice

   Check the belt for damage and tensioning pulley bearing point for wear and replace them if necessary.
3. Install the belt by turning the nut of tensioning pulley clockwise.

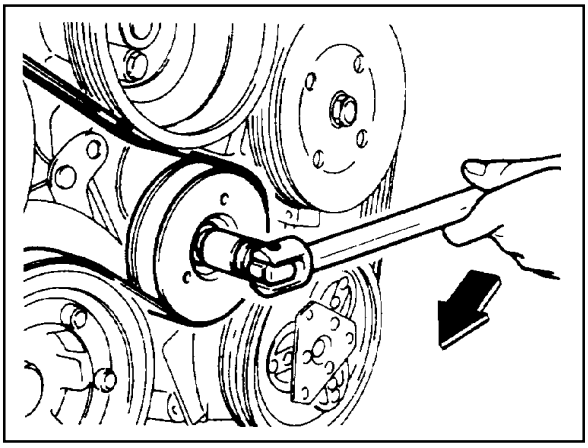

Downloaded from www.Manualslib.com manuals search engine

Poly V-Belt Arrangement

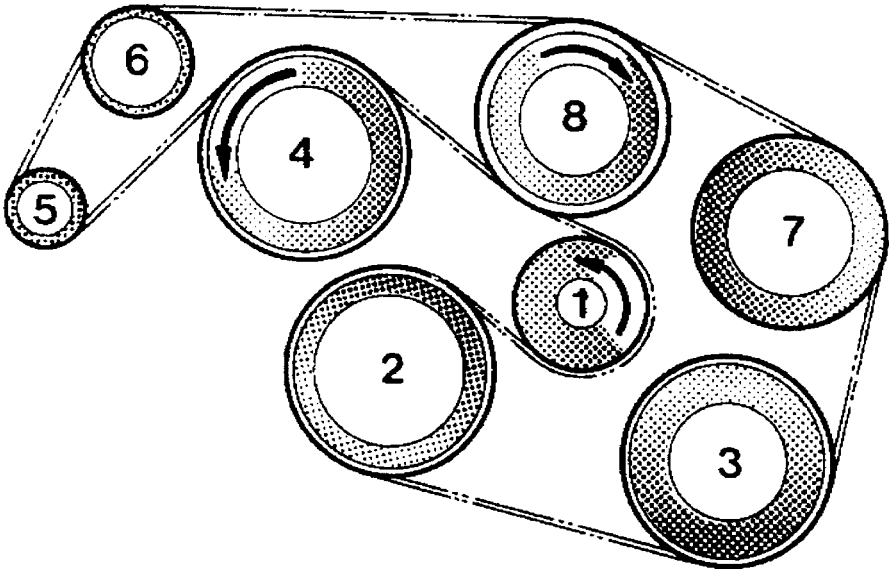

1 Belt Tensioning Pulley
2 Crankshaft Belt Pulley
3 A/C Compressor Pulley
4 Cooling Fan Pulley
5 Alternator Pulley
6 Idler
7 Power Steering Pump Pulley
8 Cooling Fan and Water Pump Pulley

Downloaded from www.Manualslib.com manuals search engine

TENSIONING DEVICE

Preceding Work : Removal of poly v-belt

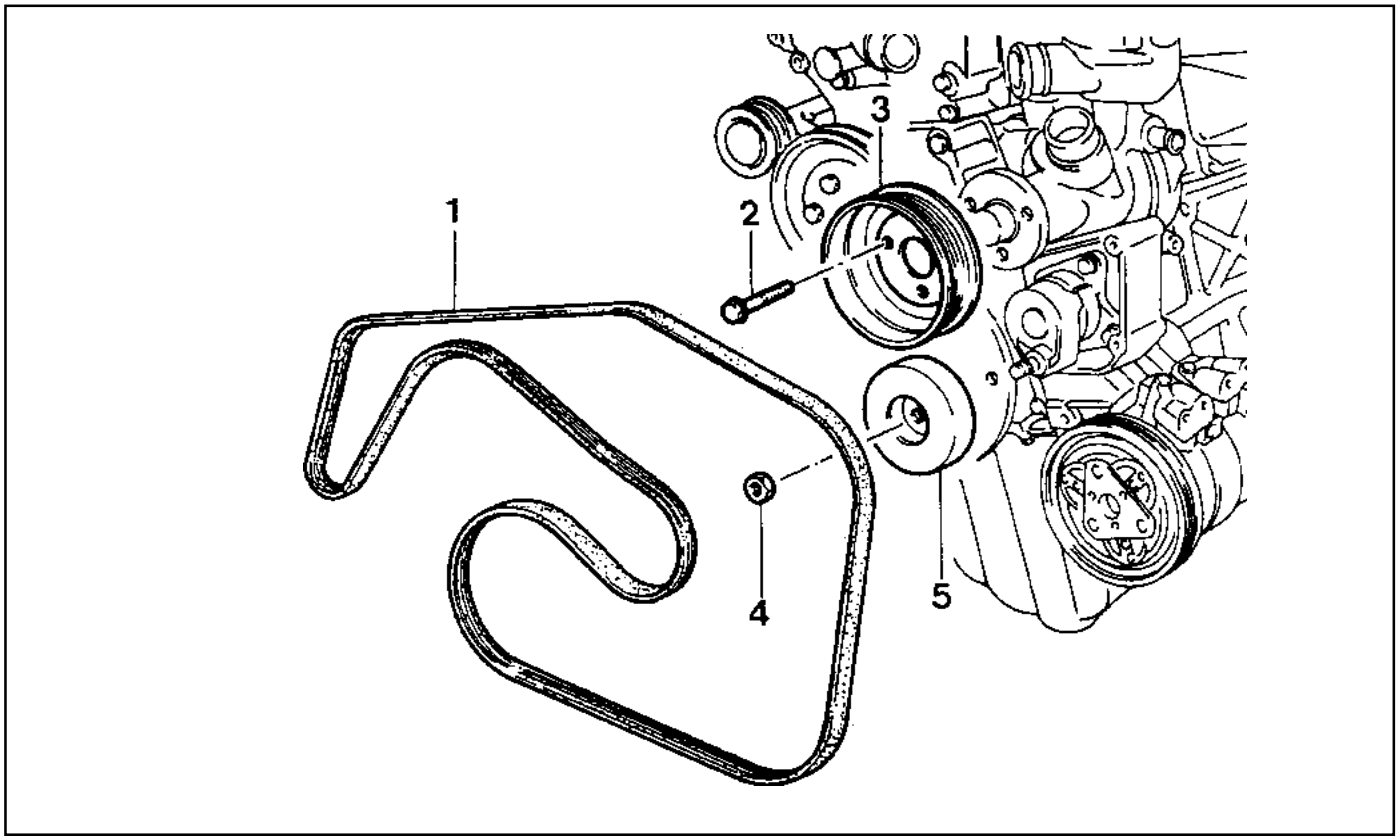

1 Belt (L = 2245)
2 Bolt Combi(M8 x 14, 3 pieces) + Washer 22.5-27.5Nm
3 Water Pump Pulley
4 Nut
5 Tensioning Pulley

Removal & Installation Procedure

1. Remove the poly v-belt.
2. Remove the tensioning pulley by turning its mounting nut counter clockwise as shown in figure.

Installation Notice

Tightening Torque	40.5 - 49.5 Nm

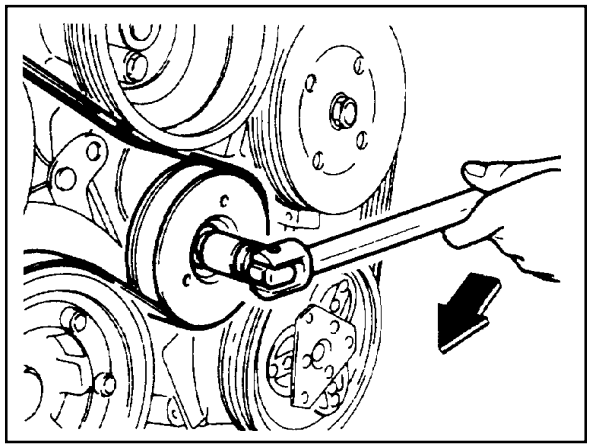

Downloaded from www.Manualslib.com manuals search engine

3. Remove the 3 bolts (2) and remove the water pump pulley (arrow).

   Installation Notice

Tightening Torque	22.5 - 27.5 Nm

4. Remove the mounting bolts(M8 x 30, 3 pieces) at the tensioning device, and remove the tensioning device (arrow).

   Installation Notice

Tightening Torque	26 - 32 Nm

5. Installation should follow the removal procedure in the reverse order.

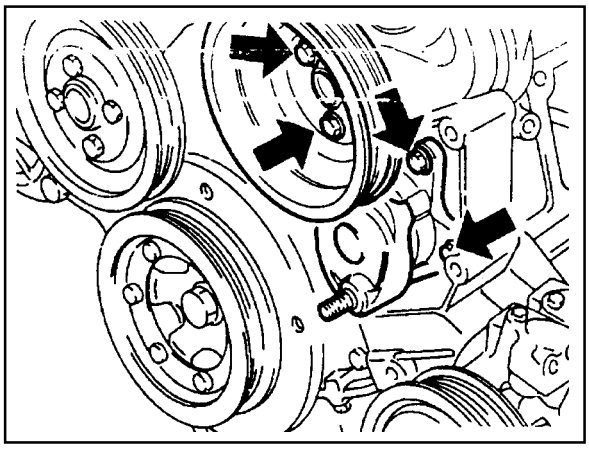

Downloaded from www.Manualslib.com manuals search engine

POLY V-BELT INSPECTION

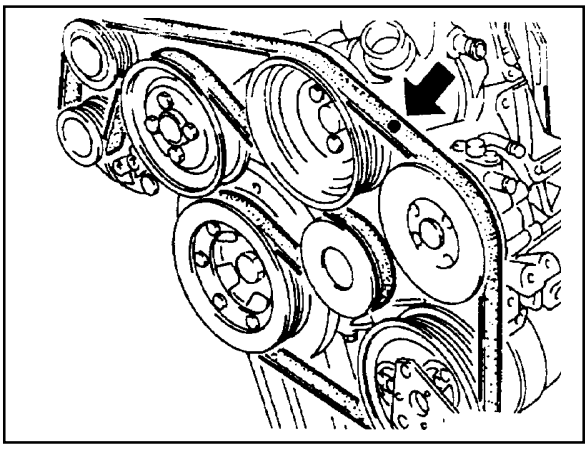

- Make marks on the belt with chalk.
- Rotate the engine and check the belt for damage.

Notice

If one of the following types of damages is found, replace the belt.

1. Rubber lumps in the base of rib.
2. Dirt or grit ingrained.

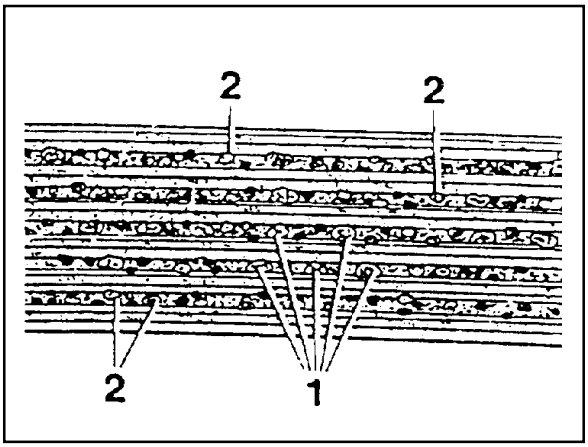

3. Pointed rib.
4. Belt cord visible in the base of rib.

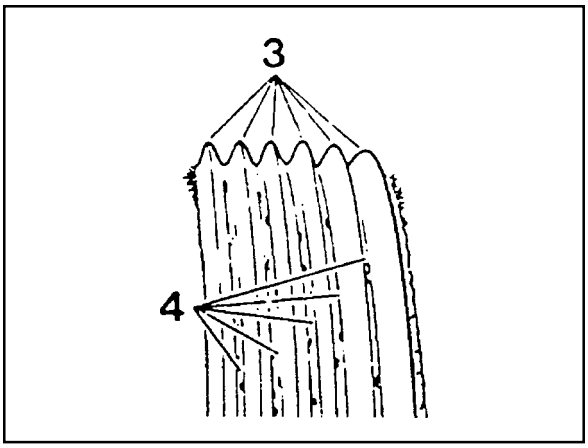

5. Cord torn out at the side.
6. Outer cords frayed.

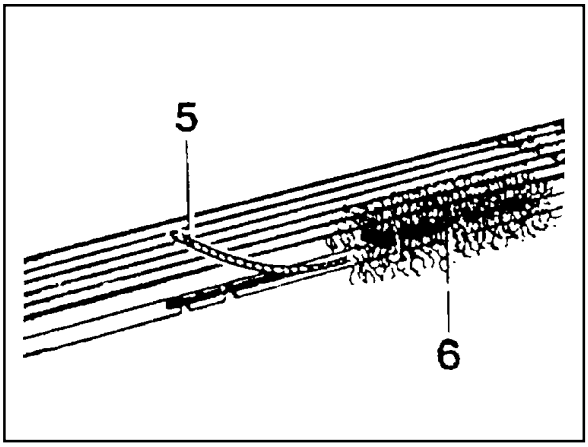

Downloaded from www.Manualslib.com manuals search engine

7. Rib detached from the base of belt.

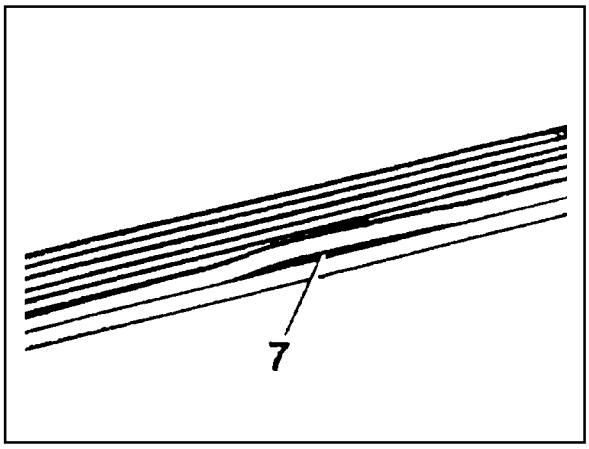

8. Splits across the rib.
9. Sections of rib torn out.

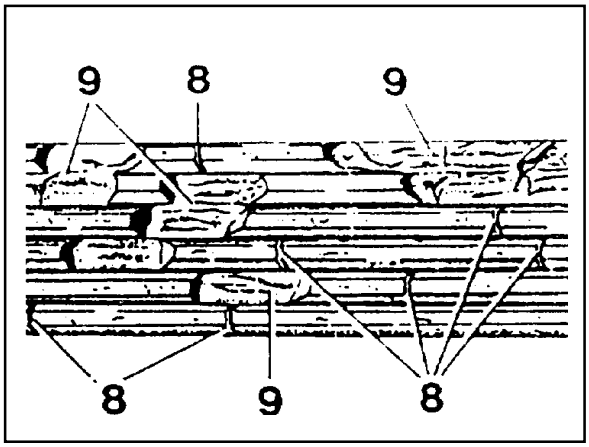

10. Splits across several ribs.

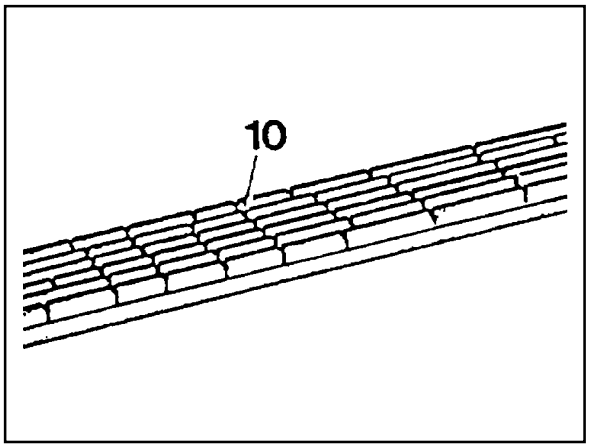

11. Splits across the back of the belt.

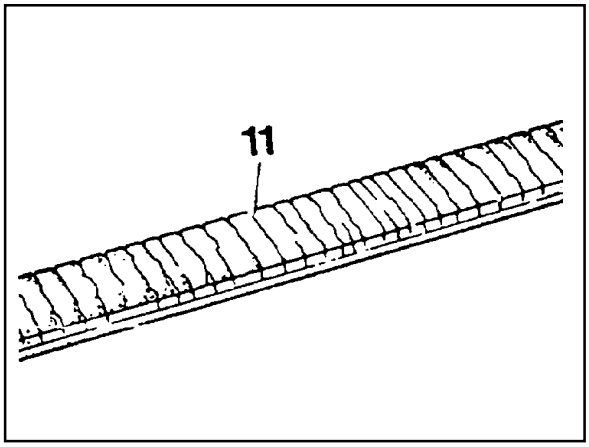

Downloaded from www.Manualslib.com manuals search engine

CYLINDER HEAD COVER

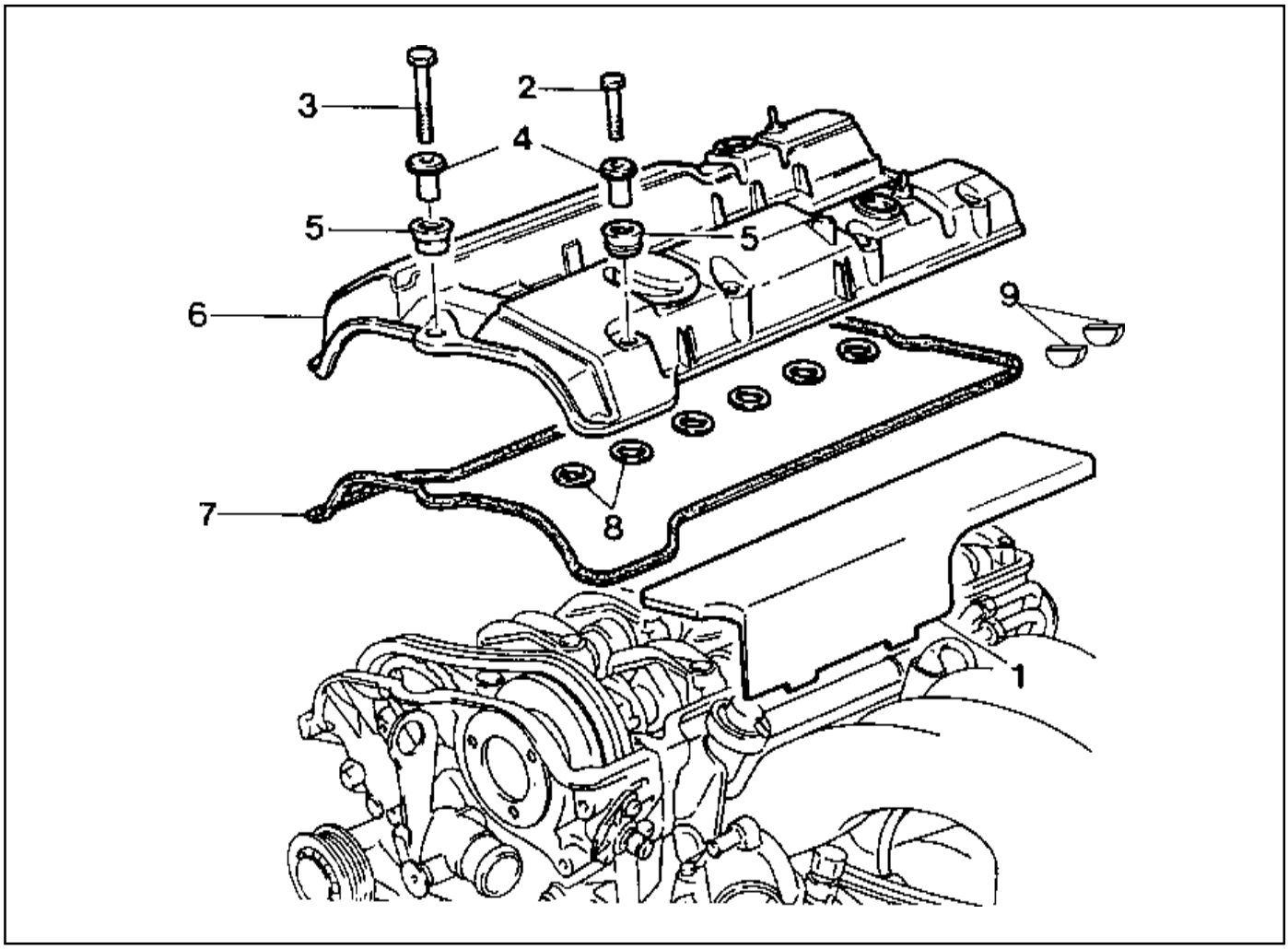

1 Ignition Cable Dust Cover
2 Bolt (M6 x 65, 8 pieces) ..... 9-11 Nm
3 Bolt (M6 x 50, 4 pieces) ..... 9-11 Nm
4 Spacer Sleeve
5 Thrust Piece
6 Cylinder Head Cover
7 Gasket ..... Replace
8 Spart Plug Hole Seal ..... Replace
9 Camshaft Seal ..... Replace

Composition of The Cylinder Head Cover Bolts

A. M6 x 50, 4 Pieces - Bolts + Washers
B. M6 x 65, 8 Pieces - Bolts + Washers

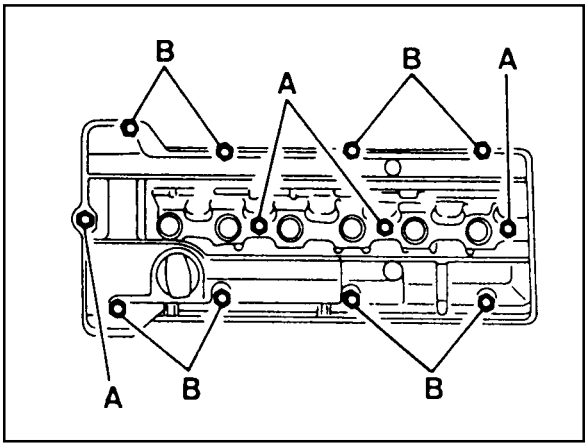

Downloaded from www.Manualslib.com manuals search engine

Removal & Installation Procedure

1. Remove the intake air duct.

Installation Notice

Tightening Torque	8.4 ± 0.65 Nm

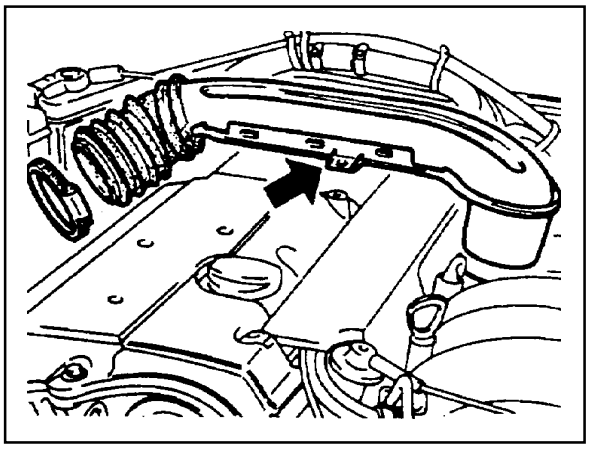

2. Remove the ignition cable cover.

Installation Notice

Tightening Torque	9 - 10 Nm

Notice

Unscrew the seven (M6 x 60) bolts and remove the ignition cable cover.

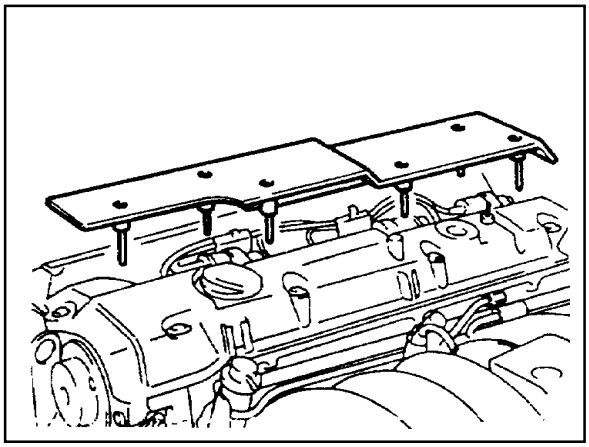

3. Remove the spark plug connector and ignition cable.

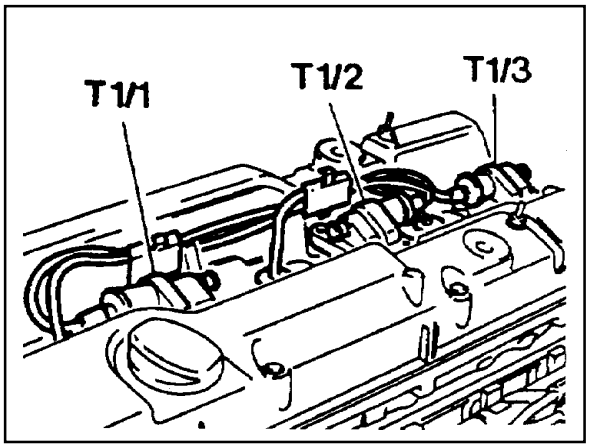

4. Unscrew all the bolts (2,3) and remove the head cover and the gasket.

Installation Notice

Tightening Torque	22.5 - 27.5 Nm

Notice

Replace the gasket with a new one if necessary.

5. Installation should follow the removal procedure in the reverse order.
6. Check for oil leaks by operating the engine.

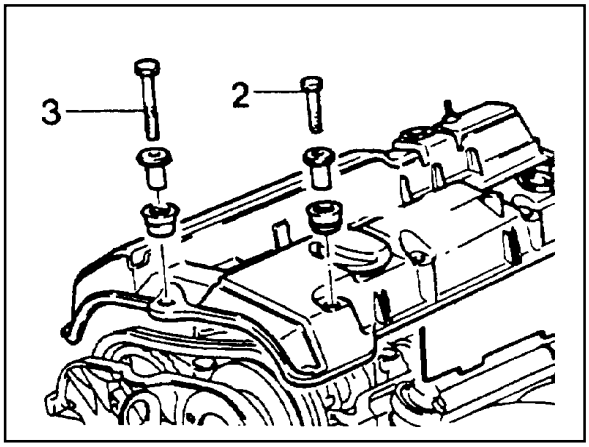

Downloaded from www.Manualslib.com manuals search engine

CYLINDER HEAD FRONT COVER

Preceding Work : Removal of cylinder head cover
Removal of coolant connection fitting

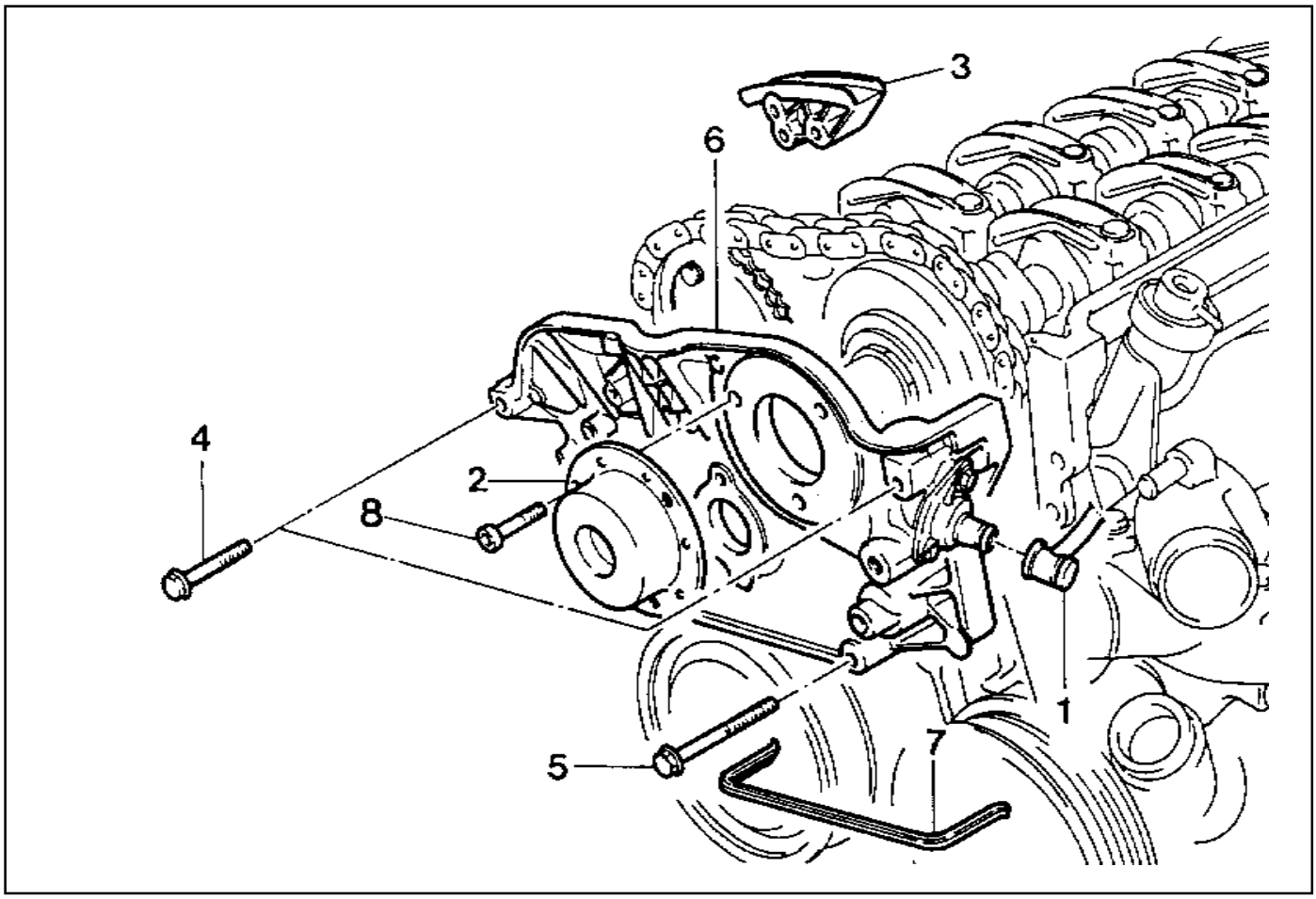

1 Camshaft Position Sensor
2 Magnet Assembly
3 Upper Guide Rail
4 Bolt (M6 x 60, 3 pieces) ..... 22.5-27.5 Nm
5 Bolt (M8 x 80, 3 pieces) ..... 22.5-27.5 Nm
6 Front Cover
7 Rubber Gasket ..... Replace
8 Bolt (M6 x 16, 3 pieces) ..... 9-11 Nm

Removal & Installation Procedure

1. Remove the magnet assembly.

Installation Notice

Tightening Torque	9 - 11 Nm

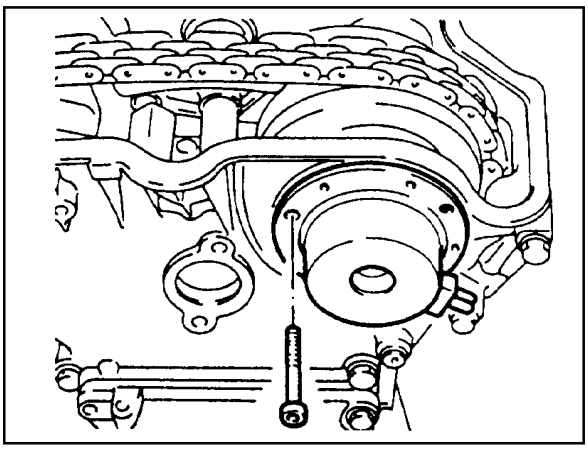

Downloaded from www.Manualslib.com manuals search engine

2. Remove the cylinder head front cover (6).

   Installation Notice

Tightening Torque	22.5 - 27.5 Nm

   Apply the sealant at the mating surface of the cylinder head and the front cover.

3. Remove the upper guide rail pin and the guide rail (3).

   Installation Notice

   Install it while the chain tensioner is loose.

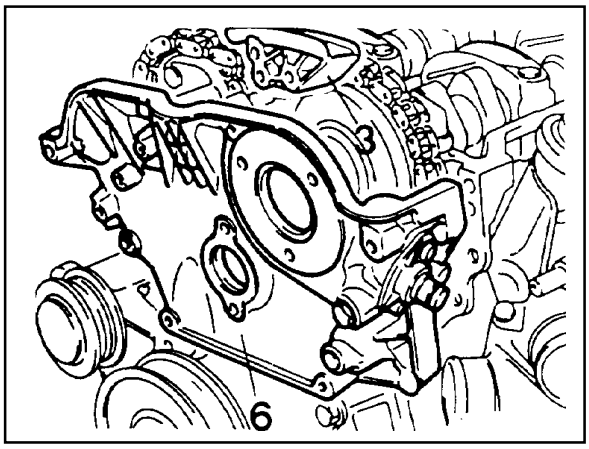

4. Remove the gasket (arrow).

   Installation Notice

   Replace the gasket with new one and apply the sealant.

5. Installation should follow the removal procedure in the reverse order.

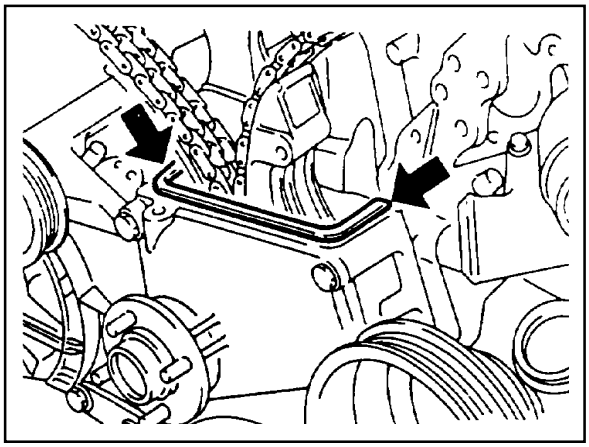

Downloaded from www.Manualslib.com manuals search engine

CYLINDER HEAD

Preceding Work : Removal of cylinder head cover
Removal of cylinder head front cover
Removal of upper intake manifold

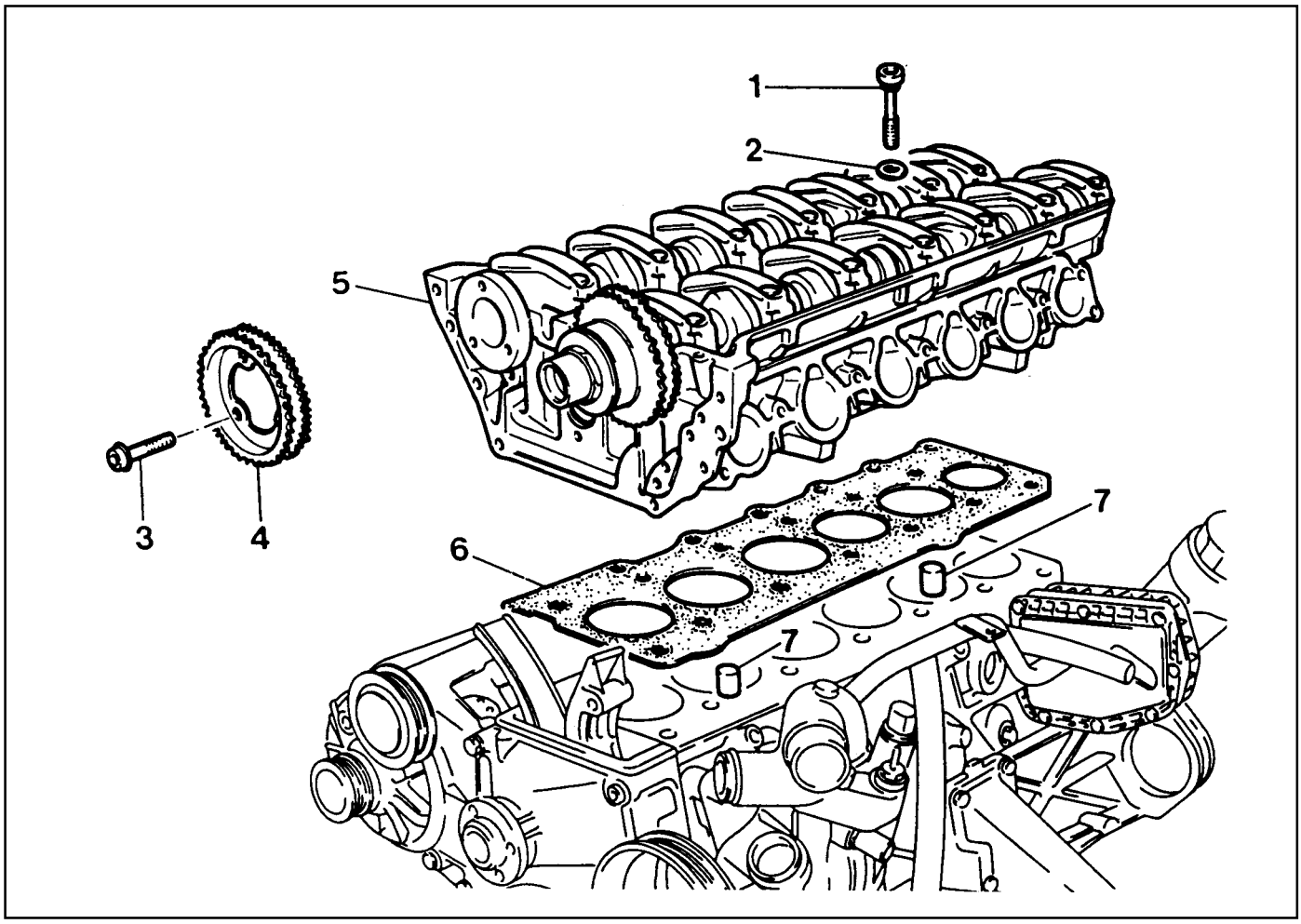

1 Cylinder Head Bolt (14 pieces) ..... 1st step 55 Nm
2nd step 90°
3rd step 90°
2 Washers (14 pieces)
3 Flange Bolts (3 pieces) ..... 1st step 20 Nm
2nd step 90°
4 Exhaust Camshaft Sprocket
5 Cylinder Head
6 Gasket ..... Replace
7 Dowel Sleeve

Downloaded from www.Manualslib.com manuals search engine

Tools Required

000 589 01 10 00 Box Wrench Insert

116 589 02 34 00 Screw-fixed Pin

116 589 20 33 00 Sliding Hammer

Removal & Installation Procedure

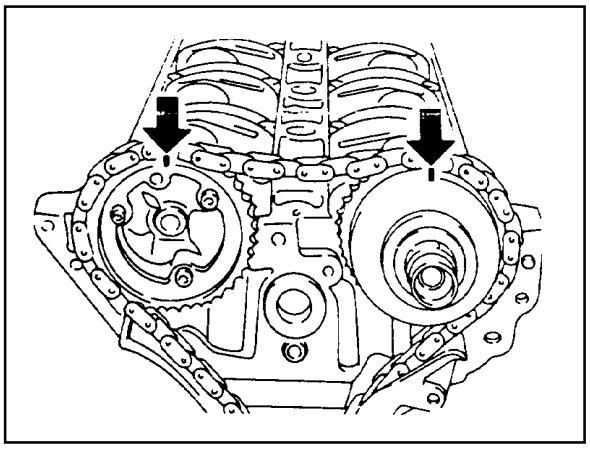

1. Rotate the crankshaft so that the piston of number 1 cylinder is at TDC.

   Notice

   Rotate the crankshaft in the normal engine direction.
2. Put the alignment marks (arrows) on the timing chain and camshaft sprocket.
3. Drain the coolant from the crankcase.

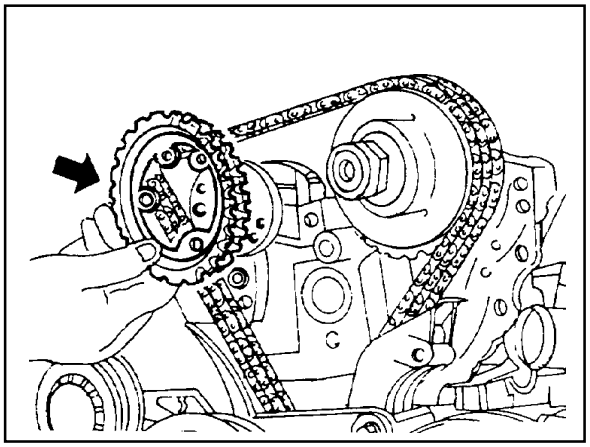

4. Remove the three flange bolts in the exhaust camshaft sprocket.

   Installation Notice

Tightening Torque	1st step 18 - 22 Nm 2nd step 90° ± 5°

   Do not reuse the removed bolts.

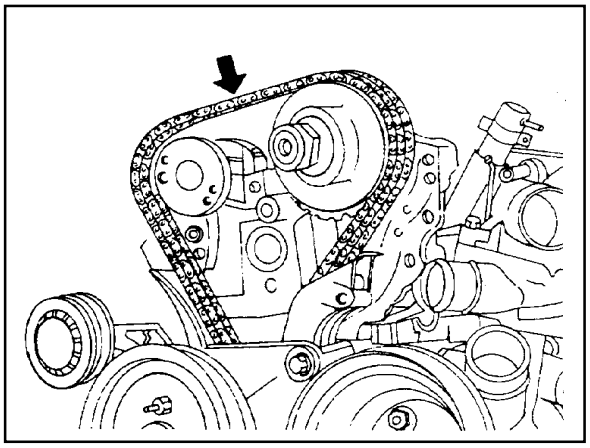

5. Separate the chain from the camshaft sprockrt.

   Notice

   Be careful not to drop the chain into the timing case.

Downloaded from www.Manualslib.com manuals search engine

6. Remove the guide rail fixing pin from the cylinder head using the sliding hammer (01) and the threaded pin (02).

Sliding Hammer 116 589 20 33 00
Threaded Pin 116 589 02 34 00

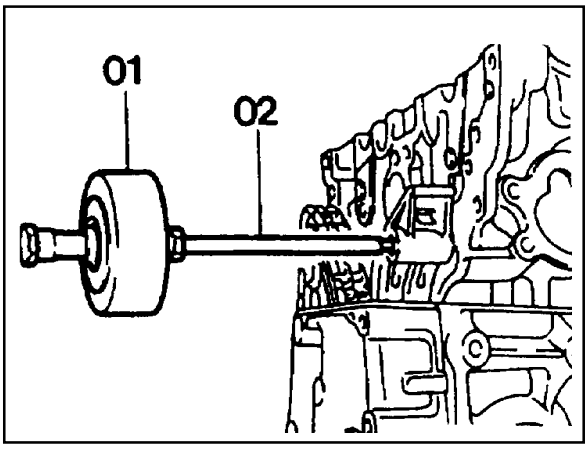

7. Remove the cylinder head bolts in numerical order.

Installation Notice

Tightening Torque	1st step 55 Nm 2nd step 90° 3rd step 90°

Box Wrench Insert 000 589 01 10 00

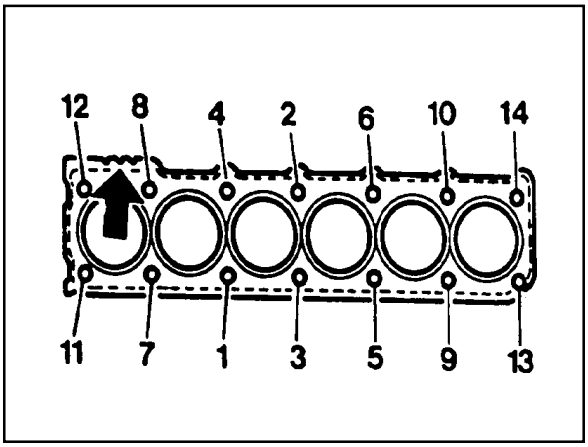

8. Check the length of the cylinder head bolt.

Installation Notice

Length (L)	New 160 ± 0.8 mm
	Max. 162 ± 0.7 mm

- Replace the bolt if the measured length exceed the max. length.
- Apply the oil to the thread surface of bolt.

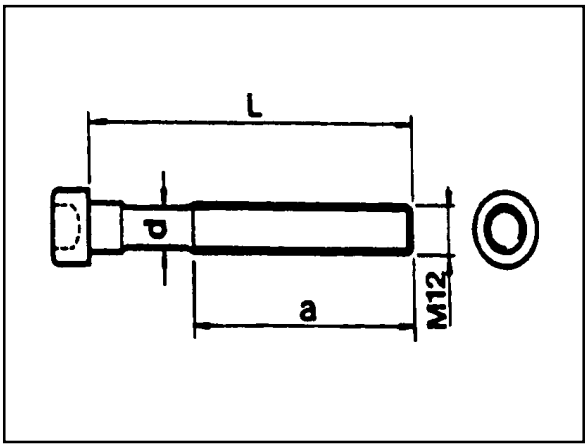

9. Carefully remove the cylinder head and check the mating surface.

10. Installation should follow the removal procedure in the reverse order.

Downloaded from www.Manualslib.com manuals search engine

TIMING GEAR CASE COVER

Preceding Work : Removal of cylinder head front cover
Removal of alternator bracket
Removal of tensioning device
Removal of belt pulley and vibration damper

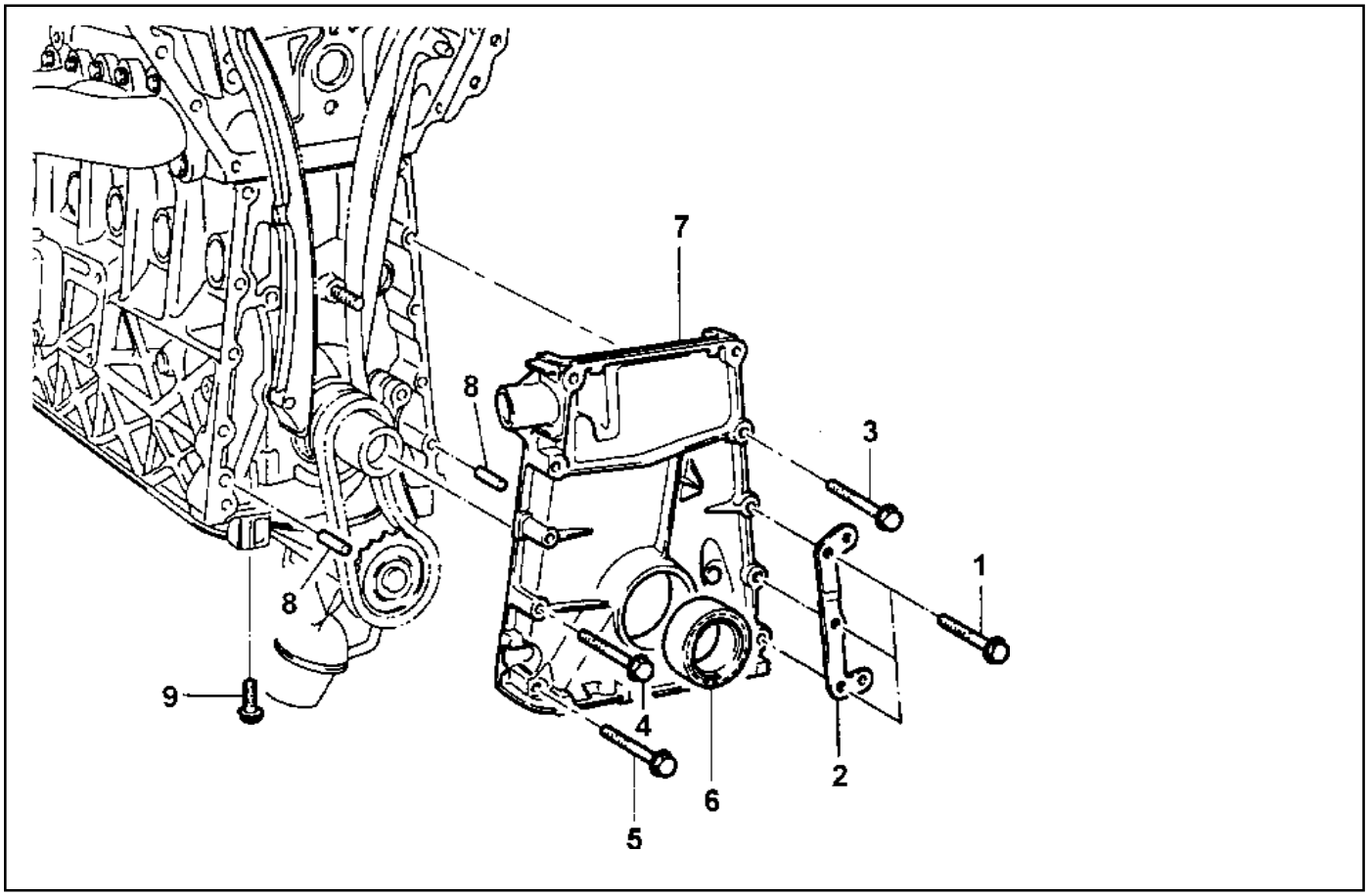

1 Bolt (M8 x 60, 3 pieces) ..... 22.5-27.5 Nm
2 A/C Bracket
3 Bolt (M8 x 65, 3 pieces) ..... 22.5-27.5 Nm
4 Bolt (M8 x 40, 1 piece) ..... 22.5-27.5 Nm
5 Bolt (M8 x 60, 1 piece) ..... 22.5-27.5 Nm
6 Seal
7 Timing Gear Case Cover
8 Roll Pin
9 Bolt (M6 x 22, 6 pieces) ..... 9-11 Nm

Removal & Installation Procedure

1. Put the alignment marks (arrows) on the timing chain and camshaft sprocket.
2. Unscrew the A/C bracket bolts (1) and remove the bracket.

Installation Notice

Tightening Torque	22.5 - 27.5 Nm

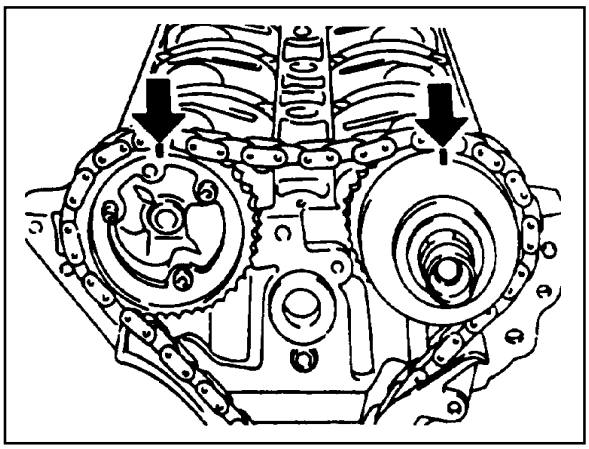

Downloaded from www.Manualslib.com manuals search engine

3. Remove the cooling fan and the viscous clutch. Unscrew the three bolts from the cooling fan bracket and remove the bracket (arrows).

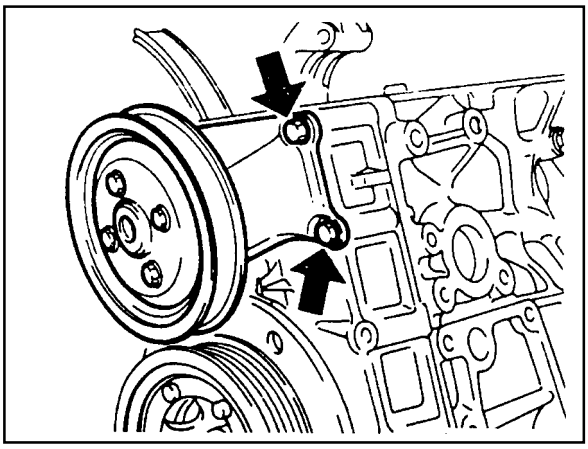

Installation Notice

Tightening Torque	22.5 - 27.5 Nm

4. Remove the timing gear case cover after unscrewing the bolts (3) and (4) from the timing gear case cover and the bolt (9) from the oil pan.

Notice

Be careful not to damage the oil pan gasket.

Installation Notice

Tightening Torque	Bolt (3,4) 22.5 - 27.5 Nm
	Bolt (9) 9 - 11 Nm

- Apply the sealant after cleaning the timing gear case cover surface.
- Be careful not to stain the oil chamber of chain tensioner with the sealant.

5. Installation should follow the removal procedure in the reverse order.

6. Warm up the engine and check for oil leaks.

Downloaded from www.Manualslib.com manuals search engine

CRANKSHAFT SEALING REAR COVER

Preceding Work : Removal of the automatic transmission drive plate

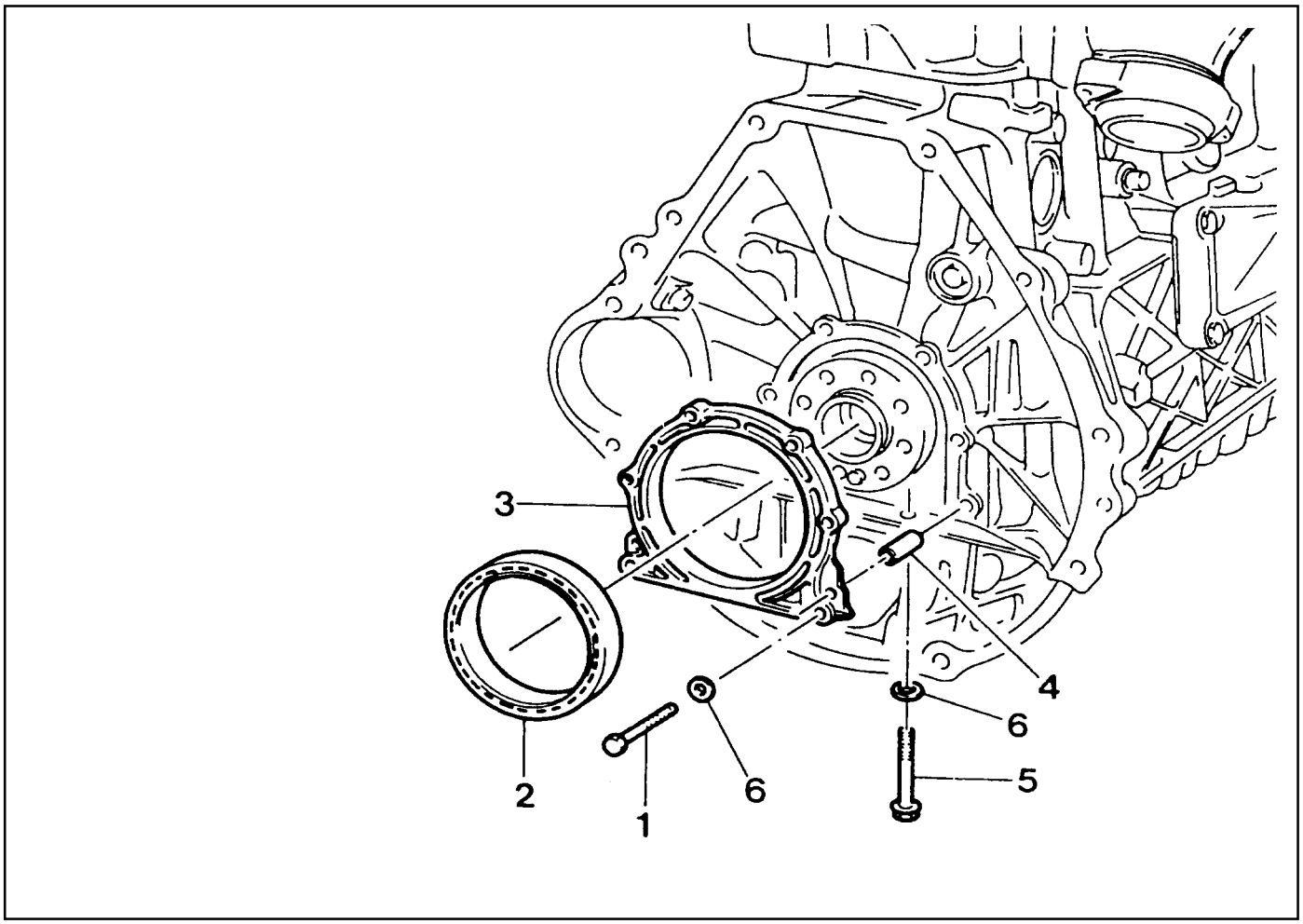

1 Bolt (M6 x 20, 6 pieces) ..... 9-11 Nm
2 Radial Shaft Seal
3 Rear Cover
4 Sleeve
5 Bolt (M6 x 85, 2 pieces) ..... 9-11 Nm
6 Washer

Downloaded from www.Manualslib.com manuals search engine

Tools Required

601 589 03 43 00 Sleeve

Removal & Installation Procedure

1. Unscrew the bolts (1) and (5) and remove the closing cover by pulling the rear cover lug (arrows).

   Notice

   Be careful not to damage the oil pan gasket.

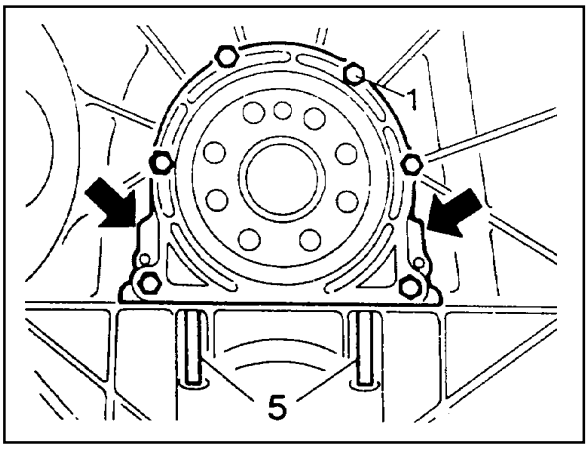

2. Clean the sealing surface of the crankcase and the rear sealing cover.
3. Check the radial shaft seal and replace it if necessary.
4. Apply the Loctite 573 to the rear cover sealing surface.
5. Apply the engine oil to the dust lip of the radial shaft seal.

   Notice

   Do not use the grease.

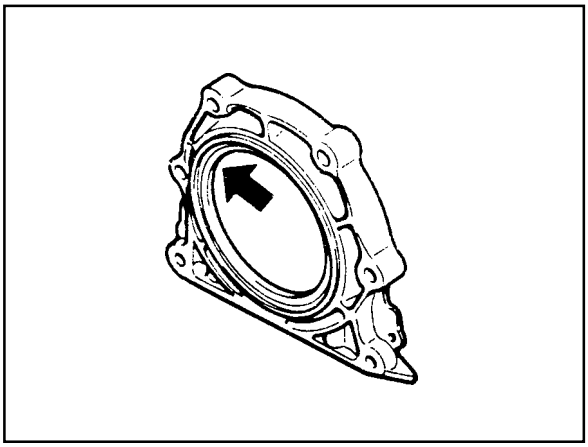

6. Using the special tool, press the radial shaft seal and the rear cover.

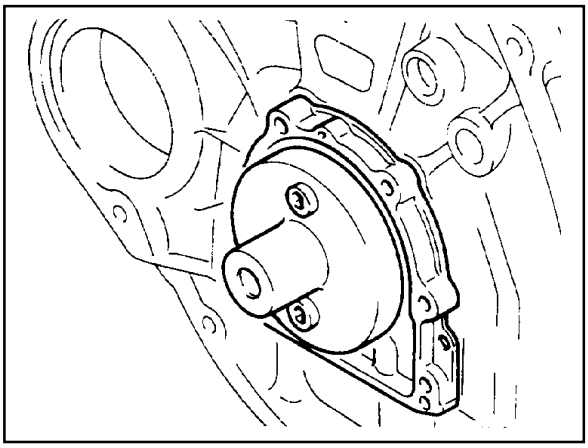

7. Tighten the rear cover bolt (1) and then tighten the oil pan bolt (5) as specified and remove the special tool.

   Installation Notice

Tightening Torque(Bolt 1,5)	9 - 11 Nm

Seal Assembler 601 589 03 43 00

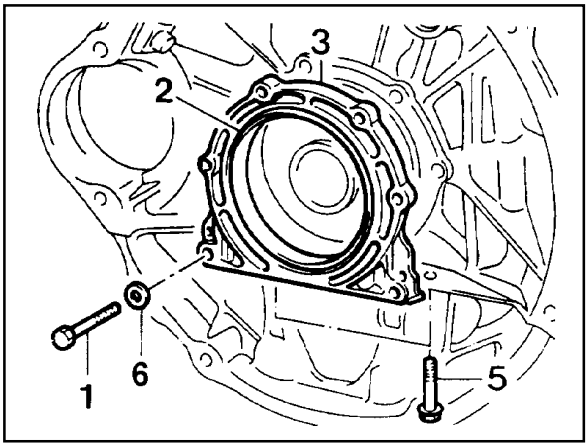

Downloaded from www.Manualslib.com manuals search engine

BELT PULLEY AND VIBRATION DAMPER

Preceding Work : Removal of cooling fan and viscous clutch
Removal of fan shroud
Removal of drive belt

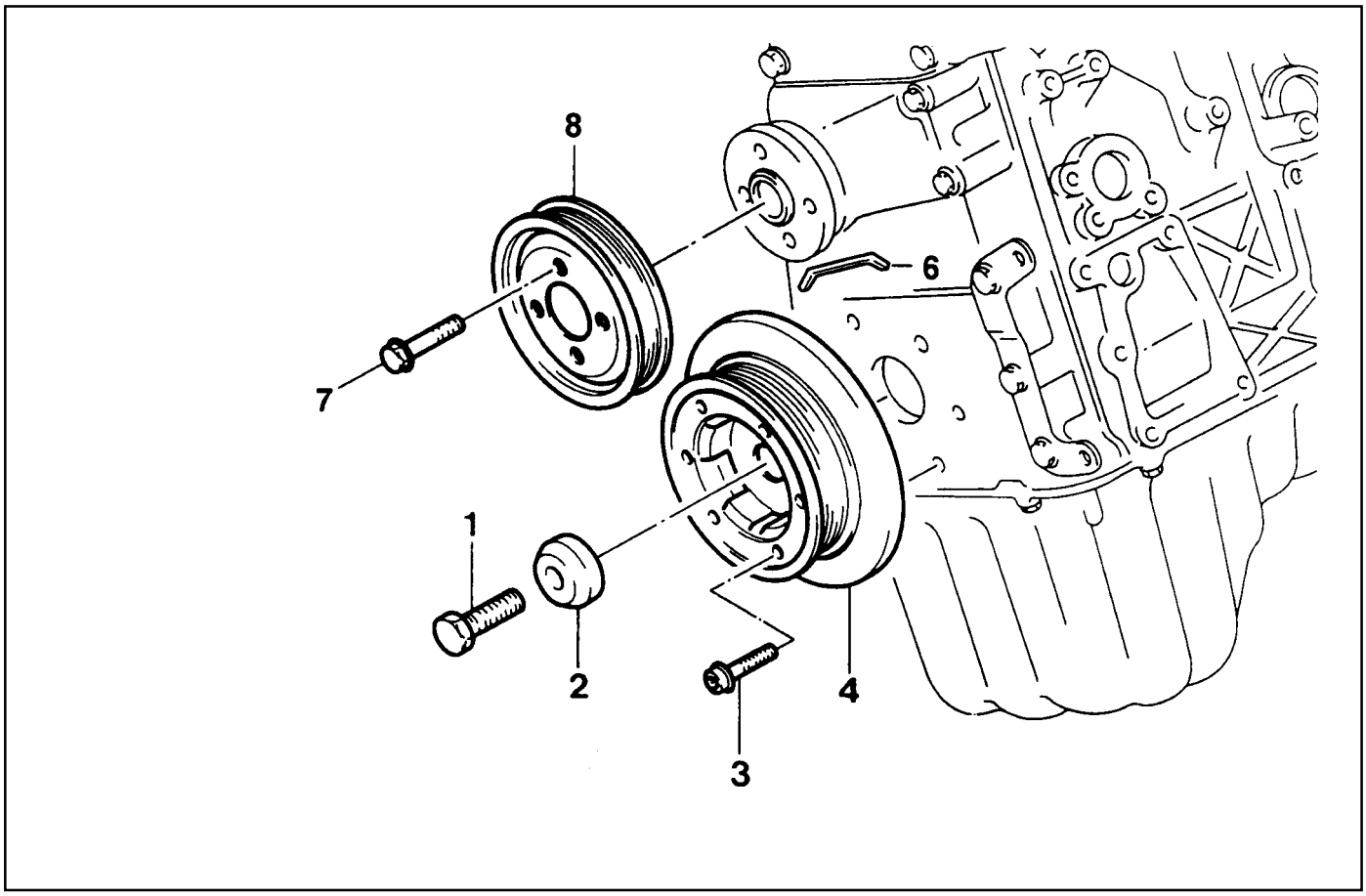

1 Center Bolt (M18 x 50) ..... 1st step 200- 220 Nm
2nd step 90°+10°
2 Vibration Damper Disk
3 Bolt (M6 x 20, 6 pieces) ..... 7.7-9.5 Nm
4 Vibration Damper Assembly
5 Key
6 Bolt (M6 x 12, 4 pieces) ..... 9-11 Nm
7 Cooling Fan Pulley

Downloaded from www.Manualslib.com manuals search engine

Components

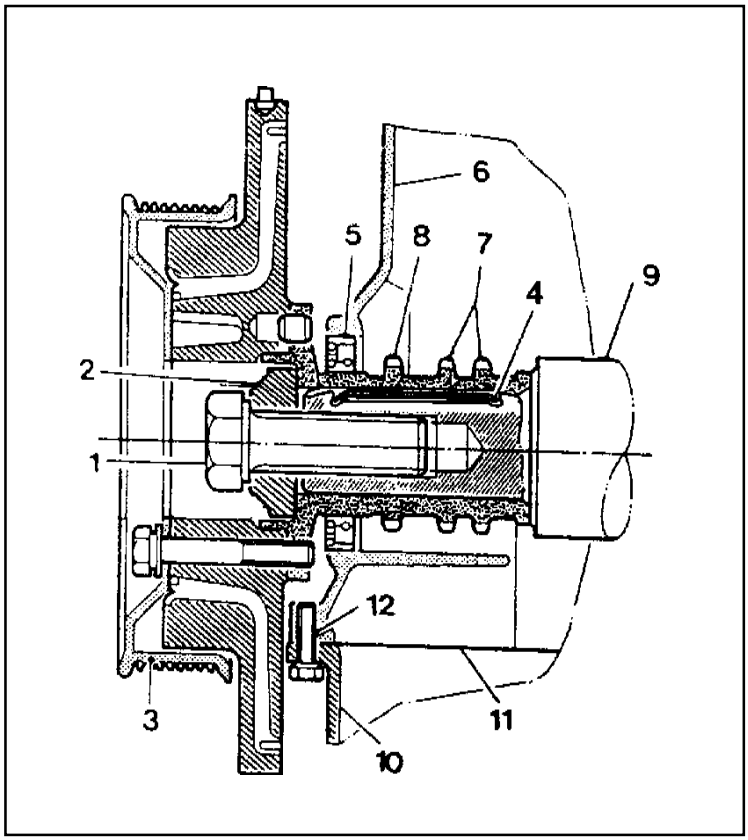

1 Center Bolt (M18 x 50)
2 Center Bolt Washer
3 Vibration Damper and Pulley Assembly
4 Key
5 Crankshaft Front Seal
6 Timing Gear Case Cover
7 Crankshaft Sprocket (Camshaft Driven)
8 Crankshaft Sprocket (Oil pump Driven)
9 Crankshaft
10 Oil Pan
11 Oil Pan Gasket
12 Oil Pan Mounting Bolt (M6 x 22)

Service Data Standard

Permissble Deviation of The Vibration Damper	Radial Runout	0.6 mm
	Axial Runout	0.6 mm

Tools Required

103 589 00 33 00 Puller
001 589 65 09 00 Socket Wrench Insert
602 589 00 40 00 Engine Lock

Removal & Installation Procedure

1. Adjust the piston of number 1 cylinder to the TDC.

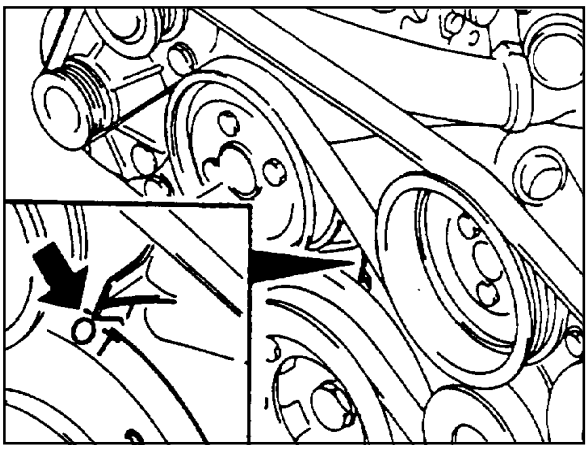

Downloaded from www.Manualslib.com manuals search engine

2. Remove the start motor and install the engine lock to the flywheel ring gear.
3. Remove the center bolt.

Installation Notice

Tightening Torque	1st step 200 - 220 Nm 2nd step 90° +10°

Engine Lock 602 589 00 40 00

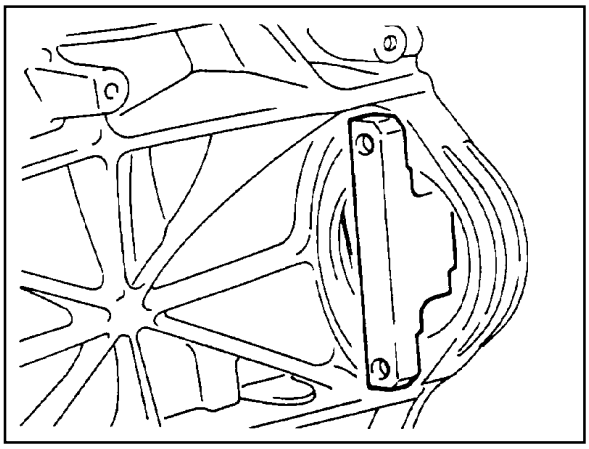

4. Remove the vibration damper assembly using the puller.
5. Installation should follow the removal procedure in the reverse order.

Notice

If possible, don't separate the vibration damper and the pulley.

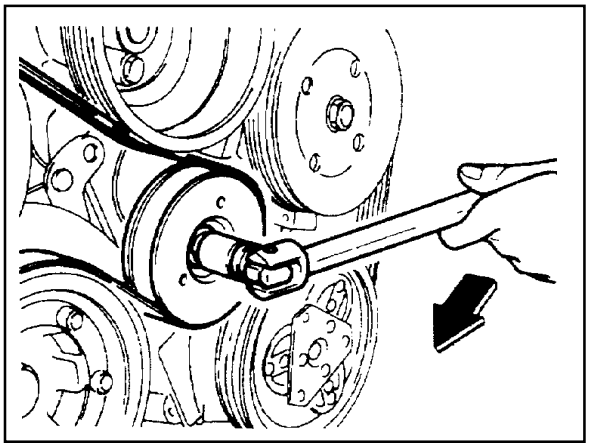

Downloaded from www.Manualslib.com manuals search engine

CRANKSHAFT FRONT RADIAL SEAL

Preceding Work : Removal of belt pulley and vibration damper

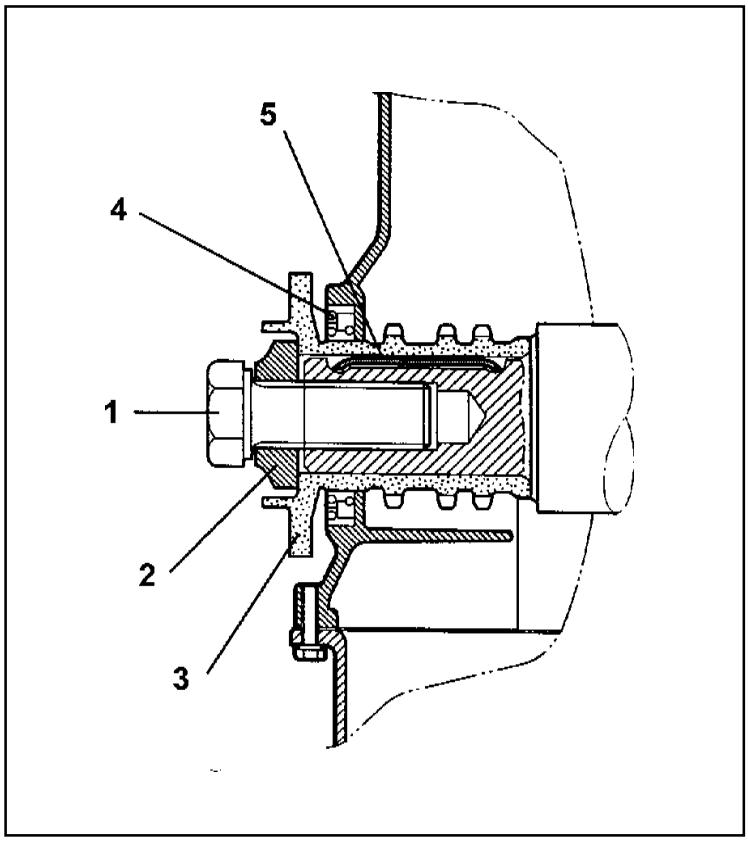

1 Center Bolt (M18 x 50)
..... 1st step 200-220 Nm
2nd step 90° +10°
2 Center Bolt Washer
3 Sleeve (Special Tool)
4 Crankshaft Front Seal
5 Key

Tools Required

601 589 03 14 00 Sleeve

Replacement Procedure

1. Remove the radial seal with a screw driver.

   Notice

   Use a clean cloth not to damage the radial seal mounting hole and the crankshaft.

2. Coat the radial sealing lip with engine oil.
3. Using the sleeve, assemble the radial seal .
4. Align the sleeve groove and the woodruff key and tighten the center bolt until the center bolt and the damper disk stop in the movement.

   Installation Notice

Tightening Torque	1st step 200 - 220Nm 2nd step 90° + 10°

5. Remove the sleeve and install the belt pulley and the vibration damper.
6. Check for leaks while operating the engine.

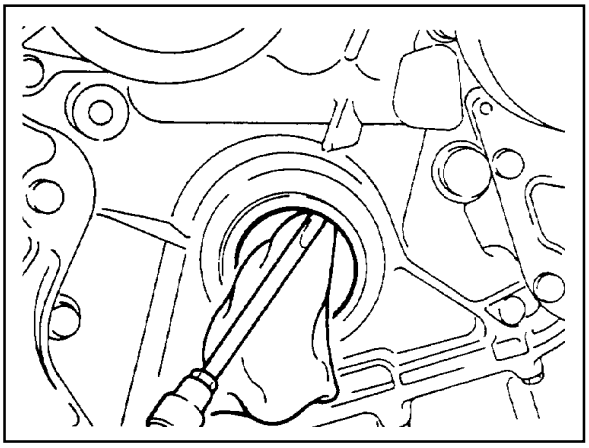

Downloaded from www.Manualslib.com manuals search engine

CRANKSHAFT REAR RADIAL SEAL

Preceding Work : Removal of flywheel or drive plate

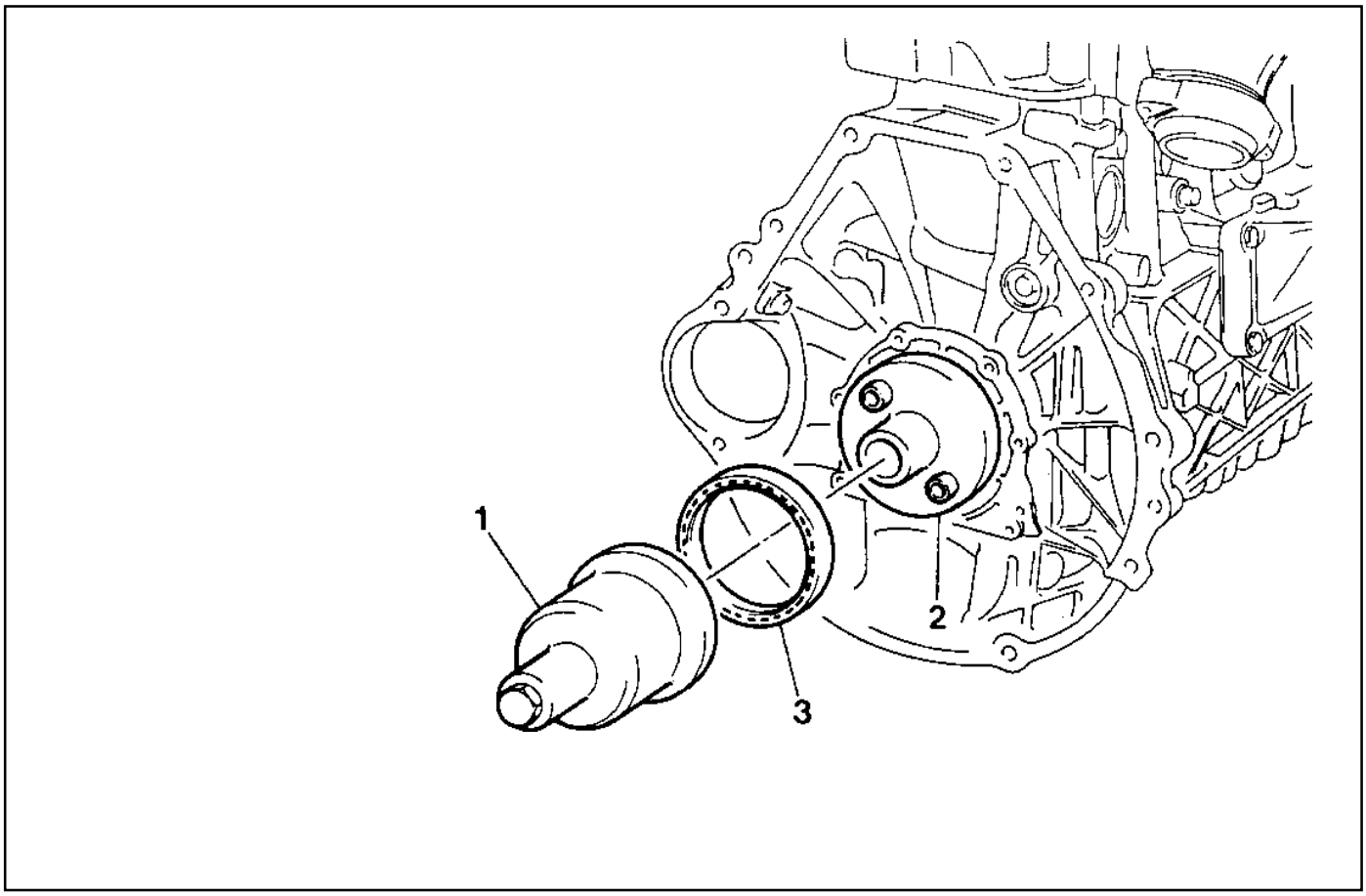

1 Special Tool
2 Special Tool
3 Crankshaft Rear Seal

Tools Required

601 589 03 43 00 Sleeve

Replacement Proceudre

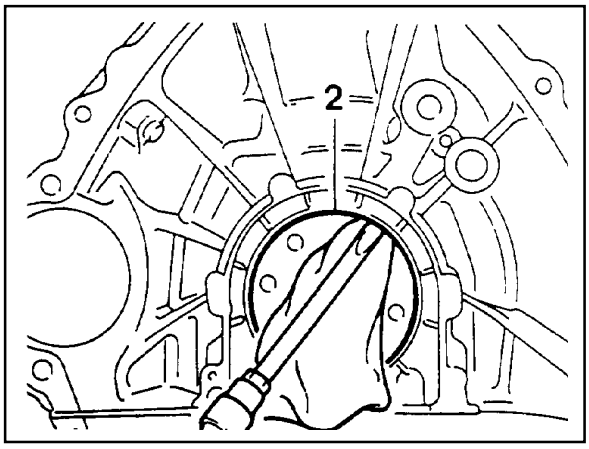

1. Remove the radial seal with a screw driver.

   Notice

   Use a clean cloth not to damage the radial seal mounting hole and the crankshaft.
2. Install the special tool (2) to the crankshaft.
3. Apply the engine oil on the special tool (2).

   Notice

   Do not use the grease.
4. Install the radial seal on the inner parts assembler.
5. Press in the special tool (1) until the radial seal is stopped.
6. Check for leaks while operating the engine.

Downloaded from www.Manualslib.com manuals search engine

CRANKSHAFT

Preceding Work : Removal of engine assembly
Removal of timing gear case cover
Removal of cylinder head
Removal of oil pump
Removal of oil shield

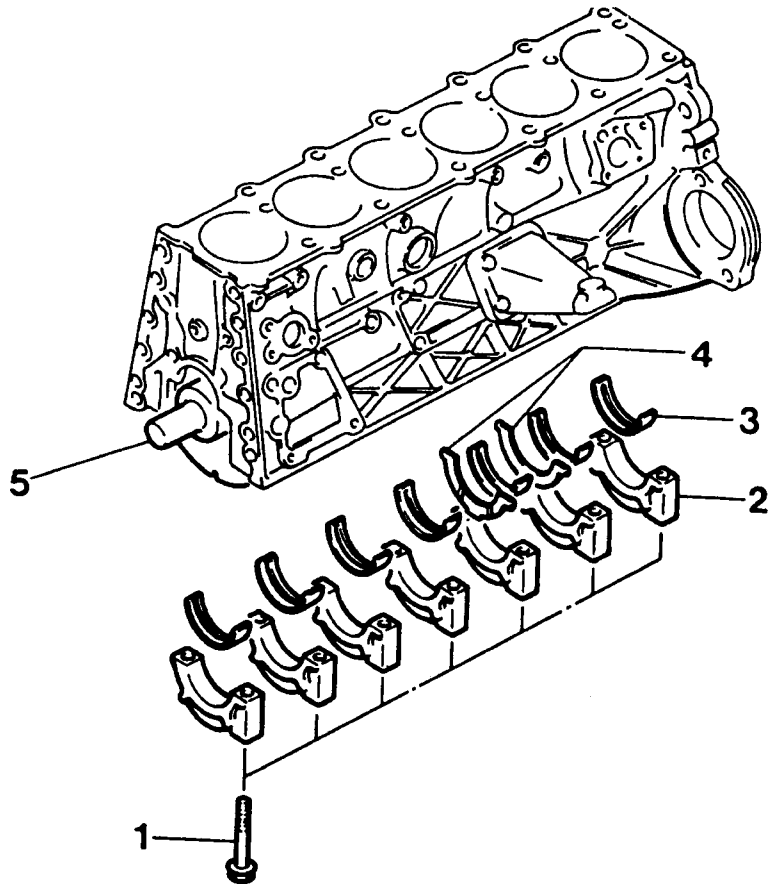

1 12-sided Stretch Bolt ..... 55 Nm x 90°, lubricate
2 Crank Shaft Bearing Cap
3 Crank Shaft Low Main Bearing
4 Lower Thrust Bearing
5 Crank Shaft

Downloaded from www.Manualslib.com manuals search engine

Arrangement of the Thrust Bearing and the Main Bearing

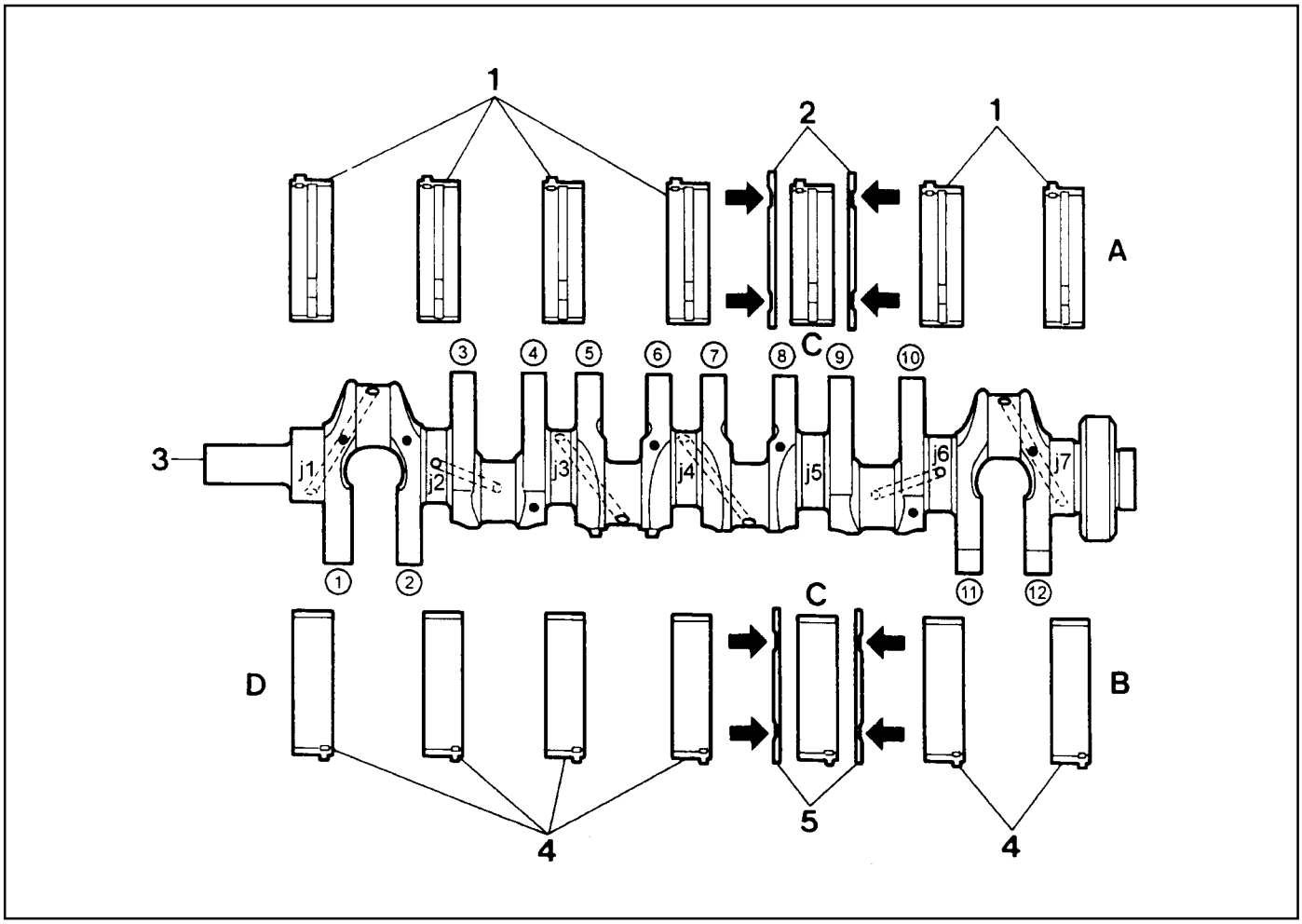

1 Upper Main Bearing
2 Upper Thrust Bearing
3 Crankshaft
4 Lower Main Bearing
5 Lower Thrust Bearing

A Crankcase Side
B Bearing Cap Side (Oil Pan Side)
C Axial Fit Bearing (Number 5 Bearing Point)
D Radial Bearing

①-⑫ Weight Balance/Color Marking Point
j1 - j7 Journal Main Bearing #1 - #7
● Color Dot Marking

The color dot marking are put on the ①, ②, ④, ⑥, ⑧, ⑩, ⑫ and it indicates the diameter of crankshaft journal by color as below.

Downloaded from www.Manualslib.com manuals search engine

Color Dot Marking	Crankshaft Journal Diameter (mm)
Blue	57.960 - 57.965
Yellow	57.955 - 57.960
Red	57.950 - 57.955
White	57.945 - 57.950
Violet	57.940 - 57.945

Selection of Crankshaft Main Bearing

1. Crankcase Side

   There are seven punching marks on the mating surface to oil pan. This mark is correspondent to the bearing distinguished by color. Select the relevant bearing according to the punching mark when repaired.

Punching Mark	Bearing Color Selected
▪	Blue
▪ ▪	Yellow
▪ ▪ ▪	Red

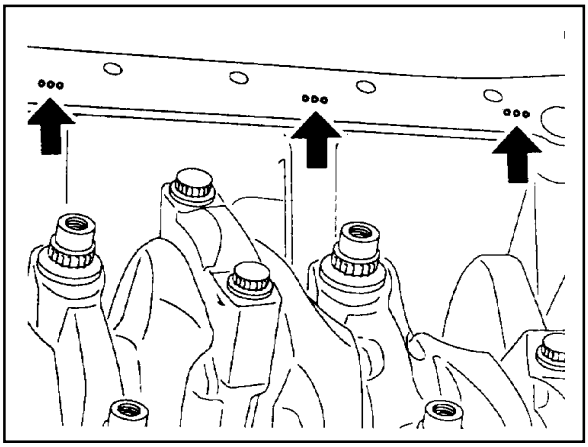

2. Crankshaft Bearing Cap Side

   Select the crankshaft main bearing according to the marking letter on the crankshaft main journal when repaired.

Marking Letter	Bearing Color Selected
B	Blue
Y	Yellow
R	Red
W	White
V	Violet

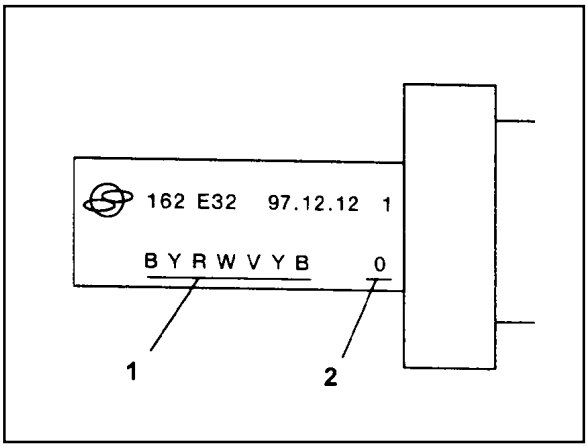

Service Data

Unit : mm

Crankshaft Standard and Repair Size	Crankshaft Bearing Journal Diameter	Crankshaft Bearing Diameter	Crankshaft Journal Width at fit bearing	Connecting Rod Bearing Journal Diameter	Connecting Rod Bearing Journal Width
Standard size	57.950-57.965	58	24.50-24.533	47.94-47.96	27.958-28.042
1st repair size	57.700-57.715	-	-	47.75	-
2nd repair size	57.450-57.465			47.50	
3rd repair size	57.200-57.215			47.25	
4th repair size	56.950-56.965			47.00	

Downloaded from www.Manualslib.com manuals search engine

Removal & Installation Procedure

1. Unscrew the connecting rod bearing cap bolt and remove the bearing cap.

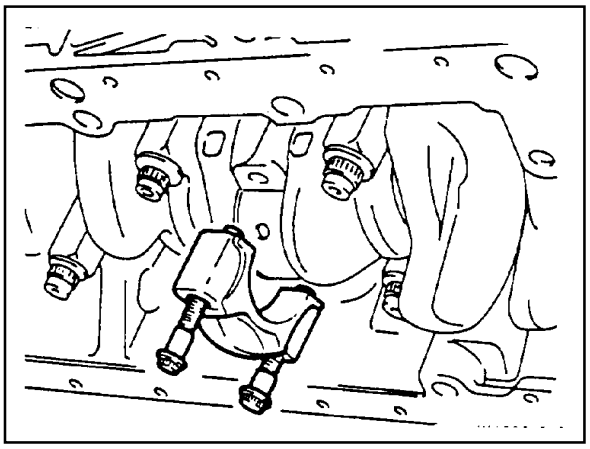

Installation Notice

Tightening Torque	40 Nm + 90°

- Make sure that the upper and lower bearing shells do not change each other.
- Coat the bearing shell with engine oil.
- Install the bearing cap according to the consecutive number.

2. Unscrew the crankshaft bearing cap bolts and separate the upper and lower bearing shells and thrust washers.

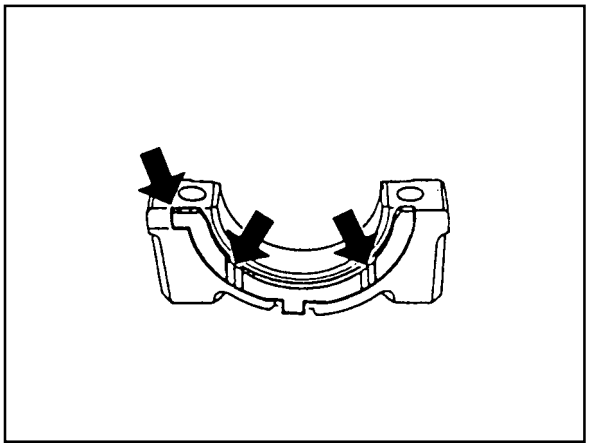

Installation Notice

Tightening Torque	55 Nm + 90°

- Remove the bearing cap from front (pulley side) to rear.
- Make sure that the upper and lower bearing shells do not change each other and coat with engine oil.
- The oil grooves (arrows) in the thrust washers must face outward and insert the thrust bearing into the bearing cap.
- There are five kinds of thrust washers by thickness. Select the proper washer when repaired.

Part No. : 601 030 00 62 2.15 mm
Part No. : 601 030 01 62 2.20 mm
Part No. : 601 030 02 62 2.25 mm
Part No. : 601 030 03 62 2.30 mm
Part No. : 601 030 04 62 2.40 mm

3. Remove the crankshaft.
4. Installation should follow the removal procedure in the reverse order.
5. After completion of the installation, check for the rotating condition of the crankshaft.

Installation Notice

- Make sure the crankshaft bearing cap properly seated in place in the crankcase side. When perfectly installed, the projected part (arrow) locates in the left side (intake manifold side).
- Assemble so that the projected part of the cap and crankcase face the same direction.

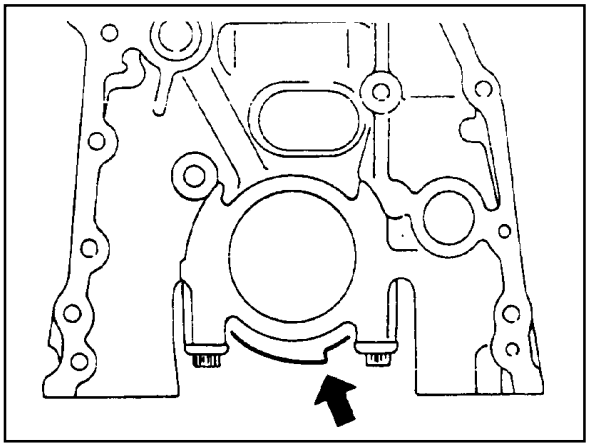

Downloaded from www.Manualslib.com manuals search engine

Inspection

1. If the length 'L' of the crankshaft bearing cap bolt exceeds 63.8mm, replace it.

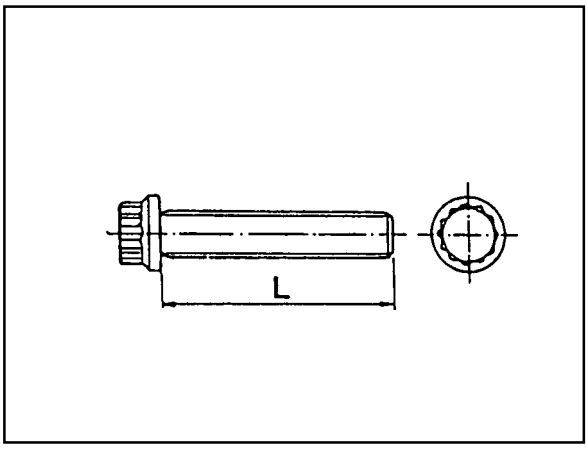

2. Make sure the crankshaft bearing cap is properly seated on the cylinder block (arrows).

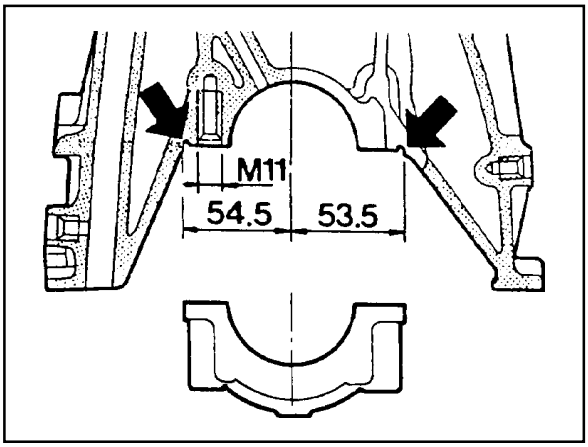

3. Measure and record the inner diameter of the crankshaft bearing.

   Notice

   - Measure at 2 points (1, 2).
   - Measure 'A','B'and 'C' as shown. If average value of 'B' and 'C'is less than value 'A', then the average value of 'B' and 'C' is actual average value. If average value of 'B' and 'C' is more than value 'A'is actual average value.

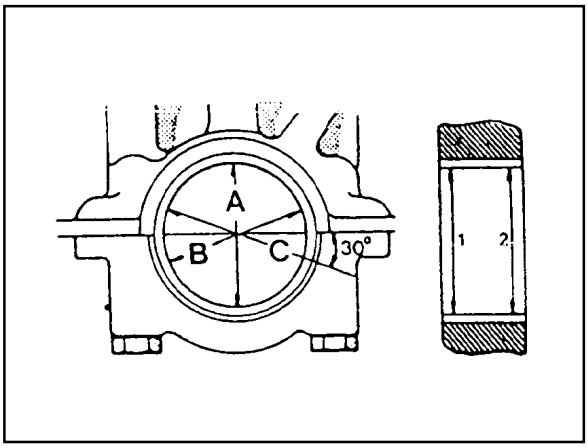

4. Measure and record the diameter of the crankshaft bearing journal.

   Notice

   - Record the mean value when measured at 3 points (A, B, C).
   - Measure the inner diameter of bearing and the diameter of journal and if it is out of the standard data, replace the bearing shell.

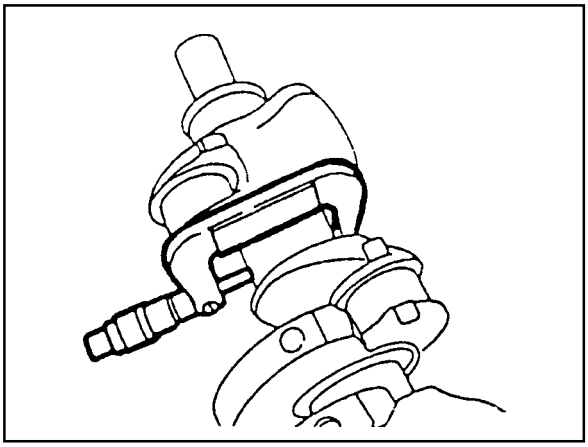

Downloaded from www.Manualslib.com manuals search engine

Service Data Standard (Crankshaft Main Bearing Gap)

Item	Measuring Position	Gap (mm)
Main Bearing Journal (NO. 1, 5, 7)	Radial	Static condition :0.015 - 0.039 Dynamic condition: 0.031 - 0.051 (Consider the expansion 0.011 - 0.016)
	Axial	0.010 - 0.254
Main Bearing Journal (NO. 3, 4, 6)	Radial	Static condition :0.011 - 0.039 Dynamic condition: 0.031 - 0.051 (Consider the expansion 0.015 - 0.022)
	Axial	0.010 - 0.254

(Connecting Rod Bearing Gap)

Item	Measuring Position	Gap (mm)
Connecting Rod Bearing	Radial	0.030 - 0.050

Downloaded from www.Manualslib.com manuals search engine

FLYWHEEL / DRIVEN PLATE

Preceding Work : Removal of manual or automatic transmission

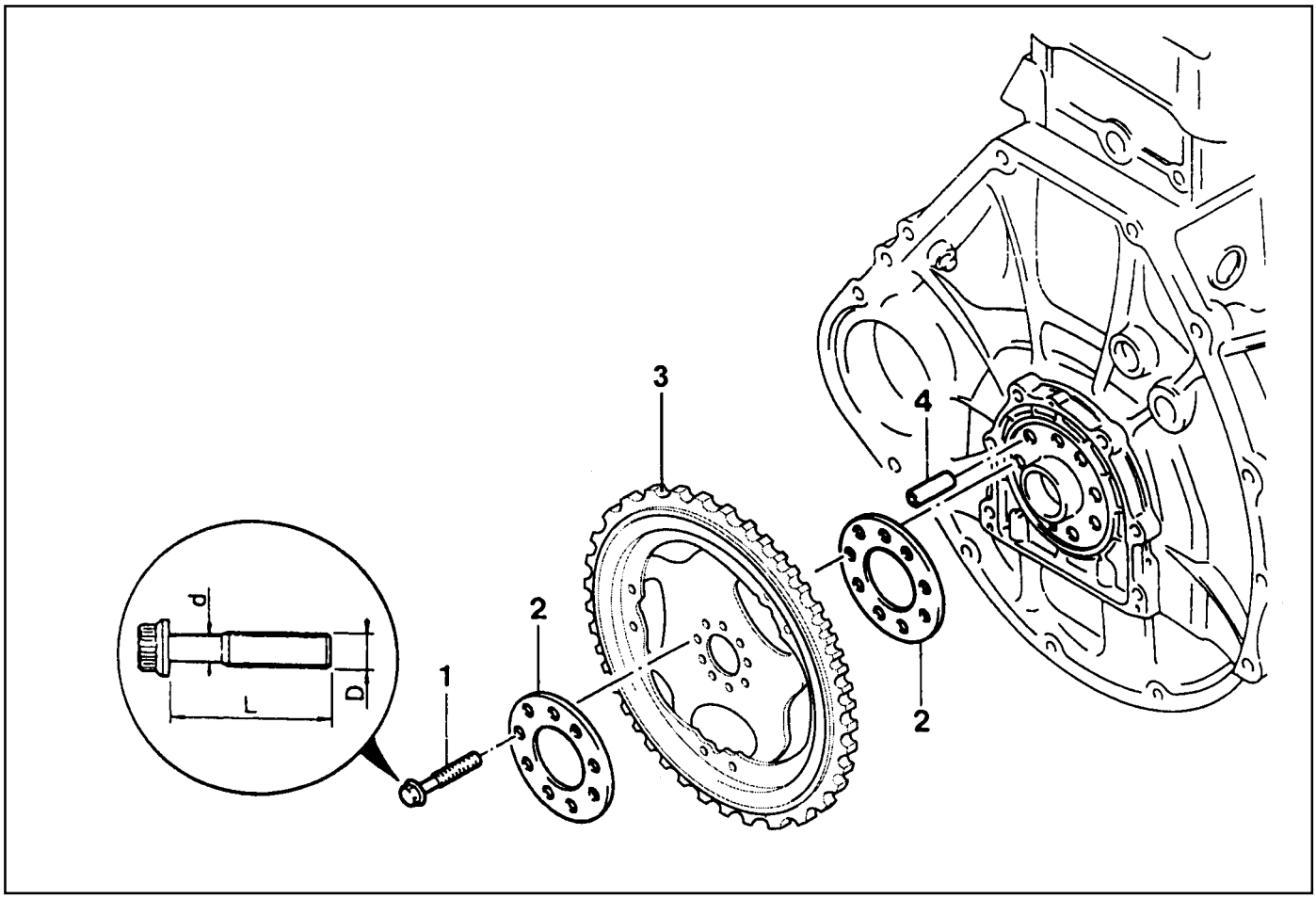

1 Flywheel Mounting Bolt (M10 x 22, 8 pieces)
..... 1st step 45+5 Nm
2nd step +90° +10°

2 Plate

3 Driven Plate (A/T)

4 Dowel Pin

Service Data Standard (Stretch Bolt)

Nominal Size	D	-	M x 1.5
Stretch Side Diameter	d	When New	8.5 - 0.2 mm
		Min. Diameter	8.0 mm
Bolt Length	L	When New	21.8 - 22.2 mm
Tightening Torque	1st step 50 Nm, 2nd step 90°		

Downloaded from www.Manualslib.com manuals search engine

Removal & Installation Procedure

1. Unscrew the stretch bolt.

Installation Notice

Tightening Torque	1st step 45+5 Nm 2nd step 90° + 10°

- Replace the bolt when the stretch side diameter (d) of the flywheel mounting bolt is less than 8.0mm.
- For the stretch bolt tightening, keep the socket wrench and Tommy-bar to be 90° and tighten as specified.

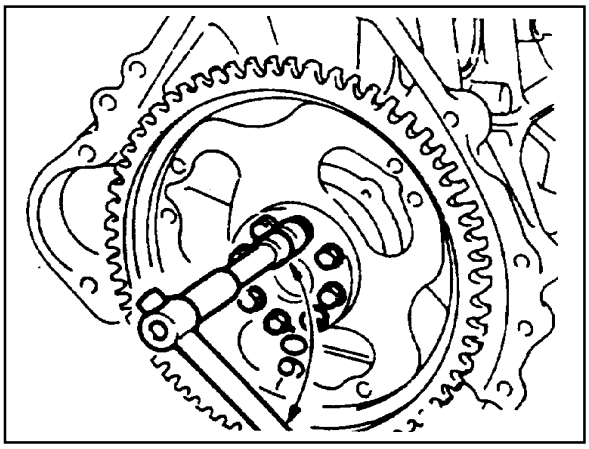

2. Remove the flywheel for manual transmission vehicles, or the driven plate (3), and plate (2) for Auto. transmission vehicle.
3. Installation should follow the removal procedure in the reverse order.

Sectional View

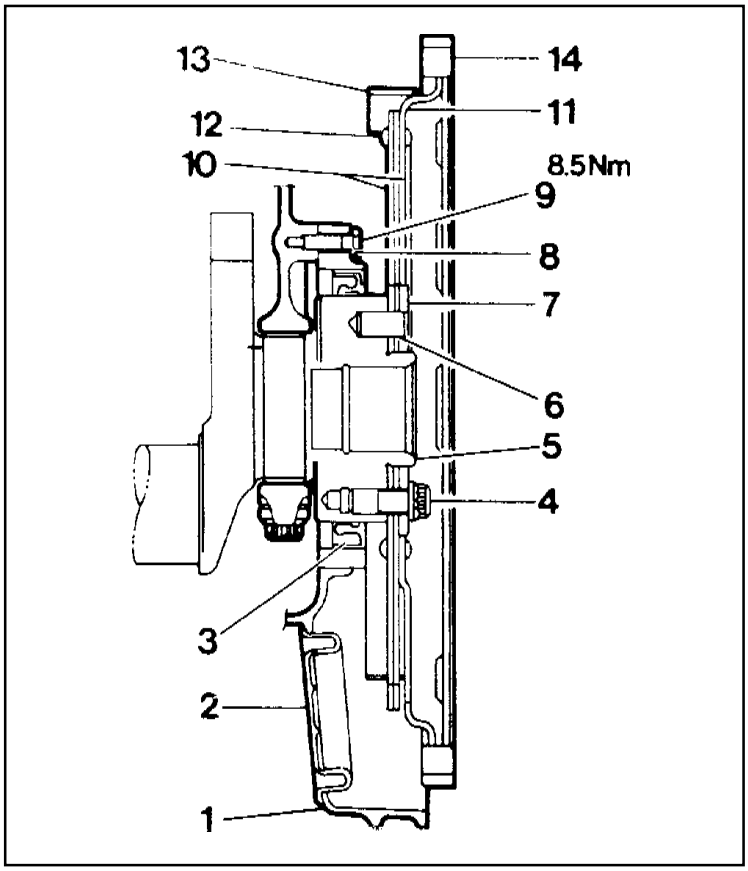

1 Oil Pan
2 Cover
3 Crankshaft Front Seal
4 Flywheel MTG Bolt
5 Crankshaft
6 Dowel Pin
7 Plate
8 TGCC
9 Bolt
10 Front Drive Plate
11 Rear Drive Plate
12 Rivet
13 Segment
14 Ring Gear

Downloaded from www.Manualslib.com manuals search engine

CAMSHAFT ADJUSTER

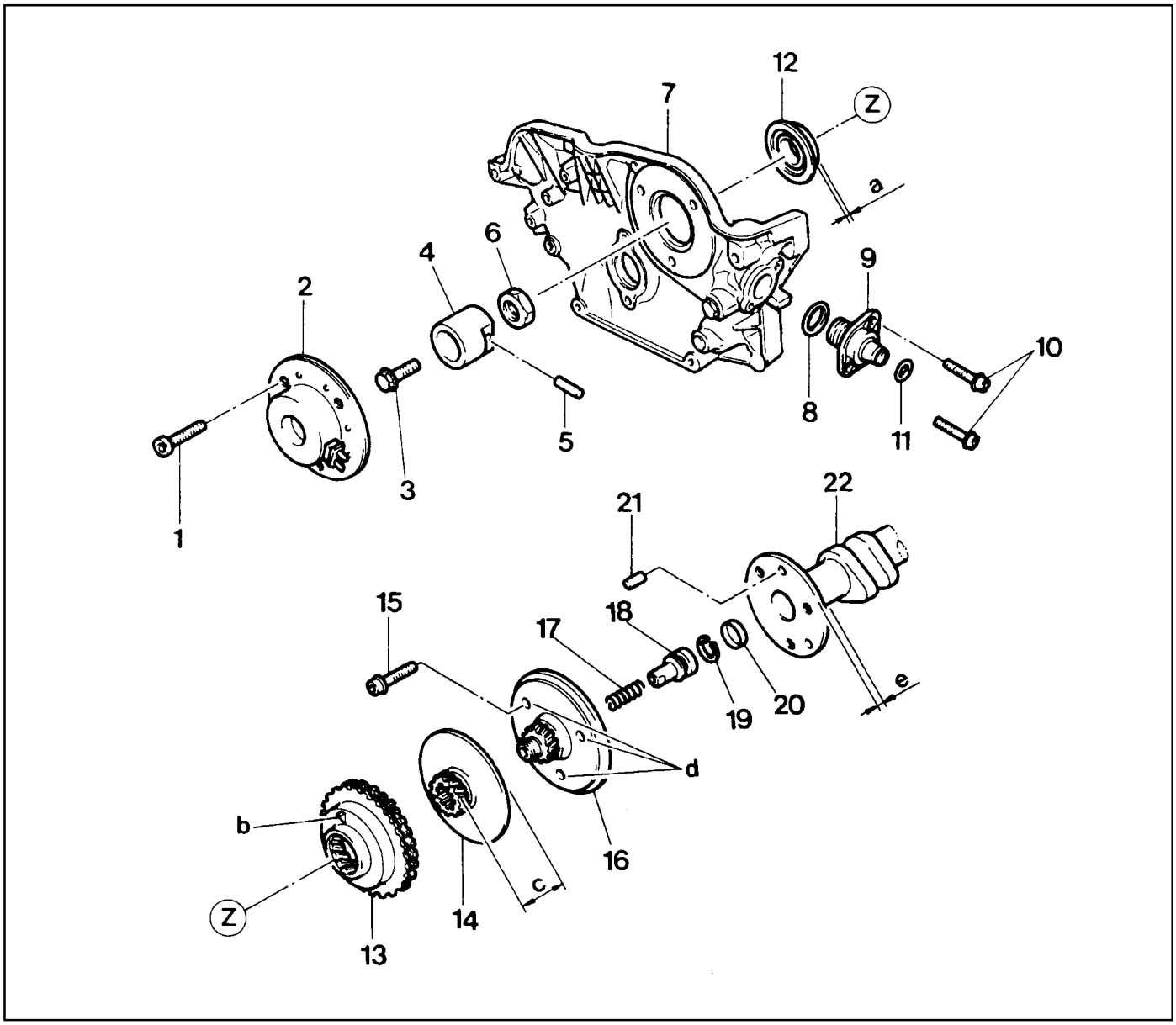

1 Bolt (M6 x 16, 3 pieces) ..... 9-11 Nm
2 Electromagnetic Actuator (2 Pin Connector)
3 Bolt ..... 35 Nm
4 Armature
5 Roll Pin
6 Nut (M20 x 1.5) ..... 60-70 Nm
7 Front Cover
8 Seal
9 Camshaft Position Sensor
10 Bolt (M6 x 16, 2 pieces) ..... 9-11 Nm
11 Seal
12 Seal Cover
13 Camshaft Sprocket and Position Indicator (b)
14 Adjuster piston
15 Flange bolt (M7 x 13, 3 pieces)
..... 1st step 18-22 Nm
2nd step 90° ± 5°
16 Flange Shaft
17 Compression Spring
18 Control Piston
19 Circlip
20 Oil Gallery
21 Pin
22 Intake Camshaft

Downloaded from www.Manualslib.com manuals search engine

Removal & Installation Procedure

1. Turn the crankshaft to the direction of engine rotation and position the no.1 cylinder piston at TDC which the camshaft is positioned at OT.

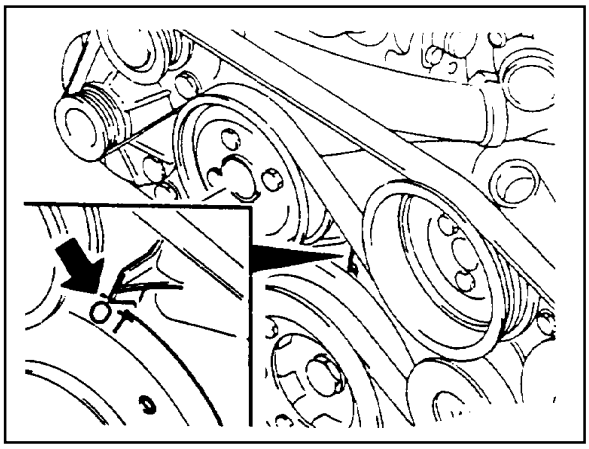

2. Remove the cylinder head front cover.
3. Paint the alignment marks (arrows) on the intake and exhaust camshaft sprocket and the timing chain.

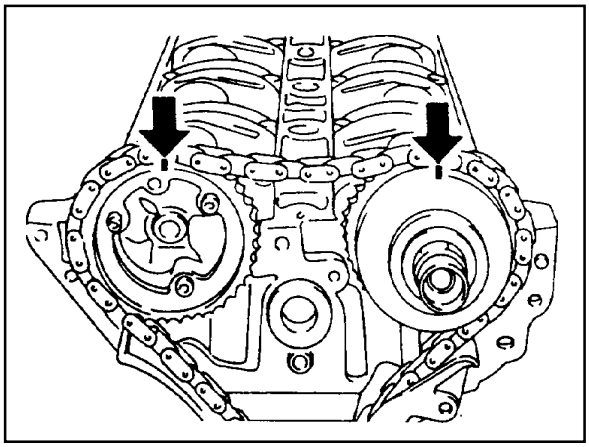

4. Unscrew the bolt (3) from the armature (4) and remove the armature.

Installation Notice

Tightening Torque	35 Nm

5. Unscrew the nut (6) and remove the ring and seal cover (11).

Installation Notice

Tightening Torque	60 - 70 Nm

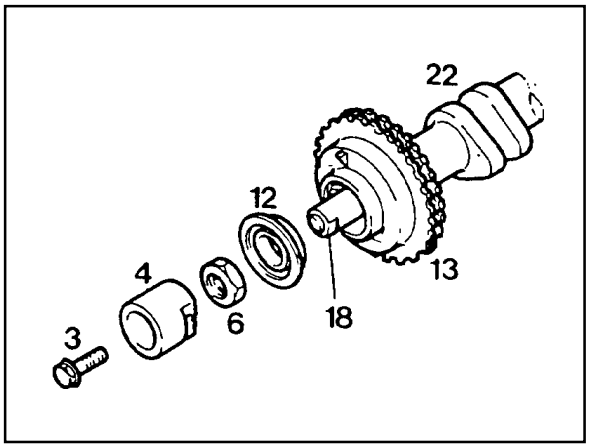

3 Bolt
4 Amarture
6 Nut (M20 x 1.5)
11 Seal Cover
12 Camshaft Sprocket
17 Control Piston
21 Intake Camshaft

6. Unscrew the sprocket bolt from the exhaust camshaft and remove the sprocket.

Installation Notice

Tightening Torque	1st step 18 - 22 Nm 2nd step 90° ± 5°

The sprocket bolt is designed to be used only once, so always replace with new one.

Downloaded from www.Manualslib.com manuals search engine

7. Remove the camshaft sprocket (13) and adjust piston (14), and remove the flange shaft (16) from the intake camshaft (22) after removing the bolt (15).

Installation Notice

Tightening Torque	1st step 18 - 22 Nm 2nd step 90° ± 5°

The sprocket bolt is designed to be used only once, so always replace with new one.

8. Installation should follow the removal procedure in the reverse order.
9. Adjust the camshaft timing.

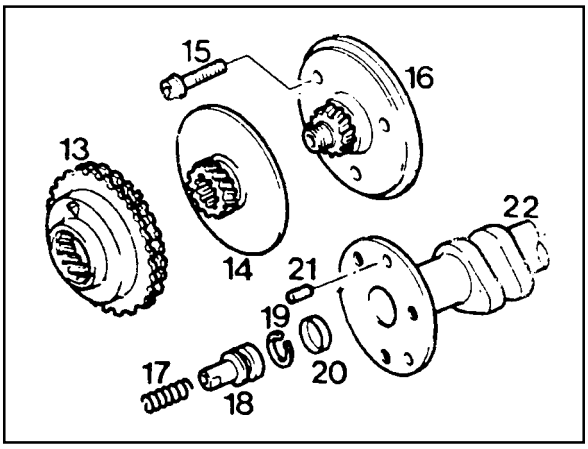

Downloaded from www.Manualslib.com manuals search engine

CAMSHAFT SPROCKET BOLT

Intake Flange Shaft Bolt

Tightening Torque	1st step 18 - 22 Nm 2nd step 90° ± 5°

Notice

The sprocket bolts are designed to be used only once, so always replace with new one.

C. M7 x 13 Collar Bolt Torx-T30
e. 6.8mm
16. Flange Shaft
18. Control Piston
22. Intake Camshaft

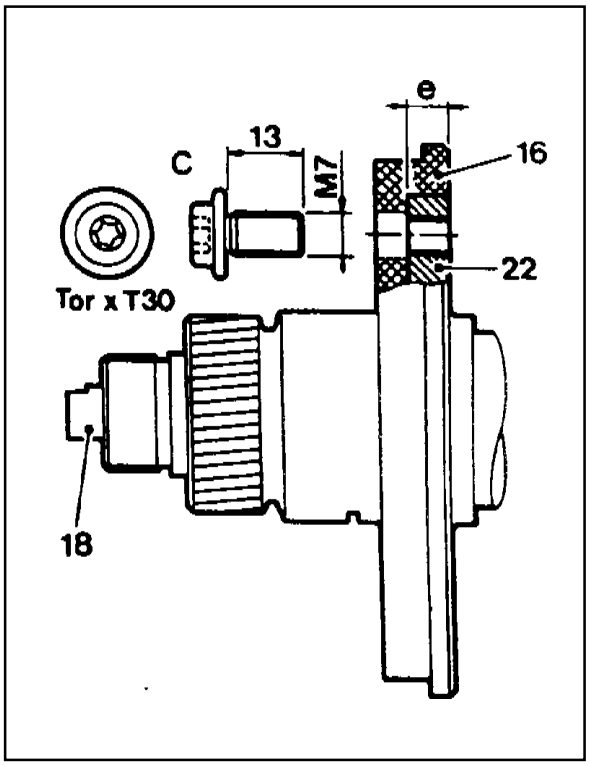

Exhaust Camshaft Sprocket Bolt

Tightening Torque	1st step 18 - 22 Nm 2nd step 90° ± 5°

Notice

The sprocket bolts are designed to be used only once, so always replace with new one.

E. M7 x 13 Collar Bolt Torx-T30
e. 6.8mm
13a. Camshaft Sprocket
22a. Exhaust Camshaft

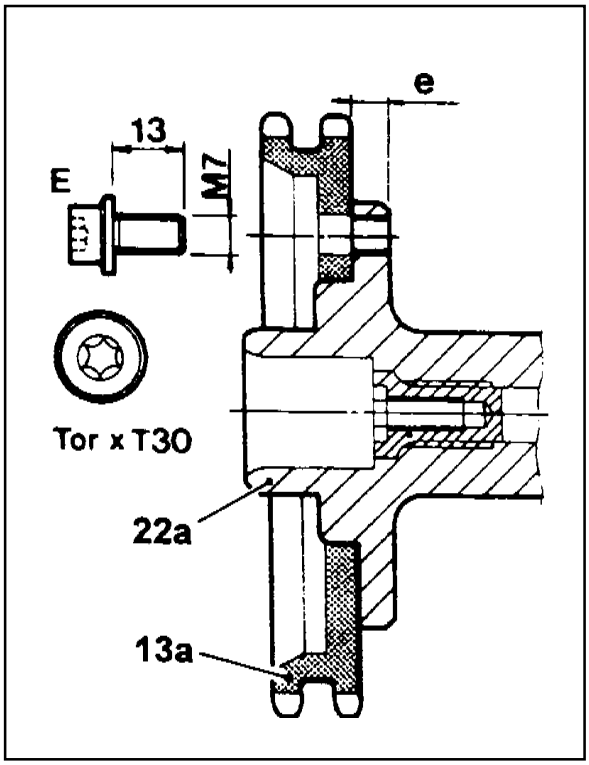

Downloaded from www.Manualslib.com manuals search engine

CAMSHAFT

Preceding Work : Removal of cylinder head cover, removal of coolant connection fitting

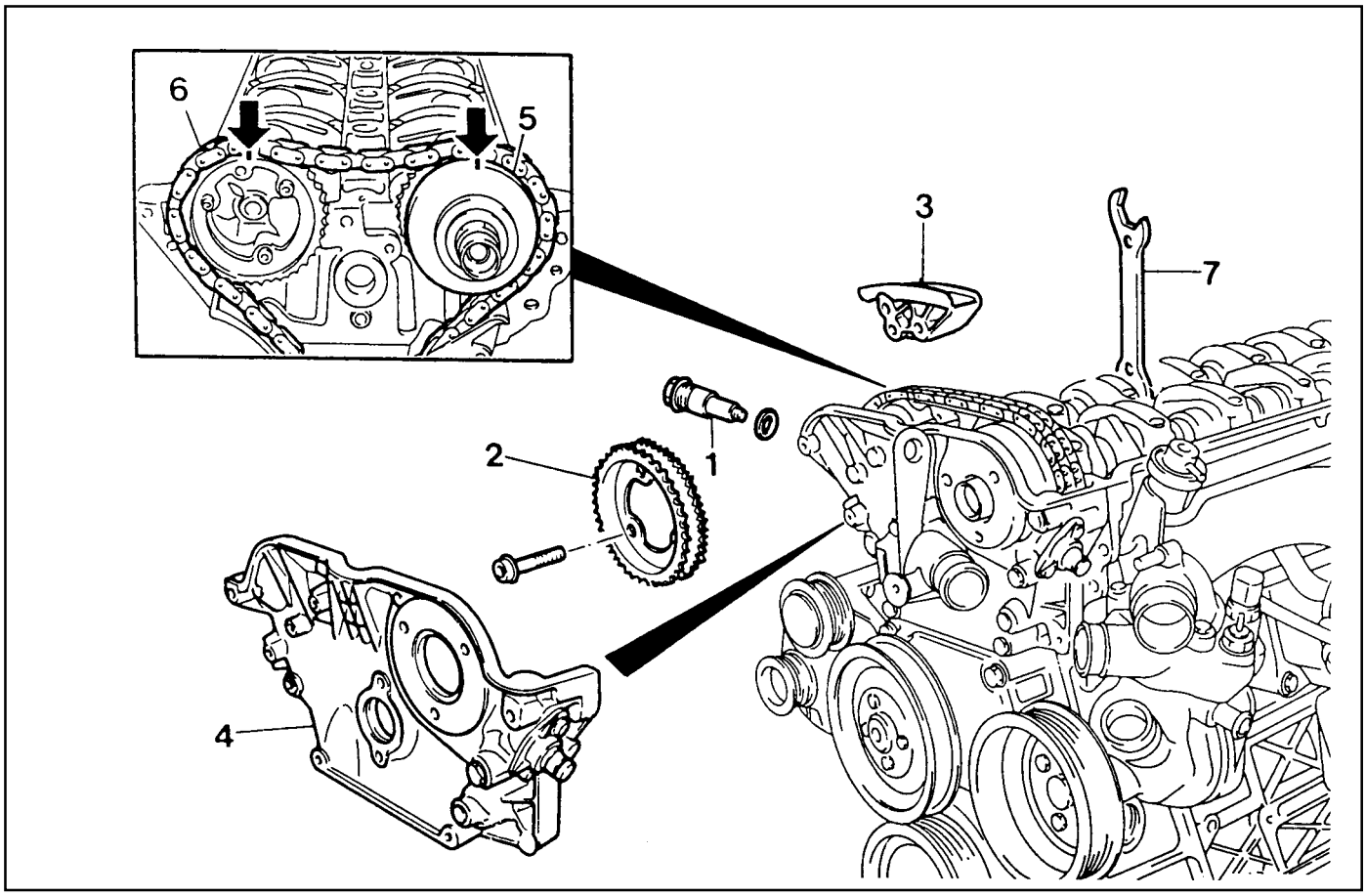

1 Chain Tensioner Assembly ..... 72-88 Nm
2 Exhaust Camshaft Sprocket
3 Upper Guide Rail
4 Cylinder Head Front Cover
5 Intake Camshaft Sprocket
6 Chain
7 Wrench (Special Tool)

Downloaded from www.Manualslib.com manuals search engine

Tools Required

000 589 01 10 00 Box Wrench Insert

104 589 01 01 00 Spanner

Removal Procedure

1. Turn the crankshaft and position the No. 1 cylinder piston at BTDC 30°.
2. Remove the alternator.
3. Remove the chain tensioner.

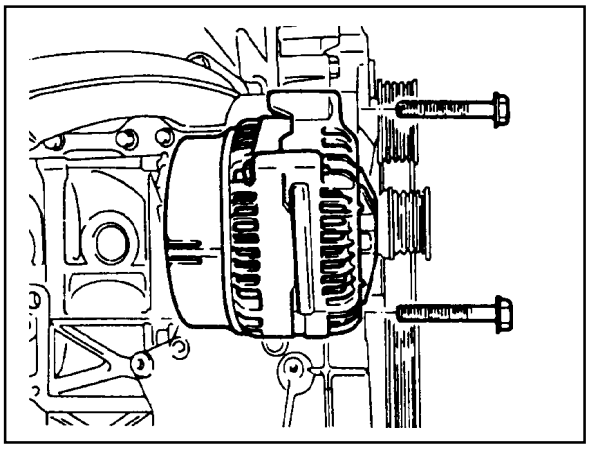

4. Remove the cylinder head front cover and the upper guide rail.

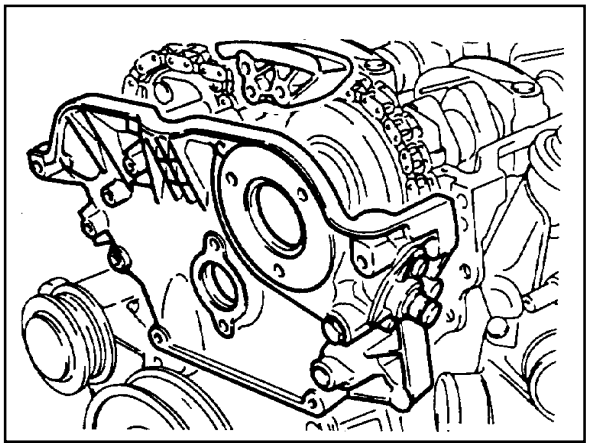

5. Put the alignment marks (arrows) on the camshaft sprocket (2, 5) and the timing chain (6).

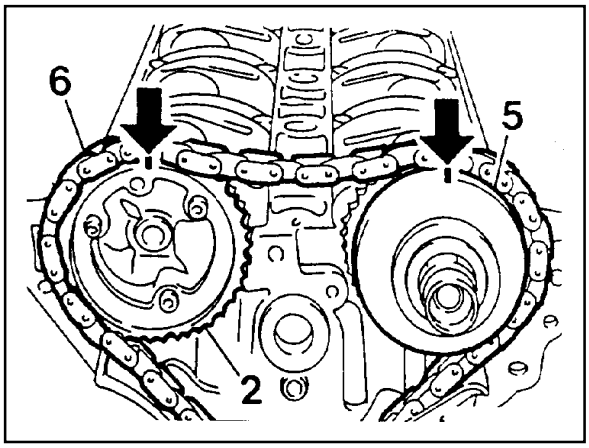

6. Unscrew the exhaust camshaft sprocket bolt and remove the sprocket.
7. Separate the chain from the intake camshaft sprocket and put the chain not to be dropped into timing case.

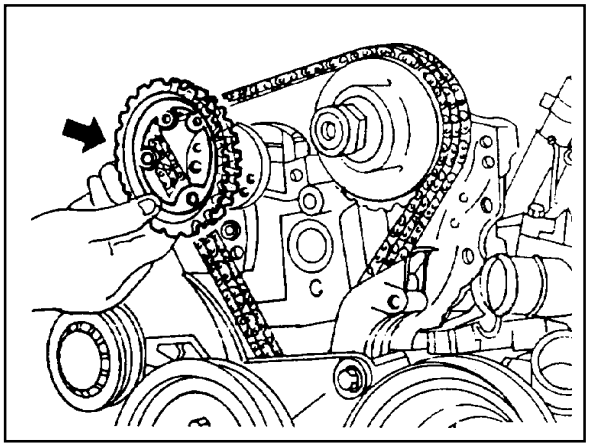

Downloaded from www.Manualslib.com manuals search engine

8. Unscrew the intake side bolts (8, 11, 13, 14) and the exhaust side bolts (1, 4, 6, 7).
9. Loosen the remaining bolts and unscrew the intake and exhaust side camshaft bearing cap bolts.

   Notice

   Number the camshaft bearing cap bolts when removing them, so that they don't get mixed up.
10. Remove the intake and exhaust camshafts.

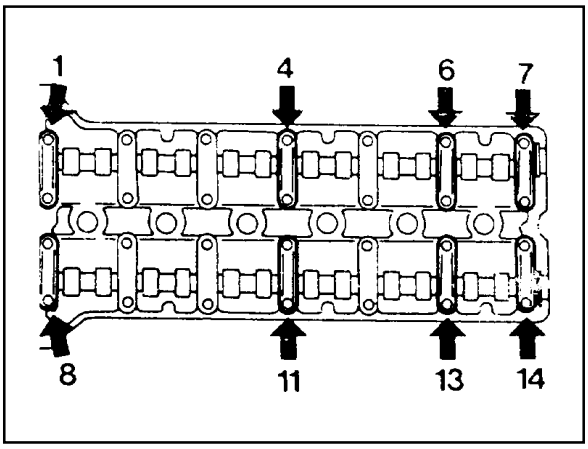

Installation Procedure

1. Turn the crankshaft and position the No. 1 cylinder piston at BTDC 30°.

   Notice

   Turn the crankshaft in the direction of engine rotation.
2. Install the exhaust camshaft bearing caps (2, 3, 5) and the intake camshaft bearing caps (9, 10, 12). Tighten the bolts with specified torque and install the remaining bearing caps.

   Notice

Tightening Torque	22.5 - 27.5 Nm

   Install the bearing caps according to the numbers on the bearing caps.

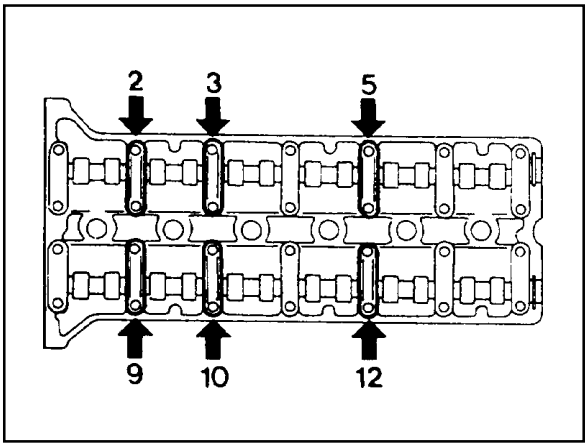

3. Turn the camshaft using the wrench (special tool) so that the intake camshaft adjustment hole lines up with the cylinder head upper side (3 o'clock direction at the intake, 9 o'clock direction at the exhaust).

   Notice

   Turn the crankshaft and adjust it to OT so that no. 1 cylinder's piston would be at TDC.

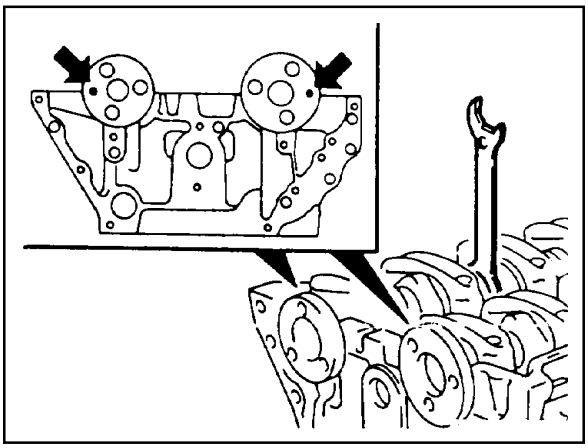

Downloaded from www.Manualslib.com manuals search engine

4. Turn the intake camshaft adjuster to the direction of camshaft rotation by hard until it stops and then install the chain.

Notice

- Make sure that the camshaft sprocket and timing chain are aligned with marks.
- Intake camshaft adjuster should be in retarded position.

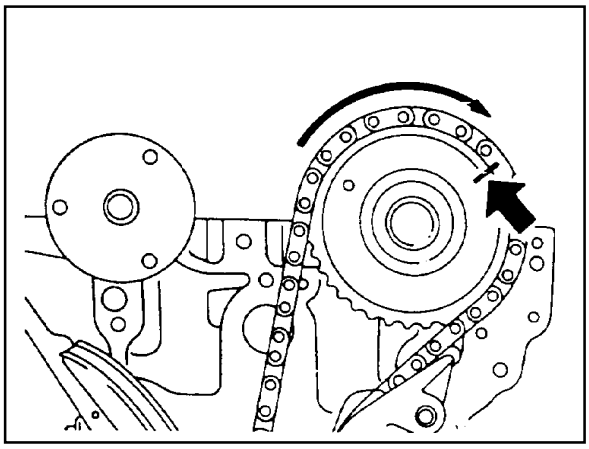

5. Install the chain on the exhaust sprocket and tighten the sprocket bolts.

Notice

Tightening Torque	1st step 18 - 22 Nm 2nd step 90° ± 5°

- Make sure that the camshaft sprocket and timing chain are aligned with marks.
- Replace the sprocket bolt with new one.

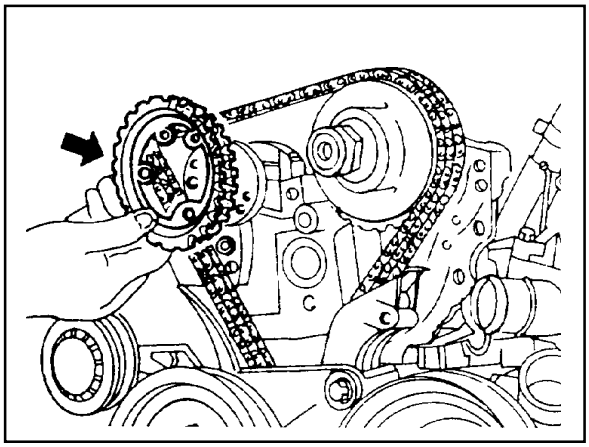

6. Install the chain tensioner and tighten it as specified.

Notice

Tightening Torque	(1) 40 Nm
	(2) 72 - 88 Nm

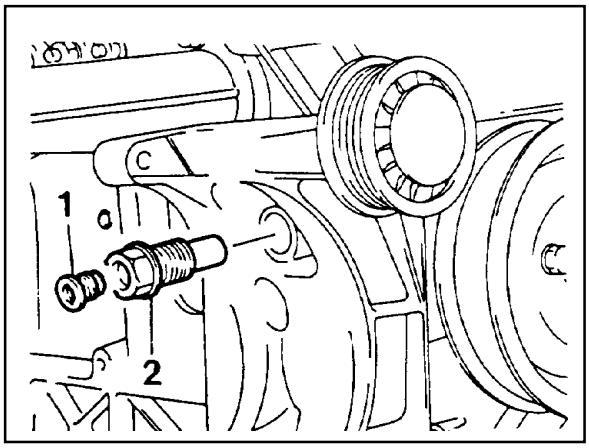

7. Rotate the crankshaft 2 revolutions and check followings:
   - TDC of No. 1 cylinder : OT
   - Alignment between camshaft adjustment hole and cylinder head surface.
   - Alignments between timing chain and sprocket marks.

Notice

- Turn the crankshaft in the direction of engine rotation.
- Read just if not aligned.

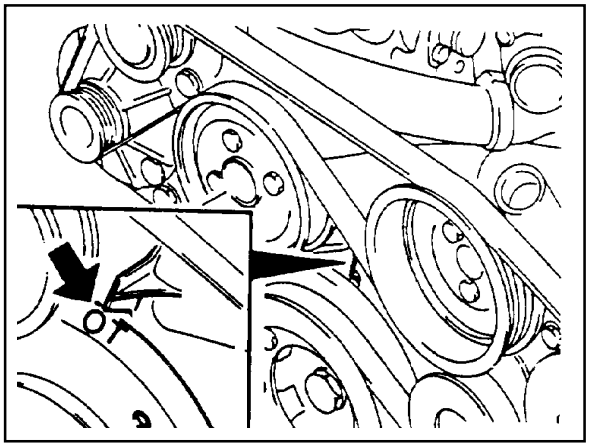

Downloaded from www.Manualslib.com manuals search engine

8. Install the upper guide rail and cylinder head front cover.
9. Install the alternator.

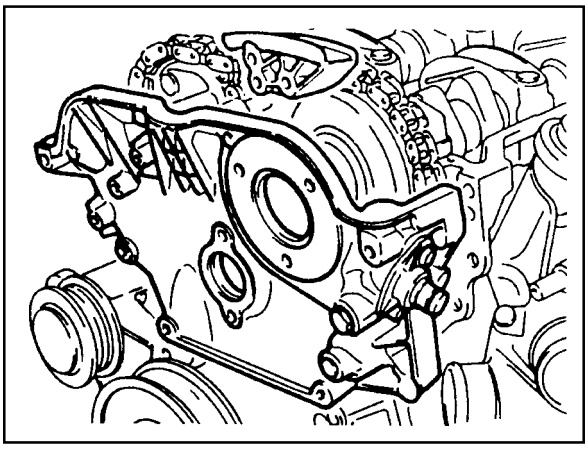

Downloaded from www.Manualslib.com manuals search engine

CAMSHAFT TIMING POSITION

Preceding Work : Removal of cylinder head cover
Removal of cylinder head front cover

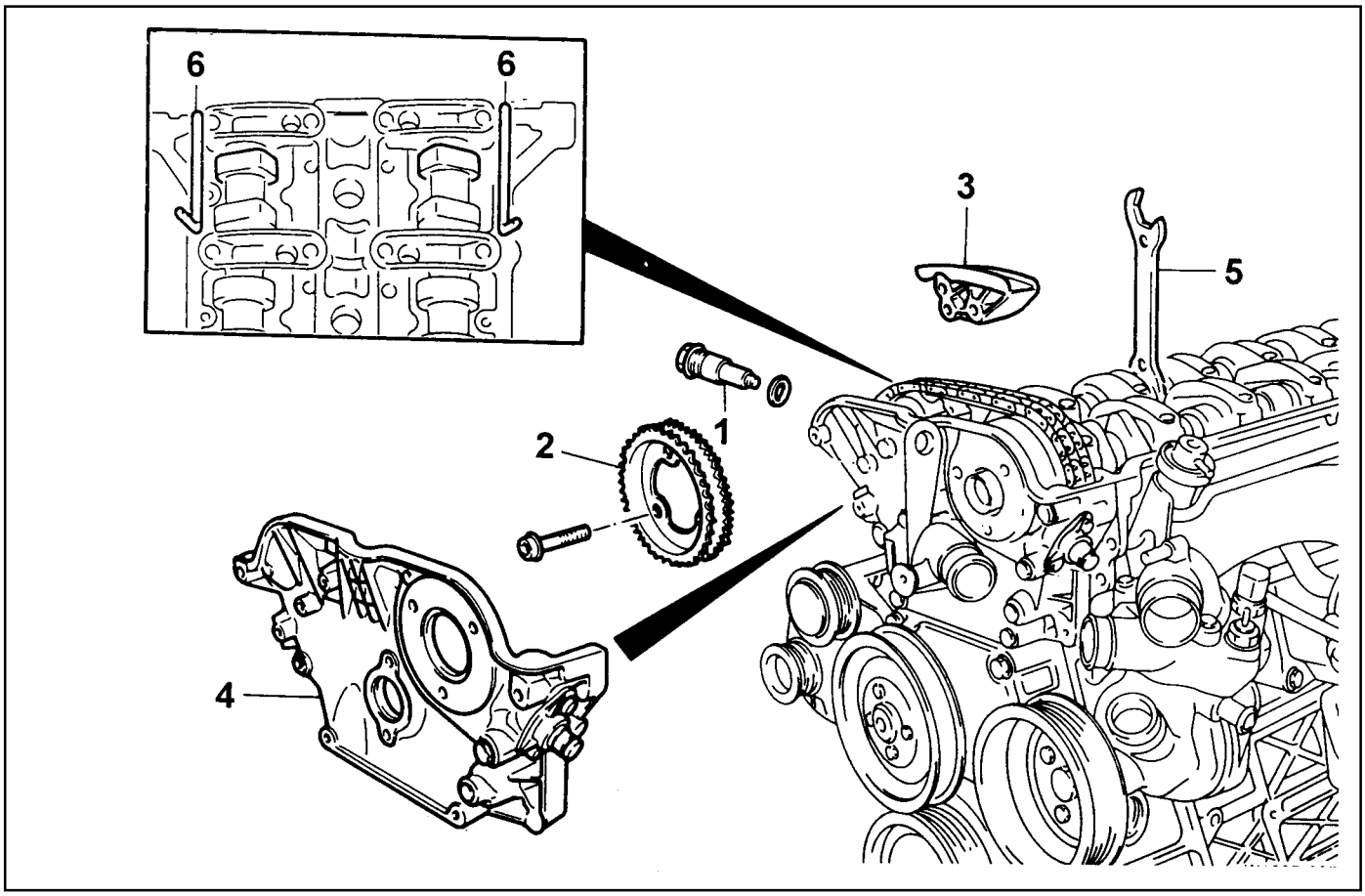

1 Chain Tensioner Assembly
2 Exhaust Camshaft Sprocket
3 Upper Guide Rail
4 Cylinder Head Front Cover
5 Wrench (Special Tool)
6 Adjustment Hole Fitting Pin (ƒ4.0 mm)

Downloaded from www.Manualslib.com manuals search engine

Tools Required

104 589 01 01 00 Spanner

Inspection

1. Position the No.1 cylinder piston to TDC (OT) by turning the crankshaft.

   Notice

   When the OT mark on vibration damper is aligned with timing gear case cover, the intake and exhaust cam of cylinder will make the slope to the center and will face up. In this way, the adjustment hole of the intake and exhaust camshaft will match in line with the cylinder head upper end, at 3 o'clock, and 9 o'clock direction each other.

2. Check the timing as below procedure;
   - Check if the camshaft adjustment hole is positioned to 3 o'clock direction at the intake side and to 9 o'clock direction at the exhaust side, respectively and align with the cylinder head mating surface.
   - At this condition, check if the OT mark on vibration damper aligns with the marker on the timing gear case.

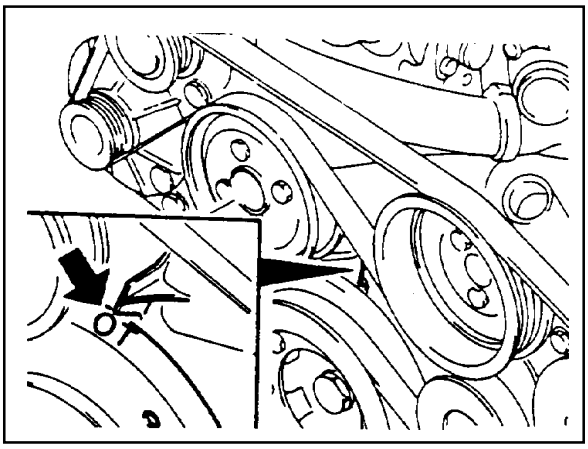

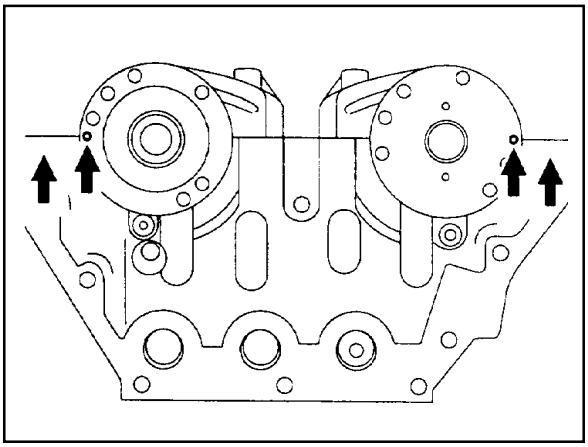

Adjustment Procedure

1. Position the No.1 cylinder to BTDC 30° .
2. Remove the chain tensioner.
3. Remove the exhaust camshaft sprocket.
4. Align the intake and exhaust camshaft flange hole with the cylinder head upper surface.
   - Intake Side : 3 o'clock direction
   - Exhaust Side : 9 o'clock direction
5. Secure the intake and exhaust camshaft.
6. Position the piston of No.1 cylinder at TDC (OT) by turning the crankshaft.
7. Turn the camshaft adjuster of the intake camshaft to the left as much as possible (cam adjuster 'retarded' position).
8. Install the chain to the intake camshaft sprocket.

   Notice

   Timing chain must be placed on the guide rail in gear case cover.

Downloaded from www.Manualslib.com manuals search engine

9. Install the chain to the exhaust camshaft sprocket and install it to the camshaft.

   Installation Notice (Sprocket Bolt)

Tightening Torque	1st step 18 - 22 Nm 2nd step 90° ± 5°

   The sprocket bolt is designed to be used only once, so replace with new one.

10. Install the chain tensioner.

   Installation Notice

Tightening Torque	Screw Plug	40 Nm
	Tensioner Assembly	72 - 88 Nm

11. Check the camshaft timing.

Downloaded from www.Manualslib.com manuals search engine

VALVE SPRING

Preceding Work : Removal of camshaft
Removal of spark plug

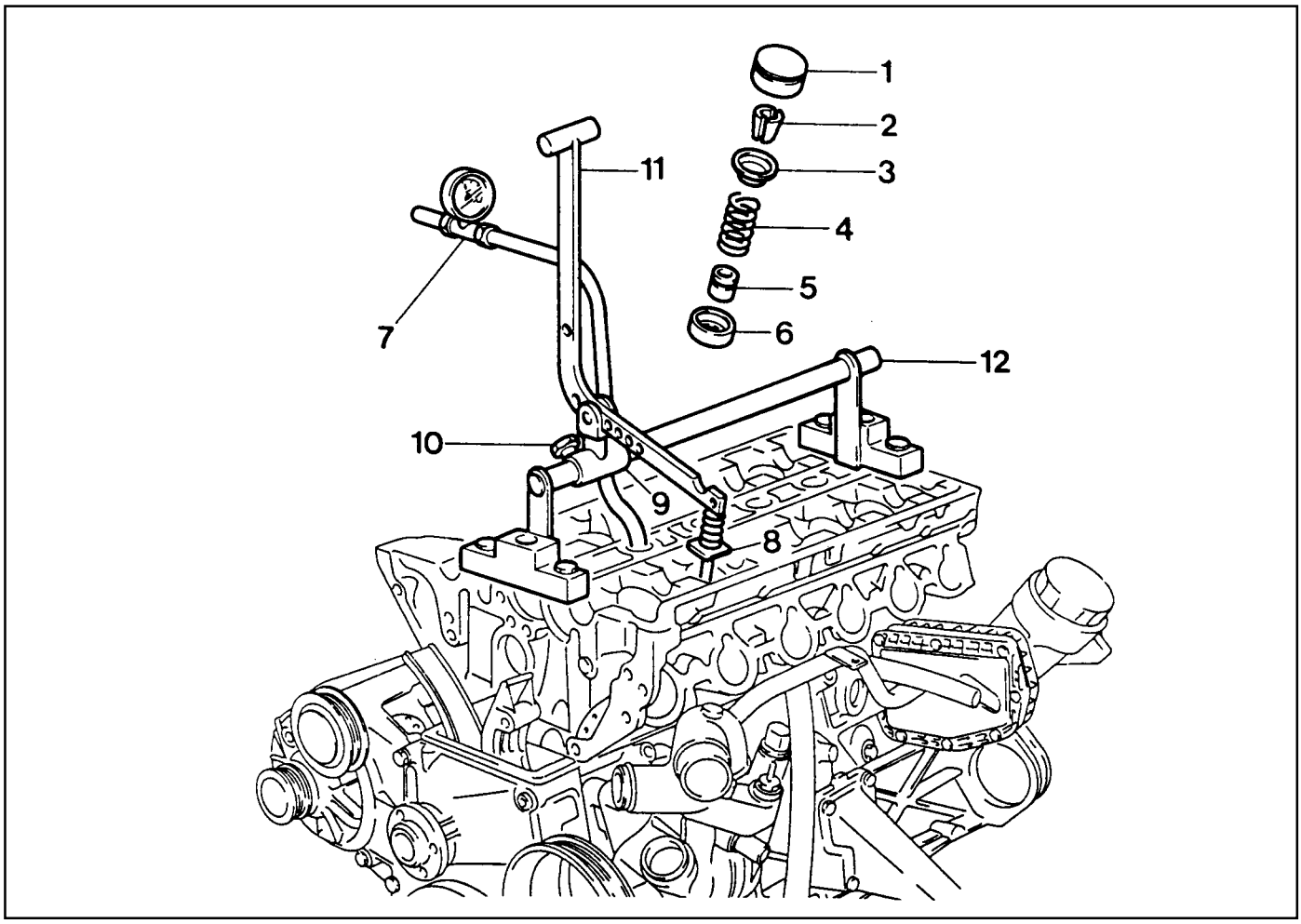

1 Valve Tappet Assembly
2 Valve Cotter
3 Upper Retainer
4 Valve Spring ..... Check, Replace if necessary
5 Valve Stem Seal
6 Lower Retainer
7 Connecting Hose
8 Thrust Piece
9 Slide
10 Adjust Bolt
11 Lever Pusher
12 Supporting Bar

Downloaded from www.Manualslib.com manuals search engine

Tools Required

111 589 01 59 00 Supporting Bar

111 589 18 61 00 Lever Pusher

111 589 25 63 00 Thrust Piece

116 589 06 63 00 Magnetic Finger

Removal & Installation Procedure

1. Place the supporting bar (12) and the slide (9) at the camshaft bearing cap (Nos 1 & 7/8&14) and tighten them with the bearing cap bolt.

   Installation Notice

Tightening Torque	22.5 - 27.5 Nm

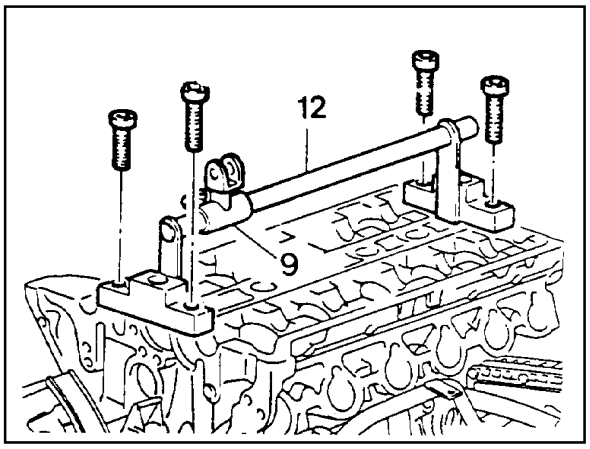

Supporting Bar 111 589 01 59 00

2. Turn the crankshaft to position the each cylinder piston at TDC.

Mark on The Vibration Damper	Cylinder
OT	1, 6
120°	2, 5
240	3, 4

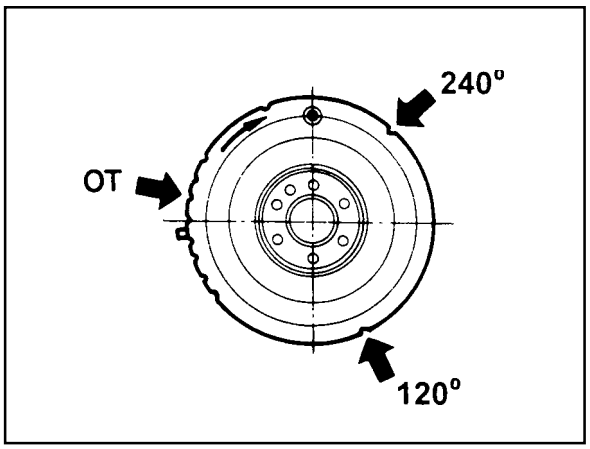

   Notice

   - Remove the valve spring only at TDC.
   - Always rotate the crankshaft by holding the chain to prevent from timing chain damage and tangling, and for smooth rotation.

3. Remove the valve tappet (1) using the magnetic finger.
4. Install the leakage tester connecting hose to the spark plug hole.
5. Install the engine lock to the ring gear to prevent the crankshaft from rotating.
6. Blow up with compressed air.

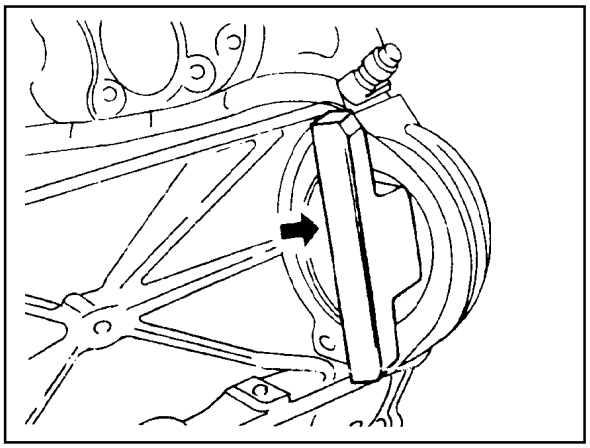

Downloaded from www.Manualslib.com manuals search engine

8. Install the lever pusher (11) and the thrust piece (8) to the slide (9).

Lever Pusher 111 589 18 61 00

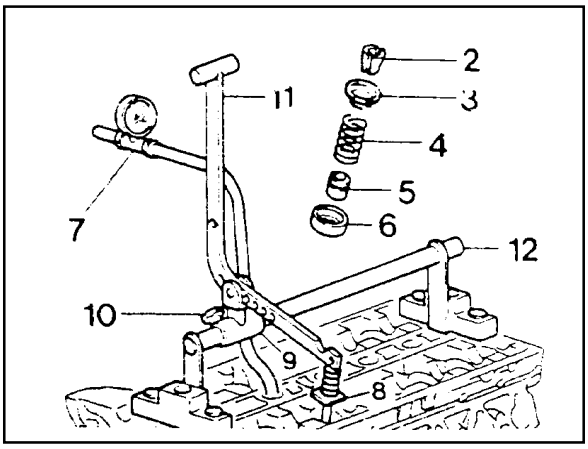

9. Mount the thrust piece (8) vertically to the valve spring retainer (3).
10. Make the thrust piece (8) and the slide (9) perpendicular to each other.
11. Secure the slide (9) by turning the adjust bolt (10).
12. Press the valve spring (4) by using the lever pusher (11).

13. Remove the valve cotter (2) using either the pincette (13) or magnetic finger.

Magnetic Finger 116 589 06 63 00

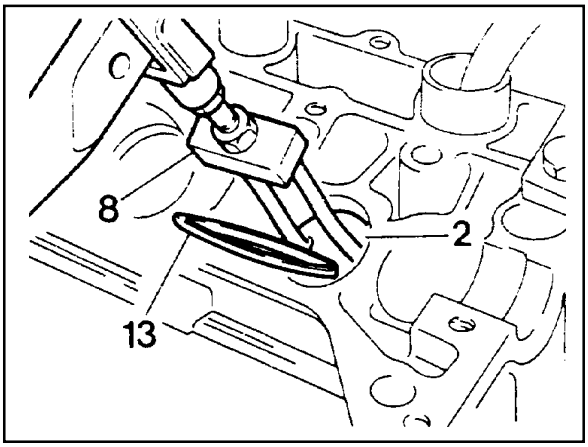

14. Remove the upper retainer (3) and the valve spring (4).
15. Remove the valve stem seal and replace if necessary.

    Notice

    Check the valve stem seal and replace if necessary.
16. Remove the lower retainer (6).

    Notice

    Check the retainer for damages and replace with a new one if necessary.
17. Installation should follow the removal procedure in the reverse order.

Downloaded from www.Manualslib.com manuals search engine

Test (Upper and Lower Valve Tappet and Valve Cotter)

- Upper Valve Spring Retainer

Size (mm)	(d)	8.5
	(D)	12.3

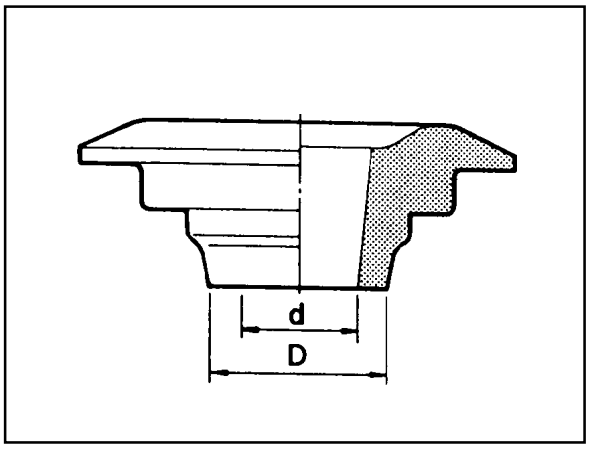

- Lower Valve Spring Retainer

Thickness (mm)	(a)	0.8 - 1.0

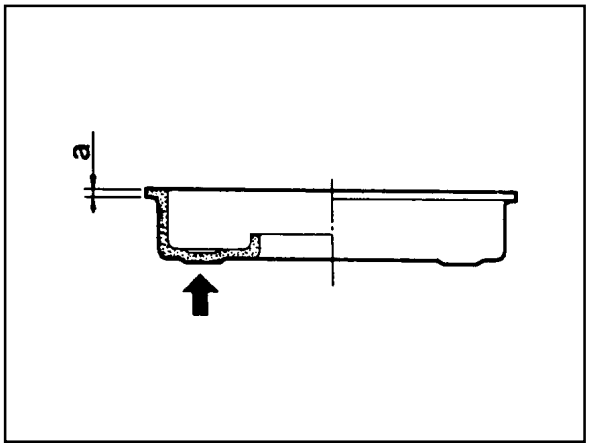

- Valve Cotter

Size (mm)	(B)	9.0
	(H)	9.2 - 9.8

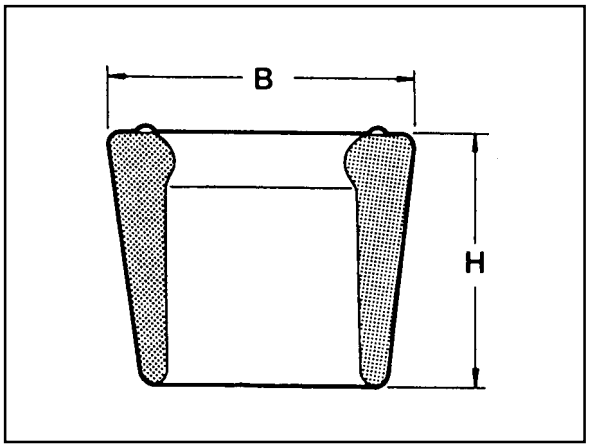

Downloaded from www.Manualslib.com manuals search engine

VALVE STEM SEAL

Preceding Work : Removal of valve spring

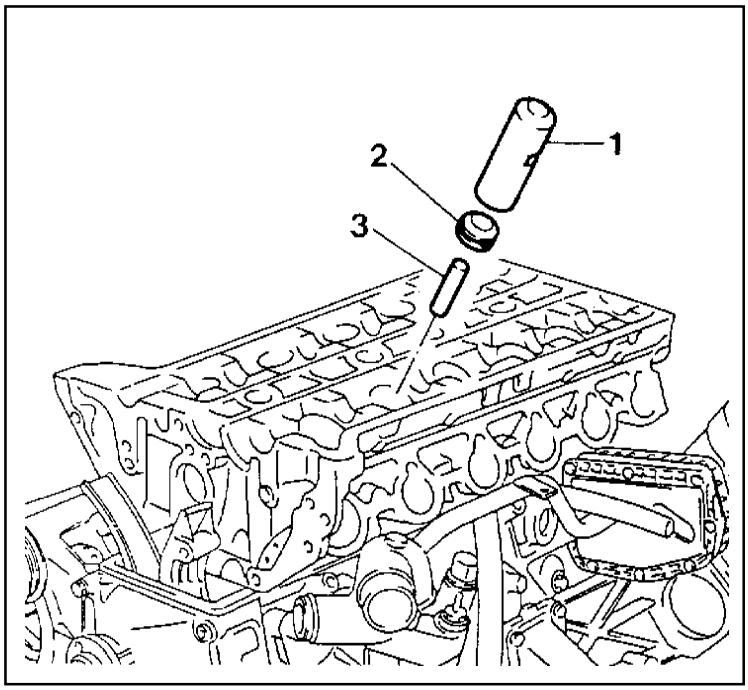

1 Drift (Special Tool)
2 Valve Stem Seal
3 Protective Sleeve

Tools Required

104 589 00 37 00 Pliers

119 589 00 43 00 Drift

Replacement Procedure

1. Remove the valve stem seal (2) using the pliers.

   Notice

   Check the valve stem seal for damage and replace if necessary.

   Pliers 104 589 00 37 00

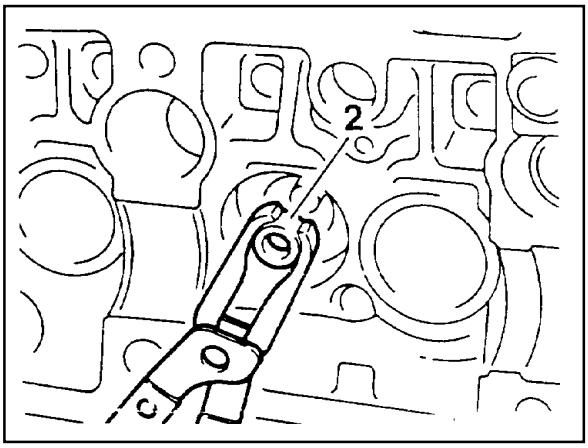

2. Coat the valve stem seal with oil and assemble it with the protective sleeve.
3. Insert the valve stem seal by pressing it with the drift.

   Drift 119 589 00 43 00

Downloaded from www.Manualslib.com manuals search engine

CHAIN TENSIONER

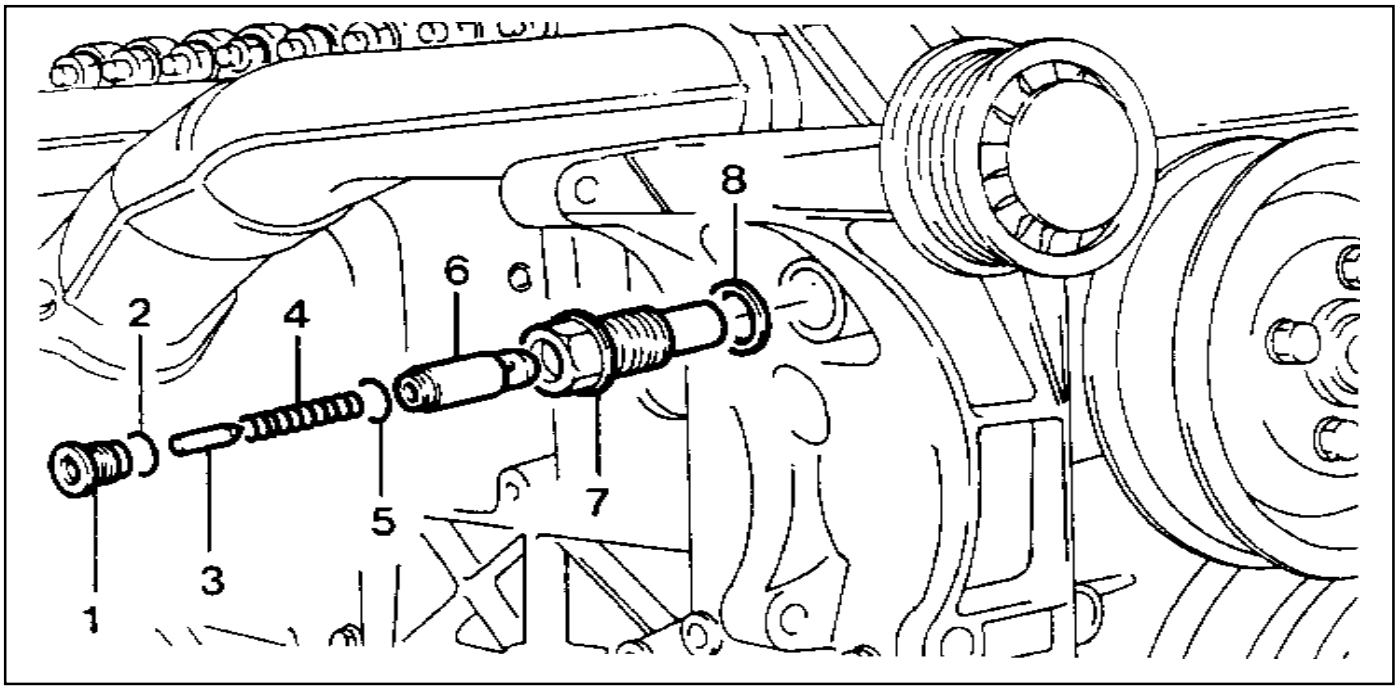

1 Screw Plug ..... 40 Nm
2 Seal
3 Filler Pin
4 Compression Spring
5 Snap Ring
6 Thrust Pin
7 Chain Tensioner Housing ..... 72-88 Nm
8 Seal

Removal Procedure

1. Position the No.1 cylinder to TDC (OT).

   Notice

   Remove the oil filler cap at adjustment position, and check whether the intake camshaft cam's lobe (arrow) stays in the upper side.

2. Cover the alternator with a clean cloth.
3. Release the tension by unscrewing the screw plug once.

   Notice

   In case that the tension is reduced by unscrewing the screw plug, reinstall after completely removing the chain tensioner. If the chain tensioner is tightened again without completely reducing its tension, then the detent spring doesn't return to the original position and the tension gets excedded.

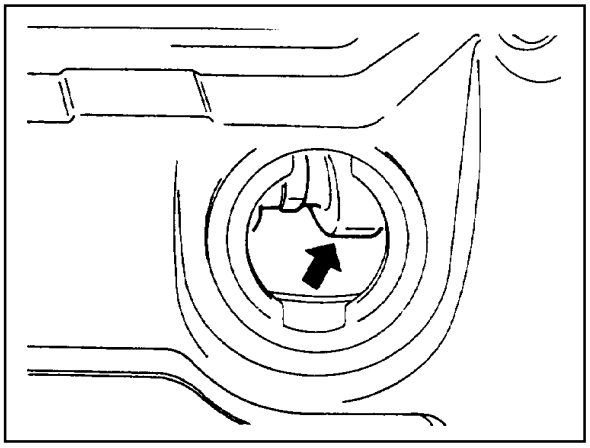

Downloaded from www.Manualslib.com manuals search engine

4. Carefully unscrew the screw plug (1), and remove the seal (2).

   Notice

   - For the removal of screw plug, be careful that it can be jumped out due to the force of compression spring.
   - Remove the screw plug only when the seal and compression spring are damaged.

5. Carefully remove the filler pin (3), compression spring (4), snap ring (5), and the thrust pin (6).

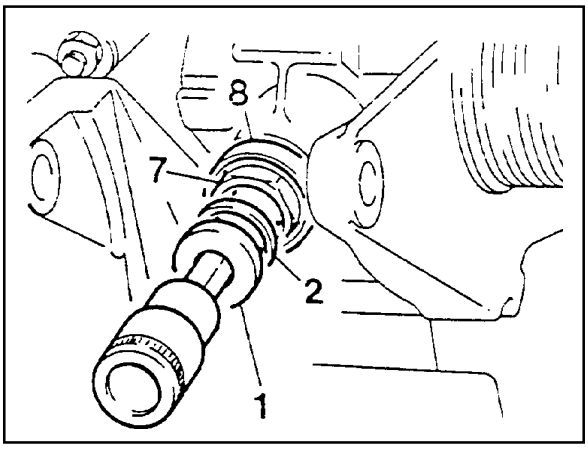

6. Remove the chain tensioner housing (7) and the seal (8).

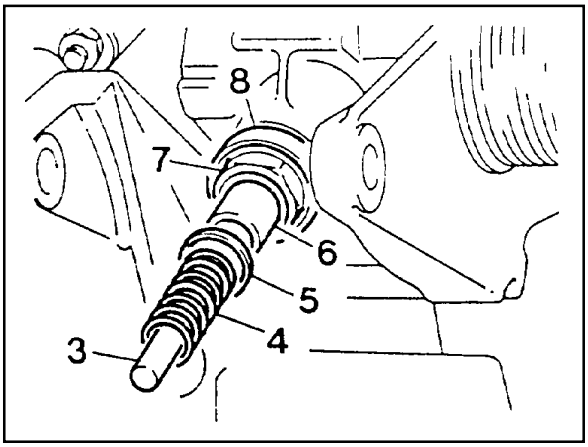

Installation Procedure

1. Connect the thrust pin (6) and the snap ring (5) to the chain tensioner housing (7).

   Notice

   When connecting the thrust pin, push in the thrust pin far enough so that it doesn't protrude at the chain tensioner housing.

2. Install the chain tensioner housing (7), thrust pin (6), snap ring (5), and the seal (8).

   Installation Notice

Tightening Torque	35 - 40 Nm

3. Insert the compression spring (4) with the filler pin (3) into chain tensioner housing.

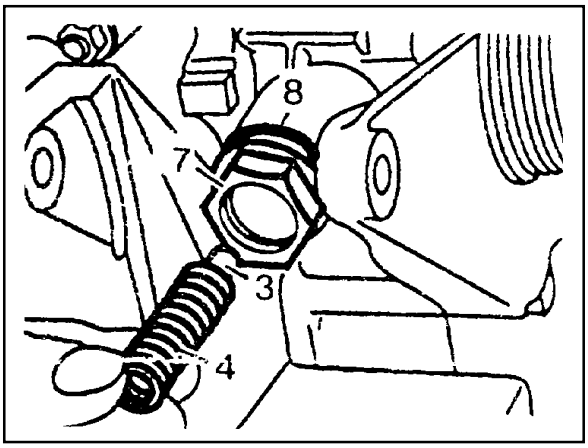

Downloaded from www.Manualslib.com manuals search engine

4. Lightly apply the grease to the seal (2) and install the screw plug (1).

Installation Notice

Tightening Torque	40 Nm

5. Check for leaks by operating the engine.

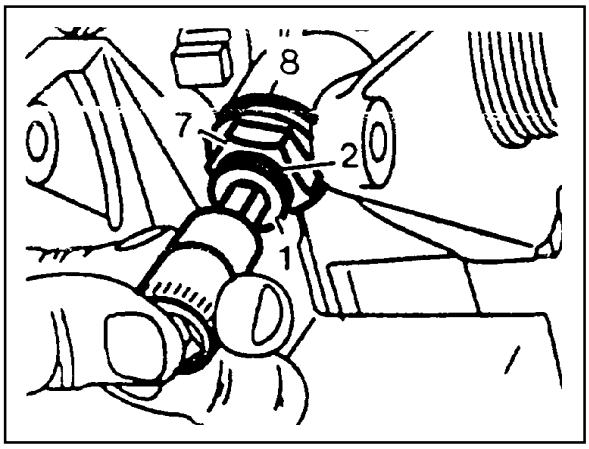

Sectional View

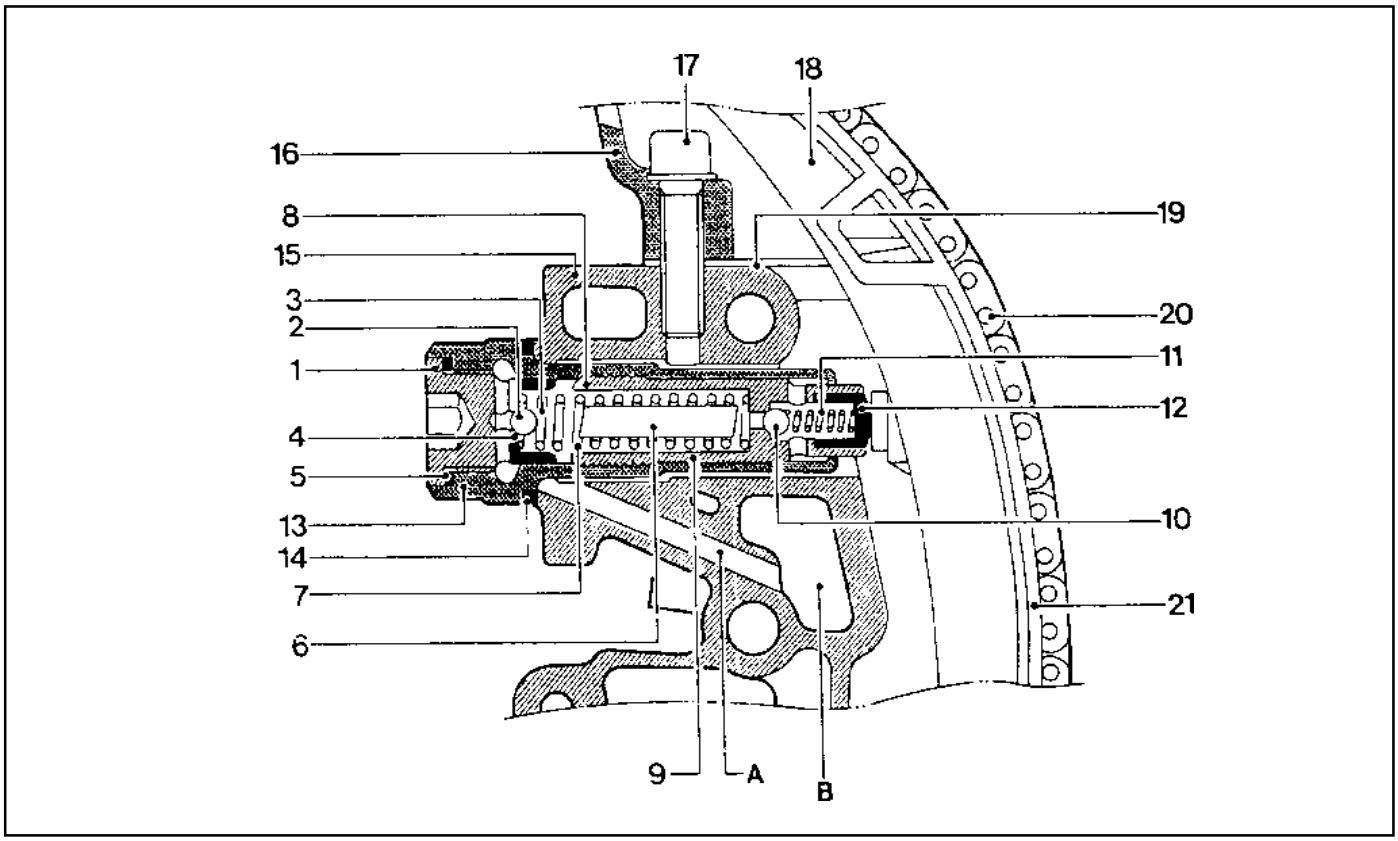

1 Screw Plug
2 Ball (Nonreturn Valve)
3 Compression Spring
4 Ball Guide
5 Seal (Aluminum)
6 Filler Pin
7 Compression Spring
8 Snap Ring
9 Thrust Pin
10 Ball (Nonreturn Valve)
11 Compression Spring
12 Thrust Piece
13 Chain Tensioner Housing
14 Seal
15 Timing Gear Case Cover
16 Cylinder Head
17 Bolt / Washer
18 Tensioning Rail
19 Cylinder Head Gasket
20 Timing Chain
21 Tensioning Rail Base (Sliding Surface)
A Oil Supply Hole
B Chain Tensioner Oil Storage Hole

Downloaded from www.Manualslib.com manuals search engine

TIMING CHAIN

Preceding Work : Removal of cylinder head cover
Removal of spark plug

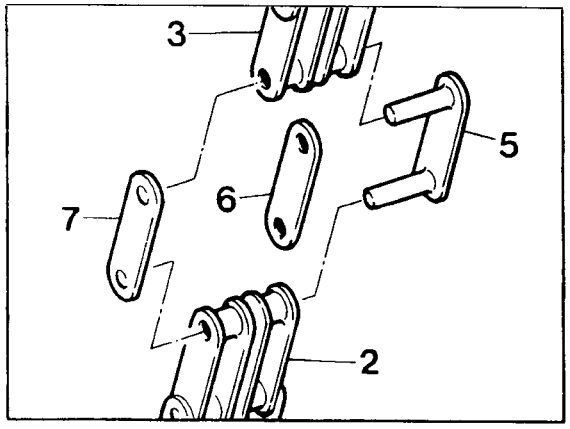

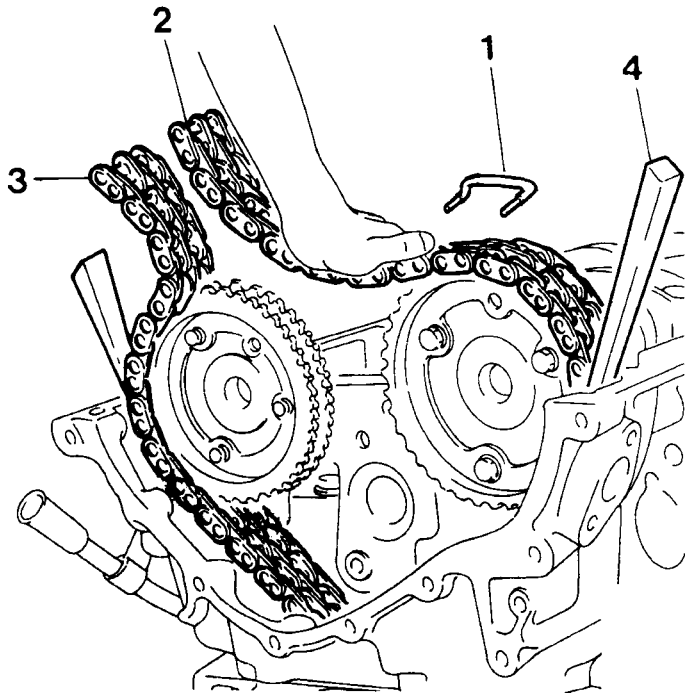

1 Pin
2 New Timing Chain
3 Timing Chain (Used)
4 Wedge
5 Link
6 Center Plate
7 Outer Plate

Downloaded from www.Manualslib.com manuals search engine

Tools Required

000 589 58 43 00 Chain Assembly

103 589 01 63 00 Rivet Set

001 589 72 21 00 Torque Wrench

Replacement Procedure

1. Position the No.1 cylinder to TDC (OT).

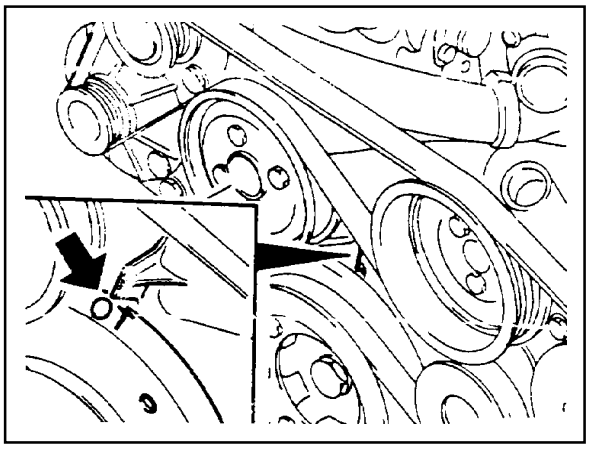

2. Insert the f4mm pin to the intake and exhaust camshaft flange not to rotate camshaft.
3. Remove the chain tensioner.

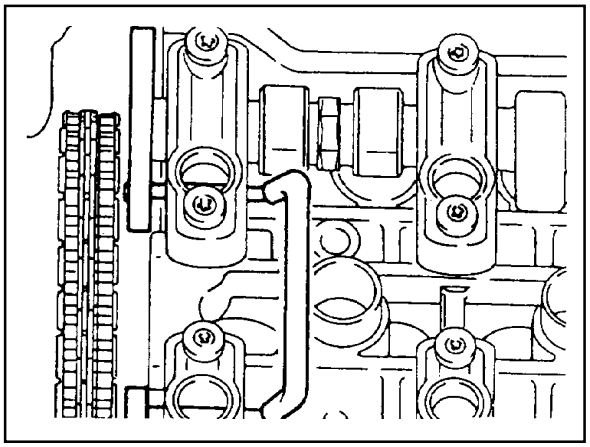

4. Mount the wedges to both sides of the camshaft sprocket as shown in the figure.

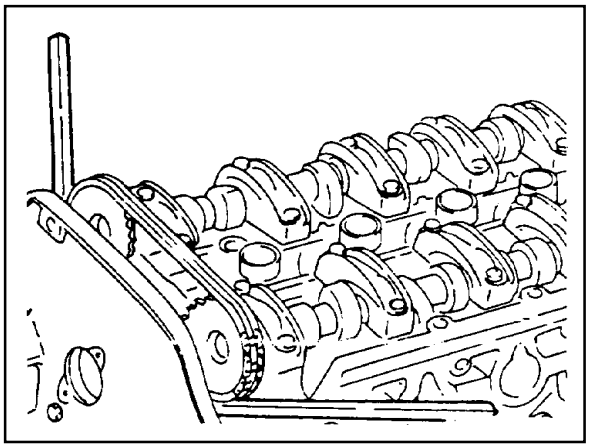

5. Cover the chain housing with a clean cloth, and grind off the timing chain pin from the intake camshaft sprocket with the grinder.

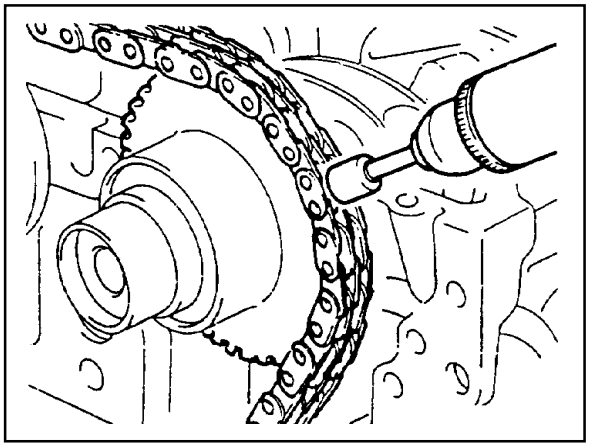

Downloaded from www.Manualslib.com manuals search engine

6. Remove the outer plate (7) with the screw driver and remove the link (5).

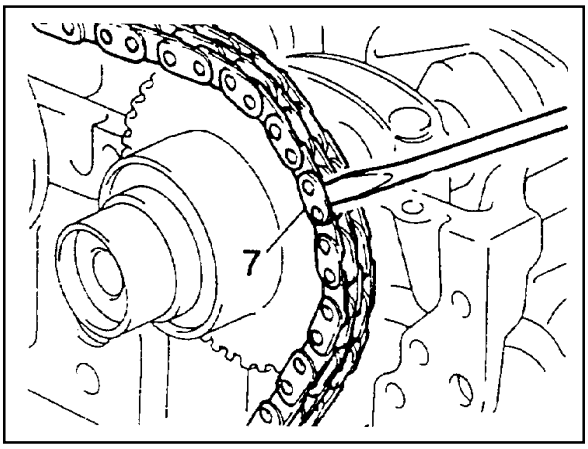

7. Connect the new timing chain (2) to the used timing chain (3) with the link (5), center plate (6, thickness 1.6mm), and the outer plate (7).
8. Rotate the crankshaft in the direction if engine revolution by pressing the new timing chain against the exhaust camshaft sprocket to prevent it to be tangled.

   Notice

   Be sure to remove the wedge before cranking the engine.
9. Take out the used timing chain out from the chain housing.
10. Connect both separators of the new timing chain with the link (5) and the center plate (6).

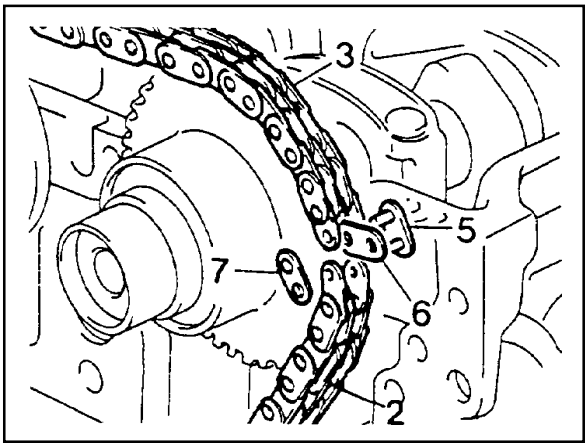

11. Install the jaw (a) and the thrust piece (b) to the assembly tool as shown in the figures.

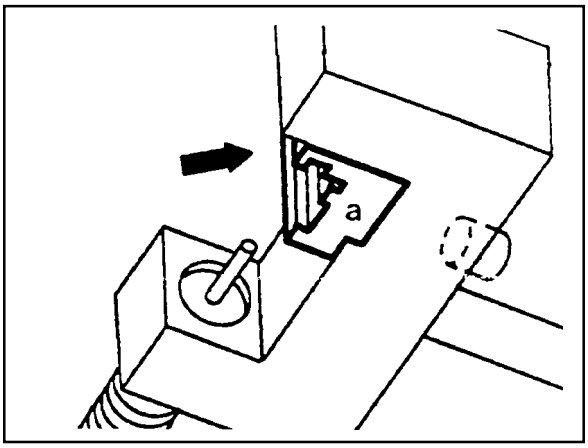

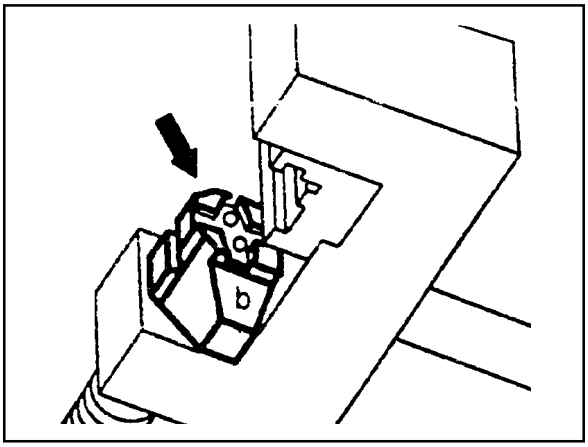

Downloaded from www.Manualslib.com manuals search engine

12. Place the outer plate (7, thickness 1.2mm) inside the thrust piece (b).

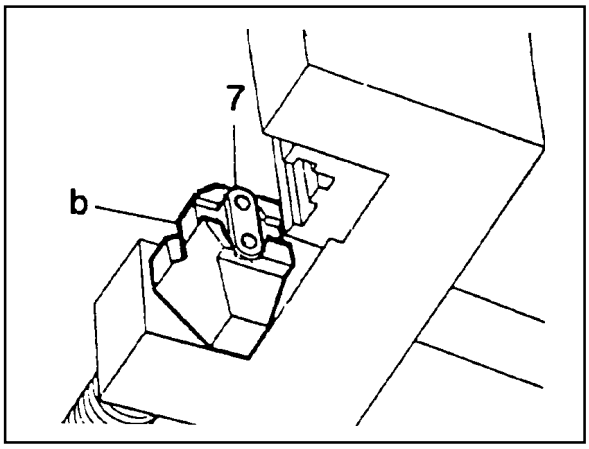

13. Install the assembly tool above the link and tighten the spindle (c) until a block is felt.
14. Place the assembly tool.

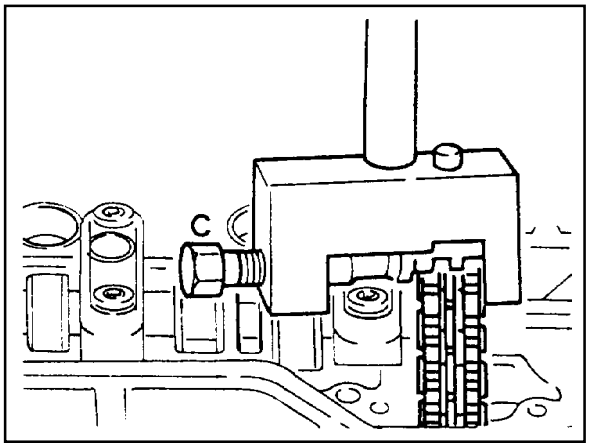

15. Replace the thrust piece (b) as shown in the figure.

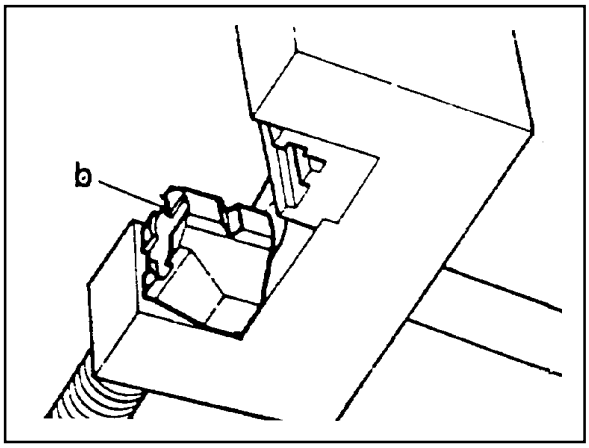

16. Install the assembly tool to the link pin and tighten the spindle (c).

Tightening Torque	30 Nm

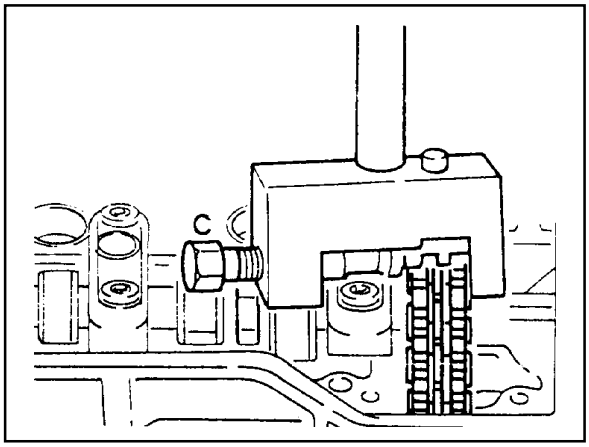

Downloaded from www.Manualslib.com manuals search engine

17. Rivet the link pin.
    Check the condition and it again if necessary.
18. Install the chain tensioner.
    Installation Notice

Tightening Torque	Screw Plug	40 Nm
	Tensioner Assembly	72 - 88 Nm

19. Check the camshaft timing position.

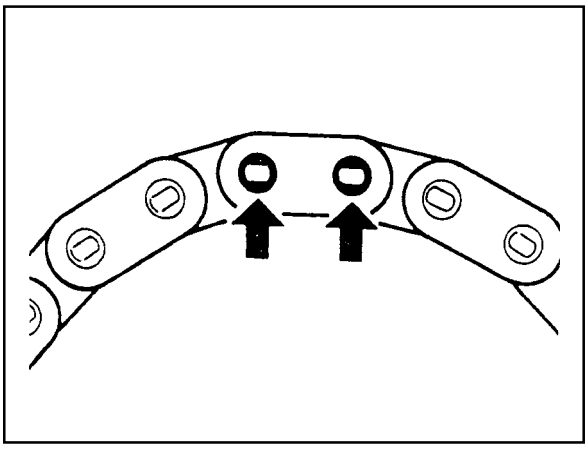

Downloaded from www.Manualslib.com manuals search engine

TENSIONING RAIL

Preceding Work : Removal of timing gear case cover

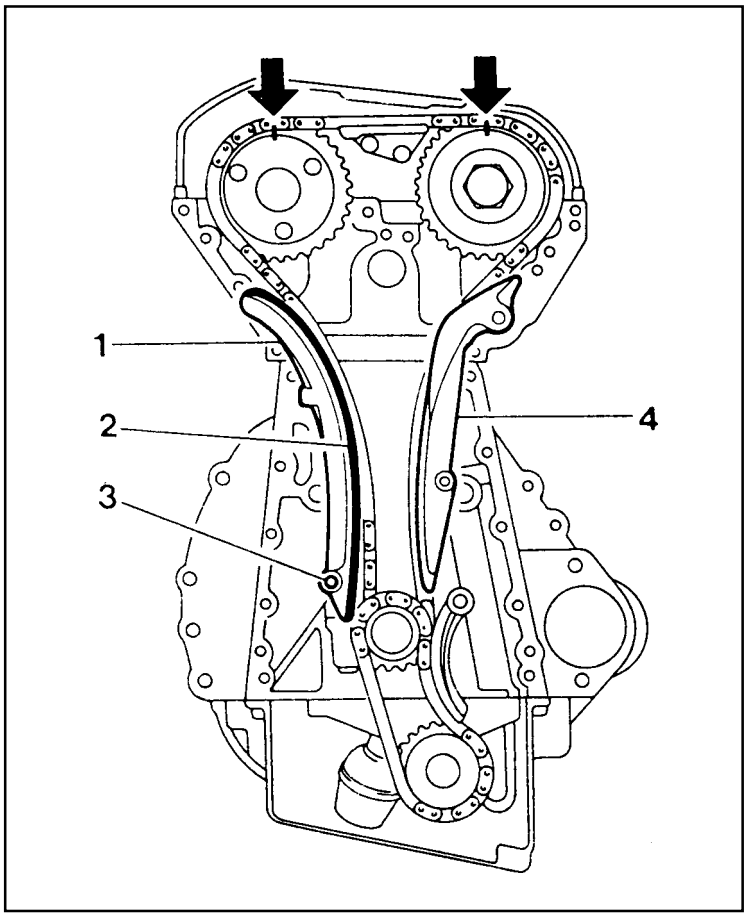

1 Tensioning Rail
2 Plastic Guide
3 Tensioning Rail Pin
4 Guide Rail

Removal & Installation Procedure

1. Put the assembly mark at the camshaft sprocket and the timing chain with the paint (arrow).
2. Remove the exhaust camshaft sprocket.
3. Remove the tensioning rail (1) from the tensioning rail pin (3).

   Notice

   - Replace the plastic guide (2) if it is damaged.
   - For installation, exactly align the plastic guide (2) with the tensioning rail (1).
4. Installation should follow the removal procedure in the reverse order.
5. Check the camshaft timing position.

Downloaded from www.Manualslib.com manuals search engine

CYLINDER HEAD GUIDE RAIL

Preceding Work : Removal of cylinder head cover

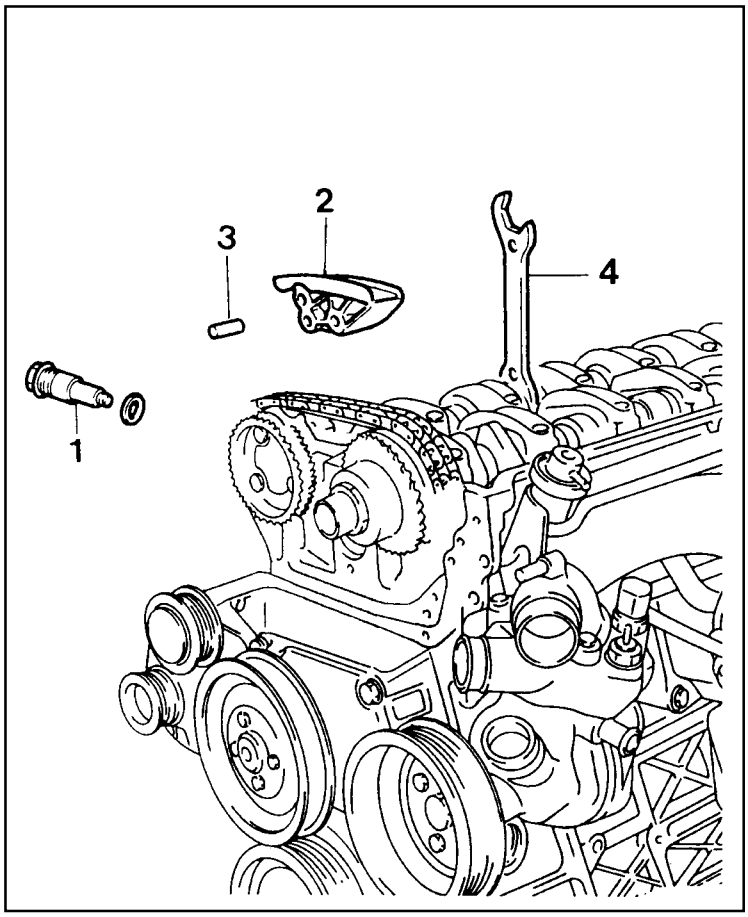

1 Chain Tensioner
2 Upper Guide Rail
3 Upper Guide Rail Pin
4 Wrench (Special Tool)

Tools Required

104 589 01 01 00 Spanner

Removal & Installation Procedure

1. Remove the chain tensioner (1).
2. Turn the exhaust camshaft to the camshaft rotating direction using the wrench (4) and loosen the timing chain at upper guide rail (2).
3. Pull out the upper guide rail pin from the guide rail (2).
4. Turn the exhaust camshaft to the opposite direction of rotation using the wrench (4, special tool : 104 589 01 01 00).
5. Check for damages at the upper sliding rail and replace it if necessary. Install the upper guide rail pin.
6. Install the chain tensioner.

Installation Notice

Tightening Torque	Screw Plug	40 Nm
	Tensioner Assembly	72 - 88 Nm

Downloaded from www.Manualslib.com manuals search engine

CRANKCASE GUIDE RAIL

Preceding Work : Removal of timing gear case cover

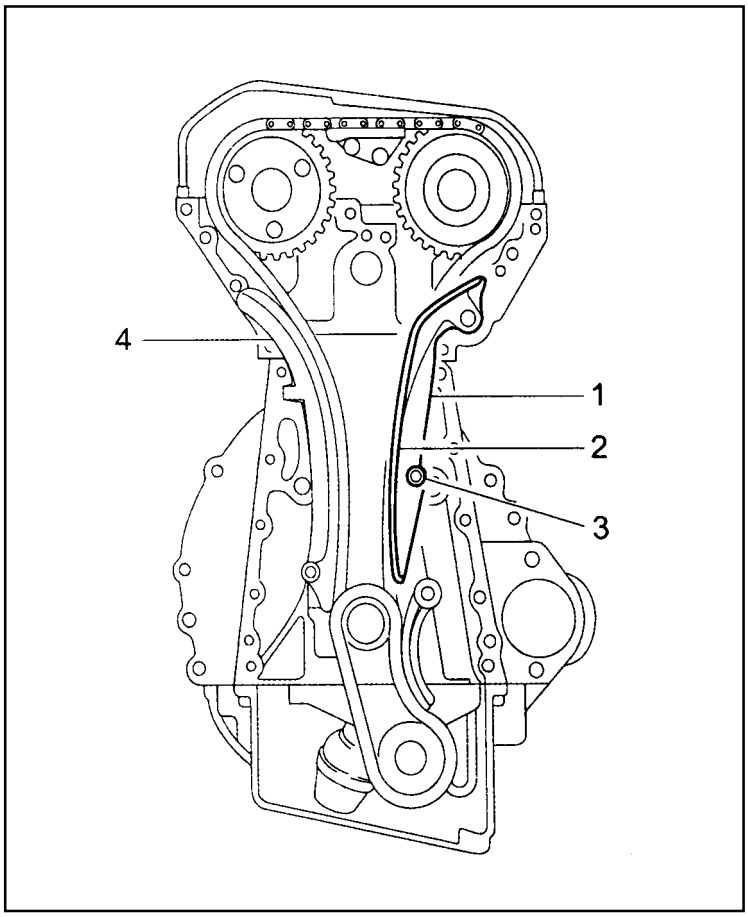

1 Guide Rail
2 Plastic Guide
3 Guide Rail Pin
4 Tensioning Rail

Removal & Installation Procedure

1. Put the assembly mark at the camshaft sprocket and the timing chain with the paint (arrow).
2. Remove the exhaust camshaft sprocket.
3. Remove the guide rail (1) from the guide rail pin (3).

   Notice

   - Replace the plastic guide (2) if damaged.
   - Connect the plastic guide (2) and the guide rail (1) by aligning them accurately when installing.
4. Installation should follow the removal procedure in the reverse order.
5. Check the camshaft timing position.

Downloaded from www.Manualslib.com manuals search engine

CRANKSHAFT SPROCKET

Preceding Work : Removal of oil pan
Removal of tensioning rail
Removal of crank case guide rail

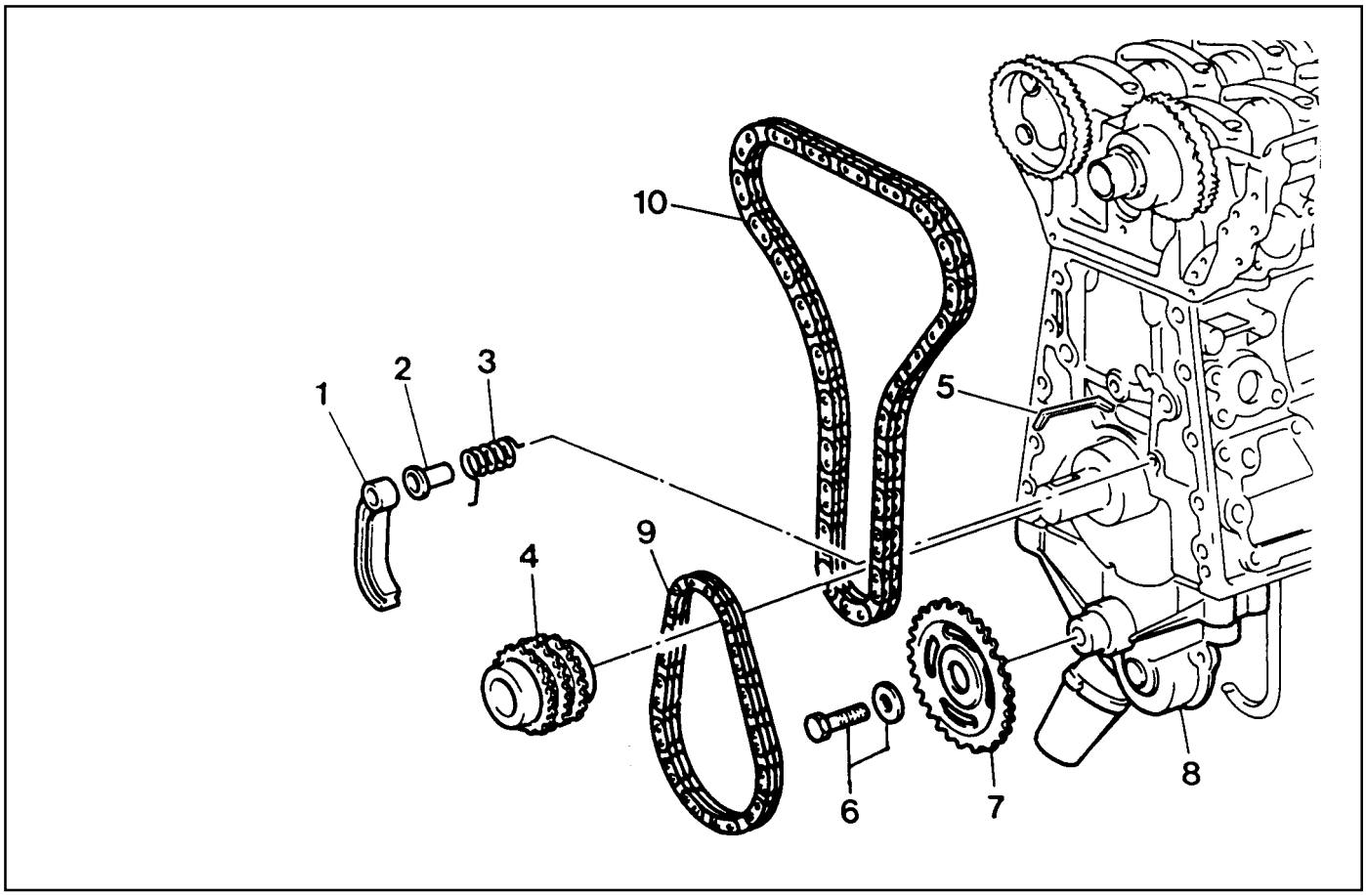

1 Oil Pump Chain Tensioner
2 Oil Pump Chain Bushing
3 Oil Pump Chain Spring
4 Crankshaft Sprocket
5 Key
6 Bolt (M8 x 20, 1 piece) / Washer ..... 29-35 Nm
7 Oil Pump Sprocket
8 Oil Pump
9 Oil Pump Roller Chain
10 Timing Chain

Downloaded from www.Manualslib.com manuals search engine

Tools Required

615 589 01 33 00 Puller

Removal & Installation Procedure

1. Put the assembly mark at the crankshaft sprocket (4) and the timing chain (10) with the paint (arrow).

   Installation Notice

   Align the assembly marks on cranshaft sprocket and timing chain. Also, align the assembly marks on camshaft sprocket and timing chain when installing.

2. Unscrew the bolt (6) and remove the oil pump sprocket (7) from the oil pump.

   Installation Notice

Tightening Torque	29 - 35 Nm

3. Remove the oil pump roller chain (9).
4. Remove the oil pump chain tensioner (1), oil pump chain bushing (2), and the oil pump chain spring (3).
5. Remove the crankshaft sprocket (4) using the puller (04, special tool).

   Notice

   - Make sure not to lose the crankshaft pulley key(5) when removing.
   - Install the crankshaft sprocket(4) after warming it up.

6. Installation should follow the removal procedure in the reverse order.

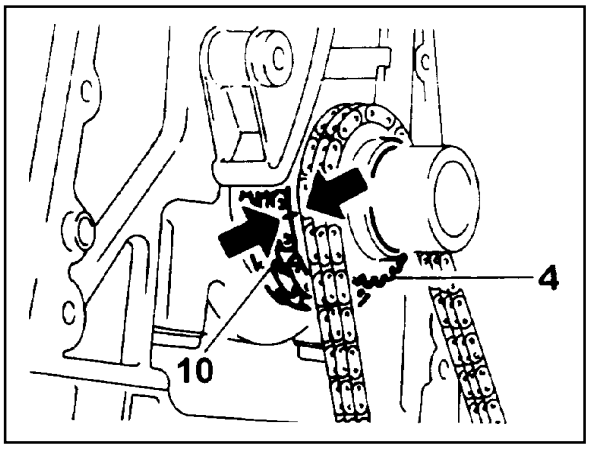

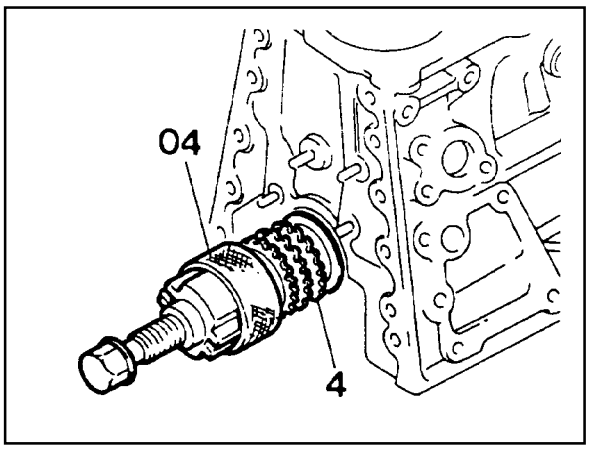

Puller (04) 615 589 01 33 00

Downloaded from www.Manualslib.com manuals search engine

PISTON

Preceding Work : Removal of engine
Removal of cylinder head
Removal of oil pan
Removal of oil pump
Removal of baffle plate

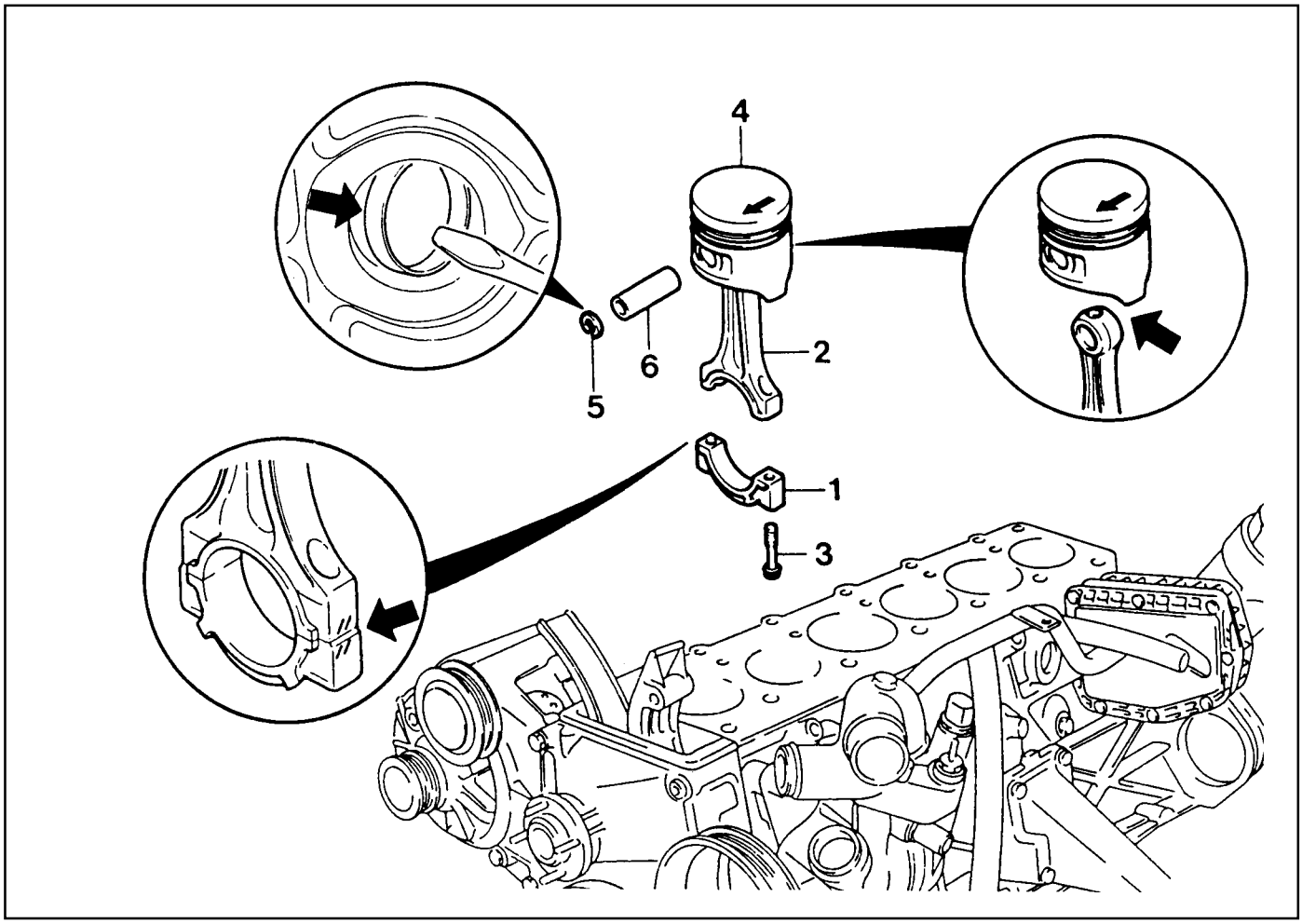

1 Connecting Rod Bearing Cap
2 Connecting Rod
3 Connecting Rod Bolt (M9 x 52, 12 pieces)
..... 1st step 40 Nm
2nd step 90° + 5°
4 Piston
5 Snap Ring
6 Piston Pin

Downloaded from www.Manualslib.com manuals search engine

Tools Required

001 589 72 21 00 Torqued Wrench

000 589 04 14 00 Clamping Strap

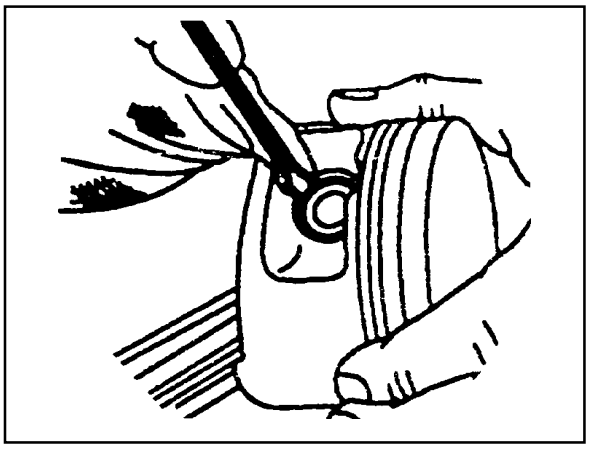

Removal Procedure

1. Unscrew the connecting rod bolt (3) and remove the cap.
2. Remove the connecting rod and the piston upward.

   Notice

   Make sure that the bearing cap and shell are not changed each other.

3. Remove the snap ring (5) and pull out the piston pin (6).

   Notice

   Remove the snap ring using a clean cloth as shown in the right picture so that the piston, piston ring, and the snap ring don't get damaged.

Installation Procedure

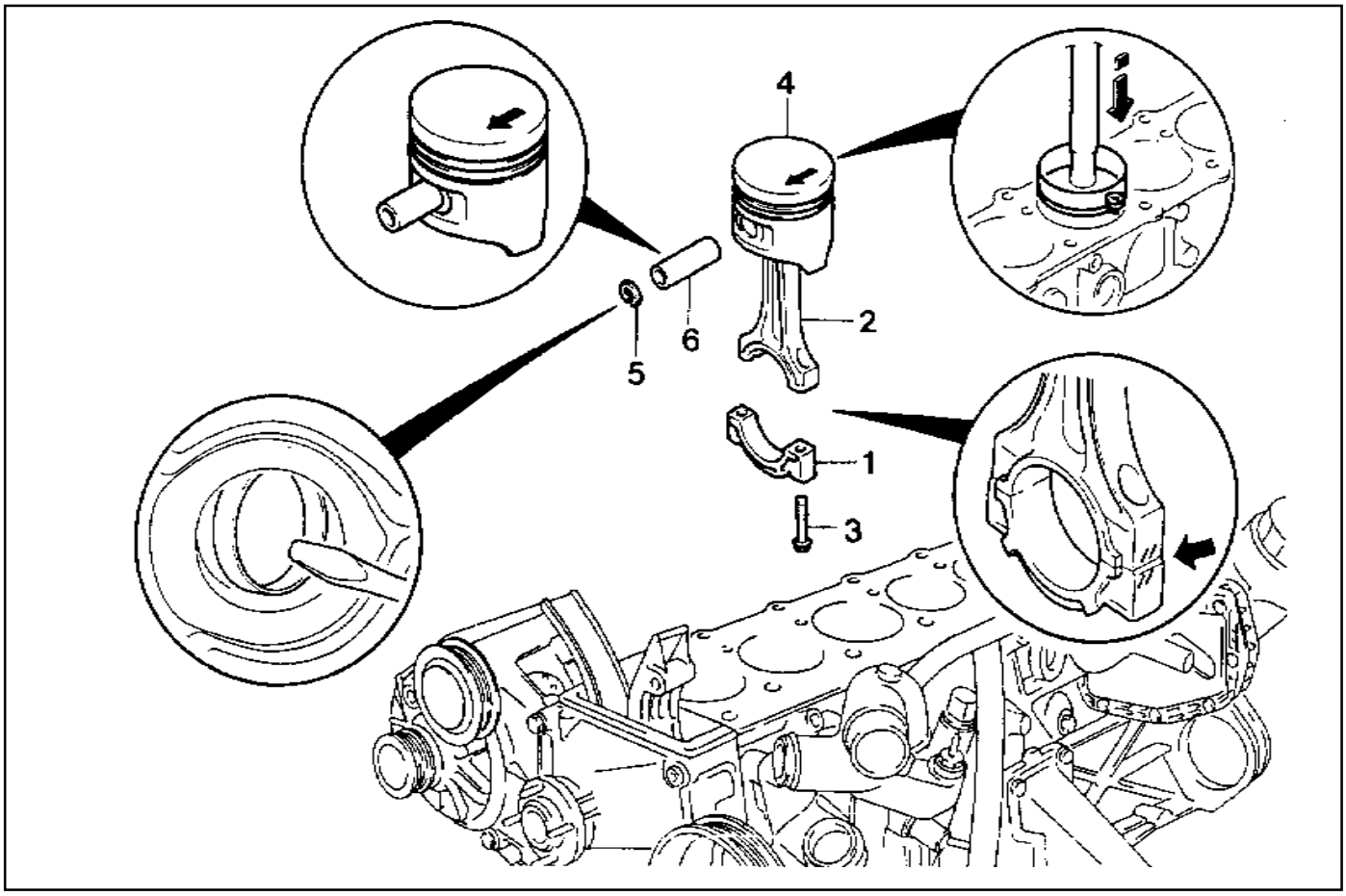

Downloaded from www.Manualslib.com manuals search engine

1. Check the piston ring gap and apply the engine oil to the piston pin and the connecting rod bushing.
2. Connect the piston and the connecting rod by pressing in the piston pin (6) and install the snap ring to the groove.
3. Clean the cylinder bore, connecting rod bearing journal, connecting rod bearing shell and the piston and coat them with engine oil.
4. Install the piston ring using the tensioning strap(000 589 04 14 00).
5. Install the piston so that the arrow on the piston head faces to the forward of the vehicle.
6. After aligning the connecting rod and the bearing cap mark (// or a number), tighten the bolts.

   Installation Notice

Tightening Torque	1st step 35 - 45 Nm 2nd step 90° + 5°

   Apply the engine oil to the bearing cap upper and lower bearing shells.
7. Check if the crankshaft rotates without any trouble by rotating it.

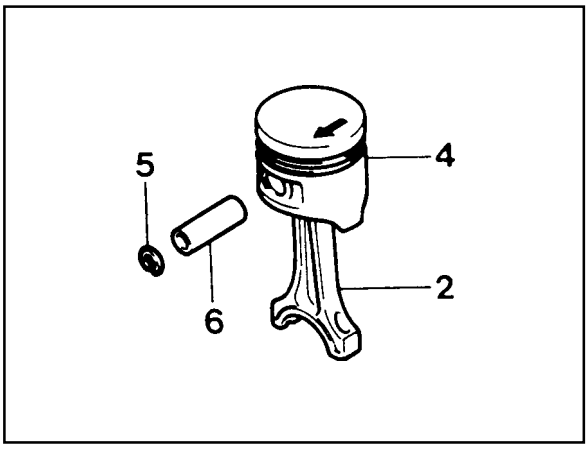

Downloaded from www.Manualslib.com manuals search engine

CONNECTING ROD

Preceding Work : Removal of piston

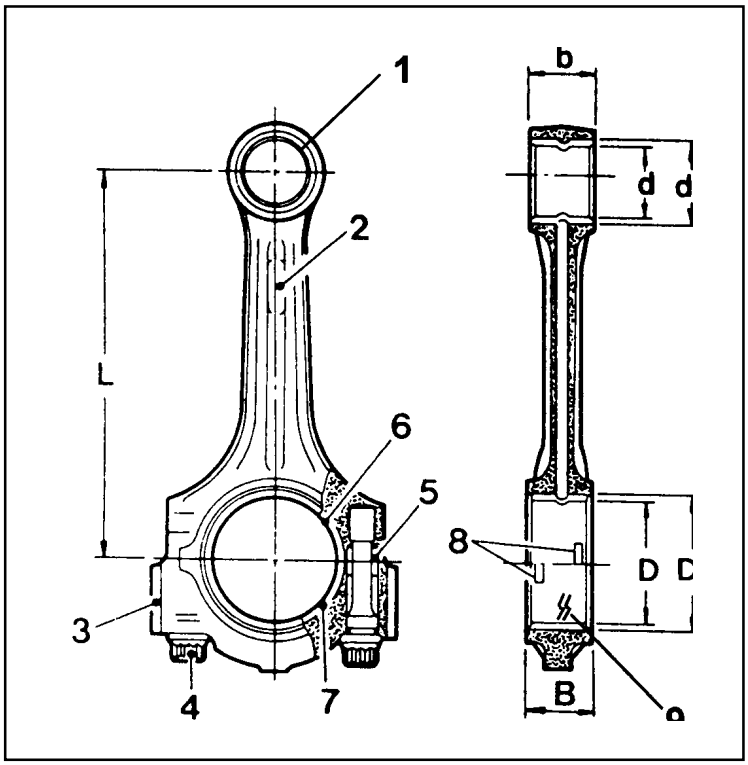

1 Connecting Rod Bushing
2 Oil Gallery
3 Balance Weight
4 Connecting Rod Bolt
(M9 x 52, 12 m pieces) .. 1st step 40+5 Nm
2nd step 90°+10°
5 Fit Sleeve
6 Upper Connecting Rod Bearing
7 Lower Connecting Rod Bearing
8 BearingShell Lug
9 Marking [Indication(//) or Numbers]

Service Data Standard

Distance (L) from The Connecting Rod Bearing Bore Center to The Bushing Bore Center	145 ± 0.05 mm
Width of The Connecting Rod (B) at Bearing Bore	21.940 - 22.000 mm
Width of The Connecting Rod (b) at Bushing Bore	21.940 - 22.000 mm
Basic Bore at The Bearing Shell (D1)	51.600 - 51.614 mm
Basic Bore at The Bushing (d1)	24.500 - 24.571 mm
Bushing Inner Diameter (d)	22.007 - 22.013 mm
Clearance Between The Piston Pin and The Bushing	0.007 - 0.018 mm
Peak-to-valley Height of Connecting Rod Bushing on Inside	0.005 mm
Permissible Wwist of Connecting Rod Bearing Bore to Connecting Rod Bushing Bore	0.15 mm
Permissible Deviation of Axial Paralleism of Connecting Rod Bearing Bore to Connecting Rod Bushing Core	0.07 mm
Permissible Deviation of Connecting Rod Bearing Bore from Concentricity	0.01 mm
Permissible Difference of Each Connecting Rod in Weight	0.4 g

Downloaded from www.Manualslib.com manuals search engine

Inspection

1. Measure the basic bore of the connecting rod bearing.

   Notice

   If the basic bore exceeds the value of 51.614mm, replace the bearing or check the connecting rod.

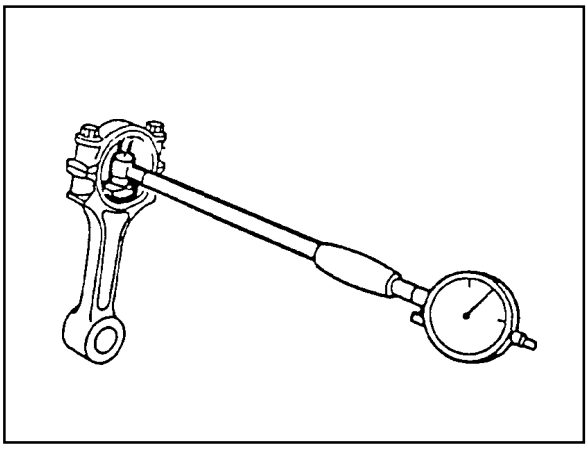

2. Check connecting rod bolts.

Length When New (L)	51.7 - 52 mm
Max. Length (L)	52.9 mm
Tightening Torque	1st step 40 + 5 Nm
	2nd step 90°+10°

   Notice

   If the length exceeds max. length, replace it.

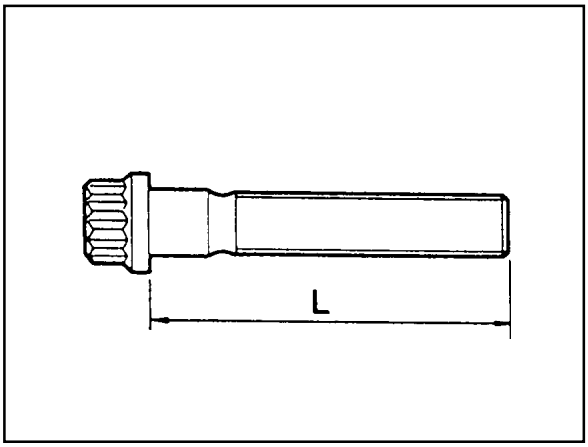

3. Check the assembly mark(indication//or number:arrow) of the connecting rods and the bearing cap when installing.

   Notice

   - Make sure it doesn't exceed over 4g with other connecting rods when replacing the connecting rods.
   - Check if the connecting rod and the bearing cap are accurately seated on the groove when replacing the bearing.

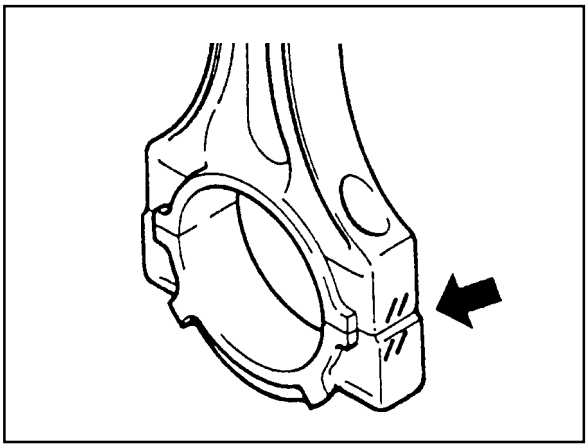

Downloaded from www.Manualslib.com manuals search engine

PISTON RING

Preceding Work : Removal of piston

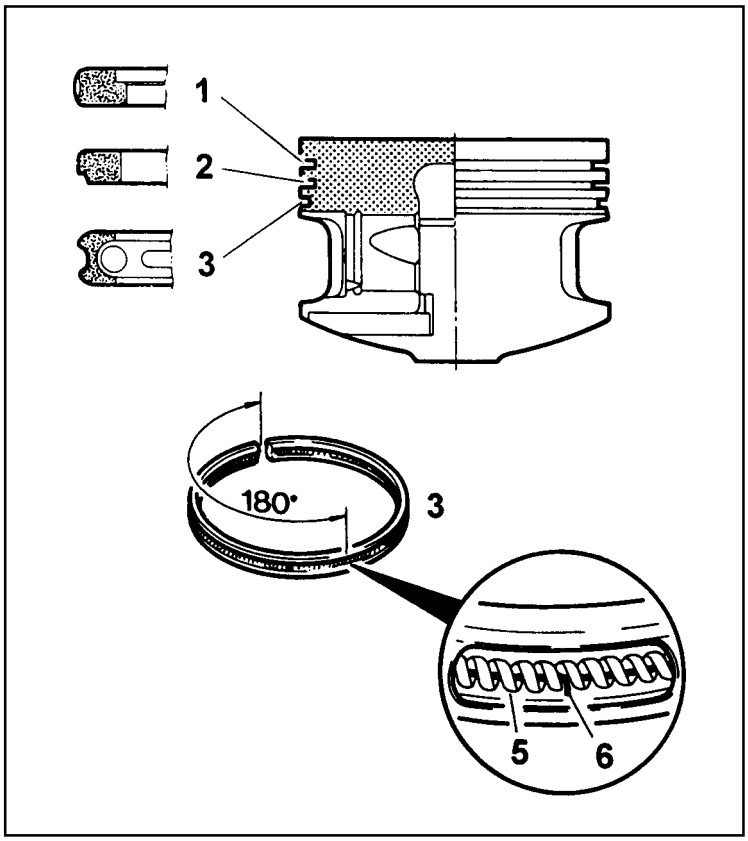

1 Piston Compression Ring
2 Piston Compression Ring
3 Piston Oil Ring
4 -
5 Coil Spring and Control Ring
6 Hook Spring

Tools Required

000 589 51 37 00 Clamping Strap

Replacement Procedure

1. Measure the piston ring's gap.

End Gap of The Piston Ring	Groove 1 0.20 - 0.40 mm
	Groove 2 0.20 - 0.40 mm
	Groove 3 0.20 - 0.45 mm
Gap Between The Piston and The Piston Ring	Groove 1 0.015 - 0.050 mm
	Groove 2 0.020 - 0.040 mm
	Groove 3 0.010 - 0.045 mm

Notice

If out of specification, replace the piston ring.

Downloaded from www.Manualslib.com manuals search engine

2. Remove the piston ring with a pliers.

Clamping Strap 000 589 51 37 00

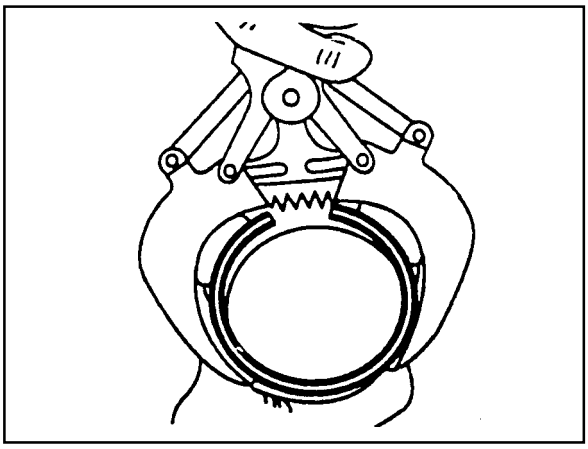

3. For installation, position the piston ring to be the 'TOP' mark on the piston ring upward and arrange the piston ring ends to be 120° apart.
4. Adjust the hook spring joint in the oil ring 180° away from the ring end.

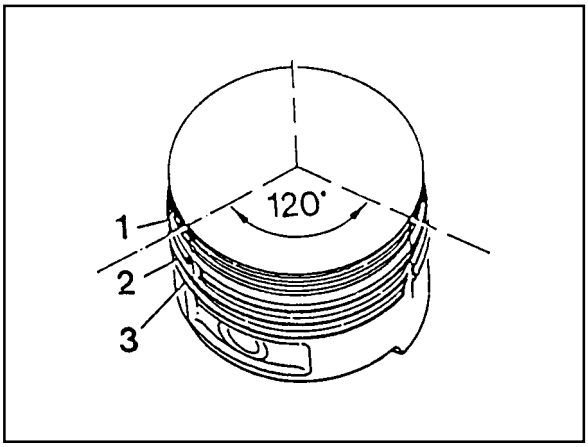

Downloaded from www.Manualslib.com manuals search engine

OIL PAN

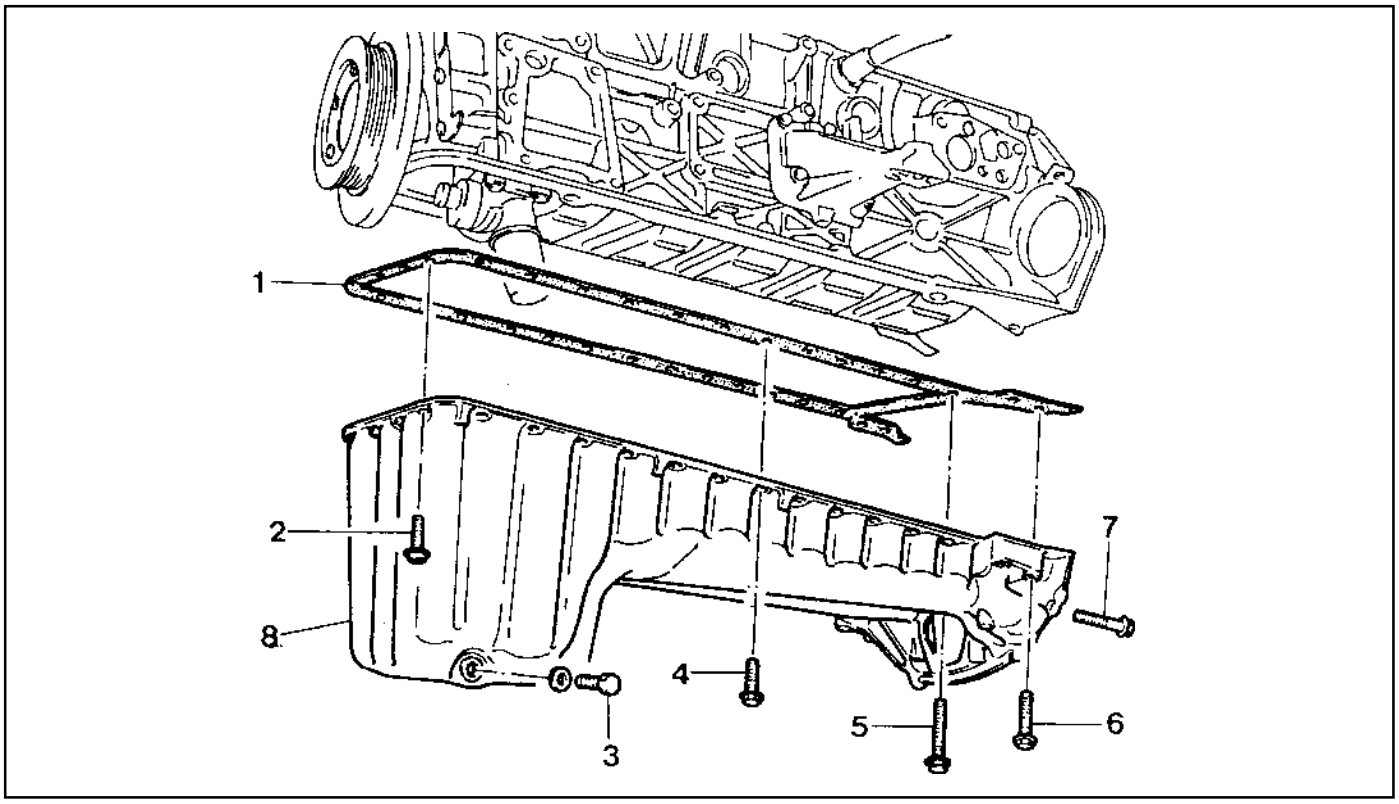

1	Gasket	Replace
2	Bolt (M6 x 22, 6 pieces)	10 Nm
3	Drain Plug (M6 x 20)	25 Nm
4	Bolt (M6 x 20, 22 pieces)	10 Nm
5	Bolt (M6 x 85)	10 Nm
6	Bolt (M8 x 40)	25 Nm
7	Bolt (M10)	40 Nm
8	Oil Pan	

Removal & Installation Procedure

1. Remove the drain plug and drain the oil completely.
2. Disconnect the electric connector from oil level switch.
3. Unscrew the bolts (10) for oil level switch and check the O-ring (11) for wear or damage. And replace it if necessary.
4. Unscrew the bolts and remove the oil pan and gasket.

   Notice

   Arrange the bolts according to each size.
5. Clean the inside of oil pan and sealing surface, then apply the sealant.
6. Replace the gasket with new one.
7. Install the oil pan with gasket, and tighten each bolt in specified torque.
8. Check for oil leaks while running the engine.

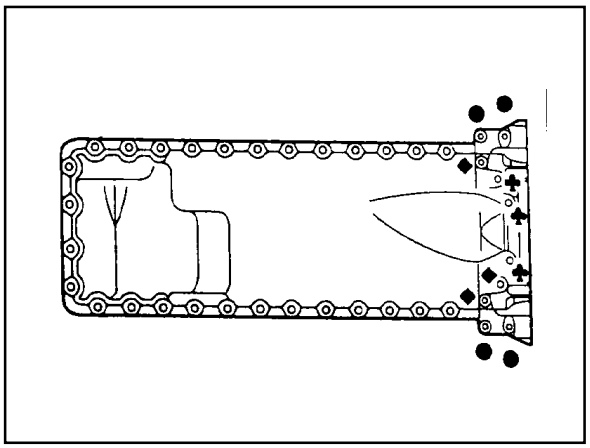

●	M8 X 40, 4 pieces
♣	M6 X 85, 3 pieces
◆	M6 X 35, 3 pieces
the rest	M6 X 20, 28 pieces

Downloaded from www.Manualslib.com manuals search engine

Oil Circulation

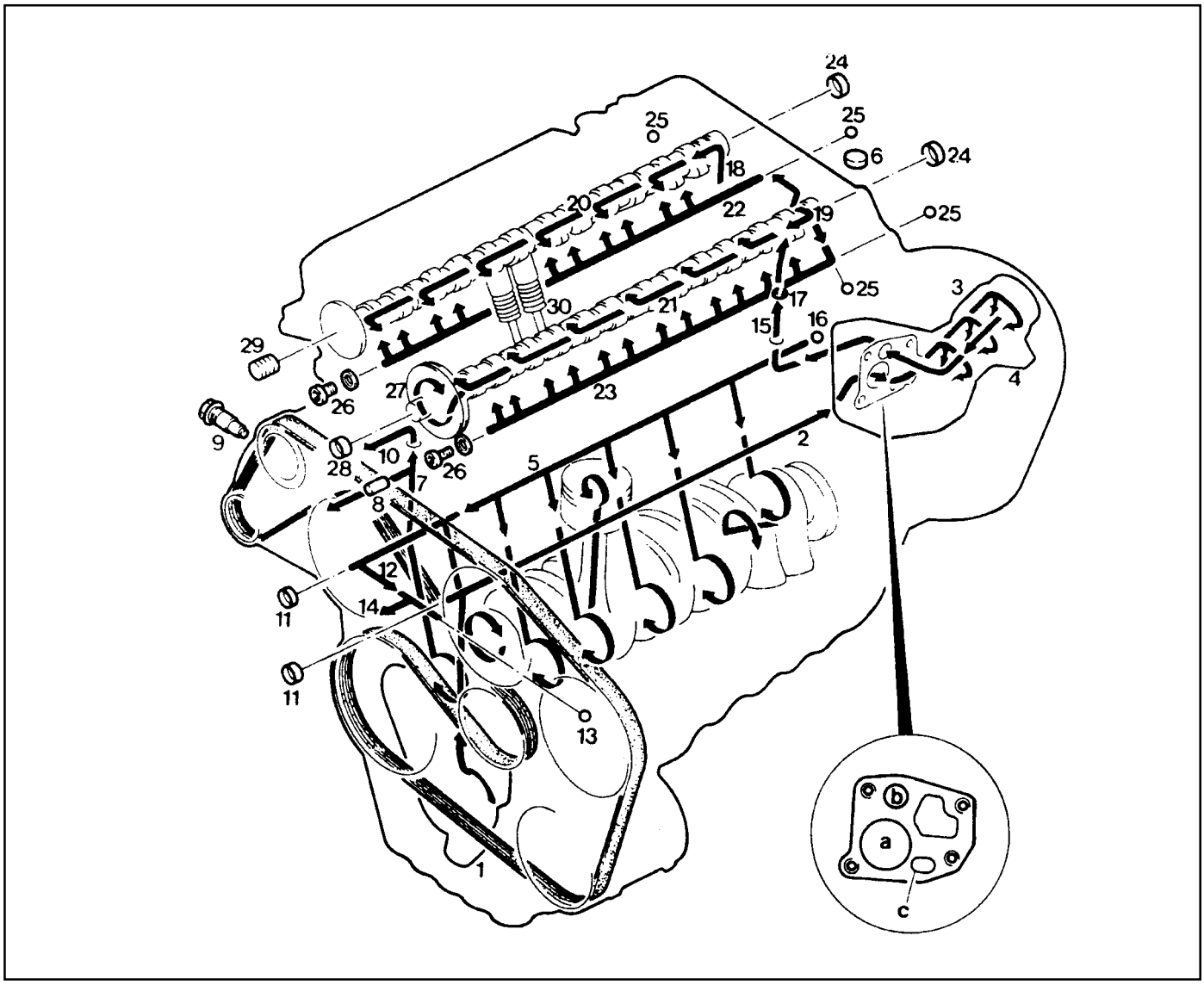

1 Oil Pump
2 Oil Gallery (to oil filter)
3 Oil Filter
4 Oil Pressure Switch
5 Main Oil Gallery
6 Cylinder Head Closing Cover
7 Oil Gallery (At Chain Tensioner)
8 Oil Non-return Valve
9 Chain Tensioner
10 Vent (Chain Tensioner)
11 Front Closing Cover (ƒ17 mm)
12 Oil Gallery (Perpendicular to The Shaft)
13 Ball (ƒ6 mm)
14 Oil Spray Nozzle (Timing Chain)
15 Oil Gallery (At Cylinder Head)
16 Ball (ƒ 15mm)
17 Oil Restriction Inner (ƒ 4mm)
18 Oil Supply (To Exhaust Camshaft)
19 Oil Supply (To Intake Camshaft)
20 Oil Supply (To Exhaust Camshaft Bearing)
21 Oil Supply (To Intake Camshaft Bearing)
22 Oil Gallery (Oil Supply to Exhaust Valve Tappet)
23 Oil Gallery (Oil Supply to Exhaust Valve Tappet)
24 Camshaft Closing Cover
25 Ball (ƒ8 mm)
26 Screw Plug
27 Camshaft Adjuster
28 Front Closing Cover (Intake Camshaft)
29 Front Treaded Bushing (Exhaust Camshaft)
30 Valve tappet

a Oil Gallery (From Oil Pump to Oil Filter)
b Main Oil Gallery
c Oil Return Line (Oil Returns to the Oil Pan when Replacing the Filter Element)

Downloaded from www.Manualslib.com manuals search engine

ENGINE OIL AND OIL FILTER ELEMENT

Tools Required

103 589 02 09 00 Oil Filter Socket Wrench

Replacement Procedure

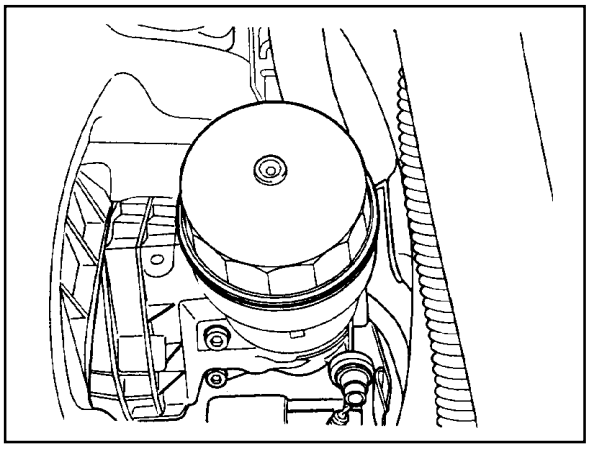

1. Install the socket wrench"7" (special tool : 103 589 02 09 00) on the oil filter cover (2).

   Notice

   Make the screw cover removable by tightening the bolt at the side of the socket wrench (special tool).
2. Install the wrench to the upper bolt in the socket wrench and remove the oil cover by turning it.
3. Remove the oil filter element.

   Notice

   Work with a cloth under the vehicle when removing the oil filter element to not drain the oil.

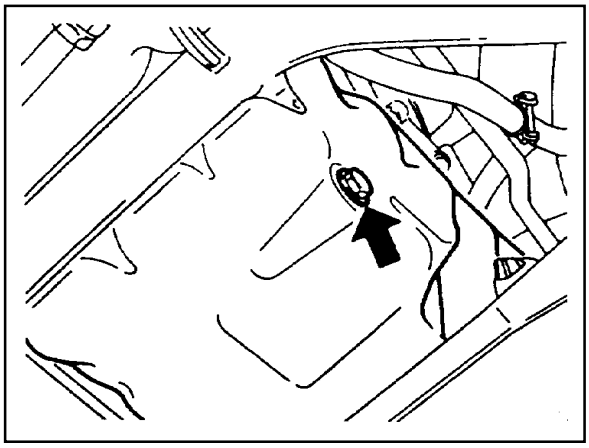

4. Remove the drain plug (arrow) and drain the engine oil.

   Notice

   Leave the oil filler cap open to ease the engine oil discharge.
5. Tighten the engine oil drain plug after cleaning it.

   Installation Notice

Tightening Torque	25 Nm

   Replace the seal washer with new one.
6. Replace the O-ring(5) in the oil filter cover with new one.

   Notice

   Apply the engine oil to the O-ring.
7. Insert new oil filter element into the oil filter housing.
8. Temporarily tighten the oil filter cover (2). Install the socket wrench "7" (special tool : 103 589 02 09 00), and then completely tighten it.

   Installation Notice

Tightening Torque	25 Nm

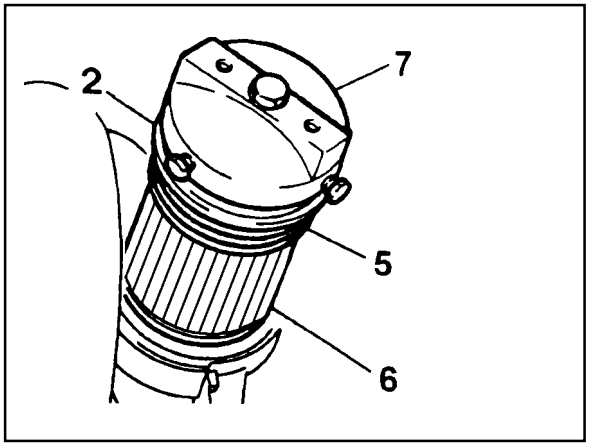

2 Oil Filter Cover
5 O-ring
6 Oil Filter Element
7 Special Tool (Socket Wrench)

Downloaded from www.Manualslib.com manuals search engine

9. Fill up engine oil through the engine oil filler opening (3).
10. Check for oil leaks at normal engine temperature after starting the engine.
11. Stop the engine and wait 5 minutes.
    Check the oil level and fill up as specified if necessary.

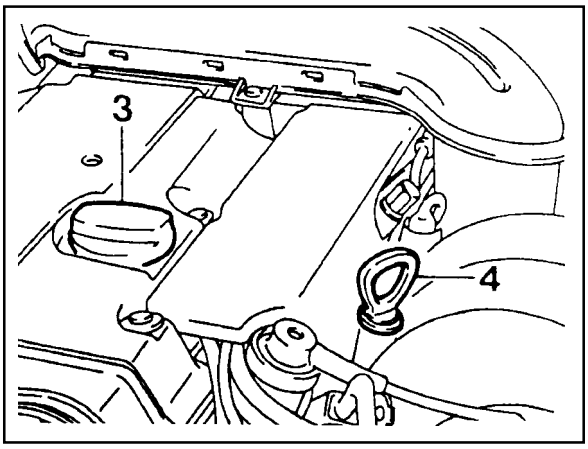

3 Oil Filler Cap
4 Dipstick Gauge

Downloaded from www.Manualslib.com manuals search engine

OIL FILTER

Preceding Work : Removal of starter motor
Removal of upper intake manifold

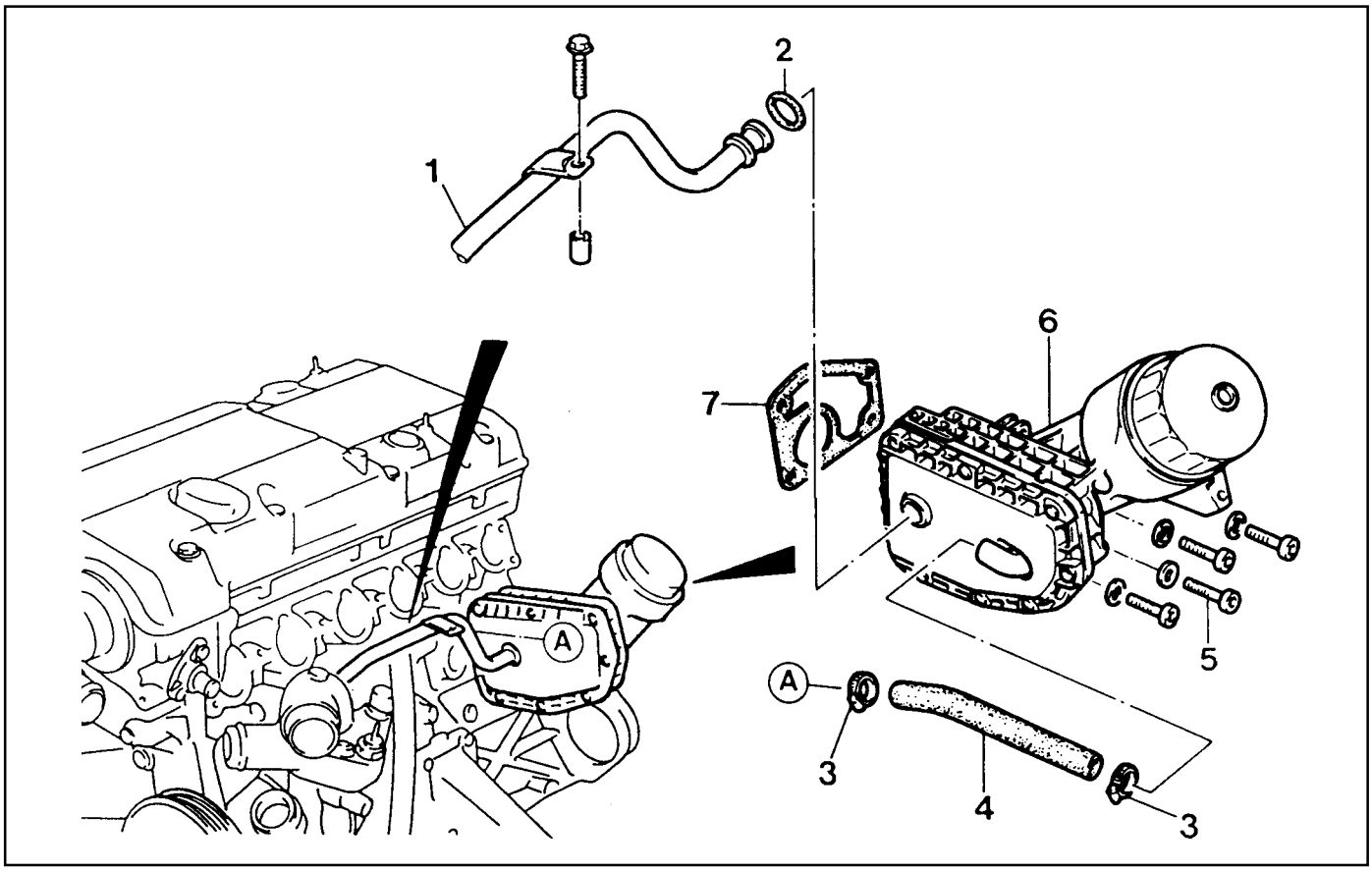

1 Coolant Line
2 O-ring ..... Replace
3 Clip
4 Hose
5 Bolt ..... 23 Nm
6 Oil Filter
7 Gasket ..... Replace

Downloaded from www.Manualslib.com manuals search engine

Removal & Installation Procedure

1. Drain the coolant from the crank case.
2. Remove the each coolant line and hose.

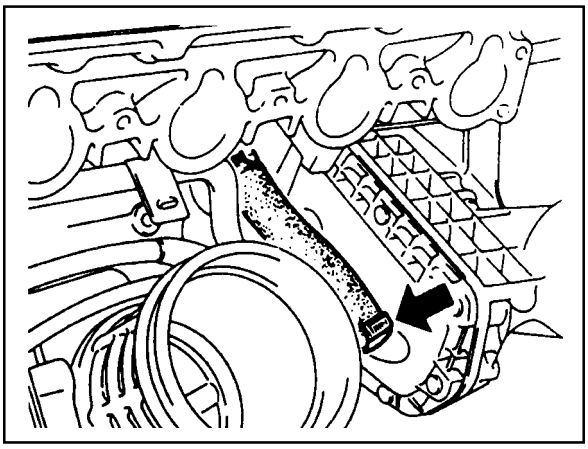

3. Remove the oil filter bolt and then remove the oil filter.

   Installation Notice

Tightening Torque	23 Nm

   Notice

   Replace the oil filter gasket.
4. Installation should follow the removal procedure in the reverse order.
5. Check engine oil level.
6. Run the engine at idle and check the engine for leaks.

Downloaded from www.Manualslib.com manuals search engine

OIL PUMP

Preceding Work : Removal of oil pan

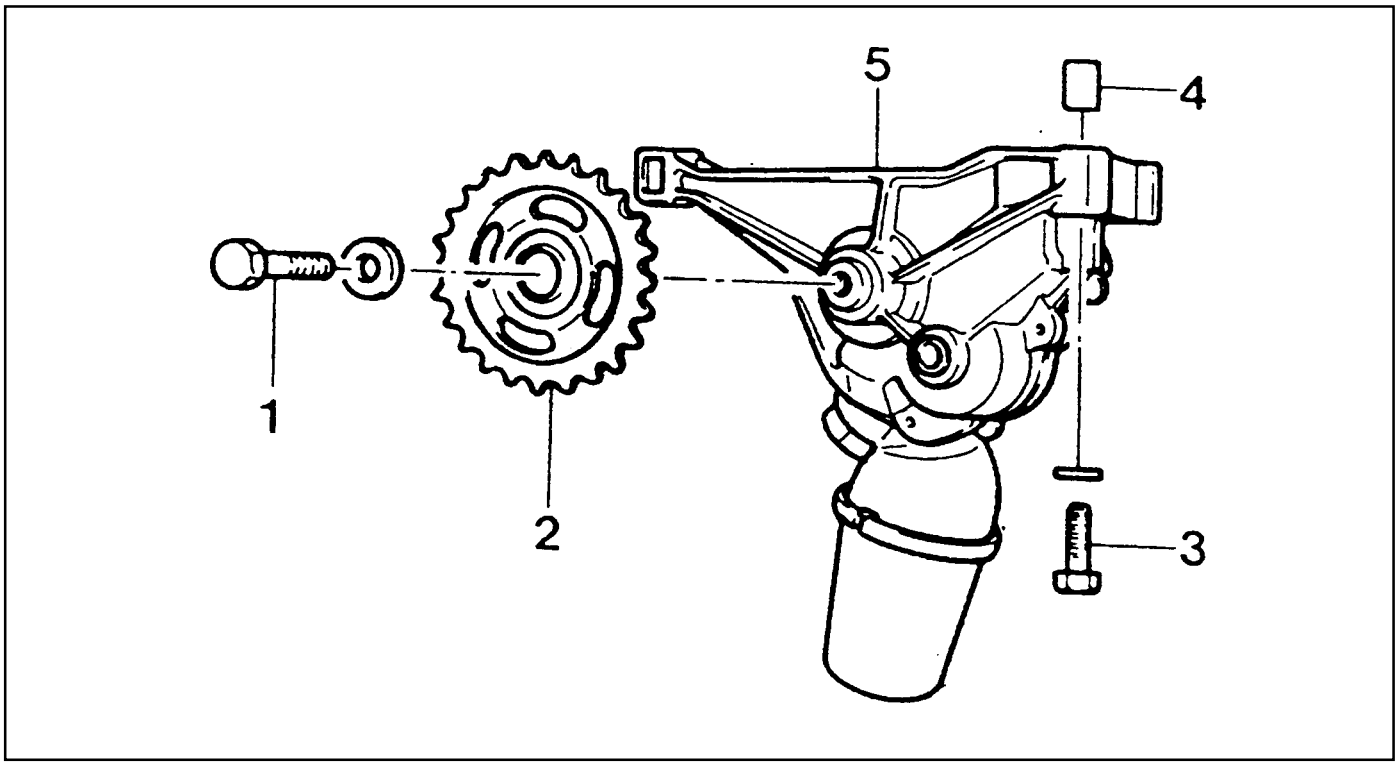

1 Bolt (M8 x 20, 1 piece) ..... 29-35 Nm
2 Sprocket (Oil Pump Drive)
3 Bolt (M8 x 35, 3 pieces) ..... 22.5-27.5 Nm
4 Spring Pin
5 Oil Pump

Downloaded from www.Manualslib.com manuals search engine

Removal & Installation Procedure

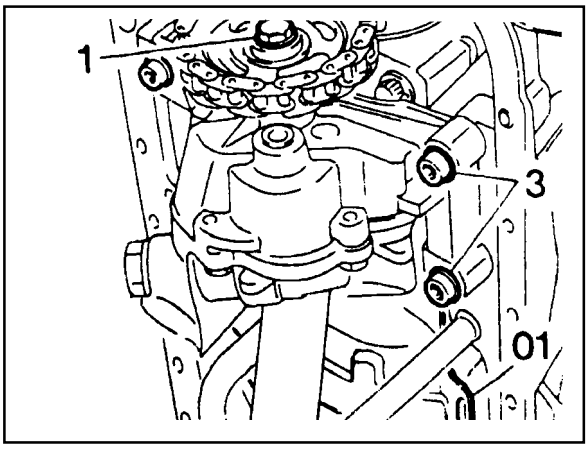

1. Remove the bolt (1) from the oil pump drive sprocket (2) and separate the gear and the oil pump drive chain.

   Installation Notice

Tightening Torque	29 - 35 Nm

2. Unscrew the oil pump mounting bolts (3).

   Installation Notice

Tightening Torque	22.5 - 27.5 Nm

   Tighten the baffle plate and the oil pump with the two bolts in right side first, and then tighten the other bolt.

3. Unscrew the bolt (9) from the oil strainer bracket.

   Installation Notice

Tightening Torque	9 - 11 Nm

4. Remove the oil pump and oil strainer assembly.
5. Replace the strainer in oil pump if necessary.
6. Installation should follow the removal procedure in the reverse order.

Downloaded from www.Manualslib.com manuals search engine

OIL PRESSURE RELIEF VALVE

Preceding Work : Removal of oil pan

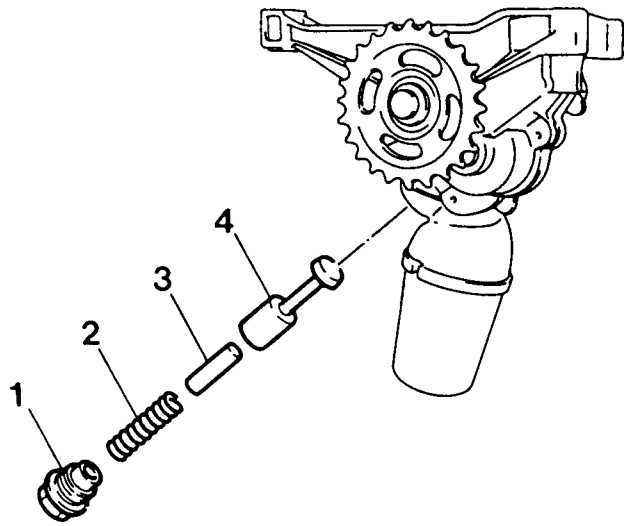

1 Screw Plug ..... 50 Nm
2 Compression Spring
3 Guide Pin
4 Piston

Removal & Installation Procedure

1. Remove the screw plug (1).

   Installation Notice

Tightening Torque	50 Nm

2. Remove the spring (2), guide pin (3) and the piston (4).
3. Installation should follow the removal procedure in the reverse order.

   Notice

   Don't use the seal for the screw plug.

Downloaded from www.Manualslib.com manuals search engine

OIL NON-RETURN VALVE

Preceding Work : Removal of timing gear case cover

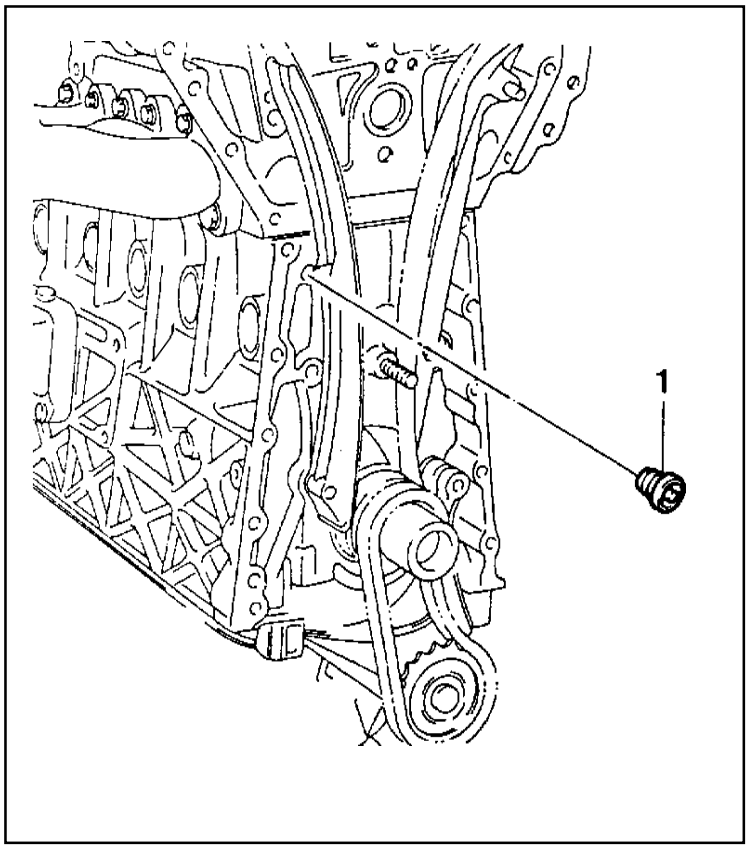

1 Oil Non-return Valve

Functions

The non-return valve prevents the oil in the chain tensioner from drying up. In other words, it stops oil-returning in order to prevent the oil in the chain tensioner from getting dry. As a result, the chain tensioner can be activated with oil in itself.

Replacement Procedure

1. Remove the non-return valve using a pliers.
2. Insert new non-return valve with hand.

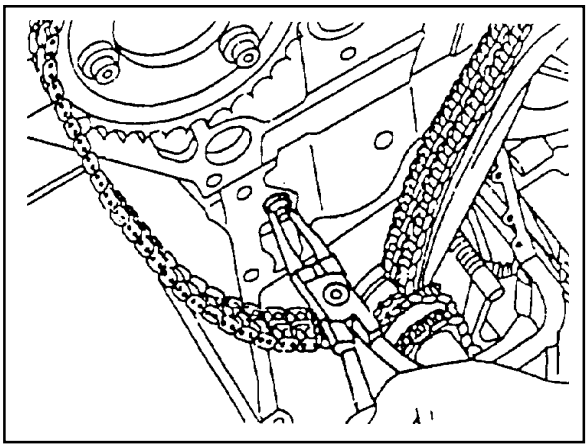

Downloaded from www.Manualslib.com manuals search engine

OIL DIPSTICK GUIDE TUBE

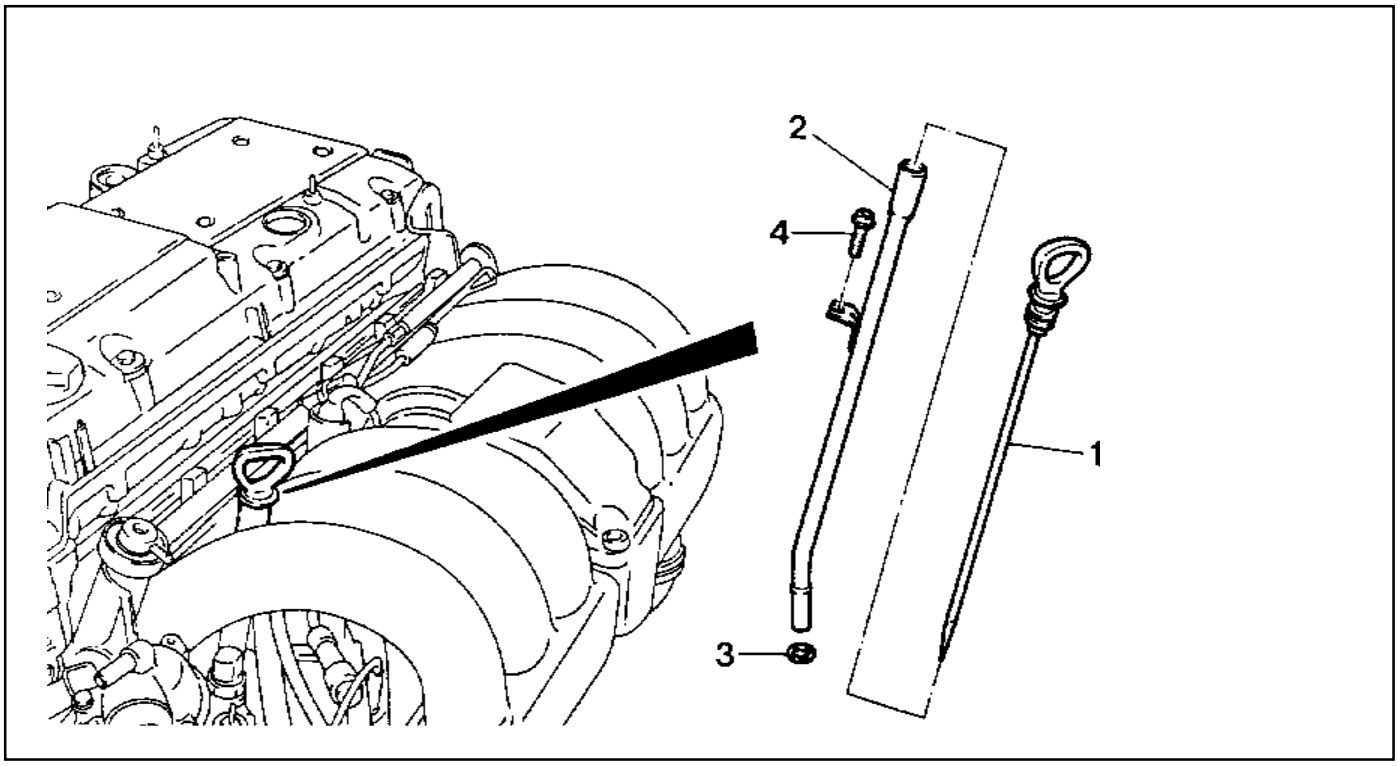

1 Oil Dipstick Level Gauge
2 Oil Dipstick Guide Tube
3 O-ring
4 Bolt (M6 x 12, 1 piece) ..... 9-11 Nm

Removal & Installation Procedure

1. Pull out the oil dipstick level gauge (1).
2. Remove the bolt (4) in the upper intake manifold and remove the oil dipstick guide tube.

   Installation Notice

Tightening Torque	9 - 11 Nm

3. Install new O-ring to the dipstick guide tube.
4. Installation should follow the removal procedure in the reverse order.
5. Check for leaks by starting the engine.

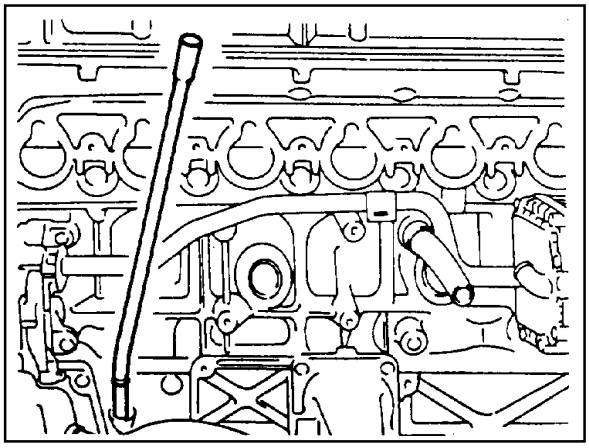

Downloaded from www.Manualslib.com manuals search engine

UNIT REPAIR

OIL GALLERY IN CRANKCASE

Preceding Work : Removal of crankshaft, removal of oil spray nozzle

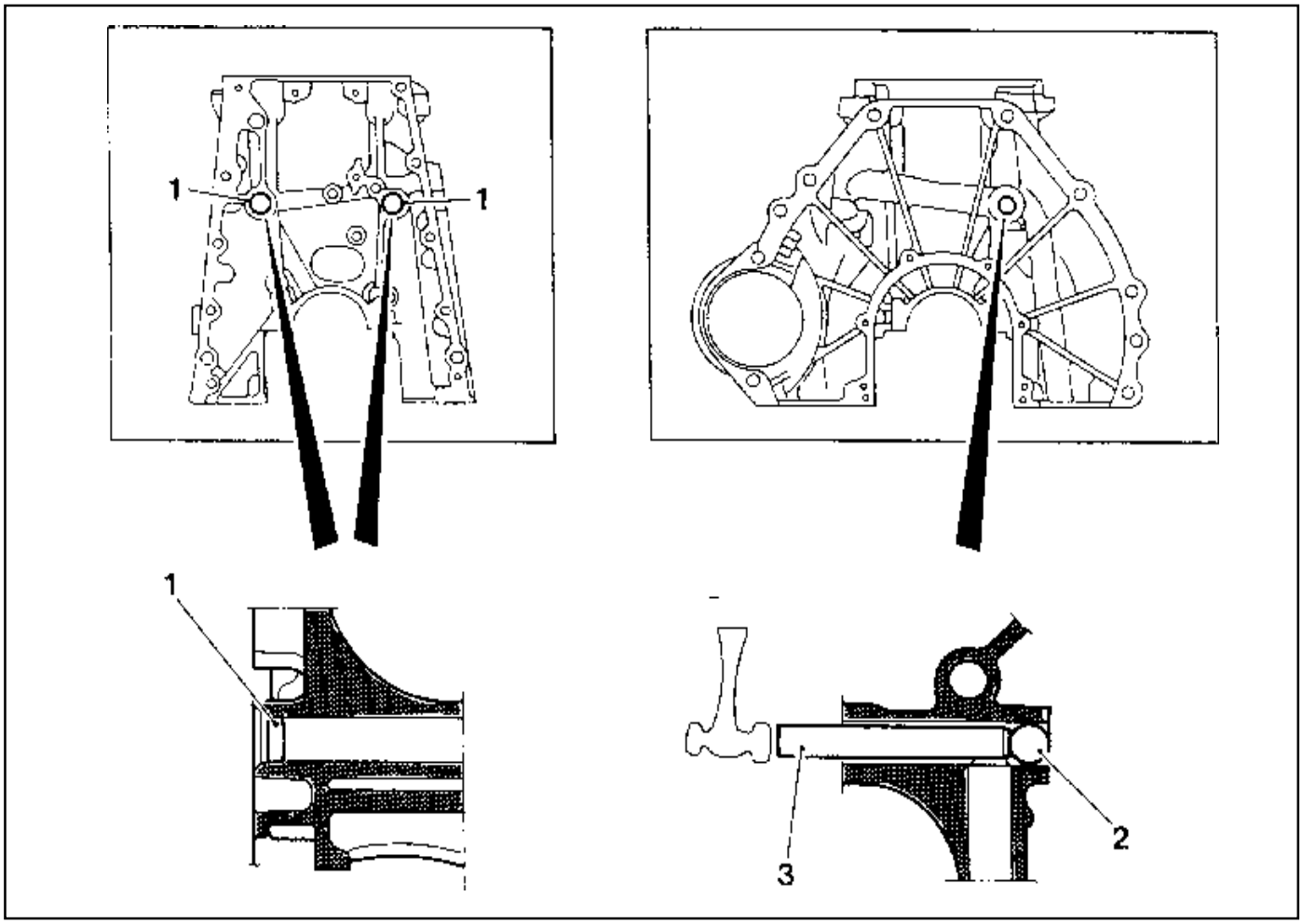

1 Plug
2 Steel Ball
3 Round Bar ..... f11 x 750 mm

Cleaning Procedure

1. Remove the plug (1) with a screwdriver.
2. Using a round bar (3) and hammer, remove the steel ball (2).
3. Using the compressed air, blow into the oil galleries and clean it off.

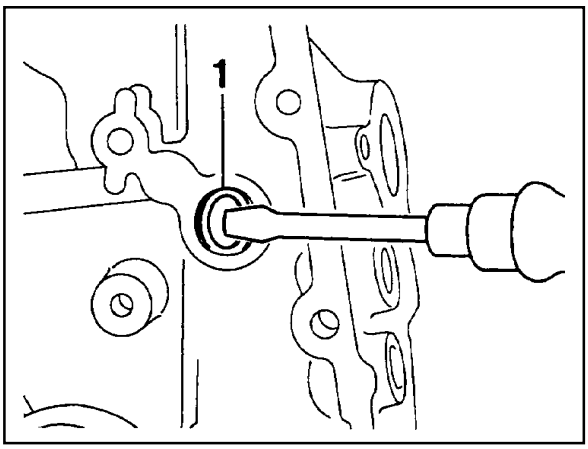

Downloaded from www.Manualslib.com manuals search engine

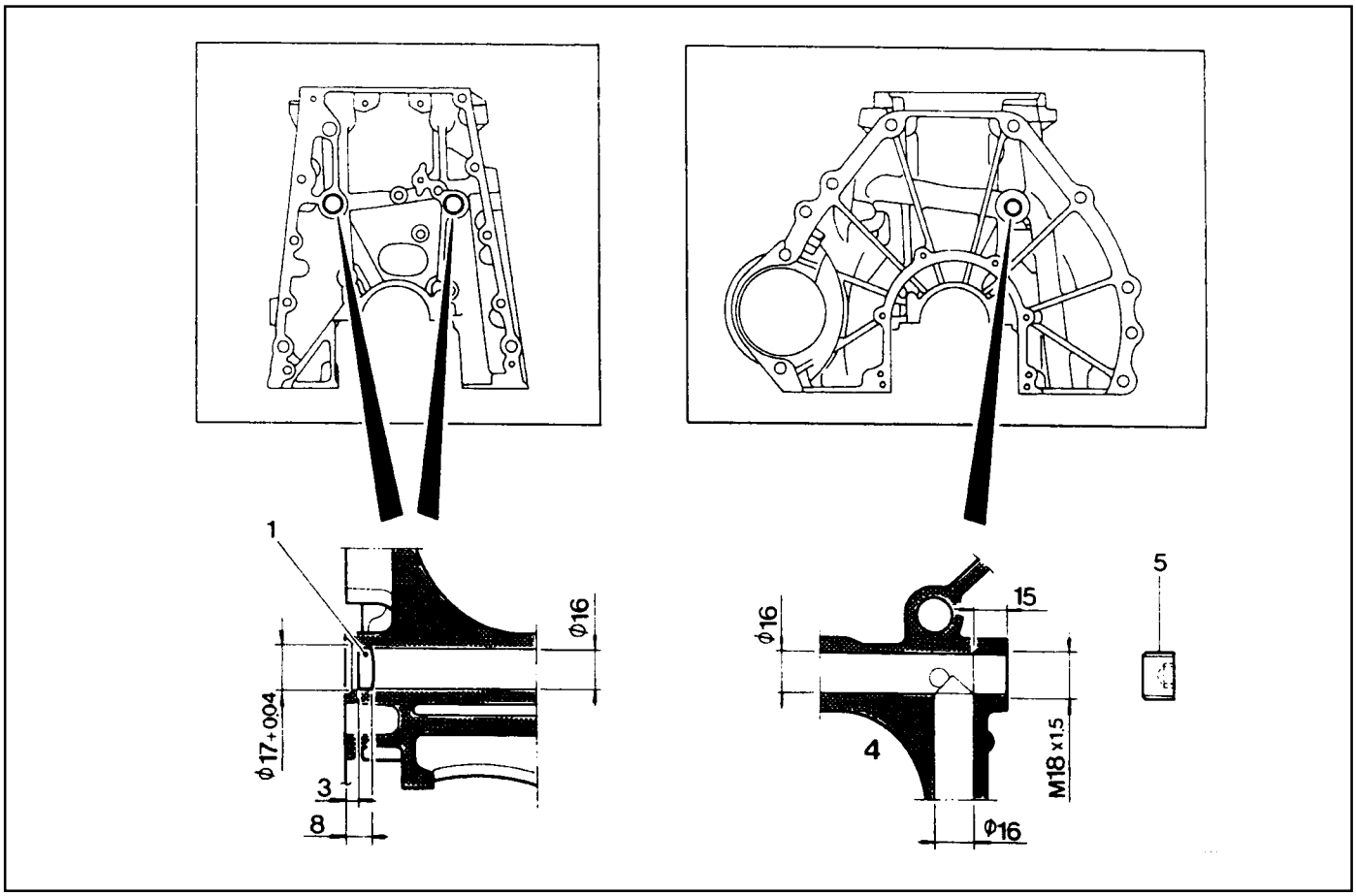

1 Plug ..... Replace
2 Main Oil Gallery
3 Screw Plug

Tools Required

102 589 12 15 00 Drift

Sealing Procedure

1. Enlarge the end of main oil gallery (4) to be diameter of 16mm, depth of 15mm.
2. Using an M16 x 1.5 thread (tap), make the thread at the end of main oil gallery (4).
3. Throughly clean the oil gallery with compressed air and tighten the screw plug (M16 x 1.5) after applying sealing bond on it.
4. Apply Loctite 270 on new plug and tighten to the hole until the drift is stopped after inserting new plug into the drift.

Downloaded from www.Manualslib.com manuals search engine

OIL GALLERY IN CYLINDER HEAD

Preceding Work : Removal of cylinder head
Removal of camshaft
Removal of tappet

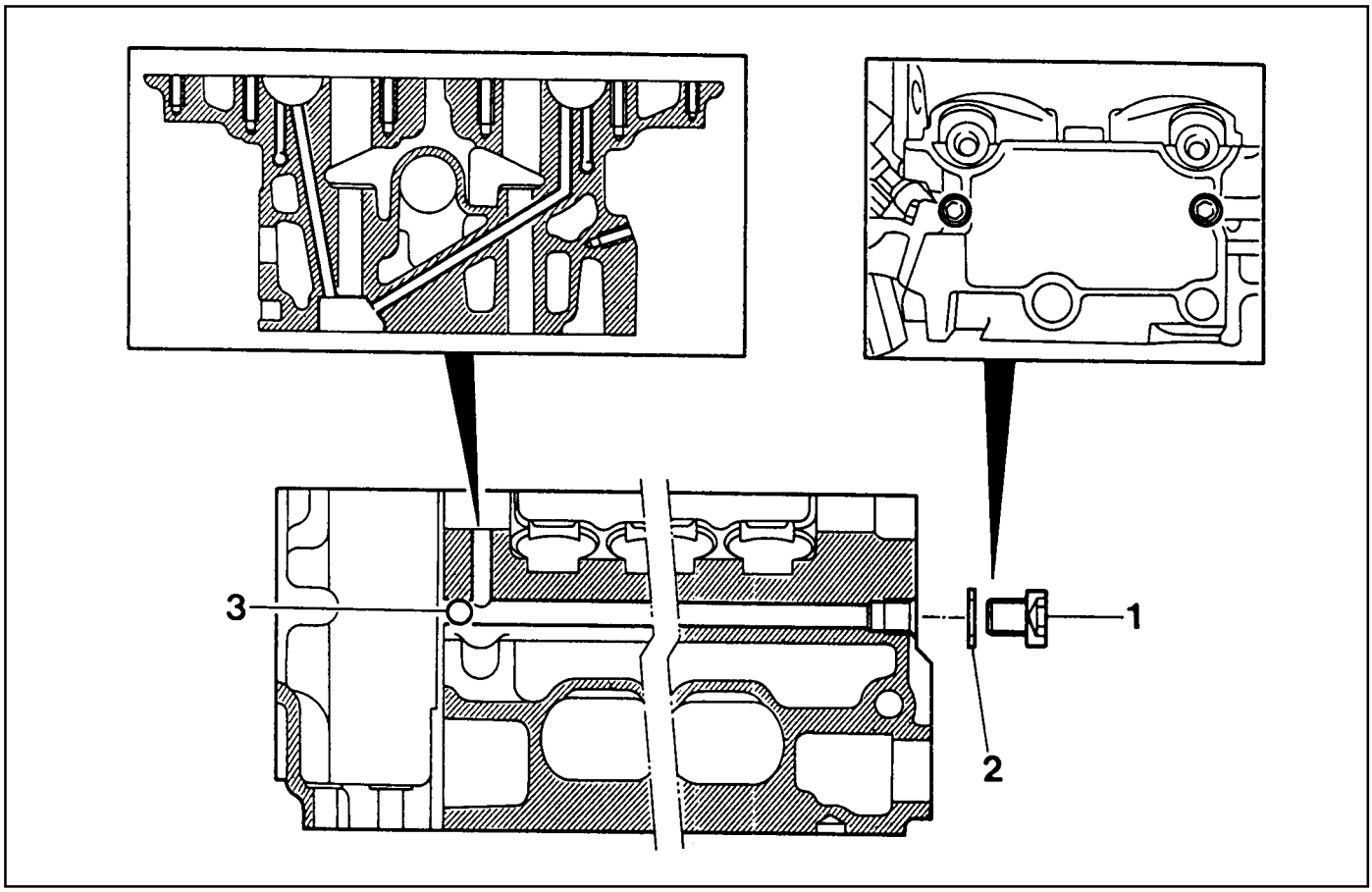

1 Screw Plug ..... 15 Nm
2 Seal
3 Steel Ball (ƒ8mm)

Cleaning Procedure

1. Remove the screw plug (1) and the seal (2).

   Installation Notice

Tightening Torque	15 Nm

   Replace the seal with new one.

2. Clean the oil gallery using the compressed air.

Downloaded from www.Manualslib.com manuals search engine

Sealing Procedure

1. Remove the screw plug (1) and the seal.

Installation Notice

Tightening Torque	15 Nm

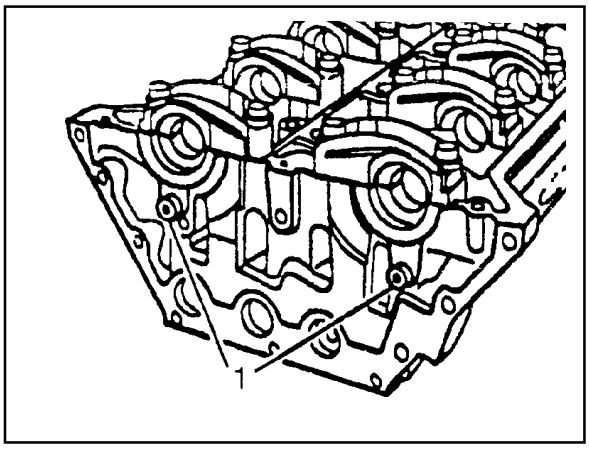

2. Remove the steel ball from the oil gallery (4), (5), (6) and (7) using the round bar (12, f6 x 700 mm).

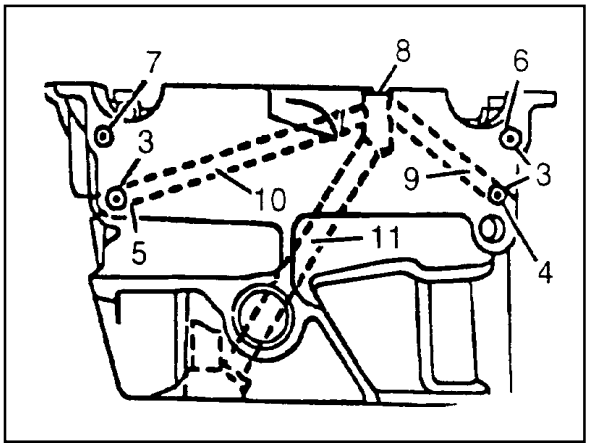

3. Remove the plug (8) using the screw driver.

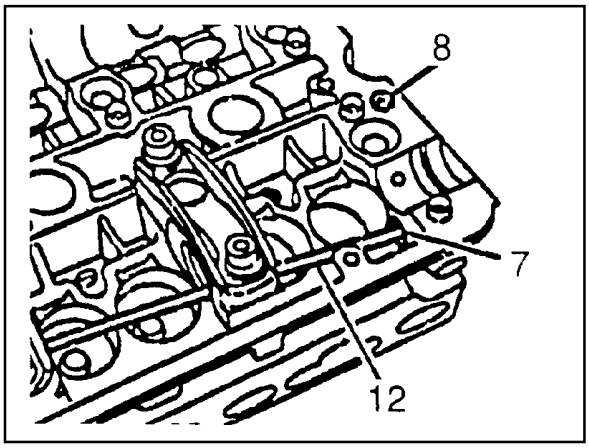

4. Enlarge the oil gallery at the rear of the cylinder head to be diameter 9mm, depth 8mm.
5. Tap in the steel ball (3) from the side to the oil gallery using the punch (13).
6. Pull out the steel ball (3) using the round bar (12).
7. Enlarge the oil gallery to be diameter 9mm, depth 8mm.

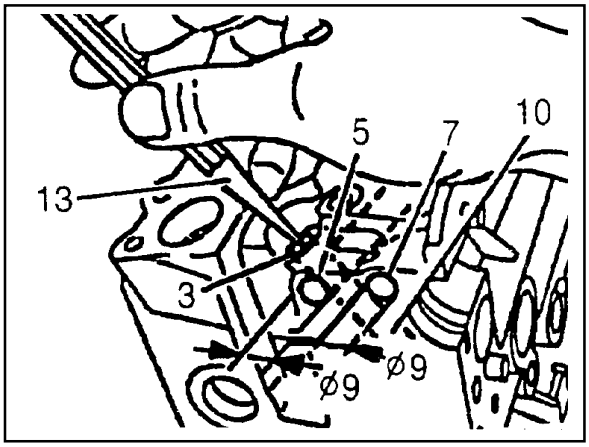

Downloaded from www.Manualslib.com manuals search engine

8. Make a screw hole at the oil gallery using M10 x 1 thread.
9. All the oil gallery should be cleaned with the compressed air.
10. Apply the Loctite 270 to new plug and press in using a suitable drift (arrow).

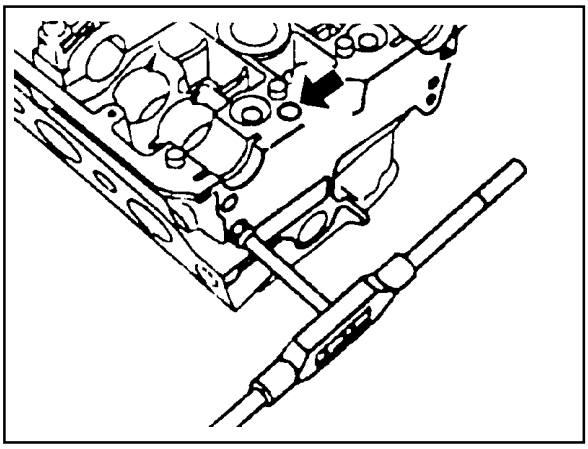

11. Tighten the screw plug with the seal (arrow).

Screw Plug (Part No. 000 908 01 00 02)
Seal (Part No. 007 603 01 01 03)

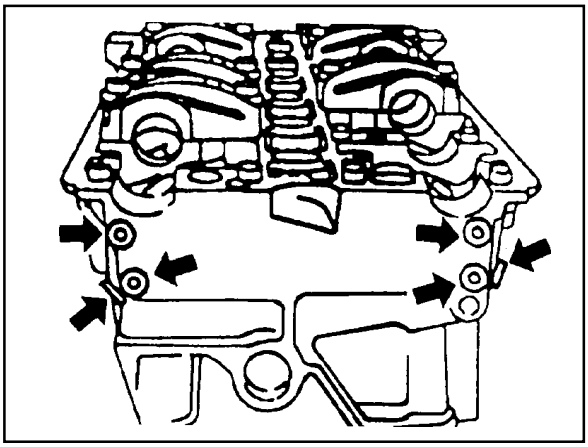

Downloaded from www.Manualslib.com manuals search engine

CORE PLUGS IN CRANKCASE

Preceding Work : Draining of the coolant

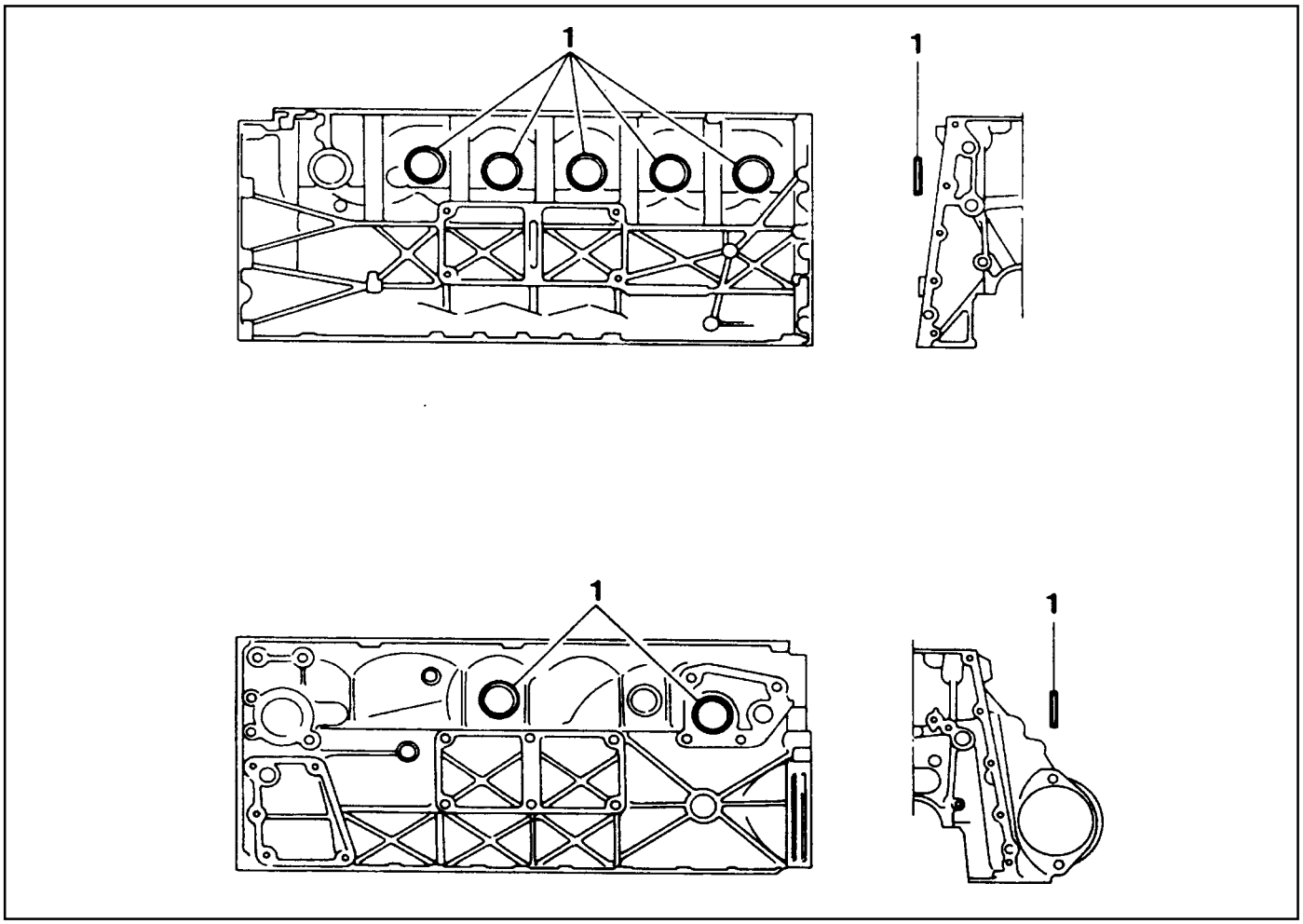

1 Core Plug ..... Replace

Downloaded from www.Manualslib.com manuals search engine

Tools Required

102 589 00 15 00 Drift

Replacement Procedure

1. Remove the intake and exhaust manifolds.
2. Pull back the core plug until the end of one side comes out using the screw driver.

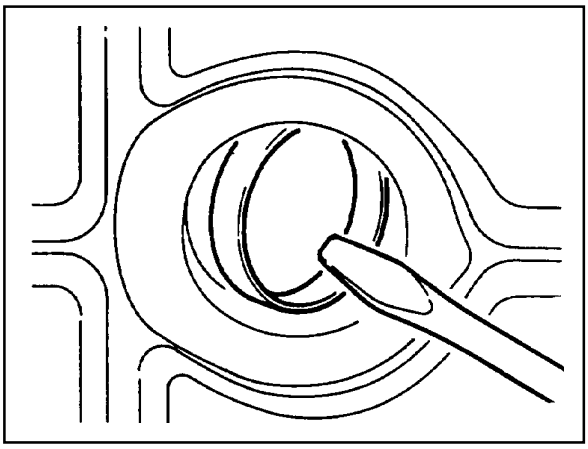

3. Pull out the plug carefully using a pliers.

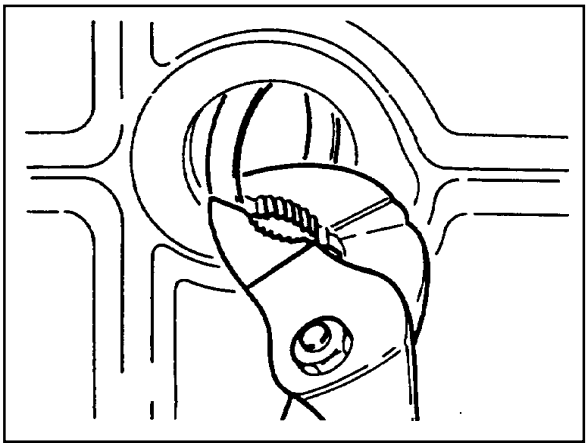

4. Clean the sealing surface and apply Loctite 241.

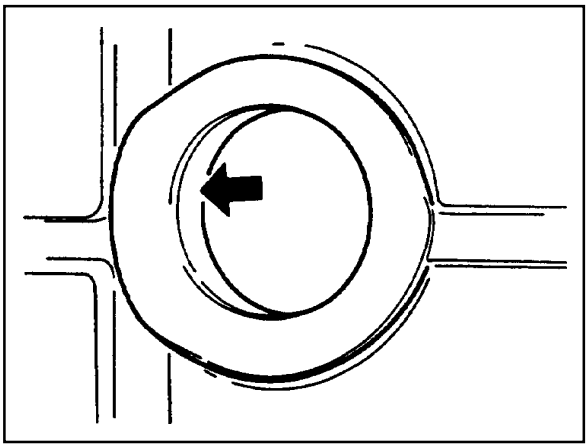

5. Press in new plug using a drift.

   Notice

   Wait for about 45minutes before filling the coolant so that the Loctite 240 hardens.
6. Warm up the engine and check the coolant for leaks.

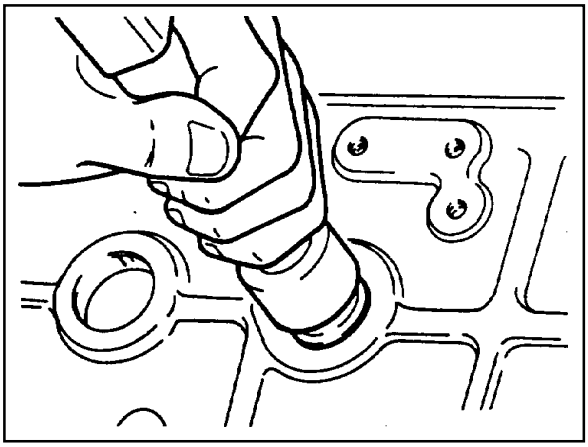

Downloaded from www.Manualslib.com manuals search engine

CYLINDER BORE

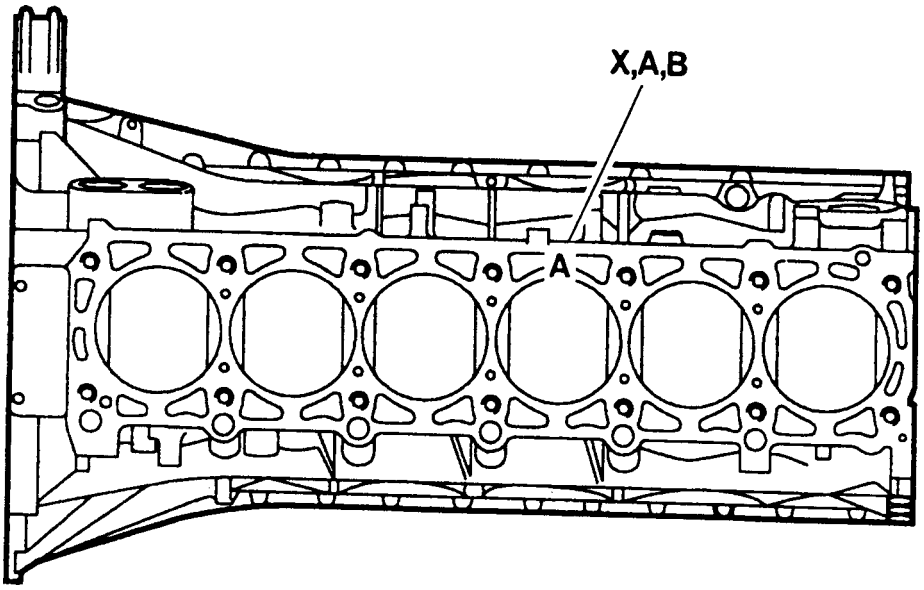

Group Code Letter and Cylinder Bore Size

Group Code Letter of Cylinder	Piston Type to be Used	Cylinder Bore Size (mm)
A	A or X	ƒ89.900 - ƒ90.906
X	A, X or B	ƒ89.906 - ƒ89.912
B	X or B	ƒ89.912 - ƒ89.918
X + 5	X + 5	ƒ89.950 - ƒ89.968
X + 10	X + 10	ƒ90.000 - ƒ90.018

Repair Size

Type	Group Code Letter[1)]	Cylinder Bore Size (mm)
Standard Size ƒ89.9	A	ƒ89.900 - ƒ90.906
	X	ƒ89.906 - ƒ89.912
	B	ƒ89.912 - ƒ89.918
1st Repair Size (Standard Size + 0.25)	A	ƒ90.150 - ƒ90.156
	X	ƒ89.156 - ƒ90.162
	B	ƒ90.162 - ƒ90.168
2nd Repair Size (Standard Size + 0.5)	A	ƒ90.400 - ƒ90.406
	X	ƒ90.406 - ƒ90.412
	B	ƒ90.412 - ƒ90.418

[1)] The group code letters are carved on the surface of the piston crown and in the mating surface of the crankcase.

Downloaded from www.Manualslib.com manuals search engine

Service Data Standard

Wear Limit in Longitudinal and Transverse Direction		0.1 mm
Permissible Deviation of Cylinder Out-of-round	When new	0.007 mm
	Wear limit	0.05 mm
Permissible Deviation of Rectangular Cylinder Height (Except Chamfered Area)		0.05 mm
Basic Peak-to-valley Height After Final Honing and Brushing		0.003 - 0.006 mm
Chamfer Angle		60°
Honing Angle		50° ± 10°

Measurement of Cylinder Bore

1. Clean the cylinder wall.
2. Using a internal diameter gauge, measure the bore size in axial and transverse direction at three points (1,2,3).

1,2,3 Measuring Points
A. Axial Direction
B. Transverse Direction
a. Location of the No.1 Piston Ring at TDC
b. Location of the Piston BDC
c. Location of the Oil Ring at BDC

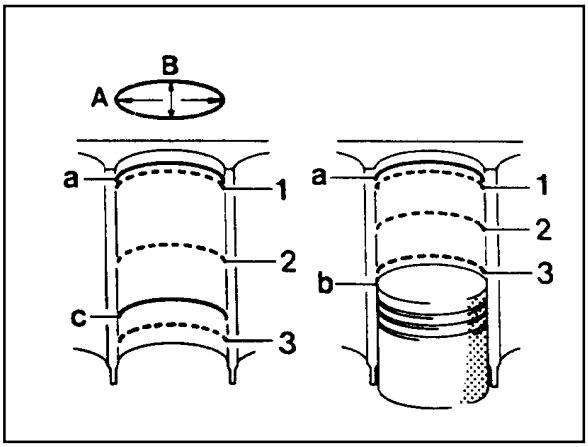

Chamfer Angle

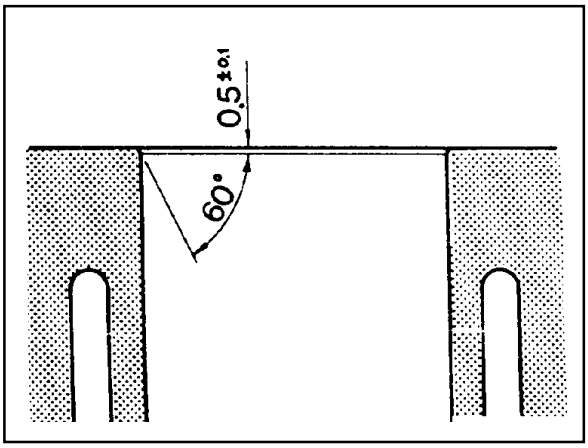

Downloaded from www.Manualslib.com manuals search engine

CRANKCASE MATING SURFACE

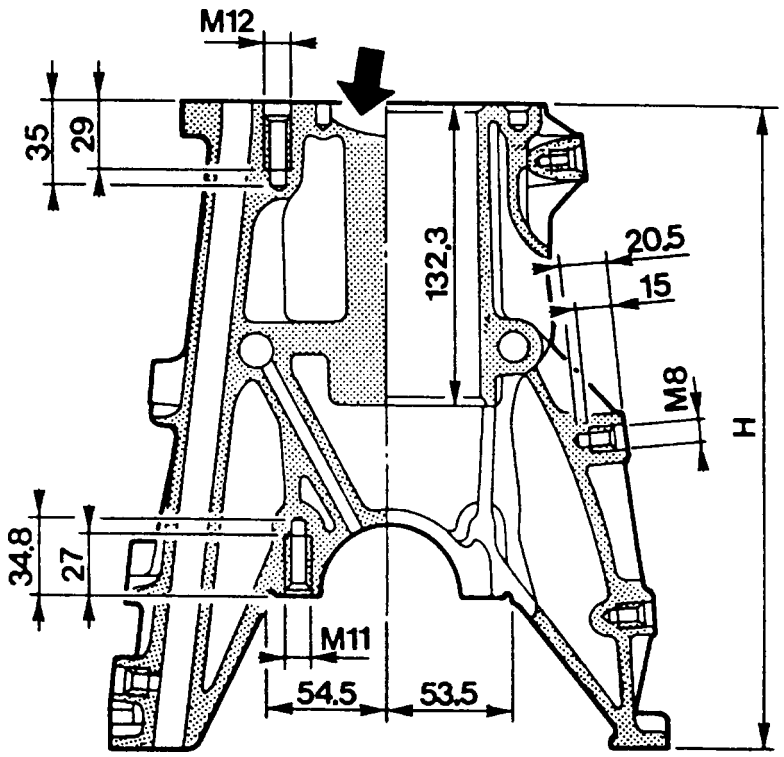

Service Data Standard

Height of The Crankcase “H” (When new)		282.25 - 282.35mm
Minimum Height After Milling		281.95mm
Flatness	Crankcase Upper Mating Surface	0.03mm
	Crankcase Lower Mating Surface	0.04mm
Permissible Deviation of Parallelism of The Upper to Lower Mating Surface	Axial Direction	0.1mm
	Transverse Direction	0.05mm
Peak-to-valley Height	Crankcase Upper Mating Surface	0.005 - 0.020mm
	Crankcase Lower Mating Surface	0.025mm

Downloaded from www.Manualslib.com manuals search engine

Chamfering Procedure

1. Chamfer angle : 60°

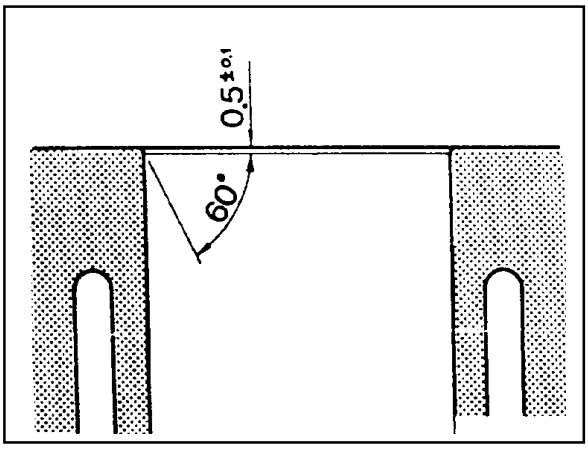

2. Polish the lower chamfered area evenly with a grinder after finishing the chamfering with a suitable tool (e.g., hand milling cutter).

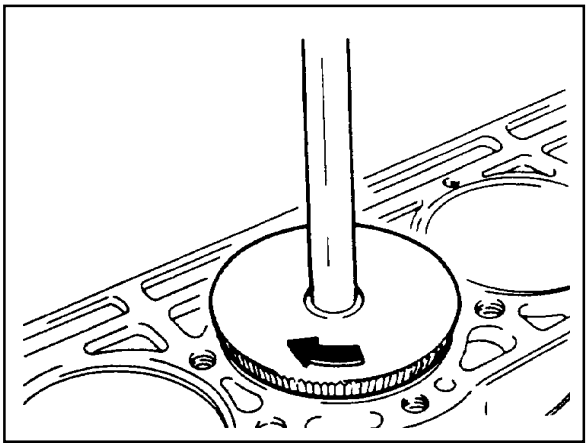

Downloaded from www.Manualslib.com manuals search engine

CYLINDER HEAD MATING SURFACE

Preceding Work : Removal of valves

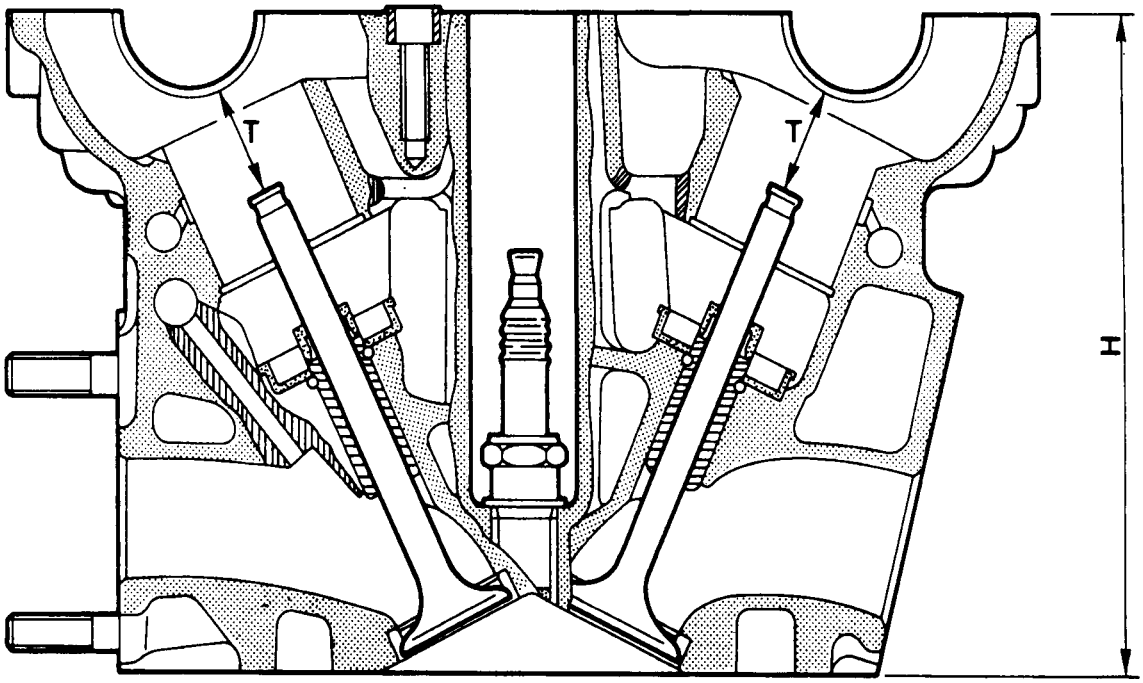

Service Data Standard

Overall Height of Cylinder Head			135.9 - 136.0 mm
Minimum Height After Machining			135.5 mm
Flatness	Axial Direction		0.08 mm
	Transverse Direction		0.0 mm
Distance 'T' (Between Camshaft Bearing and Valve Stem)	Standard Size	Intake	24.21 - 24.75 mm
		Exhaust	22.21 - 22.75 mm
	Repair Size	Intake	23.96 - 24.51 mm
		Exhaust	21.96 - 22.51 mm

Notice

Do not exceed 0.4mm for the milling of the mating surface of crankcase and cylinder head.

Downloaded from www.Manualslib.com manuals search engine

Measurement of Mating Surface

1. Measure the height (H) of the cylinder head (refer to *Service data standard*).
2. Check the mating surface of the cylinder head.
3. Mill the sharp edge of the combustion chamber.
4. Re-measure the height (H) of the cylinder head.
5. Seal the intake and exhaust valves.
6. Measure the dimension (T) between the camshaft bearing and the valve system (refer to *Service data standard*).
7. Mill the cylinder head valve seat (refer to *Service data standard*).

Universal Tool

Surface Grinding Machine	Sceledum, Type RTY Roaro Schio/Italy

Downloaded from www.Manualslib.com manuals search engine

SECTION 1B2

M161 ENGINE MECHANICAL

CAUTION: Disconnect the negative battery cable before removing or installing any electrical unit or when a tool or equipment could easily come in contact with exposed electrical terminals. Disconnecting this cable will help prevent personal injury and damage to the vehicle. The ignition must also be in LOCK unless otherwise noted.

TABLE OF CONTENTS

Specifications 1B2-2
Fastener Tightening Specifications 1B2-2
Special Tools 1B2-4
Special Tools Table 1B2-4
Maintenance and Repair 1B2-9
On-Vehicle Service 1B2-9
Engine Assembly 1B2-9
Crankcase Ventilation System 1B2-16
Alternator 1B2-20
Power Steering Pump and A/C Bracket . . . 1B2-21
Hydraulic Engine Mounting Insulator 1B2-24
Poly V-Belt 1B2-27
Tensioning Deivce 1B2-29
Tensioning Device Shock Absorber 1B2-30
Poly V-Belt Inspection 1B2-31
Cylinder Head Cover 1B2-34
Cylinder Head Front Cover 1B2-36
Cylinder Head 1B2-38
Timing Gear Case Cover 1B2-43
Crankshaft Sealing Rear Cover 1B2-46
Belt Pulley and Vibration Damper 1B2-48
Crankshaft Front Radial Seal 1B2-51
Crankshaft Rear Radial Seal 1B2-52
Crankshaft 1B2-53
Flywheel/Driven Plate 1B2-59
Camshaft Adjuster 1B2-61
Camshaft Sprocket Bolt 1B2-64
Camshaft 1B2-65
Camshaft Timing Position 1B2-68
Valve Spring 1B2-71
Valve Stem Seal 1B2-75
Chain Tensioner 1B2-76
Timing Chain 1B2-79
Tensioning Rail 1B2-84
Cylinder Head Guide Rail 1B2-85
Crankcase Guide Rail 1B2-86
Crankshaft Sprocket 1B2-87
Piston 1B2-89
Connecting Rod 1B2-92
Piston Ring 1B2-94
Oil Pan 1B2-96
Engine Oil and Oil Filter Element 1B2-98
Oil Pump 1B2-100
Oil Pressure Relief Valve 1B2-102
Oil Non-Return Valve 1B2-103
Oil Dipstick Guide Tube 1B2-104
Unit Repair 1B2-105
Core Plugs in Crankcase 1B2-105
Cylinder Bore 1B2-107
Crankcase Mating Surface 1B2-109
Cylinder Head Mating Surface 1B2-111

Downloaded from www.Manualslib.com manuals search engine

SPECIFICATIONS

FASTENER TIGHTENING SPECIFICATIONS

Application		N·m
Power Steering Hydraulic Lines		35 - 40
A/C High Pressure and Liquid Hose		10 - 15
Radiator Support Menber Bolt		5 - 10
Fuel Supply and Return Hose to Fuel Distributor		21 - 25
Exhaust Manifold and Pipe		30
Propeller Shaft to Transmission		56 - 66
Engine Mounting Nut		50 - 60
Alternator Carrier Bolt		22.5 - 27.5
Belt Pulley Bolt		41.5 - 49.5
Steering Pump Bolt		22.5 - 27.5
A/C Bracket Bolt		22.5 - 27.5
Intake Air Duct Bolt		9 - 11
Ignition Cable Cover Bolt		9 - 11
Cylinder Head Cover Bolt		9 - 11
Camshaft Adjuster Bolt		9 - 11
Cylinder Head Front Cover Bolt		22.5 - 27.5
Flange Bolt in Exhaust Camshaft Sprocket		10 +90°
Cylinder Head Bolt		55 +90° +90°
Cooling Fan Bracket Bolt		22.5 - 27.5
Timing Gear Case Cover Bolt	M8	22.5 - 27.5
	M6	9 - 10
Crankshaft Rear Cover Bolt		9-10
Vibration Damper Center Bolt		200 +90°
Connecting Rod Bearing Cap Bolt		40 +90°
Flywheel Stretch Bolt		45 +90°
Amarture Bolt in Flywheel		35
Ring and Seal Cover Nut in Flywheel		9 - 11
Sprocket Bolt to Exhaust Camshaft		20
		+90°
Camshaft Adjuster Flange Bolt		20
		+90°
Intake Flange Shaft Bolt		20 / + 90°
Exhaust Camshaft Sprocket Bolt		20 / + 90°
Camshaft Bearing Cap Bolt		22.5 - 27.5

Downloaded from www.Manualslib.com manuals search engine

FASTENER TIGHTENING SPECIFICATIONS (Cont'd)

Application	N·m
Exhaust Camshaft Sproket Bolt	20 / +90°
Chain Tensioner Screw Plug	40
Chain Tensioner Assembly	72 - 88
Exhaust Camshaft Sprocket to Camshaft	20 / +90°
Oil Pump Sprocket Bolt	25 - 35
Tensioning Device Bolt	22.5 - 27.5
Water Pump Pulley	22.5 - 27.5
Upper Intake Manifold Bolt	22.5 - 27.5
Lower Intake Mainfold Bolt	22.5 - 27.5
Flange Bolt to Exhaust Mainfold	30
Exhaust Mainfold Nut to Stud Bolt	26 - 34
Rivet Nut in Exhuast Mainfold Hole	30
Pre-Silencer Bolt	8 - 10
Oil Drain Plug	25
Oil Filter Cover	25
Oil Filter Bolt	22.5 - 27.5
Oil Pump Drive Sprocket Bolt	29 - 35
Oil Pump Mounting Bolt	22.5 - 27.5
Oil Strainer Bracket Bolt	9 - 11
Oil Pressure Relief Valve Screw Plug	50
Oil Dipstick Guide tube Bolt	9 - 11
Oil Gallery Screw Plug	15

Downloaded from www.Manualslib.com manuals search engine

SPECIAL TOOLS

SPECIAL TOOLS TABLE

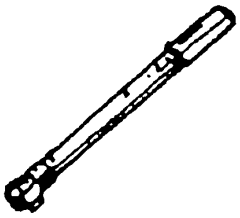	**000 589 10 99 01** **Torque Wrench**	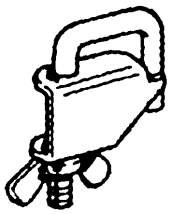	**000 589 40 37 00** **Hose Clamp**
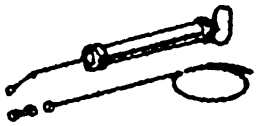	**112 589 00 72 00** **Oil Extractor**	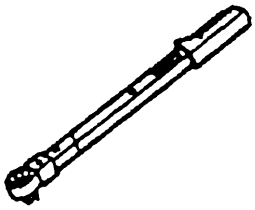	**000 589 72 21 00** **Torque Wrench**
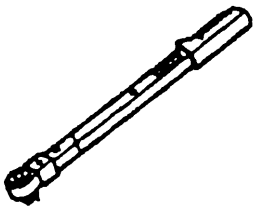	**001 589 66 21 00** **Torque Wrench**	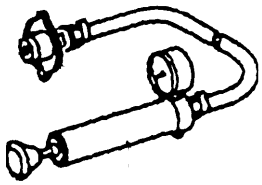	**124 589 15 21 00** **Radiator Cap** **Testing Unit**
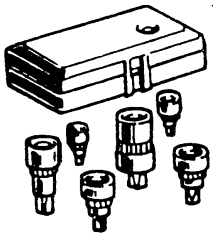	**000 589 01 10 00** **Box Wrench Insert**	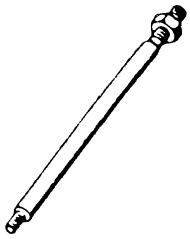	**116 589 02 34 00** **Screw-Fixed Pin**

Downloaded from www.Manualslib.com manuals search engine

SPECIAL TOOLS TABLE (Cont'd)

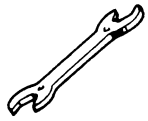	**104 589 01 01 00** **Spanner**	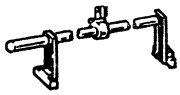	**111 589 01 59 00** **Supporting Bar**
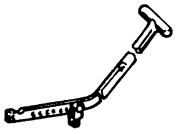	**111 589 18 61 00** **Lever Pusher**		**111 589 25 63 00** **Thrust Piece**
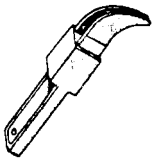	**116 589 06 63 00** **Magnetic Finger**		**104 589 00 37 00** **Pliers**
	119 589 00 43 00 **Drift**	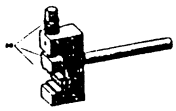	**000 589 58 43 00** **Chain Assembly**

Downloaded from www.Manualslib.com manuals search engine

SPECIAL TOOLS TABLE (Cont'd)

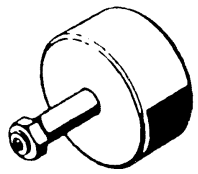	**116 589 20 33 00** **Sliding Hammer**	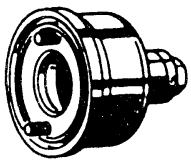	**601 589 03 43 00** **Sleeve**
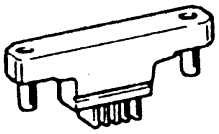	**602 589 00 40 00** **Engine Lock**	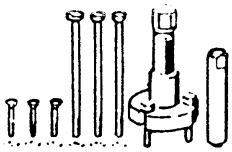	**103 589 00 33 00** **Puller**
	001 589 65 09 00 **Socket Wrench Insert**	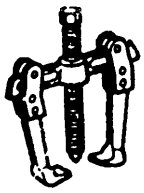	**000 589 88 33 00** **Puller**
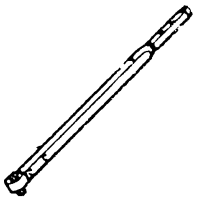	**001 589 74 21 00** **Torque Wrench**	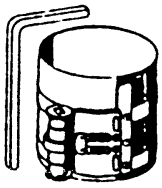	**000 589 04 14 00** **Clamping Strap**

Downloaded from www.Manualslib.com manuals search engine

SPECIAL TOOLS TABLE (Cont'd)

	103 589 01 63 00 **Rivet Set**	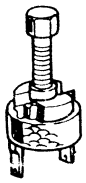	**615 589 01 33 00** **Caulking Bolt**
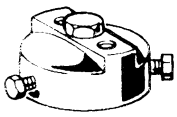	**103 589 02 09 00** **Oil Filter** **Socket Wrench**		**102 589 12 15 00** **Drift**
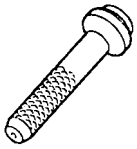	**102 589 00 15 00** **Drift**		**601 589 03 14 00** **Sleeve**
	000 589 51 37 00 **Clamping Strap**		**001 589 72 21 00** **Torque Wrench**

Downloaded from www.Manualslib.com manuals search engine

SPECIAL TOOLS TABLE (Cont'd)

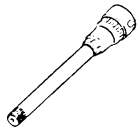	**617 589 00 10 00** **Wrench Socket**	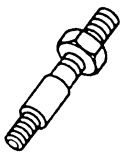	**116 589 01 34 00** **Threaded Bolt**
	104 589 00 40 00 **Holder**	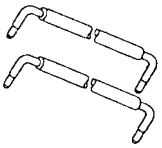	**111 589 03 15 00** **Insert Pin**

Downloaded from www.Manualslib.com manuals search engine

MAINTENANCE AND REPAIR

ON-VEHICLE SERVICE

ENGINE ASSEMBLY

Tools Required

000 589 10 99 01 Torque Wrench
000 589 40 37 00 Hose Clamp
112 589 00 72 00 Oil Extractor
000 589 72 21 00 Torque Wrench
001 589 66 21 00 Torque Wrench
124 589 15 21 00 Radiator Cap Testing Unit

Removal & Installation Procedure

1. Disconnect the negative terminal of battery.
2. Remove the hood.
3. Remove the under cover.

Installation Notice

Tightening Torque	28 - 47 Nm

4. Disconnect the coupling of HFM sensor and remove the air cleaner cross pipe.

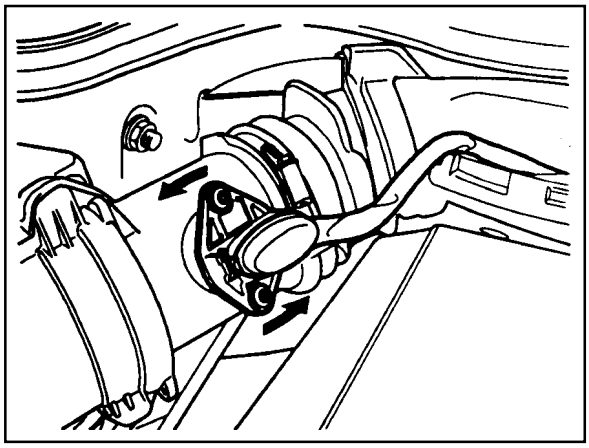

5. Remove the air cleaner cover. Remove the mounting bolts and air cleaner housing and element assembly.

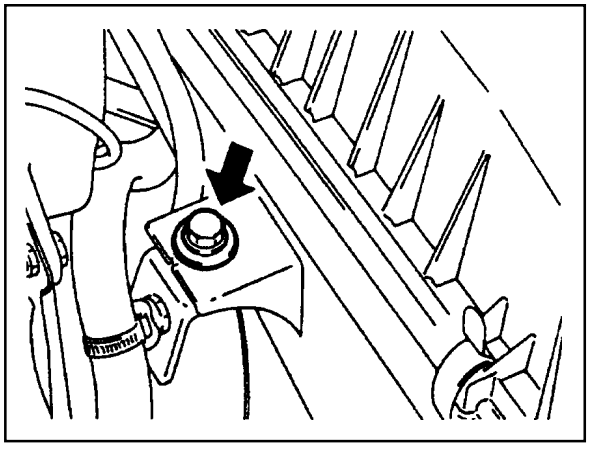

Downloaded from www.Manualslib.com manuals search engine

6. Loosen the radiator drain cock and drain the coolant.

   Notice

   Open the coolant reservoir cap.

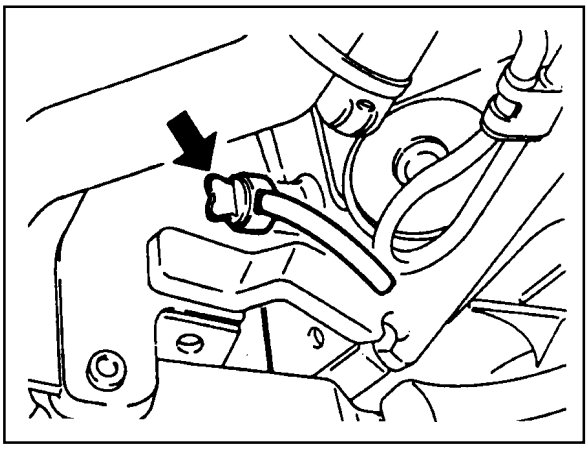

7. Loosen the cylinder block drain plug and then drain the coolant completely.

   Installation Notice

Tightening Torque	30 Nm

   Notice

   Replace the seal before installation of the drain plug.

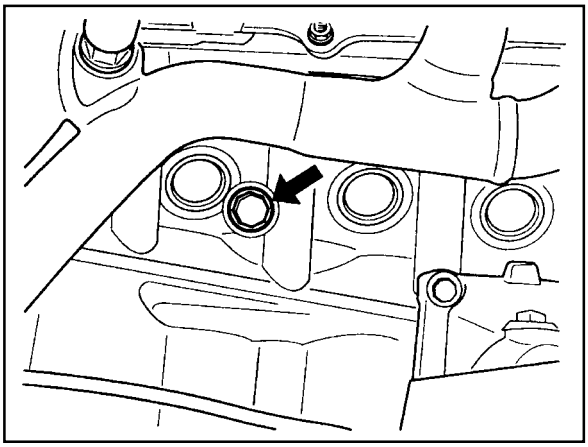

8. Remove the cooling fan shroud.

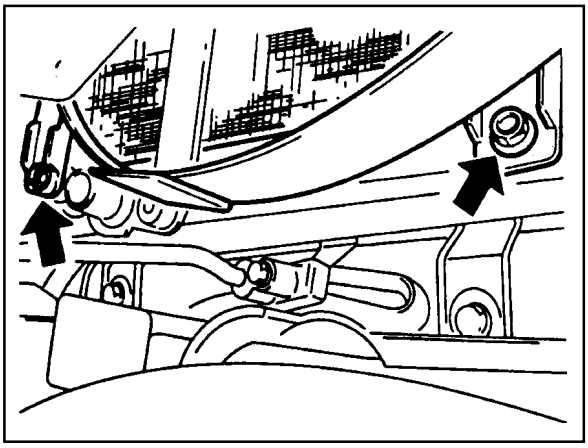

9. Disconnect the each hose from radiator.

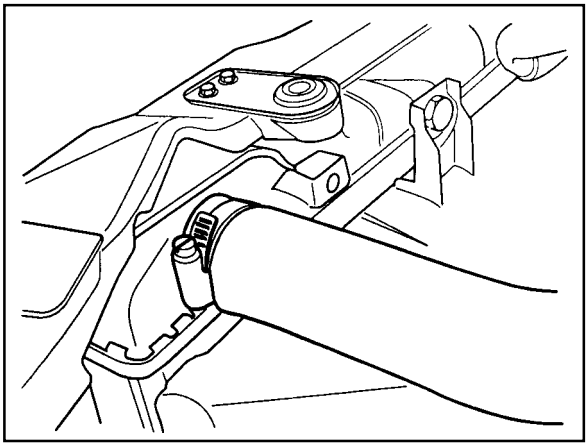

Downloaded from www.Manualslib.com manuals search engine

10. Remove the upper mounting bolts of radiator and then remove the radiator.

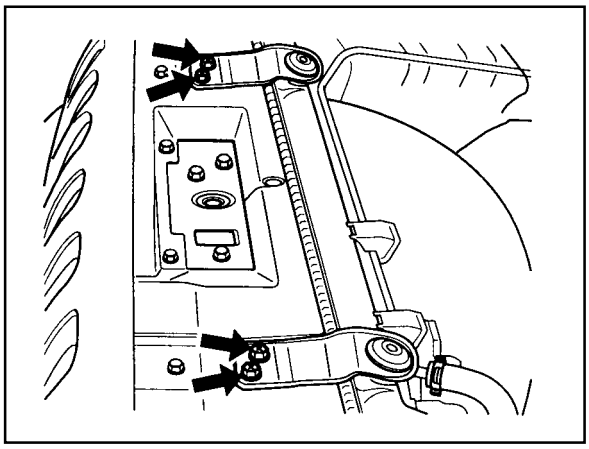

11. Remove the hydraulic pipe of power steering.

    Notice

    Completely drain the oil.

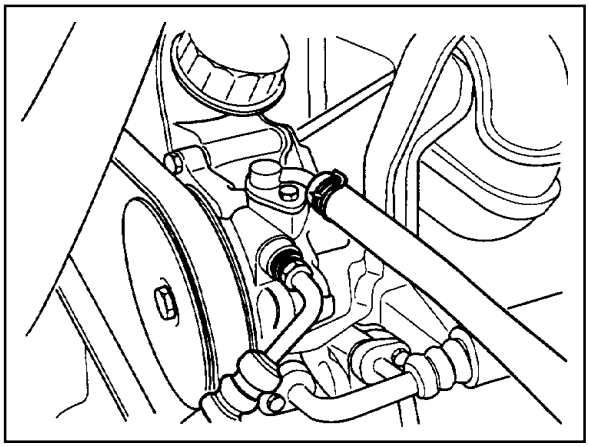

12. Discharge the refrigerant from A/C system, and disconnect the discharge pipe and suction pipe from the compressor.

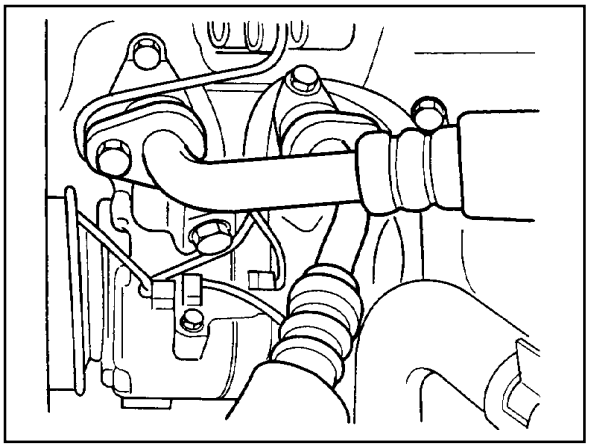

13. Remove the acceleration control cable and automatic transmission pressure cable.

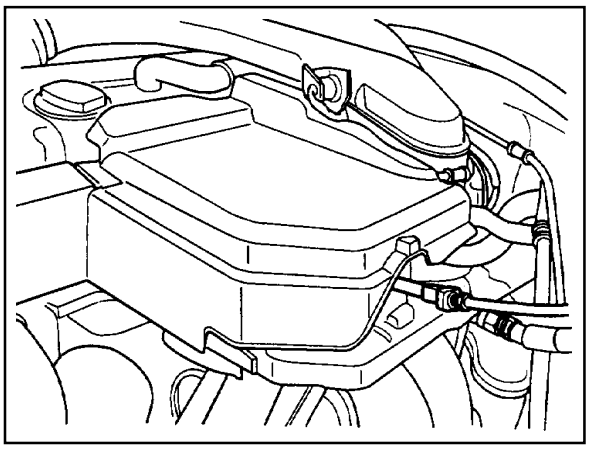

Downloaded from www.Manualslib.com manuals search engine

14. Remove the fuel feed and return line.

Notice

Before removing the fuel lines, release the pressure in the fuel system.

Installation Notice

Tightening Torque	21 - 25 Nm

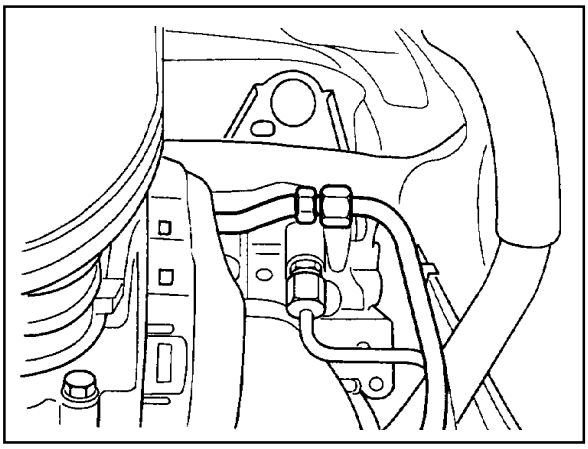

15. Remove the automatic transmission dipstick guide tube.

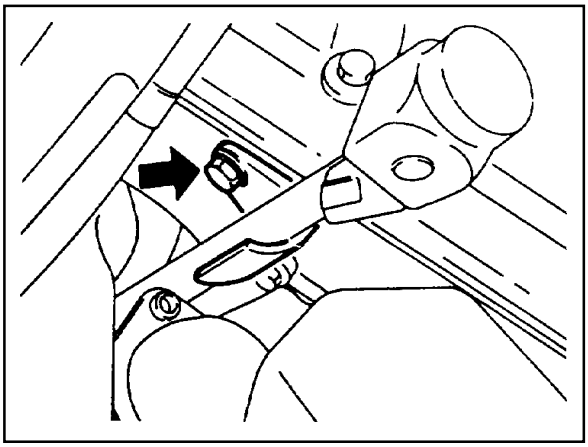

16. Disconnect the wire of alternator.

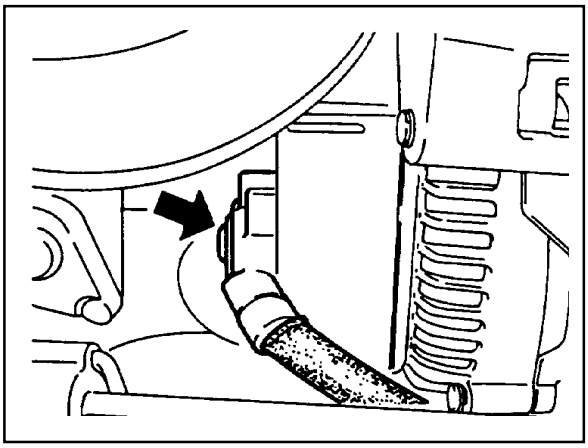

17. Disconnect the wire of starter motor and remove the starter motor.
18. Disconnect the engine main harness ground.

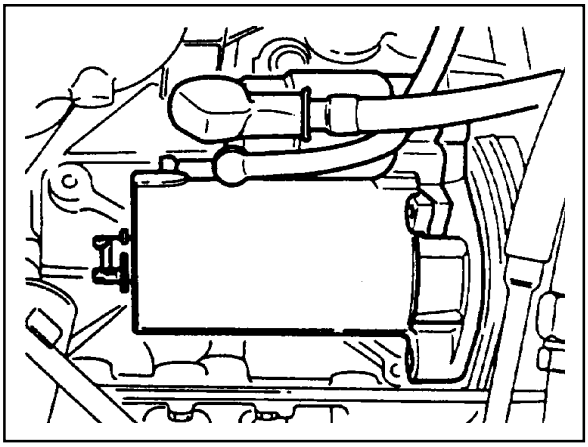

Downloaded from www.Manualslib.com manuals search engine

19. Disconnect the engine ground wire.

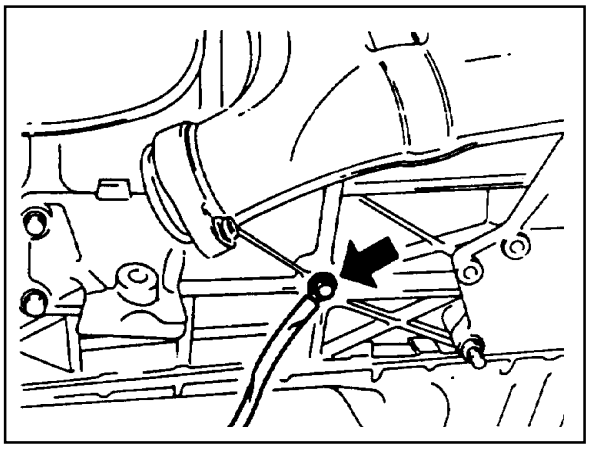

20. Disconnect following sensors connector.
    - HFM sensor.
    - Coolant temperature sensor.
    - 2 knock sensors.
    - Camshaft and crankshaft sensors.

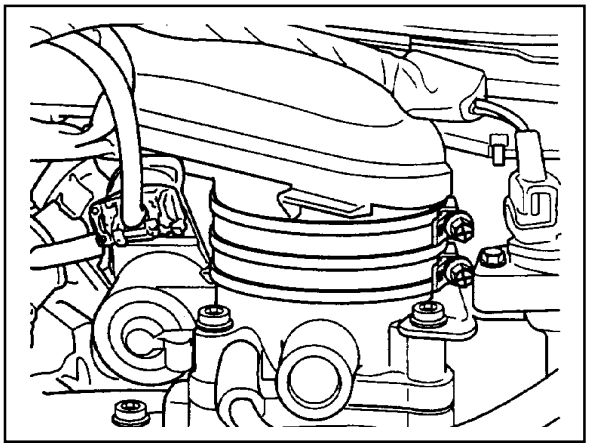

21. After removing the ignition coil cover, disconnect the ignition coil connector.
22. Remove the harness cover and disconnect the 6 injection valve connectors. Disconnect the main harness.

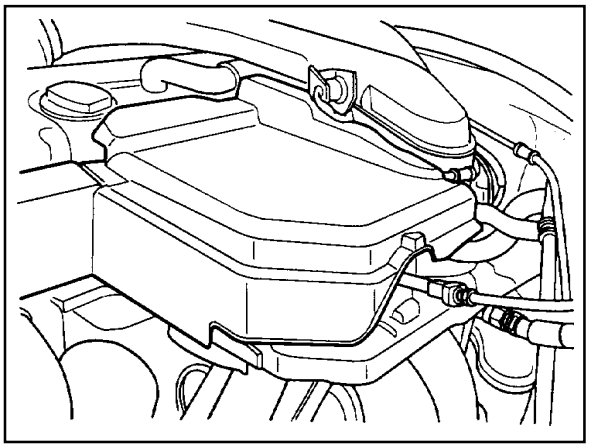

23. Separate the hose toward engine from canister purge solenoid valve.

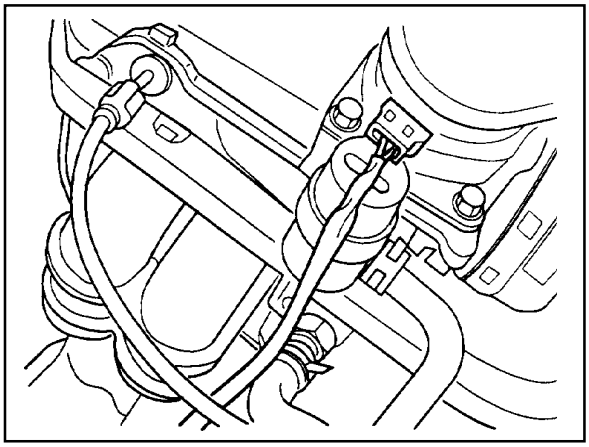

Downloaded from www.Manualslib.com manuals search engine

24. Remove the automatic transmission oil cooler line.

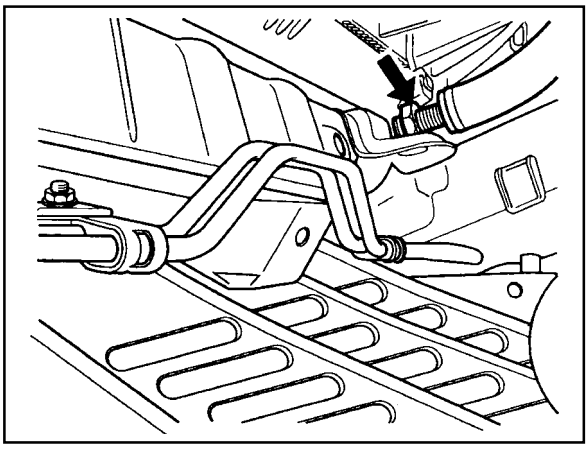

25. Separate the vacuum hose for brake booster.
26. Separate the other vacuum hoses.

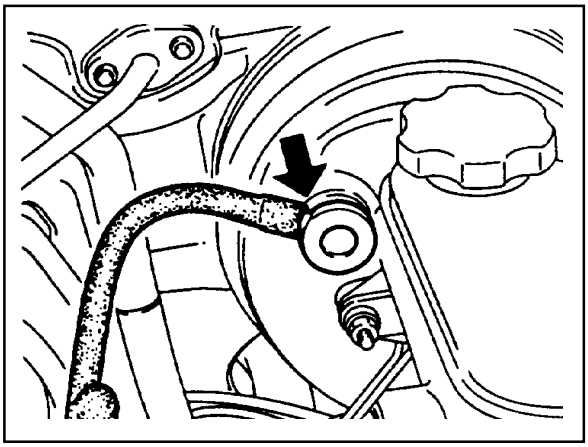

27. Remove the propeller shaft from the front axle.

Installation Notice

Tightening Torque	81 - 89 Nm

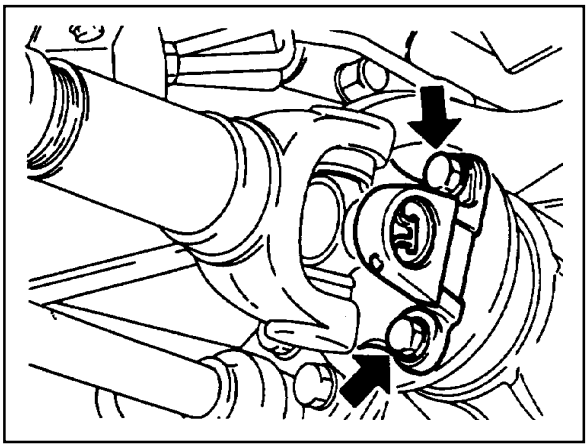

28. By rotating the crankshaft from the front of engine, remove the 6 torque converter mounting bolts from the engine ring gear plate.

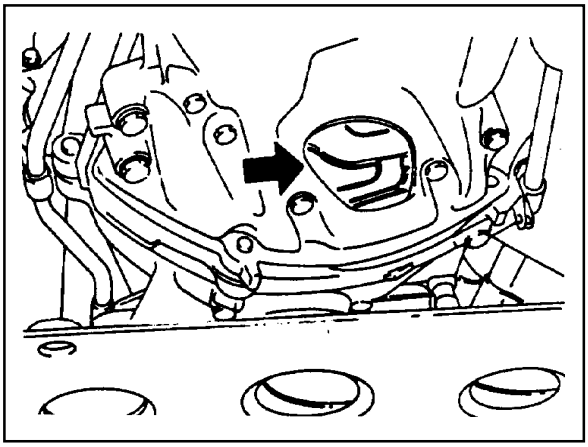

Downloaded from www.Manualslib.com manuals search engine

29. Remove the exhaust manifold and exhaust pipe.

Installation Notice

Tightening Torque	30 Nm

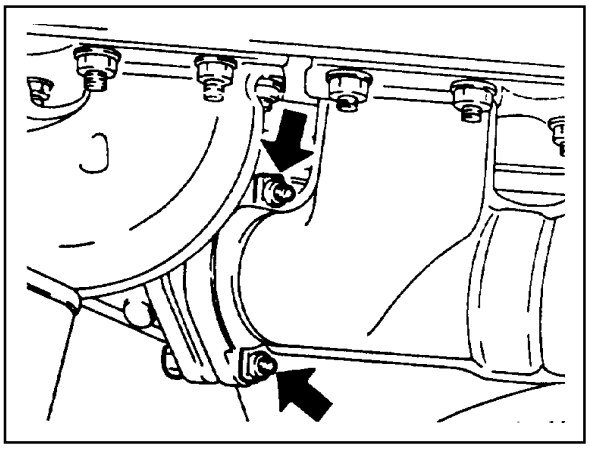

30. Remove the transmission mounting bolts and separate the transmission from the engine.

Installation Notice

Tightening Torque	65 Nm

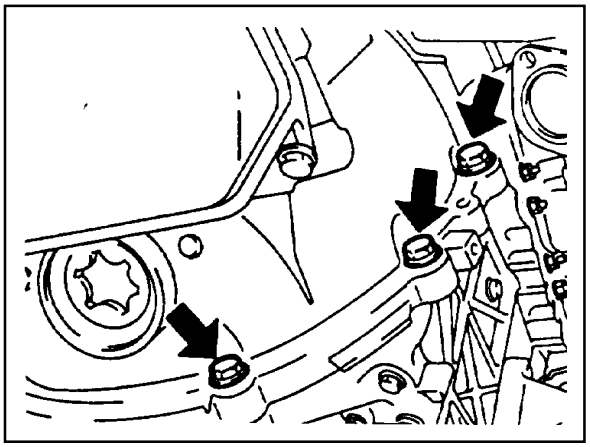

31. Remove the bolts for engine mounting bracket.

Installation Notice

Tightening Torque	50 - 75 Nm

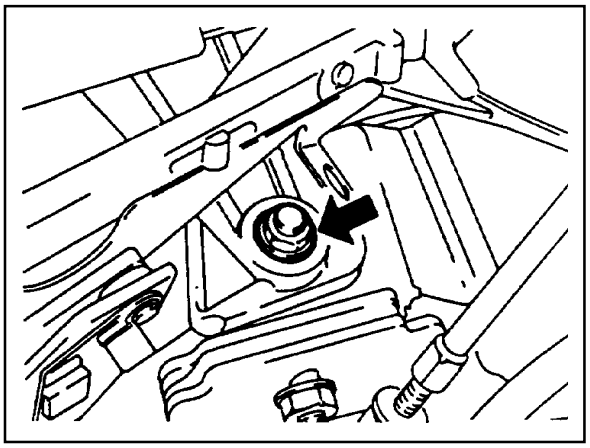

32. Hook the chain to the bracket of engine and by using a hoist or crane, carefully separate the engine assembly from the vehicle.
33. Installation should follow the removal procedure in the reverse order.

Downloaded from www.Manualslib.com manuals search engine

CRANKCASE VENTILATION SYSTEM

Operation at Idling and Mid-Load

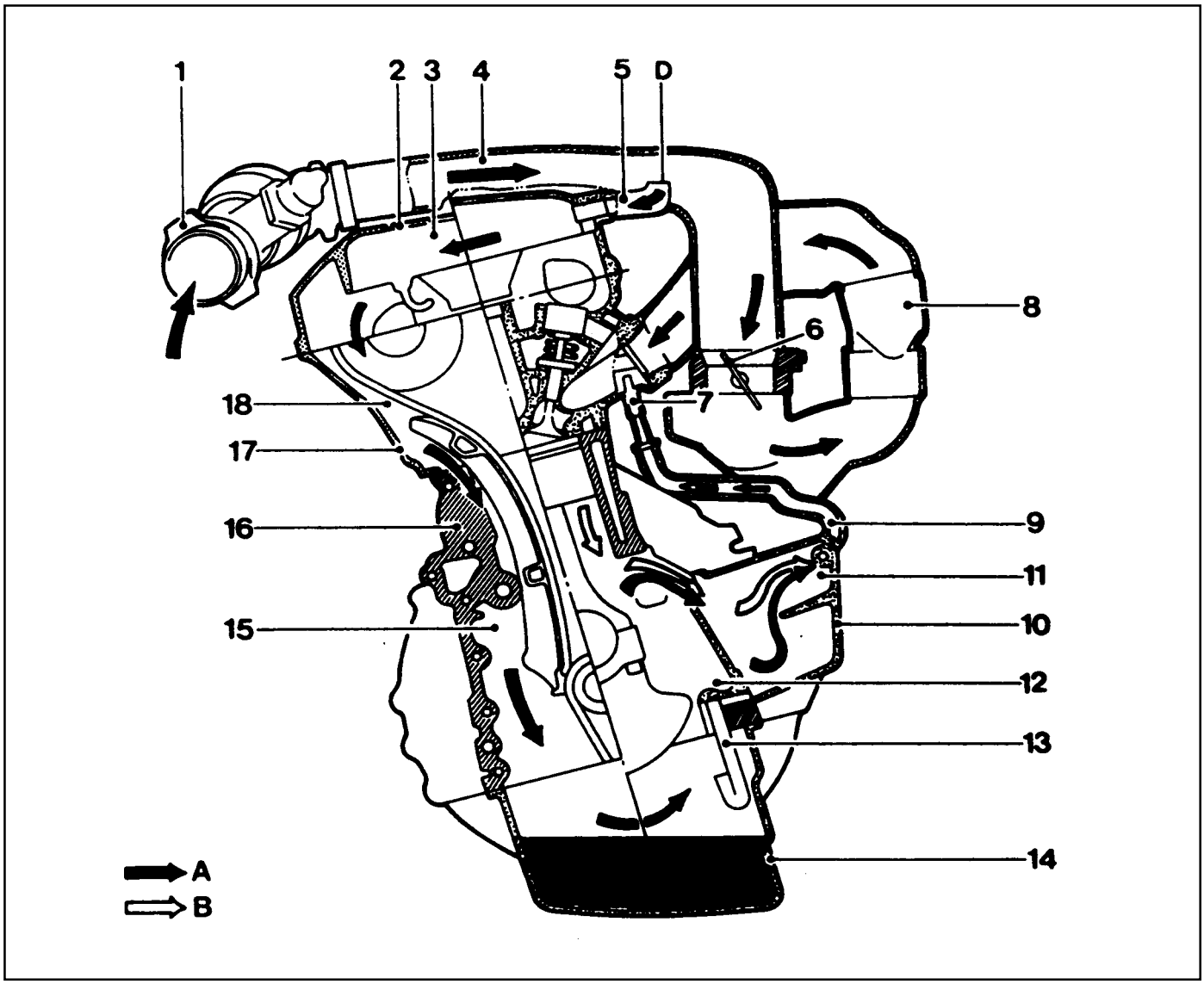

1 HFM Sensor
2 Cylinder Head Cover
3 Oil Spearation Chamber (Full-Load or Over Mid-Load)
4 Intake Air Duct (Cross Pipe)
5 Vent Line (Full-Load or Over Mid-Load)
6 Throttle Valve
7 Restrictor, Diameter 1.1mm (Mid-Load at Idling)
8 Intake Manifold
9 Vent Line (Mid-Load at Idling)
10 Air Conditioner Bracket
11 Oil Separation Chamber (Mid-Load at Idling)
12 Crank Chamber
13 Oil Return Pipe
14 Oil Pan
15 Timing Gear Case Cover
16 Crankcase
17 Chain Housing

A Fresh Air
C Blow-by Gas
D Vent Connection

Downloaded from www.Manualslib.com manuals search engine

Operation at Idling and Mid-Load

- The throttle valve(6) is closed or very partially opened, and the vacuum pressure in intake manifold is high.

  The blow-by gas and the fresh air that is additionally supplied through the vent connection(D) in the crankcase in partial load gets supplied to the combustion chamber from the crank chamber(12) through the oil separation chamber(11), air-conditioner bracket(10), vent line(9), and restrictor(7) mounted to the cylinder head.

  The circulated engine oil returns to the oil pan through the oil return pipe(13) at the bottom of oil separation chamber(11).

  The fresh air gets supplied to the crank chamber(12) through the HFM sensor(1), intake air duct(4), vent line(5), oil separation chamber(3), chain housing(17), and the timing gear case cover(15).

  The additional supply of the fresh air is needed to prevent from forming the residues of the engine oil.

Downloaded from www.Manualslib.com manuals search engine

Operation When Full-Load at Partial Load

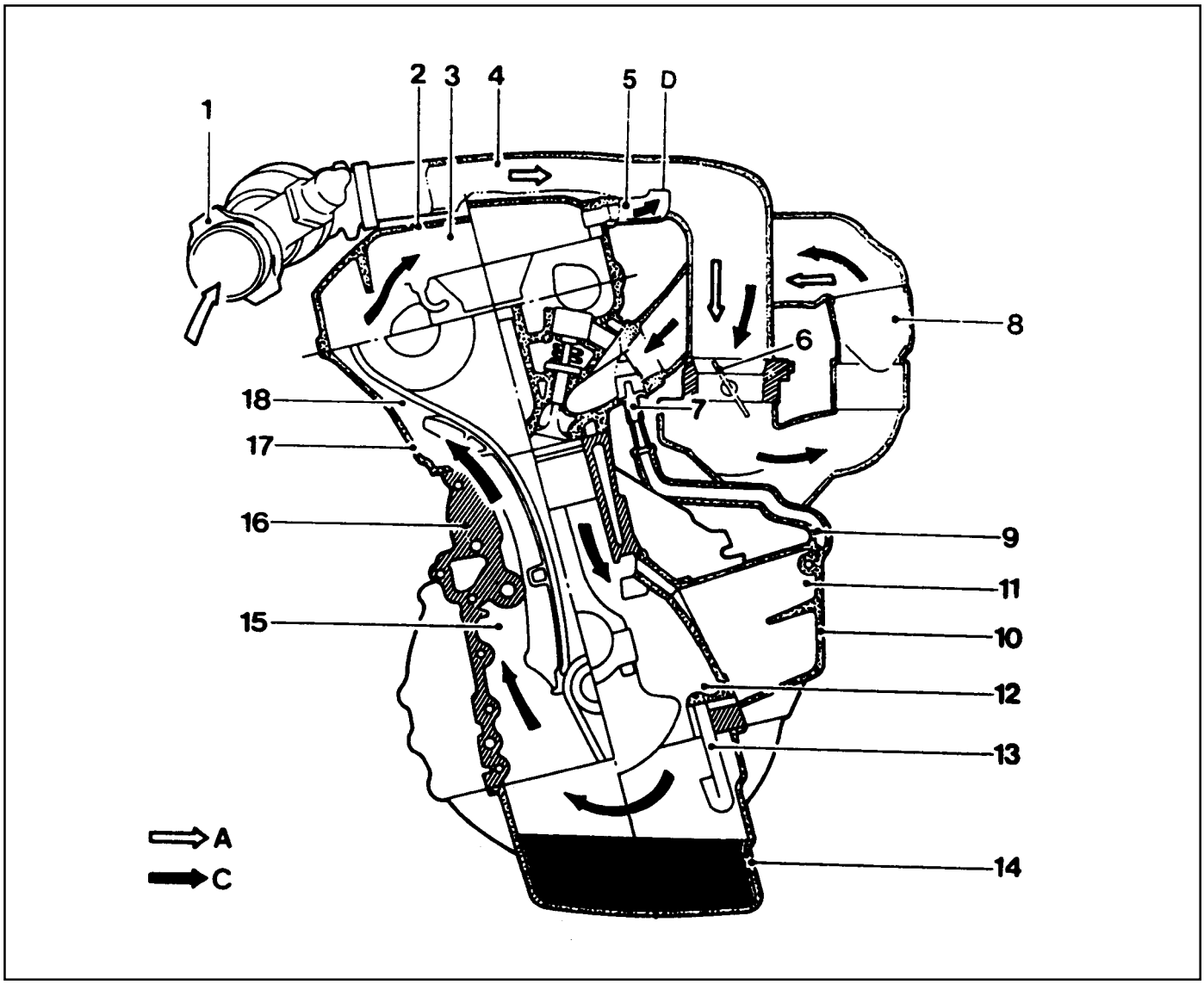

1 HFM Sensor
2 Cylinder Head Cover
3 Oil Spearation Chamber (Full-Load or Over Mid-Load)
4 Intake Air Duct (Cross Pipe)
5 Vent Line (Full-Load or Over Mid-Load)
6 Throttle Valve
7 Restrictor, Diameter 1.1mm (Mid-Load at Idling)
8 Intake Manifold
9 Vent Line (Mid-Load at Idling)
10 Air Conditioner Bracket
11 Oil Separation Chamber (Mid-Load at Idling)
12 Crank Chamber
13 Oil Return Pipe
14 Oil Pan
15 Timing Gear Case Cover
16 Crankcase
17 Chain Housing

A Fresh Air
C Blow-by Gas
D Vent Connection

Downloaded from www.Manualslib.com manuals search engine

Operation When Full-Load at Partial Load

- The throttle valve (6) is partially opened or fully opened.

  The air flows very rapidly through the vent line(5)s connection(D) and the intake air duct when full-load at partial load.

  Consequently, most of the low-by gases are supplied to the combustion chamber through the timing gear case cover(15), chain housing(17), oil separation chamber(3), vent line(5), throttle valve(6), and intake manifold(8).

Downloaded from www.Manualslib.com manuals search engine

ALTERNATOR

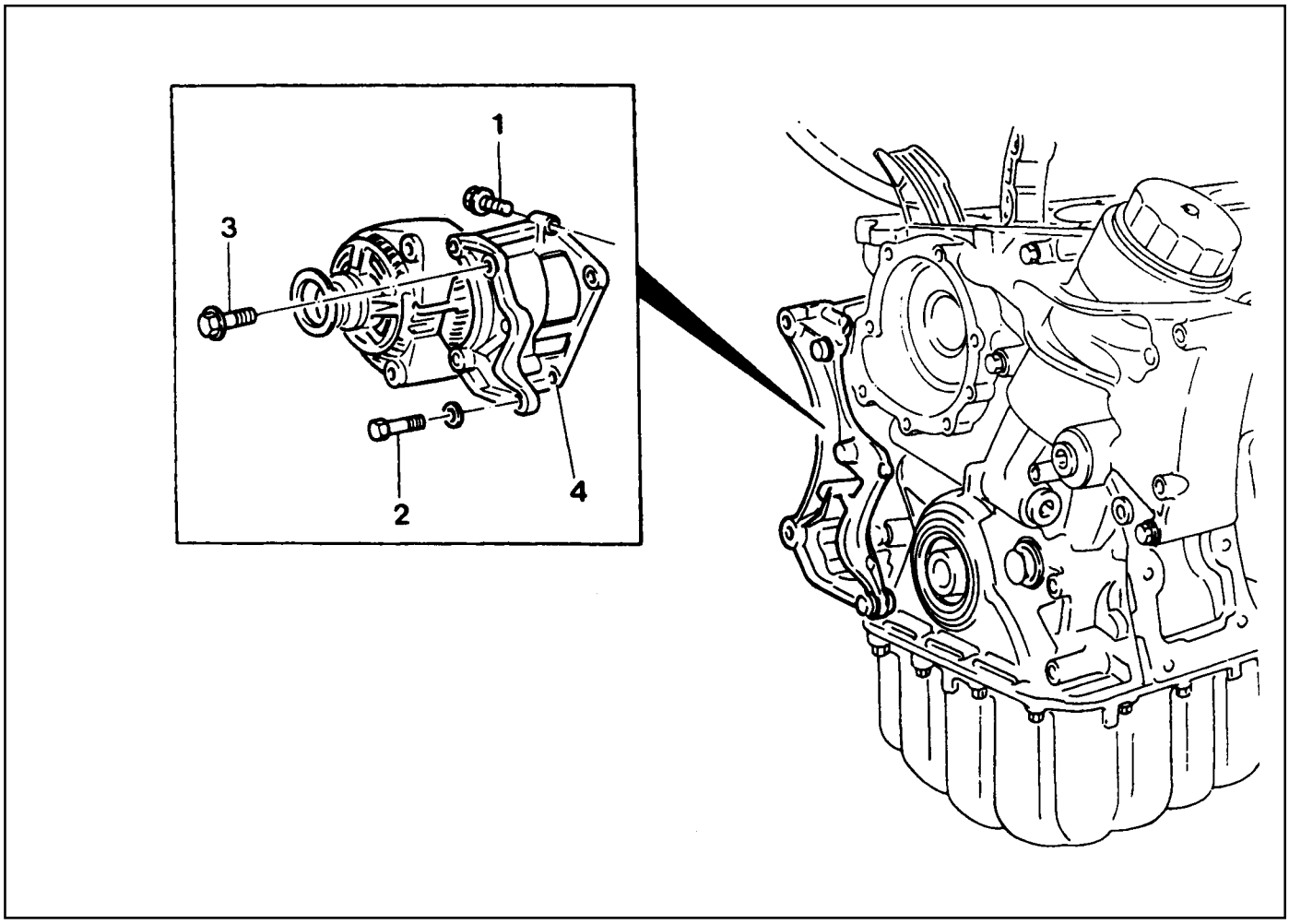

1 Bolt (M8 X 40, 3 pieces) ..... 22.5-27.5 Nm
2 Bolt (M8 X 70, 2 pieces) ..... 22.5-27.5 Nm
3 Bolt (M8 X 85, 1 piece) ..... 22.5-27.5 Nm
4 Alternator Bracket

Removal & Installation Procedure

1. Remove the drive belt.
2. Remove the alternator.
3. Unscrew the alternator carrier bolts (1,2,3) and remove the carrier (4).

   Installation Notice

Tightening torque	22.5 - 27.5 Nm

   Notice

   Apply 3Nm of torque when mounting the bolt (1); apply 25 ± 2.5Nm of torque when mounting the bolts (2), and (3); and then tighten the bolt (1) with 25 ± 2.5Nm of torque.
4. Installation should follow the removal procedure in the reverse order.

Downloaded from www.Manualslib.com manuals search engine

POWER STEERING PUMP AND A/C BRACKET

Preceding Work : Removal of cooling fan and shroud
Removal of drive belt

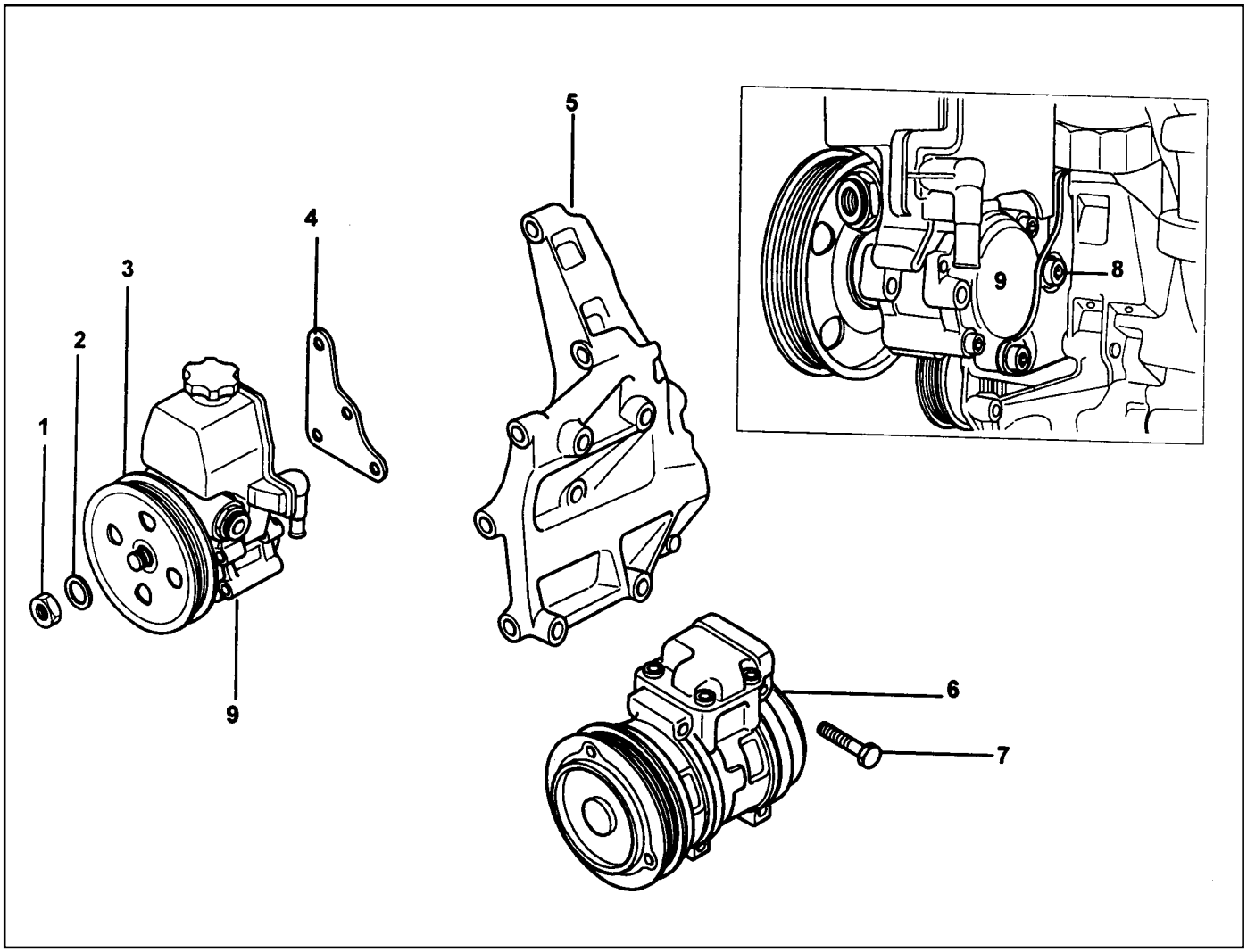

1 Nut ..... 35.2-28.8 Nm
2 Washer
3 Belt Pulley
4 Bracket
5 A / C Bracket
6 A / C Compressor
7 Bolt ..... 22.5-27.5 Nm
8 Bolt (M8 X 20, 2 pieces) ..... 22.5-27.5 Nm

Downloaded from www.Manualslib.com manuals search engine

Removal & Installation Procedure

1. Remove the belt pulley after removal of poly v-belt.

   Installation Notice

Tightening Torque	40.5 - 49.5 Nm

   Notice

   Pull the tensioning pulley counterclockwise as shown in the figure.

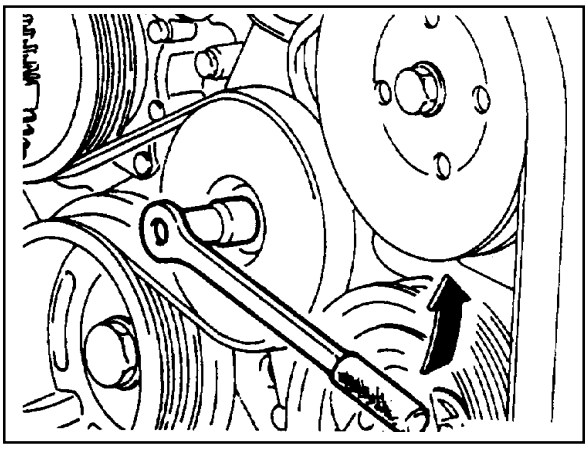

2. Disconnect the hydraulic pipe of the power steering pump and drain the oil.

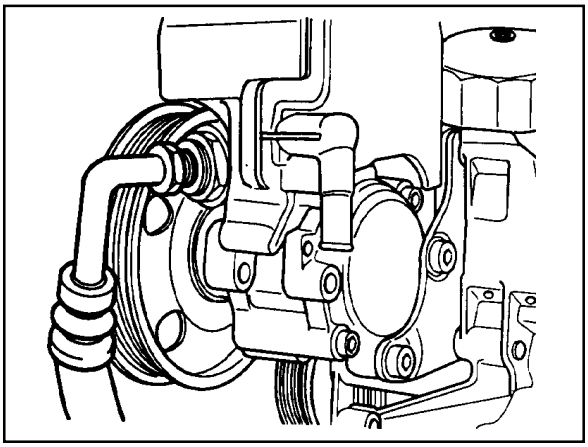

3. Unscrew the bolts (arrows) and remove the steering pump.

   Installation Notice

Tightening Torque	22.5 - 27.5 Nm

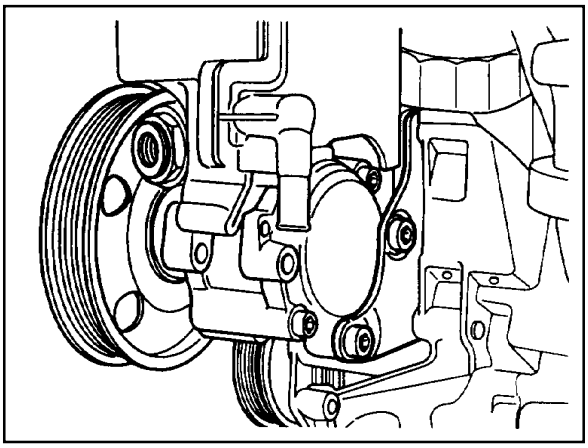

4. Remove the compressor after disconnecting the wiring connector and refrigerant pipe of A/C compressor.

   Notice

   Discharge all the refrigerant before removing the pipes.

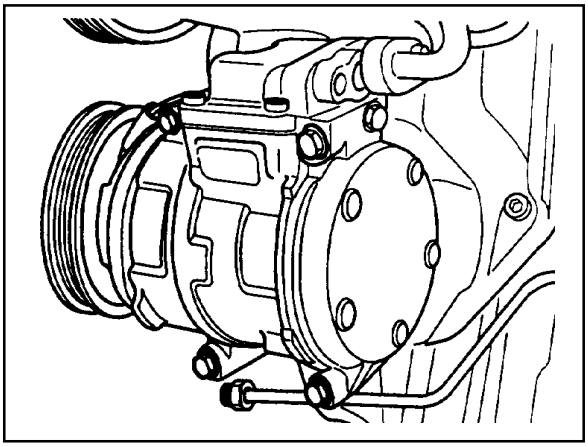

Downloaded from www.Manualslib.com manuals search engine

5. Disconnect the vent hose from the A/C bracket.

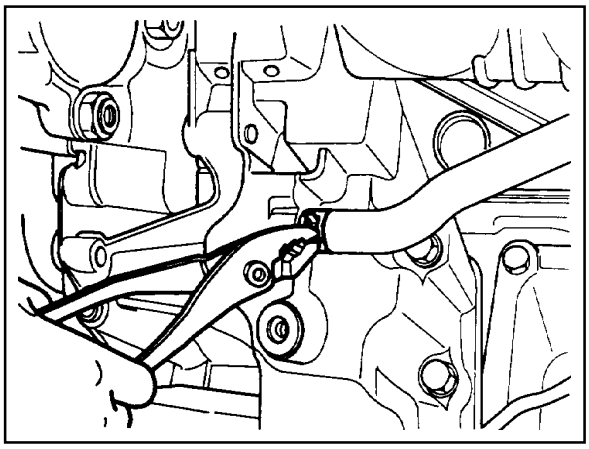

6. Unscrew all the mounting bolts (arrows) and remove the A/C bracket and the gasket.

Installation Notice

Tightening Torque	22.5 - 27.5 Nm

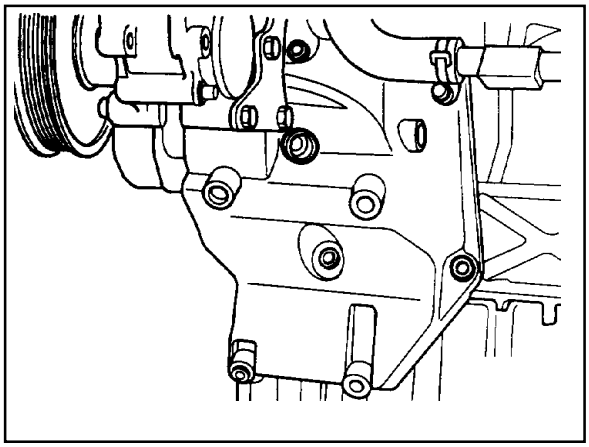

7. Clean the sealing surface.
8. Replace the gasket with new one.
9. Installation should follow the removal procedure in the reverse order.
10. Check the oil leakage by operating the engine after installation.

Downloaded from www.Manualslib.com manuals search engine

HYDRAULIC ENGINE MOUNTING INSULATOR

Service Data

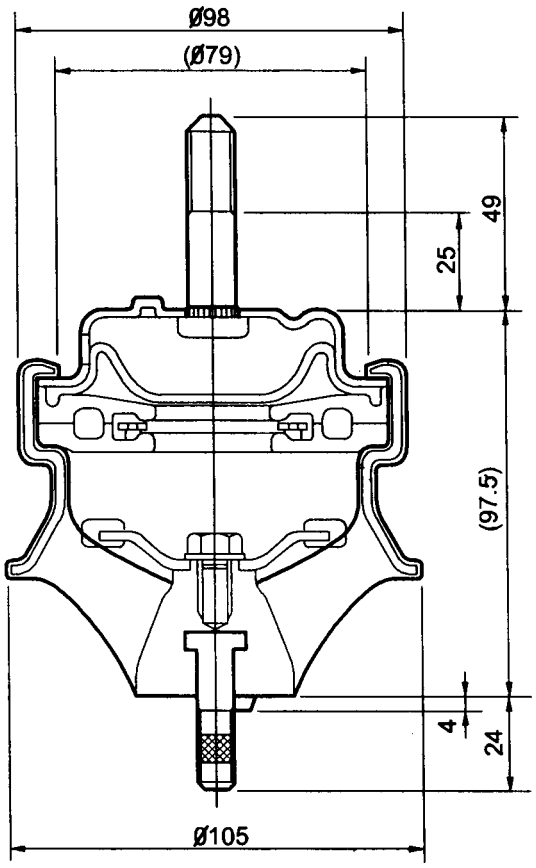

Downloaded from www.Manualslib.com manuals search engine

Sectional View

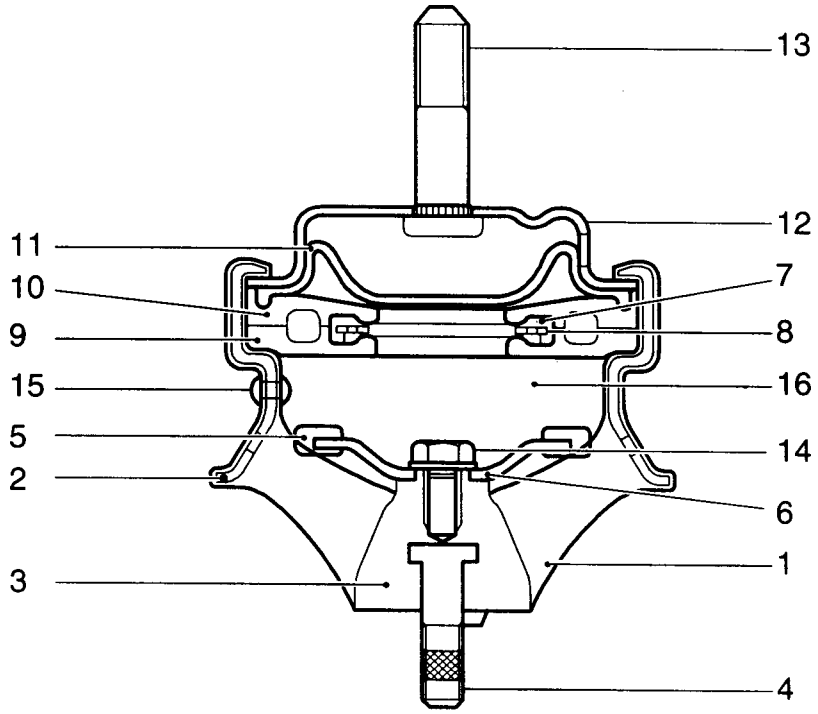

1 Rubber Body
2 Brackek
3 Core
4 Lower Bolt
5 Rubber Plunger
6 Plunger Plate
7 Rubber
8 Plate
9 Lower Orifice
10 Upper Orifice
11 Diaphram
12 Cover Plate
13 Upper Bolt
14 Flange Bolt
15 Rivet
16 Fluid

Downloaded from www.Manualslib.com manuals search engine

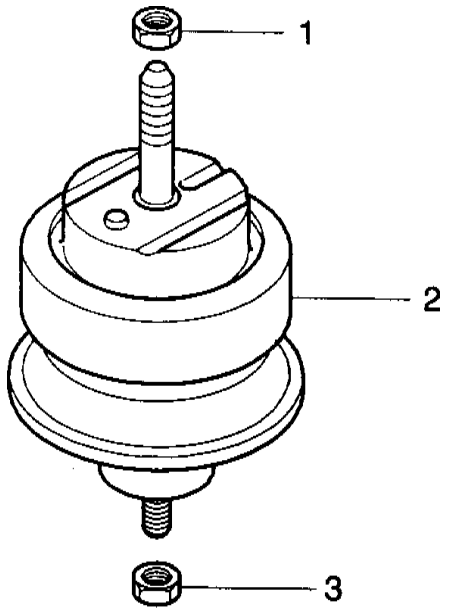

1 Upper Nut
2 Hydraulic Installer ..... 62-93 Nm
3 Lower Nut ..... 28-47 Nm

Removal and Installation Procedure

1. Unscrew the upper nut(1) on engine mounting and remove the engine.

   Installation Notice

Tightening Torque	62 - 93 Nm

2. Unscrew the lower nut(3) and remove the hydraulic engine mounting insulator.

   Installation Notice

Tightening Torque	28 - 47 Nm

   Notice

   If the insulator is spotted with oil, replace the hydraulic insulator assembly.

3. Installation should follow the removal procedure in the reverse order.

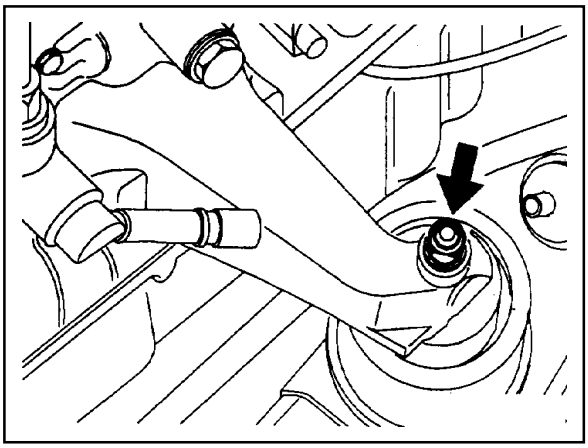

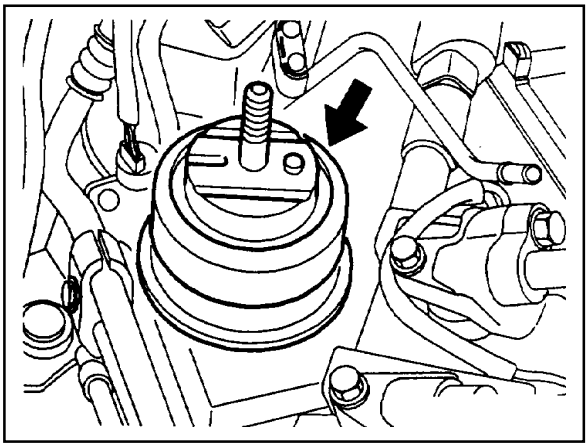

Downloaded from www.Manualslib.com manuals search engine

POLY V-BELT

Preceding Work : Removal of cooling fan

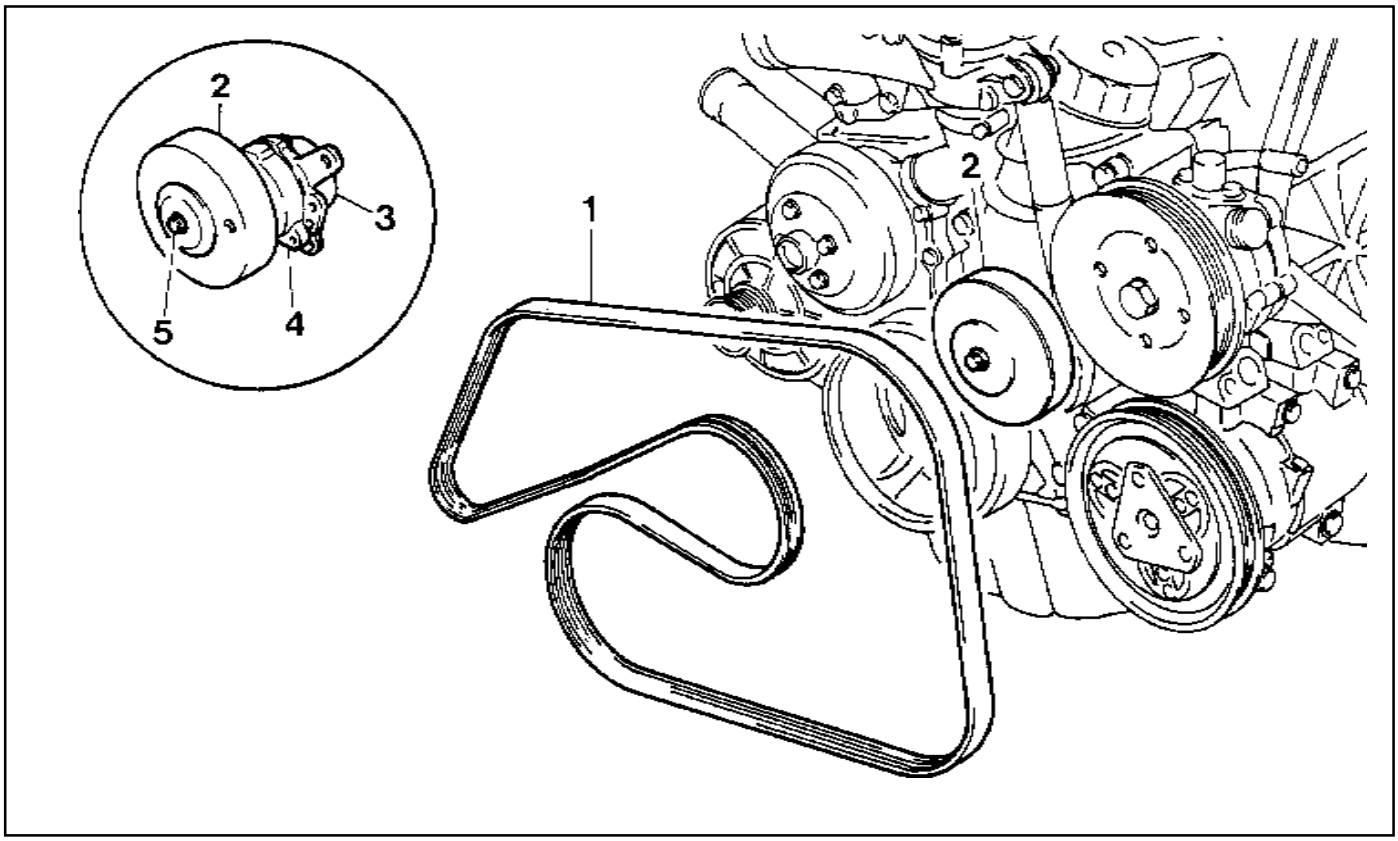

1 Poly V-belt (2,155 mm)
2 Belt Tensioning Pulley
3 Belt Tensioner

Removal & Installation Procedure

1. Release the belt tension by turning the stud on the cap with 12 sided wrench or spanner counterclockwise.
2. Remove the poly v-belt.

   Notice

   Check the belt for damage and tensioning pulley bearing point for wear and replace them if necessary.
3. Install the belt after prying the tensioning pulley.

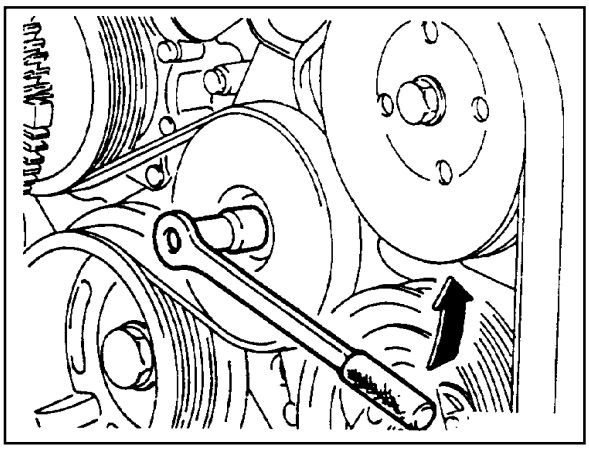

Downloaded from www.Manualslib.com manuals search engine

Poly V-belt Arrangement

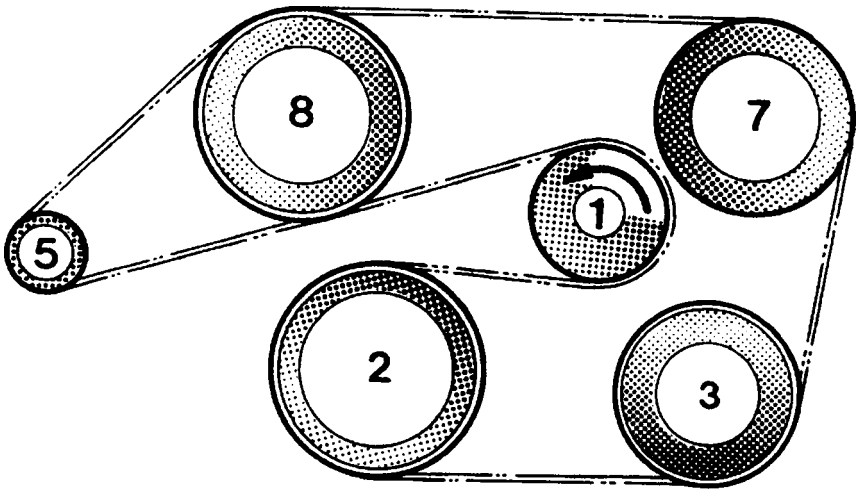

1 Belt Tensioning Pulley
2 Crankshaft Belt Pulley
3 A/C Compressor Pulley
5 Alternator Pulley
7 Power Steering Pump Pulley
8 Water Pump Pulley

Downloaded from www.Manualslib.com manuals search engine

TENSIONING DEVICE

Preceding Work : Removal of tensioning device shock absorber

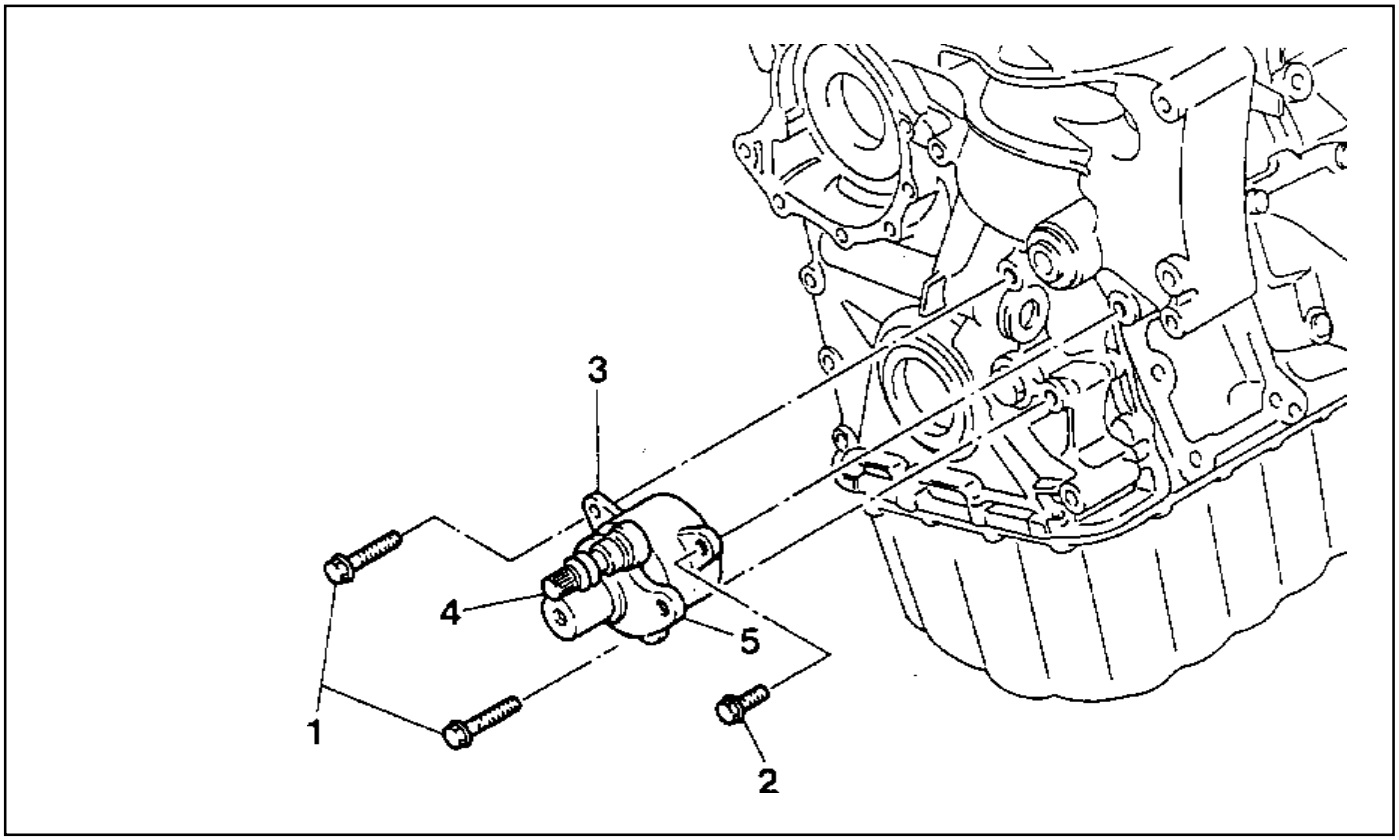

1 Bolt (M8 x 75, 2 pieces) + Washer ..... 22.5-27.5 Nm
2 Bolt (M8 x 25, 1 pieces) + Washer ..... 22.5-27.5 Nm
3 Tensioning Device
4 Stud bolt
5 Tensioning Arm

Removal & Installation Procedure

1. Turn the stud bolt to counterclockwise.
2. Insert the pin (111 589 01 15 00) into the hole in tensioning arm.
3. Unscrew the bolts (1, 2) and remove the tensioning device.

Installation Notice

Tightening Torque	22.5 - 27.5 Nm

4. Installation should follow the removal procedure in the reverse order.

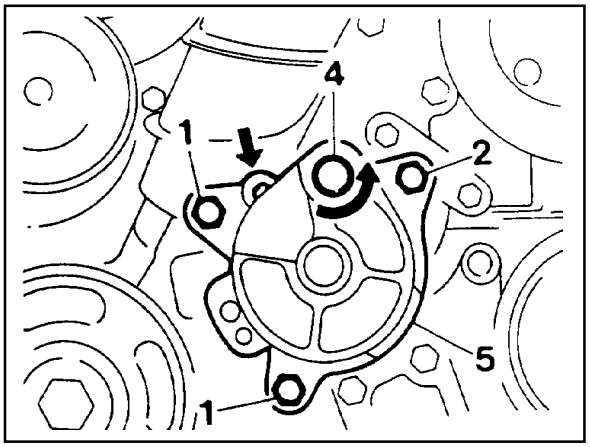

Downloaded from www.Manualslib.com manuals search engine

TENSIONING DEVICE SHOCK ABSORBER

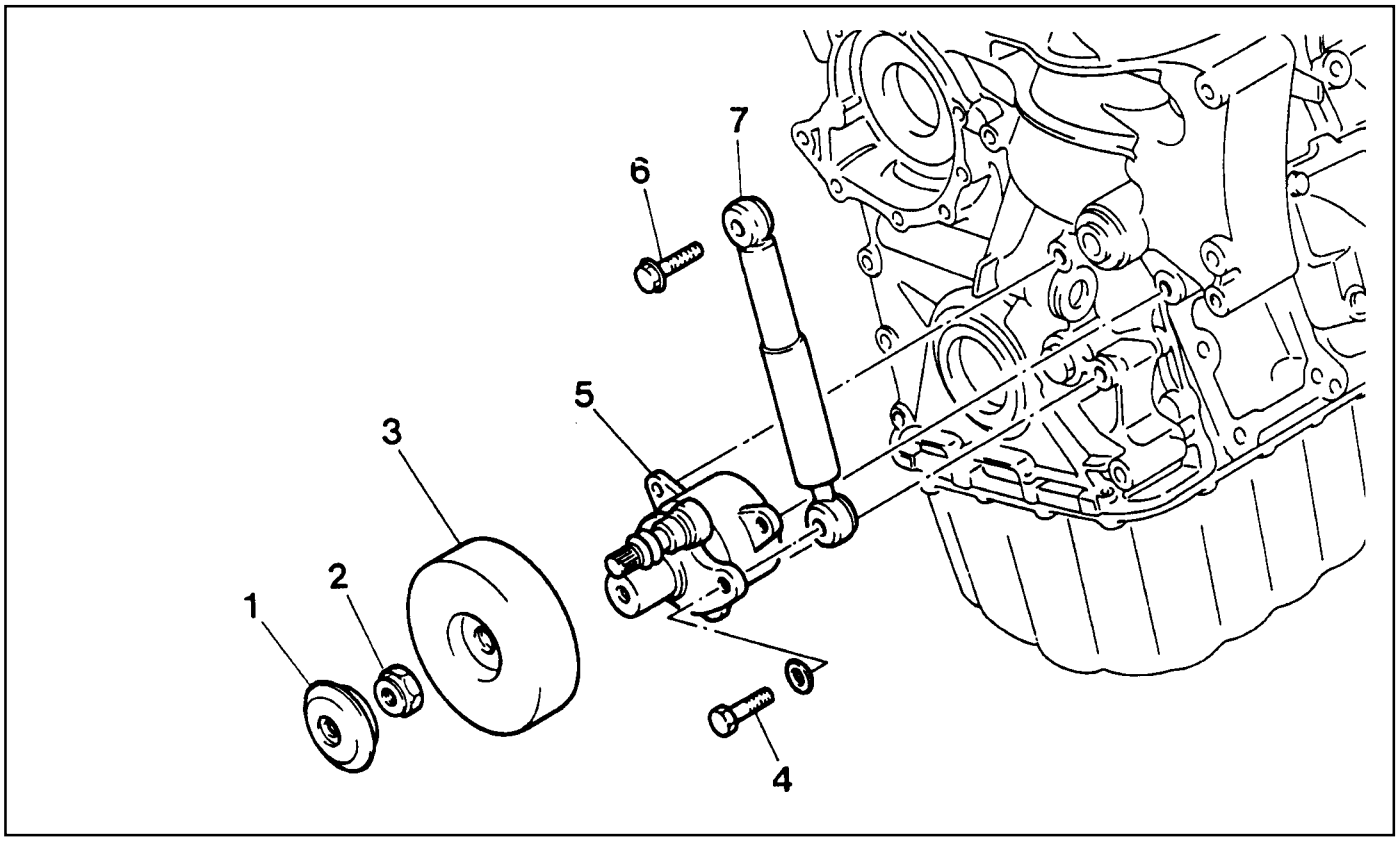

1 End Cover
2 Nut ..... 40.5-49.5 Nm
3 Tensioning Pulley
4 Bolt (M8 X 25) + Washer ..... 22.5-27.5 Nm
5 Tensioning Device
6 Bolt (M8 X 35) + Washer ..... 22.5-27.5 Nm
7 Shock Absorber

Removal & Installation Procedure

1. Remove the end cover (1).
2. Remove the nut (2) and remove the tensioning pulley (3).

   Installation Notice

Tightening Torque	40.5 - 49.5 Nm

3. Unscrew the bolts (4,6) and remove the shock absorber (7).

   Installation Notice

Tightening Torque	22.5 - 27.5 Nm

Downloaded from www.Manualslib.com manuals search engine

POLY V-BELT INSPECTION

- Make marks on the belt with chalk.

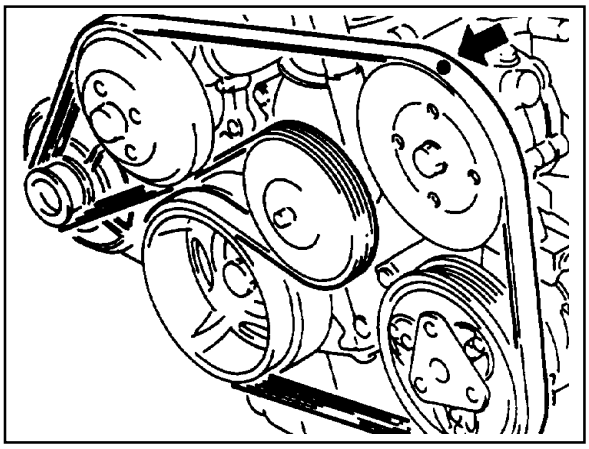

- Rotate the engine and check the belt for damage.

Notice

If one of the following types of damages is found, replace the belt.

1. Rubber lumps in the base of rib.
2. Dirt or grit ingrained.

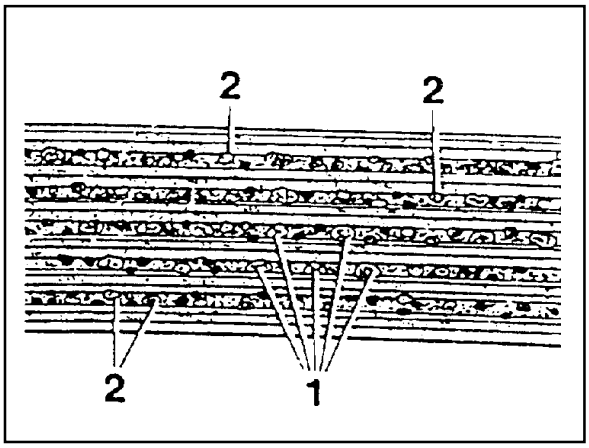

3. Pointed rib.
4. Belt cord visible in the base of rib.

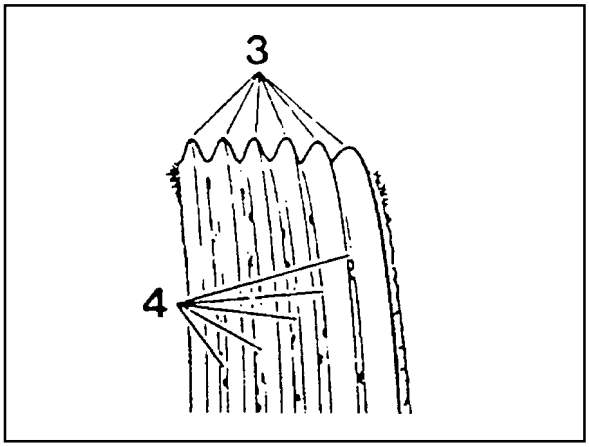

Downloaded from www.Manualslib.com manuals search engine

5. Cord torn out at the side.
6. Outer cords frayed.

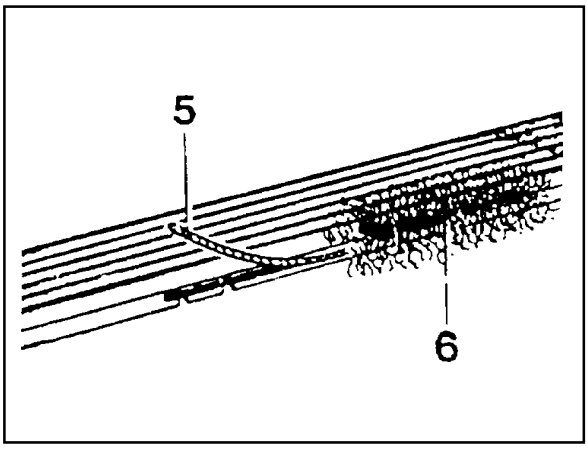

7. Rib detached from the base of belt.

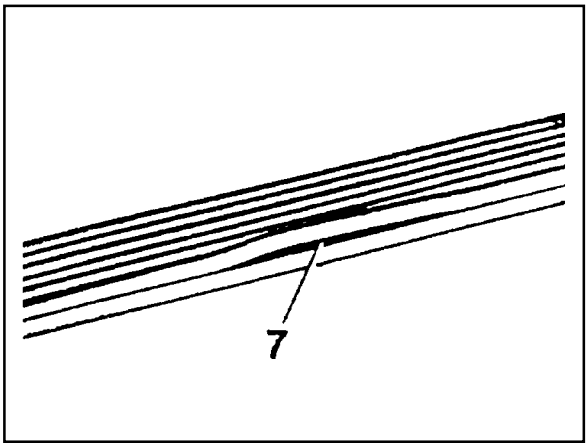

8. Splits across the rib.
9. Sections of rib torn out.

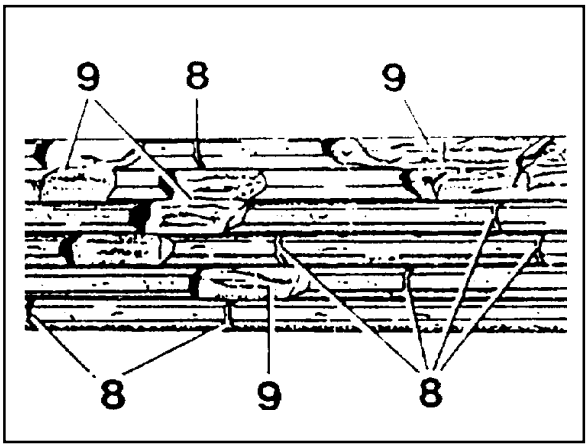

10. Splits across several ribs.

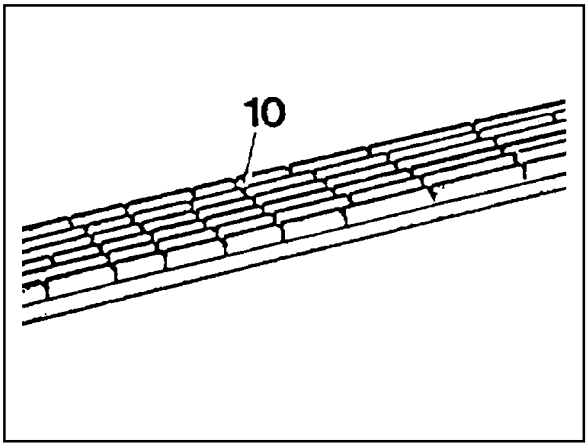

Downloaded from www.Manualslib.com manuals search engine

11. Splits across the back of the belt.

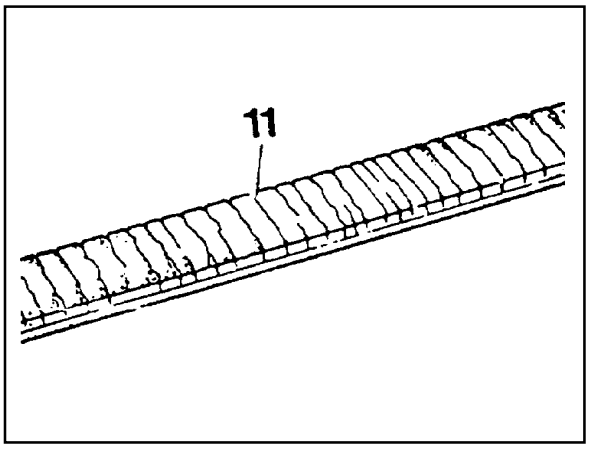

Downloaded from www.Manualslib.com manuals search engine

CYLINDER HEAD COVER

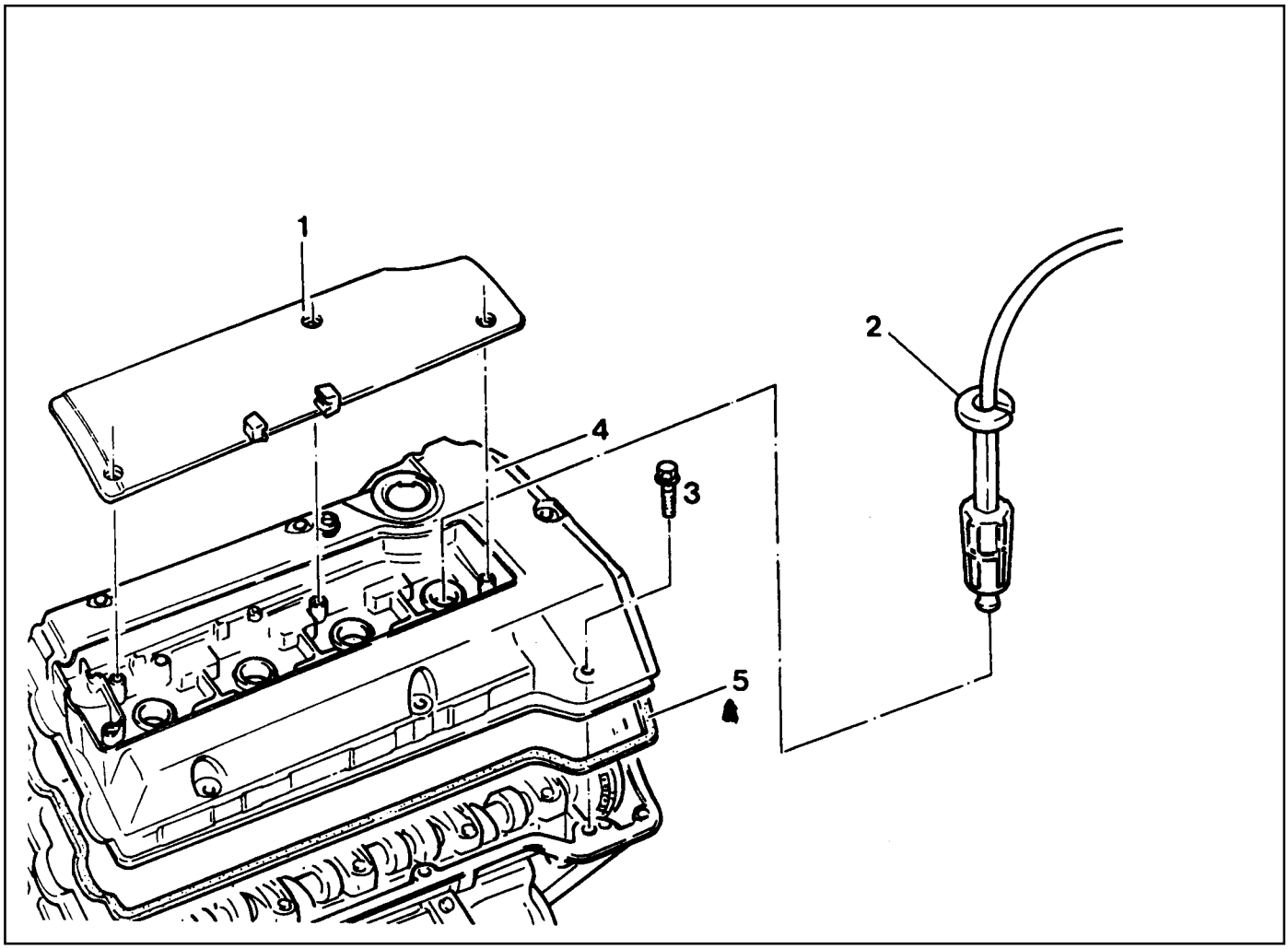

1 Ignition Coil Cover
2 Spark Plug Connector
3 Bolt (M6 X 45 : 4 pieces, M6 X 60 : 6 pieces) ..... 10 ± 1 Nm
4 Cylinder Head Cover
5 Gasket ..... Replace

Downloaded from www.Manualslib.com manuals search engine

Removal & Installation Procedure

1. Remove the intake air duct.

Installation Notice

Tightening Torque	9 - 11 Nm

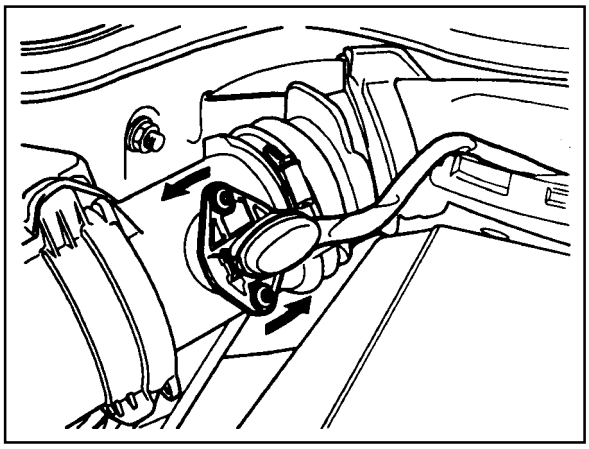

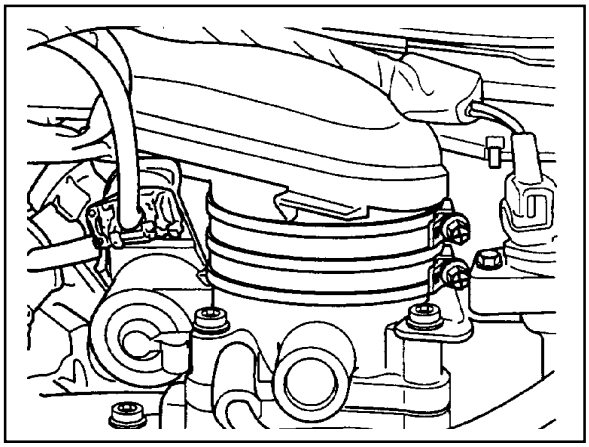

2. Remove the ignition coil cover.

Installation Notice

Tightening Torque	9 - 10 Nm

Notice

Release 3 screws from the ignition cover and remove the cover for M161 Engine coil.

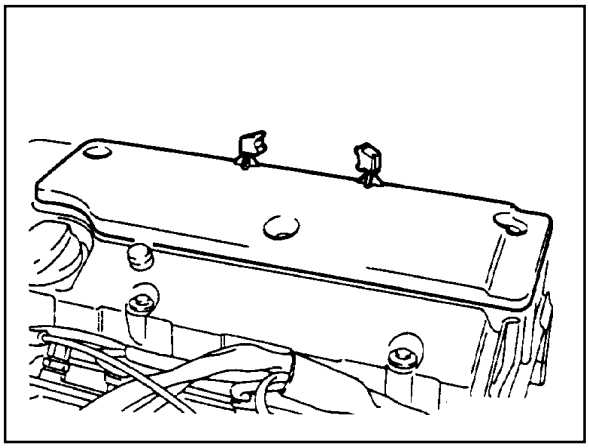

3. Remove the spark plug connector and ignition cable.

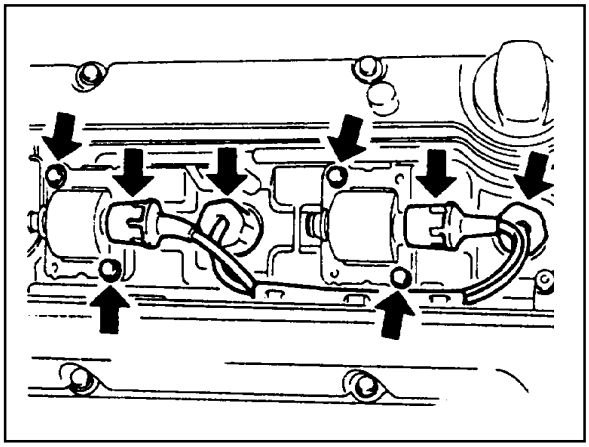

Downloaded from www.Manualslib.com manuals search engine

CYLINDER HEAD FRONT COVER

Preceding Work : Removal of cylinder head cover
Removal of thermostat housing assembly
Removal of engine hanger bracket

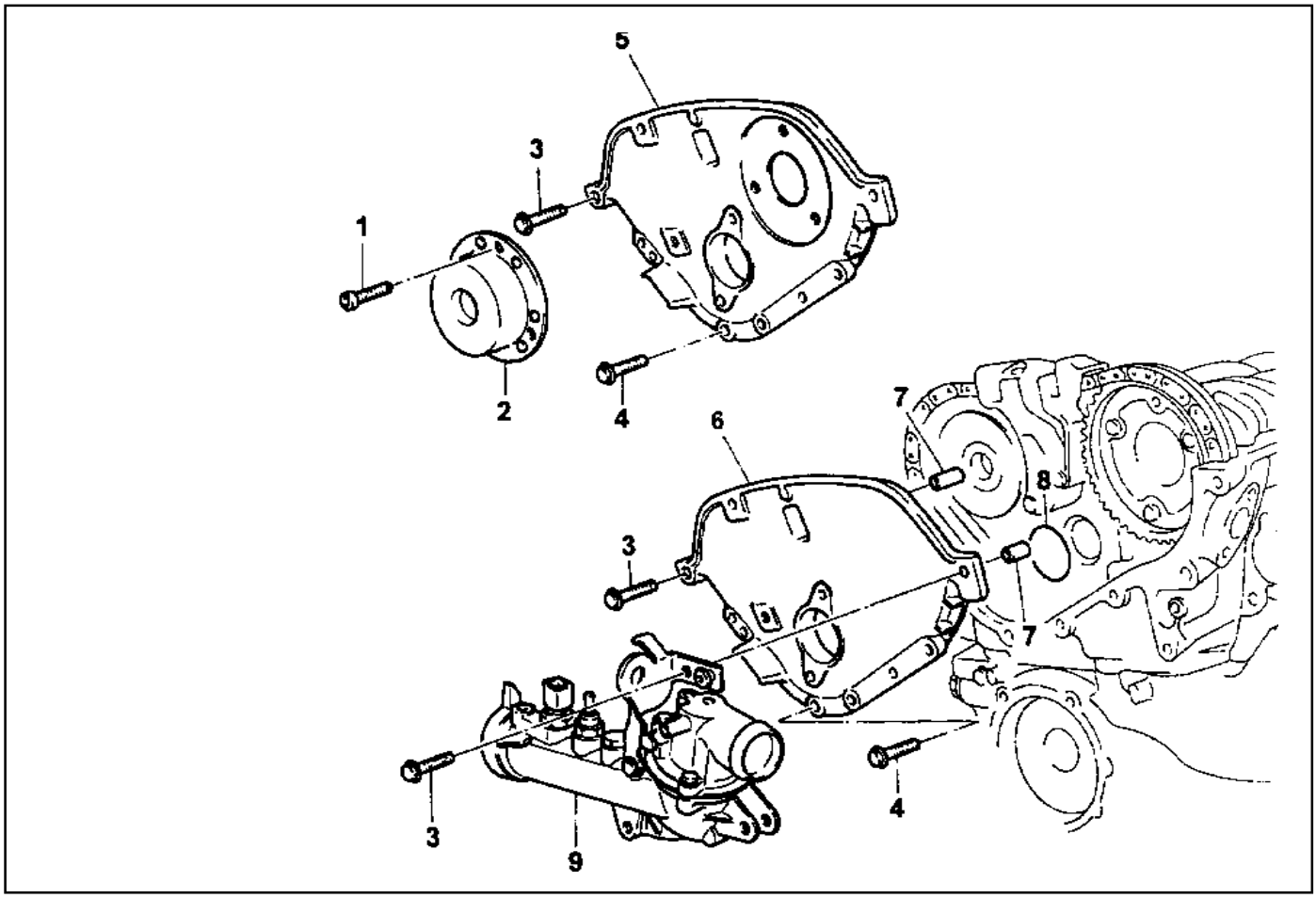

1 Bolt (M6 X 16, 3 pieces) ..... 9-11 Nm
2 Camshaft Adjuster
3 Bolt (M8 X 35, 2 pieces) ..... 22.5-27.5 Nm
4 Bolt (M6 X 22, 6 pieces) ..... 9-11 Nm
5 Front Cover (E23 : M161.970)
6 Front Cover (E20 : M161.940)
7 Sleeve
8 O-ring ..... Replace
9 Thermostat Housing

Removal & Installation Procedure

1. Disconnect the camshaft adjuster connector and remove the camshaft adjuster (E23 engine only).

Installation Notice

Tightening Torque	9 - 11 Nm

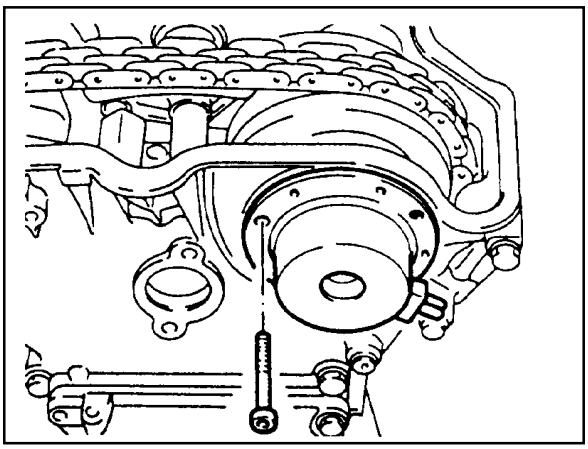

Downloaded from www.Manualslib.com manuals search engine

2. Remove the cylinder head front cover.

   Installation Notice

Tightening Torque (3)	22.5 - 27.5 Nm
Tightening Torque (4)	9 - 11 Nm

   Apply the sealant at the mating surface of the cylinder head and the front cover.

3. Remove the O-ring.

   Installation Notice

   Replace the O-ring with new one and apply the sealant.

4. Installation should follow the removal procedure in the reverse order.

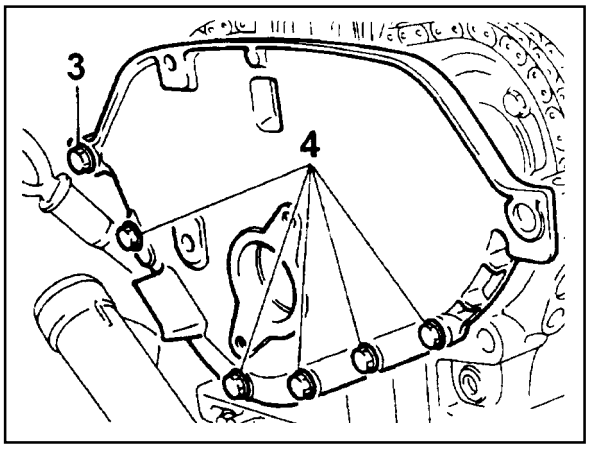

Downloaded from www.Manualslib.com manuals search engine

CYLINDER HEAD

Preceding Work : Removal of cylinder head cover
Removal of cylinder head front cover
Removal of intake manifold
Removal of cylinder head lower line (intake manifold side)

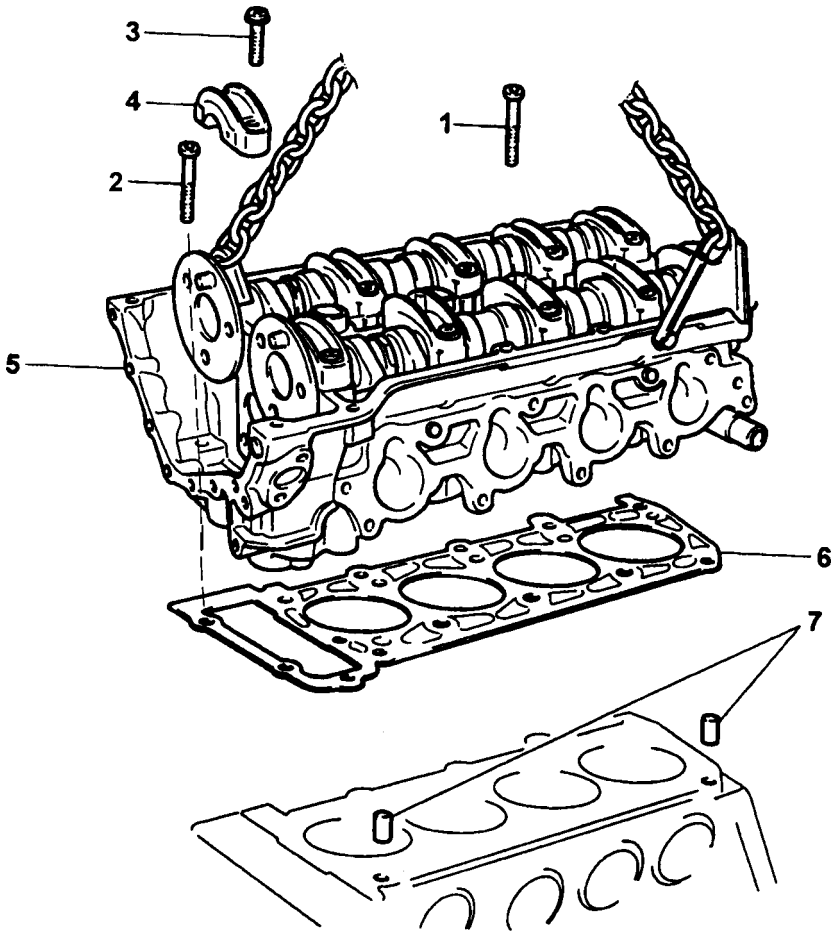

1 Cylinder Head Bolt (M12 X 100, 10 pieces) ..... 1st step 55 Nm
2nd step 90° rotation added
3rd step 90° rotation added
2 Bolt (M8 X 35, 4 pieces) ..... 22.5-27.5 Nm
3 Camshaft Bearing cap ..... 22.5-27.5 Nm
4 Cylinder Head
5 Gasket ..... Replace
6 Dowel Sleeve ..... Note

Downloaded from www.Manualslib.com manuals search engine

Tools Required

617 589 00 10 00 Wrench Socket
116 589 20 33 00 Sliding Hammer
116 589 01 34 00 Threaded Bolt
001 589 66 21 00 Torque Wrence
104 589 00 40 00 Holder

Removal & Installation Procedure

1. Rotate the crankshaft so that the piston of No.1 cylinder is at ATDC 20.

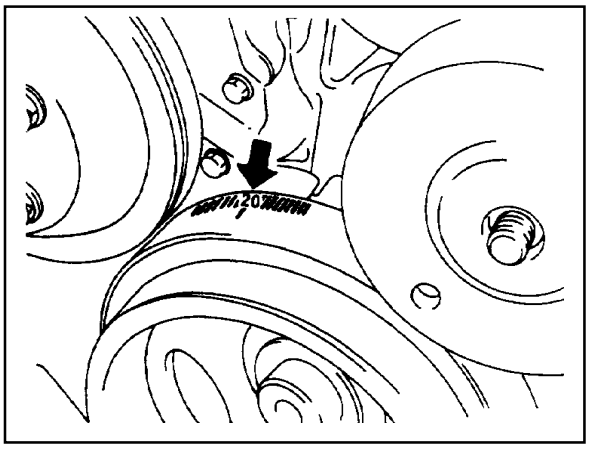

2. Put the pin into the camshaft bearing cap.

Pin 111 589 03 15 00

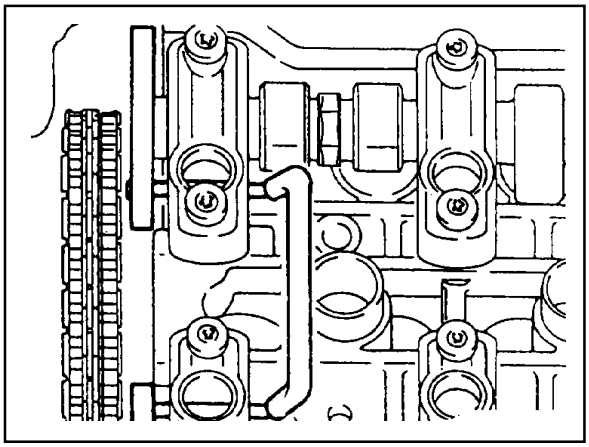

3. Put the alignment marks (arrows) on the timing chain and camshaft sprocket.
4. Remove the chain tensioner

Installation Notice

Tightening Torque	72 - 88 Nm

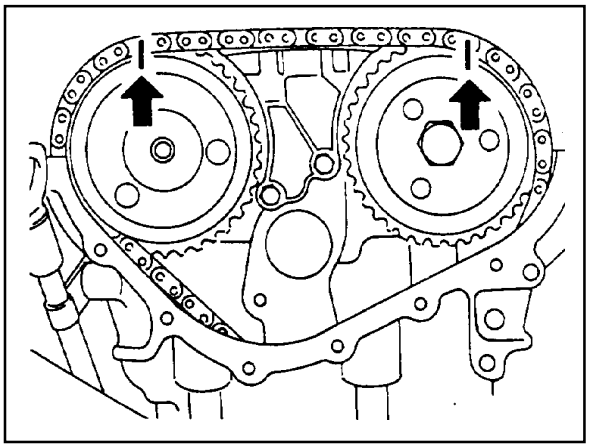

5. Remove the exhaust camshaft sprocket.

Installation Notice

Tightening Torque	1st step 18 - 22 Nm 2nd step 85° - 95°

Notice

The flange bolt is designed to be used only once, so always replace with new one.

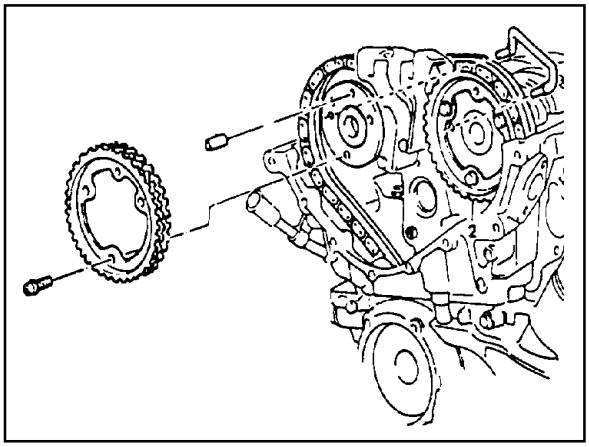

Downloaded from www.Manualslib.com manuals search engine

6. Remove the in take camshaft sprocket (E20 engine).
7. Remove the camshaft adjuster (E23, M161.973 engine).

Installation Notice (Flange Bolt)

Tightening Torque	1st step 18 - 22 Nm 2nd step 85° - 95°

Notice

The flange bolt is designed to be used only once, so always replace with new one.

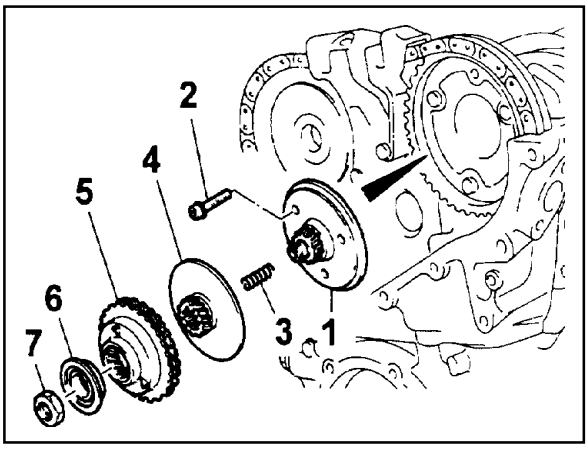

1 Flange Shaft
2 Flange Bolt
3 Campression Spring
4 Adjust Piston
5 Camshaft Sprocket
6 Seal Cover
7 Nut

8. Remove the guide rail pin using the sliding hammer (02) and the threaded pin (03).

Notice

Apply the sealant on guide rail pin when installation.

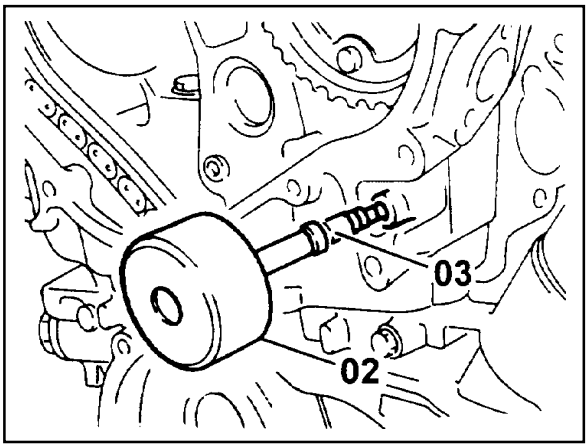

9. Unscrew the bolts (A).

Installation Notice

Tightening Torque	22.5 - 27.5 Nm

Bolt (A) : (M8 X 35, 4 pieces)

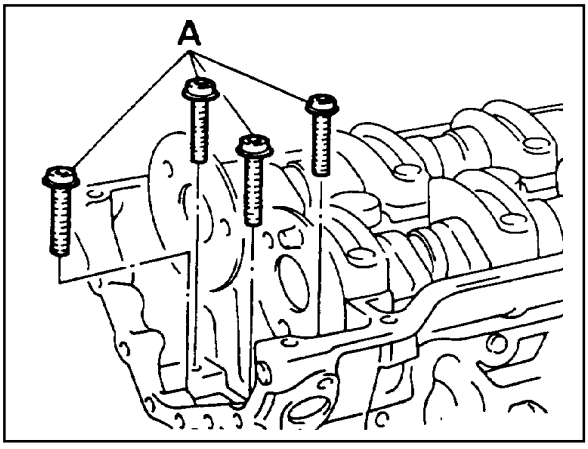

Downloaded from www.Manualslib.com manuals search engine

10. Remove the cylinder head bolts in the reverse order of the numerics (No.10 ® No.1).

Installation Notice

Tighten the bolts as numerical order with specified torque (No.1 ® No.10).

Tightening Torque	1st step 55 ± 5 Nm 2nd step + 90° 3rd step + 90°

Notice

Operate during engine cooling.

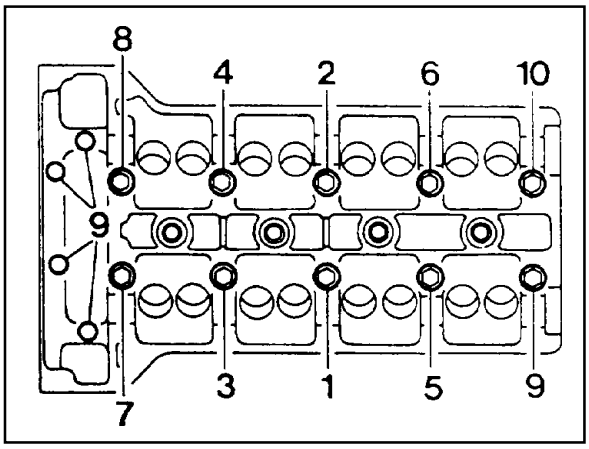

11. Remove the No. 1 bearing cap of the exhaust camshaft.

Installation Notice

Tightening Torque	22.5 - 27.5 Nm

12. Install the special tool (05) on the bearing cap removed place and hook the engine hoist into them and remove the cylinder head carefully.

Holder 104 589 00 40 00

1 Cylinder Head Bolt
2 M8 X 43 Bolt & Washer
3 Bearing Cap
4 Engine Hoist
5 Gasket
6 Hanger Bracket

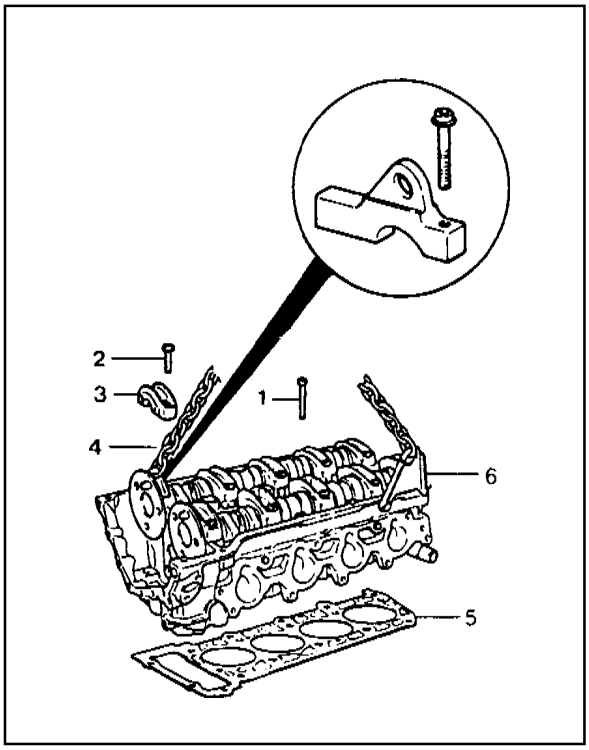

13. Check the cylinder head mating surface and clean the crankcase head bolt mounting hole.
14. Replace the cylind head gasket with new one.

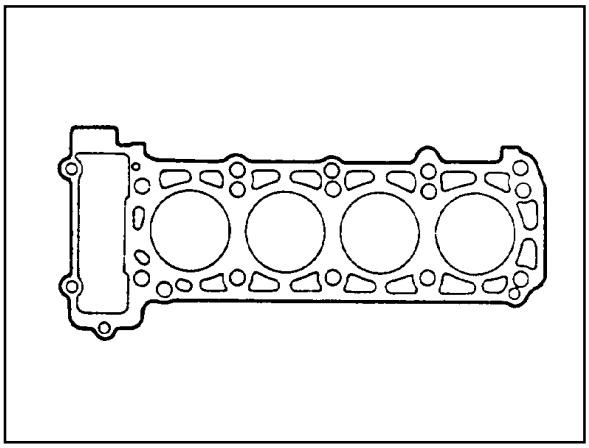

Downloaded from www.Manualslib.com manuals search engine

15. Check the length of the cylinder head bolt.

Length of the bolt(L)	When New 100 mm
	Max. Length 105 mm

Notice

Replace the bolt if the measured length exceed the max. length.

16. Installation should follow the removal procedure in the reverse order.

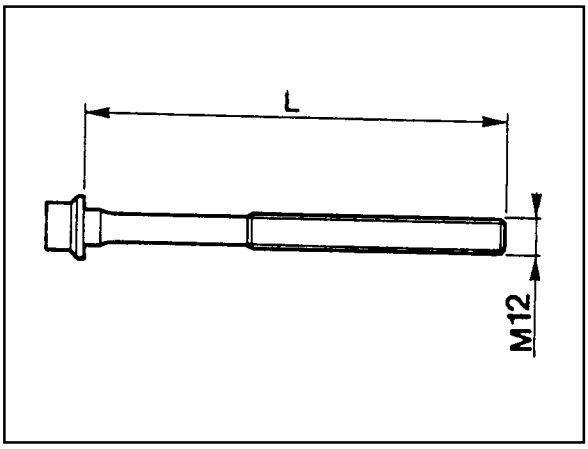

Downloaded from www.Manualslib.com manuals search engine

TIMING GEAR CASE COVER

Preceding Work : Removal of viscous clutch
Removal of cylinder head front cover
Removal of tensioning device
Removal of water pump
Removal of oil filter element
Removal of oil pan
Removal of alternator bracker

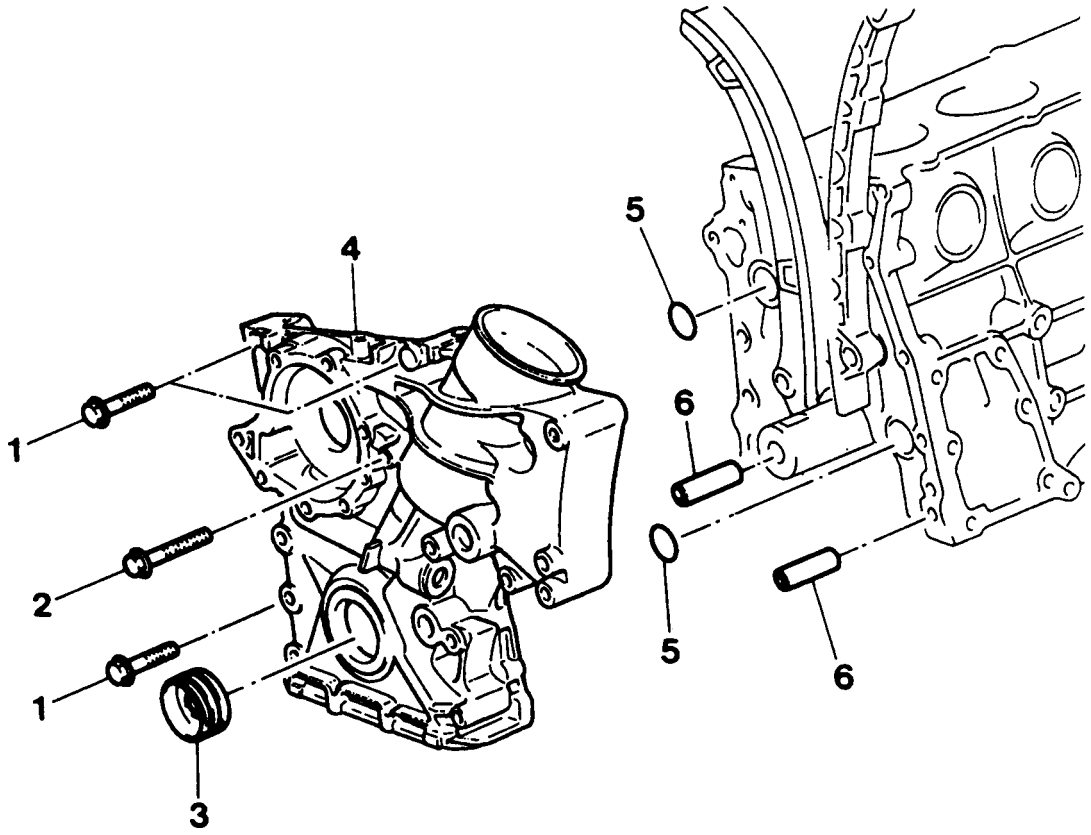

1	Bolt (M8 X 60, 3 Pieces) ..... 22.5-27.5 Nm	4	Timing Gear Case Cover
2	Bolt (M8 X 75, 1 Piece) ..... 22.5-27.5 Nm	5	O-ring
3	Seal	6	Sleeve

Downloaded from www.Manualslib.com manuals search engine

Tools Required

001 589 72 21 00 Torque Wrench

116 589 20 33 00 Sliding Hammer

116 589 01 34 00 Threaded Bolt

Removal & Installation Procedure

1. Remove the power steering belt pulley and A/C compressor bracket.
2. Remove the oil line from power steering pump.
3. Rotate the crankshaft so that the piston of number, cylinder is at ATDC20°

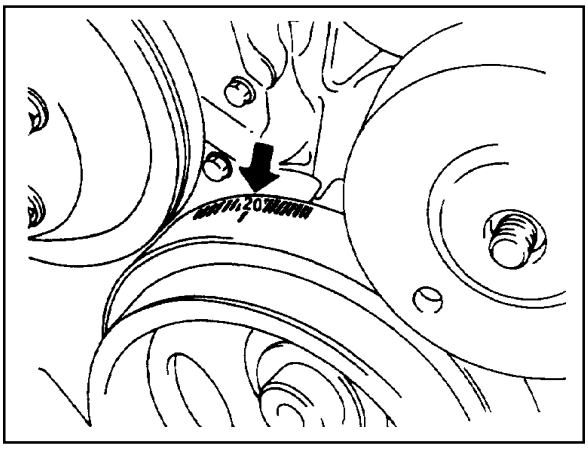

4. Put the alignment marks (arrows) on the timing chain and camshaft sprocket.
5. Remove the chain tensioner.

Installation Notice

Tightening Torque	22.5 - 27.5 Nm

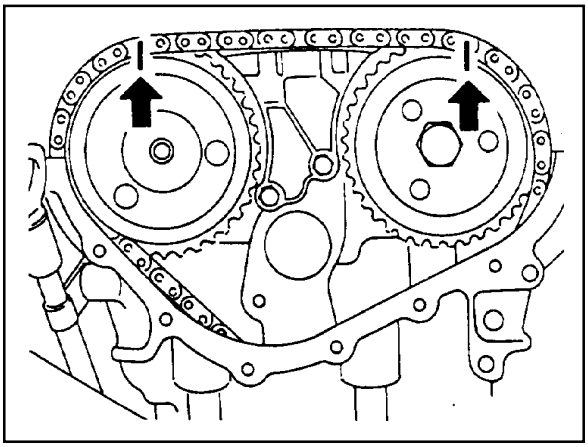

6. Remove the intake and exhaust camshaft sprocket (remove the camshaft adjuster assembly in E23 engine).

Installation Notice

Tightening Torque	1st step 18 - 22 Nm
	2nd step 85° - 95°

Notice

The flange bolt is designed to be used only once, so always replace with new one.

7. Remove the guide rail pin using the sliding hammer (02) and the threaded pin (03).

Notice

Apply the sealant on guide rail pin when installation.

Sliding Hammer 116 589 20 33 00
Threaded Pin 116 589 02 34 00

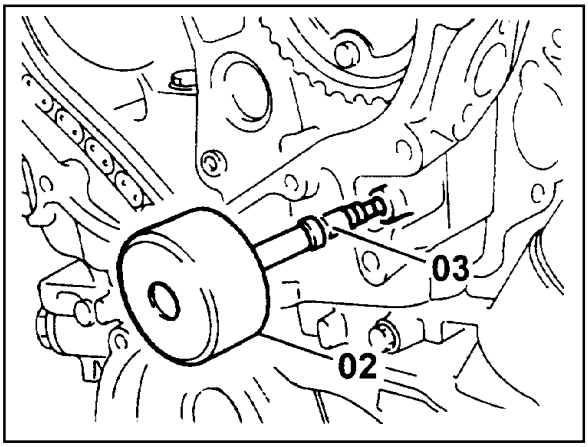

Downloaded from www.Manualslib.com manuals search engine

8. Unscrew the bolts (A).

Installation Notice

Tightening Torque	22.5 - 27.5 Nm

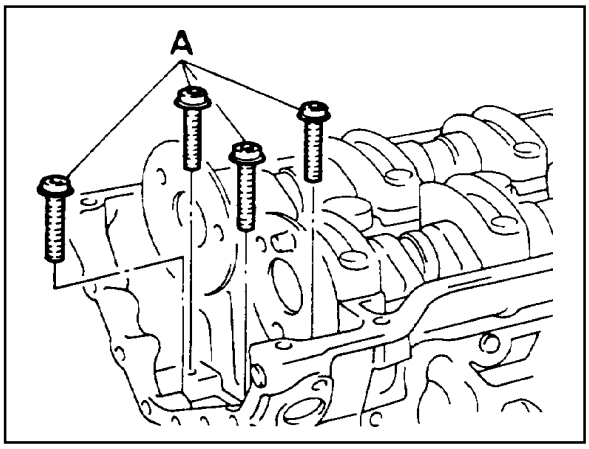

9. Remove the belt pulley and vibration damper.

Installation Notice (Center Bolt)

Tightening Torque	1st step 180 - 220 Nm 2nd step 80° - 100°

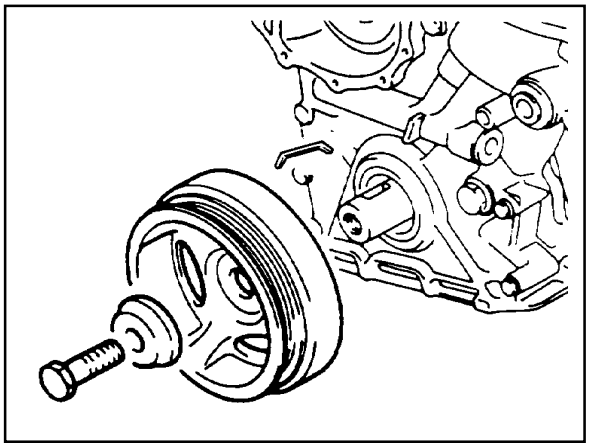

10. Unscrew the bolts (1, 2) on timing gear case cover and remove the timing gear case cover.

Installation Notice

Tightening Torque	22.5 - 27.5 Nm

Notice

Be careful not to damage the cylinder head gasket.

11. Remove the radial shaft seal

Notice

Installation note replace the seal with new one.

12. Clean the timing gear case cover and crankcase sealing surface.
13. Replace the O-ring with new one and apply the sealant on the sealing surface.

Notice

Be careful not to stain the oil chamber of chain tensioner with the sealant.

14. Installation should follow the removal precedure in the reverse order.
15. Warm up the engine and check for oil leaks.

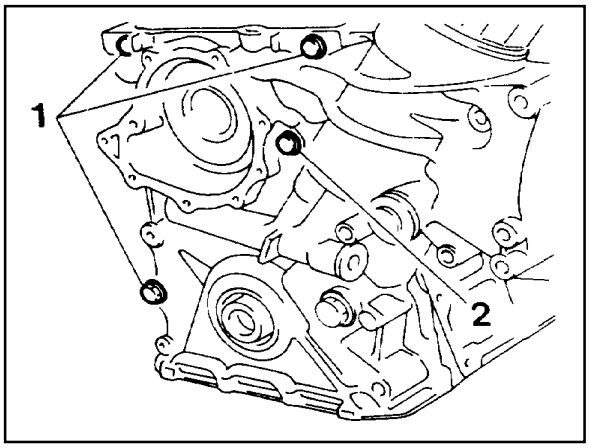

Downloaded from www.Manualslib.com manuals search engine

CRANKSHAFT SEALING REAR COVER

Preceding Work : Removal of the automatic transmission drive plate or flywheel

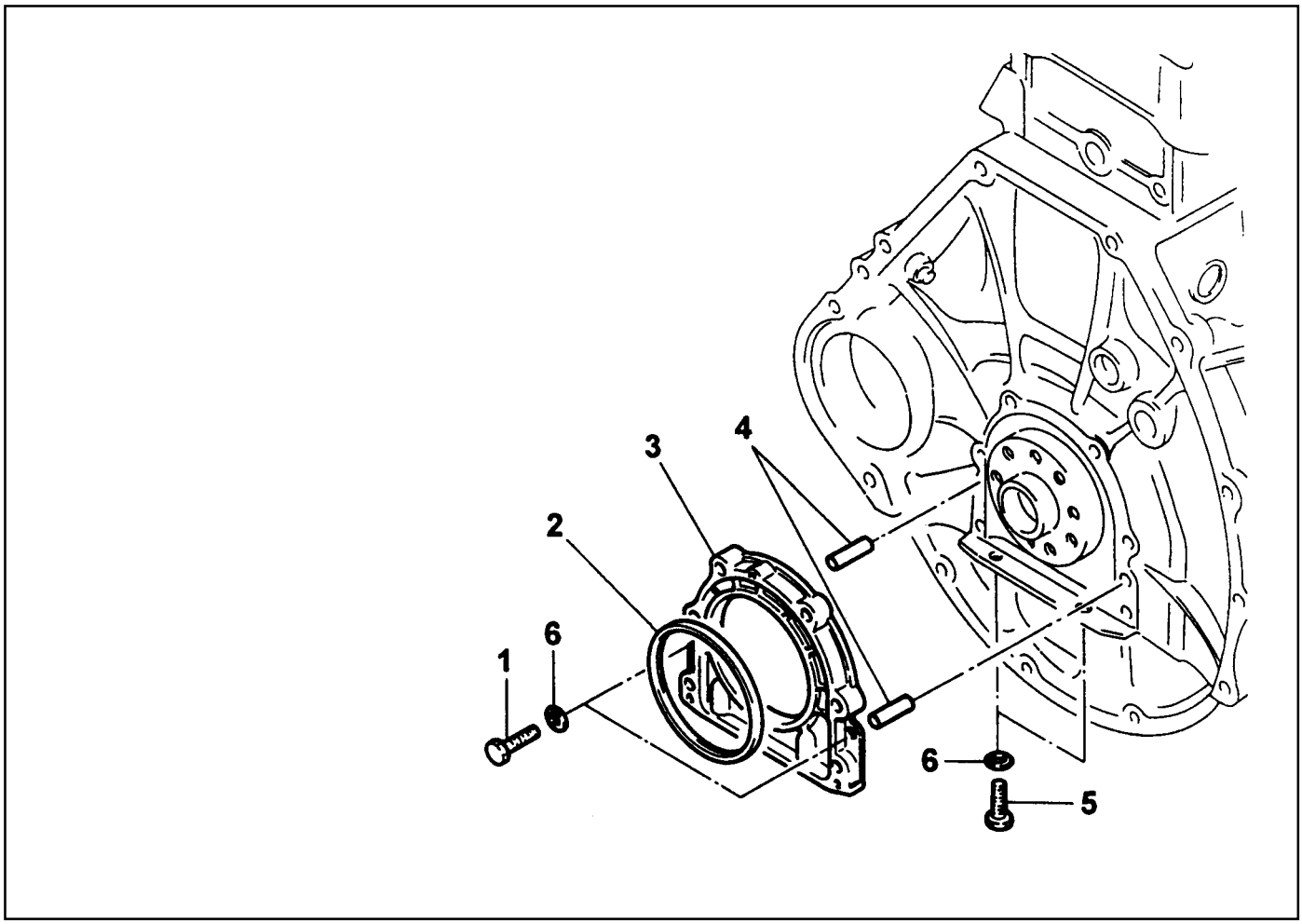

1 Bolt (M6 x 20, 6 pieces) ..... 9-11 Nm
2 Radial Shaft Seal
3 Rear Cover
4 Sleeve
5 Bolt (M6 x 85, 2 pieces) ..... 9-11 Nm
6 Washer

Downloaded from www.Manualslib.com manuals search engine

Tools Required

601 589 03 43 00 Sleeve

Removal & Installation Procedure

1. Unscrew the bolts (1) and (5) and remove the closing cover by pulling the rear cover lug (arrows).

   Notice

   Be careful not to damage the oil pan gasket.

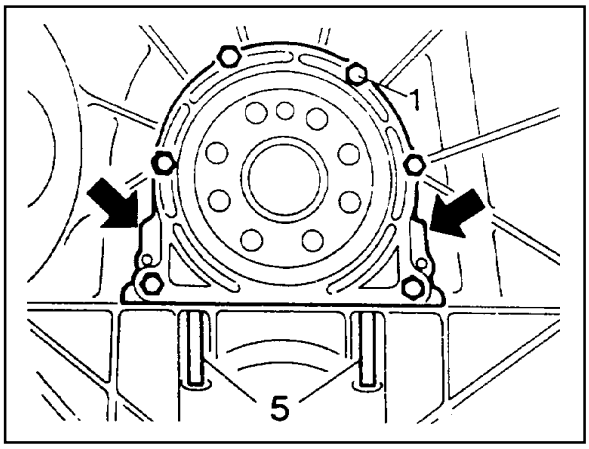

2. Clean the sealing surface of the crankcase and the rear sealing cover.
3. Check the radial shaft seal and replace it if necessary.
4. Apply the Loctite 573 to the rear cover sealing surface.
5. Apply the engine oil to the dust lip of the radial shaft seal.

   Notice

   Do not use the grease.

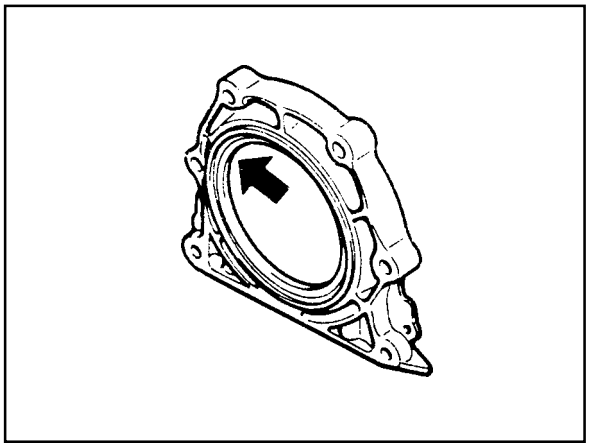

6. Using the special tool, press the radial shaft seal and the rear cover.

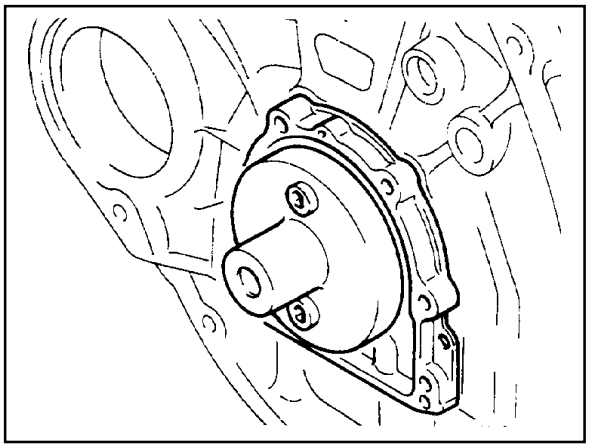

7. Tighten the rear cover bolt (1) and then tighten the oil pan bolt (5) as specified and remove the special tool.

   Installation Notice

Tightening Torque(Bolt 1,5)	9 - 11 Nm

Seal Assembler 601 589 03 43 00

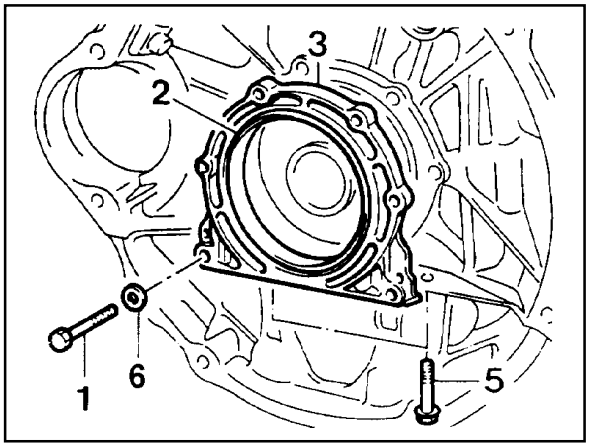

Downloaded from www.Manualslib.com manuals search engine

BELT PULLEY AND VIBRATION DAMPER

Preceding Work : Removal of cooling fan and viscous clutch
Removal of fan shroud
Removal of drive belt

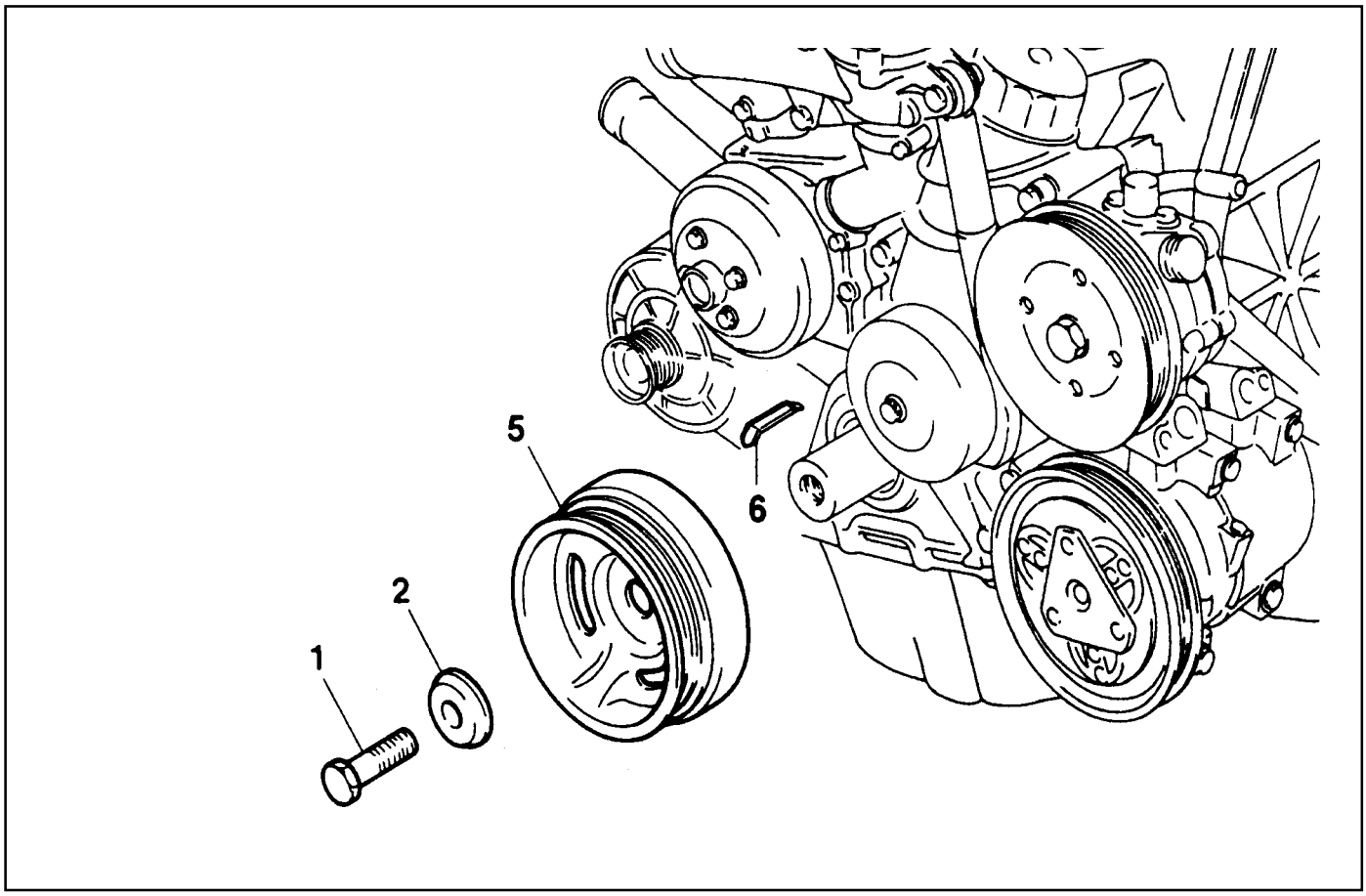

1 Center Bolt
(M18 X 55) ..... 1st step 200-220 Nm
2nd step 90° + 10° rotation added
2 Vibration Damper Disk
5 Vibration Damper Assembly
6 Key

Downloaded from www.Manualslib.com manuals search engine

Components

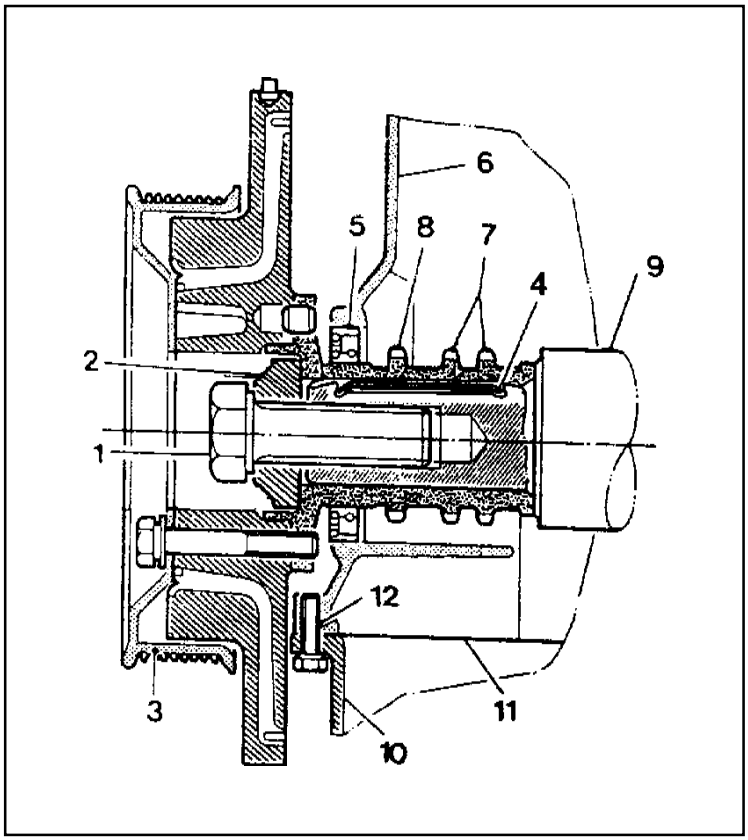

1 Center Bolt (M18 x 50)
2 Center Bolt Washer
3 Vibration Damper and Pulley Assembly
4 Key
5 Crankshaft Front Seal
6 Timing Gear Case Cover
7 Crankshaft Sprocket (Camshaft Driven)
8 Crankshaft Sprocket (Oil pump Driven)
9 Crankshaft
10 Oil Pan
11 Oil Pan Gasket
12 Oil Pan Mounting Bolt (M6 x 22)

Service Data Standard

Permissble Deviation of The Vibration Damper	Radial Runout	0.6 mm
	Axial Runout	0.6 mm

Tools Required

103 589 00 33 00 Puller
001 589 65 09 00 Socket Wrench Insert
001 589 74 21 00 Puller
000 589 88 33 00 Torque Wrench
602 589 00 40 00 Engine Lock

Removal & Installation Procedure

1. Adjust the piston of number 1 cylinder to the TDC.

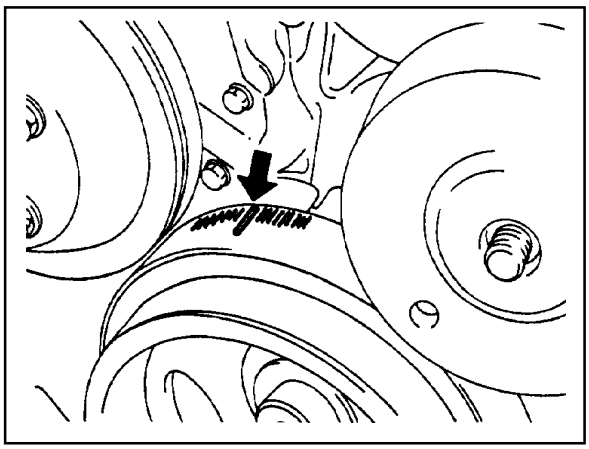

Downloaded from www.Manualslib.com manuals search engine

2. Remove the start motor and install the engine lock to the flywheel ring gear.
3. Remove the center bolt.

Installation Notice

Tightening Torque	1st step 180 - 220 Nm 2nd step + 90°

Engine Lock 602 589 00 40 00

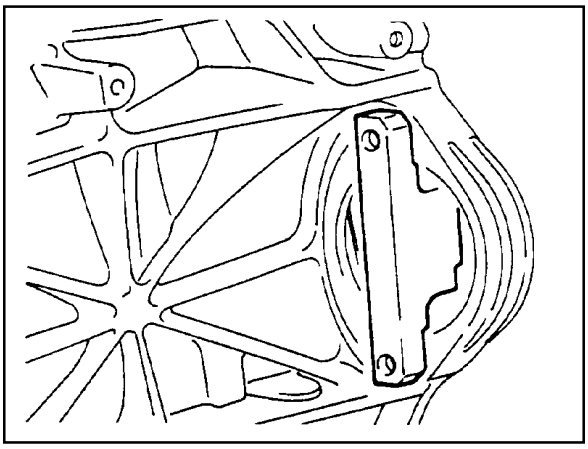

4. Remove the vibration damper assembly using the puller.
5. Installation should follow the removal procedure in the reverse order.

Notice

If possible, don't separate the vibration damper and the pulley.

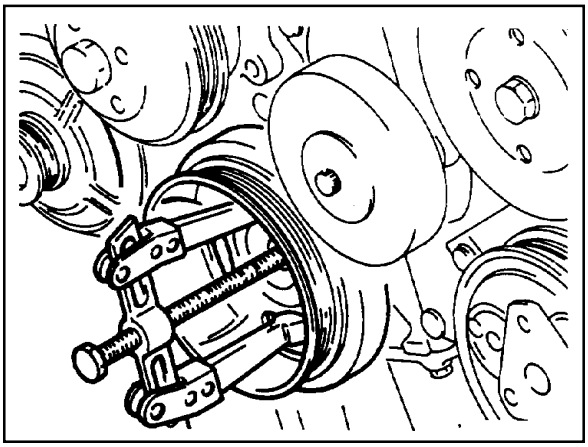

Downloaded from www.Manualslib.com manuals search engine

CRANKSHAFT FRONT RADIAL SEAL

Preceding Work : Removal of belt pulley and vibration damper

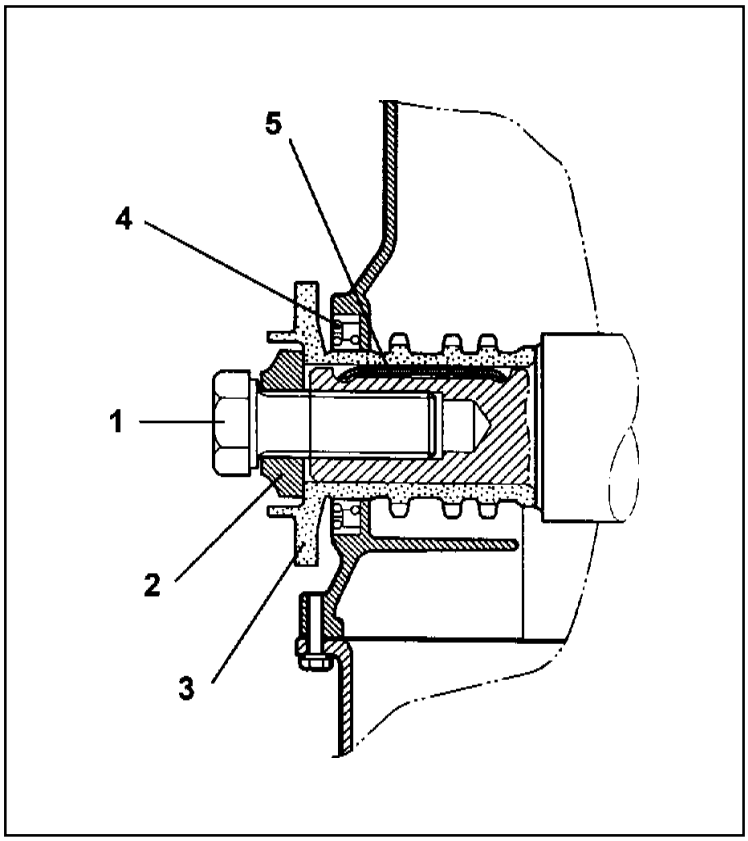

1 Center Bolt (M18 x 50)
..... 1st step 200-220 Nm
2nd step 90° +10°
2 Center Bolt Washer
3 Sleeve (Special Tool)
4 Crankshaft Front Seal
5 Key

Tools Required

601 589 03 14 00 Sleeve

Replacement Procedure

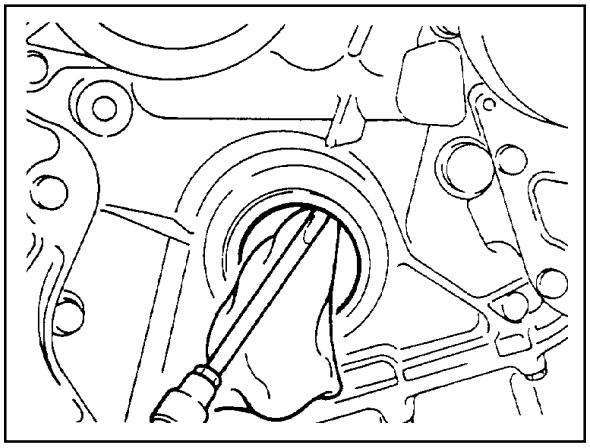

1. Remove the radial seal with a screw driver.

   Notice

   Use a clean cloth not to damage the radial seal mounting hole and the crankshaft.

2. Coat the radial sealing lip with engine oil.
3. Using the sleeve, assemble the radial seal .
4. Align the sleeve groove and the woodruff key and tighten the center bolt until the center bolt and the damper disk stop in the movement.

   Installation Notice

Tightening Torque	1st step 200 - 220Nm 2nd step 90° + 10°

5. Remove the sleeve and install the belt pulley and the vibration damper.
6. Check for leaks while operating the engine.

Downloaded from www.Manualslib.com manuals search engine

CRANKSHAFT REAR RADIAL SEAL

Preceding Work : Removal of flywheel or drive plate

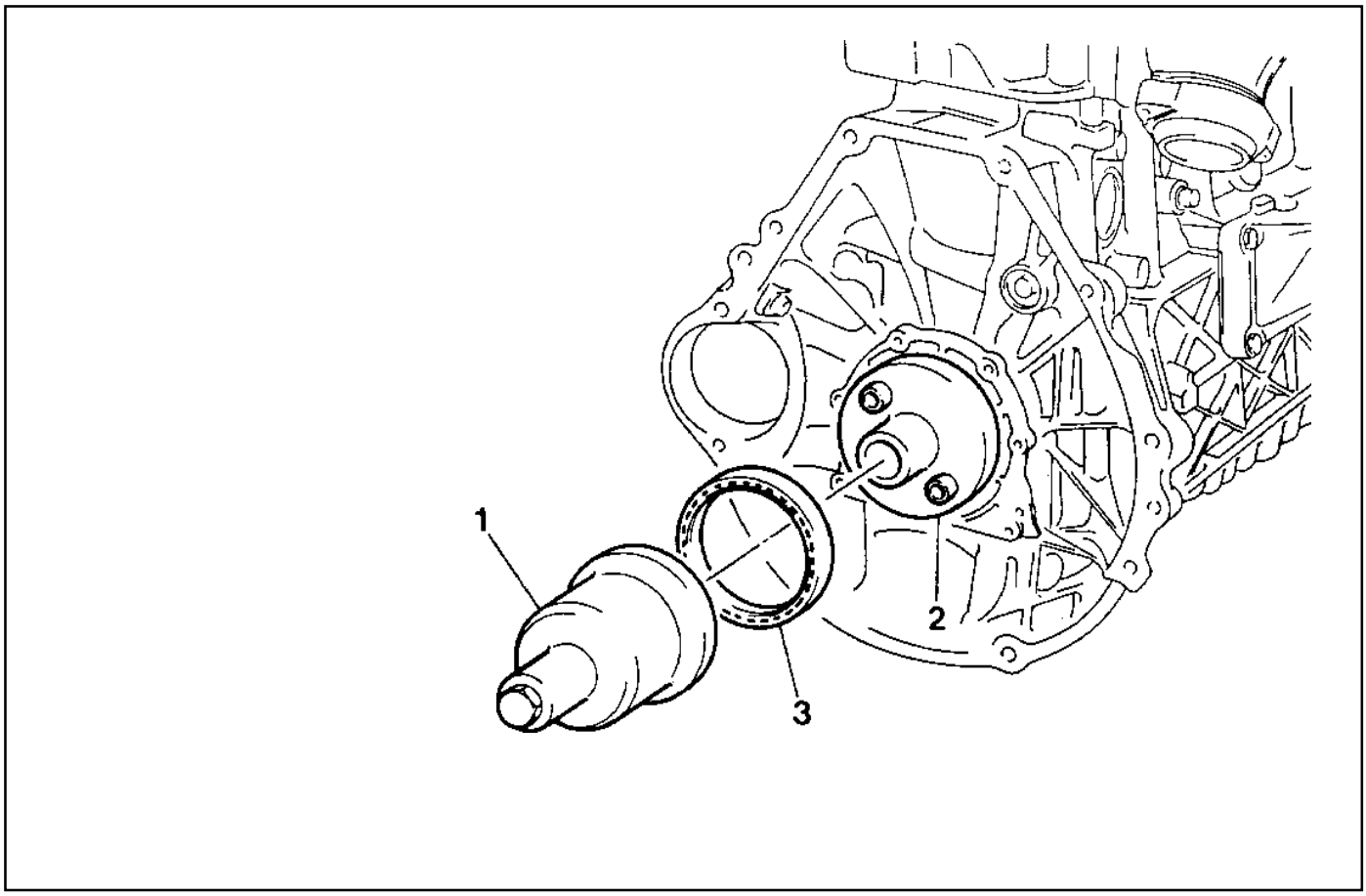

1 Special Tool
2 Special Tool
3 Crankshaft Rear Seal

Tools Required

601 589 03 43 00 Sleeve

Replacement Proceudre

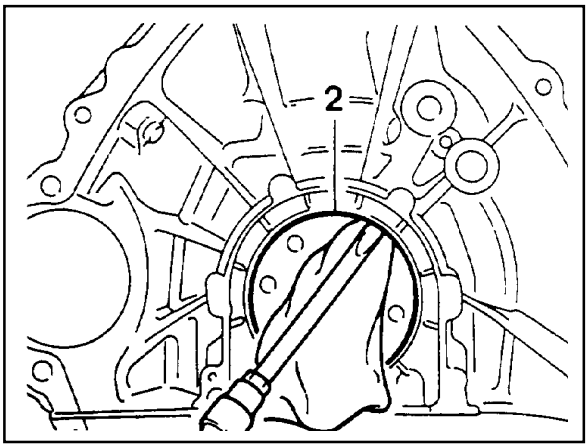

1. Remove the radial seal with a screw driver.

   Notice

   Use a clean cloth not to damage the radial seal mounting hole and the crankshaft.
2. Install the special tool (2) to the crankshaft.
3. Apply the engine oil on the special tool (2).

   Notice

   Do not use the grease.
4. Install the radial seal on the inner parts assembler.
5. Press in the special tool (1) until the radial seal is stopped.
6. Check for leaks while operating the engine.

Downloaded from www.Manualslib.com manuals search engine

CRANKSHAFT

Preceding Work : Removal of engine
Removal of cylinder head
Removal of timing gear case cover
Removal of crankcase sealing rear cover
Removal of oil pan
Removal of baffle plate
Removal of oil pump

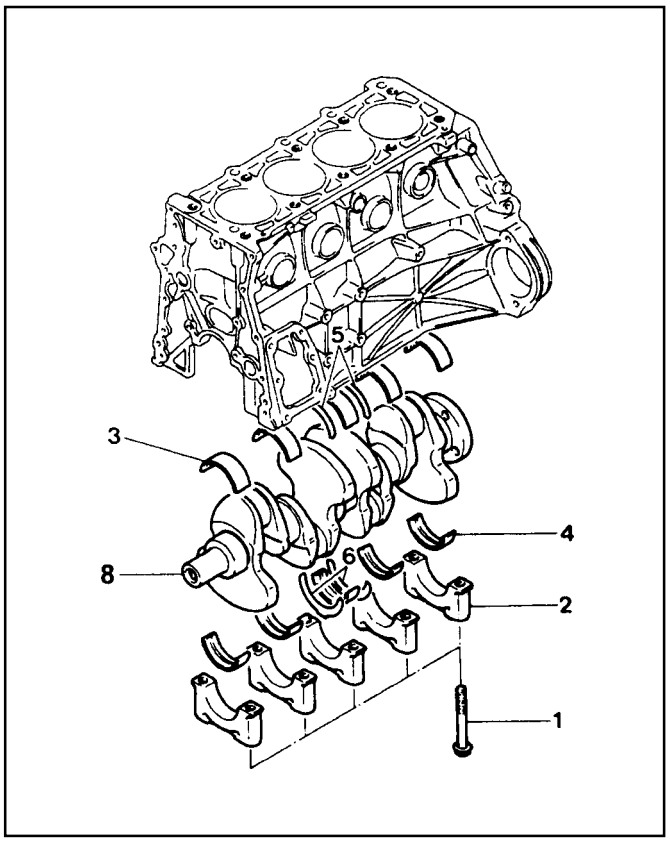

1 Bearing Cap Bolt
(M8 X 55-10 pieces) ..... 1st step 50-60 Nm
2nd step 90°+5° rotation added
2 Bearing Cap
3 Upper Main Bearing
4 Lower Main Bearing
5 Upper Thrust Bearing
6 Lower Thrust Bearing
8 Crank Shaft

Downloaded from www.Manualslib.com manuals search engine

Arrangement of the Thrust Bearing and the Main Bearing

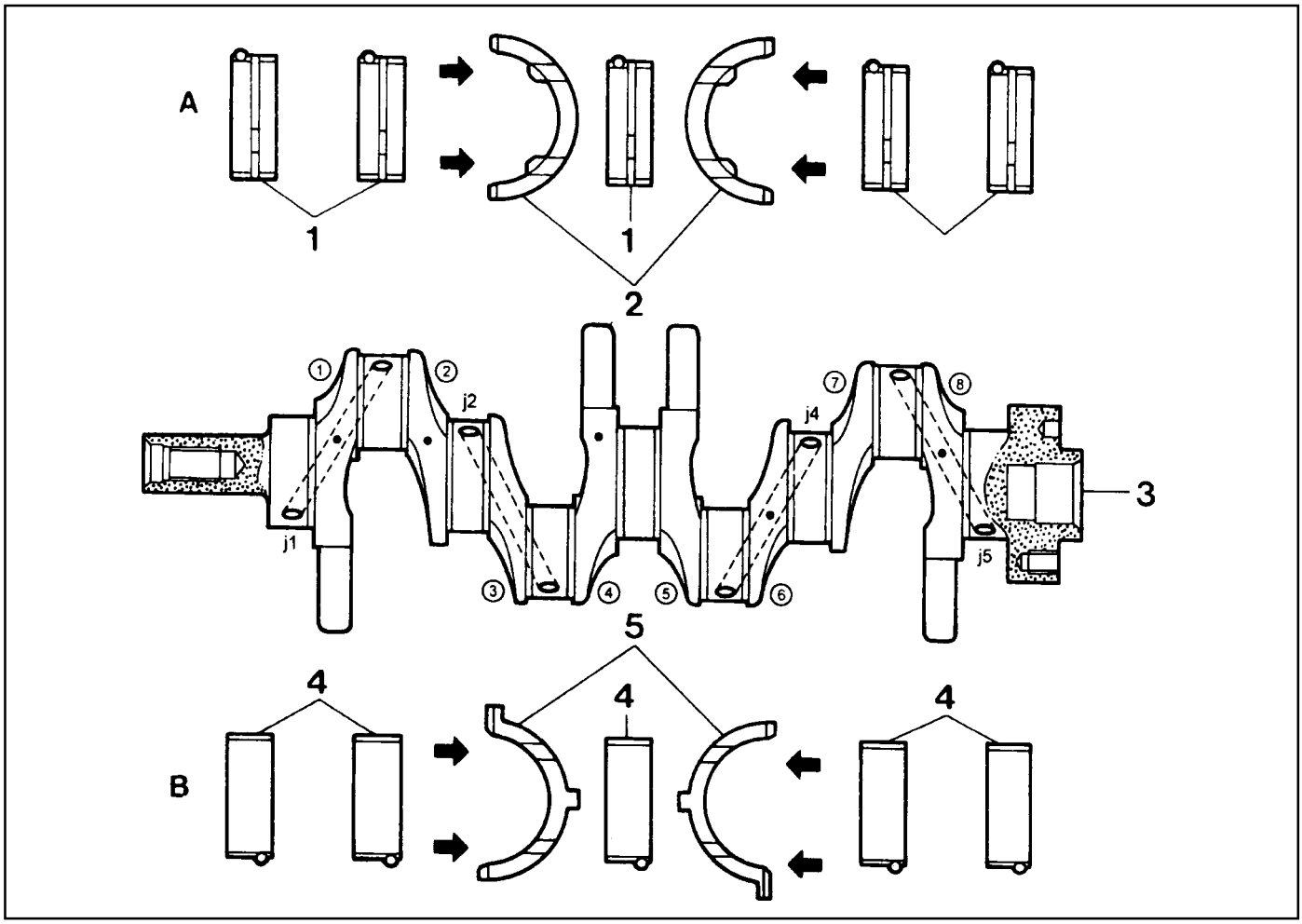

1 Upper Main Bearing
2 Upper Thrust Bearing
3 Crankshaft
4 Lower Main Bearing
5 Lower Thrust Bearing

A Crankcase Side
B Bearing Cap Side (Oil Pan Side)

①-⑧ Weight Balance/Color Marking Point
j1 - j5 Journal Main Bearing #1 - #5
● Color Dot Marking

The color dot marking are put on the ①, ②, ④, ⑥, ⑧, and it indicates the diameter of crankshaft journal by color as below.

Downloaded from www.Manualslib.com manuals search engine

Color Dot Marking	Crankshaft Journal Diameter (mm)
Blue	57.960 - 57.965
Yellow	57.955 - 57.960
Red	57.950 - 57.955
White	57.945 - 57.950
Violet	57.940 - 57.945

Selection of Crankshaft Main Bearing

1. Crankcase Side

   There are seven punching marks on the mating surface to oil pan. This mark is correspondent to the bearing distinguished by color. Select the relevant bearing according to the punching mark when repaired.

Punching Mark	Bearing Color Selected
▪	Blue
▪ ▪	Yellow
▪ ▪ ▪	Red

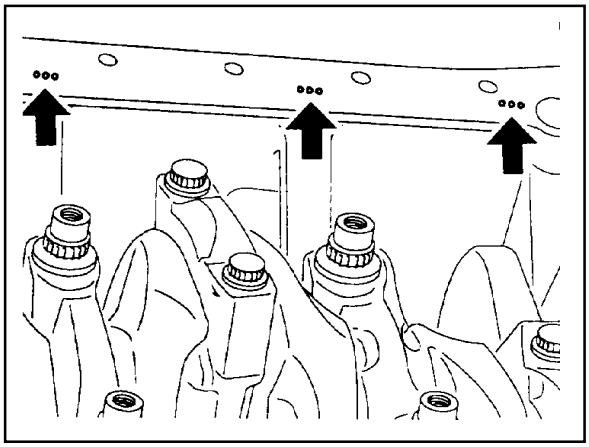

2. Crankshaft Bearing Cap Side

   Select the crankshaft main bearing according to the marking letter on the crankshaft main journal when repaired.

Marking Letter	Bearing Color Selected
B	Blue
Y	Yellow
R	Red
W	White
V	Violet

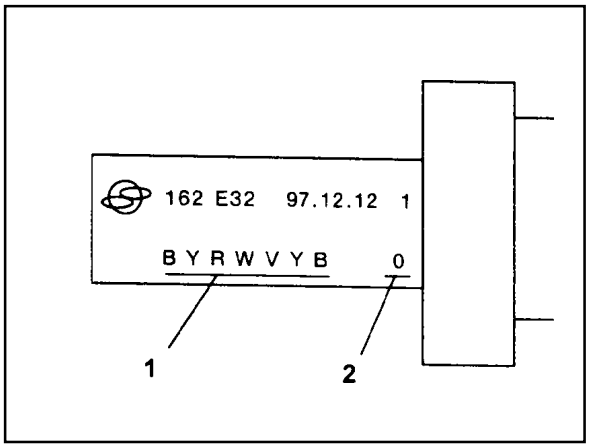

Service Data

Unit : mm

Crankshaft Standard and Repair Size	Crankshaft Bearing Journal Diameter	Crankshaft Bearing Diameter	Crankshaft Journal Width at fit bearing	Connecting Rod Bearing Journal Diameter	Connecting Rod Bearing Journal Width
Standard size	57.950-57.965	58	24.50-24.533	47.94 - 47.96	27.958 - 28.042
1st repair size	57.700-57.715	-	-	47.75	-
2nd repair size	57.450-57.465			47.50	
3rd repair size	57.200-57.215			47.25	
4th repair size	56.950-56.965			47.00	

Downloaded from www.Manualslib.com manuals search engine

Removal & Installation Procedure

1. Unscrew the connecting rod bearing cap bolt and remove the bearing cap.

   Installation Notice

Tightening Torque	40 Nm + 90°

   - Make sure that the upper and lower bearing shells do not change each other.
   - Coat the bearing shell with engine oil.
   - Install the bearing cap according to the consecutive number.

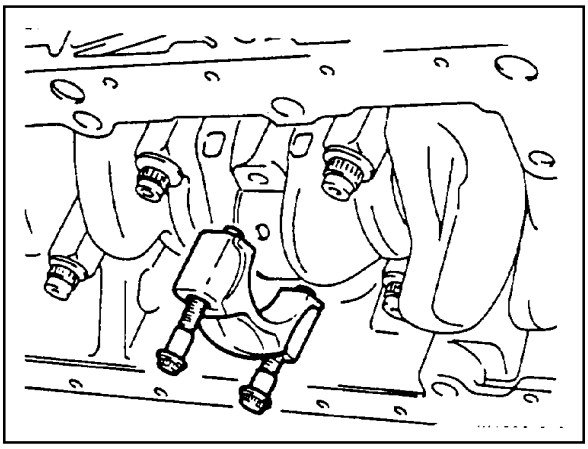

2. Unscrew the crankshaft bearing cap bolts and separate the upper and lower bearing shells and thrust washers.

   Installation Notice

Tightening Torque	55 Nm + 90°

   - Remove the bearing cap from front (pulley side) to rear.
   - Make sure that the upper and lower bearing shells do not change each other and coat with engine oil.
   - The oil grooves (arrows) in the thrust washers must face outward and insert the thrust bearing into the bearing cap.
   - There are five kinds of thrust washers by thickness. Select the proper washer when repaired.
3. Remove the crankshaft.
4. Installation should follow the removal procedure in the reverse order.
5. After completion of the installation, check for the rotating condition of the crankshaft.

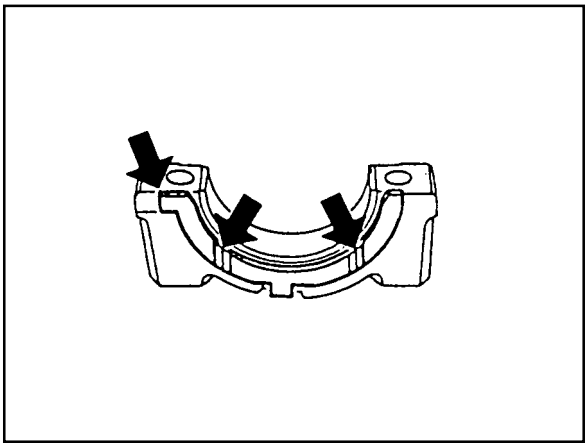

Part No. : 601 030 00 62 2.15 mm
Part No. : 601 030 01 62 2.20 mm
Part No. : 601 030 02 62 2.25 mm
Part No. : 601 030 03 62 2.30 mm
Part No. : 601 030 04 62 2.40 mm

Installation Notice

- Make sure the crankshaft bearing cap properly seated in place in the crankcase side. When perfectly installed, the projected part (arrow) locates in the left side (intake manifold side).
- Assemble so that the projected part of the cap and crankcase face the same direction.

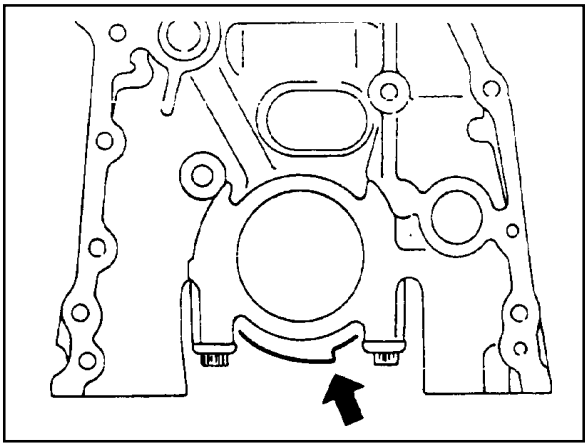

Downloaded from www.Manualslib.com manuals search engine

Inspection

1. If the length 'L' of the crankshaft bearing cap bolt exceeds 63.8mm, replace it.

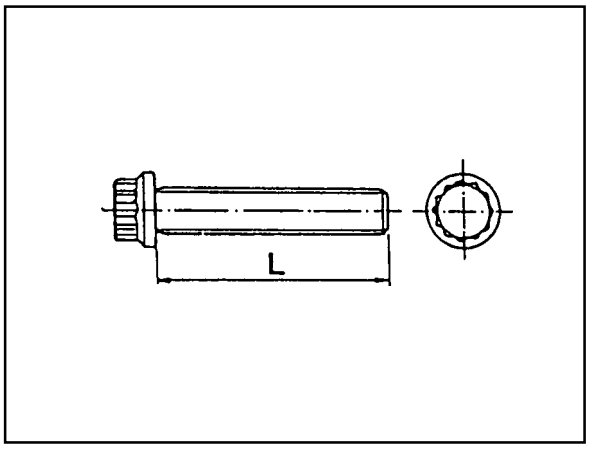

2. Make sure the crankshaft bearing cap is properly seated on the cylinder block (arrows).

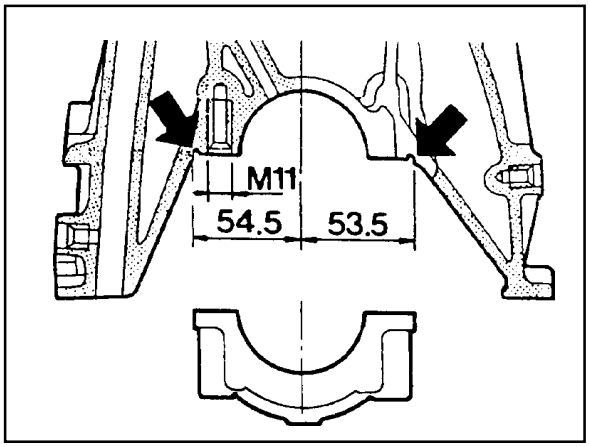

3. Measure and record the inner diameter of the crankshaft bearing.

   Notice

   - Measure at 2 points (1, 2).
   - Measure 'A','B'and 'C' as shown. If average value of 'B' and 'C'is less than value 'A', then the average value of 'B' and 'C' is actual average value. If average value of 'B' and 'C' is more than value 'A'is actual average value.

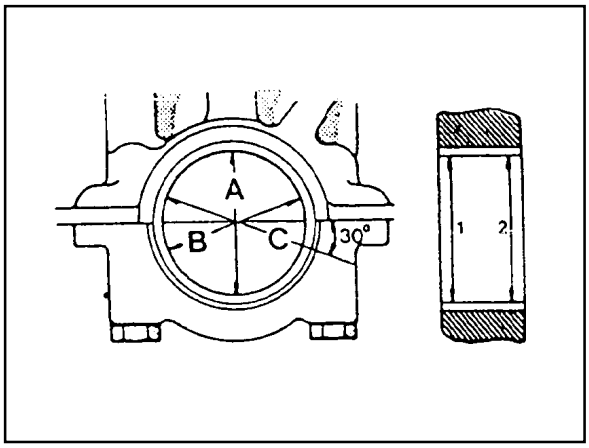

4. Measure and record the diameter of the crankshaft bearing journal.

   Notice

   - Record the mean value when measured at 3 points (A, B, C).
   - Measure the inner diameter of bearing and the diameter of journal and if it is out of the standard data, replace the bearing shell.

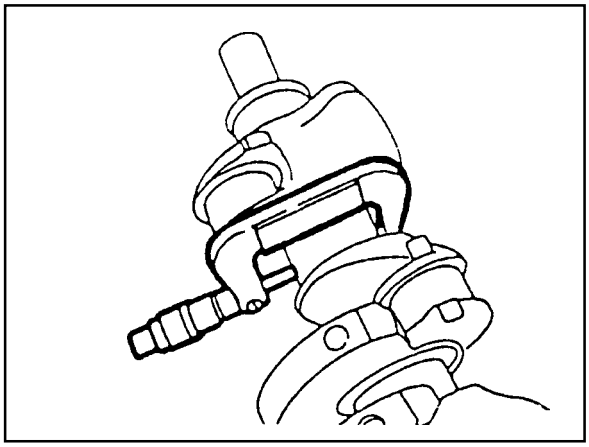

Downloaded from www.Manualslib.com manuals search engine

Service Data Standard (Crankshaft Main Bearing Gap)

Item	Measuring Position	Gap (mm)
Main Bearing Journal (NO. 1, 5, 7)	Radial	Static condition :0.015 - 0.039 Dynamic condition: 0.031 - 0.051 (Consider the expansion 0.011 - 0.016)
	Axial	0.010 - 0.254

(Connecting Rod Bearing Gap)

Item	Measuring Position	Gap (mm)
Connecting Rod Bearing	Radial	0.020 - 0.065

Downloaded from www.Manualslib.com manuals search engine

FLYWHEEL/DRIVEN PLATE

Preceding Work : Removal of manual or automatic transmission

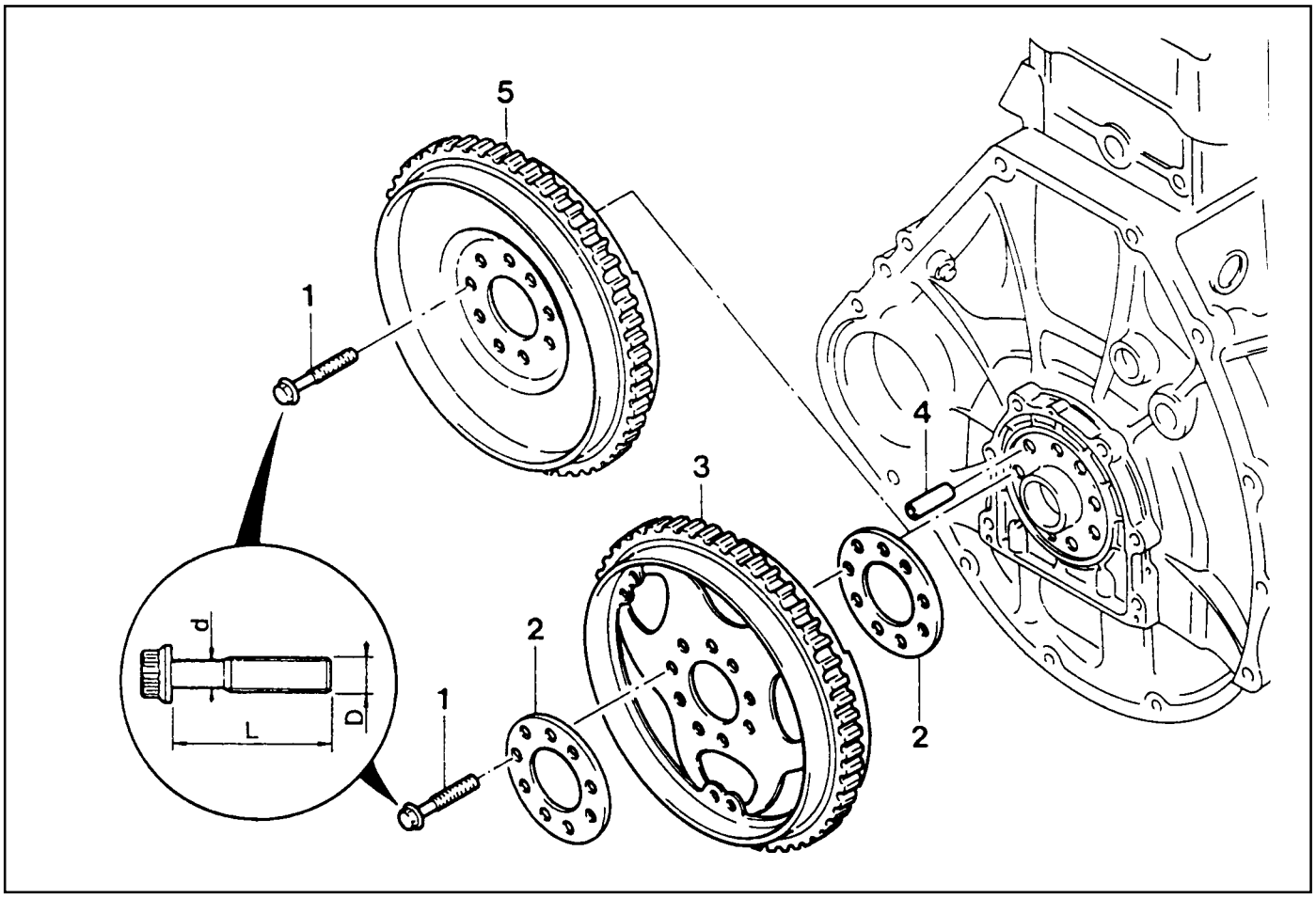

1 Flywheel Mounting Bolt
(M10 x 22, 8 pieces) ..... 1st Step 45 Nm
2nd Step 90°+10°

2 Plate

3 Driven Plate (A/T)

4 Dowel Pin

5 Flywheel (M/T)

Service Data Standard (Stretch Bolt)

Nominal Size	D	-	M x 1.5
Stretch Side Diameter	d	When New	8.5 - 0.2 mm
		Min. Diameter	8.0 mm
Bolt Length	L	When New	21.8 - 22.2 mm
Tightening Torque	1st step 50 Nm, 2nd step 90°		

Downloaded from www.Manualslib.com manuals search engine

Removal & Installation Procedure

1. Unscrew the stretch bolt.

Installation Notice

Tightening Torque	1st step 45 Nm 2nd step 90°+10°

- Replace the bolt when the stretch side diameter (d) of the flywheel mounting bolt is less than 8.0mm.
- For the stretch bolt tightening, keep the socket wrench and Tommy-bar to be 90° and tighten as specified.

2. Remove the flywheel for manual transmission vehicles, or the driven plate (3), and plate (2) for Auto. transmission vehicle.
3. Installation should follow the removal procedure in the reverse order.

Sectional View

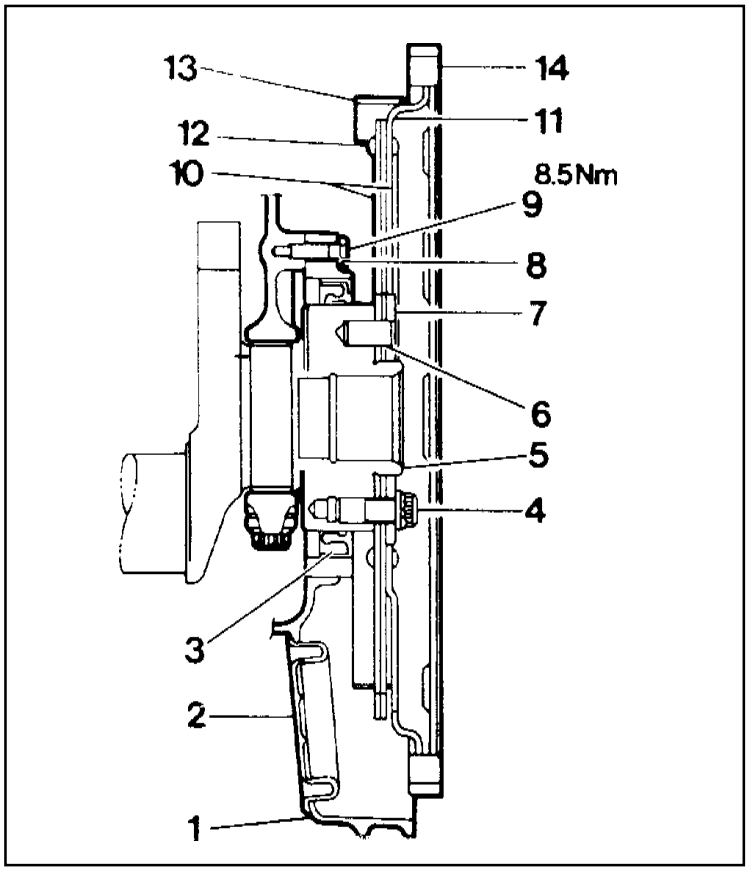

1 Oil Pan
2 Cover
3 Radial Seal
4 Bolt
5 Crankshaft
6 Dowel Pin
7 Washer (Thickness : 3.5 mm)
8 Washer
9 Bolt
10 Front Drive Plate
11 Rear Drive Plate
12 Rivet
13 Segment
14 Ring Gear

Downloaded from www.Manualslib.com manuals search engine

CAMSHAFT ADJUSTER

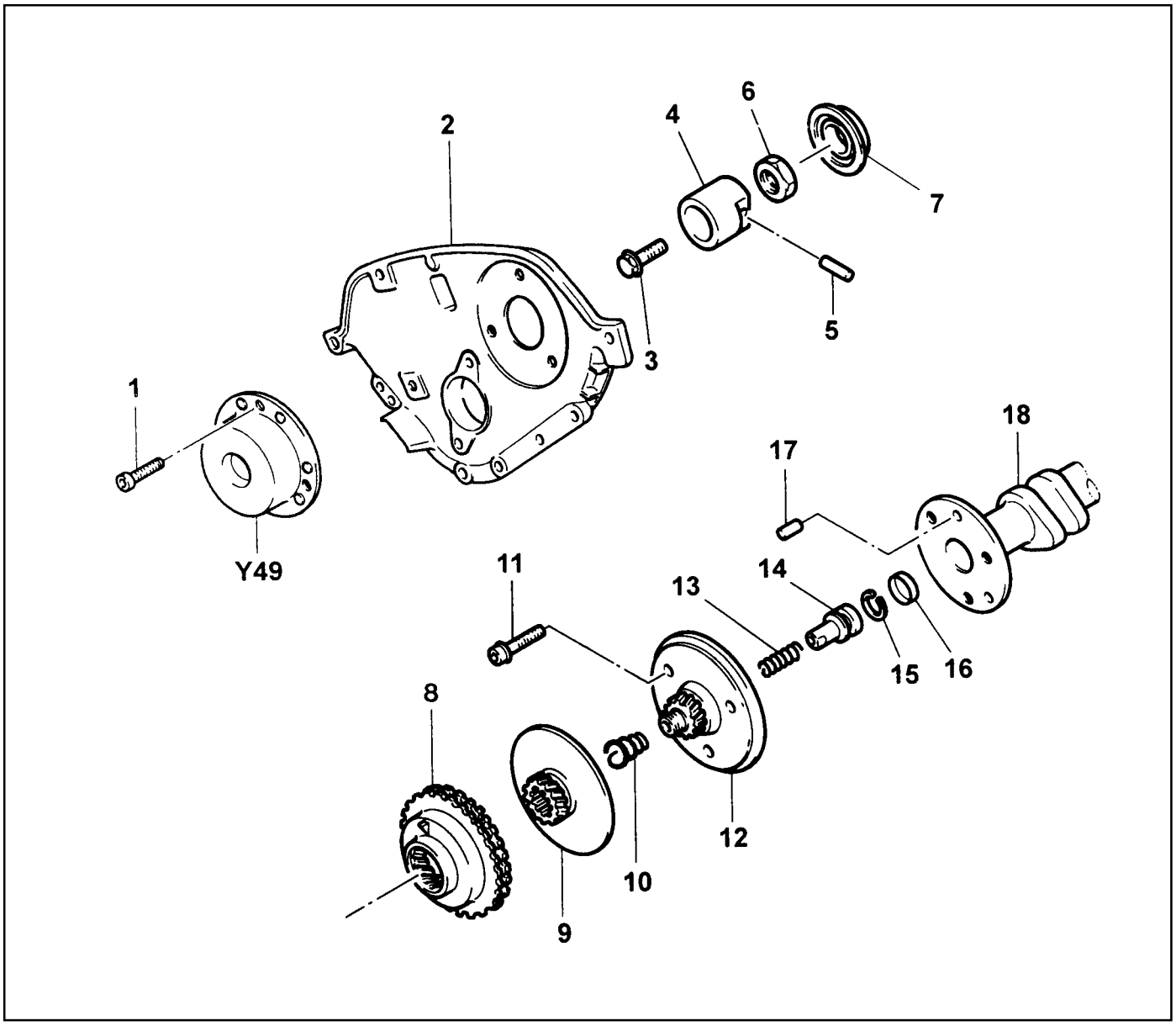

1 Bolt (M6 X 16, 3 pieces) ..... 9-11 Nm
2 Cylinder Head Front Cover
3 Bolt ..... 35 Nm
4 Armature
5 Roll Pin
6 Nut (M20 X 1.5) ..... 60-70 Nm
7 Seal Cover
8 Camshaft Sprocket
9 Adjust Piston
10 Conical Spring
11 Flange Bolt
(M7 X 13, 3 pieces) ..... 1st Step 20±2 Nm
2nd Step 90° ± 5° Rotation Added
12 Flange Shaft
13 Compression Spring
14 Control Piston
15 Circlip
16 Oil Gallery
17 Straight Pin
18 Intake Camshaft
Y49 Magnetic Actuator (2-pin connector)

Downloaded from www.Manualslib.com manuals search engine

Removal & Installation Procedure

1. Turn the crankshaft and position the No.1 cylinder piston at ATDC 20°.

   Notice

   Turn the crankshaft in the direction of engine rotation.

2. Remove the cylinder head front cover.

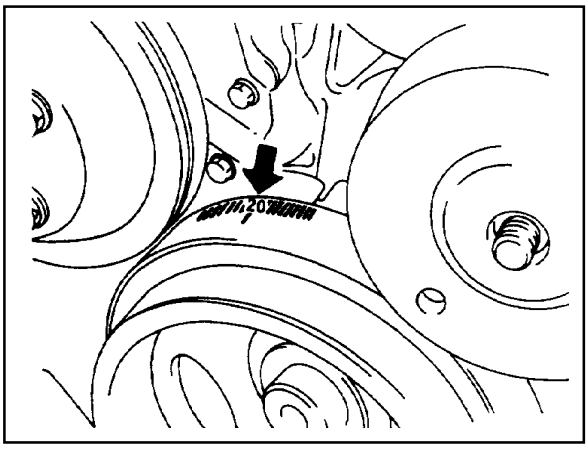

3. Put the alignment marks (arrows) on the camshaft sprocket and the timing chain.

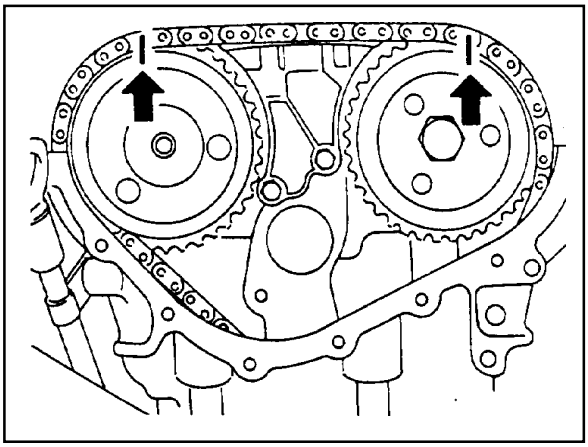

4. Insert the insert pin into the No.1 and no.6 bearing cap hole on camshaft to secure intake and exhaust camshaft.
5. Remove the chain tensioner.

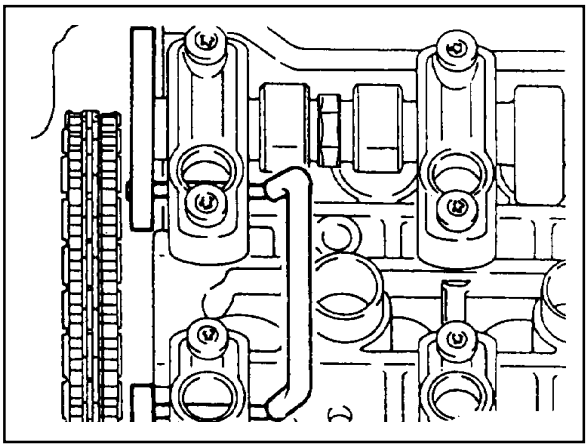

6. Unscrew the exhaust sprocket bolt and remove the exhaust camshaft sprocket.

   Installation Notice

Tightening Torque	1st step 20 Nm 2nd step 90°

   Notice

   The flange bolt is designed to be used only once, so always replace with new one.

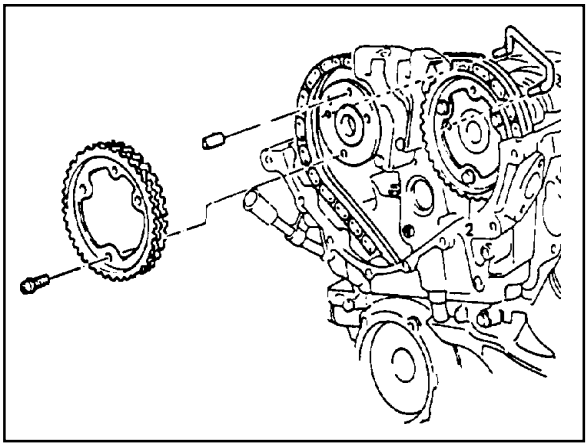

Downloaded from www.Manualslib.com manuals search engine

7. Unscrew the bolt (3) from the armature (4) and remove the roll pin, and remove the armature.

Installation Notice

Tightening Torque	35 Nm

8. Unscrew the nut (6) and remove the seal cover (7).

Installation Notice

Tightening Torque	60- 70 Nm

Notice

Put the locking slot of nut toward armarture.

9. Take off the timing chain from intake camshaft sprocket.

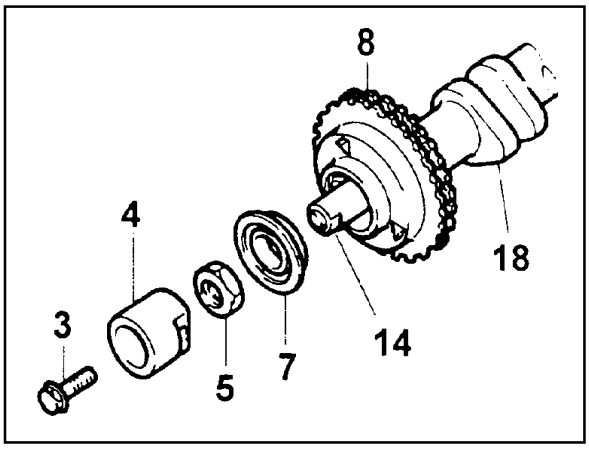

10. Remove the cover (7), adjuster piston (9) and conical spring (10) from intake camshaft sprocket.
11. Unscrew the bolt (11) and remove the flange shaft.

Installation Notice

Tightening Torque	1st step 20 Nm 2nd step + 95°

Notice

The flange bolt is designed to be used only once, so always replace with new one.

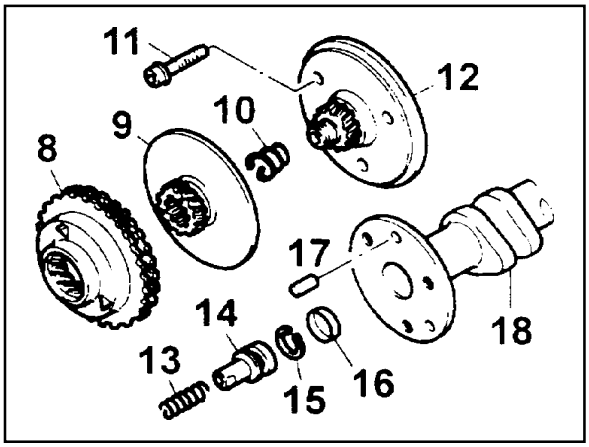

12. Installation should follow the removal procedure in the reverse order.
13. Check and adjust the camshaft timing.

Downloaded from www.Manualslib.com manuals search engine

CAMSHAFT SPROCKET BOLT

Intake Flange Shaft Bolt

Tightening Torque	1st step 20 Nm 2nd step + 90°

Notice

The sprocket bolts are designed to be used only once, so always replace with new one.

C. M7 x 13 Collar Bolt Torx-T30
e. 6.8 mm
16. Flange Shaft
18. Control Piston
22. Intake Camshaft

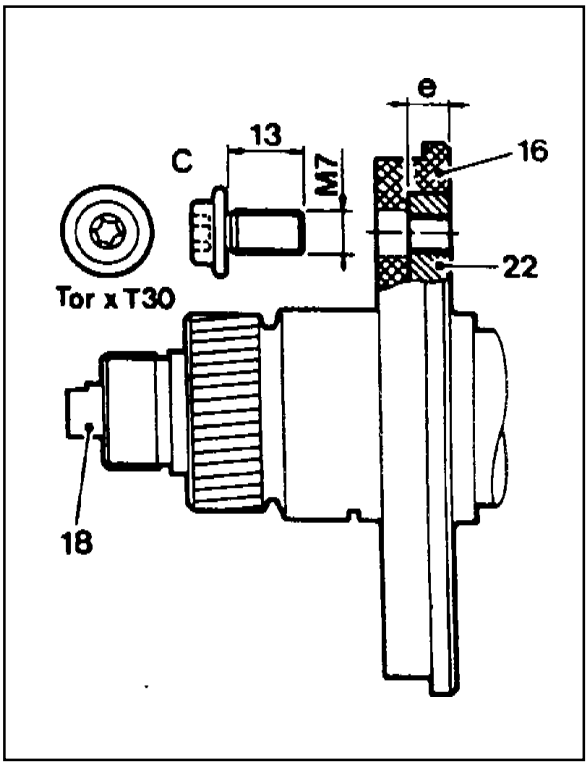

Exhaust Camshaft Sprocket Bolt

Tightening Torque	1st step 20 Nm 2nd step + 90°

Notice

The sprocket bolts are designed to be used only once, so always replace with new one.

E. M7 x 13 Collar Bolt Torx-T30
e. 6.8 mm
13a. Camshaft Sprocket
22a. Exhaust Camshaft

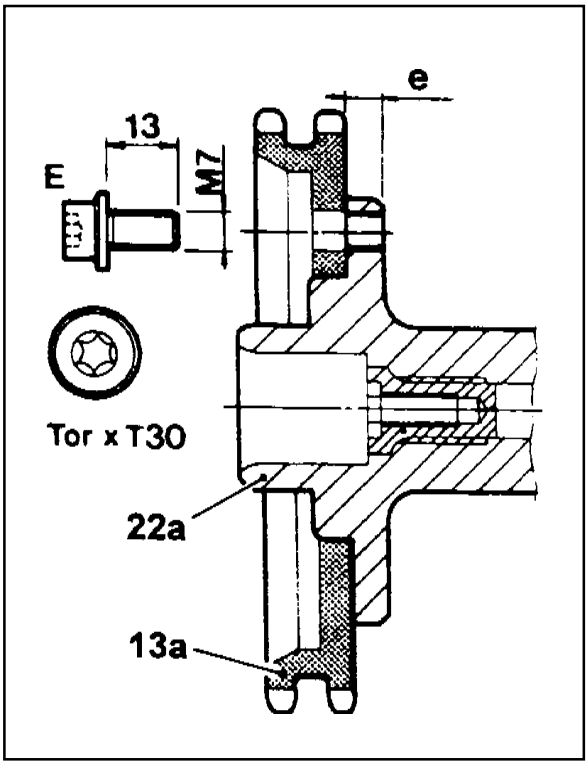

Downloaded from www.Manualslib.com manuals search engine

CAMSHAFT

Preceding Work : Removal of cylinder head cover
Removal of camshaft adjust actuator and cylinder head front cover

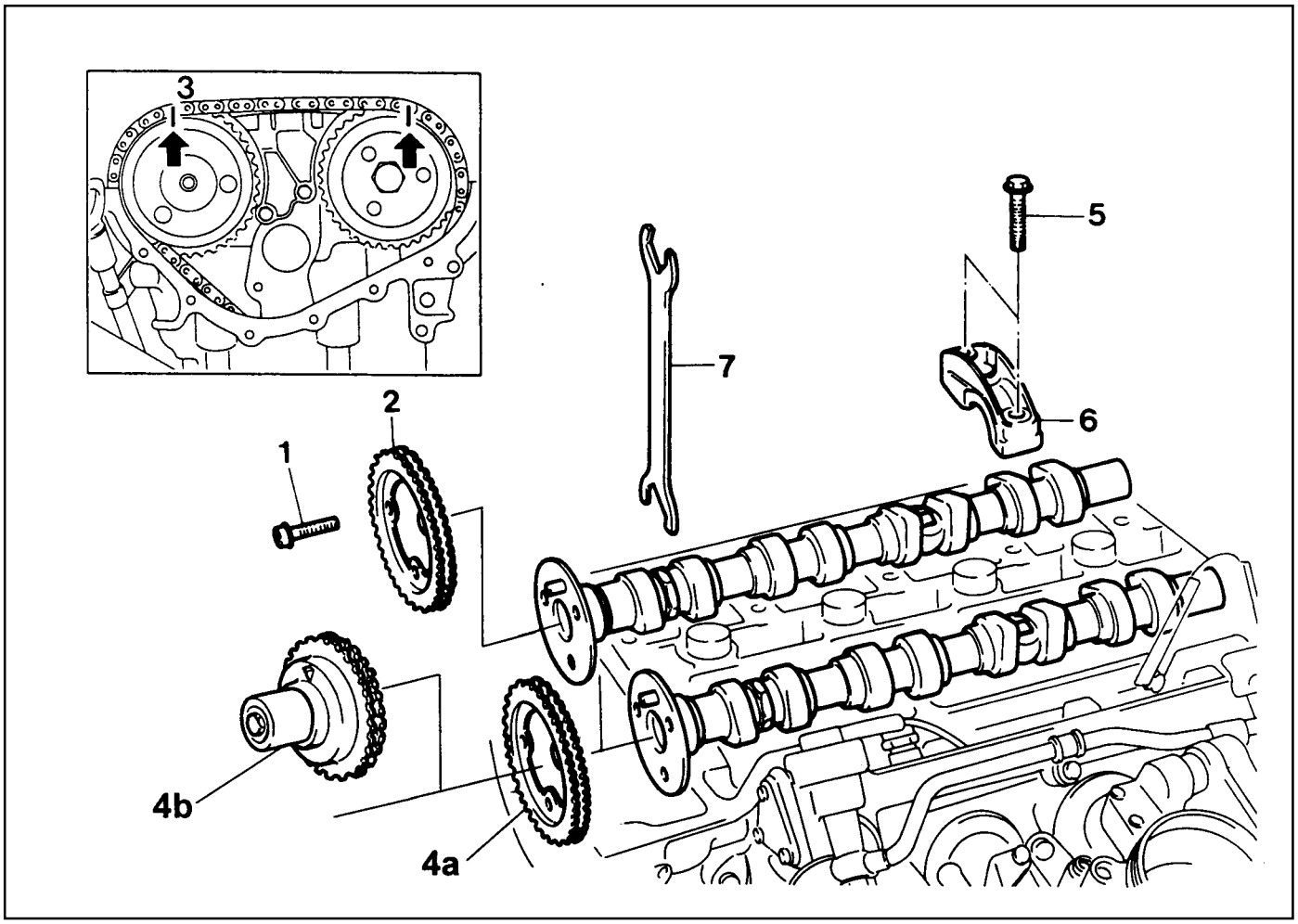

1 Bolt (M7 X 13, 3 pieces) ..... 1st Step 18-22 Nm
2nd Step 90°+ 5° Rotation Added
2 Exhaust Camshaft Sprocket
3 Timing Chain
4a Intake Camshaft Spocket (E20)
4b Camshaft Adjuster and Camshaft Sprocket (E23)
5 Bearing Cap Bolt (20 pieces) ..... 22.5-27.5 Nm
6 Camshaft Bearing Cap
7 Wrench (Special Tool)

Downloaded from www.Manualslib.com manuals search engine

Tools Required

000 589 01 10 00 Box Wrench Insert

104 589 01 01 00 Spanner

Removal & Installation Procedure

1. Turn the crankshaft and position the No.1 cylinder piston at ATDC20°.

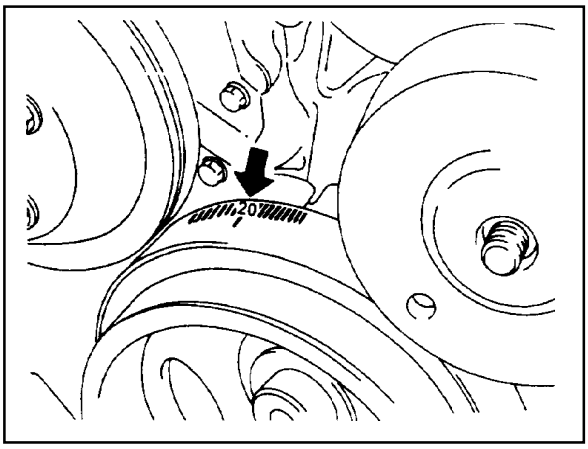

2. Put the alignment marks (arrows) on the camshaft sprocket and the timing chain.
3. Remove the chain tensioner.

Installation Notice

Tightening Torque	Screw Plug	40 Nm
	Tensioner Assembly	72 - 88 Nm

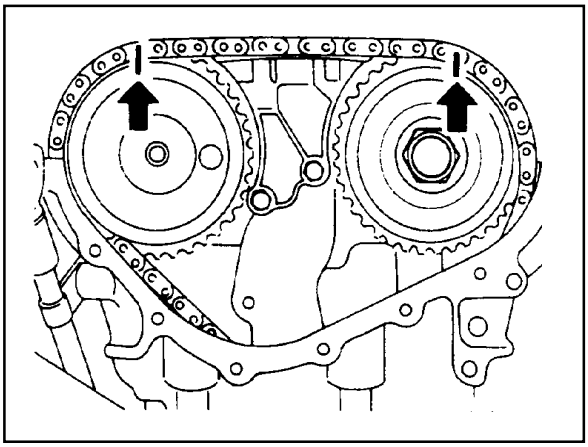

4. Remove the exhoust camshaft sprocket.

Installation Notice

Tightening Torque	1st step 35 - 45 Nm 2nd step 85° - 95°

Notice

The sprocket bolt is designed to be used only once, so always replace with new one.

5. Take off the timing chain from intake camshaft sprocket, and secute it not to fall down into the timing gear case.

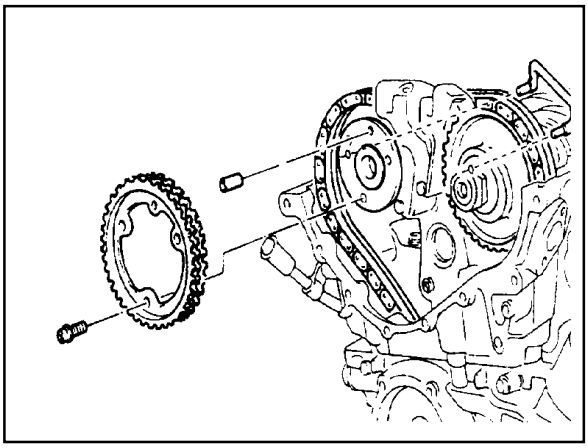

6. Using the wrench (7), turn the camshaft until there is no resistence in camshaft bearing area.

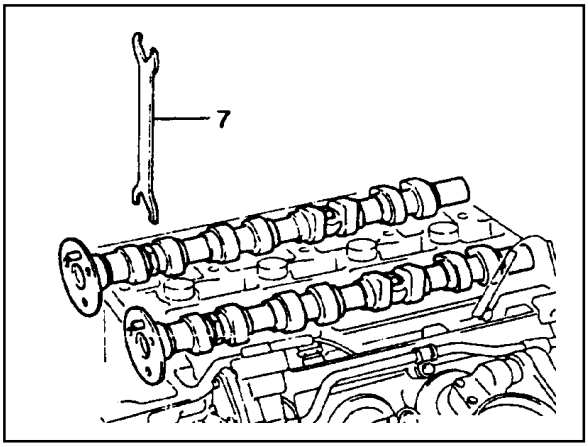

Downloaded from www.Manualslib.com manuals search engine

7. Remove the bearing cap, and remove the intake and the exhaust camshaft.

Installation Notice

Tightening Torque	22.5 - 27.5 Nm

Notice

Check the numbers on the bearing cap not to be miked up.

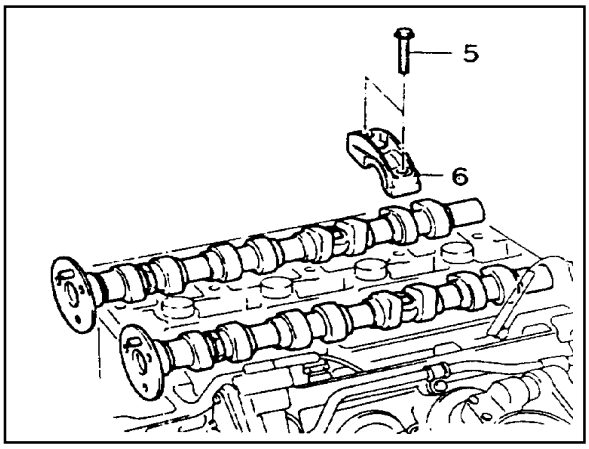

8. Apply the engine oil on the valve tappet and camshaft bearing.
9. Installation should follow the removal procedure in the reverse order.

Notice

- Base circle of cam should cantact with the valve tappet.
- Install the camshaft bearing caps according to the numbers on the cylinder head cast and bearing cap.

10. Check the camshaft timing position.

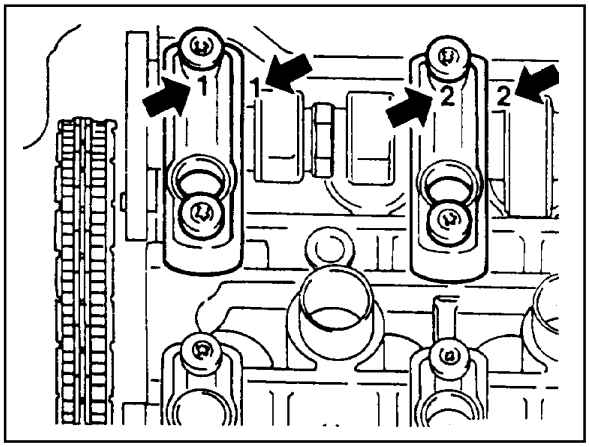

Downloaded from www.Manualslib.com manuals search engine

CAMSHAFT TIMING POSITION

Preceding Work : Removal of cylinder head cover
Removal of cylinder head front cover

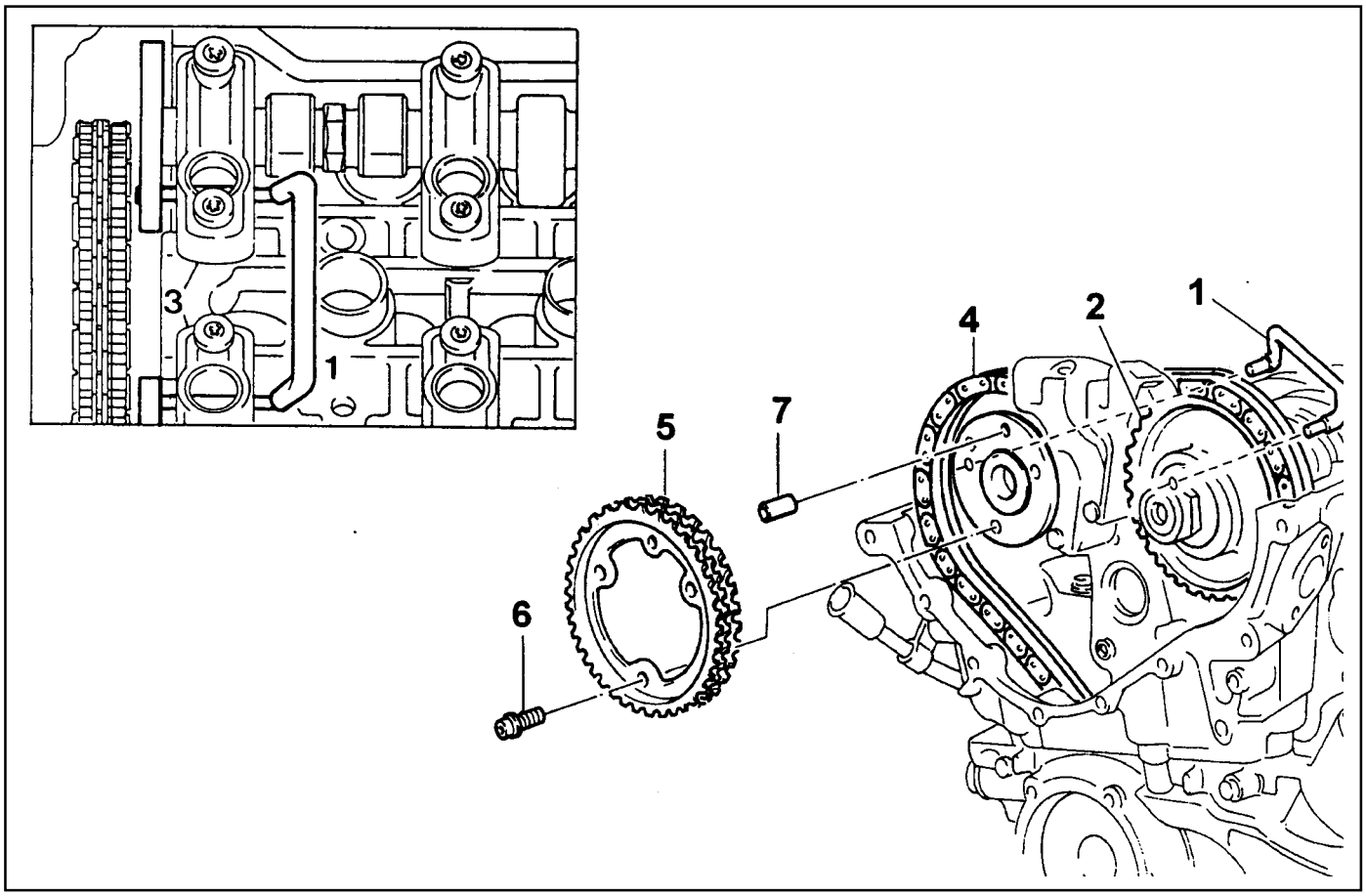

1 Insert Pin (ƒ6.5mm, Special Tool)
2 Intake Camshaft Sprocket
3 Camshaft Bearing Cap
4 Timing Chain
5 Exhaust Camshaft Sprocket
6 Bolt (M7 X 13, 3 pieces) ..... 1st step 20 ± 2 Nm
2nd step 90° ± 5° rotation added
7 Strate Pin

Downloaded from www.Manualslib.com manuals search engine

Tools Required

104 589 01 01 00 Spanner

111 589 03 15 00 Insert Pin

Inspection Procedure

1. Position the No.1 cylinder piston to ATDC 20° by turning the crankshaft

   Notice

   When the ATDC 20° mark on vibration damper is aligned with timing gear case cover, the intake and exhaust cam of cylinder will make the slope to the center and will face up. In this way, the insert hole in No.1 and No.4 camshaft bearing cap will match in line with the flange hole for camshaft sprocket.

2. Check the timing as below procedure;
   - Check if the insert pin (111 589 03 15 00) can be inserted into the No.1 and No.4 bearing cap hole.
   - At this condition, check if the ATDC 20° mark on vibration damper aligns with the marker on the timing gear case.

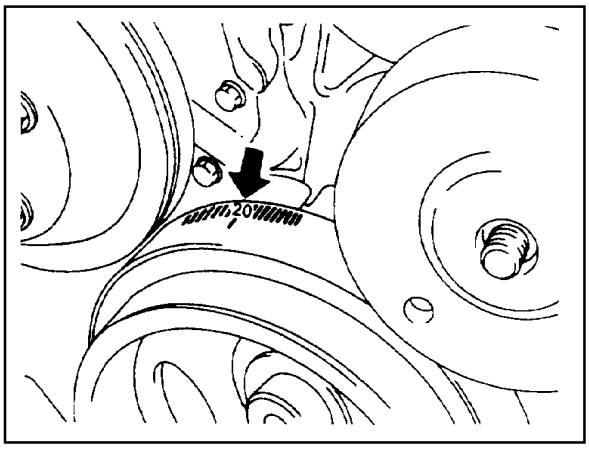

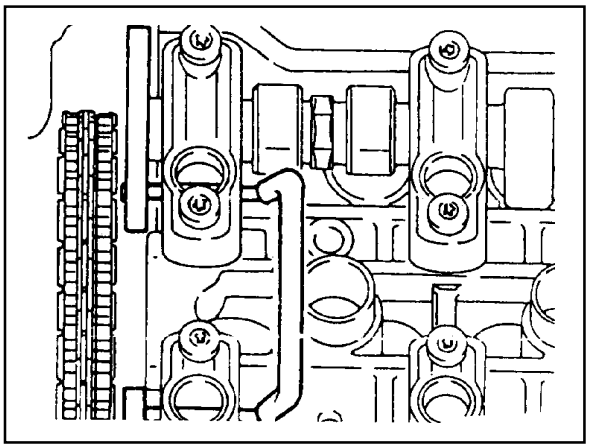

Downloaded from www.Manualslib.com manuals search engine

Adjustment Procedure

1. Position the No.1 cylinder to ATDC 20° .
2. Remove the chain tensioner.
3. Remove the exhaust camshaft sprocket.
4. Adjust the timing position with inserting the insert pin (f 6.5mm, 111 589 03 15 00) into the No.1 and No.4 camshaft bearing cap hole and flange hole while rotating the camshaft by using wrench (104 589 01 01 00).
5. Install the chain to the intake camshaft sprocket.
6. Install the chain to the exhaust camshaft sprocket and tighten the bolt.

   Installation Notice

Tightening Torque	1st step 20 Nm 2nd step + 90°

   The sprocket bolt is designed to be used only once, so replace with new one.

7. Install the chain tensioner.

   Installation Notice

Tightening Torque	Screw plug	40 Nm
	Tensioner assembly	80 ± 8 Nm

8. Check the camshaft timing.

Downloaded from www.Manualslib.com manuals search engine

VALVE SPRING

Preceding Work : Removal of camshaft
Removal of spark plug

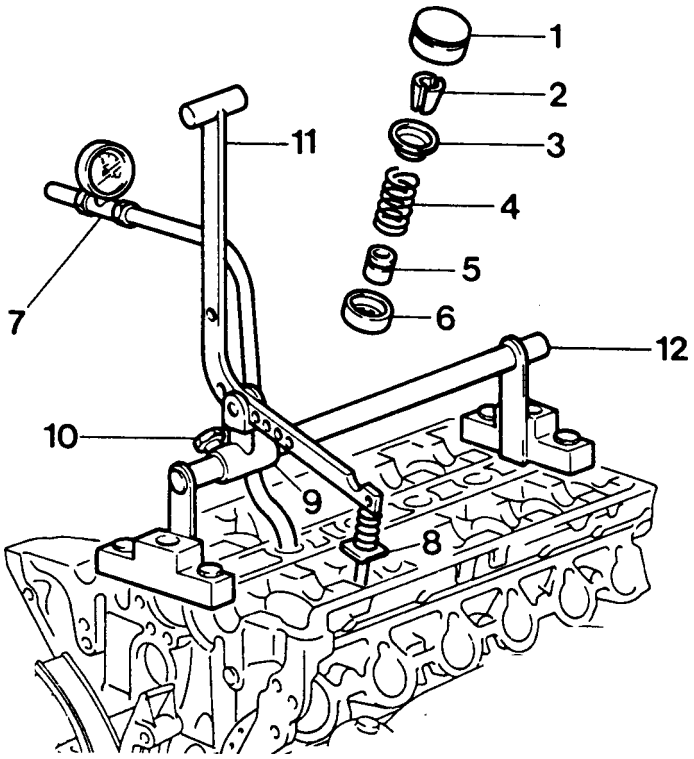

1 Valve Tappet Assembly
2 Valve Cotter
3 Upper Retainer
4 Valve Spring ..... Check, Replace if necessary
5 Valve Stem Seal
6 Lower Retainer
7 Connecting Hose
8 Thrust Piece
9 Slide
10 Adjust Bolt
11 Lever Pusher
12 Supporting Bar

Downloaded from www.Manualslib.com manuals search engine

Tools Required

111 589 01 59 00 Supporting Bar
111 589 18 61 00 Lever Pusher
111 589 25 63 00 Thrust Piece
116 589 06 63 00 Magnetic Finger

Removal & Installation Procedure

1. Place the supporting bar (12) and the slide (9) at the camshaft bearing cap (Nos 1 & 7/8&14) and tighten them with the bearing cap bolt.

   Installation Notice

Tightening Torque	22.5 - 27.5 Nm

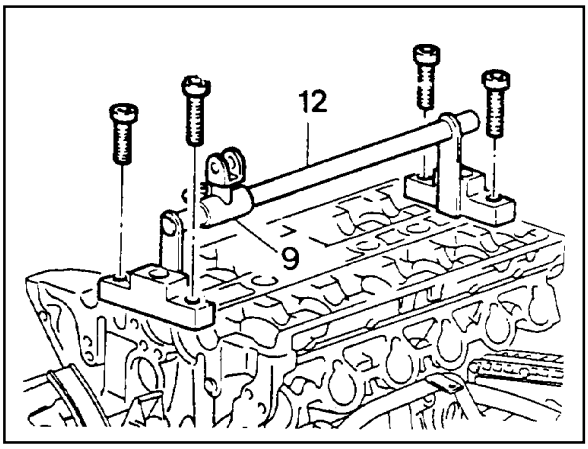

Supporting Bar 111 589 01 59 00

2. Turn the crankshaft to position the each cylinder piston at TDC.

Mark on The Vibration Damper	Cylinder
OT	1, 4
UT	2, 3

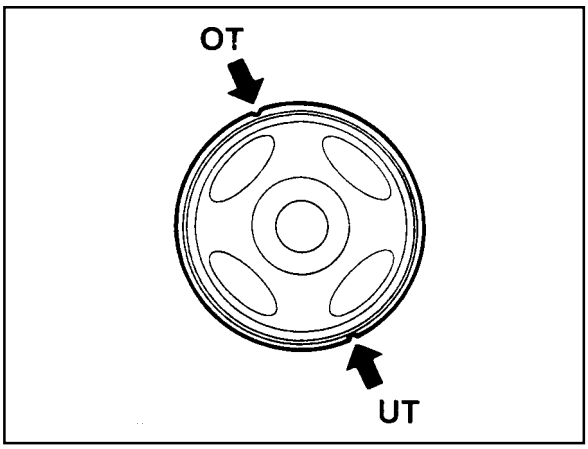

   Notice

   - Remove the valve spring only at TDC.
   - Always rotate the crankshaft by holding the chain to prevent from timing chain damage and tangling, and for smooth rotation.

3. Remove the valve tappet (1) using the magnetic finger.
4. Install the leakage tester connecting hose to the spark plug hole.

5. Install the engine lock to the ring gear to prevent the crankshaft from rotating.
6. Blow up with compressed air.

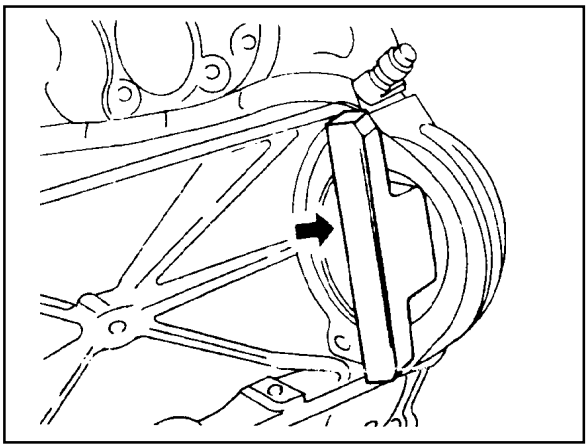

Downloaded from www.Manualslib.com manuals search engine

8. Install the lever pusher (11) and the thrust piece (8) to the slide (9).

Lever Pusher 111 589 18 61 00

9. Mount the thrust piece (8) vertically to the valve spring retainer (3).
10. Make the thrust piece (8) and the slide (9) perpendicular to each other.
11. Secure the slide (9) by turning the adjust bolt (10).
12. Press the valve spring (4) by using the lever pusher (11).

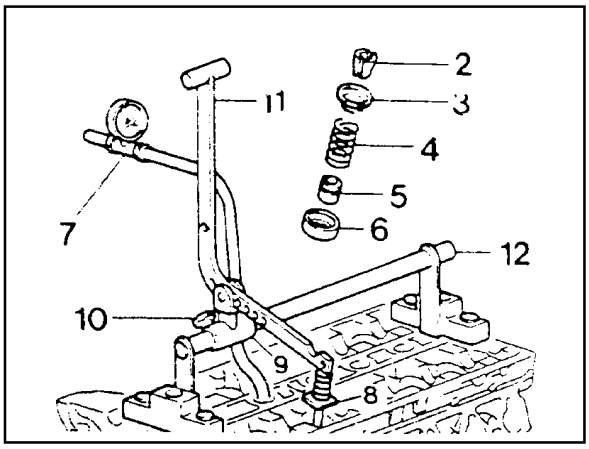

13. Remove the valve cotter (2) using either the pincette (13) or magnetic finger.

Magnetic Finger 116 589 06 63 00

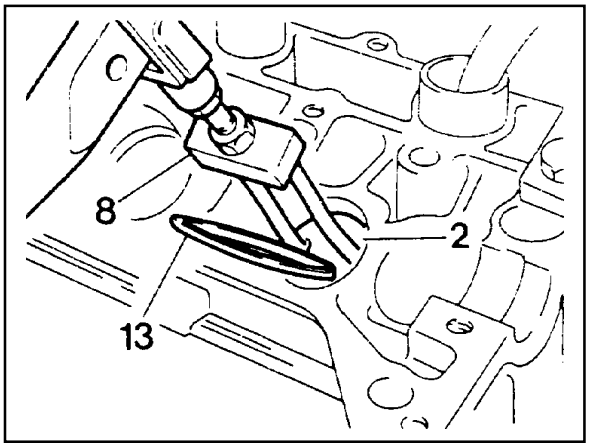

14. Remove the upper retainer (3) and the valve spring (4).
15. Remove the valve stem seal and replace if necessary.

    Notice

    Check the valve stem seal and replace if necessary.
16. Remove the lower retainer (6).

    Notice

    Check the retainer for damages and replace with a new one if necessary.
17. Installation should follow the removal procedure in the reverse order.

Downloaded from www.Manualslib.com manuals search engine

Test (Upper and Lower Valve Tappet and Valve Cotter)

- Upper Valve Spring Retainer

Size (mm)	(d)	8.5
	(D)	12.3

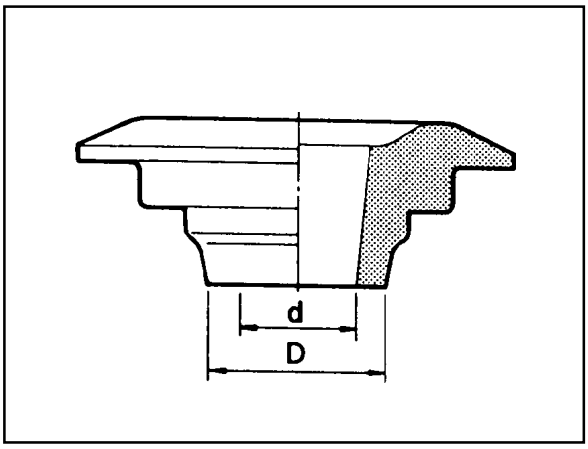

- Lower Valve Spring Retainer

Thickness (mm)	(a)	0.8 - 1.0

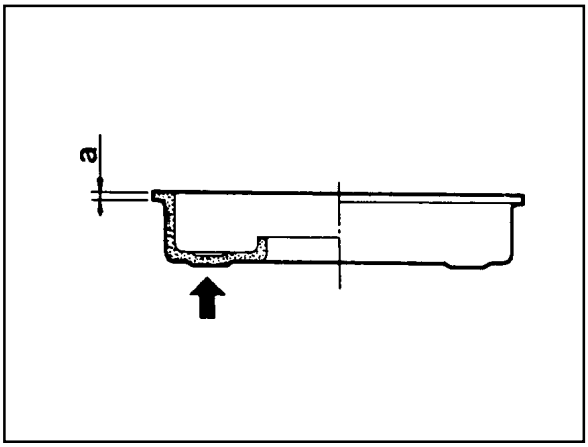

- Valve cotter

Size (mm)	(B)	9.0
	(H)	9.2 - 9.8

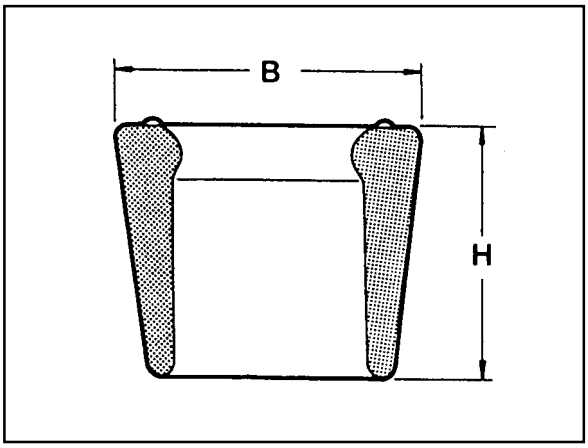

Downloaded from www.Manualslib.com manuals search engine

VALVE STEM SEAL

Preceding Work : Removal of valve spring

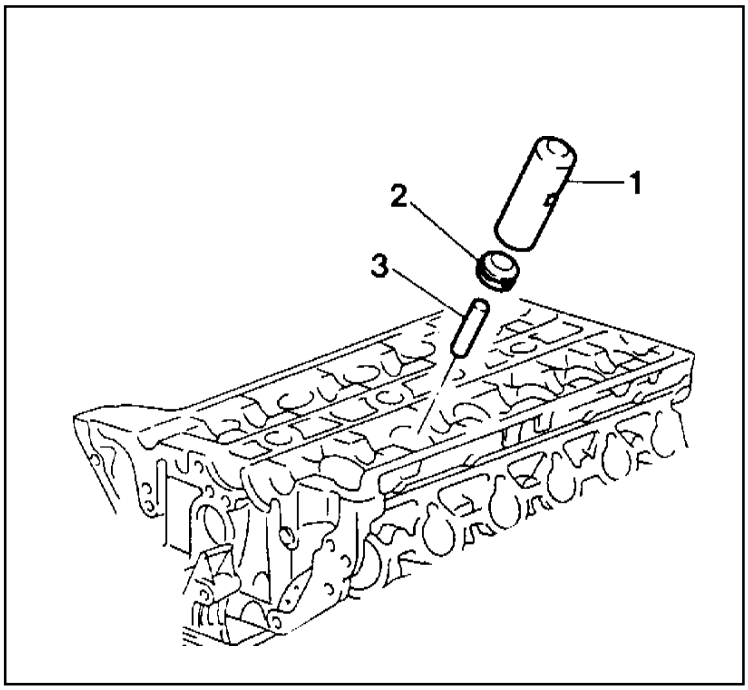

1 Drift (Special Tool)
2 Valve Stem Seal
3 Protective Sleeve

Tools Required

104 589 00 37 00 Pliers

119 589 00 43 00 Drift

Replacement Procedure

1. Remove the valve stem seal (2) using the pliers.

   Notice

   Check the valve stem seal for damage and replace if necessary.

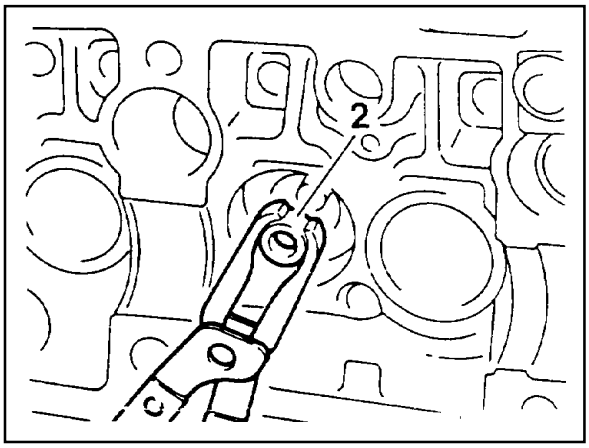

Pliers 104 589 00 37 00

2. Coat the valve stem seal with oil and assemble it with the protective sleeve.
3. Insert the valve stem seal by pressing it with the drift.

Drift 119 589 00 43 00

Downloaded from www.Manualslib.com manuals search engine

CHAIN TENSIONER

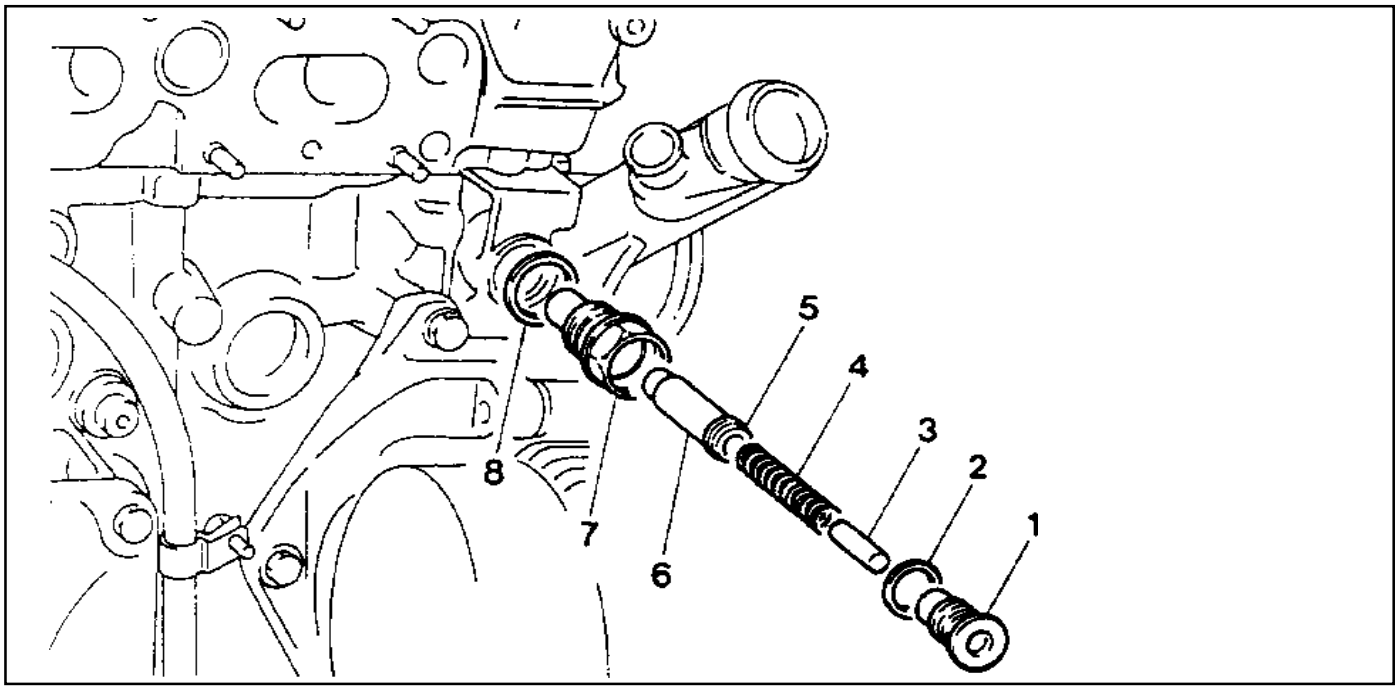

1 Screw Plug ..... 40 Nm
2 Seal
3 Filler Pin
4 Compression Spring
5 Snap Ring
6 Thrust Pin
7 Chain Tensioner Housing ..... 72-88 Nm
8 Seal

Removal Procedure

1. Position the number 1 cylinder to ATDC 20°.

   Notice

   Remove the oil filler cap at adjustment position, and check whether the intake camshaft cam's lobe (arrow) stays in the upper side.

2. Cover the alternator with a clean cloth.
3. Release the tension by unscrewing the screw plug once.

   Notice

   In case that the tension is reduced by unscrewing the screw plug, reinstall after completely removing the chain tensioner. If the chain tensioner is tightened again without completely reducing its tension, then the snap ring doesn't return to the original position and the tension gets excedded.

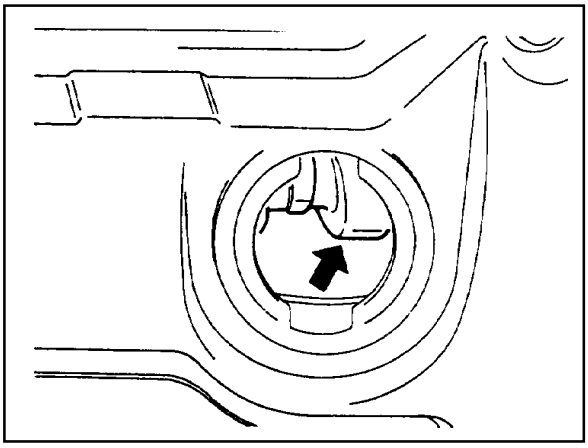

Downloaded from www.Manualslib.com manuals search engine

4. Carefully unscrew the screw plug (1), and remove the seal (2).

   Notice

   - For the removal of screw plug, be careful that it can be jumped out due to the force of compression spring.
   - Remove the screw plug only when the seal and compression spring are damaged.

5. Carefully remove the filler pin (3), compression spring (4), snap ring (5), and the thrust pin (6).

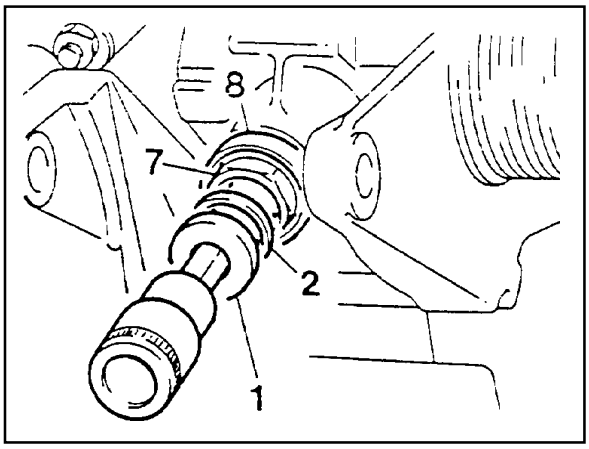

6. Remove the chain tensioner housing (7) and the seal (8).

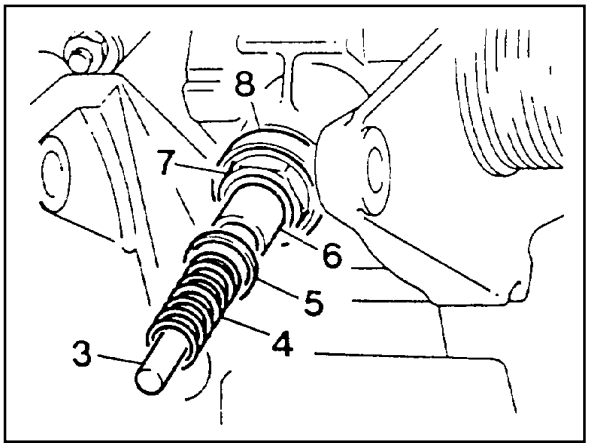

Installation Procedure

1. Connect the thrust pin (6) and the snap ring (5) to the chain tensioner housing (7).

   Notice

   When connecting the thrust pin, push in the thrust pin far enough so that it doesn't protrude at the chain tensioner housing.

2. Install the chain tensioner housing (7), Thrust pin (6), snap ring (5), and the seal (8).

   Installation Notice

Tightening Torque	72 - 88 Nm

3. Insert the compression spring (4) with the filler pin (3) into chain tensioner housing.

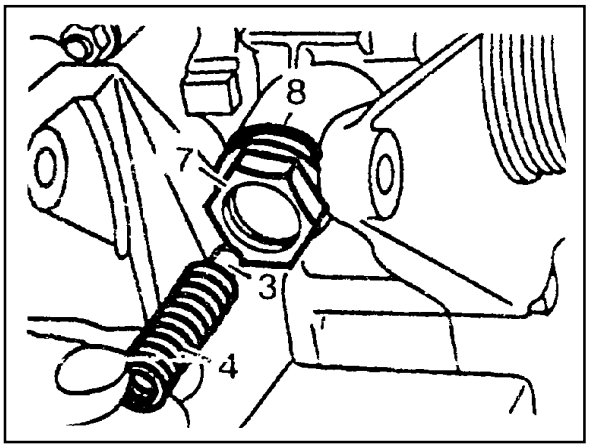

Downloaded from www.Manualslib.com manuals search engine

4. Lightly apply the grease to the seal (2) and install the screw plug (1).

   Installation Notice

Tightening Torque	40 Nm

5. Check for leaks by operating the engine.

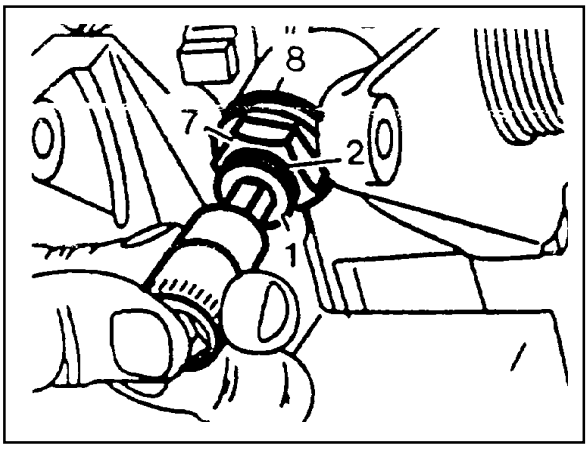

Sectional View

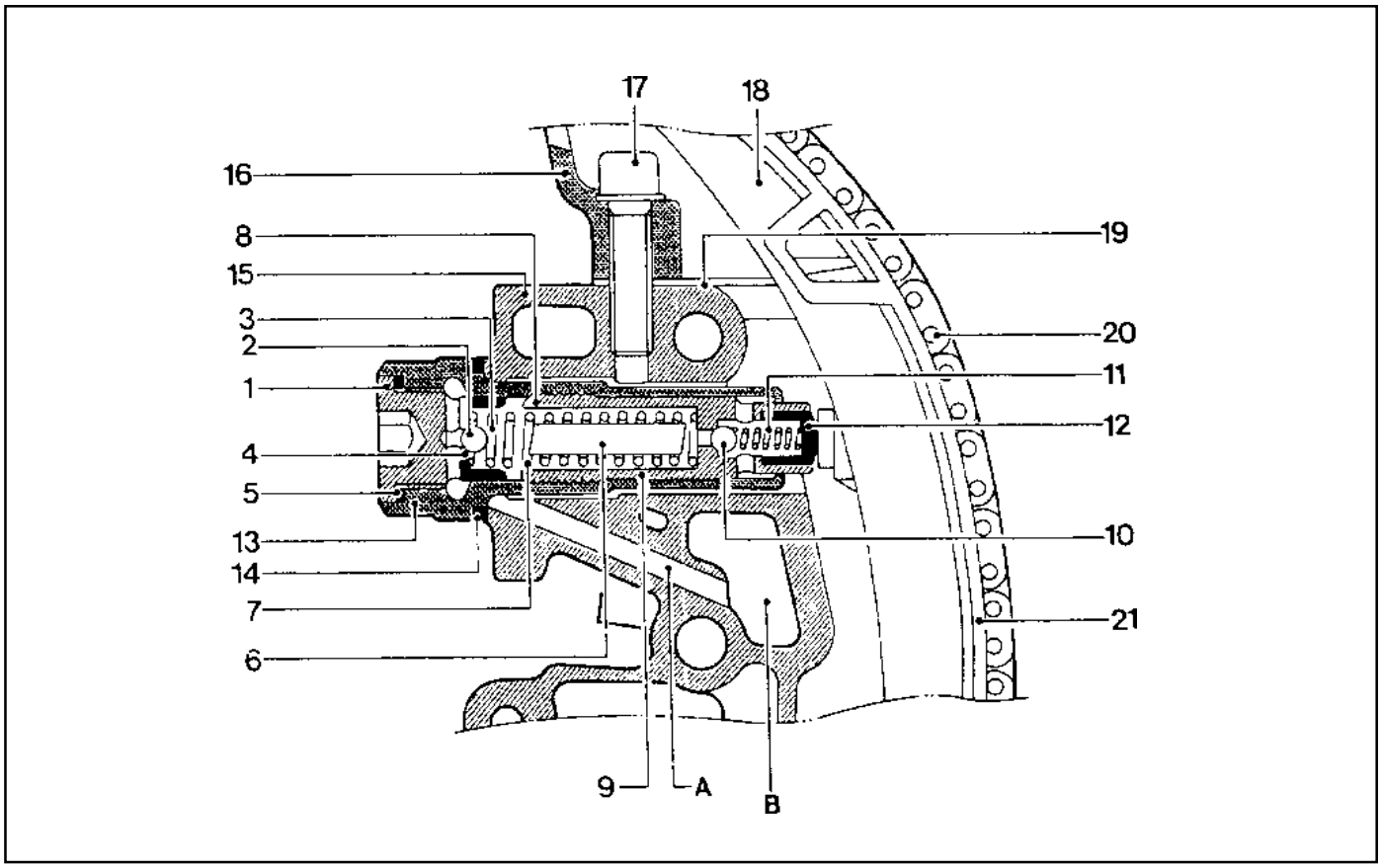

1 Screw Plug
2 Ball (Nonreturn Valve)
3 Compression Spring
4 Ball Guide
5 Seal (Aluminum)
6 Filler Pin
7 Compression Spring
8 Snap Ring
9 Thrust Pin
10 Ball (Nonreturn Valve)
11 Compression Spring
12 Thrust Piece
13 Chain Tensioner Housing
14 Seal
15 Timing Gear Case Cover
16 Cylinder Head
17 Bolt / Washer
18 Tensioning Rail
19 Cylinder Head Gasket
20 Timing Chain
21 Tensioning Rail Base (Sliding Surface)
A Oil Supply Hole
B Chain Tensioner Oil Storage Hole

Downloaded from www.Manualslib.com manuals search engine

TIMING CHAIN

Preceding Work : Removal of cylinder head cover
Removal of spark plug

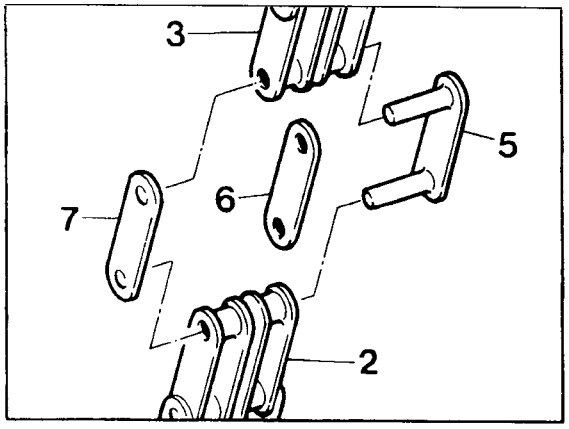

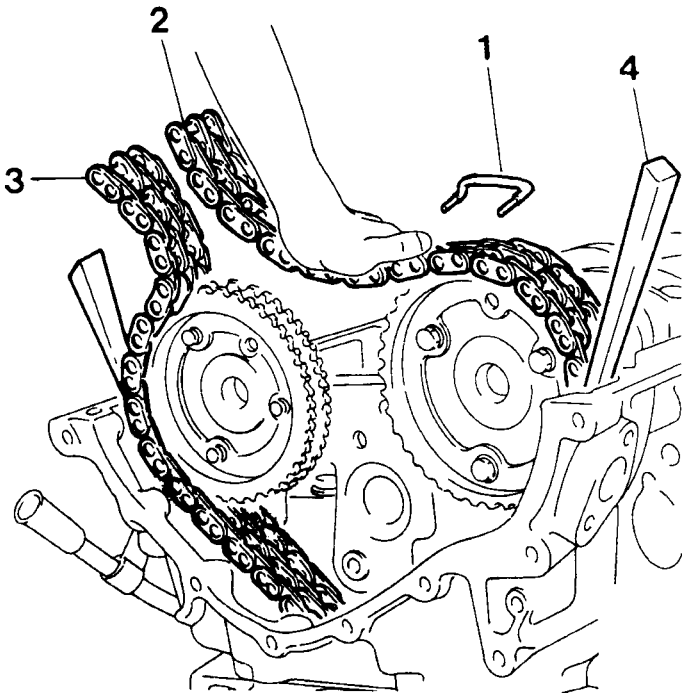

1 Pin
2 New Timing Chain
3 Timing Chain (Used)
4 Wedge
5 Link
6 Center Plate
7 Outer Plate

Downloaded from www.Manualslib.com manuals search engine

Tools Required

000 589 58 43 00 Chain Assembly
103 589 01 63 00 Rivet Set
001 589 72 21 00 Torque Wrench

Replacement Procedure

1. Position the No.1 cylinder to ATDC 20°.

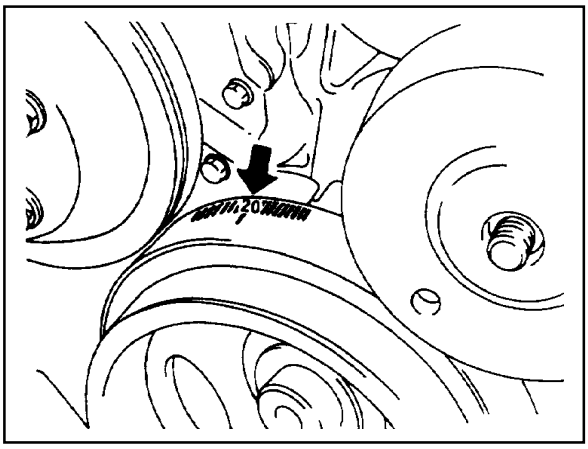

2. Insert the pin to the intake and exhaust camshaft flange.
3. Remove the chain tensioner.

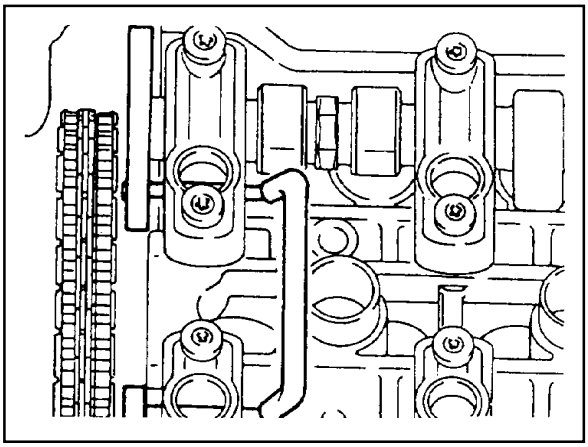

4. Mount the wedges to both sides of the camshaft sprocket as shown in the figure.

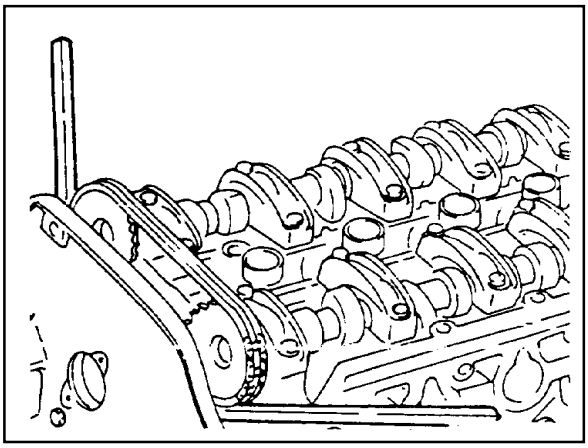

5. Cover the chain housing with a clean cloth, and grind off the timing chain pin from the intake camshaft sprocket with the grinder.

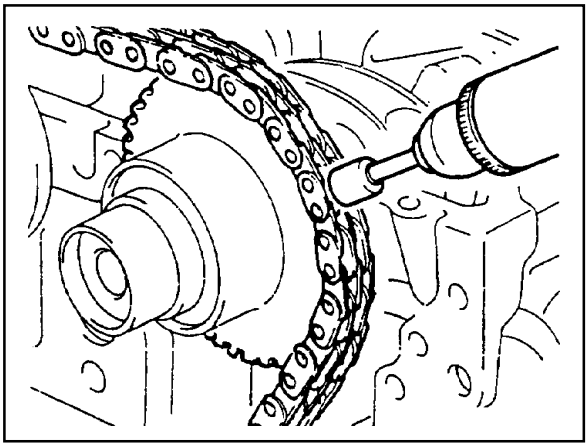

Downloaded from www.Manualslib.com manuals search engine

6. Remove the outer plate (7) with the screw driver and remove the link (5).

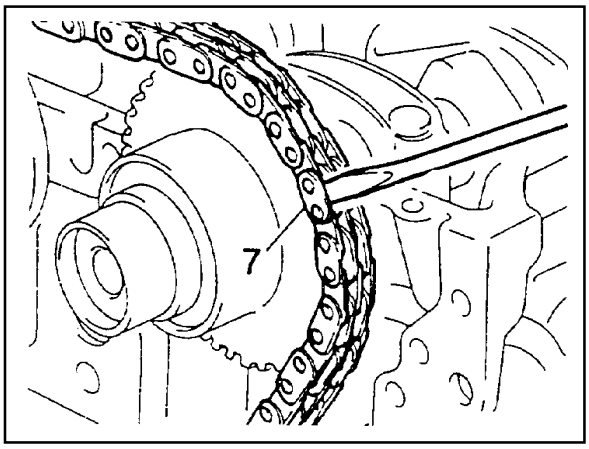

7. Connect the new timing chain (2) to the used timing chain (3) with the link (5), center plate (6, thickness 1.6mm), and the outer plate (7).
8. Rotate the crankshaft in the direction if engine revolution by pressing the new timing chain against the exhaust camshaft sprocket to prevent it to be tangled.

   Notice

   Be sure to remove the wedge before cranking the engine.
9. Take out the used timing chain out from the chain housing.
10. Connect both separators of the new timing chain with the link (5) and the center plate (6).

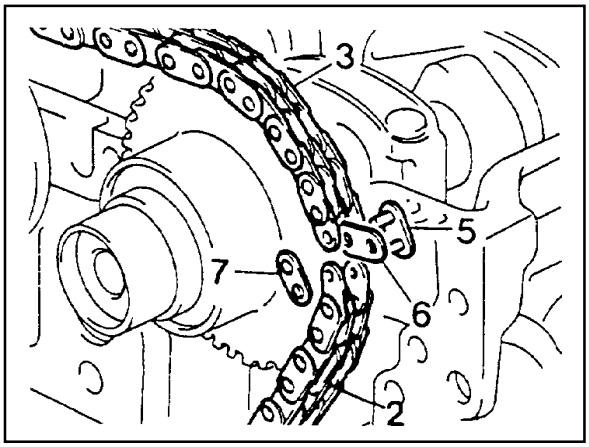

11. Install the jaw (a) and the thrust piece (b) to the assembly tool as shown in the figures.

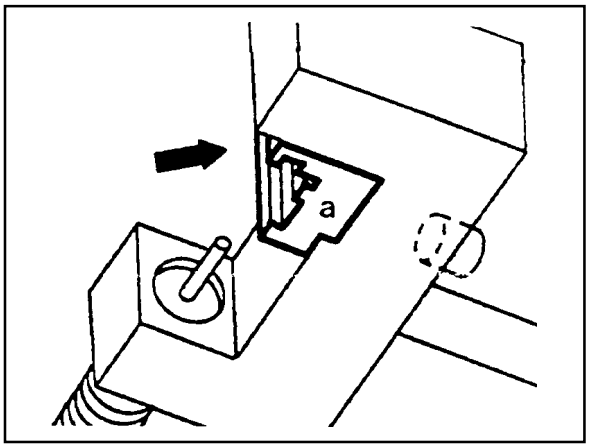

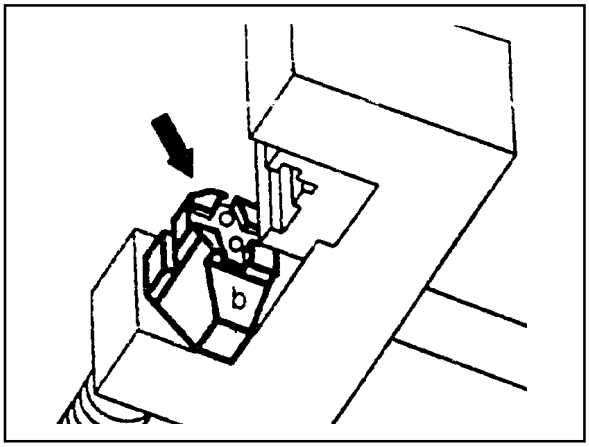

Downloaded from www.Manualslib.com manuals search engine

12. Place the outer plate (7, thickness 1.2mm) inside the thrust piece (b).

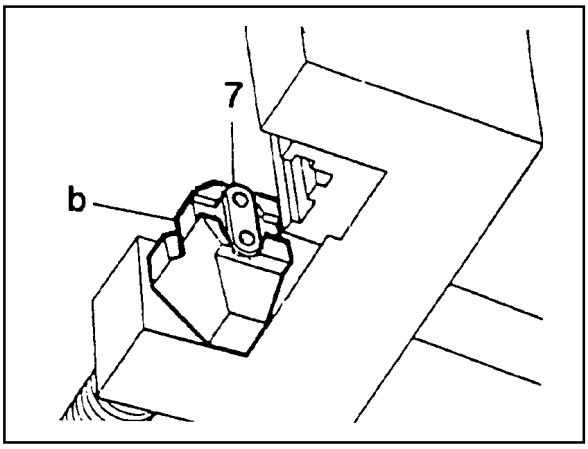

13. Install the assembly tool above the link and tighten the spindle (c) until a block is felt.
14. Place the assembly tool.

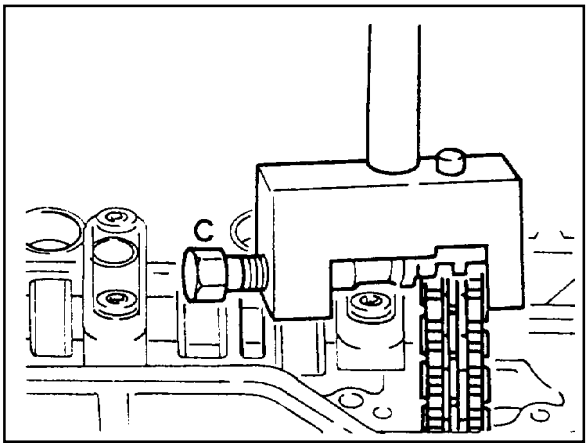

15. Replace the thrust piece (b) as shown in the figure.

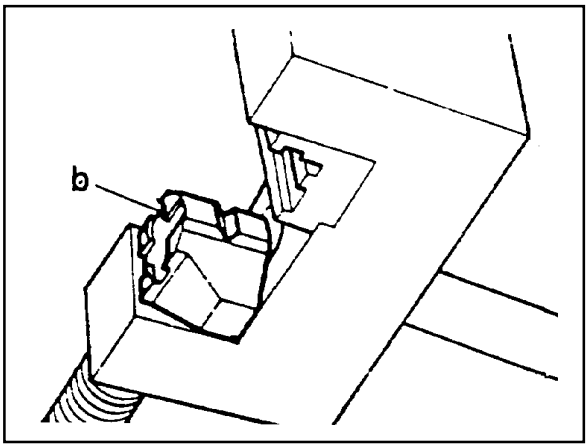

16. Install the assembly tool to the link pin and tighten the spindle (c).

Tightening Torque	30 Nm

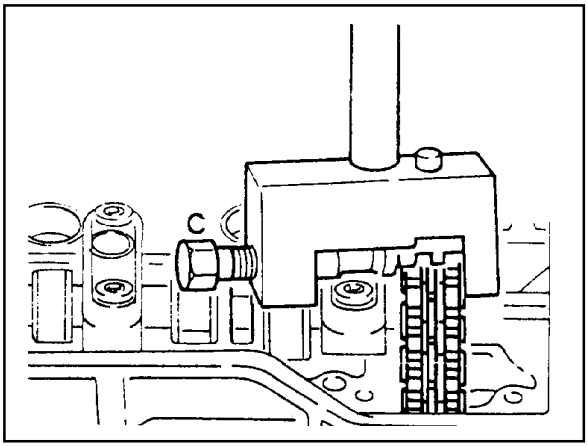

Downloaded from www.Manualslib.com manuals search engine

17. Rivet the link pin.
    Check the condition and it again if necessary.
18. Install the chain tensioner.
    Installation Notice

Tightening Torque	Screw Plug	40 Nm
	Tensioner Assembly	72 - 88 Nm

19. Check the camshaft timing position.

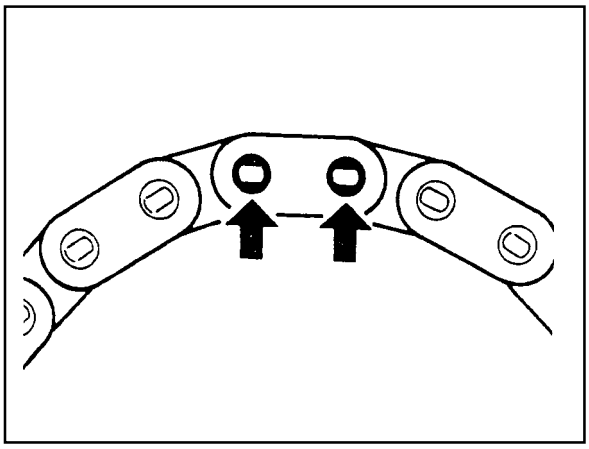

Downloaded from www.Manualslib.com manuals search engine

TENSIONING RAIL

Preceding Work : Removal of cylinder head

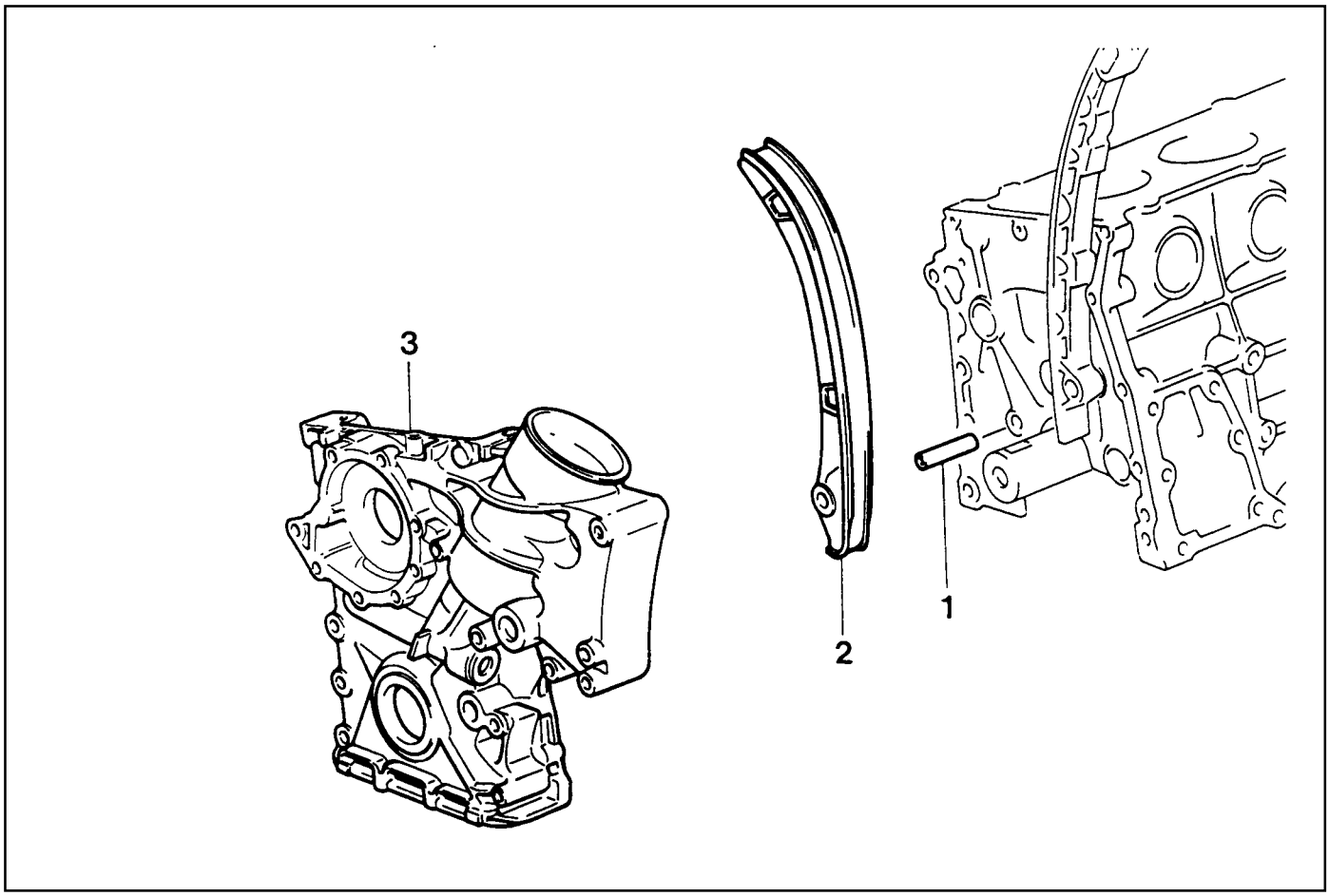

1 Sliding Rail Pin
2 Sliding Rail
3 Timing Gear Case Cover

Removal & Installation Procedure

1. Remove the timing gear case cover (3).

   Notice

   Be careful not to damage the gasket.

2. Remove the sliding rail (1) from the sliding rail pin (2).

   Notice

   - Replace the plastic guide (2) if it is damaged.
   - For installation, exactly align the plastic guide (2) with the sliding rail (1).

3. Installation should follow the removal procedure in the reverse order.

Downloaded from www.Manualslib.com manuals search engine

CYLINDER HEAD GUIDE RAIL

Preceding Work : Removal of cylinder head cover

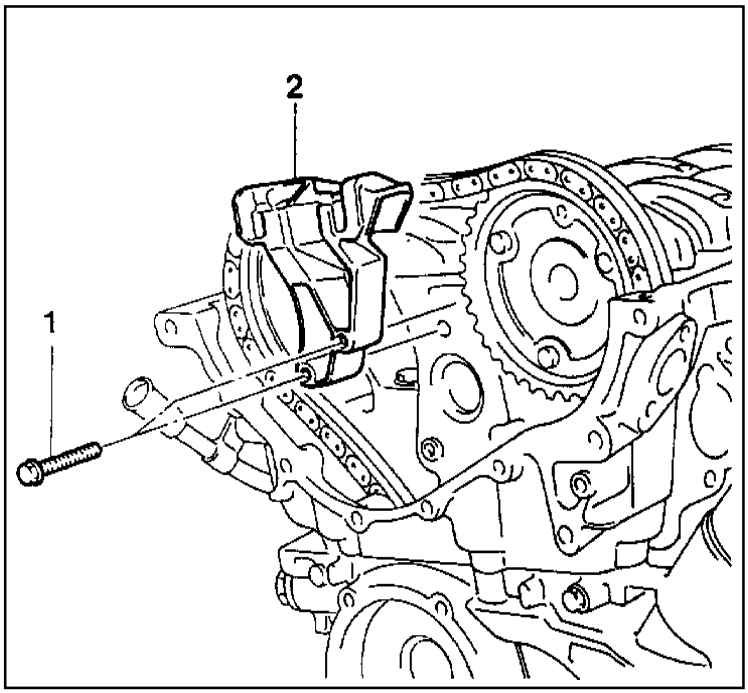

1 Bolt (M6 X 45, 2 pieces) ..... 9-11 Nm
2 Guide Rail

Removal & Installation Procedure

1. Position the number 1 cylinder to ATDC20° guide rail.
2. Install the pin (special tool : 111 589 03 15 00) into the no.1 and no.6 bearing cap hole.
3. Remove the chain tensioner.

Installation Notice

Tightening Torque	Screw Plug	40 Nm
	Tensioner Assembly	72 - 88 Nm

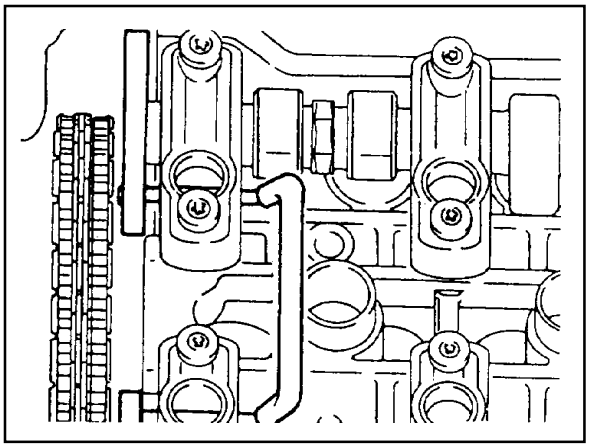

4. Unscrew the bolt (1) and remove the guide rail.

Installation Notice

Tightening Torque	9 - 11 Nm

5. Installation should follow the removal procedure in the reverse order.

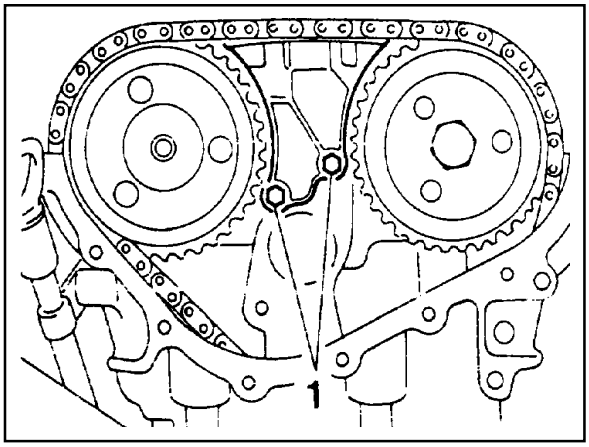

Downloaded from www.Manualslib.com manuals search engine

CRANKCASE GUIDE RAIL

Preceding Work : Removal of timing gear case cover

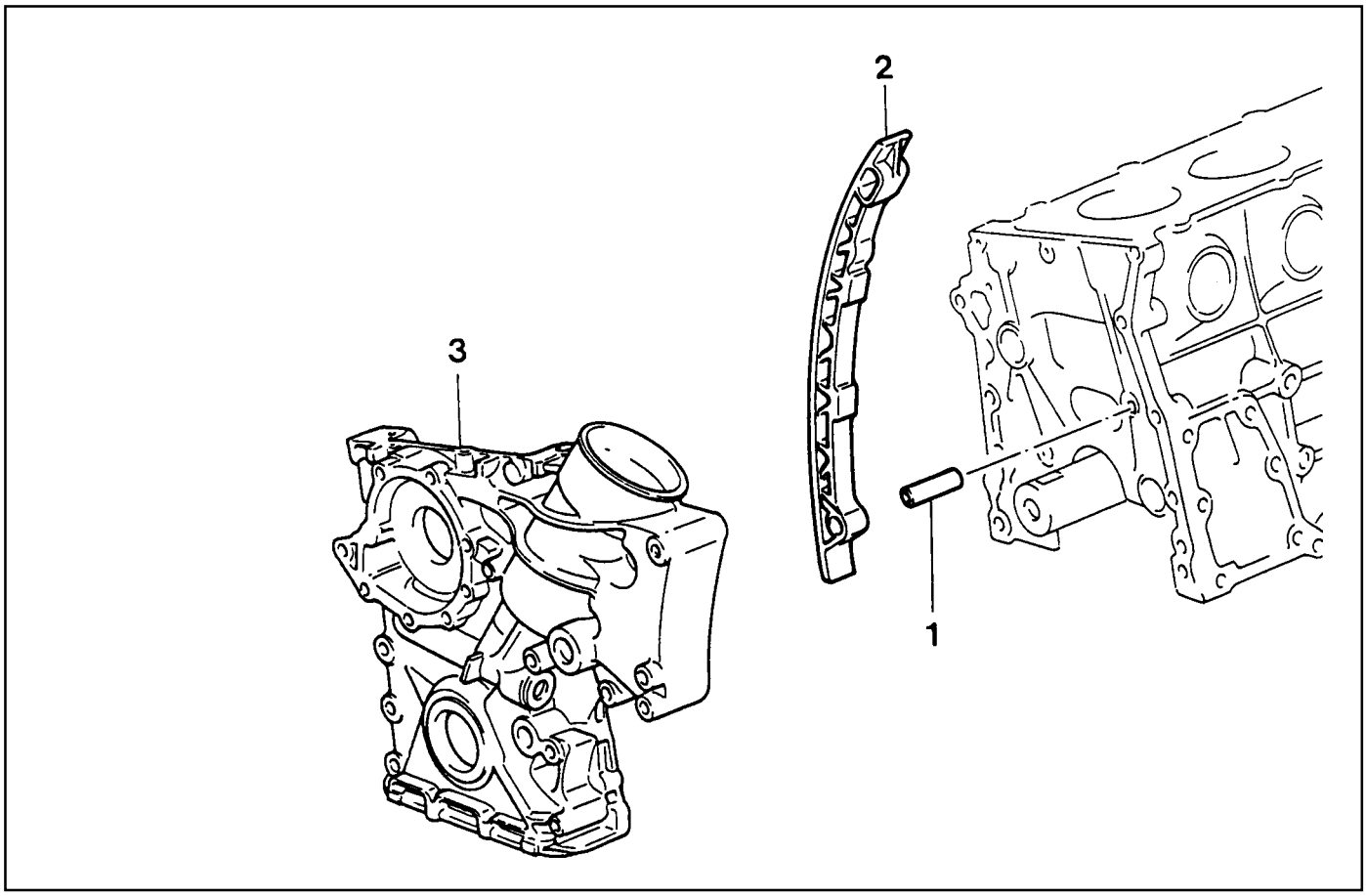

1 Guide Rail Pin
2 Guide Rail
3 Timing Gear Case Cover

Removal & Installation Procedure

1. Remove the timing gear case cover (3).

   Notice

   Be careful not to damage the gasket when removing/ installing the timing gear case cover.

2. Remove the guide rail (2) from the guide rail pin(1).

   Notice

   - Replace the plastic guide (2) if damaged.
   - Connect the plastic guide (2) and the guide rail (1) by aligning them accurately when installing.

3. Installation should follow the removal procedure in the reverse order.

Downloaded from www.Manualslib.com manuals search engine

CRANKSHAFT SPROCKET

Preceding Work : Removal of oil pan
Removal of tensioning rail
Removal of crank case guide rail
Removal of cylinder head

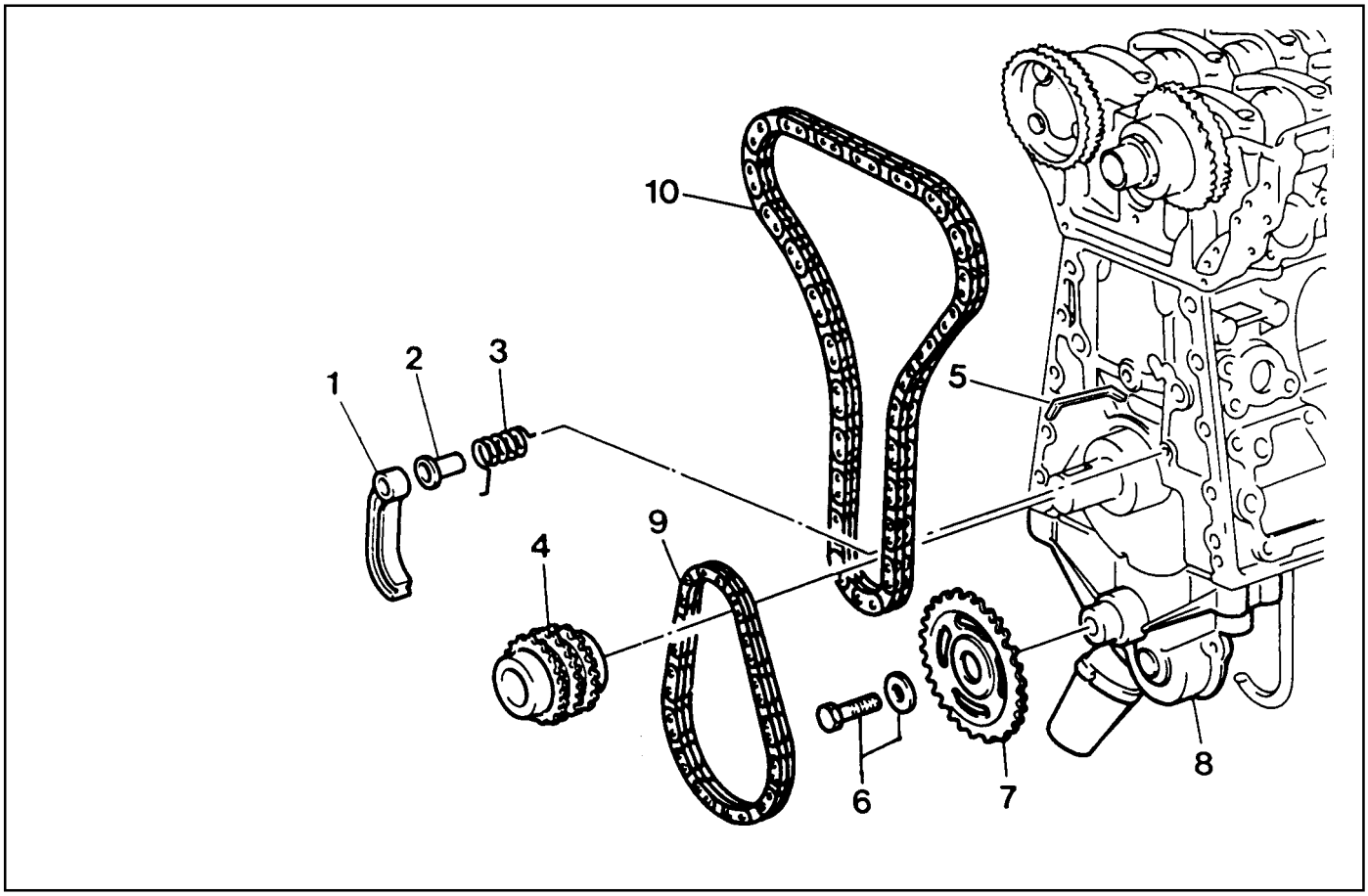

1 Oil Pump Chain Tensioner
2 Oil Pump Chain Spring
3 Oil Pump Chain Bushing (Pin)
4 Crankshaft Sprocket
5 Key
6 Bolt (M8 x 20, 1 piece) / Washer ..... 29-35 Nm
7 Oil Pump Sprocket
8 Oil Pump
9 Oil Pump Roller Chain
10 Timing Chain

Downloaded from www.Manualslib.com manuals search engine

Tools Required

615 589 01 33 00 Caulking Bolt

Removal & Installation Procedure

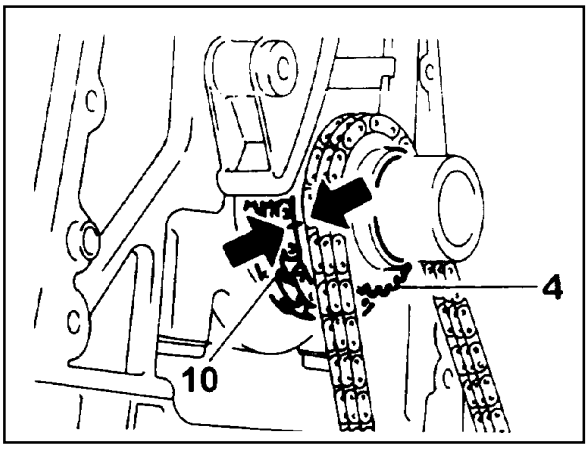

1. Put the assembly mark at the crankshaft sprocket (4) and the timing chain (10) with the paint (arrow).

   Installation Notice

   Align the assembly marks on cranshaft sprocket and timing chain. Also, align the assembly marks on camshaft sprocket and timing chain when installing.

2. Unscrew the bolt (6) and remove the oil pump sprocket (7) from the oil pump.

   Installation Notice

Tightening Torque	29 - 35 Nm

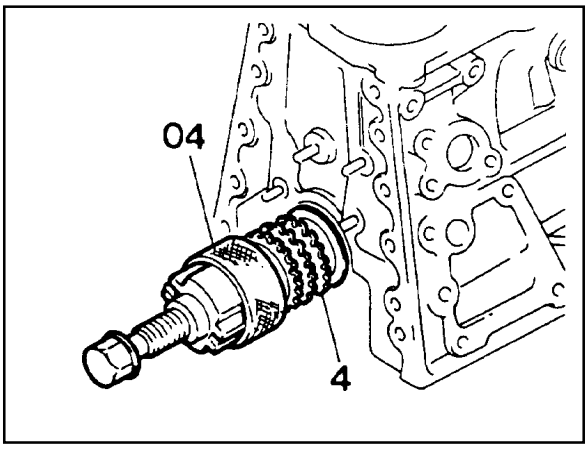

3. Remove the oil pump roller chain (9).
4. Remove the oil pump chain tensioner (1), oil pump chain bushing (3), and the oil pump chain spring (2).
5. Remove the crankshaft sprocket (4) using the puller (04, special tool).

   Notice

   - Make sure not to lose the crankshaft pulley key (5) when removing.
   - Install the crankshaft sprocket (4) after warming it up.

6. Installation should follow the removal procedure in the reverse order.

Caulking (04) 615 589 01 33 00

Downloaded from www.Manualslib.com manuals search engine

PISTON

Preceding Work : Removal of engine
Removal of cylinder head
Removal of oil pan
Removal of oil pump
Removal of baffle plate

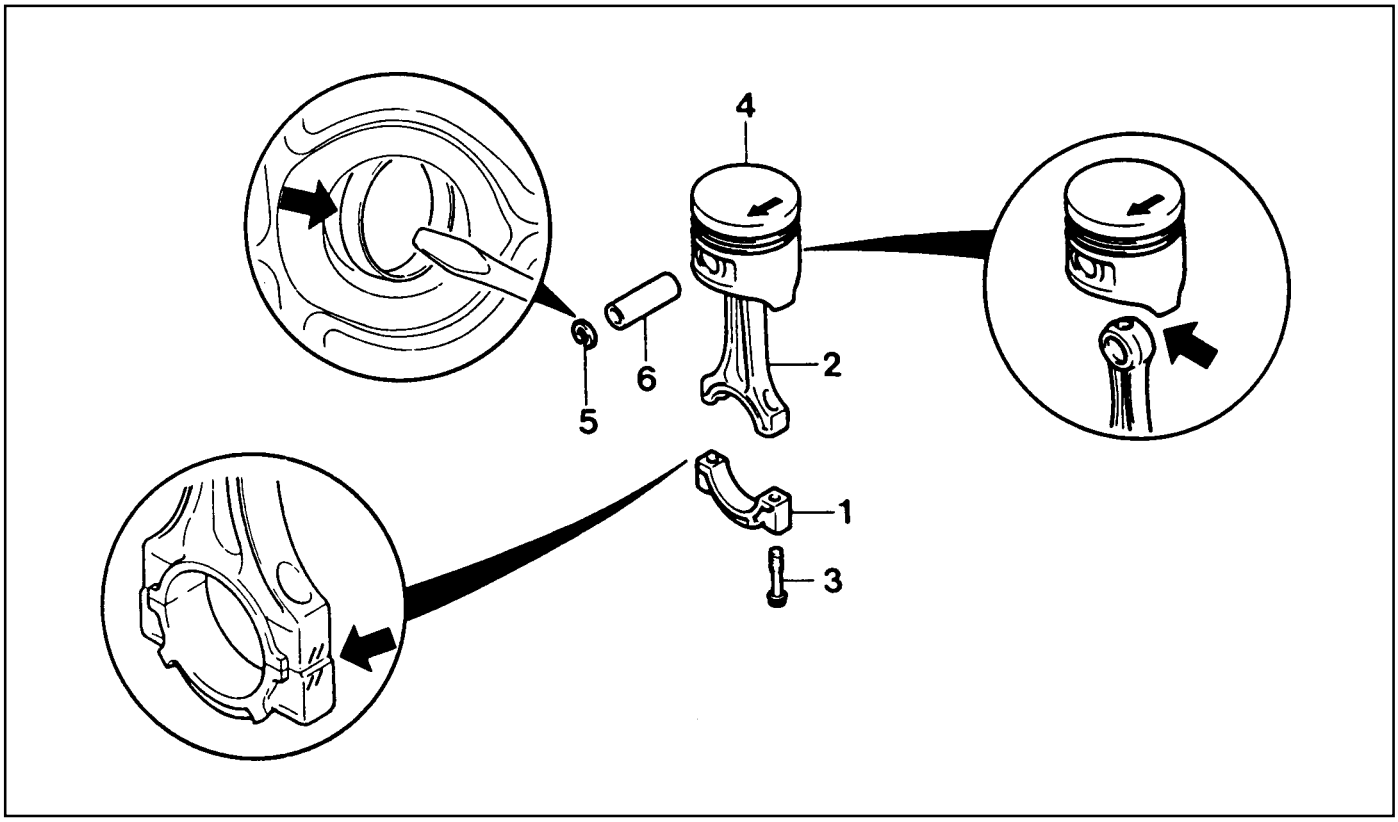

1 Connecting Rod Bearing Cap
2 Connecting Rod
3 Connecting Rod Bolt
(M9 x 52, 8 pieces) ..... 1st step 40 Nm
2nd step 90° +5°
4 Piston
5 Snap Ring
6 Piston Pin

Downloaded from www.Manualslib.com manuals search engine

Tools Required

001 589 72 21 00 Torqued Wrench

000 589 04 14 00 Clamping Strap

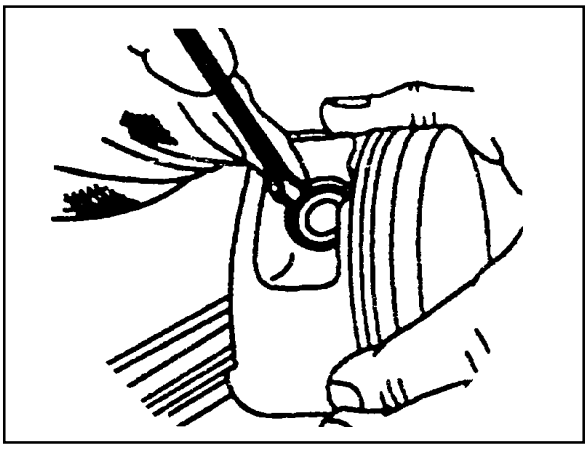

Removal Procedure

1. Unscrew the connecting rod bolt (3) and remove the cap.
2. Remove the connecting rod and the piston upward.

   Notice

   Make sure that the bearing cap and shell are not changed each other.

3. Remove the snap ring (5) and pull out the piston pin (6).

   Notice

   Remove the snap ring using a clean cloth as shown in the right picture so that the piston, piston ring, and the snap ring don't get damaged.

Installation Procedure

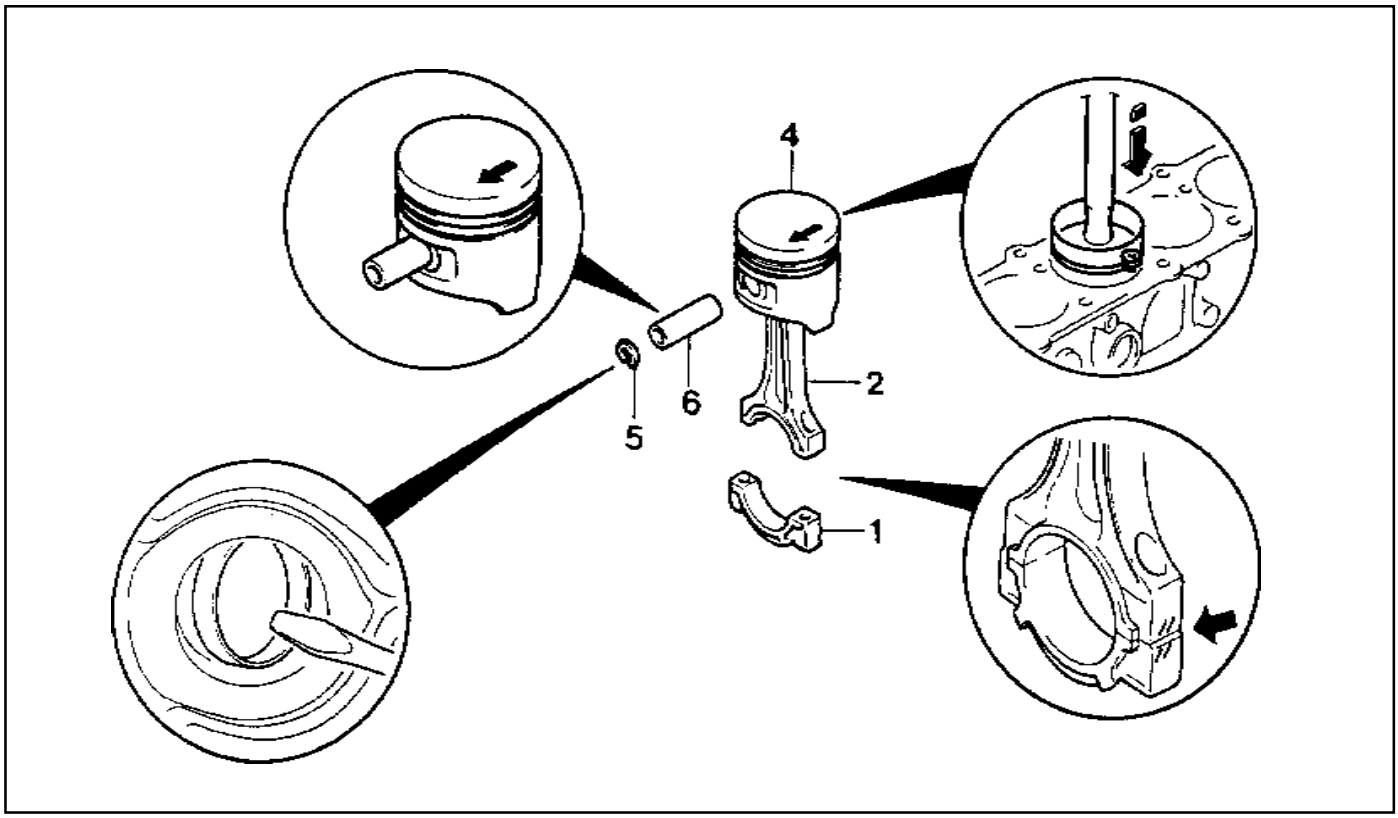

Downloaded from www.Manualslib.com manuals search engine

1. Check the piston ring gap and apply the engine oil to the piston pin and the connecting rod bushing.
2. Connect the piston and the connecting rod by pressing in the piston pin (6) and install the snap ring to the groove.
3. Clean the cylinder bore, connecting rod bearing journal, connecting rod bearing shell and the piston and coat them with engine oil.
4. Install the piston ring using the tensioning strap(000 589 04 14 00).
5. Install the piston so that the arrow on the piston head faces to the forward of the vehicle.
6. After aligning the connecting rod and the bearing cap mark (// or a number), tighten the bolts.

   Installation Notice

Tightening Torque	1st step 35-45 Nm 2nd step 90°+5°

   Apply the engine oil to the bearing cap upper and lower bearing shells.
7. Check if the crankshaft rotates without any trouble by rotating it.

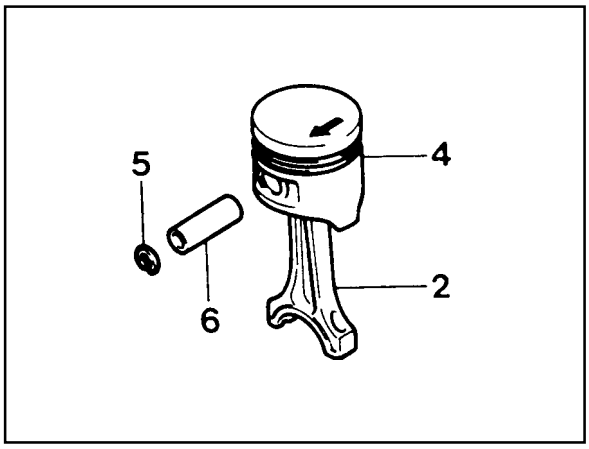

Downloaded from www.Manualslib.com manuals search engine

CONNECTING ROD

Preceding Work : Removal of piston

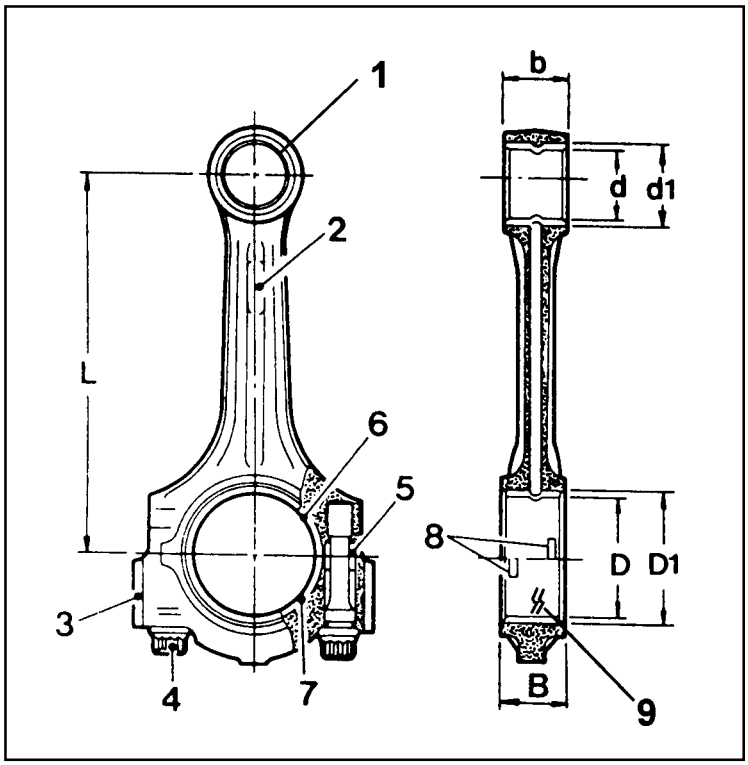

1 Connecting Rod Bushing
2 Oil Gallery
3 Balance Weight
4 Connecting Rod Bolt
(M9 x 52, 8 pieces) ..... 1st step 40 Nm
2nd step 90°
5 Fit Sleeve
6 Upper Connecting Rod Bearing
7 Lower Connecting Rod Bearing
8 BearingShell Lug
9 Marking [Indication(//) or Numbers]

Service Data Standard

Distance (L) from The Connecting Rod Bearing to Bushing Bore Center	E20 : 154 mm E23 : 149 ± 0.05 mm
Width of The Connecting Rod (B) at Bearing Bore	21.940 - 22.000 mm
Width of The Connecting Rod (b) at Bushing Bore	21.940 - 22.000 mm
Basic Bore at The Bearing Shell (D1)	51.600 - 51.614 mm
Basic Bore at The Bushing (d1)	24.500 - 24.571 mm
Bushing Inner Diameter (d)	22.007 - 22.013 mm
Clearance Between The Piston Pin and The Bushing	0.007 - 0.018 mm
Peak-to-valley Height of Connecting Rod Bushing on Inside	0.005 mm
Permissible Wwist of Connecting Rod Bearing Bore to Connecting Rod Bushing Bore	0.1/100 mm
Permissible Deviation of Axial Paralleism of Connecting Rod Bearing Bore to Connecting Rod Bushing Bore	0.045/100 mm
Permissible Deviation of Axial Paralleism of Connecting Rod Bearing Bore from Concentricity	0.01 mm
Permissible Difference of Each Connecting Rod in Weight	0.4 g

Downloaded from www.Manualslib.com manuals search engine

Inspection

1. Measure the basic bore of the connecting rod bearing.

   Notice

   If the basic bore exceeds the value of 51.614mm, replace the bearing or check the connecting rod.

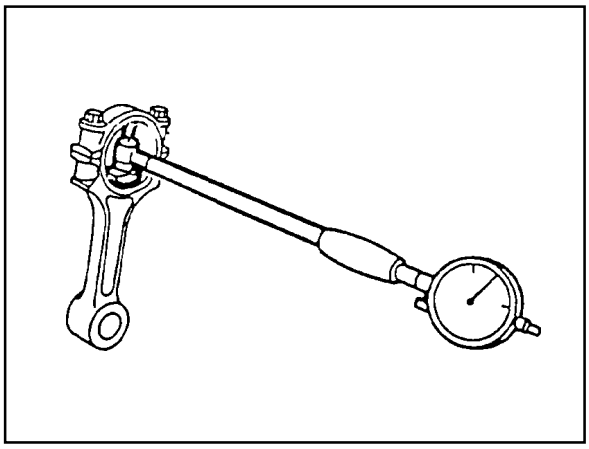

2. Check connecting rod bolts.

Length When New (L)	51.7 - 52 mm
Max. Length (L)	52.9 mm
Tightening Torque	1st step 40 + 5 Nm
	2nd step 90°+10°

   Notice

   If the length exceeds max. length, replace it.

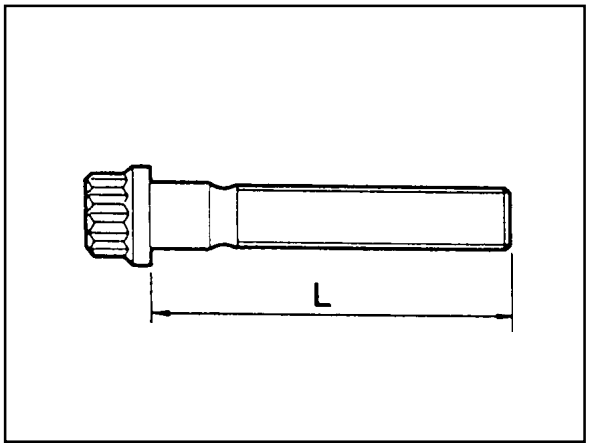

3. Check the assembly mark(indication // or number:arrow) of the connecting rods and the bearing cap when installing.

   Notice

   - Make sure it doesn't exceed over 4g with other connecting rods when replacing the connecting rods.
   - Check if the connecting rod and the bearing cap are accurately seated on the groove when replacing the bearing.

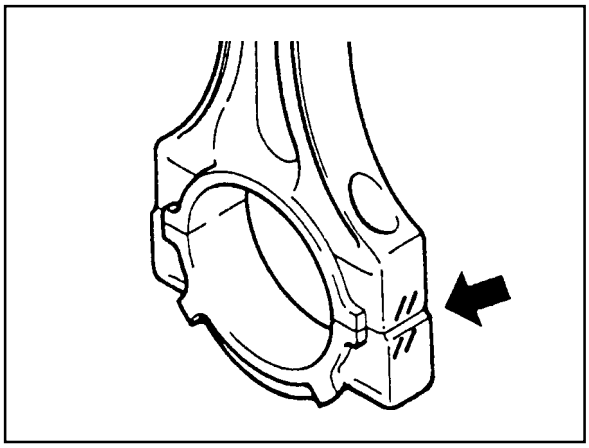

Downloaded from www.Manualslib.com manuals search engine

PISTON RING

Preceding Work : Removal of piston

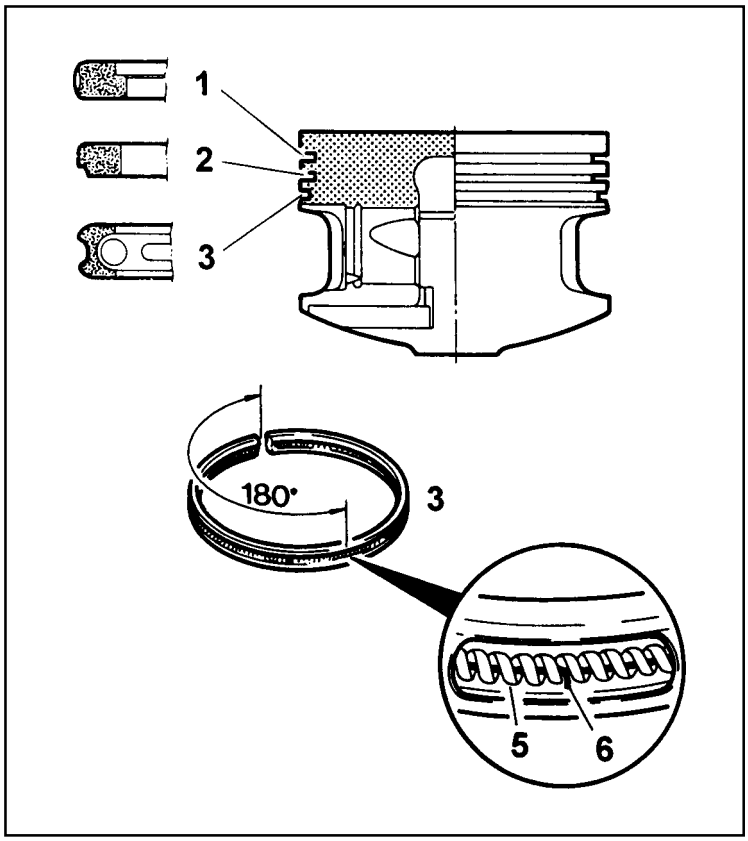

1 Piston Compression Ring (Top Ring)
2 Piston Compression Ring (2nd Ring)
3 Piston Oil Ring
4 -
5 Spacer
6 Side Rail

Tools Required

000 589 51 37 00 Clamping Strap

Replacement Procedure

1. Measure the piston ring's gap.

End Gap of The Piston Ring	Groove 1 0.20 - 0.40 mm
	Groove 2 0.20 - 0.40 mm
	Groove 3 0.20 - 0.45 mm
Gap Between The Piston and The Piston Ring	Groove 1 0.028 - 0.060 mm
	Groove 2 0.010 - 0.045 mm
	Groove 3 0.010 - 0.045 mm

Notice

If out of specification, replace the piston ring.

Downloaded from www.Manualslib.com manuals search engine

2. Remove the piston ring with a pliers.

Clamping Strap 000 589 51 37 00

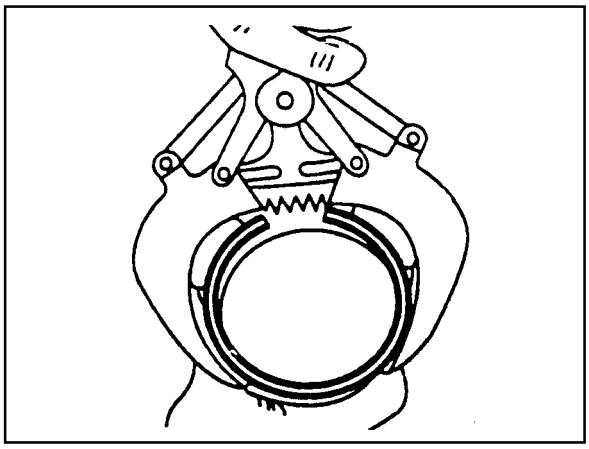

3. For installation, position the piston ring to be the 'TOP' mark on the piston ring upward and arrange the piston ring ends to be 120° apart.
4. Adjust the hook spring joint in the oil ring 180° away from the ring end.

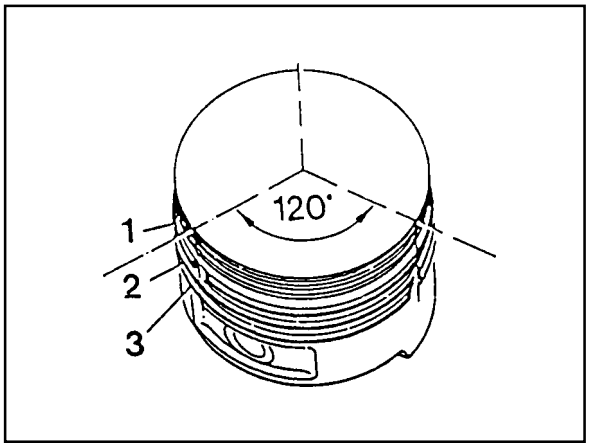

Downloaded from www.Manualslib.com manuals search engine

OIL PAN

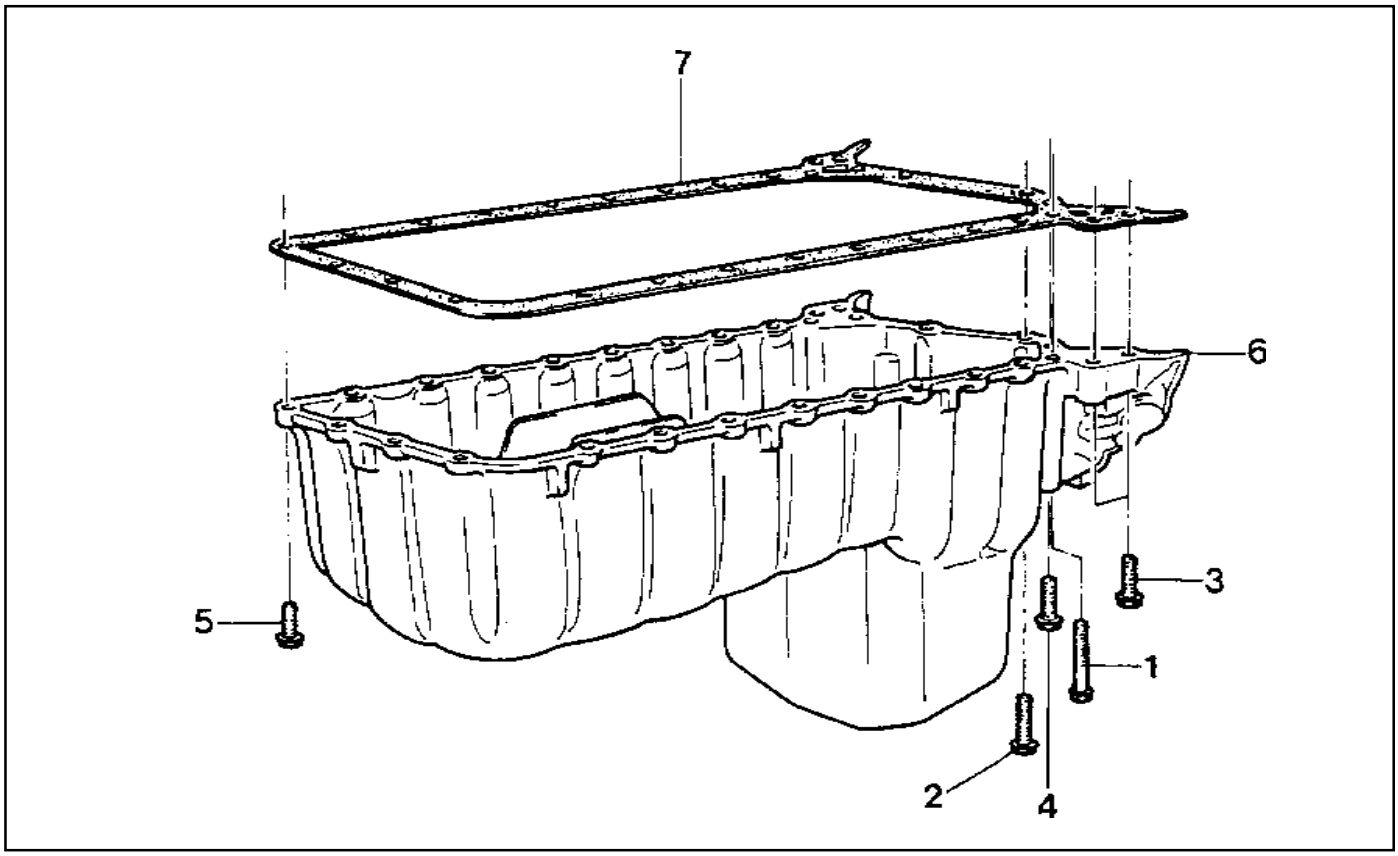

1 Bolt
2 Bolt
3 Bolt
4 Bolt
5 Bolt
6 Oil Pan
7 Gasket

1. Remove the drain plug and drain the oil completely.
2. Unscrew the bolts and remove the oil pan and gasket.

   Notice

   Arrange the bolts according to each size.
3. Clean the inside of oil pan and sealing surface, then apply the sealant.
4. Replace the gasket with new one.
5. Install the oil pan with gasket, and tighten each bolt in specified torque.
6. Check for oil leaks while running the engine.

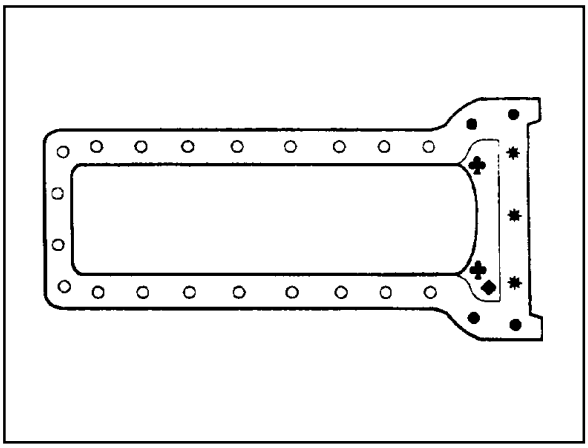

○ M8 X 40, 4 pieces
● M6 X 35, 1 pieces
♣ M6 X 100, 2 piece
★ M6 X 85, 3 pieces
◆ M6 X 20, 20 pieces

Downloaded from www.Manualslib.com manuals search engine

Oil Circulation

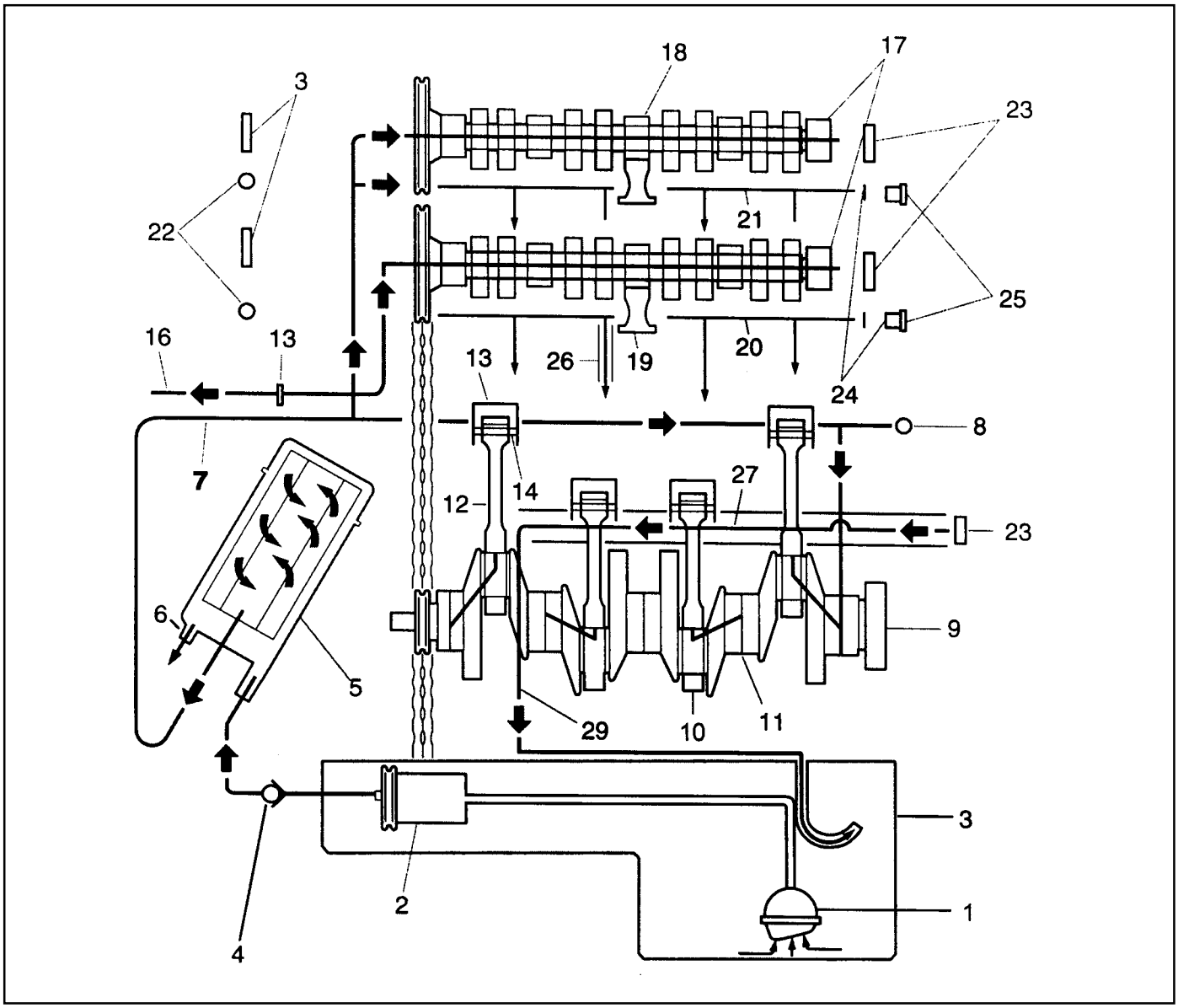

1 Oil Strainer
2 Oil Pump
3 Oil Pan
4 Oil Non-Return Valve
5 Oil Filter
6 Oil Filter Bypass Valve
7 Main Oil Gallery
8 Closing Ball (ƒ15mm)
9 Crankshaft
10 Connecting Rod Bearing
11 Crankshaft Bearing
12 Connecting Rod
13 Piston
14 Oil Spray (Piston Crown Area)
15 Non-Return Valve (Crankcase)
16 Oil Supply (To Chain Tensioner)
17 Camshaft
18 Cam Bearing
19 Valve
20 Oil Gallery (Supply Oil to Intake Tappet)
21 Oil Gallery (Supply Oil to Exhaust Tappet)
22 Ball (ƒ8mm)
23 Camshaft Plug
24 Seal
25 Screw Plug
26 Oil Return Gallery (Cylinder Head and Crankcase)
27 Oil Return Gallery (Crankcase)
28 End Cover (ƒ 20mm)
29 Oil Return Pipe

Downloaded from www.Manualslib.com manuals search engine

ENGINE OIL AND OIL FILTER ELEMENT

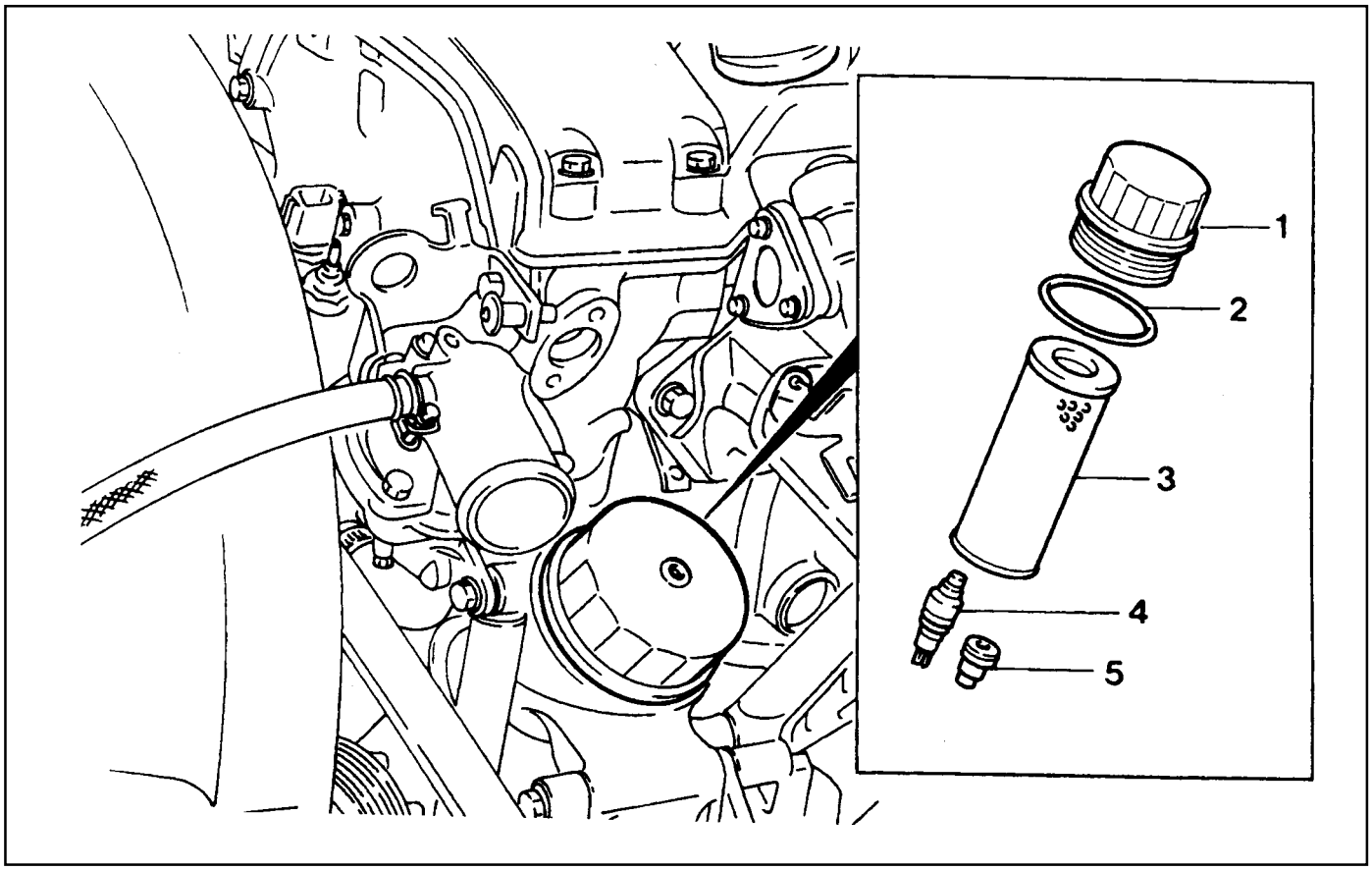

1 Oil Filter Cover ..... 25 Nm
2 O-ring ..... Replace
3 Oil Filter Element
4 Oil Drain Plug
5 Oil Filter Bypass Valve
6 Oil Filter Cap

Downloaded from www.Manualslib.com manuals search engine

Tools Required

103 589 02 09 00 Oil Filter Socket Wrench

Replacement Procedure

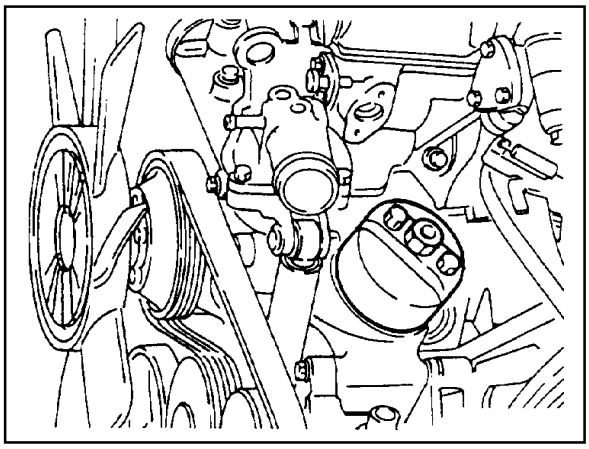

1. Install the socket wrench"7" (special tool : 103 589 02 09 00) on the oil filter cover (2).

   Notice

   Make the screw cover removable by tightening the bolt at the side of the socket wrench (special tool).
2. Install the wrench to the upper bolt in the socket wrench and remove the oil cover by turning it.
3. Remove the oil filter element.

   Notice

   Work with a cloth under the vehicle when removing the oil filter element to not drain the oil.

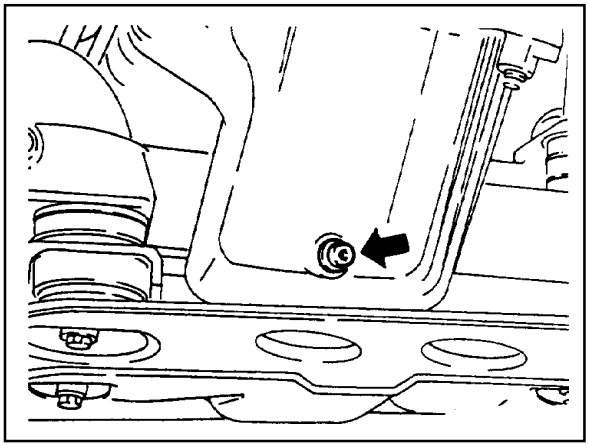

4. Remove the drain plug (1) and drain the engine oil.

   Notice

   Leave the oil filler cap (3) open to ease the engine oil discharge.
5. Tighten the engine oil drain plug after cleaning it.

   Installation Notice

Tightening Torque	25 Nm

   Replace the seal washer with new one.
6. Replace the O-ring(5) in the oil filter cover with new one.

   Notice

   Apply the engine oil to the O-ring.
7. Insert new oil filter element into the oil filter housing.
8. Temporarily tighten the oil filter cover (2). Install the socket wrench "7" (special tool : 103 589 02 09 00), and then completely tighten it.

   Installation Notice

Tightening Torque	25 Nm

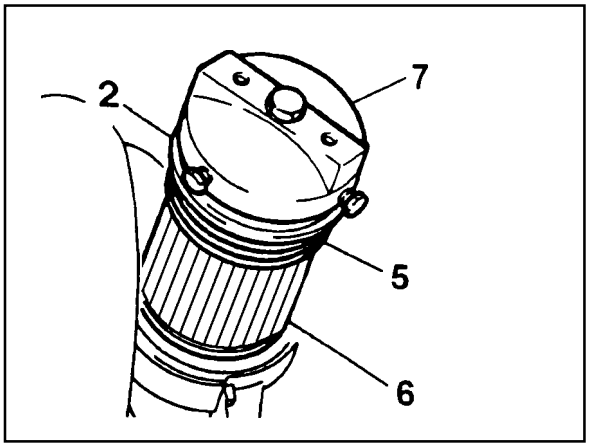

2 Oil Filter Cover
5 O-ring
6 Oil Filter Element
7 Special Tool (Socket Wrench)

9. Fill up engine oil through the engine oil filler opening.
10. Check for oil leaks at normal engine temperature after starting the engine.
11. Stop the engine and wait 5 minutes.
    Check the oil level and fill up as specified if necessary.

Downloaded from www.Manualslib.com manuals search engine

OIL PUMP

Preceding Work : Removal of oil pan

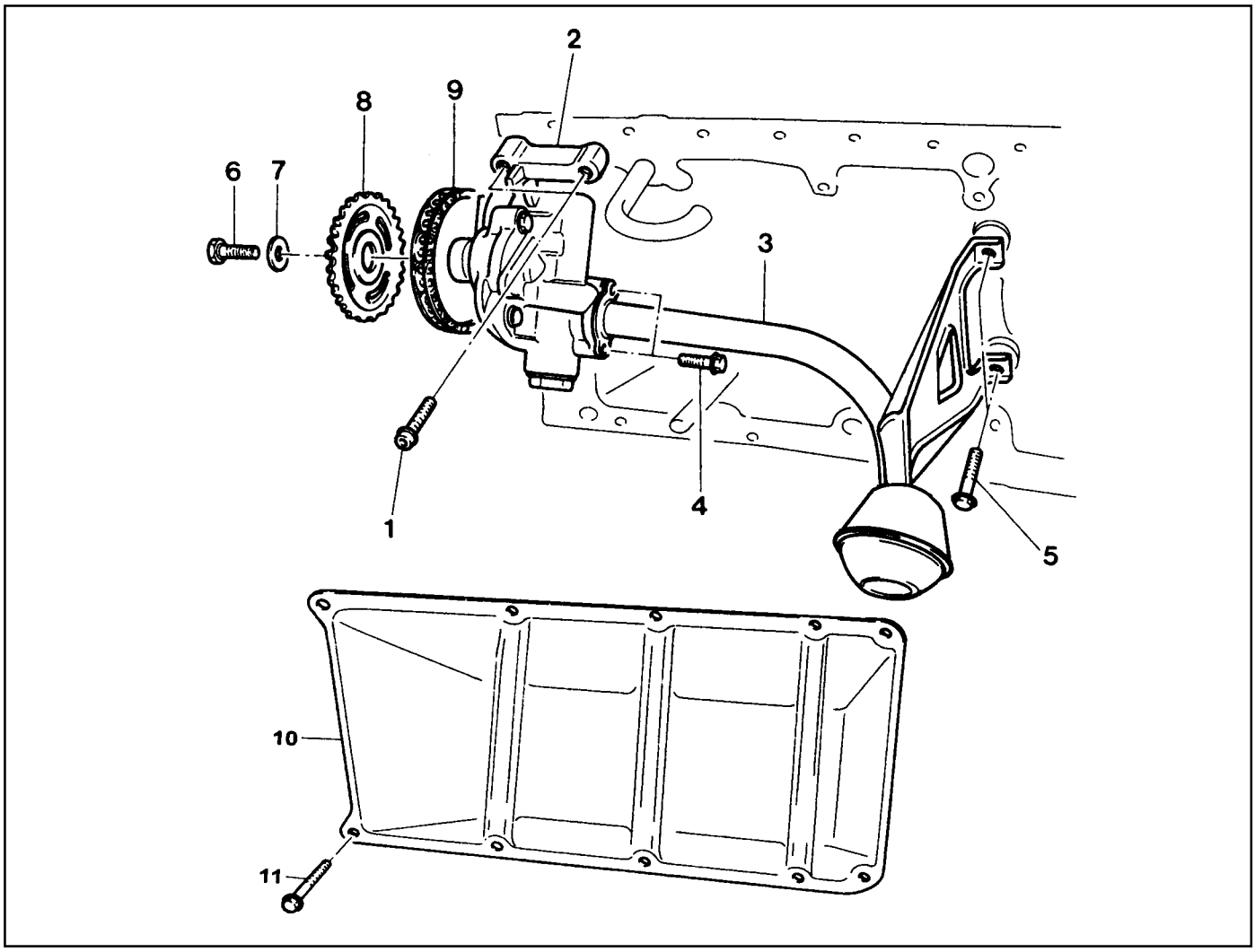

1 Bolt (M8 X 35, 3 piece) ..... 22.5-27.5 Nm
2 Oil Pump
3 Oil Strainer Assembly
4 Bolt (M6 X 12, 2 pieces) ..... 9-11 Nm
(In E23 Engine, These Bolts are Combined with Baffle Plate)
5 Bolt (M8 X 20, 1 pieces) ..... 29-35 Nm
6 Washer
7 Sprocket (Oil Pump Drive)
8 Chain (Oil Pump Drive)
9 Plate-Baffle
10 Bolt (M6 X 12, 6 piece) ..... 9-11 Nm
(E23 Engine Only : Baffle Plate Mounting Bolt)

Downloaded from www.Manualslib.com manuals search engine

Removal & Installation Procedure

1. Unscrew the bolt (6) from the oil pump drive sprocket and separate the oil pump drive chain.

   Installation Notice

Tightening Torque	29 - 35 Nm

2. Unscrew the bolts (4,5) and remove the oil strainer assembly (3).

   Installation Notice

Tightening Torque	Bolt (4) 9 - 11 Nm
	Bolt (5) 9 - 11 Nm

   Insert the steel gasket into the oil pump and bolt (4) mounting surface.

3. Unscrew the six bolts (11) and remove the haffle plate.

   Installation Notice

Tightening Torque	9 - 11 Nm

4. Unscrew the three bolt (1) and remove the oil pump.

   Installation Notice

Tightening Torque	22.5 - 27.5 Nm

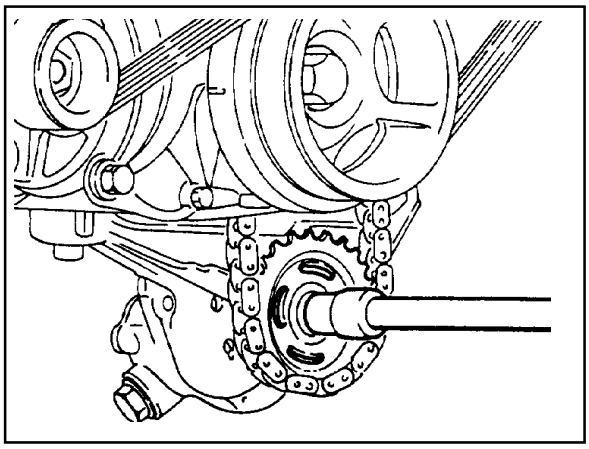

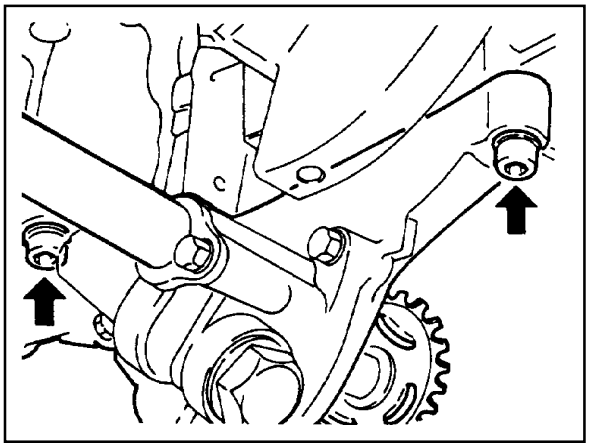

Downloaded from www.Manualslib.com manuals search engine

OIL PRESSURE RELIEF VALVE

Preceding Work : Removal of oil pan

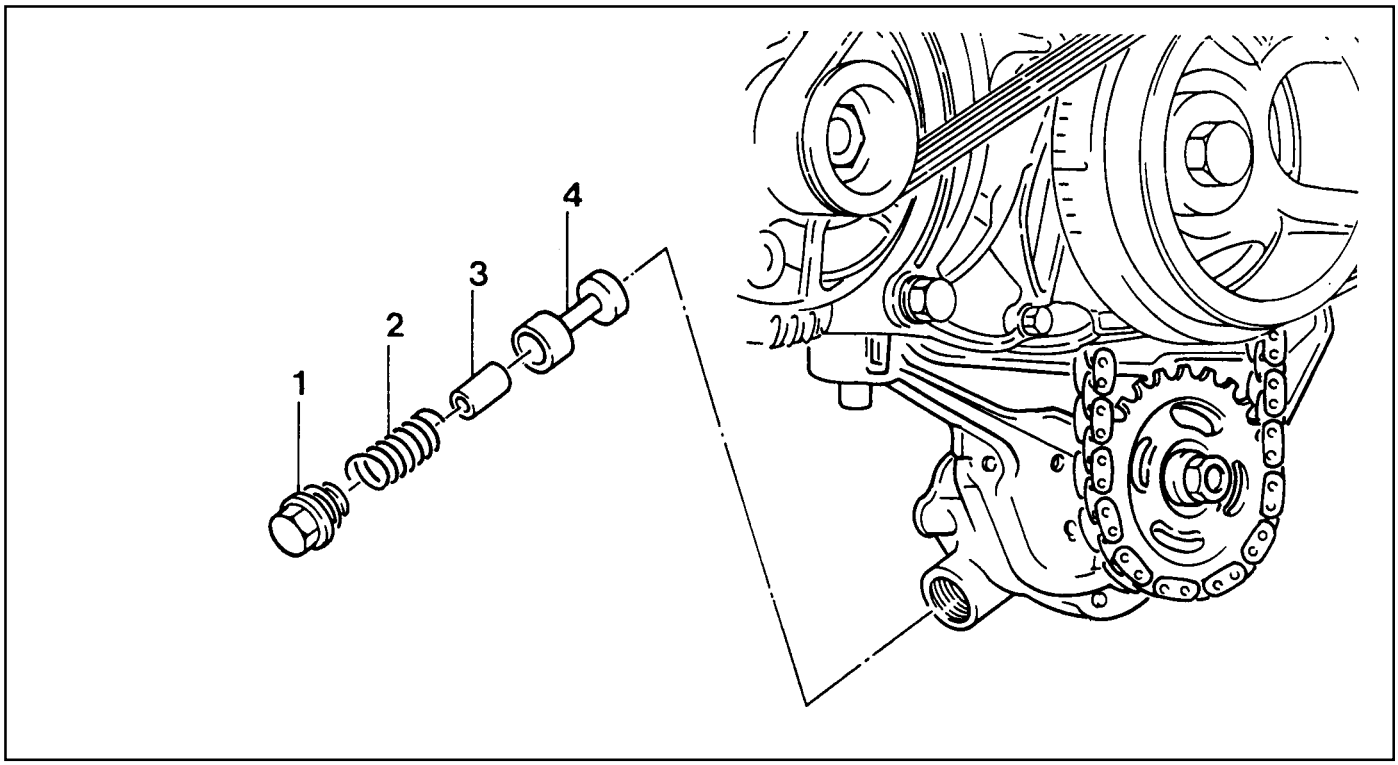

1 Screw Plug ..... 50 Nm
2 Compression Spring
3 Guide Pin
4 Piston

Removal & Installation Procedure

1. Remove the screw plug (1).

   Installation Notice

Tightening Torque	50 Nm

2. Remove the spring (2), guide pin (3) and the piston (4).
3. Installation should follow the removal procedure in the reverse order.

   Notice

   Don't use the seal for the screw plug.

Downloaded from www.Manualslib.com manuals search engine

OIL NON-RETURN VALVE

Preceding Work : Removal of timing gear case cover

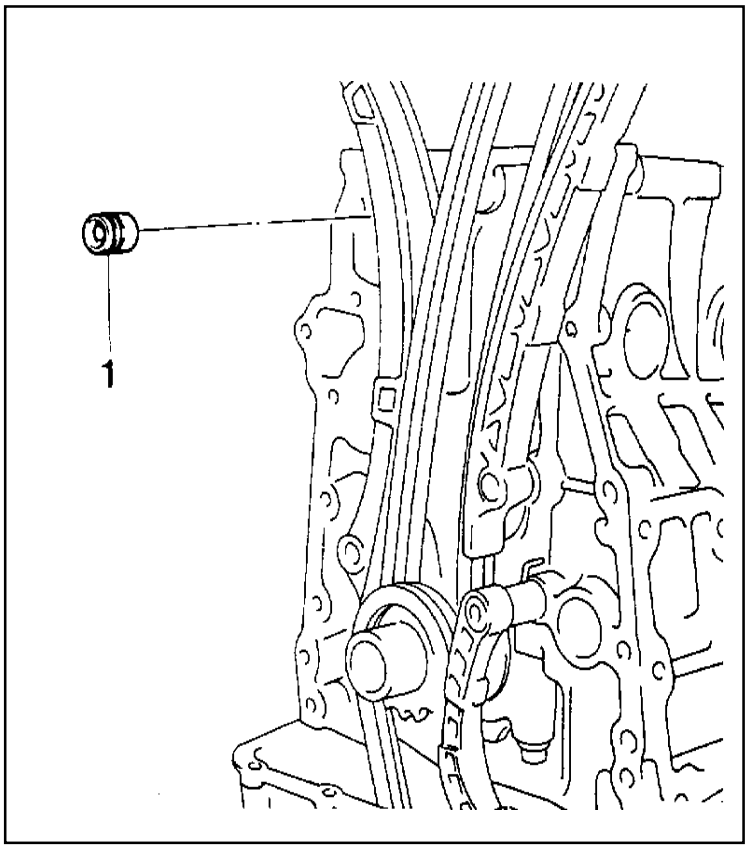

1 Oil Non-Return Valve

Functions

The non-return valve prevents the oil in the chain tensioner from drying up. In other words, it stops oil-returning in order to prevent the oil in the chain tensioner from getting dry. As a result, the chain tensioner can be activated with oil in itself.

Replacement Procedure

1. Remove the non-return valve using a pliers.
2. Insert new non-return valve with hand.

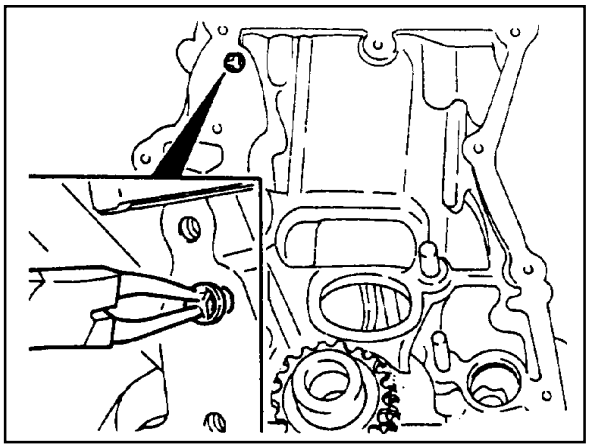

Downloaded from www.Manualslib.com manuals search engine

OIL DIPSTICK GUIDE TUBE

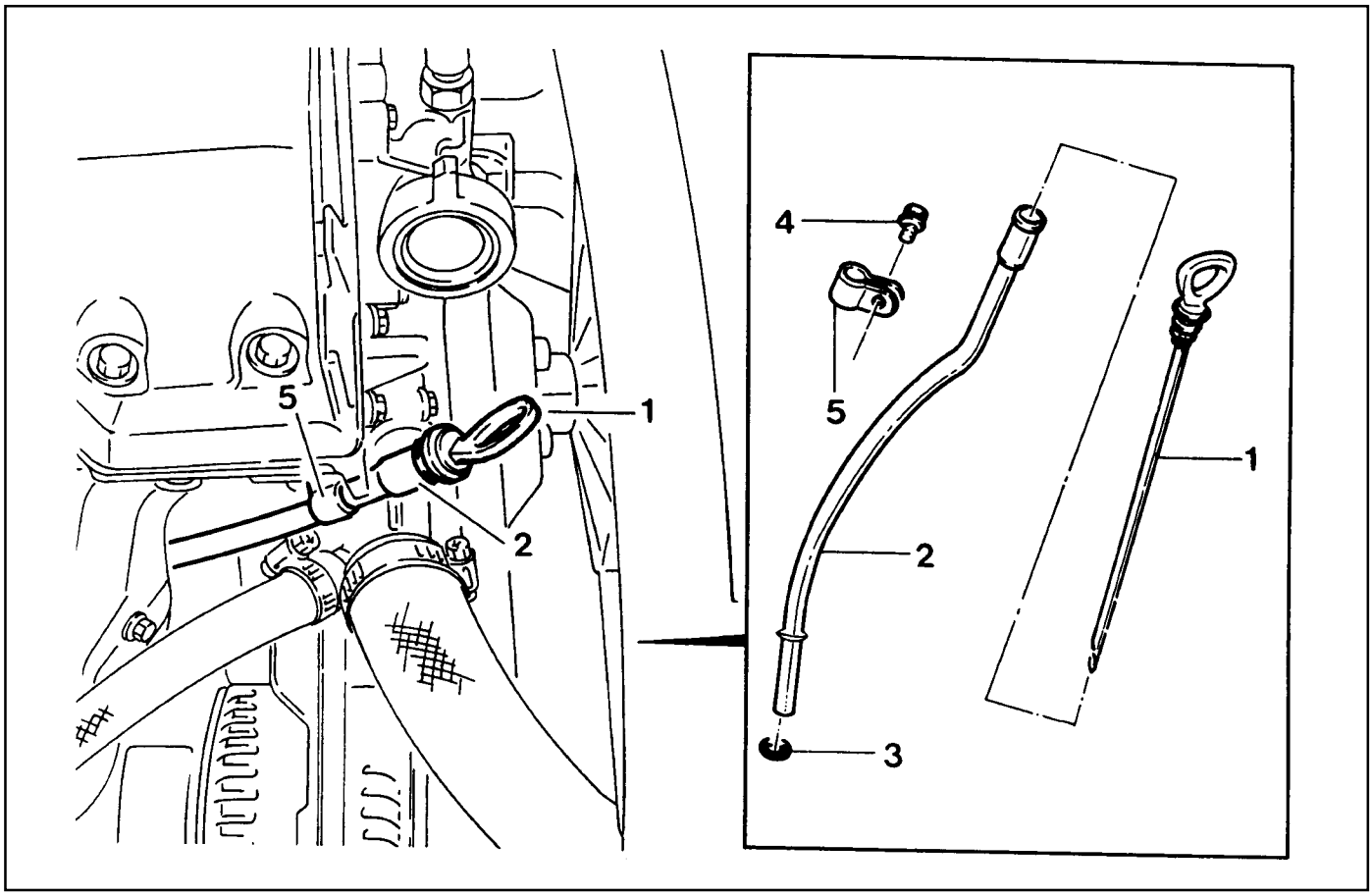

1 Oil Dipstick Level Gauge
2 Oil Dipstick Guide Tube
3 O-ring
4 Bolt (M6 X 16, 1 piece) ..... 9-11 Nm
5 Clamp

Removal & Installation Procedure

1. Pull out the oil dipstick level gauge (1).
2. Unscrew the bolt (4) and remove the oil dipstick guide tube (2).

   Installation Notice

Tightening Torque	9 - 11 Nm

   It is very hard to remove the oil dipstick guide tube without special tool. If it is not necessary, do not remove the guide tube.
3. Installation should follow the removal procedure in the reverse order.
4. Check for leaks by starting the engine.

Downloaded from www.Manualslib.com manuals search engine

UNIT REPAIR

CORE PLUGS IN CRANKCASE

Preceding Work : Draining of the coolant

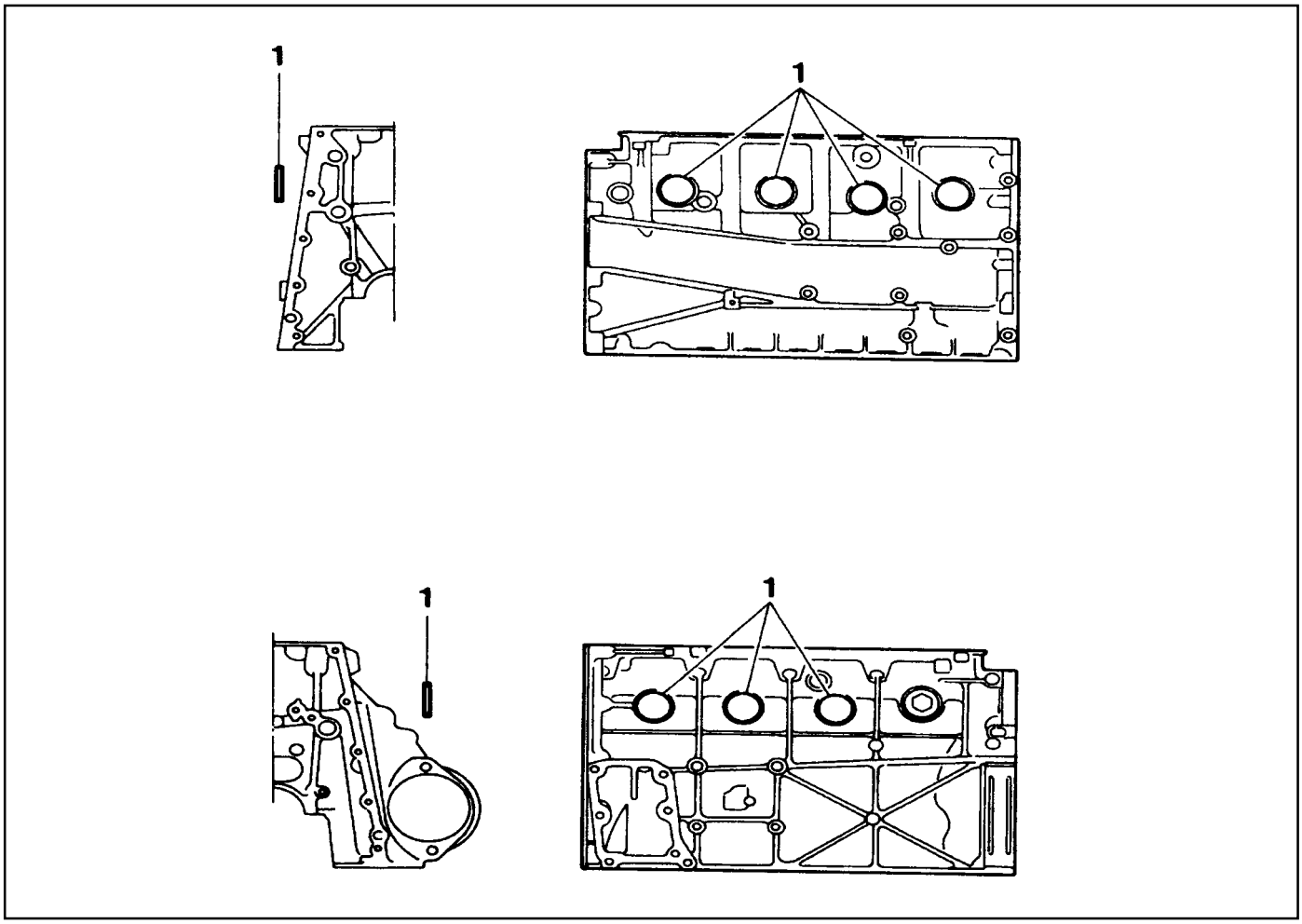

1 Core Plug ..... Replace

Downloaded from www.Manualslib.com manuals search engine

Tools Required

102 589 00 15 00 Drift

Replacement Procedure

1. Remove the intake and exhaust manifolds.
2. Pull back the core plug until the end of one side comes out using the screw driver.

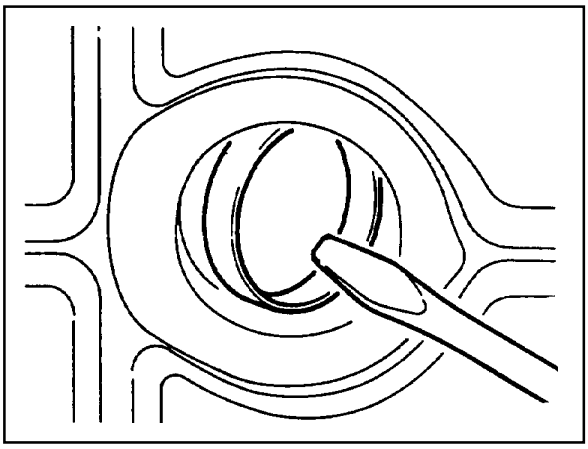

3. Pull out the plug carefully using a pliers.

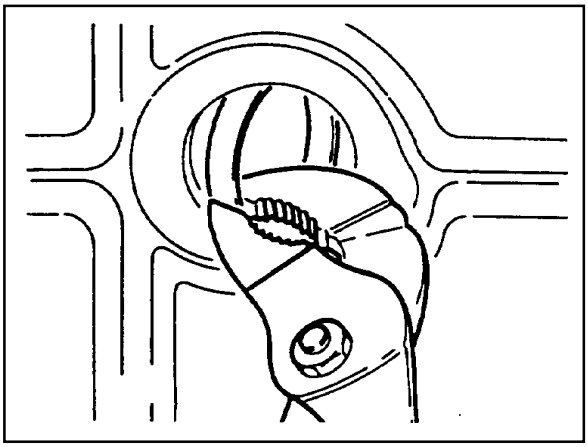

4. Clean the sealing surface and apply Loctite 241.

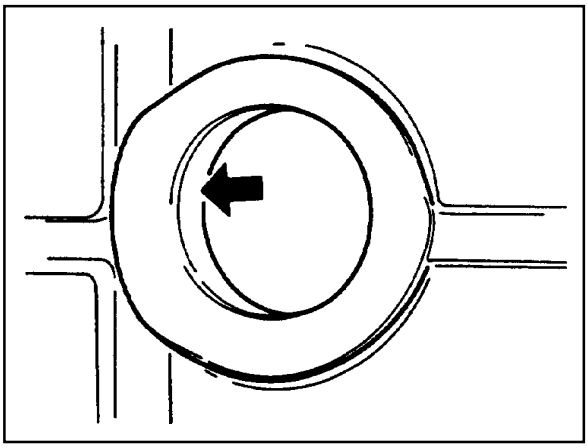

5. Press in new plug using a drift.

   Notice

   Wait for about 45minutes before filling the coolant so that the Loctite 241 hardens.

6. Warm up the engine and check the coolant for leaks.

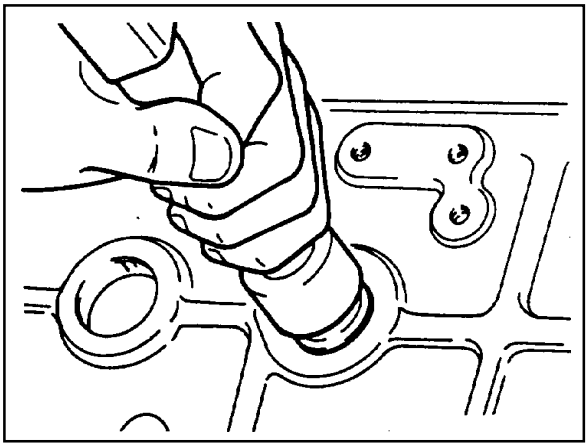

Downloaded from www.Manualslib.com manuals search engine

CYLINDER BORE

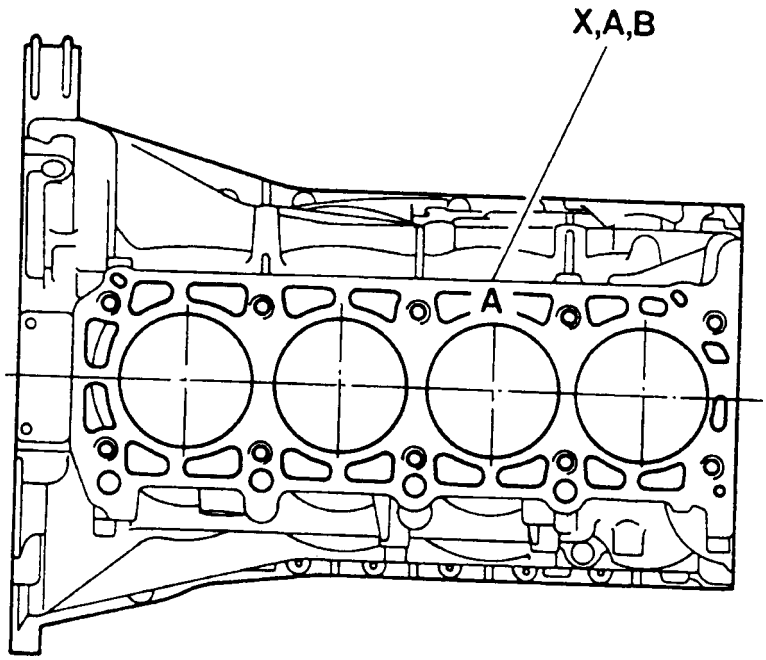

Group Code Letter and Cylinder Bore Size

Engine	Group Code Letter of Cylinder	Piston Type to be Used	Cylinder Bore Size (mm)
E23	A	A or X	f90.906 - f90.912
	X	A, X or B	f90.906 - f90.912
	B	X or B	f90.912 - f90.918
	X + 5	X + 5	f90.950 - f90.968
	X + 10	X + 10	f91.000 - f91.018
E20	A	A or X	f89.900 - f90.906
	X	A, X or B	f89.906 - f89.912
	B	X or B	f89.912 - f89.918
	X + 5	X + 5	f89.950 - f89.968
	X + 10	X + 10	f90.000 - f90.018

Downloaded from www.Manualslib.com manuals search engine

Type	Group Code Letter[1)]	Cylinder Bore Size (mm)
Standard Size	A	f 89.900 - f 90.906
E20 : f 89.9	X	f 89.906 - f 89.912
E23 : f 90.9	B	f 89.912 - f 89.918
1st Repair Size	A	f 90.150 - f 90.156
(Standard Size + 0.25)	X	f 89.156 - f 90.162
	B	f 90.162 - f 90.168
2nd Repair Size	A	f 90.400 - f 90.406
(Standard Size + 0.5)	X	f 90.406 - f 90.412
	B	f 90.412 - f 90.418

[1)] The group code letters are carved on the surface of the piston crown and in the mating surface of the crankcase.

Service Data Standard

Wear Limit in Longitudinal and Transverse Direction		0.1 mm
Permissible Deviation of Cylinder Out-of-round	When new	0.007 mm
	Wear limit	0.05 mm
Permissible Deviation of Rectangular Cylinder Height (Except Chamfered Area)		0.05 mm
Basic Peak-to-valley Height After Final Honing and Brushing		0.003 - 0.006 mm
Chamfer Angle		75°
Honing Angle		50° ± 10°

Measurement of Cylinder Bore

1. Clean the cylinder wall.
2. Using a internal diameter gauge, measure the bore size in axial and transverse direction at three points (1,2,3).

1,2,3 Measuring Points
A. Axial Direction
B. Transverse Direction
a. Location of the No.1 Piston Ring at TDC
b. Location of the Piston BDC
c. Location of the Oil Ring at BDC

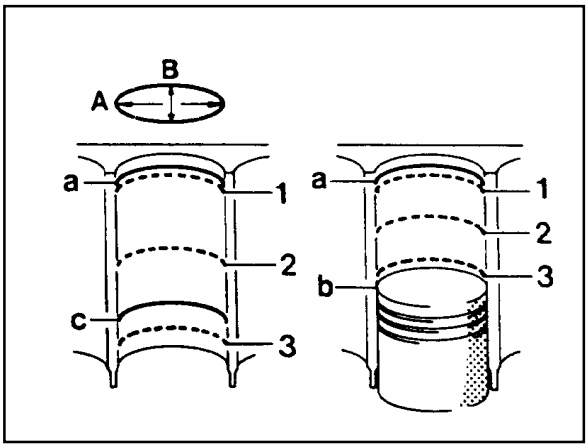

Chamfer Angle

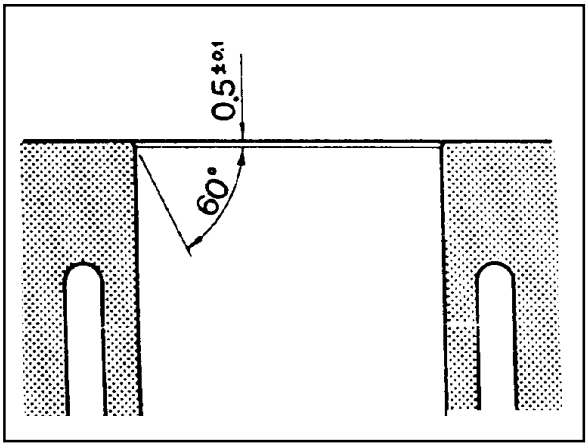

Downloaded from www.Manualslib.com manuals search engine

CRANKCASE MATING SURFACE

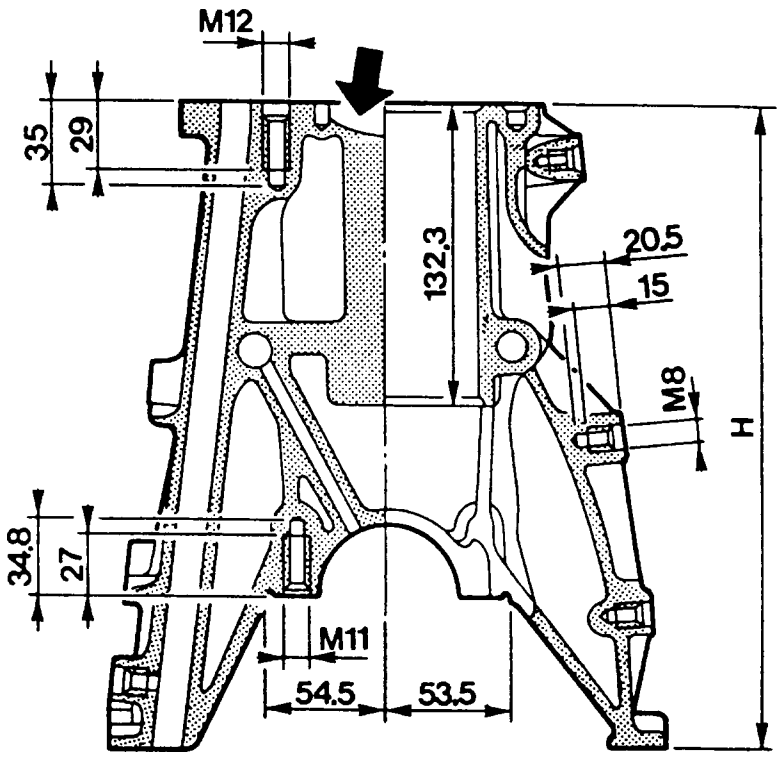

Service Data Standard

Height of the Crankcase “H” (When New)		289.35 - 289.45mm
Minimum Height After Milling		289.05mm
Flatness	Crankcase Upper Mating Surface	0.03mm
	Crankcase Lower Mating Surface	0.04mm
Permissible Deviation of Parallelism of the Upper to Lower Mating Surface	Axial Direction	0.1mm
	Transverse Direction	0.05mm
Peak-to-valley Height	Crankcase Upper Mating Surface	0.012 - 0.009mm
	Crankcase Lower Mating Surface	0.025 - 0.020mm

Downloaded from www.Manualslib.com manuals search engine

Chamfering Procedure

1. Chamfer angle : 75°

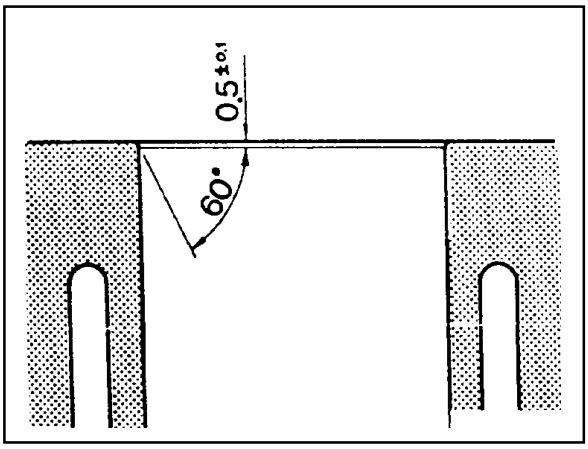

2. Polish the lower chamfered area evenly with a grinder after finishing the chamfering with a suitable tool (e.g., hand milling cutter).

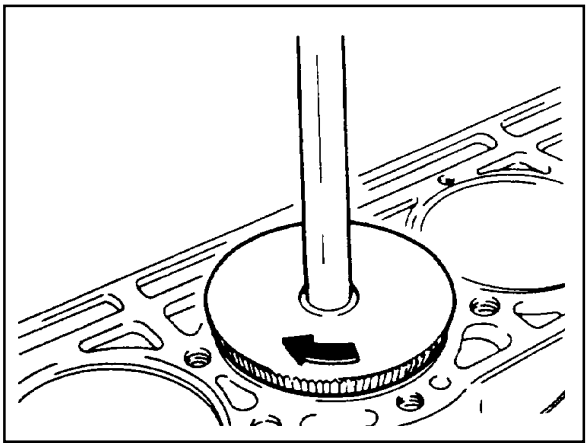

Downloaded from www.Manualslib.com manuals search engine

CYLINDER HEAD MATING SURFACE

Preceding Work : Removal of valves

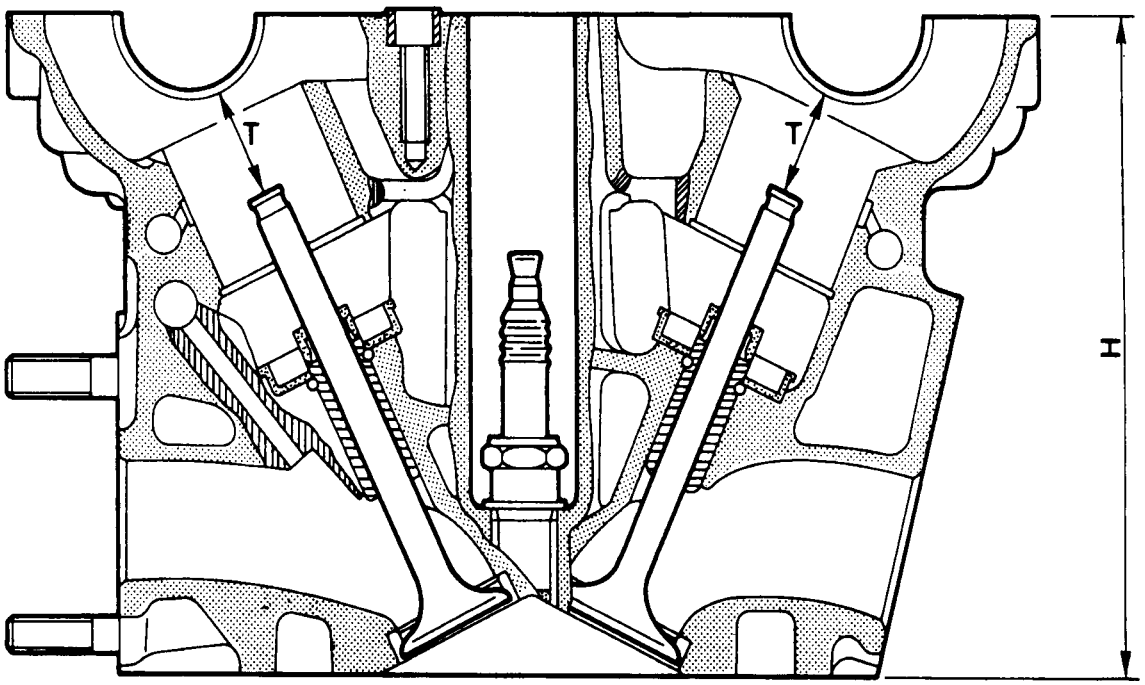

Service Data Standard

Overall Height of Cylinder Head			135.9 - 136.0 mm
Minimum Height After Machining			135.5 mm
Flatness	Axial Direction		0.08 mm
	Transverse Direction		0.0 mm
Distance 'T' (Between Camshaft Bearing and Valve Stem)	Standard Size	Intake	24.21 - 24.75 mm
		Exhaust	22.21 - 22.75 mm
	Repair Size	Intake	23.96 - 24.51 mm
		Exhaust	21.96 - 22.51 mm

Notice

Do not exceed 0.4mm for the milling of the mating surface of crankcase and cylinder head.

Downloaded from www.Manualslib.com manuals search engine

Measurement of Mating Surface

1. Measure the height (H) of the cylinder head (refer to *Service data standard*).
2. Check the mating surface of the cylinder head.
3. Mill the sharp edge of the combustion chamber.
4. Re-measure the height (H) of the cylinder head.
5. Seal the intake and exhaust valves.
6. Measure the dimension (T) between the camshaft bearing and the valve system (refer to *Service data standard*).
7. Mill the cylinder head valve seat (refer to *Service data standard*).

Universal Tool

Surface Grinding Machine	Sceledum, Type RTY Roaro Schio/Italy

Downloaded from www.Manualslib.com manuals search engine

SECTION 1B3

OM600 ENGINE MECHANICAL

CAUTION: Disconnect the negative battery cable before removing or installing any electrical unit or when a tool or equipment could easily come in contact with exposed electrical terminals. Disconnecting this cable will help prevent personal injury and damage to the vehicle. The ignition must also be in LOCK unless otherwise noted.

TABLE OF CONTENTS

Specifications 1B3-2
Fastener Tightening Specifications 1B3-2
Special Tools 1B3-4
Special Tools Table 1B3-4
Maintenance and Repair 1B3-12
On-Vehicle Service 1B3-12
Engine Assembly 1B3-12
Poly V-Belt 1B3-21
Tensioning Device 1B3-23
Poly V-Belt Alignment & Inspection 1B3-26
Prechamber 1B3-29
Milling of Prechamber Sealing Surface 1B3-32
TDC (TDC Sensor Bracket) Setting 1B3-35
Cylinder Head 1B3-37
Timing Case Cover 1B3-63
Crankshaft End Cover 1B3-71
Vibration Damper and Hub 1B3-74
Crankshaft Front Radial Seal 1B3-80
Crankshaft Ball Bearing 1B3-82
Crankshaft 1B3-83
Flywheel 1B3-93
Machining of Flywheel 1B3-97
Flywheel Ring Gear 1B3-98
Hydraulic Valve Clearance Compensation Element Check 1B3-101
Valve Tappets 1B3-103
Valve Springs Check 1B3-105
Valve Springs (Cylinder Head Removed) . 1B3-106
Valve Springs (Cylinder Head Installed) . . 1B3-109
Valve Stem Seals 1B3-112
Check and Replacement of Valve Guides 1B3-116
Valve Seat Rings 1B3-122
Check and Machining of Valves 1B3-127
Machining of Valve Seat 1B3-132
Camshaft Timing Test 1B3-137
Camshaft 1B3-139
Chain Tensioner 1B3-145
Timing Chain 1B3-147
Tensioning Rail 1B3-151
Cylinder Head Guide Rail 1B3-152
Timing Case Cover Guide Rail 1B3-156
Crankshaft Sprocket 1B3-158
Piston 1B3-163
Oil Filter 1B3-169
Oil Pan 1B3-171
Oil Spray Nozzle 1B3-174
Oil Pump 1B3-175
Unit Repair 1B3-177
Cylinder Head Pressure Leakage Test . . . 1B3-177
Facing Cylinder Head Mating Surface 1B3-178
Replacement of Crankcase Core Plug . . . 1B3-180
Facing Crankcase Contacting Surface . . . 1B3-182
Oil Gallery Steel Ball 1B3-183
Cylinder Bore Measurement 1B3-187

Downloaded from www.Manualslib.com manuals search engine

SPECIFICATIONS

FASTENER TIGHTENING SPECIFICATIONS

Engine Assembly

Application	N·m
Skid Plate Bolt	28 - 47
Drain Plug Bolt	30
Coolong Fan Shroud Bolt	3 - 7
Control Linkage Nut	8 - 18
Clutch Linkage Cylinder Nut	20 - 34
Exhaust Manifold Bolt	30
Propeller Shaft Bolt & Nut (Axle)	70 - 80
Propeller Shaft Bolt & Nut (T/C)	81 - 84
Engine Mounting Nut	50 - 75

Crankshaft Assembly

Application	N·m
Cooling Fan Belt Pulley Bolt	10
Socket Bolt	23
Tighten The Bolt	200 / 90°
End Cover Bolt	10
Crankshaft Bearing Cap Bolt	55 / 90°
Ball Bearing	45 / 90°
Camshaft Sprocket Bolt	25 / 90°
Oil Pump Sprocket Bolt	25

Piston

Application	N·m
Connecting Rod Bolt	35 / 90°

Flywheel

Application	N·m
12-Sided Stretch Bolt	45 / 90°

Cylinder Head

Application	N·m
Prechamber Threaded Ring	130
Cylinder Head Cover Bolt	10
Fuel Injsction Pipe Nut	18
Socket Bolt	25
Fuel Filter Pipe Bolt	25
Idle Pulley Bolt	23
Damper Bolt	21

Downloaded from www.Manualslib.com manuals search engine

Cylinder Head

Application	N·m
Camshaft Bearing Cap Bolt	25
Camshaft Sprocket Bolt	25 / 90°
Exhaust Pipe Bolt& Nut	25
Chain Tensioner	80
Injection Nozzle	40
Intake Manifold Not	25
Injection Nozzle Pipe Not	18
Oil Dipstick Tube Bolt	10
Screw Plug M18 x 15	50

Cam Support & Shaft

Application	N·m
Stud Bolt	12
Exhaust Manifold Not	25
CamShaft Bearing Cap Bolt	25
12-Sided Bolt (M11)	25 / 90°

Timing Cover

Application	N·m
Oil Pan Bolt-Socket Bolt	10
Oil Pan Bolt- M6	10
Oil Pan Bolt- M23	23
Belt Pulley Bolt	32
Guide Pulley Bolt	4
Guide Pulley Bracket Nut	23
Chain Tensioner	80
Tesioning Lever Bolt	23

Downloaded from www.Manualslib.com manuals search engine

SPECIAL TOOLS

SPECIAL TOOLS TABLE

	603 589 00 09 00 **Serration Wrench**		**603 589 00 40 00** **Counter Holder**
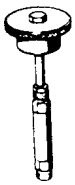	**657 589 03 63 00** **Sliding Hammer**		**000 589 77 03 00** **Box Wrench Insert**
	601 589 00 66 00 **Counter Sink**	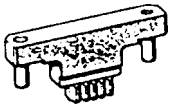	**602 589 00 40 00** **Engine Lock**
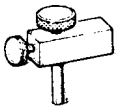	**667 589 00 23 00** **Height Gauge**	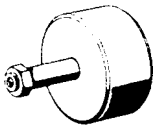	**116 589 20 33 00** **Sliding Hammer**

Downloaded from www.Manualslib.com manuals search engine

SPECIAL TOOLS TABLE (Cont'd)

	116 589 03 07 00 **T Type Socket Wrench**	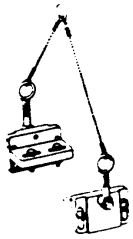	**115 589 34 63 00**
	601 589 00 10 00 **Cylinder Head Bolt 102**		**601 589 00 25 00**
	102 589 12 15 00 **(f 17) Drift**	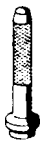	**102 589 00 15 00** **(f 34) Drift**
	617 589 10 21 00 **RI Sensor**		**601 589 05 14 00** **Assembly Cage**

Downloaded from www.Manualslib.com manuals search engine

SPECIAL TOOLS TABLE (Cont'd)

	601 589 08 15 00 **Drift**	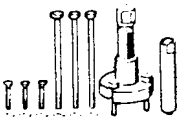	**103 589 00 33 00** **Puller**
	001 589 53 21 00 **Dial Gauge**		**601 589 03 14 00** **Sleeve**
	601 589 07 21 00 **Depth Gauge**	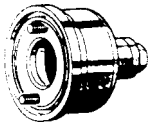	**601 589 03 43 00** **Oil Seal Assembler**
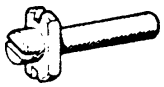	**667 589 01 21 00** **Fixing Device**	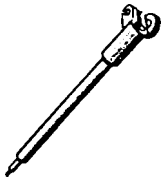	**366 589 00 21 05** **Extension**

Downloaded from www.Manualslib.com manuals search engine

SPECIAL TOOLS TABLE (Cont'd)

	363 589 02 21 00 **Dial Gauge Holder**		**116 589 07 15 00** **Drift**
	000 589 33 33 00 **Counter Support**	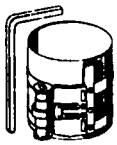	**000 589 04 14 00** **Tensioning Strap**
	000 589 25 33 00 **Internal Extractor**		**102 589 03 40 00** **Magnetic Bar**
	102 589 05 33 00 **Puller**		**601 589 01 59 00** **Assembling Board**

Downloaded from www.Manualslib.com manuals search engine

SPECIAL TOOLS TABLE (Cont'd)

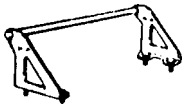	**601 589 02 59 00** **Supporting Bridge**	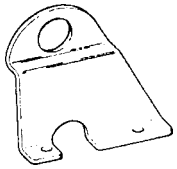	**667 584 02 63 00** **Supporting Bar**
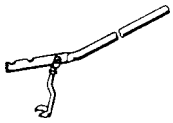	**667 589 00 31 00** **Press Lever**	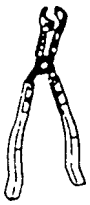	**104 589 00 37 00** **Pliers**
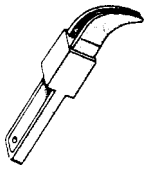	**116 589 06 63 00** **Magnetic Finger**		**601 589 02 43 00** **Drift**
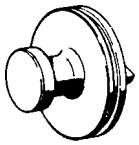	**603 589 01 40 00** **Holding Wheel**	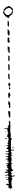	**000 589 10 68 00** **Cylinder Brush**

Downloaded from www.Manualslib.com manuals search engine

SPECIAL TOOLS TABLE (Cont'd)

	601 589 02 23 00 **Go/No Go Gauge**		**601 589 05 15 00** **Drift (for Intake)**
	105 589 03 15 00 **Drift (for Intake)**		**601 589 06 15 00** **Drift (for Exhaust)**
	103 589 02 15 00 **Drift (for Exhaust)**		**000 589 10 53 00** **Reamer (for Exhaust)**
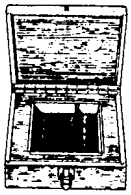	**346 589 00 63 00** **Super Cooling Box**	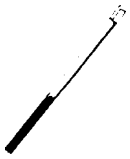	**000 589 21 53 00** **Reamer (for Intake)**

Downloaded from www.Manualslib.com manuals search engine

SPECIAL TOOLS TABLE (Cont'd)

	001 589 32 21 00 **Dial Gauge**	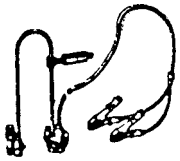	**124 589 15 21 00** **Tester**
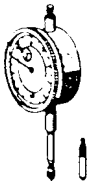	**001 589 53 21 00** **Dial Gauge**	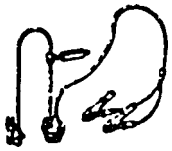	**667 589 02 21 00** **TDC Pulse Generator**
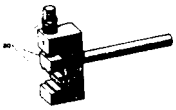	**000 589 58 43 00** **Chain Assembling Device**	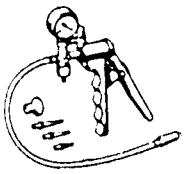	**501 589 73 21 00** **Vacuum Pump**
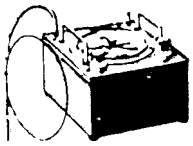	**201 589 13 21 00** **Vacuum Tester**	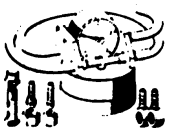	**617 589 04 21 00** **Tester**

Downloaded from www.Manualslib.com manuals search engine

SPECIAL TOOLS TABLE (Cont'd)

	000 589 14 21 00 **Tester**		**601 589 00 08 00** **Flange**
	001 589 65 09 00 **Serration Wrench**	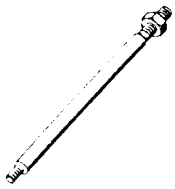	**116 589 02 34 00** **Thread Bolt**
	000 589 00 68 00 **Cleaning Set**	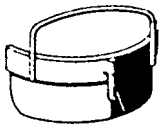	**667 589 04 63 00** **Retaining Plate**
	601 589 05 21 00 **Looking Screw**		**617 589 08 21 00** **Position Sensor**

Downloaded from www.Manualslib.com manuals search engine

MAINTENANCE AND REPAIR

ON-VEHICLE SERVICE

ENGINE ASSEMBLY

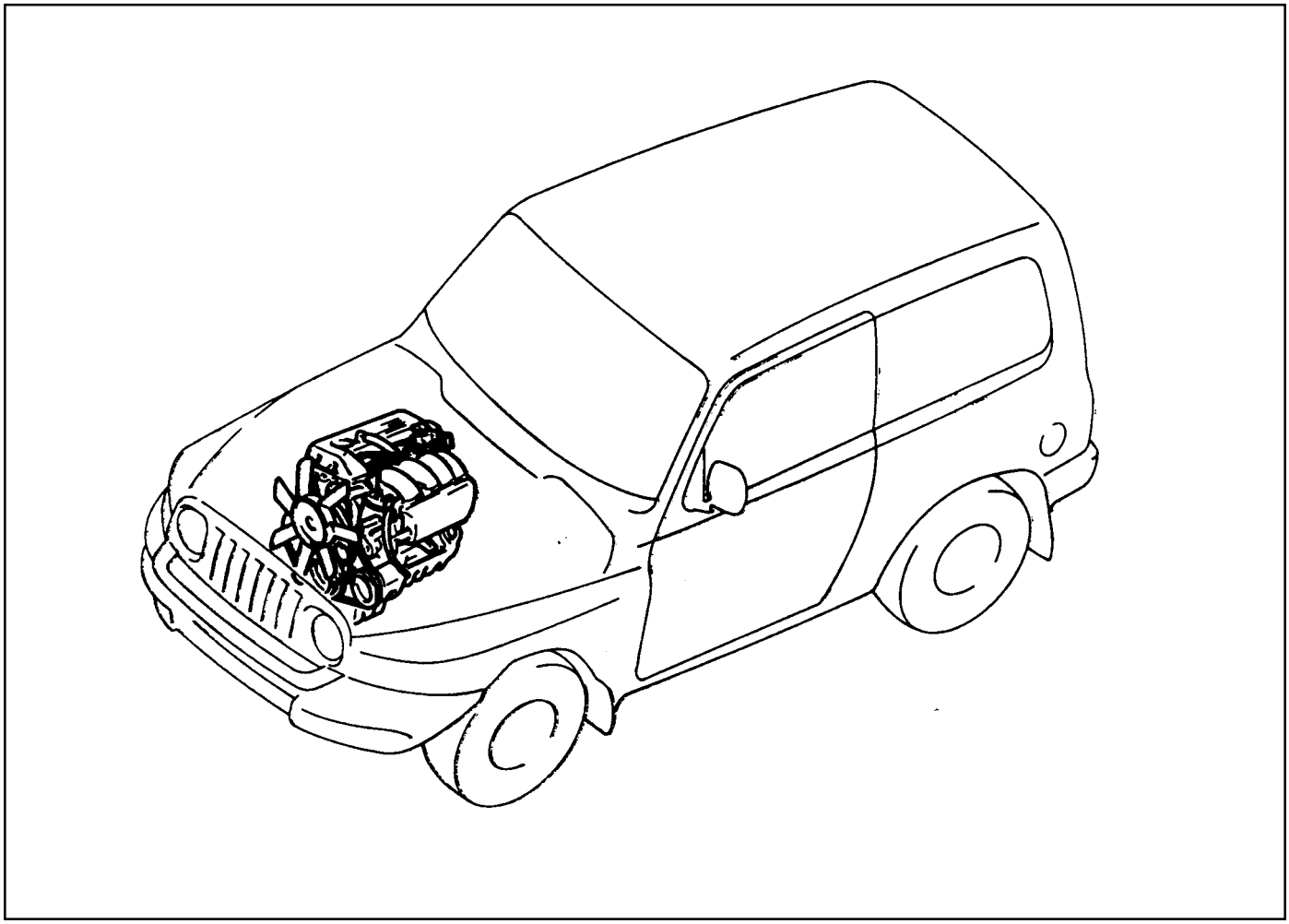

Removal & Installation Procedure

1. Disconnect the negative terminal of battery.
2. Remove the hood.

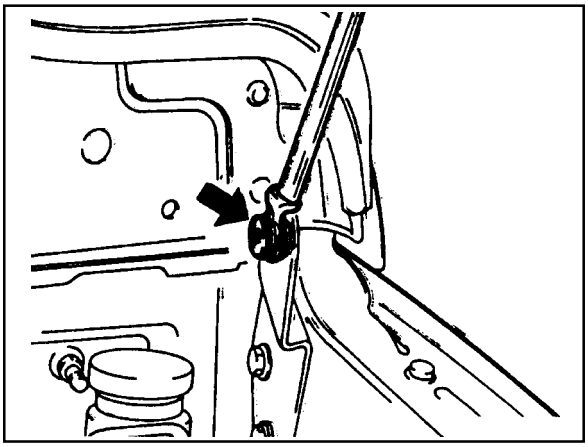

Downloaded from www.Manualslib.com manuals search engine

3. Remove the skid plate.

Installation Notice

Tightening Torque	28 - 47 Nm

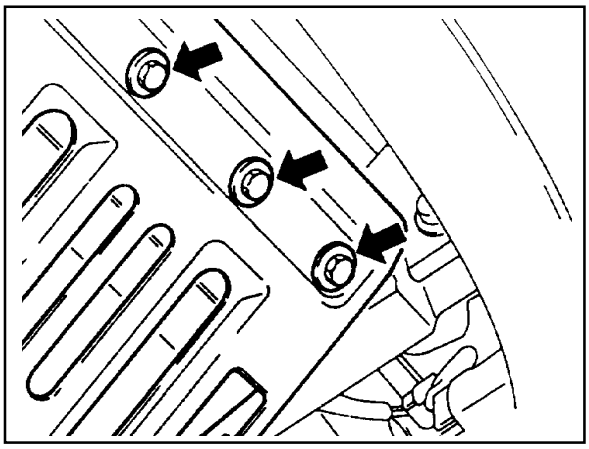

4. Remove the radiator drain cock and drain the coolant.

Notice

Open the coolant reservoir tank cap.

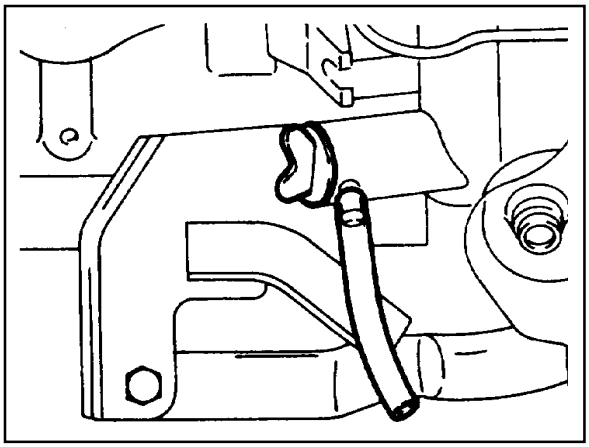

5. Remove the drain plug (1) and seal (2) from the cylinder block and drain the coolant completely.
6. After draining, replace the seal and reinstall the drain plug.

Installation Notice

Tightening Torque	30 Nm

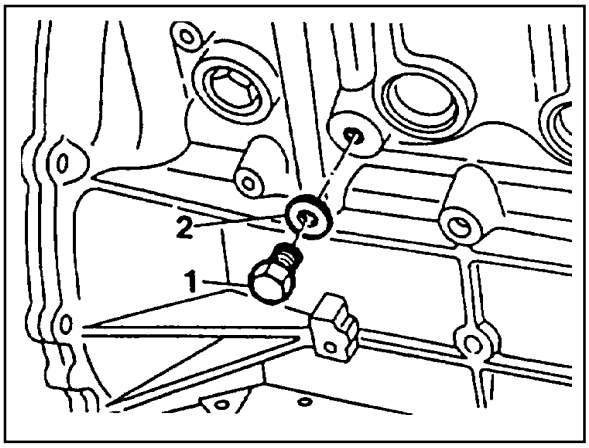

7. Disconnect the lower coolant hose from the radiator.

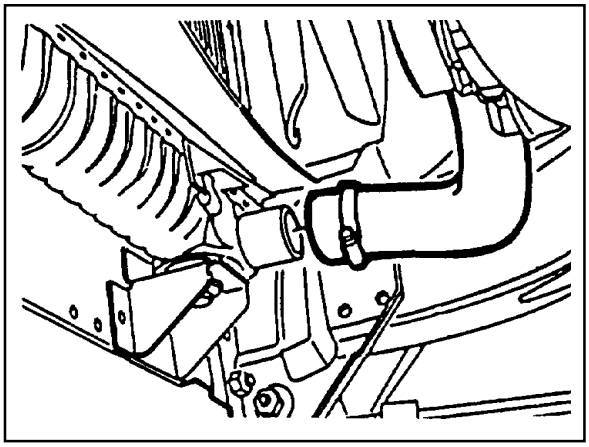

Downloaded from www.Manualslib.com manuals search engine

8. Disconnect the upper coolant hose from the radiator.

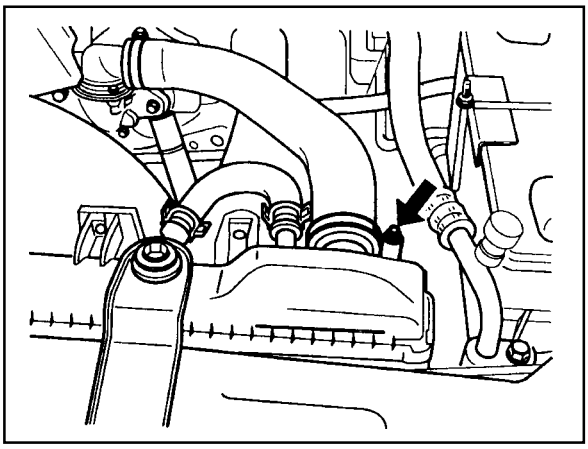

9. Loosen the bolt and remove the coolant pipe and cooling fan shroud.

Tightening Torque	3 -7 Nm

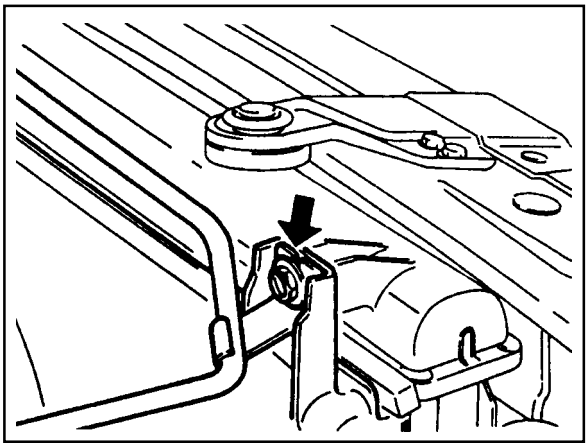

10. Remove the hoses (air intake to intercooler, intercooler to intake duct).

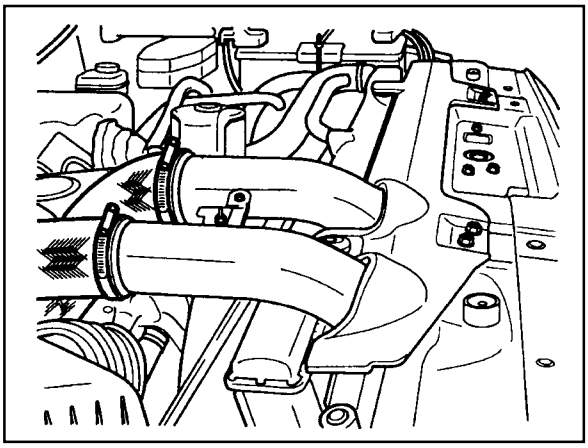

11. Remove the pipes connected to intercooler.

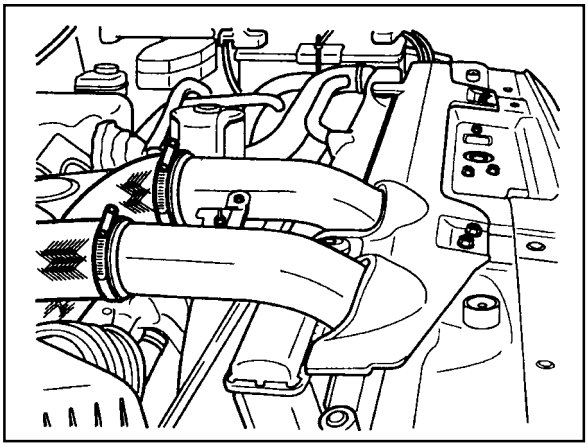

Downloaded from www.Manualslib.com manuals search engine

12. Remove the hose(air cleaner to turbocharger) with blow by hose.

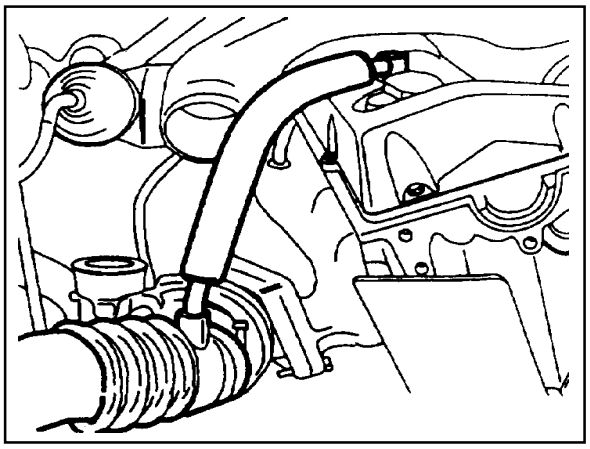

13. Disconnect the air cleaner intake hose and remove the air cleaner cover and element.

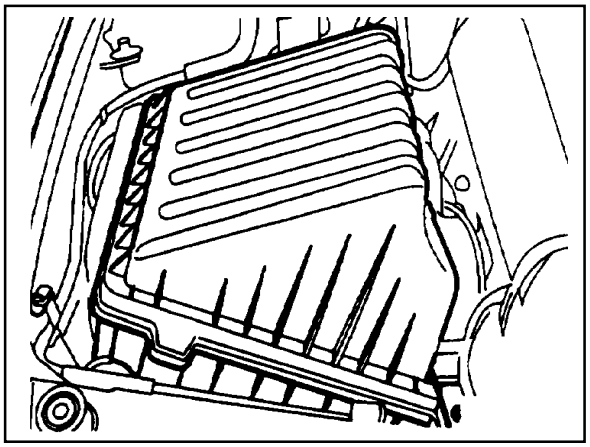

14. Disconnect the coolant hose from the water inlet.

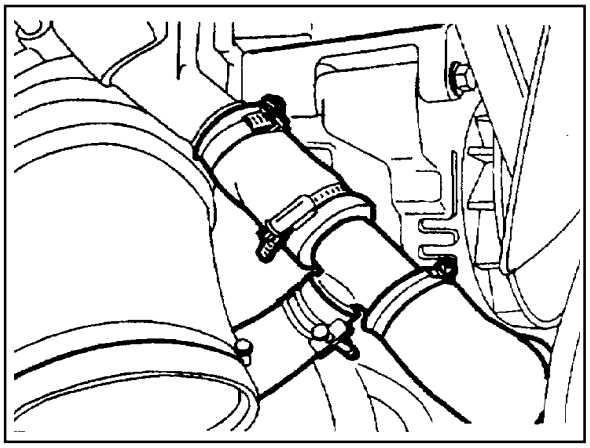

15. Remove the air-conditioner lines from the compressor.

Notice

Evacuate the refrigerant before removal.

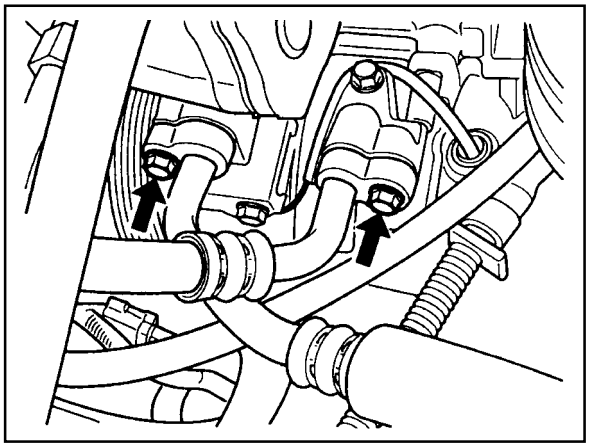

Downloaded from www.Manualslib.com manuals search engine

16. Remove the power steering pump lines.

    Notice

    Completely drain the fluid.

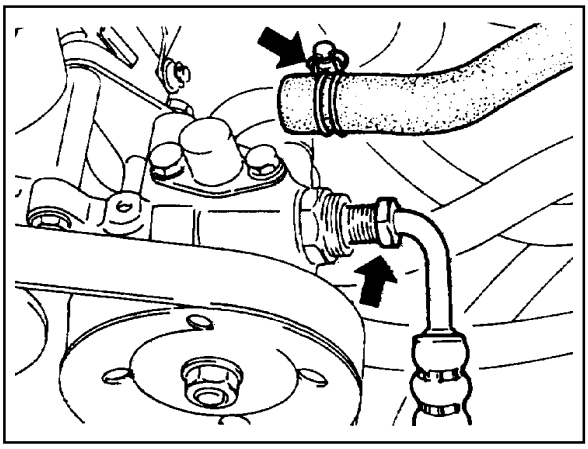

17. Disconnect the fuel feed line with prefilter from the feed pump on injection pump.

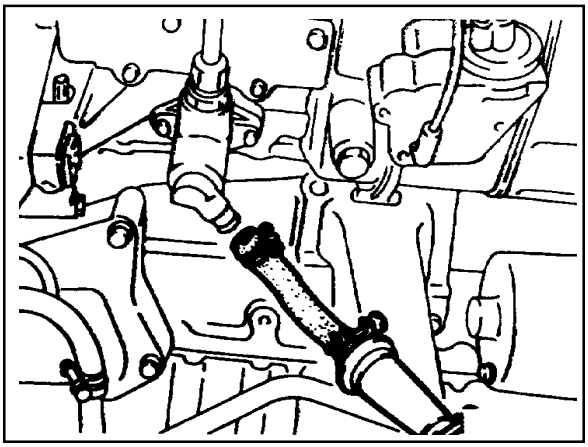

18. Vehicle with automatic transmission.

    Remove the hydraulic lines (19, 20) from oil cooler (2).

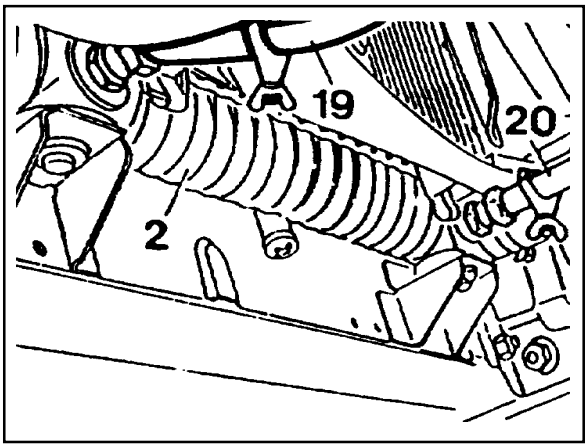

19. Disconnect the engine harness.
20. Disconnect the preheating time relay cable.

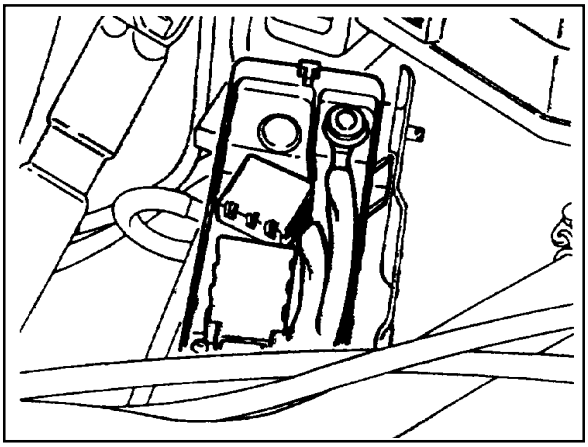

Downloaded from www.Manualslib.com manuals search engine

21. Remove the fuel lines from the fuel filter and cover the filter with plug.

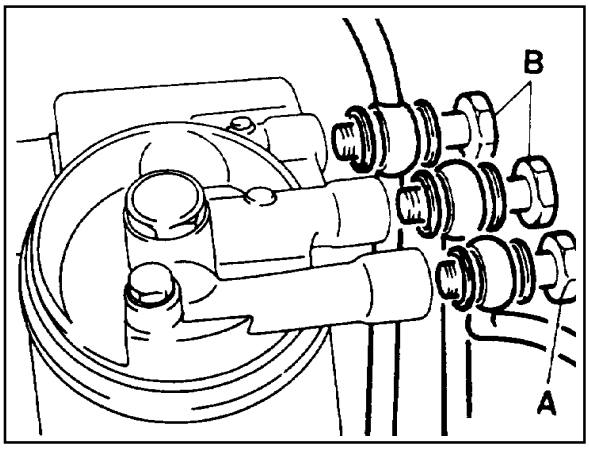

22. Disconnect the brake booster hose from vacuum pump.
23. Disconnect the other vacuum lines.

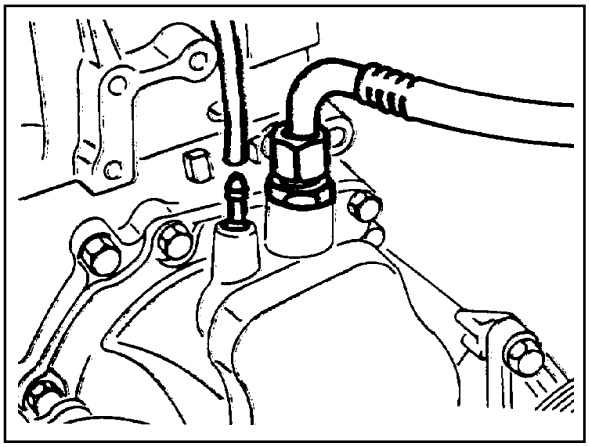

24. Disconnect the ground cable.
25. Disconnect the alternator wires.

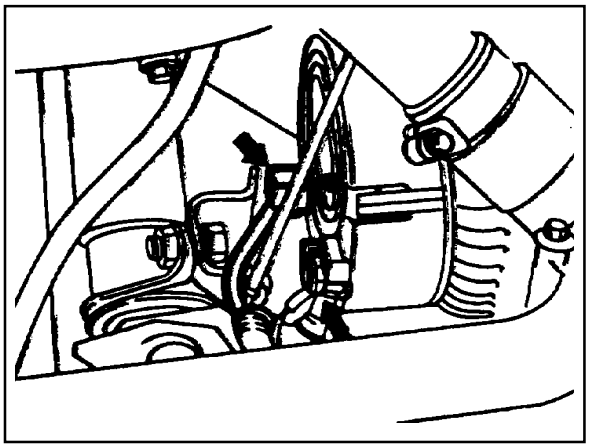

26. Disconnect the starter motor wires and remove the starter motor.

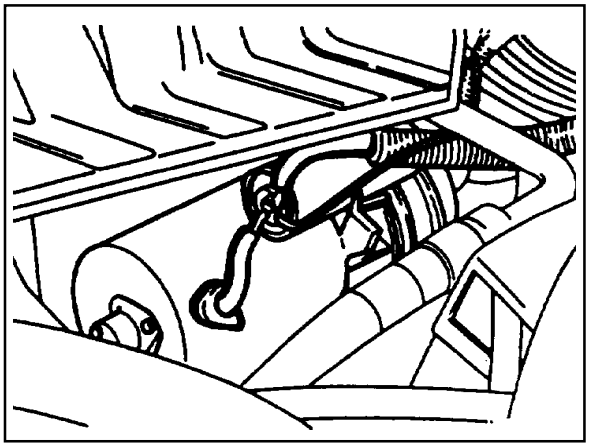

Downloaded from www.Manualslib.com manuals search engine

27. Disconnect the preheating time relay sensor plug.

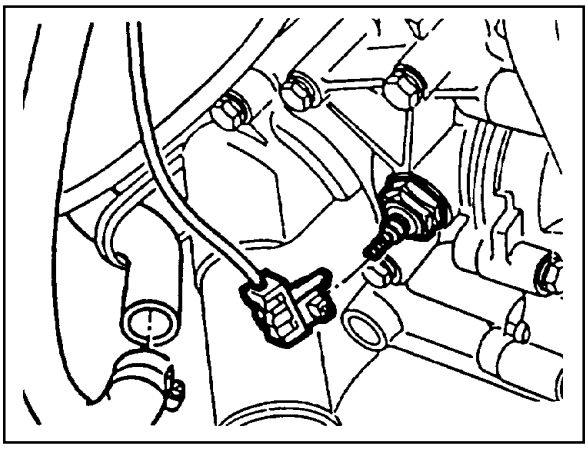

28. Disconnect the coolant temperature sensor plug.

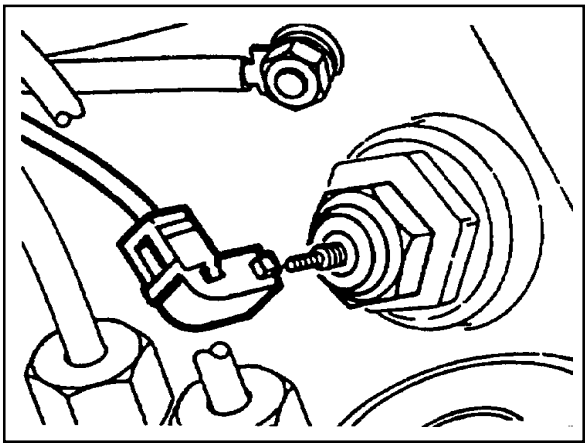

29. Disconnect the accelerator cable from the control linkage.

Installation Notice

Tightening Torque	8 - 18 Nm

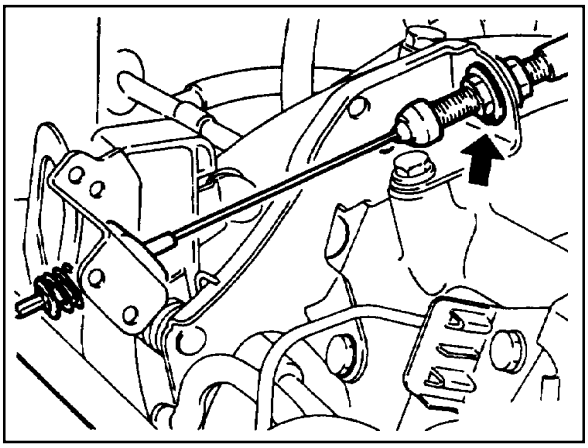

30. Loosen the connection of control pressure cable (an arrow) used in auto transmission.

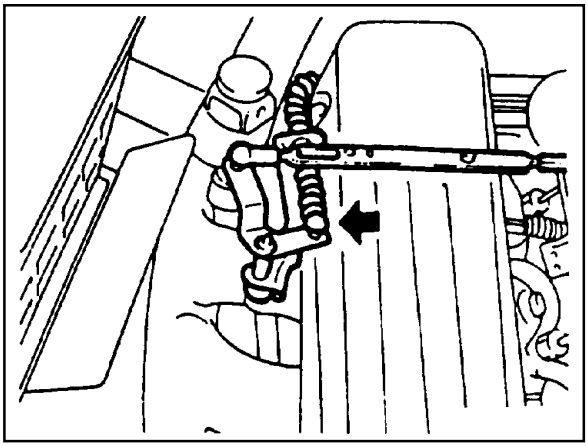

Downloaded from www.Manualslib.com manuals search engine

31. Separate the exhaust pipe flange from the turbo charger.

Installation Notice

Tightening Torque	30 Nm

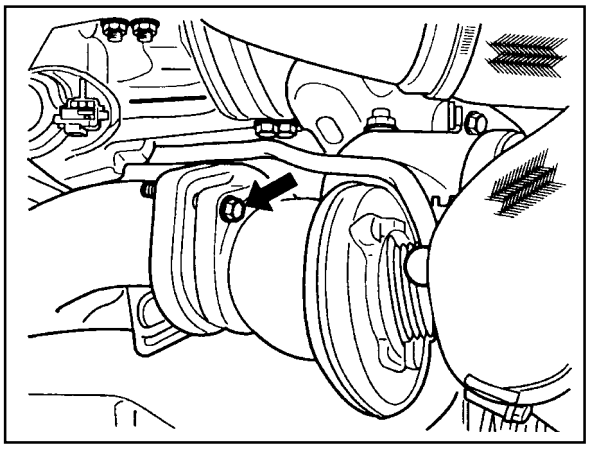

32. Loosen the installing bolt of clutch release cylinder and remove the clutch release cylinder.

Installation Notice

Tightening Torque	20 - 34 Nm

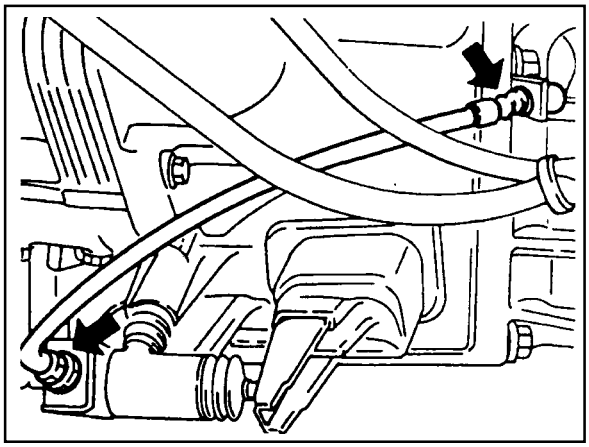

33. Disconnect the exhaust pipe flange from the exhaust manifold.

Installation Notice

Tightening Torque	30 Nm

34. Remove the propeller shaft from the transmission.

Installation Notice

Tightening Torque	Axle 70 ~ 80 Nm
	T/C 81 ~ 89 Nm

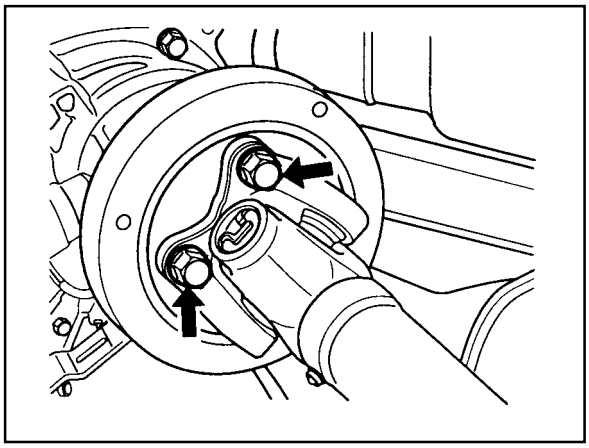

35. Remove the shift control cable.
36. Remove the transmission.

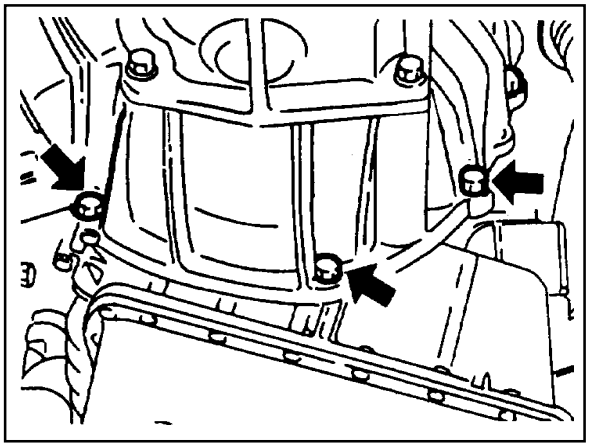

Downloaded from www.Manualslib.com manuals search engine

37. Loosen the engine mounting bracket nut.

Installation Notice

Tightening Torque	50 - 75 Nm

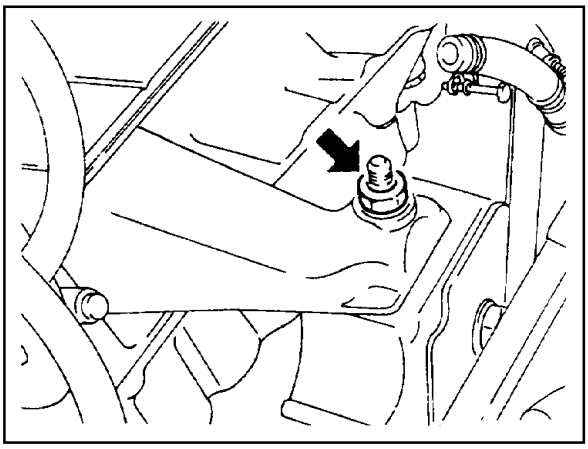

38. Remove the engine assembly from the vehicle by using a hoist or crane.

39. Installation should follow the removal procedure in the reverse order.

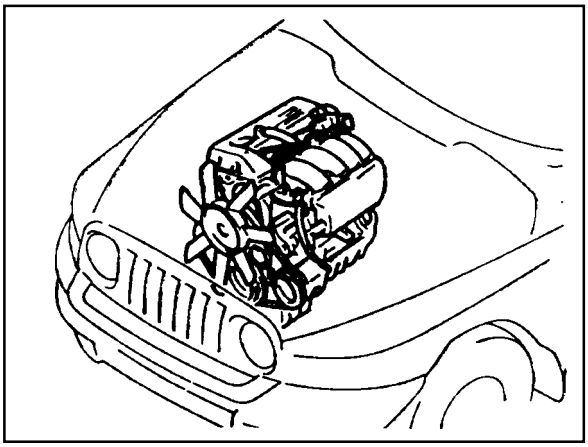

Downloaded from www.Manualslib.com manuals search engine

POLY V-BELT

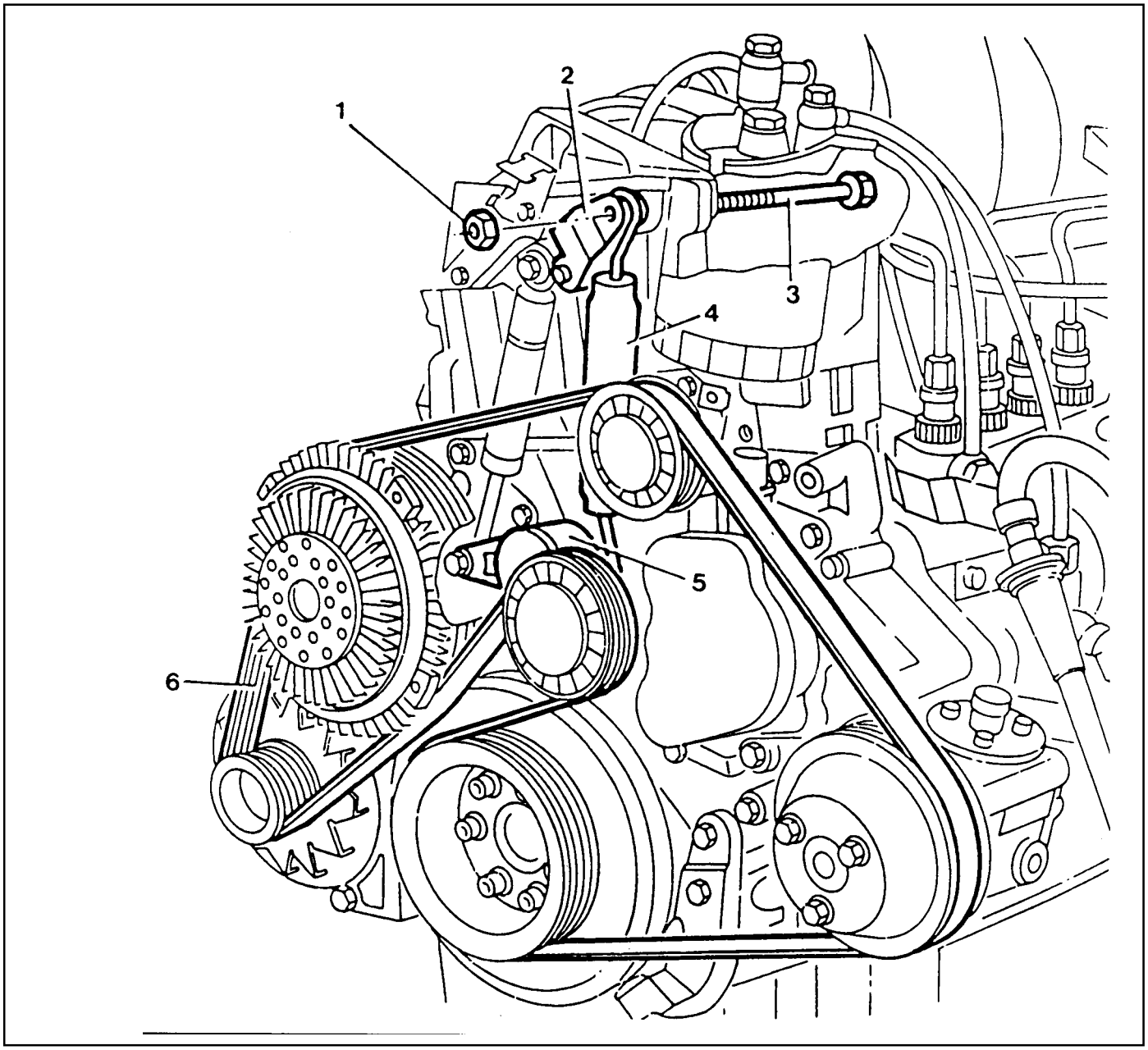

1 Nut 23Nm
2 Tensioning Lever
3 Bolt
4 Spring
5 Tensioning Lever
6 Poly V-Belt

Downloaded from www.Manualslib.com manuals search engine

Removal & Installation Procedure

1. Remove the nut.
2. Push the tensioning lever in direction of arrow with a rod (F12 ´ 180mm) and pull out the bolt to the rear.

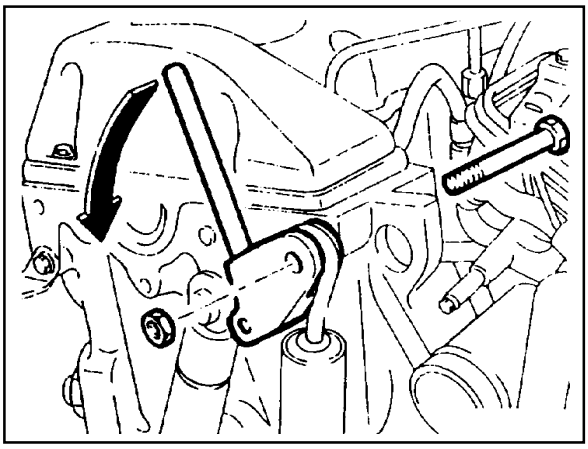

3. Push back the tensioning lever (arrow direction) to release the spring tension and remove the belt.

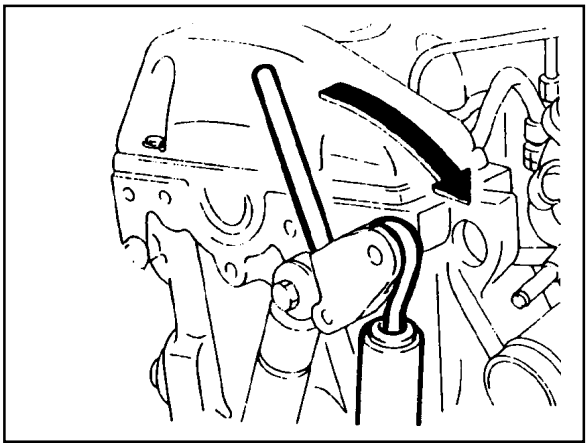

4. Install the poly V-belt beginning at the tensioning pulley (7).

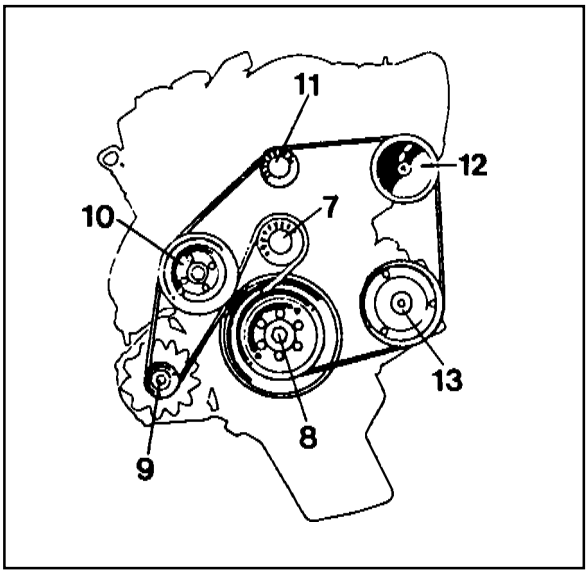

7 Tensioning Pulley
8 Crankshaft
9 Alternator
10 Coolant Pump
11 Guide Pulley
12 Power Steering Pump
13 Aircon. Compressor

Lengthe of Belt

Length (L)	With Air Conditioner	2,100 mm
	Without Air Conditioner	2,040 mm

Downloaded from www.Manualslib.com manuals search engine

TENSIONING DEVICE

Preceding Work : Removal of cooling fan

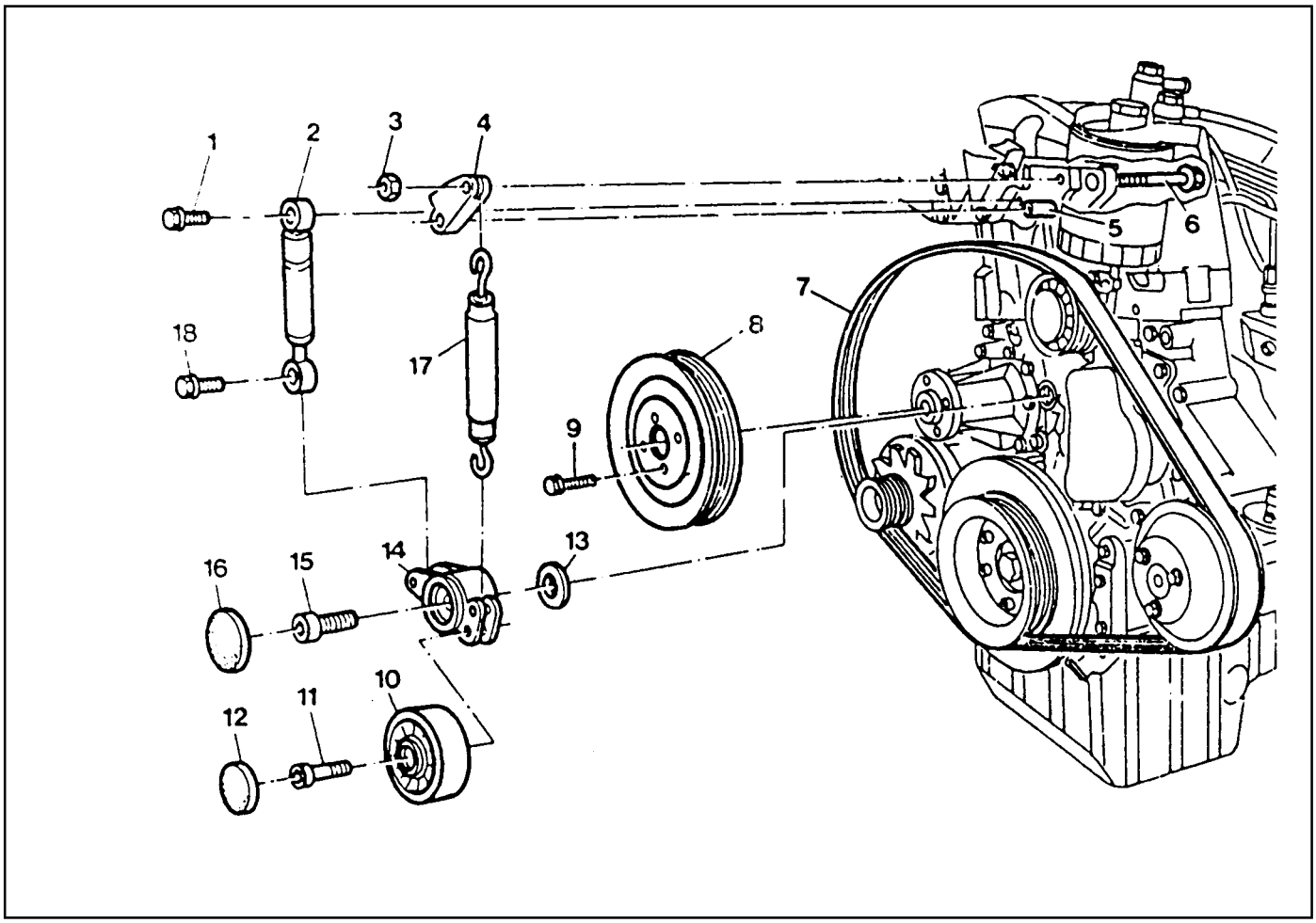

1 Bolt 21Nm
2 Damper
3 Nut 21Nm
4 Tensioning Lever
5 Guide Rail Pin
6 Bolt
7 Poly V-Belt
8 Belt Pulley
9 Bolt 10Nm
10 Tensioning Pulley
11 Socket Bolt 29Nm
12 Closing Cover
13 Washer
14 Tensioning Lever
15 Fit Bolt 100Nm
16 Closing Cover
17 Spring
18 Bolt 20Nm

Downloaded from www.Manualslib.com manuals search engine

Removal & Installation Procedure

1. Remove the nut.

   Installation Notice

Tightening Torque	10 Nm

2. Push the tensioning lever in direction of arrow with a rod (F12 ´ 180mm) and push out the bolt to the rear.

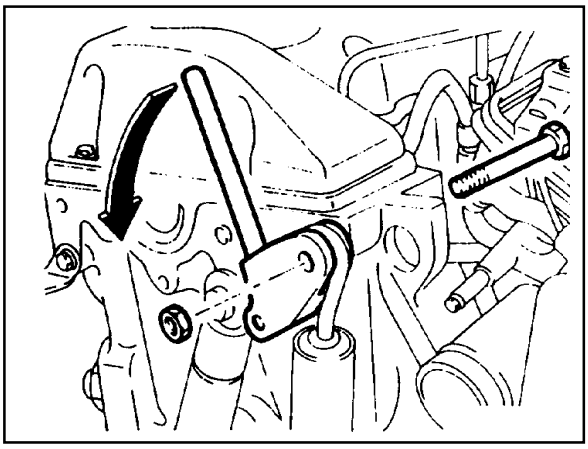

3. Push back the tensioning lever to release the spring tension and remove the belt.

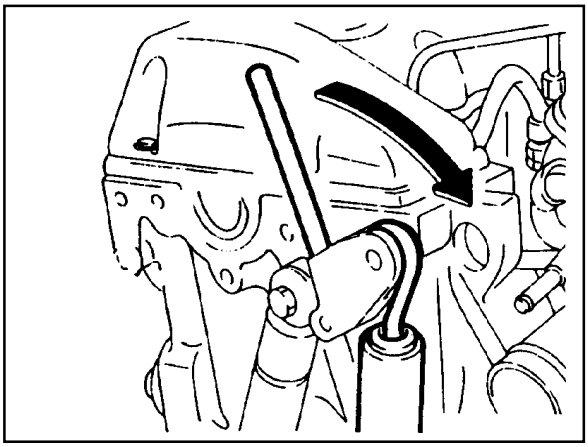

4. Remove the bolt (9) and then remove the belt pulley (8).

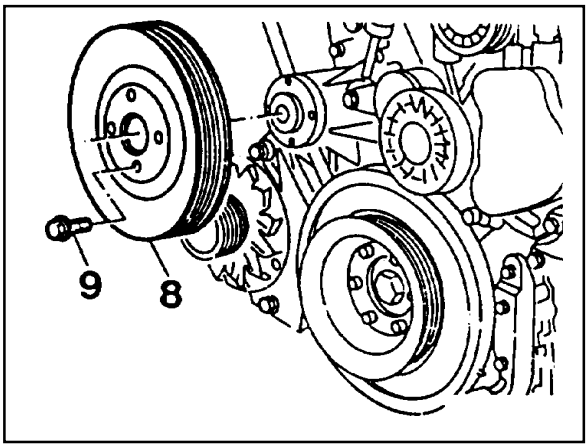

5. Remove the bolt (1, 18) and take off the damper (2).

   Notice

   Pay attention to installation position of the damper.

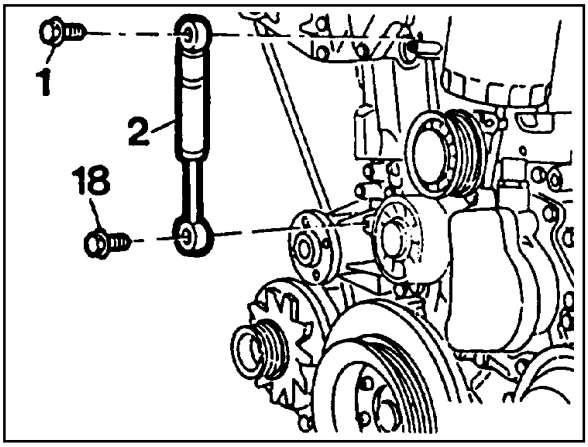

Downloaded from www.Manualslib.com manuals search engine

6. Pull off the tensioning lever (4) from guide rail pin.
7. Remove the spring (17).

Installation Notice

Insert spring (17) with color coding (blue/violet) facing up.

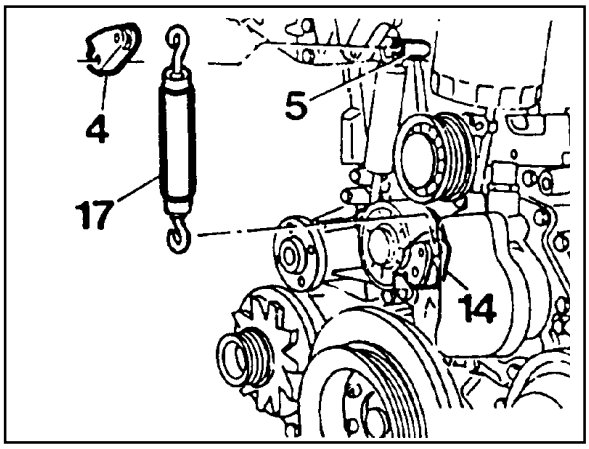

8. Pry off the closing cover (12) and remove the socket bolt (11) and then remove the tensioning pulley (10).

Installation Notice

Tightening Torque	29 Nm

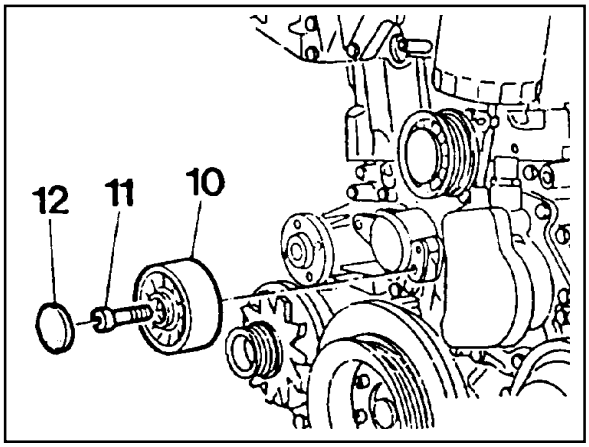

9. Pry off the closing cover (16) and remove the fit bolt (15).
10. Remove the tensioning lever (14) and washer (13).
11. Clean thread in the timing case cover and fit bolt.

Installation Notice

Apply Loctite on thread of fit bolt.

Tightening Torque	100 Nm

12. Installation should follow the removal procedure in the reverse order.

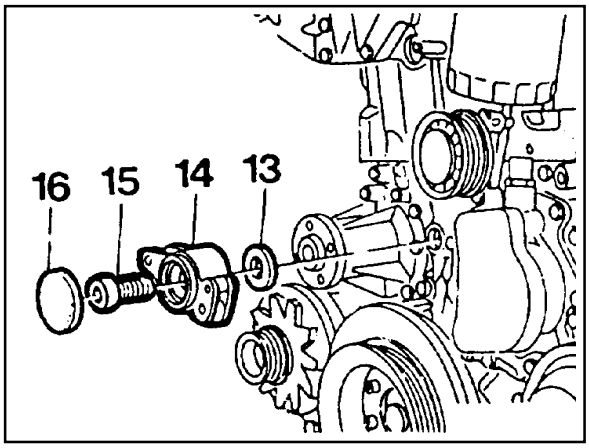

Downloaded from www.Manualslib.com manuals search engine

POLY V-BELT ALIGNMENT & INSPECTION

Without Air Conditioner

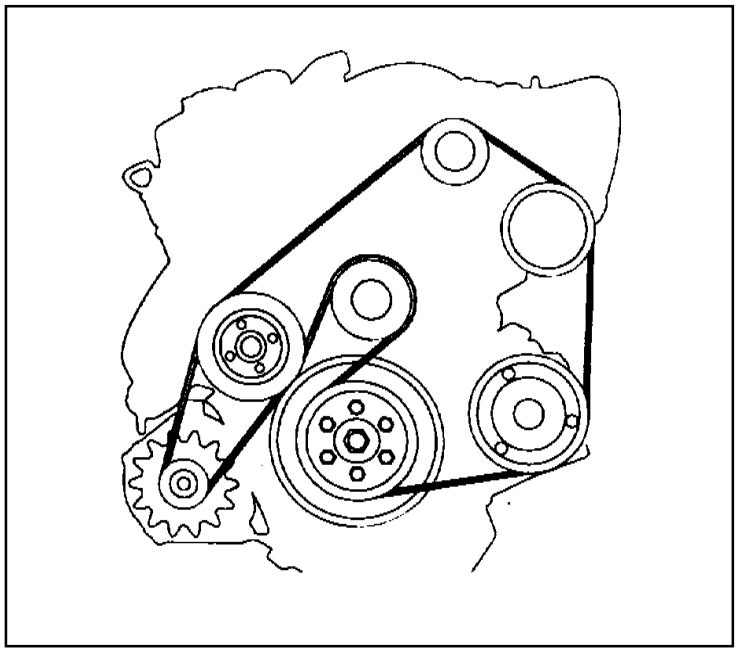

With Air Conditioner

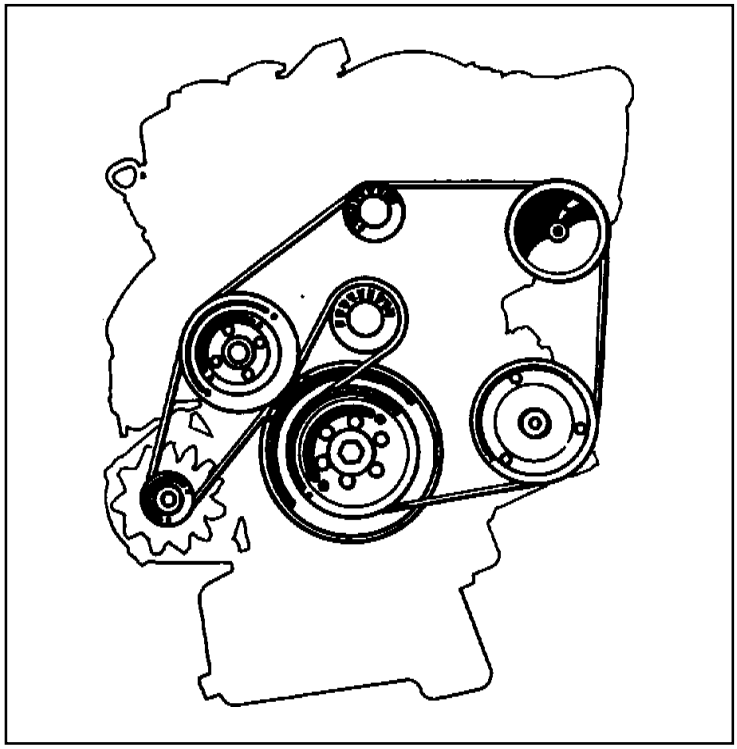

Downloaded from www.Manualslib.com manuals search engine

Inspection Procedure

- Mark poly V-belt at a clearly visible point with chalk.
- Rotate the engine and check the belt.

Notice

If one of the following types of damage is found, replace the belt.

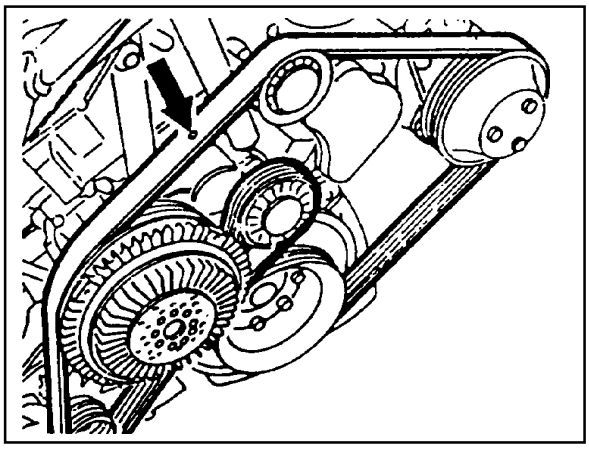

1. Rubber lumps in the base of rips.
2. Dirt or grit ingrained.

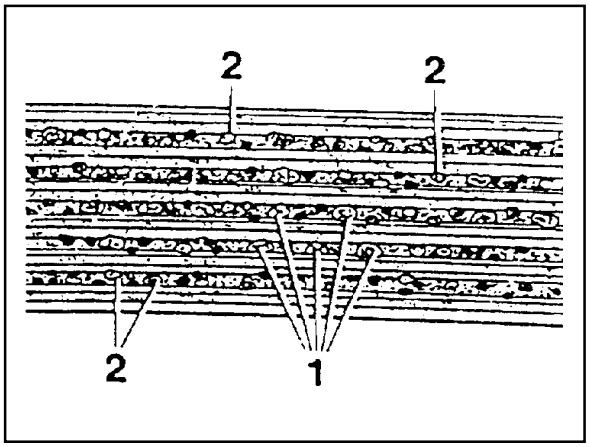

3. Pointed rips.
4. Belt cord visible in the base of rips.

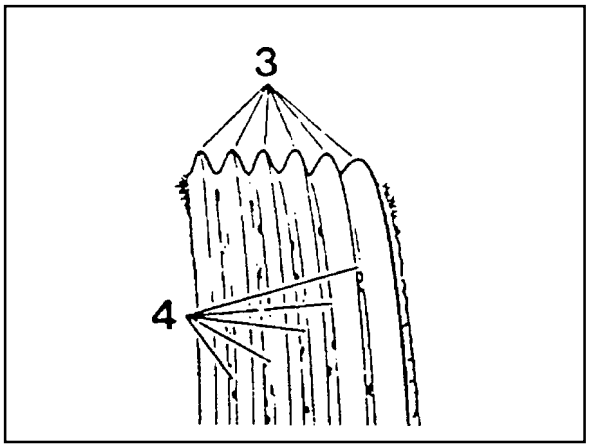

5. Cord torn out at the side.
6. Outer cords frayed.

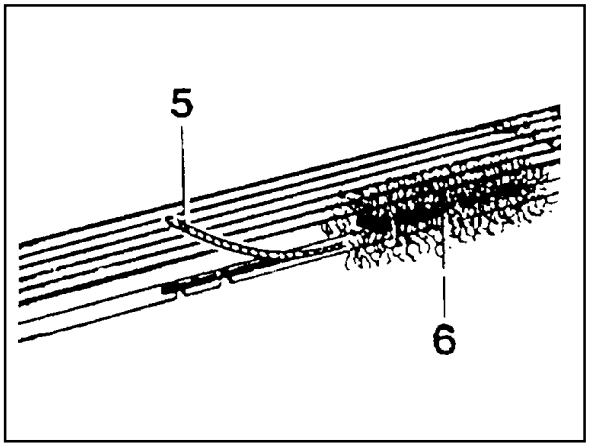

Downloaded from www.Manualslib.com manuals search engine

7. Belt detached from the base of rip.

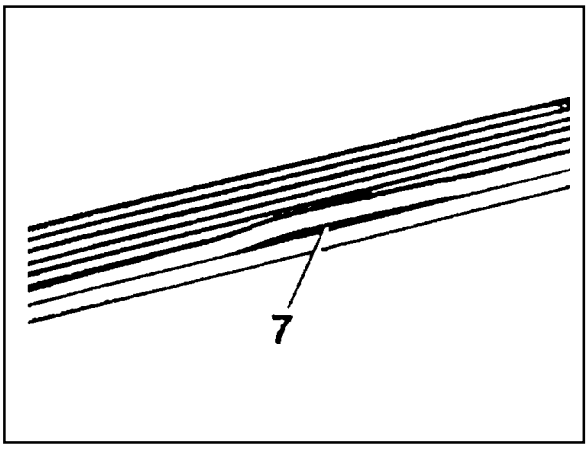

8. Splits across the rips.
9. Sections of rip torn out.

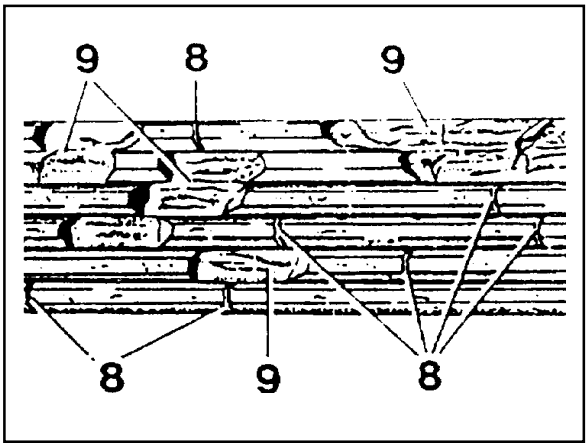

10. Splits across several rips.

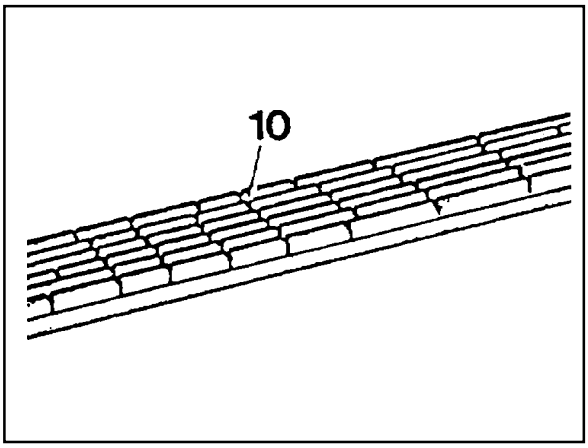

11. Splits across the back.

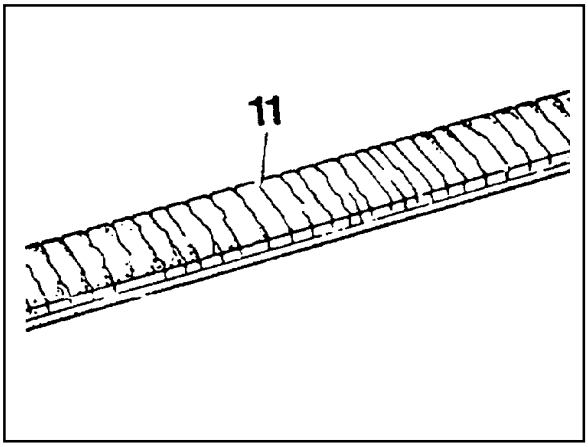

Downloaded from www.Manualslib.com manuals search engine

PRECHAMBER

Preceding Work : Removal of glow plug
Removal of fuel injection nozzle

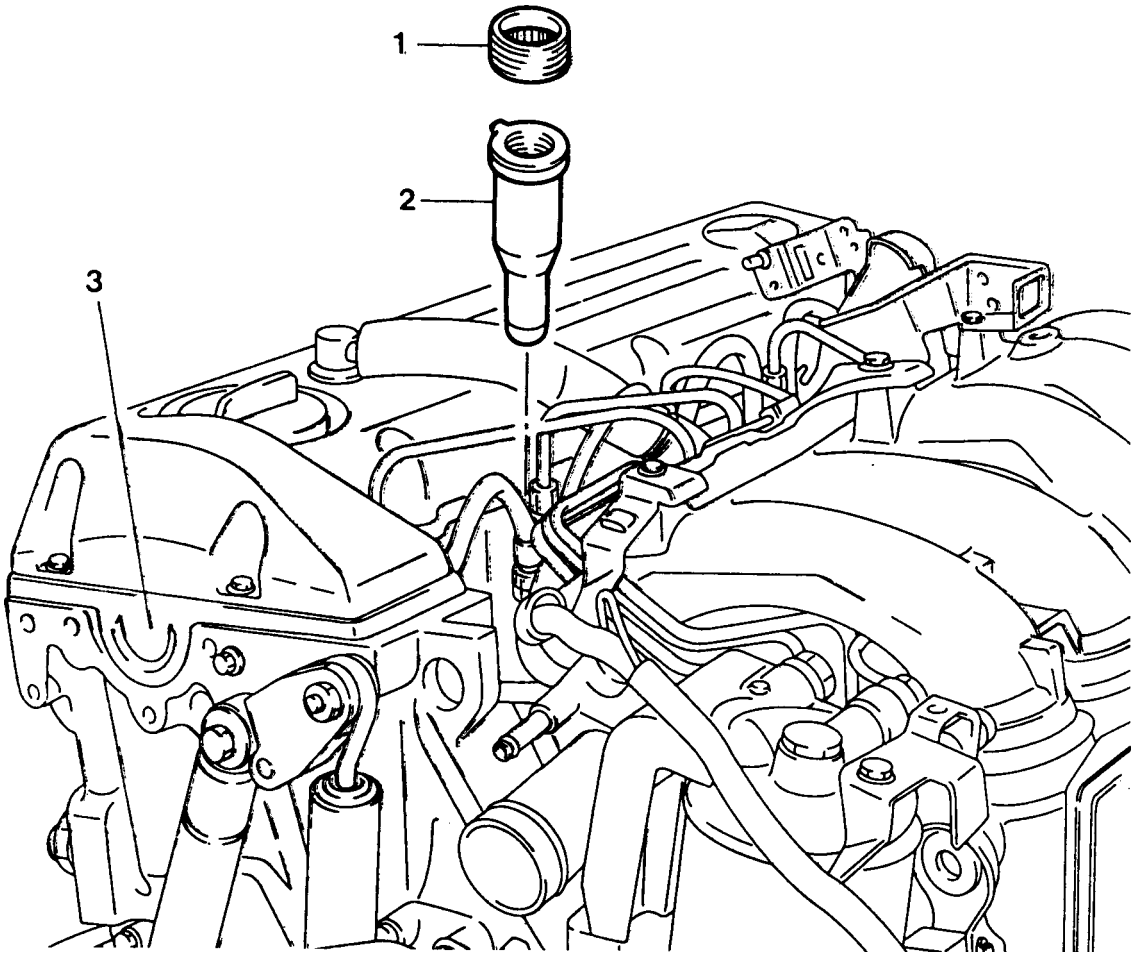

1 Threaded Ring ..... 130 Nm
2 Prechamber
3 Cylinder Head

Downloaded from www.Manualslib.com manuals search engine

Tools Required

603 589 00 09 00 Serration Wrench

667 589 03 63 00 Sliding Hammer

Removal & Installation Procedure

1. Using the serration wrench (4), remove the threaded ring (1).

Serration Wrench 603 589 00 09 00

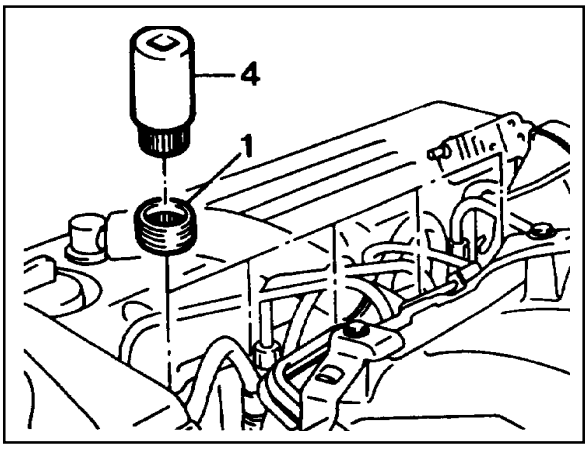

2. Install the sliding hammer into the prechamber.

Sliding Hammer 667 589 03 63 00

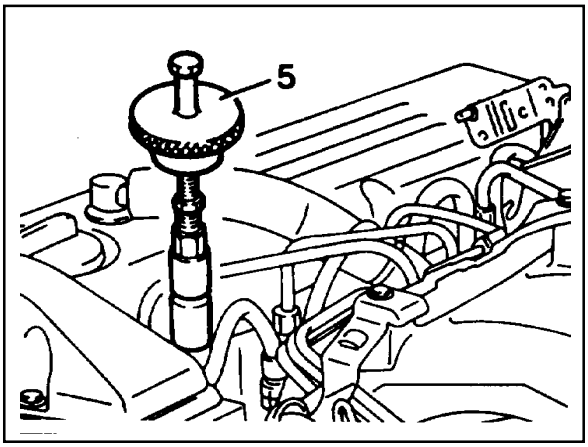

3. Remove the perchamber (2).

Notice

After removing the prechamber, cover over the bores with clean rag.

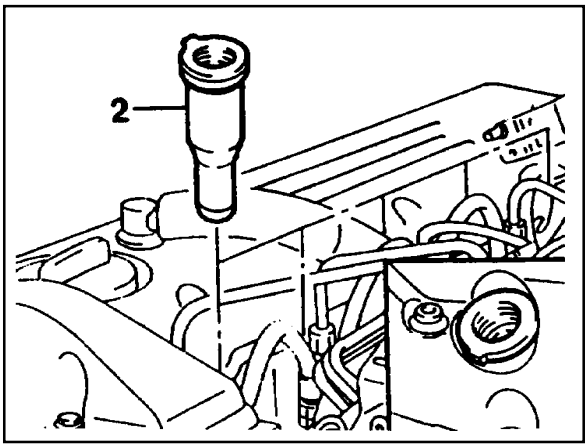

4. Inspect the prechamber.

Notice

If the prechamber seats in the cylinder head are leaking or if the prechambers are replaced, the sealing surfaces in the cylinder head must be remachined.

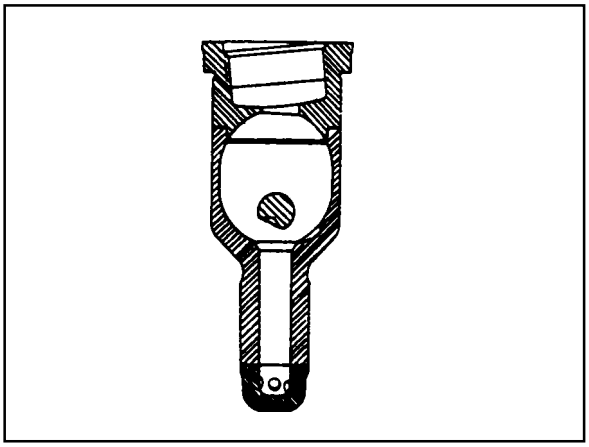

Downloaded from www.Manualslib.com manuals search engine

Assembly Procedure

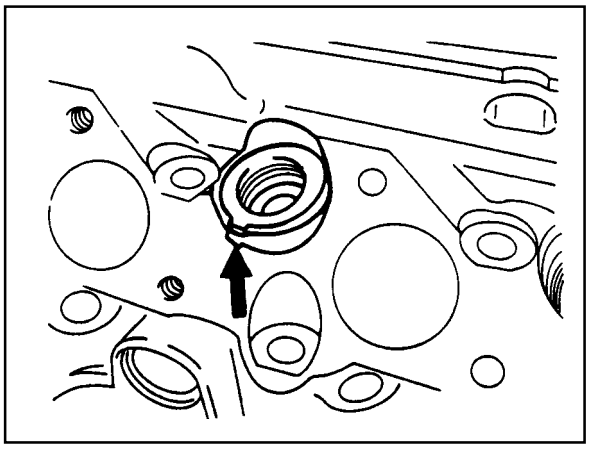

Notice

In case the prechambers are reused, inspect the prechambers thoroughly, if the ball pin by heat and fire is broken, it can not be used.

1. Clean the sealing surface of the prechamber.
2. Insert the prechamber into the cylinder head at the same time aligning the cam on the collar of the prechambers with the slots in the cylinder head.

Notice

If the spacer rings are fitted to the prechambers, the spacer rings should be replaced with rings of the same thickness.

Thickness of Spacer Ring	0.3, 0.6, 1.0 mm

3. Coat the threaded ring with oil and assemble the ring by using the serration wrench.

Tightening Torque	130 Nm

Downloaded from www.Manualslib.com manuals search engine

MILLING OF PRECHAMBER SEALING SURFACE

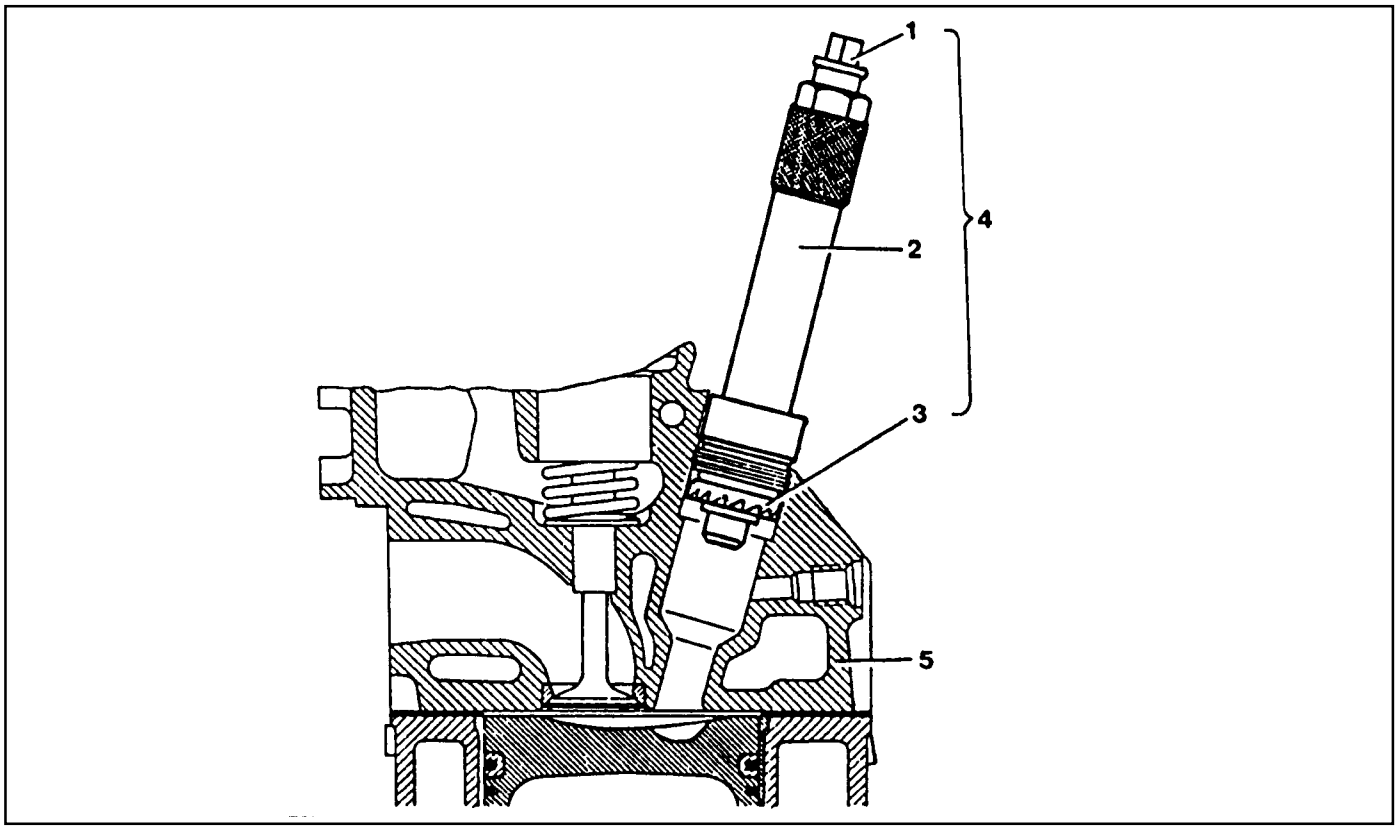

1 Drift
2 Sleeve
3 Milling Cutter
4 Counter Sink (Special Tool - 601 589 00 66)
5 Cylinder Head

Tools Required

601 589 00 66 00 Counter Sink

667 589 00 23 00 Height Gauge

Milling of the Prechamber Sealing Surface

Notice

The prechamber sealing surface may only be remachined once with the cylinder head fitted. It is essential to adhere to the specified projection ‘C’ of the prechamber of 7.6 - 8.1mm.

This ensures that the required clearance exists between prechamber and piston crown with the piston in TDC. For this reason, spacer rings should be inserted on remachined sealing surfaces.

Tightening Torque	0.3, 0.6, 1.0 mm

If a spacer ring is already fitted, or a marking is made on the cylinder head, the cylinder head must be removed and size ‘C’ measured if further remachining is necessary on a prechamber sealing surface.

Downloaded from www.Manualslib.com manuals search engine

1. Remove the injection nozzle.
2. Remove the prechamber.
3. Cover the prechamber bore to avoid any chips dropping into the combustion chamber.
4. Remove the protective sleeve from the countersink and rotate the countersink into the prechamber bore to be machined as far as the stop.

Counter Sink 601 589 00 66 00

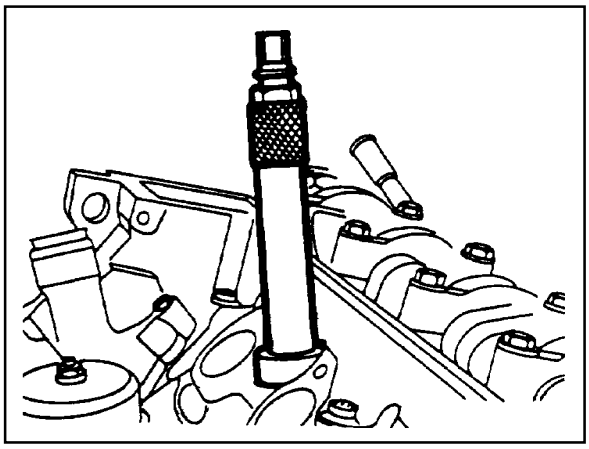

5. Maintain size ‘X’ from the top edge of mandrel to the top edge of the sleeve with the gauge.

Height Gauge 667 589 00 23 00

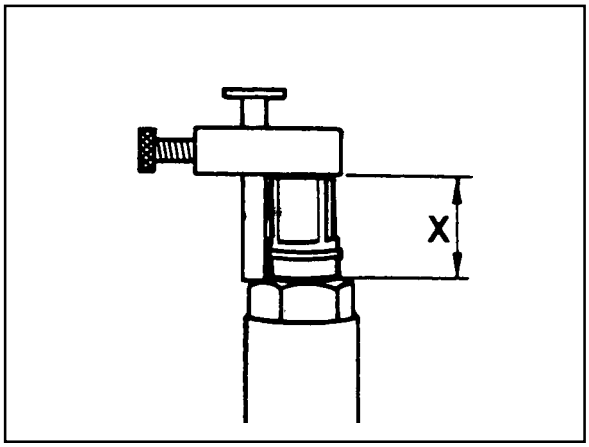

6. Measure the ‘X’ by using a vernier caliper.

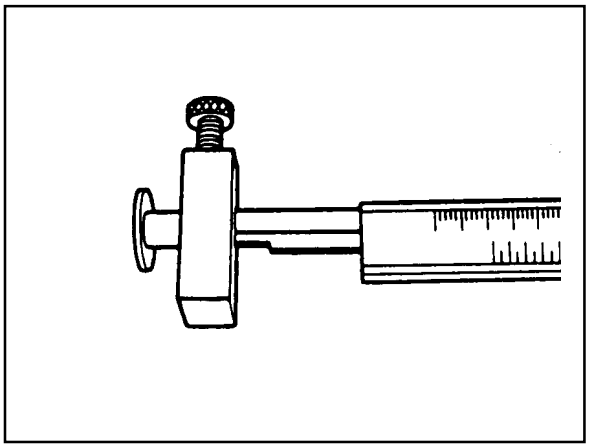

7. Mount the turning tool onto the countersink tool and rotate to the right approx. 5 revolutions by applying slight pressure.

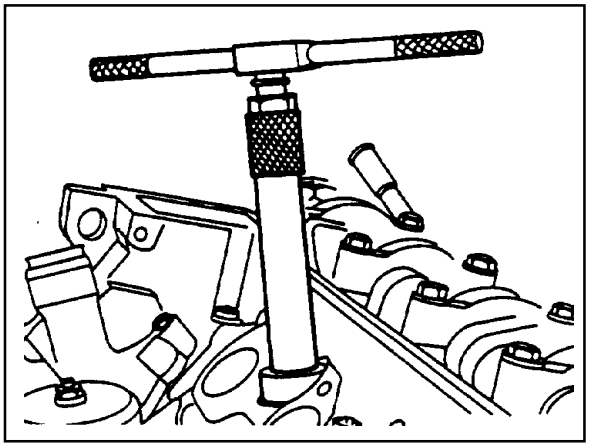

Downloaded from www.Manualslib.com manuals search engine

8. Remeasure size ‘X’ and compare it with the first measurement and determine the thickness of spacer ring.

Ex	Size before machining	25.7 mm
	Size after machining	25.5 mm

The spacer ring should be selected so that it is at least 0.1mm and not more than 0.3mm thicker than the measured on the sealing surface. In this example, the necessary thickness of spacer ring should be within 0.3 ~ 0.5mm and the thickness of spacer ring to be installed is 0.3mm.

9. Remove the countersink tool and clean the chips.

Notice

If the sealing surface is not completely flat, remachine the sealing surface.

10. emove rag from the prechamber bore and crank the engine with starter motor to threw out any chips which may have got into the combustion chamber.
11. Insert the proper spacer ring into the prechamber sealing surface.
12. Punch a mark on the cylinder head above the prechamber sealing surface which has been machined.
13. Install the prechambers.

Notice

If the cylinder head is removed, the projection ‘C’ is measured in place of size ‘X’ and the appropriate size of spacer ring selected.

Normal Projection (c)	7.6 - 8.1mm

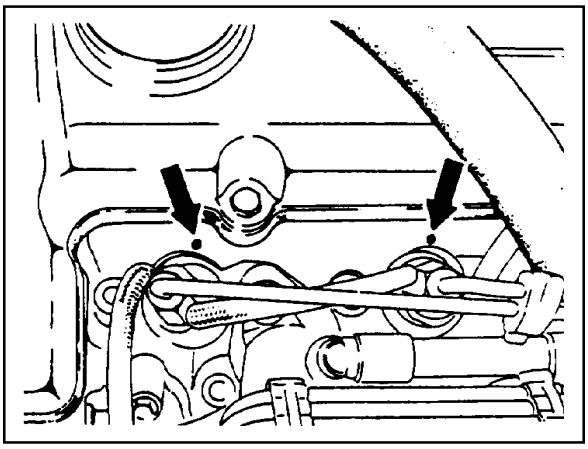

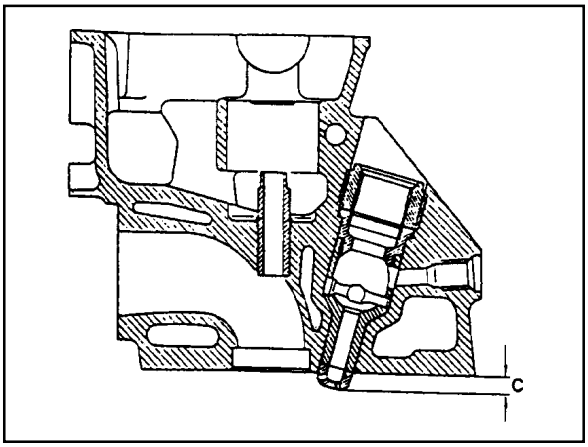

Downloaded from www.Manualslib.com manuals search engine

TDC (TDC SENSOR BRACKET) SETTING

Preceding Work : Removal of No.1 cylinder prechamber

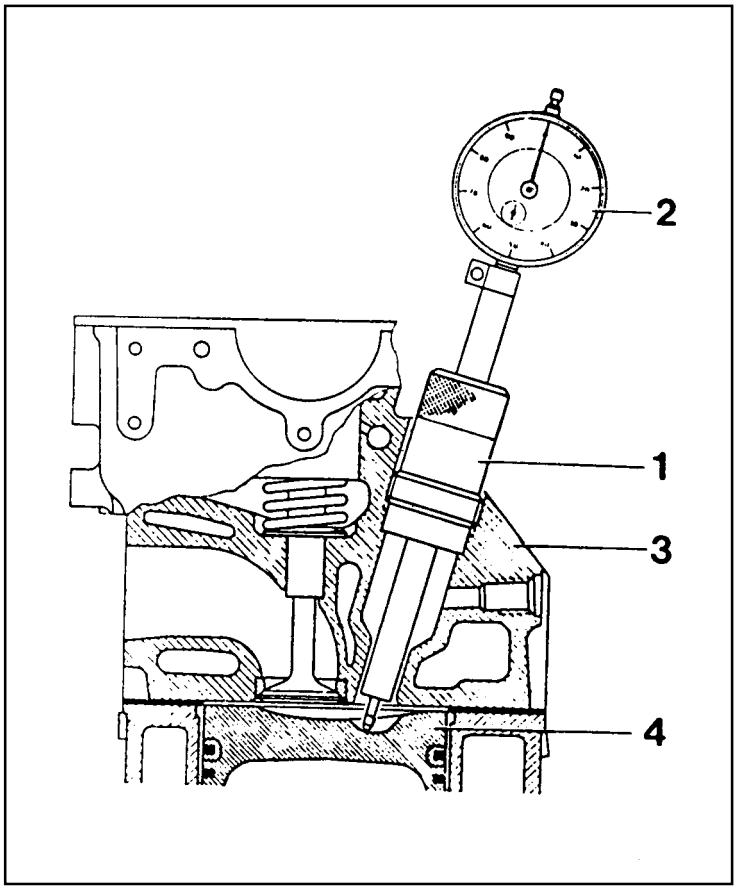

1 Measuring Device
2 Dial Gauge
3 Cylinder Head
4 Piston ..... Set at TDC

Tools Service

001 589 32 21 00 Dial Gauge

601 589 07 21 00 Deqth Gauge

667 589 01 21 00 Fixing Device

Notice

- The TDC sensor bracket must be adjusted in case of followings.
- When replacing the TDC sensor bracket.
- When replacing the crankshaft, the hub or the vibration damper.
- When replacing or installing the timing case cover.
- After engine overhauling.

* If the cylinder head is removed, the measuring pin of the dial gauge can be positioned on the piston crown.

This is done by placing the magnetic dial holder on the mating surface of the crankcase.

Downloaded from www.Manualslib.com manuals search engine

Setting (with cylinder head installed)

1. Remove the prechamber of No. 1 cylinder.
2. Position the piston of No.1 cylinder at BTDC 10.

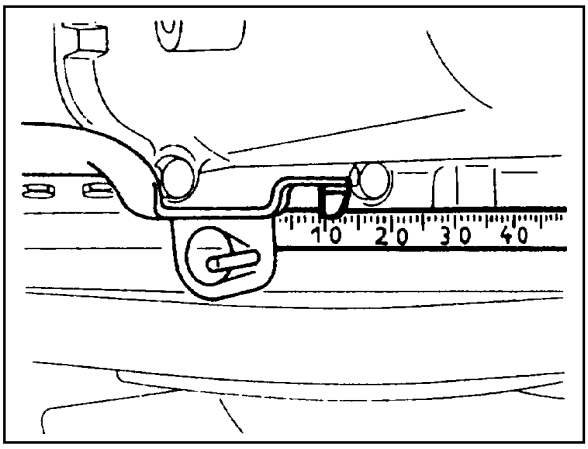

3. Install the measuring device into the prechamber bore and position the dial gauge with a preload of 5mm.

   Dial Gauge 001 589 53 21 00
   Depth Gauge 601 589 07 21 00

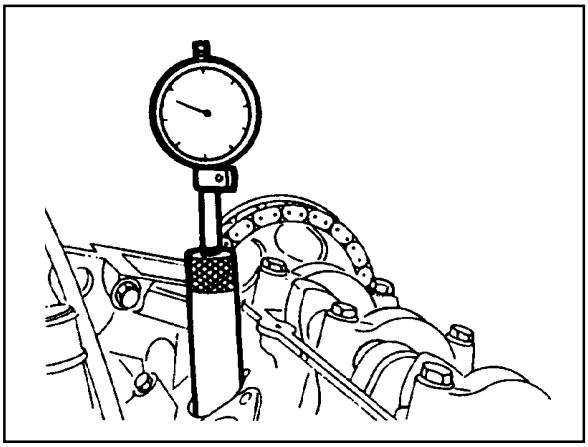

4. Slowly rotate the crankshaft in the direction of engine rotation until the large pointer on the dial gauge stops (TDC position).

   Notice

   The position of TDC is when the large pointer on the dial gauge is stopped before moving back.

5. remove the reinstall the measuring device and position the dial gauge scale at ‘0’.
6. Slowly rotate the crankshaft in the direction of engine rotation until the dial gauge has moved back (counterclockwise) by 3.65mm.

7. Insert fixing device into the sensor bracket.

   Notice

   The pin on the vibration damper must engage into the slot of the fixing device.

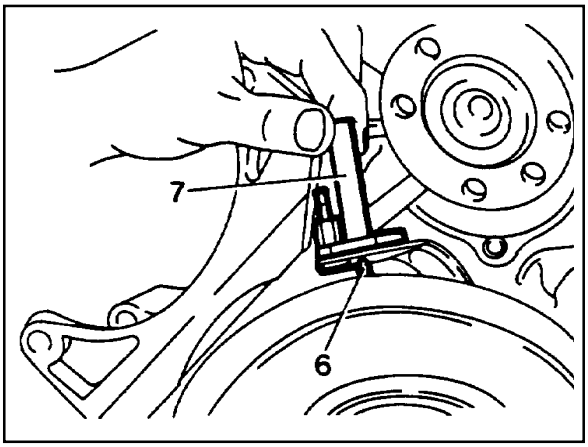

   Fixing Device 667 589 01 21 00

8. If the pin does not engage, adjust the setting of the sensor bracket by removing and tightening of the sensor bracket bolts.

Tightening Torque	10 Nm

   Notice

   The timing mark on the damper must be positioned at ATDC 20.

Downloaded from www.Manualslib.com manuals search engine

CYLINDER HEAD

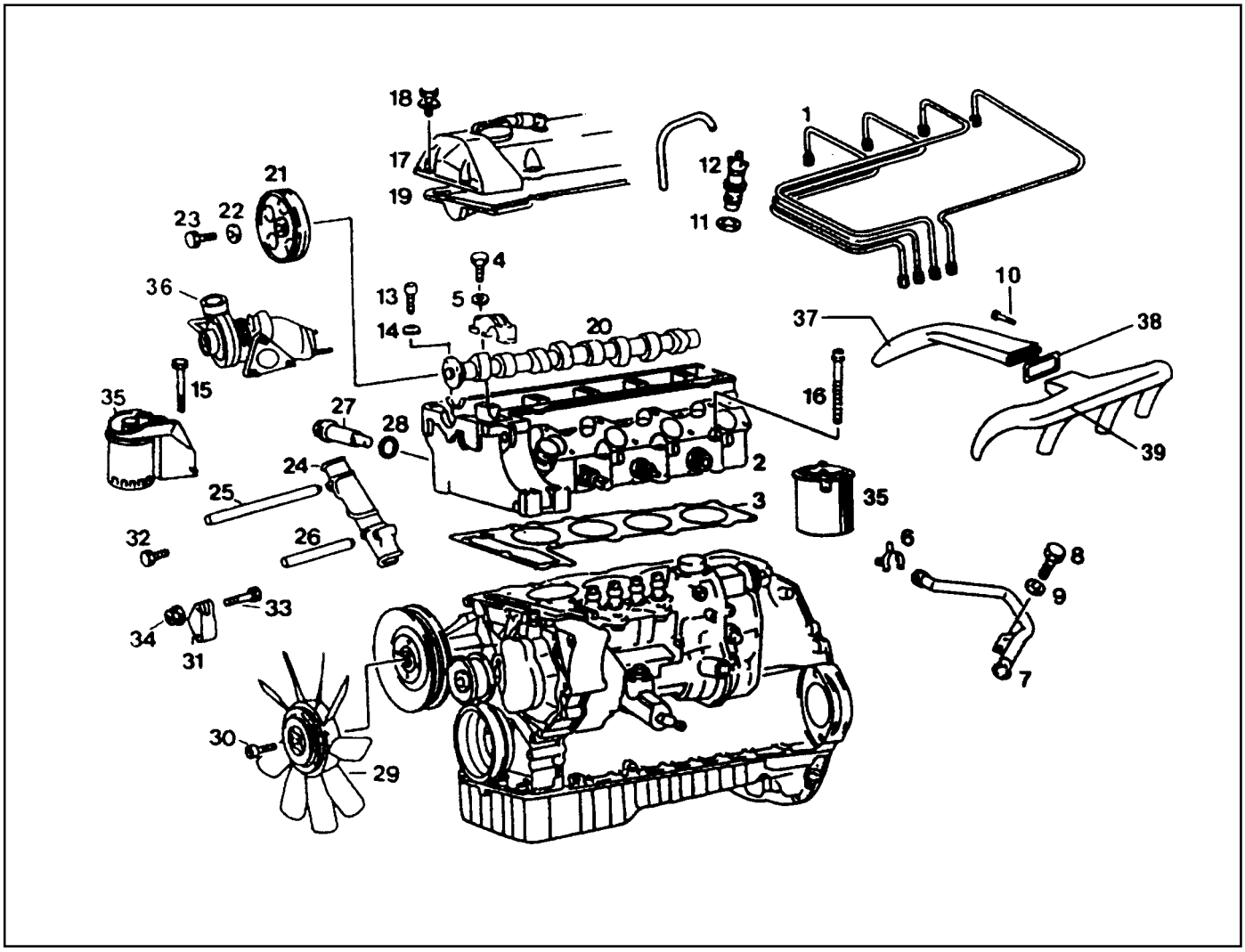

1	Fuel Injection Pipe	18Nm
2	Cylinder Head	
3	Gasket	Replace
4	Bolt	25Nm
5	Washer	
6	Clamp	
7	Heater Feed Pipe	
8	Bolt	
9	Washer	
10	Bolt	
11	Nozzle Washer	Replace
12	Fuel Injection Nozzle	35-40 Nm
13	Hexagon Socket Bolt	25 Nm
14	Washer	
15	Bolt	25 Nm
16	Cylinder Head Bolt	See Table
17	Cylinder Head Cover	
18	Bolt	10 Nm
19	Gasket	
20	Camshaft	
21	Camshaft Drive Sprocket	Replace
22	Washer	
23	Bolt(12-Sided)	25Nm + 90°
24	Sliding Rail	
25	Sliding Rail Pin	
26	Sliding Rail Pin	
27	Chain Tensioner	80 Nm
28	Gasket	Replace
29	Cooling Fan	Check
30	Hexagon Socket Bolt	45 Nm
31	Tensioning Lever	
32	Bolt	25 Nm
33	Bolt	
34	Nut	23 Nm
35	Fuel Filter	
36	Turbo Charger	
37	Intake Duct	
38	Gasket	Replace
39	Intake Manifold	

Downloaded from www.Manualslib.com manuals search engine

Tightening Torque

Cylinder Bolts (12-sided socket head) (Engine cold)	stage1	10 Nm
	stage2	35 Nm
	stage3	180°
M8 Cylinder Head Bolts		25 Nm

Tools Required

000 589 77 03 00 Box Wrench Insert
001 589 65 09 00 Socket Wrench Insert
102 589 03 40 00 Magnetic Bar
116 589 02 34 00 Threaded Pin
116 589 03 07 00 Type Socket Wrench
116 589 20 33 00 Sliding Hammer
601 589 00 10 00 Cylinder Head Bolt Wrench
602 589 00 40 00 Engine Lock
603 589 00 40 00 Counter Holder

Tightening Sequence for Cylinder Head Bolts

OM 662LA Engine

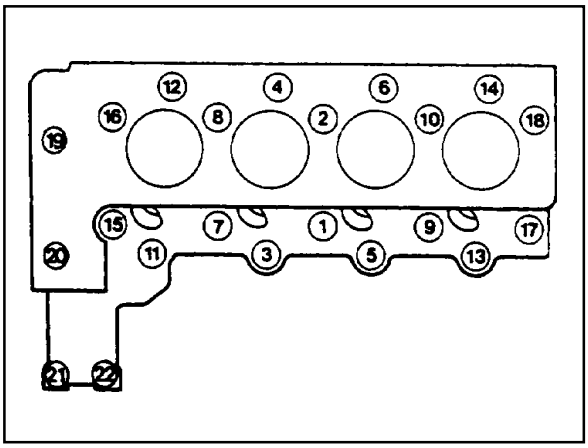

OM 661LA Engine

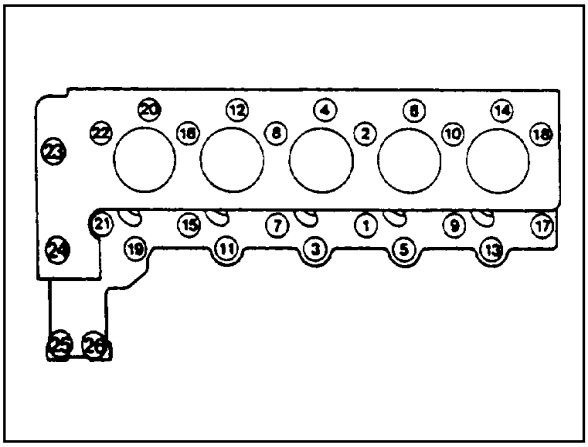

Downloaded from www.Manualslib.com manuals search engine

Notice

The cylinder head may only be removed when the engine has cooled down. The cylinder head is removed together with the exhaust manifold. As the cylinder head bolts undergo a permanent tightening. They require to be replaced if they exceed the maximum lengthes indicated in the table.

Thread Dia.	Length(L) When New	Max. Length(L)
M10	80mm	82mm
M10	102mm	104mm
M10	115mm	117mm

The twelve-sided socket head bolts are tightened with each stages of torque and torque angle.

It is not necessary to retighten the cylinder head bolts at the 1000~1500km inspection or after 1000~1500km of repairs.

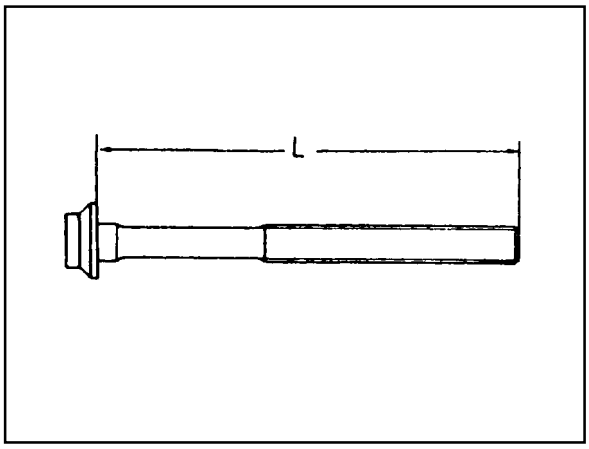

Downloaded from www.Manualslib.com manuals search engine

Disassembly Procedure

1. Completely drain the coolant from the radiator and cylinder block.
2. Remove the cooling fan shroud.
3. Hold the fan with counter holder and remove the bolt and then remove the cooling fan.

   Notice

   Keep the fan in vertical position.

Counter Holder 603 589 00 40 00

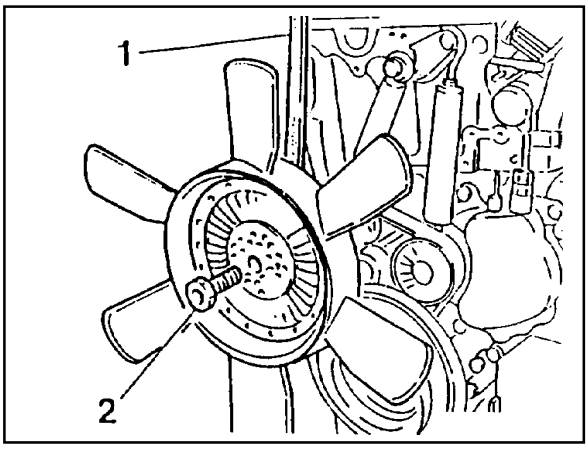

4. Remove the bracket oil dipstick tube.

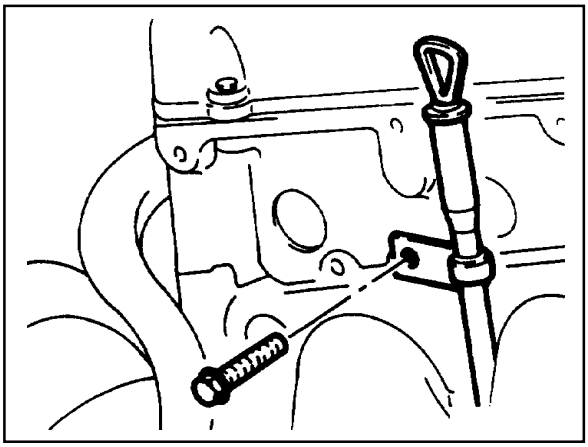

5. Remove the nut.
6. Remove the nut on the tensioning lever and insert the rod(F12´180mm). By pushing the rod to the arrow direction, pull back the bolt.

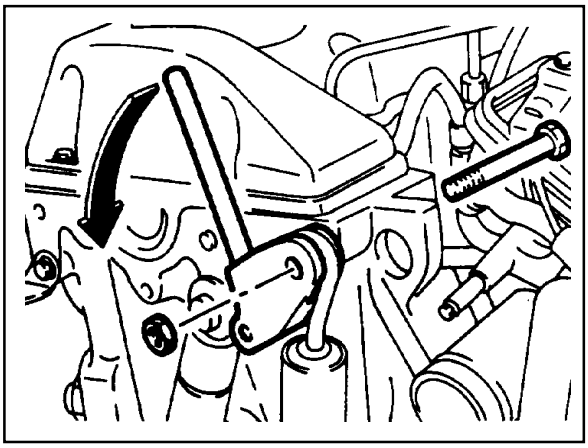

7. Push the tensioning lever to the opposite direction to release the spring tension and remove the poly V-belt.

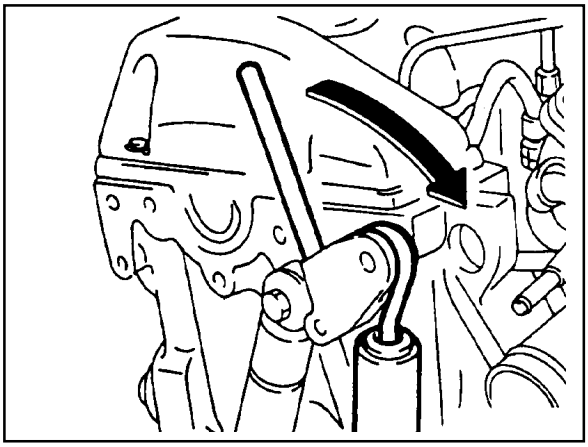

Downloaded from www.Manualslib.com manuals search engine

8. Remove the air cleaner cover and element and then remove the air cleaner housing.
9. Remove the oil return hose and plug.

   Notice

   Cover them to prevent chips from coming into.

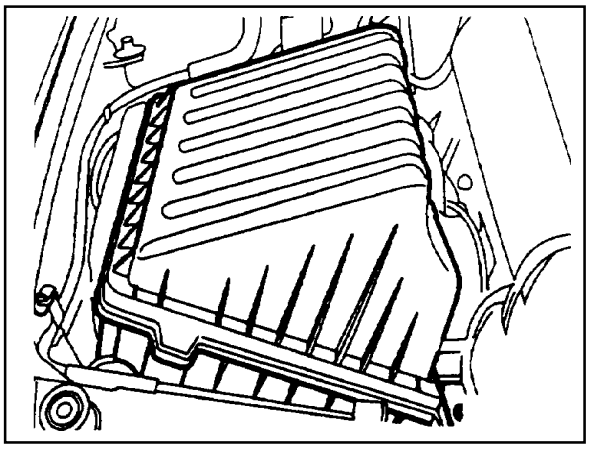

10. Unscrew the EGR pipe mounting bolts onto the exhaust manifold.
11. Remove the duct bracket from the cylinder head.

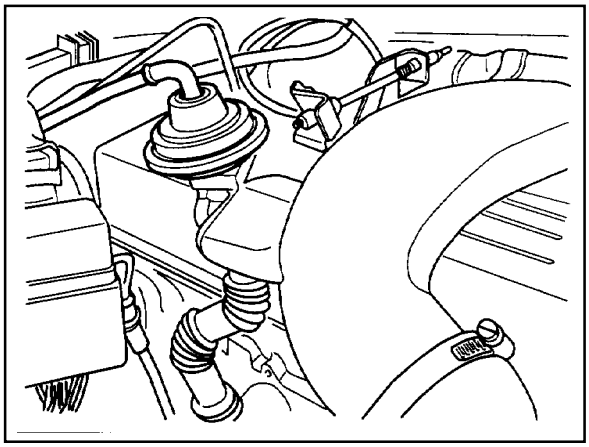

12. Unscrew the intake duct mounting bolts onto the intake manifold.

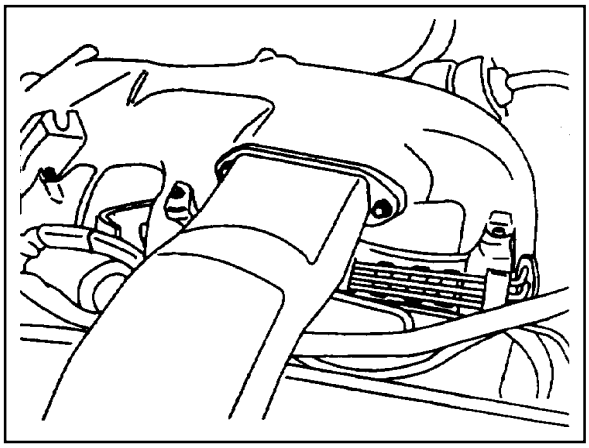

13. Separate the connecting rod from the control lever.

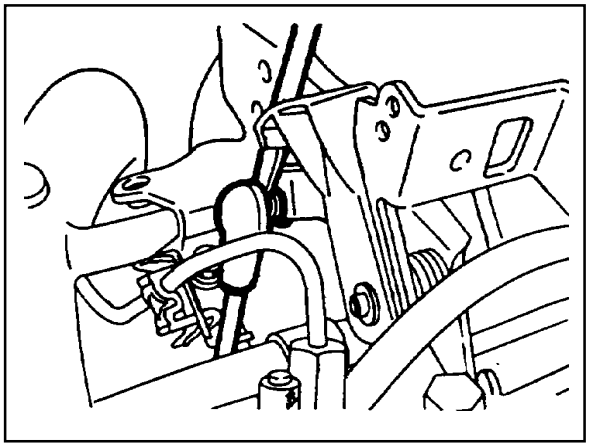

Downloaded from www.Manualslib.com manuals search engine

14. Pull out the accelerator control linkage.

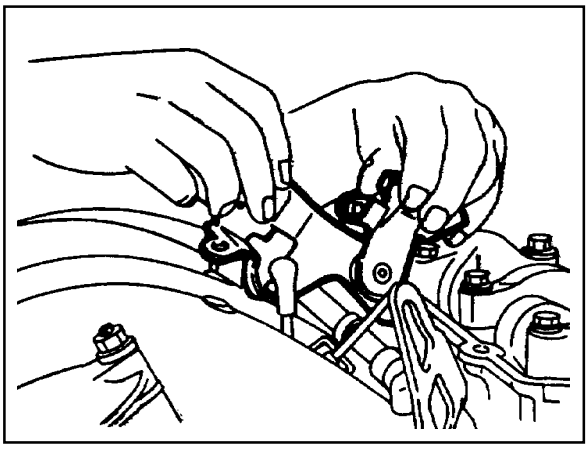

15. Remove the fuel injection line(1) from the fuel injection nozzle(12).

Box Wrench Inset 000 589 77 03 00

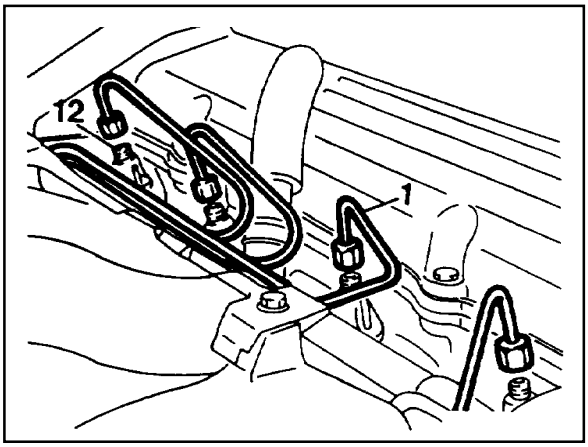

16. Remove the fuel injection line from the fuel injection pump.

Box Wrench Insert 000 589 77 03 00

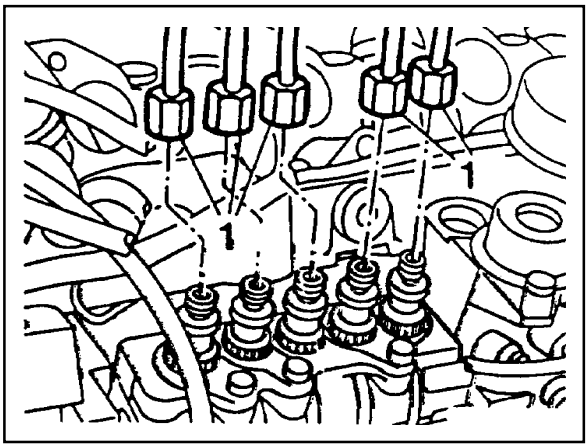

17. Remove the bracket mounting bolts and then remove the fuel injection line(1).

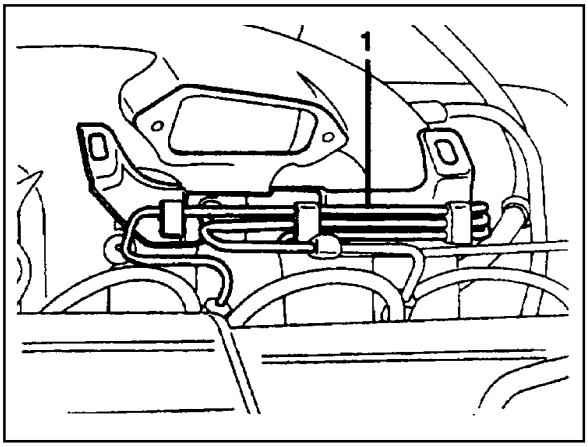

Downloaded from www.Manualslib.com manuals search engine

18. Disconnect the booster hose connected to intake manifold.

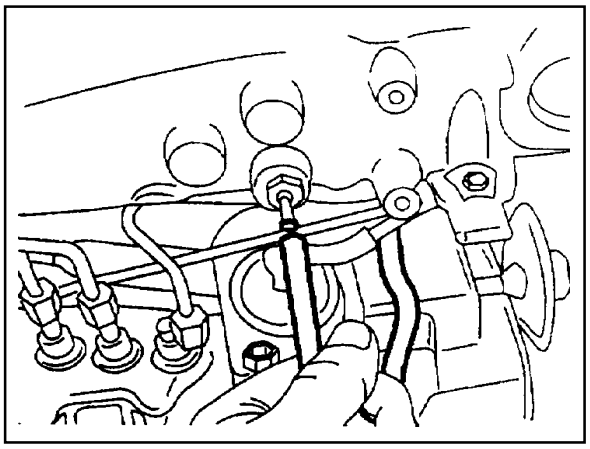

19. Remove the intake manifold and gasket.

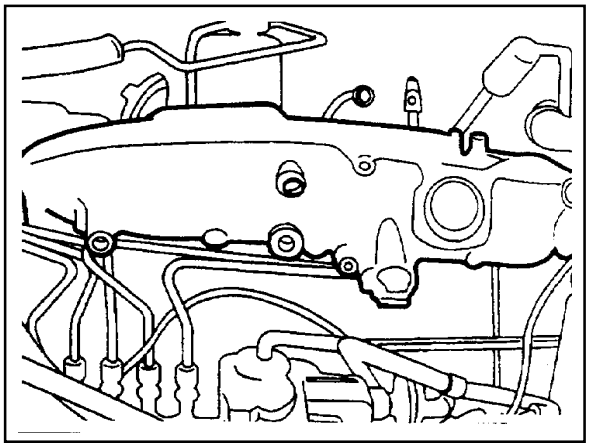

20. Remove the cylinder head cover and gasket with the blow-by gas hose.

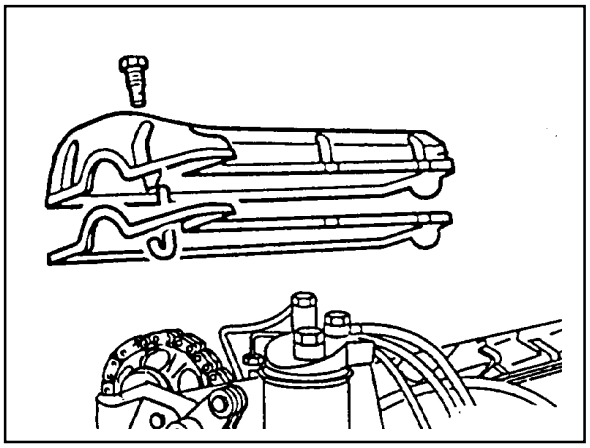

21. Disconnect the glow plug cables.

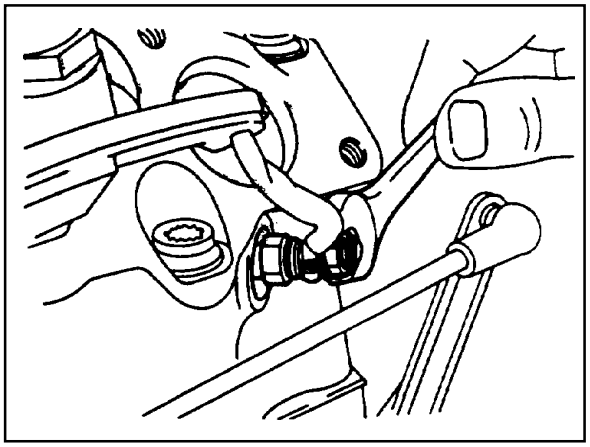

Downloaded from www.Manualslib.com manuals search engine

22. Remove the cable channel.

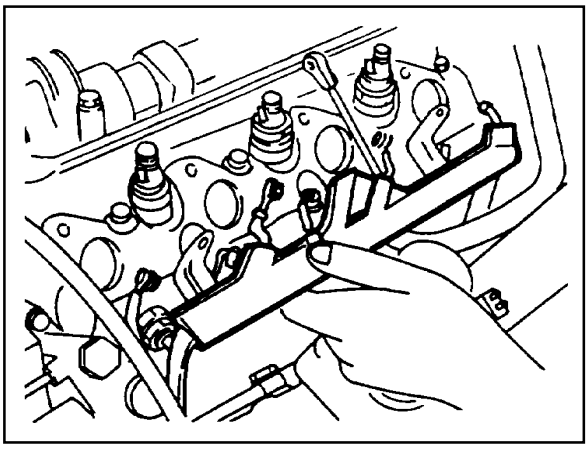

23. Disconnect the cables from the glow plug sensor and coolant temperature sensor.

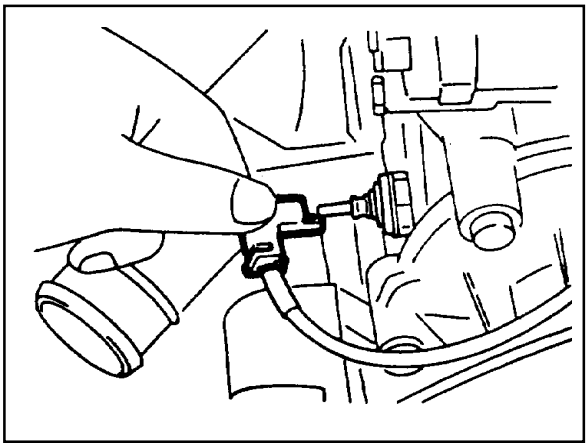

24. Remove the heater pipe bracket from the oil filter.

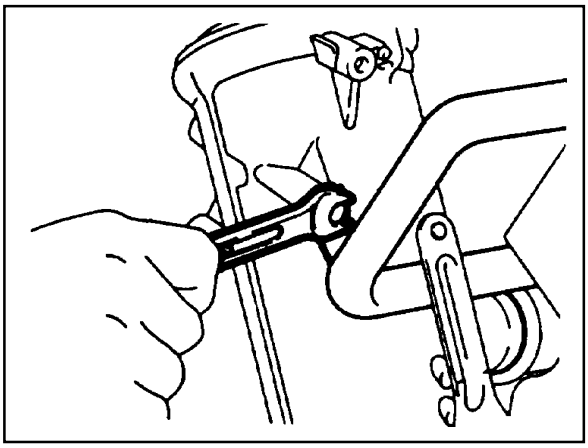

25. Pry off the clamp and push the heater feed pipe forward and then pull out the pipe.

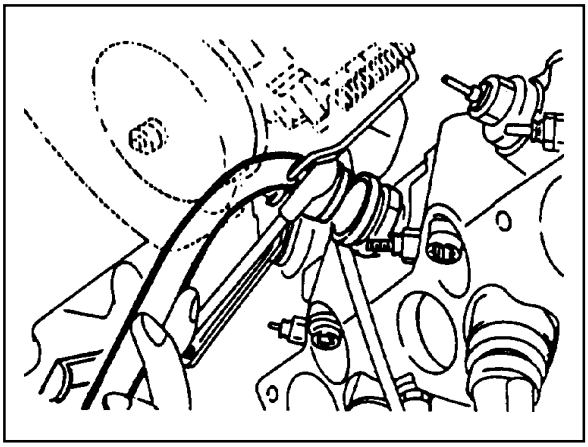

Downloaded from www.Manualslib.com manuals search engine

26. Disconnect the fuel lines from the fuel filter.

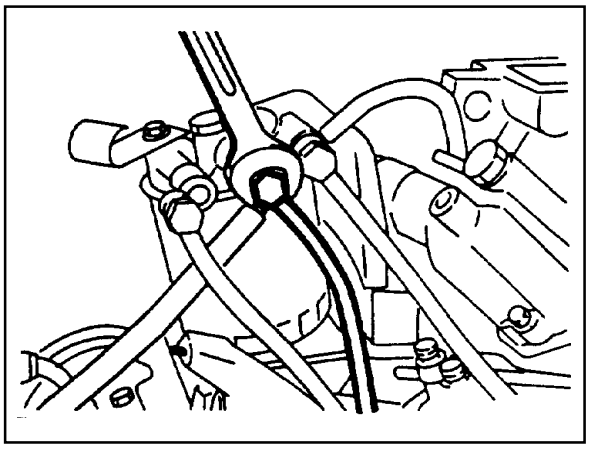

27. Disconnect the fuel lines from the injection pump.

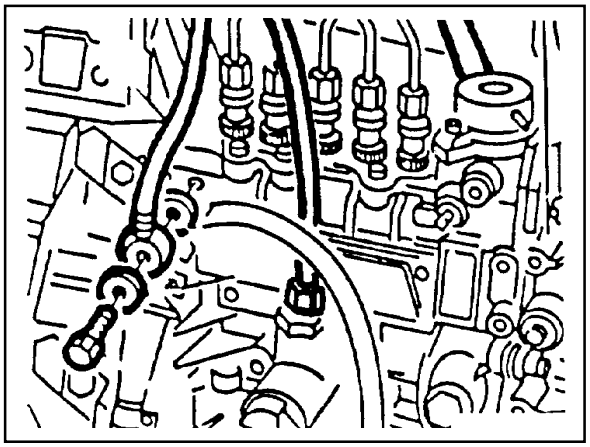

28. Remove the fuel filter(35).

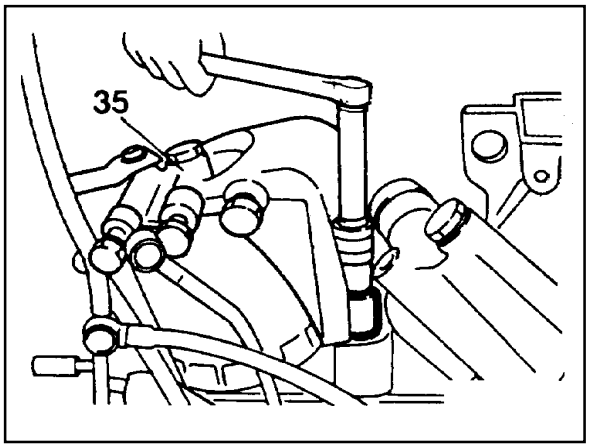

29. Remove the fuel injection nozzle(12) and nozzle washer(11).

Socket Wrench Insert 001 589 65 09 00

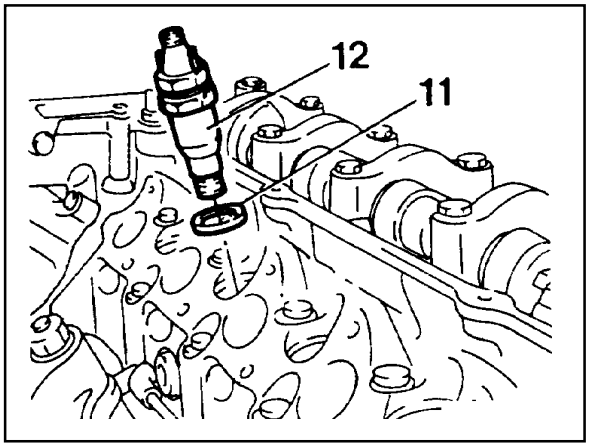

Downloaded from www.Manualslib.com manuals search engine

30. Rotate the crankshaft and set the No.1 cylinder at TDC.

    Notice

    Do not rotate the crankshaft to the opposite direction of engine revolution.

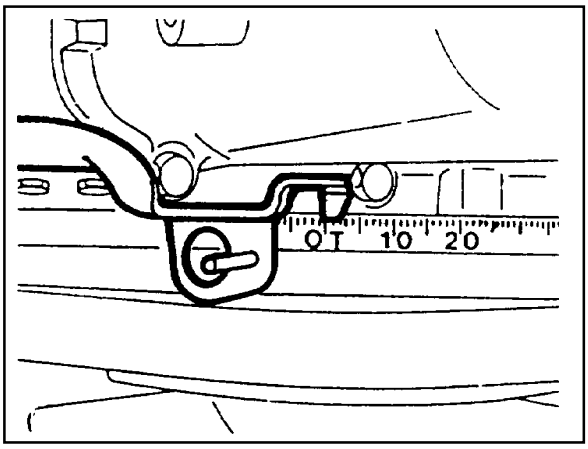

31. Place alignment marks on the camshaft gear and timing chain.

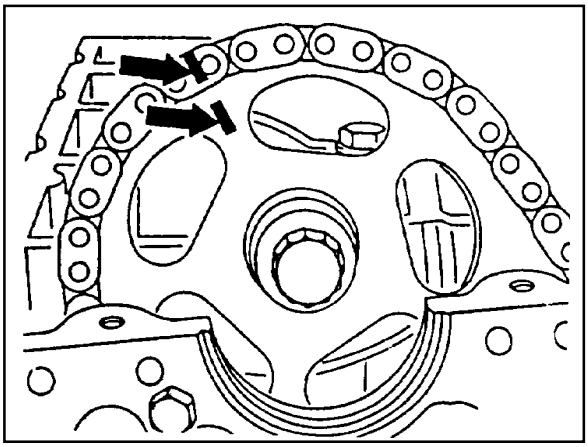

32. Ensure that the camshaft and the bearing cap marking are aligned.

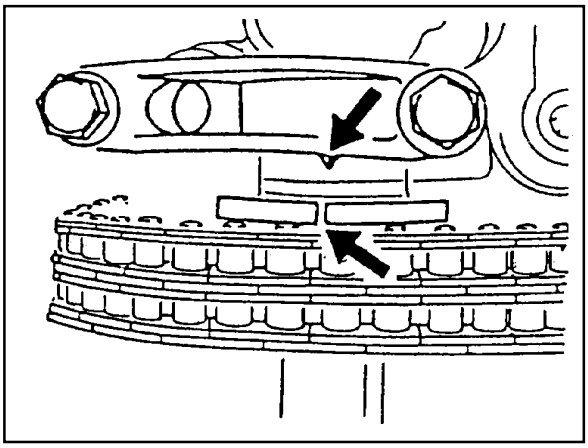

33. Remove the starter motor and install the engine lock onto the flywheel ring gear.

    Engine Lock 602 589 00 40 00

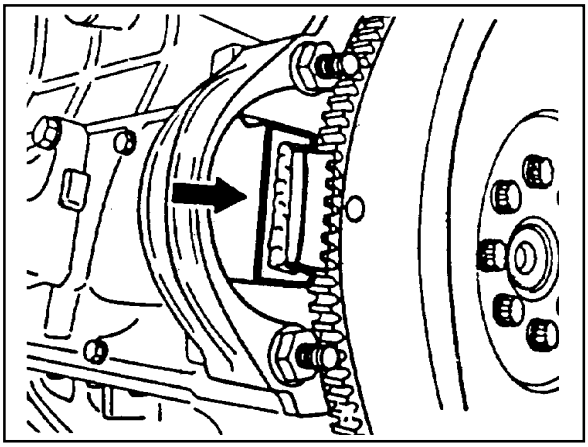

Downloaded from www.Manualslib.com manuals search engine

34. Remove the turbocharger.

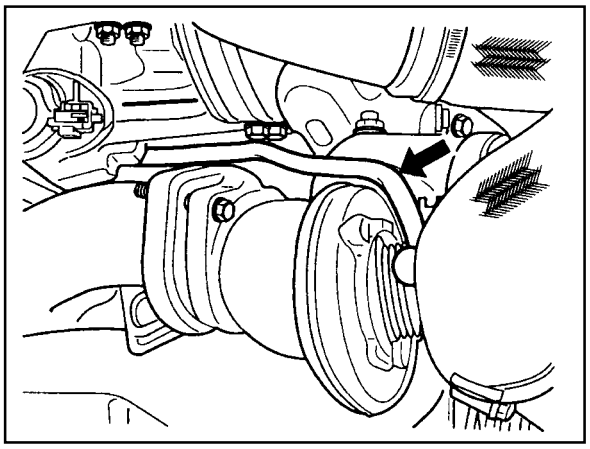

35. Remove the exhaust manifold and gasket.

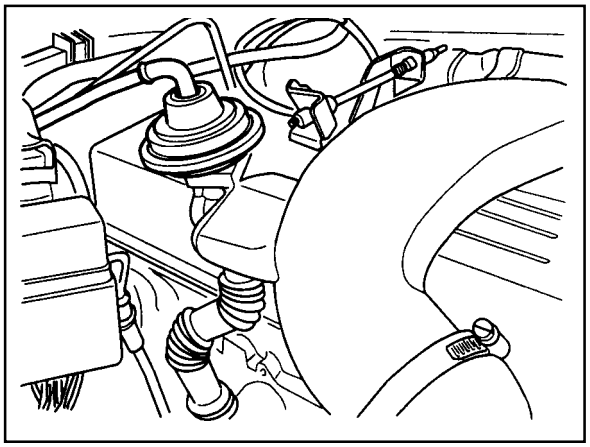

36. Remove the chain tensioner and seal.

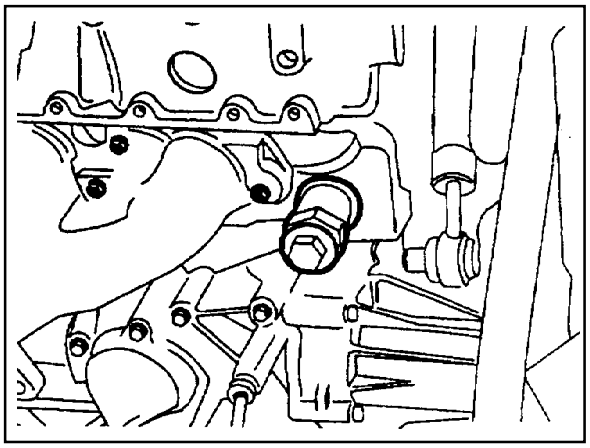

37. Remove the bolt and separate the drive sprocket(21).

Notice

During removal, be careful not to drop the sprocket and chain into the timing case.

Carefully pull off the chain and then pull out the sprocket.

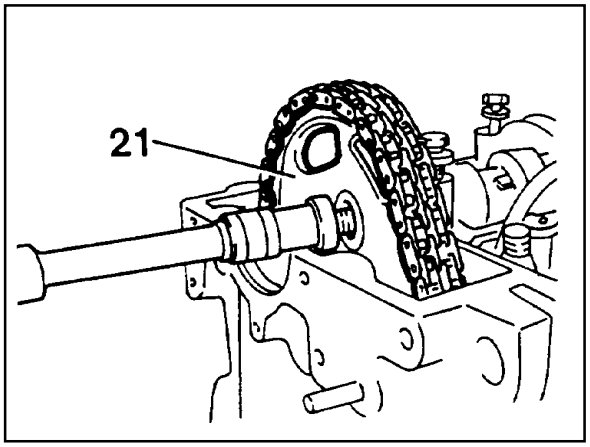

Downloaded from www.Manualslib.com manuals search engine

38. Remove the camshaft bearing cap bolts according to the numerical sequence.

Notice

Remove the No.1 bolts first and then remove the No. 2 bolts. Do not remove the bolts at a time completely but remove them step by step evenly or camshaft can be seriously damaged.

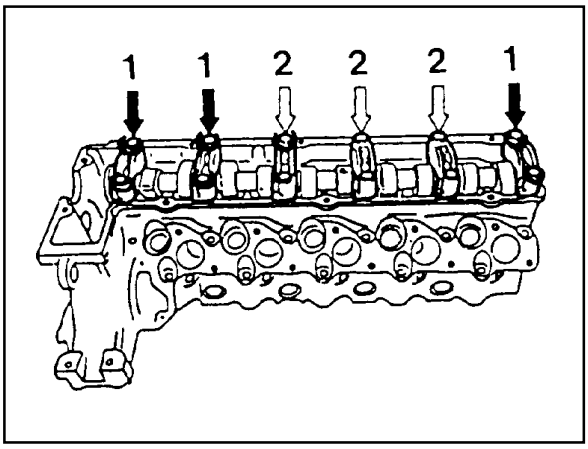

OM662LA

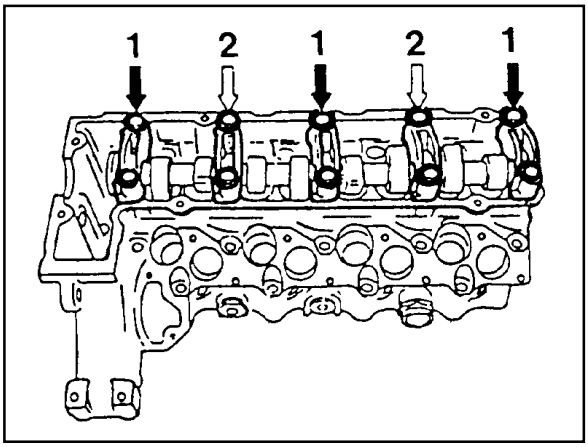

OM661LA

39. Remove the bearing caps and then pull out the camshaft(20) upward.

Notice

Be careful not to miss the locking washer.

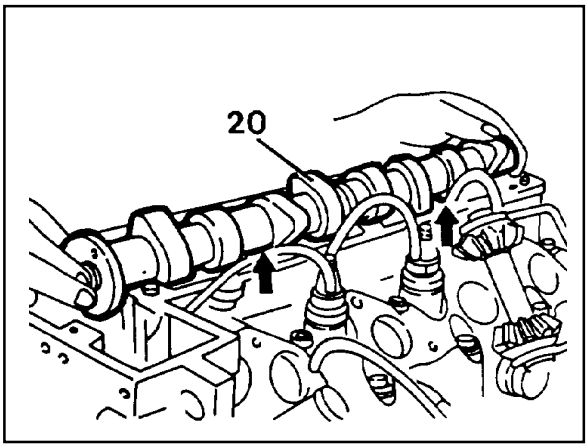

40. Remove the locking washer.

Notice

Check the locking washer and replace if necessary.

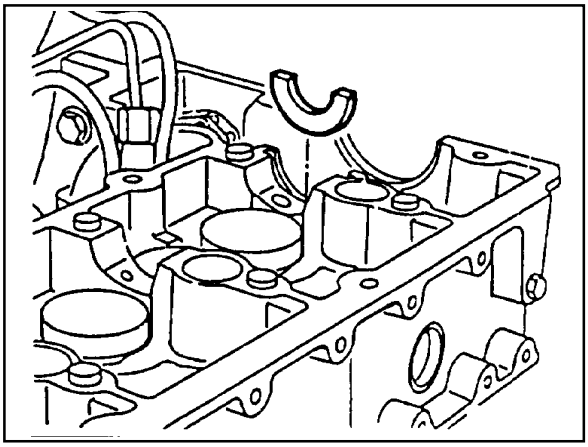

Downloaded from www.Manualslib.com manuals search engine

41. Remove the bolt(32).

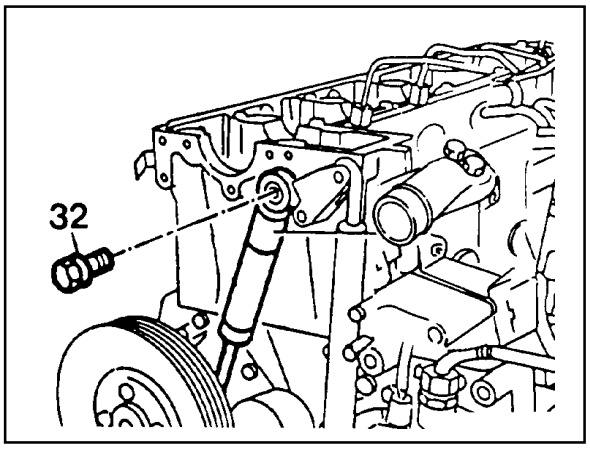

42. Separate the spring and pull out the tensioning lever(31).

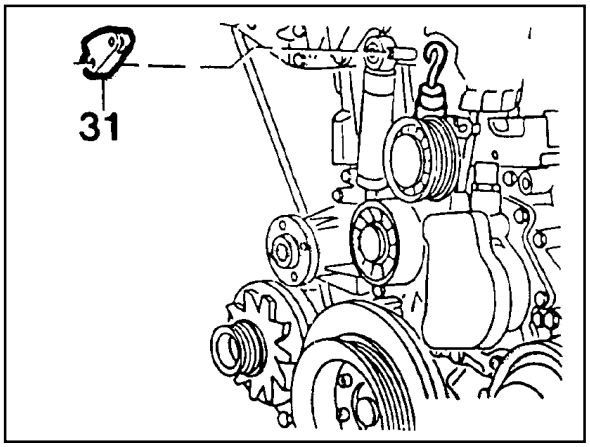

43. Pry off the closing cover. Remove the bolt and then remove the idle pulley.

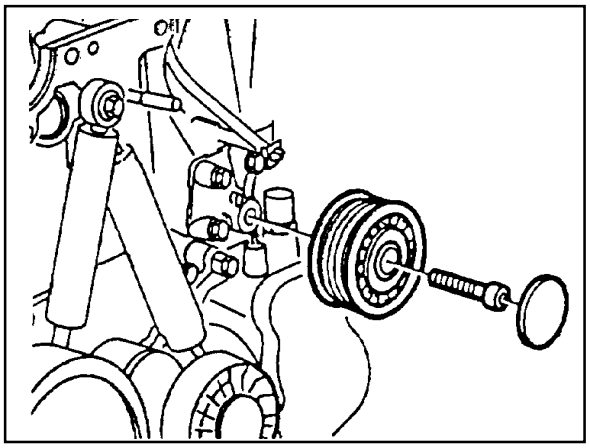

44. Using the sliding hammer(36) and the threaded pin(37), pull out the sliding rail pins(25, 26) and remove the sliding rail(24).

Sliding Hammer 116 589 20 33 00
Threaded Pin 116 589 02 34 00

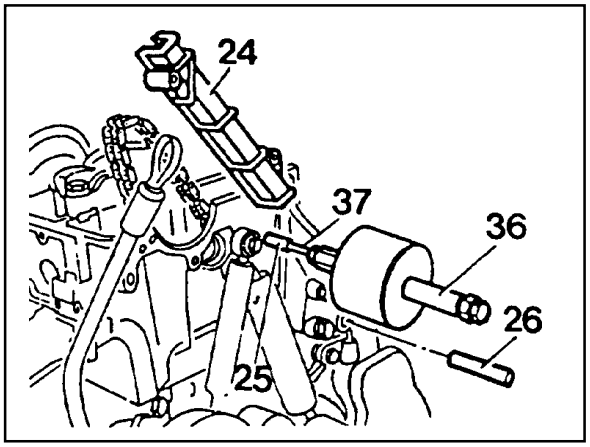

Downloaded from www.Manualslib.com manuals search engine

45. Remove the vacuum line from the vacuum pump.

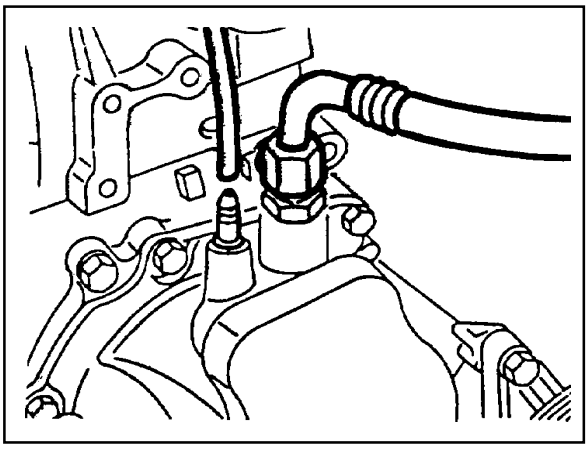

46. Disconnect the vacuum pipe from thermo valve.

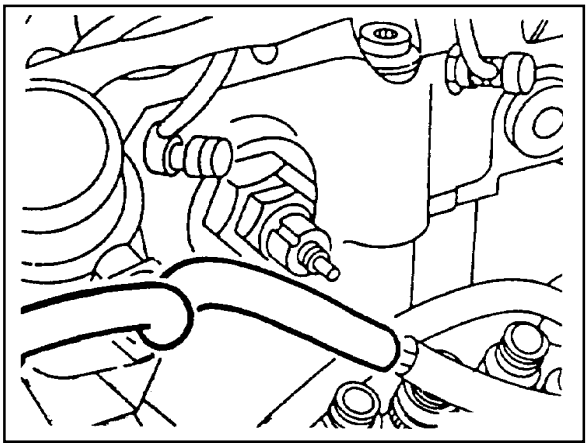

47. Remove the socket bolts(13) of the chain box.

T Type Socket Wrench 116 589 03 07 00
Magnetic Bar 102 589 03 40 00

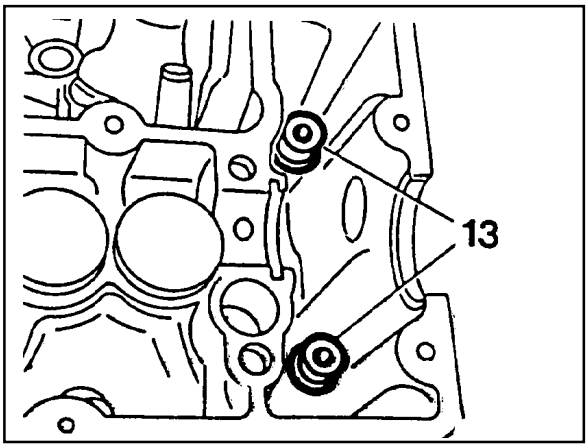

48. Remove the cylinder head bolts in numerical se-quence.

Cylinder Head Bolt Wrench 601 589 00 10 00

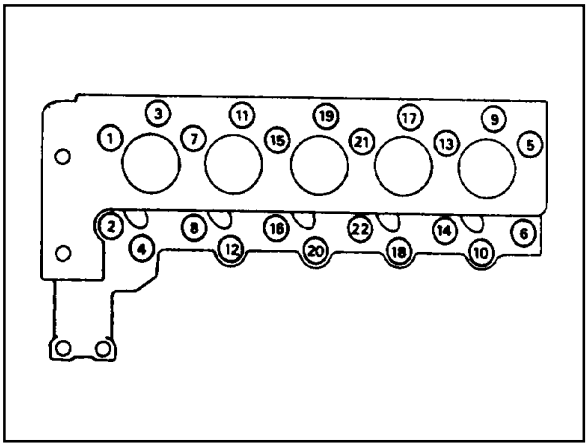

OM 662LA

Downloaded from www.Manualslib.com manuals search engine

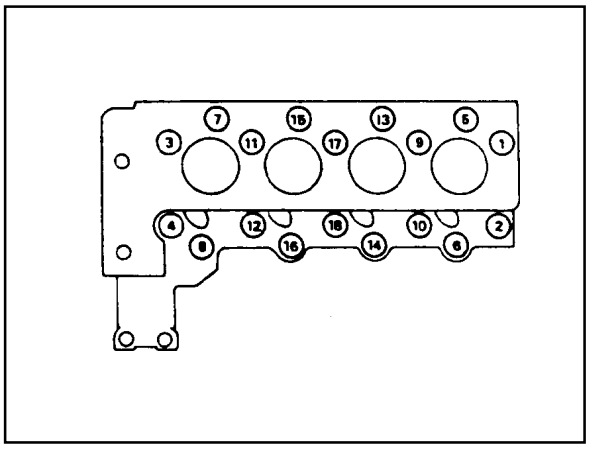

OM 661LA

49. Remove the cylinder head(2) and gasket(3).

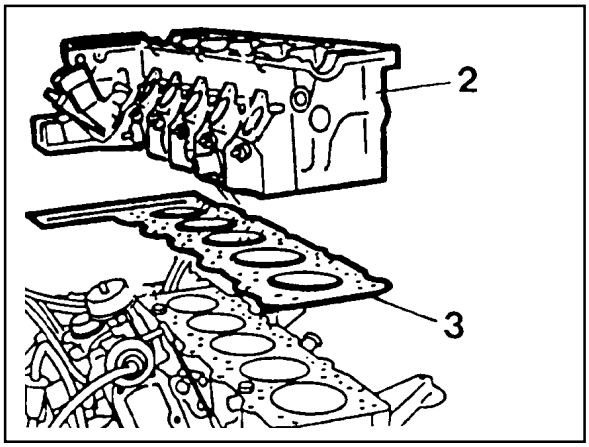

Downloaded from www.Manualslib.com manuals search engine

Assembly Procedure

1. Replace the cylinder head gasket.

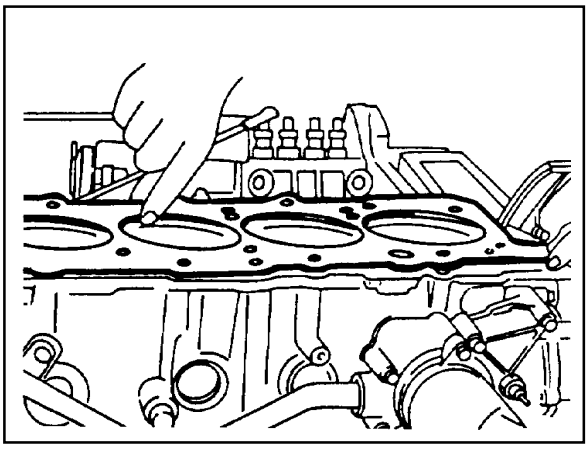

2. Install the cylinder head onto the crankcase.

   Notice

   Align the cylinder head holes with the guide pins.

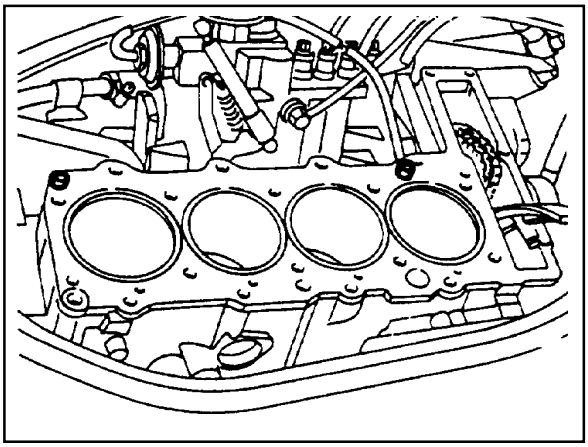

3. Measure the length(L) of cylinder head bolts.

   Notice

   If the max. length is exceeded, replace the bolts.

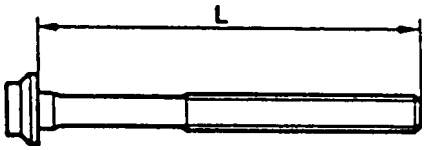

Thread Dia.	Length(L) when new	Max. Limit(L)
M10	80mm	82mm
M10	102mm	104mm
M10	115mm	117mm

4. Coat the head contact surface of bolts and thread with oil and insert them as shown.

   - Cylinder head bolts arrangement

   Bore

   1 ..... M10 × 80
   2 ..... M10 × 102
   3 ..... M10 × 115
   4 ..... M 8 × 50
   5 ..... M 8 × 80

OM662LA

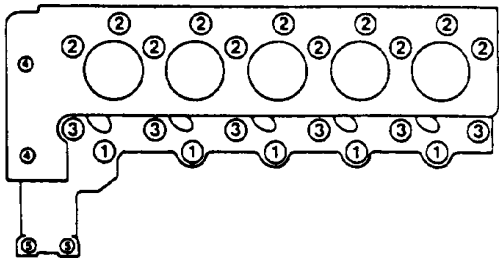

Downloaded from www.Manualslib.com manuals search engine

5. Tighten the cylinder head bolts to specified torque and torque angle.

Stage 1	15 Nm
Stage 2	35 Nm
Torque Angle	90°
Wait For	10 minutes
Torque Angle	90°

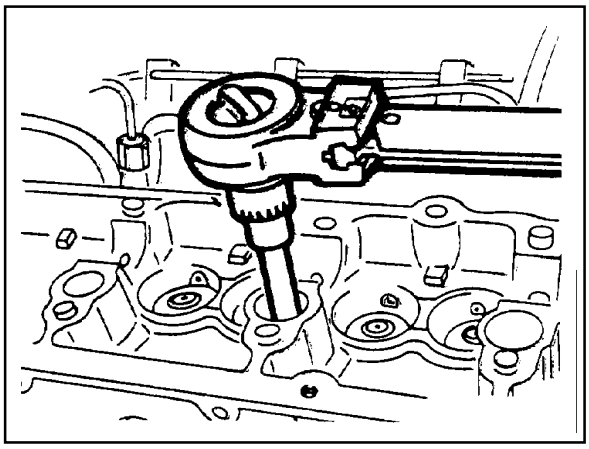

OM 661LA

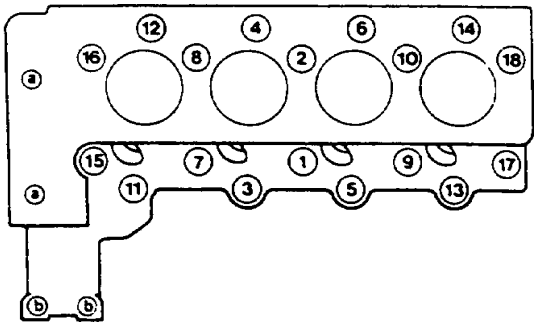

OM 662LA

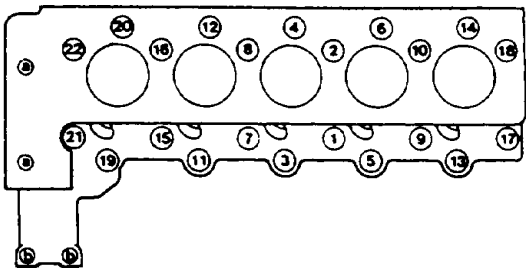

6. Install the socket bolts in the chain box.

Tightening Torque	25 Nm

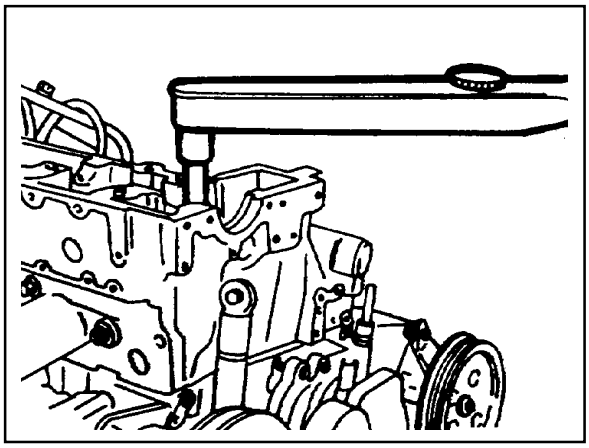

7. Connect the vacuum pipe to the thermo valve.

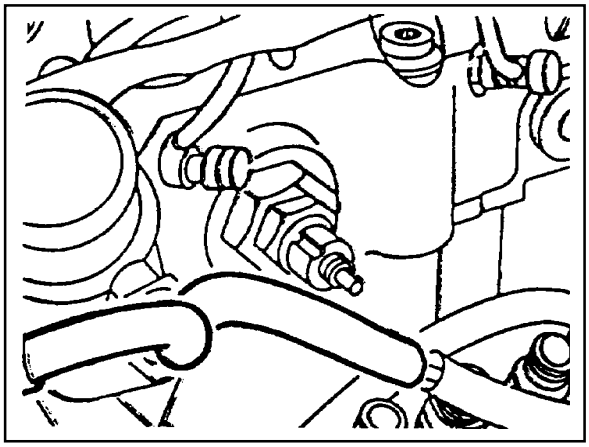

Downloaded from www.Manualslib.com manuals search engine

8. Connect the vacuum lines to the vacuum pump.

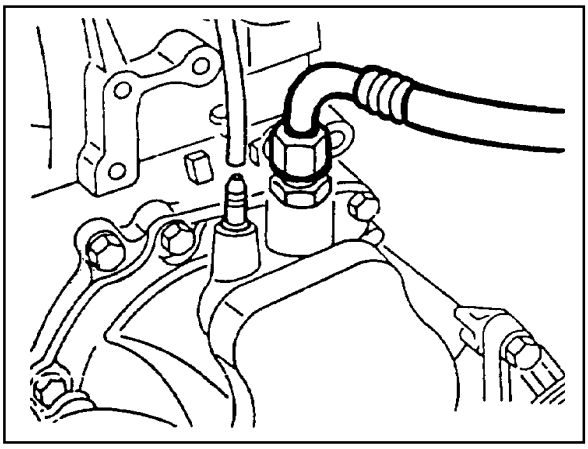

9. Install the fuel filter and connect the pipe.

Tightening Torque	25 Nm

Notice

Be careful not to be confused the connections and hoses.

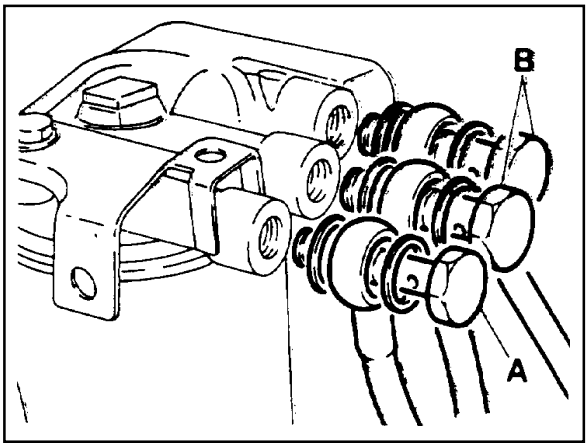

10. Connect the fuel pipe to the injection pump.

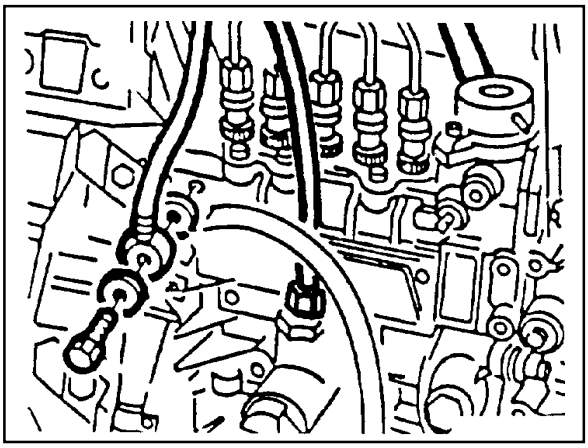

11. Install the sliding rail(24) and insert the sliding rail pins(25, 26).

Notice

Apply sealing compound on the each collar of the sliding rail pins.

Sliding Hammer 116 589 20 33 00
Threaded Pin 116 589 02 34 00

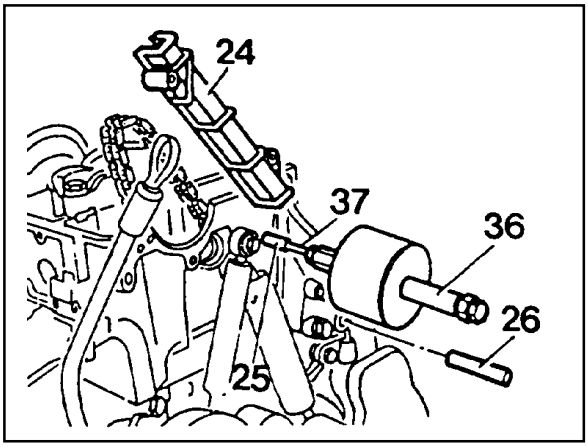

Downloaded from www.Manualslib.com manuals search engine

12. Install the idle pulley and fit the closing cover.

Tightening Torque	25 Nm

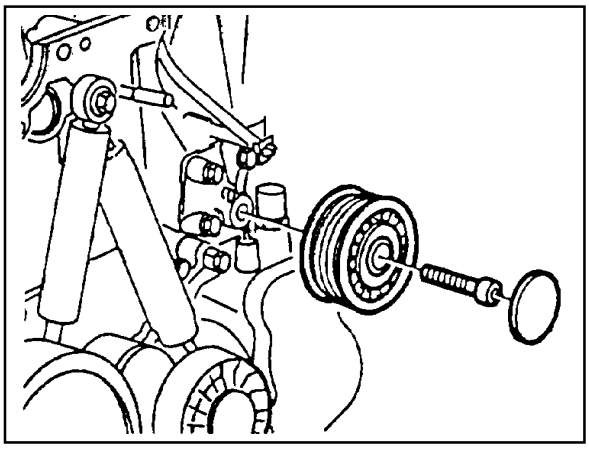

13. Insert the tensioning lever(31) and install the spring.

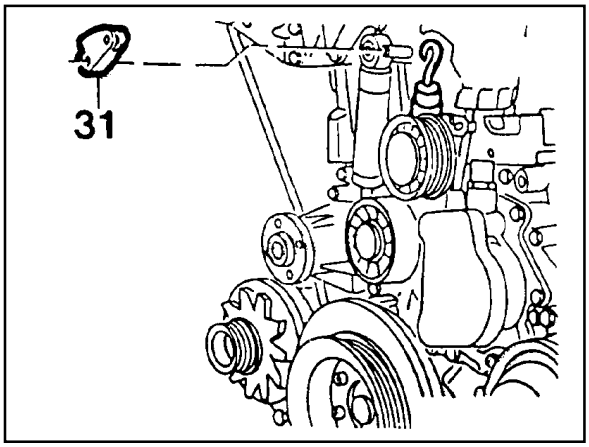

14. Install the damper.

Tightening Torque	23 Nm

Notice

Insert the tensioning lever bolts onto the mounting hole.

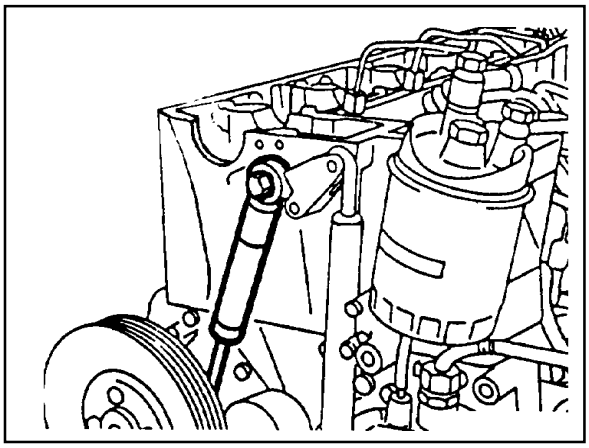

15. Insert the locking washer.
16. Inspect the valve tappet and check that the tappet moves smoothly.

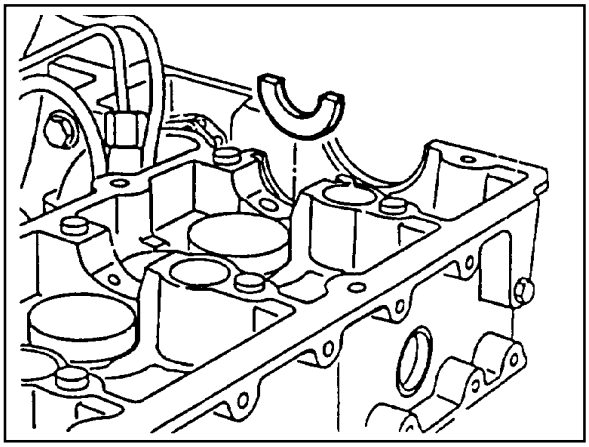

Downloaded from www.Manualslib.com manuals search engine

17. Coat the camshaft with oil and install the camshaft on the cylinder head to be TDC mark(arrow) upward.
18. Measure the axial end play of the camshaft.

End Play	0.06 - 0.21mm

Notice

If out of standard, adjust it with the proper thickness of locking washer.

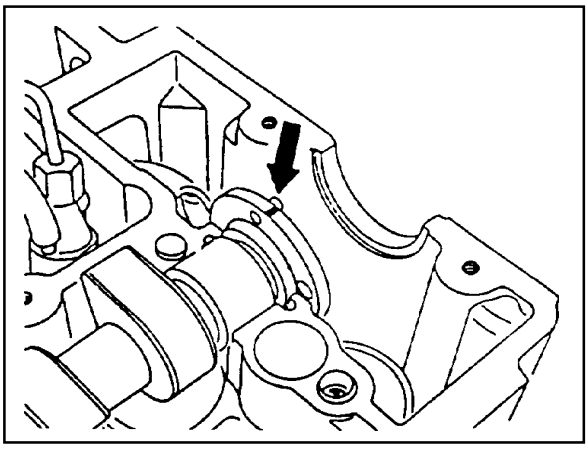

19. Install the bearing caps on the camshaft according to the number on the caps.

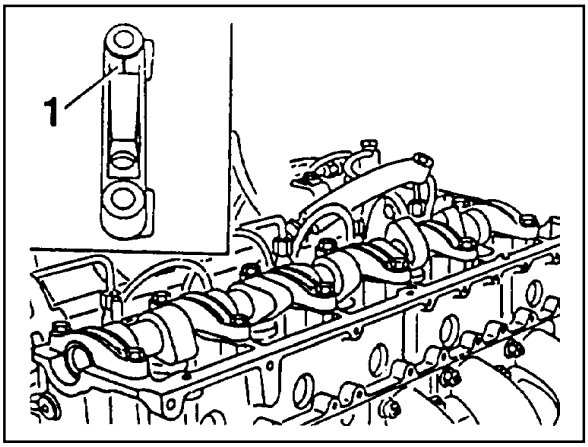

20. Tighten the bearing cap bolts according to the numerical sequence.

Tightening Torque	25 Nm

Notice

Tighten the No. 1 bolts(light arrow) first and then tighten the No. 2 bolts(dark arrow) stage by stage.

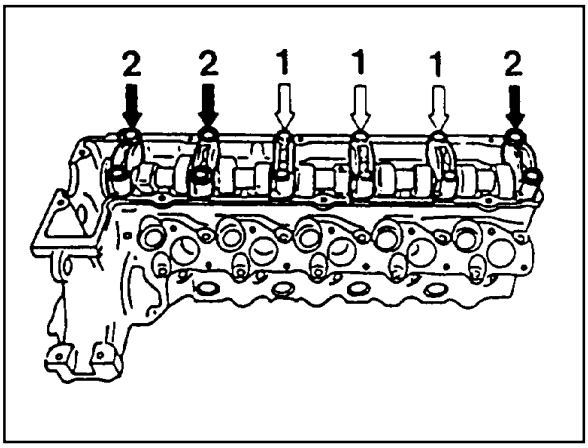

OM662LA

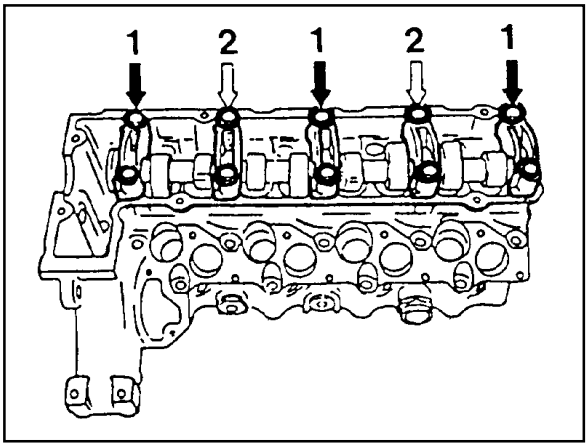

OM661LA

Downloaded from www.Manualslib.com manuals search engine

21. Position the camshaft on marking and install the camshaft sprocket.

    Notice

    Align the alignment marks on the chain and sprocket.

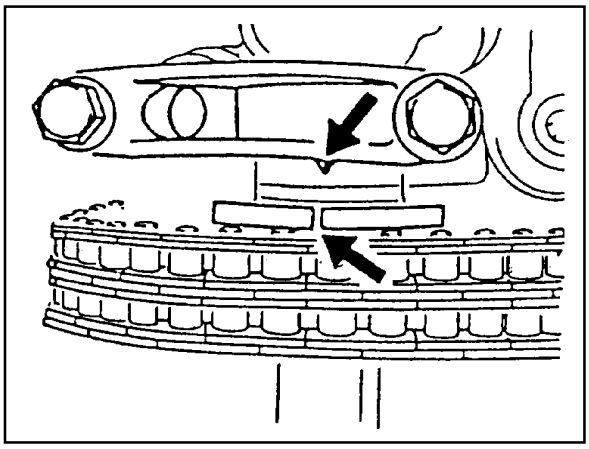

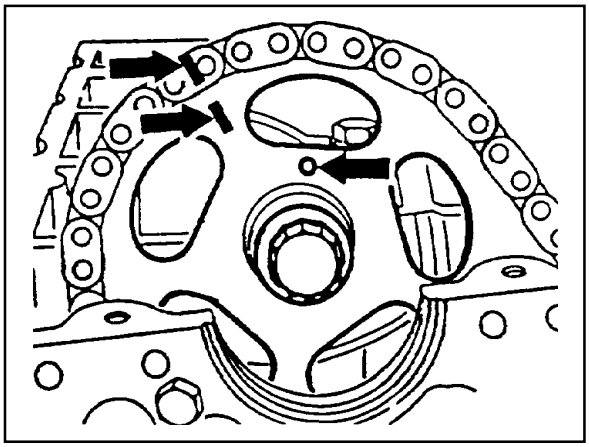

22. Check the TDC position of the crankshaft.

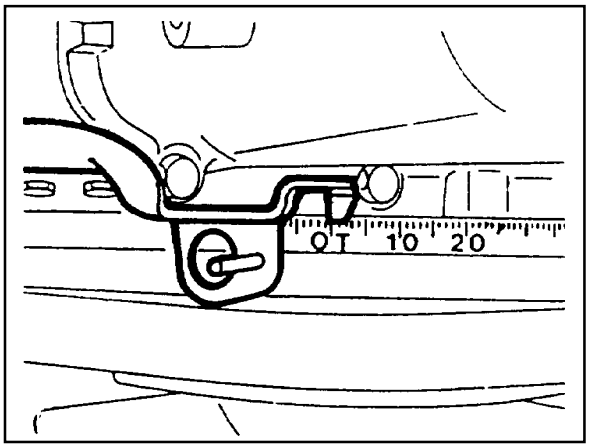

23. Install the camshaft sprocket bolt.

Tightening Torque	25 Nm + 90°

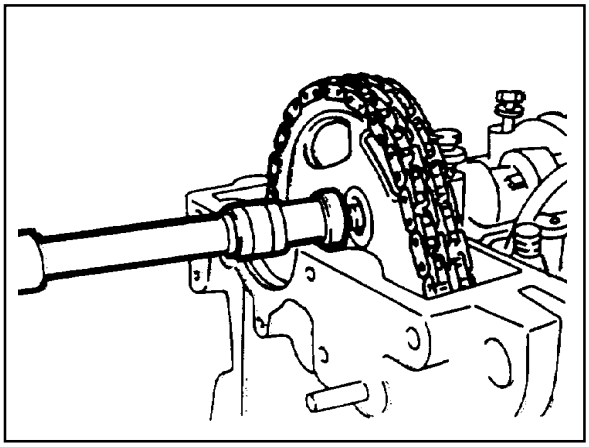

Downloaded from www.Manualslib.com manuals search engine

Notice

Measure the max. length 'L' and replace the bolt if it exceeds 53.6mm.

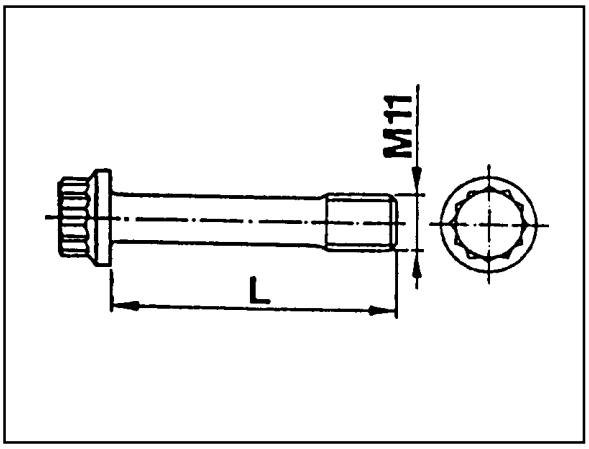

24. Install the exhaust manifold and gasket.

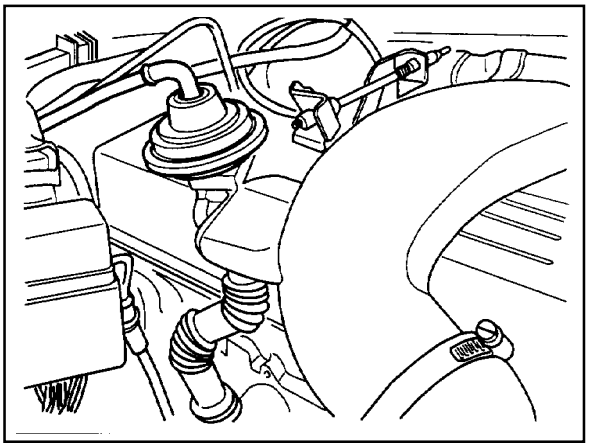

25. Install the turbocharger.

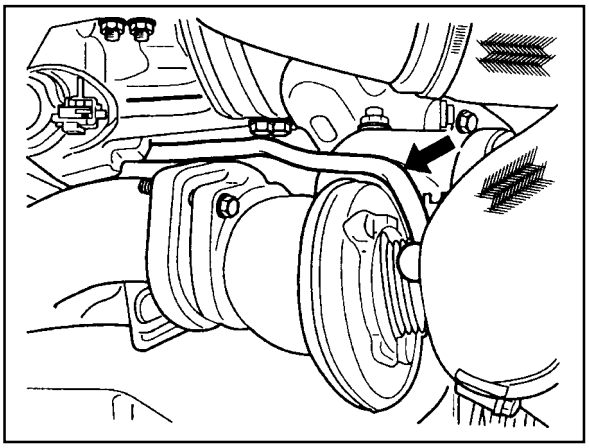

26. Install the exhaust pipe onto the turbocharger.

Tightening Torque	25 Nm

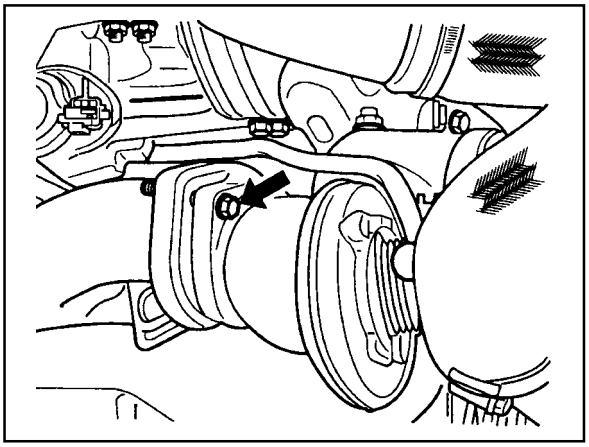

Downloaded from www.Manualslib.com manuals search engine

27. Replace the seal and then install the chain tensioner(27).

Tightening Torque	80 Nm

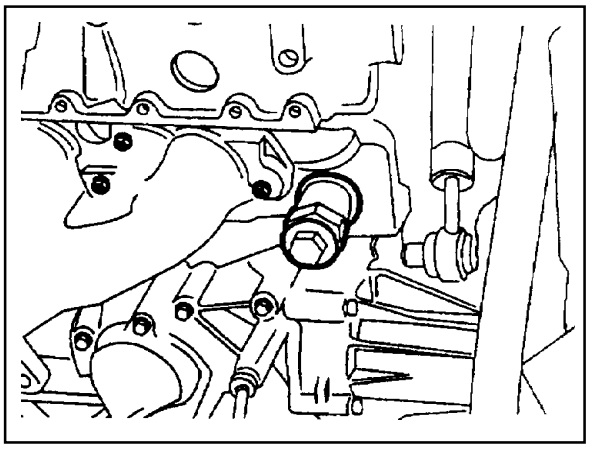

28. Remove the engine lock.

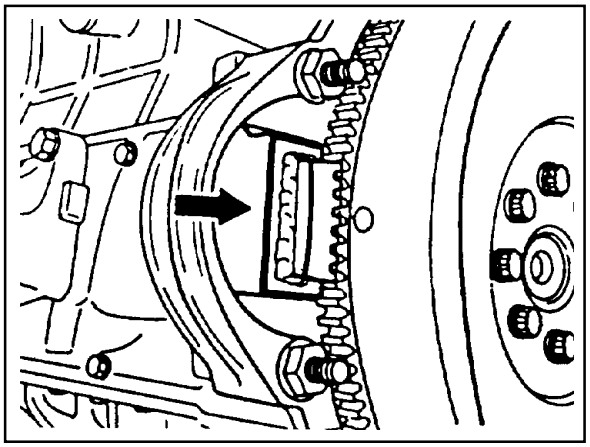

29. Insert the nozzle washer into the hole to face round part downward.
30. Install the fuel injection nozzle.

Tightening Torque	40 Nm

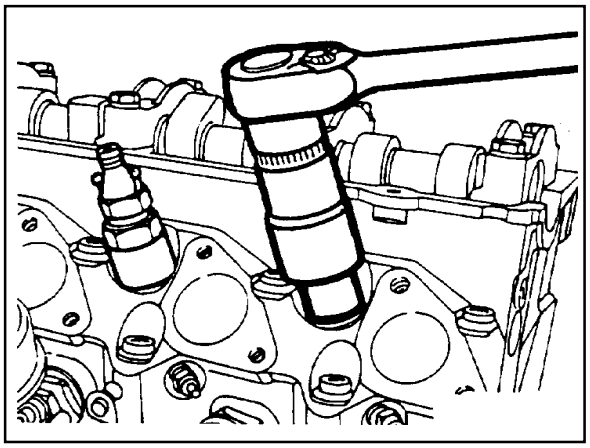

31. Connect the fuel hose.
32. Install the cable channel and connect the cables to glow plugs.

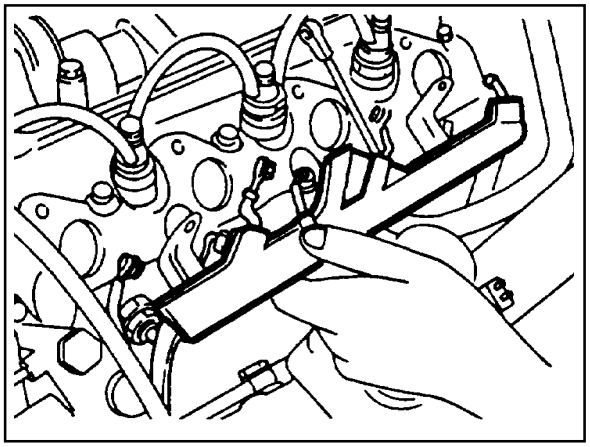

Downloaded from www.Manualslib.com manuals search engine

33. Replace the gasket and install the cylinder head cover.

Tightening Torque	10 Nm

34. Install the blow-by hose.

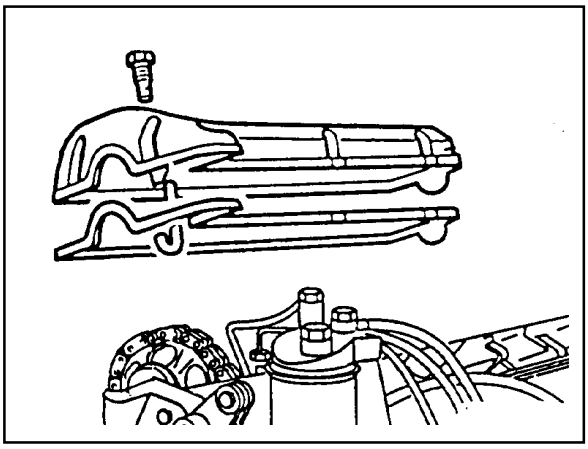

35. Connect the wires to the coolant temperature sensor and the glow plug sensor.

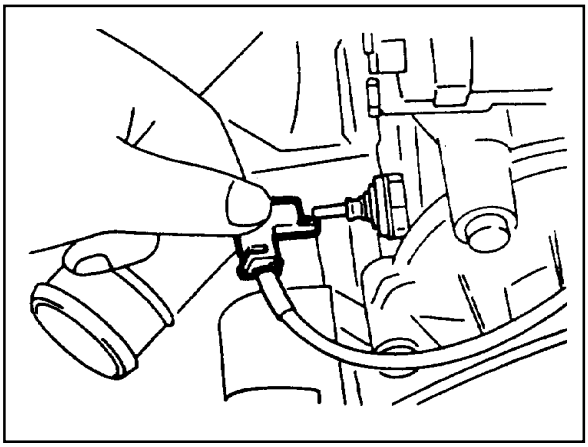

36. Replace the intake manifold gasket.

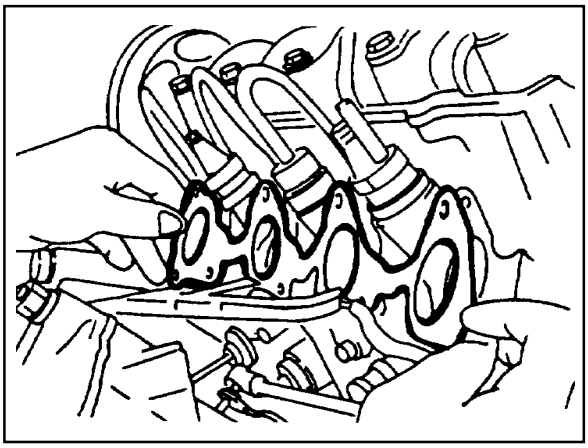

37. Install the intake manifold.

Tightening Torque	25 Nm

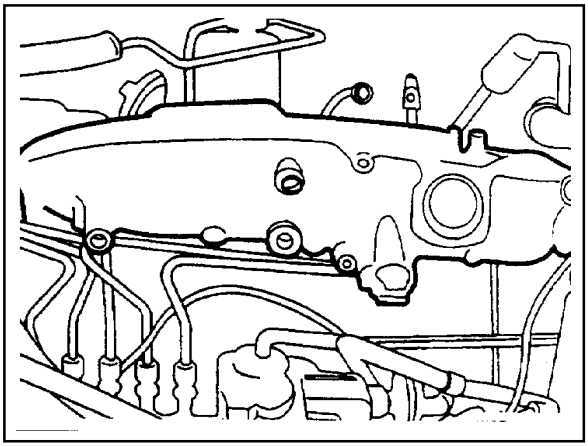

Downloaded from www.Manualslib.com manuals search engine

38. Replace the O-ring of heater feed pipe and install it to the cylinder head.

    Notice

    For installation, clean the hole.

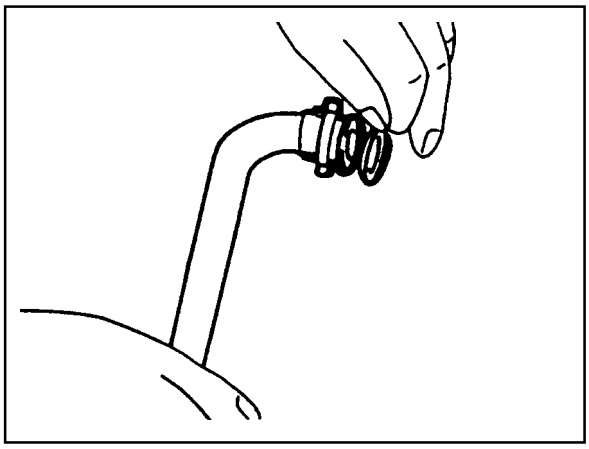

39. Install the bracket of heater feed pipe to the oil filter.

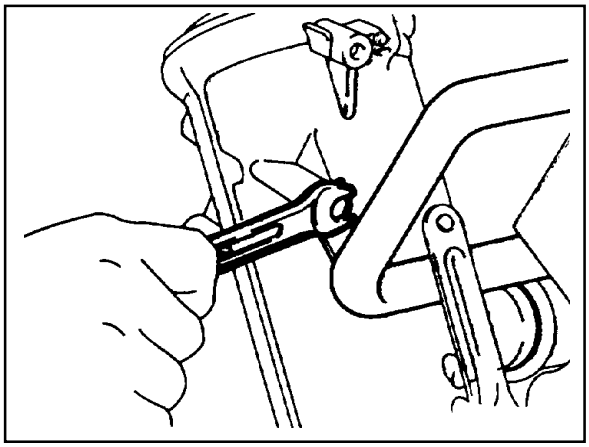

40. Install the fuel pipe and the accelerator control linkage.

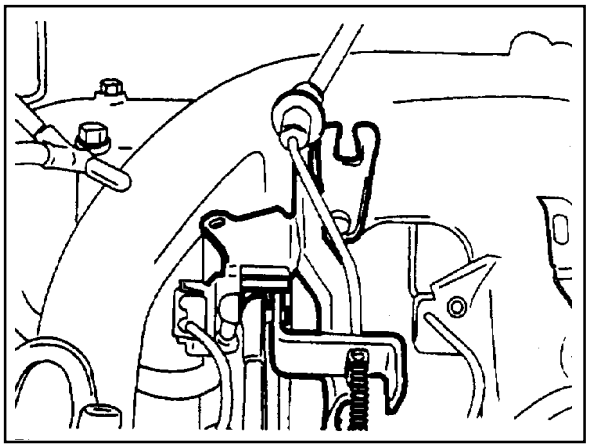

41. Connect the fuel lines to the injection nozzles and to the injection pump.

Tightening Torque	18 Nm

Box Wrench Insert 000 589 77 03 00

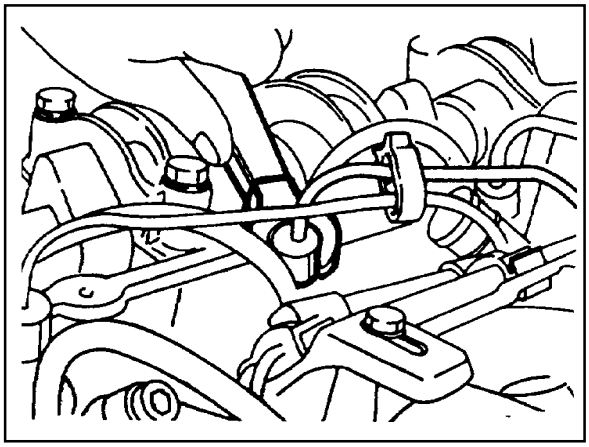

Downloaded from www.Manualslib.com manuals search engine

42. Install the poly V-belt.

    Notice

    Be careful not to contaminate the belt.

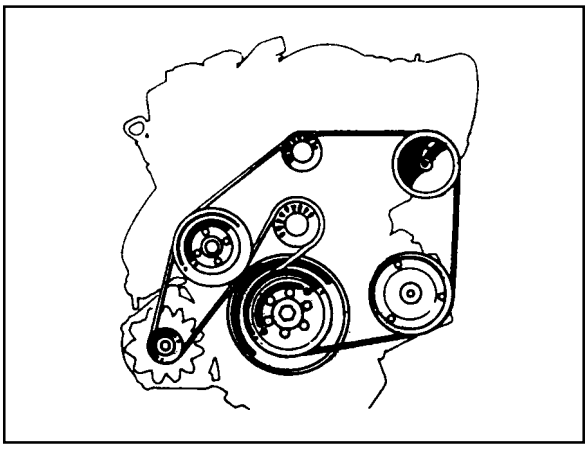

43. By inserting a rod into the tensioning lever upper hole and pulling the rod, install the bolt and then tighten the nut.

Tightening Torque	23 Nm

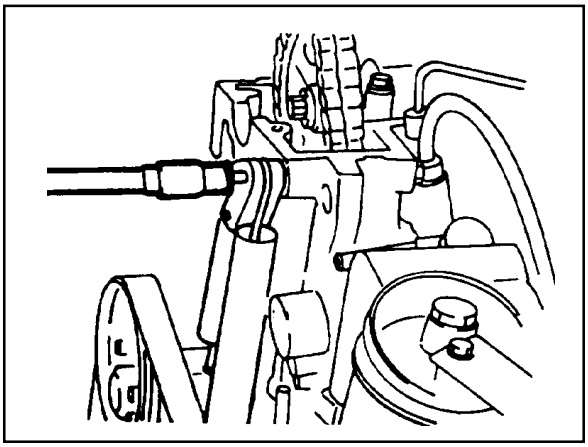

44. Install the oil dipstick tube bracket.

Tightening Torque	10 Nm

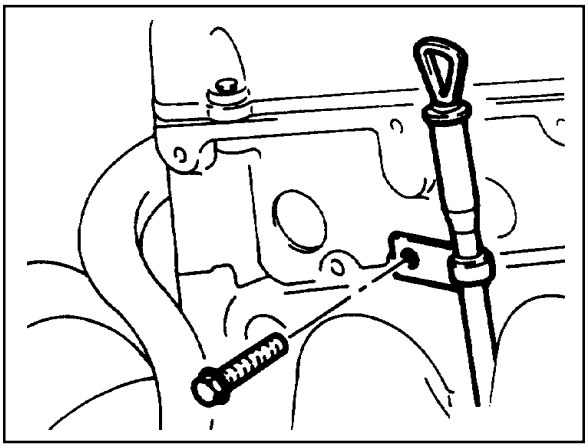

45. Hold the cooling fan with the counter holder and tighten the bolt.

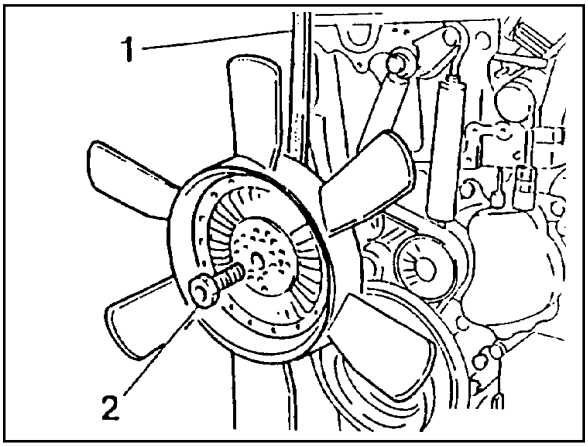

Downloaded from www.Manualslib.com manuals search engine

TIMING CASE COVER

Preceding Work : Removal of the cooling fan
Rmoval of the V-belt tensioning device
Removal of the vibration damper and hub
Removal of the alternator

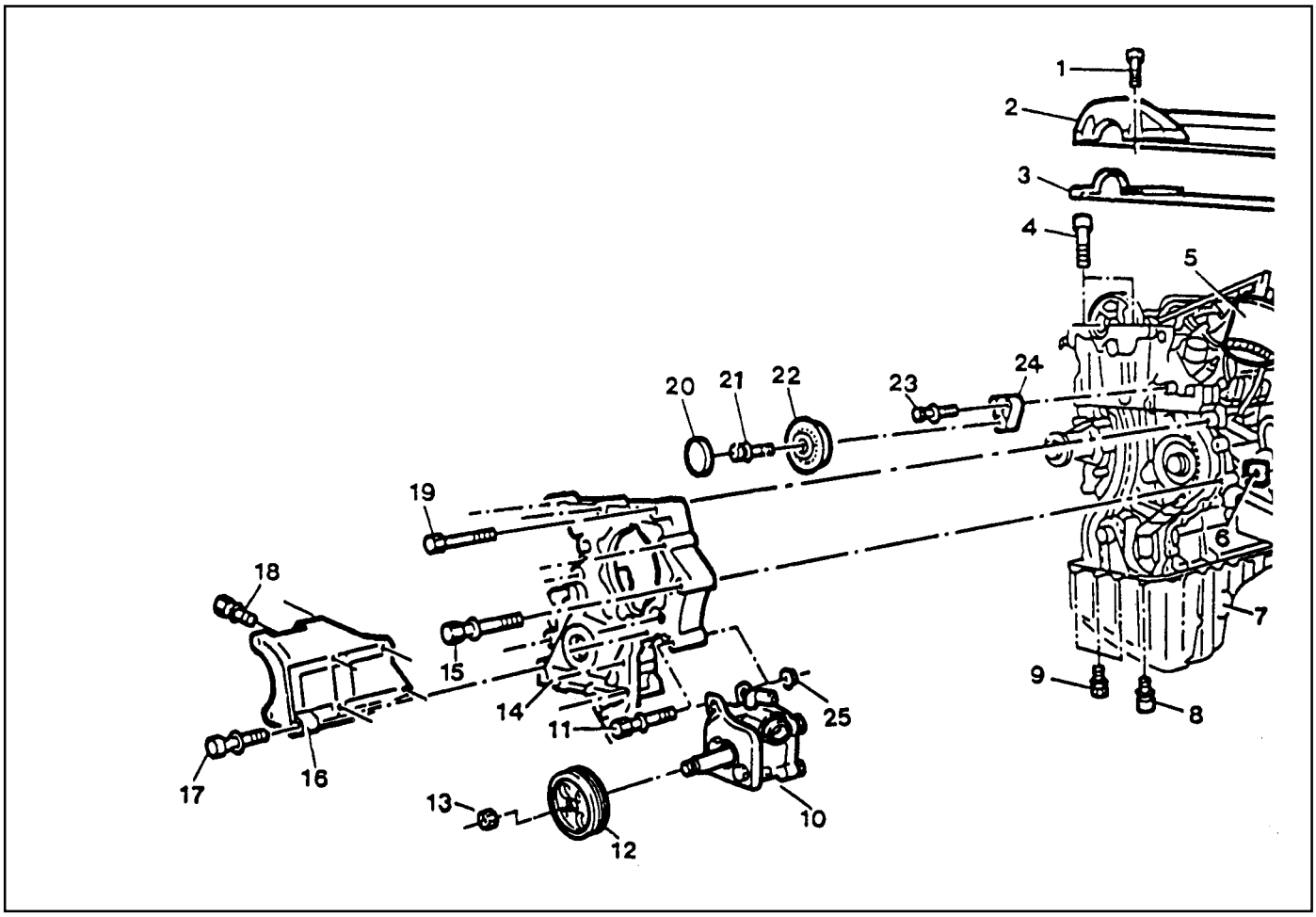

1	Bolt	10Nm
2	Cylinder Head Cover	
3	Gasket	Replace
4	Socket Bolt	25Nm
5	Fuel Filter	
6	Square Nut	
7	Oil Pan	
8	Socket Bolt	10Nm
9	Bolt	M6 : 10Nm M8 : 23Nm
10	Power Steering Pump	
11	Bolt	
12	Belt Pulley	
13	Bolt	32Nm
14	Timing Case Cover	
15	Bolt	23Nm
16	Alternator Bracket	
17	Bolt	45Nm
18	Bolt	25Nm
19	Bolt	10Nm
20	Closing Cover	
21	Socket Bolt	23Nm
22	Guide Pulley	
23	Bolt	9Nm
24	Guide Pulley Bracket	
25	Nut	23Nm

Downloaded from www.Manualslib.com manuals search engine

Tools Required

116 589 03 07 00 Socket Wrench

Removal Procedure

1. Remove the fan clutch and cooling fan belt pulley.
2. Drain the engine oil completely.
3. Remove the oil dipstick tube bracket bolts.
4. Remove the crankshaft pulley.
5. Loosen the bolt (1) and then remove the cylinder head cover (2) and gasket.

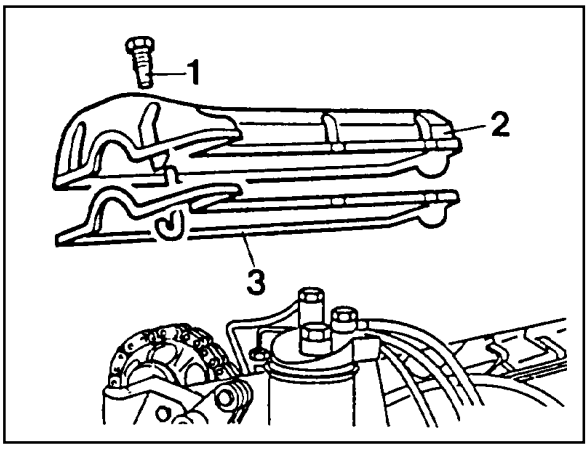

6. Remove the vacuum pump.

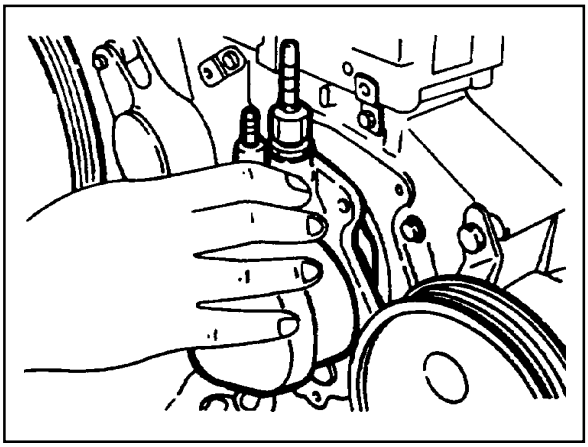

7. Detach the closing cover (20). Remove the bolts(21) and then remove the guide pulley (22).

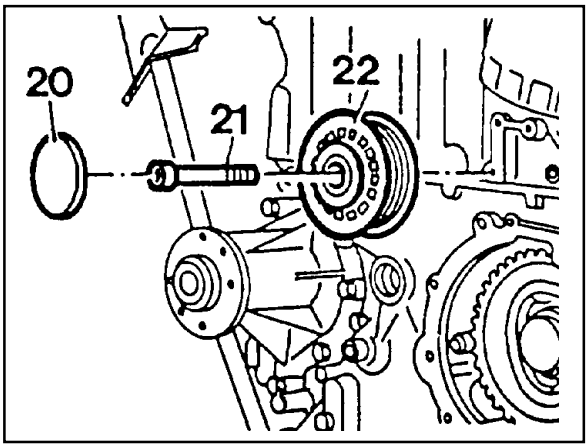

8. Remove the guide pulley bracket (24).

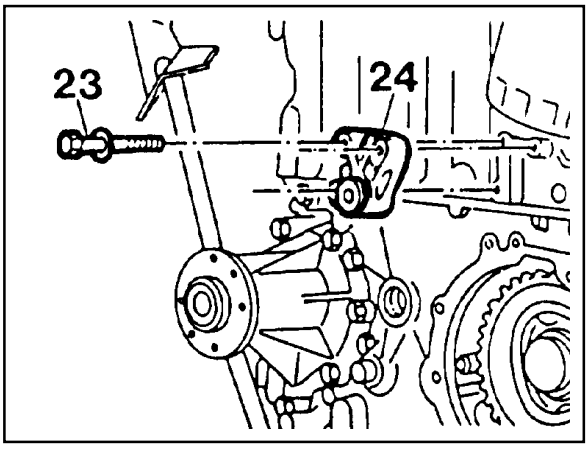

Downloaded from www.Manualslib.com manuals search engine

9. Disconnect the pipes of power steering pump and remove the belt pulley.

   Notice

   Be careful not to lose the key.

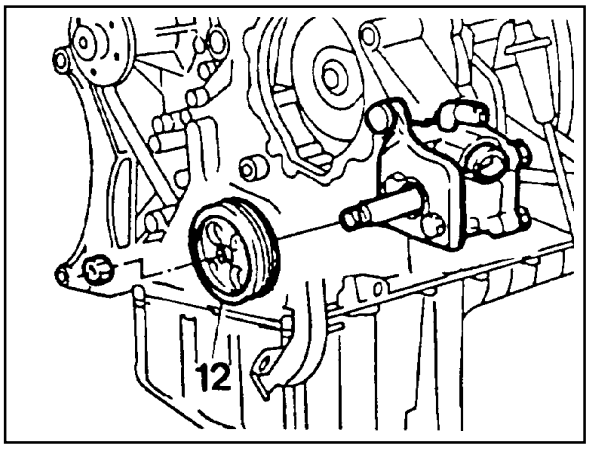

10. Remove the nut and pull out the bolt and then remove the power steering pump.

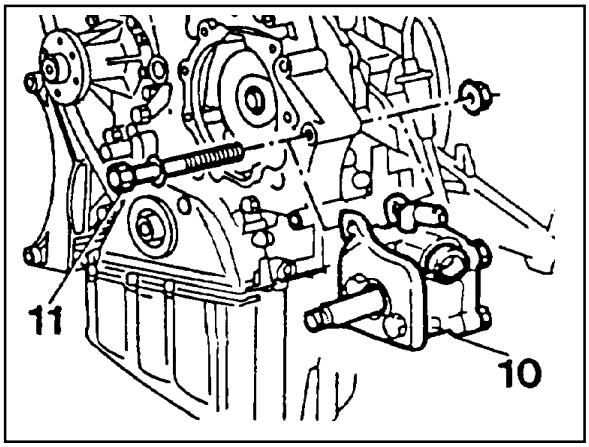

11. Remove the alternator bracket (16).

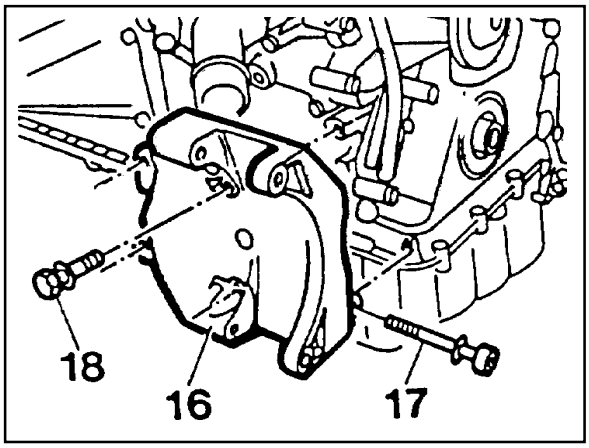

12. Remove the fuel filter.

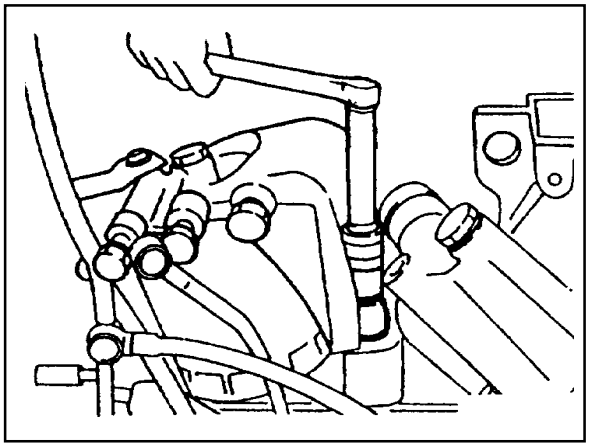

Downloaded from www.Manualslib.com manuals search engine

13. Remove the camshaft.
14. Remove the socket bolts(4) in the chain box.

Socket Wrench 115 589 03 07 00

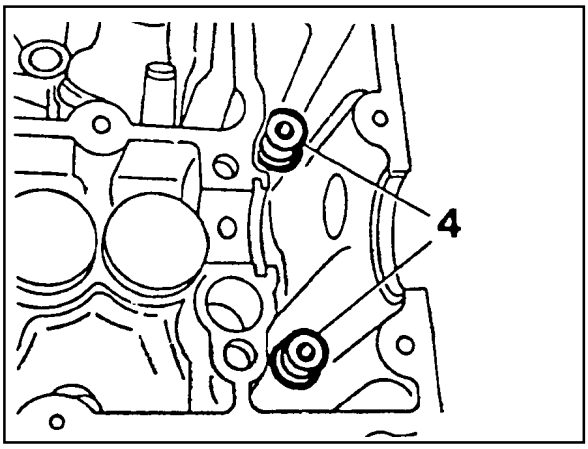

15. Remove the injection pump.

Notice

See the 'Removal of fuel injection pump'.

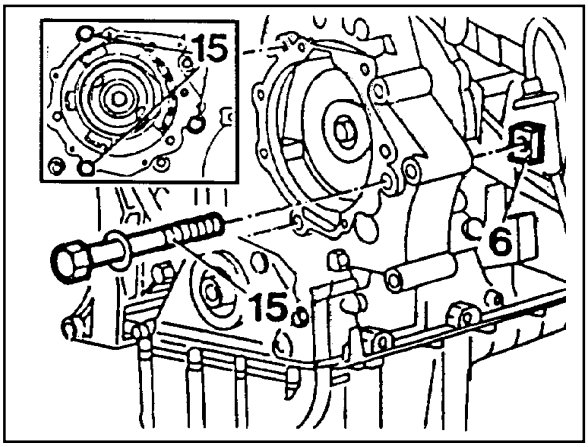

16. Remove the oil pan bolts (8, 9) in the area of the timing case cover (14).
17. Slightly loosen the remaining oil pan bolts.

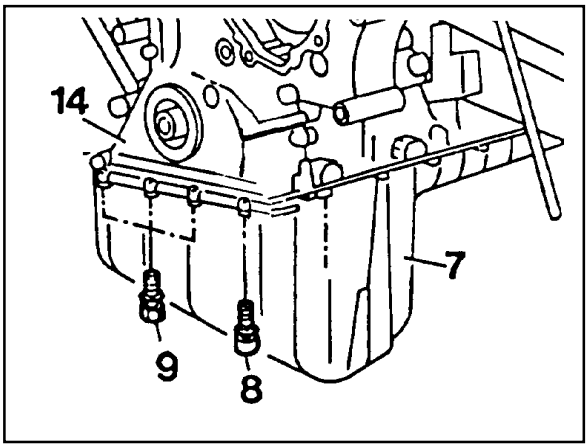

18. Remove the timing case cover (19) bolts and then remove the timing case cover (14).

Notice

Be careful not to damage the cylinder head gasket or oil pan gasket.

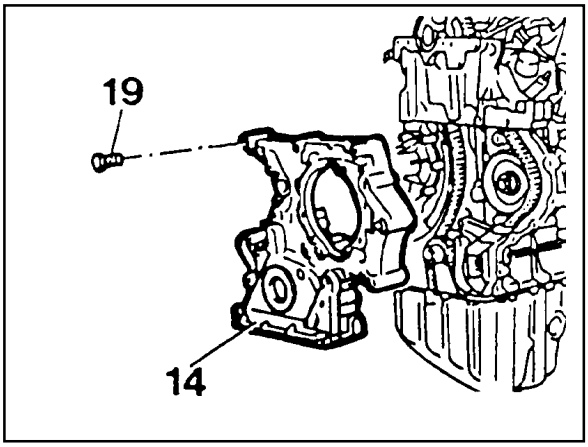

Downloaded from www.Manualslib.com manuals search engine

Installation Procedure

1. Thoroughly clean the sealing surface and apply sealant.

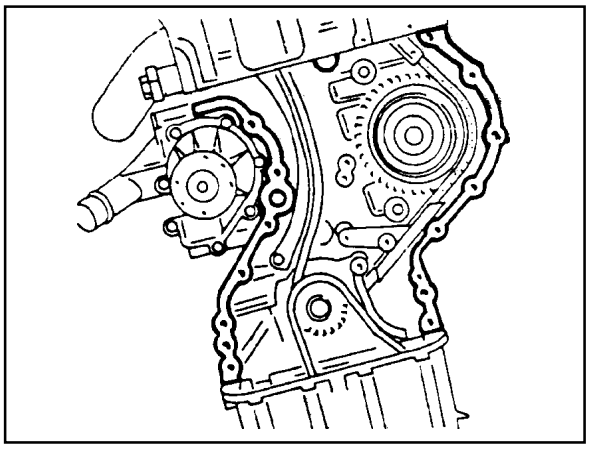

2. Install the timing case cover.

Notice

Tightening Torque	10 Nm

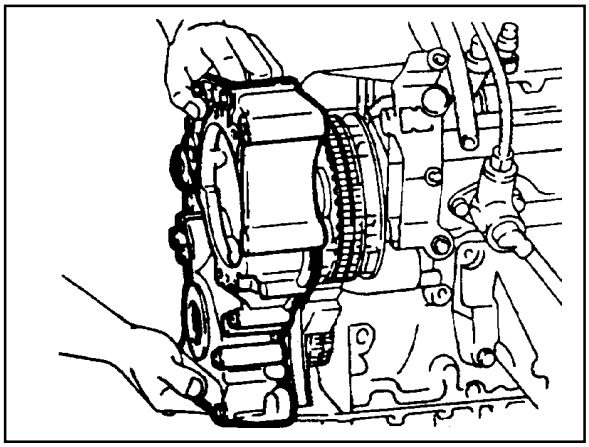

Bolts arrangement
1.M6 x 60
2.M6 x 70
3.M6 x 40

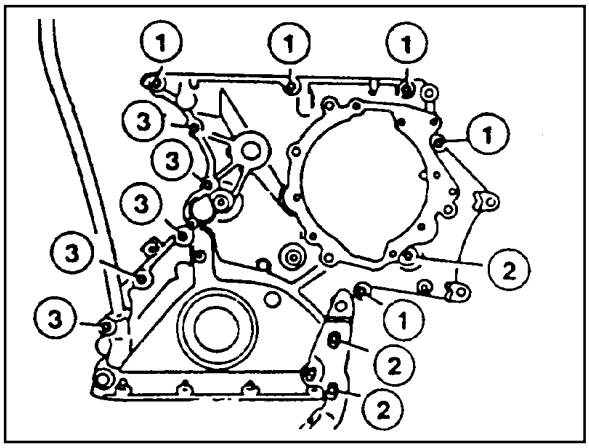

3. Tighten the socket bolts in the chain box.

Tightening Torque	23 Nm

4. Tighten the oil pan bolts.

Tightening Torque	Socket bolt	10 Nm
	M6 bolt	10 Nm
	M8 bolt	23 Nm

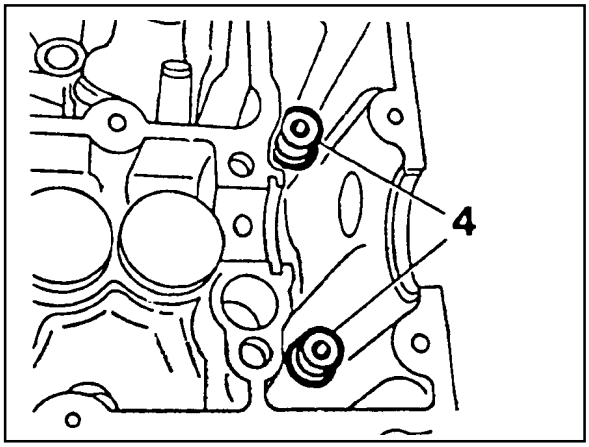

Downloaded from www.Manualslib.com manuals search engine

5. Install the flange, vibration damper and crankshaft belt pulley.

   Notice

   Replace front radial seal if necessary.

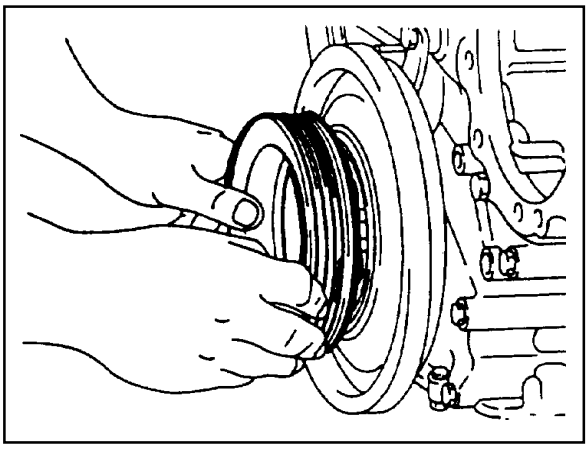

6. Install the alternator bracket.

Tightening Torque	Front	25 Nm
	Side	25 Nm

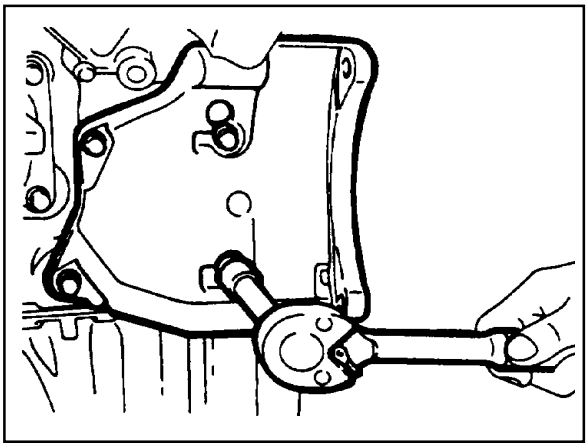

7. Install the alternator.

Tightening Torque	Upper	25 Nm
	Low	25 Nm

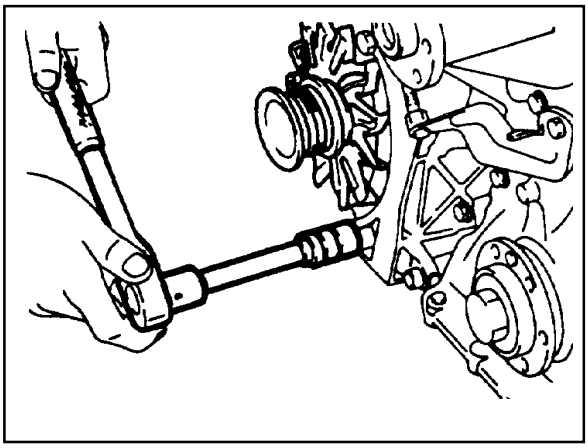

8. Install the cylinder head cover.

Tightening Torque	10 Nm

9. Tighten the injection pump mounting bolts.

Tightening Torque	23 Nm

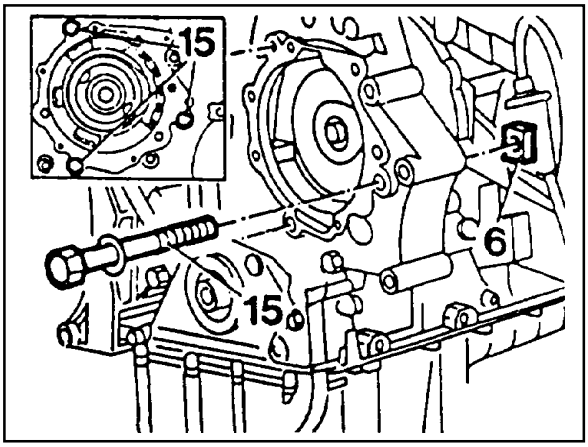

Downloaded from www.Manualslib.com manuals search engine

10. Install the fuel filter.

Tightening Torque	25 Nm

11. Install the vacuum pump.

Tightening Torque	10 Nm

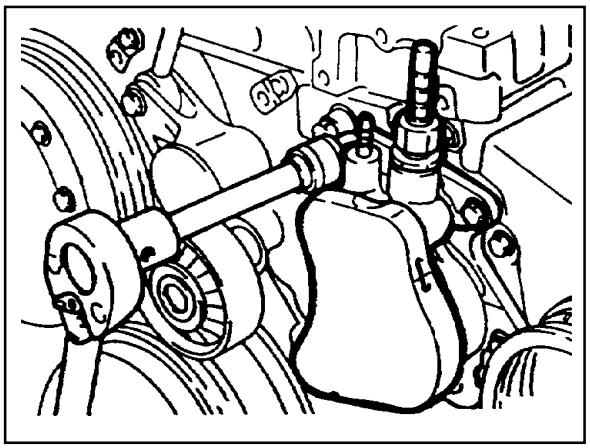

12. Install the power steering pump.

Tightening Torque	23 Nm

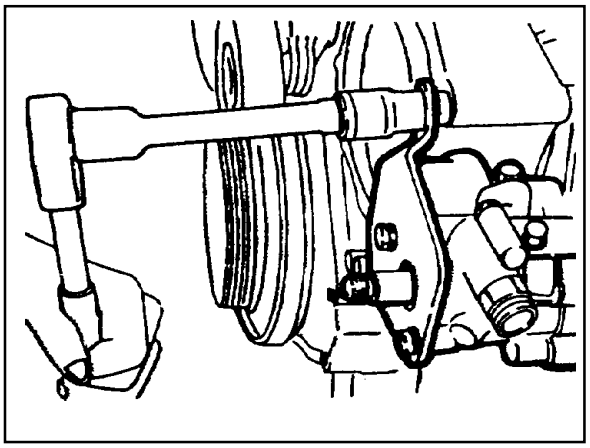

13. Install the power steering pump pulley.

Tightening Torque	32 Nm

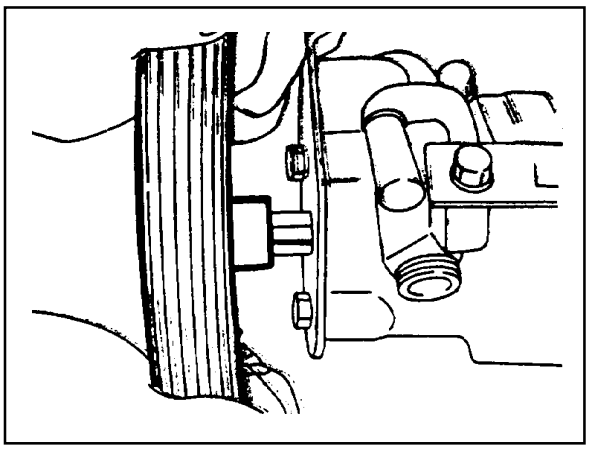

14. Install the guide pulley bracket.

Tightening Torque	9 Nm

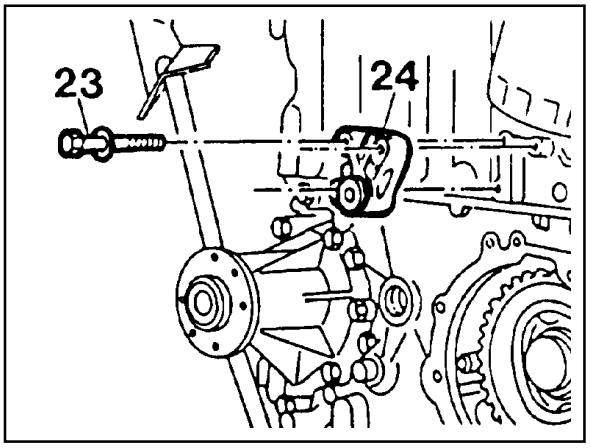

Downloaded from www.Manualslib.com manuals search engine

15. Install the guide pulley (22) and fit the closing cover (20).

Tightening Torque	23 Nm

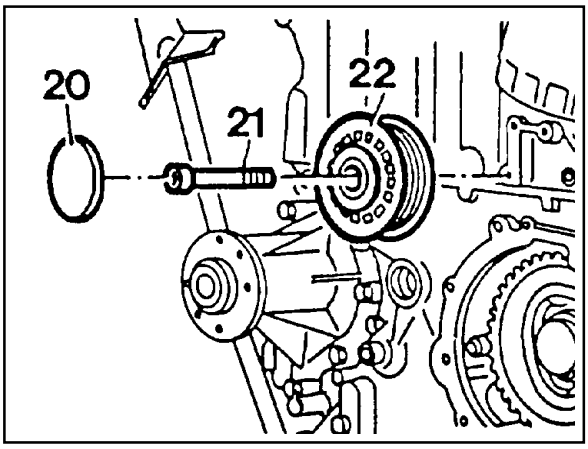

16. Replace the gasket (3) and install the cylinder head cover (2).

Tightening Torque	10 Nm

17. Install the cooling fan belt pulley and fan clutch.
18. Install the belt tensioning device and then install the belt.
19. Install the cooling fan.
20. Fill the engine oil and check oil leaks by running the engine.

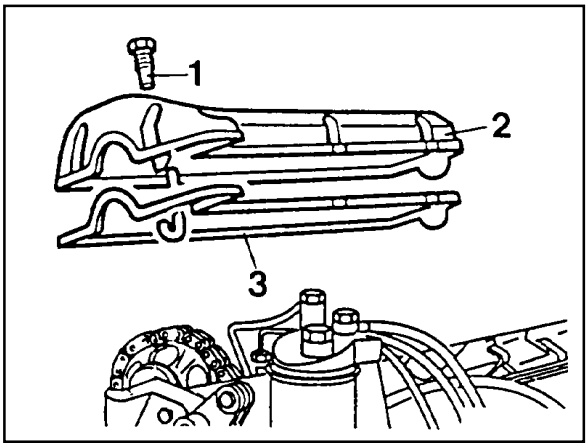

Downloaded from www.Manualslib.com manuals search engine

CRANKSHAFT END COVER

Preceding Work : Removal of flywheel and driven plate.

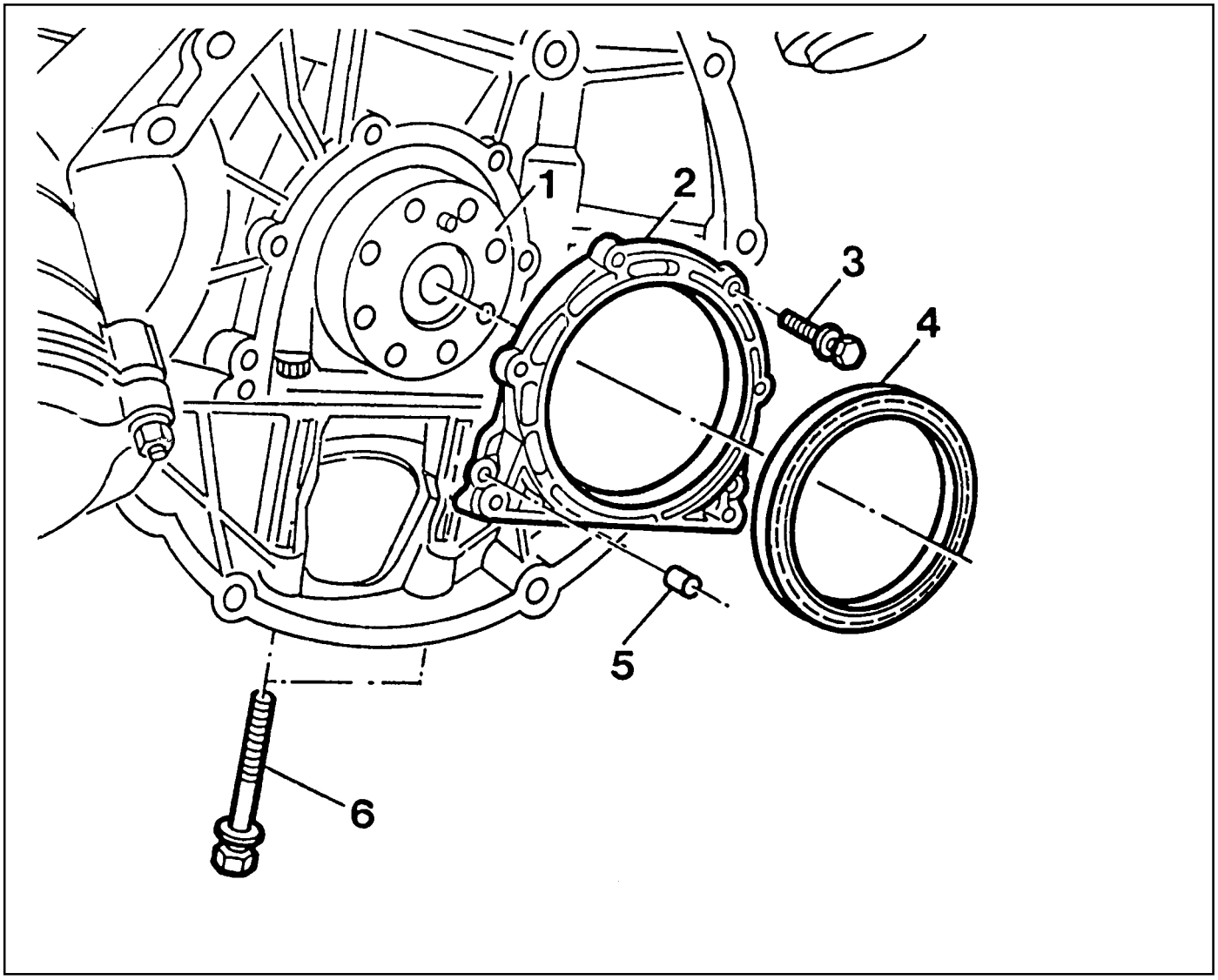

1	Crankshaft Flange		
2	End Cover	Clean, Loctite 573	
3	Bolt	10Nm, Loctite 573	
4	Radial Seal	Replace	
5	Dowel Sleeve		
6	Bolt	10Nm, Loctite 573	

Downloaded from www.Manualslib.com manuals search engine

Tools Required

601 589 03 43 00 Oil Seal Assmbler

Removal Procedure

1. Remove the bolts (3, 6) from end cover, By pulling out the lugs (arrow), remove the cover.

   Notice

   Be careful not to damage the oil pan gasket.

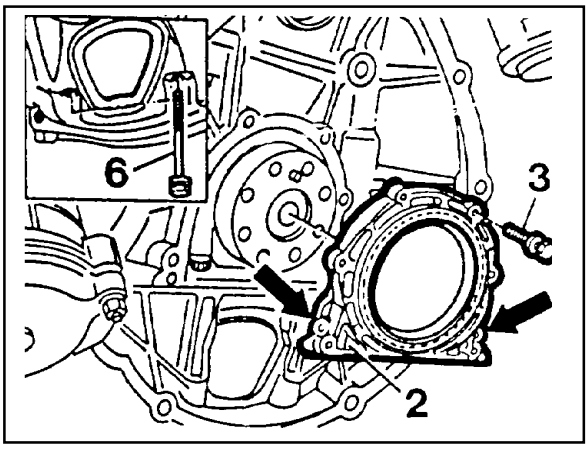

2. Remove the radial seal (4) with care not to damage the sealing surface.

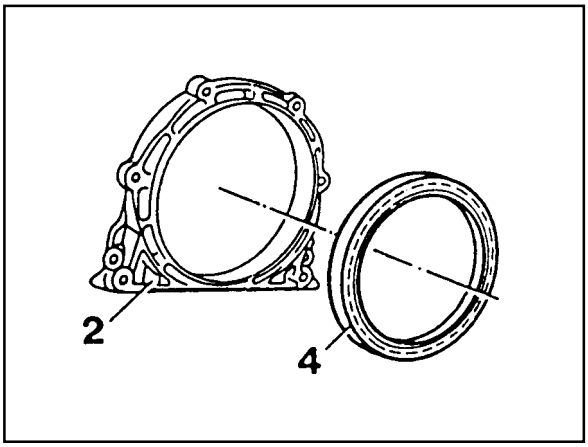

Installation Procedure

1. Thoroughly clean the sealing surface of end cover and apply Loctite 573.
2. Clean the groove of radial seal.
3. Apply Loctite 573 on the bolts and install the end cover.

Tightening Torque	10 Nm

   Notice

   Be careful not to damage the oil pan gasket.

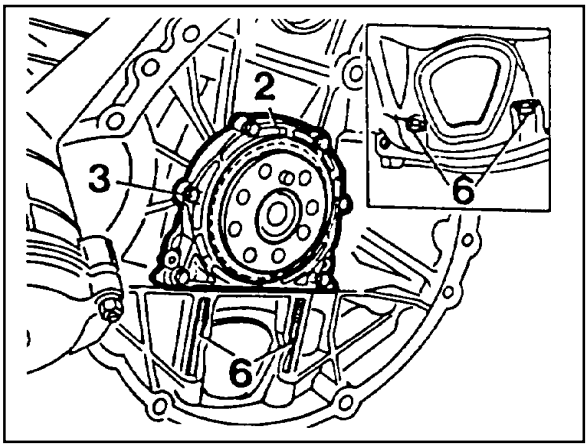

4. Install the inner oil seal assembler to the crankshaft flange.

Oil Seal Assembler 601 589 03 43 00

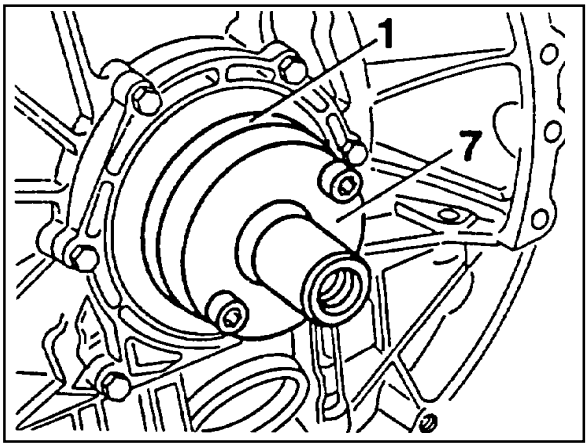

Downloaded from www.Manualslib.com manuals search engine

5. Coat a little oil on the sealing lip of new radial seal and contacting surface.

   Notice

   Don't use grease.

6. Insert the new radial seal (4) onto the oil seal assembler (7).

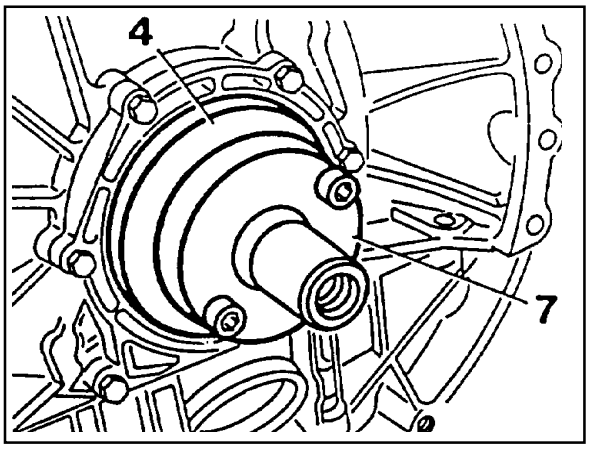

   Notice

   The sealing lip of the repair radial seal is offset to the inside by 3mm to ensure that it does not run in any groove which the standard radial seal may have left on the crankshaft flange.

   A Standard Radial Seal
   B Repair Radial Seal

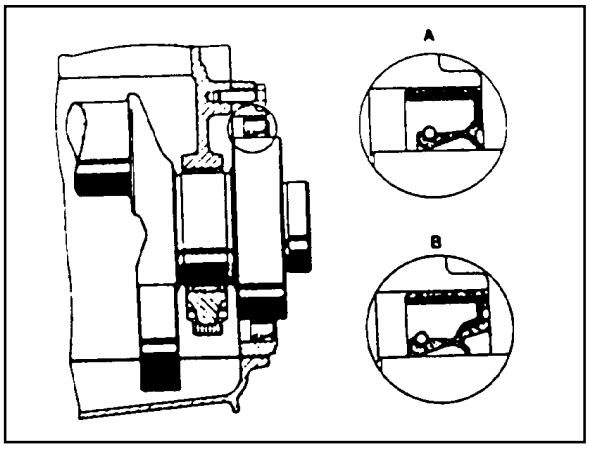

7. Install the outer oil seal assembler on he seal and by tightening the bolts, press the radial seal into the end cover as far as the stop.

   Notice

   The seal must be positioned exactly at right angles in the end cover to ensure that it provides a proper seal.

   Oil Seal Assembler 601 589 03 43 00

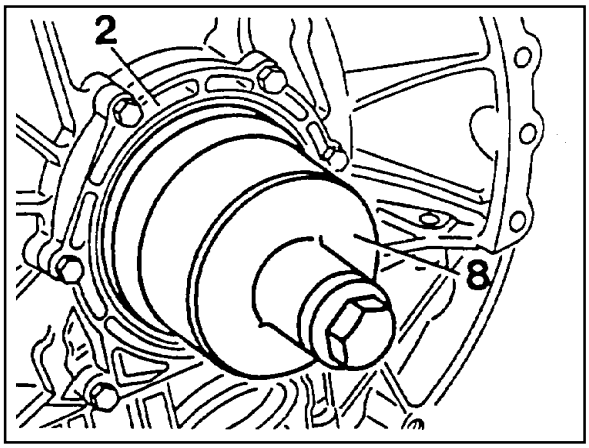

Downloaded from www.Manualslib.com manuals search engine

VIBRATION DAMPER AND HUB

Preceding Work : Removal of the cooling fan
Removal of poly V-belt

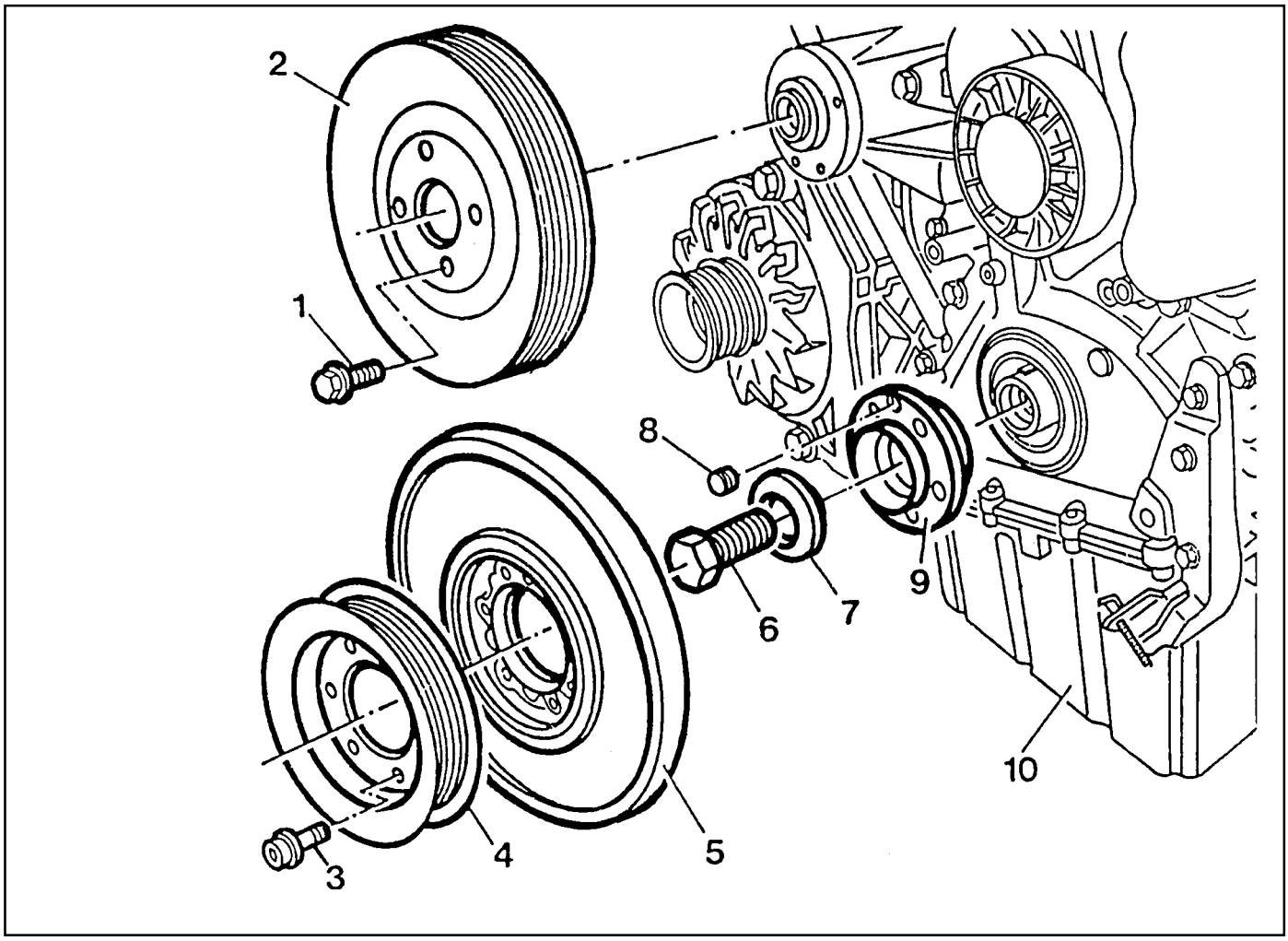

1 Bolt 10Nm
2 Cooling Fan Belt Pulley
3 Socket Bolt 23Nm
4 Crankshaft Belt Pulley
5 Vibration Damper
6 Bolt ..... 200Nm + 90°
7 Washer
8 Straight Pin
9 Hub
10 Oil Pan

Downloaded from www.Manualslib.com manuals search engine

Sectional View

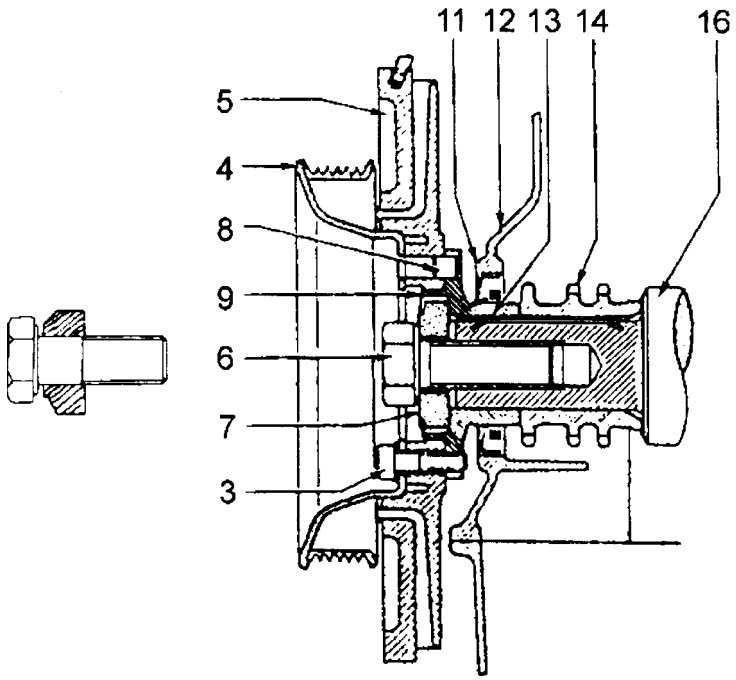

3 Socket Bolt
4 Crankshaft Belt Pulley
5 Vibration Damper
6 Bolt
7 Washer
8 Straight Pin
9 Hub
11 Radial Seal
12 Timing Gear Case Cover
13 Key
14 Crankshaft Sprocket
16 Crankshaft

Notice

The mounting position of vibration damper is fixed by straight pin (8).

Tools Required

602 589 00 40 00 Engine Lock

103 589 00 30 00 Puller

Downloaded from www.Manualslib.com manuals search engine

Removal Procedure

1. Remove the starter motor and install the engine lock into the wheel ring gear.

Engine Lock 602 589 00 40 00

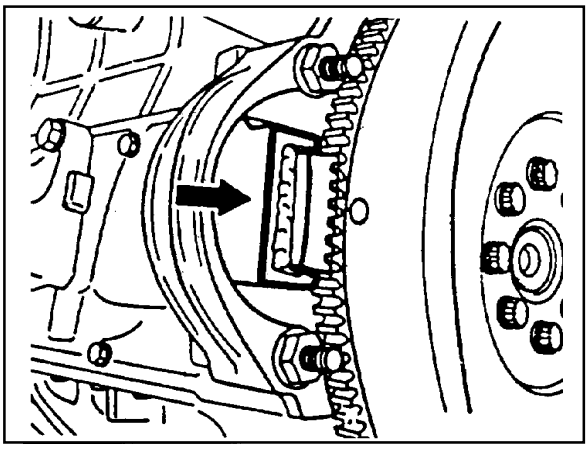

2. Remove the poly V-belt.
3. Remove the cooling fan.

Notice

Keep the fan in vertical position.

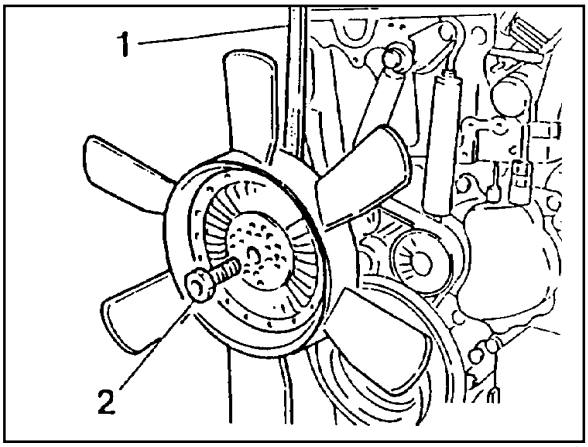

4. Remove the cooling fan belt pulley (2).
5. Place alignment marks (arrow) on the vibration damper (5) and crankshaft belt pulley (4).

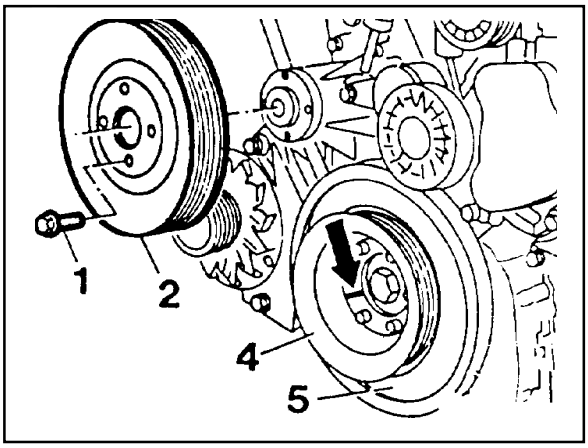

6. Remove the timing sensor bracket.

Notice

Remove if necessary.

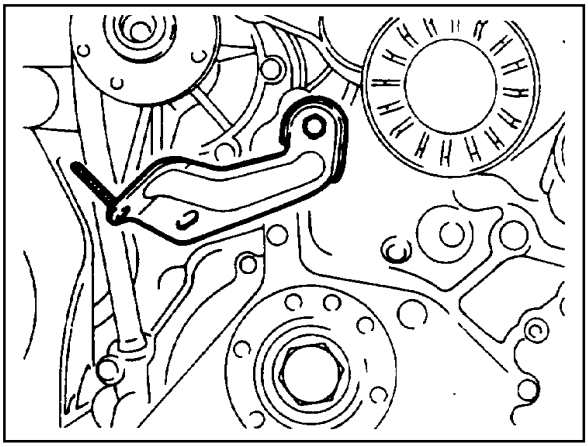

Downloaded from www.Manualslib.com manuals search engine

7. Remove the socket bolts (3) and then remove the belt pulley (4) and vibration damper (5).

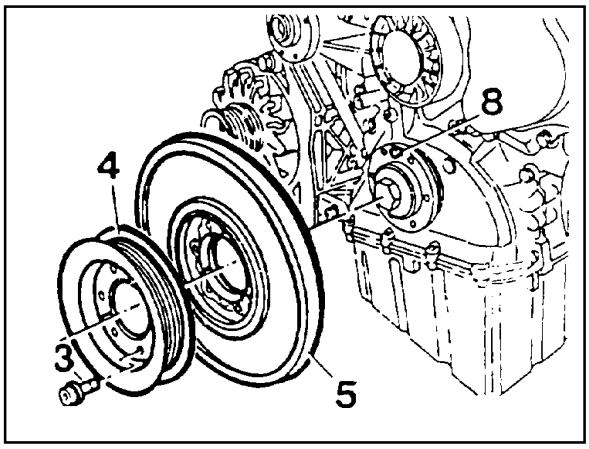

8. Remove the washer and bolt.

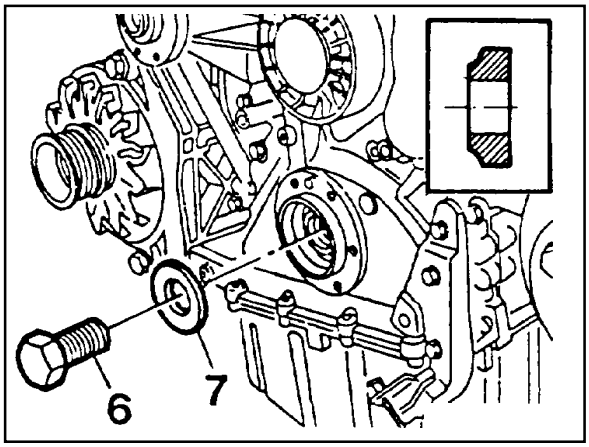

9. Remove the hub by using a puller.

Puller 103 589 00 33 00

10. Replace the radial seal.

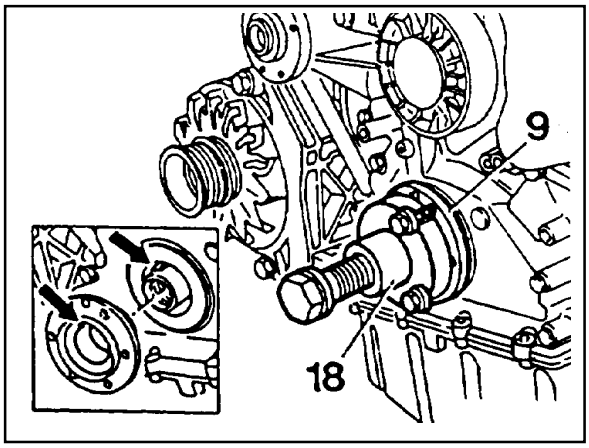

Downloaded from www.Manualslib.com manuals search engine

Installation Procedure

1. Install the hub.

   Notice

   Exactly align the woodruff key and the groove of hub (arrow).

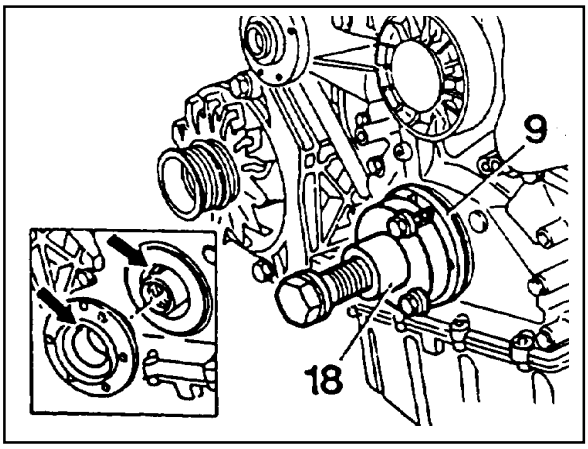

2. Install the washer (7) and tighten the bolt (6).

Washer (new) : 1 EA	200 Nm + 90°

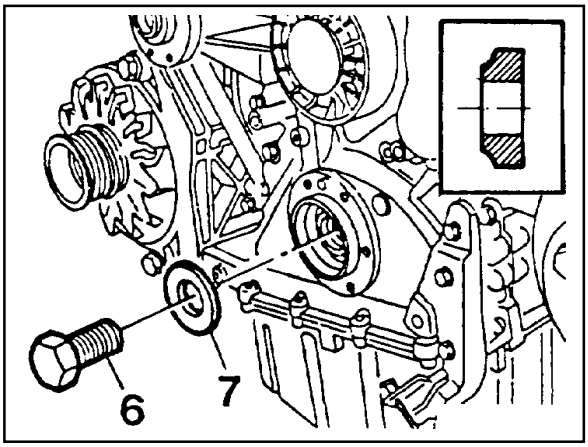

3. Install the vibration damper.

   Notice

   Exactly align and insert onto the straight pin.

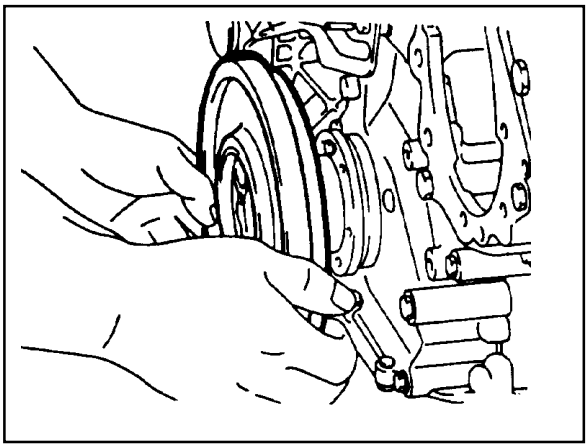

4. Install the belt pulley.

Tightening Torque	25 Nm

   Notice

   Align the alignment marks.

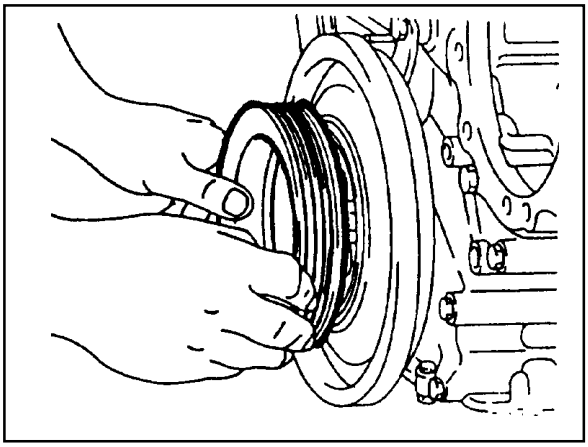

Downloaded from www.Manualslib.com manuals search engine

5. Install the timing sensor bracket.

   Notice

   See the 'TDC setting'.

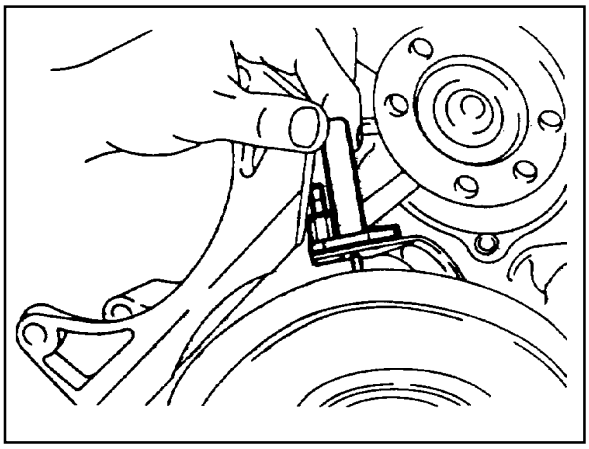

6. Install the cooling fan pulley.

Tightening Torque	10 Nm

7. Install the cooling fan.
8. Install the fan belt.

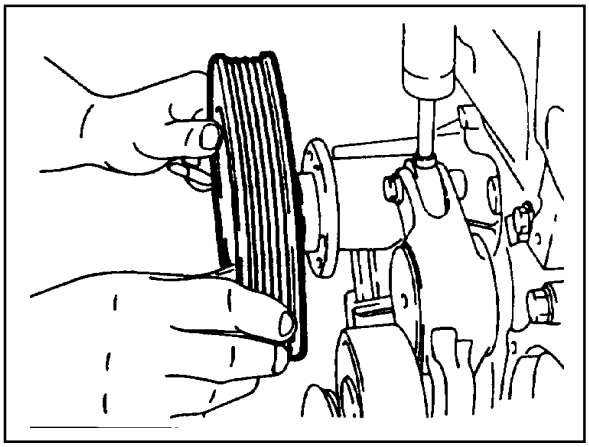

9. Remove the engine lock.

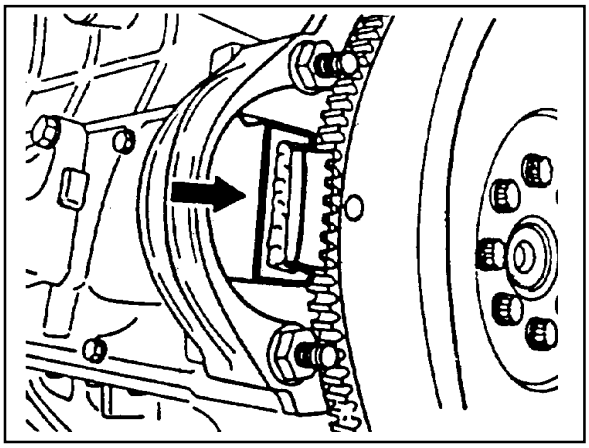

Downloaded from www.Manualslib.com manuals search engine

CRANKSHAFT FRONT RADIAL SEAL

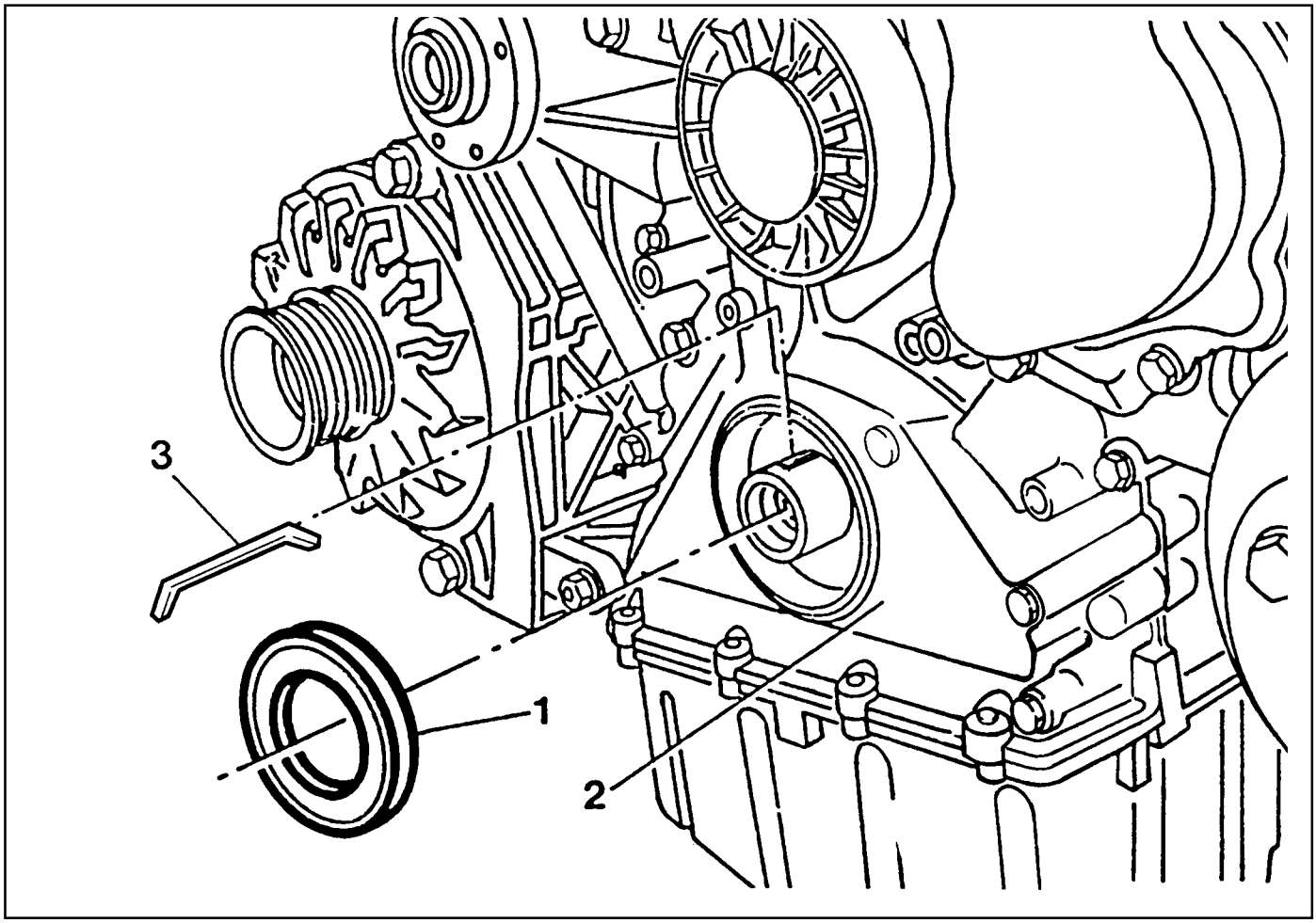

1 Radial Seal
2 Timing Case Cover
3 Woodruff Key

Tools Required

601 589 03 14 00 Sleeve

Downloaded from www.Manualslib.com manuals search engine

Notice

The sealing lip of the repair radial seal is offset to the inside by 2mm to ensure that is does not run in any groove which the standard radial seal may have left on the crankshaft flange.

A Standard Radial Seal
B Repair Radial Seal

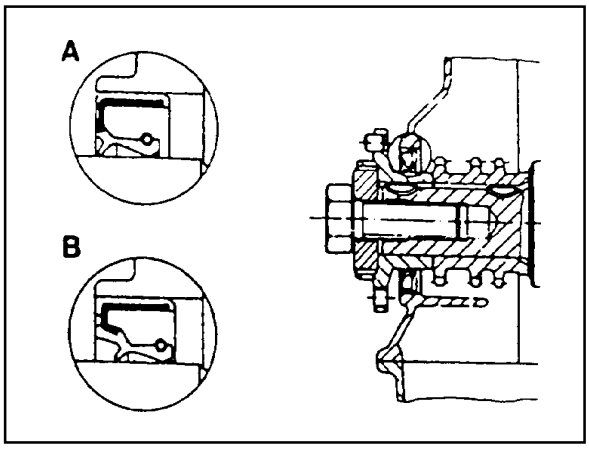

Replacement Procedure

1. Pull out the radial seal (1) and be careful not to damage the sealing surface of timing case cover.
2. Thoroughly clean the mounting bore of the radial seal.

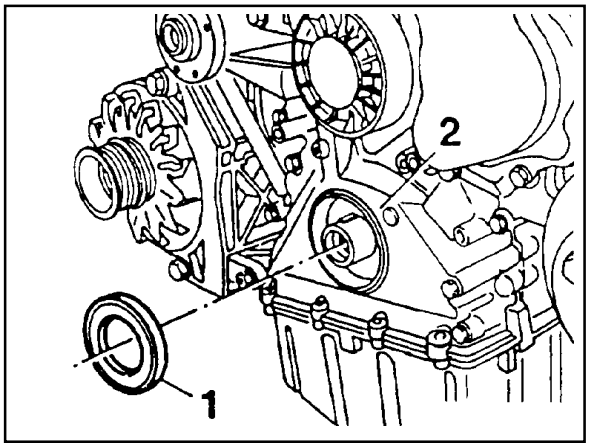

3. Coat a little oil on the sealing lip of new radial (1) and contact surface.

   Notice

   Don't use grease.
4. Install the radial seal (1) by using a sleeve (4).

   Notice

   Align the groove of sleeve and woodruff key(arrow).

Sleeve 601 589 03 14

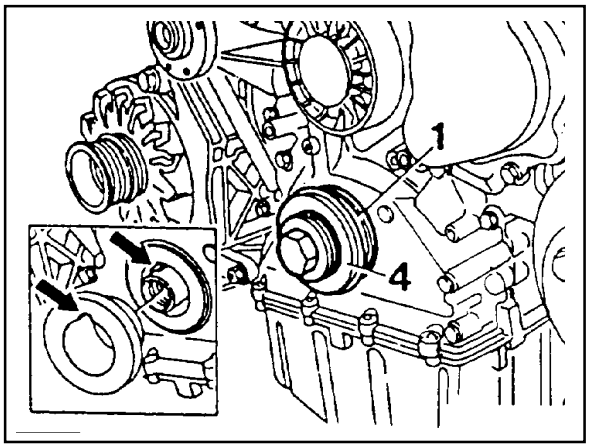

Downloaded from www.Manualslib.com manuals search engine

CRANKSHAFT BALL BEARING

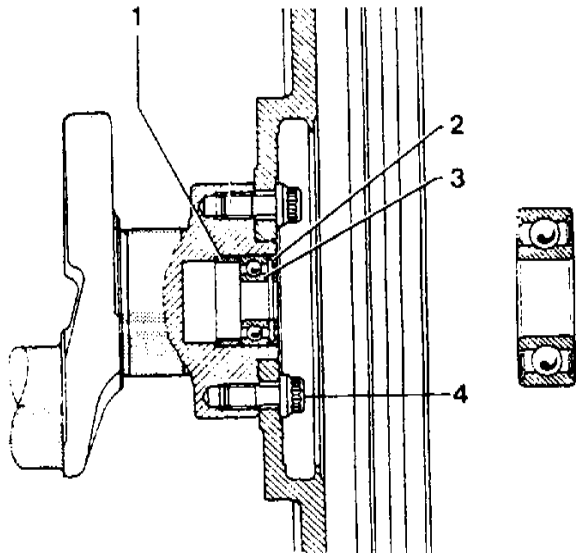

1 Spacer
2 Cover ..... Replace
3 Ball Bearing
4 Bolt ..... 45Nm + 90°

Notice

Manual transmission only.

Tools Required

000 589 33 33 00 Counter Support

000 589 25 33 00 Internal Extractor

Removal & Installation Procedure

1. Remove the manual transmission.
2. Using a puller, pull out the locking ring and ball bearing together.

Counter Support 000 589 33 33 00
Internal Extractor 000 589 25 33 00

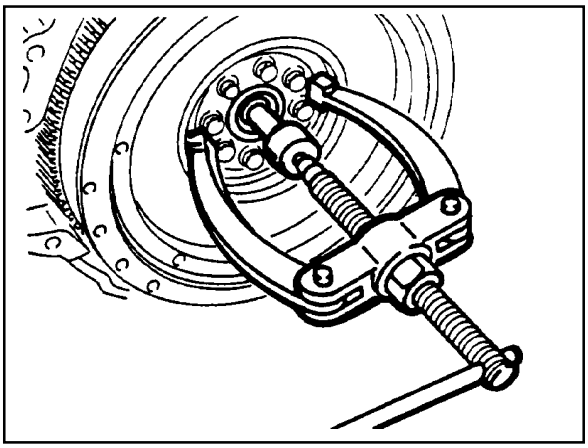

3. Apply Loctite 241 on the new ball bearing and then insert the ball bearing to be stopped at the spacer ring by using a proper mandrel.

Downloaded from www.Manualslib.com manuals search engine

CRANKSHAFT

Preceding Work : Removal of the end cover
Removal of the piston
Removal of the crankshaft sprocket

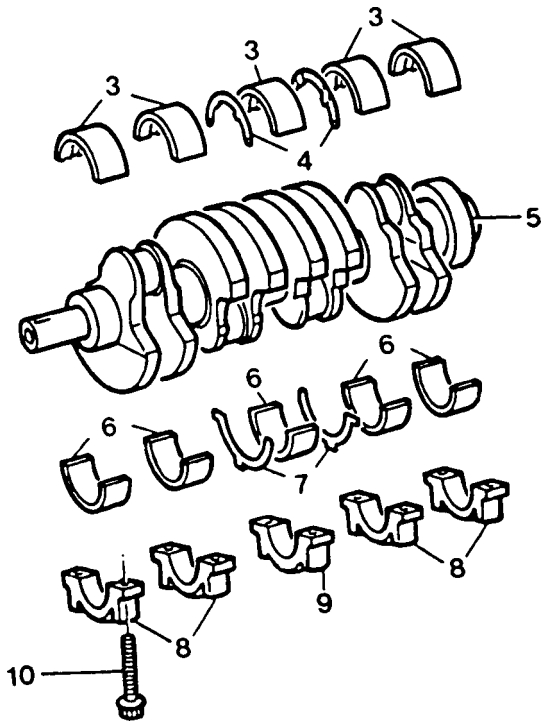

3 Crankshaft Main Bearing Shells (Upper)
4 Trust Bearings (Upper)
5 Crankshaft
6 Crankshaft Main Bearing Shells (Lower)
7 Thrust Bearings (Lower)
8 Crankshaft Bearing Cap
9 Crankshaft Bearing Cap (Fit Bearing)
10 12-sided Stretch Bolts ..... 55Nm + 90°

Tools Required

001 589 53 21 00 Dial Gauge
363 589 02 21 00 Dial Gauge Holder
366 589 00 21 05 Extension

Downloaded from www.Manualslib.com manuals search engine

Thrust Washer and Bearing Arrangement

OM662LA Engine

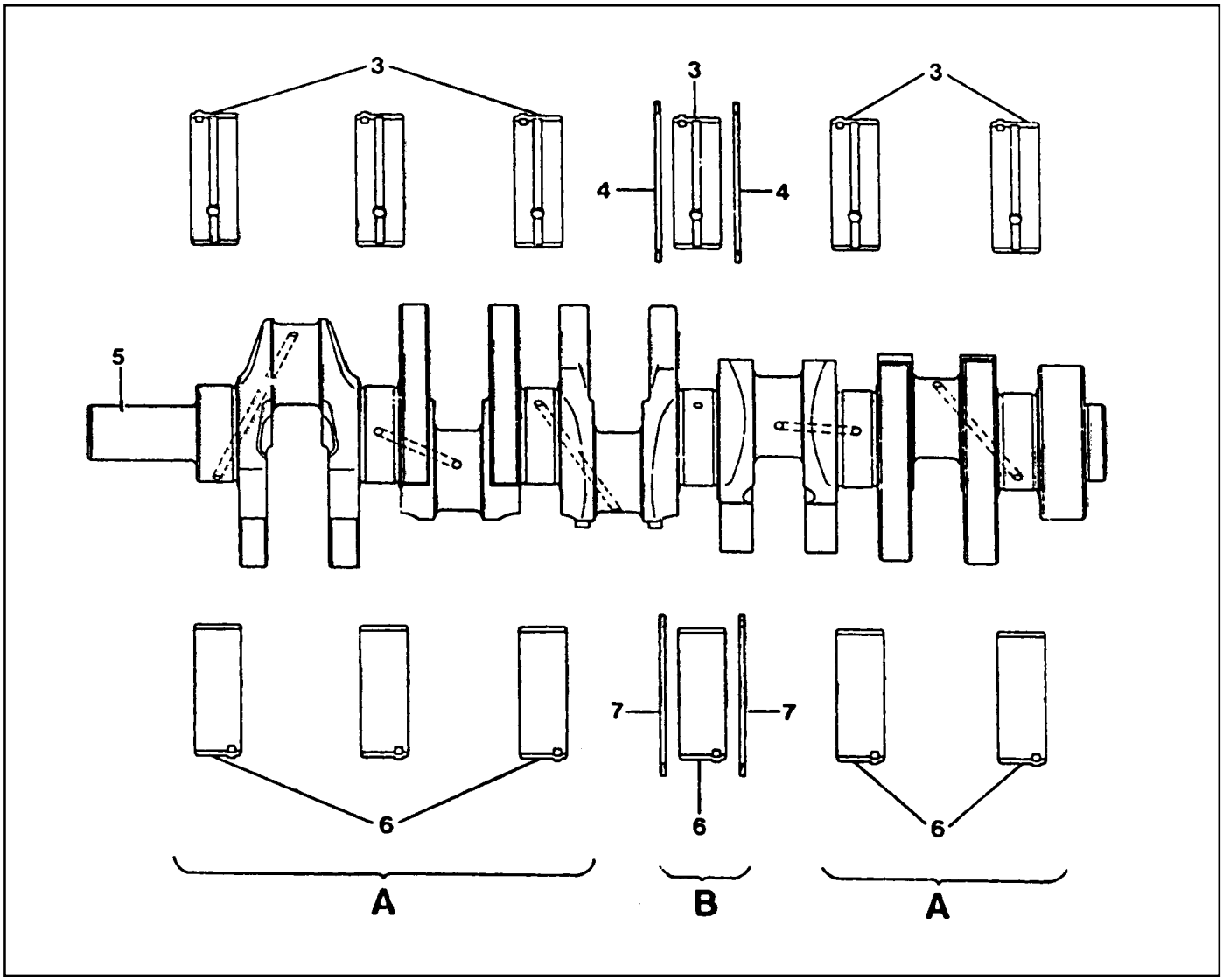

3 Crankshaft Main Bearing Shells (Upper)
4 Thrust Bearings (Upper)
5 Crankshaft
6 Crankshaft Main Bearing Shells (Lower)
7 Thrust Bearings (Lower)

A Radial Bearings
B Radial and Axial Bearings (Thrust Bearing)

Notice

The gaps between the bearing shell and bore and between the bearing shell and journal are different each other. Refer to service data.

Downloaded from www.Manualslib.com manuals search engine

OM661LA Engine

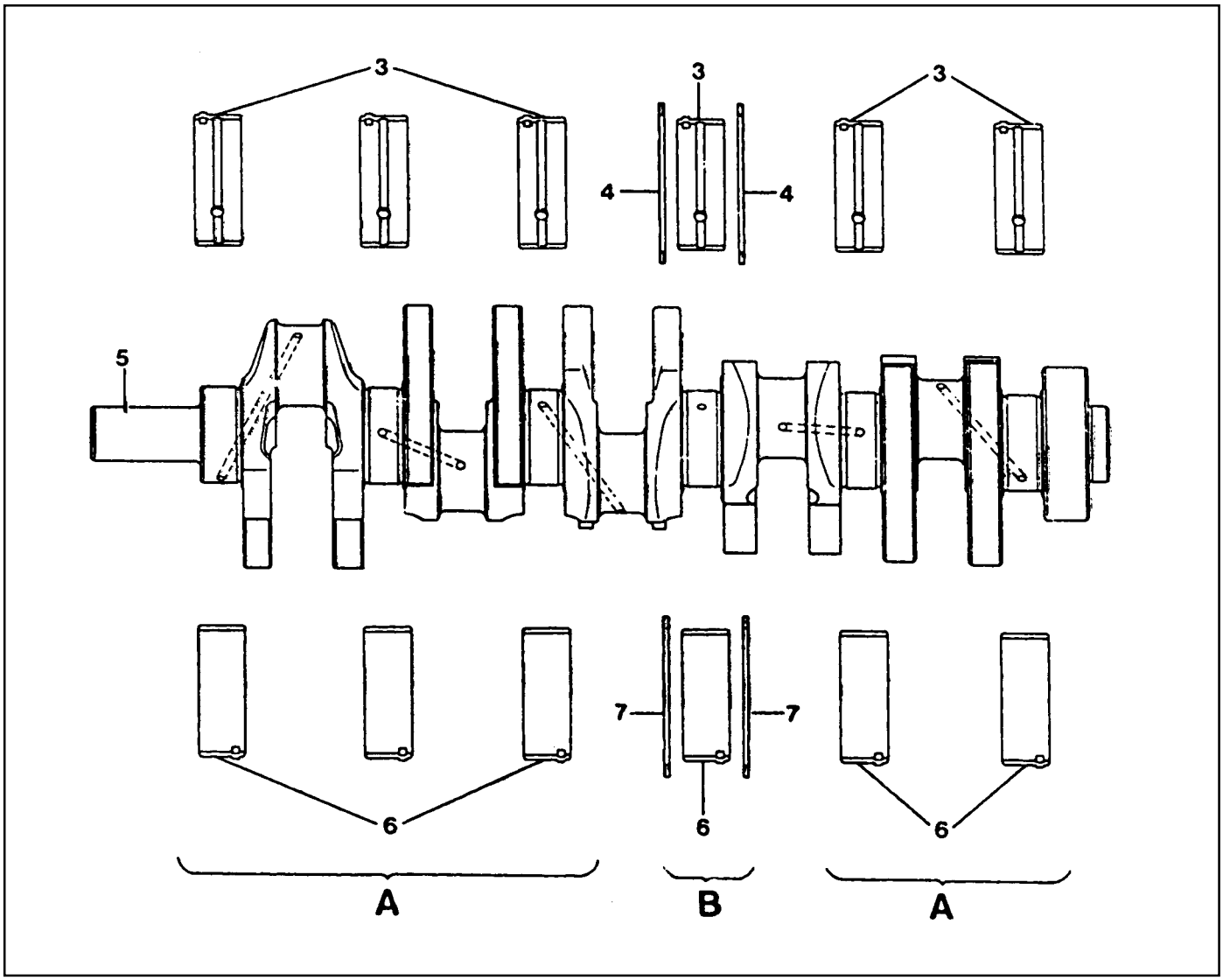

3 Crankshaft Main Bearing Shells (Upper)
4 Thrust Bearings (Upper)
5 Crankshaft
6 Crankshaft Main Bearing Shells (Lower)
7 Thrust Bearings (Lower)

A Radial Bearings
B Radial and Axial Bearings (Thrust Bearing)

Notice

The gaps between the bearing shell and bore and between the bearing shell and journal are different each other. Refer to service data.

Downloaded from www.Manualslib.com manuals search engine

Crankshaft Standard and Repair Sizes

mm

	Crankshaft bearing journal diameter	Thrust bearing journal width	Thrust bearing journal diameter
Standard size	50.950 - 57.965	24.500 - 24.533	47.950 - 47.965
		24.600 - 24.633	
Repair size 1	57.500 - 57.715	24.700 - 24.733	47.700 - 47.715
Repair size 2	57.450 - 57.465	24.900 - 24.933	47.450 - 47.650
Repair size 3	57.200 - 57.215	25.000 - 25.033	47.200 - 47.215
Repair size 4	56.950 - 56.965	-	46.950 - 46.965

Bearing Clearances

mm

		Thrust bearing	Crankshaft bearing
Radial clearances	New	0.027 - 0.051	0.026 - 0.068
	Limit	Max. 0.070	Max. 0.080
Axial clearances	New	0.100 - 0.254	-
	Limit	Max. 0.300	-

Matching Fit Bearing Journal Width to Thrust Bearings

mm

Fit bearing journal width	Thrust bearings thickness
24.500 - 24.533	2.15
24.600 - 24.633	2.20
24.700 - 24.733	2.25
24.900 - 24.933	2.35
25.000 - 25.033	2.40

Notice

- Measure crankshaft axial clearance and adjust with proper thrust Bearing.
- The same thickness of washer must be installed on both sides of the fit bearing.

Downloaded from www.Manualslib.com manuals search engine

Matching Crankshaft Bearing Shells to Basic Bearing Bore in Crankshaft

Marking of basic bearing bore in lower parting surface	Color code of relevant crankshaft bearing shell
1 punch mark or blue	Blue or white-blue
2 punch marks or yellow	Yellow or white-yellow
3 punch marks or red	Red or white-red

Matching Crankshaft Bearing Shells to Basic Bearing Journal of Crankshaft

Marking of bearing journals on crank webs	Color code of relevant crankshaft bearing shell
Blue or white-blue	Blue or white-blue
Yellow or white-blue	Yellow or white-yellow
Red or white-blue	Red or white-red

Downloaded from www.Manualslib.com manuals search engine

Removal & Installation Procedure

1. Remove the bearing cab bolt.
2. Remove the bearing caps (8).

   Notice

   The crankshaft bearing caps are marked with stamped numbers. Remove the bearing cap from the vibration damper side.

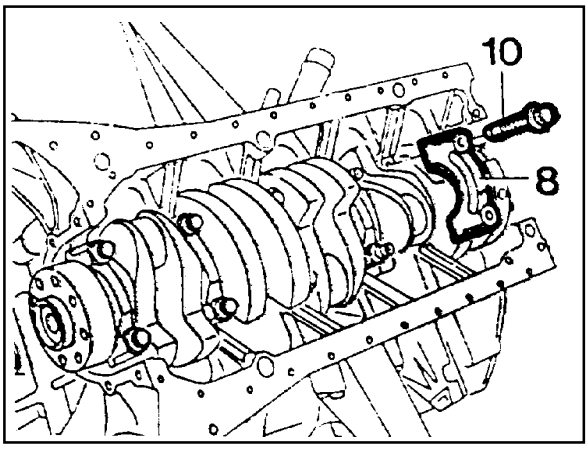

3. Remove the crankshaft bearing caps (9) and lower thrust bearings (7).
4. Remove the lower thrust bearings (6) from the bearing cap (9).

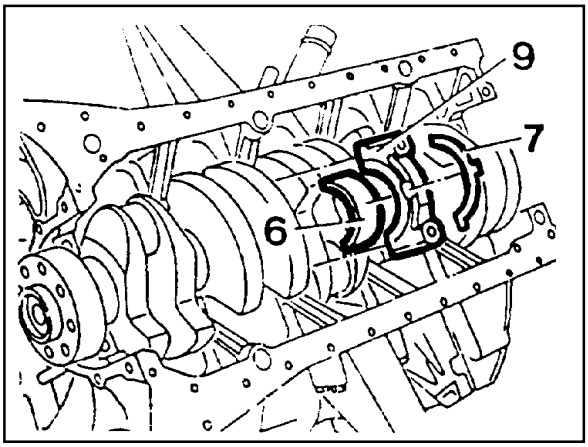

5. Remove the crankshaft (5).

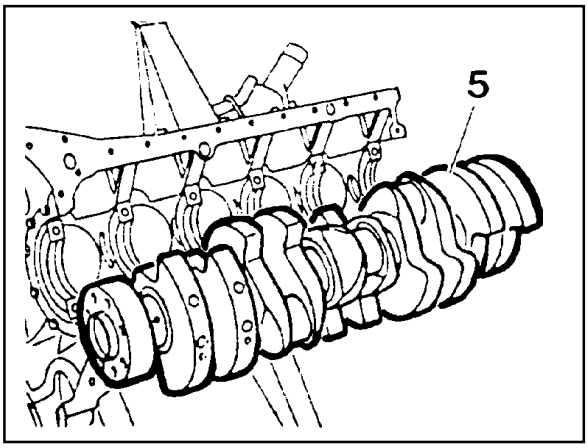

6. Remove the upper thrust bearings(4).
7. Remove the upper bearing shells (3) from crankcase.

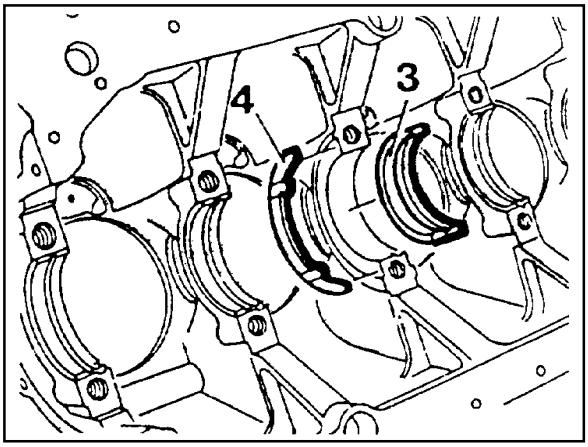

Downloaded from www.Manualslib.com manuals search engine

8. Thoroughly clean the oil gallery.
9. Select a proper new bearing shells with reference to table.
10. Coat the new bearing shells with oil and insert into the crankcase and into the crankshaft bearing caps.

    Notice

    Do not mix up upper and lower crankshaft bearing shells.
11. Install the bearing caps according to marking and tighten the 12-sided stretch bolts.

Tightening Torque	35 - 40 Nm

    Notice

    No. 1 is vibration damper side.
12. Measure crankshaft bearing diameters (E).

Extension 366 589 00 21 05

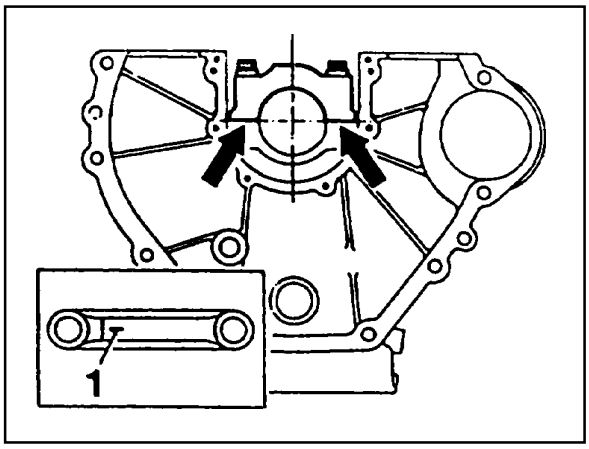

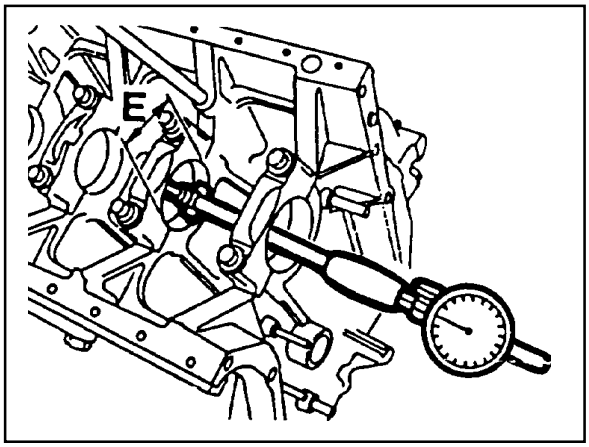

13. Measure at 3 points (A, B and C) and if the average value of B and C is less than A's value, the average value of B and C is the mean value and if more than A's value, A's value is the mean value.

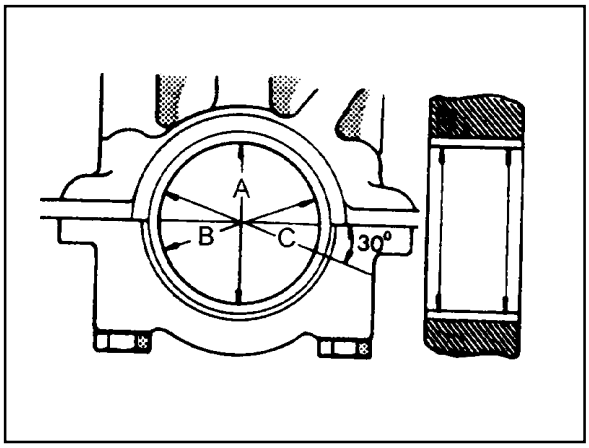

14. Measure crankshaft bearing journal diameter (F).

    Notice

    When measured in A and B, the runout should not exceed 0.010mm.

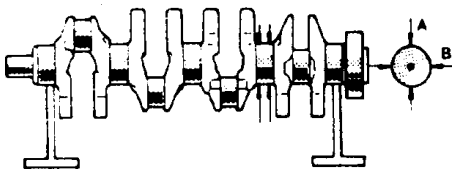

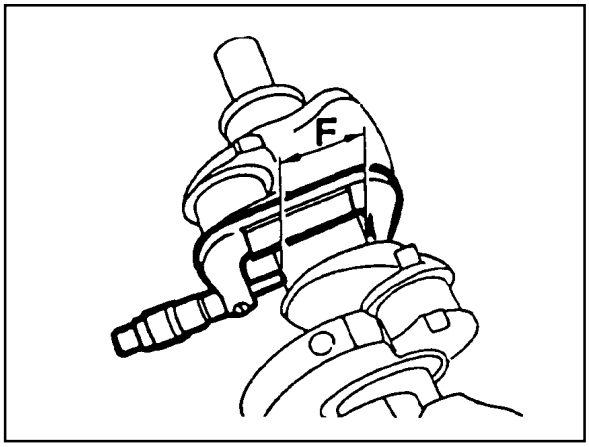

Downloaded from www.Manualslib.com manuals search engine

15. Measure radial clearance of crankshaft bearing (G).

Clearance 'G'	0.027 - 0.051mm

Notice

If 'G' is out of standard, replace the bearing shells and adjust the radial clearance of crankshaft bearing.

Example) Measured value 'E' = 57.700mm
Measured value 'F' = 57.659mm

Clearance 'G' = 0.041mm

16. Remove the crankshaft bearing cap.

17. Measure width of thrust bearing journal (H) and adjust with proper thrust bearings (see table).

Notice

The same thickness of thrust washers should be installed on both sides of the thrust bearing.

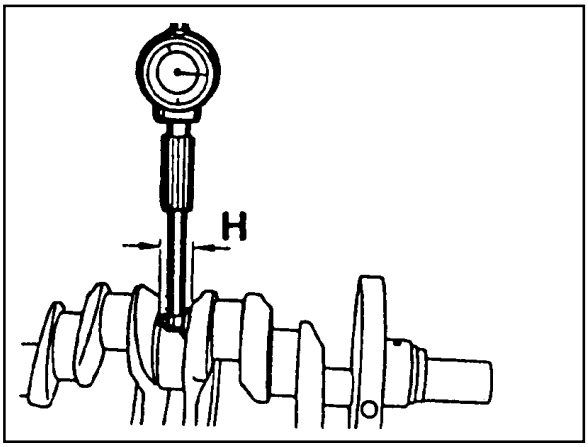

18. Coat the upper thrust bearing (4) with oil and insert into the crankcase so that the oil grooves are facing the crank webs (arrow).

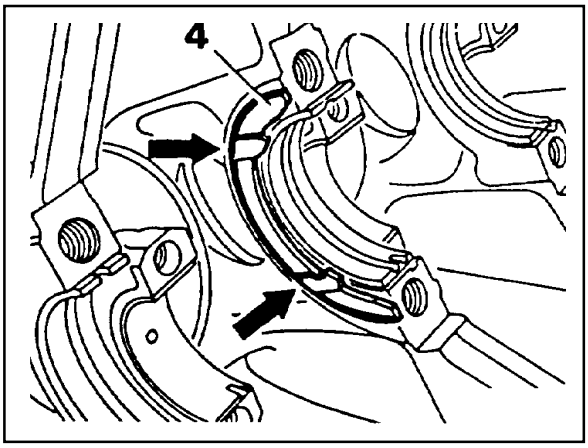

19. Coat the lower thrust bearing (7) with oil and insert into the crankshaft bearing cap so that the oil grooves are facing the crank webs (arrow).

Notice

The retaining lugs should be positioned in the grooves (arrow).

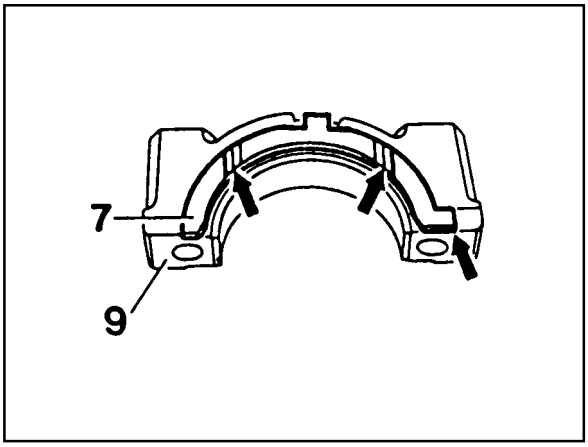

Downloaded from www.Manualslib.com manuals search engine

Notice

If the max. length of bolts(L) exceed 63.8mm, replace them.

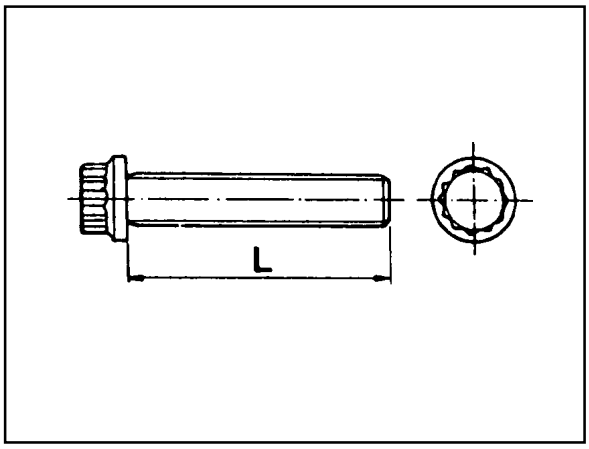

19. Coat the new crankshaft with engine oil and place it on the crankcase.
20. Install the crankshaft bearing caps according to marking and tighten the bolts.

Tightening Torque	55 Nm + 90°

Notice

Install from No. 1 cap.

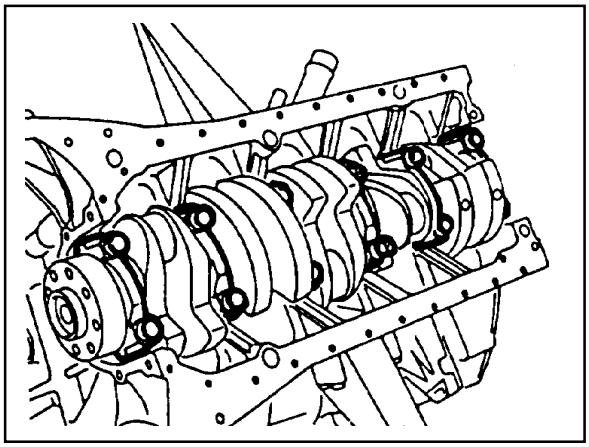

22. Rotate the crankshaft with hand and check whether it rotates smoothly.
23. Measure crankshaft bearing axial clearance.

Clearance	0.100 - 0.245mm

Notice

If the clearance is out of standard, adjust the axial clearance of crankshaft bearing by replacing the thrust washers.

Dial Gauge 001 589 53 21 00
Dial Gauge Holder 363 589 02 21 00

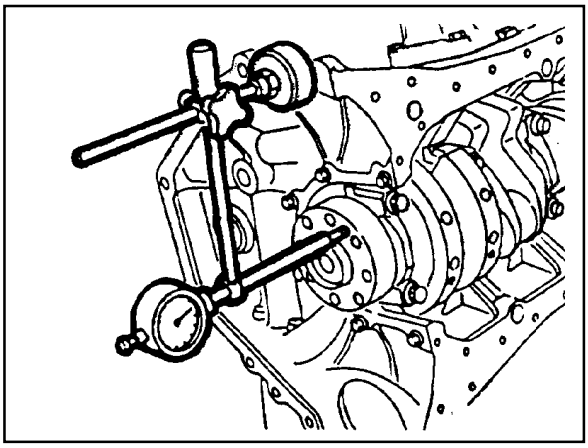

Notice

The same thickness of thrust washers should be installed on both sides of the thrust bearing.

Downloaded from www.Manualslib.com manuals search engine

24. Insert the new connecting rod bearing shells into the connecting rod and connecting rod bearing cap and tighten the 12-sided stretch bolts (11).

Tightening Torque	40 Nm + 90°

25. Measure inner diameter of connecting rod bearing.

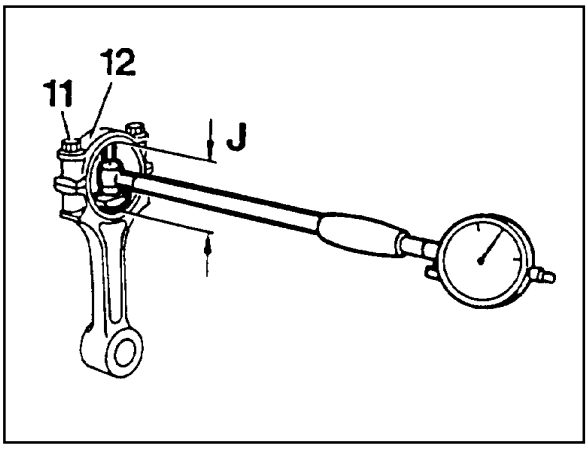

26. Measure connecting rod bearing journal diameter (K).

Notice

Refer to measurement of the crankshaft bearing journal diameter.

27. Measure the radial clearance (L) of the connecting rod bearing.

Example) Measured value 'J' = 47.700mm
Measured value 'K' = 47.653mm

Clearance 'L' = 0.047mm

Radial clearance 'L'	0.026 - 0.068mm

Notice

If the clearance is out of standard, adjust the radial clearance of connecting rod bearing by replacing the connecting rod bearing shells.

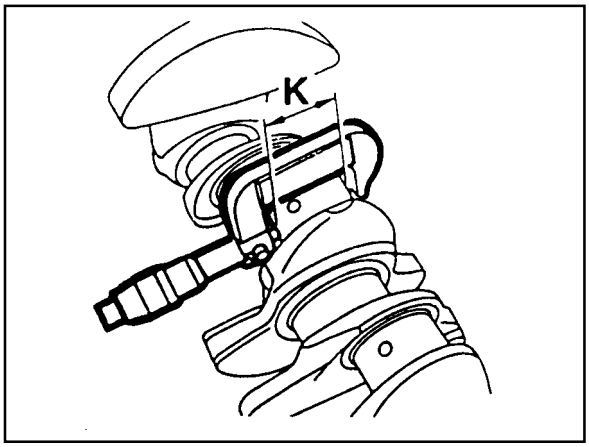

28. Remove the connecting rod bearing cap.
29. Install the piston.
30. Rotate the crankshaft by hand and check whether it rotates smoothly.
31. If the bearings are damaged,
    - replace the oil presser relief valve.
    - clean the oil pump and oil filter housing carefully and replace the hose if necessary.

Notice

After assembling the engine, check the camshaft timing, adjust the start of fuel injection and check the TDC sensor bracket setting.

32. Fill oil and run the engine and then check the oil pressure and oil level.

Notice

Install the original oil filter element and then change the engine oil and oil filter element after 1,000 - 1,500km.

Downloaded from www.Manualslib.com manuals search engine

FLYWHEEL

Preceding Work : Removal of the transmission
Removal of the clutch

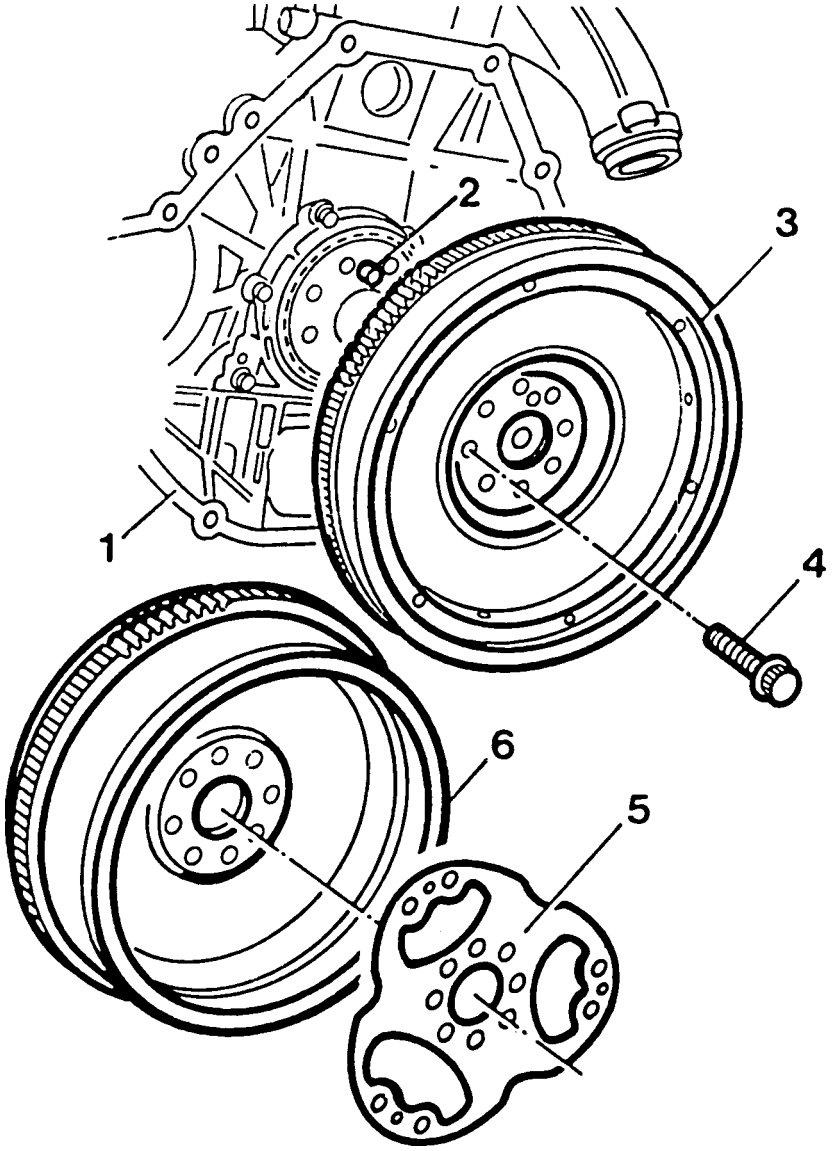

1 Oil Pan
2 Straight Pin
3 Flywheel
4 12-Sided Stretch Bolt ..... Check, 45Nm + 90°
5 Drive Plate (Automatic Transmission)
6 Flywheel (Automatic Transmission)

Downloaded from www.Manualslib.com manuals search engine

- Manual transmission flywheel

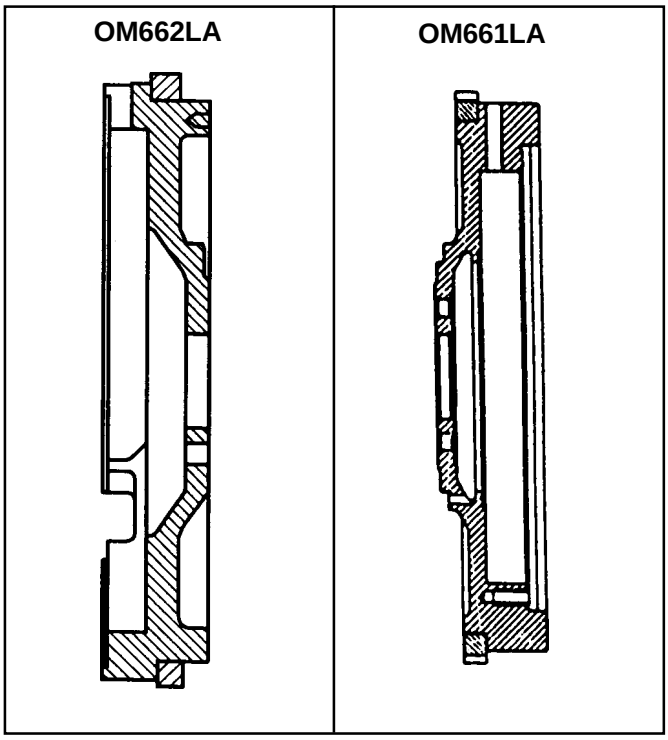

- Automatic transmission flywheel

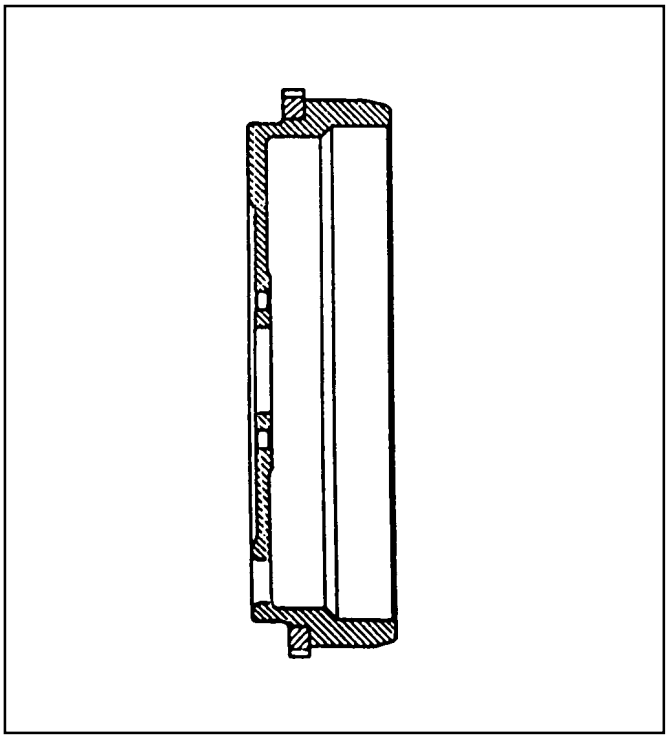

Downloaded from www.Manualslib.com manuals search engine

Tools Required

602 589 00 40 00 Engine Lock

Removal & Installation Procedure

1. Install the engine lock.

Engine Lock 602 589 02 40 00

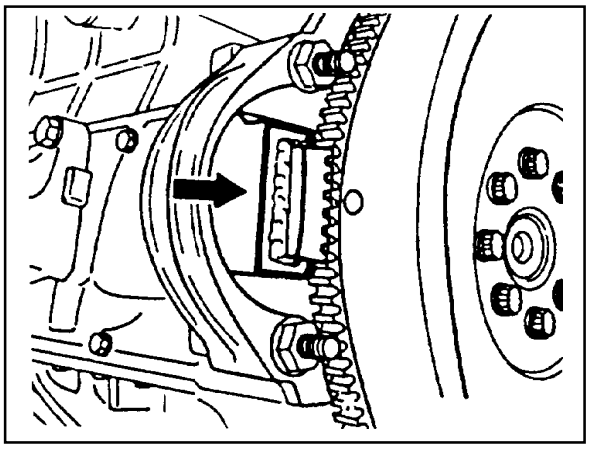

2. Remove the 12-sided stretch bolts (4).

Installation Notice

Tightening Torque	45 Nm + 90°

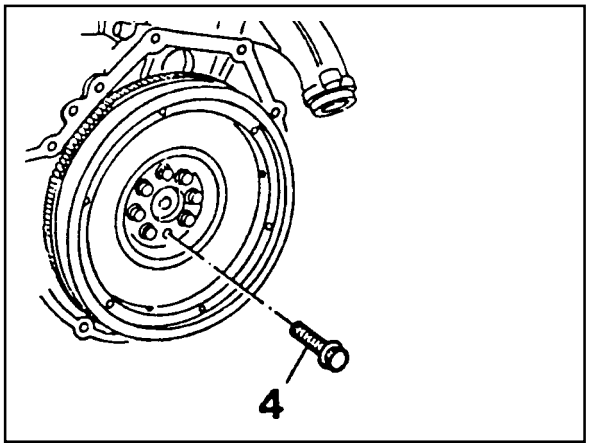

Notice

If the length 'L' of bolts exceeds 22.5mm, replace the bolts.

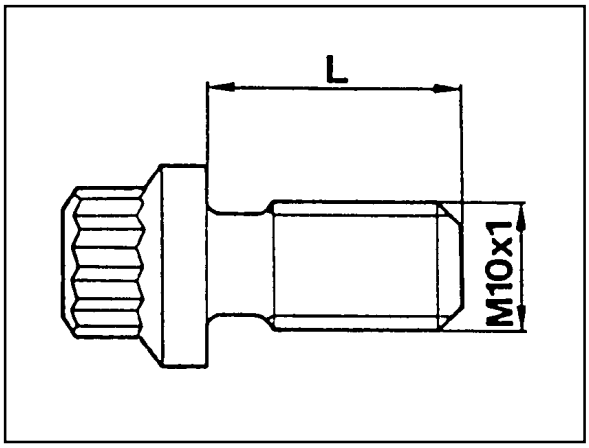

3. Remove the flywheel (3), if equipped with manual transmission.

Installation Notice

Correctly align the position of dowel pin (2).

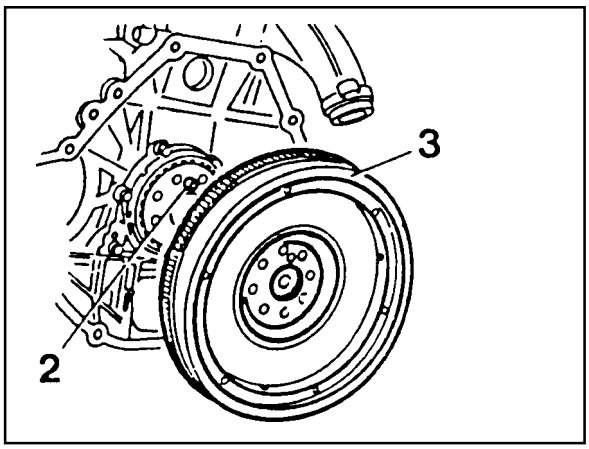

Downloaded from www.Manualslib.com manuals search engine

4. Remove the flywheel (6) and driven plate (5), if equipped with automatic transmission.

   Installation Notice

   Correctly align the position of dowel pin (2).

5. Installation should follow the removal procedure in the reverse order.

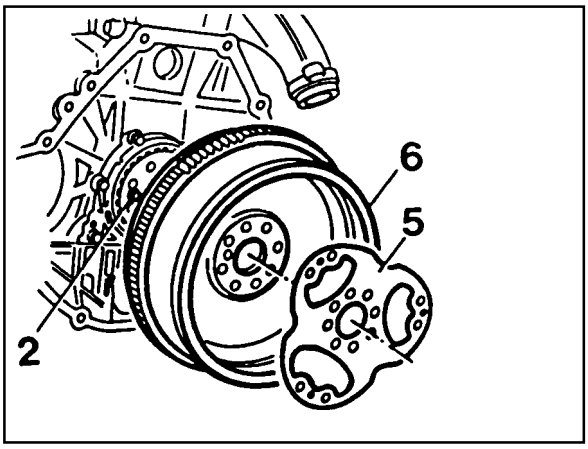

Downloaded from www.Manualslib.com manuals search engine

MACHINING OF FLYWHEEL

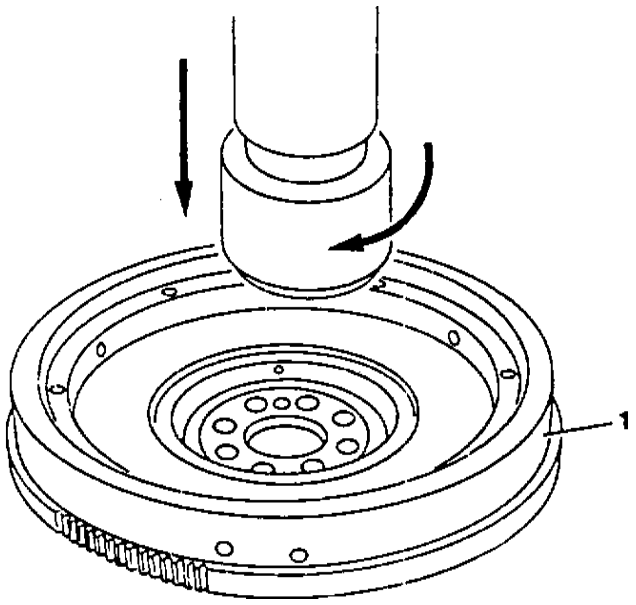

1 Flywheel

Machining of Flywheel

Notice

Flywheels which have scorch marks, scoring or cracks in the clutch surface should be machined by grinding or precision-turning. If the scores or cracks are severe than permissible specifications, replace the flywheel.

Distance 'a'	19.3 - 19.5 mm	
Distance 'b'	New	16.6 mm
	Repair up to	15.6 mm
Max. axial runout		0.05 mm

- When machining the clutch surface 'A', the mounting surface (B) for the clutch pressure plate should also be machined in accordance with 'A' to keep the distance 'a'.
- Do not machine under 'b' value.
- When machining, fix the flywheel exactly not to exceed the standard runout.

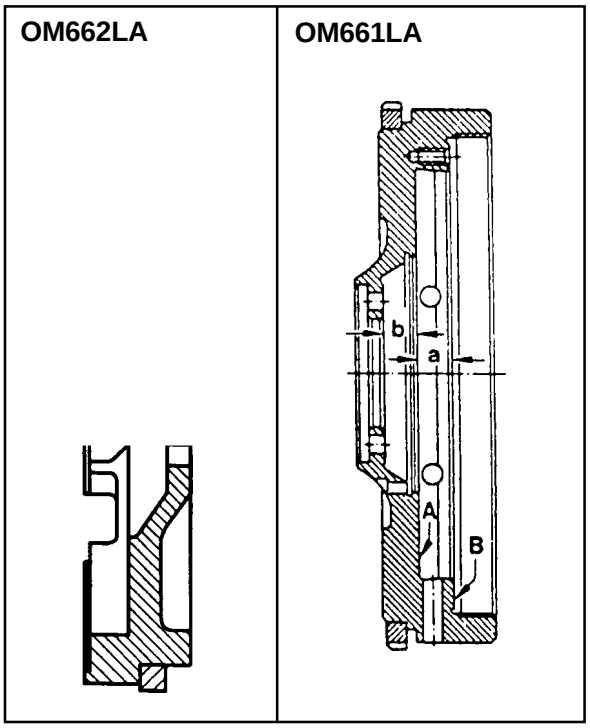

Downloaded from www.Manualslib.com manuals search engine

FLYWHEEL RING GEAR

Preceding Work : Removal of flywheel

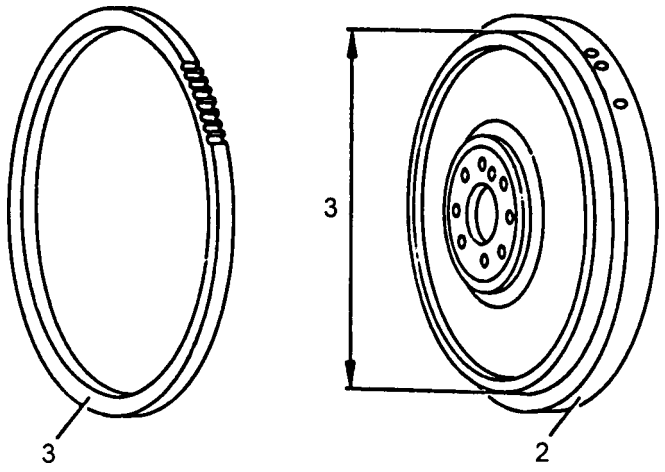

1 Ring Gear
2 Flywheel
3 Centering Collar Diameter

Tools Required

001 589 53 21 00 Dial Gauge

363 589 02 21 00 Dial Gauge Holder

Downloaded from www.Manualslib.com manuals search engine

Replacement Procedure

1. Drill a hole into the ring gear (1) (arrow) and snap with a chisel.
2. Thoroughly clean the collar surfaces of ring gear.

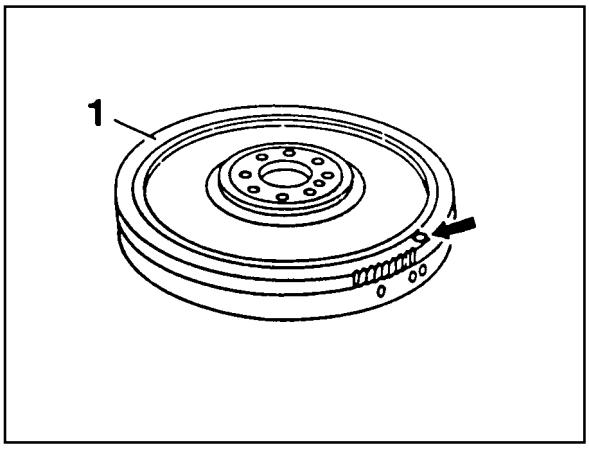

3. Measure diameter (a) of centering collar.

   Notice

   If out of standard, replace the flywheel.

Diameter ‘a’	275 + 0.5mm

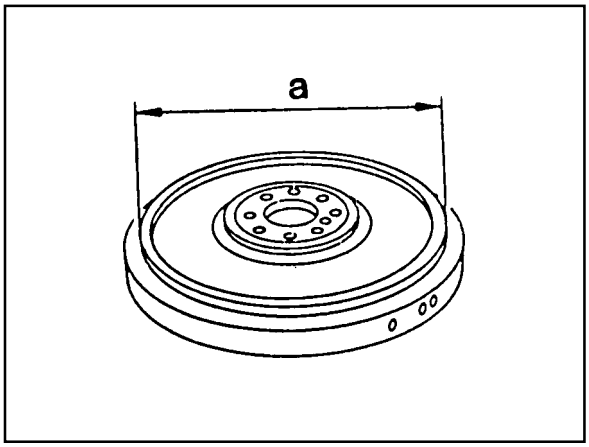

4. Heat up the new ring gear up to 220°C by using a heating device.

   Notice

   Use temperature measuring chalk.

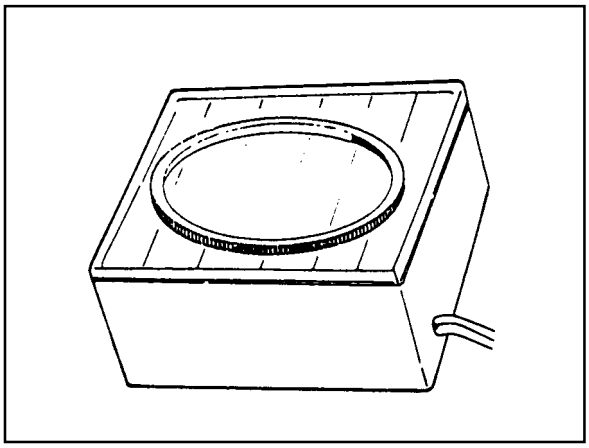

5. Install the new ring gear (1) onto the flywheel by using a drift.

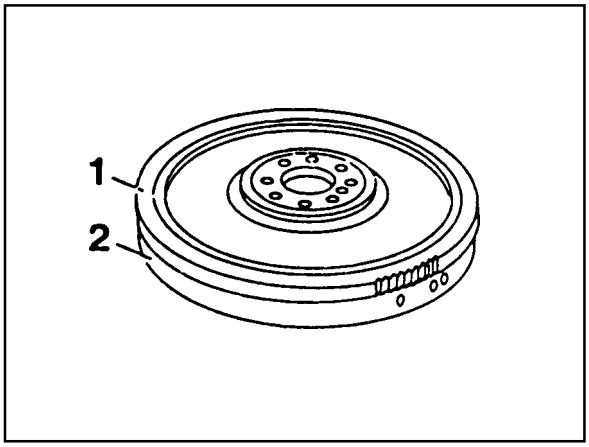

Downloaded from www.Manualslib.com manuals search engine

6. Measure axial runout of ring gear (1) on a surface plate.

Limit	Max. 0.4mm

Notice

For correct measurement, put the flywheel on the flat measuring board.

Dial Gauge 001 589 53 21 00
Dial Gauge Holder 363 589 02 21 00

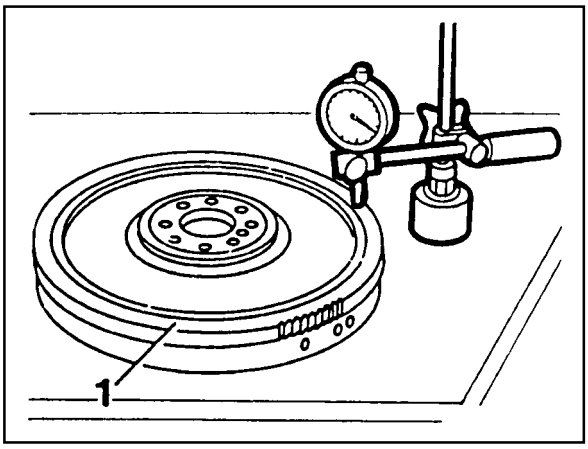

Downloaded from www.Manualslib.com manuals search engine

HYDRAULIC VALVE CLEARANCE COMPENSATION ELEMENT CHECK

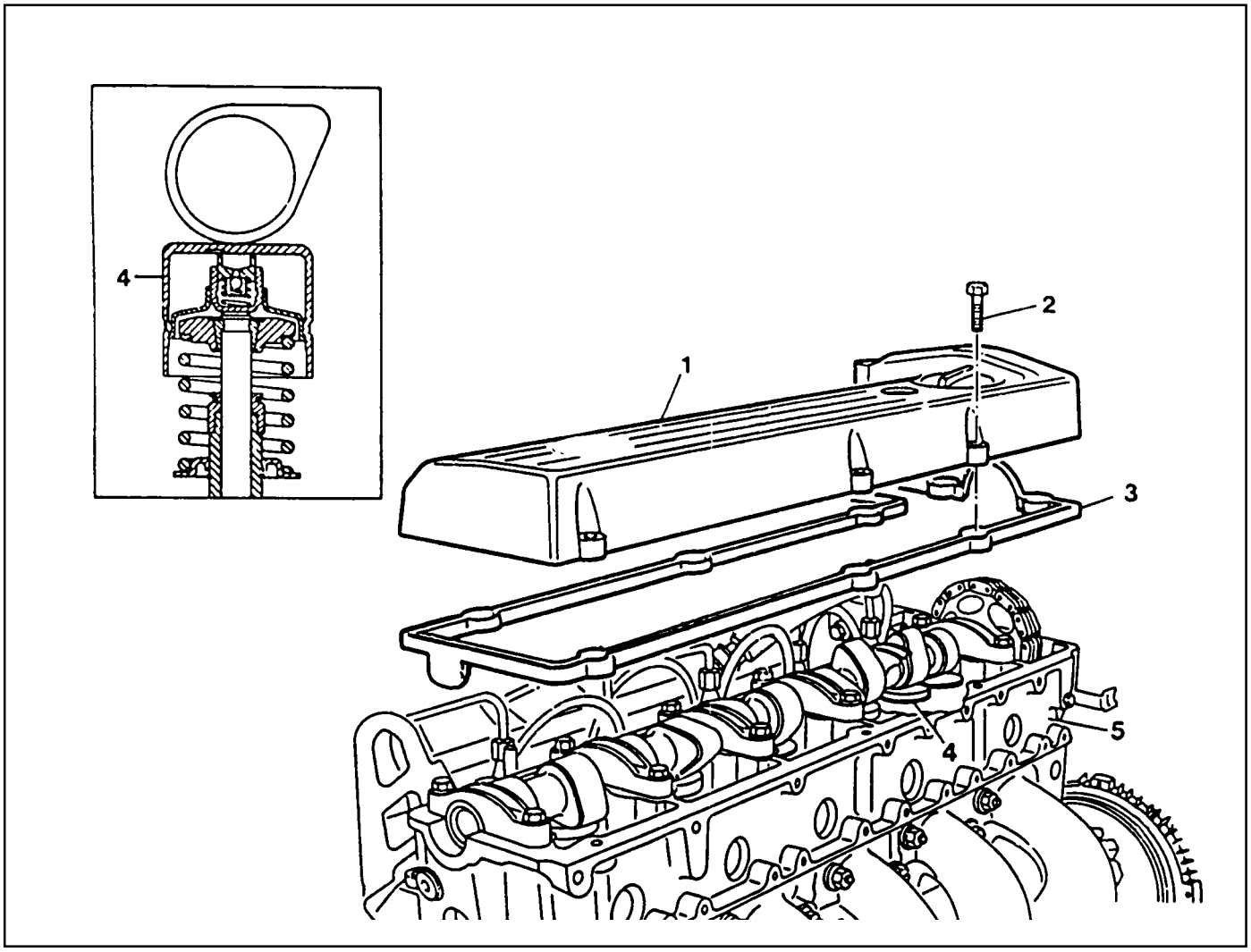

1 Cylinder Head Cover
2 Bolt 10Nm
3 Gasket ..... Replace
4 Valve Tappet
5 Cylinder Head

Downloaded from www.Manualslib.com manuals search engine

Checking Procedure

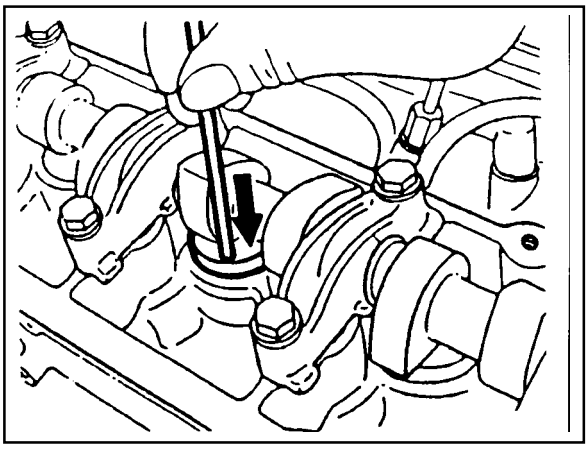

Notice

The noise which continues short time during short travel (frequent starting of the engine) or engine starting after a long time storage is normal operating conditions. So, it does not need to be repaired. Determine the malfunctions in valve clearance compensation device with noise through following tests. If defective, replace as respectively.

1. Run the engine at more than 3000rpm for approx. 4 minutes.
2. Stop the engine. After 5minutes, check the engine oil level and adjust if necessary.
3. Remove the cylinder head cover.
4. Check the valve tappets at TDC position of each cylinders.
5. Using a drift, lightly press the valve tappet and measure clearance between the cam and valve tappet.

Notice

If the clearance exceeds 0.4mm, replace the valve tappet.

6. If a valve tappet moves down too far in comparison to the others, replace the valve tappet.
7. Rotate the engine and check the remaining valve tappets.

Notice

- Unnecessary rotation of the engine will damage the valve tappets.
- Do not rotate the engine by using the camshaft sprocket bolt or to the opposite direction of the engine rotation.

Downloaded from www.Manualslib.com manuals search engine

VALVE TAPPETS

Preceding Work : Removal of camshaft

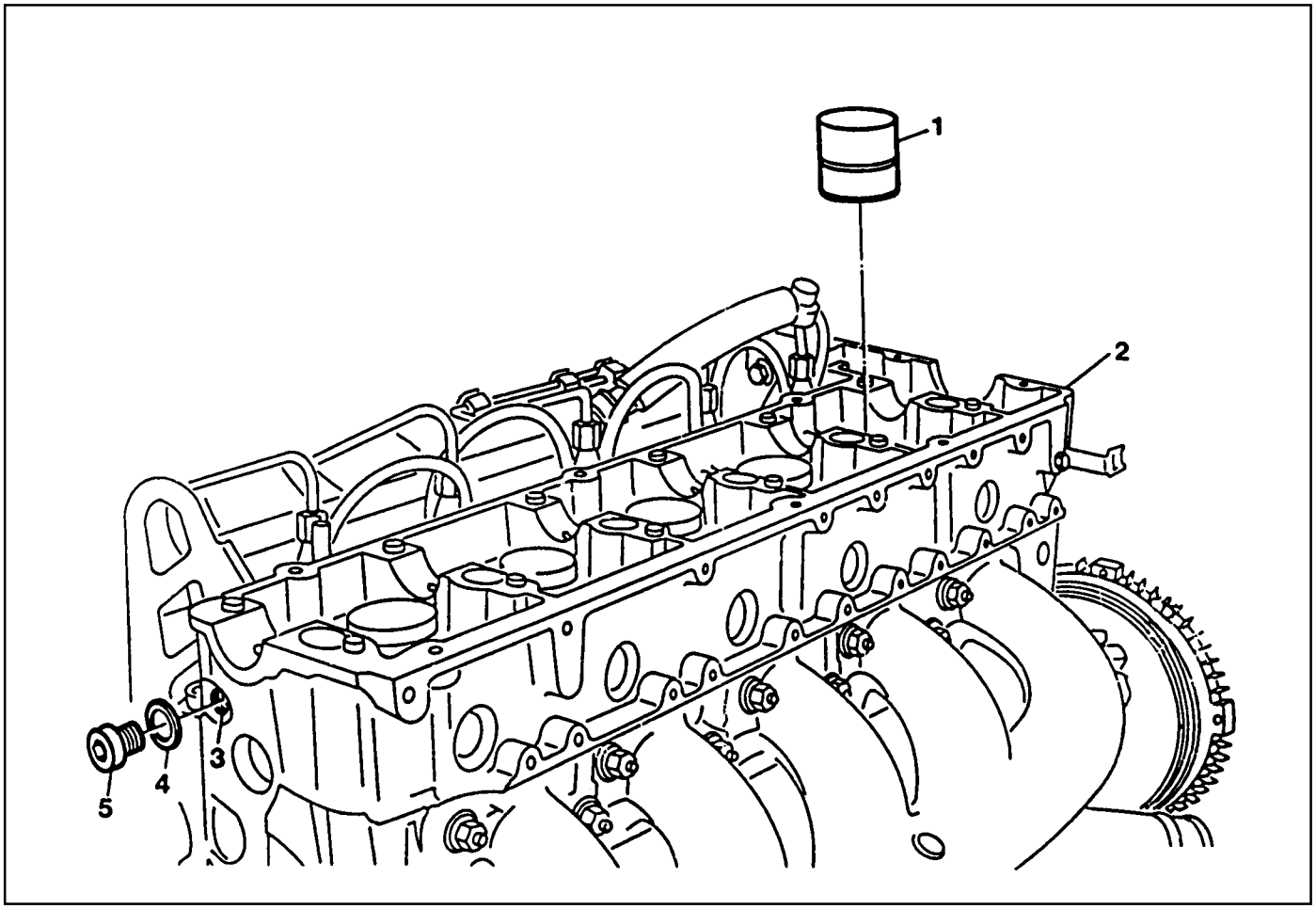

1 Valve Tappet
2 Cylinder Head
3 Oil Gallery
4 Seal ..... Replace
5 Screw Plug

Tools Required

102 589 03 40 00 Magnetic Bar

Downloaded from www.Manualslib.com manuals search engine

Replacement Procedure

1. Pull out the valve tappet (1).

Magnetic Bar 102 589 03 40 00

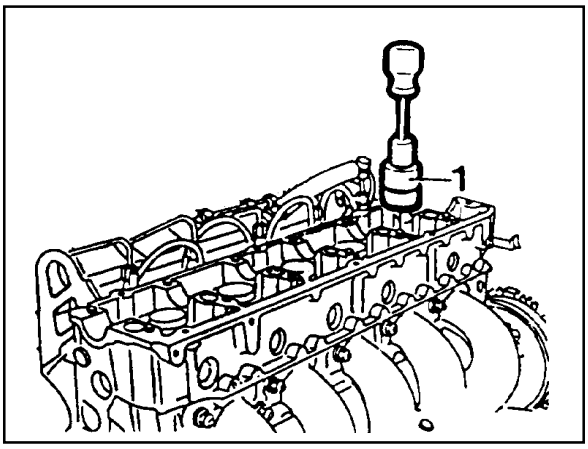

2. Remove the plug (5) and blow compressed air into the oil gallery (3). At this time, check that the outlet bores(arrow) at the seat of the valve tappet are clear.
3. Replace the seal (4) and tighten the plug (5).
4. Insert the new valve tappet.

   Notice

   Coat the valve tappet with oil.

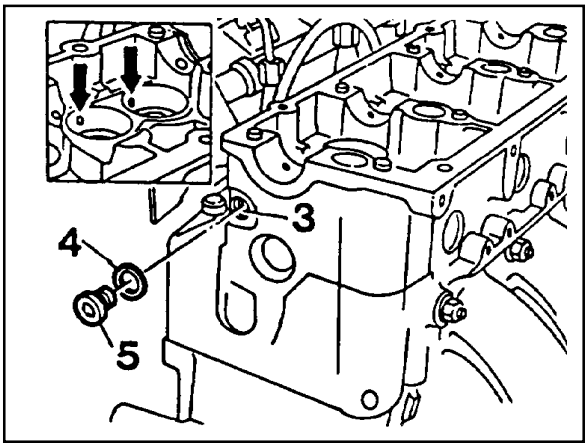

Downloaded from www.Manualslib.com manuals search engine

VALVE SPRINGS CHECK

Preceding Work : Removal of valve spring

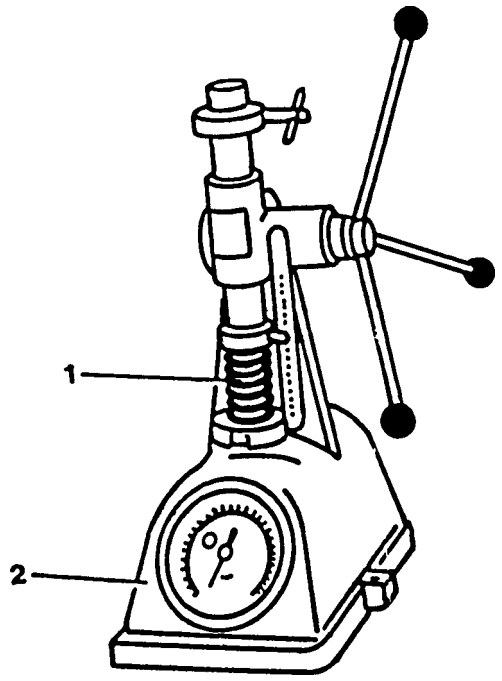

1 Valve Spring

2 Spring Scale

Service Data

Outer diameter	Wire diameter	Free length	At preloaded		
			Length	Tension (new)	Limit
33.1mm	4.20mm	50.0mm	27mm	680 - 740N	612N

Downloaded from www.Manualslib.com manuals search engine

VALVE SPRINGS (CYLINDER HEAD REMOVED)

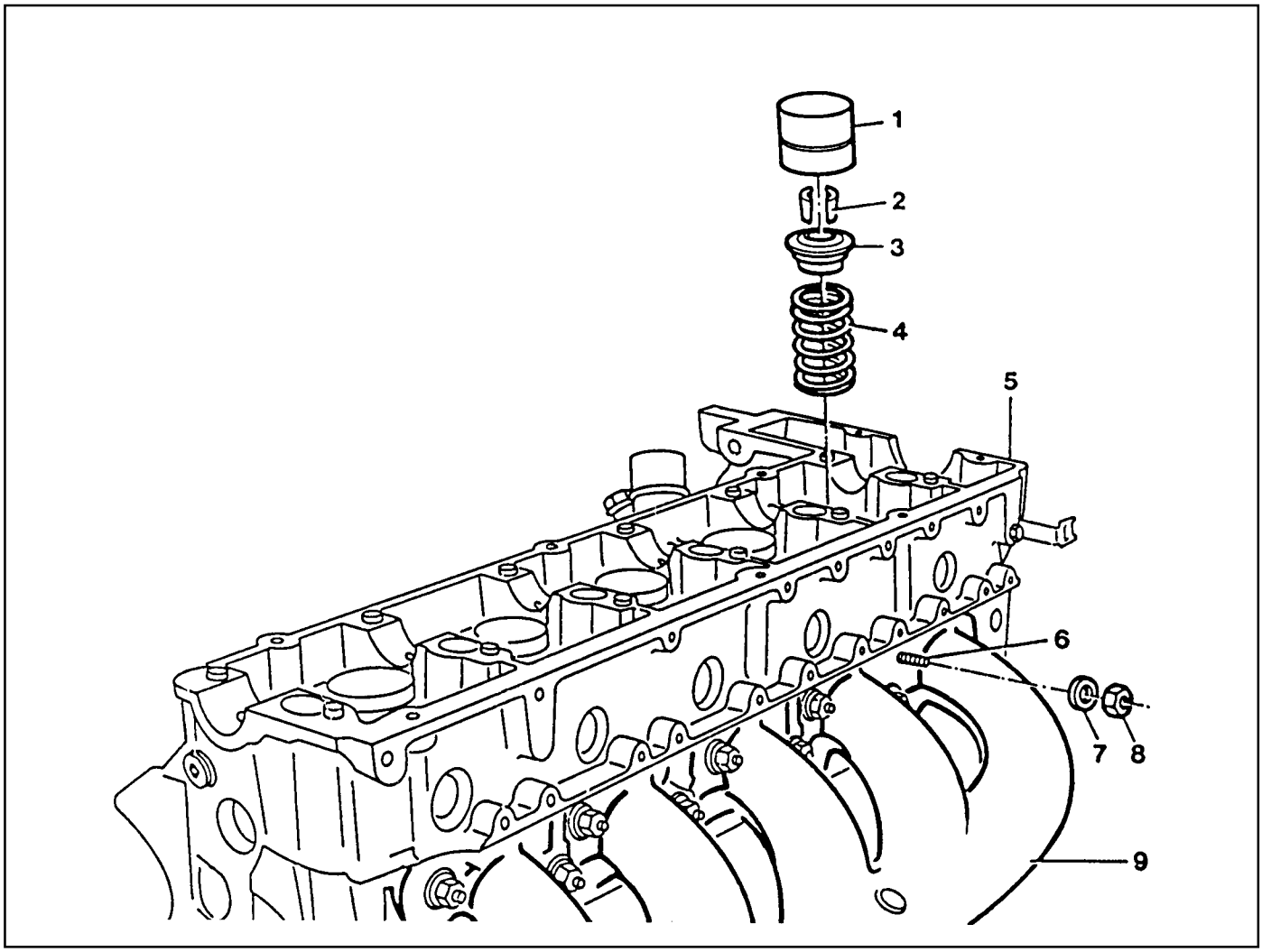

1 Valve Tappet
2 Valve Cotters
3 Spring Retainer
4 Valve Spring ..... Check, replace if necessary
5 Cylinder Head
6 Stud Bolt 12Nm
7 Washer
8 Nut ..... Replace, 25Nm
9 Exhaust Manifold

Downloaded from www.Manualslib.com manuals search engine

Tools Required

102 589 03 40 00 Magnetic Bar
116 589 06 63 00 Magnetic Finger
601 589 01 59 00 Assembling Board
601 589 02 59 00 Supporting Bridge
667 589 00 31 00 Press Lever

Removal & Installation Procedure

1. Remove the nuts (8) uniformly and then remove the washer (7), exhaust manifold (9) and gasket.

   Installation Notice

   Check the stud bolt (6) for damage and replace if necessary.

Tighten Torque	12 Nm

   Replace the gasket and tighten the nuts (8).

Tighten Torque	25 Nm

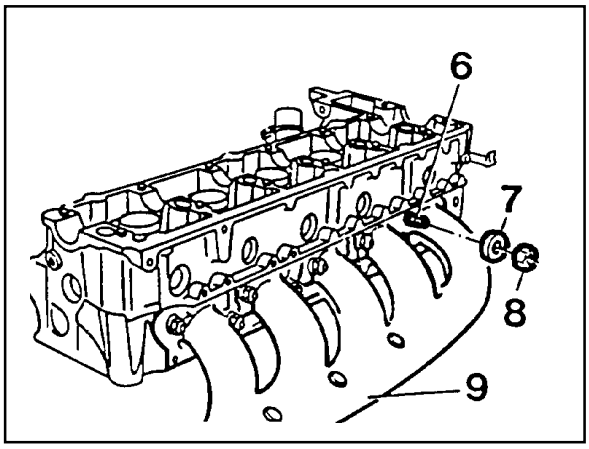

2. Install the assembling board (11) to the cylinder head with 4 cylinder head blots (10).

Assembling Board 601 589 01 59 00

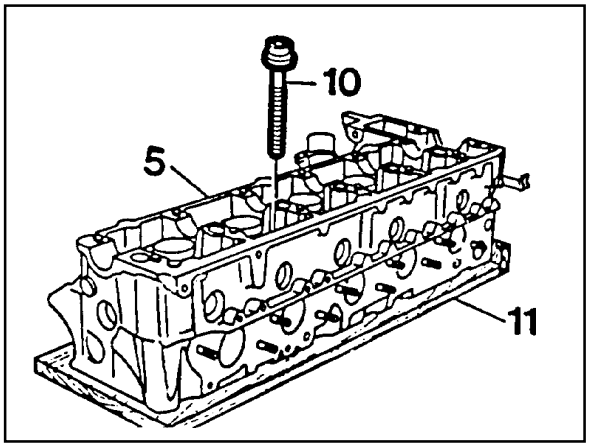

3. Pull out the valve tappet (1) with magnetic bar (12).

   Notice

   Place the valve tappets upside down (open end upward).

Magnetic Bar 102 589 03 40 00

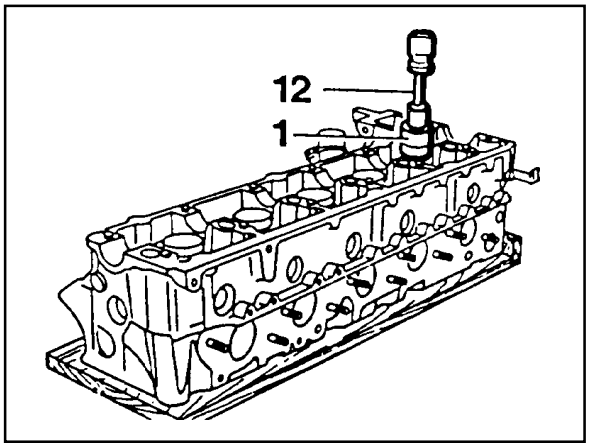

4. Install the supporting bridge (13) on the cylinder head (5).

Supporting Bridge 601 589 02 59 00

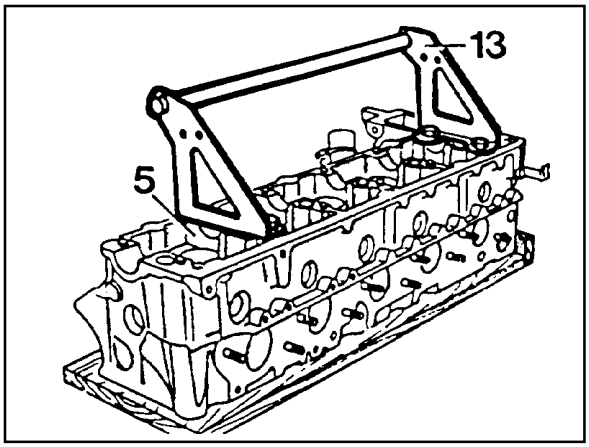

Downloaded from www.Manualslib.com manuals search engine

5. Using the press lever (14), press the spring retainer downward and remove the valve cotters (2) with magnetic finger (15).

   Notice

   Be careful not to damage guide bore of the valve tappet.

Press Lever 667 589 00 31 00
Magnetic Finger 116 589 06 63 00

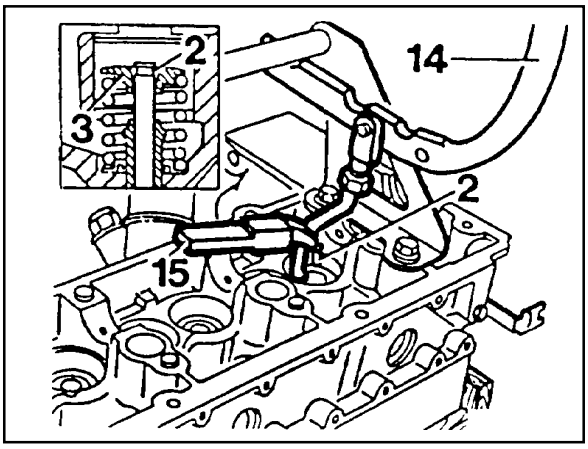

6. Remove the spring retainer (3) and spring (4).

   Installation Notice

   Install the valve spring with the color coding (arrow) facing down.

7. Check the valve spring and replace if necessary.
8. Installation should follow the removal procedure in the reverse order.

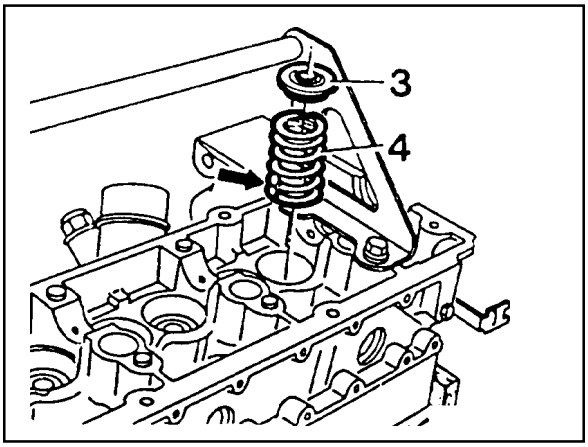

Downloaded from www.Manualslib.com manuals search engine

VALVE SPRINGS (CYLINDER HEAD INSTALLED)

Preceding Work : Removal of camshaft

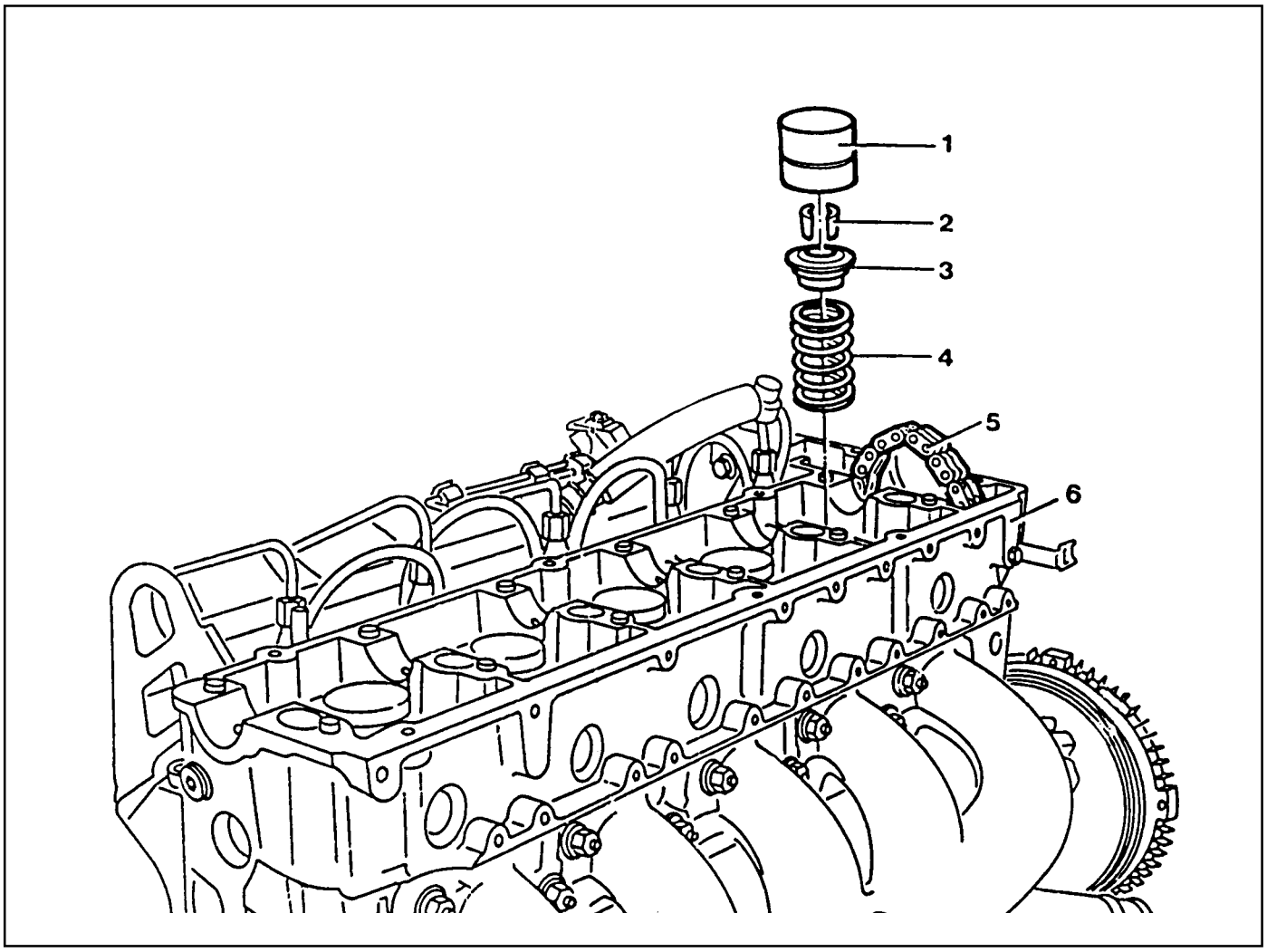

1 Valve Tappet
2 Valve Cotters
3 Spring Retainer
4 Valve Spring ..... Check, replace if necessary
5 Timing Chain
6 Cylinder Head

Notice

Remove the valve springs only when the piston is at TDC.

Tools Required

102 589 03 40 00 Magnetic Bar
116 589 06 63 00 Magnetic Finger
603 589 01 40 00 Holding Wheel
667 589 00 31 00 Press Lever
667 589 02 63 00 Supporting Bar

Downloaded from www.Manualslib.com manuals search engine

Removal & Installation Procedure

1. Remove the valve tappet (1) with magentic lifter.

   Notice

   Place the valve tappets upside down (open end upward)

   Magentic Liter 102 589 03 40 00

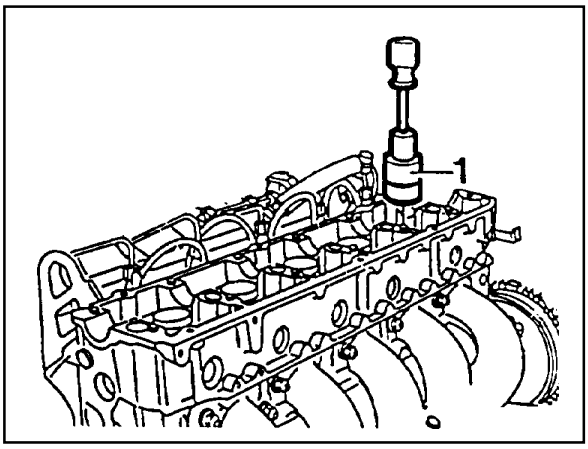

2. Install the holding wheel (7) into the timing chain of camshaft sprocket piston.

   Holding Wheel 603 589 01 40 00

3. Position the piston of relevant cylinder at TDC.

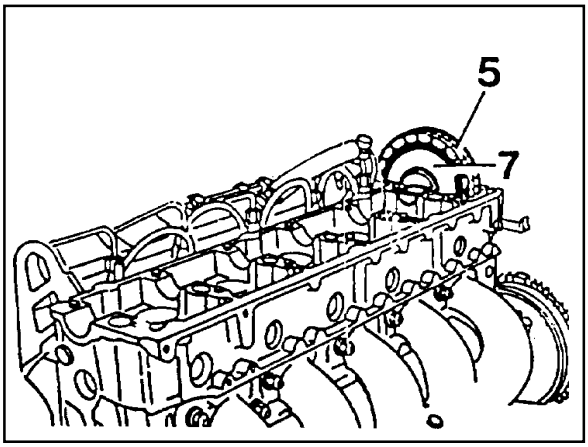

4. Install the supporting bar (8).

   Supporting Bar 667 589 02 63 00

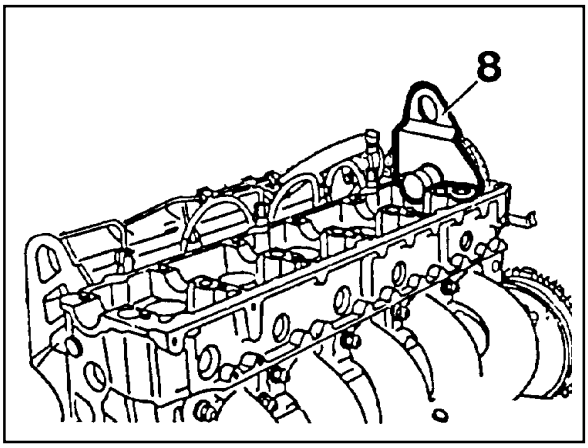

5. Using the press lever (9), press the spring retainer(3) downward and remove the valve cotters (2) with magnetic finger (10).

   Notice

   Be careful not to damage guide bore of the valve tappet.

   Press Lever 667 589 00 31 00
   Magnetic Finger 116 589 06 63 00

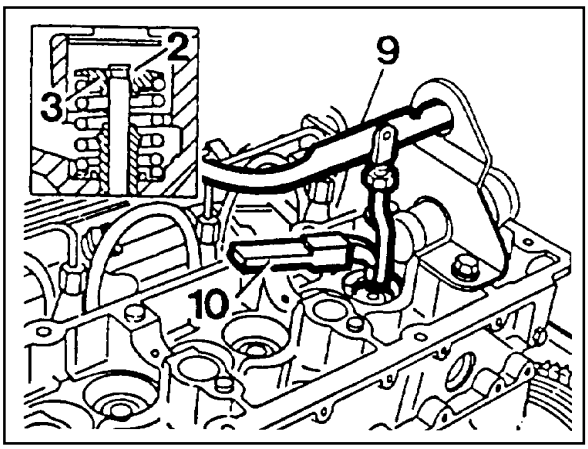

Downloaded from www.Manualslib.com manuals search engine

6. Remove the spring retainer(3) and spring (4).
7. Check the valve spring and replace if necessary.
8. Insert valve spring (4) with the color coding (arrow) facing down and insert valve spring Retainer(3).

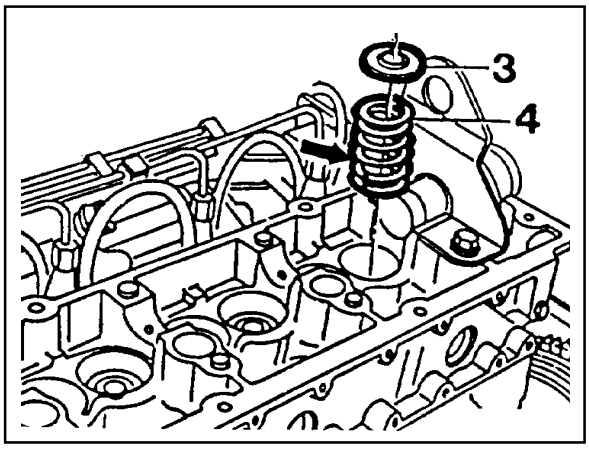

9. By press the spring retainer(3) with press lever (90), install the valve cotters with magnetic finger (10).

Press Lever 667 589 00 31 00
Magnetic Finger 116 589 06 63 00

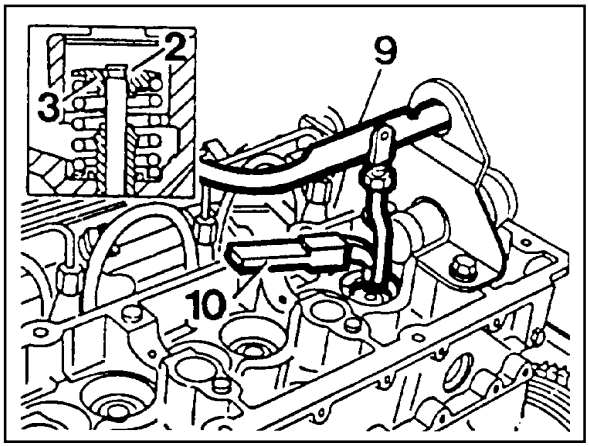

10. Remove the supporting bar.
11. Remove the holding wheel (7) from the timing chain (5).

Holding Wheel 603 589 01 40 00

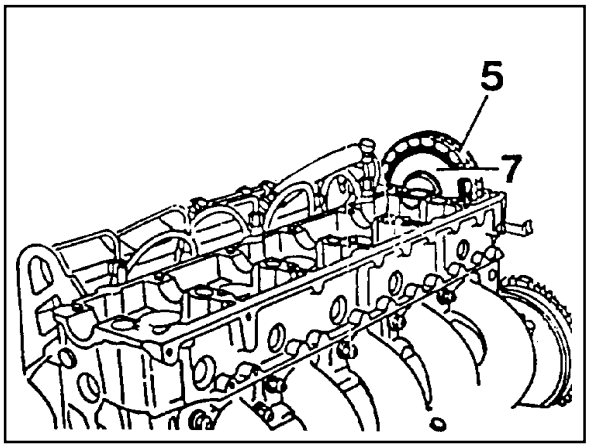

13. Coat the valve tappet with oil and install it.

Magnetic Bar 102 589 03 40 00

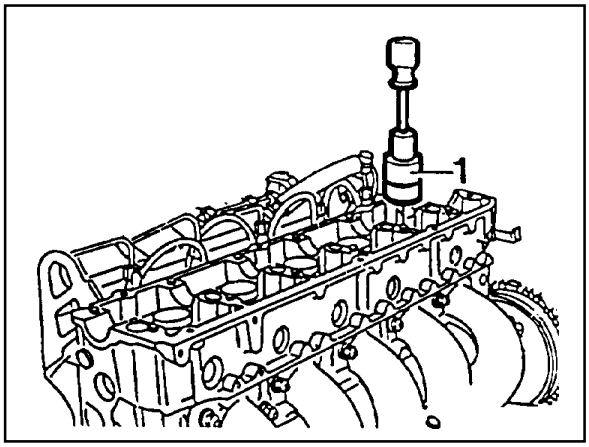

Downloaded from www.Manualslib.com manuals search engine

VALVE STEM SEALS

Preceding Work : Removal of camshaft.

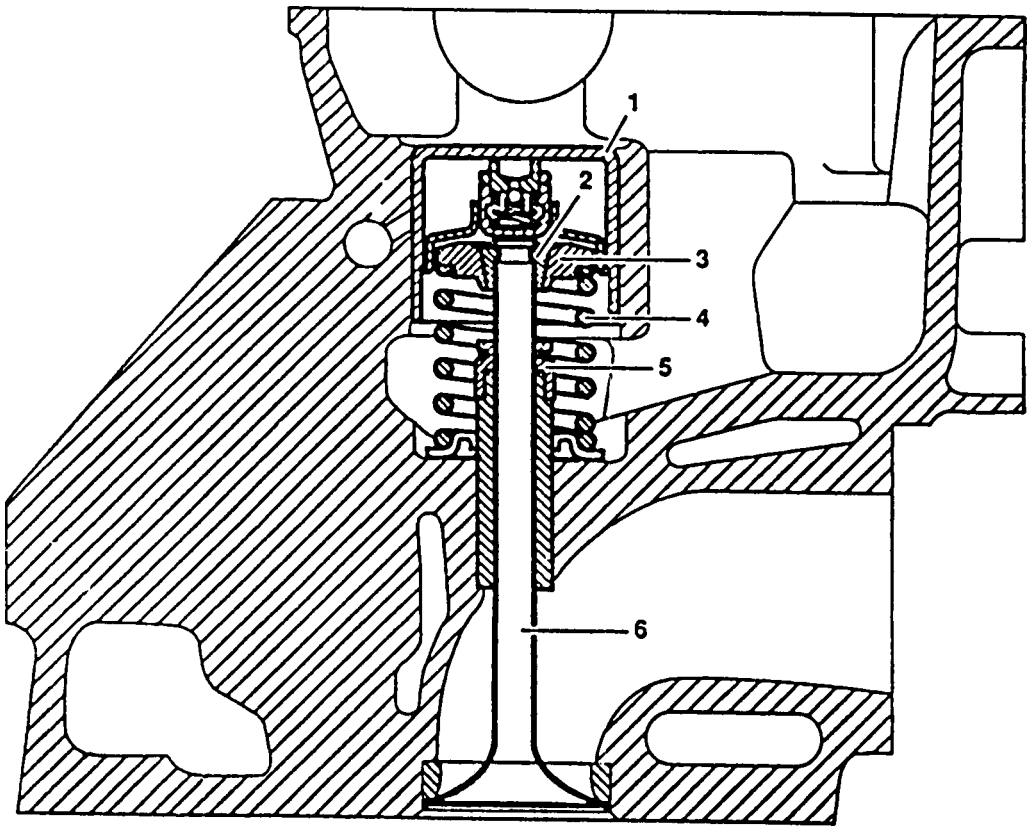

1 Valve Tappet
2 Valve Cotters
3 Spring Retainer
4 Valve Spring ..... Check, replace if necessary
5 Valve Stem Seal
6 Valve

Notice

Remove the valve stem seals when the piston is positioned at TDC.

Downloaded from www.Manualslib.com manuals search engine

Tools Required

667 589 00 31 00 Press Lever
104 589 00 37 00 Pliers
102 589 03 40 00 Magnetic Lifter
603 589 01 40 00 Holding Wheel
601 589 02 43 00 Drift
116 589 06 63 00 Magnetic Finger
667 589 02 63 00 Supporting Bar

A : Intake valve stem seal

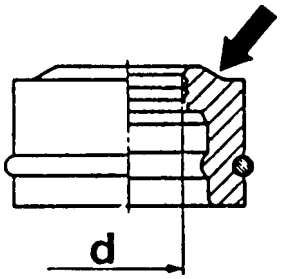

B : Exhaust valve stem seal

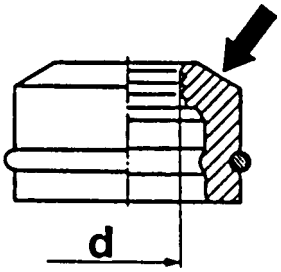

	Intake valve stem seal	Exhaust valve stem seal
Chamfer	Offset	All round
Inner diameter ‘d’	7.3mm	8.2mm
Color	Brown	Green
Wire ring	Black	Yellow

Downloaded from www.Manualslib.com manuals search engine

Replacement Procedure

1. Remove the valve tappet (1) with magnetic lifter.

   Notice

   Place the valve tappets upside down (open end upward).

   Magnetic Lifter 102 589 03 40 00

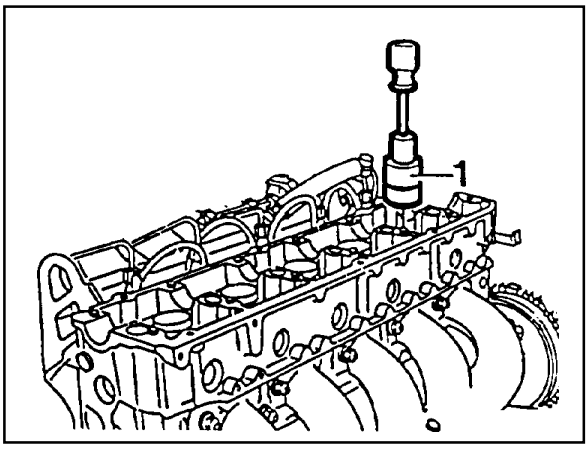

2. Install the holding wheel (7) into the timing chain (11).

   Holding Wheel 603 589 01 40 00

3. Position the piston of relevant cylinder at TDC.

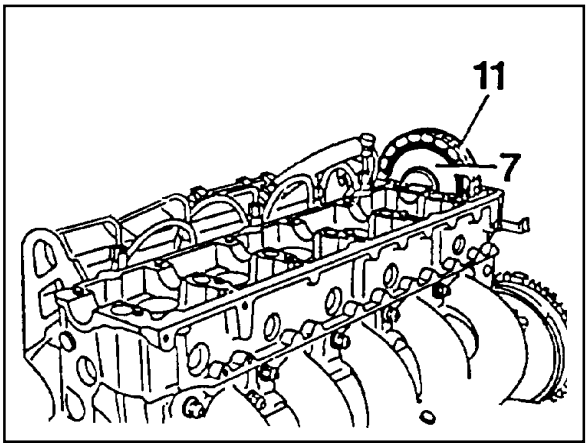

4. Install the supporting bar (8).

   Supporting Bar 667 589 02 63 00

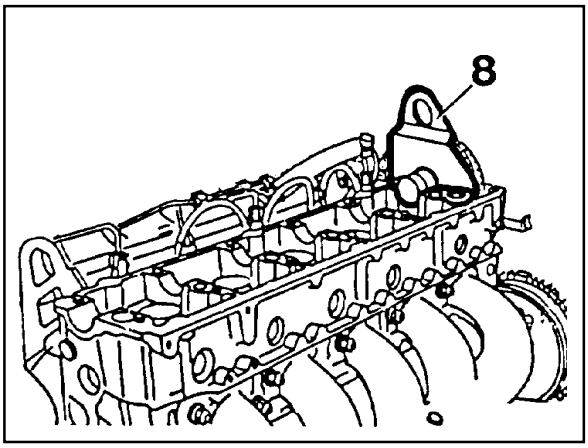

5. Using press lever (9), press the spring retainer(3) downward and remove the valve collets with magnetic finger (10).

   Press Lever 667 589 00 31 00
   Magnetic Finger 116 589 06 63 00

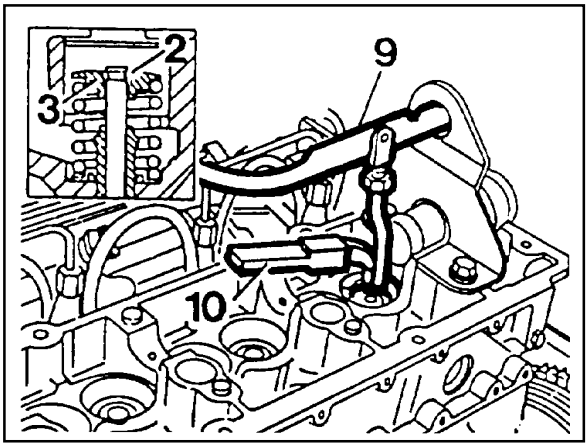

Downloaded from www.Manualslib.com manuals search engine

6. Remove the spring retainer(3) and valve spring (4).

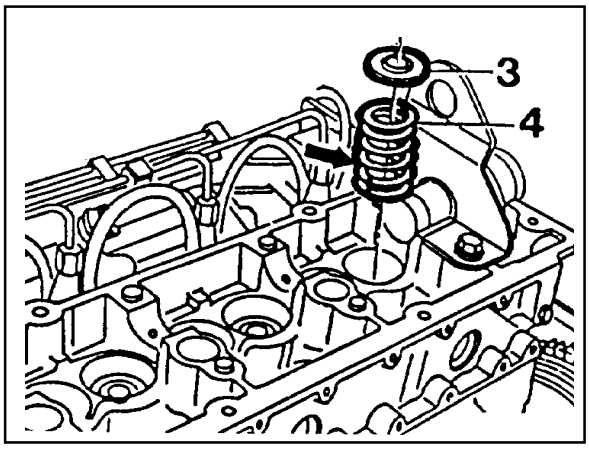

7. Remove the valve stem seal (5).

Pliers 104 589 00 37 00

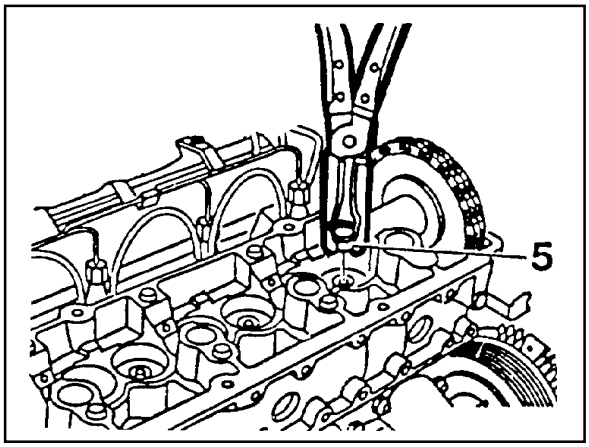

8. Insert the cap (12) onto the valve (6) and install the new valve stem seal (5) and then remover the cap.

Drift 601 589 02 43 00

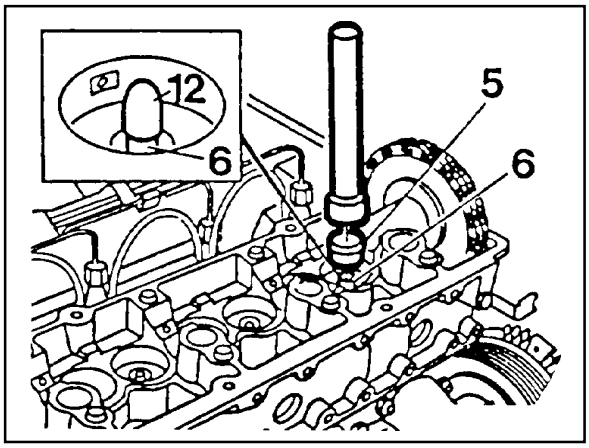

9. By pressing the spring seat with press lever (9), install the valve cotters(2) with magnetic finger (10).

Notice

Be careful not to damage guide bore of the valve tappet.

Press Lever 667 589 00 31 00
Magnetic Finger 116 589 06 63 00

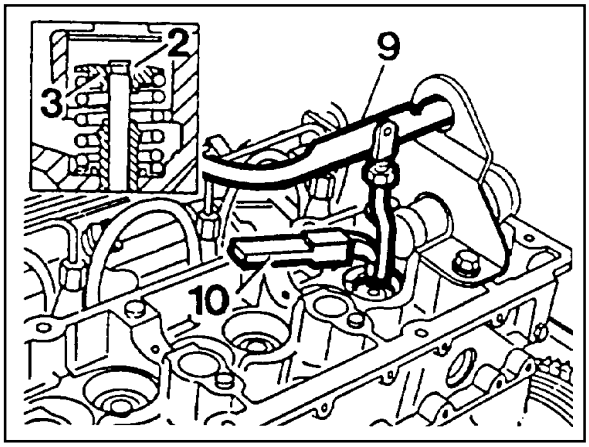

Downloaded from www.Manualslib.com manuals search engine

CHECK AND REPLACEMENT OF VALVE GUIDES

Preceding Work : Removal of cylinder head
Removal of valve spring
Removal of valve

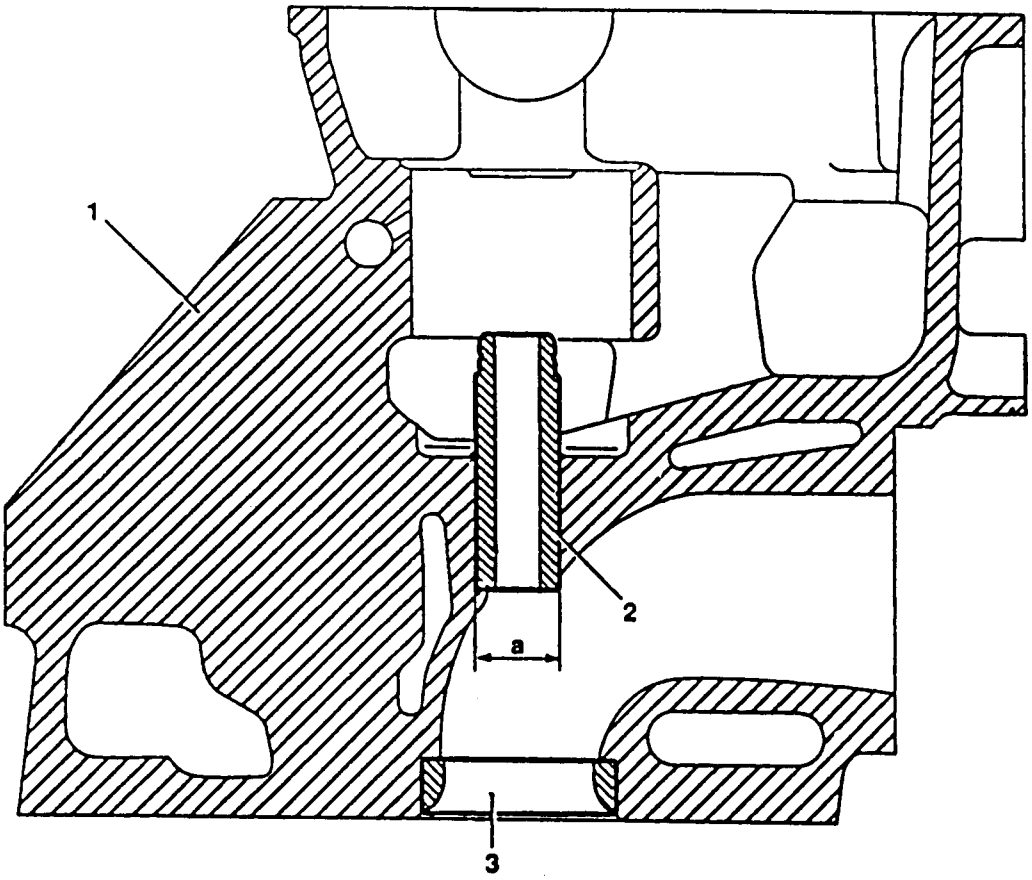

1 Cylinder Head
2 Valve Guide
3 Valve Seat Ring
a Basic Bore Diameter

Service Data

	Item	Outer Diameter 'D'	Color Code	Basic Bore Diameter 'a'	Overlap 'D' - 'a'	Valve Guide Inner Diameter 'A'	Length 'L'
Intake	Repair size 1	14.251	Red	14.200 - 14.211	0.029 - 0.051	8.000 - 8.030	39.5
	Repair size 2	14.440 - 14.451	White	14.400 - 14.411			
Exhaust	Repair size 1	14.240 - 14.251	Red	14.200 - 14.211	0.029 - 0.051	9.000 - 9.050	37.7
	Repair size 2	14.440 - 14.451	White	14.400 - 14.411			

Downloaded from www.Manualslib.com manuals search engine

Notice

Measure center (arrow) of the valve guide and if the inner diameter 'A' exceeds standard value, replace the guide.

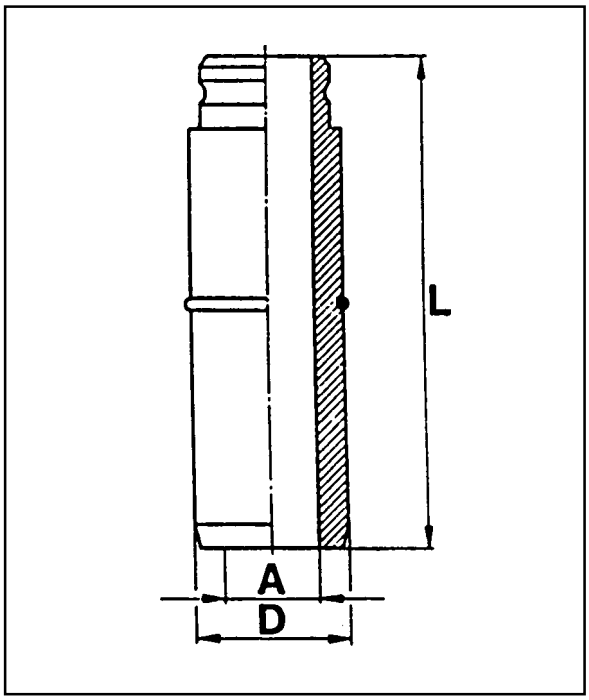

Tools Required

000 589 10 53 00 Reamer (for Exhaust)
000 589 10 68 00 Cylinder Brush
000 589 21 53 00 Reamer (for Intake)
102 589 00 23 00 GO / NO GO Gauge (for Intake)
103 589 02 15 00 Drift (for Exhaust)
103 589 03 15 00 Drift (for Intake)
117 589 03 25 00 GO / NO GO Gauge (for Exhaust)
346 589 00 63 00 Super Cooling Box
601 589 02 23 00 GO/NO GO Gauge
601 589 05 15 00 Drift (for Intake)
601 589 06 15 00 Drift (for Exhaust)

Matching Valve Seat - Broaching Tools - Guide Sleeves

Valve Seat	Broaching Tool No.	Guide Sleeve Tool No.	Guide Sleeve Side
Intake	115 589 00 53 00	102 589 00 63 00	B
Exhaust	(14.2mm)	102 589 08 63 00	B
Intake	115 589 01 53 00	601 589 15 63 00	A
Exhaust	(14.4mm)		B

Downloaded from www.Manualslib.com manuals search engine

Checking Procedure

1. Thoroughly clean the valve guide bore using a cylinder brush.

Cylinder Brush 000 589 10 68 00

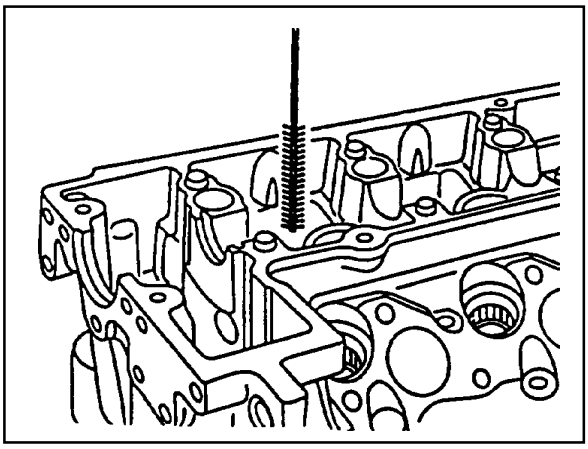

2. Insert the GO/NO GO gauge into the valve guide bore. If the NO GO side is inserted fully, replace the valve guide (Intake 8mm, Exhaust 9mm).

GO/NO GO Gauge 601 589 02 23 00

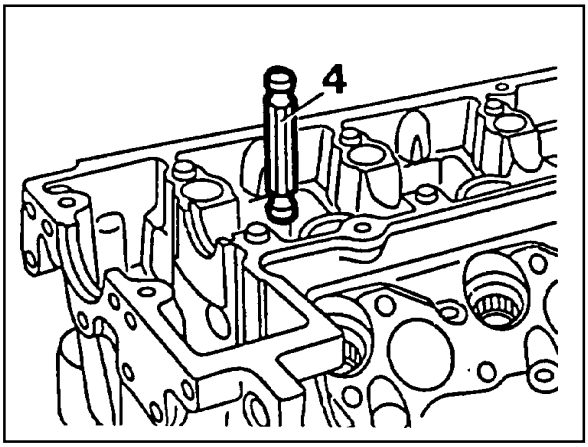

Replacement Procedure

1. Drive out the valve guide (2) by using a drift (5).

   Notice

   The valve guide must be driven out upward of the cylinder head.

Drift (for Intake) 103 589 03 15 00
Drift (for Exhaust) 103 589 02 15 00

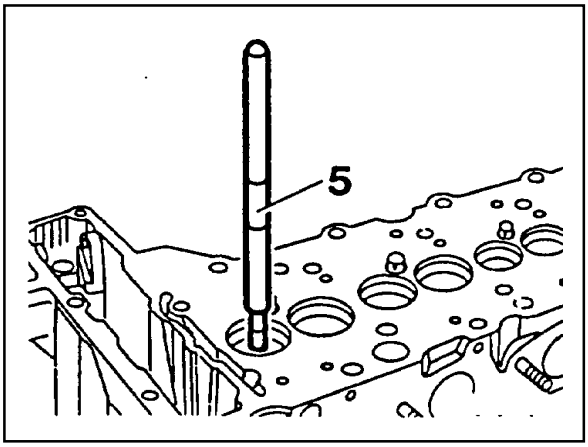

2. Thoroughly clean the basic bore by using a cylinder brush.

Cylinder Brush 000 589 10 68 00

3. Check the basic bore in cylinder head for scoring marks and ream to next repair size if necessary.

Downloaded from www.Manualslib.com manuals search engine

4. Reaming basic bore in cylinder head (repair size).
   - Thoroughly remove carbon deposits in cylinder head.

     Notice

     Particularly remove the insides of the valve seat rings.

   - Remove the elevation (arrow) of intake valve seat rings.

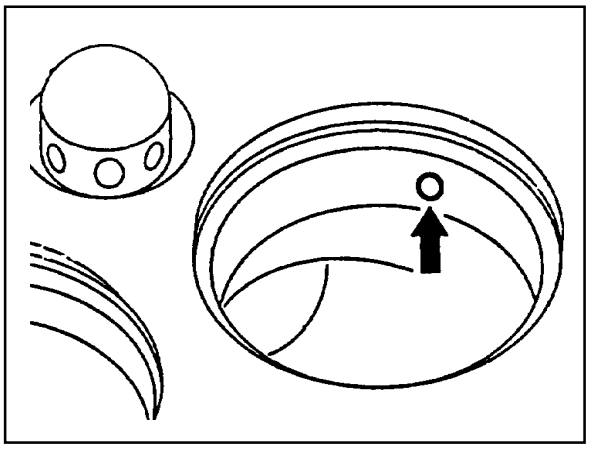

   - Select correct broaching tool and guide sleeve (refer to the table).

     Notice

     Before broaching work, the broaching tool must be cleared of swarf with a stiff plastic brush.

   - Lubricate the basic bore, guide sleeve and broaching tool with petroleum.
   - Push broaching tool (6) in broaching direction (arrow) into the guide sleeve (7) far enough so that the first cut of the broaching tool is positioned in the basic bore when guide sleeve is fitted onto the valve seat ring (3).

6 B ndard tool
7 Guide sleeve
See the 'standard data'

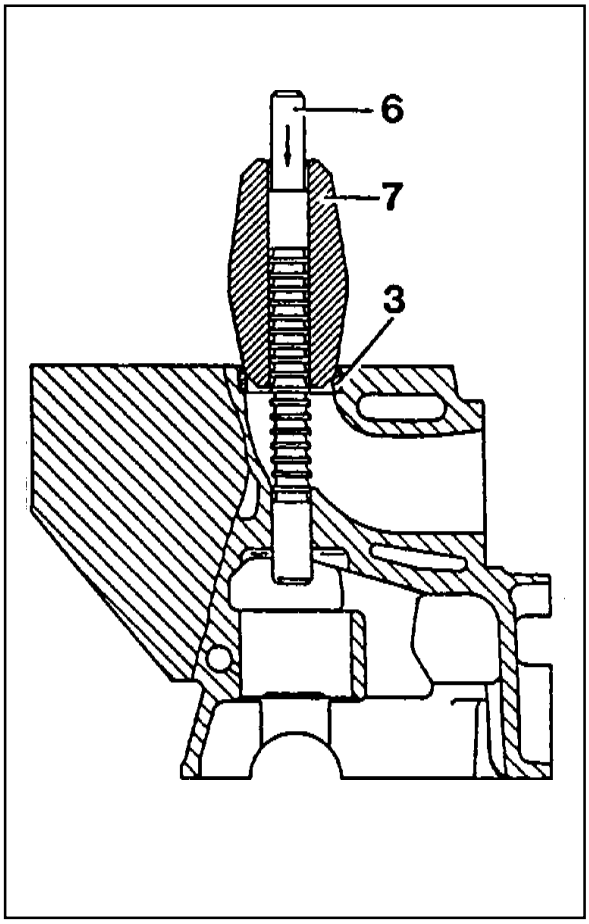

   - Center the guide sleeve (7) in the valve seat ring (3) by turning.
   - Knock through the broaching tool (6) with a plastic hammer (approx. 25g). and aluminum drift.

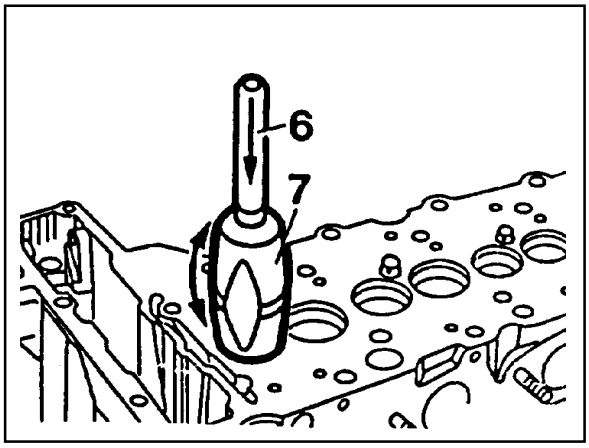

Downloaded from www.Manualslib.com manuals search engine

5. Heat the cylinder head (1) in a wear tank to approx. 80°C.

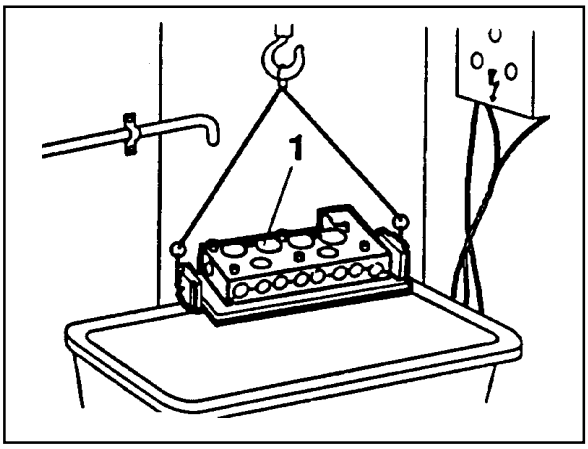

6. Cool down the new valve guide (2) with liquid nitrogen.

   Notice

   Do not touch the cooled valve guide by hand.

   Super Cooling box 346 589 00 63 00

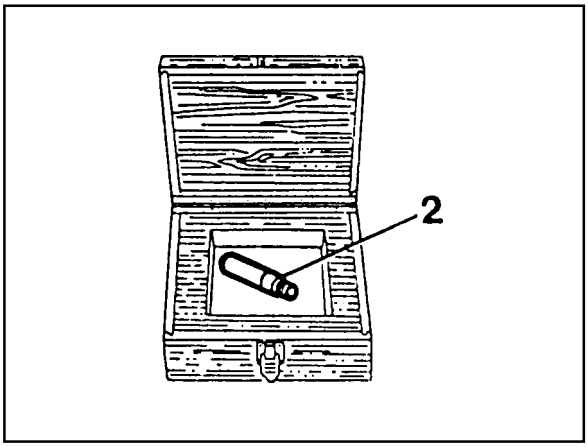

7. Drive in new valve guide with drift (8) until the wire ring makes contact.

   Notice

   The valve guide must be driven in from the cylinder head cover.

   Drift (for Intake) 601 589 05 15 00
   Drift (for Exhaust) 601 589 06 15 00

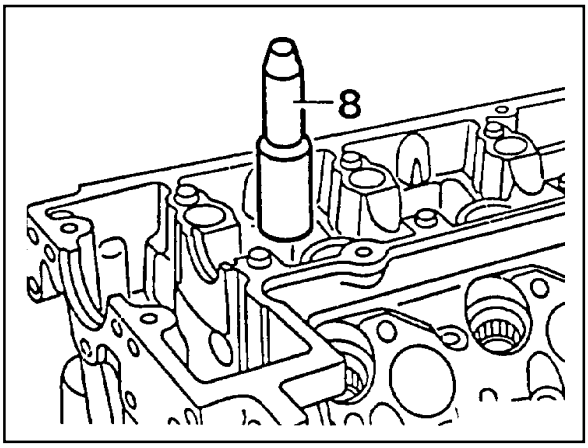

8. Check the valve guide bore with GO / NO GO gauge (9).

   The GO side (marked ‘0’) should just still drop. If the GO side cannot be inserted, the bore of valve guide should be reamed.

   Notice

   Perform the check only on cooled down cylinder head.

   GO / NO GO Gauge (for Intake) 102 589 00 23 00
   GO / NO GO Gauge (for Exhaust) 117 589 03 23 00

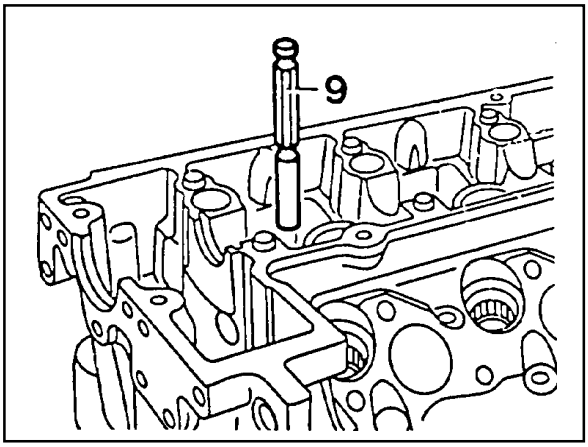

Downloaded from www.Manualslib.com manuals search engine

9. If necessary, ream the valve guide bore evenly.

   Notice

   Never turn the reamer against the direction of rotation.

Reamer (for Exhaust) 000 589 10 53 00
Reamer (for Intake) 000 589 21 53 00

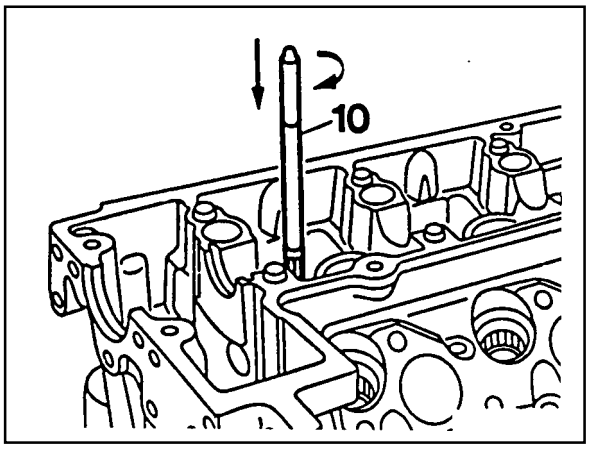

Downloaded from www.Manualslib.com manuals search engine

VALVE SEAT RINGS

Preceding Work : Removal of valve
Checking of valve guide, replace if necessary
Removal of prechamber

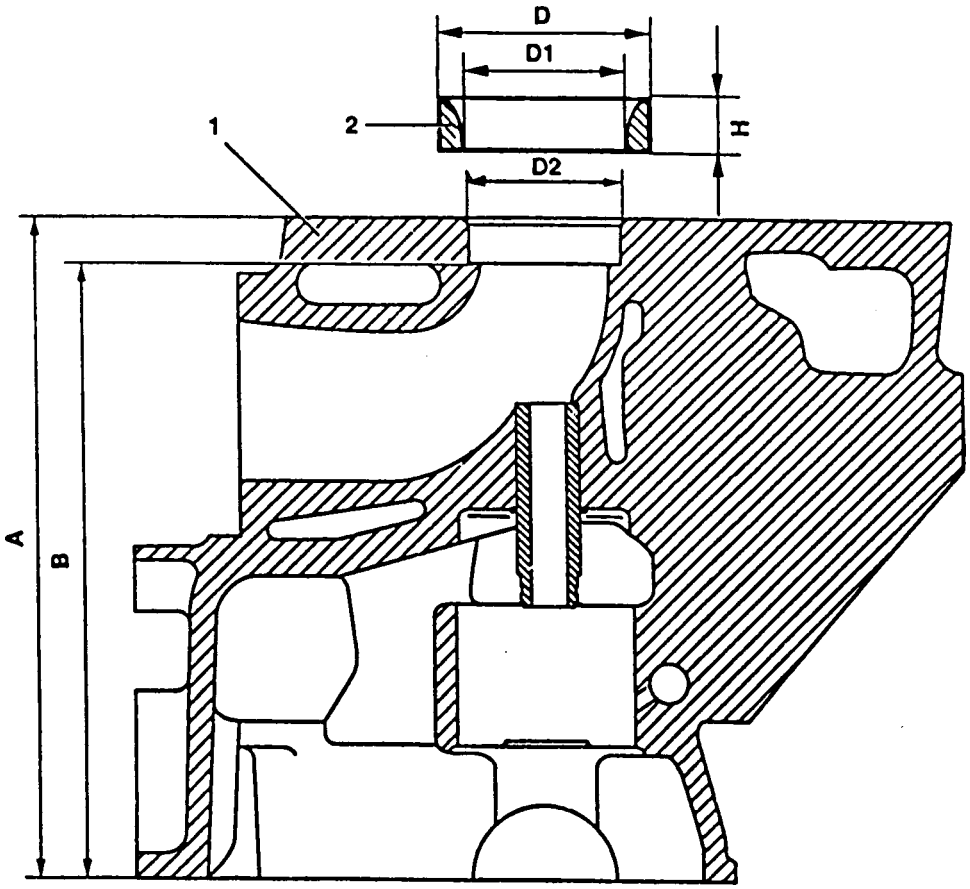

1 Cylinder Head
2 Valve Seat Ring
3 Valve Guide
A Height (Cylinder Head Upper / Lower Surface)
B Height (cylinder Head Cover Surface - Seat of Valve Seat Ring)

D Valve Seat Ring Outer Diameter
D1 Valve Seat Ring Inner Diameter
D2 Basic Bore Diameter
H Height of Valve Seat Ring

Service Data

Item	Intake	Exhaust
D2	40.000 - 40.016mm	37.000 - 37.016mm
D	40.084 - 40.100mm	37.084 - 37.100mm
D1	33.400 - 33.600mm	30.400 - 30.600mm
H	6.955 - 7.045mm	6.955 - 7.045mm
Overlap U=D-D2	0.068 - 0.100mm	0.068 - 0.100mm
B	133.4mm	133.4mm
A	142.5mm	142.5mm

Downloaded from www.Manualslib.com manuals search engine

Commercial Tools

Cylinder Head Clamping Device	Hunger D-8000 München 70 Type Ventilknecht K2000 Order No. 221 00 100
Valve Seat Turning Tool	Hunger D-8000 München 70 Type VDS 1A Order No. 236 03 308
Ring Seat Turning Tool	Hunger D-8000 München 70 Type RDS 1 Order No. 219 00 100
Pneumatic Removal / Installation Device (Drift : 8mm, 9mm, 14mm)	Hunger D-8000 München 70 Type PVM 1
Tensioning Head	Hunger D-8000 München 70 Order No. 250 15 250
Cutting Tool for Recessing Grooves	Hunger D-8000 München 70 Order No. 217 93 601
Test Set for Valves	Hunger D-8000 München 70 Order No. 216 69 210
Internal Dial Gauge (Range : 25-60mm)	Mahr D-7300 Esslingen Order No. 844
External Micrometer (Range : 25-60mm)	Mahr D-7300 Esslingen Order No. 40 S
Electrically Heated Water Tank	Otto Dürr D-7123 Sachsenherm - Ochsenbach

Downloaded from www.Manualslib.com manuals search engine

Removal Procedure

1. Measure dimension 'A'.

Limit	142.5mm

2. Clamp the cylinder head with clamping device.

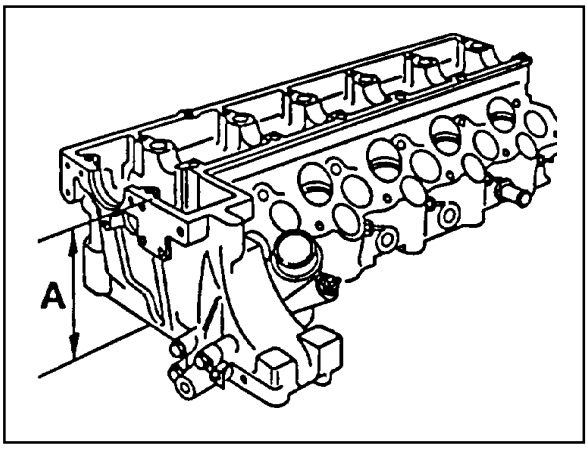

3. Cut groove into the valve seat ring so that dimension 'C' is approx. 2mm and dimension 'E' is approx. 6mm.

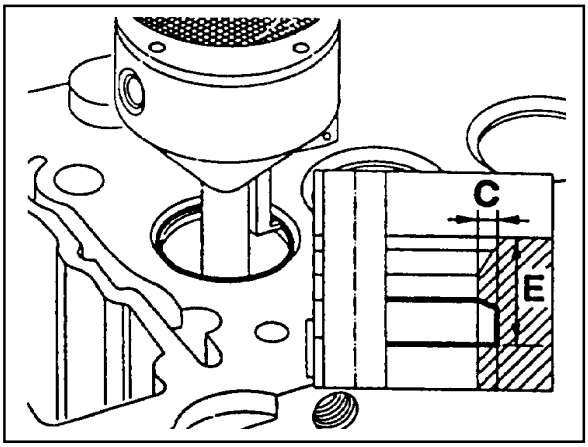

4. Remove the cylinder head from the clamping device and place it onto wooden blocks.
5. Remove the valve guide (3).

Drift (Intake) 8mm
Drift (Exhaust) 9mm

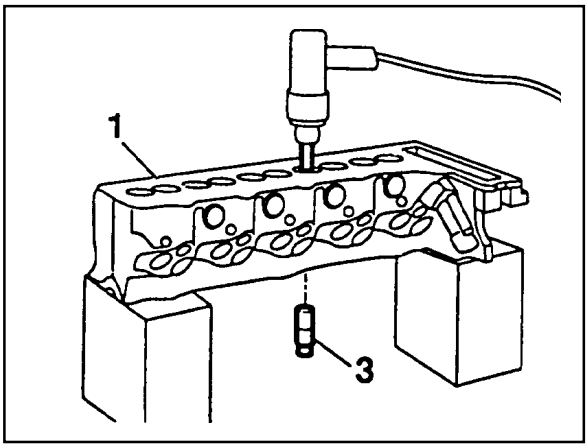

6. Insert the tensioning head (4) and extracted wedges(arrow) by turning the bolt (5).

   Notice

   Carefully tighten the bolt (5) otherwise the valve seat ring in the cylinder head will be excessively tensioned.

7. Lock the bolt (5) with nut (6).

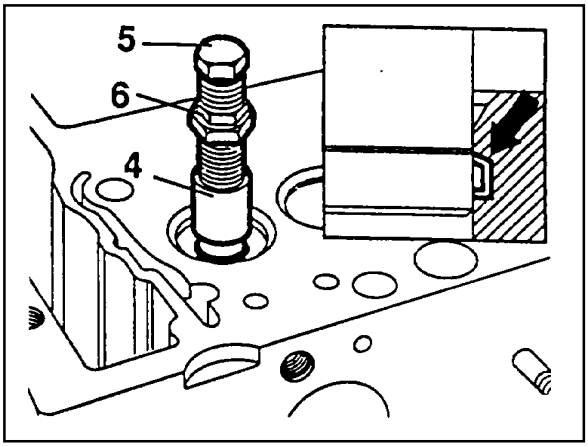

Downloaded from www.Manualslib.com manuals search engine

8. Turn over the cylinder head.
9. Remove the tensioning head (4) and valve seat ring (2) with drift (14mm) and removal tool.
10. Clean the basic bore of valve seat ring.

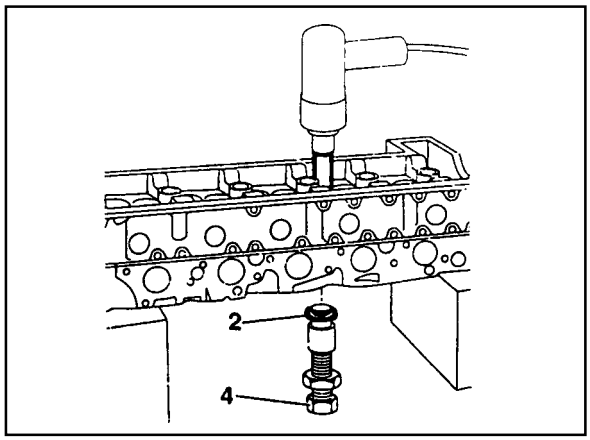

11. Measure the basic bore diameter (D2) and outer diameter (D) of the new valve seat ring (standard size).
12. Calculate the overlap value 'U' (D - D2).

Overlap value 'U'	0.068 - 0.100mm

Example) Measured value D = 37.100mm
Measured value D2 = 37.010mm

Overlap value 'U' = 0.090mm

If overlap value 'U' is out of standard, machine the basic bore for the valve seat ring.

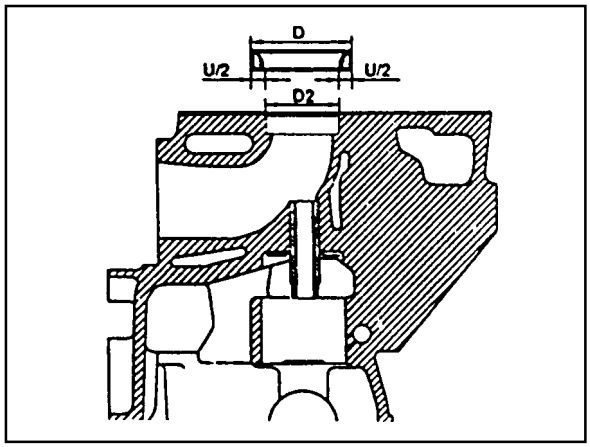

13. Clamp the cylinder head with clamping device.
14. Machining basic bore for valve seat ring (repair size).

Notice

Maintain minimum value of 'B'.

- Machine the basic bore.

Limit

Max. D2	Intake	40.516mm
	Exhaust	37.516mm
Min. B		133.4mm

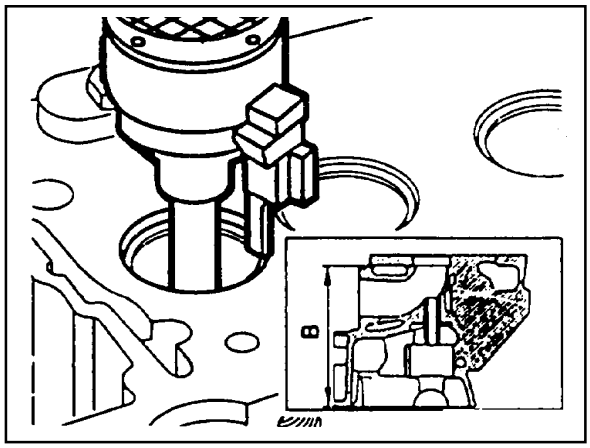

- Measure machined basic bore and outer diameter 'D' of valve seat ring (repair size).
- Measure the overlap 'U'

Overlap 'U' (D - D2)	0.068 - 0.100 mm

Example) Measured value D = 37.600 mm
Measured value D2 = 37.480 mm
Overlap U = 0.120 mm

The basic diameter D2 must be machined by 0.020mm in order to get the required overlap value.

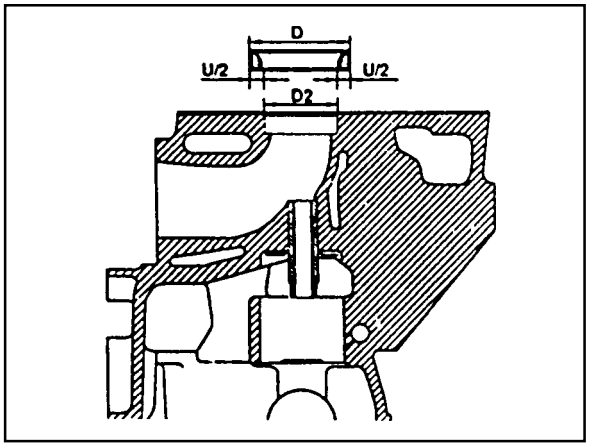

Downloaded from www.Manualslib.com manuals search engine

15. Hang the cylinder head (1) to the lifting device and heat in a water tank to approx. 80°C.

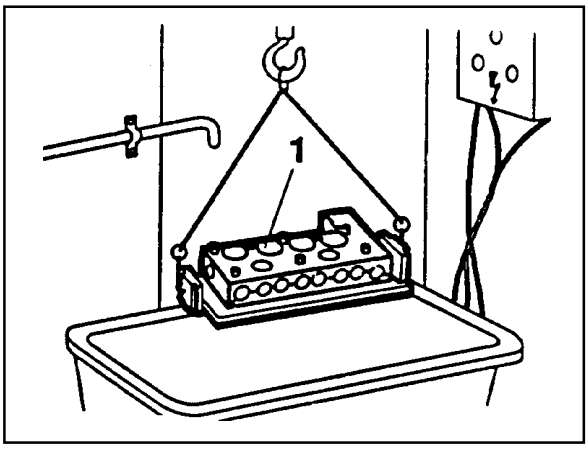

16. Cool down new valve seat ring (2) into the cooling box with liquid nitrogen.

Notice

Do not touch the cooled valve seat rings with hand.

Super Cooling Box 345 589 00 63 00

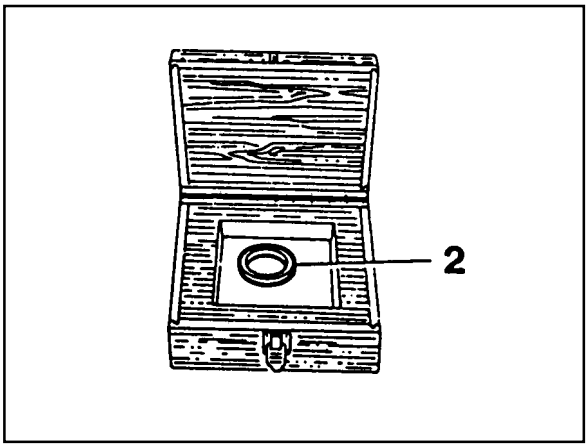

17. Drive in new valve seat ring (2) with a proper wooden drift.

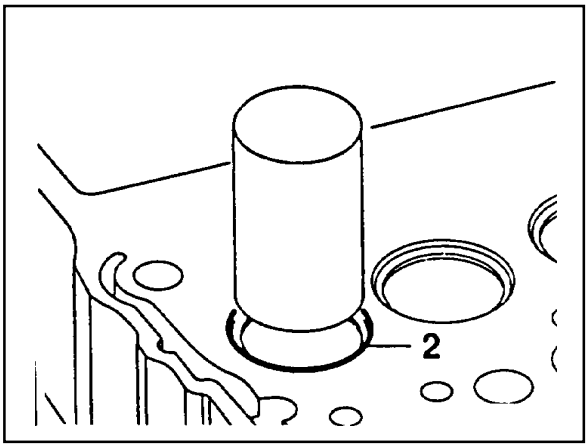

18. Install the valve guide (3) with a proper drift and assembling tool.

Notice

The valve guide must be driven in from the cylinder head cover.

Drift (Intake) 8mm
Drift (Exhaust) 9mm

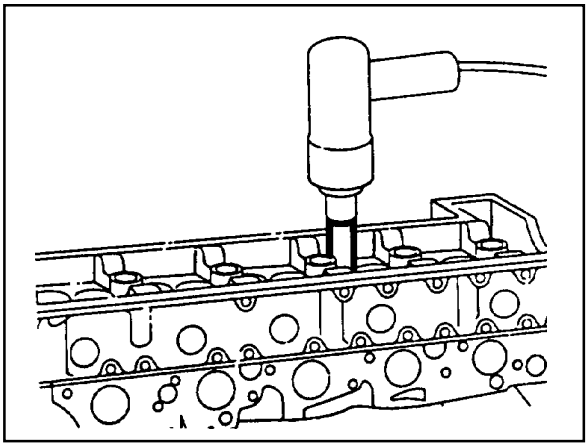

19. Machine the valve seats.

Downloaded from www.Manualslib.com manuals search engine

CHECK AND MACHINING OF VALVES

Preceding Works : Removal of cylinder head
Removal of the vale spring
Removal of the valve

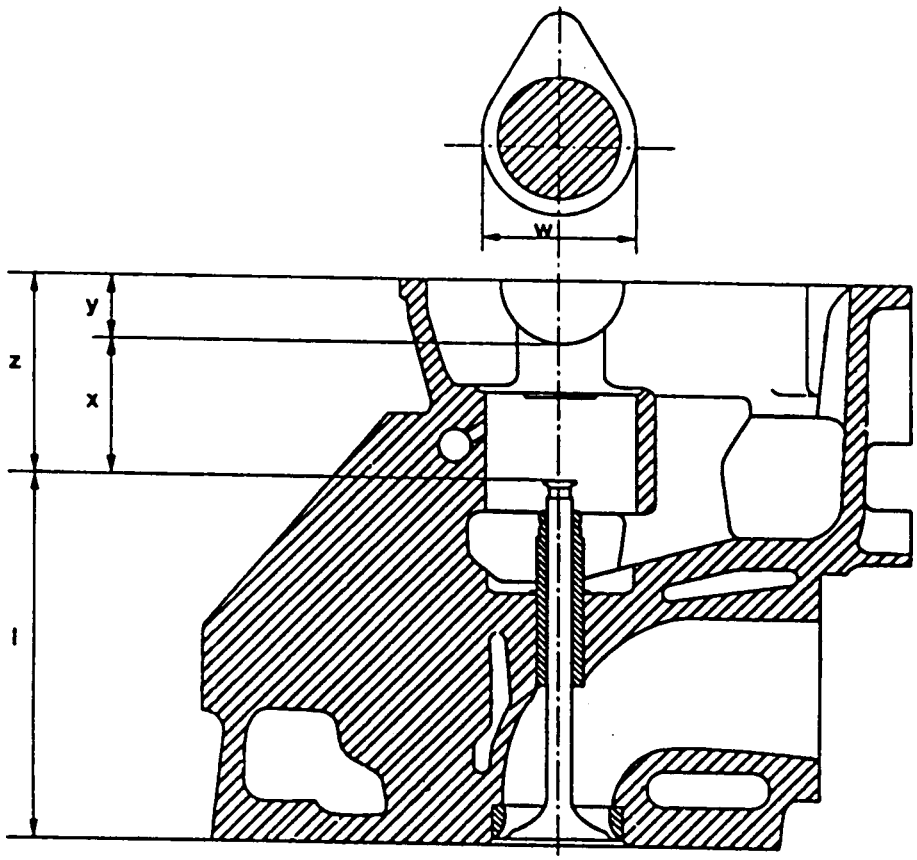

I Valve Length
W Camshaft Cam Basic Diameter
X Distance (Camshaft Basic Bore - Valve Stem)
Y Half Camshaft Basic Bore Diameter
Z Distance (Cylinder Head Cover Parting Surface - Valve Stem)

Downloaded from www.Manualslib.com manuals search engine

Intake Valve

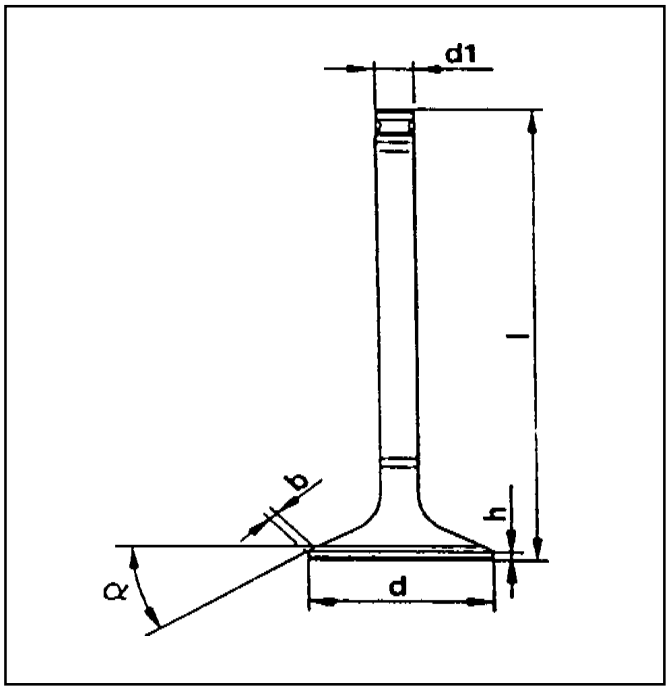

Exhaust Valve

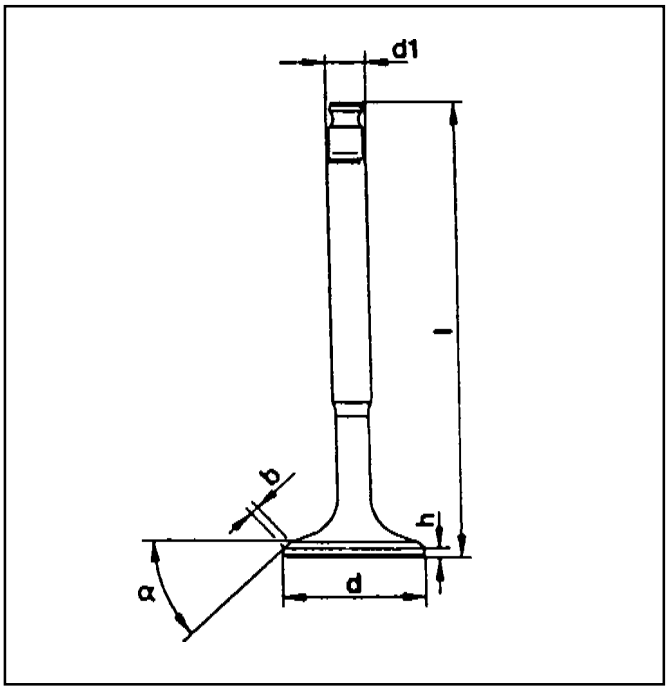

Item		Intake Valve	Exhaust Valve
Valve disc diameter ‘d’		37.90 - 38.10 mm	34.90 - 35.10 mm
Valve disc height ‘h’		1.7 mm	1.7 mm
Setting angle “a”o r machining the valve		45°	45°
Valve stem diameter ‘d1’		7.955 - 7.970 mm	9.945 - 8.960 mm
Valve length ‘l’	Standard	106.20 - 106.60 mm	106.20 - 106.60 mm
	Repair	105.30 - 105.70	105.30 - 105.70 mm
Max. permissible runout at valve stem and valve seat		0.03 mm	0.03 mm

Matching Valves

	Camshaft cam basic dia. w = 38.0 ± 0.2mm	Camshaft cam basic dia. w = 36.6 ± 0.2mm	Valve to be used
Size (x)	19.5 - 20.3mm	19.5 - 20.1mm	Use machined valve, if needed new repair valve l = 105.5 ± 0.2mm
Size (x)	20.4 - 21.4mm	20.2 - 21.2mm	Reuse valve
Size (x)	21.4 - 21.97mm	21.2 - 21.97mm	Use standard size valve l = 106.4 ± 0.2mm

Downloaded from www.Manualslib.com manuals search engine

Tools Required

001 589 32 21 00 Dial Gauge

Commercial Tool

Valve corn grinding machine

Checking and Machining Procedure

1. Clean the valves and do visual check.

   Valves with wobbled valve disc, with worn or scored valve stem should be replaced.

2. Measure valve disc height ‘h’.

Service data	Intake	1.7 ± 0.15 mm
	Exhaust	1.7 ± 0.15 mm

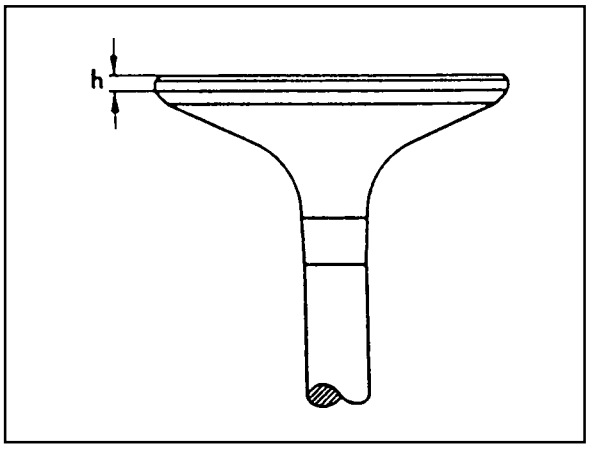

3. Machine the valve.

   Notice

   Pay attention to setting angle ‘a’.

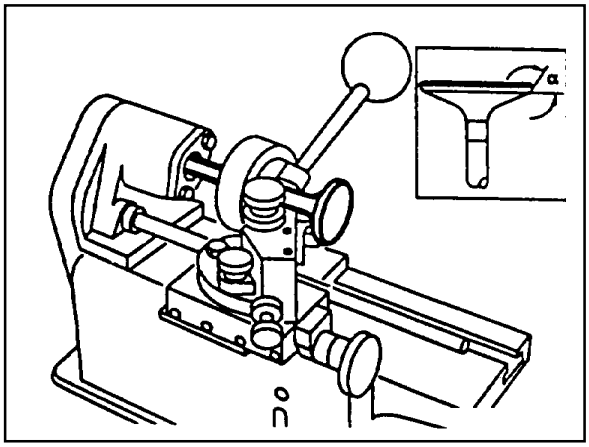

4. Measure radial runout between valve stem and valve seat.

Limit	Max. 0.03mm

Dial Gauge 001 589 32 21 00

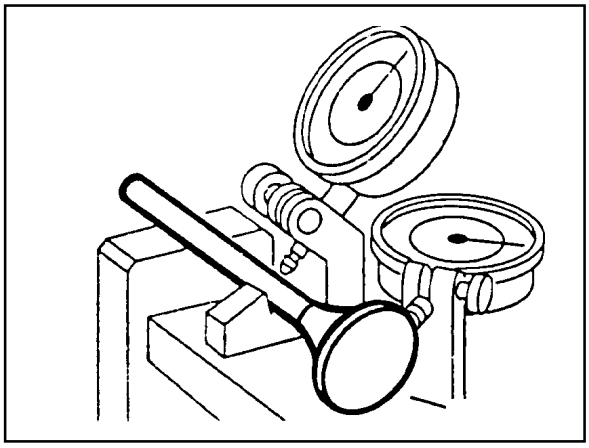

Downloaded from www.Manualslib.com manuals search engine

5. Clean the vales, valve seats and valve guides.
6. Coat the valve stem with oil and insert it into valve guide.

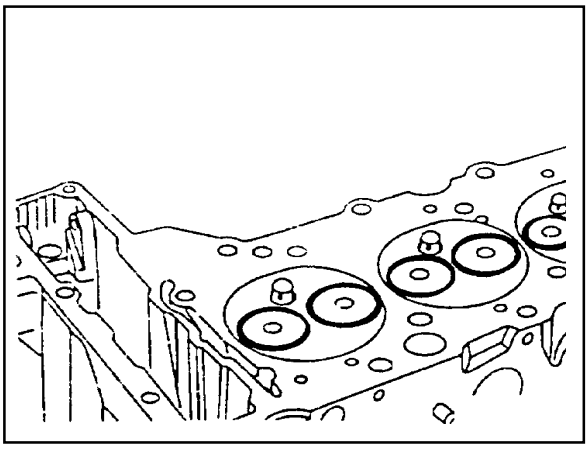

7. Insert the valves (1) into the valve guides according to marking.
8. Measure amount by which the valve arrears ‘a’.

Arrears ‘a’	0.1 - 0.7 mm

Notice

If out of standard, replace the valve seat ring.

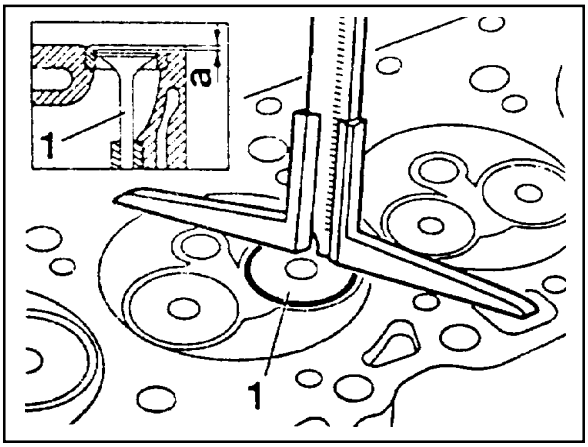

9. Measure camshaft cam basic diameter (w).

Diameter ‘w’	38 ± 0.2 mm or 37.6 ± 0.2 mm

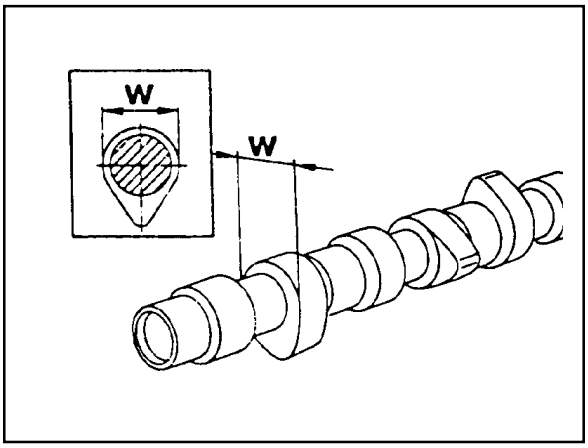

10. Measure distance ‘z’ (cylinder head cover parting surface - valve stem).

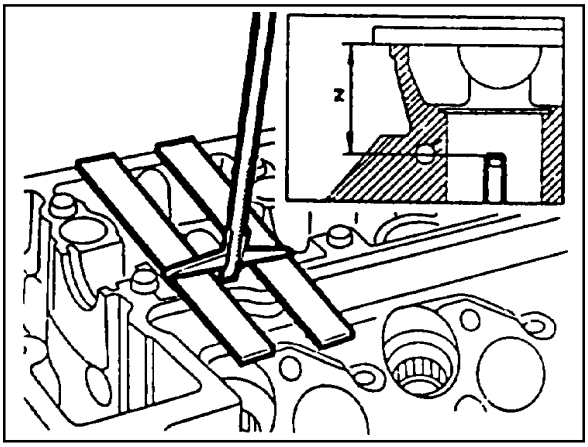

Downloaded from www.Manualslib.com manuals search engine

11. The distance ‘x’ (camshaft basic bore - valve stem).

    ‘x’ = ‘z’ - ‘y’.

    Determine the valve to use according to this measurement (See ‘matching valves’)

    Example) Measured value ‘w’ = 38.2 mm
    Measured value ‘z’ = 36.5 mm
    Value ‘y’ = 15.5 mm

    ‘x’ = 36.5 - 15.5 = 21.0mm

    In this case according to ‘Matching valves’ table, the installed valve may be used.

Downloaded from www.Manualslib.com manuals search engine

MACHINING OF VALVE SEAT

Preceding Work : Removal of prechamber
Removal and inspection of valve, replace if necessary
Inspection of valve guide, replace if necessary

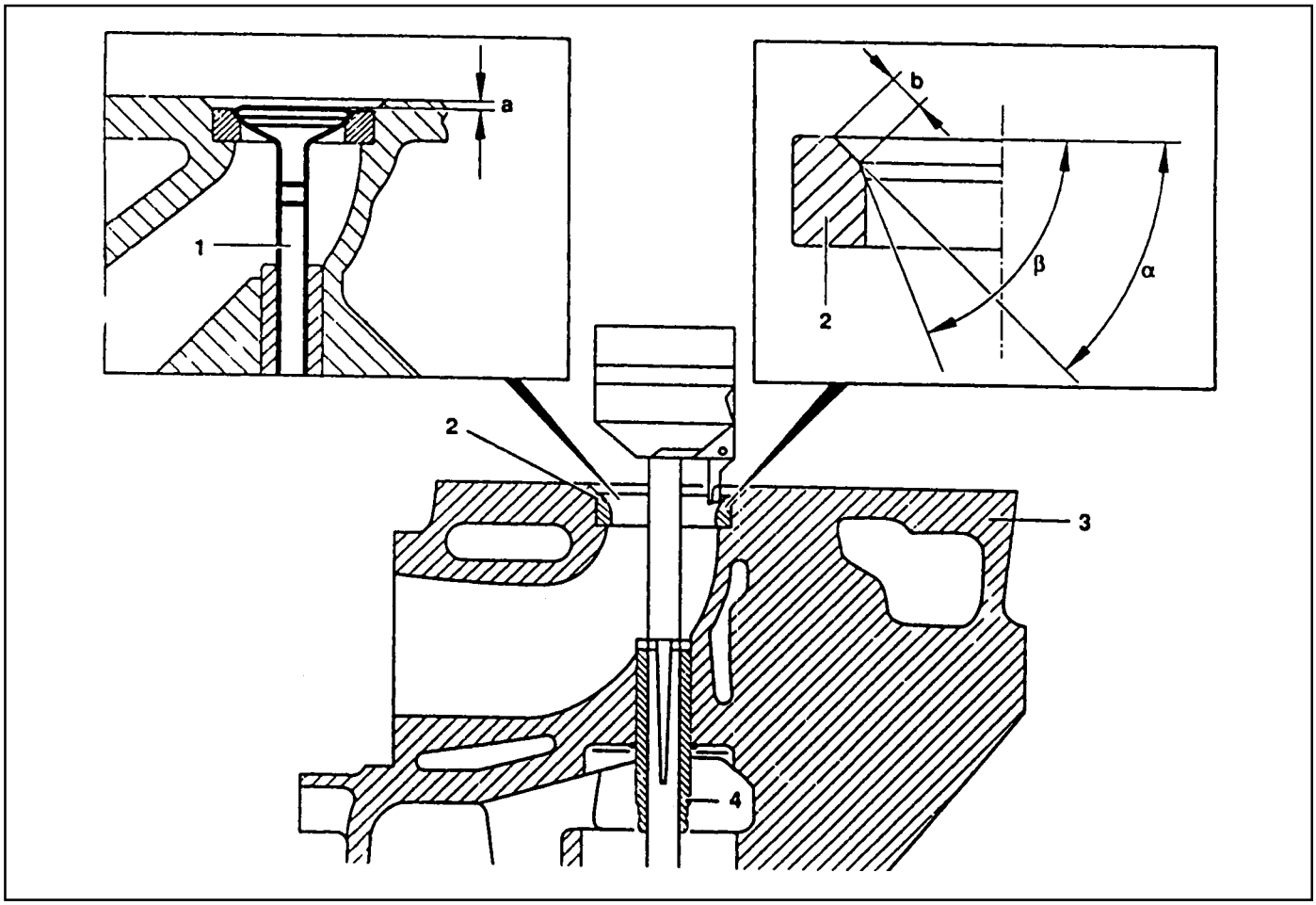

1 Valve
2 Valve Seat Ring
3 Cylinder Head
4 Valve Guide

a Valve Arreare
b Valve Seat Width
a Valve Seat Angle
b Valve Seat Free Angle

Downloaded from www.Manualslib.com manuals search engine

Service Data

Item		Intake	Exhaust
Valve arrears 'a'		0.1 - 0.7 mm	0.1 - 0.7 mm
Valve seat width 'b'		1.2 - 1.7 mm	1.5 - 2.0 mm
Valve seat angle 'a'		45°	45°
Valve seat free angle 'b'		65°	65°
Permissible radial runout		0.03 mm	0.03 mm
Valve length 'l'	Standard	106.20-106.60 mm	106.20-106.60 mm
	Repair	105.30-105.70 mm	105.30-105.70 mm

Matching Valves

	Camshaft cam basic dia. w = 38.0 ± 0.2 mm	Camshaft cam basic dia. w = 37.6 ± 0.2 mm	Valve to be used
Size (x)	19.5 - 20.3mm	19.5 - 20.1mm	Use machined valve, if needed use pair valve 1 = 105.5 ± 0.2mm
Size (x)	20.4 - 21.4mm	20.2 - 21.2mm	Reuse valve
Size (x)	21.4 - 21.97mm	21.2 - 21.97mm	Use standard size valve l = 106.4 ± 0.2mm

Commercial Tools

Cylinder Head Clamping Devie	Hunger D-8000 München 70 Type Ventilknecht K2000 Order No. 221 00 100
Valve Seat Turning Tool	Hunger D-8000 München 70 Type VDS 1A Order No. 236 03 308
Test Sat for Valves	Hunger D-8000 München 70 Order No. 217 93 601

Downloaded from www.Manualslib.com manuals search engine

Machining Procedure

Valve machining is required :

- When the valve is leaking.
- When replacing the valve.
- When replacing the valve guide.
- When replacing the valve seat or valve seat ring.

1. Machine the valve seat (a=45°).

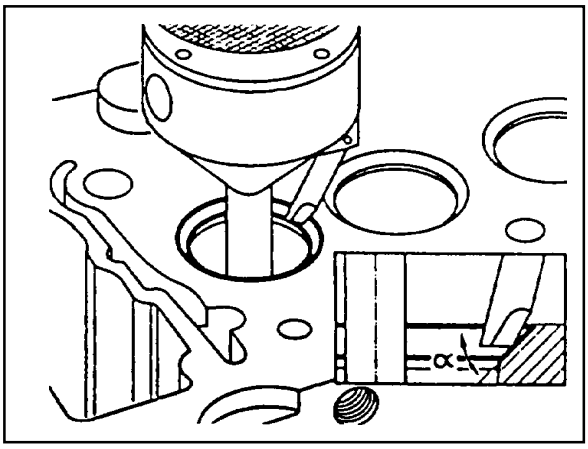

2. Measure valve seat width ‘b’.

Valve seat width ‘b’	Intake	1.2 - 1.7 mm
	Exhaust	1.5 - 2.0 mm

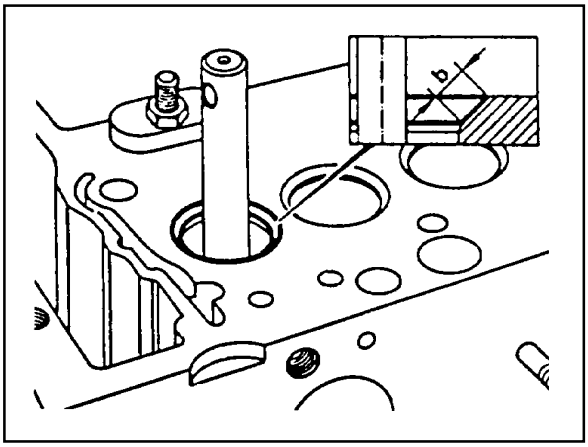

3. If the specification is exceeded, the valve seat width has to be corrected at the lower free angle of ‘b’=65°.

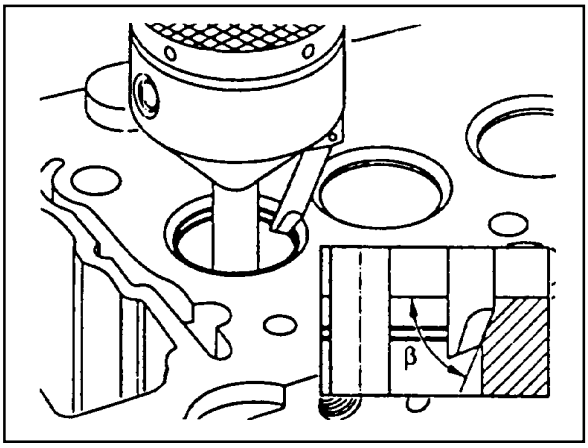

4. Measure radial runout.

Runout	Max. 0.03mm

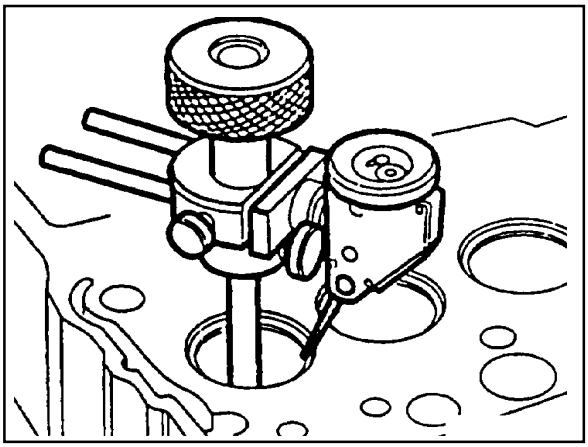

Downloaded from www.Manualslib.com manuals search engine

5. Insert the valve (1) into the valve guide according to marking and measure amount by which the valve arrears 'a'.

Arrears 'a'	0.1 - 0.7mm

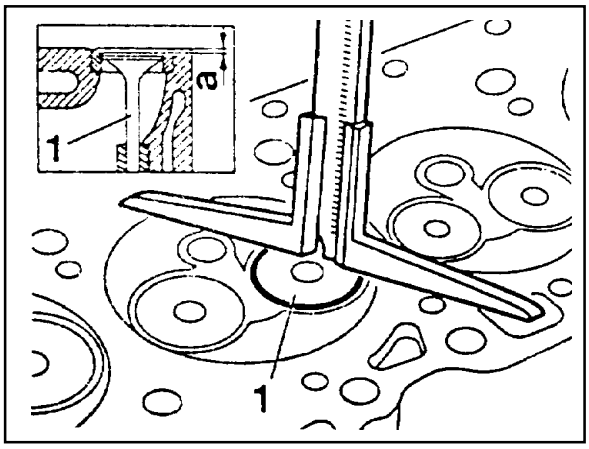

6. Measure camshaft cam basic circle diameter (w).

Diameter 'w'	38 ± 0.2mm or 37.6 ± 0.2mm

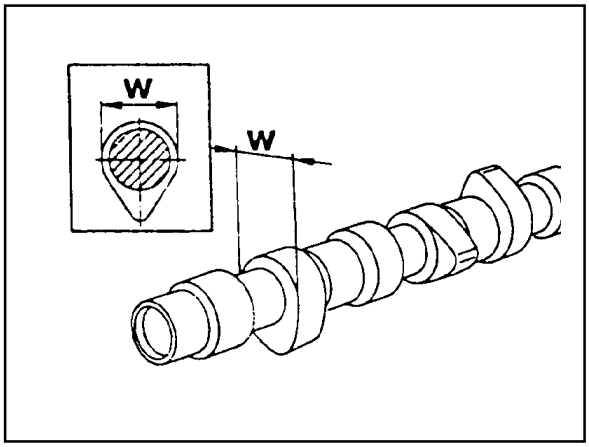

7. Measure distance 'z' (cylinder head cover parting surface - valve stem).

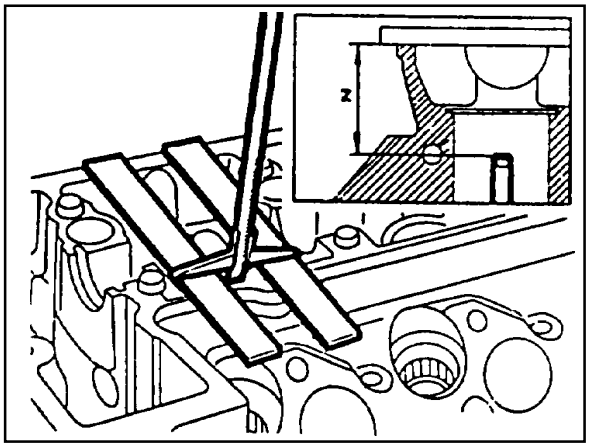

Downloaded from www.Manualslib.com manuals search engine

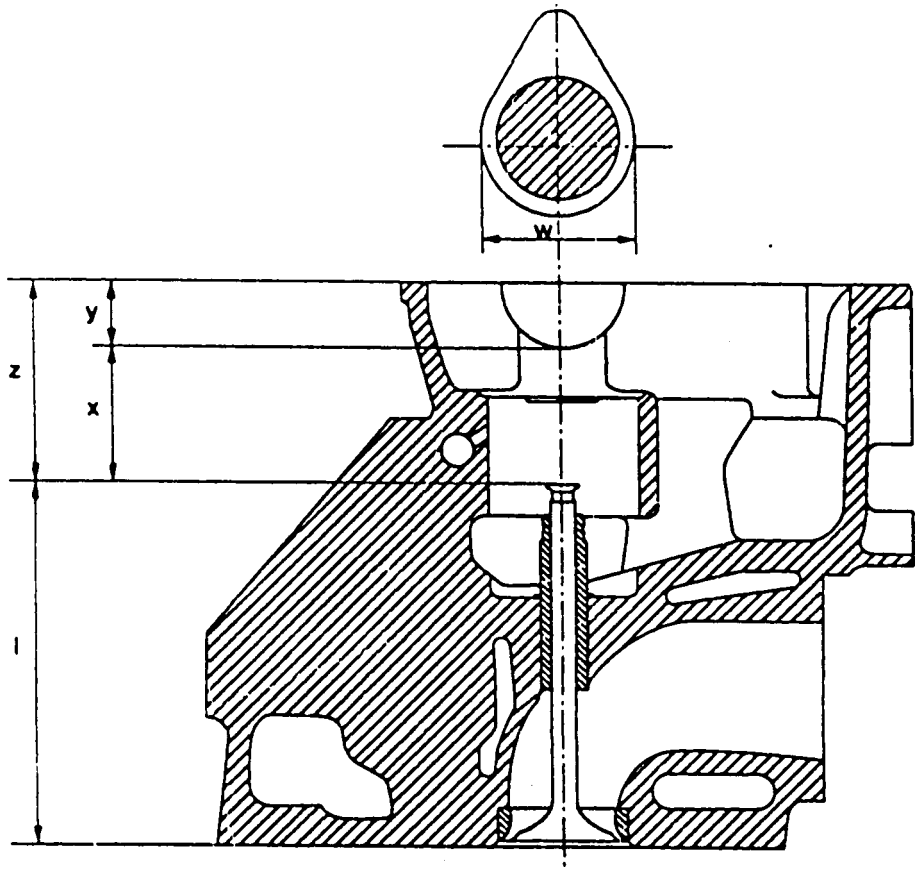

l Length of Valve
w Camshaft Cam Basic Circle Diameter
x Distance (Camshaft basic bore - valve stem)
y Half Camshaft Basic Bore Diameter
z Distance (Cylinder head cover parting surface - . valve stem)

8. Measure ‘x’ (Camshaft basic bore - valve stem).
   ‘x’ = ‘z’ - ‘y’
9. Determine the valve to be used.
   (See ‘Matching valves’)
   Example) Measured value ‘w’ = 38.2 mm
   Measured value ‘z’ = 36.5 mm
   Value ‘y’ = 15.5 mm
   ‘x’ = 36.5 - 15.5 = 21.0 mm
   In the case of a camshaft cam basic circle diameter ‘w’ = 38.2mm and a distance ‘x’ = 21.0mm, the installed valve may be used.

Downloaded from www.Manualslib.com manuals search engine

CAMSHAFT TIMING TEST

Preceding Work : Removal of glow plug

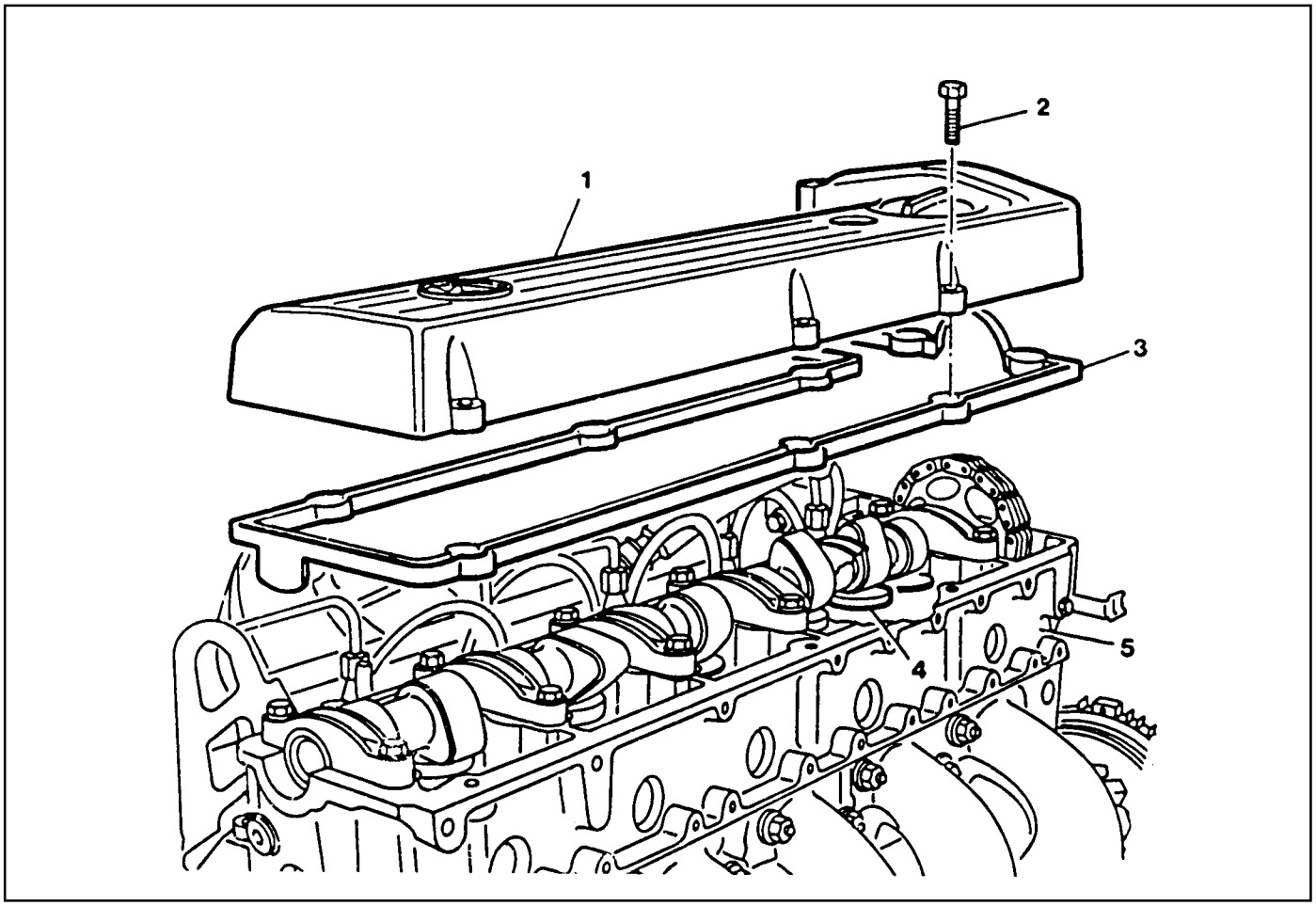

1 Cylinder Head Cover
2 Bolt 10Nm
3 Gasket ..... Replace
4 Valve Tappet
5 Cylinder Head

Timing

Condition of camshaft	Intake valve		Exhaust valve	
	Open	Close	Open	Close
New	ATDC 11.33°	ABDC 17°	BBDC 28°	BTDC 15.25°
After approx. 20,000km	ATDC 12°	ABDC 18°	BBDC 27°	BTDC 14°

*At 2mm of valve lifting stroke.

Downloaded from www.Manualslib.com manuals search engine

Tools Required

001 589 53 21 00 Dial Gauge

363 589 02 21 00 Dial Gauge Holder

366 589 00 21 05 Extension

Measurement Procedure

1. Remove the cylinder head cover.
2. Rotate the engine in the direction of engine rotation until the intake valve of no. 1 cylinder is completely closed. The cam lobe faces up (arrow).

   Notice

   Do not rotate the engine at the bolt of the crankshaft sprocket. Do not rotate the engine in the opposite direction of engine rotation. If do, this will cause serious measuring errors.

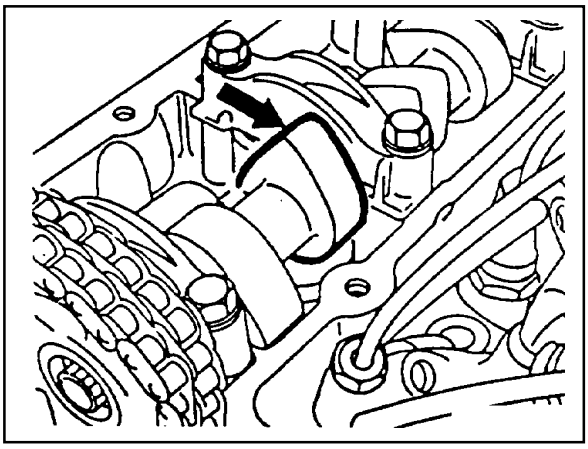

3. Install the dial gauge holder and dial gauge (7) with the extension (8) to the cylinder head and position the tracer pin (9) onto the valve tappet (intake valve of cylinder no.1) with a preload of min. 3mm.

   Notice

   The tracer pin should be positioned exactly vertical.

   Dial gauge Holder 363 589 02 21 00
   Dial Gauge 001 589 53 21 00
   Extension 366 589 00 21 05

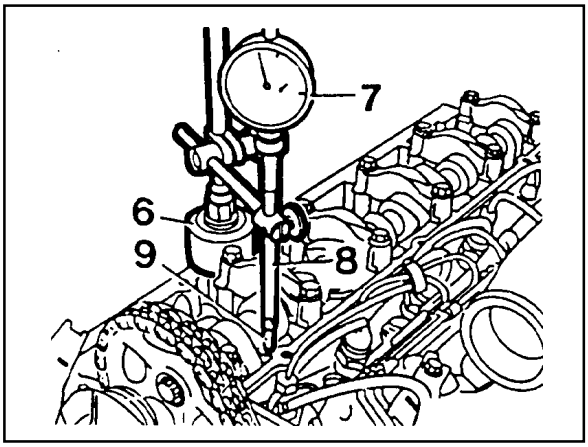

4. Set the dial gauge to ‘0’.
5. Rotate the engine further in direction of rotation until the dial gauge has moved back by 2mm (valve lift) to 1mm.
6. Check the timing.

New	ATDC 11.33°
After approx. 20,000km	ATDC 12°

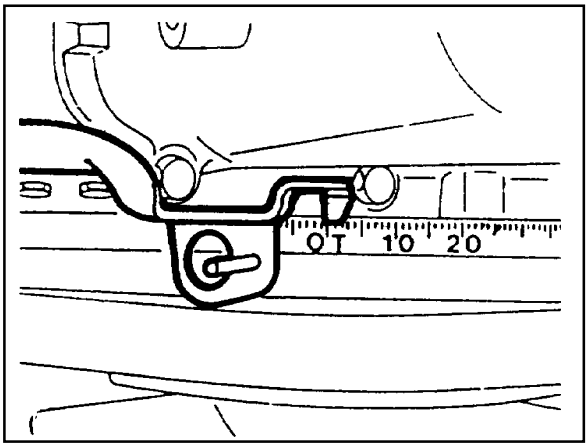

   Notice

   If timing is out standard, the camshaft should be checked for wear and the timing chain for stretch. If a difference of more than 4° exists, the timing chain should be replaced.

7. Replace the gasket and install the cylinder head cover.

Tightening Torque	10 Nm

Downloaded from www.Manualslib.com manuals search engine

CAMSHAFT

Preceding Work : Removal of cylinder head cover

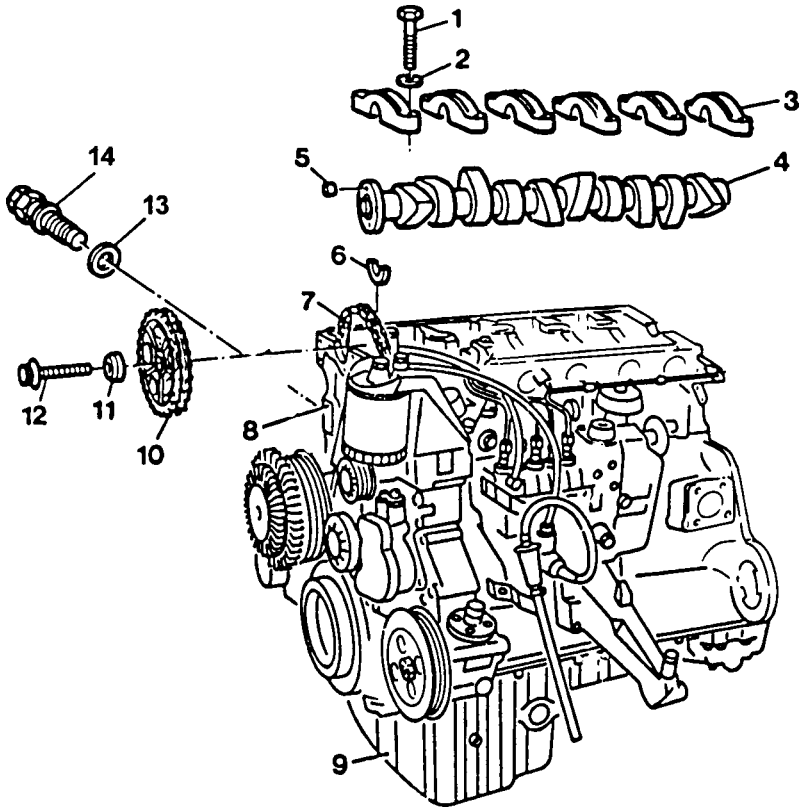

1 Bolt 25Nm
2 Washer
3 Camshaft Bearing Cap
4 Camshaft
5 Dowel Pin
6 Locking Washer
7 Timing Chain
8 Cylinder Head
9 Oil Pan
10 Camshaft Sprocket
11 Washer
12 12-Sided Bolt (M11) ..... Check, 25Nm + 90°
13 Gasket ..... Replace
14 Chain Tensioner 80Nm

Downloaded from www.Manualslib.com manuals search engine

Tools Required

602 589 00 40 00 Engine Lock

Removal Procedure

1. Rotate the crankshaft and position the piston of No.1 cylinder at TDC.

   Notice

   Do not rotate the crankshaft in the opposite direction of engine rotation.

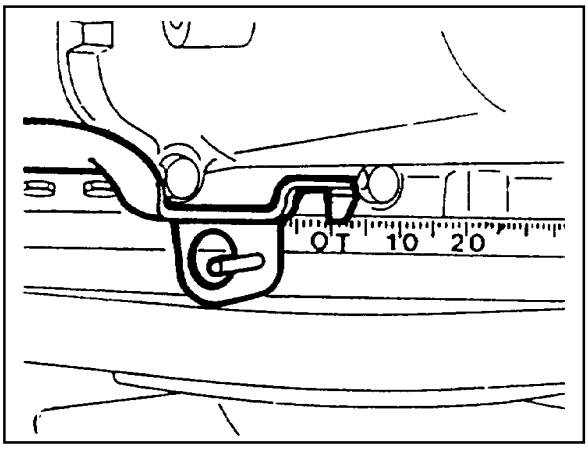

   In this position, the markings of the camshaft/camshaft bearing cap (arrow) must be aligned.

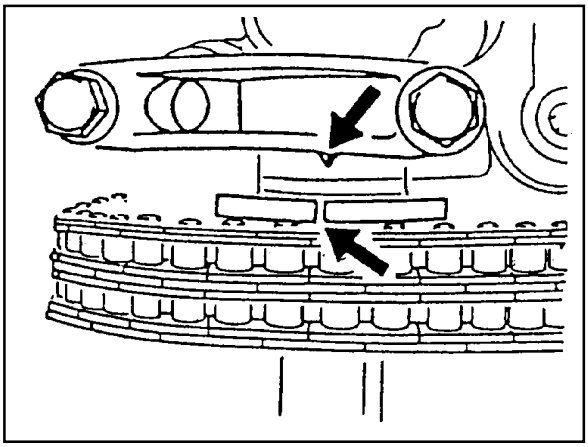

2. Place alignment marks on the camshaft sprocket and timing chain.

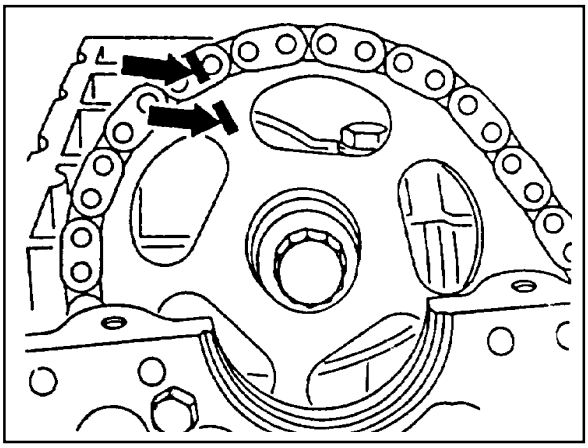

3. Remove the starter motor and install the engine lock.

Engine Lock 602 589 00 40 00

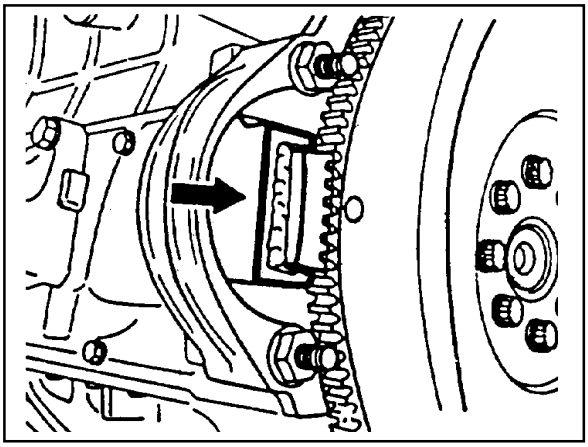

Downloaded from www.Manualslib.com manuals search engine

4. Remove the bolt and then remove the camshaft sprocket.

   Notice

   During removal, be careful not to drop the sprocket with chain. Remove the chain carefully and then pull out the sprocket.

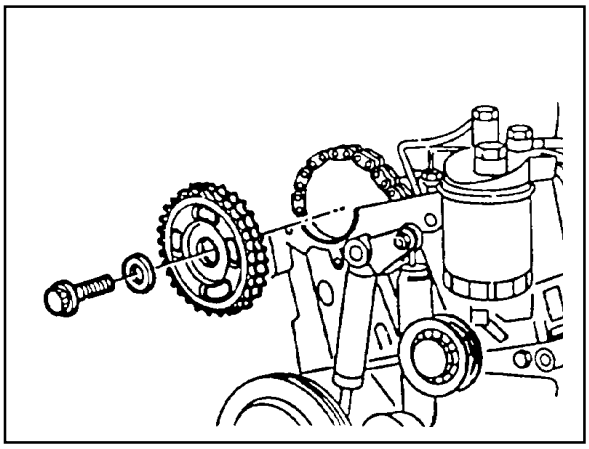

5. Remove the chain tensioner.

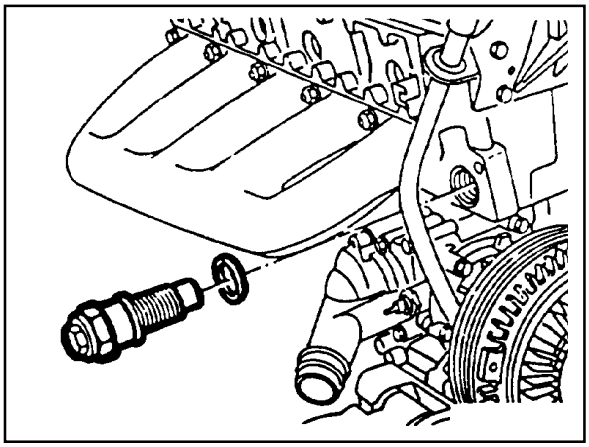

6. Remove the camshaft bearing cap bolts according to the removal order.

   Notice

   Remove the camshaft bearing cap bolts of 1(dark arrow) first and then remove the bolts of 2 (light arrow) one revolution in stages until the counter-pressure is released. In order to avoid damaging the camshaft, it is essential to adhere to the removal order for the camshaft bearing caps.

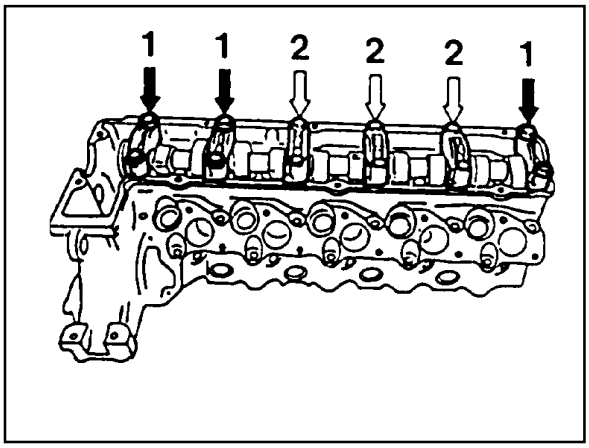

OM 662LA

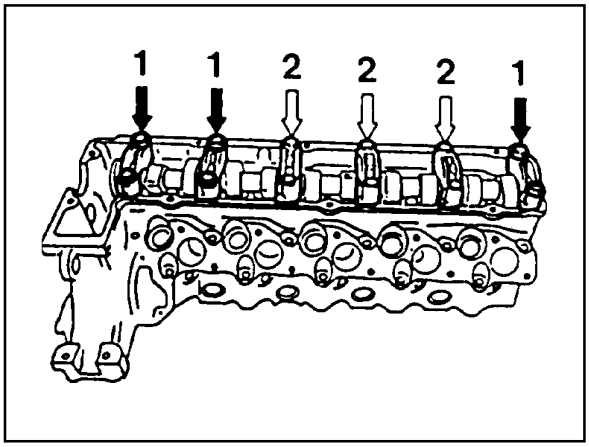

OM 661LA

Downloaded from www.Manualslib.com manuals search engine

7. Remove the camshaft bearing cap.
8. Pull off the camshaft.

   Notice

   Be careful not to miss front locking washer.

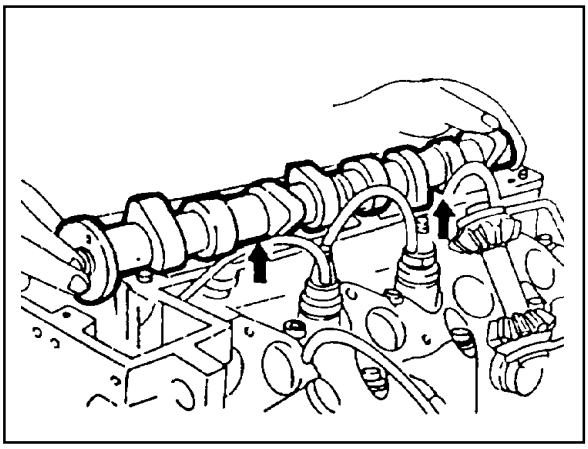

9. Pull out the locking washer.

   Notice

   Check the condition of locking washer and replace if necessary.

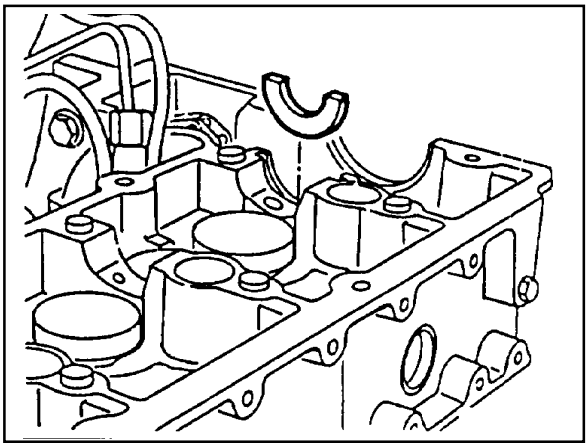

Installation Procedure

1. Insert the locking washer.
2. Check the valve tappet and ensure that tappet moves smoothly.
3. Coat the camshaft with oil and install the camshaft onto the cylinder head so that the TDC marking (arrow) is positioned upward vertically.

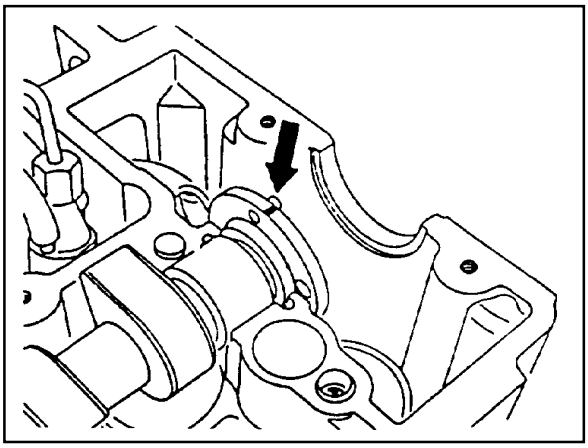

4. Install the camshaft bearing caps according to markings(1, 2, 3 etc.).

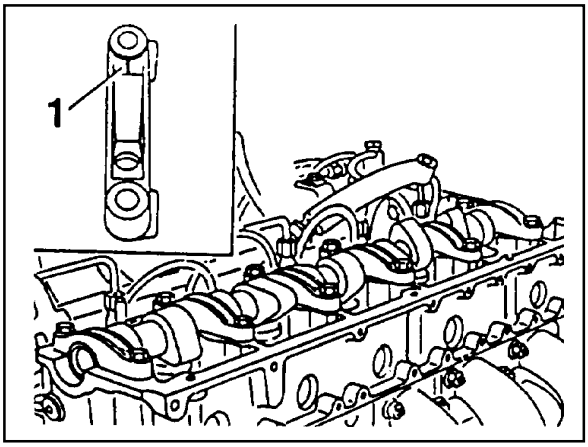

Downloaded from www.Manualslib.com manuals search engine

5. Tighten the camshaft bearing cap bolts acccording to installation order.

Tightening Torque	25 Nm

Notice

Tighten the No. 1 bolts (light arrow) by one revolution in stages first and then tighten the No.2 bolts (dark arrow).

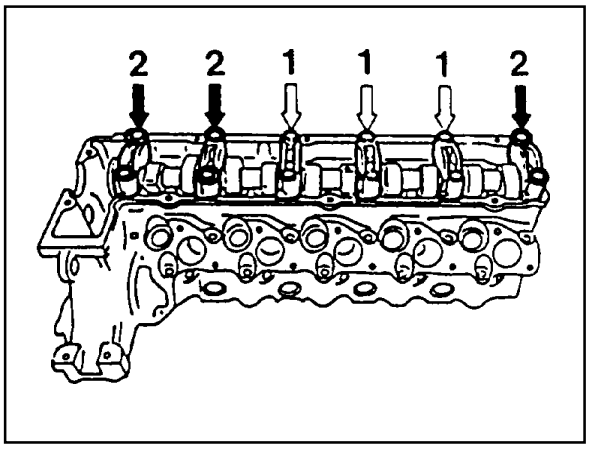

OM 662LA

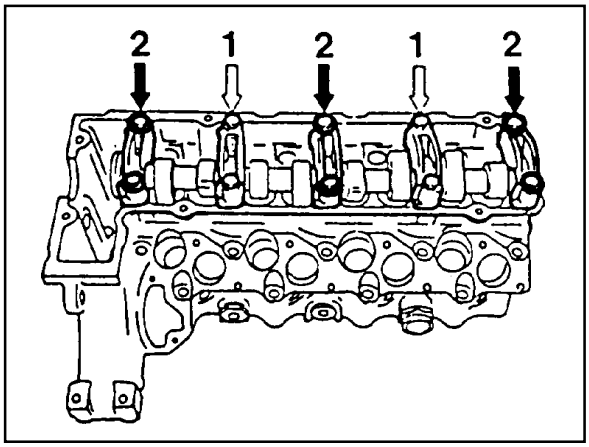

OM 661LA

6. Install the camshaft sprocket to be aligned the markings of the camshaft / camshaft bearing cap (arrow).

Notice

Align the alignment marks on the timing chain and sprocket.

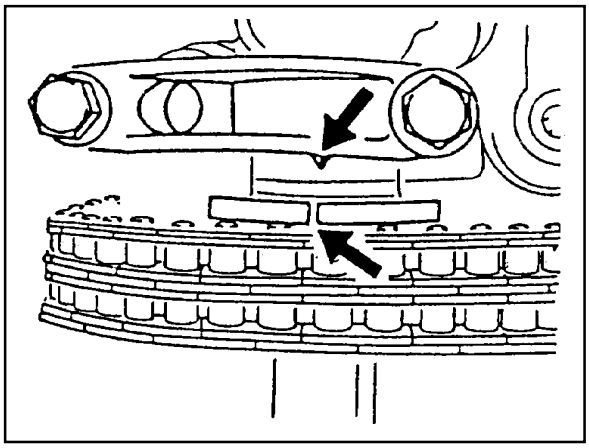

7. Tighten the camshaft sprocket bolt.

Tightening Torque	25Nm + 90°

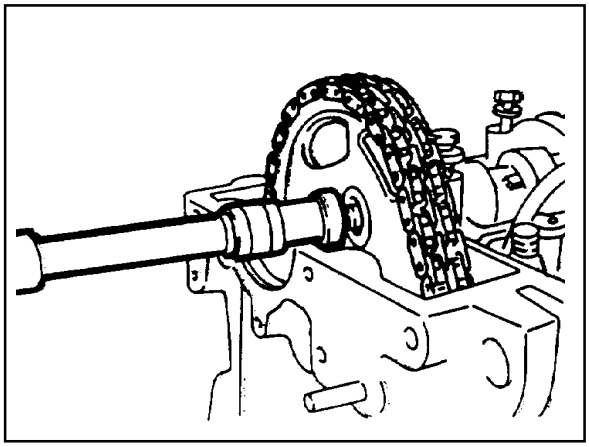

Downloaded from www.Manualslib.com manuals search engine

Notice

If max. length 'L' of the 12-sided bolt exceeds 53.6mm, replace it.

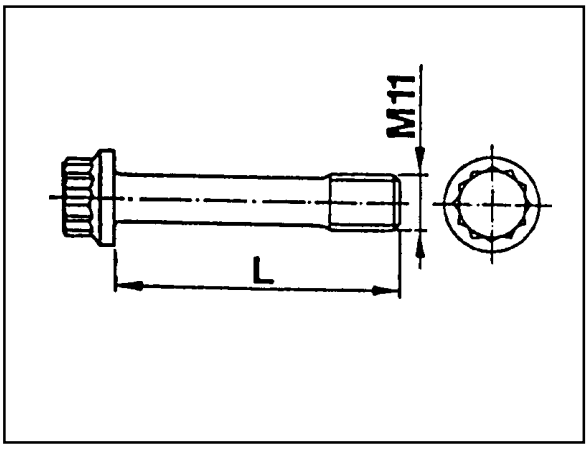

8. Install the chain tensioner.

Tightening Torque	80 Nm

Notice

Replace the seal.

Before installation, by pumping in the oil approx. 10 times, fill the oil.

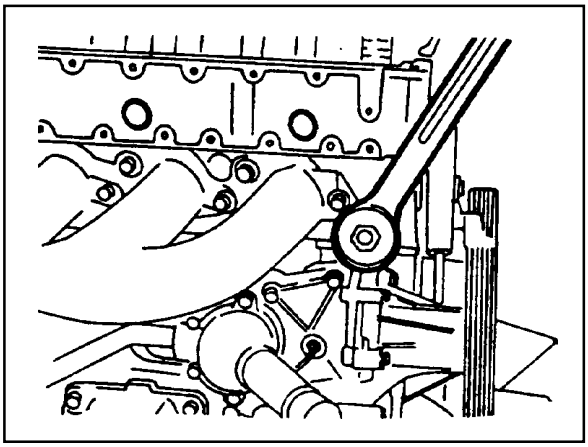

9. Remove the engine lock.

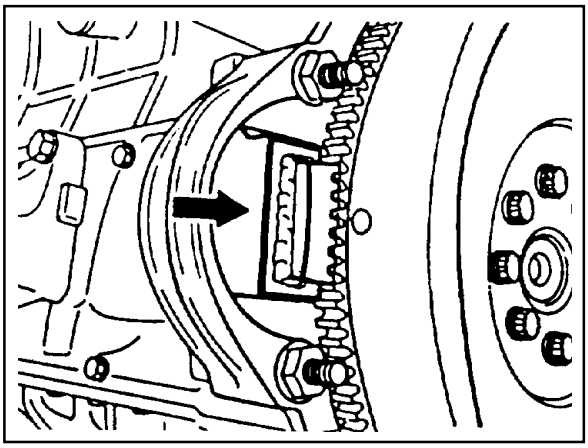

10. Check the TDC marking of OT on the crankshaft.

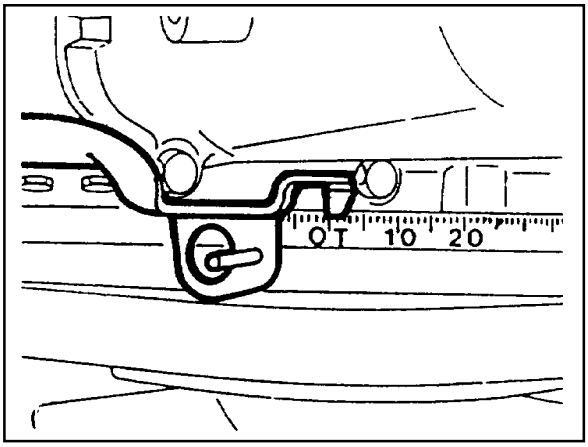

Downloaded from www.Manualslib.com manuals search engine

CHAIN TENSIONER

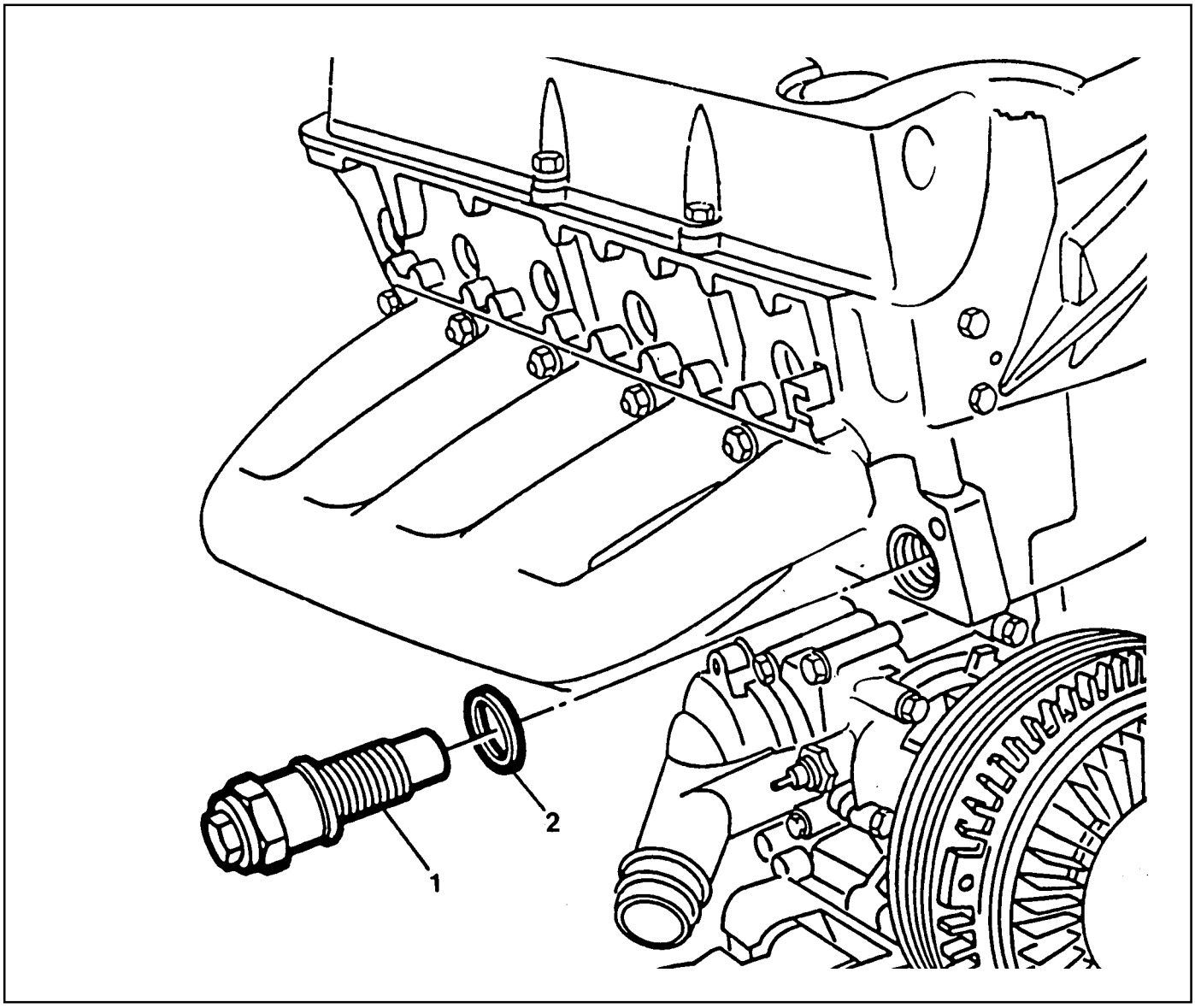

1 Chain Tensioner 80Nm

2 Seal ..... Replace

Downloaded from www.Manualslib.com manuals search engine

Notice

Always install the chain tensioner to be filled with oil.

Place the chain tensioner in engine oil up to over the collar on the hexagon head with the thrust pin facing up. Slowly push down the thrust pin as far as the stop 7~10 times with the aid of a press or a column drill

Faulty chain tensioners should be replaced completely.

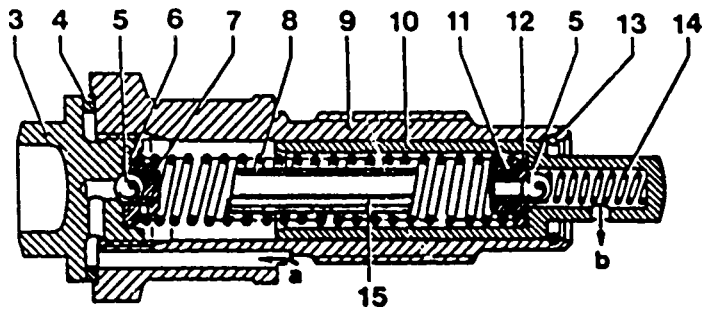

3 Screw Plug
4 Aluminum Gasket
5 Ball
6 Ball Guide
7 Compression Spring
8 Compression Spring
9 Housing
10 Thrust Pin
11 Valve Disc
12 O-Ring
13 Snap Ring
14 Compression Spring
15 Filler

A Feed Bore from Cylinder Head
B To Oil Pan

Downloaded from www.Manualslib.com manuals search engine

TIMING CHAIN

Preceding Work : Removal of glow plug
Removal of chain tensioner
Removal of cooling fan
Removal of cylinder head cover

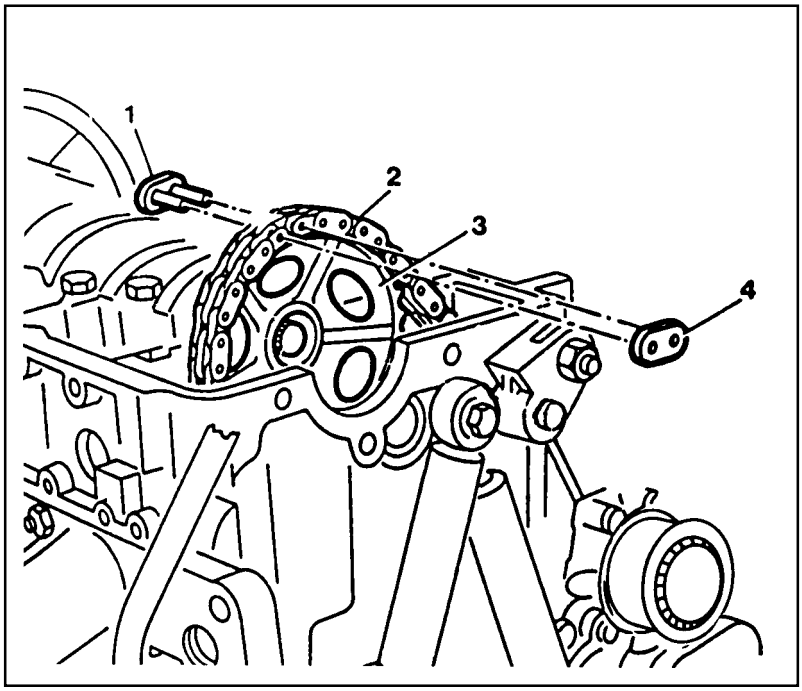

1 Chain Link
2 Timing Chain
3 Camshaft Sprocket
4 Outer Plate

Downloaded from www.Manualslib.com manuals search engine

Tools Required

000 589 58 43 00 Chain Assembling Device

Replacement Procedure

1. Cover over the chain box with cleaning rag and grind off both chain pins (arrow) at a chain link (1) of the timing chain.

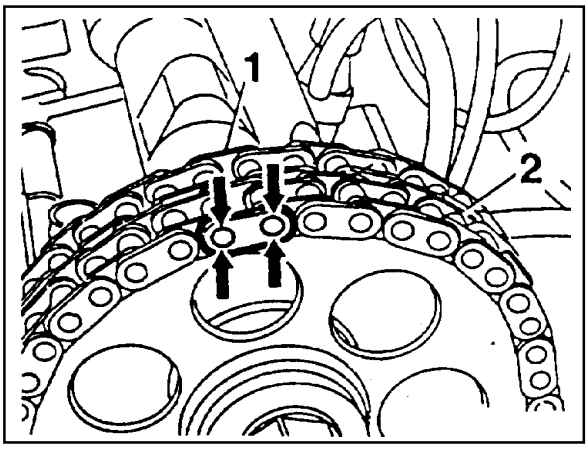

2. Remove the outer plate (4) and chain link (1).

   Notice

   Ensure that the ends of the timing chain do not drop into the chain box.

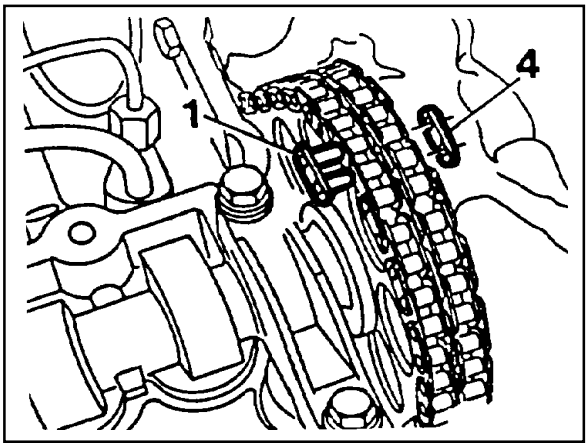

3. Loosen the chain tension with approx. 4 turns.
4. Connect the new timing chain (arrow) with chain link (1) to the old timing chain (2).

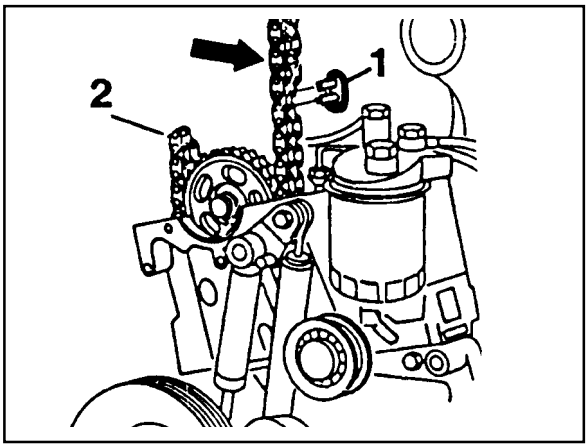

5. By rotating the crankshaft in the of engine rotation, pull out the old timing chain with installing the new timing chain.
6. Remove the old timing chain and hold the ends of the new timing chain to camshaft sprocket (3) with wire (arrow).

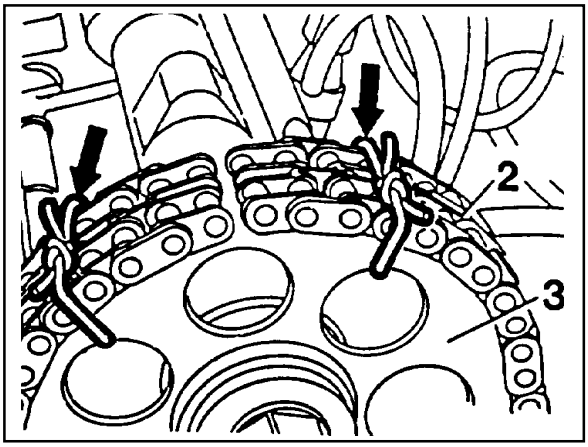

Downloaded from www.Manualslib.com manuals search engine

7. Insert the new chain link (1) to connect the chain.

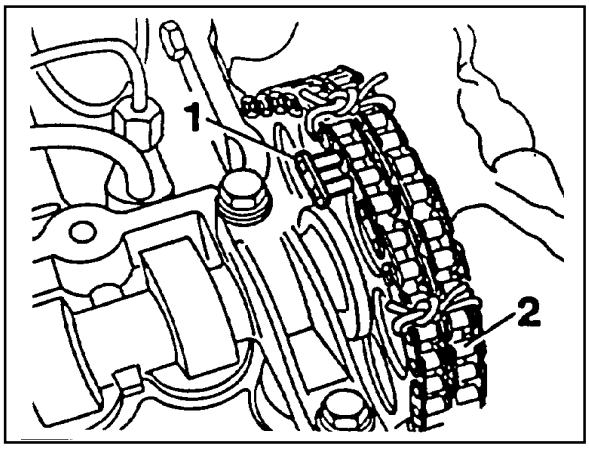

8. Insert the new outer plate (4) into the fitting tool (8) and then the outer plate will be held by a magnet.

Chain Assembling Device 000 589 58 43 00

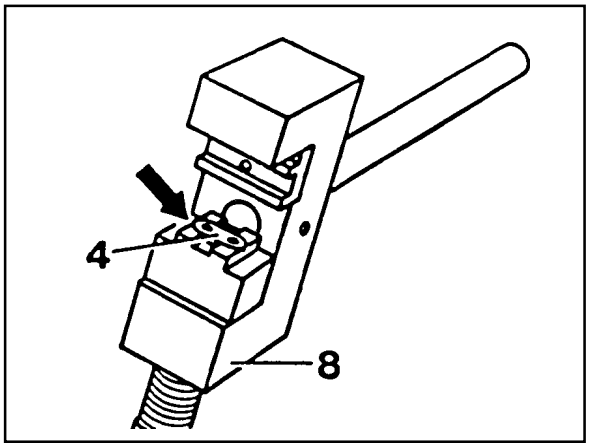

9. Place the fitting tool (8) onto the chain link and press the outer plate on as far as the stop.

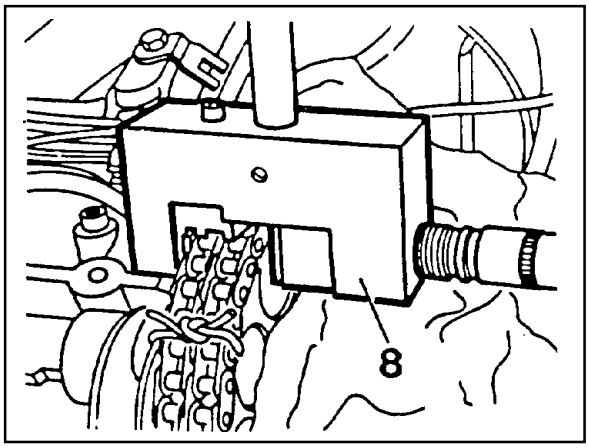

10. Switch over the die (9) of the fitting tool (8).

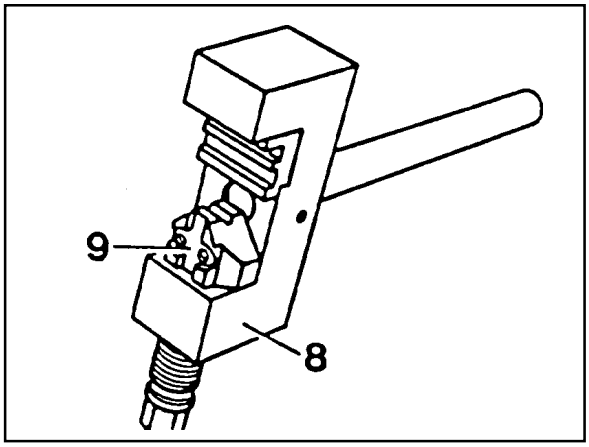

Downloaded from www.Manualslib.com manuals search engine

11. Place the fitting tool (8) onto the chain link and rivet the chain pins one by one.

Tightening Torque	35 - 40 Nm

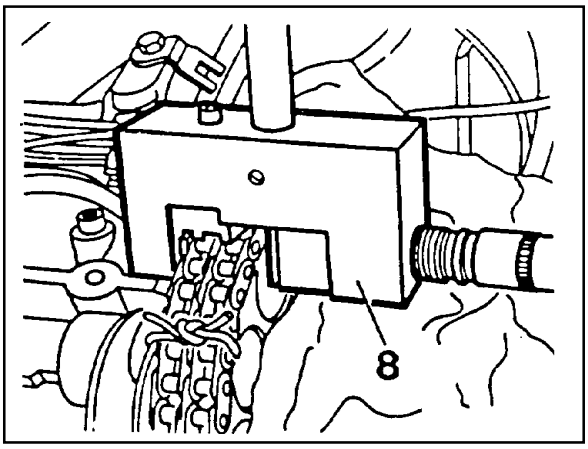

12. Check the riveting of chain pins and re-rivet if necessary.
13. Remove the wire.

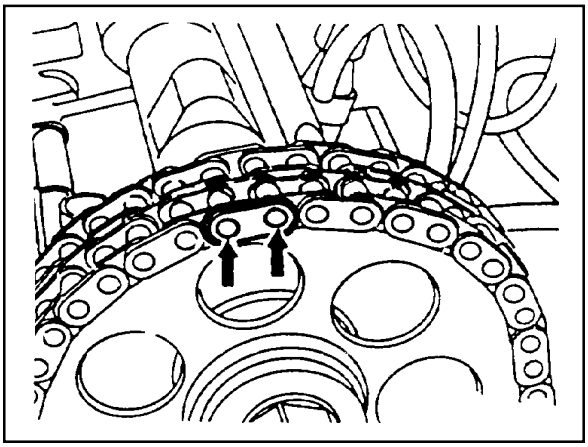

14. Position the no.1 cylinder at TDC.

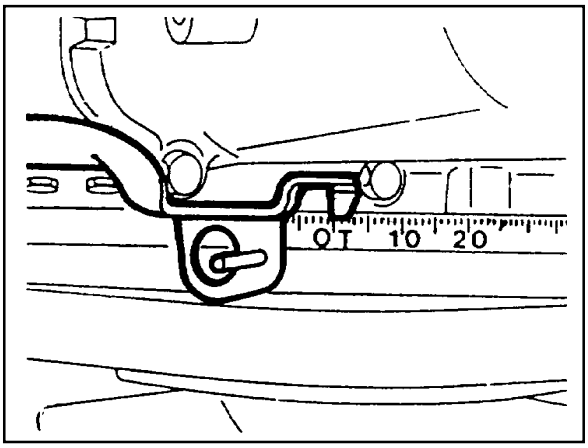

In this position, the marking on camshaft / camshaft bearing cap (arrow) must also be aligned. If the markings are not aligned, the timing chain must be re-set and the injection pump timing has to be set.

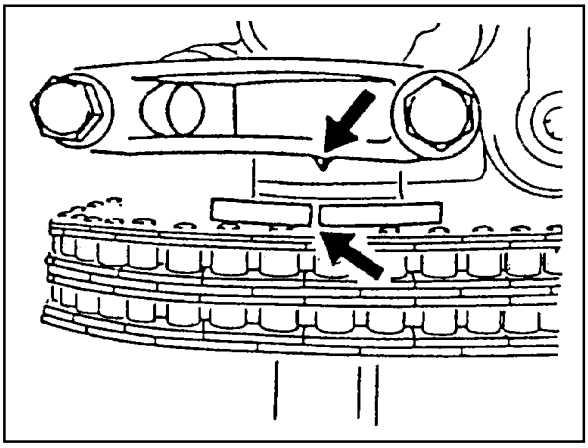

Downloaded from www.Manualslib.com manuals search engine

TENSIONING RAIL

Preceding Work : Removal of cylinder head
Removal of timing case cover

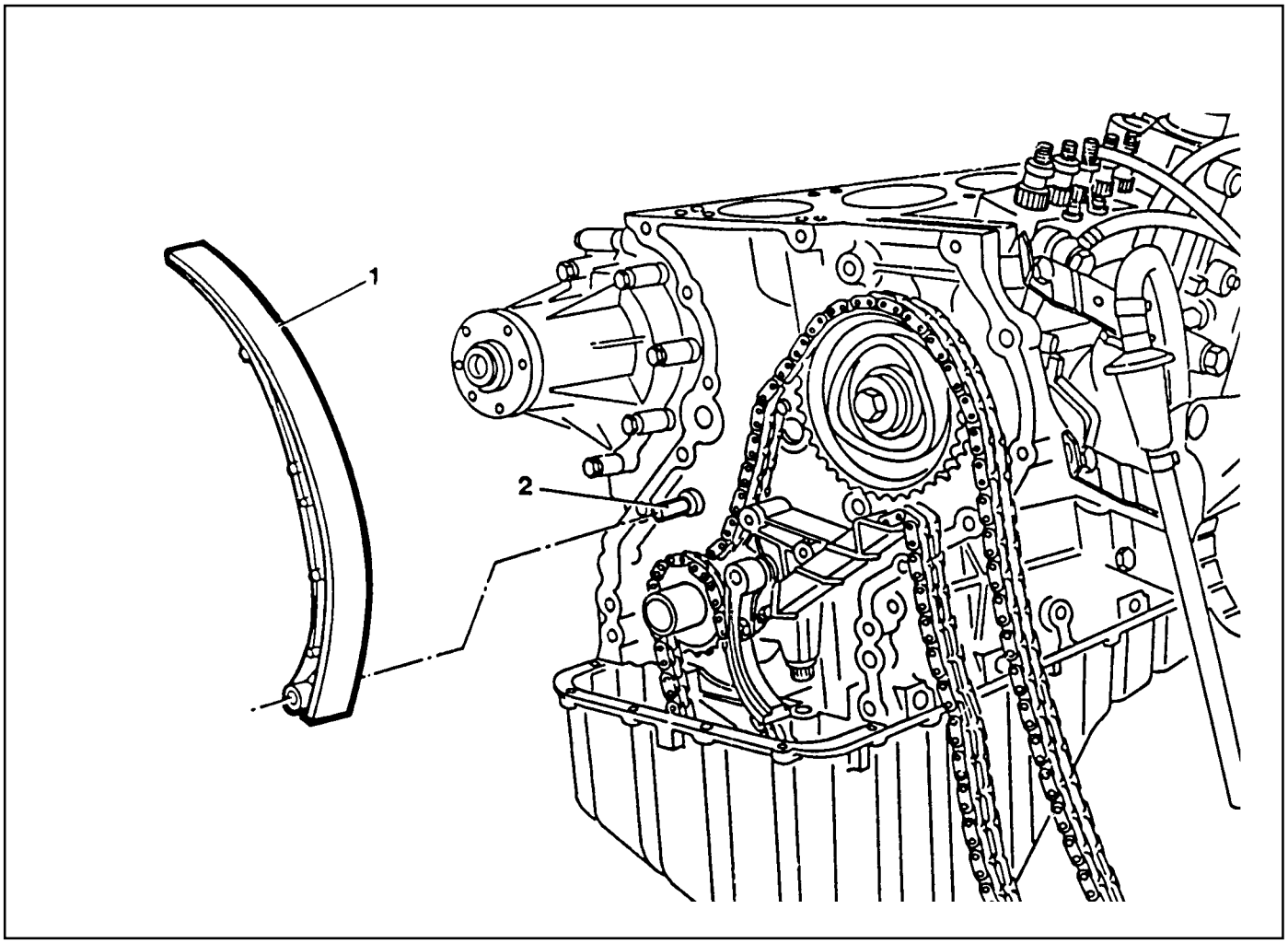

1 Tensioning Rail

2 Bearing Pin

Notice

The plastic coating of the tensioning rail can not be replaced.

Downloaded from www.Manualslib.com manuals search engine

CYLINDER HEAD GUIDE RAIL

Preceding Work : Removal of the cooling fan
Removal of poly V-belt
Removal of chain tensioner

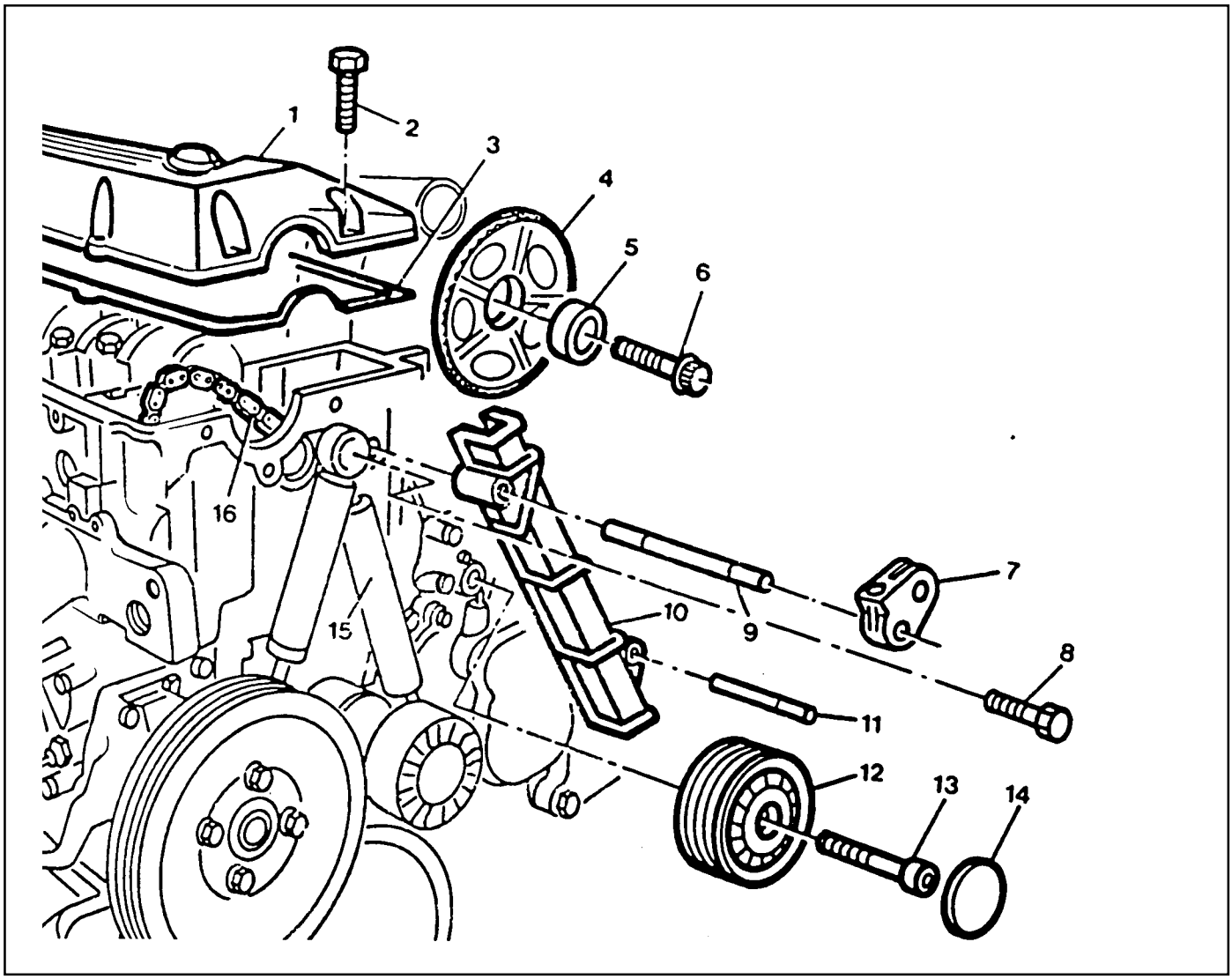

1 Cylinder Head Cover
2 Bolt 10Nm
3 Gasket ..... Replace
4 Camshaft Sprocket
5 Washer
6 12-Sided Bolt (M11) ..... Inspect, 25Nm + 90°
7 Tensioning Lever
8 Bolt 23Nm
9 Bearing Pin ..... Sealing Compound
10 Guide Rail
11 Bearing Pin
12 Guide Pulley
13 Socket Bolt 23Nm
14 Closing Cover
15 Spring
16 Timing Chain

Downloaded from www.Manualslib.com manuals search engine

Tools Required

115 589 02 34 00 Sliding Hammer

116 589 20 33 00 Threaded Pin

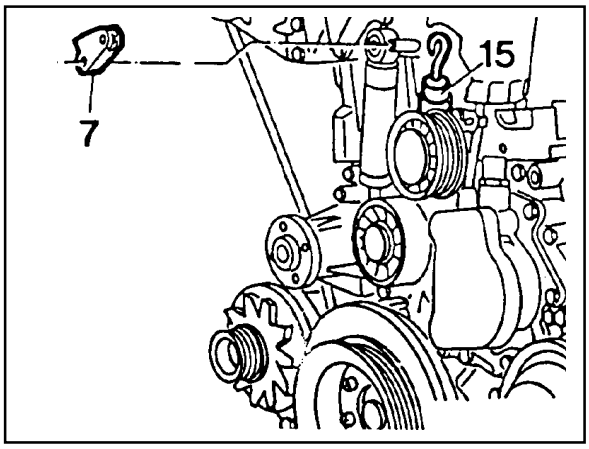

Removal Procedure

1. Removal the cylinder head cover.
2. Pull off the tensioning lever (7) and remove from the spring (15).

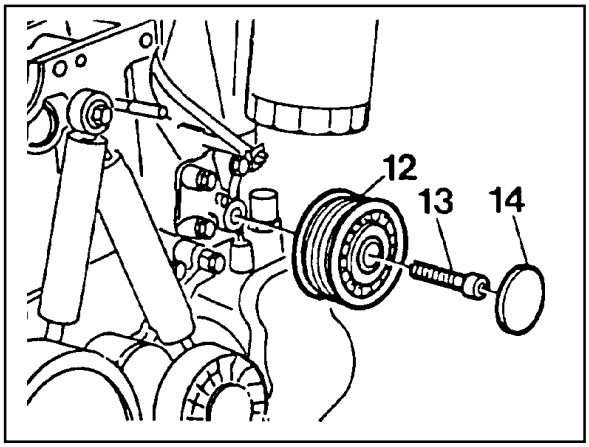

3. Pry off the closing cover (14) and remove the bolt (13) and then remove the guide pulley (12).

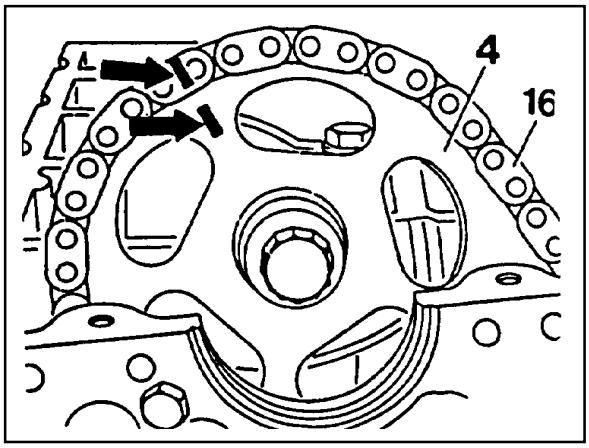

4. Place alignment marks (arrow) on the timing chain (16) and camshaft sprocket (4).

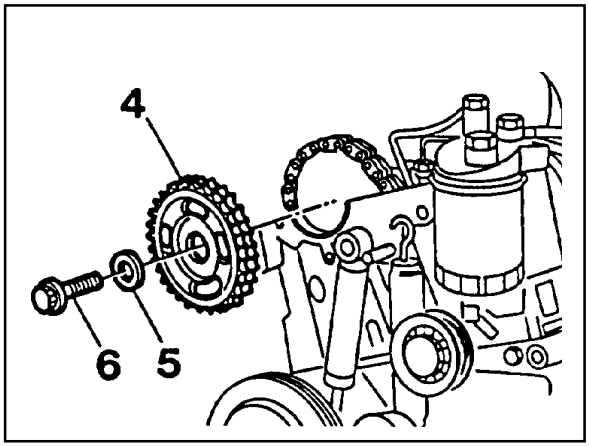

5. Remove the camshaft sprocket.

Downloaded from www.Manualslib.com manuals search engine

6. Pull out the bearing pins (9, 11) with sliding hammer and remove the guide rail 10.

Sliding Hammer 116 589 20 33 00
Threaded Pin 116 589 02 34 00

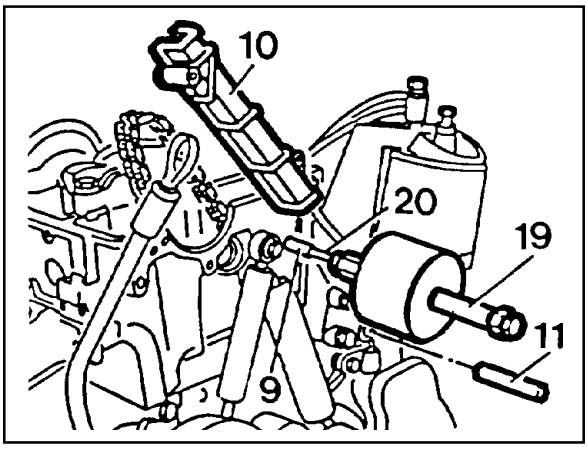

Installation Procedure

1. Apply collar of both bearing pins with sealing compound.
2. Position the guide rail and insert the bearing pins.
3. Install the camshaft sprocket.

Tightening Torque	10 Nm

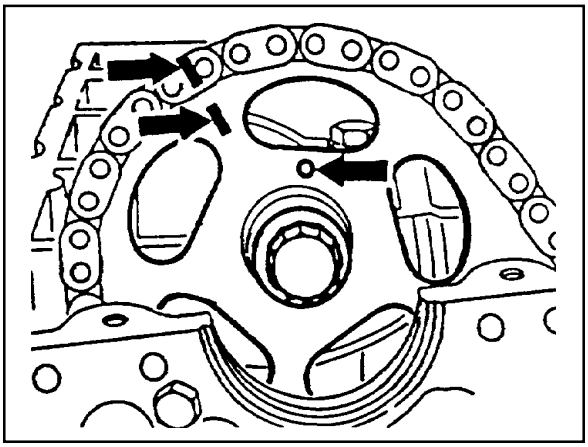

Notice

If the max. length 'L' of the 12-sided bolt exceeds 53.6mm, replace it.

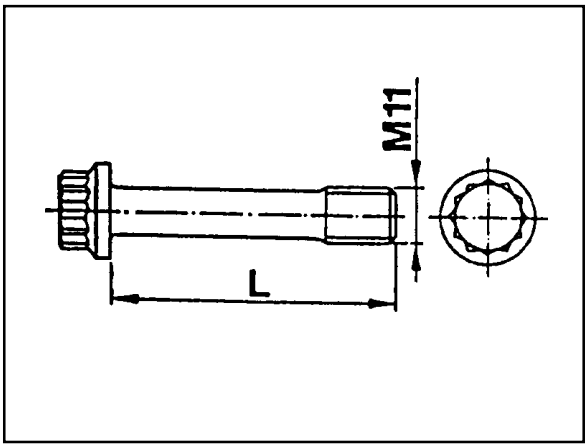

4. Position the No.1 cylinder at the TDC of OT.

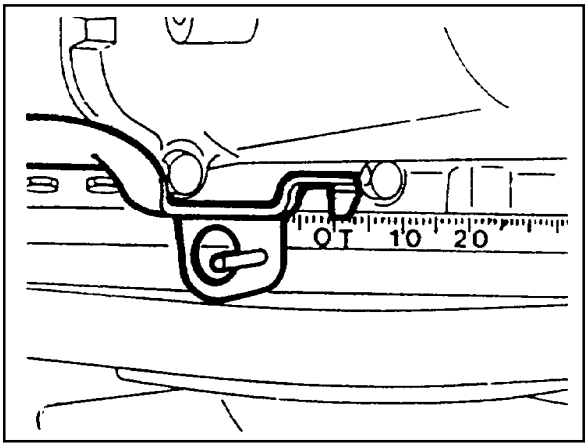

Downloaded from www.Manualslib.com manuals search engine

In this position, the marking on the camshaft / camshaft bearing cap (arrow) must also be aligned.

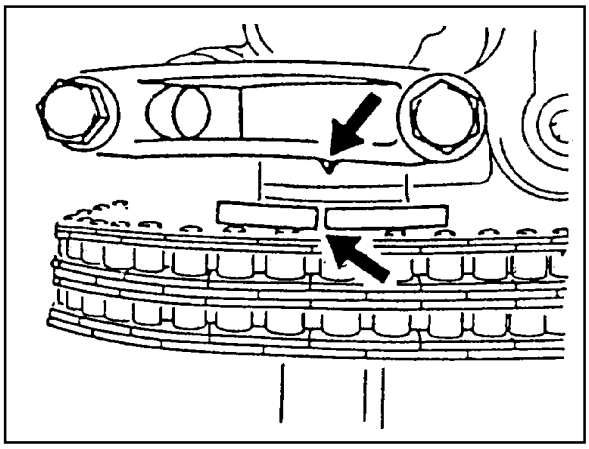

5. Install the guide pulley (12).

Tightening Torque	23 Nm

6. Attach the tensioning lever (7) to the spring (15) and install.
7. Replace the gasket and install the cylinder head cover.

Tightening Torque	10 Nm

Downloaded from www.Manualslib.com manuals search engine

TIMING CASE COVER GUIDE RAIL

Preceding Work : Removal of cylinder head cover

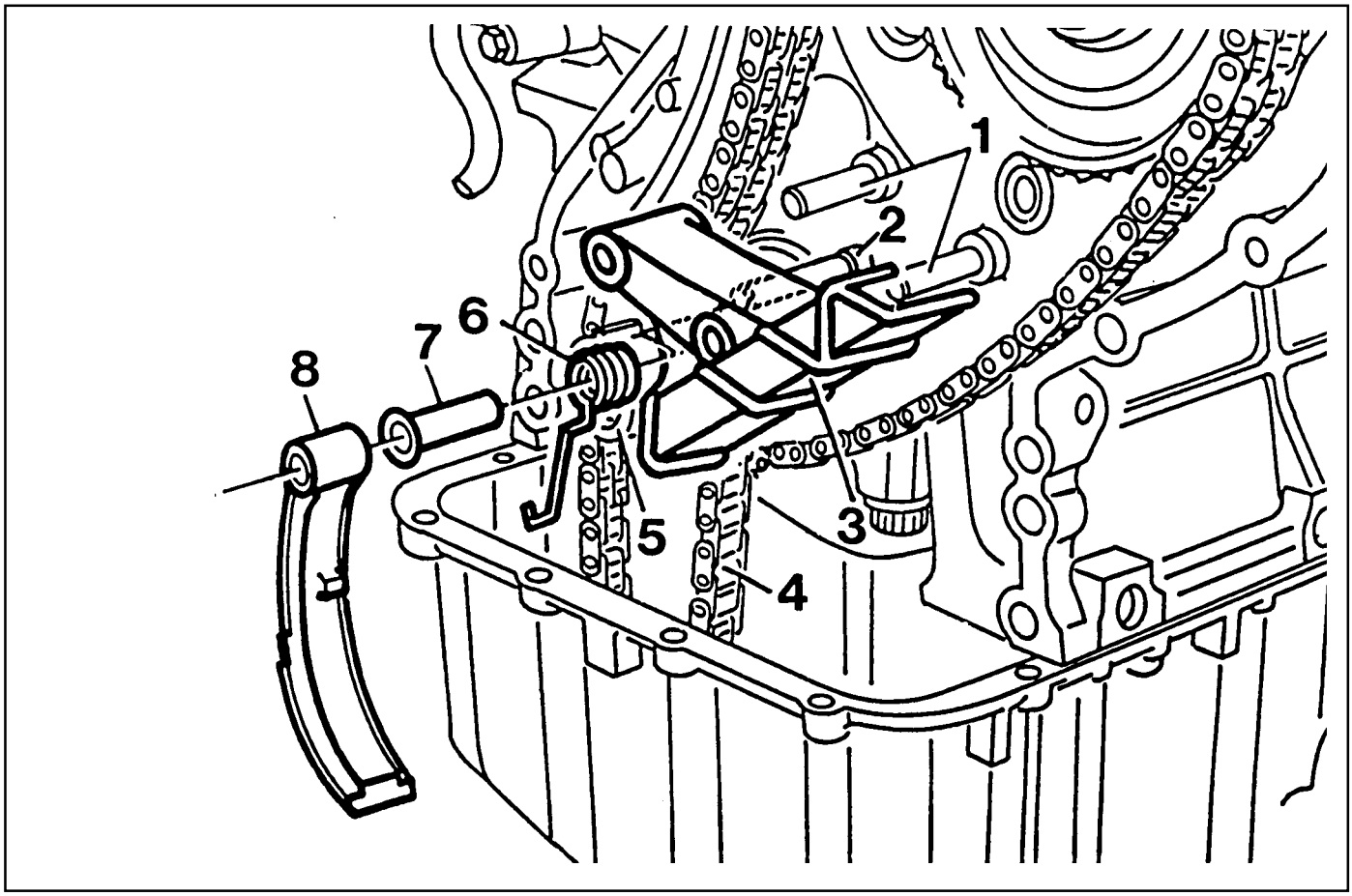

1 Bearing Pin
2 Bearing Pin
3 Guide Rail
4 Oil Pump Chain
5 Crankshaft
6 Spring
7 Bushing
8 Tensioning Lever

Downloaded from www.Manualslib.com manuals search engine

Removal Procedure

1. Pull out the tensioning lever (8) together with the spring (6) and guide rail (3) far enough until the tensioning lever has moved passed the oil pump chain (4) and is resting against the crankshaft (5)

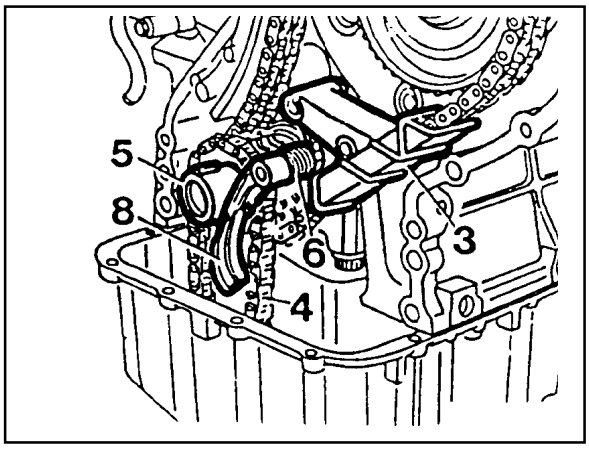

2. Pull the tensioning lever (8) off the bearing pin (2) and carefully remove the spring (6). Remove the tensioning lever (8) together with the spring (6) and bushing (7).

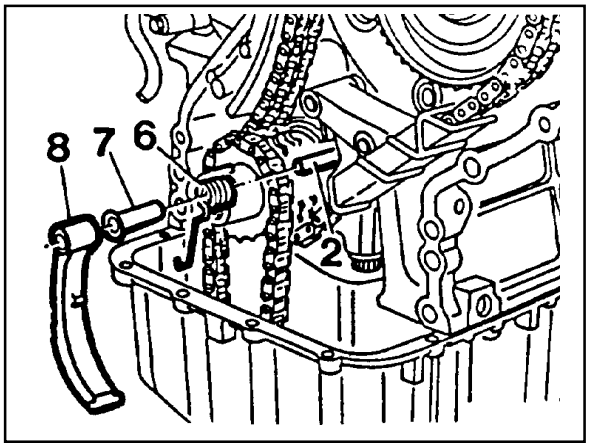

3. Remove the guide rail (3).

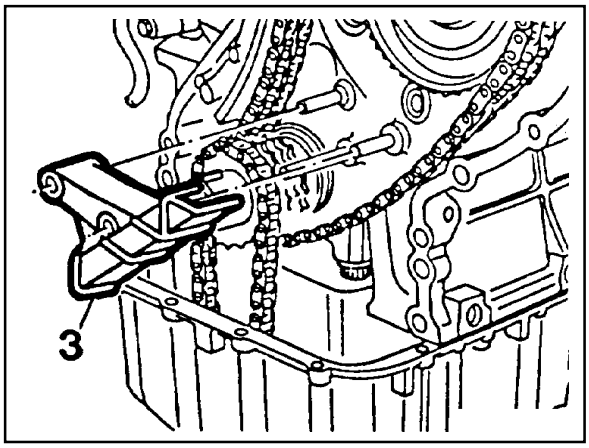

Installation Procedure

1. Install the guide rail (3). Attach the spring (6) to the guide rail and to the tensioning lever (8).

   Notice

   Ensure that the spring is correctly located in the guide rail (arrow).

2. Push the guide rail, spring, bushing and tensioning lever together onto the bearing pin (1, 2).

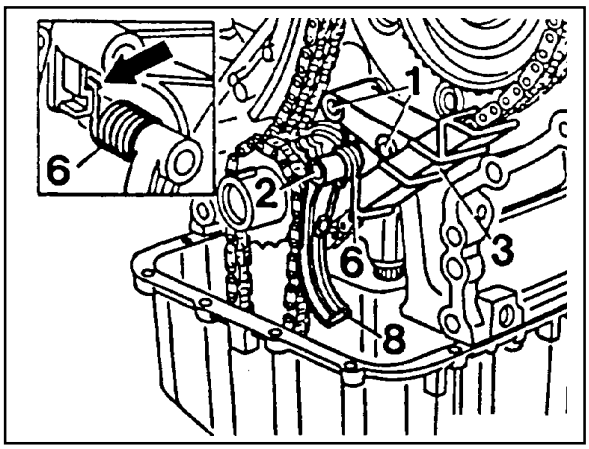

Downloaded from www.Manualslib.com manuals search engine

CRANKSHAFT SPROCKET

Preceding Work : Removal of oil pan
Removal of timing case cover

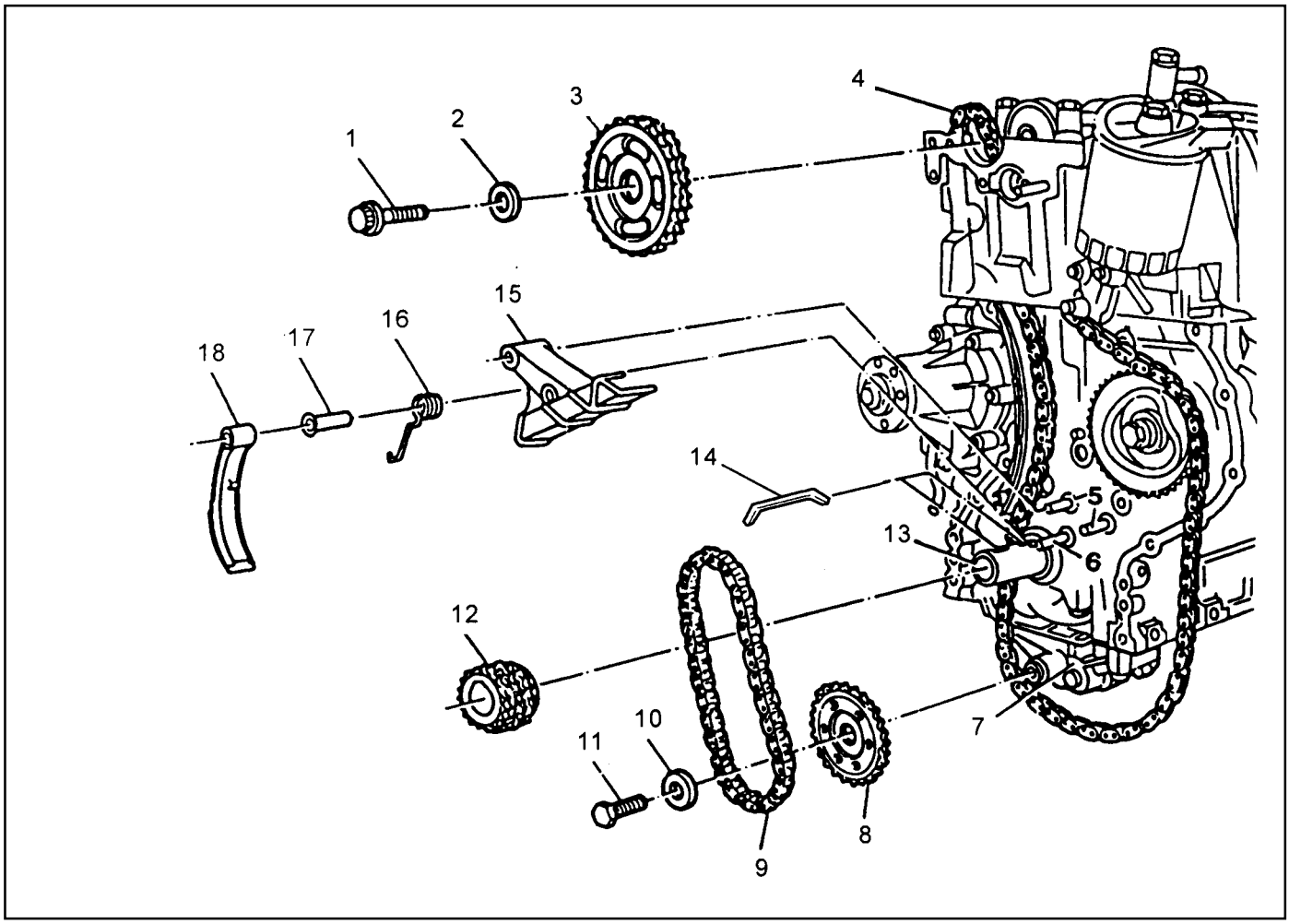

1 12-Sided Stretch Bolt (M11) .. Check, 25Nm + 90°
2 Washer
3 Camshaft Sprocket
4 Timing Chain
5 Bearing Pin
6 Bearing Pin
7 Oil Pump
8 Oil Pump Sprocket
9 Oil Pump Chain
10 Washer
11 Bolt 25Nm
12 Crankshaft Sprocket
13 Crankshaft
14 Key
15 Guide Rail
16 Spring
17 Bushing
18 Tensioning Lever

Downloaded from www.Manualslib.com manuals search engine

Special Tools

116 589 07 15 00 Drift

102 589 05 33 00 Puller

Removal

1. Pull out the tensioning lever (19) together with the spring (17) and guide rail (16) far enough until the tensioning lever has passed the oil pump chain (9) and is resting against the crankshaft (13).

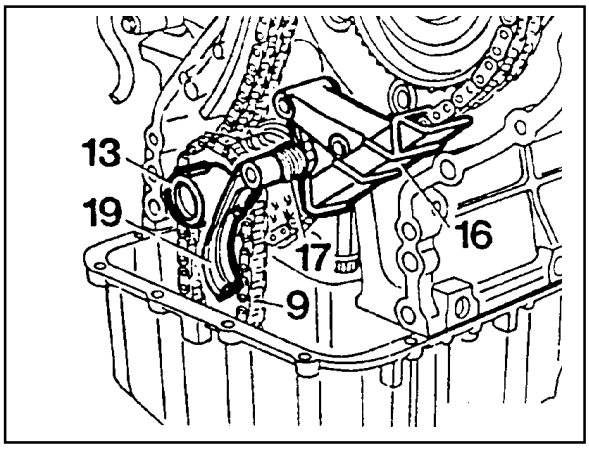

2. Pull out tensioning lever (19), spring (17) and bushing (18) from the bearing pin (6).

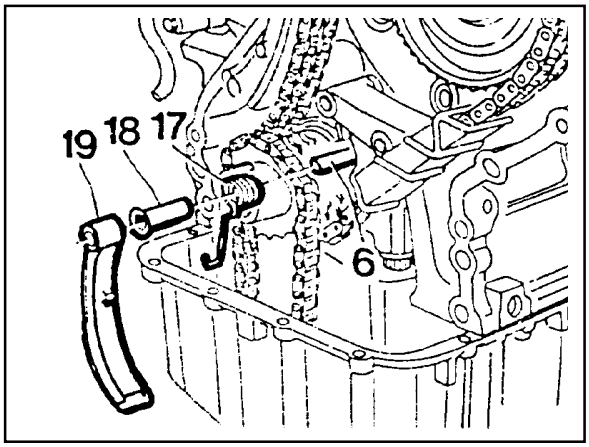

3. Pull out the guide rail (16).

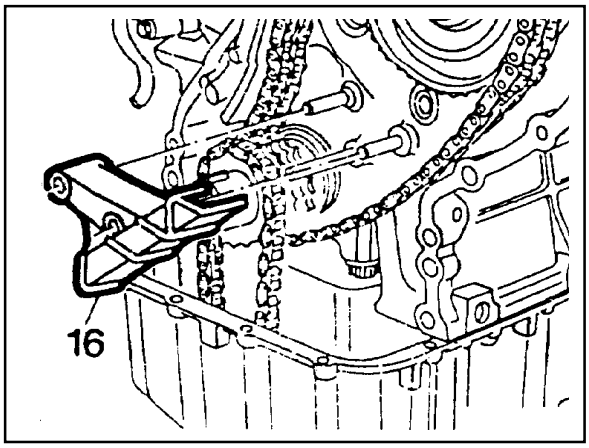

4. Remove the bolt(11) and then remove the washer (10), oil pump chin (9) and sprocket (8).

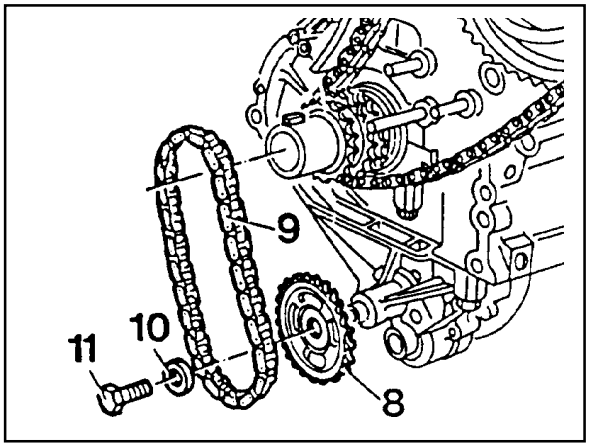

Downloaded from www.Manualslib.com manuals search engine

5. Place alignment marks (arrow) on the timing chain (4) and crankshaft sprocket (12).
6. Remove the key(15).

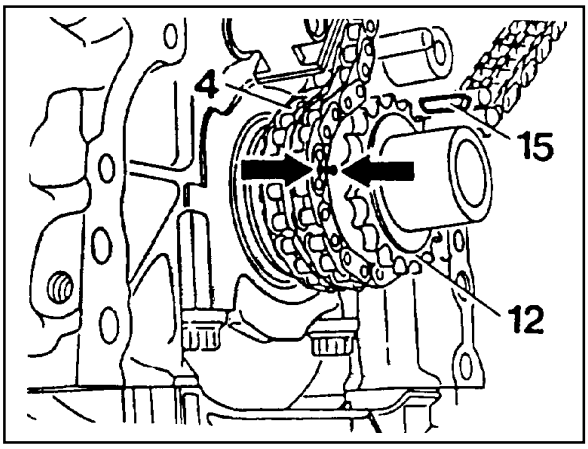

7. Place alignment marks (arrow) on the timing chain (4) and camshaft sprocket (3).

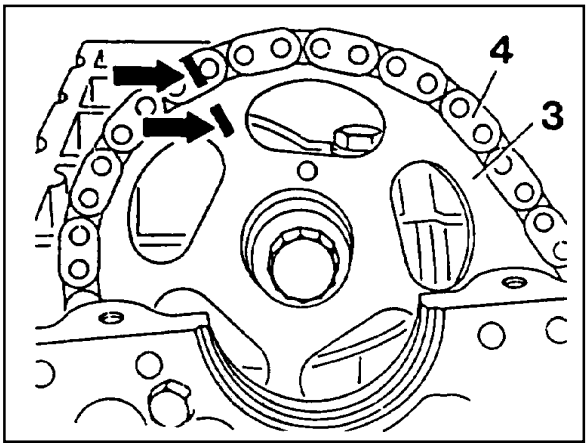

8. Remove the chain tensioner.
9. Remove the bolt (1) and then remove the washer (2) and camshaft sprocket (3).

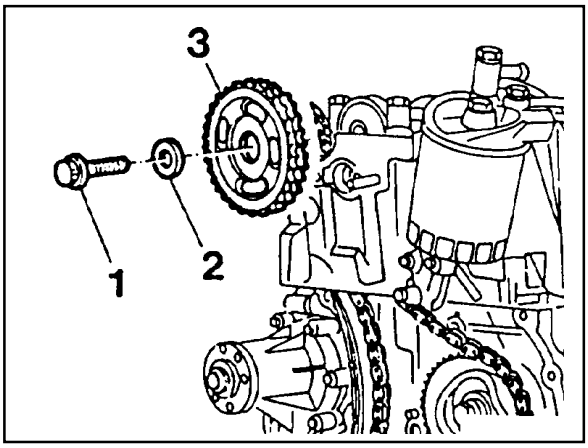

10. Remove the crankshaft sprocket (12) by using a puller (20).

Puller 102 589 05 33 00

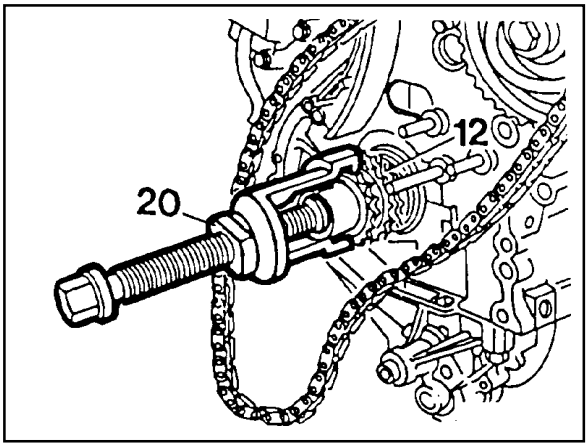

Downloaded from www.Manualslib.com manuals search engine

Installation

1. Put the same alignment mark on the new crankshaft sprocket as in the old sprocket.

   Notice

   Check the timing chain, camshaft sprocket, injection pump timing sprocket, oil pump chain and oil pump sprocket for wear and replace if necessary.

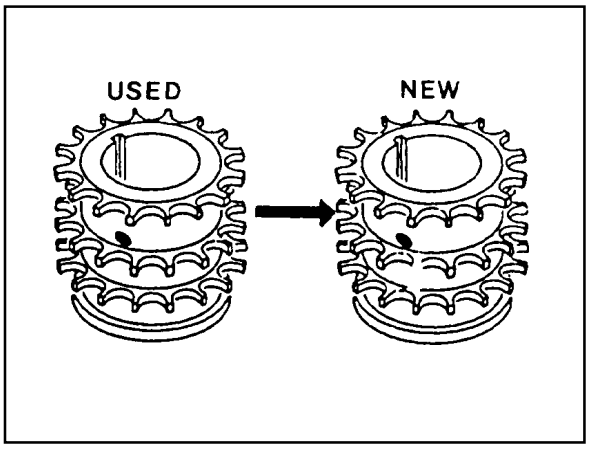

2. Install the new crankshaft sprocket (12) by using a drift (21).

   Notice

   Align the groove of sprocket and woodruff key (arrow) exactly.

   Drift 116 589 07 15 00

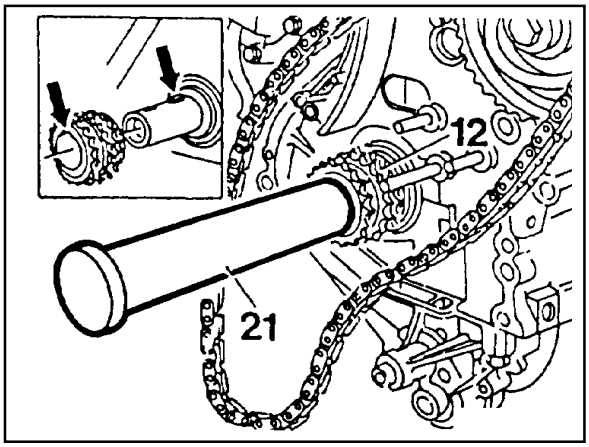

3. Fit the timing chain (4) on the crankshaft sprocket (12).

   Notice

   Align the alignment marks (arrow) on the chain and sprocket.

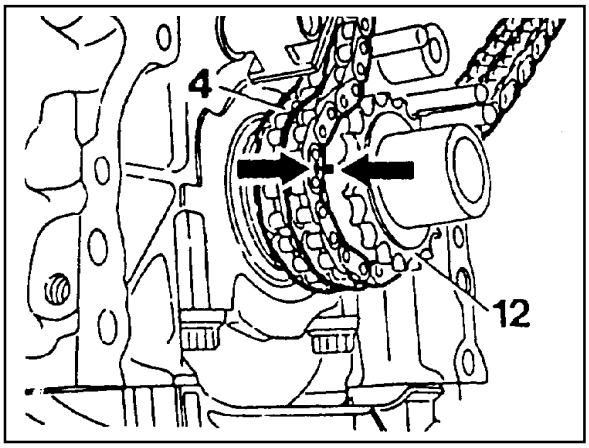

4. Install the camshaft sprocket (3).

Tightening Torque	25 Nm + 90°

   Notice

   Pay attention on the alignment marks and dowel pin (arrow).

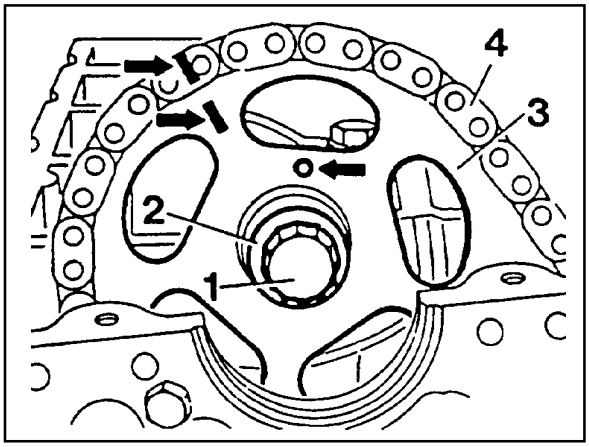

Downloaded from www.Manualslib.com manuals search engine

Notice

If the max. length 'L' of the stretch bolt exceeds 53.6mm, replace it.

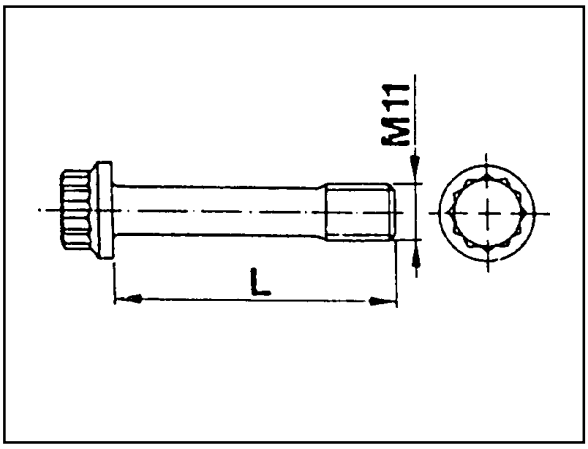

5. Fit the oil pump chain (9) on the crankshaft sprocket (12) and insert the oil pump sprocket (8) into the oil pump chain and then install it on the oil pump.

   Notice

   The curved side of the oil pump sprocket should face the oil pump.

6. Insert the woodruff key (15).

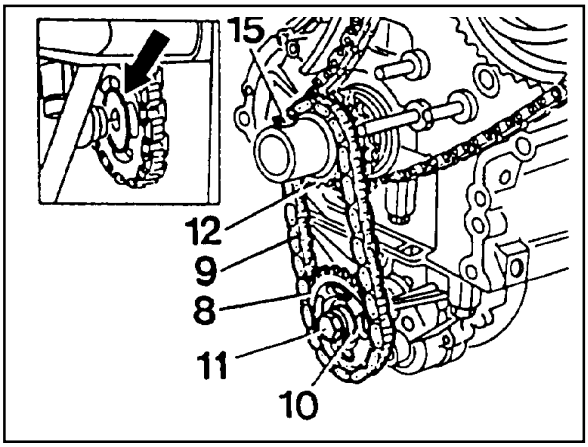

7. Install the guide rail (16). Attach the spring (17) to guide rail and to tensioning lever together onto the bearing pins (5,6).

   Notice

   Ensure that the spring is correctly located in the guide rail (arrow).

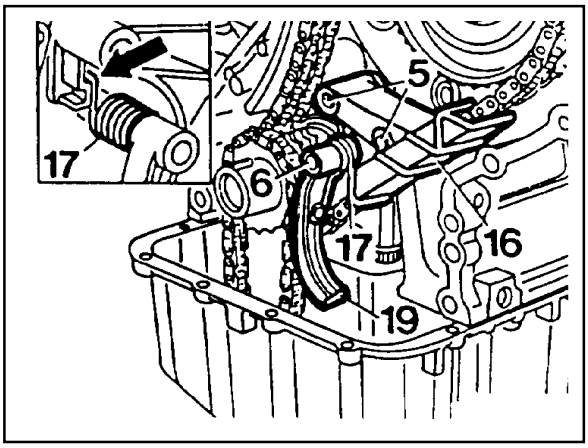

Downloaded from www.Manualslib.com manuals search engine

PISTON

Preceding Work : Removal of the cylinder head
Removal of the oil pump

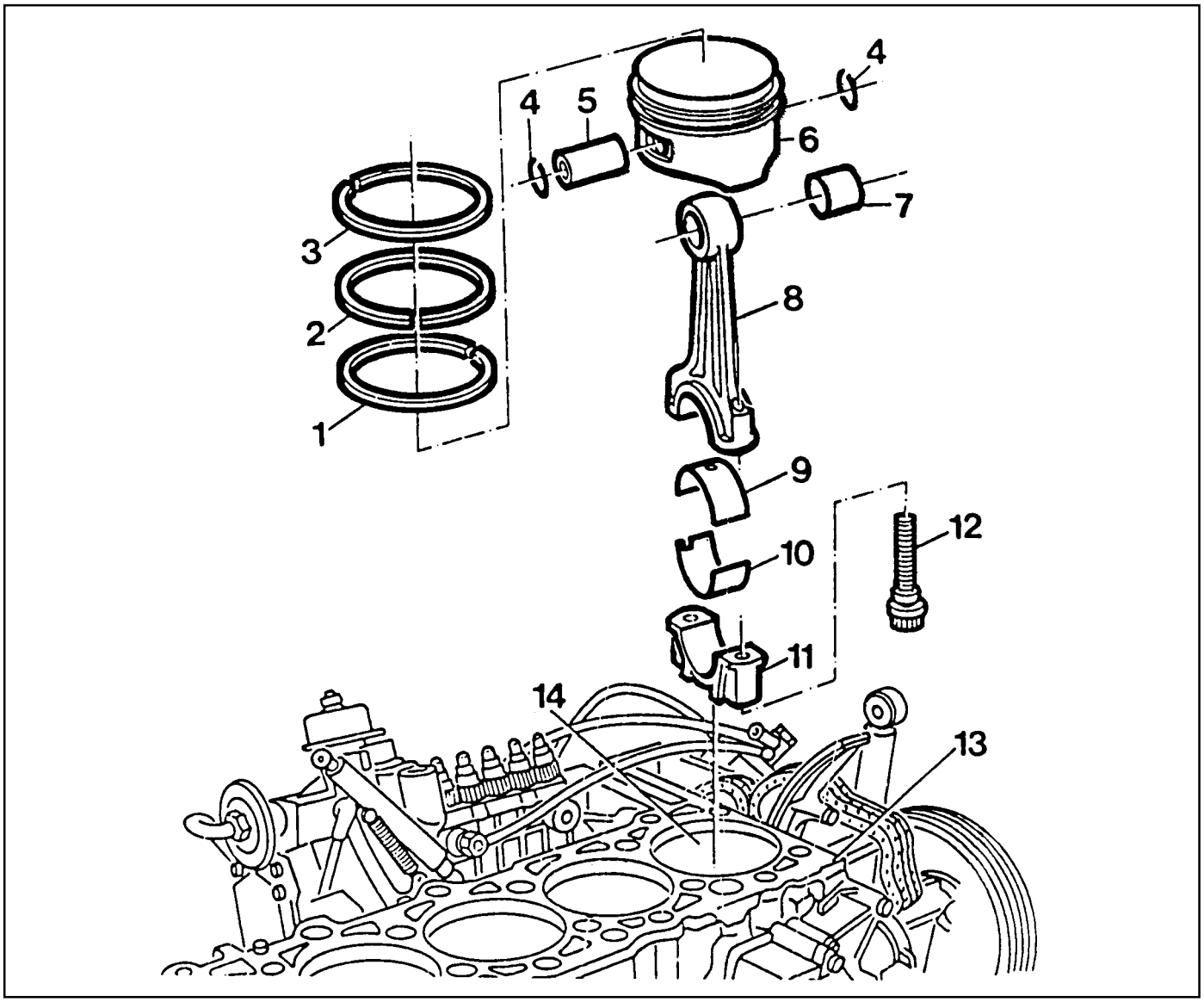

1 Oil Ring
2 2nd Ring
3 Top Ring
4 Snap Ring ..... Replace
5 Piston Pin
6 Piston
7 Connecting Rod Bushing ..... Check
8 Connecting Rod
9 Connecting Rod Upper Bearing Shell
10 Connecting Rod Lower Bearing Shell
11 Connecting Rod Bearing Cap
12 Connecting Rod Bolt ..... 35Nm + 90°
13 Crankcase
14 Cylinder Bore

Notice

There are two kinds of connecting rods (for machining) and they are different in weight approx. 15g. When replacing the connecting rod, measure its weight and ensure that a engine has the same weight of connecting rods. If not, there would be a unbalancing of engine.

Downloaded from www.Manualslib.com manuals search engine

Service Data

Piston clearance	Max. 0.12 mm
Piston crown protrusion in TDC position	0.735 - 0.965 mm
Connecting rod bushing diameter	26.012 - 26.018 mm

Connecting Rod Bolt Dimensions

Thread	M9 x 1
Stretch shaft(C) diameter (new)	$7.4^{-0.1}$ mm
Minimum stretch shaft diameter (C)	7.1 mm
Length(L)(new)	$52^{-0.3}$ mm

Tools Required

000 589 04 14 00 Tensioning Strap
001 589 53 21 00 Dial Gauge
363 589 02 21 00 Dial Gauge Holder

Downloaded from www.Manualslib.com manuals search engine

Removal

1. Remove combustion residues from the cylinder bores.
2. Remove the connecting rod bolts (12) and then remove the connecting rod bearing caps(11).

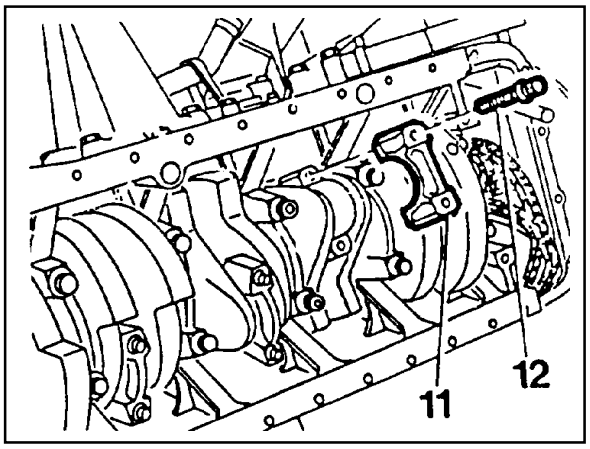

3. Remove the connecting rod bearing shells (9, 10).

   Notice

   Be careful not mix the bearing caps and shells each other.

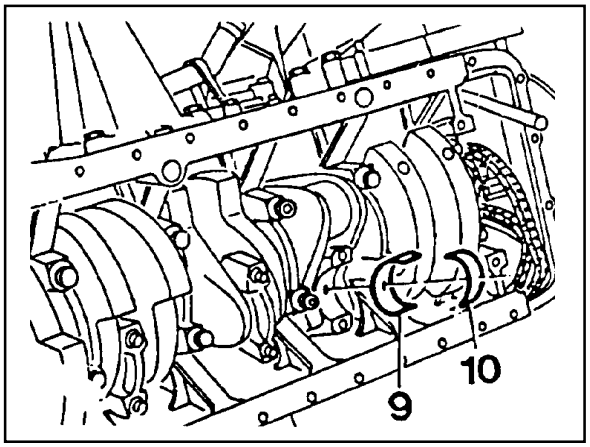

4. Remove the piston (6) and connecting rod (8).

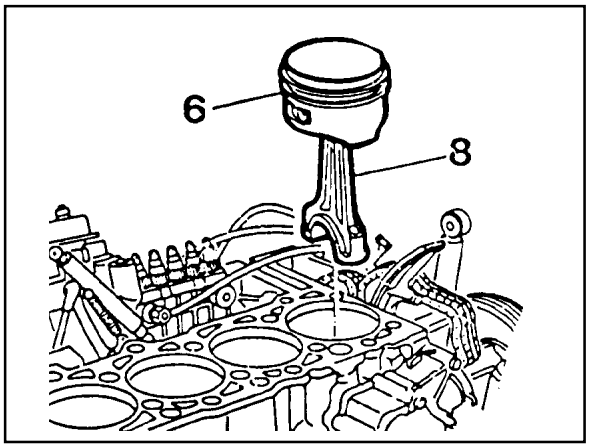

5. Remove the snap ring (4) and pull out the piston pin (5).
6. Separate the piston and connecting rod.

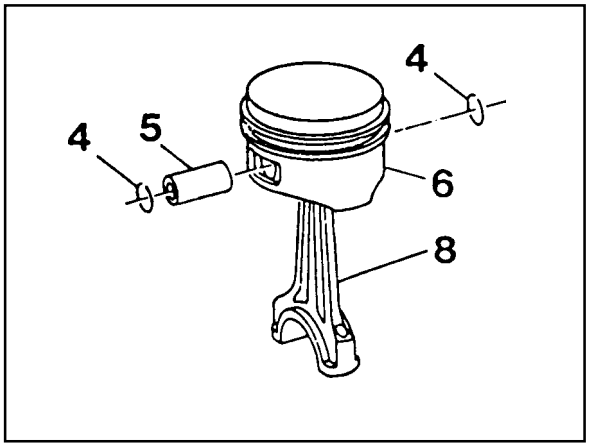

Downloaded from www.Manualslib.com manuals search engine

Installation

1. Fit the piston onto the connecting rod so that the arrow (15) and the locking slot (16) are facing in direction of the vehicle.

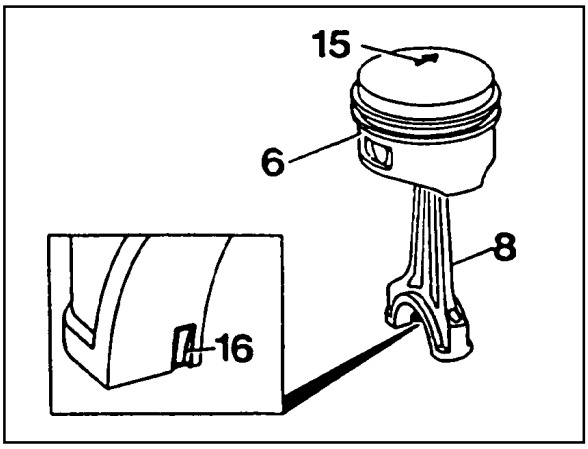

2. Coat the piston pin (15) with engine oil and insert it by hand.

   Notice

   Do not heat up the piston.

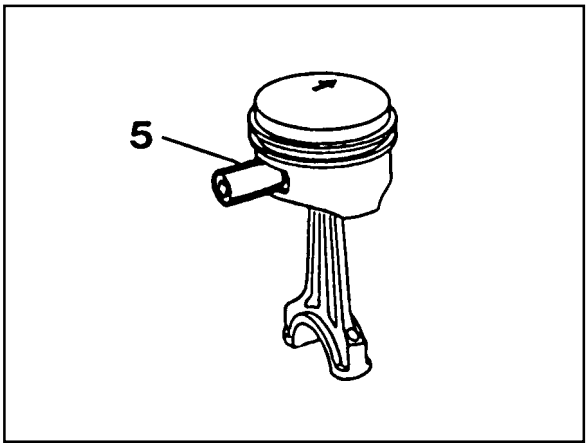

3. Install the new snap ring (4) into the grooves (arrow).
4. Check the piston rings (1, 2, 3) and replace them if necessary.

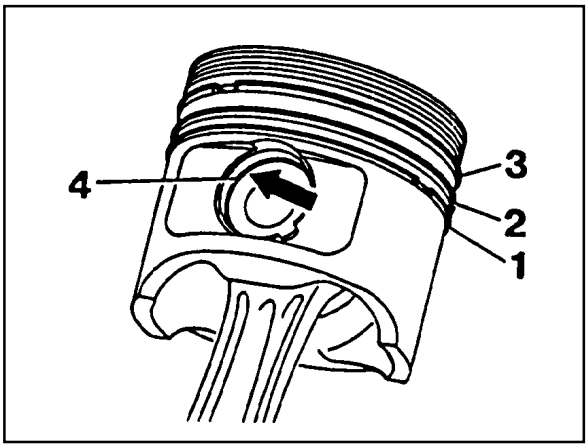

5. Install and arrange the piston rings to be evenly 120° from each ends gap.

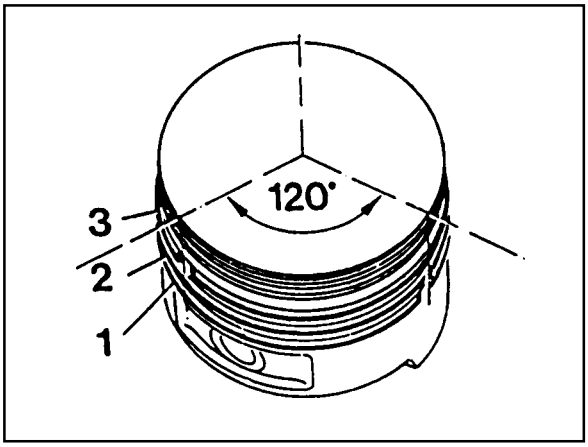

Downloaded from www.Manualslib.com manuals search engine

6. Coat the cylinder bore, connecting rod bearing journal, connecting rod bearing shell and piston with oil.
7. Compress the piston rings with a tensioning strap (7).

Tensioning Strap 000 589 04 14 00

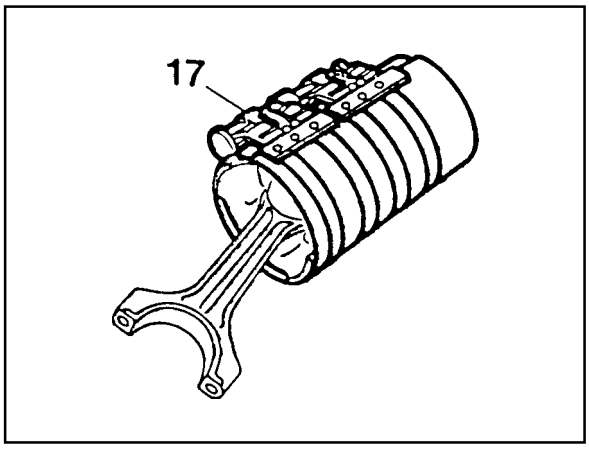

8. Insert the piston assembly into the cylinder with a wooden stick (18).

Notice

The arrow on the piston crown must point toward the front of vehicle.

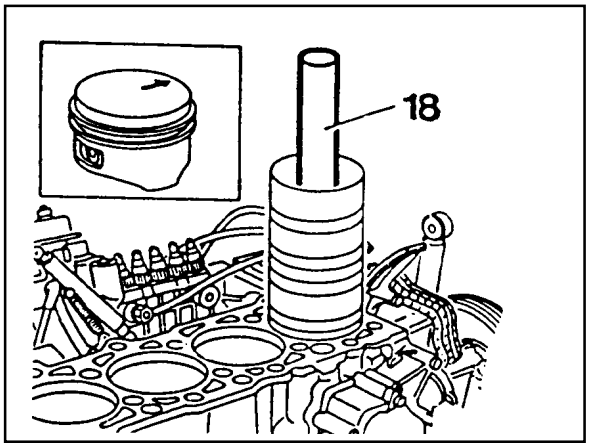

9. Insert the connecting rod bearing shells (9, 10).

Notice

Be careful of the difference in upper and lower bearing shells and not to be changed.

10. Position the connecting rod bearings caps.

Notice

Position so that the retaining lugs are on the same side of the connecting rod bearing(arrow).

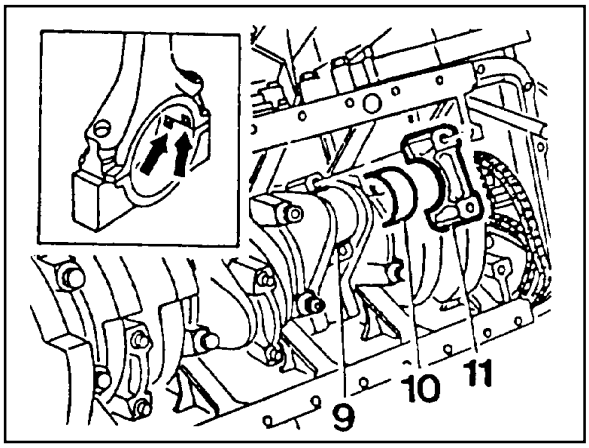

11. Measure stretch shaft diameter (C) of the connecting rod bolts.

Limit 'C'	7.1mm

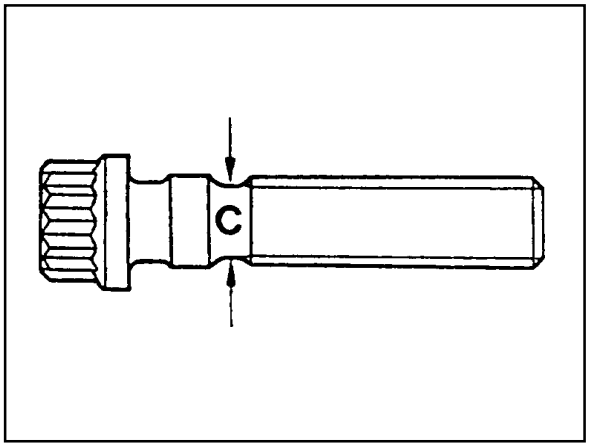

Downloaded from www.Manualslib.com manuals search engine

12. Coat the bolts (12) with oil and then tighten the bolts.

Tightening Torque	40Nm + 90°

13. Rotate the crankshaft and check axial clearance between the connecting rod and crankshaft.

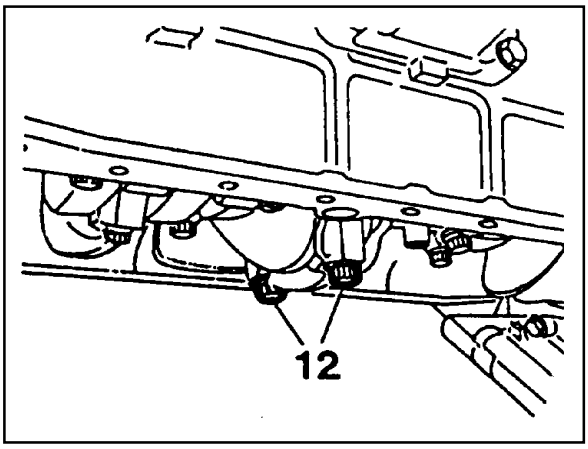

14. Measure clearance between the piston crown and cylinder

Standard	Max. 0.12mm

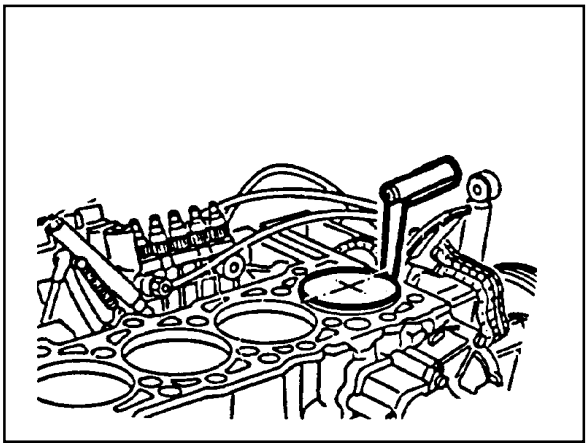

15. Position the piston at TDC and measure the distance between the piston crown and the crankcase surface.

Standard	Max. 0.965 mm

Notice

Measure at points marked.

Dial Gauge 001 589 00 53 21
Dial Gauge Holder 363 589 02 21 00

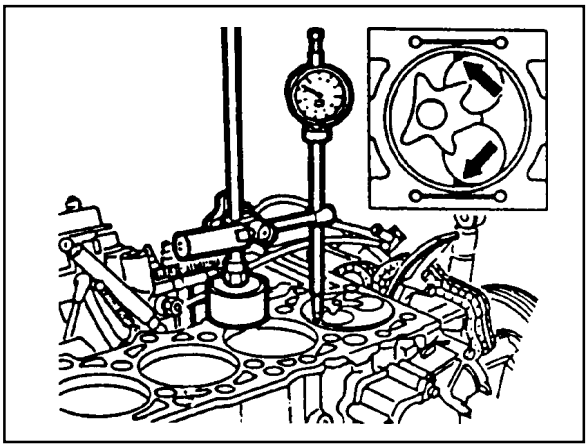

Downloaded from www.Manualslib.com manuals search engine

OIL FILTER

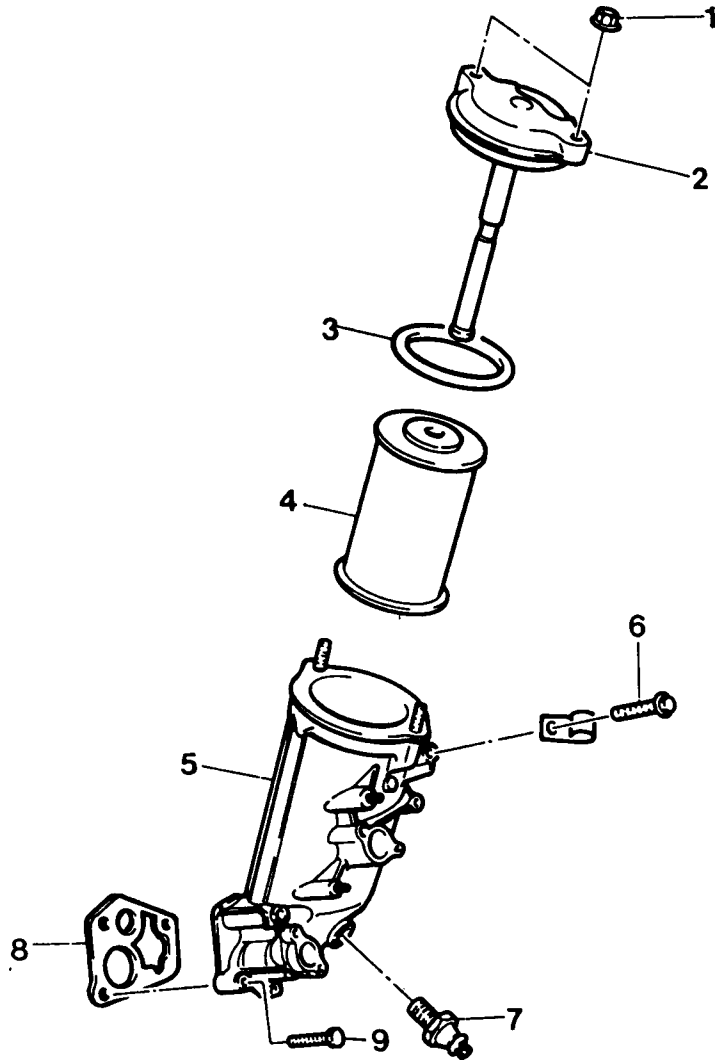

1 Nut ..... 25 Nm
2 Oil Filter ..... Cover
3 O-Ring ..... Replace
4 Oil Filter ..... Element Replace If necessary
5 Oil Filter Housing
6 Bolt (M6) 10Nm
7 Oil Pressure Switch
8 Gasket
9 Bolt ..... 25 Nm

Downloaded from www.Manualslib.com manuals search engine

Removal & Installation Procedure

1. Remove the oil filter cover and then drain the oil.

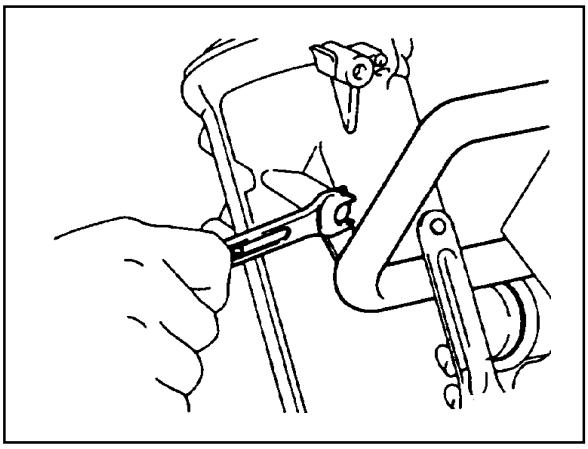

2. Remove the oil pressure switch line.

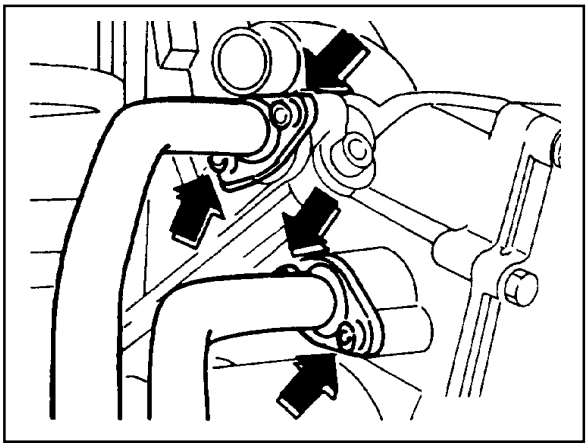

3. Remove the oil filter housing.
4. Clean the sealing surface.
5. Installation should follow the removal procedure in the reverse order.

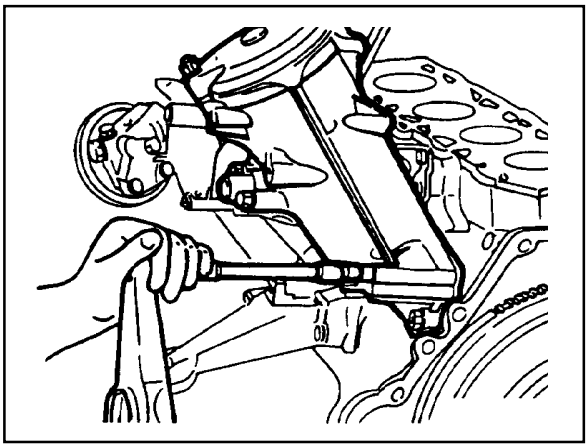

Downloaded from www.Manualslib.com manuals search engine

OIL PAN

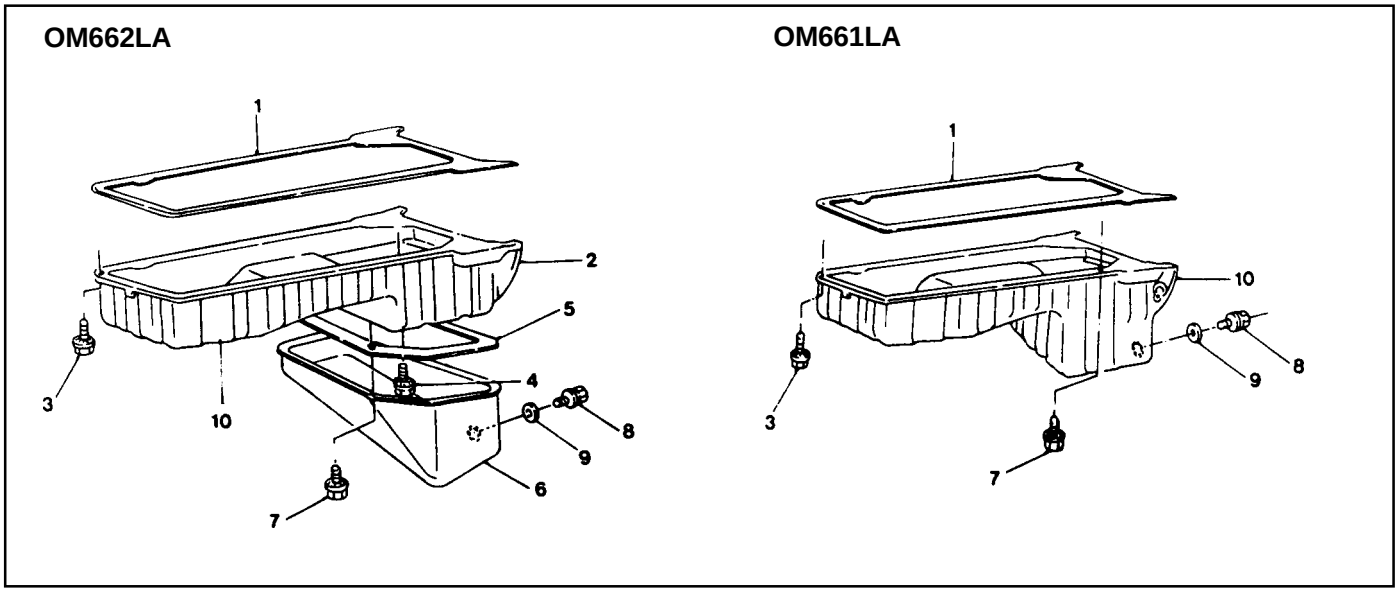

1	Gasket	Replace
2	Upper Oil Pan	
3	Combination Bolt	10 Nm
4	Combination Bolt	10 Nm
5	Gasket	Replace
6	Lower Oil Pan	
7	Combination Bolt	25 Nm
8	Drain Plug	25 Nm
9	Washer Seal	Replace
10	Oil Pan	

*Remove and install as numerical sequence.

Notice

Replace the washer seal with new one.

Downloaded from www.Manualslib.com manuals search engine

Oil Circulation

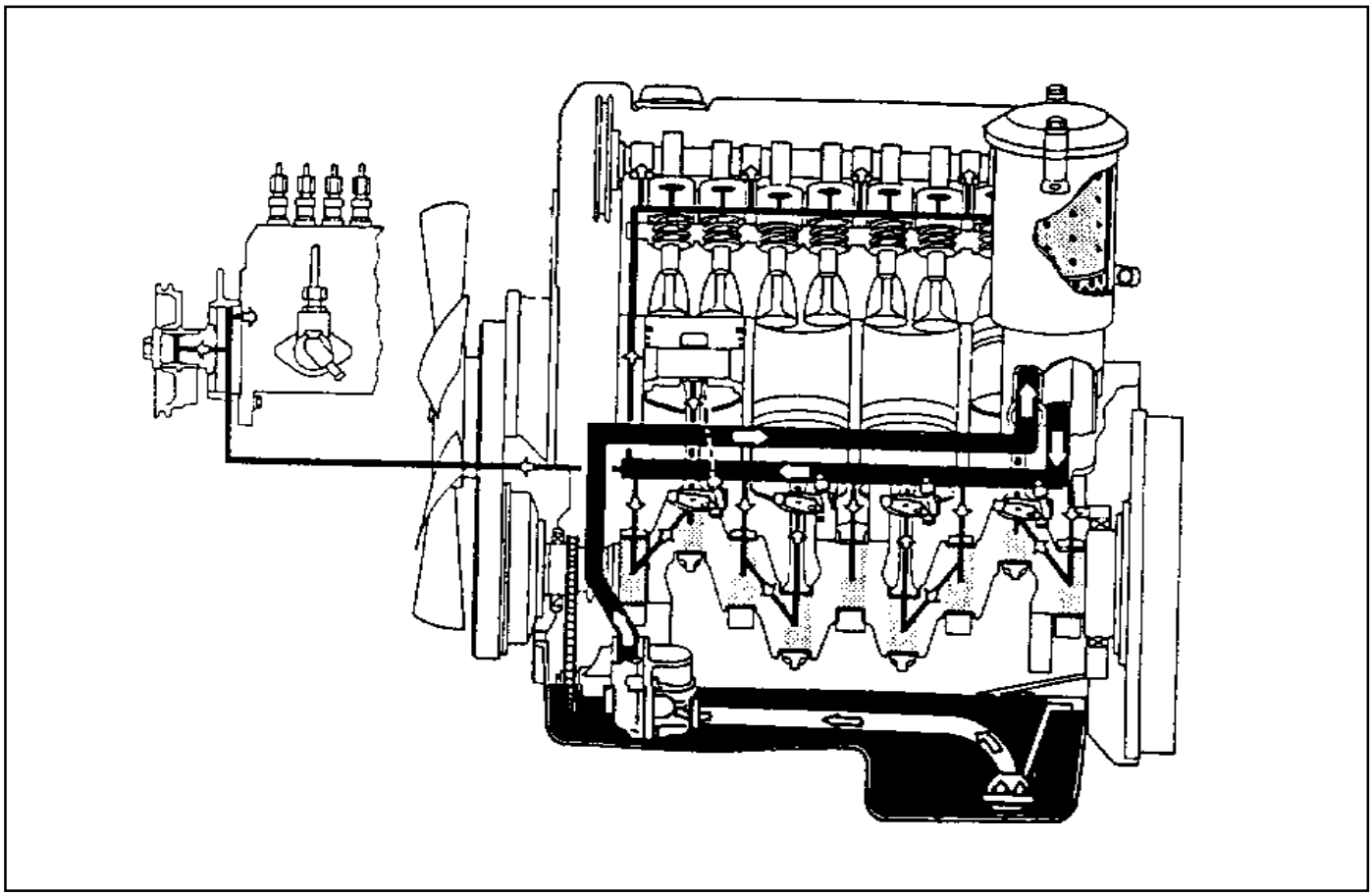

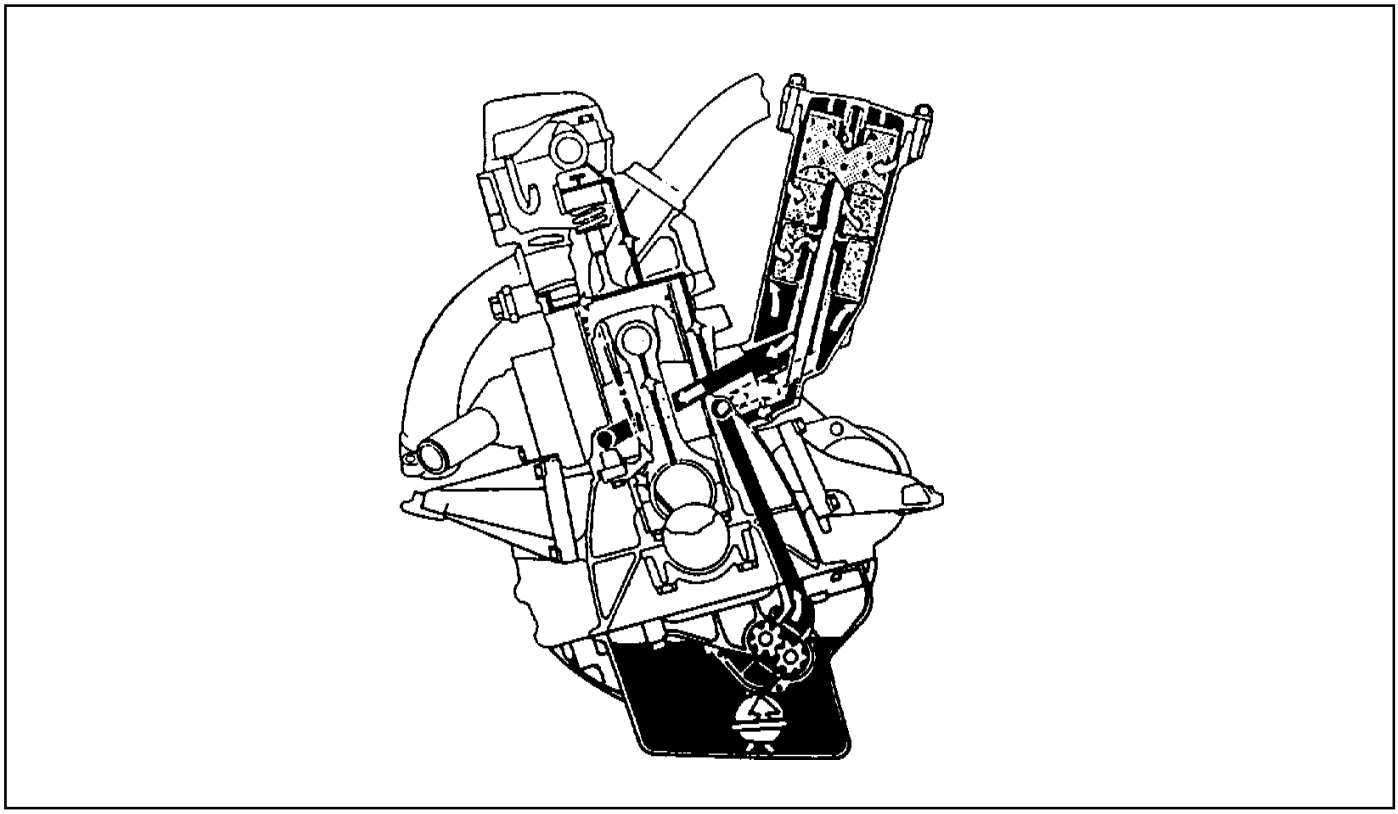

Downloaded from www.Manualslib.com manuals search engine

Oil Filter

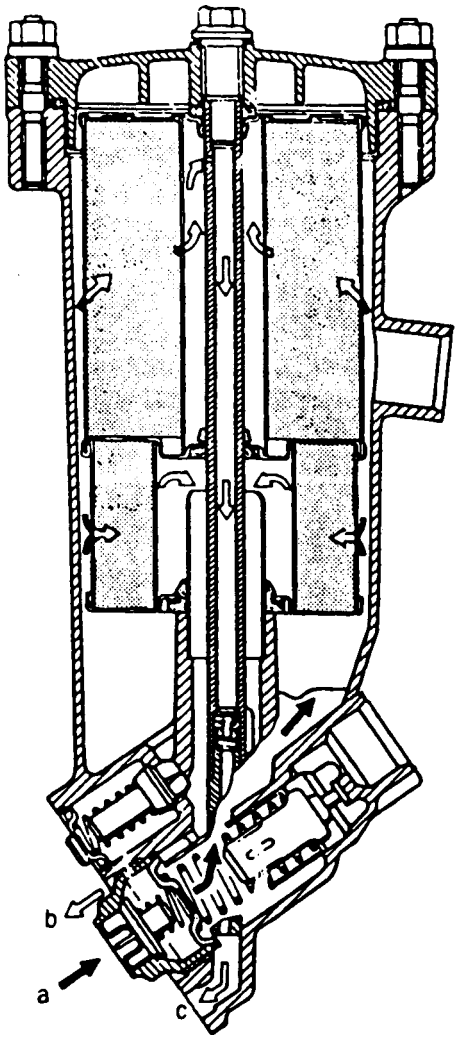

a From Oil Pump
b To Main Oil Gallery
c To Oil Pan

Downloaded from www.Manualslib.com manuals search engine

OIL SPRAY NOZZLE

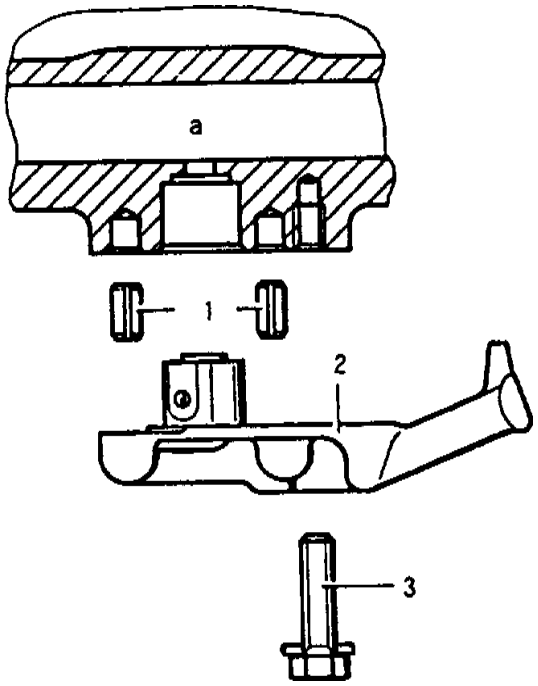

1 Fitting Sleeve
2 Oil Spray Nozzle
3 Combination Bolt ..... 10 Nm
A Oil Duct

Disassembly Procedure

1. Remove oil pan or crankshaft.
2. Loose the bolt and then remove the nozzle.

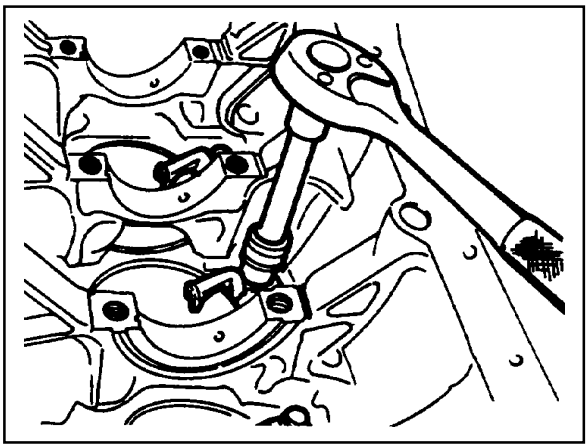

Downloaded from www.Manualslib.com manuals search engine

OIL PUMP

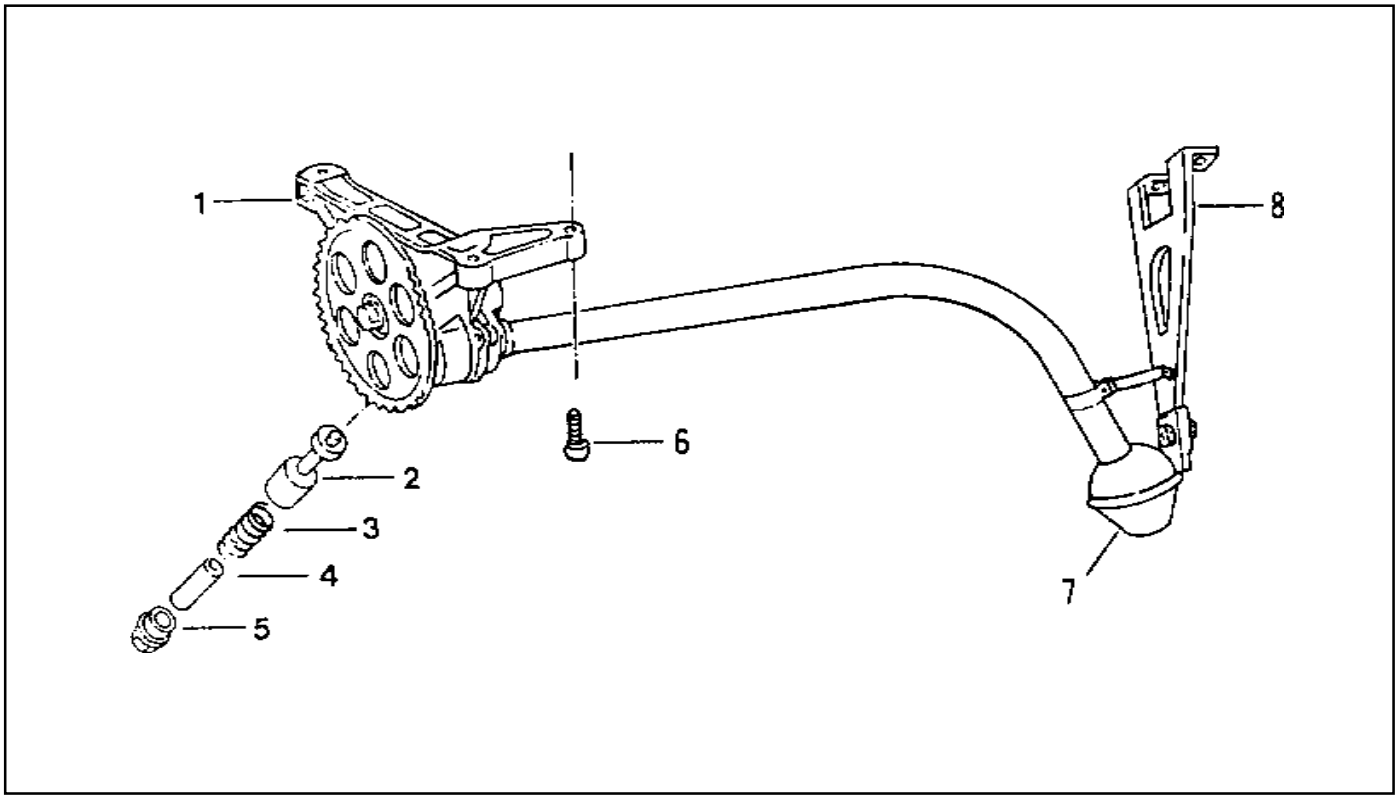

1 Oil Pump
2 Piston
3 Pressure Spring
4 Guide Pin
5 Screw Plug ..... 50 Nm
6 Combination Bolt ..... 25 Nm
7 Oil Strainer
8 Bracket

Disassembly Procedure

1. Remove the oil pan.
2. Unscrew the mounting bolt of spracket.

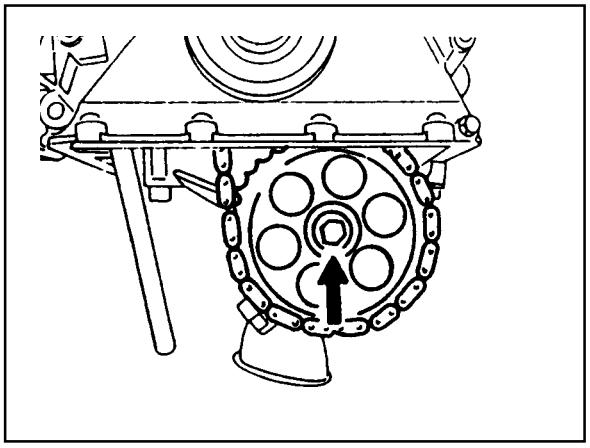

Downloaded from www.Manualslib.com manuals search engine

3. Unscrew the oil strainer bracket bolt.

Tightening Torque	10 Nm

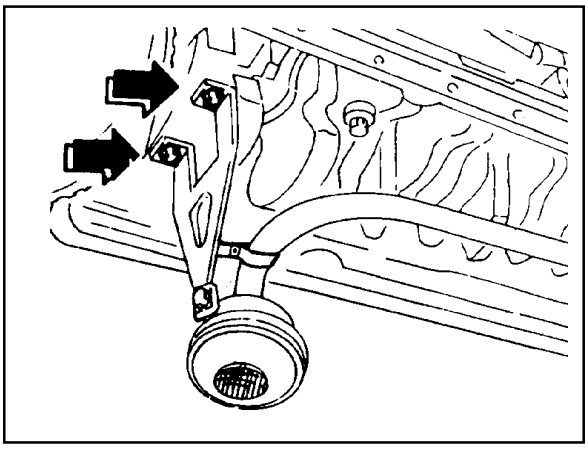

4. Remove the oil pump.

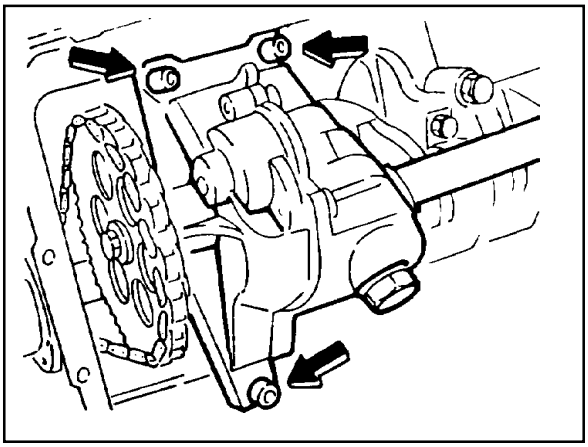

5. Unscrew the screw plug and remove the relief valve.
6. Installation should follow the removal procedure in the reverse order.

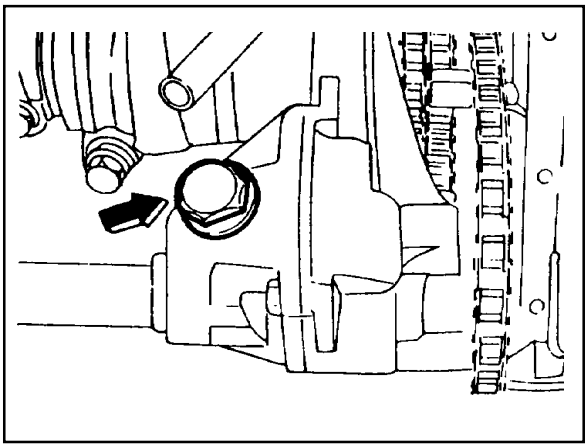

Downloaded from www.Manualslib.com manuals search engine

UNIT REPAIR

CYLINDER HEAD PRESSURE LEAKAGE TEST

Preceding Work : Removal of the cylinder head
Removal of the exhaust manifold
Removal of the valve

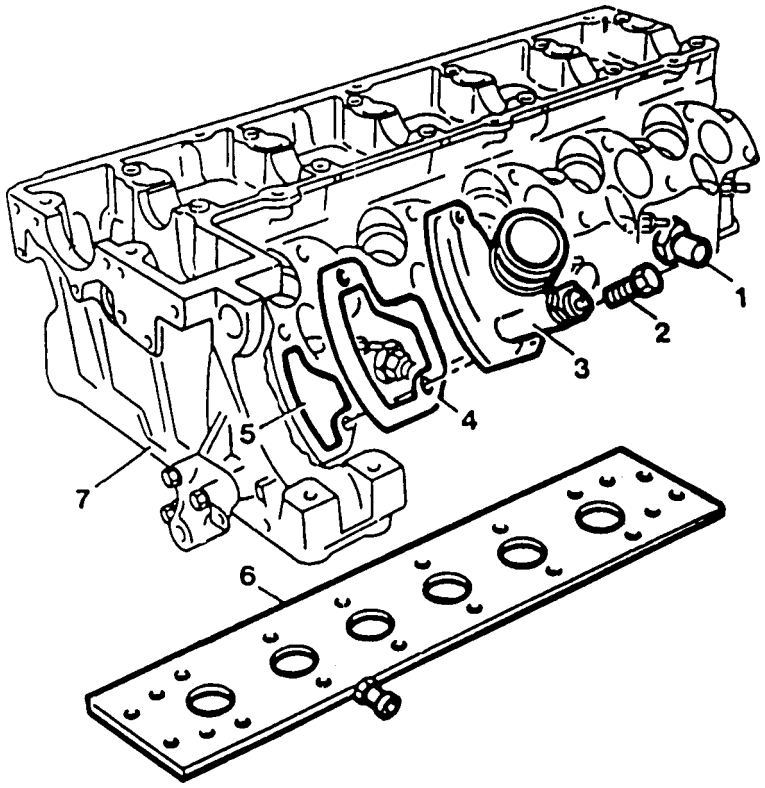

1 Feed Pipe
2 Bolt
3 Return Connection
4 Gasket ..... Replace
5 Coolant Gallery ..... Sealing
6 Pressure Measuring Plate ..... Completely tight to the cylinder head
7 Cylinder Head .....
Immerse with pressure measuring plate into warm water of approx. 60°C and pressurize with compressed airof 2 bar.

Notice

If air bubbles are seen, replace the cylinderhead.

Tools Required

115 589 34 63 00 Pressure Measuring Plate
601 589 00 25 00 Suspension Device

Downloaded from www.Manualslib.com manuals search engine

FACING CYLINDER HEAD MATING SURFACE

Preceding Work : Removal of prechamber
Cylinder head pressure leakage test

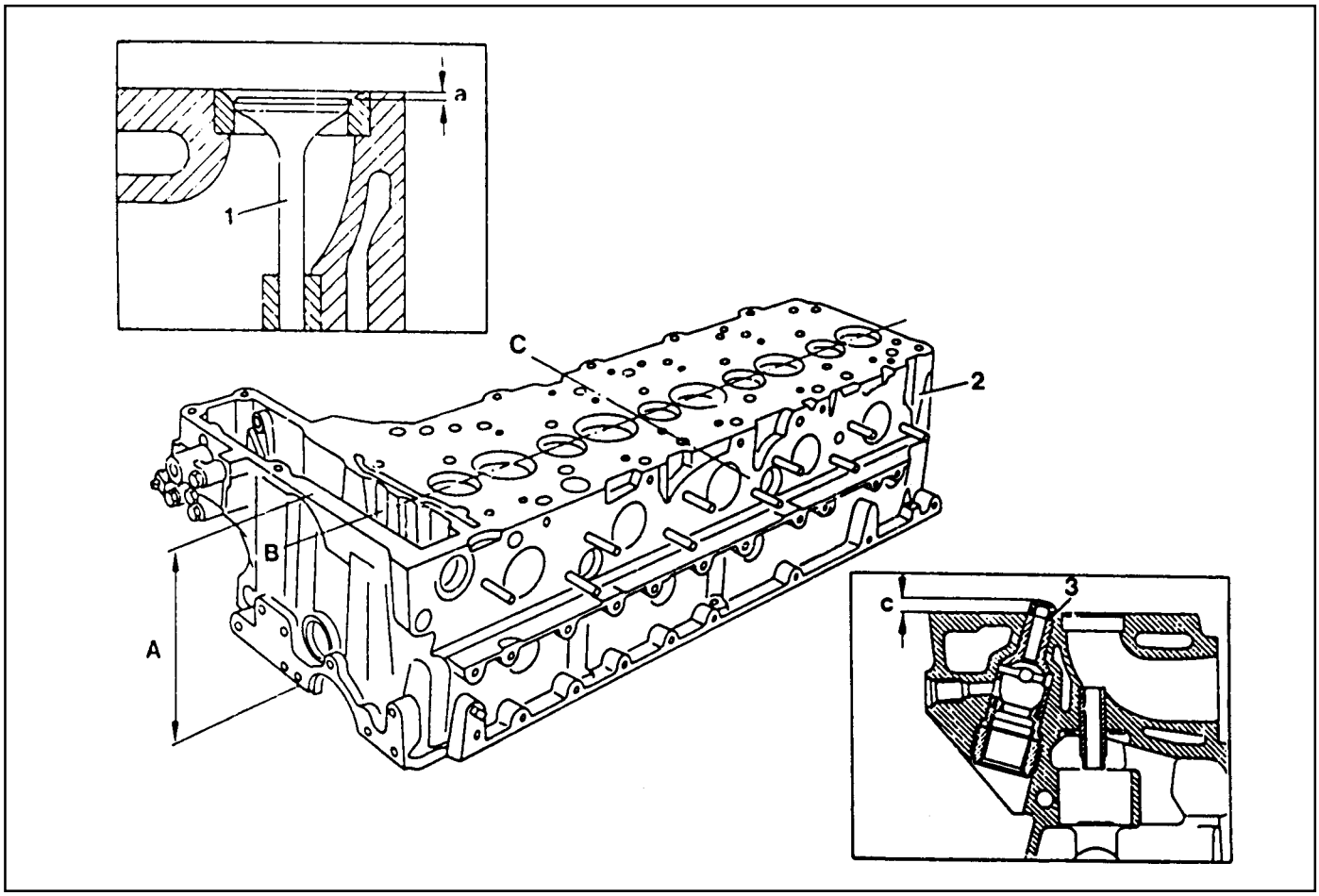

1 Valve
2 Cylinder Head
3 Prechamber
A Height of Cylinder Head
B Longitudinal Direction
C Transverse Direction
a Valve Arrears
b Prechamber Protrusion

Service Data

Height 'A' (Cylinder Head Surface - Cylinder Head Cover Surface)		142.9 - 143.1mm
Minimum Height After Machining		142.5mm
Permissible Unevenness of Parting Surface	In Longitudinal Direction	0.08mm
	In Transverse Direction	0.0mm
Permissible Variation of Parallelism (Longitud. Direction)		Max. 0.1mm
Peak-to-Valley Height		0.0017mm
Valve Arrears 'a'	Intake Valve	0.1 - 0.7mm
	Exhaust Valve	0.1 - 0.7mm
Prechamber Protrusion		7.6 - 8.1mm

Downloaded from www.Manualslib.com manuals search engine

Measurement Procedure

1. Measure height 'A'.

Limit	142.5 mm

Notice

If the height is less than 142.5mm, replace the cylinder head.

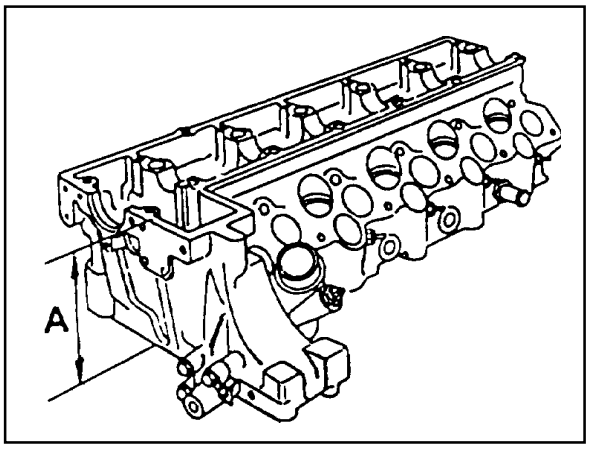

2. Insert the valve (1) and measure valve arrears 'a'.

Valve arrears 'a'	0.1 - 0.7 mm

Notice

If out of standard, machine the valve seat.

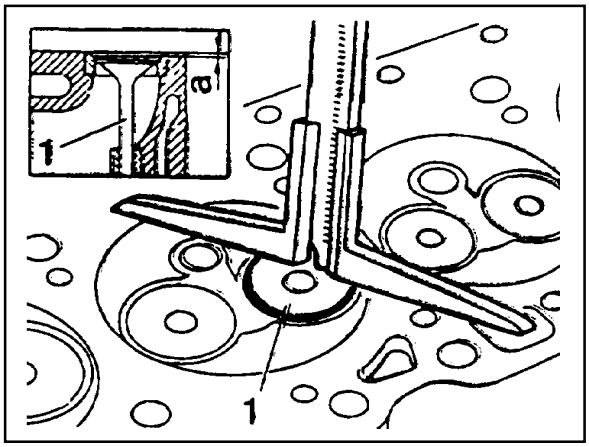

3. Install the prechamber and measure protrusion 'C'.

Protrusion 'C'	7.6 - 8.1mm

4. Assemble the engine and check the valve timing.

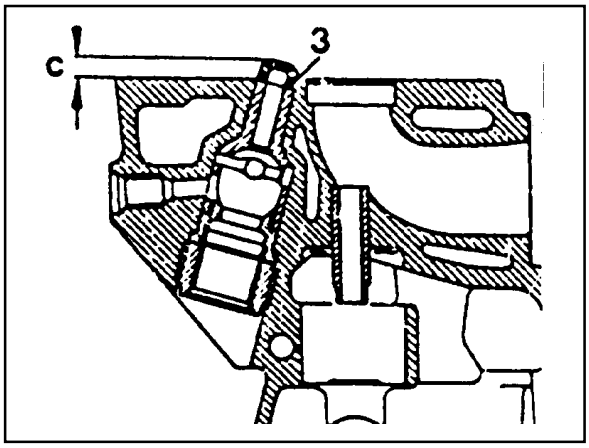

Downloaded from www.Manualslib.com manuals search engine

REPLACEMENT OF CRANKCASE CORE PLUG

Left

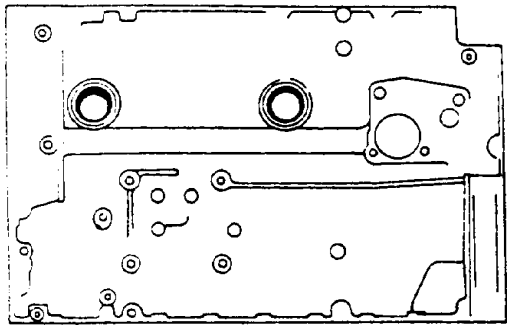

Core plug f34mm
OM661LA - 2EA
OM662LA - 3EA

Right

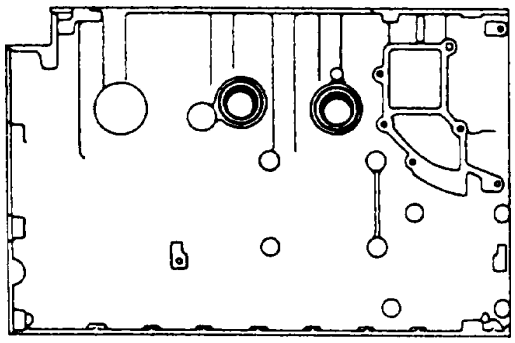

Core plug f34mm
OM661LA - 2EA
OM662LA - 3EA

Left

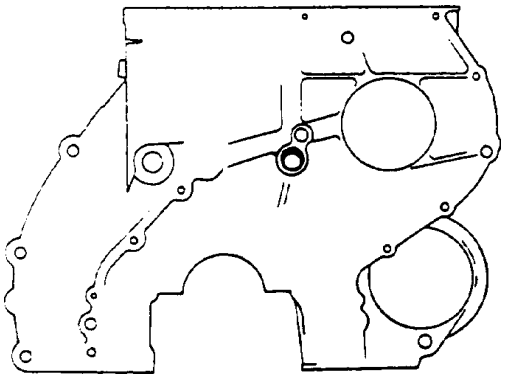

Core plug f17mm
OM661LA - 1EA
OM662LA - 1EA

Right

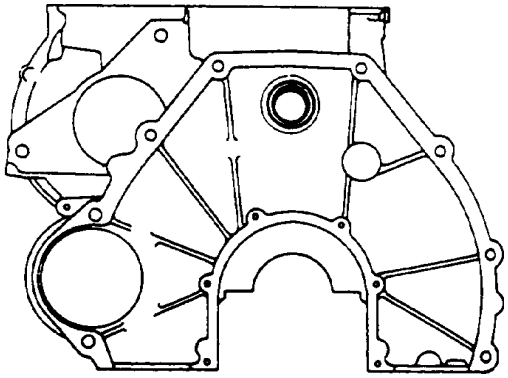

Core plug f34mm
OM661LA - 1EA
OM662LA - 1EA

Downloaded from www.Manualslib.com manuals search engine

Tools Required

102 589 00 15 00 Drift

102 589 12 15 00 Drift

Replacement Procedure

1. Completely drain the coolant.
2. Remove any parts which impede access.
   (Example : transmission, injection pump)
3. Place the screwdriver to the deepdrawn edge of the core plug and pull forward and then rotate 90°.

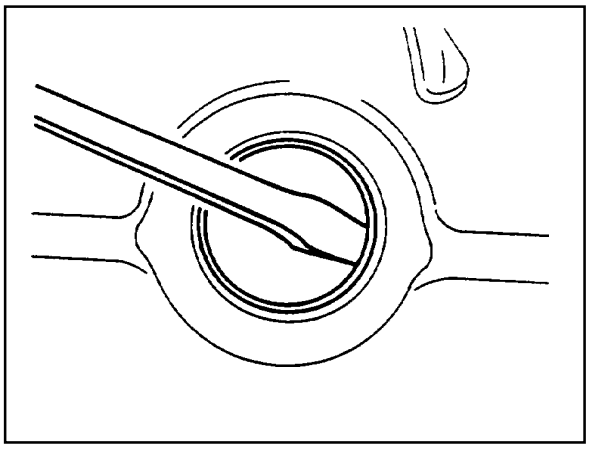

4. Pull out the core plug with pliers.

5. Thoroughly clean the sealing surface and apply Loctite 241.
6. Install the new core plug by using a drift.

Drift 102 589 00 15 00 (F34)
Drift 102 589 12 15 00 (F17)

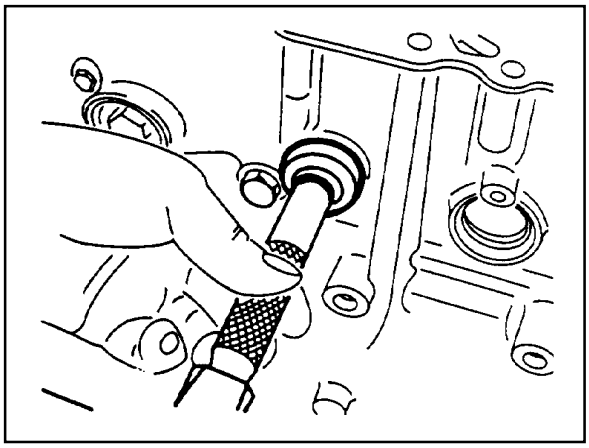

7. Install the removed parts and fill the coolant.

   Notice

   The adhesive must be allowed to harden for about 45 minutes before filling of coolant.
8. Warm up the engine and check the coolant for leaks.

Downloaded from www.Manualslib.com manuals search engine

FACING CRANKCASE CONTACTING SURFACE

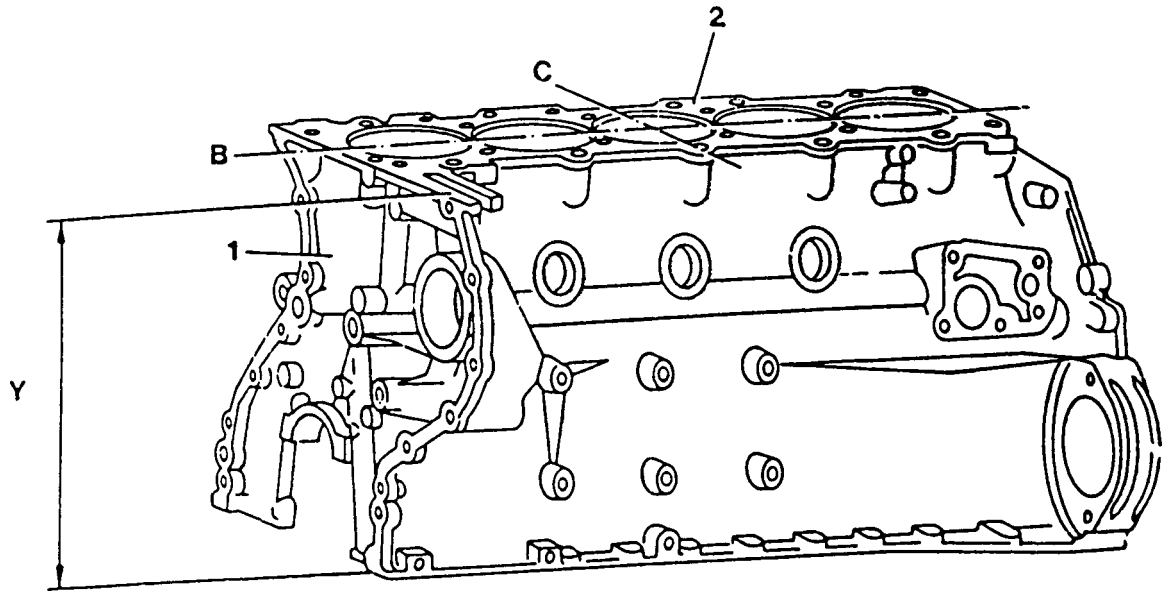

1 Crankcase
2 Crankcase Contacting Surface

Y Height (crankcase upper surface - crankcase lower surface)

B Longitudinal Direction
C Transverse Direction
H Chamfer Height
b Chamfer Angle

Service Data

Height 'Y'		Min. 299.62 mm
Permissible unevenness of contacting surface	In longitudinal direction (B)	0.06 mm
	In transverse direction (C)	0.06 mm
Permissible roughness upper contacting surface		0.0006 - 0.0016 mm
Permissible variation of parallelism of crankcase upper surface to lower surface in longitudinal direction		0.05 mm
Piston protrusion at TDC to crankcase upper surface	Max.	0.965 mm
	Min.	0.735 mm

Downloaded from www.Manualslib.com manuals search engine

OIL GALLERY STEEL BALL

Preceding Work : Removal of cooling fan
Removal of the coolant pump housing
Removal of the flywheel and driven plate

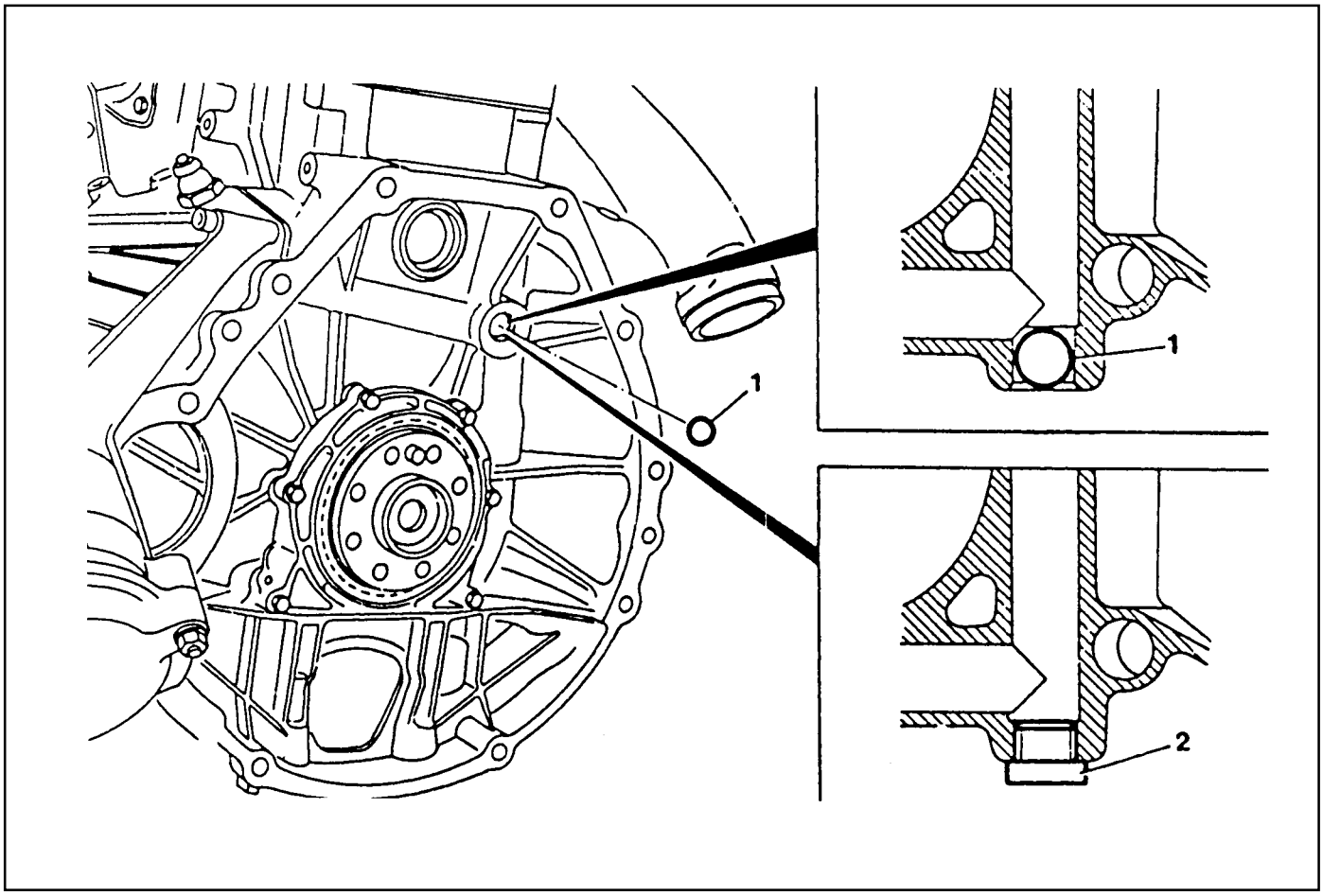

1 Steel Ball f15mm

2 Screw Plug M16 x 1.5 ..... Loctite 241,50Nm

Notice

The screw plug (2) has to be installed as a repair solution if the steel ball (1) is leaking.

Downloaded from www.Manualslib.com manuals search engine

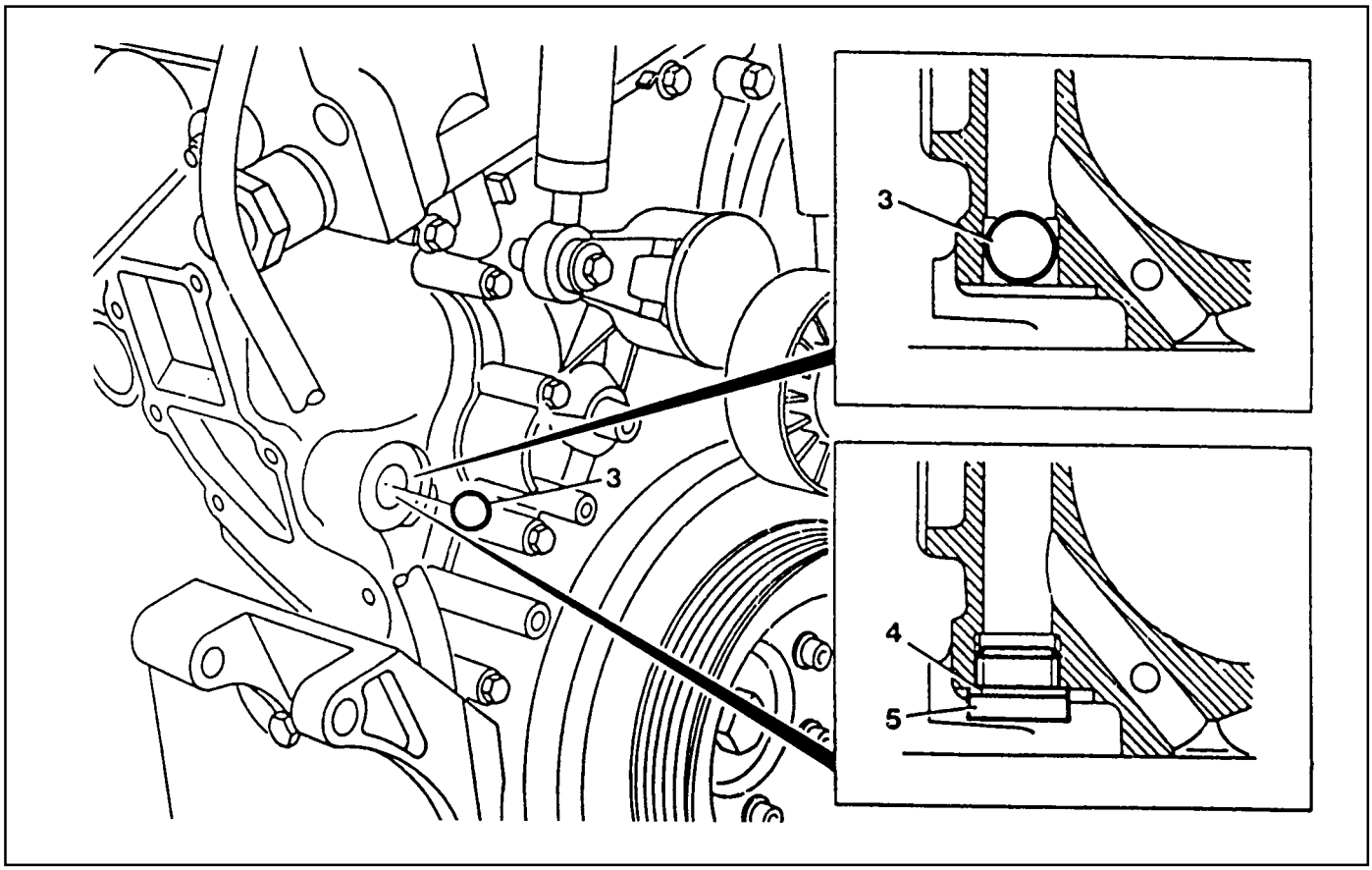

3	Steel Ball	ƒ17mm	5	Screw Plug M18 x 1.5	50Nm
4	Seal				

Notice

The seal (4) and screw plug (5) have to be installed as a repair solution if the steel ball (3) is leaking.

Tools Required

601 589 08 15 00 Drift

Downloaded from www.Manualslib.com manuals search engine

Removal & Installation Procedure

1. Remove the timing case cover.
2. By inserting a round bar (6) approx. 0.7m from the back to the front side through the oil gallery, knock out the steel balls (1,3).

   Notice

   Be careful not to damage the bores of the steel balls.

   6 Shop-made tool

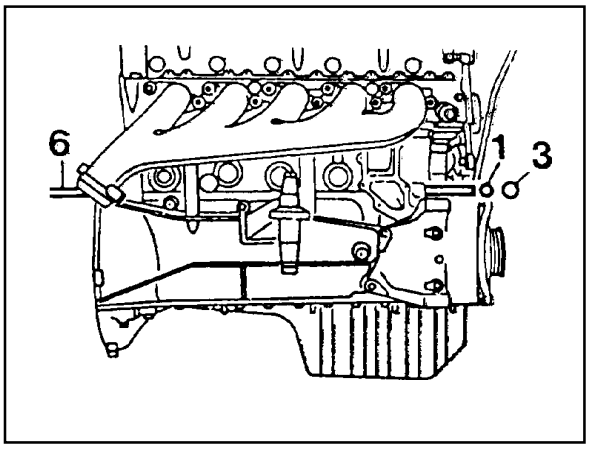

3. Thoroughly clean the bores of steel balls.
4. Place the steel ball (3) onto the drift (7) with a little grease and position to the bore and then tap until the drift stops.

   Drift 601 589 08 15 00

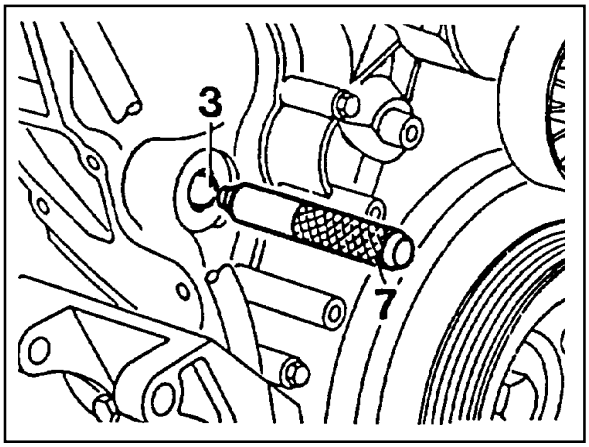

5. Place the steel ball (1) onto the drift (7) with a little grease and position to the bore and then tap until the drift stops.

   Drift 601 589 08 15

6. Warm up the engine and check the oil for leaks.

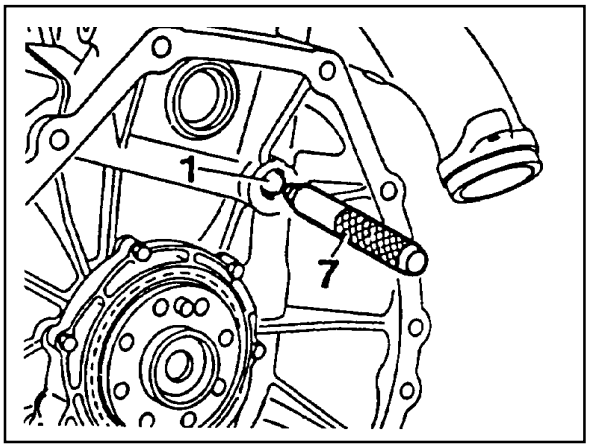

Downloaded from www.Manualslib.com manuals search engine

Installation of screw plug

Notice

If steel ball leaks again, install the screw plug.

1. Remove the steel ball.
2. Tap thread into the bores of the oil gallery.

Notice

Front bore : M18 ´ 1.5, depth 10mm

Rear bore : M16 ´ 1.5, depth 14mm

3. Thoroughly clean the oil gallery.
4. Tighten the front plug (5) with seal (4).

Tightening Torque	50 Nm

5. Apply Loctite 241 and then tighten the rear plug (2).

Tightening Torque	50 Nm

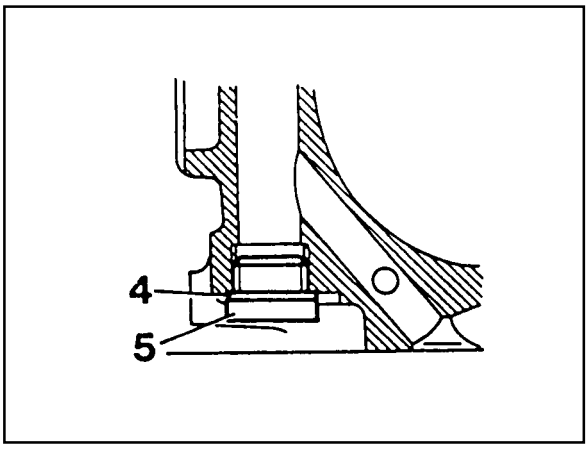

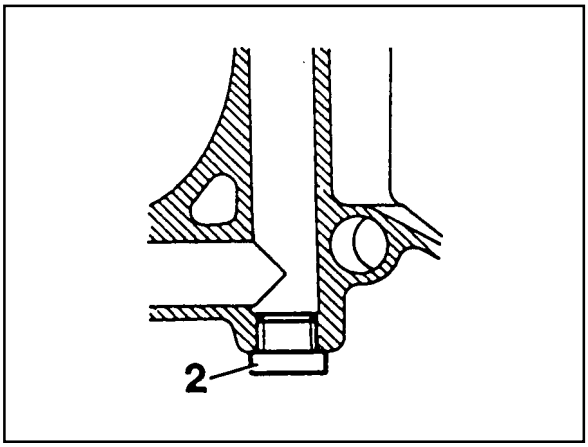

Downloaded from www.Manualslib.com manuals search engine

CYLINDER BORE MEASUREMENT

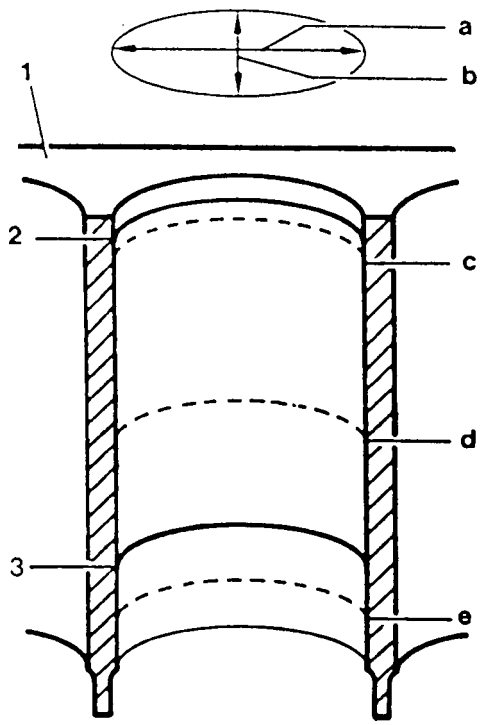

a Longitudinal Direction
b Transverse Direction
c, d, e. Measuring Point

1 Crankcase Contacting Surface
2 TDC of 1st Piston Ring
4 BDC of Ring

Service Data

Standard size	Code letter 'A'	89.000 - 89.006mm
	Code letter 'X'	89.006 - 89.012mm
	Code letter 'B'	89.012 - 89.018mm
Wear limit in direction of travel and in transverse direction	-	Max. 0.20mm
	When new	0.01mm
Permissible deviation of cylinder shape	Wear limit	0.05mm
Honing angle	-	50° ± 10°

Downloaded from www.Manualslib.com manuals search engine

SECTION 1D1

M162 ENGINE COOLING

CAUTION: Disconnect the negative battery cable before removing or installing any electrical unit or when a tool or equipment could easily come in contact with exposed electrical terminals. Disconnecting this cable will help prevent personal injury and damage to the vehicle. The ignition must also be in LOCK unless otherwise noted.

TABLE OF CONTENTS

Specifications 1D1-1
General Specifications 1D1-1
Fastener Tightening Specifications 1D1-2
Special Tools 1D1-3
Special Tools Table 1D1-3
Diagnosis 1D1-4
System Leakage Test 1D1-4
Maintenance and Repair 1D1-5
On-Vehicle Service 1D1-5
Coolant Drain and Fill Up 1D1-5
Coolant Connection Fitting 1D1-7
Water Pump 1D1-8
Thermostat 1D1-10
Oil Cooler Pipe Line 1D1-11
Cooling Fan and Viscous Clutch 1D1-12
Cooling Fan Shroud 1D1-14
Radiator 1D1-15

SPECIFICATIONS

GENERAL SPECIFICATIONS

Application		Description
Cooling Type		Water Cooling Forced Circulation
Radiator	Circulation Type	Double Cross Flow
	Radiation Capability	70,000 kcal/h
Dimension(Width´Height´Thickeness)		580 x 482 x 45 mm
Cooling Fan		ƒ460, Six Blades
Anti-Freeze Agent		ALUTEC - P78
Mixing Ratio of Anti-Freeze Agen with Water (Anti-Freeze Agent : Water)		50 : 50
Coolant Capacity		11.3 L
Reservoir Capacity		3.4 L
Cap Operating Pressure (Reservoir Tank Pressure Cap)		1.4 bar

Downloaded from www.Manualslib.com manuals search engine

FASTENER TIGHTENING SPECIFICATIONS

Application	N·m
Coolant Drain Plug	30
Engine Hanger Bracket and Coolant Outlet Port Bolt	22.5 - 27.5
Thermostat Cover Bracket Bolt	9 - 11
Oil Cooler Pipe Line Bolt	9 - 11
Cooling Fan Bolt	9 - 11
Viscous Clutch Bolt	40.5 - 49.5
Automatic Transmission Oil Cooling Hose Bolt	3 - 7
Cooling Fan Shroud Bolt	3 - 7

Downloaded from www.Manualslib.com manuals search engine

SPECIAL TOOLS

SPECIAL TOOLS TABLE

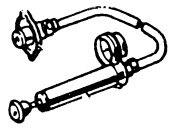	**124 589 15 21 00** **Tester**
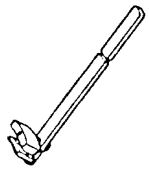	**603 589 00 40** **Counter Holder**

Downloaded from www.Manualslib.com manuals search engine

DIAGNOSIS

SYSTEM LEAKAGE TEST

Tools Required

124 589 15 21 00 Tester

Test Procedure

1. Loosen the cap a little and release pressure and remove the cap.

   Notice

   For the risk of scalding, cap must not be opened unless the coolant temperature is below 90°C.

2. Fill coolant up to upper edge (arrow) of reservoir.

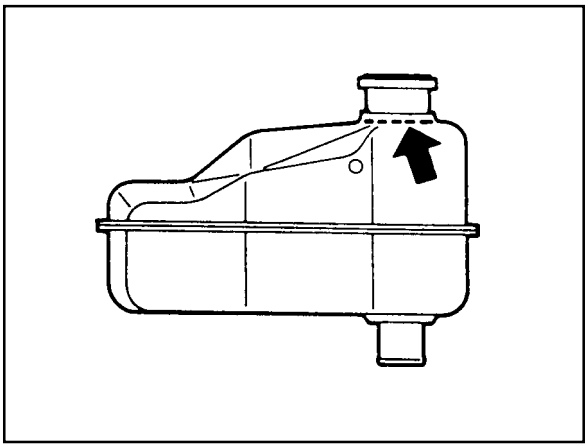

3. Connect the special tool to the reservoir filler cap and apply 1.4 bar of pressure.

   Tester 124 589 15 21 00

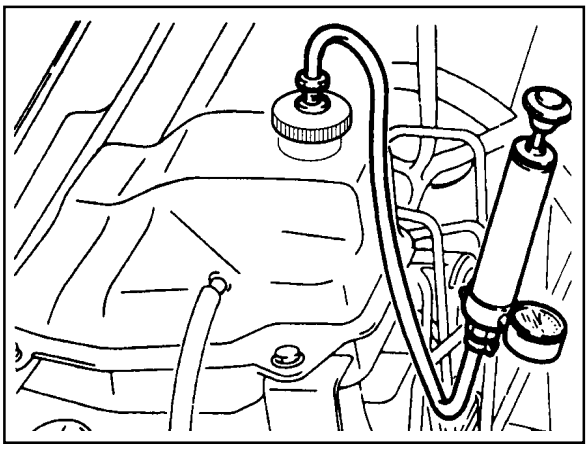

4. If the pressure on the tester drops, check leakage at the all coolant hoses and pipes and each connections. Replace or retighten if necessary.

Downloaded from www.Manualslib.com manuals search engine

MAINTENANCE AND REPAIR

ON-VEHICLE SERVICE

COOLANT DRAIN AND FILL UP

Draning & Filling up Procedure

1. Loosen the cap a little and release pressure and remove the cap.

   Notice

   For the risk of scalding, the cap must not be opened unless the coolant temperature is below 90°C.

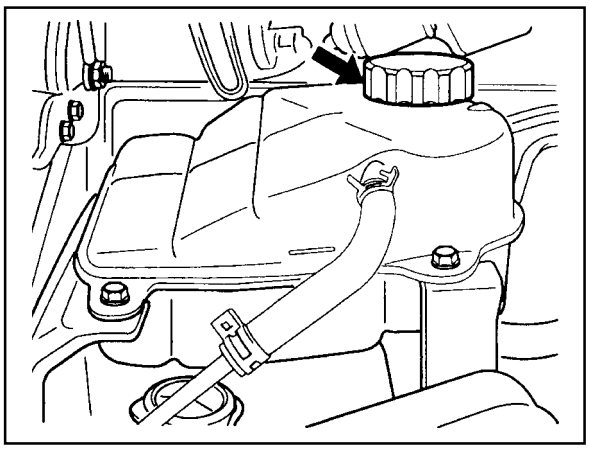

2. Loosen the radiator lower drain cock and drain the coolant.

   Notice

   Collect coolant by using a proper container.

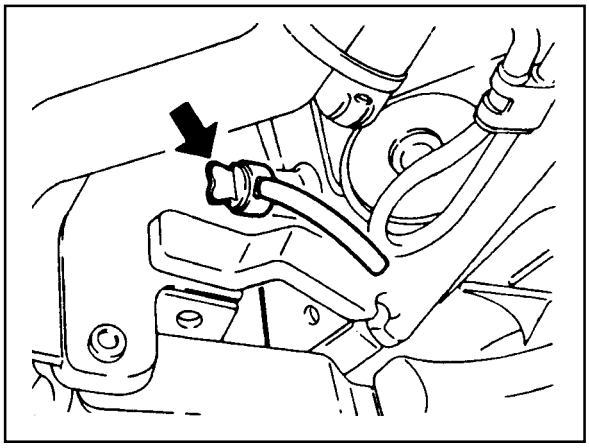

3. Drain the coolant from the crankcase by inserting a hose (dia. 14mm) onto the drain bolt on the side of crankcase (exhaust manifold) and by loosening the plug.

   Notice

   - Just loosen the drain plug to drain the coolant and do not remove the plug completely.
   - Collect coolant by using proper container.

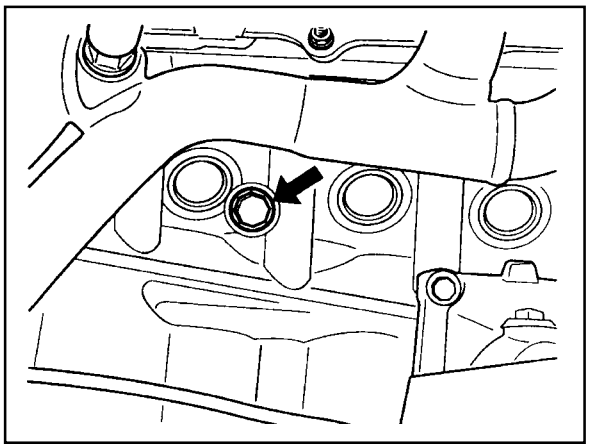

4. After complete draining of the coolant, remove the hose connector to drain plug and reinstall the drain plug.

   Installation Notice

Tightening Torque	30 Nm

5. Tighten the radiator lower drain cock.

Downloaded from www.Manualslib.com manuals search engine

6. Remove the de-aeration hose clamp in the coolant pump and remove the de-aeration hose.
7. Fill up the coolant through the coolant reservoir tank.

   Notice

   - Match the anti-freeze and the water ratio to 50 : 50.
   - Supplement the coolant until the coolant overflows to the deaeration hose.

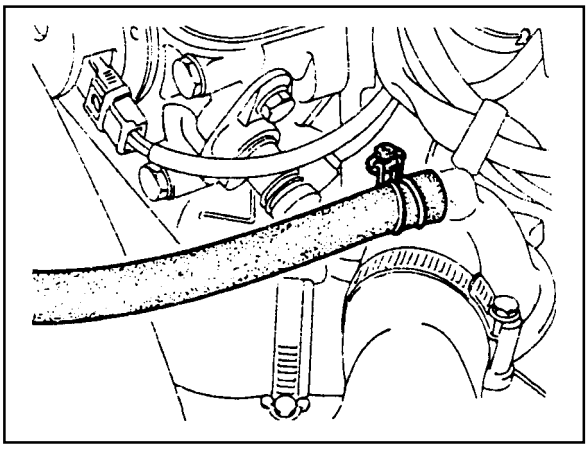

8. Insert the de-aeration hose and completely tighten the clamp.
9. Check the coolant level in the coolant reservoir tank.
10. Warm up(until thermostat is opened) the engine and recheck the coolant level in the reservoir tank. and fill up the coolant if necessary.

Downloaded from www.Manualslib.com manuals search engine

COOLANT CONNECTION FITTING

Preceding Work : Removal of cooling fan shroud

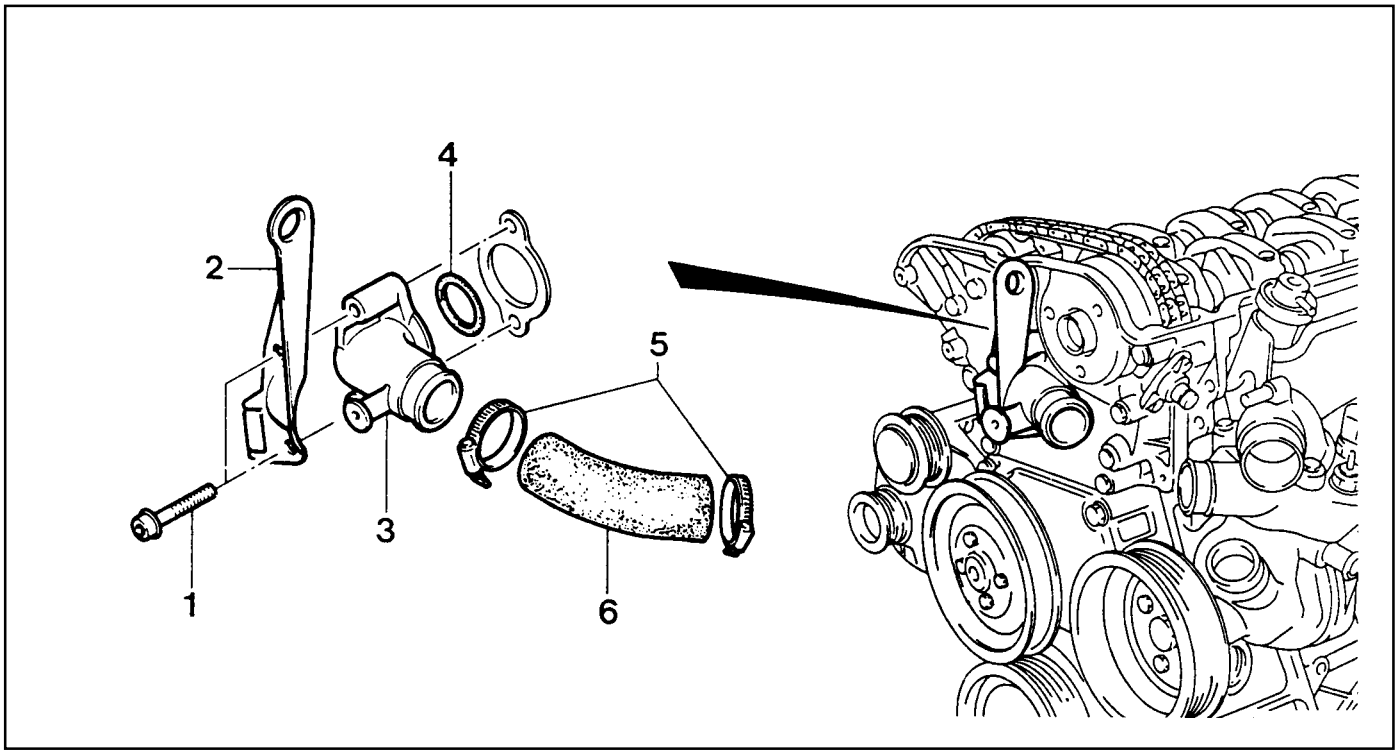

1 Bolt (M8 X 100, 2 pieces) ..... 22.5-27.5 Nm
2 Engine Hanger Bracket
3 Coolant Outlet Port
4 O-ring
5 Hose Mounting Clamp
6 Hose

Removal & Installation Procedure

1. Drain coolant from the radiator.
2. Remove the hose mounting clamp (5) and disconnect the coolant hose (6).
3. Remove the two bolts (1), the engine hanger bracket (2) and coolant outlet port (3).

   Installation Notice

Tightening Torque	22.5 - 27.5 Nm

   Replace the O-ring with new one.
4. Installation should follow the removal procedure in the reverse order.
5. Fill up the coolant as specified.
6. Check the leaks in the cooling system.

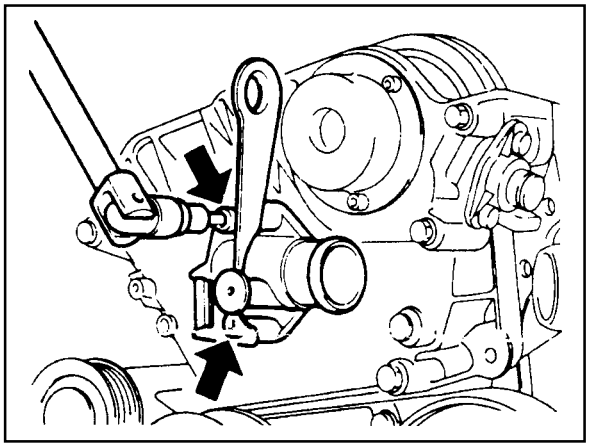

Downloaded from www.Manualslib.com manuals search engine

WATER PUMP

Preceding Work : Removal of V-belt
Removal of air admission housing

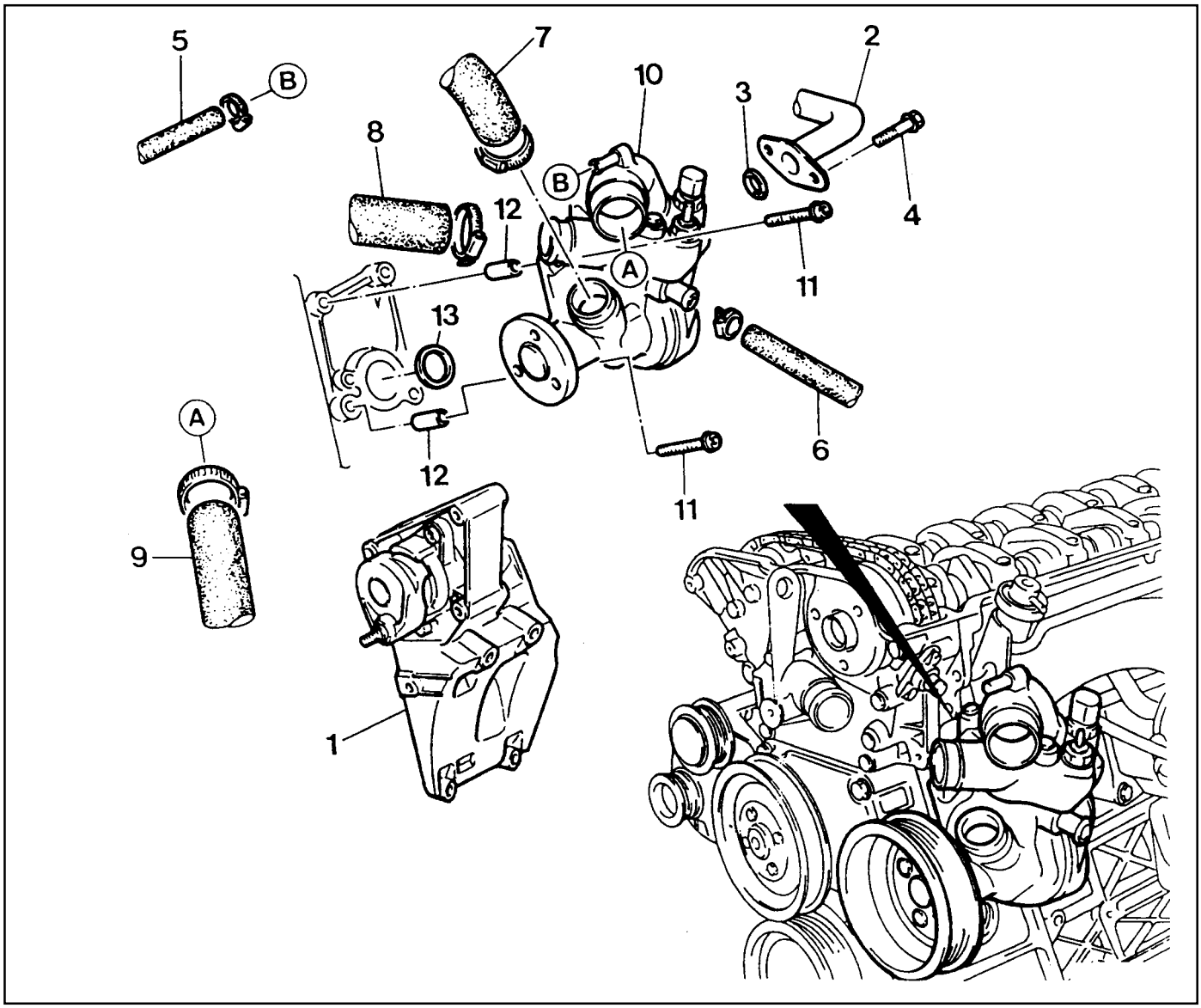

1 Air Admission Housing
2 Oil Cooler Pipe Line
3 Seal ..... Replace
4 Bolt ..... 9-11 Nm
5 Coolant Hose
6 Coolant Hose
7 Outlet Coolant Hose
8 Coolant Hose
9 Inlet Coolant Hose
10 Coolant Pump
11 Bolt ..... 21 Nm
12 Dowel Sleeve
13 Seal ..... Replace

Downloaded from www.Manualslib.com manuals search engine

Removal & Installation Procedure

1. Drain the coolant.
2. Disconnect the coolant pump wire connector.
3. Loosen the hose clip and dsconnect all hoses from the coolant pump
4. Remove the coolant line bolts (4) and then remove the coolant line (2).

   Installation Notice

Tightening Torque	9 - 11 Nm

   Notice

   Replace the seal (3).

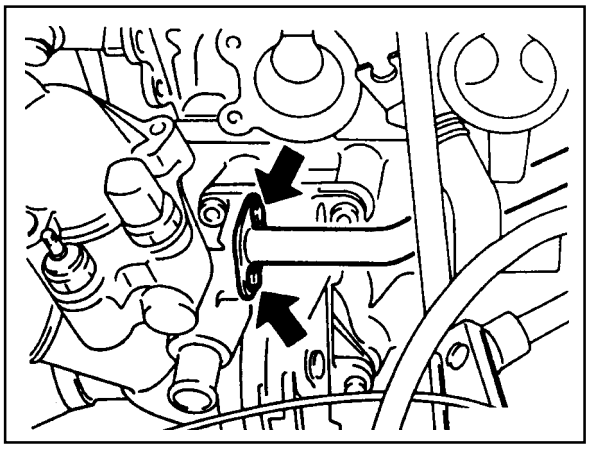

5. Remove the mounting bolts (11) and carefully pull out coolant pump (10).

   Installation Notice

Tightening Torque	21 Nm

   Notice

   Replace the seal (13).

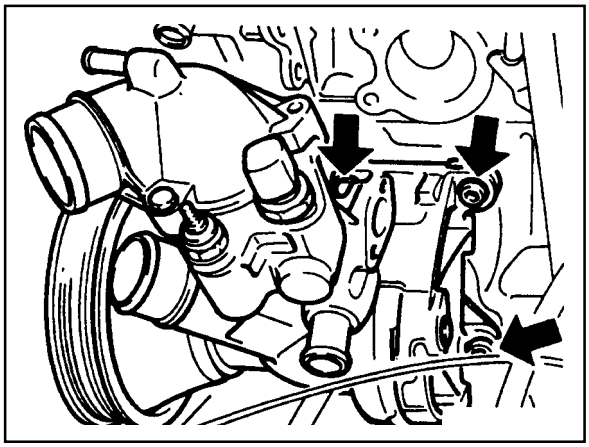

6. Installation should follow the removal procedure in the reverse order.
7. Fill up coolant.
8. Do coolaing system leakage test

Downloaded from www.Manualslib.com manuals search engine

THERMOSTAT

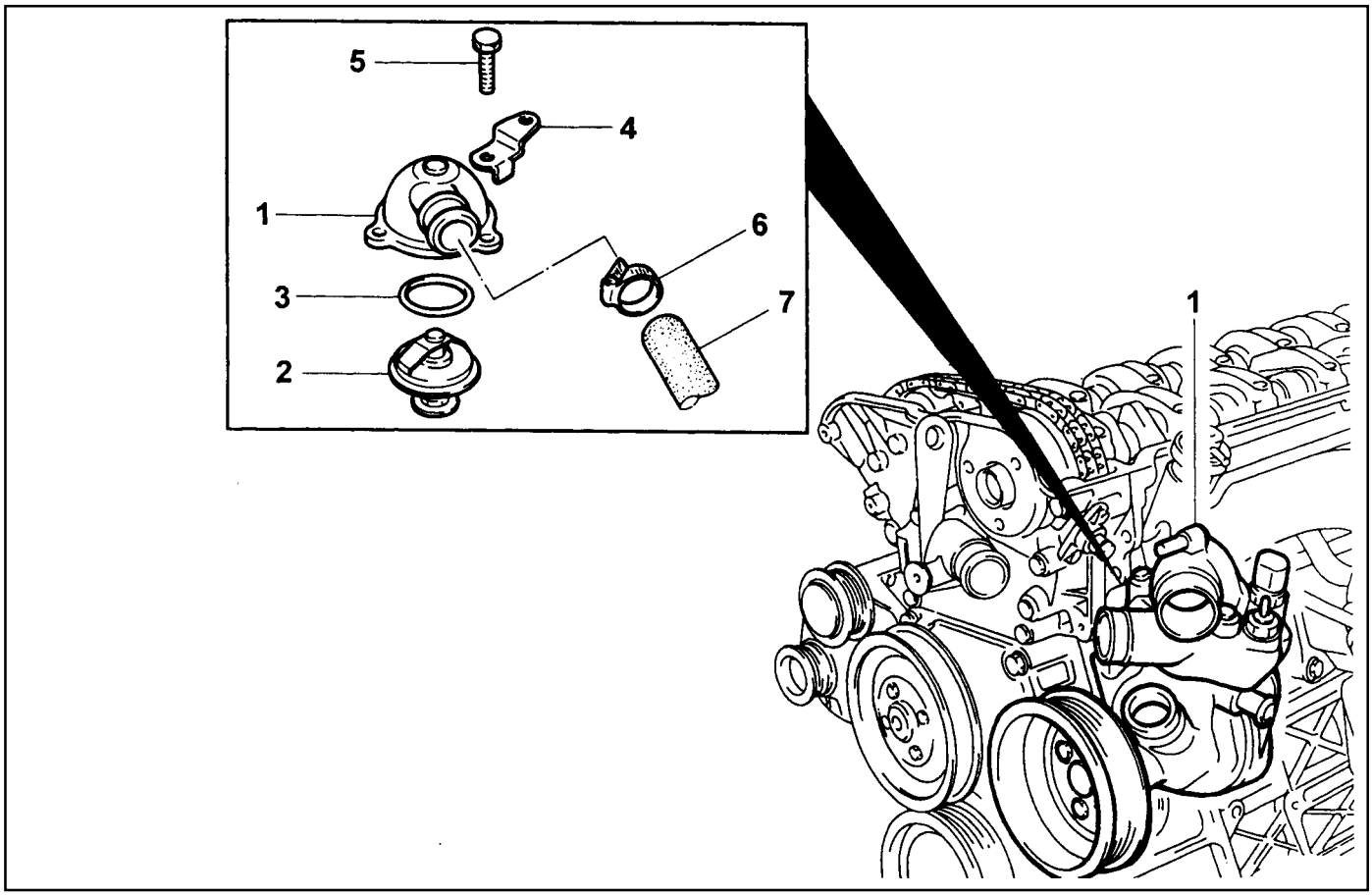

1 Thermostat Cover
2 Thermostat
3 O-ring
4 Thermostat Cover Bracket
5 Bolt (M6 X 25, 3 pieces) ..... 9-11 Nm
6 Hose Mounting Clamp
7 Heater Hose

Removal & Installation Procedure

1. Drain the coolant from the radiator.
2. Loosen the hose mounting clamp (6) and remove the heater hose (7).
3. Unscrew the three bolts (5) and remove the thermostat cover bracket, thermostat cover and the thermostat in order.

   Installation Notice

Tightening Torque	9 - 11 Nm

   Do not separate the thermostat cover and thermostat.
4. Replace the O-ring if necessary.
5. Check the leakage in the cooling system.

Downloaded from www.Manualslib.com manuals search engine

OIL COOLER PIPE LINE

Preceding Work : Removal of upper intake manifold

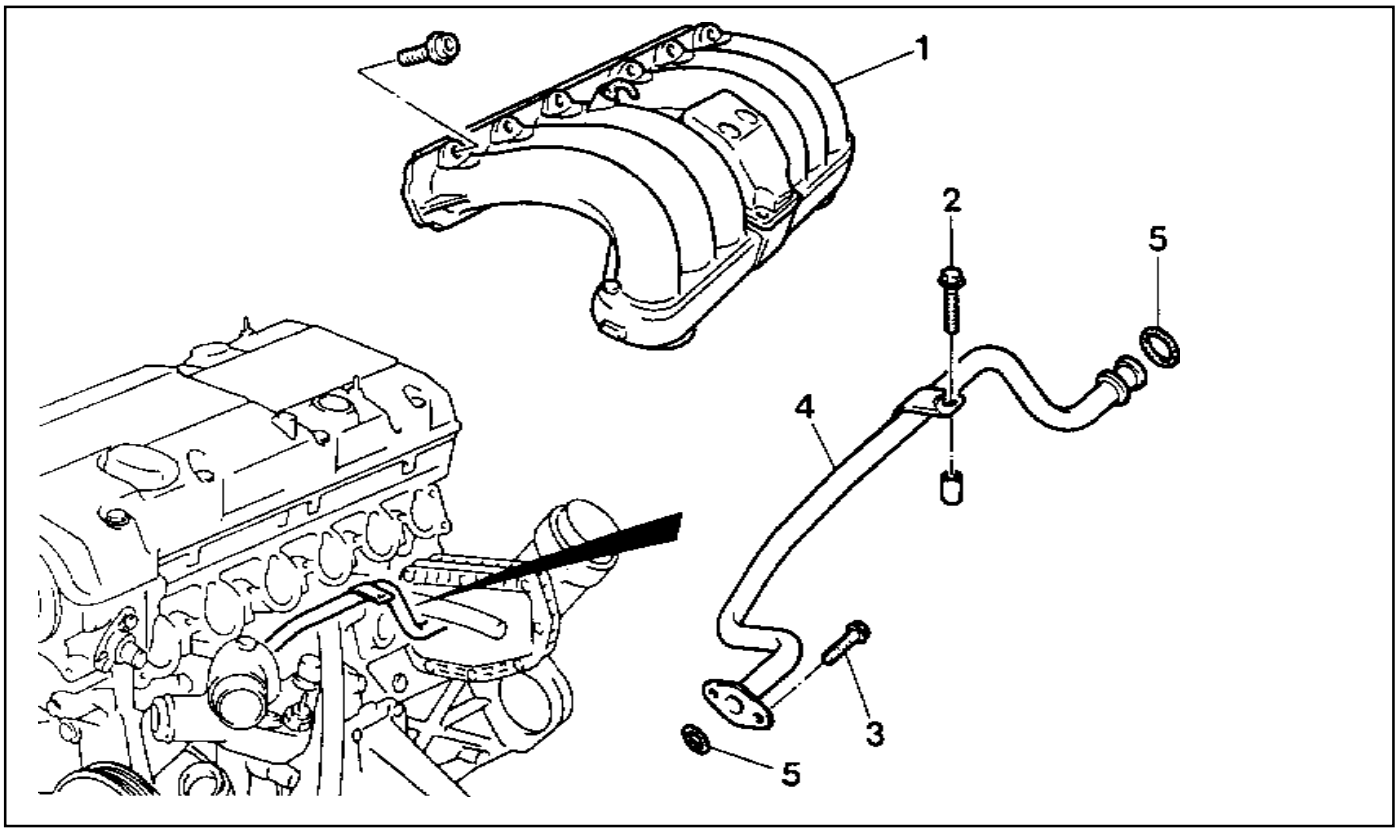

1 Upper Intake Manifold
2 Bolt (M6 X 35, 1 piece) ..... 9-11 Nm
3 Bolt (M6 X 16, 2 pieces) ..... 9-11 Nm
4 Oil Cooler Pipe Line
5 O-ring ..... Replace

Removal & Installation Procedure

1. Drain the coolant.
2. Unscrew the bolts (2, 3) and remove the oil cooler pipe line (4). Replace the O-ring with new one.

   Installation Notice

Tightening Torque	9 - 11 Nm

3. Installation should follow the removal procedure in the reverse order.
4. Fill up the coolant as specified.
5. Check the leaks in the cooling system.

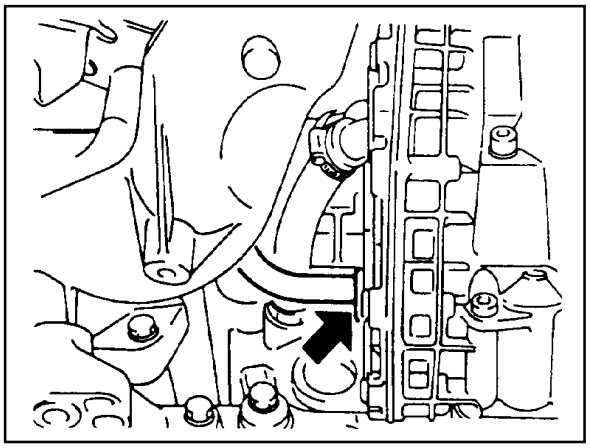

Downloaded from www.Manualslib.com manuals search engine

COOLING FAN AND VISCOUS CLUTCH

Preceding Work : Removal of cooling fan shroud

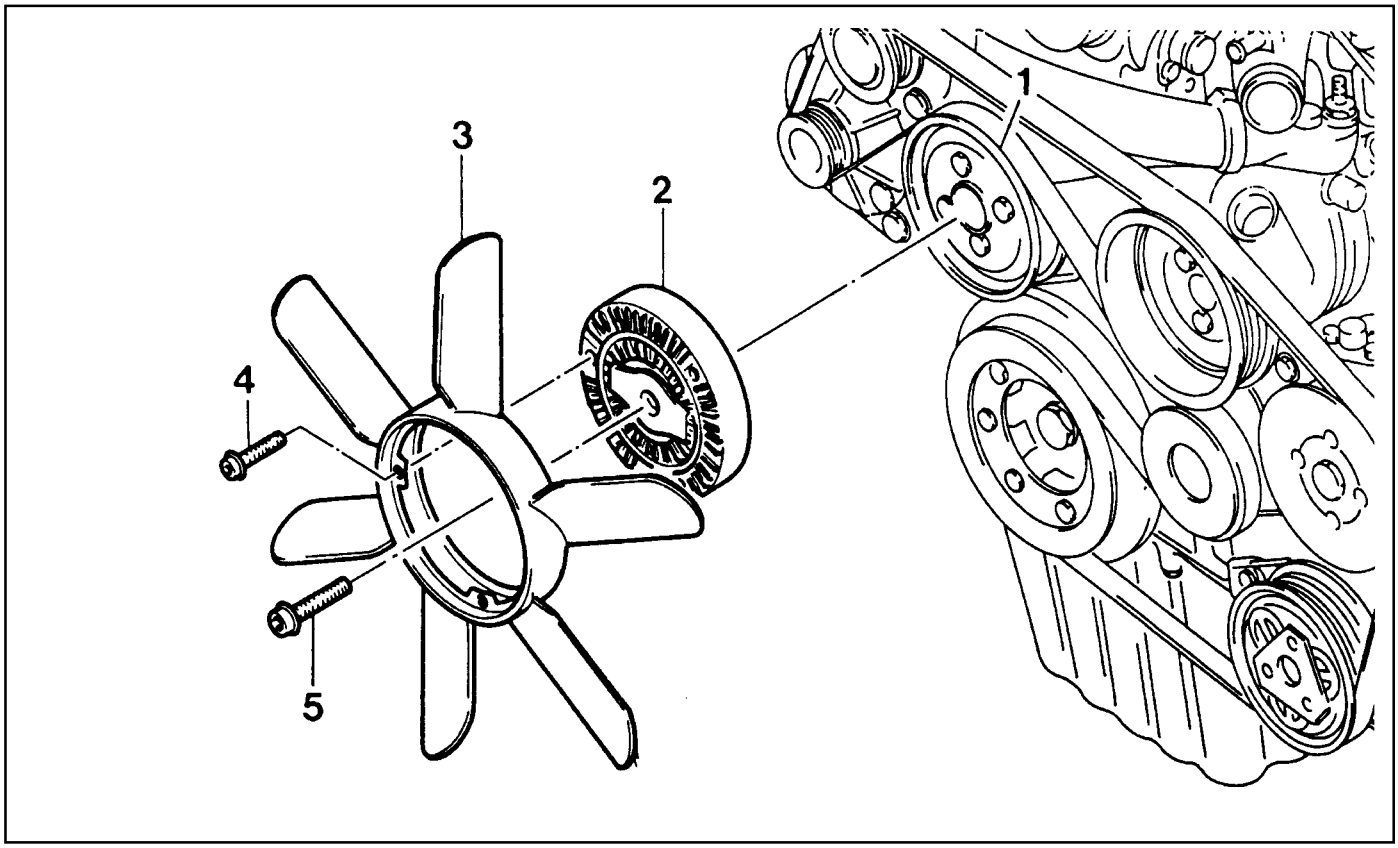

1 Cooling Fan Pulley
2 Viscous Clutch
3 Cooling Fan
4 Bolt (M6 X 12, 4 pieces) ..... 9-11 Nm
5 Bolt (M10 X 45, 1 piece) ..... 40.5-49.5 Nm

Downloaded from www.Manualslib.com manuals search engine

Tools Required

603 589 00 40 00 Counter Holder

Removal & Installation Procedure

1. Hold the cooling fan pulley using the counter holder (special tool : 603 589 00 40 00) and remove the cooling fan after unscrewing the four bolts (4).

   Installation Notice

Tightening Torque	9 - 11 Nm

2. Remove the bolt (5) from the viscous clutch and remove the viscous clutch from the cooling fan pulley.

   Installation Notice

Tightening Torque	40.5 - 49.5 Nm

3. Installation should follow the removal procedure in the reverse order.

Downloaded from www.Manualslib.com manuals search engine

COOLING FAN SHROUD

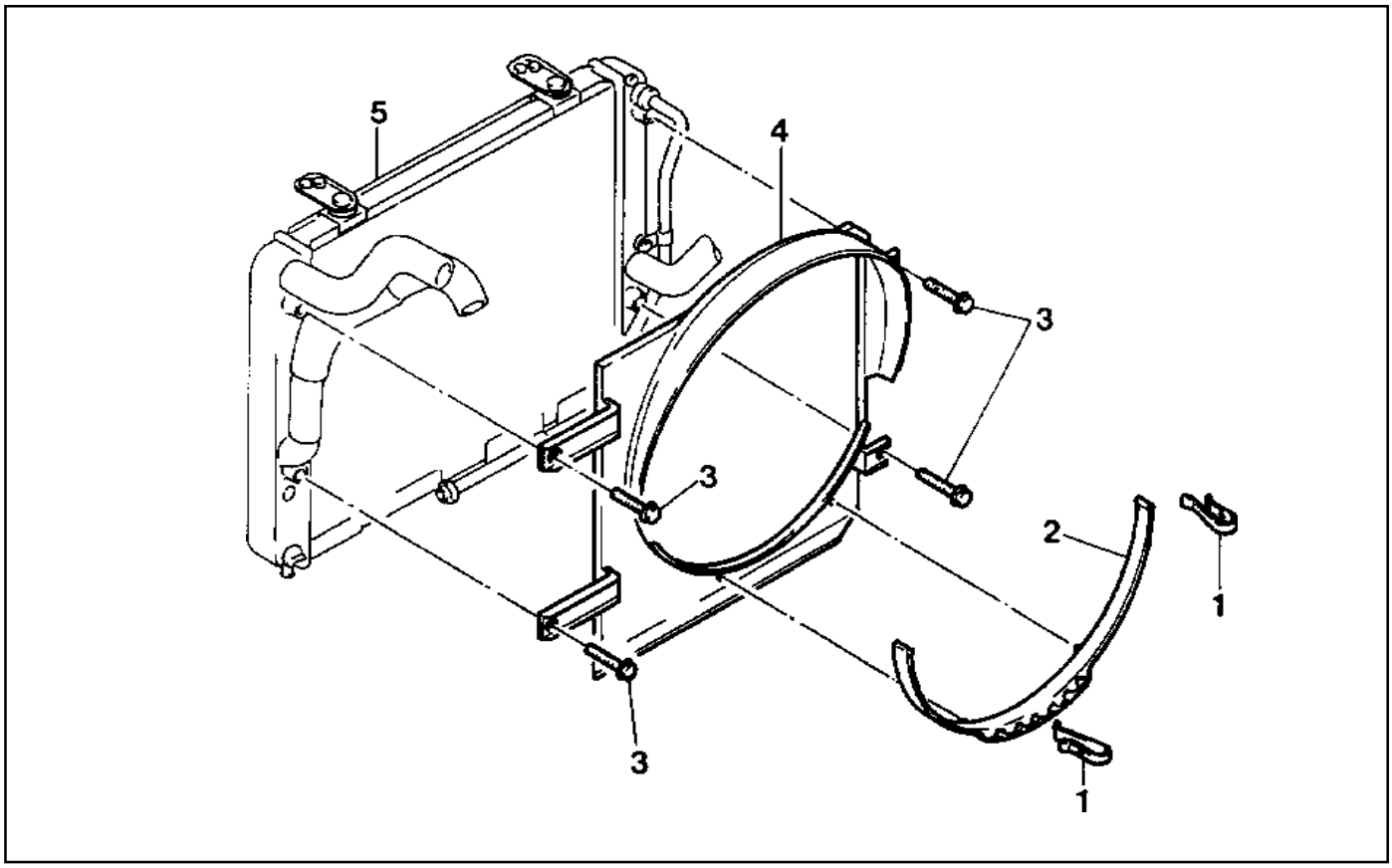

1 Clip
2 Lower Fan Shroud
3 Bolt
4 Fan Shroud Assembly
5 Radiator

Removal & Installation Procedure

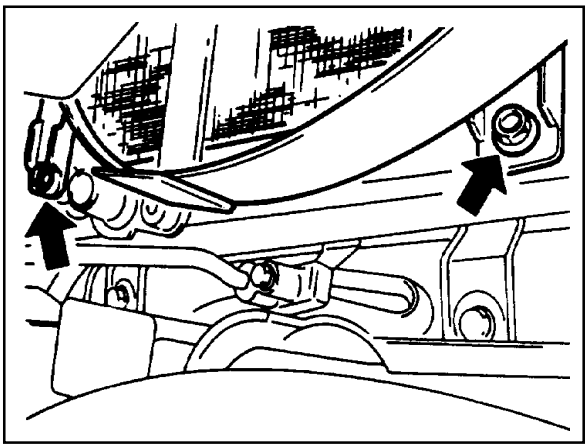

1. Pull out the 2 clips (1) from the fan shroud assembly.
2. Remove the lower fan shroud (2).

   Notice

   For installation, exactly align the lower fan shroud pin into the hole of the fan shroud assembly (4) and insert the clips.
3. Remove the bolts (3) and then remove the cooling fan shroud assembly (4).

   Installation Notice

Tightening Torque	7 Nm

4. Installation should follow the removal procedure in the reverse order.

Downloaded from www.Manualslib.com manuals search engine

RADIATOR

Preceding Work : Removal of cooling fan shroud

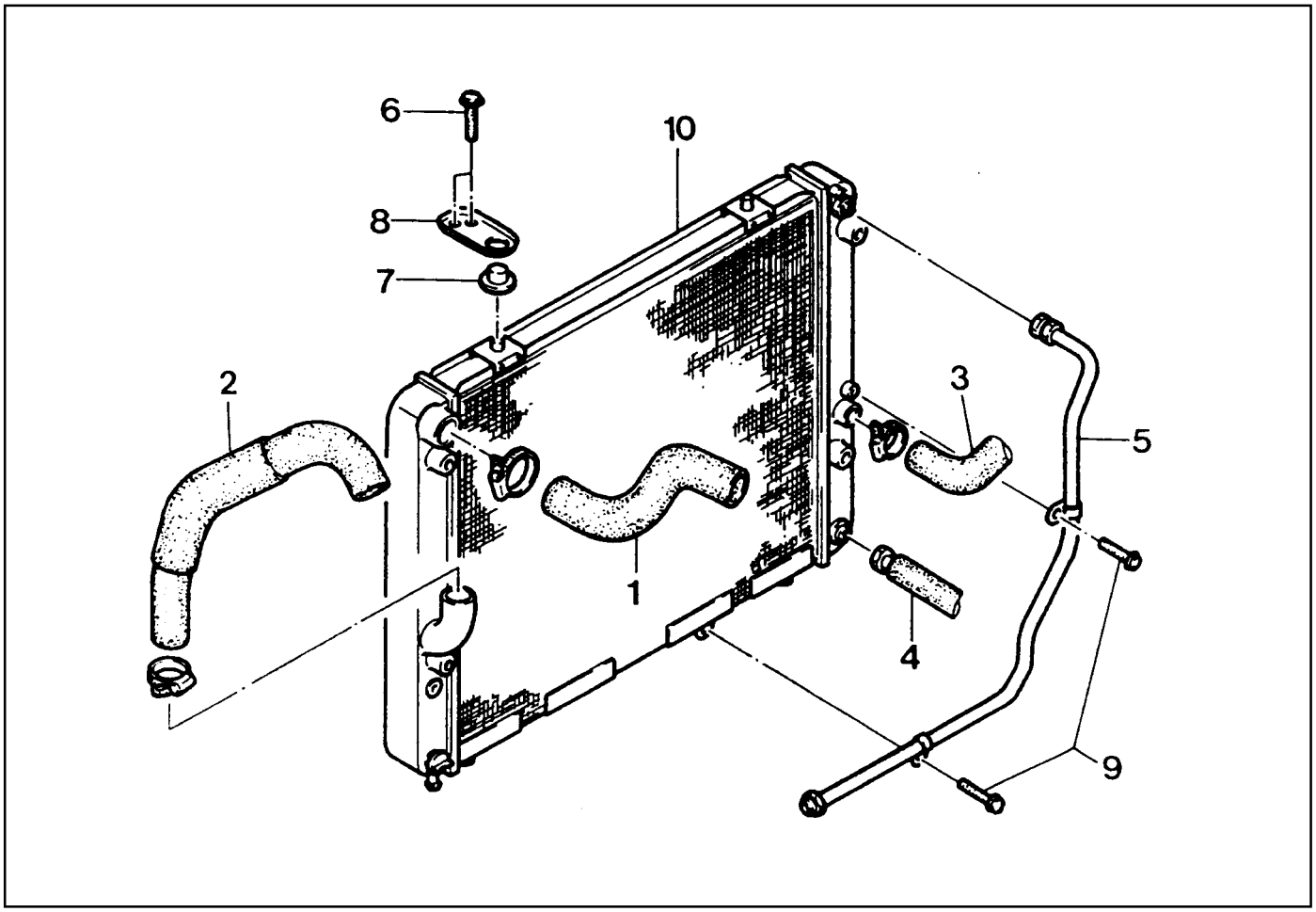

1 Radiator Inlet Coolant Hose
2 Radiator Outlet Coolant Hose
3 Make Up Coolant Hose
4 Automatic Transmission Oil Cooling Hose
5 Automatic Transmission Oil Cooling Line
6 Bolt
7 Insulator
8 Stopper
9 Bolt ..... 7 Nm
10 Radiator

Downloaded from www.Manualslib.com manuals search engine

Removal & Installation Procedure

1. Drain coolant from the radiator.
2. Remove the coolant thermo connector from the radiator.
3. Remove the each coolant hoses.

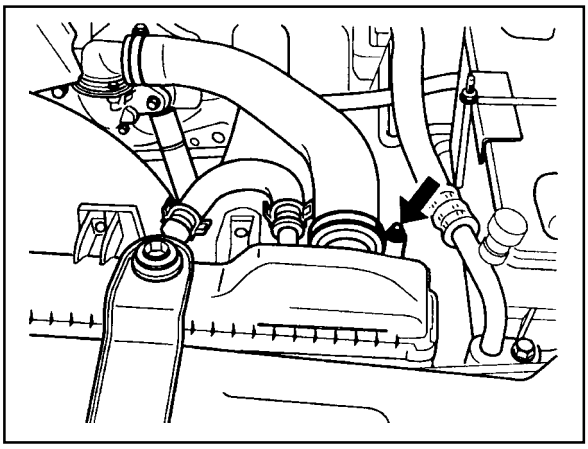

4. Remove the automatic transmission oil cooling hose.

Installation Notice

Tightening Torque	14 Nm

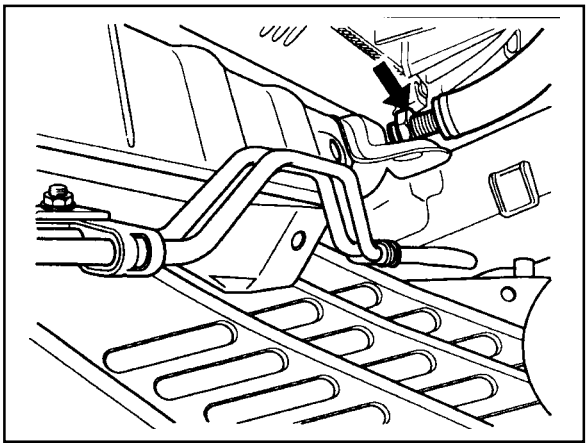

5. Remove the automatic transmission oil cooling line bolts and then remove the oil cooling line.
6. Remove the radiator upper mounting bolts and then remove the bracket and insulator.
7. Remove the radiator.
8. Check the radiator pin for crack, damage, leakage and bending and replace if necessary.

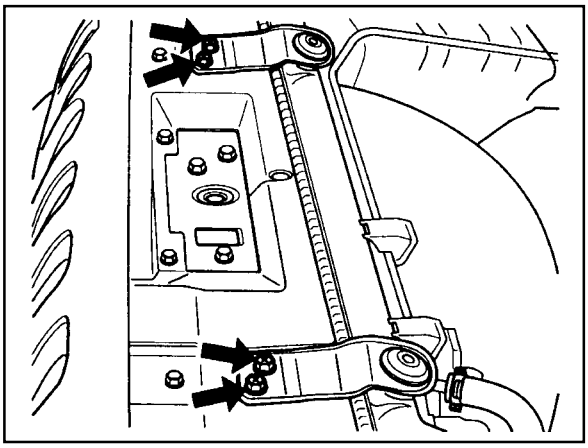

9. Installation should follow the removal procedure in the reverse order.
10. Do cooling system leakage test.

Downloaded from www.Manualslib.com manuals search engine

SECTION 1D2

M161 ENGINE COOLING

CAUTION: Disconnect the negative battery cable before removing or installing any electrical unit or when a tool or equipment could easily come in contact with exposed electrical terminals. Disconnecting this cable will help prevent personal injury and damage to the vehicle. The ignition must also be in LOCK unless otherwise noted.

TABLE OF CONTENTS

Specifications 1D2-1
General Specifications 1D2-1
Fastener Tightening Specifications 1D2-2
Special Tools 1D2-3
Special Tools Table 1D2-3
Diagnosis 1D2-4
System Leakage Test 1D2-4
Maintenance and Repair 1D2-5
On-Vehicle Service 1D2-5
Coolant Drain and Fill Up 1D2-5
Cooling Fan and Viscous Clutch 1D2-7
Coolant Pump 1D2-9
Thermostat 1D2-11
Thermostat Housing Assembly 1D2-12
Removal and Installation of Cooling Fan Shroud 1D2-14
Removal and Installation of Radiator 1D2-15

SPECIFICATIONS

GENERAL SPECIFICATIONS

Application		Description
Cooling Type		Water Cooling Forced Circulation
Radiator	Circulation Type	Down Flow
	Radiation	61,500 kcal/h
	Capability	58,000 kcal/h
Dimension(Width´Height´Thickeness)		680 x 415 x 25 mm
		680 x 415 x 28 mm
Cooling Fan		f460, 9 Blades
Anti-Freeze Agent		ALUTEC-P78, Dragon Power Coolant A
Mixing Ratio of Anti-Freeze Agen with Water (Anti-Freeze Agent : Water)		50 : 50
Coolant Capacity		10.5 L
Reservoir Capacity		3.4 L
Cap Operating Pressure (Reservoir Tank Pressure Cap)		1.4 bar

Downloaded from www.Manualslib.com manuals search engine

FASTENER TIGHTENING SPECIFICATIONS

Application	N·m
Coolant Drain Plug	30
Engine Hanger Bracket and Coolant Outlet Port Bolt	22.5 - 27.5
Thermostat Cover Bracket Bolt	9 - 11
Oil Cooler Pipe Line Bolt	9 - 11
Cooling Fan Bolt	9 - 11
Viscous Clutch Bolt	40.5 - 49.5
Automatic Transmission Oil Cooling Hose Bolt	3 - 7
Cooling Fan Shroud Bolt	3 - 7

Downloaded from www.Manualslib.com manuals search engine

SPECIAL TOOLS

SPECIAL TOOLS TABLE

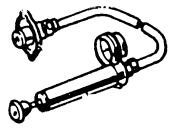	**124 589 15 21 00** **Tester**	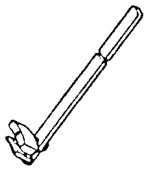	**603 589 00 40** **Counter Holder**
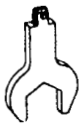	**111 589 02 01 00** **Open End Wrench**		**111 589 00 40 00** **Open End Wrench**

Downloaded from www.Manualslib.com manuals search engine

DIAGNOSIS

SYSTEM LEAKAGE TEST

Tools Required

124 589 15 21 00 Tester

Test Procedure

1. Loosen the cap a little and release pressure and remove the cap.

   Notice

   For the risk of scalding, cap must not be opened unless the coolant temperature is below 90°C.

2. Fill coolant up to upper edge (arrow) of reservoir.

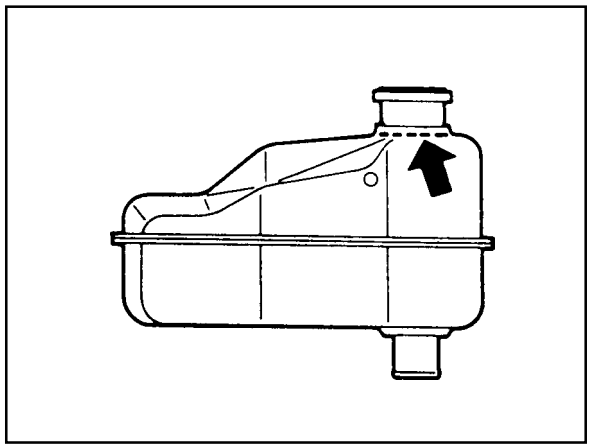

3. Connect the special tool to the reservoir filler cap and apply 1.4 bar of pressure.

   Tester 124 589 15 21 00

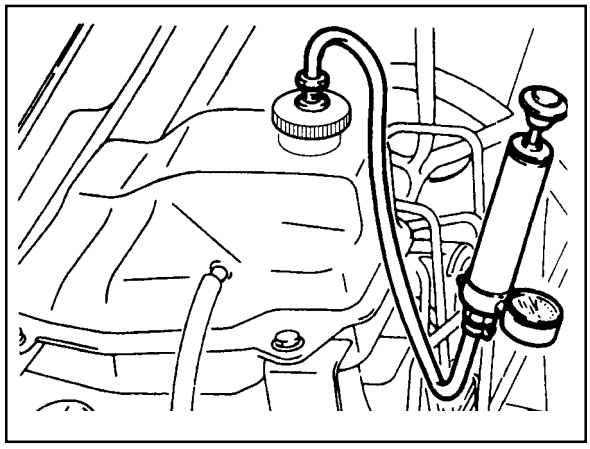

4. If the pressure on the tester drops, check leakage at the all coolant hoses and pipes and each connections. Replace or retighten if necessary.

Downloaded from www.Manualslib.com manuals search engine

MAINTENANCE AND REPAIR

ON-VEHICLE SERVICE

COOLANT DRAIN AND FILL UP

Draning & Filling up Procedure

1. Loosen the cap a little and release pressure and remove the cap.

   Notice

   For the risk of scalding, the cap must not be opened unless the coolant temperature is below 90oC.

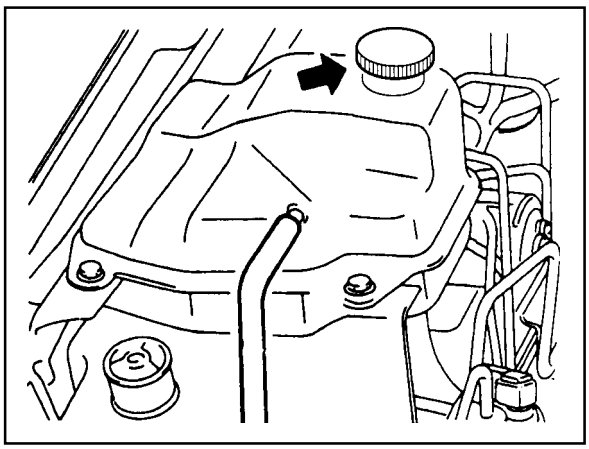

2. Loosen the radiator lower drain cock and drain the coolant.

   Notice

   Collect coolant by using a proper container.

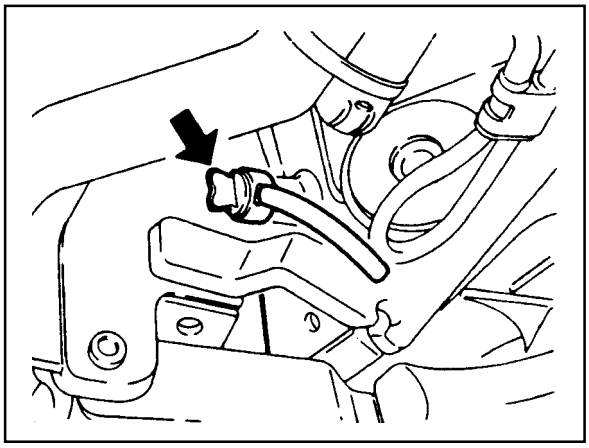

3. Drain the coolant from the crankcase by inserting a hose (dia. 14mm) onto the drain bolt on the side of crankcase (exhaust manifold) and by loosening the plug.

   Notice

   - Just loosen the drain plug to drain the coolant and do not remove the plug completely.
   - Collect coolant by using proper container.

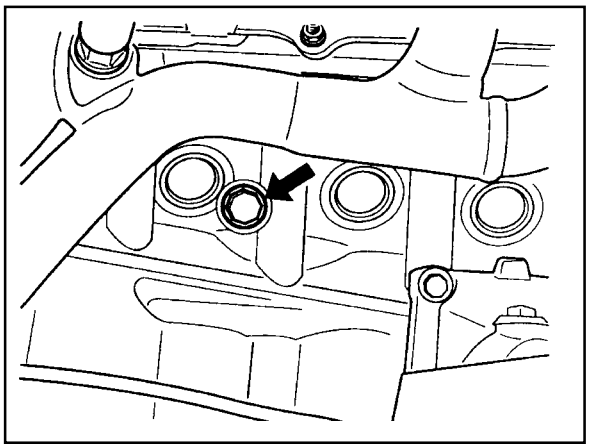

4. After complete draining of the coolant, remove the hose connector to drain plug and reinstall the drain plug.

   Installation Notice

Tightening Torque	30 Nm

5. Tighten the radiator lower drain cock.

Downloaded from www.Manualslib.com manuals search engine

6. Remove the de-aeration hose clamp in the coolant pump and remove the de-aeration hose.
7. Fill up the coolant through the coolant reservoir tank.

   Notice

   - Match the anti-freeze and the water ratio to 50 : 50.
   - Supplement the coolant until the coolant overflows to the deaeration hose.

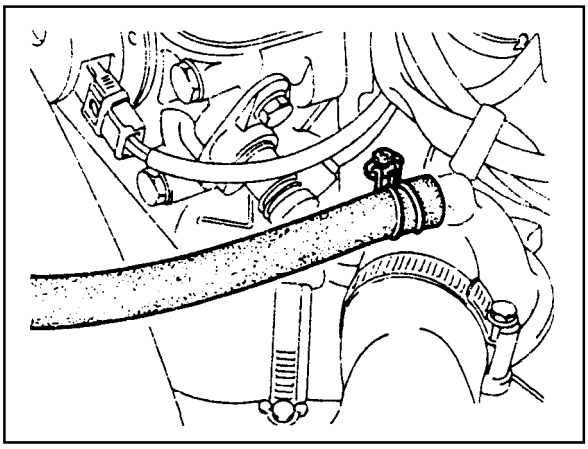

8. Insert the de-aeration hose and completely tighten the clamp.
9. Check the coolant level in the coolant reservoir tank.
10. Warm up(until thermostat is opened) the engine and recheck the coolant level in the reservoir tank and fill up the coolant if necessary.

Downloaded from www.Manualslib.com manuals search engine

COOLING FAN AND VISCOUS CLUTCH

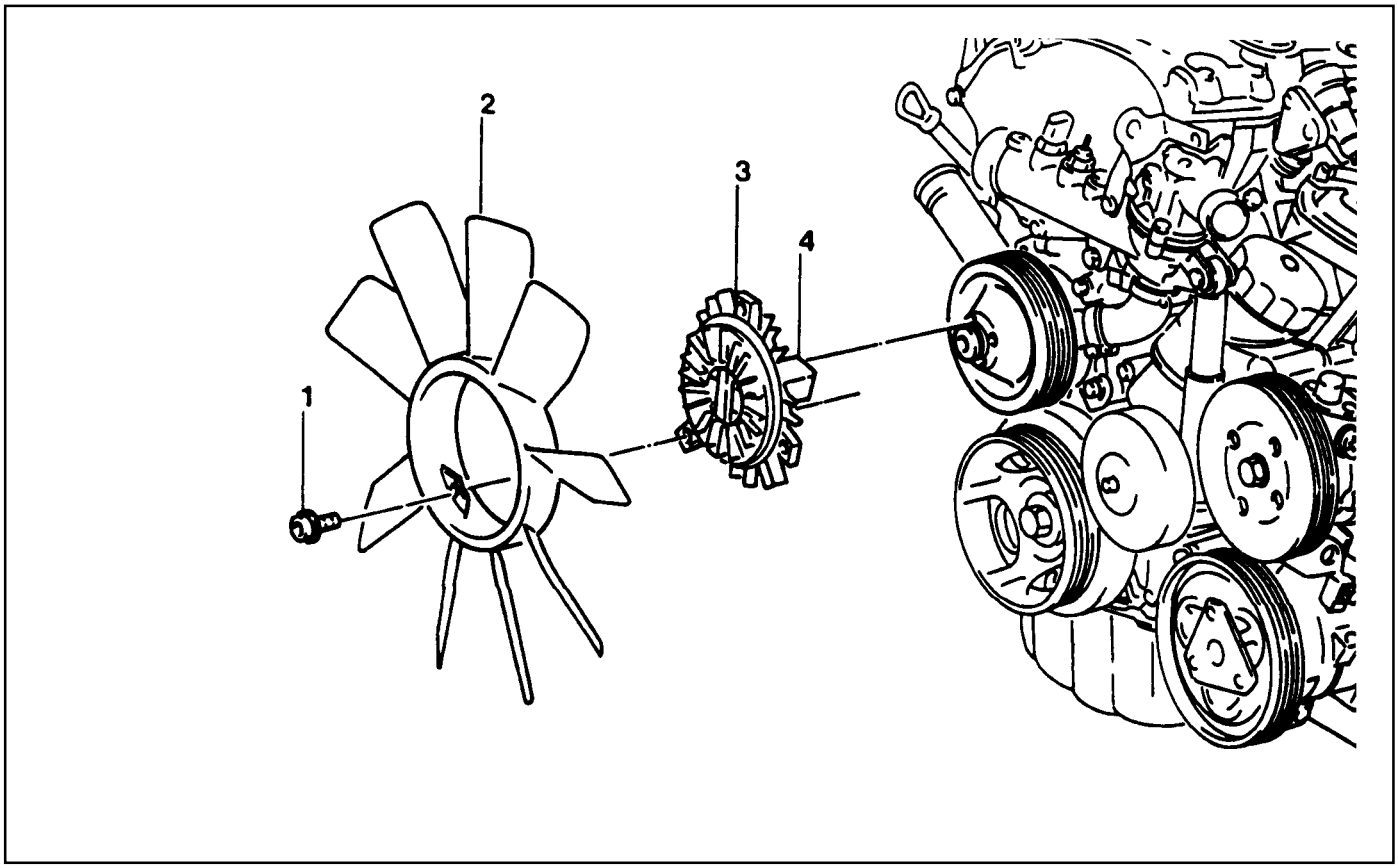

1 Bolt (M6 X 14, 3 piece) ..... 9-11 Nm
2 Cooling Fan
3 Viscous Clutch
4 Union Nut (Left Threaded Screw) ... 40.5-49.5 Nm

Downloaded from www.Manualslib.com manuals search engine

Tools Required

111 589 02 01 00 Open End Wrench

111 589 00 40 00 Open End Wrench

Removal & Installation Procedure

1. Install the holder (special tool : 111 589 00 40 00) to the bolt at the pulley as shown in the right figure to hold the pulley.
2. Remove the viscous clutch using an open end wrench (special tool : 111 589 02 01 00).

   Installation Notice

Tightening Torque	40.5 - 49.5 Nm

   Notice

   The union nut is left threaded screw.

3. Remove the 3 bolts (1) from the viscous clutch and remove the cooling fan and the viscous clutch.

   Installation Notice

Tightening Torque	9 - 11 Nm

   Notice

   You may change the procedure (2) and (3) if necessary.

4. Installation should follow the removal procedure in the reverse order.

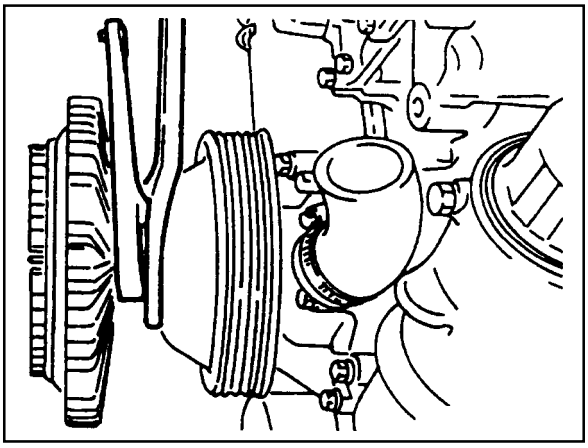

Downloaded from www.Manualslib.com manuals search engine

COOLANT PUMP

Preceding Work : Removal of viscous clutch

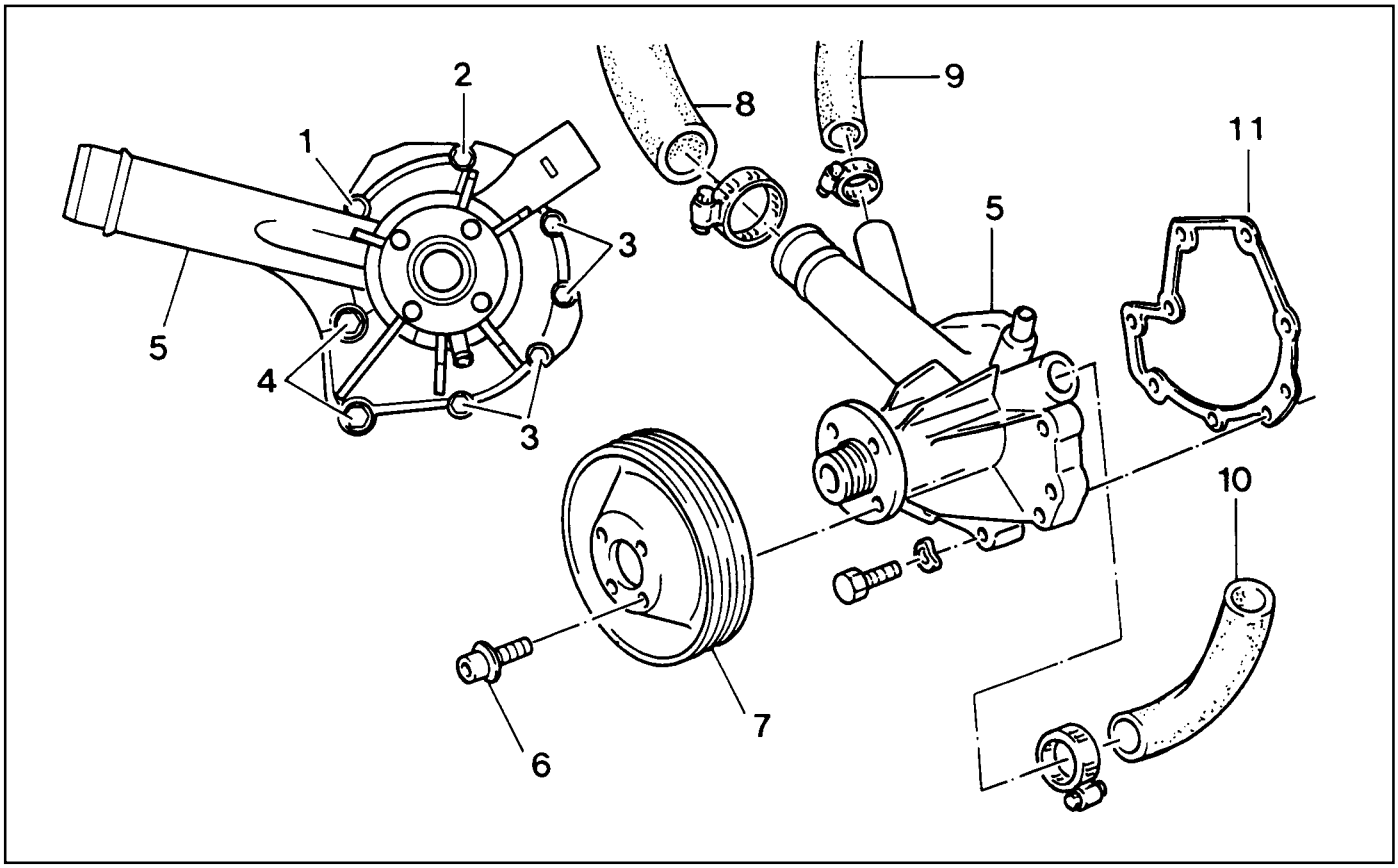

1	Bolt (M6 X 45, 1 piece)	9-11 Nm
2	Bolt (M6 X 95, 1 piece)	9-11 Nm
3	Bolt (M6 X 25, 4 piece)	9-11 Nm
4	Bolt (M8 X 85, 2 piece)	20.5-20.5 Nm
5	Coolant Pump Housing	
6	Bolt (M6 X 16, 4 piece)	9-11 Nm
7	Coolant Pump Pulley	
8	Coolant Inlet Hose	
9	Heater Hose	
10	Coolant Bypass Hose	
11	Gasket	

Downloaded from www.Manualslib.com manuals search engine

Tools Required

124 589 15 21 00 Tester

Removal & Installation Procedure

1. Drain the coolant.
2. Disconnect the coolant hoses (8, 9, 10).
3. Tak off the drive belt.
4. Unscrew the four bolts (6) from coolant pump pulley and remove the pulley (7).

   Installation Notice

Tightening Torque	9 - 11 Nm

   Notice

   Hold the pulley with special tool (603 589 00 40 00) while removing the pulley.

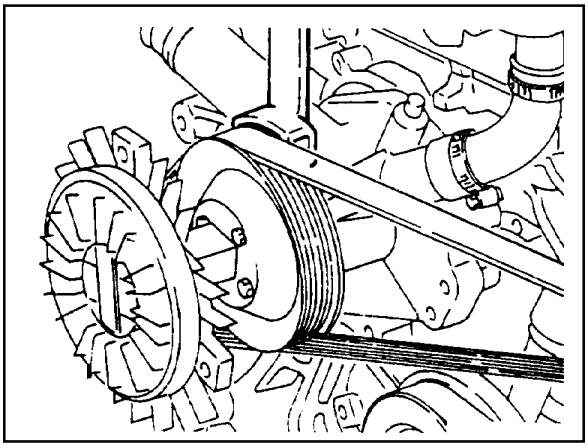

5. Unscrew the bolts (1, 2, 3, 4) from coolant pump housing (5) and remove the coolant pump.

   Installation Notice

Tightening Torque	(1, 2, 3)	9 - 11 Nm
	(4)	22.5 - 27.5 Nm

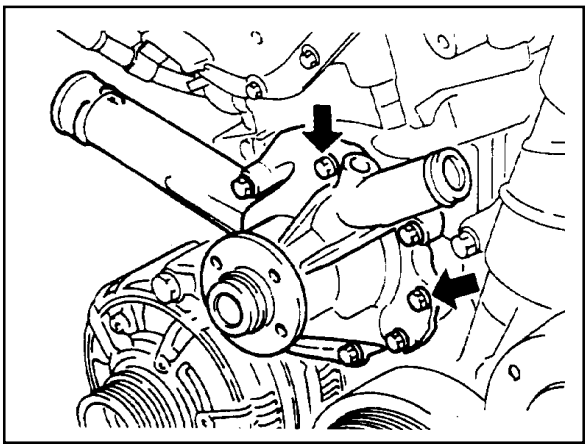

6. Clean the sealing surface.
7. Replace the gasket with new one.

   Notice

   Apply the sealant when the sealing surface of coolant pump housing and coolant mounting area is clean.

8. Installation should follow the removal procedure in the reverse order.
9. Check for leaks by starting the engine.

Downloaded from www.Manualslib.com manuals search engine

THERMOSTAT

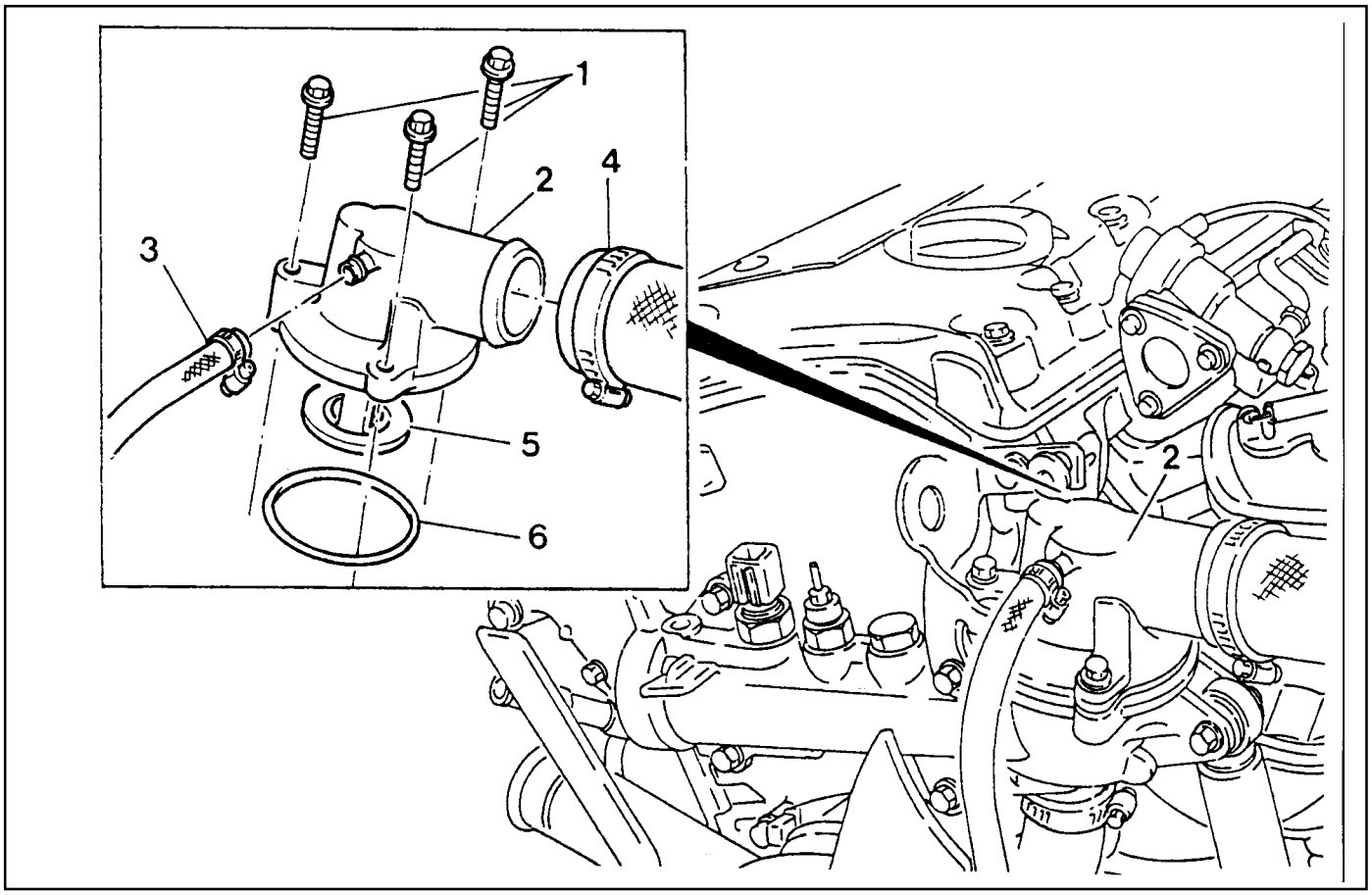

1 Bolt (M6 X 25, 3 pieces) ..... 9 -11 Nm
2 Thermostat Cover
3 De-aeration Hose
4 Coolant Outlet Hose
5 Thermostat
6 O-ring

Removal & Installation Procedure

1. Drain the coolant from the radiator.
2. Loosen the hose mounting clip and remove the coolant hose (3, 4).
3. Unscrew the three bolts (1) and remove the thermostat cover assembly from thermostat housing.

   Installation Notice

Tightening Torque	9 - 11 Nm

   Do not separate the thermostat cover and thermostat.

4. Replace the O-ring if necessary.
5. Check the leakage in the cooling system.

Downloaded from www.Manualslib.com manuals search engine

THERMOSTAT HOUSING ASSEMBLY

Preceding Work : Removal of viscous clutch

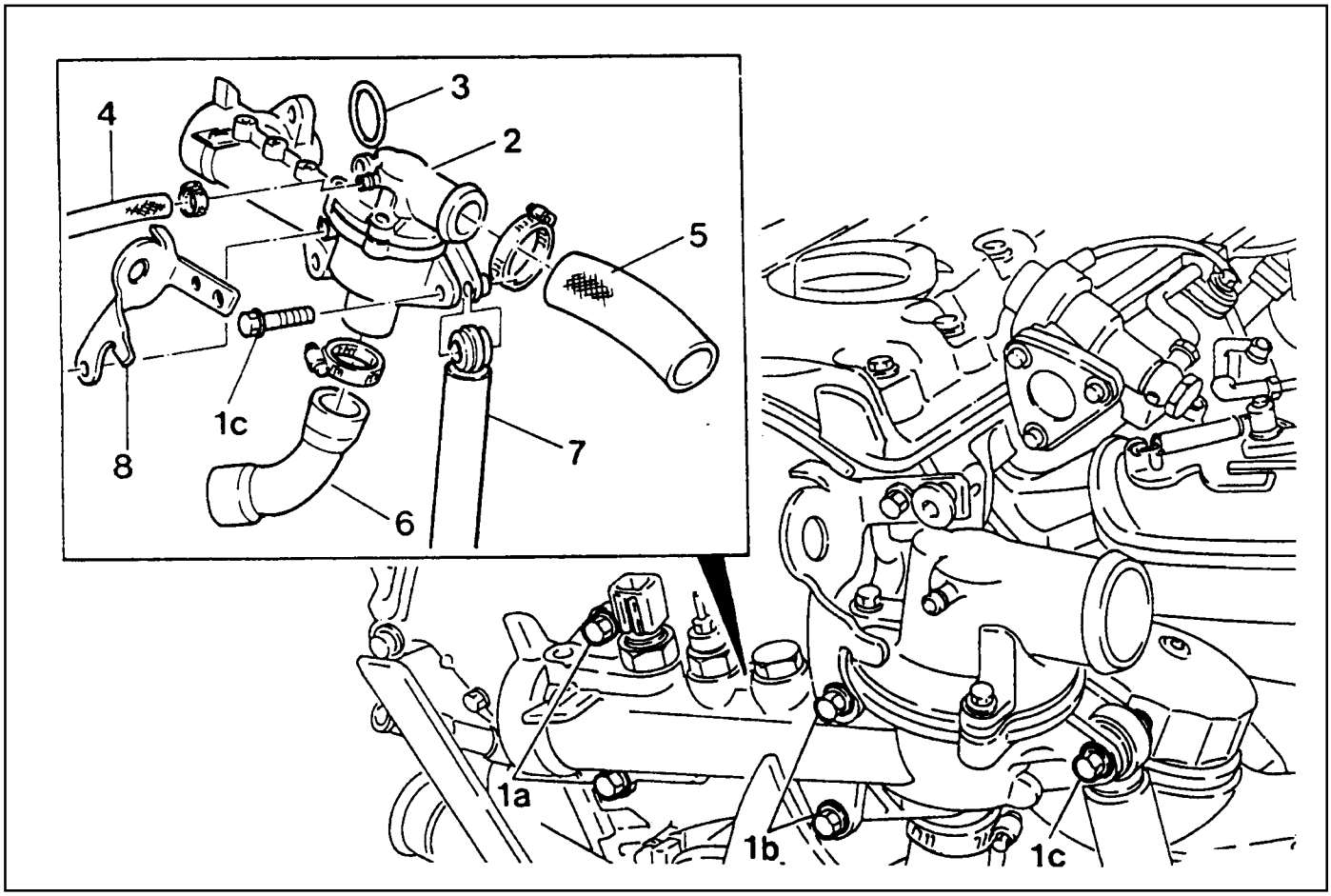

1a	Bolt (M6 X 95, 2 pieces)	9-11 Nm
1b	Bolt (M8 X 75, 2 pieces)	22.5-27.5 Nm
1c	Bolt (M8 X 35, 1 piece)	22.5-27.5 Nm
2	Thermostat Housing Assembly	
3	O-ring	
4	De-aeration Hose	
5	Coolant Outlet Hose	
6	Coolant Bypass Hose	
7	Tensioning Device Shock Absorber	
8	Engine Hanger Brocket	

Downloaded from www.Manualslib.com manuals search engine

Removal & Installation Procedure

1. Drain the coolant.
2. Remove the de-aeration hose (4), coolant outlet hose (5) and coolant bypass hose (6).
3. Disconnect the coolant temperature sensor connector.
4. Unscrew the bolt (1c) and pry off the tensioning device shock absorber (7).

   Installation Notice

Tightening Torque	22.5 - 27.5 Nm

5. Unscrow the bolts (1a, 1b) and remove the engine hanger bracket and thermostat housing.

   Installation Notice

Tightening Torque	(1a)	9 - 11 Nm
	(1b)	22.5 - 27.5 Nm

6. Replace the O-ring with new one.
7. Installation should follow the removal procedure in the reverse order.
8. Check for leaks in cooling system.

Downloaded from www.Manualslib.com manuals search engine

REMOVAL AND INSTALLATION OF COOLING FAN SHROUD

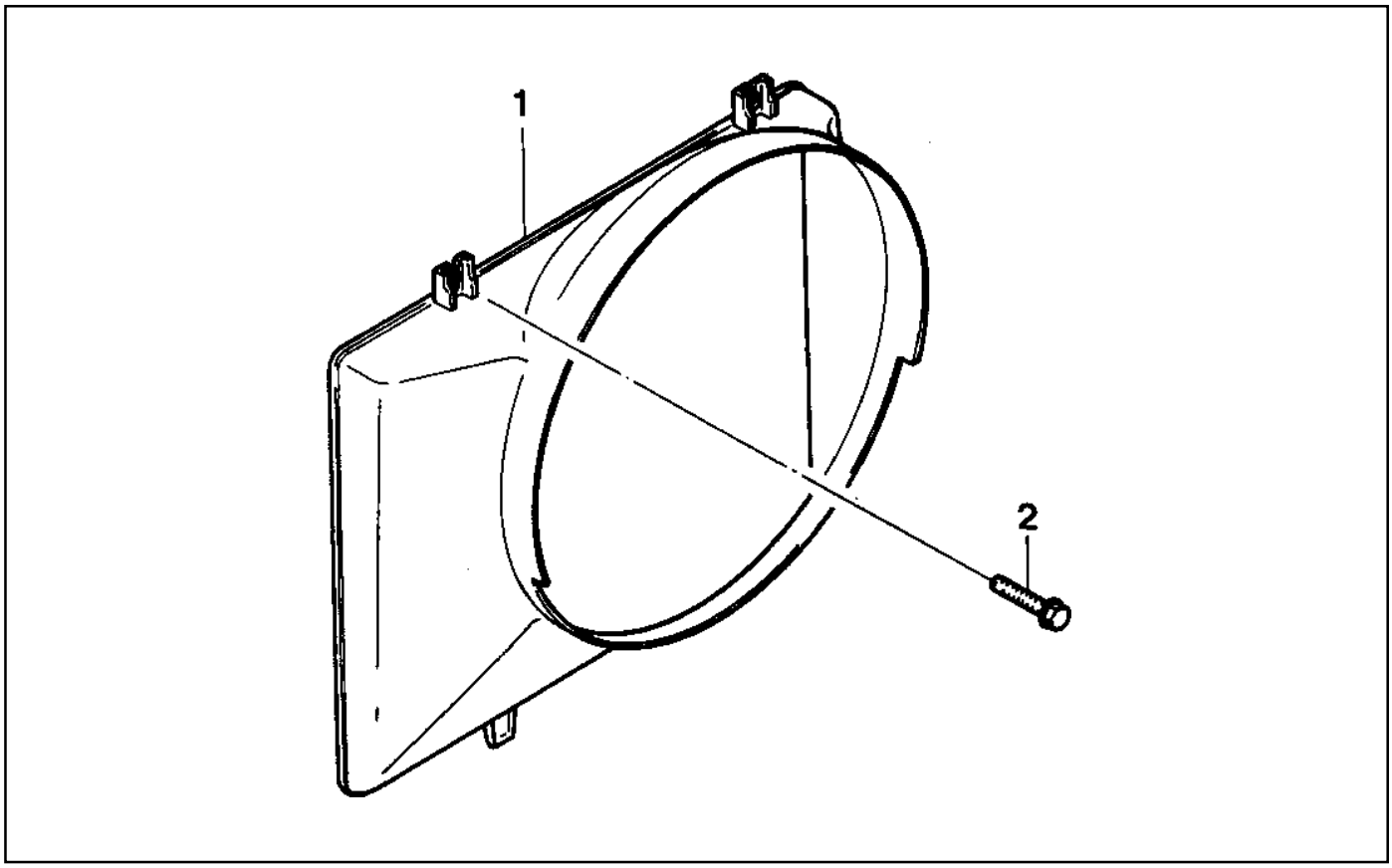

1 Fan Suroud Assembly

2 Bolt (M6 X 16, 2 pieces) ..... 3-7 Nm

Removal & Installation Procedure

1. Unscrew two bolts from cooling fan shroud and remove the shrud.

   Installation notice

Tightening Torque	3 - 7 Nm

2. Installation should follow the removal procedure in the reverse order.

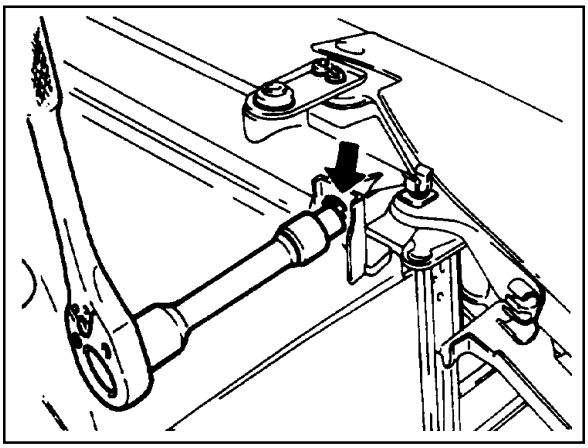

Downloaded from www.Manualslib.com manuals search engine

REMOVAL AND INSTALLATION OF RADIATOR

Preceding Work : Removal of cooling fan shroud

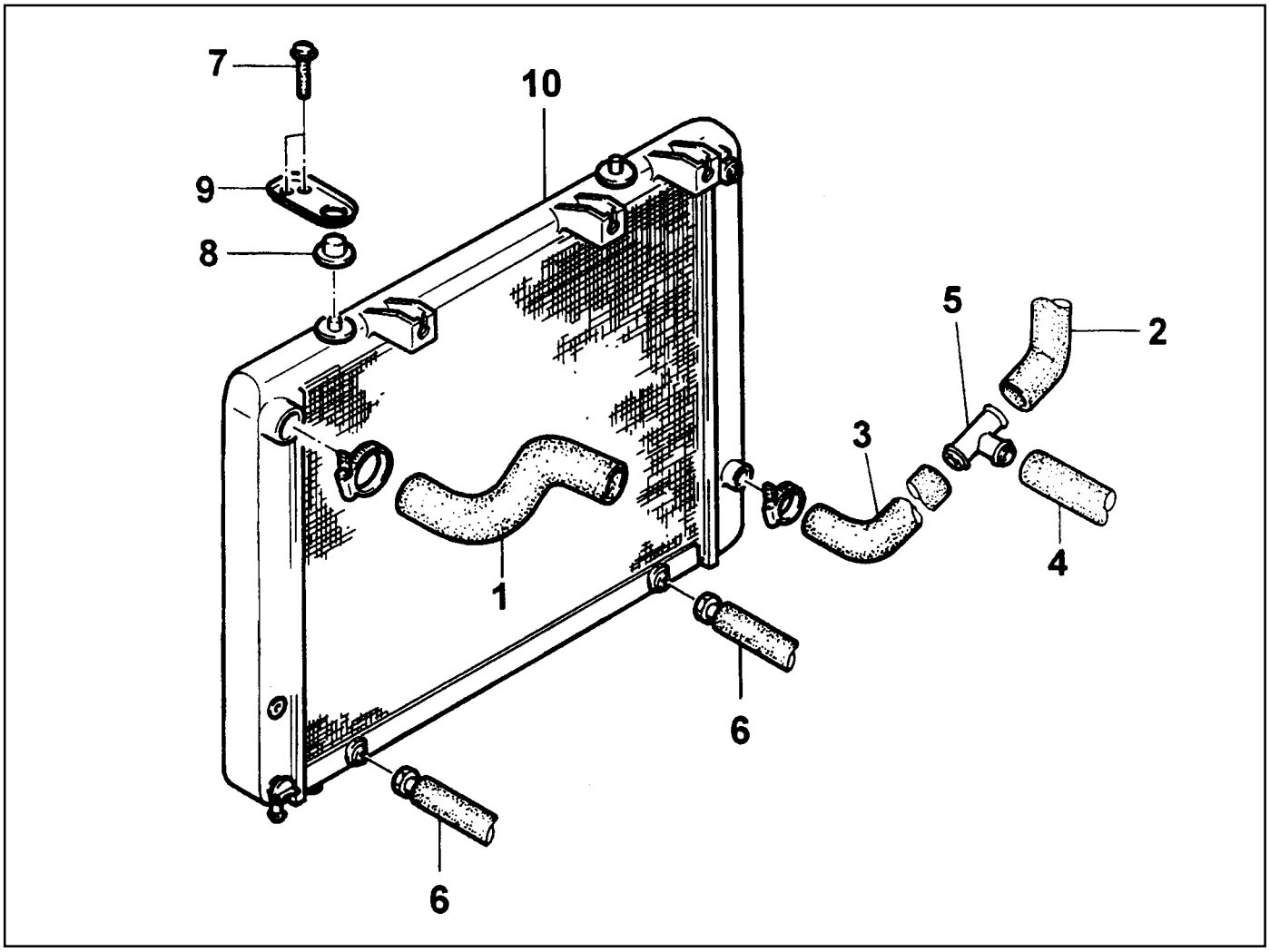

1 Inlet Hose
2 Hose (to Engine)
3 Hose (to 3-way Connector)
4 Make-up Hose (to Coolant Reservoir)
5 3-way Connector
6 Automatic Transmission Oil Cooling Hose (A/T Equippend Vehicle)
7 Bolt (M6 X 20, 4 pieces) ..... 3-7 Nm
8 Insulator
9 Radiator Bracket
10 Radiator

Downloaded from www.Manualslib.com manuals search engine

Removal & Installation Procedure

1. Drain coolant from the radiator.
2. Remove the coolant thermo connector from the radiator.
3. Remove the each coolant hoses.

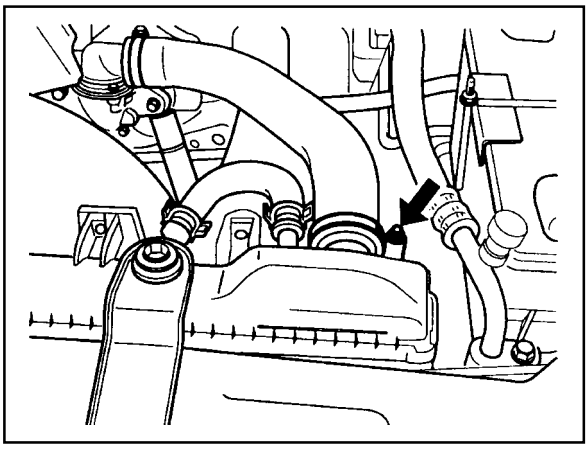

4. Remove the automatic transmission oil cooling hose.

   Installation Notice

Tightening Torque	14 Nm

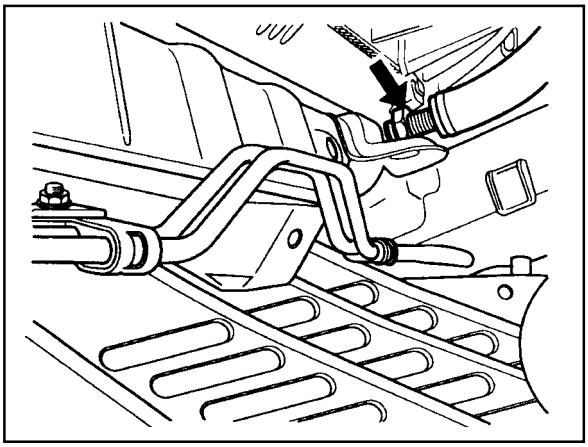

5. Unscrew the bolts from radiator bracket and remove the bracket and insulator.

   Installation Notice

Tightening Torque	3 - 7 Nm

6. Remove the radiator upper mounting bolts and then remove the bracket and insulator.
7. Remove the radiator.
8. Check the radiator pin for crack, damage, leakage and bending and replace if necessary.

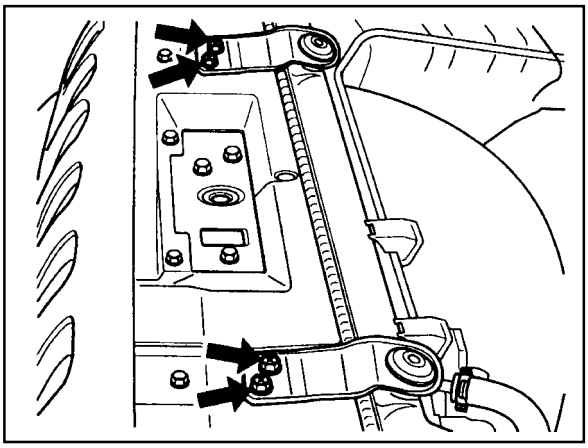

9. Installation should follow the removal procedure in the reverse order.
10. Berform the cooling system leakage test.

Downloaded from www.Manualslib.com manuals search engine

SECTION 1D3

OM600 ENGINE COOLING

Caution: Disconnect the negative battery cable before removing or installing any electrical unit or when a tool or equipment could easily come in contact with exposed electrical terminals. Disconnecting this cable will help prevent personal injury and damage to the vehicle. The ignition must also be in LOCK unless otherwise noted.

TABLE OF CONTENTS

Specifications 1D3-1
General Specifications 1D3-1
Fastener Tightening Specifications 1D3-1
Diagnosis 1D3-2
Cooling Circulation 1D3-2
Thermostat Operation 1D3-3
Cooling System Leakage Test 1D3-4
Maintenance and Repair 1D3-5
On-Vehicle Service 1D3-5
Drain and Filling of Coolant 1D3-5
Coolant Pump 1D3-6
Coolant Pump Housing 1D3-8
Cooling Fan Clutch 1D3-10
Radiator 1D3-12
Cooling Sub-System 1D3-14
Thermostat 1D3-16

SPECIFICATIONS

GENERAL SPECIFICATIONS

Application	Description
Coolant	ALUTEC P- 78
Mixing Ratio (Water : anticorrosion)	50 : 50
Capacity	10.5L - 11L (662LA) 9.5L - 10L (661LA)

FASTENER TIGHTENING SPECIFICATIONS

Application	N·m
Coolant Pump Bolt	10
Belt Pulley Bolt	10
Coolant Pump Housing Return Pipe Bolt	10
Thermostat Bolt	10
Cooling Fan Clutch Socket Bolt (Center)	45
Cooling Fan Clutch Socket Bolt (Side)	10
Radiator Bolt	3 - 7
Coolant Sub-tank Bolt	3 - 7

Downloaded from www.Manualslib.com manuals search engine

DIAGNOSIS

COOLING CIRCULATION

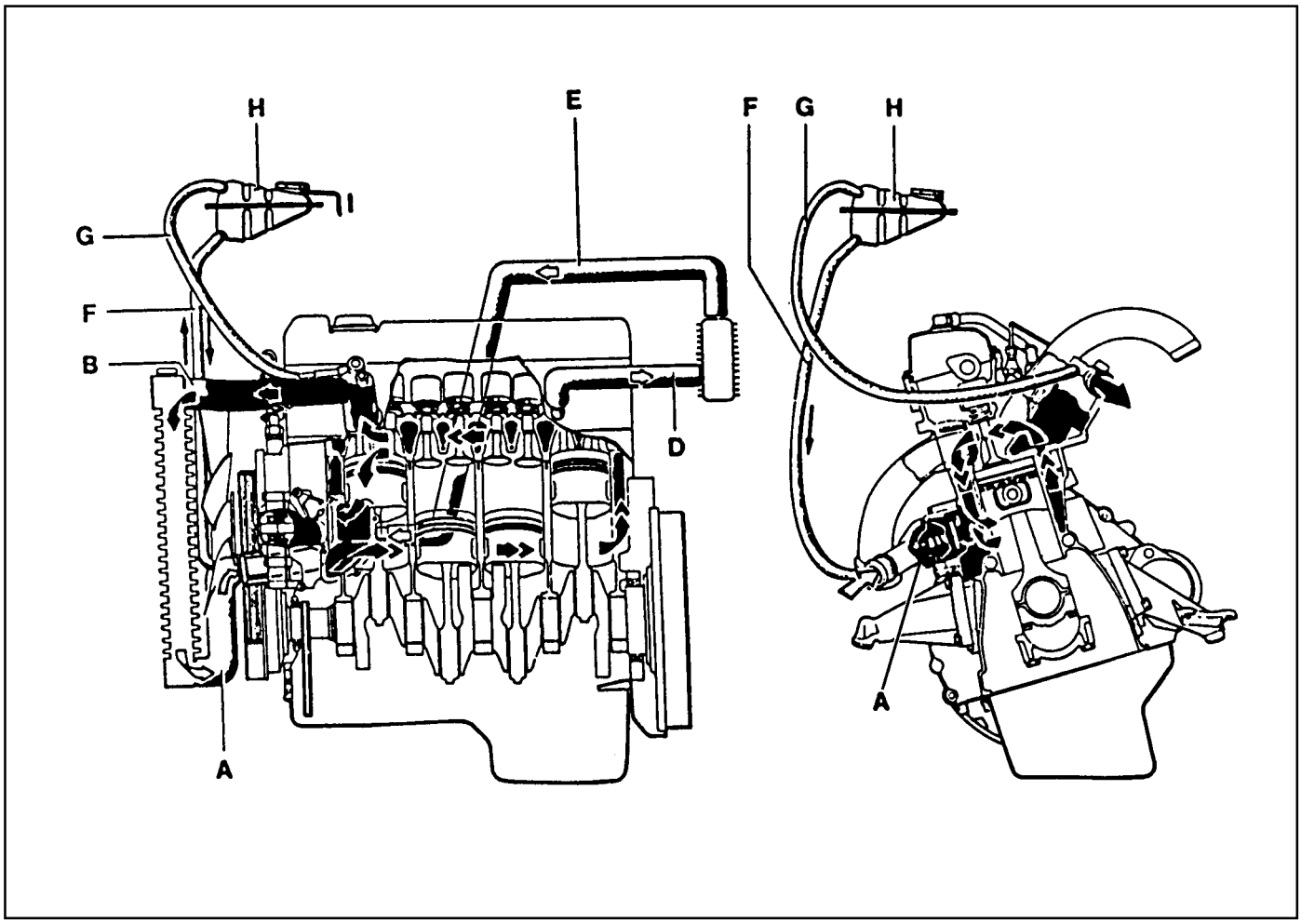

A Thermostat
B Radiator
D From Heater
E Hose
G Deaeration Line
H Reservoir

Downloaded from www.Manualslib.com manuals search engine

THERMOSTAT OPERATION

Operation

1. At warming up

   Valve closes until temperature of coolant reaches to 85°C.

B. From Radiator
C. From Crankcase
D. To Crankcase

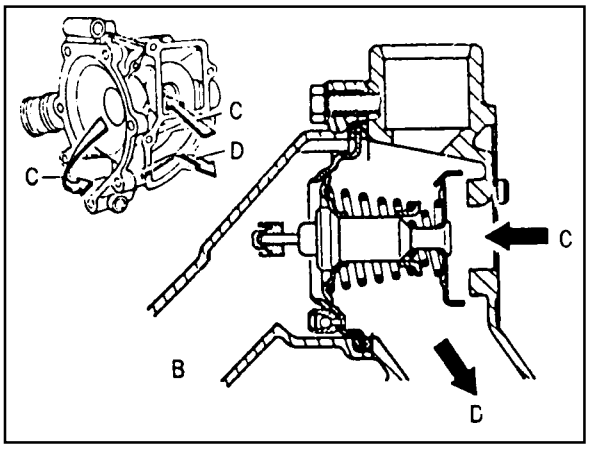

2. At partial opening.

   Valve opens partially as temperature of coolant is maintained between 85-100°C.

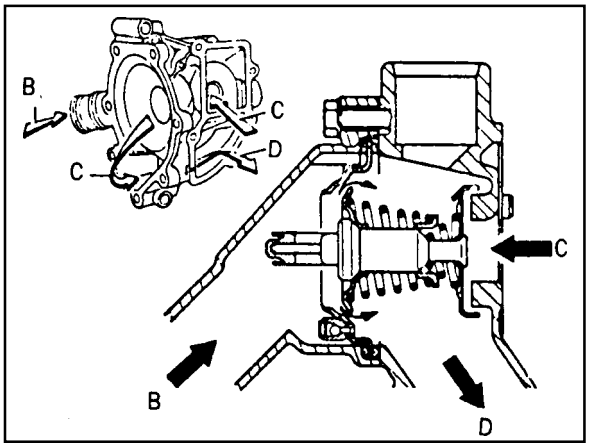

3. At full opening.

   Valve opens full as temperature of coolant is more then 100°C.

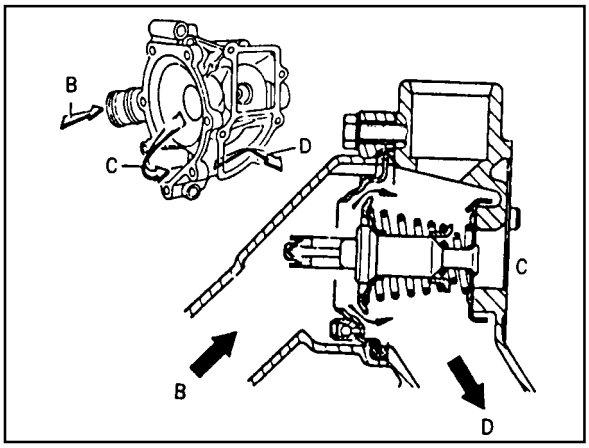

Downloaded from www.Manualslib.com manuals search engine

COOLING SYSTEM LEAKAGE TEST

Tools Required

124 589 15 21 00 Tester

Test

1. Loosen the pressure cap by 1 notch and remove the cap after.

   Notice

   Do not remove radiator cap when coolant is above 90°C.

2. Add the coolant to the arrow mark of coolant reservoir.

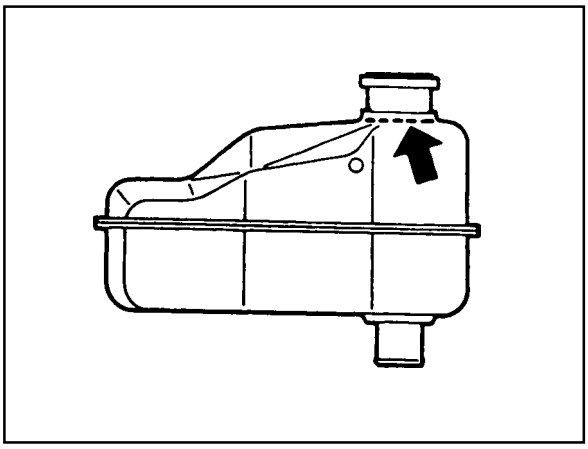

3. Connect the special tool to the injector of reservoir and apply 1.4bar pressure.

   Tester 124 589 15 21 00

4. If the pressure on the tester drops, check the hose, pipe and leakage and, replace or retighten.

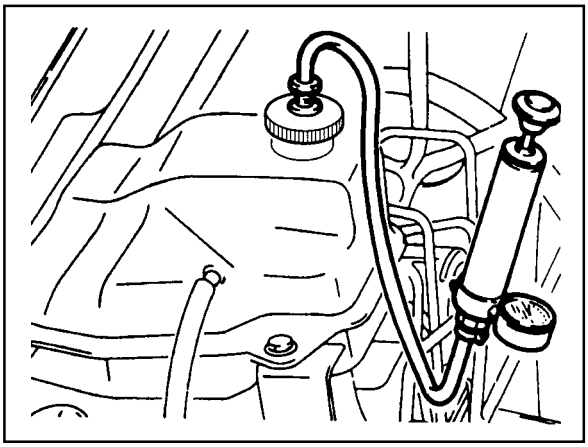

Downloaded from www.Manualslib.com manuals search engine

MAINTENANCE AND REPAIR

ON-VEHICLE SERVICE

DRAIN AND FILLING OF COOLANT

Preceding Work : Removal of skid plate

Drain / Filling

1. Loosen the pressure cap of reservoir by 1 notch and remove pressure and then loosen the cap.

   Notice

   Do not remove radiator cap when coolant is above 90°C.

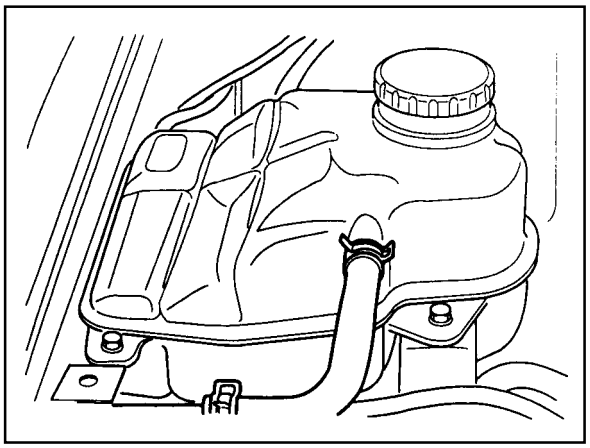

2. Open the drain plug and drain the coolant.

   Notice

   Collect the coolant by using the proper bottle.

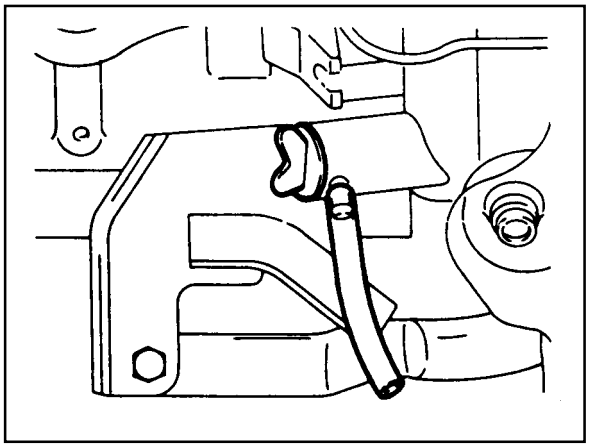

3. Remove the drain plug(1) and seal(2) of cylinder block and drain the coolant.
4. Replace the seal to new one and tighten the drain plug

   Installation Notice

Tightening Torque	30 Nm

5. Tighten the drain plug of the lower radiator.
6. Fill the coolant through coolant reservoir-tank.

   Notice

   - A proportion of 50% by volume of water / anticorrosion must be ensured

7. After engine is running at idle speed, check the level of coolant. If necessary, add enough specified coolant.

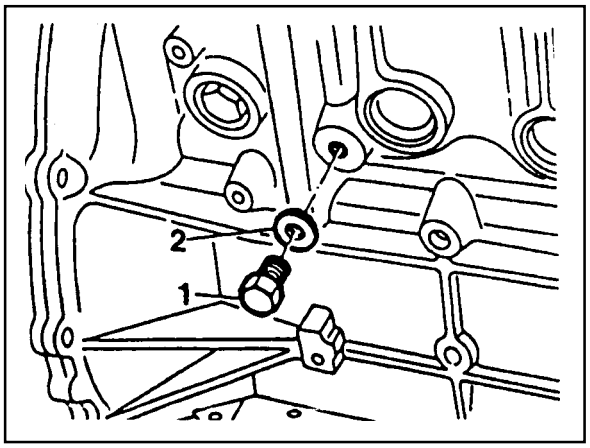

Downloaded from www.Manualslib.com manuals search engine

COOLANT PUMP

Preceding Work : Removal of cooling fan
Removal of V-belt

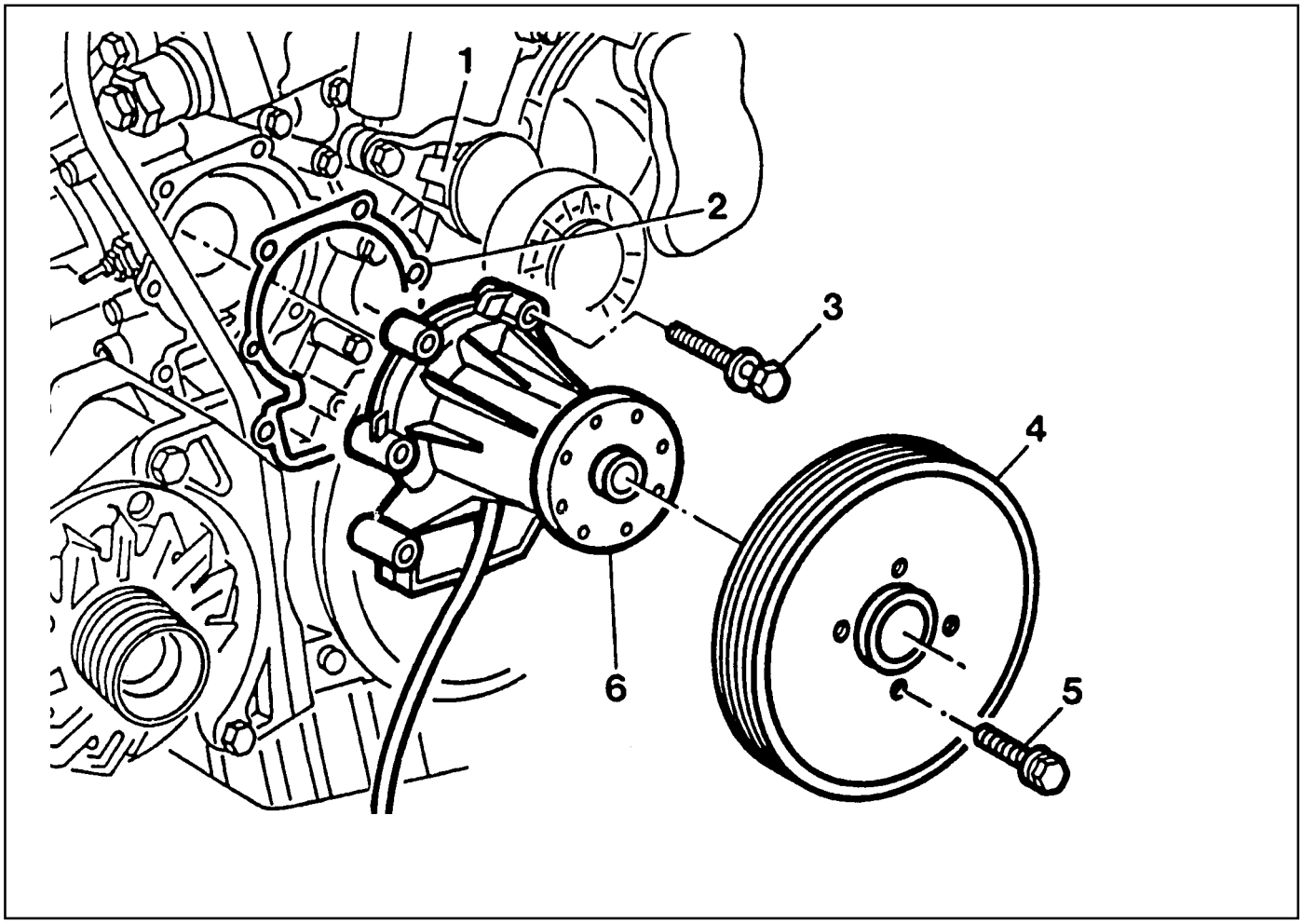

1 Tensioning Lever
2 Gasket ..... Replace
3 Bolt ..... 10 Nm
4 Belt Pulley
5 Bolt ..... 10 Nm
6 Coolant Pump

Downloaded from www.Manualslib.com manuals search engine

Removal & Installation Procedure

1. Loose the bolts(5) and remove the pulley (4).

   Installation Notice

Tightening Torque	10 Nm

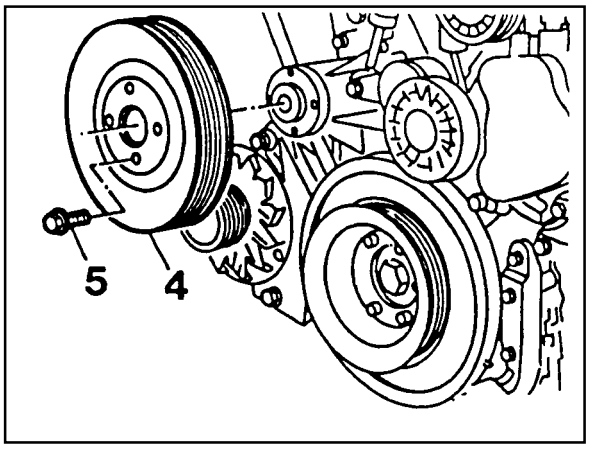

2. Loose the bolts (3).

   Installation Notice

Tightening Torque	10 Nm

3. Pull the tensioning lever(1) to the arrow direction.
4. Remove the coolant pump(6).

   Notice

   Clean gasket residues on the sealing surface of coolant pump and replace the gasket.

5. Installation should follow the removal procedure in the reverse order.

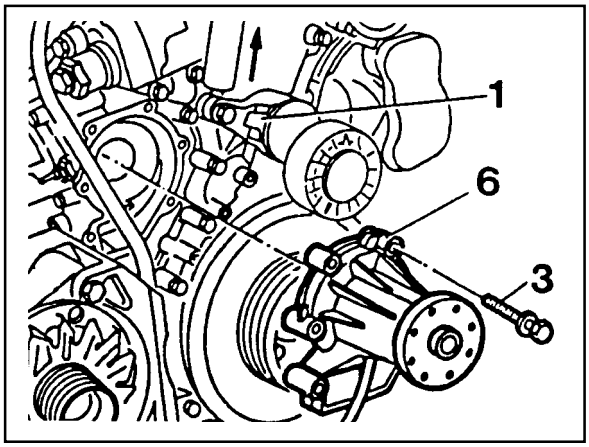

Downloaded from www.Manualslib.com manuals search engine

COOLANT PUMP HOUSING

Preceding Work : Removal of coolant pump
Removal of thermostat
Removal of alternator

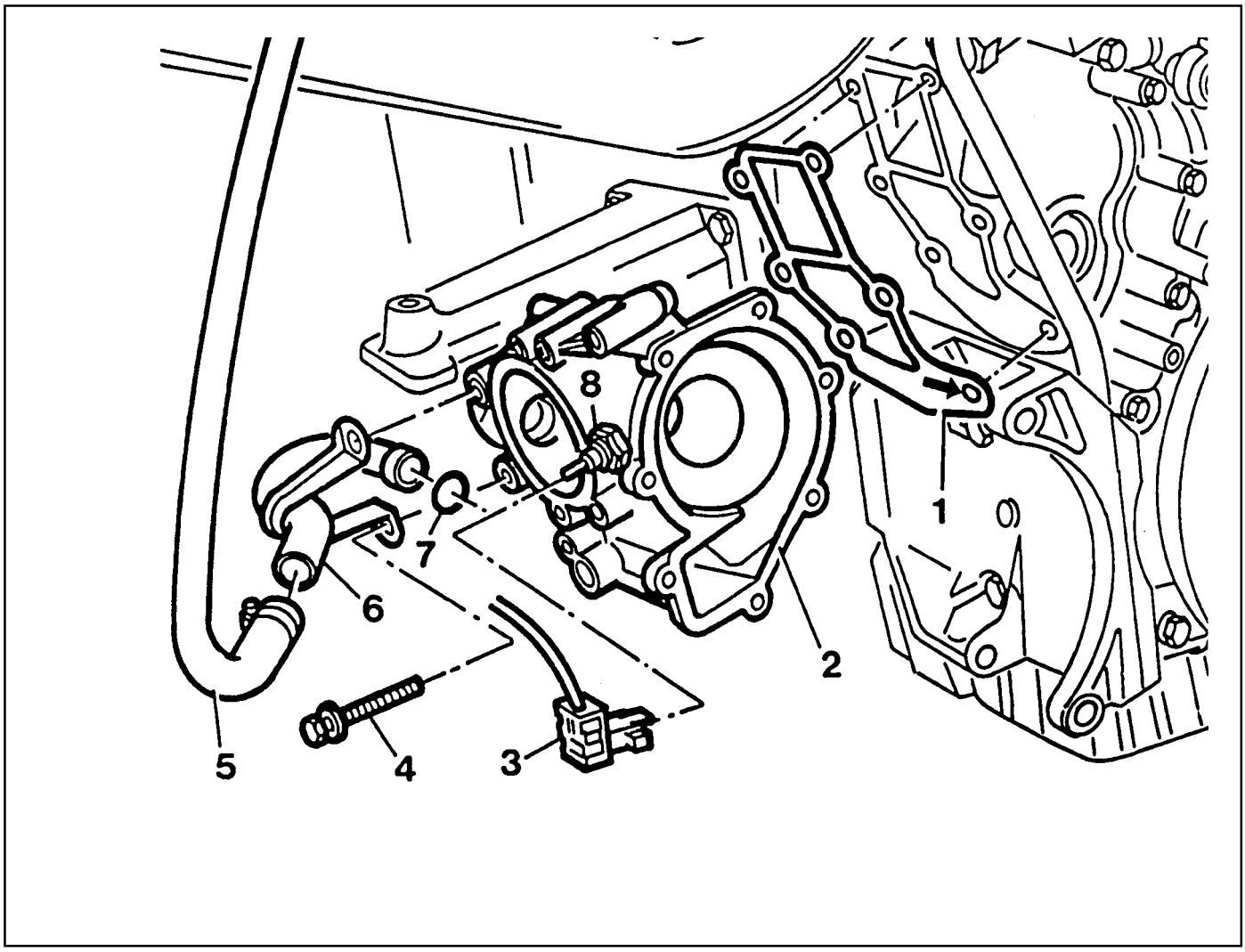

1 Gasket ..... Replace
2 Coolant Pump Housing
3 Connector
4 Bolt ..... 10 Nm
5 Coolant Hose
6 Return Pipe
7 O-Ring
8 Temperature Sensor

Notice

The bolt on the arrow should be installed last.

Downloaded from www.Manualslib.com manuals search engine

Removal & Installation Procedure

1. Disconnect the connector(3).
2. Separate the coolant hose (5) and return pipe(6).

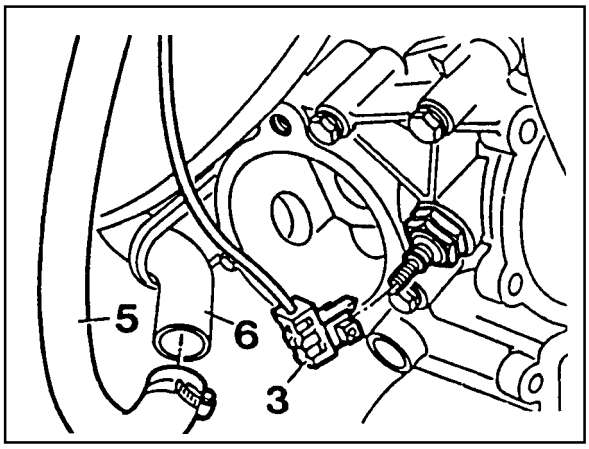

3. Remove the bolts(4) evenly.

   Installation Notice

Tightening Torque	10 Nm

   Notice

   Clean gasket residues on the sealing surface of coolant pump and replace the gasket.

4. Remove the coolant pump housing(2).
5. Installation should follow the removal procedure in the reverse order.

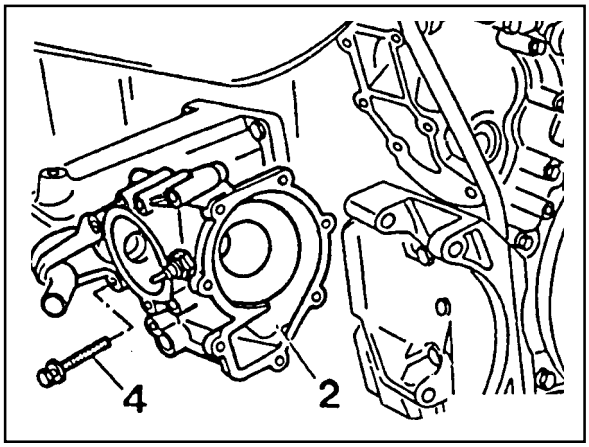

Downloaded from www.Manualslib.com manuals search engine

COOLING FAN CLUTCH

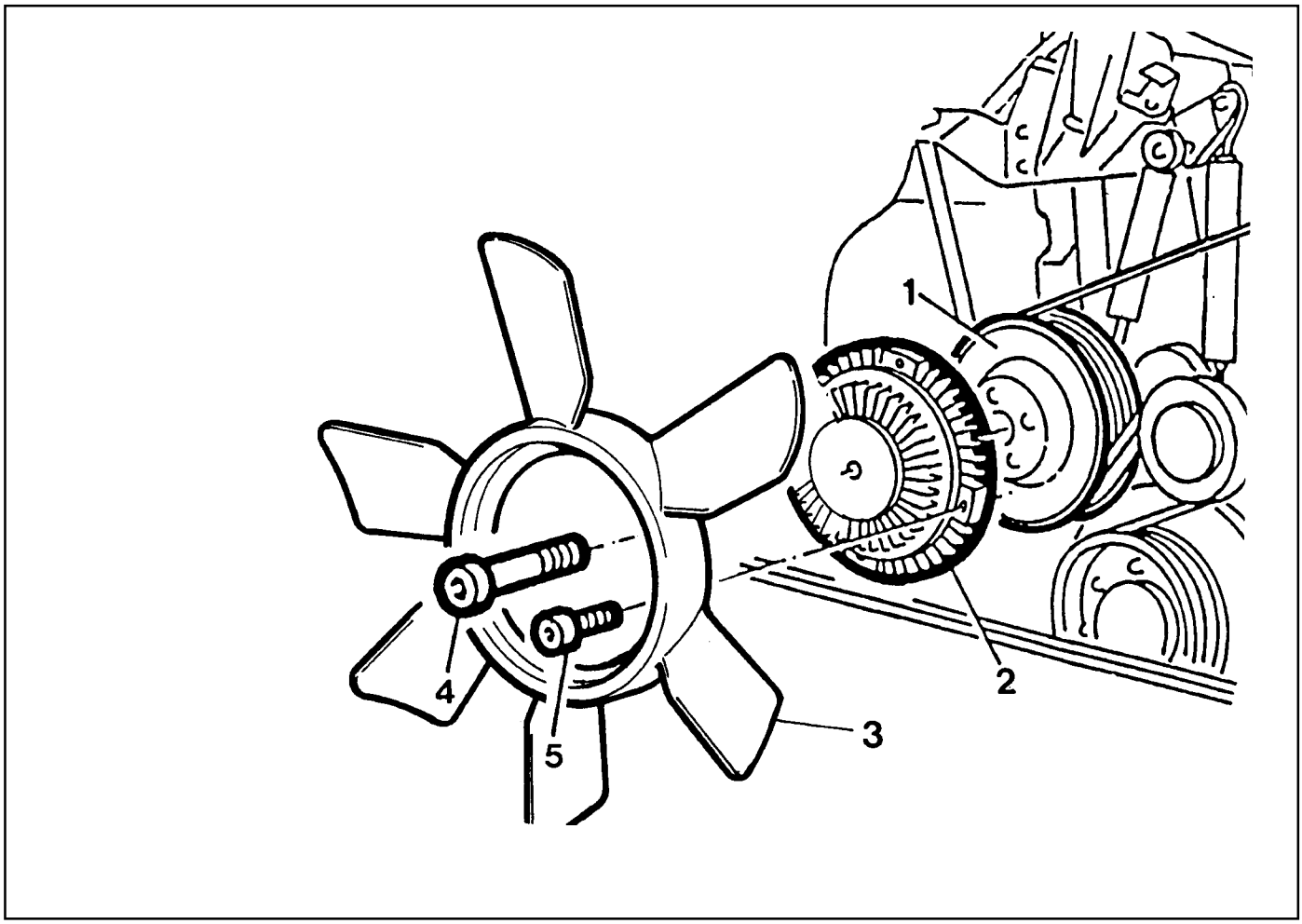

1 Belt Pulley
2 Cooling Fan Clutch
3 Cooling Fan
4 Socket Bolt ..... 45 Nm
5 Socket Bolt ..... 10 Nm

Tools Required

603 589 00 40 00 Counter Holder

Downloaded from www.Manualslib.com manuals search engine

Removal & Installation Procedure

1. Hold the bolt pulley with counter holder and remove the bolt(4).

Counter Holder 603 589 00 40 00

Installation Notice

Tightening Torque	45 Nm

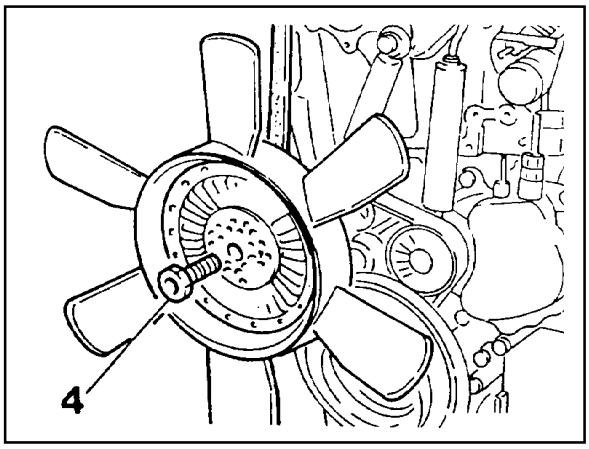

2. Remove the socket bolt(5) and then remove the cooling fan(3) and fan clutch(2).

Notice

Keep the fan clutch vertically.

Installation Notice

Tightening Torque	10 Nm

3. Installation should follow the removal procedure in the reverse order.

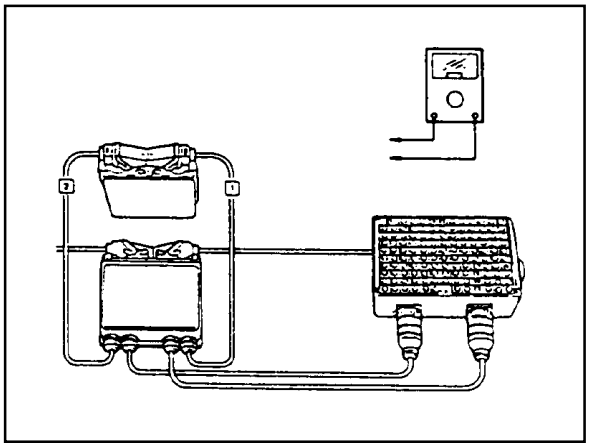

Downloaded from www.Manualslib.com manuals search engine

RADIATOR

Preceding : Removal of cooling fan shroud

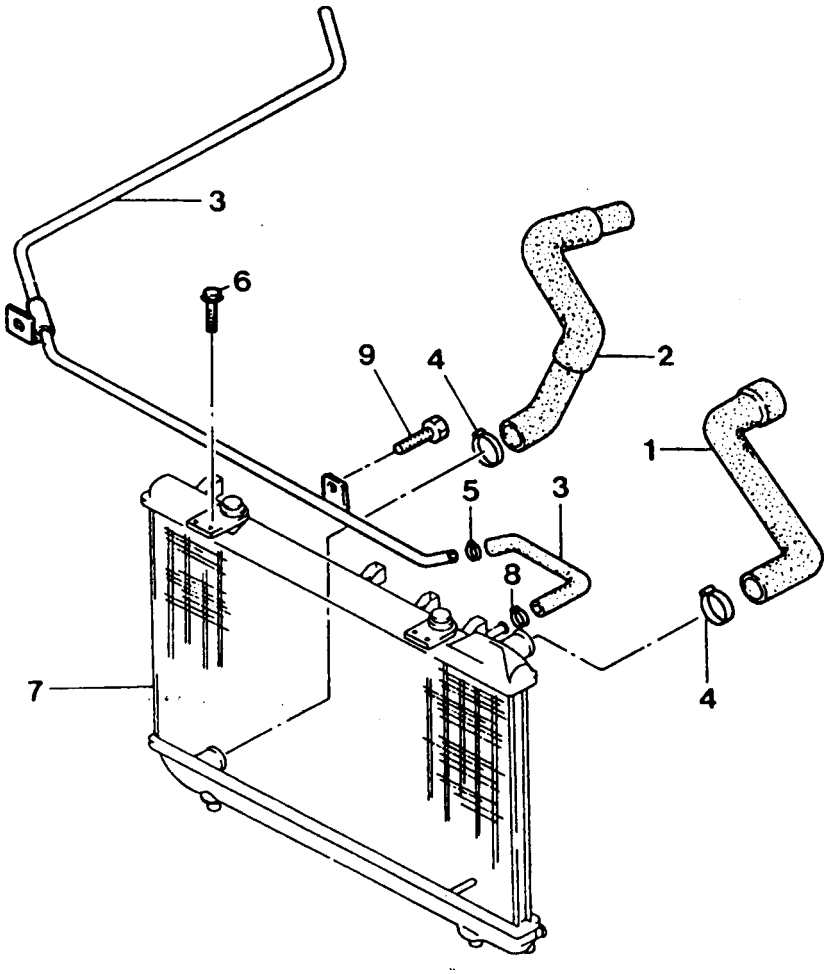

1 Radiator Inlet Hose ..... OM662LA : 220mm
..... OM661LA : 321mm
2 Radiator outlet Hose
3 Radiator Deaeration Tube & Hose
4 Clamp
5 Spring Clamp
6 Bolt ..... 3-7 Nm
7 Radiator
8 Spring Clamp
9 Bolt 3-7Nm

Downloaded from www.Manualslib.com manuals search engine

Removal & Installation Procedure

1. Drain coolant from the radiator.
2. Remove the coolant thermoswich connector from radiator.
3. Remove the each coolant hose.

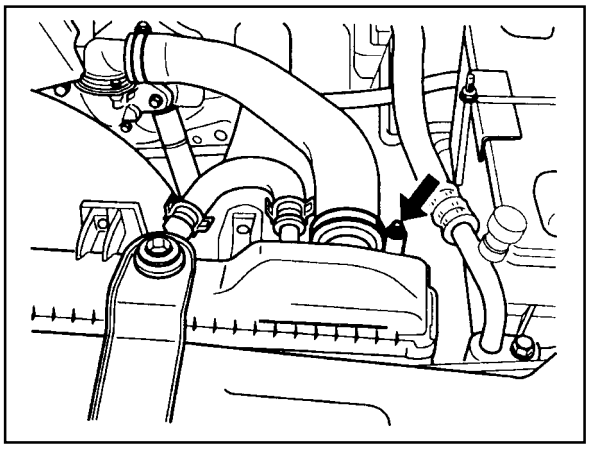

4. Remove the auto T/M oil cooling hose and cooling line.

Installation Notice

Tightening Torque	Hose : 29 - 40Nm

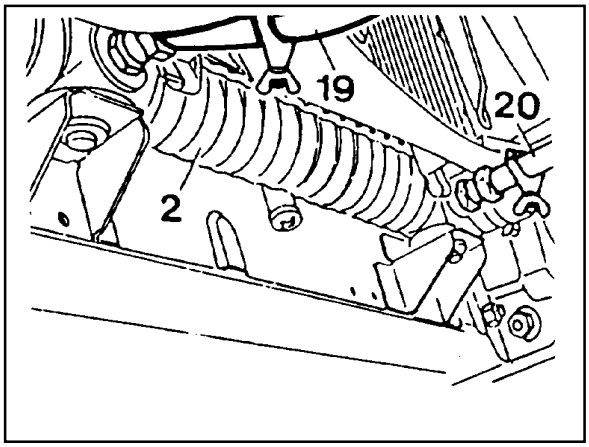

5. Loosen the radiator upper mounting bolt and remove the mounting stopper and insulator.
6. Remove the radiator.
7. Check the radiator pin for crack, leakage and bending and replace it if necessany.
8. Installation should follow the removal procedure in the reverse order.

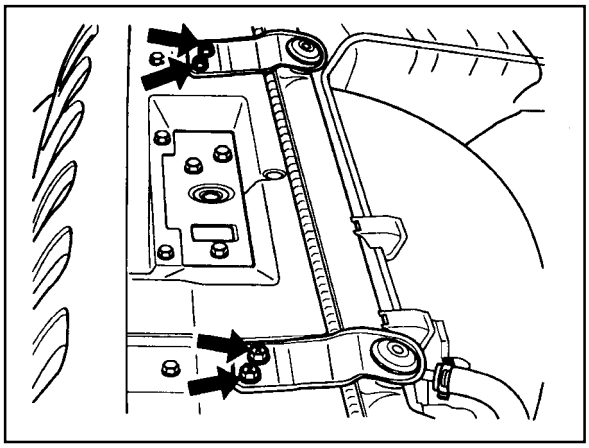

Downloaded from www.Manualslib.com manuals search engine

COOLING SUB - SYSTEM

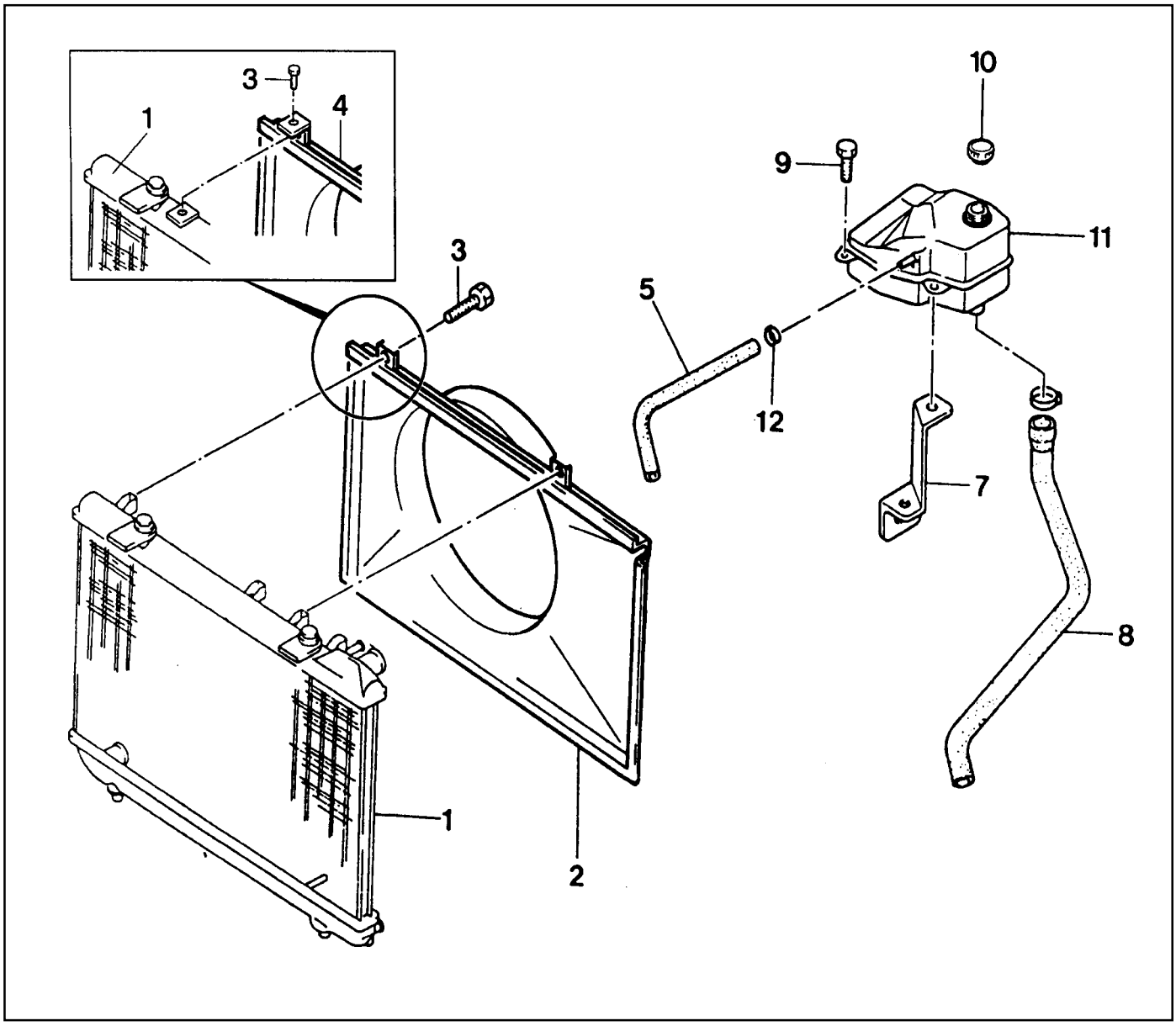

1 Radiator
2 Cooling Fan Shroud
3 Bolt 3-7Nm
4 Cooling Fan Shroud
5 Radiator Deaieration Hose
7 Mounting Bracket
8 Make-up Cooling Hose
9 Bolt 3-7Nm
10 Cooling Reservoir-tank Cap
11 Cooling Reservoir-tank

Downloaded from www.Manualslib.com manuals search engine

Removal & Installation Procedure

Cooling Fan Shroud

1. Remove the radiator deaeration hose and tube.

   Installation Notice

Tightening Torque	3 - 7 Nm

   Tightening torque 3-7Nm

2. Check the shroud.
3. Installation should follow the removal procedure in the reverse order.

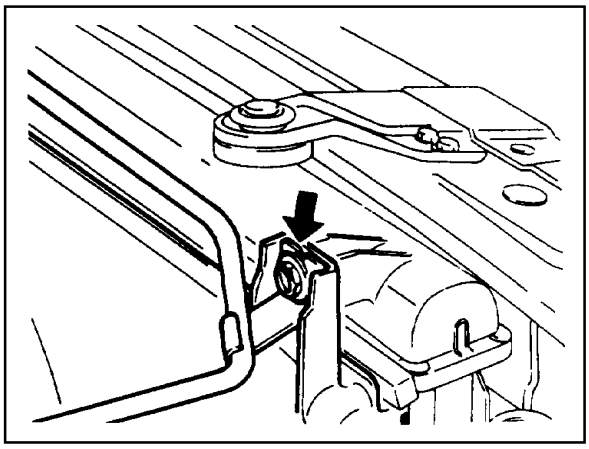

Coolant Sub-Tank

1. Drain the coolant from radiator.
2. Remove the each hose.
3. Loosen the mounting bolt of sub-tank and remove the coolant sub-tank.

   Installation Notice

Tightening Torque	3 - 7 Nm

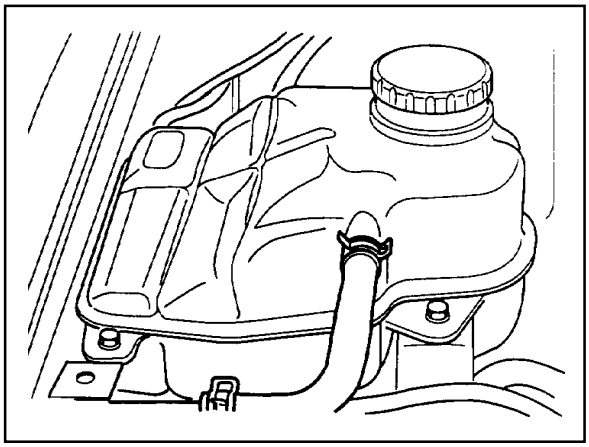

4. Installation should follow the removal procedure in the reverse order.

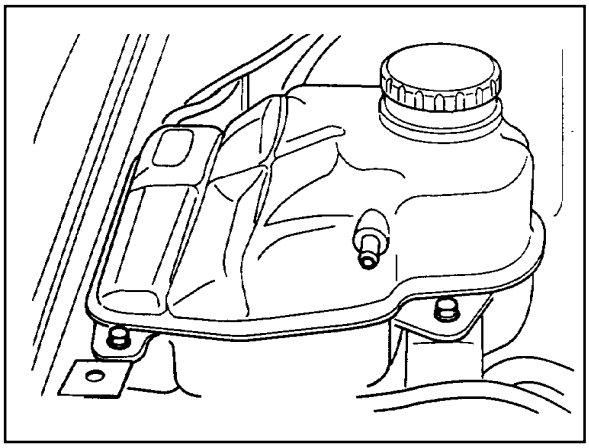

Downloaded from www.Manualslib.com manuals search engine

THERMOSTAT

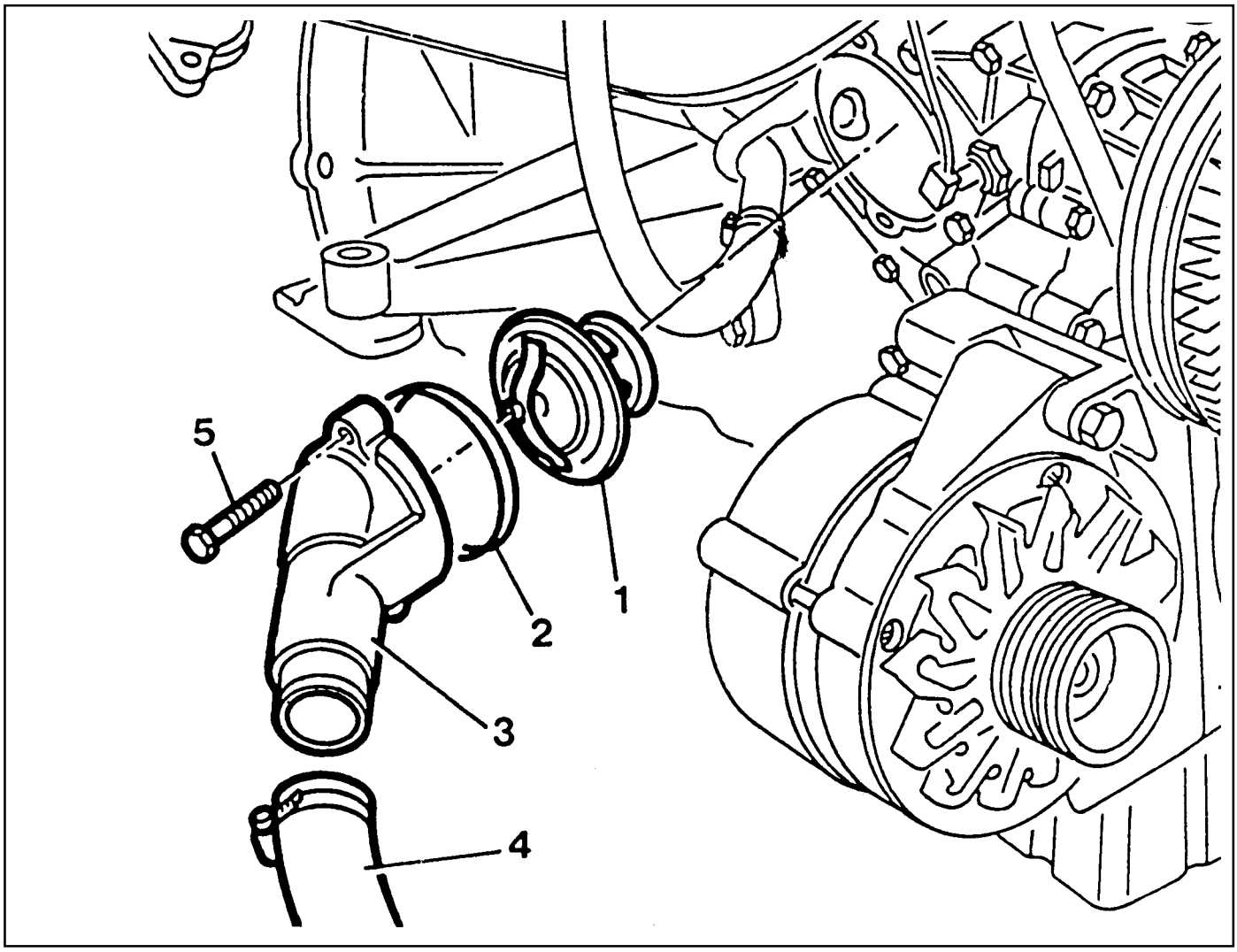

1 Thermostat
2 Seal ..... Replace
3 Thermostat Housing Cover
4 Coolant Hose
5 Bolt 10Nm

Downloaded from www.Manualslib.com manuals search engine

Removal & Installation Procedure

1. Drain the coolant completely.
2. Disconnect the coolant hose(4) from the thermostat housing cover(3).

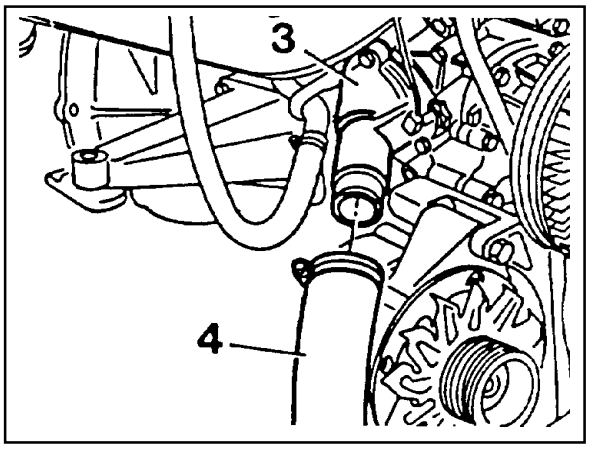

3. Remove the bolts(5) and then remove the thermostat(1) and housing cover(3)

   Installation Notice

   Align the groove on thermostat and the housing cover rib(arrow).

Tightening Torque	10 Nm

   Notice

   Replace the seal(2).

4. Installation should follow the removal procedure in the reverse order.

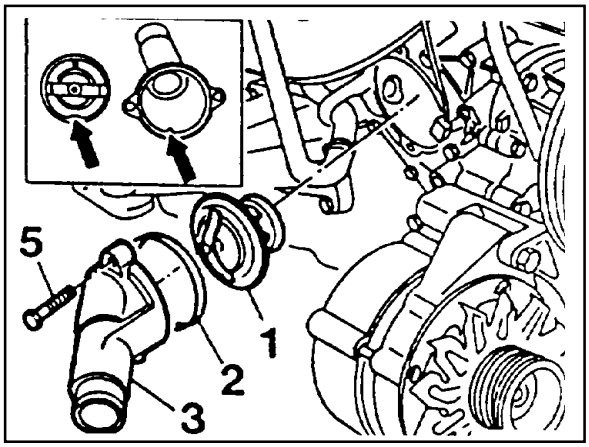

Downloaded from www.Manualslib.com manuals search engine

SECTION 1E1

M162 ENGINE ELECTRICAL

CAUTION: Disconnect the negative battery cable before removing or installing any electrical unit or when a tool or equipment could easily come in contact with exposed electrical terminals. Disconnecting this cable will help prevent personal injury and damage to the vehicle. The ignition must also be in LOCK unless otherwise noted.

TABLE OF CONTENTS

Specifications 1E1-1
Alternator Specifications 1E1-1
Starting Motor Specifications 1E1-2
Battery Specifications 1E1-2
Fastener Tightening Specifications 1E1-2
Special Tools 1E1-3
Special Tools Table 1E1-3
Maintenance and Repair 1E1-4
On-Vehicle Service 1E1-4
Alternator 1E1-4
Starting Motor 1E1-5
Battery 1E1-6
Spark Plug 1E1-7
Ignition Cable 1E1-9
Unit Repair 1E1-12
Battery 1E1-12

SPECIFICATIONS

ALTERNATOR SPECIFICATIONS

Application	Description
Output Voltage	12 - 14 V
Current	115 A
Resistance Between Rotor Core and Slip Ring	¥ W

Downloaded from www.Manualslib.com manuals search engine

STARTING MOTOR SPECIFICATIONS

Application	Description
Voltage	12 V
Output Power	1.7 KW

BATTERY SPECIFICATIONS

Application	Description
Capacity	90 Ah
Specific Gravity	^{3} 1.24
Max. Tolerance Between Cells	^{3} 0.04

FASTENER TIGHTENING SPECIFICATIONS

Application	N·m
Alternator Terminal B+Nut	14 - 18
Alternator Terminal D+Nut	4 - 5
Alternator Combinction Bolt	45 - 50
Battery Cable Nut on Starting Motor	12 - 15
Electric Wire Nut on Starting Motor	6 - 7
Starting Motor Mounting Nut	35 - 48
Battery Mounting Bracket Nut	12 - 18
Battery Negative Cable	12 - 18
Battery Positive Cable	12 - 18
Ignition Cable Cover Bolt	9 - 11
Ignition Cable Bolt	9 - 11
Spark plug	25 - 30

Downloaded from www.Manualslib.com manuals search engine

SPECIAL TOOLS

SPECIAL TOOLS TABLE

	120 589 02 09 00 **Spark Plug Wrench**

Downloaded from www.Manualslib.com manuals search engine

MAINTENANCE AND REPAIR

ON-VEHICLE SERVICE

ALTERNATOR

Preceding Work : Removal of the drivebelt

Removal & Installation Procedure

1. Disconnect the negative battery terminal.
2. Unscrew the nut and disconnect the terminal (1).

   Installation Notice

Tightening Torque	14 - 18 Nm

3. Unscrew the nut and disconnect the terminal (2).

   Installation Notice

Tightening Torque	4 - 5 Nm

4. Unscrew the combination bolt (3).

   Installation Notice

Tightening Torque	42 - 50 Nm

5. Remove the alternator.
6. Installation should follow the removal procedure in the reverse order.

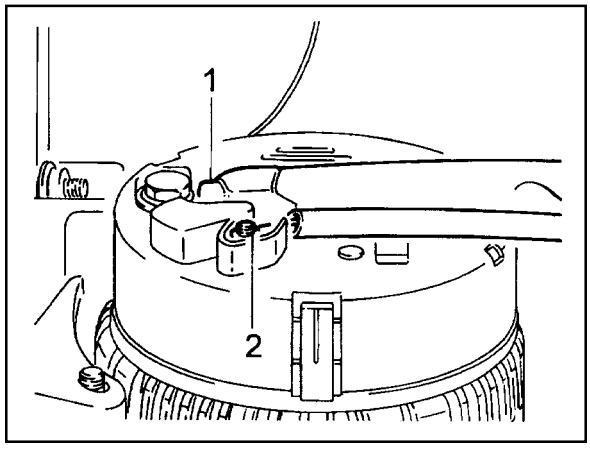

1 Terminal (B+)
2 Terminal (D+)

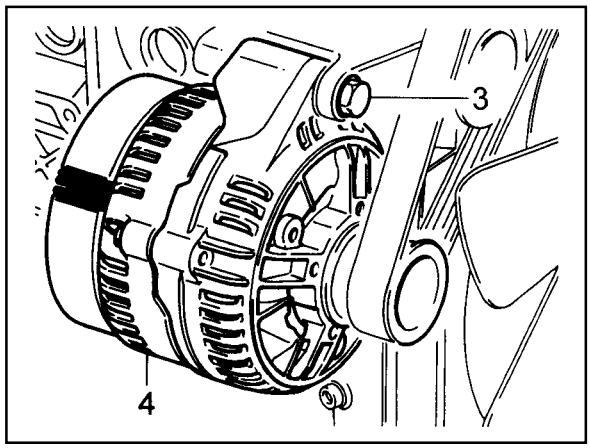

3 Combination Bolt
4 Alternator

Downloaded from www.Manualslib.com manuals search engine

STARTING MOTOR

Removal & Installation Procedure

1. Disconnect the ground cable.
2. Unscrew the nut and disconnect the battery cable(1).

   Installation Notice

Tightening Torque	12 - 15 Nm

3. Unscrew the nut and disconnect the engine electric wire (2).

   Installation Notice

Tightening Torque	6 - 7 Nm

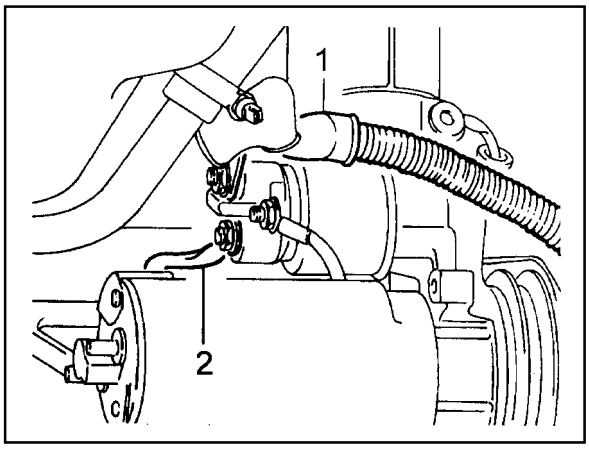

1 Battery Cable
2 Engine Electric Wire

4. Unscrew the mounting bolts (3) of starting motor.

   Installation Notice

Tightening Torque	35 - 48 Nm

5. Remove the starting motor.
6. Installation should follow the removal procedure in the reverse order.

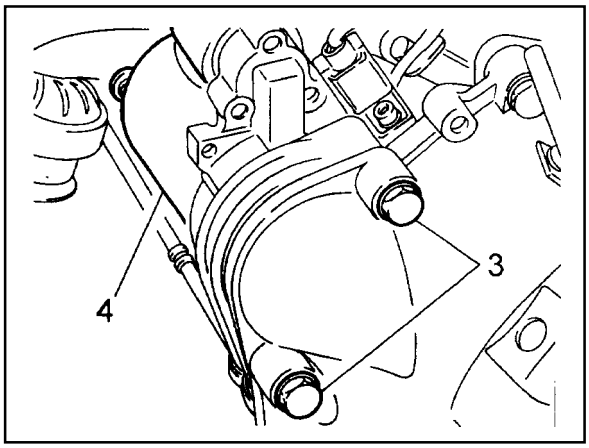

3 Fixing Bolt
4 Starting Motor

Downloaded from www.Manualslib.com manuals search engine

BATTERY

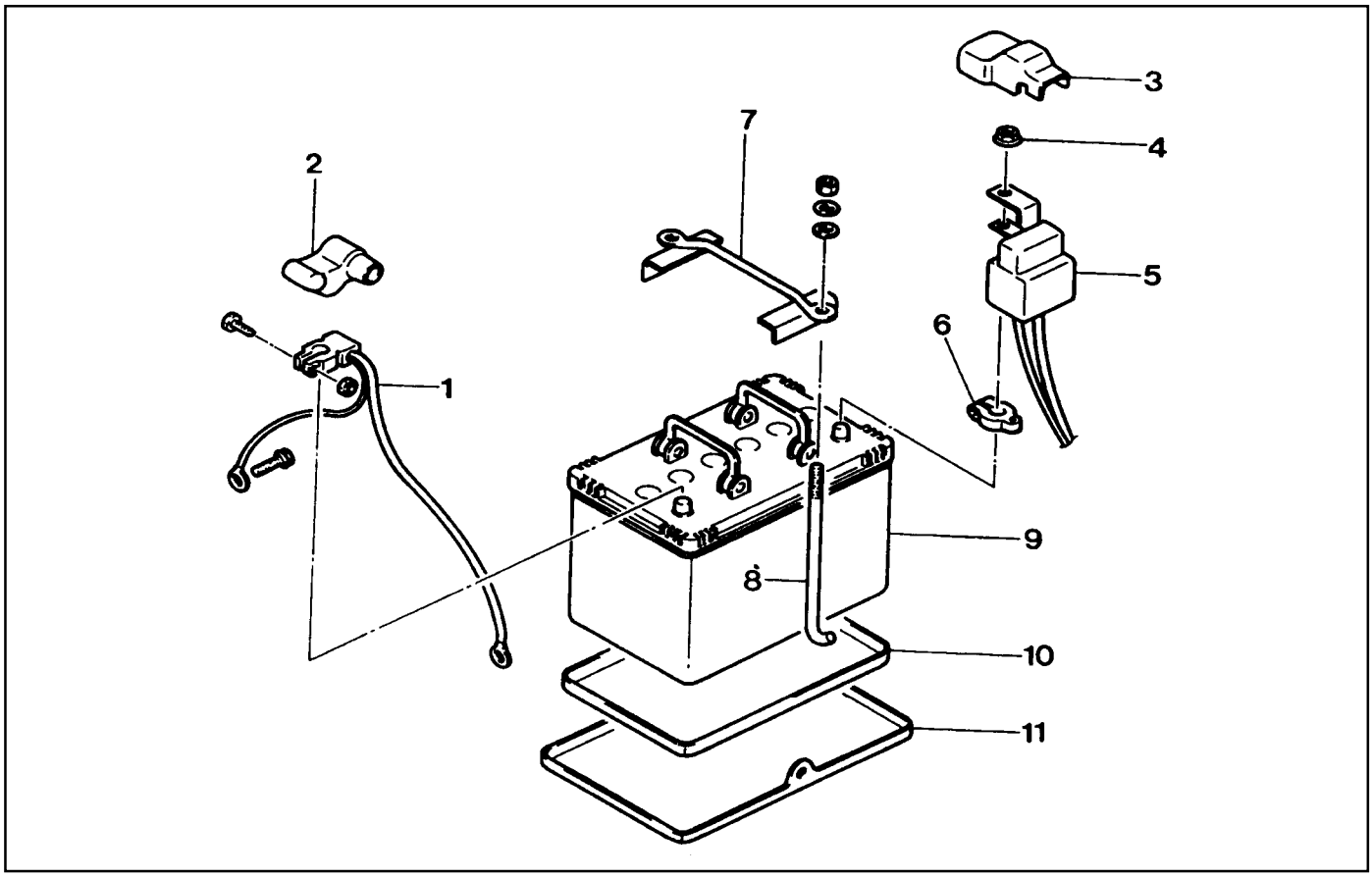

1 Cable Terminal (-)
2 Cable Terminal Cap (-)
3 Cable Terminal Cap (+)
4 Nut
5 Fuseblink Box
6 Terminal (+)
7 Battery holddown Bracket
8 Battery Clamp Bolt
9 Battery
10 Sub Tray
11 Battery Tray

Removal & Installation Procedure

Notice

- Disconnect the battery negative cable first.
- Insert the clamp bolt (8) into the battery tray hole (11) from inside when installing.

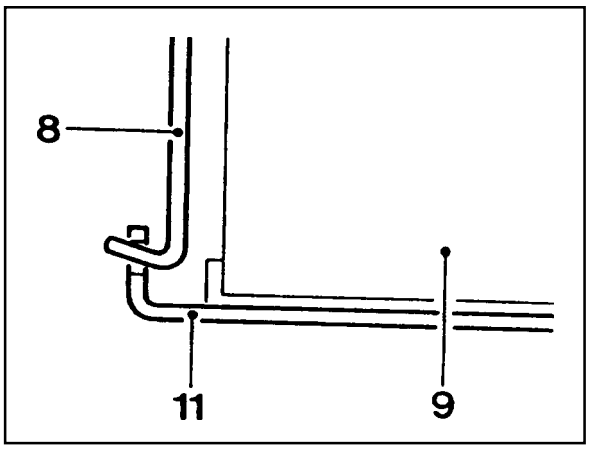

Downloaded from www.Manualslib.com manuals search engine

SPARK PLUG

Preceding Work : Removal of intake air duct

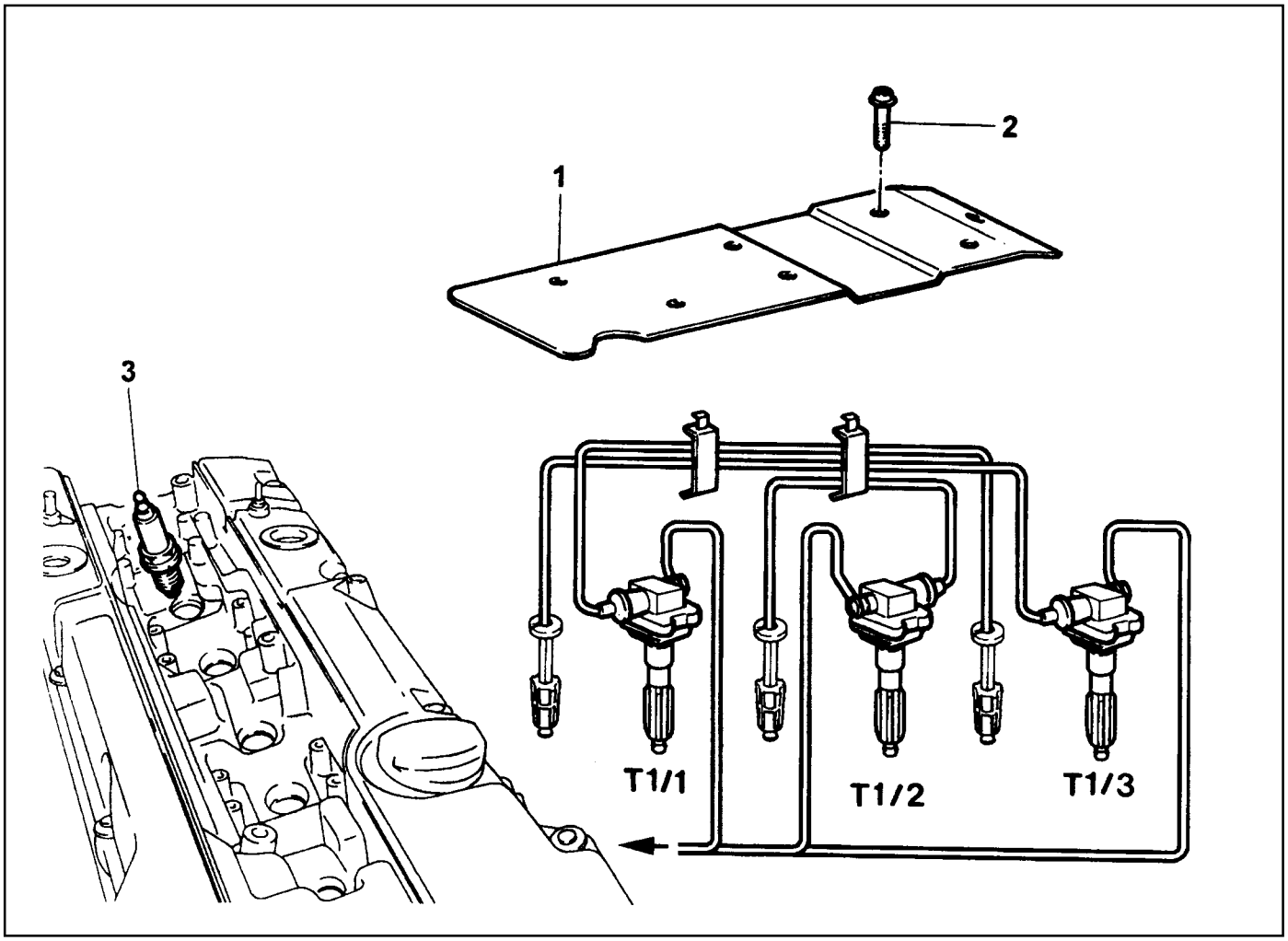

1 Ignition Coil Cable Cover
2 Bolt (M6 X 60, 7 pieces) ..... 9-11 Nm
3 Spark Plug

T1/1 Ignition Coil : Cylinder 2 and 5
T1/2 Ignition Coil : Cylinder 3 and 4
T1/3 Ignition Coil : Cylinder 1 and 6

Downloaded from www.Manualslib.com manuals search engine

Tools Required

120 589 09 00 Spark Plug Wrench

Replacement Procedure

1. Remove the seven bolts (2) and remove the ignition cable cover.

   Installation Notice

Tightening Torque	9 - 11 Nm

2. Remove the two bolts (M6 X 25) from each ignition cable and remove the ignition cable.

   Installation Notice

Tightening Torque	9 - 11 Nm

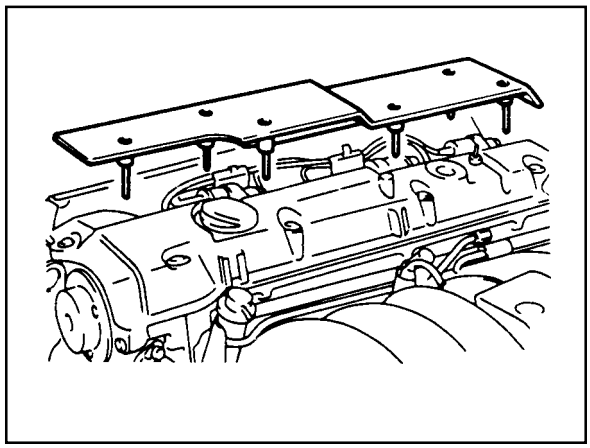

3. Remove the spark plug using the special tool.

   Installation Notice

Tightening Torque	9 - 11 Nm

Spark Plug Wrench 120 589 02 09 00

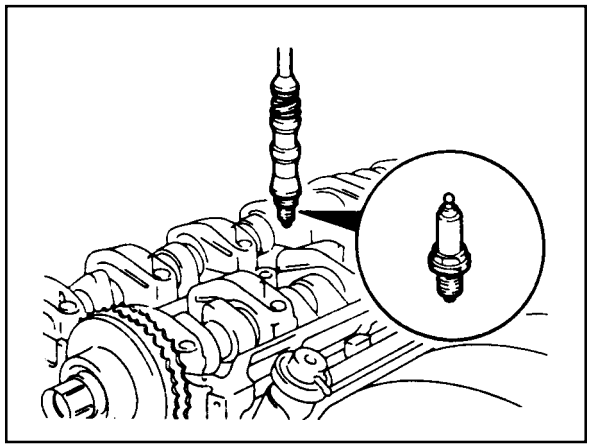

Downloaded from www.Manualslib.com manuals search engine

IGNITION CABLE

Preceding Work : Removal of intake air duct

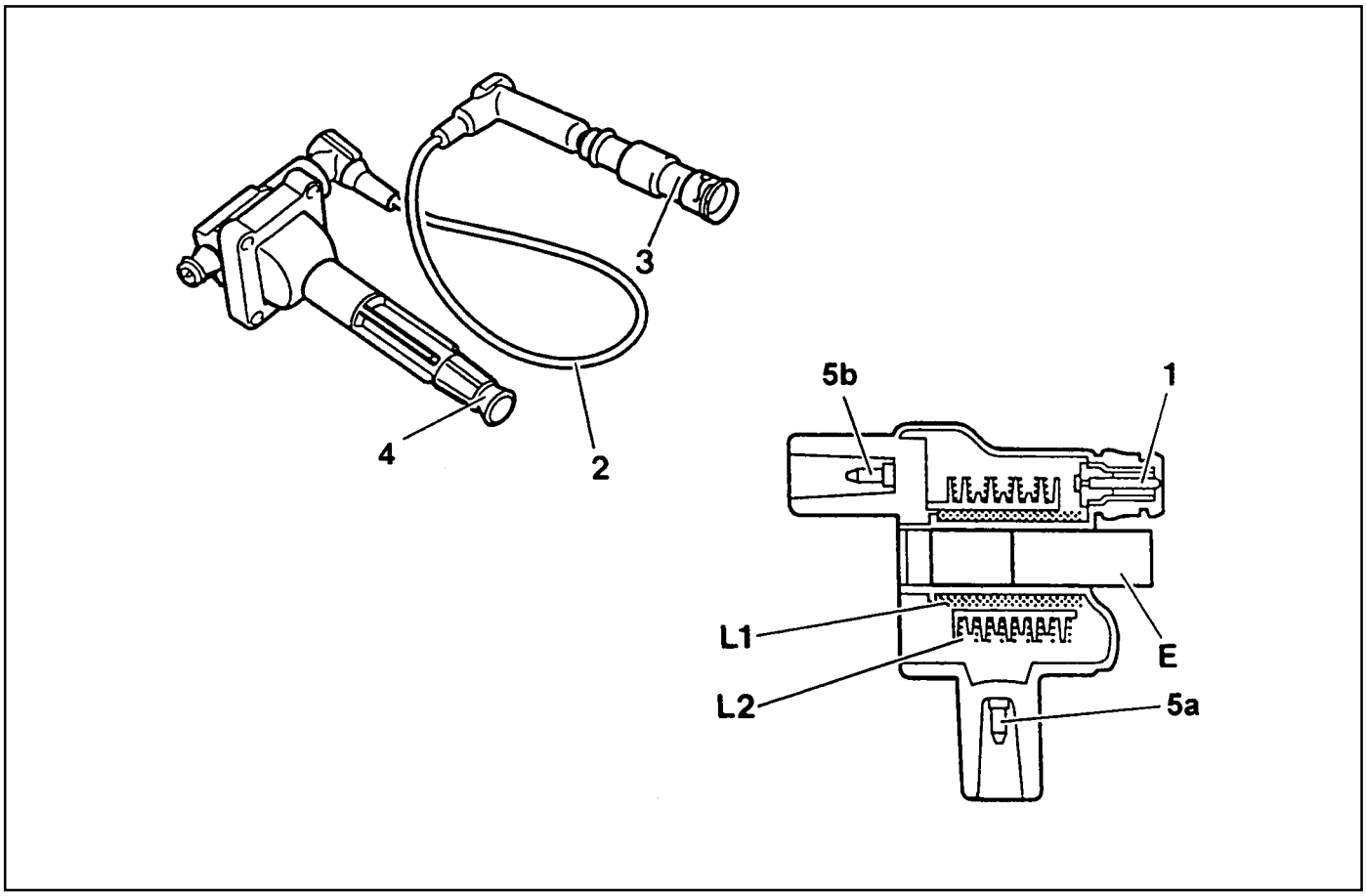

1	Control Cable Connection	5a,5b	Secondary Voltage Connection
2	Ignition Cable	E	Iron Core
3	Spark Plug Connector	L2	Primary Ignition Coil
4	Coupling Plug	L1	Secondary Ignition Coil

Downloaded from www.Manualslib.com manuals search engine

Functions

1. Firing order : 1-5-3-6-2-4
2. The ignition cables are located on the cylinder head cover. Each ignition coil provides the high voltage to two spark plugs simultaneously.
   - T1/1 : cylinder 2 and 5
   - T1/2 : cylinder 3 and 4
   - T1/3 : cylinder 1 and 6

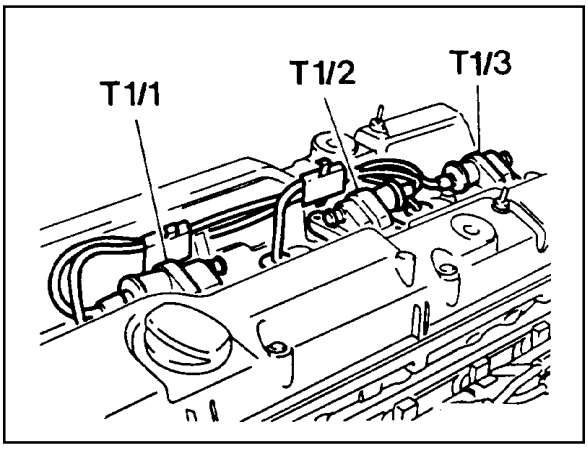

3. The secondary output voltage (5a) is supplied to the No.2 cylinder spark plug through the spark plug connector. The secondary output voltage (5b) is supplied to the No.5 cylinder spark plug through the ignition cable. The guide pin (W) acts as a ground while the ignition cable is operated.

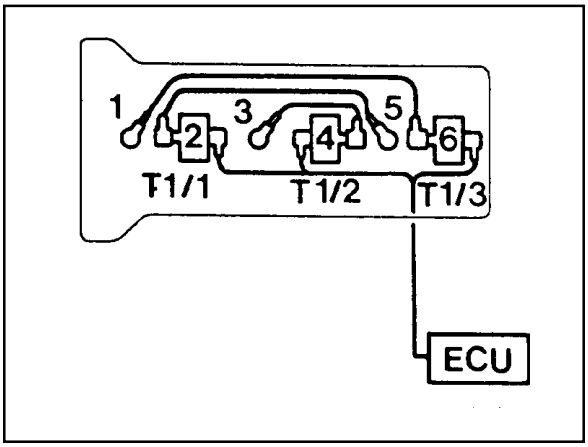

Removal & Installation Procedure

1. Disconnect the negative battery cable (1).
2. Remove the ignition cable connector from the ignition cable.
3. Disconnect the secondary spark plug connectors from the each spark plugs and remove the ignition cable.

   Installation Notice

Tightening Torque	5.2 - 8.5 Nm

   - Make sure that the ignition cables are correctly routed.
   - Exactly install the ignition cable guide pin into the vehicle to be grounded.
4. Installation should follow the removal procedure in the reverse order.

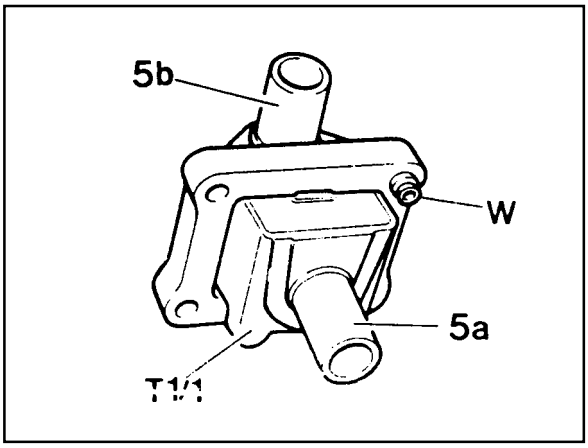

Downloaded from www.Manualslib.com manuals search engine

Circuit Diagram

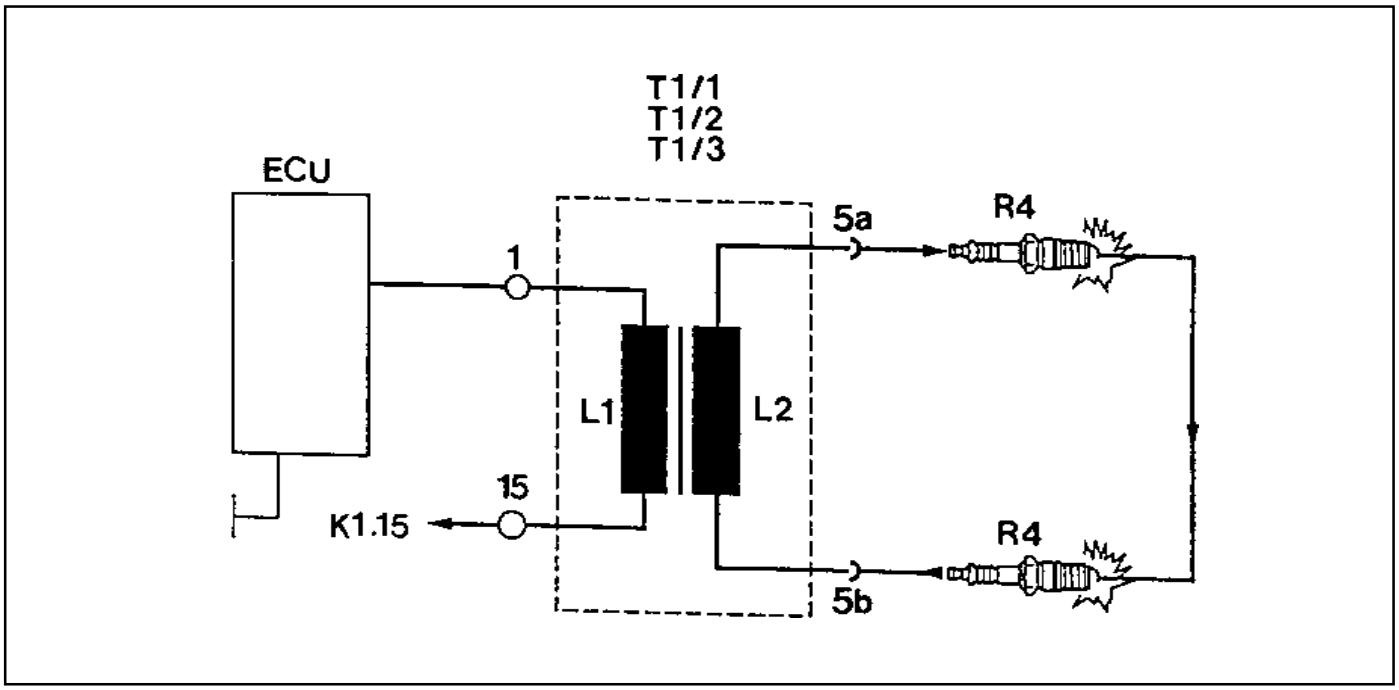

Inspection & Maintenance Procedure (for MSE)

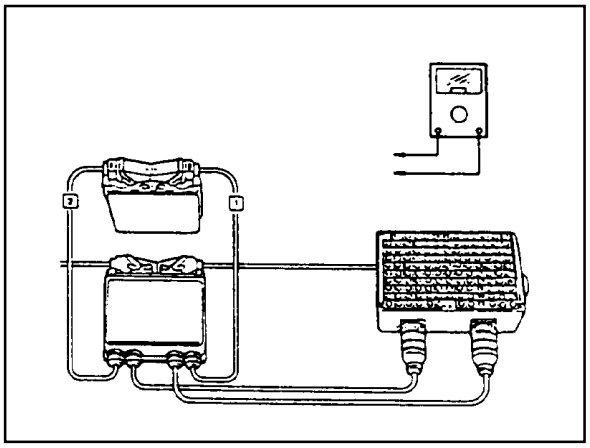

1. While the ignition switch is in 'OFF' position, remove the wiring connectors (1 and 15) from ignition coil and measure the primary resistance between terminal No.1 and No.15.

Specified Value	0.9 - 1.6 W (20°C)

Notice

If out of specified value, replace the ignition coil.

2. During engine cranking, measure primary voltage (T1/1) between ECU terminal No. 71 and No. 69.

Specified Value	200 - 350 V

Notice

- Measure remaining cables.
  - T1/2 : No. 72 and 69.
  - T1/3 : No. 70 and 69.
- If out of specified value, check ignition cable and ECU.

3. Using a multi-tester, measure the secondary coil resistance between 5a and 5b.

Specified Value	6 - 8.5 kW

Downloaded from www.Manualslib.com manuals search engine

UNIT REPAIR

BATTERY

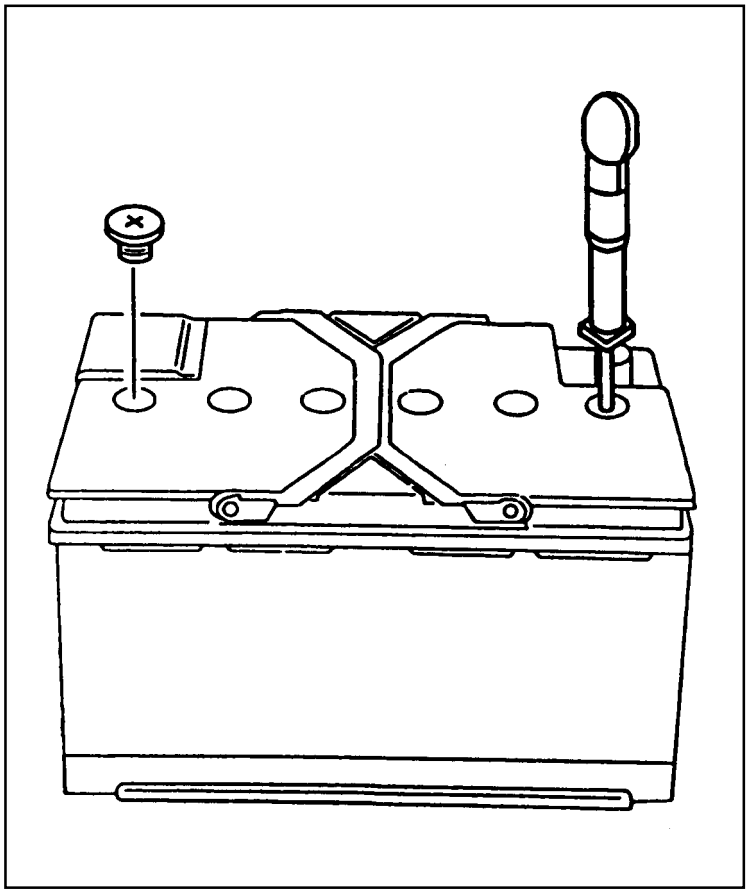

Inspection

Notice

- When charging the battery, do not leave the inflammable objects around it.
- When checking the electrolyte of battery, put on an eye protector and gloves.

1. Inspect the surface of the battery and replace if any defects were found on it.
2. Check if the specific gravity of the electrolyte is within the specified value.

Battery capacity(Ah)	85
Battery specific gravity	³ 1.24
Max. tolerance between cells	³ 0.04

Notice

- Replace the battery if the maximum tolerance of the electrolyte between cells is out of the specified value.
- Measure the specific gravity in the approx. 20°C of ambient temperature.

3. Replenish the electrolyte if necessary.

Downloaded from www.Manualslib.com manuals search engine

SECTION 1E2

M161 ENGINE ELECTRICAL

CAUTION: Disconnect the negative battery cable before removing or installing any electrical unit or when a tool or equipment could easily come in contact with exposed electrical terminals. Disconnecting this cable will help prevent personal injury and damage to the vehicle. The ignition must also be in LOCK unless otherwise noted.

TABLE OF CONTENTS

Specifications 1E2-1
Alternator Specifications 1E2-1
Starting Motor Specifications 1E2-2
Battery Specifications 1E2-2
Fastener Tightening Specifications 1E2-2
Special Tools 1E2-3
Special Tools Table 1E2-3
Maintenance and Repair 1E2-4
On-Vehicle Service 1E2-4
Alternator 1E2-4
Starting Motor 1E2-5
Battery 1E2-6
Spark Plug 1E2-7
Ignition Cable 1E2-9
Unit Repair 1E2-12
Battery 1E2-12

SPECIFICATIONS

ALTERNATOR SPECIFICATIONS

Application	Description
Output Voltage	12 - 14 V
Current	115 A
Resistance Between Rotor Core and Slip Ring	¥ W

Downloaded from www.Manualslib.com manuals search engine

STARTING MOTOR SPECIFICATIONS

Application	Description
Voltage	12 V
Output Power	1.2 KW

BATTERY SPECIFICATIONS

Application	Description
Capacity	90 Ah
Specific Gravity	^{3} 1.24
Max. Tolerance Between Cells	^{3} 0.04

FASTENER TIGHTENING SPECIFICATIONS

Application	N·m
Alternator Terminal B+Nut	14 - 18
Alternator Terminal D+Nut	4 - 5
Alternator Combinction Bolt	45 - 50
Battery Cable Nut on Starting Motor	12 - 15
Electric Wire Nut on Starting Motor	6 - 7
Starting Motor Mounting Nut	35 - 48
Battery Mounting Bracket Nut	12 - 18
Battery Negative Cable	12 - 18
Battery Positive Cable	12 - 18
Ignition Cable Cover Bolt	9 - 11
Ignition Cable Bolt	9 - 11
Spark plug	25 - 30

Downloaded from www.Manualslib.com manuals search engine

SPECIAL TOOLS

SPECIAL TOOLS TABLE

	120 589 02 09 00 **Spark Plug Wrench**

Downloaded from www.Manualslib.com manuals search engine

MAINTENANCE AND REPAIR

ON-VEHICLE SERVICE

ALTERNATOR

Preceding Work : Removal of the drivebelt

Removal & Installation Procedure

1. Disconnect the negative battery terminal.
2. Unscrew the nut and disconnect the terminal (1).

   Installation Notice

Tightening Torque	14 - 18 Nm

3. Unscrew the nut and disconnect the terminal (2).

   Installation Notice

Tightening Torque	4 - 5 Nm

4. Unscrew the combination bolt (3).

   Installation Notice

Tightening Torque	42 - 50 Nm

5. Remove the alternator.
6. Installation should follow the removal procedure in the reverse order.

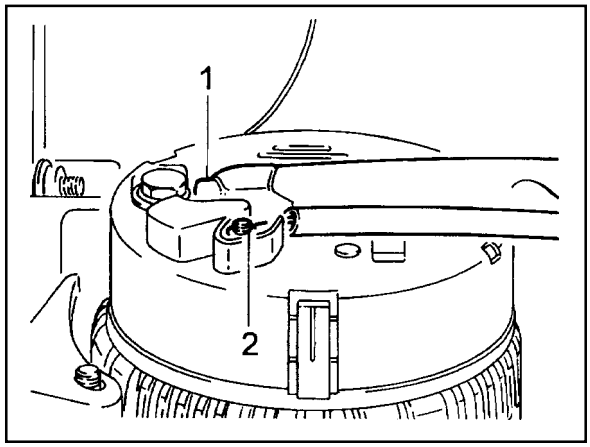

1 Terminal (B+)
2 Terminal (D+)

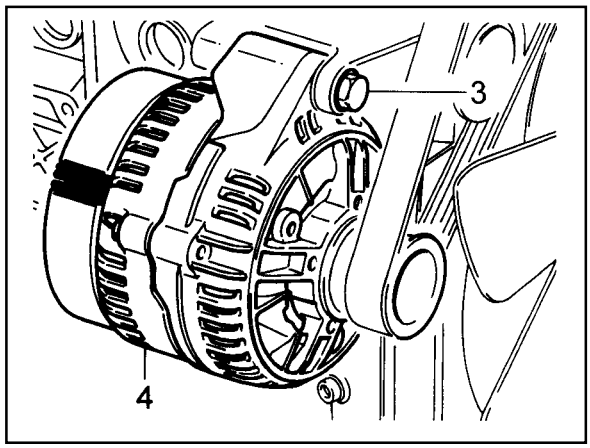

3 Combination Bolt
4 Alternator

Downloaded from www.Manualslib.com manuals search engine

STARTING MOTOR

Removal & Installation Procedure

1. Disconnect the ground cable.
2. Unscrew the nut and disconnect the battery cable(1).

   Installation Notice

Tightening Torque	12 - 15 Nm

3. Unscrew the nut and disconnect the engine electric wire (2).

   Installation Notice

Tightening Torque	6 - 7 Nm

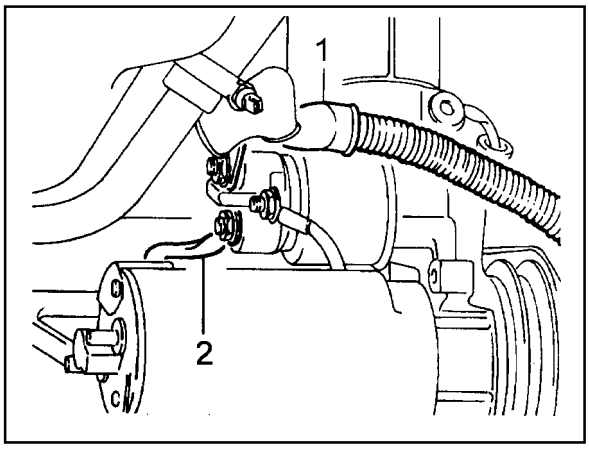

1 Battery Cable
2 Engine Electric Wire

4. Unscrew the mounting bolts (3) of starting motor.

   Installation Notice

Tightening Torque	35 - 48 Nm

5. Remove the starting motor.
6. Installation should follow the removal procedure in the reverse order.

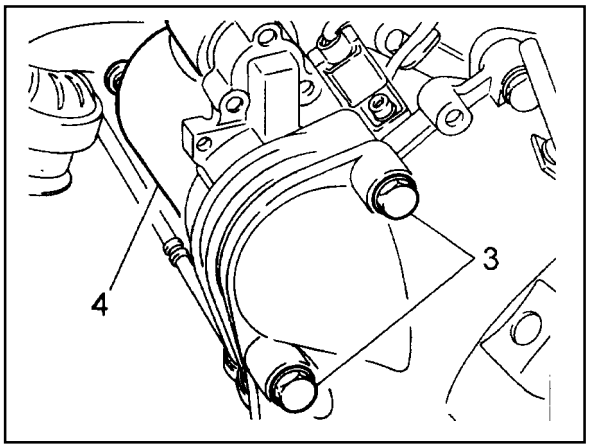

3 Fixing Bolt
4 Starting Motor

Downloaded from www.Manualslib.com manuals search engine

BATTERY

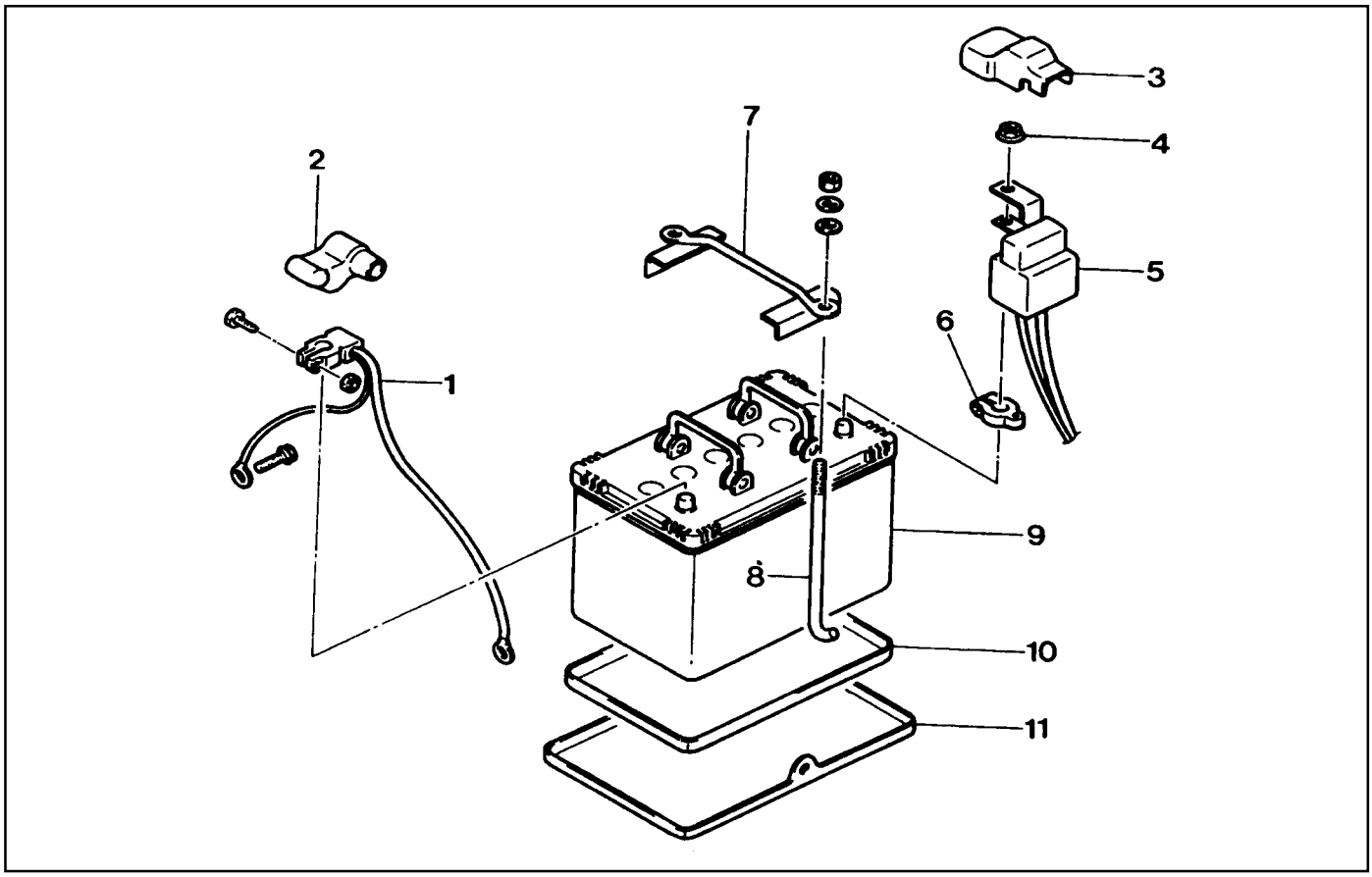

1 Cable Terminal (-)
2 Cable Terminal Cap (-)
3 Cable Terminal Cap (+)
4 Nut
5 Fuseblink Box
6 Terminal (+)
7 Battery holddown Bracket
8 Battery Clamp Bolt
9 Battery
10 Sub Tray
11 Battery Tray

Removal & Installation Procedure

Notice

- Disconnect the battery negative cable first.
- Insert the clamp bolt (8) into the battery tray hole (11) from inside when installing.

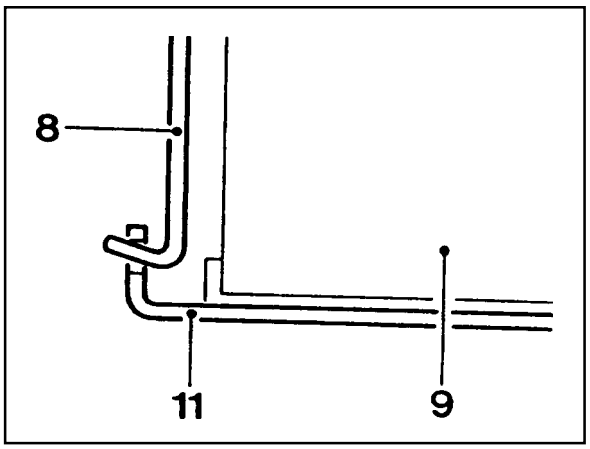

Downloaded from www.Manualslib.com manuals search engine

SPARK PLUG

Preceding Work : Removal of intake air duct

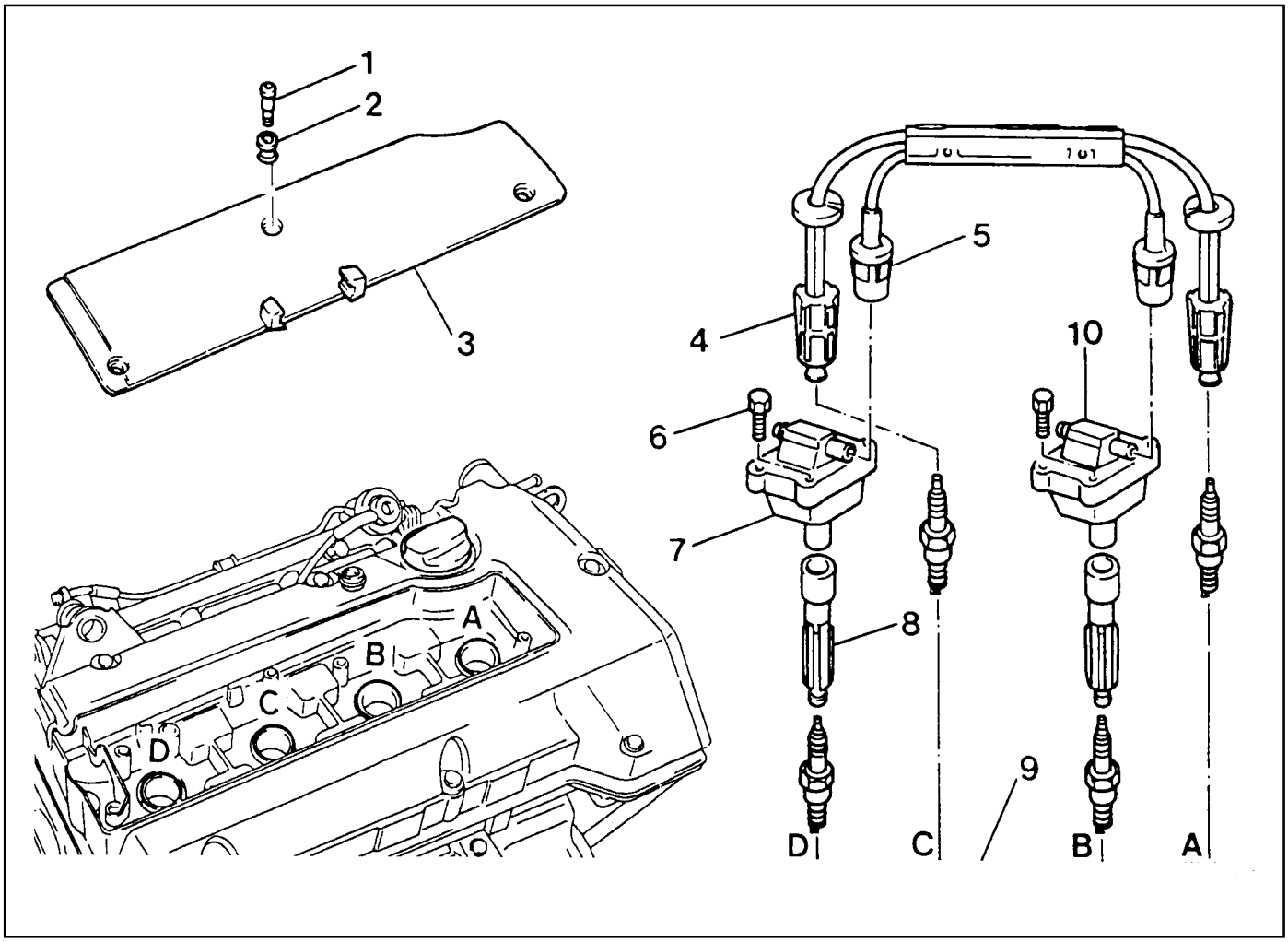

1 Screw (3 pieces) ..... 9 - 11 Nm
2 Adaptor (3 pieces)
3 Ignition Coil Cable Cover
4 Spark Plug Connector
5 Ignition Coil Connector
6 Bolts (M6 X 25, 4 pieces) ..... 9 - 11 Nm
7 Ignition Coil (T1/1)
8 Coupling Plug
9 Spark Plug ..... 25 - 30 Nm
10 Ignition Coil (T1/2)

Tools Required

119 589 01 09 00 Spark Plug Wrence

Downloaded from www.Manualslib.com manuals search engine

Replacement Procedure

1. Unscrew the three screws(1) and remove the ignition coil cable cover

   Installation Notice

Tightening Torque	9 - 11Nm

2. Disconnect the cable from ignition coil and spark plug.

3. Unscrew two bolts(M6 X 25) from each ignition coil and remove the ignition coil(arrow) .

   Installation Notice

Tightening Torque	9 - 11Nm

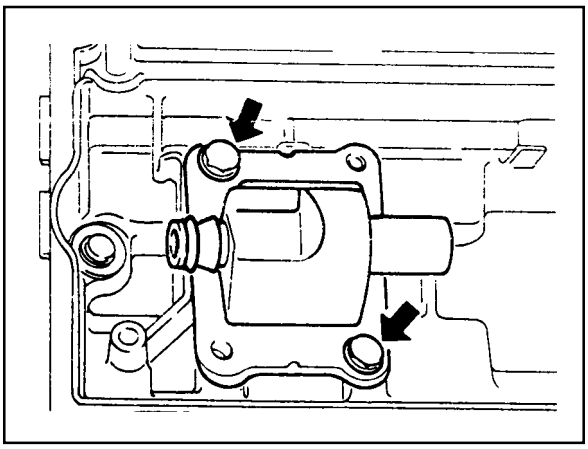

4. Using the special tool, remove the spark plug .

   Installation Notice

Tightening Torque	25 - 30 Nm
Clearance	0.8 + 0.1 mm

Spark Plug Wrench 119 589 01 09 00

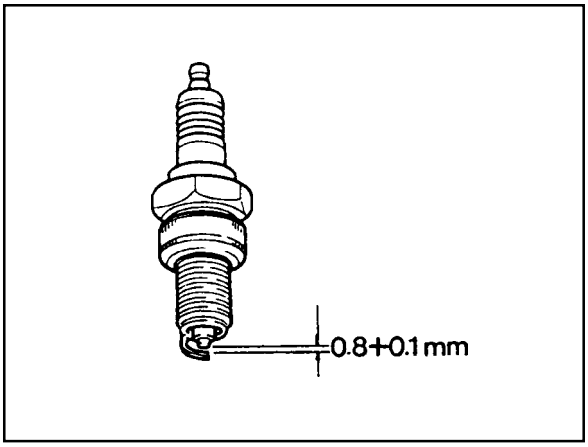

Notice

- Tighten the spark plug with specified torque.
- nstall the ignition coil to No.2 and 4 cylinder, and connect the cable to No.1, 4 and 2, 3 cylinder
  - T1/1 : cylinder 1 and 4
  - T1/2 : cylinder 2 and 3

Downloaded from www.Manualslib.com manuals search engine

IGNITION CABLE

Preceding Work : Removal of intake air duct

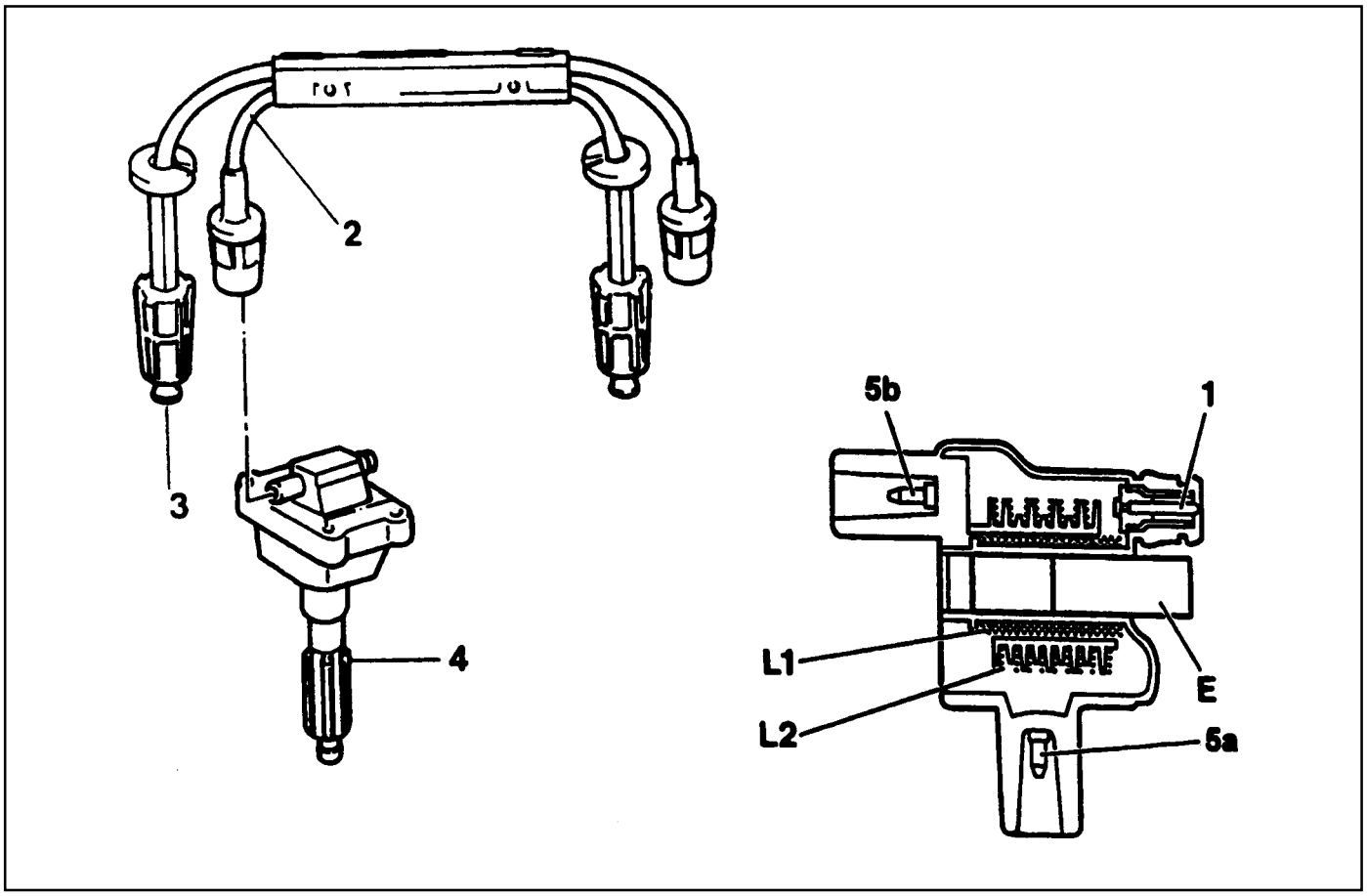

1	Control Cable Connection	5a,5b	Secondary Voltage Connection
2	Ignition Cable	E	Iron Core
3	Spark Plug Connector	L2	Primary Ignition Coil
4	Coupling Plug	L1	Secondary Ignition Coil

Downloaded from www.Manualslib.com manuals search engine

Removal & Installation Procedure

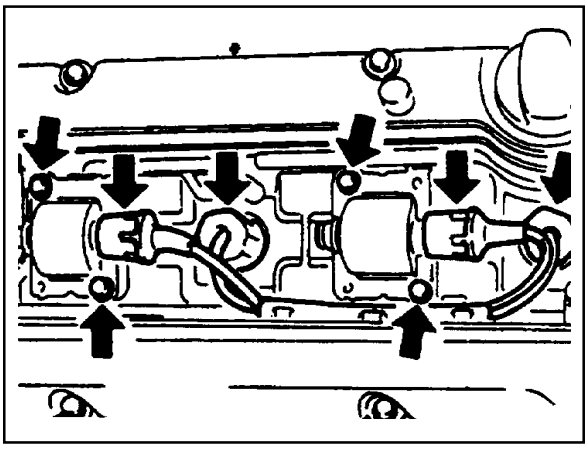

1. Disconnect the battery negative cable.
2. Unscrew the 3 screws and remove the ignition cable duct cover.

   Installation Notice

Tightening Torque	9 - 11 Nm

3. Seperate the cable from the ignition cable and the spark plug.
4. Remove the 2 bolts from each ignition cable and remove the ignition cables.

   Installation Notice

Tightening Torque	9 - 11 Nm

   Install the ignition cable to the cylinder 2 and 4 and connect the cable from 1 to 4, and from 2 to 3.

   - T1/1 : Cylinder 1 and 4
   - T1/2 : Cylinder 2 and 3

5. Installation should follow the removal procedure in the reverse order.

Ignition Cable and Cable Lay-out

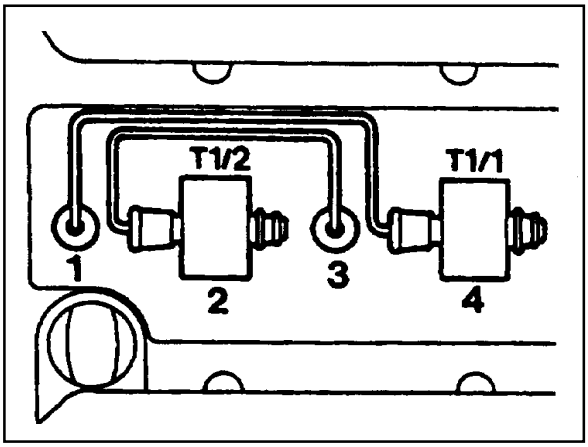

1. Firing Order : 1-3-4-2
2. T1/1 : Connect the cylinder 1 + 4
3. T1/2 : Connect the cylinder 2 + 3

Downloaded from www.Manualslib.com manuals search engine

Inspection & Maintenance (for E2.3 MSE)

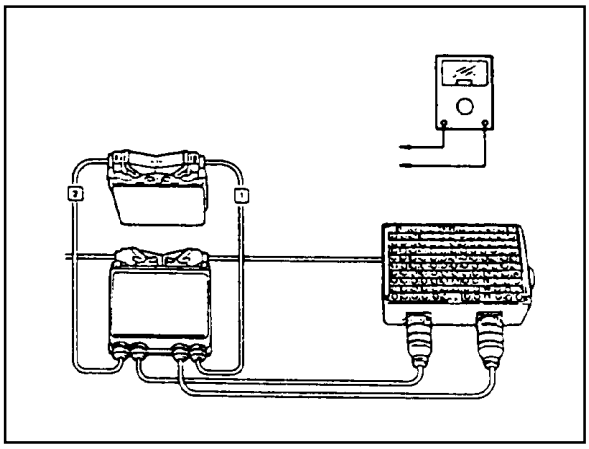

1. Measure the primary resistance between the cable terminals 1 and 15 after removing the ignition cable wiring connector (1 and 15) with ignition switch OFF.

   Notice

   Replace the ignition coil if out of the specified resistance.

Specified Value	0.9 - 1.6 W

2. Measure the primary voltage(T1/1) between the ECU terminals No.72 and No.69 during the engine cranking (starter motor activated).

Specified Value	200 - 350 V

   - T1/2 : between No.71 and No.69.

   Notice

   Check the ignition cable and the ECU if out of the specified value.

3. Measure the secondary cable resistance between the ignition coil 5a and 5b using a multimeter.

Specified Value	6 - 8.5 KW

Downloaded from www.Manualslib.com manuals search engine

UNIT REPAIR

BATTERY

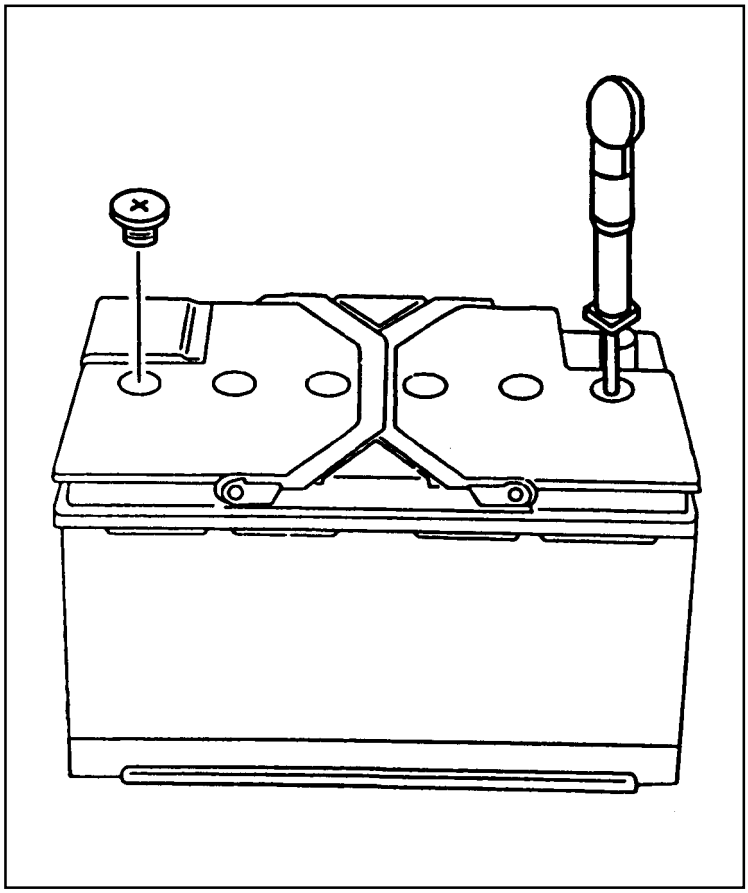

Inspection

Notice

- When charging the battery, do not leave the inflammable objects around it.
- When checking the electrolyte of battery, put on an eye protector and gloves.

1. Inspect the surface of the battery and replace if any defects were found on it.
2. Check if the specific gravity of the electrolyte is within the specified value.

Battery Capacity(Ah)	85
Battery Specific Gravity	3 1.24
Max. Tolerance between Cells	3 0.04

Notice

- Replace the battery if the maximum tolerance of the electrolyte between cells is out of the specified value.
- Measure the specific gravity in the approx. 20°C of ambient temperature.

3. Replenish the electrolyte if necessary.

Downloaded from www.Manualslib.com manuals search engine

SECTION 1E3

OM600 ENGINE ELECTRICAL

Caution: Disconnect the negative battery cable before removing or installing any electrical unit or when a tool or equipment could easily come in contact with exposed electrical terminals. Disconnecting this cable will help prevent personal injury and damage to the vehicle. The ignition must also be in LOCK unless otherwise noted.

TABLE OF CONTENTS

Specifications 1E3-1
General Specifications 1E3-1
Maintenance and Repair 1E3-2
On-Vehicle Service 1E3-2
Glow Plug 1E3-2
Alternator 1E3-6
Starter Motor 1E3-8

SPECIFICATIONS

GENERAL SPECIFICATIONS

Application	Description
Alternator	12V - 75A
Starter	12V - 2.2kW
Glow Plug	11.5V

Downloaded from www.Manualslib.com manuals search engine

MAINTENANCE AND REPAIR

ON-VEHICLE SERVICE

GLOW PLUG

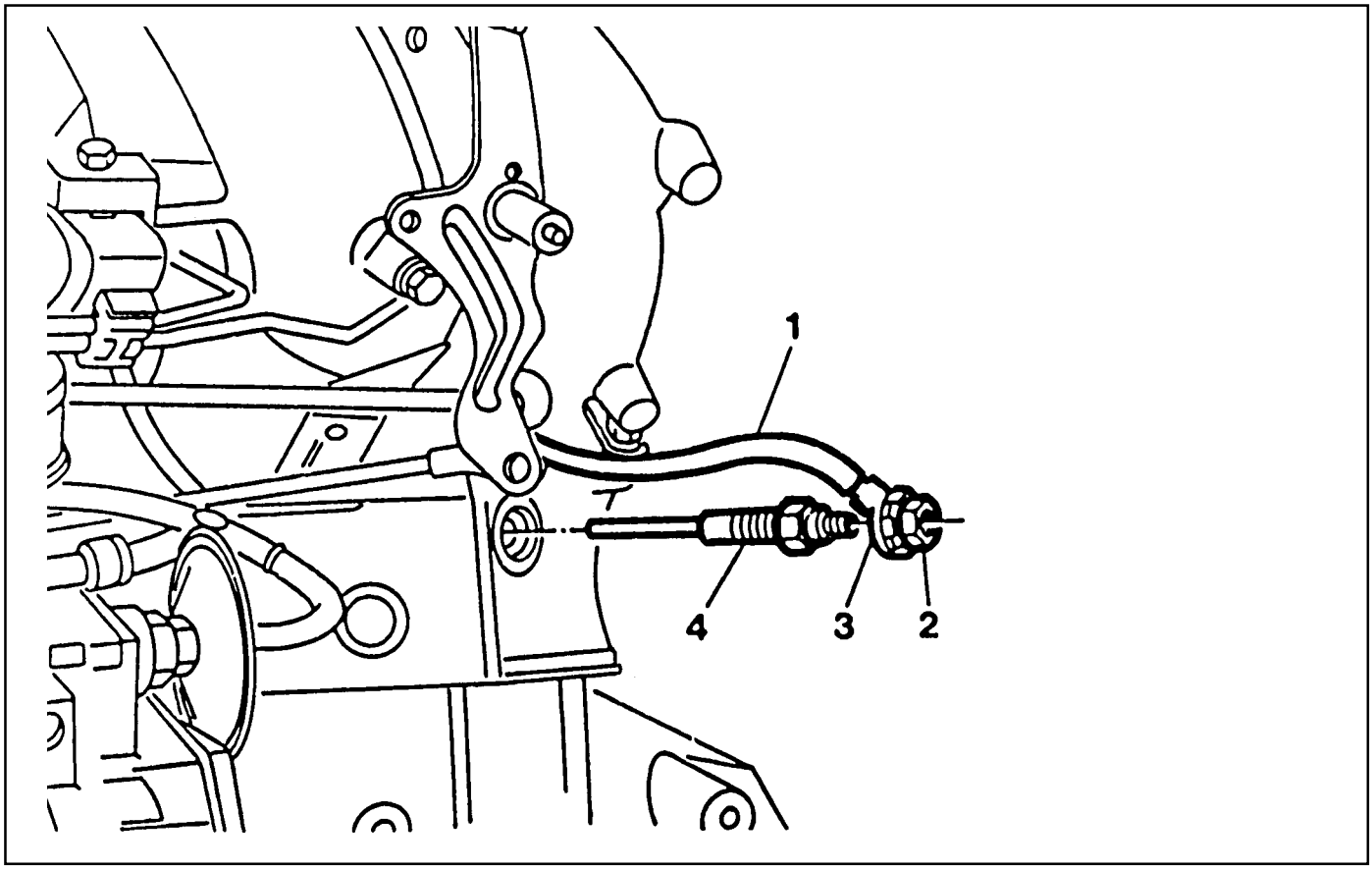

1 Wiring Harness
2 Nut ..... 4 Nm
3 Wire Terminal
4 Glow Plug

Preheating System

General information

The preheating system consists of control, coolant temperature sensor and glow plugs.

- Control relay - preheating time.
- Coolant temperature sensor.
- Glow plug.

Downloaded from www.Manualslib.com manuals search engine

1. Preheating time - control relay.

   Control relay functions as followings :

   - Switching of preheating current.
   - Indication of preheating finish.
   - Control of preheating sequence.
   - Indication of fault.

2. Coolant temperature sensor.

   Coolant temperature sensor senses coolant's temperature and signals it to the preheating relay continuously.

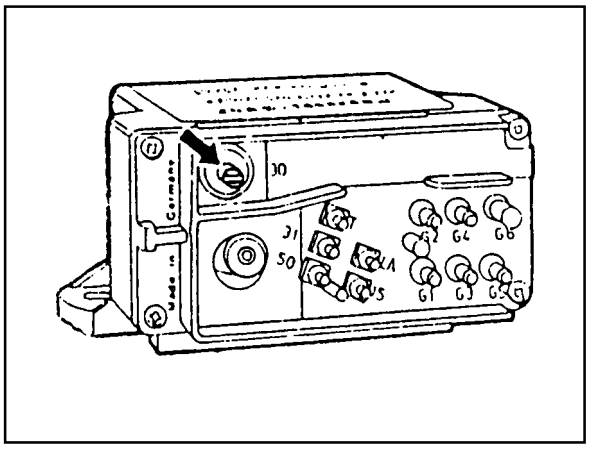

3. Glow plug

   The glow plug parts are housing with M12 ´ 1.25 thread and heating pin in housing. It is connected in a parallel circuit with the specified voltage of 11.5V.

   The heating element has a heating coil and a control coil and they are connected in series.

1 Control Coil
2. Heater Coil

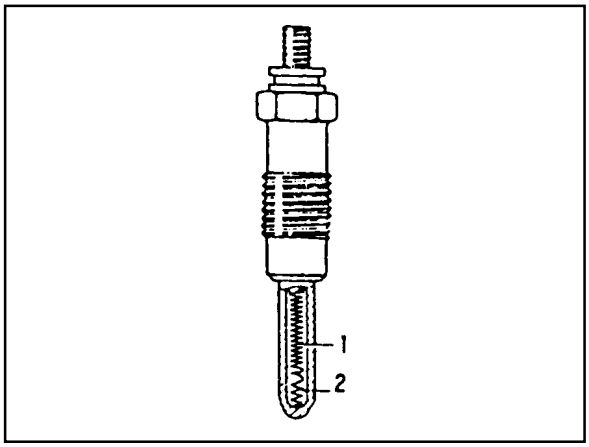

4. Current and temperature of glow plug

   - Current of glow plug

     While the preheating system operates, current of about 30A flows in each glow plug and temperature of heating coil rises very fast.

     Due to the rise of temperature, the resistance of control coil increases therefore the current is controlled to about 8~15A and that protects the glow plug from over-heating.

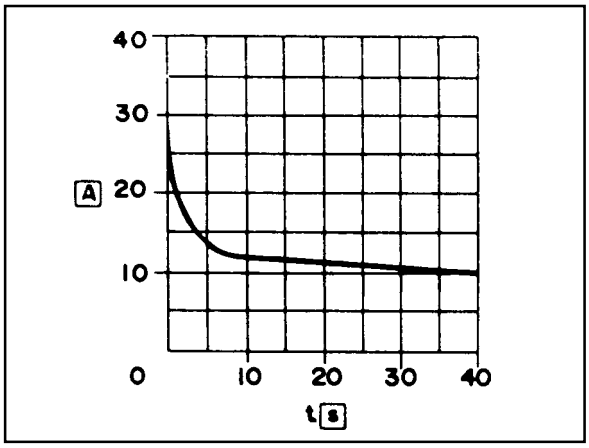

   - Temperature of glow plug

     The temperature of the glow plug reaches up to 900°C after about 9 seconds and up to 1,050°C after 30 seconds.

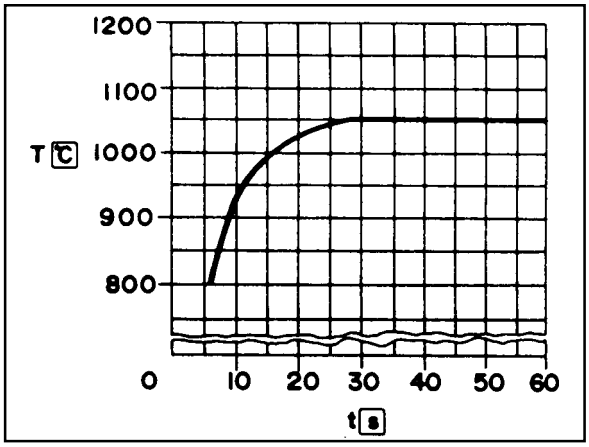

Downloaded from www.Manualslib.com manuals search engine

Preheating system operation

1. Preheating before start.

   Preheating time is different by coolant temperature and it is on until the glow indicator light goes off.

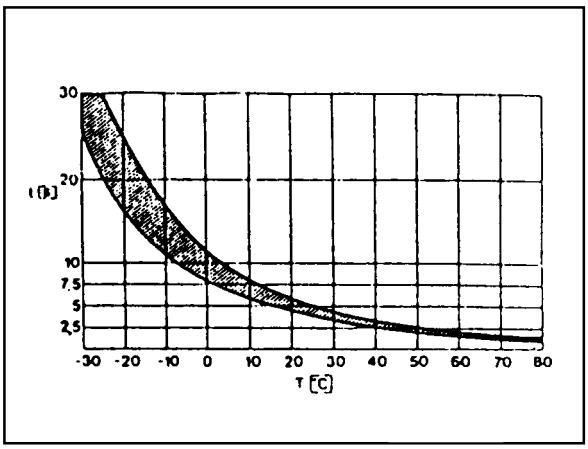

2. Preheating after start.

   Preheating continues for max. 60 seconds to rise in characteristic of warming-up on engine after starting too.

3. Monitoring on glow plug.

   Glow plugs are monitored by low current by the micro processor in control relay respectively while running the engine.

   If glow indicator comes on after starting for about one minute, it indicates on or several plugs are faulty.

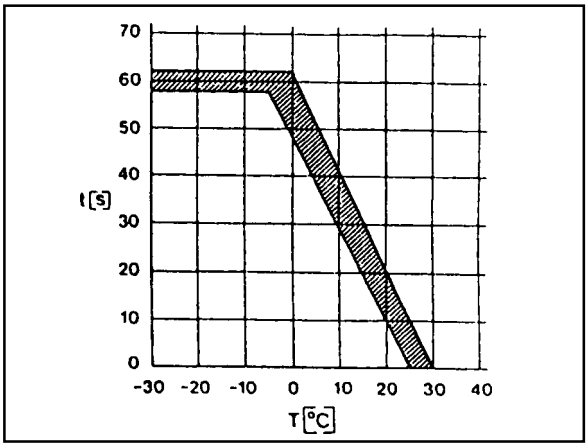

	Problem	Possible cause
1	Glow indicator does not come on in preheating time and comes on after starting the engine.	- One or several glow are faulty
2	Glow indicator does not come on while preheating and after starting engine.	- Faulty glow indicator - Faulty circuit of glow indicator - Faulty control relay
3	Glow indicator does not come on and engine's starting is difficult or does not start at all.	- Circuits short in one or several glow plugs - Faulty preheating circuits - Faulty control relay
4	Glow indicator comes on after starting for about one minute.	- One or several glow plugs are faulty

Downloaded from www.Manualslib.com manuals search engine

Removal & Installation Procedure

1. Disconnect the negative terminal of battery.
2. Remove the nut (2).

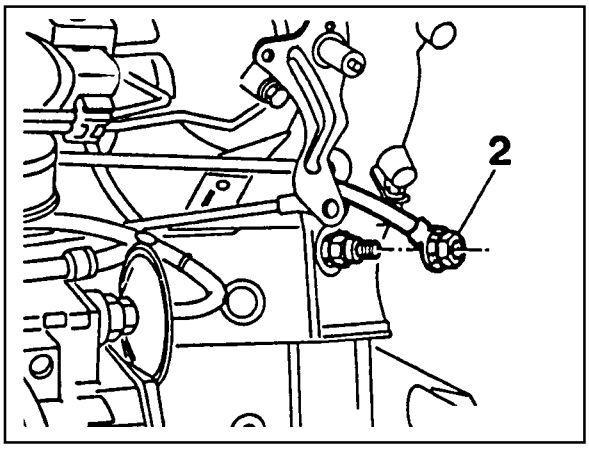

3. Remove the glow plug (4).
4. Install the glow plug (4).

Tightening Torque	20 Nm

5. Tighten the nut (2).

Tightening Torque	4 Nm

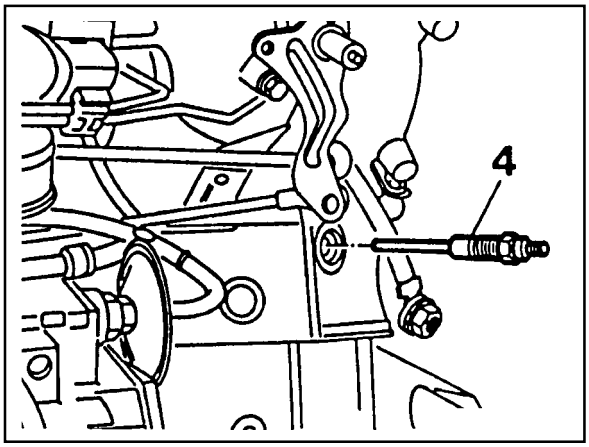

Downloaded from www.Manualslib.com manuals search engine

ALTERNATOR

Preceding Work : Removal of poly V-belt

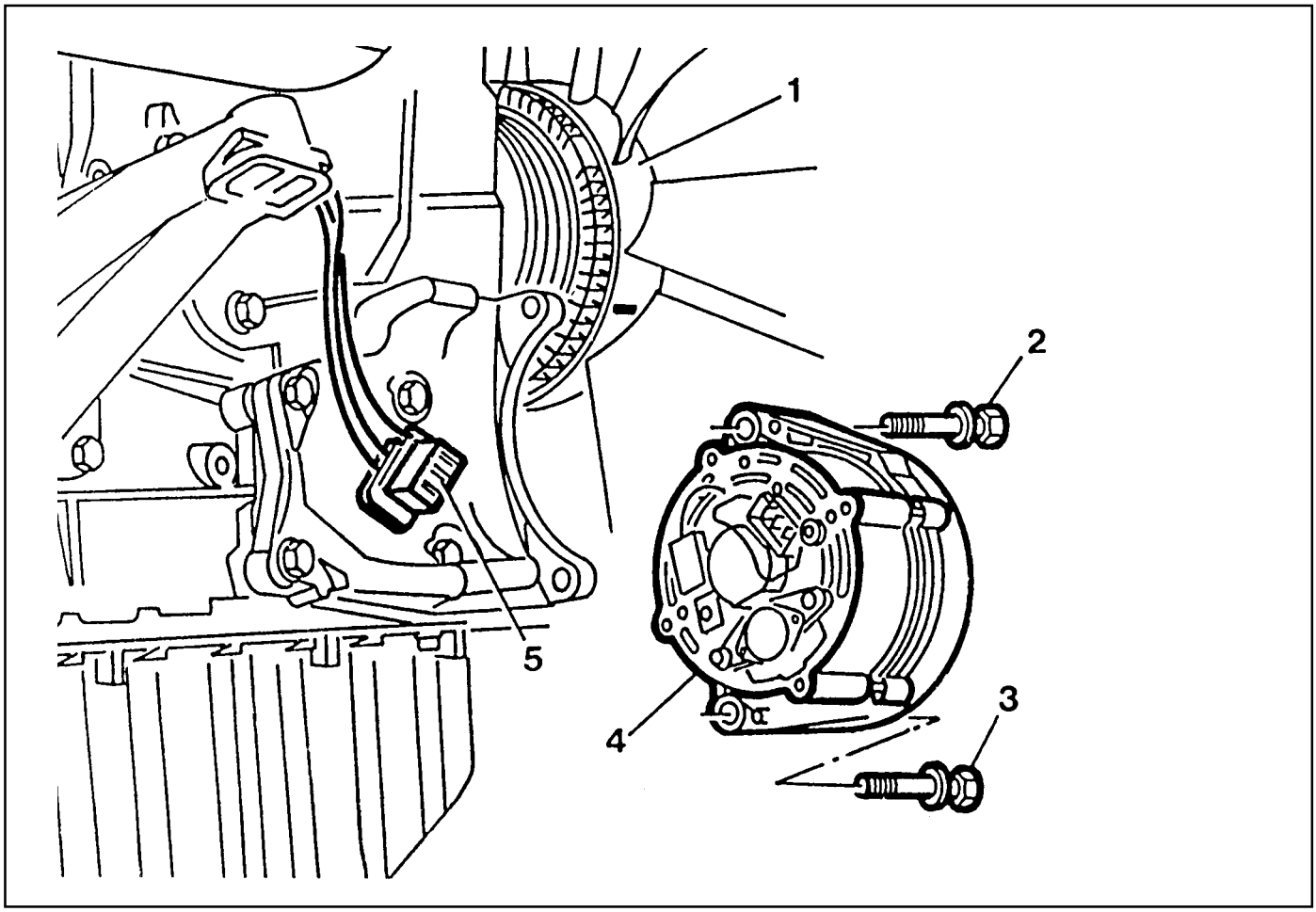

1 Cooling Fan
2 Bolt 45Nm
3 Bolt 45Nm
4 Alternator
5 Plug Connection

Downloaded from www.Manualslib.com manuals search engine

Removal & Installation Procedure

1. Disconnect the negative terminal of the battery.
2. Disconnect the plug connection (5).

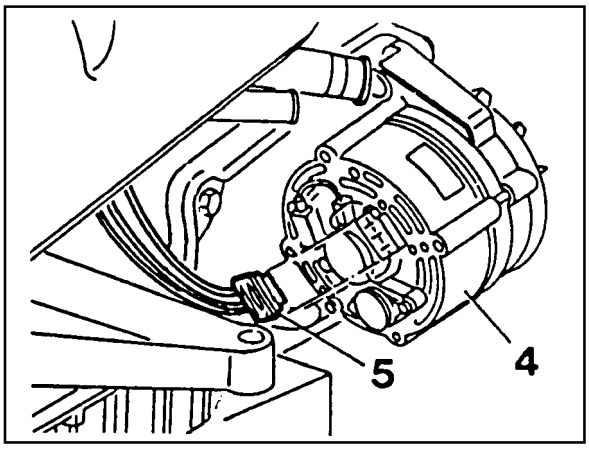

3. OM 662 Engine
   Align the groove of cooling fan with bolt (2) (arrow).

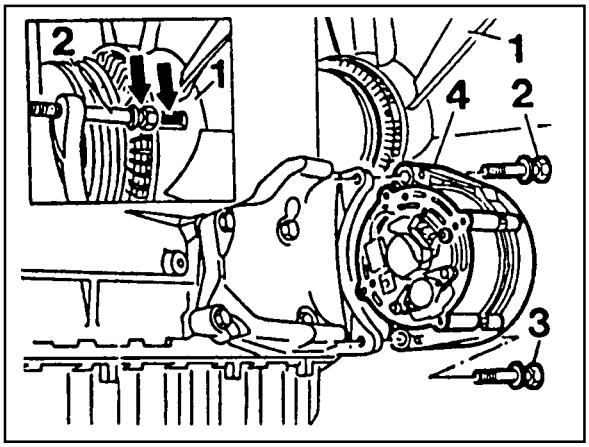

4. Remove the bolts (2, 3) and take out the alternator.

Tightening Torque	45 Nm

5. Installation should follow the removal procedure in the reverse order.

Downloaded from www.Manualslib.com manuals search engine

STARTER MOTOR

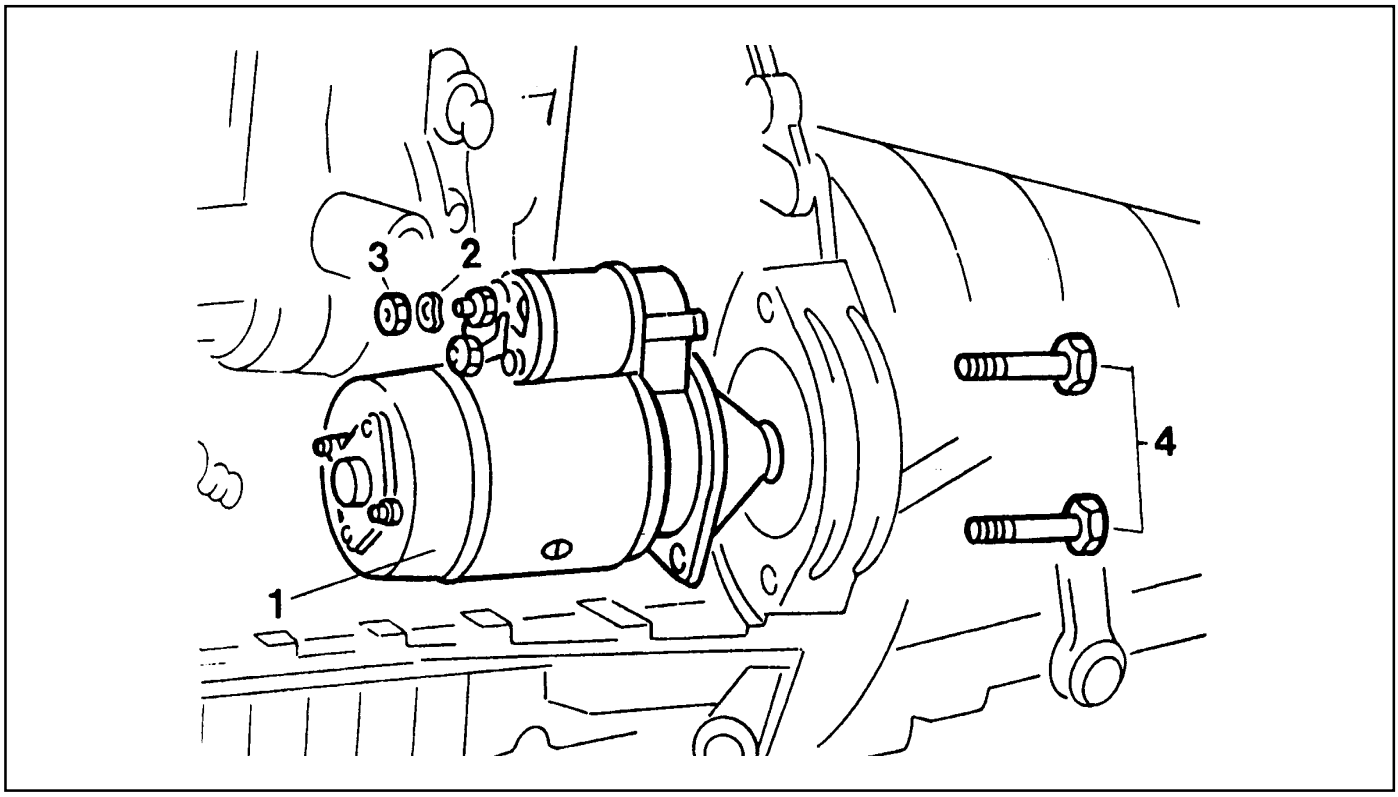

1	Starter Motor	3	Nut 15Nm
2	Washer	4	Bolt 48Nm

Removal & Installation Procedure

1. Disconnect the battery terminals.
2. Disconnect the starter motor cable harnesses.
3. Remove the bolts and then remove the starter motor.
4. Installation should follow the removal procedure in the reverse order.

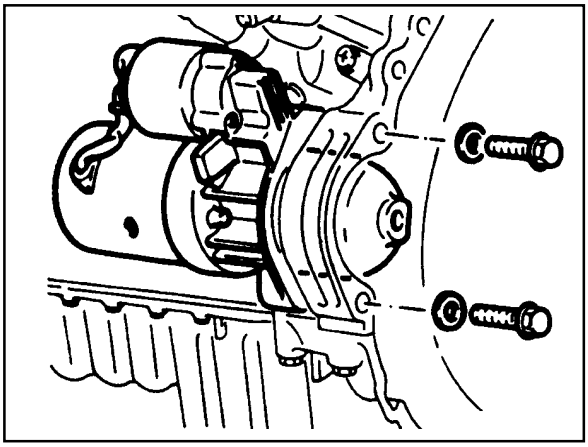

Downloaded from www.Manualslib.com manuals search engine

SECTION 1F1

M162 ENGINE CONTROLS

CAUTION: Disconnect the negative battery cable before removing or installing any electrical unit or when a tool or equipment could easily come in contact with exposed electrical terminals. Disconnecting this cable will help prevent personal injury and damage to the vehicle. The ignition must also be in LOCK unless otherwise noted.

TABLE OF CONTENTS

Specifications 1F1-2
Fastener Tightening Specifications 1F1-2
Special Tools 1F1-3
Special Tools Table 1F1-3
Schematic and Routing Diagrams 1F1-4
E32 ECU (MSE) 1F1-4
Diagnosis 1F1-5
Self Diagnosis Socket Pin Numbers and Descriptions 1F1-5
Self Diagnosis Failure Code 1F1-6
Test Box Connection 1F1-9
Fuel Injection System Test (MSE 3.62) 1F1-10
Ignition System Test 1F1-20
Idling Control and Electronic Pedal System Test 1F1-25
Air Conditioner Control System Test 1F1-27
Fuel Pressure and Internal Leakage Test . . 1F1-28
Fuel Pump Test 1F1-30
Injector Test 1F1-32
Maintenance and Repair 1F1-34
On-Vehicle Service 1F1-34
ECU 1F1-34
Fuel Pressure Regulator 1F1-45
Fuel Distributor 1F1-49
Injector 1F1-53
Fuel Filter 1F1-56
Fuel Pump 1F1-57
Purge Switchover Valve 1F1-61
Vacuum System 1F1-63
Crankshaft Position Sensor 1F1-64
Camshaft Position Sensor 1F1-66
Hot Film Air Mass (HFM) Sensor 1F1-68
Oxygen Sensor 1F1-71
Knock Sensor 1F1-73
Coolant Temperature Sensor 1F1-74
Accelerator Pedal Module 1F1-77

Downloaded from www.Manualslib.com manuals search engine

SPECIFICATIONS

FASTENER TIGHTENING SPECIFICATIONS

Application	N·m
Fuel Return and Supply Line	25 - 30
Fuel Distributor Assembly Bolt	22.5 - 27.5
Pressure Test Connector	21.6 - 26.4
Fuel Inlet and Outlet Line	25 - 30
Fuel Filter Mounting Bracket Bolt	4 - 8
Crankshaft Position Sensor Bolt	9 - 11
Camkshaft Position Sensor Bolt	9 - 11
Knock Sensor Mounting Bolt	22.5 - 27.5
Coolant Temperature Bolt	18 - 22

Downloaded from www.Manualslib.com manuals search engine

SPECIAL TOOLS

SPECIAL TOOLS TABLE

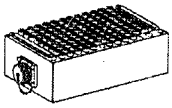	**129 589 00 21 00** **Test Box**
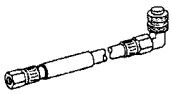	**119 589 04 63 00** **Pressure Hose**
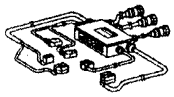	**210 589 08 63 00** **ECU Test Cable**

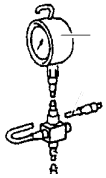	**106 589 00 21 00** **Pressure Tester**
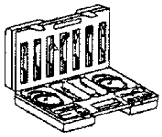	**210201** **Adaptor Line**

Downloaded from www.Manualslib.com manuals search engine

SCHEMATIC AND ROUTING DIAGRAMS

E32 ECU (MSE)

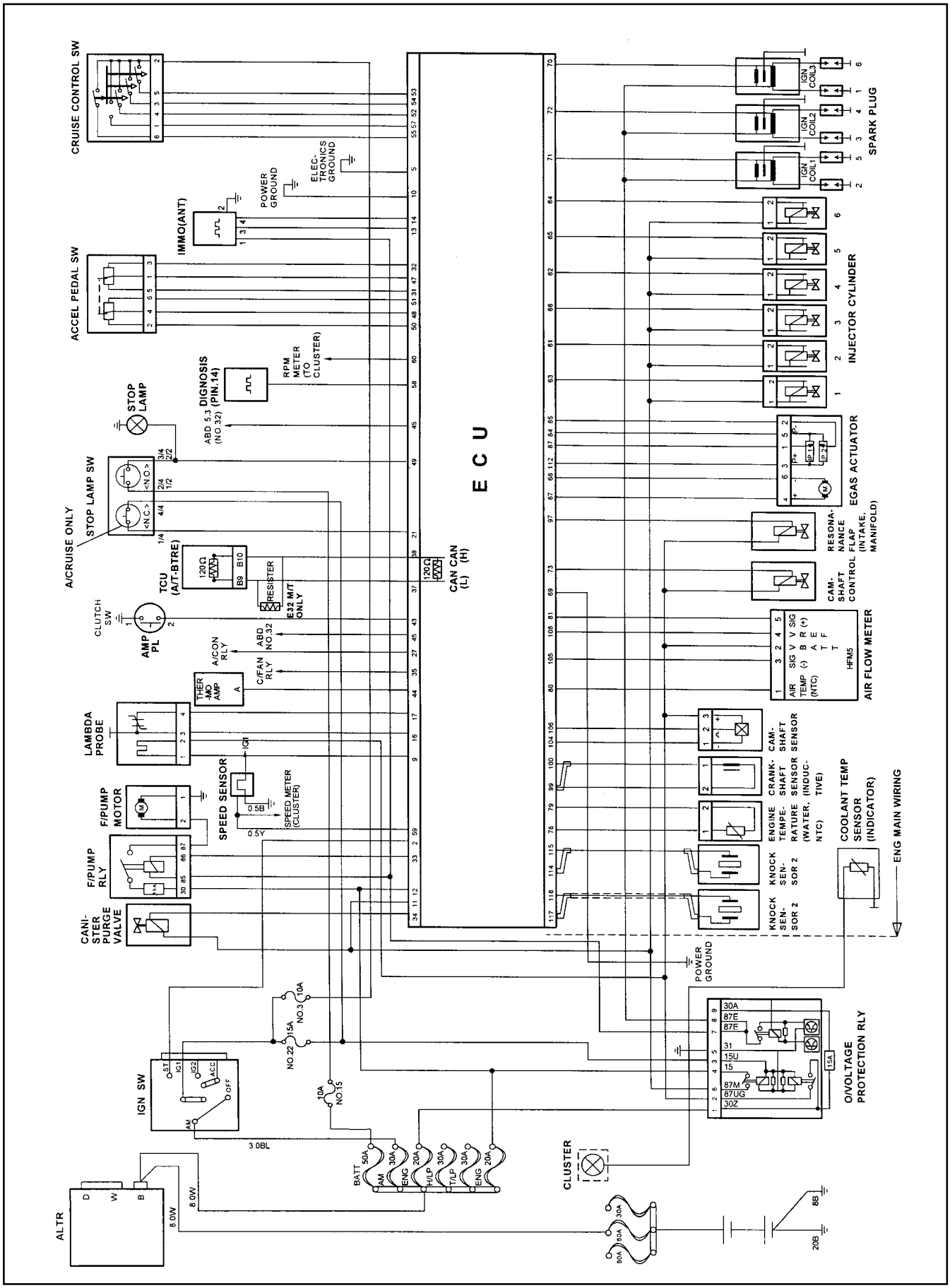

Downloaded from www.Manualslib.com manuals search engine

DIAGNOSIS

SELF DIAGNOSIS SOCKET PIN NUMBERS AND DESCRIPTIONS

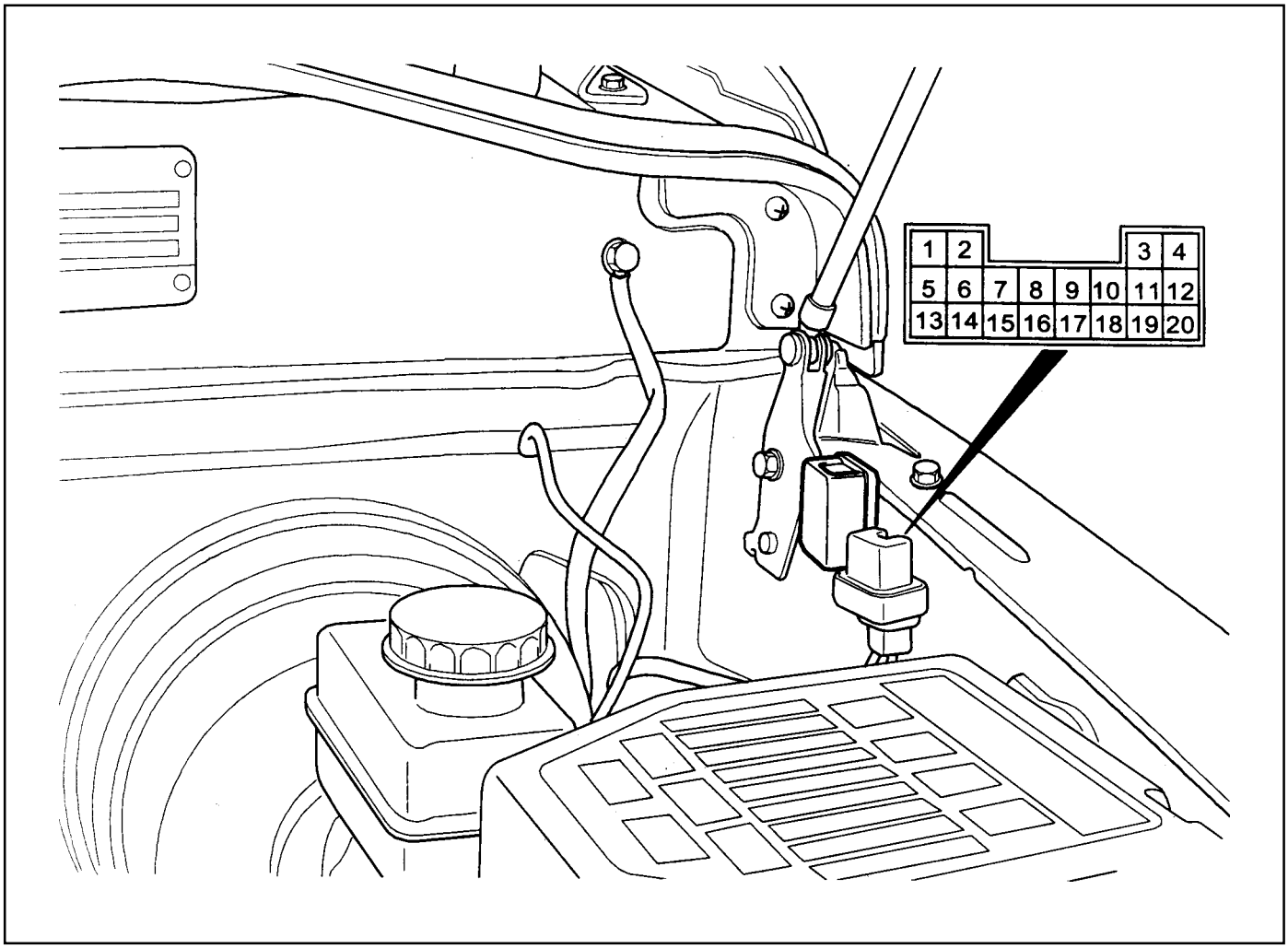

1 Ground
2 Ignition 1
3 Battery Power Supply (Fuse NO.17)
4 REKES :PIN 6
5 Engine Speed Signal :MSE PIN 60
6 TCCU(Part-time)
7 STICS(PIN 26)
8 -
9 -
10 Air Bag(PIN 20)
11 Remote Engine Start Unit(PIN 10)
12 -
13 Brake System
(ABS 5.3:PIN 11, ABS/ABD 5.3:PIN 46)
14 MSE 3.62S/3.53S(ECU Data Output:PIN 58)
15 TOD(PIN 20)
16 Immobilizer
17 -
18 TCU(PIN 23)
19 -
20 K-LINE(ECS:PIN 23)

Downloaded from www.Manualslib.com manuals search engine

SELF DIAGNOSIS FAILURE CODE

Failure code	Description	Failure code	Description
00	Coolant temperature sensor open	41	Purge valve open/short
01	Coolant temperature sensor short	44	Condenser fan(HI) relay short(PWR)
02	Coolant temperature sensor signal failure	45	Condenser fan(HI) relay short(GND)
03	Intake temperature sensor open	56	No.1 knock sensor signal failure
04	Intake temperature sensor short	57	No.2 knock sensor signal failure
05	Intake temperature sensor signal failure	58	No.1 cylinder synchronization failure
08	Low battery voltage	59	-
09	HFM sensor signal failure	60	-
10	HFM sensor signal failure(Low)	62	Cluster S/W defectave
11	HFM sensor signal failure(High)	64	No ignition voltage output(No.1 ignition coil)
17	Crankshaft position sensor signal failure (no engine revolution signal)	65	No ignition voltage output(No.2 ignition coil)
		66	No ignition voltage output(No.3 ignition coil)
18	Crankshaft position sensor signal failure (rpm > max. value)	67	Crankshaft position sensor adaptation failure
		71	Start signal recognition failure
19	No.1 cylinder recognition failure	72	No.1 injector short(PWR)
20	Crankshaft position sensor signal failure (gab recognition failure)	73	No.1 injector open/short(GND)
		74	No.2 injector short(PWR)
21	Transmission coding failure	75	No.2 injector open/short(GND)
23	CAN communication failure : ASR	76	No.3 injector short(PWR)
24	-	77	No.3 injector open/short(GND)
25	Transponder signal failure	78	No.4 injector short(PWR)
26	CAN communication failure : TCU(A/T only)	79	No.4 injector open/short(GND)
27	CAN communication failure : TOD(E32 only)	80	High oxygen sensor voltage
29	-	81	Low oxygen sensor amplifying voltage
30	-	82	Oxygen sensor operating failure
31	CAN communication failure : communication initialization failure	83	Not excessive lean indication in oxygen sensor(during coasting)
34	Fuel pump relay short(PWR)	86	Oxygen sensor heater short(PWR)
35	Fuel pump relay open/short(GND)	87	Oxygen sensor heater open/short(GND)
40	Purge valve short	89	Low oxygen sensor voltage

Downloaded from www.Manualslib.com manuals search engine

Failure code	Description	Failure code	Description
93	Short learning control failure	133	Cruise control acceleration failure
96	Lambda control failure (rich stop)	134	Cruise control deceleration failure
97	Lambda control failure (lean stop)	136	ECU failure(RAM)
98	Lambda idle adaptation failure(above rich threshold)	137	ECU failure(EPROM)
		139	Servo motor control output inter-ruption memory failure
99	Lambda idle adaptation failure(below lean threshold)		
		140	Servo motor open/short
100	learning control failure(rich, low load)	141	Unprogramed ECU with Immobilizer
101	learning control failure(lean, low load)	142	Uncoded ECU
102	learning control failure(rich, high load)	143	ECU failure(NVRAM checksum failure)
103	learning control failure(lean, high load)	144	ECU failure(coding ID checksum failure)
104	Low throttle position sensor(IP1) voltage	145	ECU failure(coding checksum failure)
105	High throttle position sensor(IP1) voltage	146	ECU failure(programing checkusm failure)
108	Low throttle position sensor(IP2) voltage	150	ABD input signal short(power)
109	High throttle position sensor(IP2) voltage	151	ABD input signal short(GND)
110	Throttle actuator learning data fault	160	Low pedal valve sensor SP1 voltage
116	Throttle actuator learning control failure	161	High pedal valve sensor SP1 voltage
117	Exceed fuel-cut safety time	162	Low pedal valve sensor SP2 voltage
119	Throttle valve return spring failure	163	High pedal valve sensor SP2 voltage
120	Cruise control interruption memory failure	164	Different pedal valve sensor signal(1,2)
121	Throttle actuator failure	167	Pedal valve sensor 1,2 failure
122	Pedal module position sensor signal failure	185	HFM sensor, and throttle position sensor failure
123	Different HFM signal with throttle potentiometer		
125	Both throttle potentiometer(IP1&IP2) failure	186	ECU failure(incompatible CPU)
126	IPS1 with IPS2	187	ECU failure(CPUs communication failure)
127	High permanent throttle signal	188	ECU failure(CPU(2) configuration failure)
129	Message counter failure® cruise control 'OFF'	189	ECU failure(CPU(2) fault)
130	Vehicle speed signal failure	190	ECU failure(CPU run time failure between CPUs)
131	Vehicle speed signal failure		
132	Cruise control lever failure	192	No.5 injector short(PWR)

Downloaded from www.Manualslib.com manuals search engine

Failure code	Description	Failure code	Description
193	No.5 injector open/short(GND)	234	Control lever dual operation(CPU2)
194	No.6 injector short(PWR)	235	Control lever safety terminal failure(CPU2)
195	No.6 injector open/short(GND)	236	Unusual pedal position variation(CPU2)
198	Variable intake air valve short(PWR)	237	Unusal throttle position variation(CPU2)
199	Variable intake air valve open/short(GND)	238	Unusal throttle control data(CPU2)
226	Cam actuator short(PWR)	239	Unusal pedal position sensor(CPU2)
227	Cam actuator open/short(GND)	240	Throttle potentiometer fault(CPU2)
228	A/C compressor relay short(PWR)	241	Unusual CPU communication(CPU2)
229	A/C compressor relay open/short(GND)	242	Unusual CPU configuration(CPU2)
232	Over acceleration limit	243	AD converter failure(CPU2)
233	Over acceleration limit(CPU2)		

Downloaded from www.Manualslib.com manuals search engine

TEST BOX CONNECTION

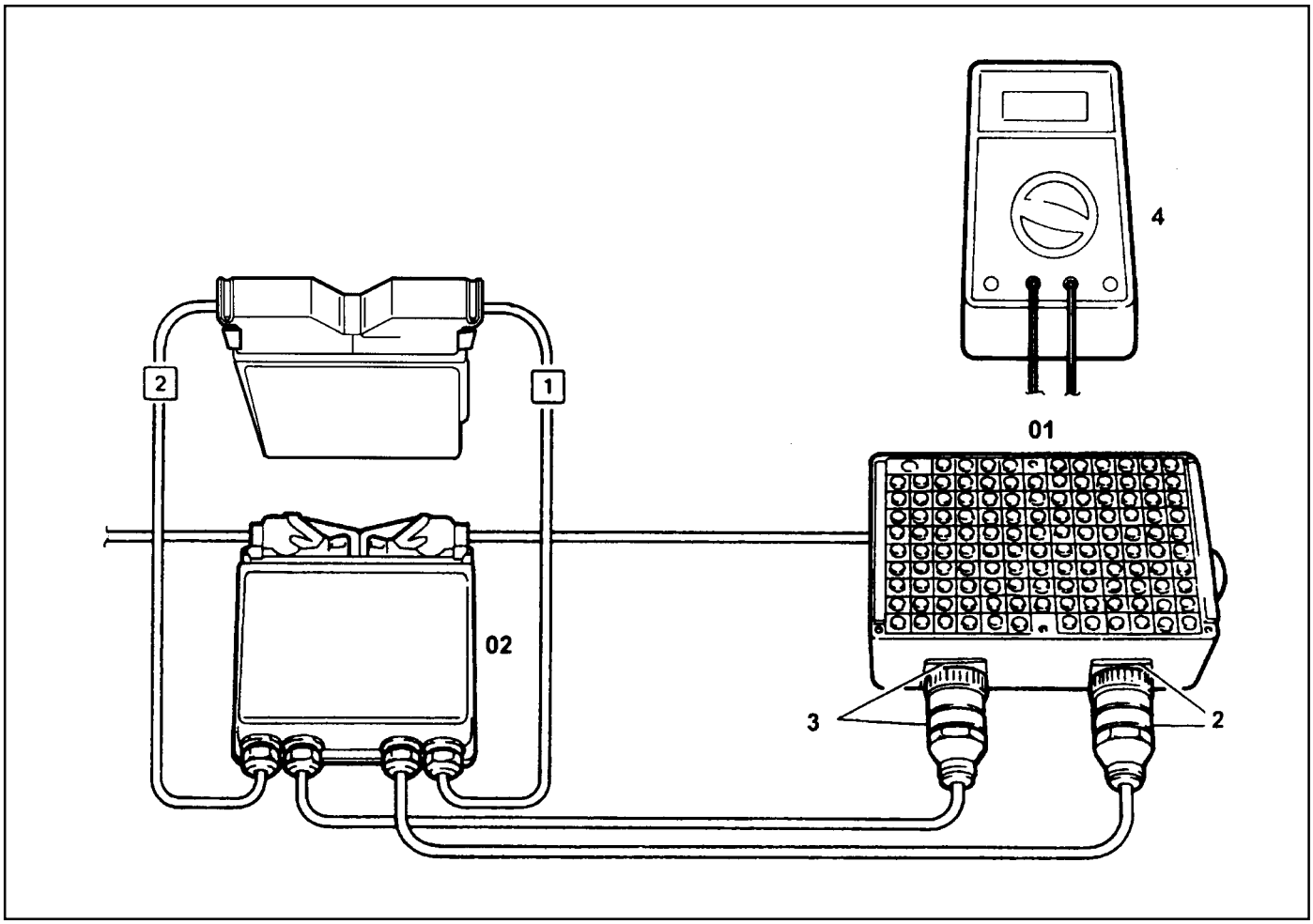

1 ECU
2 Test Coupling(No.1 - 60)
3 Test Coupling(No.61 - 120)
4 Multi-tester

01 Test Box
02 ECU Test Cable

Tools Required

129 589 00 21 00 Test Box

210 589 08 63 00 ECU Test Cable

Downloaded from www.Manualslib.com manuals search engine

FUEL INJECTION SYSTEM TEST (MSE3.62)

Failure code	Test step	Item	Checking method	Requirement	Specified value	Possible cause
08,	Þ 1.0	· **ECU:power supply** - terminal 30(TM.30)	10 — 12	· Ignition:ON	11 -14V	· Þ 1.1 · Þ 1.2
	Þ 1.1	· **Ground cable:** - Battery ground	Diagnosis socket 10 — 2 Diagnosis socket 69 — 2	· Ignition:ON	11 -14V	· Ground cable · Ground condition
	Þ 1.2	· **Power supply:** - terminal 30(TM.30)	Diagnosis socket 1 — 12	· Ignition:ON	11 -14V	· Power supply cable
08,	Þ 2.0	· **ECU:power supply** - terminal 87(TM.87)	5 — 11	· Ignition:ON	11 -14V	· Þ 1.1 · Þ 2.1
	Þ 2.1	· **Ground cable** - Electronic ground	Diagnosis socket 5 — 2	· Ignition:ON	11 -14V	· Ground cable
	Þ 2.2	· **Power supply:** - terminal 87(TM.87)	Diagnosis socket 1 — 11	· Ignition:ON · Ignition:OFF	11 -14V < 1V	· Power supply cable · OVPR
	Þ 3.0	· **Start signal:** - terminal 50(TM.50)	5 — 2	· Engine:in Cranking	11 -14 (during engine cranking)	· Cable · Ignition switch

Downloaded from www.Manualslib.com manuals search engine

Failure code	Test step	Item	Checking method	Requirement	Specified value	Possible cause
09, 10, 11,	Þ 4.0	· **HFM sensor signal**	105 — 81	· Ignition:ON	0.9 - 1.1V	· Þ 4.1 - 4.3 · Cable · External air inflow · HFM sensor
				· Engine:in Idle (Coolant temperature : > 70℃) : voltage value is increased when engine rpm is increased	1.3 - 1.7V	
	Þ 4.1	· **HFM sensor:** - 5V power supply	HFM sensor 105 — 4	· Ignition:ON · HFM sensor connector removed	4.7 - 5.2V	· Cable · ECU coupling
	Þ 4.2	· **HFM sensor:** - 5V power supply	HFM sensor 3 — 108	· Ignition:ON · HFM sensor connector removed	4.7 - 5.2V	· Þ 4.3 · Cable
	Þ 4.3	· **HFM sensor:** - 12V power supply	HFM sensor 104 — 2	· Ignition:ON · HFM sensor connector removed	11 - 14V	· Cable · OVPR
03, 04, 05,	Þ 5.0	· **Intake air temperature sensor:** - Voltage	105 — 80	· Ignition:ON	℃ V 10 3.1 20 2.65 30 2.18 40 1.76 50 1.4 60 1.1 ±5%	· Þ 5.1 · ECU
	Þ 5.1	· **Intake air temperature sensor:** - Resistance	105 — 80	· Ignition:OFF · No.2 ECU coupling removed	℃ W 10 3600 20 2420 30 1662 40 1166 50 853 60 600 ±5%	· Cable · HFM sensor

Downloaded from www.Manualslib.com manuals search engine

Failure code	Test step	Item	Checking method	Requirement	Specified value	Possible cause
34,	Þ 6.0	· **Fuel pump relay:** - Operation	33 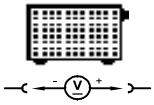 11	· Ignition:ON (Fuel pump relay will operate for 1 - 2 seconds when the ignition switch is turned to "ON" after stopping the engine) · Engine:cranking	11 - 14V (approx.1-2sec.) 11 - 14V (Cranking or driving)	·Cable ·Fuel pump relay
34, 35,	Þ 6.1	· **Fuel pump relay:** - Current consumption	5 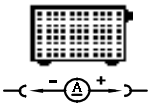 33	· Ignition:ON	0.1 - 0.3A	·Cable ·Fuel pump relay ·ECU
00, 01, 02, 06,	Þ 7.0	· **Coolant temperature sensor:** - Voltage	79 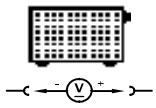 78	· Ignition:ON	℃ V 20 3.57 80 1.22 100 0.78 ±5%	· Þ 7.1 ·ECU
	Þ 7.1	· **Coolant temperature sensor:** - Resistance & cable	79 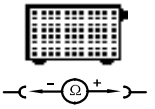 78	· Ignition:OFF (Remove the No.2 coupling from ECU)	℃ W 20 2500 80 322 100 185 ±5%	·Þ 7.2 ·Cable
	Þ 7.2	· **Coolant temperature sensor:** - Resistance	Coolant temperature sensor: 1 4	· Remove the connector from coolant temperature sensor and measure the resistance between No.1 and No.2 pin with multimeter.	· Þ refer to specified resistance value of 7.1	·Coolant temperature sensor

Downloaded from www.Manualslib.com manuals search engine

Failure code	Test step	Item	Checking method	Requirement	Specified value	Possible cause
32, 33,	Þ 8.0	· **ECU:** - RPM signal output	5 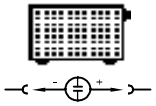 60	· Engine:in cranking or idle	refer to figure 2	· Cable · ECU
		- Voltage	5 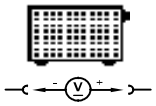 60	· Engine:in cranking or idle (above 5V in idling)	6.0 - 7.0 V	
80, 81, 82, 83, 89,	Þ 9.0	· **Oxygen sensor:** - Signal	16 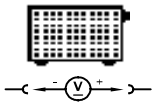 17	· Keep the engine run above 2 minutes in over 80℃ of coolant temperature.	There will be a voltage fluctuation in the range of - 0.2 -1.0V	· ECU · Cable · Oxygen sensor
85, 86, 87,	Þ 10.0	· **Oxygen sensor:** - Heating function operated	9 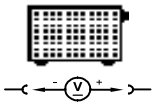 11	· Keep the engine run above 2 minutes in over 80℃ of coolant temperature.	11 - 14 V	· ECU · Cable · Oxygen sensor
		- Current consumption	5 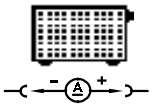 9	· Ignition:ON	0.2 - 2.0 A	
72, 73,	Þ 11.0	· **No.1 cylinder injector:** - Operating & injection time	63 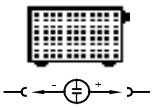 11	· When the coolant temperature is approx. 20℃: - Engine:in cranking · When the coolant temperature is approx. 80℃: - Engine:at idling speed - Engine:at sharp acceleration(full throttle) (refer to figure 3 and 4)	8.0 ms approx. 2.7 - 5.0ms approx. 14ms	· Cable · ECU · No.1 Injector · Coolant temperature sensor · Oxygen sensor · Intake air temperature sensor

Downloaded from www.Manualslib.com manuals search engine

Failure code	Test step	Item	Checking method	Requirement	Specified value	Possible cause
		- Internal resistance (No.1 injector)	63 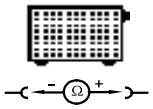 11	· Ignition:OFF(injector temperature is 20℃)	14 - 17 W	
74, 75,	Þ 12.0	· **No.2 cylinder injector:** - Operating & injection time	61 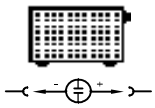 11	· When the coolant temperature is approx. 20℃: - Engine:in cranking · When the coolant temperature is approx. 80℃: - Engine:at idling speed - Engine:at sharp acceleration(full throttle) (refer to figure 3 and 4)	8.0 ms approx. 2.7 - 5.0ms approx. 14ms	· Cable · ECU · No.2 Injector · Coolant temperature sensor · Oxygen sensor · Intake air temperature sensor
		- Internal resistance (No.2 injector)	61 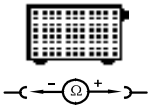 11	· Ignition:OFF(injector temperature is 20℃)	14 - 17 W	
76, 77,	Þ 13.0	· **No.3 cylinder injector:** - Operating & injection time	66 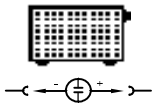 11	· When the coolant temperature is approx. 20℃: - Engine:in cranking · When the coolant temperature is approx. 80℃: - Engine:at idling speed - Engine:at sharp acceleration(full throttle) (refer to figure 3 and 4)	8.0 ms approx. 2.7 - 5.0ms approx. 14ms	· Cable · ECU · No.3 Injector · Coolant temperature sensor · Oxygen sensor · Intake air temperature sensor

Downloaded from www.Manualslib.com manuals search engine

Failure code	Test step	Item	Checking method	Requirement	Specified value	Possible cause
		- Internal resistance (No.3 injector)	66 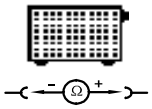 11	· Ignition:OFF(injector temperature is 20℃)	14 - 17 W	
78, 79,	Þ 14.0	· **No.4 cylinder injector:** - Operating & injection time	62 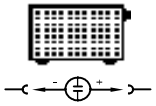 11	· When the coolant temperature is approx. 20℃: - Engine:in cranking · When the coolant temperature is approx. 80℃ - Engine:at idling speed - Engine:at sharp acceleration(full throttle) (refer to figure 3 and 4)	8.0 ms approx. 2.7 - 5.0ms approx. 14ms	· Cable · ECU · No.4 Injector · Coolant temperature sensor · Oxygen sensor · Intake air temperature sensor
		- Internal resistance (No.4 injector)	62 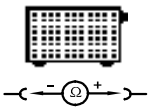 11	· Ignition:OFF(injector temperature is 20℃)	14 - 17 W	
192, 193,	Þ 15.0	· **No.5 cylinder injector:** - Operating & injection time	65 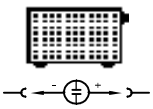 11	· When the coolant temperature is approx. 20℃: - Engine:in cranking · When the coolant temperature is approx. 80℃: - Engine:at idling speed - Engine:at sharp acceleration(full throttle) (refer to figure 3 and 4)	8.0 ms approx. 2.7 - 5.0ms approx. 14ms	· Cable · ECU · No.5 Injector · Coolant temperature sensor · Oxygen sensor · Intake air temperature sensor

Downloaded from www.Manualslib.com manuals search engine

Failure code	Test step	Item	Checking method	Requirement	Specified value	Possible cause
		- Internal resistance (No.5 injector)	65 11	· Ignition:OFF(injector temperature is 20℃)	14 - 17 W	
194, 195,	Þ 16.0	· **No.6 cylinder injector:** - Operating & injection time	64 11	· When the coolant temperature is approx. 20℃: - Engine:in cranking · When the coolant temperature is approx. 80℃: - Engine:at idling speed - Engine:at sharp acceleration(full throttle) (refer to figure 3 and 4)	8.0 ms approx. 2.7 - 5.0ms approx. 14ms	· Cable · ECU · No.6 Injector · Coolant temperature sensor · Oxygen sensor · Intake air temperature sensor
		- Internal resistance (No.6 injector)	64 11	· Ignition:OFF(injector temperature is 20℃)	14 - 17 W	
198, 199,	Þ 17.0	· **Variable intake air valve (resonance flap switch valve)** - Operating	97 11	· Engine:in cranking/ below 3500rpm · Engine:rpm > above 3500rpm	< 1V 11 - 15V	· ECU · Cable · Variable intake air valve
		- Current consumption	69 97	· Ignition:ON	0.4 - 0.6A	
226, 227,	Þ 18.0	· **Camshaft actuator:** Current consumption	Camshaft actuator 1 2	· Engine : in idling - Coolant temperature : above 70℃ - Engine rpm : increase up to 2000 rpm	1 - 1.5 A	· ECU · Þ 18.1 · Þ 19.0

Downloaded from www.Manualslib.com manuals search engine

Failure code	Test step	Item	Checking method	Requirement	Specified value	Possible cause
	Þ 18.1	· **Camshaft actuator:** Solenoid resistance	Diagnosis socket 73 — 2	· Ignition:OFF	8 - 12 W	· Cable · Camshaft actuator
226, 227,	Þ 19.0	· **Camshaft actuator:** Mechanical Actuation	73 — 69	· Engine:in idling - connect the bridge to the test box for approx. 10 seconds	Engine is unstable or stopped	· Mechanical failure of camshaft actuator
40, 41, 54,	Þ 20.0	· **Purge control valve:** - Operating	34 — 11	· Engine:in idling	The purge control valve should be operated after approx. 1minute. (refer to figure 5)	· ECU · Cable · Purge control valve
		- Current consumption	10 — 34	· Ignition:ON	0.3 - 0.5 A	
	Þ 21.0	· **Purge control valve:** - Vacuum control	Connect the vacuum gauge between the control valve and canister	· Engine:in idling/ normal operating temperature	Creating above 50mbar of vacuum after approx. 1 minute	· Vacuum line · Purge control valve
22,23, 24,26, 27,29, 30,31, 59,60,	Þ 22.0	· **CAN data bus**	38 — 37	· Ignition:OFF	55 - 65 W	· Data bus · Þ 22.1 · Þ 22.2

Downloaded from www.Manualslib.com manuals search engine

Failure code	Test step	Item	Checking method	Requirement	Specified value	Possible cause
	Þ 22.1	· **CAN module resistance in ABS, ABD, ASR control unit**	38 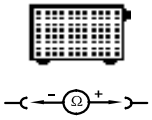 37	· Ignition:OFF - disconnect the coupling "No.1" from ECU.	115 - 125 W	· Cable · ABS, ABD, ASR control unit
22,23, 24,26, 27,29, 30,31, 59,60,	Þ 22.2	· **CAN module resistance in ECU control unit**	38 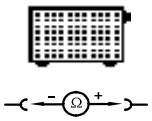 37	· Ignition:OFF - disconnect the coupling "No.1" from ECU.	115 - 125 W	· ECU
	Þ 23.0	· **Diagnosis cable operating**	5 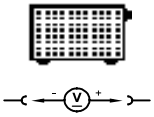 58	· Ignition:ON	11 - 14 V	· ECU · Cable

Downloaded from www.Manualslib.com manuals search engine

Reference Figures

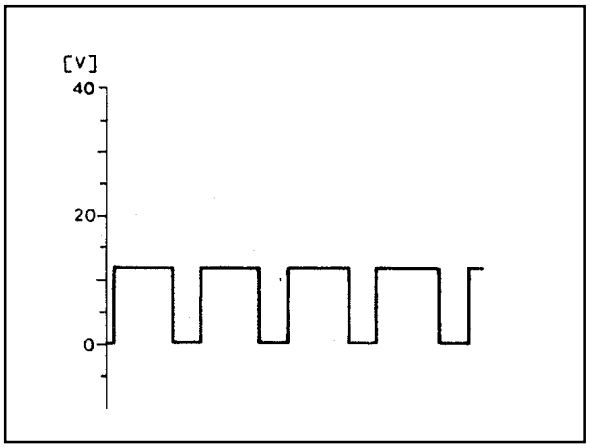

Figure2. RPM Sgnal Output

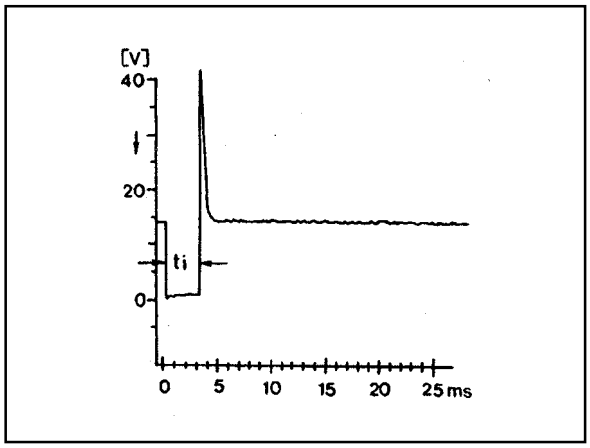

Figure 3. Injection Valve Wave(at idle speed)

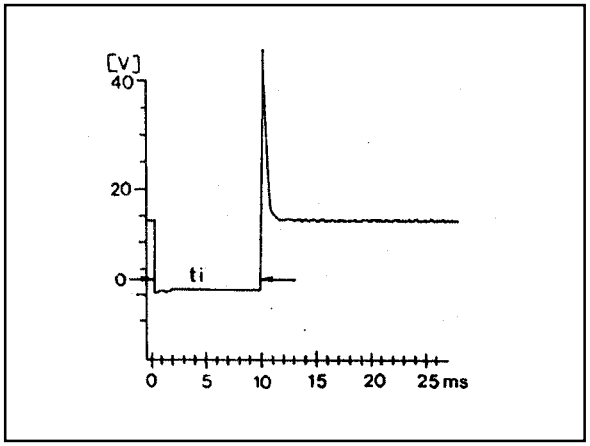

Figure 4. Injection Valve Wave(at sharp acceleration)

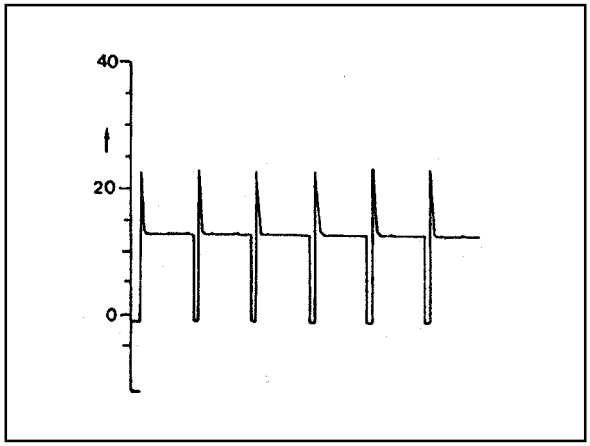

Figure 5. Purge Control Valve Operationg Wave

Downloaded from www.Manualslib.com manuals search engine

IGNITION SYSTEM TEST

Failure code	Test step	Item	Checking method	Requirement	Specified value	Possible cause
08,		· **ECU:power supply** - terminal 30(TM.30)	10 — 12		11 - 14V	· Þ 1.1 · Þ 1.2
	Þ 1.1	· **Ground cable:** - Battery ground	Diagnosis socket 10 — 2 Diagnosis socket 69 — 2	· Ignition:ON	11 - 14V	· Ground cable · Ground condition (figure 1)
	Þ 1.2	· **Power supply:** - terminal 30(TM.30)	Diagnosis socket 1 — 12	· Ignition:ON	11 - 14V	· Power supply cable · Fuse No.8
08,	Þ 2.0	· **ECU:power supply** - terminal 87(TM.87)	5 — 11	· Ignition:ON	11 -14V	· Þ 2.1 · Þ 2.2
	Þ 2.1	· **Ground cable** - Electronic ground	Diagnosis socket 5 — 2	· Ignition:ON	11 - 14V	· Ground cable
	Þ 2.2	· **Power supply:** - terminal 87(TM.87)	Diagnosis socket 1 — 11	· Ignition:ON · Ignition:OFF	11 - 14V < 1V	· Power supply cable · OVPR
64,	Þ 3.0	· **Ignition coil(T1/1)** - No.2,5 Cylinder	69	· Ignition:ON · Engine:in cranking	11 - 14 V > 10 V	· Cable · Ignition coil(T1/1) · Fuse No.17

Downloaded from www.Manualslib.com manuals search engine

Failure code	Test step	Item	Checking method	Requirement	Specified value	Possible cause
65,	Þ 4.0	· **Ignition coil(T1/2)** - No.3,4 Cylinder	69 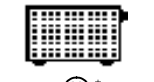 72	· Ignition:ON	11 -14 V	· Cable · Ignition coil(T1/2) · Fuse No.17
				· Engine:in cranking	> 10 V	
66,	Þ 5.0	· **Ignition coil(T1/3)** - No.1,6 Cylinder	69 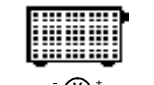 70	· Ignition:ON	11 -14 V	· Cable · Ignition coil(T1/3) · Fuse No.17
				· Engine:in cranking	> 10 V	
17, 18, 20, 67,	Þ 6.0	· **Crankshaft position sensor:** - Signal	99 100	· Engine:in cranking · Engine:in idling	Measure the signal (refer to figure 6)	· Þ 6.1 · Increament failure in driven plate
		- Voltage (alternating)	99 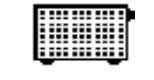 100	· Engine:in cranking	> 2.5 V -	
				· Engine: in idling	> 5 V - Voltage value is increased when engine rpm is increased	
17, 18, 20, 67,	Þ 6.1	· **Crankshaft position sensor:** - Resistance	99 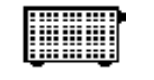 100	· Ignition:OFF - Disconnect the coupling "NO.2" from ECU	1050 - 1400W	· Cable · Crankshaft position sensor
19, 58,	Þ 7.0	· **Camshaft position sensor:** - Signal	104 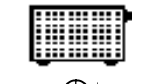 106	· Engine:in cranking	Measure the signal(refer to figure 7)	· Þ 7.1 · Cable · Camshaft position sensor

Downloaded from www.Manualslib.com manuals search engine

Failure code	Test step	Item	Checking method	Requirement	Specified value	Possible cause
		- Voltage (alternating)	106 — 11	· Engine:in cranking	The value will be changed in 1.2 - 1.7 V	
	Þ 7.1	· **Camshaft position sensor** (E23 only) - Power supply	Camshaft position sensor 1 — 3	· Ignition:ON - Remove the connector from the Camshaft position sensor between No.1 terminal and No.3 terminal.	11 -14 V	· Cable · OVPR
64,	Þ 8.0	· **Ignition coil(T1/1)** - primary coil voltage (No.2 and 5 cylinder)	71 — 11	· Engine:in cranking (starter operating) - Measuring range: 400 V - Time range: 100 % (using engine tester)	200 - 350 V	· Þ 8.1
	Þ 8.1	· **Connecting resistance of ignition coil between T1/1 and T1/2**	71 — 72	· Ignition:OFF	0.9 - 1.6 W The resistance of ignition coil at 20 ℃ is approached 0.6W	· Cable · Ignition coil T1/1 · Ignition coil T1/2
65,	Þ 9.0	· **Ignition coil(T1/2)** - primary coil voltage (No.3 and 4 cylinder)	72 — 11	· Engine:in cranking (starter operating) - Measuring range: 400 V - Time range: 100 % (using engine tester)	200 - 350 V	· Þ 9.1
	Þ 9.1	· **Connecting resistance of ignition coil between T1/2 and T1/1**	72 — 71	· Ignition:OFF	0.9 - 1.6 W The resistance of ignition coil at 20 ℃ is approached 0.6W	· Cable · Ignition coil T1/1 · Ignition coil T1/2

Downloaded from www.Manualslib.com manuals search engine

Failure code	Test step	Item	Checking method	Requirement	Specified value	Possible cause
66,	Þ 10.0	· **Ignition coil(T1/3)** - primary coil voltage (No.1 and 6 cylinder)	11	· Engine:in cranking (starter operating) - Measuring range: 400 V - Time range: 100 %	200 - 350 V	· Þ 10.1
	Þ 10.1	· **Connecting resistance of ignition coil between T1/3 and T1/2**	70 72	· Ignition:OFF	0.9 - 1.6 W The resistance of ignition coil at 20℃ is approached 0.6W	· Cable · Ignition coil T1/3 · Ignition coil T1/2
64, 65, 66,	Þ 11.0	· **Ignition coil** (T1/1, T1/2, T1/3) - Secondary ignition voltage	Engine tester	· Engine:in cranking - Select the ignition coil in order of T1/1, T1/2 - Measuring range: 20KV - Time range:100 %	8 - 20 KV	· Þ 11.1 · Ignition plug · ECU · High tension cable
	Þ 11.1	· **Ignition coil** (T1/1, T1/2, T1/3) - Secondary coil resistance	Ignition coil (T1/1, T1/2, T1/3) TM.4a TM.4b	· Remove the high tension cable of T1/1, T1/2, T1/3.	6 - 8.5 KW	· Ignition coil T1/1 · Ignition coil T1/2 · Ignition coil T1/3
56,	Þ 12.0	· **Knock sensor 1** - Resistance (cylinder No1, 2, 3)	117 118	· Ignition:OFF - Disconnect the coupling "No.2" from ECU.	> 10 MW	· Connecting condition · Cable · ECU
57,	Þ 13.0	· **Knock sensor 2** - Resistance (cylinder No.4, 5, 6)	114 115	· Ignition:OFF - Disconnect the coupling "No.2" from ECU.	> 10 MW	· Connecting condition · Cable · ECU

Downloaded from www.Manualslib.com manuals search engine

Reference Figures

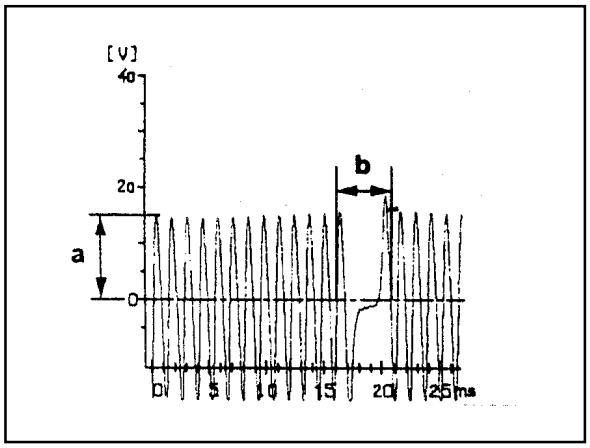

Figure 6. Crankshaft Position Sensor Signal
a Voltage
b Identifying the No.1 - 2 Missing Teeth

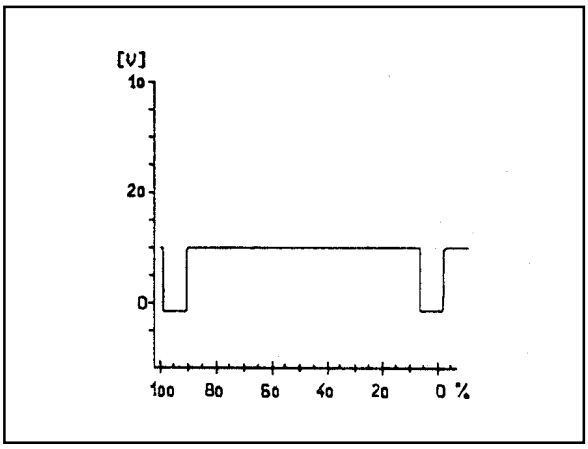

Figure 7. Camshaft Position Sensor Signal

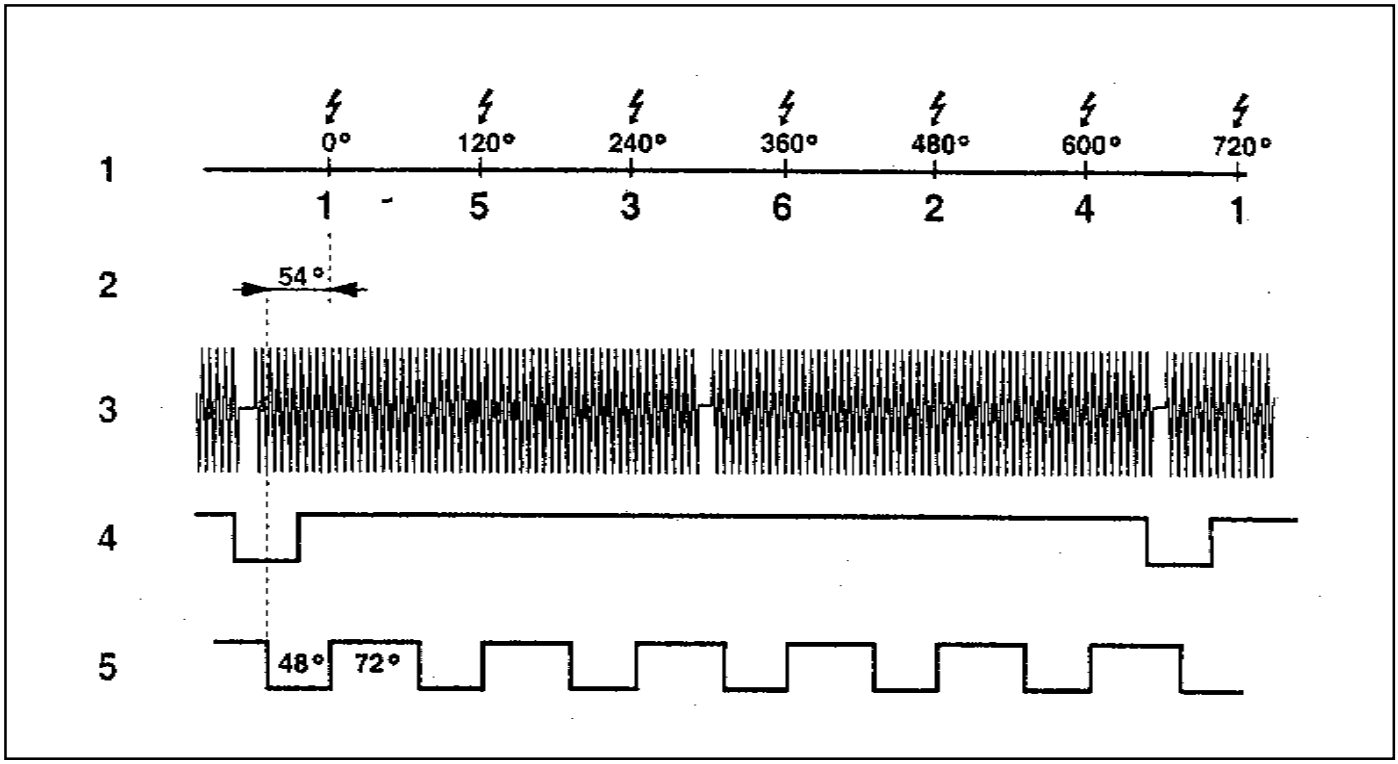

Figure 8. Signal Function
1 Crank Angle
2 Cylinder
3 Crankshaft Position Sensor Signal
4 Camshaft Position Sensor Signal
5 RPM Signal

Downloaded from www.Manualslib.com manuals search engine

IDLING CONTROL AND ELECTRONIC PEDAL SYSTEM TEST

Failure code	Test step	Item	Checking method	Requirement	Specified value	Possible cause
160, 161, 164, 167,	Þ 1.0	· **Pedal valve sensor:** - Signal (potentiometer 1)	31 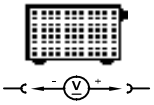 47	· Ignition:ON · Position of accelerator pedal: - Closed throttle position - Full throttle with kick down	0.3 - 0.7 V 4.3 - 4.8 V	· Þ 1.1 · Cable · Pedal valve sensor
	Þ 1.1	· **Pedal valve sensor:** - Power supply (potentiometer 1)	31 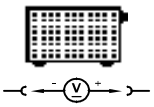 32	· Ignition:ON	4.75 - 5.25 V	· Cable · ECU
162, 163, 164, 167,	Þ 2.0	· **Pedal valve sensor:** - Signal (potentiometer 2)	50 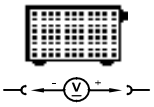 48	· Ignition:ON · Position of accelerator pedal: - Closed throttle position - Full throttle with kick down	0.1 - 0.4 V 2.1 - 2.5 V	· Þ 2.1 · Cable · Pedal valve sensor
	Þ 2.1	· **Pedal valve sensor:** - Power supply (potentiometer 2)	50 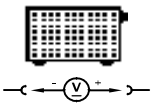 51	· Ignition:ON	2.25 - 2.75 V	· Cable · ECU
104, 105, 108, 109, 116, 119, 185,	Þ 3.0	· **Throttle valve actuator:** - Signal Throttle valve potentiometer 1	84 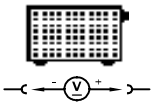 87	· Engine:in idling · Position of accelerator pedal: - Closed throttle position - Full throttle with kick down	0.3 - 0.9 V 4.0 - 4.6 V	· Þ 3.1 · Cable · E-GAS actuator

Downloaded from www.Manualslib.com manuals search engine

Failure code	Test step	Item	Checking method	Requirement	Specified value	Possible cause
		Throttle valve potentiometer 2	84 — V — 85	· Position of accelerator pedal: - Closed throttle position - Full throttle with kick down	4.0 - 4.6 V 0.3 - 0.9 V	
	Þ 3.1	· **Throttle valve actuator:** - Power supply(5V) Throttle valve potentiometer 1+2	84 — V — 112	· Ignition:ON	4.75 - 5.25 V	· Cable · ECU
104, 105, 108, 109, 116, 119, 185,	Þ 4.0	· **Throttle valve actuator:** - Signal Throttle valve actuator motor voltage supply Throttle valve actuator motor resistance	68 — V — 67 68 — Ω — 67	· Ignition:ON · Engine:in idling - Coolant temperature: >70 ℃ · Ignition:OFF	0.8 - 2.3 V The value will be changed in 1.0 - 2.5V. < 10 W	· ECU · Cable · E-GAS actuator

Downloaded from www.Manualslib.com manuals search engine

AIR CONDITIONER CONTROL SYSTEM TEST

Failure code	Test step	Item	Checking method	Requirement	Specified value	Possible cause
44, 45,	Þ 1.0	· **Air conditioner signal:** - Input signal (input signal from thermo amplifier)	10 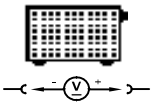 44	· Engine:In idling · Air conditioner switch : ON/OFF Air conditioner switch : OFF Air conditioner switch : ON	< 1 V 11 - 14 V	· Þ 5.1 · Cable · Thermo amp · Auto amp · Dual pressure switch · Air conditioner control panel
	Þ 1.1	· **Air conditioner compressor:** - Output signal	10 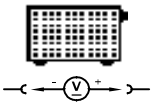 27	· Engine:In idling · Air conditioner switch : ON/OFF Air conditioner switch : OFF Air conditioner switch:ON	< 1 V 11 - 14 V	· Thermo amp · Auto amp · Dual pressure switch · Air conditioner control panel · ECU
	Þ 2.0	· **Condenser fan(HI) control:**	10 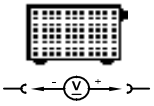 35	· Engine:In idling · Air conditioner switch : ON/OFF Air conditioner switch : OFF Air conditioner switch : ON Coolant temperature: above 105 ℃	11 - 14 V 11 - 14 V < 1 V	· Condenser fan relay · Fan motor · ECU

Downloaded from www.Manualslib.com manuals search engine

FUEL PRESSURE AND INTERNAL LEAKAGE TEST

Preparation

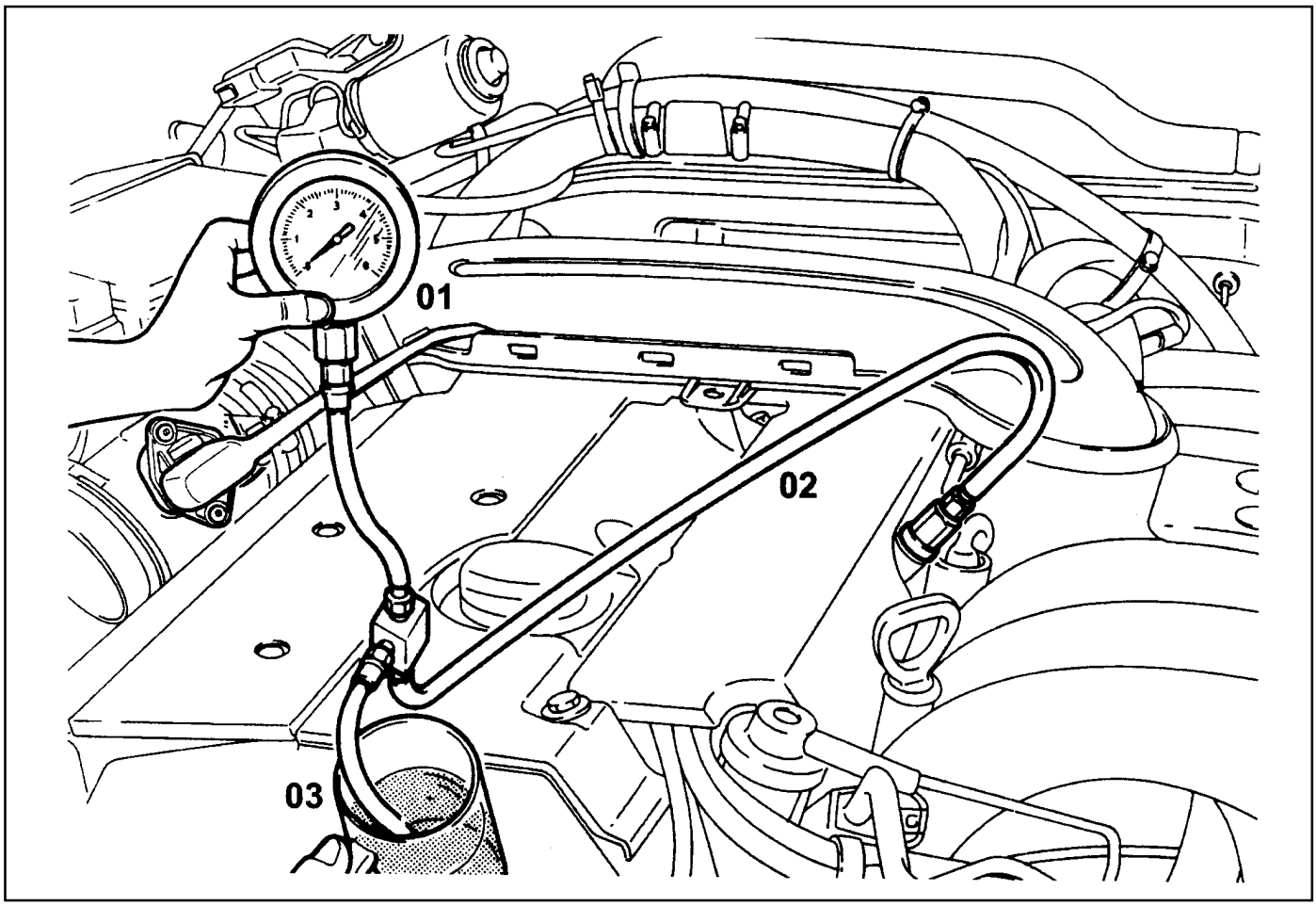

01 Pressure Tester
02 Pressure Hose
03 Measuring Beaker

Connection of the Equipment

1. Turn the ignition switch to "OFF" position.
2. Remove the air cleaner cross pipe.
3. Remove the cap on fuel pressure test plug and connect the pressure hose and pressure tester.
4. Prepare the beaker for measuring the amount of fuel.

Tools Required

103 589 00 21 00 Pressure Tester

119 589 04 63 00 Pressure Hose

Downloaded from www.Manualslib.com manuals search engine

Failure code	Test step	Item	Checking method	Requirement	Specified value	Possible cause
	Þ 1.0	· **Fuel pressure:in idling speed** - When the vacuum is applied	Connect the fuel pressure test plug to the pressure tester (refer to the flgure on previous page).	· Engine:in idling - Close the valve screw on pressure tester	3.2 - 3.6 bar	· Þ Fuel pump test · Fuel pressure regulator
	Þ 2.0	· **Fuel pressure:in idling speed** - When the vacuum is not applied	Connect the fuel pressure test plug to the pressure tester (refer to the flgure on previous page).	· Engine:in idling - Close the valve screw on pressure tester	3.7 - 4.2 bar	· Fuel pressure regulator
	Þ 3.0	· **Fuel system internal leakage:**	Connect the fuel pressure test plug to the pressure tester (refer to the flgure on previous page).	· Engine:stop	> 3.0 bar	· The pressure drops rapidly:non-return valve in fuel pump
				· After 30 minutes from engine stop	> 2.5 bar	· The pressure drops slowly: - Injector test - Fuel pressure regulator - O-ring

Downloaded from www.Manualslib.com manuals search engine

FUEL PUMP TEST

Preparation

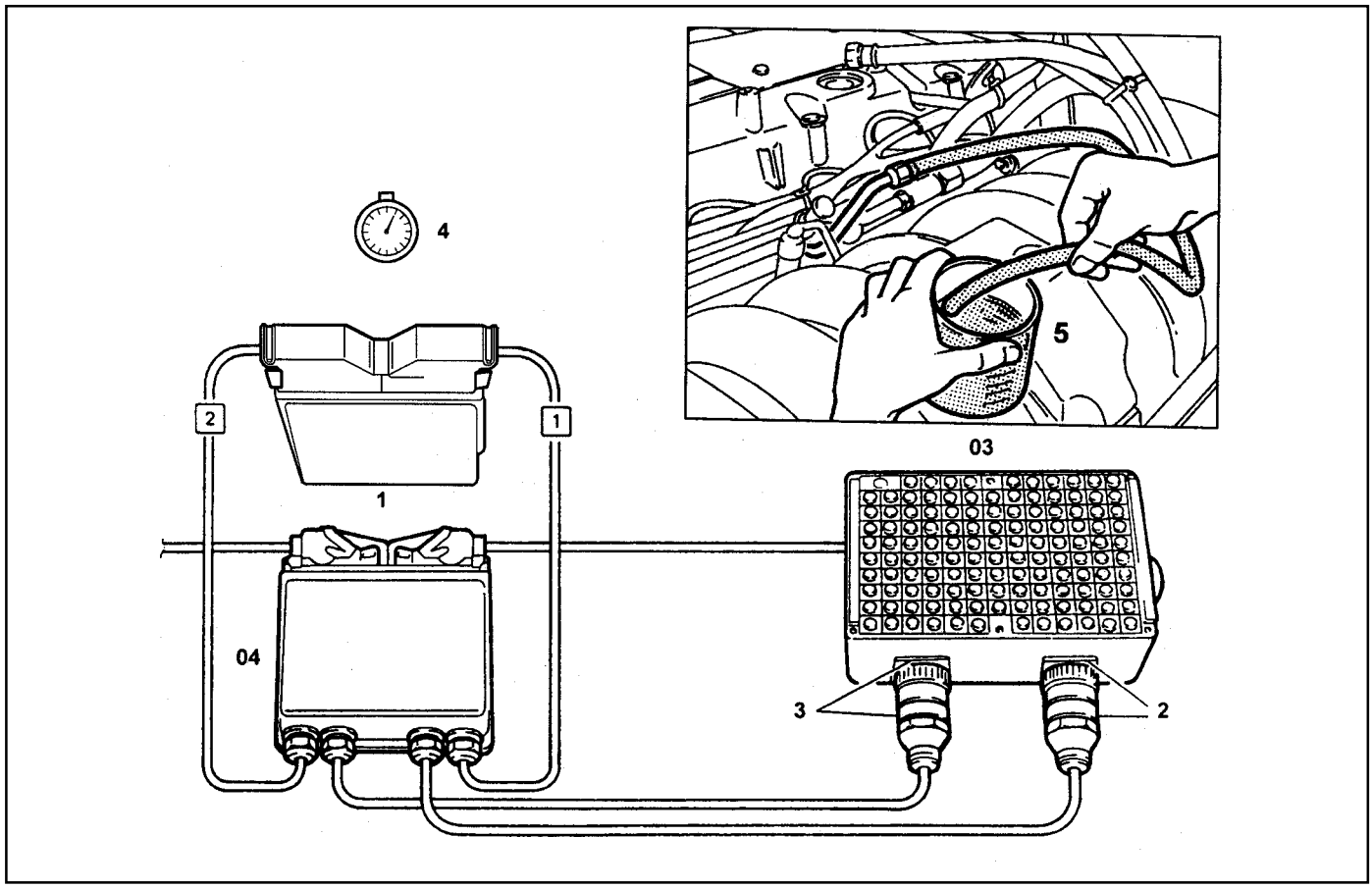

1 ECU
2 Test Coupling(No.1-60)
3 Test Coupling(No.61-120)
4 Stop Watch
5 Measuring Beaker

03 Test Box
04 ECU Test Cable

Connection of the Equipment

1. Turn the ignition switch to "OFF" position.
2. Connect the test box to the ECU.

Tools Required

103 589 00 21 00 Pressure Tester
210 589 00 99 00 Adaptor Line
129 589 00 21 00 Test Box
210 589 08 63 00 Ecu Test Cable

Downloaded from www.Manualslib.com manuals search engine

Failure code	Test step	Item	Checking method	Requirement	Specified value	Possible cause
	Þ 1.0	· **Fuel pump:** - Fuel supply ratio	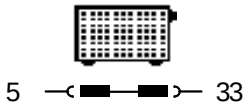	· Ignition:ON - Disconnect the fuel return pipe and connect the host to beaker to collect the supplied fuel	1 liter of fuel supply for max. 35 seconds	· Þ 2.0 · Check the fuel line
	Þ 2.0	· **Fuel pump:** - Current consumption	Multi tester(DC current) 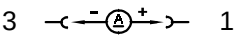	· Ignition:ON - Remove the fuel relay from the fuse and relay box in luggage compartment and connect the amperemeter between No.1 and No.3 in relay box(fuel pump relay removed position) for measuring current consumption	5 - 9 A	· Fuel pump

Downloaded from www.Manualslib.com manuals search engine

INJECTOR TEST

Preparation

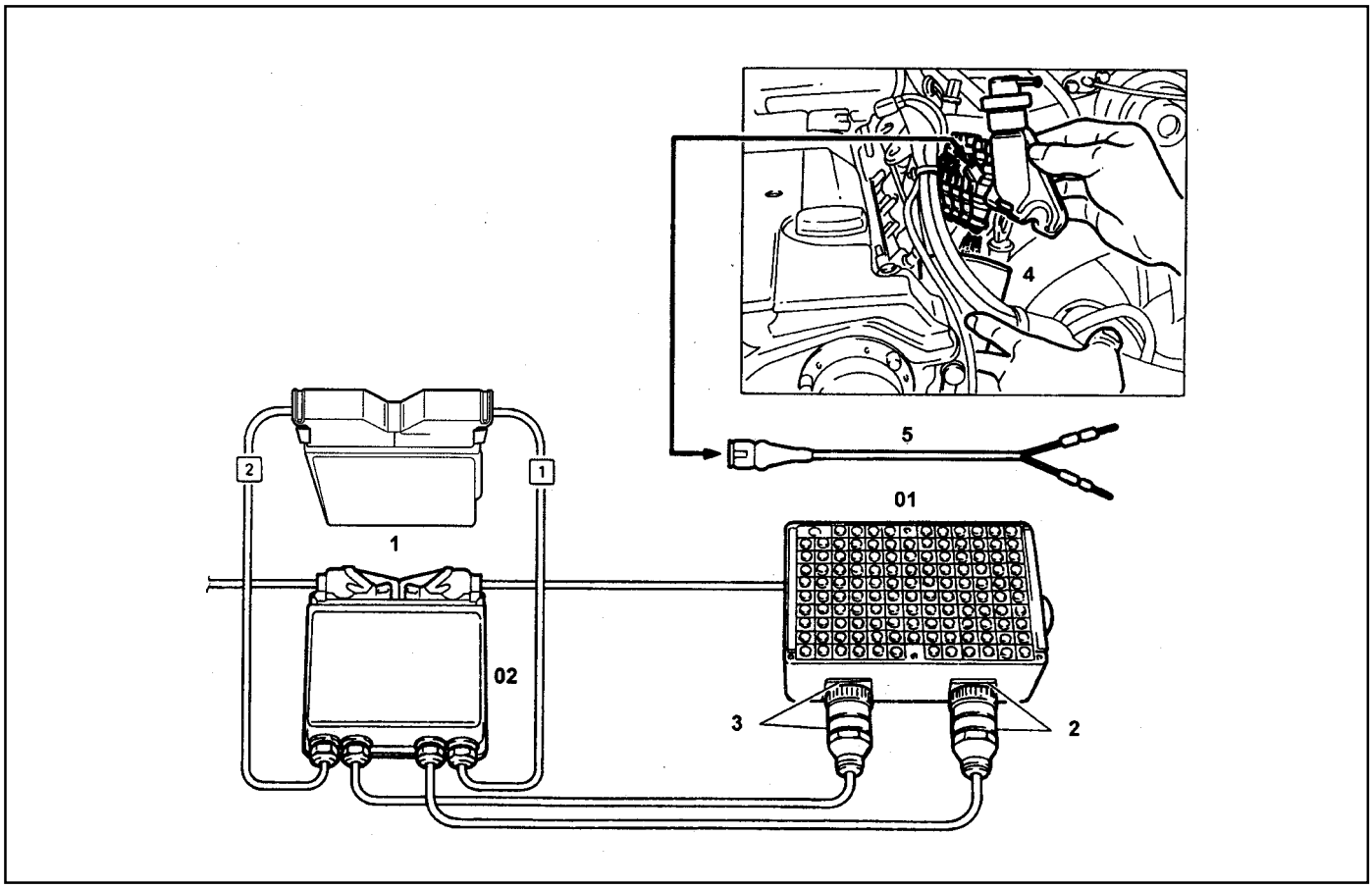

1 ECU
2 Test Coupling(No.1-60)
3 Test Coupling(No.61-120)
4 Measuring Beaker
5 Shop Made Cable
03 Test Box
04 ECU Test Cable

Connection of the Equipment

1. Connect the test box to the ECU as shown in the figure.
2. Remove the 2-pin coupling from injector.
3. Remove the fuel distributor and injector with a unit. At this time, do not remove the supply and return line.
4. Connect the shop made cable to the injector with a firing order.
5. Collect the fuel from injector.

Tools Required

129 589 00 21 00 Test Box

210 589 08 63 00 Ecu Test Cable

Downloaded from www.Manualslib.com manuals search engine

Failure code	Test step	Item	Checking method	Requirement	Specified value	Possible cause
	Þ 1.0	· **Injector:** - Leakage test	5 — 33	· Ignition:ON - Remove the fuel distributor and fuel injector with a unit.	There should be no leaks and later drops from the injector	
	Þ 2.0	· **Injector:** - Function test and spray pattern check	5 — 33	· Ignition:ON - Connect the shop made cable to the injector - Collect the spraying fuel with a beaker - Connect the shop made cable to No.21(+) and No.3 (-) terminal in test box	The spray pattern of the injector most show in the figure 10.	· Injector

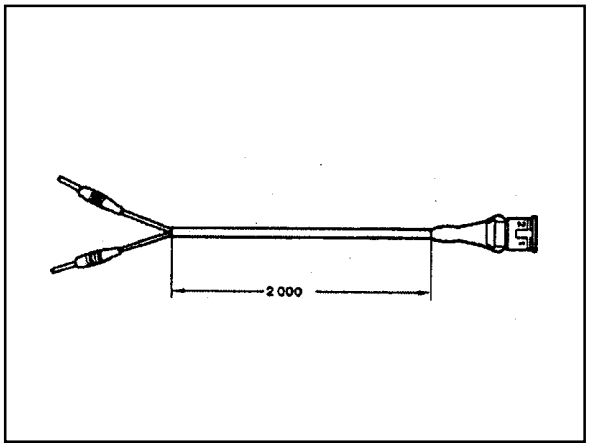

Figure 9. Shop Made Cable

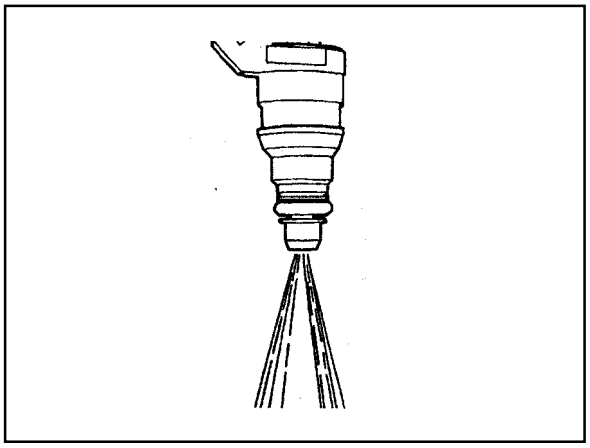

Figure 10. Fuel Injector Normal Spary Pattern

Downloaded from www.Manualslib.com manuals search engine

MAINTENANCE AND REPAIR

ON-VEHICLE SERVICE

ECU

Appearance

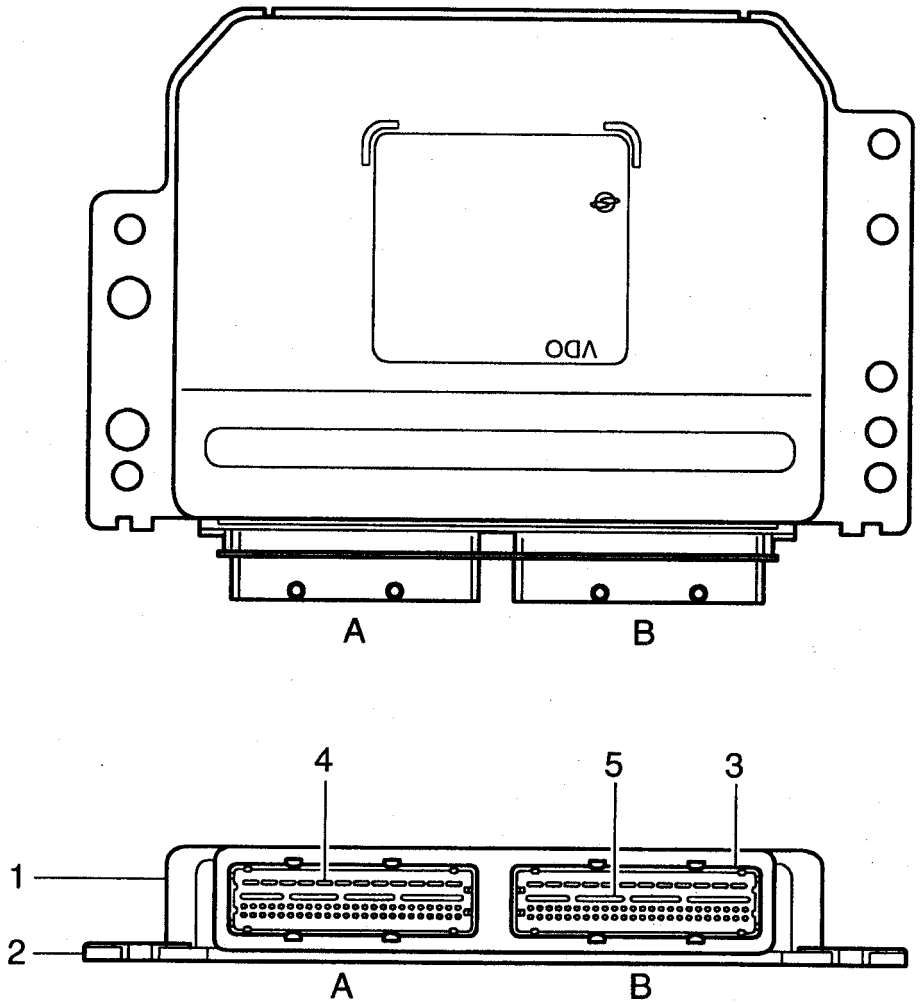

1 Cover
2 Plate
3 Connector
4 Flat Pin
Vehicle Side : Number 1 - 12
Engine Side : Number 61 - 72
5 Pin
Vehicle Side : Number 13 - 60
Engine Side : Number 73 - 120
A Vehicle Connector : Black
B Engine Connector : Gray

Downloaded from www.Manualslib.com manuals search engine

Location

Engine ECU is located at the inside of cowl side trim in right bottom of instrument panel of passenger side.

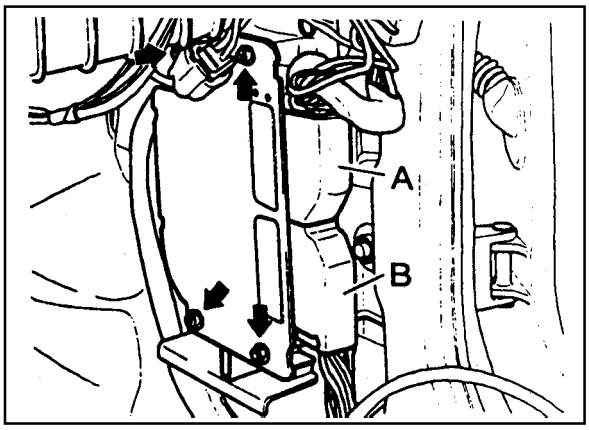

Removal & Installation Procedure

1. Turn the ignition switch to "OFF" position.
2. Disconnect the battery negative cable
3. Remove the cowl side trim form passenger side.
4. Unscrew four securing nuts for ECU from mounting bracket.

   Installation Notice

Tightening Torque	9 - 11 Nm

5. Pulling out the ECU from bracket.
6. Disconnect the vehicle side coupling(B).
7. Installation should follow the removal procedure in the reverse order.

Downloaded from www.Manualslib.com manuals search engine

ECU Pin Numbers and Descriptions

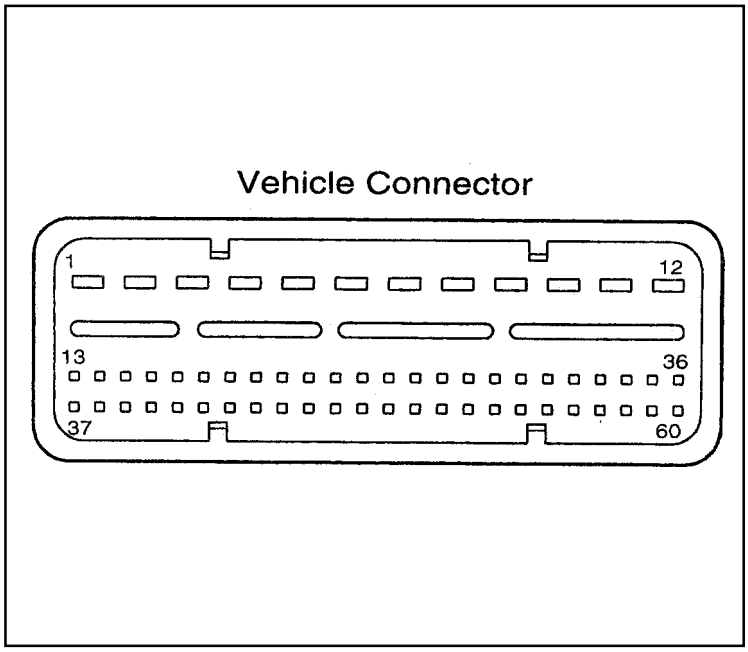

Vehicle Connector

Pin No.	Description	Abbreciation
1	-	-
2	Starter motor TM.50	TM.50
3	-	-
4	-	-
5	Electronic ground	GND
6	-	-
7	-	-
8	-	-
9	Lambda probe 1 heating	LSH1
10	Power ground TM.31	TM.31
11	V-BATTERY TM.87	TM.87
12	V-BATTERY TM.30	TM.30
13	Immobilizer crypto read	WFS I/O
14	Immobilizer crypto write	WFS O
15	-	-
16	Lambda probe 1 ground	GND
17	Lambda probe 1 signal	LS1
18	-	-
19	-	-
20	-	-

Downloaded from www.Manualslib.com manuals search engine

Pin No.	Decription	Abbreciation
21	Brake switch	BRS
22	-	-
23	-	-
24	-	-
25	-	-
26	-	-
27	Air conditioning clutch relay	KLIKU
28	Starter control 1	START
29	-	-
30	-	-
31	Pedal potentiometer 1 ground	GND
32	Pedal potentiometer 1 supply	SP1+5V
33	Fuel pump relay	KP
34	Tank purge valve	TEV
35	Engine fan	ML
36	-	-
37	CAN-Low	CAN L
38	CAN-High	CAN H
39	-	-
40	-	-
41	-	-
42	-	-
43	Clutch switch	KPI
44	Air conditioning	KLIMA
45	Electronic traction signal	KLIMA
46	-	-
47	Pedal potentiometer 1 signal	SP1S
48	Pedal potentiometer 2 signal	SP2S
49	Brake light switch	BLS
50	Pedal potentiometer 2 ground	GND
51	Pedal potentiometer 2 supply	SP2+2.5V
52	Cruise accelerate/Set	S+B
53	Cruise resume	WA
54	Cruise decelerate/Set	S-B
55	Cruise safety contact switch	KSK
56	-	-
57	Cruise off switch	AUS
58	Diagnostics	DIAG
59	Vehicle speed signal	V-SIG
60	Engine speed signal	TN-SIG

Downloaded from www.Manualslib.com manuals search engine

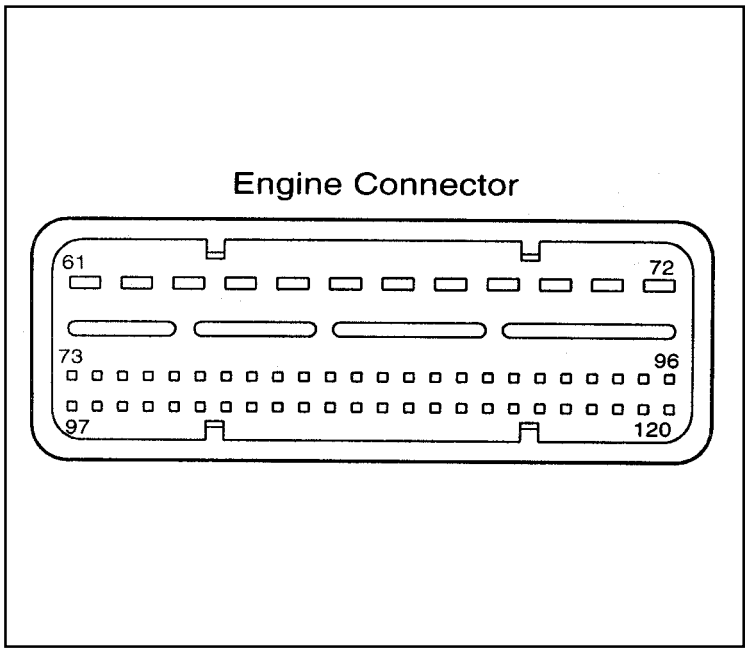

Engine Connector

Pin No.	Decription	Abbreciation
61	Injector-cylinder 2	EV5
62	Injector-cylinder 4	EV6
63	Injector-cylinder 1	EV1
64	Injector-cylinder 6	EV4
65	Injector-cylinder 5	EV2
66	Injector-cylinder 3	EV3
67	E-GAS motor plus	M+
68	E-GAS motor minus	M-
69	Power ground TM.31	TM.31
70	Ignition coil cylinder 1+6	ZSC16
71	Ignition coil cylinder 2+5	ZSA25
72	Ignition coil cylinder 3+4	ZSB34
73	Camshaft control	NWS
74	-	-
75	-	-
76	-	-
77	-	-
78	Engine coolant temperature	MT
79	Temperature ground	GND
80	Intake air temperature	LT

Downloaded from www.Manualslib.com manuals search engine

Pin No.	Description	Abbreciation
81	Hot film air mass signal	HFM
82	-	-
83	-	-
84	E-GAS potentiometer ground	-
85	E-GAS potentiometer 2 signal	IP2S
86	-	-
87	E-GAS potentiometer 1 signal	IP1S
88	-	-
89	-	-
90	-	-
91	-	-
92	-	-
93	-	-
94	-	-
95	-	-
96	-	-
97	Intake manifold resonance flap	SRV
98	-	-
99	Crankshaft sensor ground	KW-
100	Crankshaft sensor signal	KW+
101	-	-
102	-	-
103	-	-
104	Camshaft sensor ground	NOWE-
105	Hot film air mass ground	GND
106	Camshaft sensor signal	NOWE+
107	-	-
108	Hot film air mass supply	V-REF.HFM
109	-	-
110	-	-
111	-	-
112	E-GAS potentiometer supply	V-REF.DK
113	-	-
114	Knock sensor 2 ground	GND
115	Knock sensor 2 signal	KS2
116	-	-
117	Knock sensor 1 ground	GND
118	Knock sensor 1 signal	KS1
119	-	-
120	-	-

Downloaded from www.Manualslib.com manuals search engine

Application

Pin No.	Description	Abbreviation	E32 ENG, 4speed A/T (BTRA)	E32 ENG, 5speed M/T	Remarks
1	-	-	-	-	
2	Starter motor TM.50	TM.50	●	●	
3	-	-	-	-	
4	-	-	-	-	
5	Electronic ground	GND	●	●	
6	-	-	-	-	
7	-	-	-	-	
8	-	-	-	-	
9	Lambda probe 1 heating	LSH1	●	●	
10	Power ground TM.31	TM.31	●	●	
11	V-BATTERY TM.87	TM.87	●	●	
12	V-BATTERY TM.30	TM.30	●	●	
13	Immobilizer crypto read	WFS I/O	●	●	
14	Immobilizer crypto write	WFS O	●	●	
15	-	-	-	-	
16	Lambda probe 1 ground	GND	●	●	
17	Lambda probe 1 signal	LS1	●	●	
18	-	-	-	-	
19	-	-	-	-	
20	-	-	-	-	
21	Brake switch	BRS	○	○	
22	-	-	-	-	
23	-	-	-	-	
24	-	-	-	-	
25	-	-	-	-	
26	-	-	-	-	
27	Air conditioning clutch relay	KLIKU	●	●	
28	Starter control	START	○	○	
29	-	-	-	-	
30	-	-	-	-	

●:Standard, ○:Option

Downloaded from www.Manualslib.com manuals search engine

Pin No.	Description	Abbreviation	E32 ENG, 4speed A/T (BTRA)	E32 ENG, 5speed M/T	Remarks
31	Pedal potentiometer 1 ground	GND	●	●	
32	Pedal potentiometer 1 supply	SP1+5V	●	●	
33	Fuel pump relay	KP	●	●	
34	Tank purge valve	TEV	●	●	
35	Engine fan	ML	●	●	
36	-	-	-	-	
37	CAN-Low	CAN L	●	●	
38	CAN-High	CAN H	●	●	
39	-	-	-	-	
40	-	-	-	-	
41	-	-	-	-	
42	-	-	-	-	
43	Clutch switch	KPL	○	●	
44	Air conditioning	KLIMA	●	●	
45	Electronic traction signal(ABD)	ETS	○	○	
46	-	-	-	-	
47	Pedal potentiometer 1 signal	SP1S	●	●	
48	Pedal potentiometer 2 signal	SP2S	●	●	
49	Brake light switch	BLS	○	○	
50	Pedal potentiometer 2 ground	GND	●	●	
51	Pedal potentiometer 2 supply	SP2+2.5V	●	●	
52	Cruise accelerate/Set	S+B	●	●	
53	Cruise resume	WA	●	●	
54	Cruise decelerate/Set	S-B	●	●	
55	Cruise safety contact switch	KSK	●	●	
56	-	-	-	-	
57	Cruise off switch	AUS	●	●	
58	Diagnostics	DIAG	●	●	
59	Vehicle speed signal	V-SIG	●	●	
60	Engine speed signal	TN-SIG	●	●	

Downloaded from www.Manualslib.com manuals search engine

Pin No.	Description	Abbreviation	E32 ENG, 4speed A/T (BTRA)	E32 ENG, 5speed M/T	Remarks
61	Injector-cylinder 2	EV5	●	●	
62	Injector-cylinder 4	EV6	●	●	
63	Injector-cylinder 1	EV1	●	●	
64	Injector-cylinder 6	EV4	●	●	
65	Injector-cylinder 5	EV2	●	●	
66	Injector-cylinder 3	EV3	●	●	
67	E-GAS motor plus	M+	●	●	
68	E-GAS motor minus	M-	●	●	
69	Power ground TM.31	TM.31	●	●	
70	Ignition coil cylinder 1+6	ZSC16	●	●	
71	Ignition coil cylinder 2+5	ZSA25	●	●	
72	Ignition coil cylinder 3+4	ZSB34	●	●	
73	Camshaft control	NWS	●	●	
74	-	-	-	-	
75	-	-	-	-	
76	-	-	-	-	
77	-	-	-	-	
78	Engine coolant temperature	MT	●	●	
79	Temperature ground	GND	●	●	
80	Intake air temperature	LT	●	●	
81	Hot film air mass signal	HFM	●	●	
82	-	-	-	-	
83	-	-	-	-	
84	E-GAS potentiometer ground	GND	●	●	
85	E-GAS potentiometer 2 signal	IP2S	●	●	
86	-	-	-	-	
87	E-GAS potentiometer 1 signal	IP1S	●	●	
88	-	-	-	-	
89	-	-	-	-	
90	-	-	-	-	

Downloaded from www.Manualslib.com manuals search engine

Pin No.	Description	Abbreviation	E32 ENG, 4speed A/T (BTRA)	E32 ENG, 5speed M/T	Remarks
91	-	-	-	-	
92	-	-	-	-	
93	-	-	-	-	
94	-	-	-	-	
95	-	-	-	-	
96	-	-	-	-	
97	Intake manifold resonance flap	SRV	●	●	
98	-	-	-	-	
99	Crankshaft sensor ground	KW-	●	●	
100	Crankshaft sensor signal	KW+	●	●	
101	-	-	-	-	
102	-	-	-	-	
103	-	-	-	-	
104	Camshaft sensor ground	NOWE-	●	●	
105	Hot film air mass ground	GND	●	●	
106	Camshaft sensor signal	NOWE+	●	●	
107	-	-	-	-	
108	Hot film air mass supply	V-REF.HFM	●	●	
109	-	-	-	-	
110	-	-	-	-	
111	-	-	-	-	
112	E-GAS potentiometer supply	V-REF.DK	●	●	
113	-	-	-	-	
114	Knock sensor 2 ground	GND	●	●	
115	Knock sensor 2 signal	KS2	●	●	
116	-	-	-	-	
117	Knock sensor 1 ground	GND	●	●	
118	Knock sensor 1 signal	KS1	●	●	
119	-	-	-	-	
120	-	-	-	-	

Downloaded from www.Manualslib.com manuals search engine

Removal & Installation Procedure

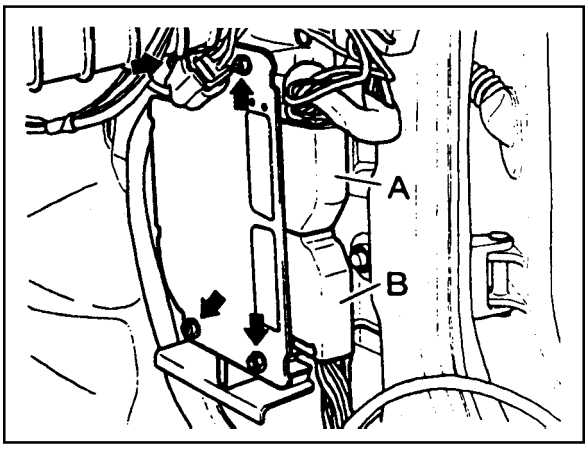

- **when removing the ECU only**

1. Turn the ignition switch to "OFF" position.
2. Disconnect the negative battery cable.
3. Disconnect the couplings from ECU.
4. Unscrew the left and right bolt (3) on bolt (1) and auxiliarly bracket and remove the auxiliarly bracket from the bracket assembly (2).

Installation Notice

Tightening Torque	(1)	6 - 8 Nm
	(3)	5 - 7 Nm

5. Unscrew the four bolts (5) and disconnect the ECU (6) from the bracket assenbly.

Installation Notice

Tightening Torque	5 - 7 Nm

6. Installation should follow the removal procedure in the reverse order.

- **When Removing the ECU with ABS or ABS/ASR Unit**

1. Turn the ignition switch to "OFF" position.
2. Disconnect the negative battery cable.
3. Disconnect the couplings from ECU.
4. Disconnect the coupling from ABS or ABS/ASR unit.
5. Unscrew the bolt (1) and the left and right flange nuts.

Tightening Torque	6 - 8 Nm

6. Remove the ECU with ABS or ABS/ASR unit assembly.
7. Unscrew the left and right bolt (3) on the auxiliary bracket and remove the auxiliary bracket from the bracket assembly.

Installation Notice

Tightening Torque	5 - 7 Nm

8. Unscrew the bolts (5) and disconnect the ECU (6) from the bracket assenbly.

Installation Notice

Tightening Torque	5 - 7 Nm

9. Installation should follow the removal procedure in the reverse order.

Downloaded from www.Manualslib.com manuals search engine

FUEL PRESSURE REGULATOR

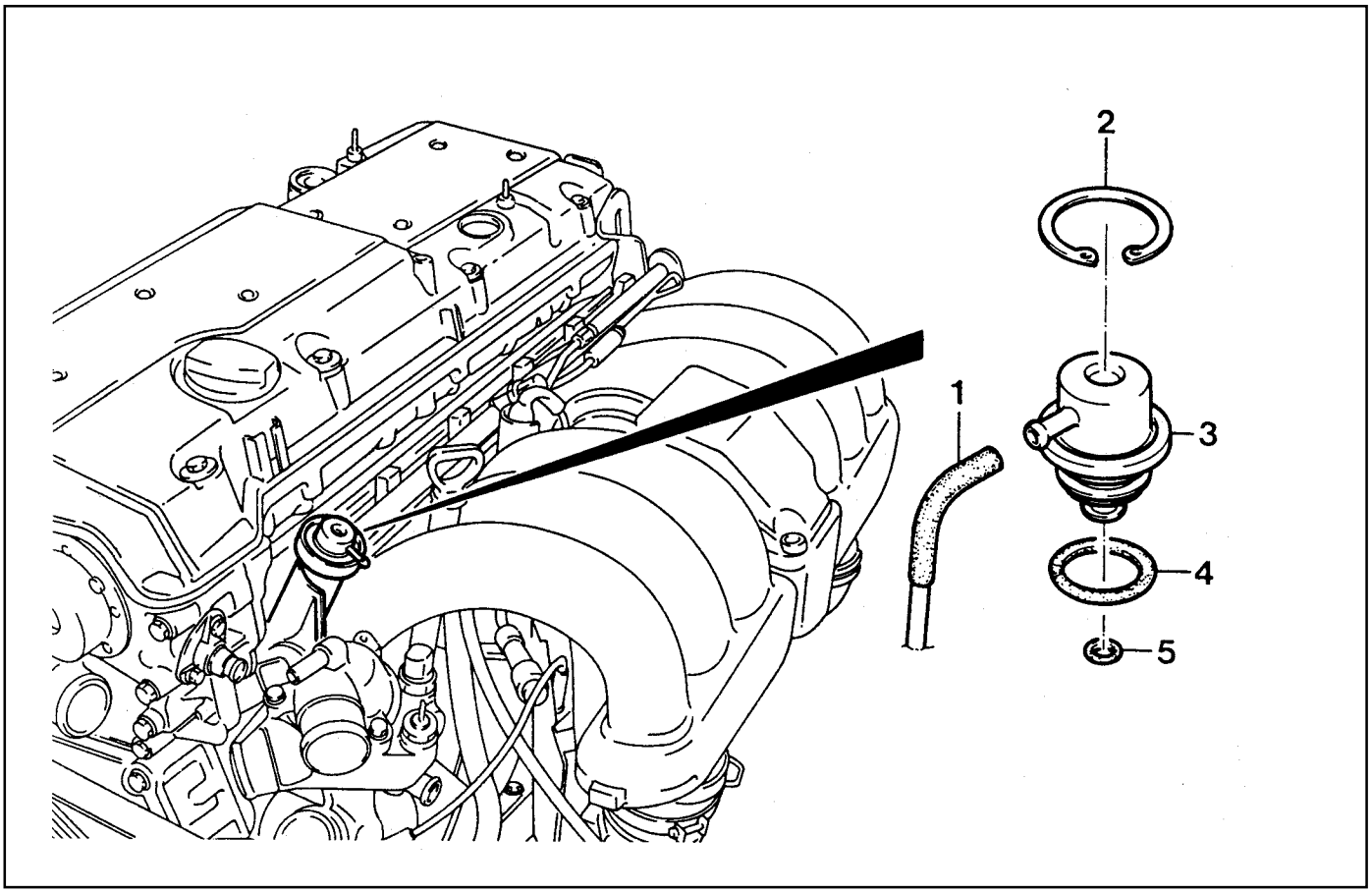

1 Vacuum Hose
2 Circlip
3 Fuel Pressure Regulator
4 O-ring ..... replace
5 O-ring ..... replace

Downloaded from www.Manualslib.com manuals search engine

Removal & Installation Procedure

1. Remove the fuel pressure test connector.

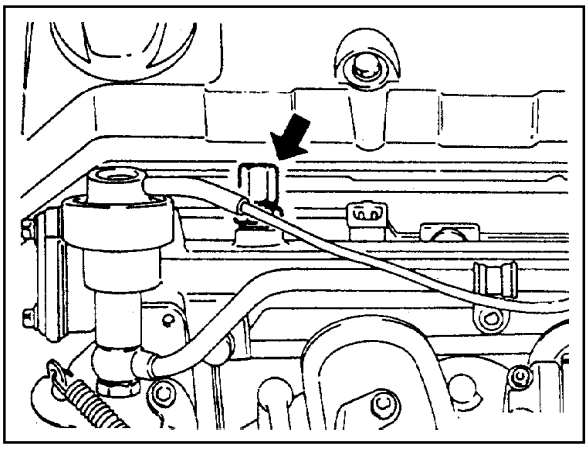

2. Discharge the pressure in fuel supply system by pressing the service valve.

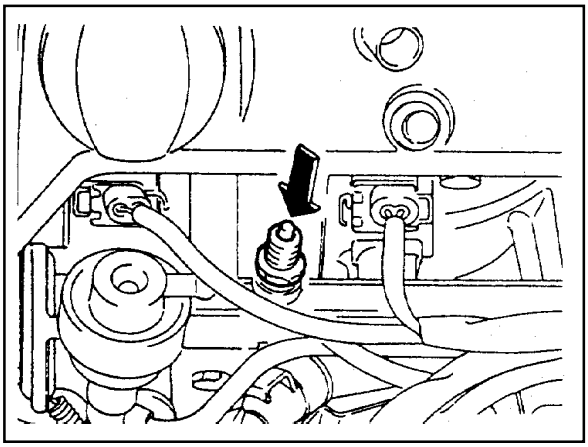

3. Disconnect the vacuum hose.
4. Disconnect the circlip and remove the fuel pressure regulator.
5. Apply the oil to O-ring lightly and then replace it.
6. Installation should follow the removal procedure in the reverse order.
7. Check for fuel pressure and internal leaks by operating the engine.

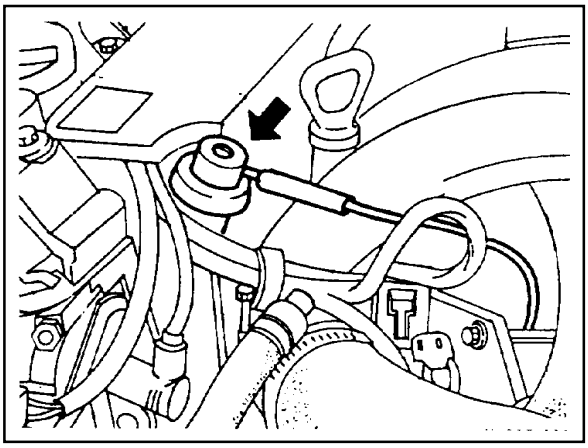

Downloaded from www.Manualslib.com manuals search engine

Function of the Fuel Pressure Regulator

The fuel pressure regulator maintains the fuel pressure in the fuel line with the pressure of 3.2 bars to 3.8 bars according to the intake manifold pressure. This operating pressure cannot be changed, and the fuel injection volume will be only determined by the injection time. Over supplied fuel returns to the fuel tank through the return line.

<Operating at full load>

There is no negative pressure applied to the spring chamber(9) during the full load, and it is separated from the fuel chamber(8) by the diaphragm(5).

When the fuel pressure goes up, the diaphragm forces the compression spring(6) in the direction of compression . At this moment, the valve(3) sticks to the diaphragm by the fuel pressure, and the fuel return line(2) opens. The fuel over supplied returns to the fuel tank through the return line.

2. Fuel return line
3. Valve
5. Diaphragm
6. Compression Spring
8. Fuel Chamber
9. Spring Chamber

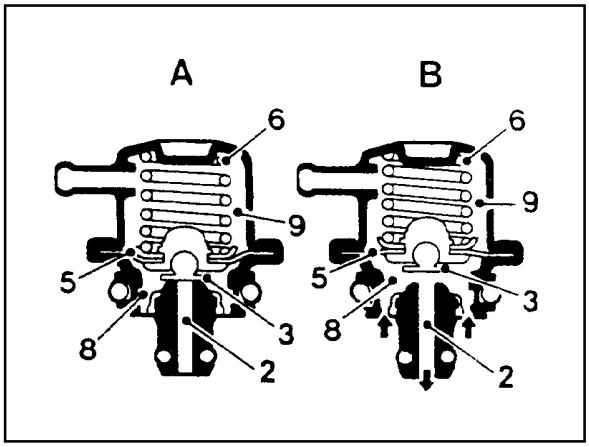

A. Valves Closed
B. Valves Opened

The pressure difference between the fuel pressure and the intake manifold is about 3.8 bars during the full load.

1. Fuel Pressure Regulator
2. Intake Manifold
3. Fuel Return(to fuel tank)
4. Fuel Supply(form fuel pump)
5. Fuel Pressure(approx. 3.8 bars)
6. Intake Manifold Negative Pressure(0 bar)

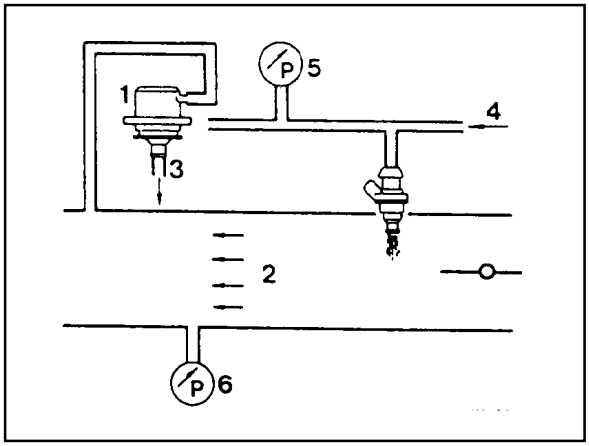

<Operating at Idle and partial load>

The spring chamber(9) is connected to the intake manifold with the vacuum hose at the intake pipe connection(7). The negative pressure generated in the intake manifold activates the diaphragm, and thus the fuel pressure gets reduced to the rate of the operating extent of the diaphragm by the intake manifold's negative pressure.

Consequently, the fuel pressure in the fuel distributor changes by the intake manifold's negative pressure, and the injector's fuel pressure gets reduced independently to the throttle valve's position. Thus, the fuel injection volume can only be determined according to the injector's injecting duration.

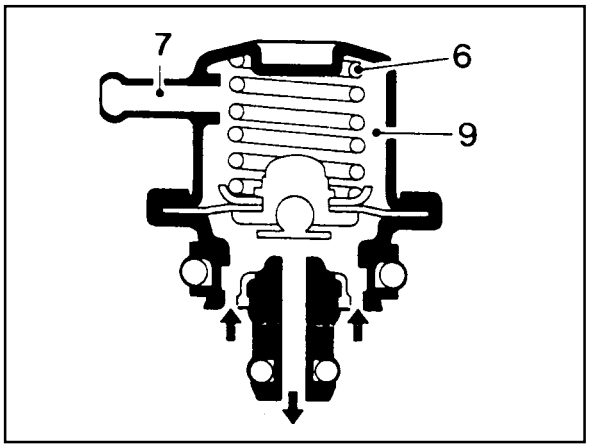

Downloaded from www.Manualslib.com manuals search engine

The pressure difference between the fuel pressure and the intake manifold is approx. 3.2 bars during idling.

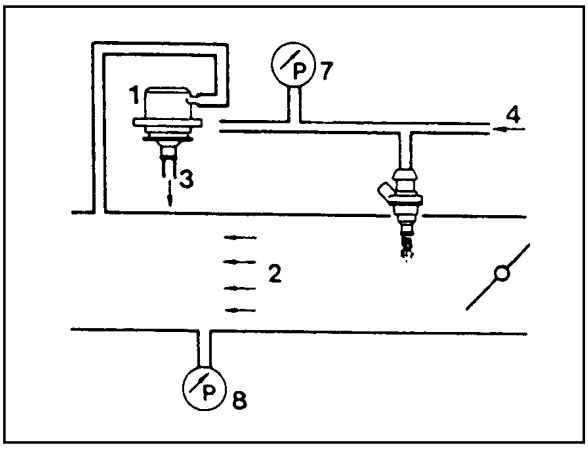

1. Fuel Pressure Regulator
2. Intake Manifold
3. Fuel Return(to fuel tank)
4. Fuel Supply(from fuel pump)
7. Fuel Pressure(approx. 3.2 bars)
8. Intake Manifold Negative Pressure(0.6 bars)

<Fuel Pressure Diagram>

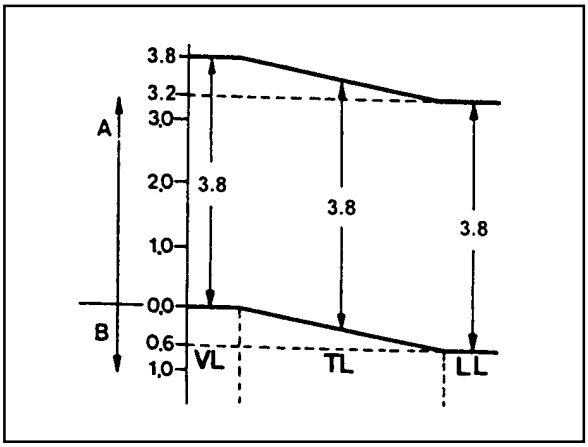

A. Fuel pressure
B. Intake Manifold Negative Pressure
LL. Idling
TL. Partial load
VL. Full load

Downloaded from www.Manualslib.com manuals search engine

FUEL DISTRIBUTOR

Preceding Work : Removal of intake air duct

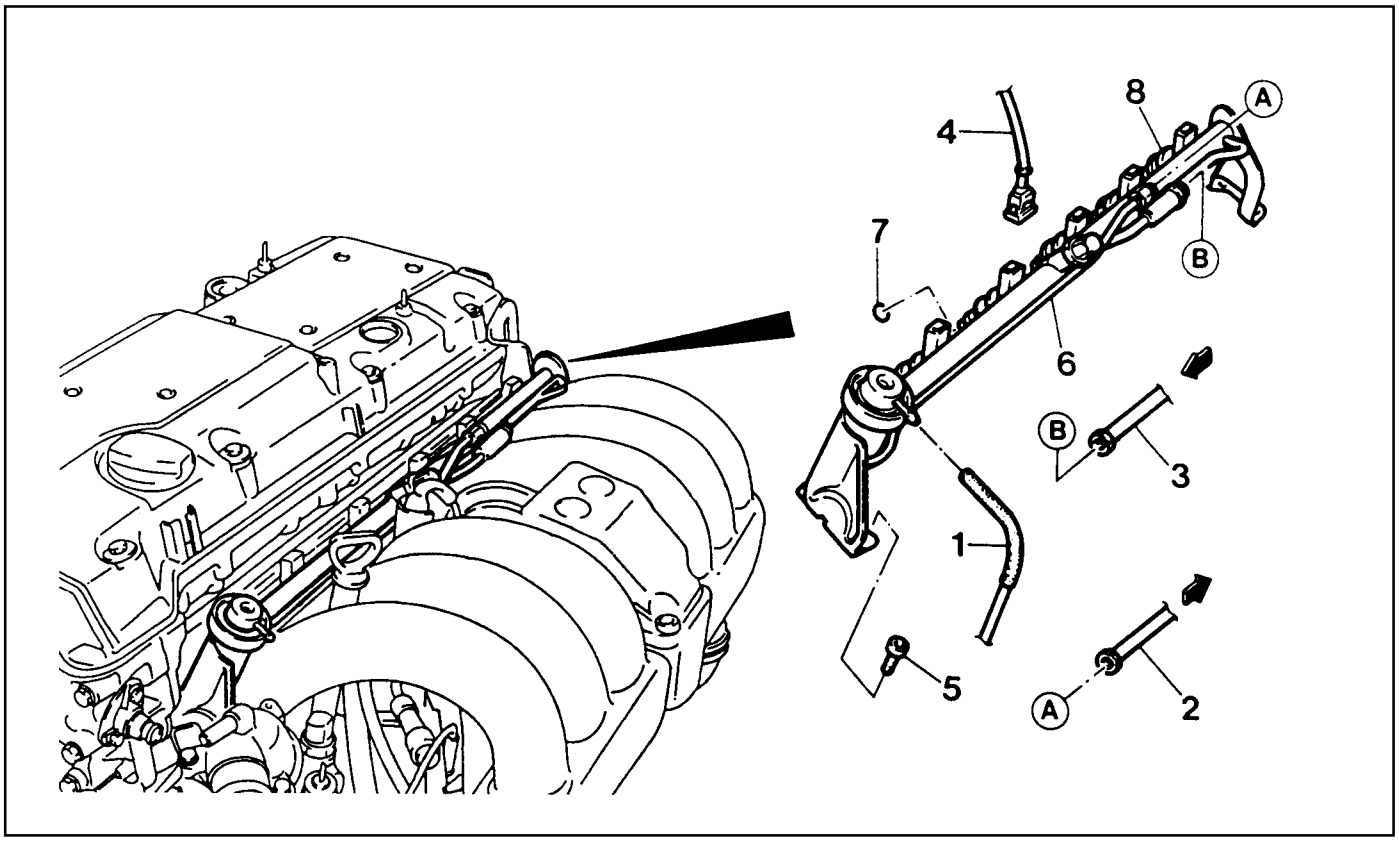

1 Vacuum Hose
2 Fuel Return Line 25-30Nm
3 Fuel Supply Line 25-30Nm
4 Injector Connector
5 Bolt (M8 X 50) ..... 22.5-27.5 Nm
6 Fuel Distributor
7 O-ring ..... Replace if damaged
8 Injector

Downloaded from www.Manualslib.com manuals search engine

Removal & Installation Procedure

1. Discharge the fuel pressure from the fuel pressure test connector.
2. Disconnect the battery ground cable.
3. Disconnect the vacuum hose from the fuel pressure regulator.

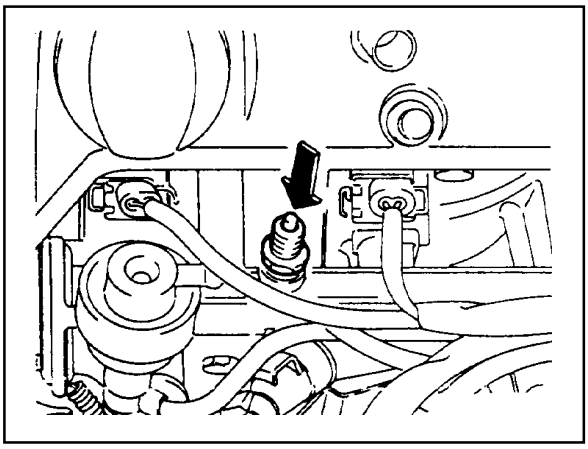

4. Remove the cable guide.

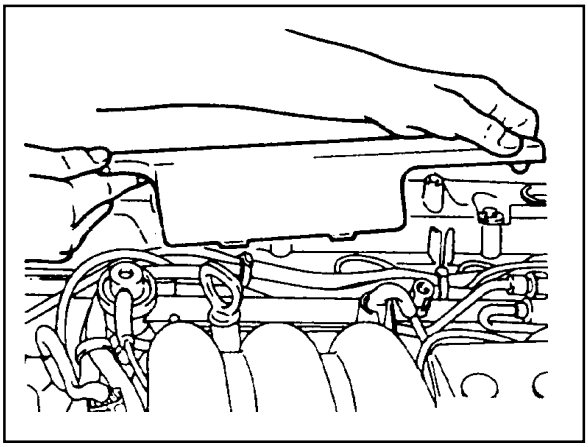

5. Remove the fuel return and supply line.

   Notice

   - For removal, cover around parts with cloths not to be stained by fuel.
   - In case of checking the injector only, do not remove the fuel return and supply line.

   Installation Notice

Tightening Torque	25 - 30 Nm

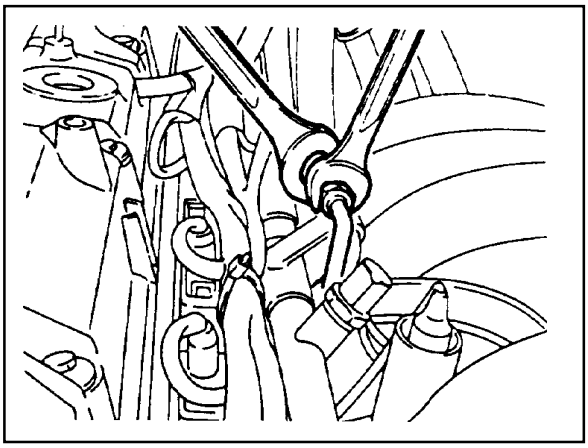

6. Remove the six injector connectors.
7. Remove the two left and two right bolts and one center bolt of the fuel distributor assembly from the intake manifold.

   Installation Notice

Tightening Torque	22.5 - 27.5 Nm

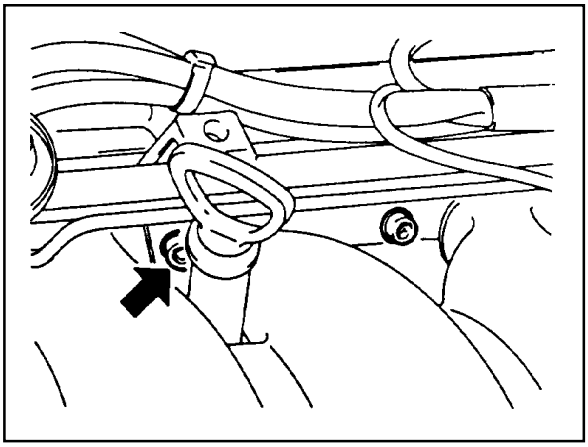

Downloaded from www.Manualslib.com manuals search engine

8. Remove the injectors and the fuel distributor carefully.
9. Installation should follow the removal procedure in the reverse order.
10. Check for fuel pressure and internal leakage by operating the engine.

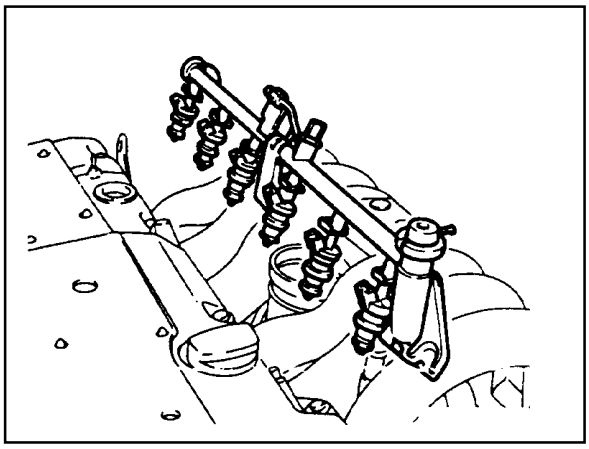

Fuel Pressure Test

1. Turn the ignition switch to "OFF" position.
2. Remove the fuel pressure test connector.

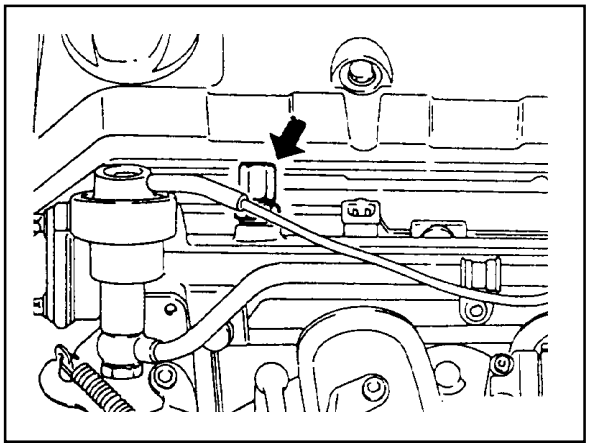

3. Connect the fuel pressure gauge to the fuel pressure test connector.
4. Test the fuel pressure at idling by operating the engine.

Vacuum Hose Connected (bar)	3.2 - 3.6
Vacuum Hose Disconnected (bar)	3.7 - 4.2

5. Replace the pressure regulator diaphragm if out of the specification.

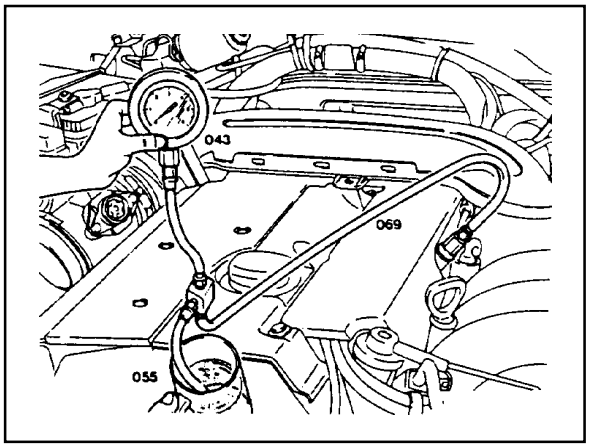

Downloaded from www.Manualslib.com manuals search engine

Internal Leakage Test

1. Connect the fuel pressure gauge to the fuel pressure test connector.
2. Stop the engine for approx. 30 minutes and then check the fuel pressure changes.

Pressure Change	Possible Cause
Fuel pressure drops slowly	· Fuel leakage at the injector • Faulty fuel pressure regulator's diaphragm and O-ring.
Fuel pressure drops rapidly	• Faulty check valve in the fuel pump.

3. If there is no change in fuel pressure and maintain the following pressure over 30 minutes, it is normal.

Fuel Pressure(bar)	≥2.5

Discharging the pressure in fuel system

1. Remove the fuel pressure test connector.

   Installation Notice

Tightening Torque	22.5 - 27.5 Nm

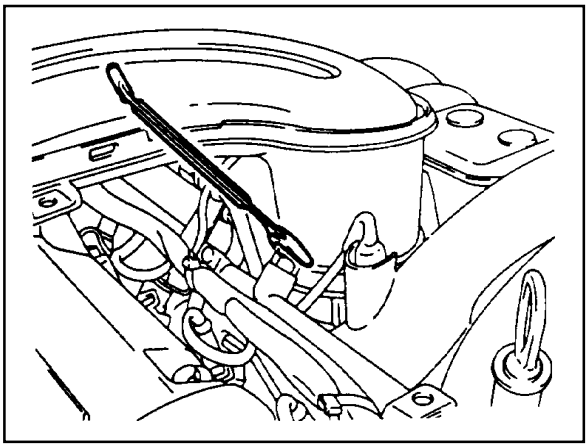

2. Remove the fuel pressure in fuel system by pressing the service valve with a clean, pointy tool.

   Notice

   Place a cloth so that the fuel doesn't stain around.

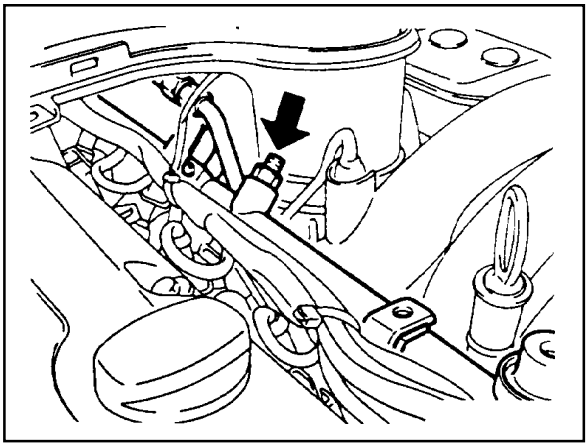

Downloaded from www.Manualslib.com manuals search engine

INJECTOR

Preceding Work : Removal of fuel distributor

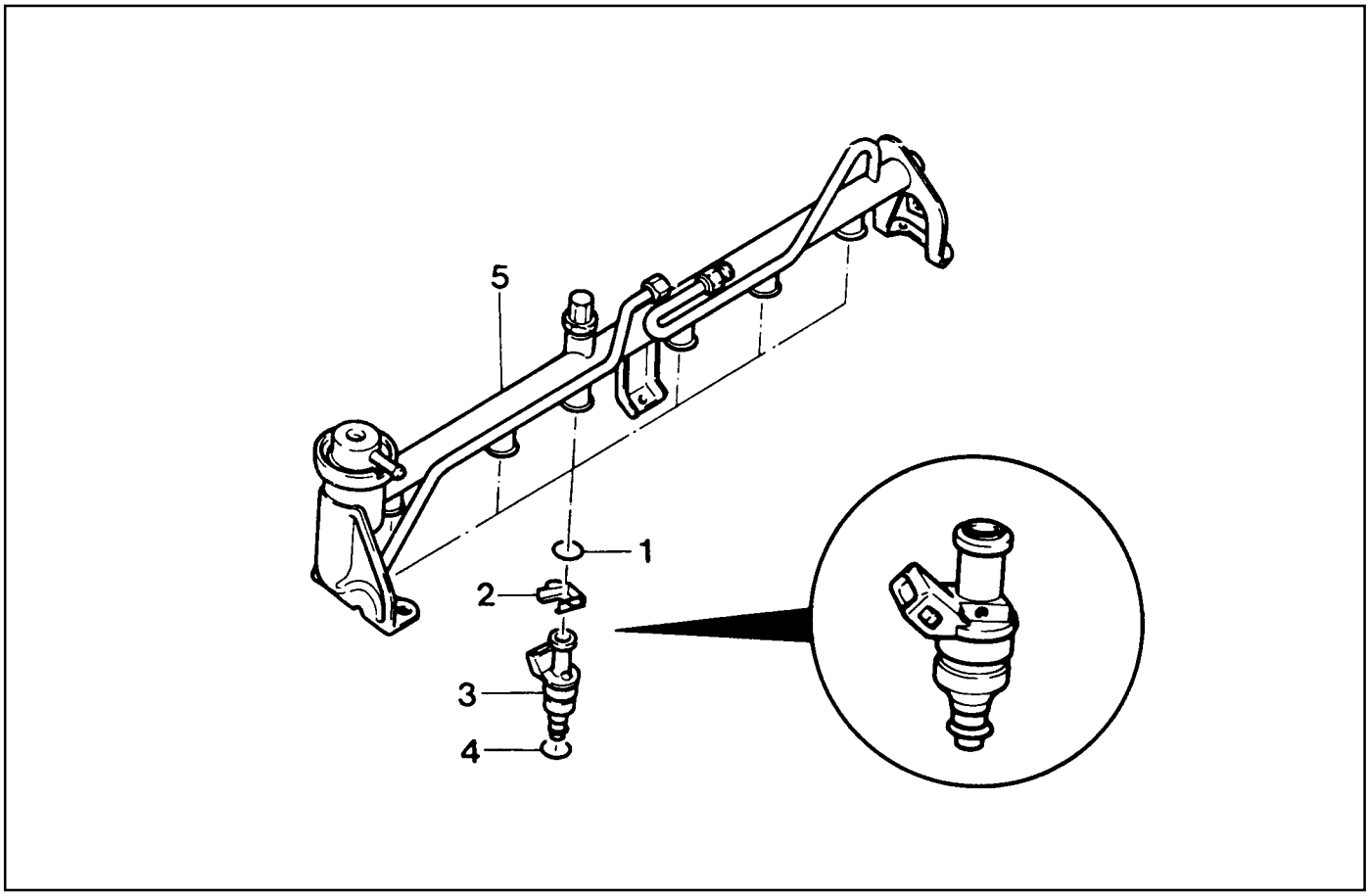

1 O-ring ..... rplace, if damaged
2 Injector Bracket
3 Injector
4 O-ring ..... replace, if damaged
5 Fuel Distributor

Downloaded from www.Manualslib.com manuals search engine

Removal & Installation Procedure

1. Remove the O-ring.
   Check for damage and replace it if necessary.
2. Remove the injector bracket from the injector.

   Installation Notice

   Exactly seat the anti-twist lock into the square groove in injector.
3. Separate the injector from the fuel distributor.

Inspection & Maintenance

Inspection of the Injector operation and spray pattern

1. Connect the contact box to the ECU.
2. Connect the shop made test plug to the injector and place it into the tank.
3. Position the ignition switch to ON.
4. Connect the pin 63(+) and 69(-) of the contact box with a test cable.
5. Check the injector spray pattern.

   Notice

   Replace the injector if the injector spray pattern is abnormal or the fuel doesn't inject.

Injector Resistance Inspection

1. Remove the injector connector.
2. Measure the injector coil resistance using a resistance tester.

Specified Value	14 - 17 W

   Notice

   Replace the injector if the measured values is out of the specified values. Check the connector and wire connection between the ECU and the injector if the measured values are normal.

Downloaded from www.Manualslib.com manuals search engine

The Injector Spray Pattern Check

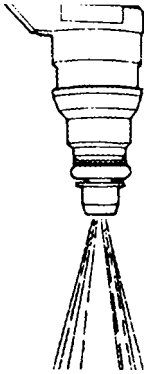

1. Connect the test box (129 589 00 21 00) to the ECU.
2. Disconnect the connector from connector.
3. Disconnect the fuel distributor and injector with a unit from engine without removing the fuel supply and return line.

   Notice

   Prepare the beaker for taking the poping fuel.
4. Connect either end of shop made cable to the injector.
5. Connect the other end of shop made cable to the 63(+) and 69(-) terminal of the test box.
6. Turn the ignition switch to "ON" position.
7. Check the injector for normal spray pattern as shown in the figure. Check injector for leaks or later drops.

   Notice

   Refer to fuel injector test of engine diagnosis in this section for detailed information.

Downloaded from www.Manualslib.com manuals search engine

FUEL FILTER

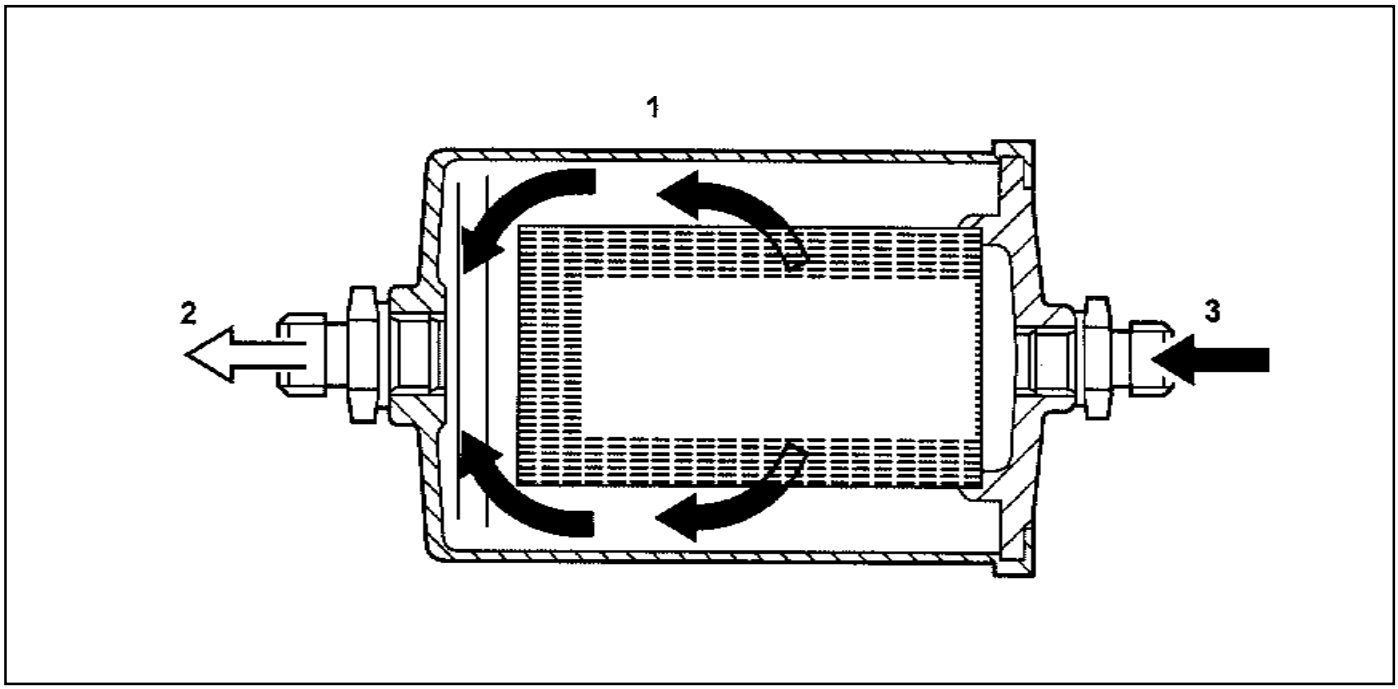

1 Fuel Filter
2 Outlet
3 Inlet

Removal & Installation Procedure

1. Open the fuel tank cap and remove the fuel tank pressure.
2. Remove the fuel at (2) and in (3).

   Installation Notice

Tightening Torque	25 - 30 Nm

3. Remove the mounting bracket bolt (4) and remove the fuel filter (1).

   Installation Notice

Tightening Torque	4 - 8 Nm

   Notice

   Place the fuel pump pad. There may be a corrosion due to the contact between the fuel filter and the bracket.

4. Check for leaks by operating the engine.

   Notice

   Installation should follow the removal procedure in the reverse order.

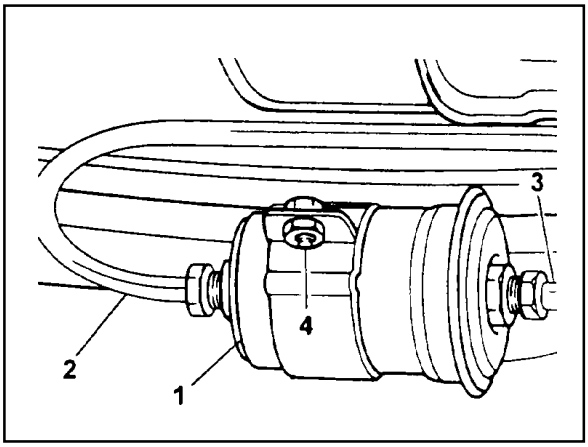

Downloaded from www.Manualslib.com manuals search engine

FUEL PUMP

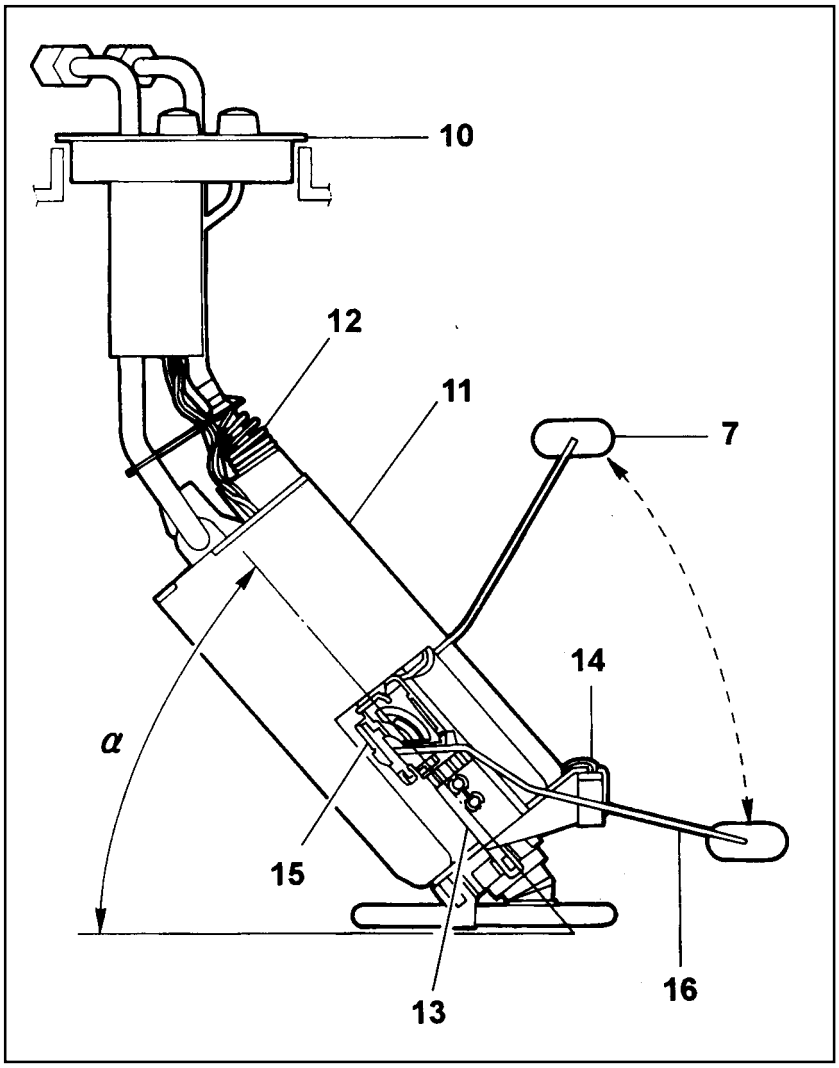

1 Reservoir Tank
2 Fuel Sensor (float/arm)
3 Resistance
4 Wiring Connector
5 Fuel Supply Pipe
7 Float
10 Flange and Harness Assembly
11 Fuel Pump
12 Spring
13 Thermister Housing
14 Thermister
15 Resistor Card and Wiper
16 Float Arm

Requirements for Fuel Pump

Item	Specified Value	Item	Specified Value
System pressure	3.8 bar	Minimum delivery at 8V	30 Litre/Hr
Maximum pressure	8.5 bar (12 V)	Operating voltage	8 V
Minimum pressure	5.0 bar (12 V)	Maximum allowable current	7.5 A
Nominal voltage	12 V	Ambient temperature	-30 ~ +70°C
Minimum amount of fuel supply	114 Liter/Hr (12 V, 3.8 bar, -30 ~ +70°C)	Maximum amount of fuel supply	165 Liter/Hr (12V, 3.8 bar, -30 ~ +70°C)

Downloaded from www.Manualslib.com manuals search engine

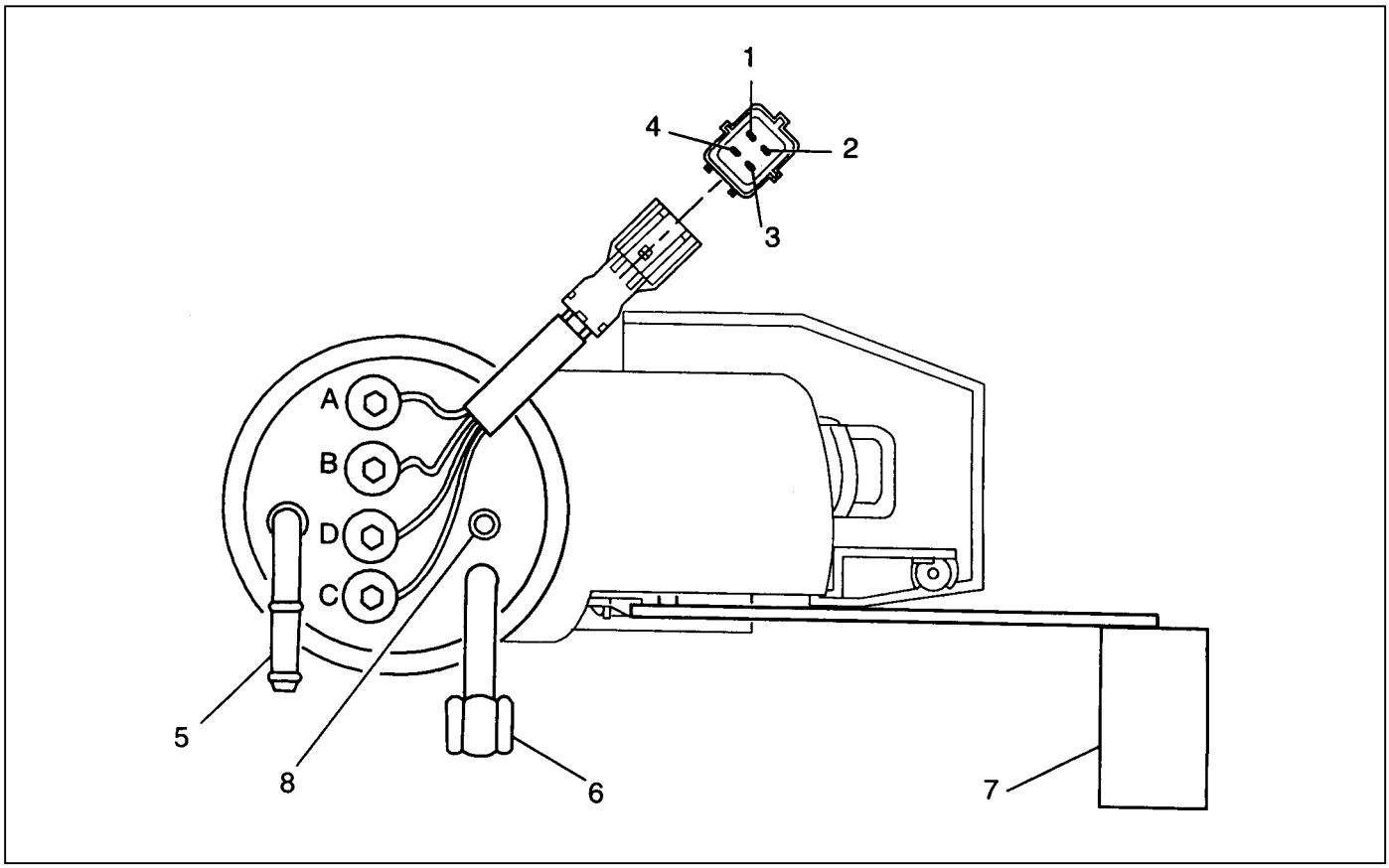

1 Fuel Pump Connector Wiring
2 Fuel Return Pipe
3 Fuel Supply Pipe
4 Bolts
5 Fuel Return Pipe
6 Fuel Supply Pipe
7 Float
8 Ground Stud (Sender "-")

Harness Location & Connector		COLOR	USE
1	A	Pump "+"	2.0 BR
2	B	Thermister "+"	0.5 W
3	C	Ground	2.0 B
4	D	Sender Unit "+"	0.5 RY

Downloaded from www.Manualslib.com manuals search engine

Tools Required

661 589 00 46 00 Cap Remover

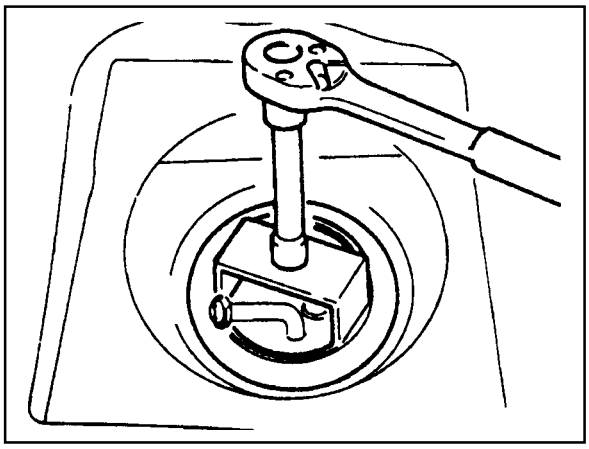

Removal & Installation Procedure

1. Disconnect the negative battery cable.
2. Disconnect the harness connector (1).
3. Disconnect the fuel supply (6) and return (5) pipes.
4. Using a special tool, Unscrew the eight fuel retaining bolts and remove the pump from fuel tank.

   Notice

   Check the condition of the seal and replace if necessary.

   Drain the fuel before removing the pump.

Downloaded from www.Manualslib.com manuals search engine

Measure the Fuel Delivery From the Fuel Pump

1. Disconnect the return pipe from fuel distributor and insert the appropriate hose into it.
2. Place the hose end into the beaker with the minimum capacity of 1Liter.
3. Turn the ignition switch to "ON" position.
4. Connect the terminal No.33 and No.5 of ECU with a service wire.
5. Measure the fuel delivery from the fuel pump.

Specifed Value	1Liter/max.35sec.

Notice

Check the fuel filter and fuel line when the fuel delivery is not within specified value.

Measure the Current Consumption of Fuel Pump

1. Remove the fuel pump relay from fuse and relay box in trunk, and turn the ignition switch to "ON" position.
2. Using a multi-tester, measure the current consumption by connecting the terminal No.1 and No.3 of pump.

Specifed Value	5 - 9A

Notice

Replace the fuel pump relay if the measured value is over 9A.

Downloaded from www.Manualslib.com manuals search engine

PURGE SWITCHOVER VALVE

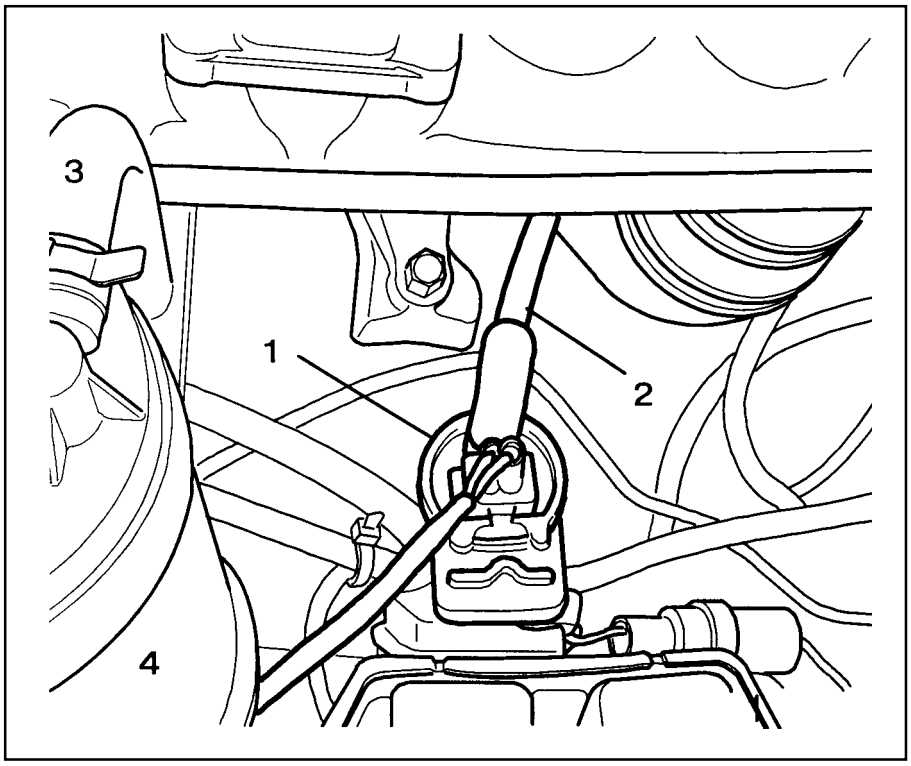

1 Purge Switchover Valve
2 Line to Engine
3 Line to Canister
4 Canister

Functions

The fuel vaporization control system is installed to inhibit the fuel vaporized gas from discharging into the atmosphere. The fuel vaporized gas that is accumulated in the canister abstracts through the purge switchover valve purification during the engine combustion (except the decreasing mode) and coolant temperature of over 80℃. For this reason, the ECU transacts the engine speed, air inflow quantity, coolant temperature, and intake temperature.

The purge switchover valve is activated by the ECU frequency according with the engine rotating speed to adjust the purification rate. The purification rate is determined by the continuous valve opening interval.

The purge switchover valve is activated by the ECU for the following conditions :

- Coolant temperature of over 80℃
- Engine speed of over 1000rpm
- 2 Minutes after starting
- When the fuel cut-off mode is not activated

Downloaded from www.Manualslib.com manuals search engine

Test

1. Maintain the normal temperature and idling state by operating the engine.
2. Connect the ECU terminal No.11 and No.34 and check for normal operation through the output waves using the scanner.

   Notice

   Test during purge control switchover valve operation after the minimum of 1 minute after the engine turned on.
3. Connect the ECU terminal No.34 and No.10 and check for current consumption during the ignition switch ON.

Specified Value	0.3 - 0.5

4. Remove the line to canister and measure the pressure with the vacuum pressure gauge.

Specified Value	> 50mbar (after approx. 1min.) purge switchover valve operates at this time

   Notice

   Test while at normal temperature and at idling state by operating the engine.

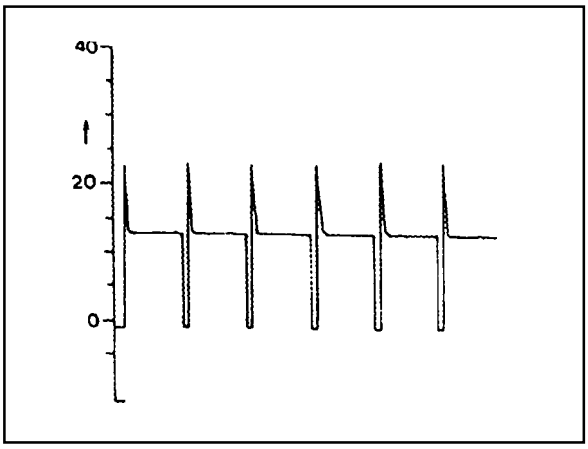

Purge switchover valve output wave

Downloaded from www.Manualslib.com manuals search engine

VACUUM SYSTEM

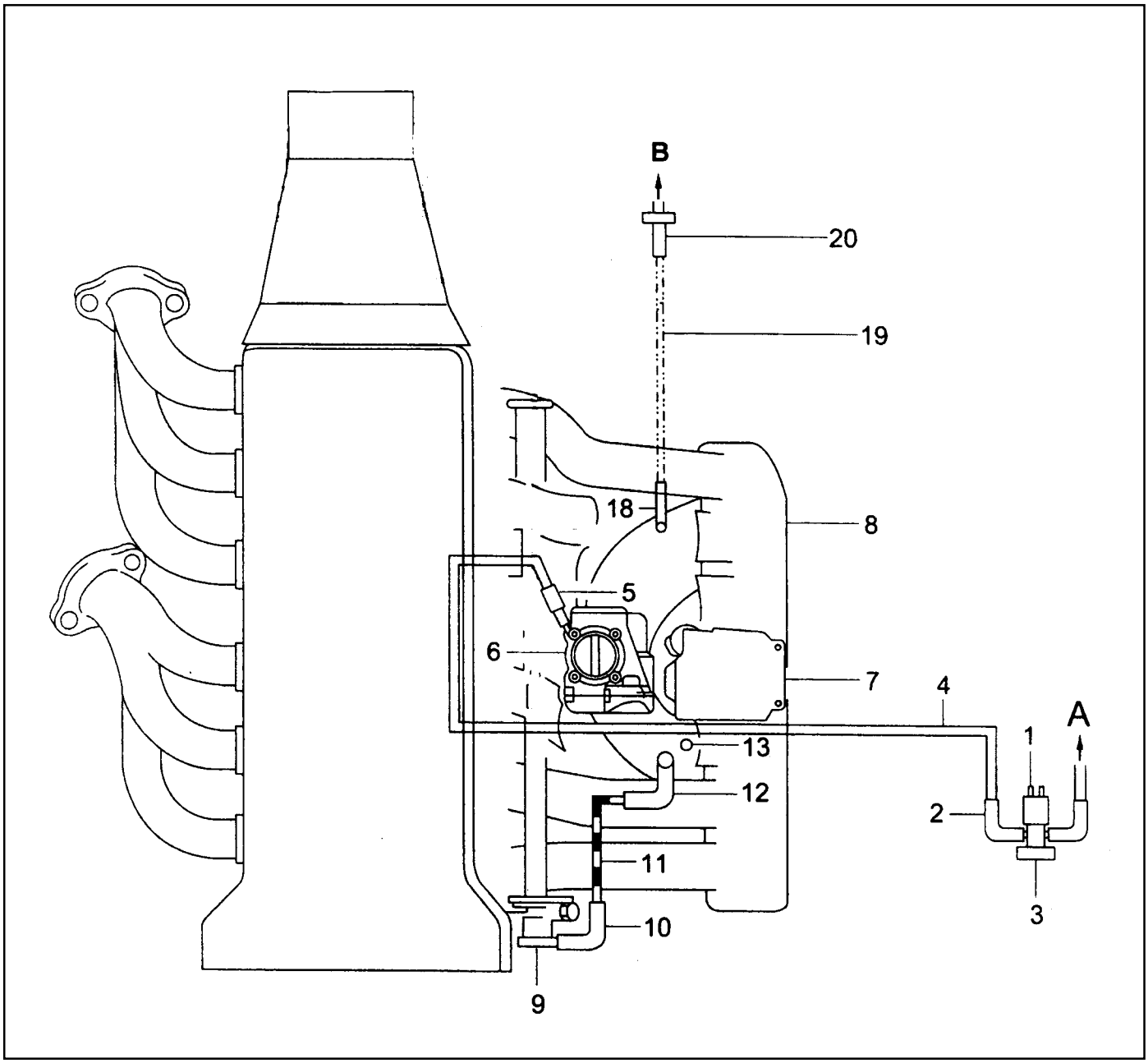

1 Purge Control Valve
2 Molded Hose
3 Insulator
4 Fuel Tube
5 Molded Hose
6 Idle Regulator
7 Resonance Flap
8 Intake Manifold
9 Fuel Pressure Regulator
10 Vacuum Line Rubber Hose
11 Vacuum Tube(Gray, 270mm)
12 Molded Hose
13 Rubber Cap
18 Rubber Hose
19 Vacuum Tube(Brown or Black, 770mm)
20 Rubber Hose
A To Canicter

Downloaded from www.Manualslib.com manuals search engine

CRANKSHAFT POSITION SENSOR

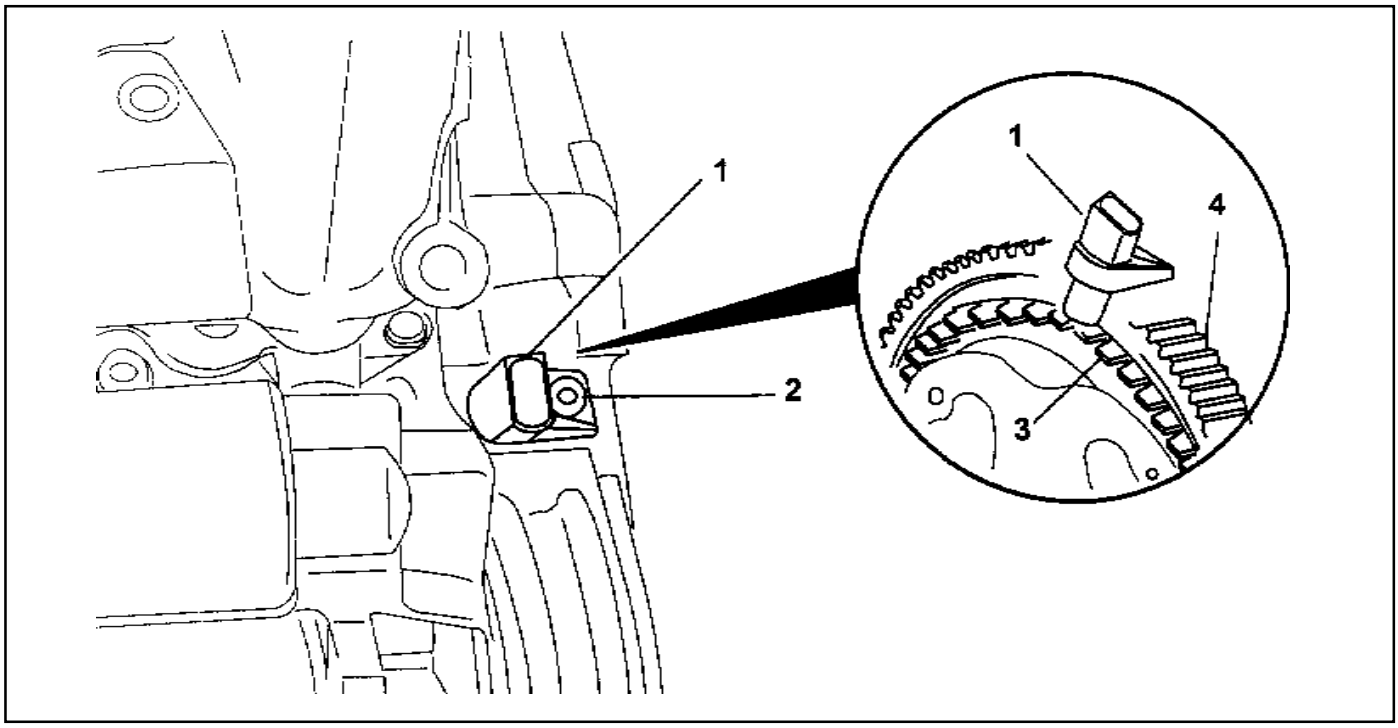

1 Crankshaft Position Sensor
2 Bolt (M6 X 14) ..... 9 -11Nm
3 Segment
4 Flywheel

Removal & Installation Procedure

1. Disconnect the wiring connector at the crankshaft position sensor.
2. Unscrew the bolt and remove the crankshaft position sensor unit.

   Installation Notice

Tightening Torque	9 -11Nm

3. Installation should follow the removal procedure in the reverse order.

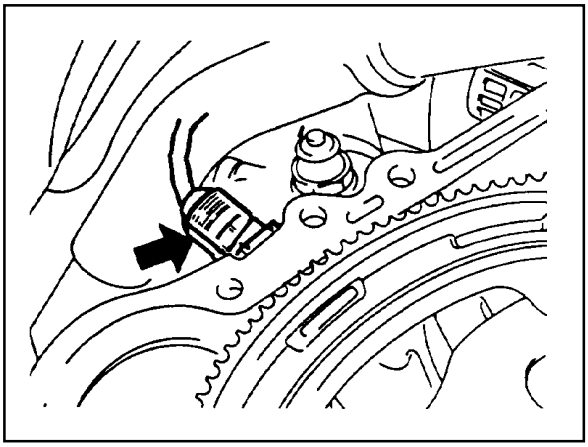

Downloaded from www.Manualslib.com manuals search engine

Crankshaft Position Sensor Resistance Inspection

1. Disconnect the coupling "E" of ECU while the ignition switch is in "OFF" position.
2. Measure the resistance between the coupling terminal pin No.99 and No.100 using a multimeter.

Specified Value	1050 - 1400 W

Notice

Measure the insulator resistance of the crankshaft position sensor if out of the specified value.

Crankshaft Position Sensor Output Wave Inspection

1. Connect the test box to the ECU.
2. Measure the output wave between the ECU terminals No.99 and No.100 using the scanner or the oscilloscope while engine cranking (starter motor activated).

Notice

Check the segment or crankshaft position sensor and air gap if cannot get the output wave as shown in the figure.

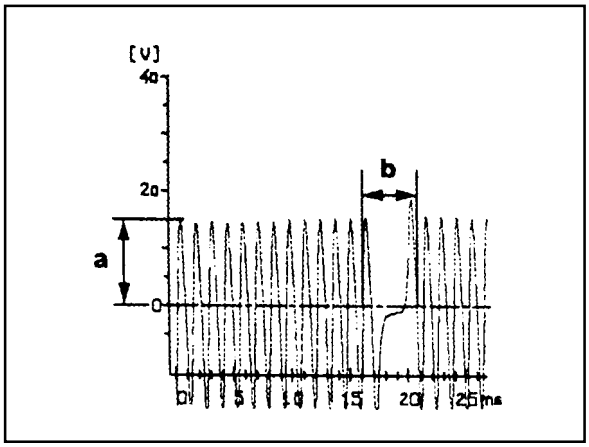

Crankshaft Position Sensor Insulator Resistance Inspection

1. Disconnect the engine coupling from ECU while the ignition switch is in "OFF" position.
2. Measure the resistance between the coupling terminal pin No.100 and No.69.

Specified Value	> 20kW

Notice

Measure the check and ground terminal of the crankshaft position sensor if out of the specified value.

Downloaded from www.Manualslib.com manuals search engine

CAMSHAFT POSITION SENSOR

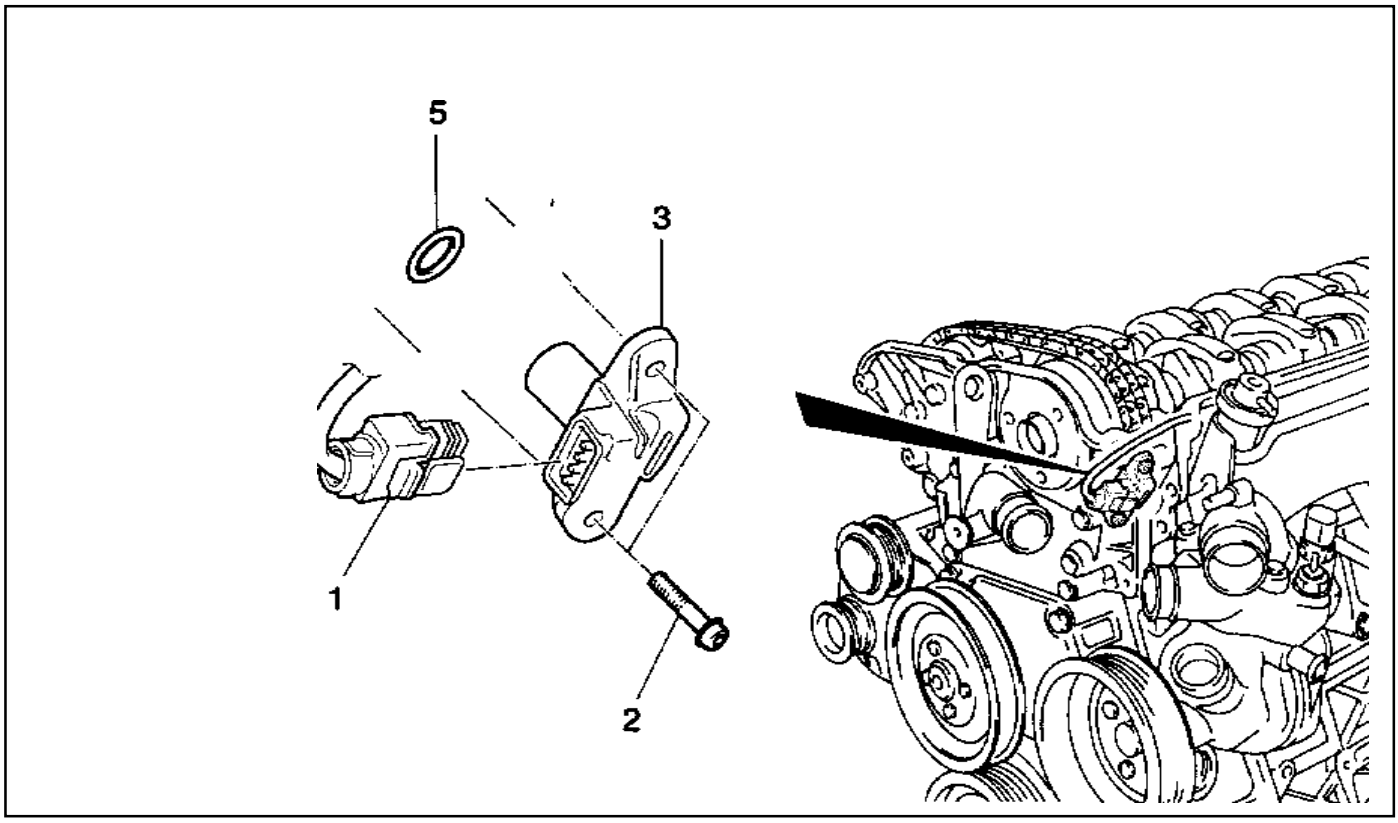

1 Bolt (M6 X 14) 9-11Nm
2 Camshaft Position Sensor
3 Shim
5 O-ring

Removal & Installation Procedure

1. Disconnect the wiring connector from the camshaft position sensor.
2. Unscrew the bolt (2) and remove the camshaft position sensor.

Installation Notice

Tightening Torque	9 -11 Nm

3. Check the clearance and replace the shim if necessary.
4. Check the O-ring for damage and replace it if necessary.
5. Installation should follow the removal procedure in the reverse order.

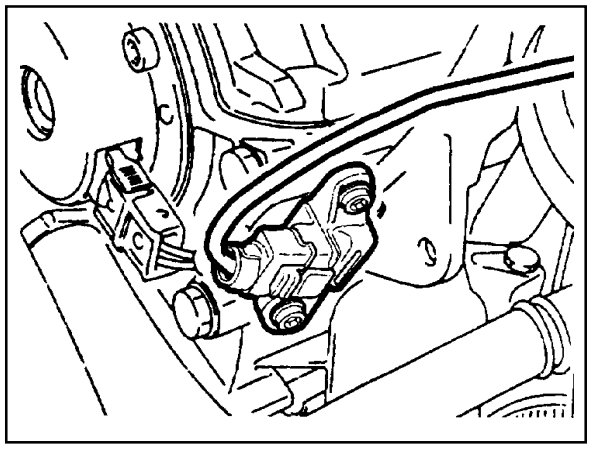

Downloaded from www.Manualslib.com manuals search engine

Camshaft Position Sensor Signal Voltage Inspection

1. Connect the test box to the ECU.
2. Measure the voltage between the ECU terminal No.11 and No.106 while the engine speed is at idle.

Specified Value	1.2 - 1.7 V

Notice

The signal voltage will be changed in the range of 1.2~1.7V.

Camshaft Position Sensor Output Wave Inspection

1. Connect the test box to the ECU.
2. Measure the output wave between the ECU terminal No.104 and No.106 using the scanner or the oscilloscope while the engine speed is at idle.

Notice

Replace the camshaft position sensor if cannot get the output wave as shown in the figure.

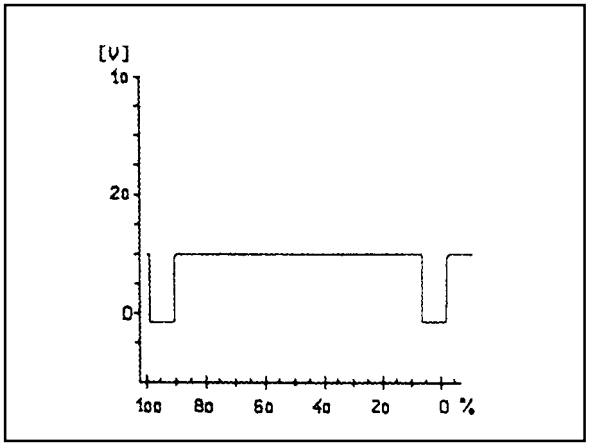

Camshaft Position Sensor Power Supply Inspection

1. Turn the ignition switch to 'ON' position.
2. Disconnect the camshaft position sensor connector.
3. Measure the voltage between the No.1 and No.3 pin of camshaft position sensor while the ignition switch is in "ON" position.

Specified Value	11 - 14 V

Notice

If the measured value is not within the specified value, check the cable.

Downloaded from www.Manualslib.com manuals search engine

HOT FILM AIR MASS (HFM) SENSOR

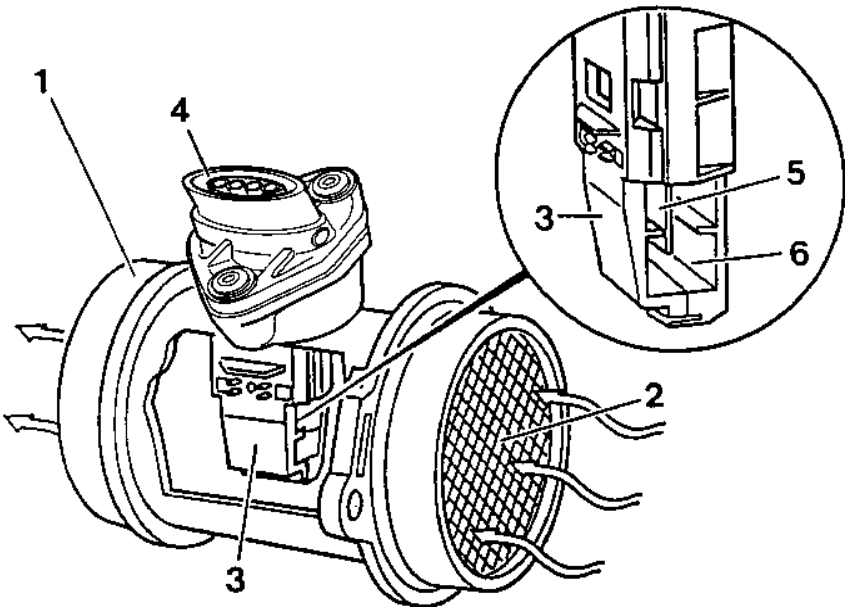

1 Housing
2 Protector Net
3 Electronic Housing
4 Connector
5 Hot film Sensor
6 Measuring Port

Removal & Installation Procedure

1. Turn the HFM sensor coupling in the direction shown in the figure in the right so that it gets separated from the contact surface.

   Notice

   Make sure the HFM sensor coupling connects completely with the contact surface Installation.
2. Remove the clip with a screw driver.
3. Pry off two tensioning clamps.
4. Remove the HFM sensor.
5. Installation should follow the removal procedure in the reverse order.

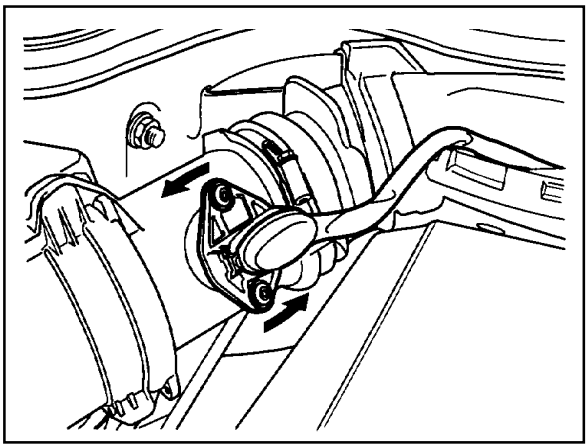

Downloaded from www.Manualslib.com manuals search engine

Circuit Diagram

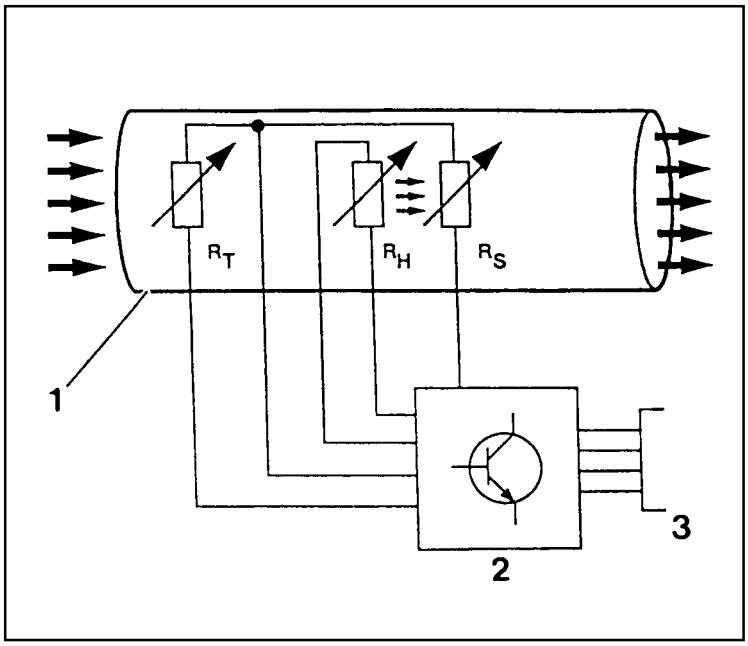

1 Housing
2 Electronic Housing
3 Connector

R_H : Heat Resistance
R_T : Temperature Resistance
R_S : Sensor Resistance

Downloaded from www.Manualslib.com manuals search engine

HFM Sensor Input Voltage Inspection

1. Measure the HFM sensor signal voltage between the ECU terminal No.81 and No.105.

Specified Value (coolant temperature is over 70°C)

Iginition"ON"	0.9 - 1.1 V
Engine at idle	1.3 - 1.7 V

If the measured value is not within the specified value, the possible cause may be in cable or HFM sensor in itself. Perform the 5V power supply inspection procedures.

HFM Sensor 5V Power Supply Inspection

1. Measure the voltage between the HFM sensor No.4 pin and No.3 after removing the HFM sensor connector.

Specified Value	4.7 - 5.2 V

If the measured value is not within the specified value, the possible cause may be in cable or ECU coupling.

HFM Sensor 12V Power Supply Inspection

1. Measure the voltage between the HFM sensor No.2 pin and No.3 after removing the HFM sensor connector.

Specified Value	11 - 14 V

If the measured value is not within the specified value, the possible cause may be in cable or over voltage protection relay.

Downloaded from www.Manualslib.com manuals search engine

OXYGEN SENSOR

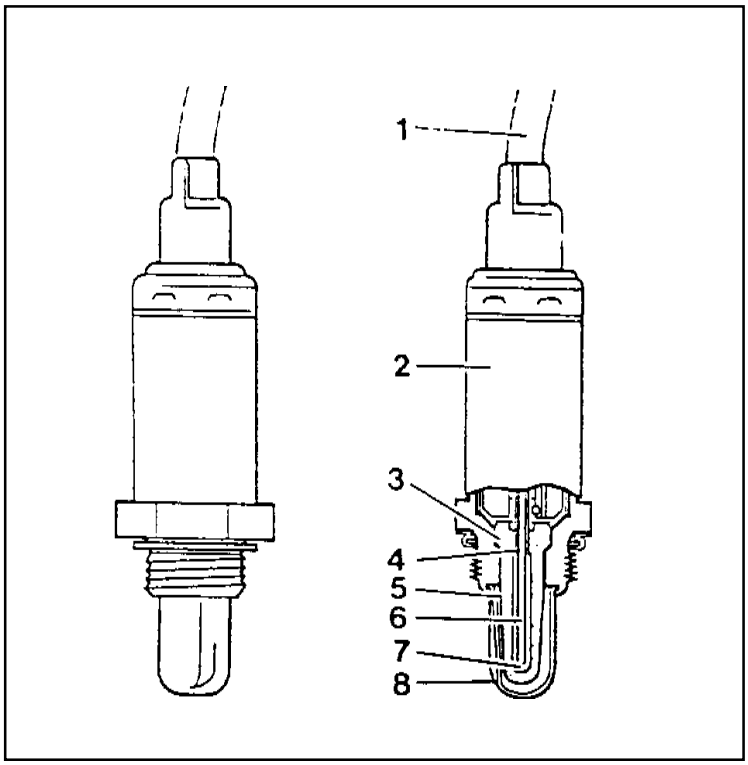

1 Electricity Wire
2 Oxygen Sensor Housing
3 Sensor Ceramic
4 Electrode (Internal)
5 Electrode (External)
6 Heating Coil
7 Open Space
8 Protector Tube

Functions

The oxygen sensor optimizes the combustion (Air-Fuel Ratio 14.7:1) and resets the Air-fuel ratio in the ECU after sensing the amount of oxygen from the exhaust gases to diminish the exhaust gases.

- Rich(<1) above approx. 450mV
- Lean(>1) below approx. 450mV

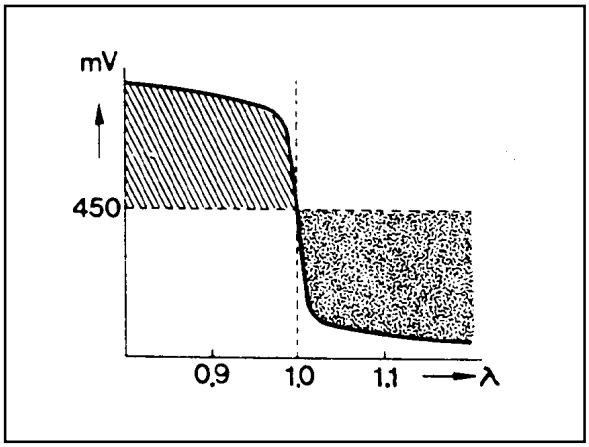

Locatoin of Sensor

Oxygen sensor is located on the front exhaust pipe.

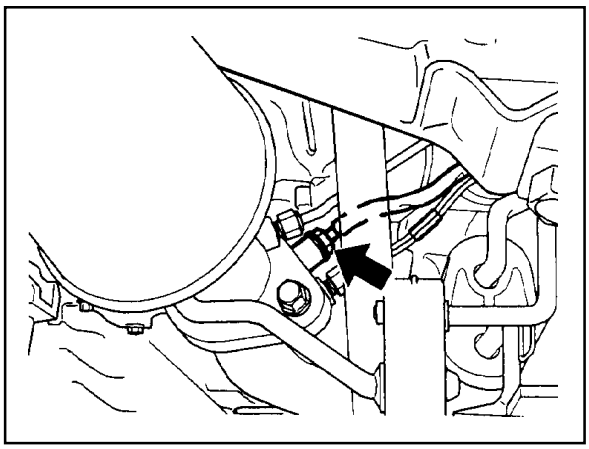

Downloaded from www.Manualslib.com manuals search engine

Oxygen Sensor Signal Voltage Inspection

1. Measure the oxygen sensor signal voltage between the ECU terminal No.11 and No.9. Maintain the engine speed ia at idle while the coolant temperature is over 80°C.

Specified Value	-0.2 - 1.0 V

If the measured value is not within the specified value, the possible cause may be in cable, oxygen sensor or ECU.

Oxygen Sensor Heating Voltage Inspection

1. Measure the oxygen sensor heating voltage between the ECU terminal No.11 and No.9. Maintain the engine speed ia at idle while the coolant temperature is over 80°C.

Specified Value	11 - 14 V

If the measured value is not within the specified value, the possible cause may be in cable, oxygen sensor or ECU.

Oxygen Sensor Heating Current Consumption Inspection

1. Measure the oxygen sensor heating current consumption between the ECU terminal No.9 and No.5 while the ignition switch is in "ON" position.

Specified Value	0.2 - 2.0 A

If the measured value is not within the specified value, the possible cause may be in cable, oxygen sensor or ECU.

Downloaded from www.Manualslib.com manuals search engine

KNOCK SENSOR

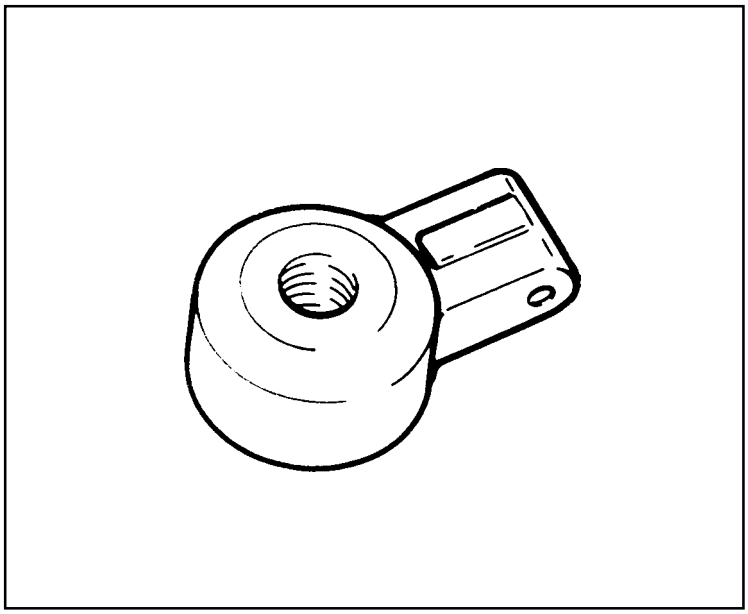

Functions

Vibration of the engine block is transmitted to the sensor and transferred to the ECU in the form of an alternating voltage signal via a shielded cable. The knock sensor is fastened to the engine block to recognize knocking in all cylinders. The ECU compares the signal and the retards firing point.

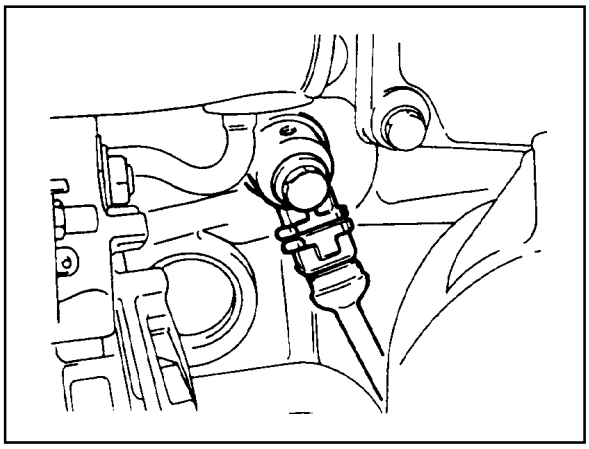

Removal & Installation Procedure

1. Disconnect the knock sensor connector from the intake manifold bracket.
2. Unscrew the mounting bolt (M8 X 28) from the knock sensor installed on the cylinder block and remove the knocking sensor.

   Installation Notice

Tightening Torque	22.5 - 27.5 Nm

3. Installation should follow the removal procedure in the reverse order.

Downloaded from www.Manualslib.com manuals search engine

COOLANT TEMPERATURE SENSOR

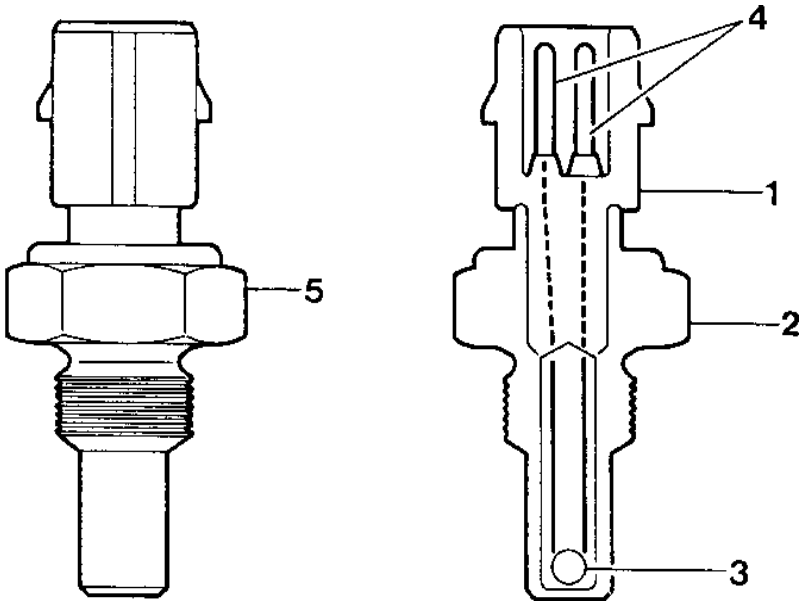

1 Artificial Resin Housing
2 Metal Housing
3 NTC (negative temperature coefficient) Resistor
4 Connector
5 Coolant Temperature Sensor

Removal & Installation Procedure

1. Remove the pressure by opening the pressure cap in the coolant subtank.
2. Disconnect the connector and remove the coolant temperature sensor.

   Installation Notice

Tightening Torque	18 - 22 Nm

   Replace the seals with new one.

3. Installation should follow the removal procedure in the reverse order.
4. Check for leaks at each connections after starting the engine.

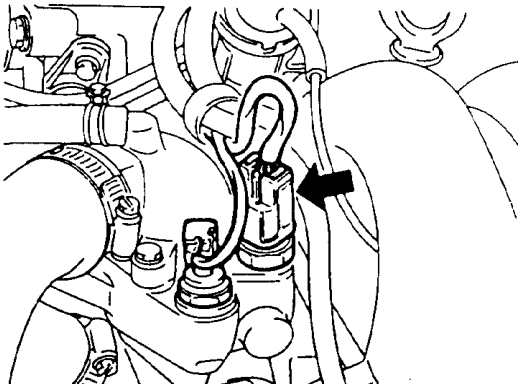

Downloaded from www.Manualslib.com manuals search engine

Inspection

1. Measure the coolant sensor input voltage between the ECU terminal No.79 and No.78 while the ignition switch in "ON" position.

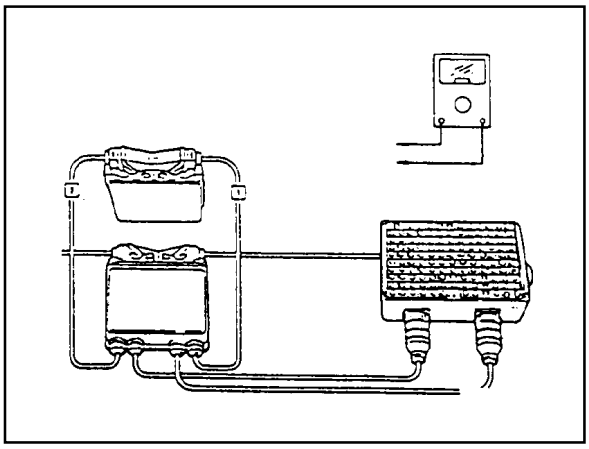

Temperature (℃)	Voltage (V)
20	3.57
30	1.22
40	0.78

allowable error :±5%

2. Measure the resistance between the coolant temperature sensor terminal No.1 and No.4 with the coolant temperature sensor disconnected.

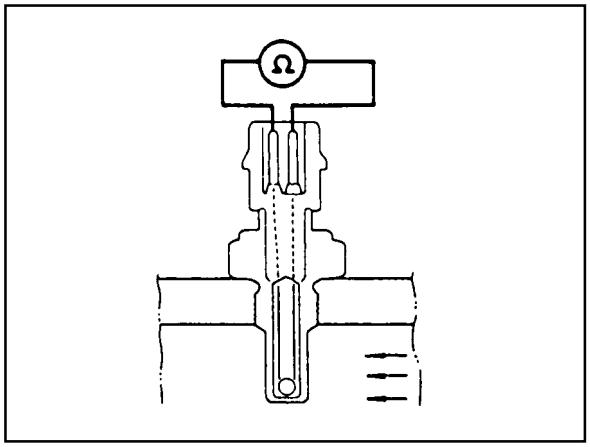

Temperature (℃)	Resistance (W)
20	2,500
30	322
40	185

allowable error :±5%

Notice

Replace wiring and coolant temperature sensor if out of specified value.

Downloaded from www.Manualslib.com manuals search engine

Service Data

Temperature(℃)	Resistance(W)	Voltage(V)	Temperature(℃)	Resistance(W)	Voltage(V)
-40	48,550	4.8991	60	594	1.8632
-30	27,000	4.8214	70	434	1.5132
-20	15,670	4.7001	80	322	1.2179
-10	9,450	4.5215	90	243	0.9775
0	5,890	4.4273	100	185	0.7806
10	3,790	3.9562	110	143	0.6255
20	2,500	3.5714	120	111.6	0.5020
30	1,692	3.1426	130	88.0	0.4044
40	1,170	2.6959	140	71.2	0.3323
50	826	2.2618	-	-	-

Resistance characteristic curve according to the coolant temperature

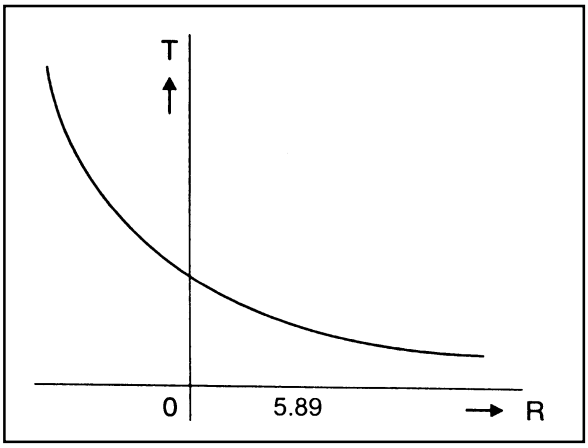

Downloaded from www.Manualslib.com manuals search engine

ACCELERATOR PEDAL MODULE

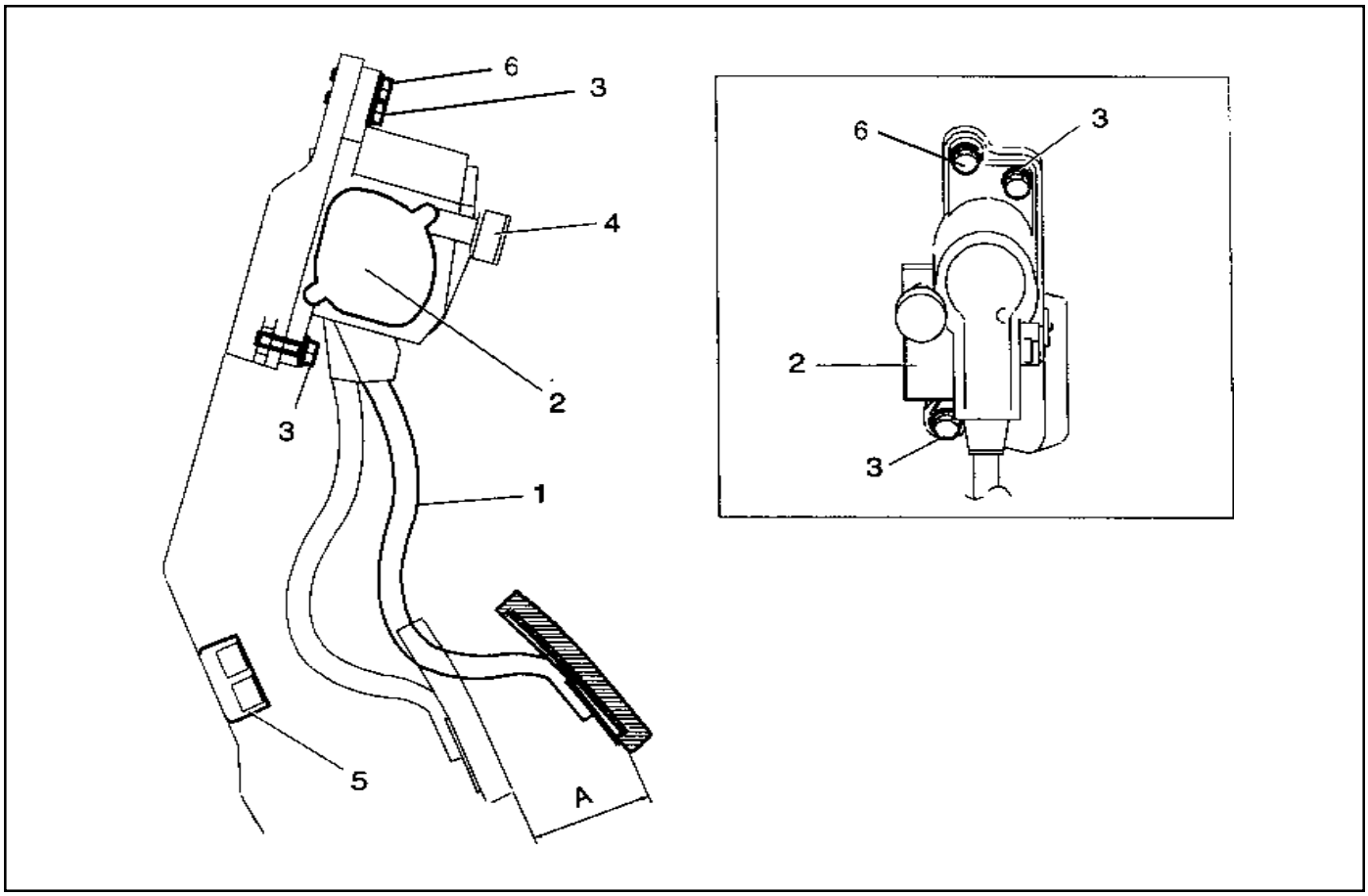

1 Accelerator Pedal
2 Accelerator Pedal Sensor
3 Bolts (2 Pieces) ..... 4-8 Nm
4 6-Pin Connector
5 Kick Down Switch
6 Nut (1 Piece) ..... 4-8 Nm

Removal and Installation Procedure

1. Disconnect the 6-pin connector (arrow).
2. Unscrew the 2 bolts (3) / 1 nut (6) and remove the pedal and sensor assembly.

Installatoin Notice

Tightining Torque	4 - 8 Nm

2. Installation should follow the removal procedure in the reverse order.

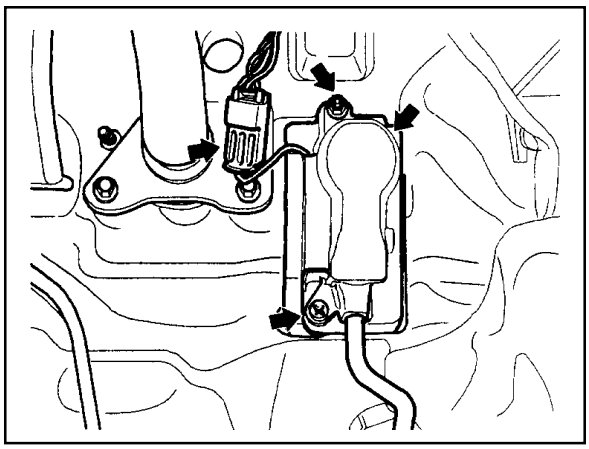

Downloaded from www.Manualslib.com manuals search engine

Accelerator Pedal Sensor Connector(Sensor Side)

Potentiometer 1.
- Pin no. 3 :Red
- Pin no. 1 :Yellow
- Pin no. 5 :Brown

Potentiometer 2.
- Pin no. 6 :Violet
- Pin no. 4 :Green
- Pin no. 2 :White

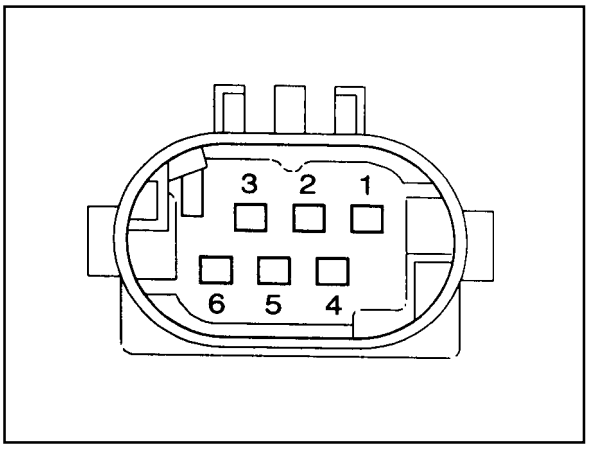

Accelerator Pedal Sensor Connector(Vehicle Side)

Potentiometer 1.
- Pin no. 3 :Red-Black
- Pin no. 1 :Blue-Green
- Pin no. 5 :Yellow-Green

Potentiometer 2.
- Pin no. 6 :Green
- Pin no. 4 :Blue-Red
- Pin no. 2 :LightGreen

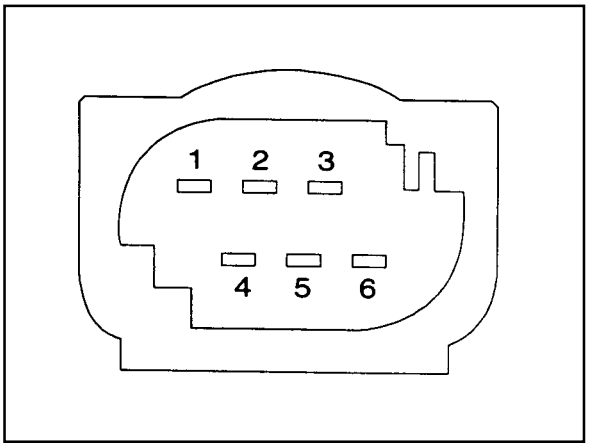

Function

Pin no. 3	Potentiometer 1, Power Supply(+)
Pin no. 1	Potentiometer 1, Signal
Pin no. 5	Potentiometer 2, Ground
Pin no. 6	Potentiometer 2, Power Supply(+)
Pin no. 4	Potentiometer 2, Signal
Pin no. 2	Potentiometer 2, Ground

Circuit Diagram

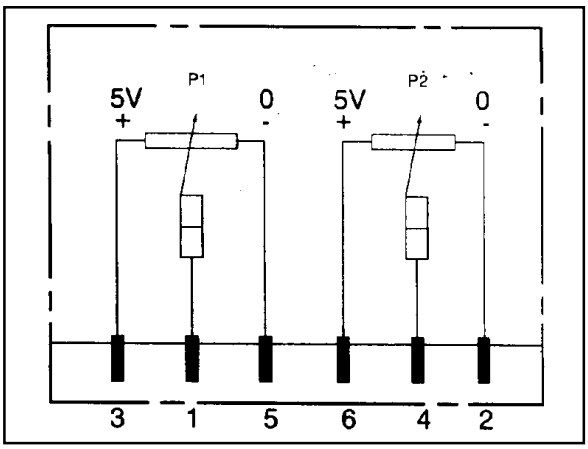

Potentiometer 1.
Potentiometer 2.

Downloaded from www.Manualslib.com manuals search engine

SECTION 1F2

M161 ENGINE CONTROLS

CAUTION: Disconnect the negative battery cable before removing or installing any electrical unit or when a tool or equipment could easily come in contact with exposed electrical terminals. Disconnecting this cable will help prevent personal injury and damage to the vehicle. The ignition must also be in LOCK unless otherwise noted.

TABLE OF CONTENTS

Specifications 1F2-2
Fastener Tightening Specifications 1F2-2
Special Tools 1F2-3
Special Tools Table 1F2-3
Schematic and Routing Diagrams 1F2-4
E23 ECU (MSE) 1F2-4
E20 ECU (MSE) 1F2-5
Diagnosis 1F2-6
Self Diagnosis Socket Pin Numbers and Descriptions 1F2-6
Self Diagnosis Failure Code (for E23 ENG.) 1F2-7
Test Box Connection 1F2-10
Fuel Injection System Test 1F2-11
Ignition System Test 1F2-20
Idling Control and Electronic Pedal System Test 1F2-25
Air Conditioner Control System Test 1F2-27
Fuel Pressure and Internal Leakage Test . . 1F2-28
Fuel Pump Test 1F2-30
Injector Test 1F2-32
Maintenance and Repair 1F2-34
On-Vehicle Service 1F2-34
ECU 1F2-34
Fuel Pressure Regulator 1F2-45
Fuel Distributor 1F2-49
Injector 1F2-54
Fuel Filter 1F2-57
Fuel Pump 1F2-58
Purge Switchover Valve 1F2-62
Vacuum System 1F2-64
Crankshaft Position Sensor 1F2-66
Camshaft Position Sensor 1F2-68
Hot Film Air Mass (HFM) Sensor 1F2-70
Oxygen Sensor 1F2-73
Knock Sensor 1F2-75
Coolant Temperature Sensor 1F2-76
Accelerator Pedal Module 1F2-79

Downloaded from www.Manualslib.com manuals search engine

SPECIFICATIONS

FASTENER TIGHTENING SPECIFICATIONS

Application	N·m
Fuel Return and Supply Line	25 - 30
Fuel Distributor Assembly Bolt	22.5 - 27.5
Pressure Test Connector	21.6 - 26.4
Fuel Inlet and Outlet Line	25 - 30
Fuel Filter Mounting Bracket Bolt	4 - 8
Crankshaft Position Sensor Bolt	9 - 11
Camkshaft Position Sensor Bolt	9 - 11
Knock Sensor Mounting Bolt	22.5 - 27.5
Coolant Temperature Bolt	18 - 22

Downloaded from www.Manualslib.com manuals search engine

SPECIAL TOOLS

SPECIAL TOOLS TABLE

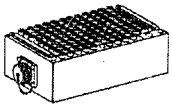	**129 589 00 21 00** **Test Box**
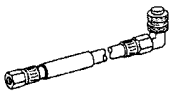	**119 589 04 63 00** **Pressure Hose**
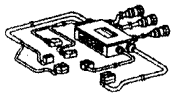	**210 589 08 63 00** **ECU Test Cable**

	106 589 00 21 00 **Pressure Tester**
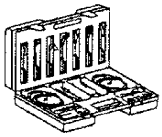	**210201** **Adaptor Line**

Downloaded from www.Manualslib.com manuals search engine

SCHEMATIC AND ROUTING DIAGRAMS

E23 ECU (MSE)

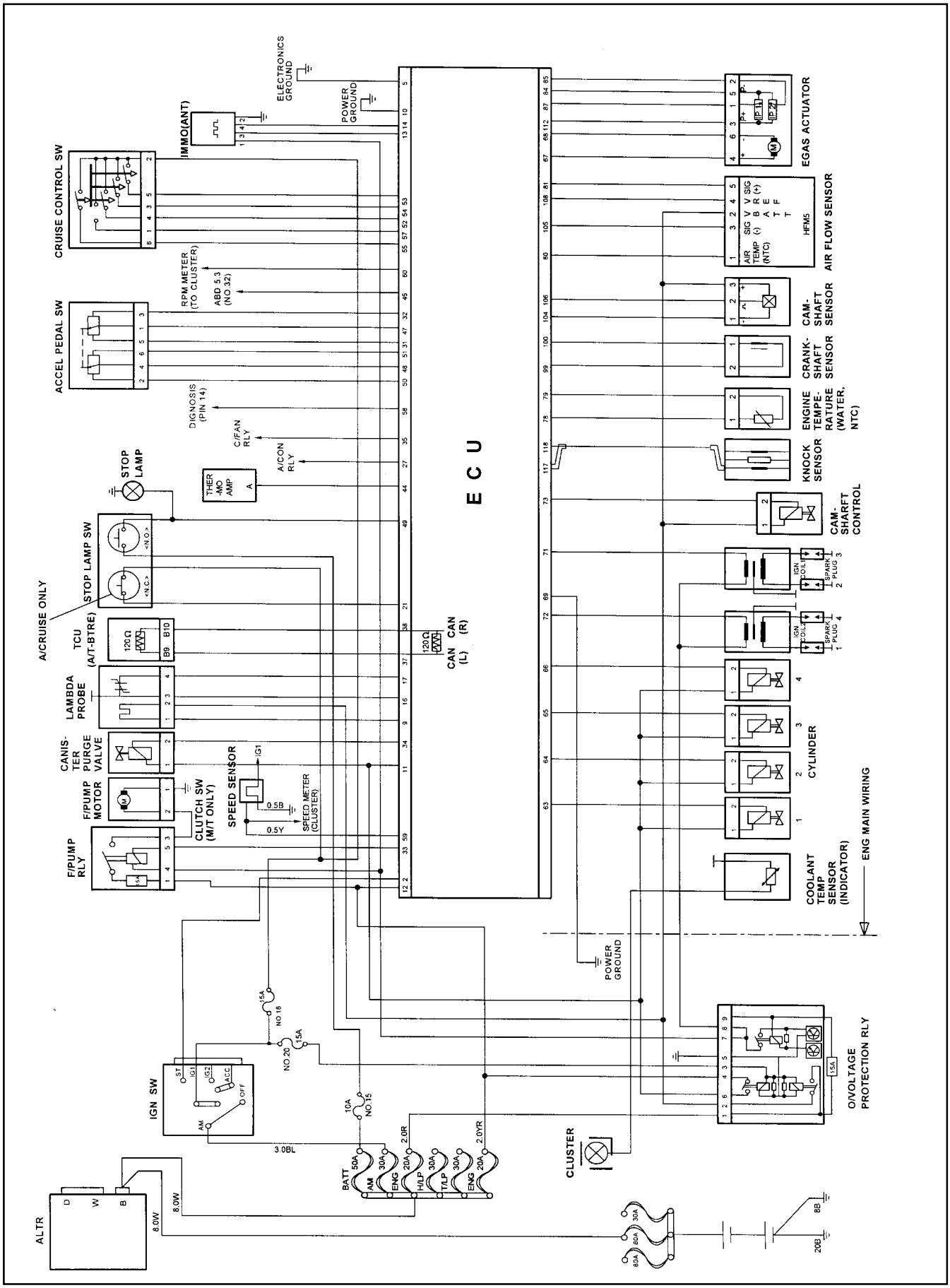

Downloaded from www.Manualslib.com manuals search engine

E20 ECU (MSE)

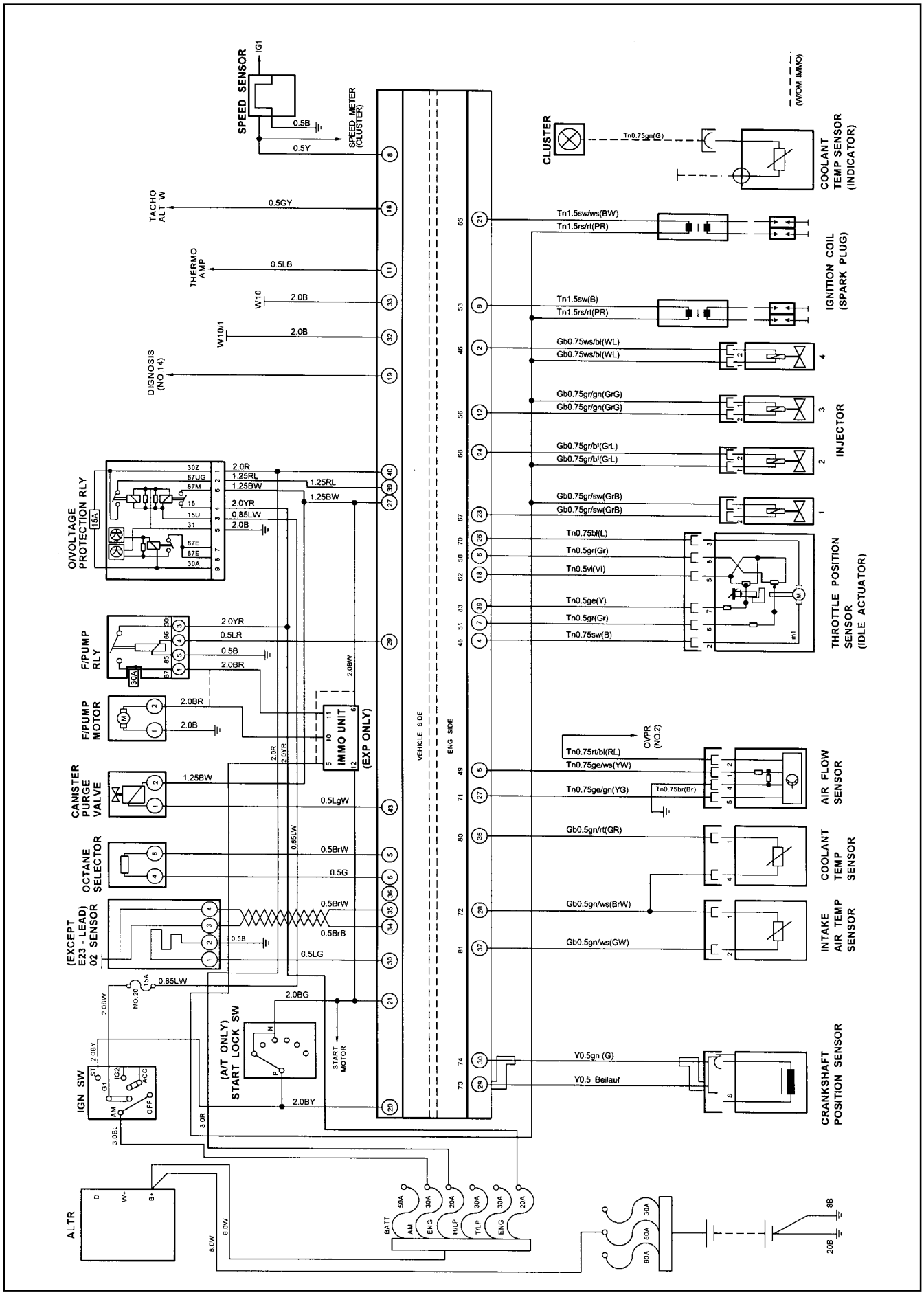

Downloaded from www.Manualslib.com manuals search engine

DIAGNOSIS

SELF DIAGNOSIS SOCKET PIN NUMBERS AND DESCRIPTIONS

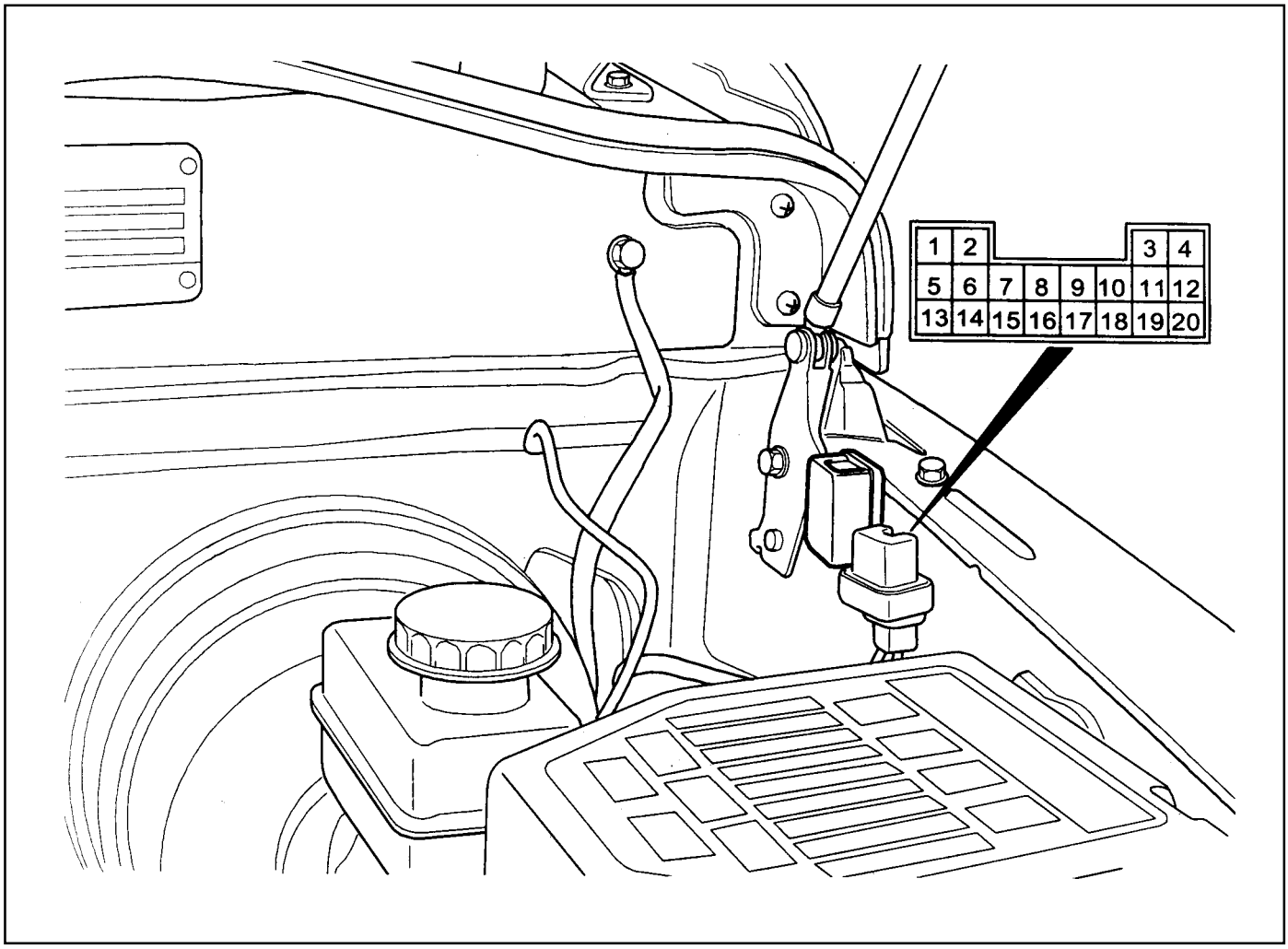

1 Ground
2 Ignition 1
3 Battery Power Supply (Fuse NO.17)
4 REKES :PIN 6
5 Engine Speed Signal :MSE PIN 60
6 TCCU(Part-time)
7 STICS(PIN 26)
8 -
9 -
10 Air Bag(PIN 20)
11 Remote Engine Start Unit(PIN 10)
12 -
13 Brake System
(ABS 5.3:PIN 11, ABS/ABD 5.3:PIN 46)
14 MSE 3.62S/3.53S(ECU Data Output:PIN 58)
15 TOD(PIN 20)
16 Immobilizer
17 -
18 TCU(PIN 23)
19 -
20 K-LINE(ECS:PIN 23)

Downloaded from www.Manualslib.com manuals search engine

SELF DIAGNOSIS FAILURE CODE (FOR E23 ENG)

Failure code	Description	Failure code	Description
00	Coolant temperature sensor open	64	No ignition voltage output (No.1 ignition coil : 1, 4 cylinder)
01	Coolant temperature sensor short	65	No ignition voltage output (No.2 ignition coil : 2, 3 cylinder)
02	Coolant temperature sensor signal failure	67	Cranshaft position sensor adaption failure
03	Intake temperature sensor open	71	Start signal recognition failure
04	Intake temperature sensor short	72	No.1 injector short(PWR)
05	Intake temperature sensor signal failure	73	No.1 injector open/short(GND)
08	Low battery voltage	74	No.2 injector short(PWR)
09	HFM sensor signal failure	75	No.2 injector open/short(GND)
10	HFM sensor signal failure (Low)	76	No.3 injector short(PWR)
11	HFM sensor signal failure (High)	77	No.3 injector open/short(GND)
17	Crankshaft position sensor signal failure (no engine revolution signal)	78	No.4 injector short(PWR)
		79	No.4 injector open/short(GND)
18	Crankshaft position sensor signal failure (rpm > max. value)	80	High oxygen sensor voltage
		81	Low oxygen sensor amplifying voltage
19	No.1 cylinder recognition failure	82	Oxygen sensor operating failure
20	Crankshaft position sensor signal failure (gab recognition failure)	83	Not excessive lean indication in oxygen sensor(during coasting)
21	Transmission coding failure	86	Oxygen sensor heater short(power)
25	Transponder signal communication failure	87	Oxygen sensor heater open/short(GND)
26	CAN communication failure : TCU(A/T only)	89	Low oxygen sensor voltage
31	CAN communication failure : communication initialization failure	93	Short learning control failure
		96	Lambda control failure (rich stop)
34	Fuel pump relay short(PWR)	97	Lambda control failure (lean stop)
35	Fuel pump relay open/short(GND)	98	Lambda idle adaptation failure(above rich threshold)
40	Purge valve short		
41	Purge valve open/short	99	Lambda idle adaptation failure(below lean threshold)
44	Condenser fan(HI) relay short(PWR)		
45	Condenser fan(HI) relay short(GND)	100	learning control failure(rich, low load)
56	No.1 knock sensor signal failure	101	learning control failure(lean, low load)
58	No.1 cylinder synchronization failure	102	learning control failure(rich, high load)

Downloaded from www.Manualslib.com manuals search engine

Failure code	Description	Failure code	Description
103	learning control failure(lean, high load)	142	Uncoded ECU
104	Low throttle position sensor(IP1) voltage	143	ECU failure(NVRAM checksum failure)
105	High throttle position sensor(IP1) voltage	144	ECU failure(coding ID checksum failure)
108	Low throttle position sensor(IP2) voltage	145	ECU failure(coding checksum failure)
109	High throttle position sensor(IP2) voltage	146	ECU failure(programing checkusm failure)
110	Throttle actuator learning data fault	150	ABD input signal short(power)
116	Throttle actuator learning control failure	151	ABD input signal short(GND)
117	Exceed fuel-cut safety time	160	Low pedal valve sensor SP1 voltage
119	Throttle valve return spring failure	161	High pedal valve sensor SP1 voltage
120	Cruise control interruption memory failure	162	Low pedal valve sensor SP2 voltage
121	Throttle actuator failure	163	High pedal valve sensor SP2 voltage
122	Pedal module position sensor signal failure	164	Different pedal valve sensor signal(1,2) SP1 with SP2
123	Defferent HFM signal with throttle potentiom-eter	167	Pedal valve sensor 1,2 failure
125	Both throttle potentiomenter(IP1 & IP2) failure	185	HFM sensor, and throttle position sensor failure
		186	ECU failure(incompatible CPU)
126	Different IPS1 with IPS2	187	ECU failure(CPUs communication failure)
127	High permanent throttle signal deviation	188	ECU failure(CPU(2) configuration failure)
129	Message counter fault ® cruise control “OFF”	189	ECU failure(CPU(2) fault)
130	Vehicle speed signal failure	190	ECU failure(CPU run time failure between CPUs)
131	Vehicle speed signal failure		
132	Cruise control lever failure	192	-
133	Cruise control acceleration failure	193	-
134	Cruise control deceleration failure	194	-
136	ECU failure(RAM)	195	-
137	ECU failure(EPROM)	198	-
139	Servo motor control output inter-ruption memory failure	199	-
		226	Cam actuator short(PWR)
140	Servo motor open/short	227	Cam actuator open/short(GND)
141	Unprogramed ECU with Immobilizer	228	A/C compressor relay short(PWR)

Downloaded from www.Manualslib.com manuals search engine

Failure code	Description	Failure code	Description
229	A/C compressor relay open/short(GND)	243	AD converter failure(CPU2)
232	Decel limit defected by CPU2	244	Pedal position sensor setpoint fault berween CPU1 and CPU2
233	Accel limit defected by CPU2		
234	Cruise control lever double input(CPU2)	245	Position setpoint fault berween CPU1 and CPU2
235	Cruise control lever safety terminal failure(CPU2)	246	-
236	Unusual pedal position variation(CPU2)	247	Idle controller setpoint fault berween CPU1 and CPU2
237	Unusual throttle position variation(CPU2)		
238	Unusual throttle control data(CPU2)	248	AD converter overflow degected by CPU2
239	Unusual pedal position sensor(CPU2)	249	ROM fault degected by CPU2
240	Throttle potentiometer fault(CPU2)	250	RAM fault degected by CPU2
241	Unusual CPU communication(CPU2)	251	Cycle monitor fault degected by CPU2
242	Unusual CPU configuration(CPU2)		

Downloaded from www.Manualslib.com manuals search engine

TEST BOX CONNECTION

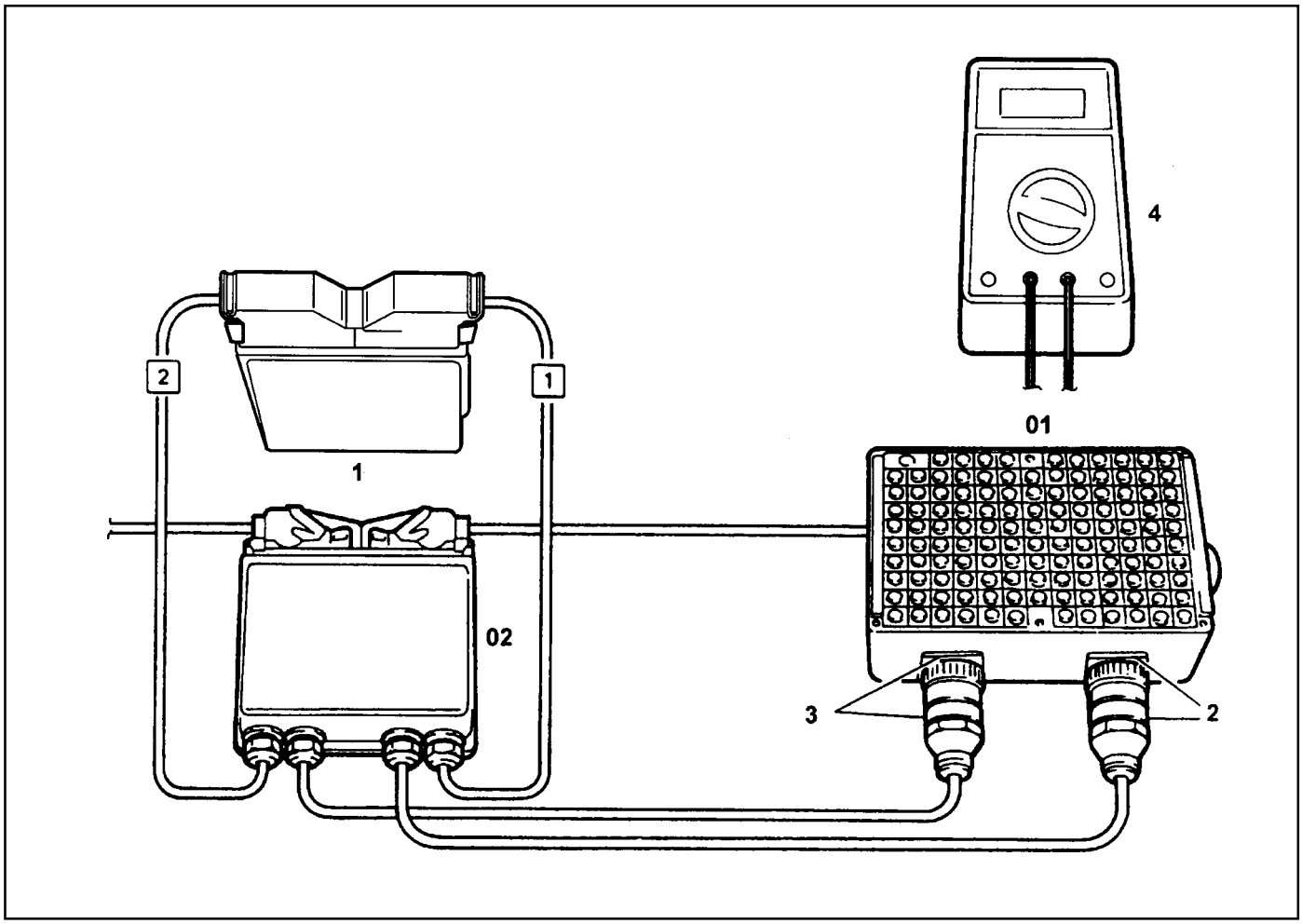

1 ECU
2 Test Coupling(No.1 - 60)
3 Test Coupling(No.61 - 120)
4 Multi-tester

01 Test Box
02 ECU Test Cable

Tools Required

129 589 00 21 00 Test Box

210 589 08 63 00 ECU Test Cable

Downloaded from www.Manualslib.com manuals search engine

FUEL INJECTION SYSTEM TEST

Failure code	Test step	Item	Checking method	Requirement	Specified value	Possible cause
08,	Þ 1.0	· **ECU:power supply** - terminal 30 (TM.30)	10 — 12	· Ignition:ON	11 -14V	· Þ 1.1 · Þ 1.2
	Þ 1.1	· **Ground cable:** - Battery ground	10 — Diagnosis socket 2 69 — Diagnosis socket 2	· Ignition:ON	11 -14V	· Ground cable · Ground condition
	Þ 1.2	· **Power supply:** - terminal 30 (TM.30)	Diagnosis socket 1 — 12	· Ignition:ON	11 -14V	· Power supply cable
08,	Þ 2.0	· **ECU:power supply** - terminal 87 (TM.87)	5 — 11	· Ignition:ON	11 -14V	· Þ 1.1 · Þ 2.1
	Þ 2.1	· **Ground cable** - Electronic ground	5 — Diagnosis socket 2	· Ignition:ON	11 -14V	· Ground cable
	Þ 2.2	· **Power supply:** - terminal 87 (TM.87)	Diagnosis socket 1 — 11	· Ignition:ON · Ignition:OFF	11 -14V < 1V	· Power supply cable · OVPR
	Þ 3.0	· **Start signal:** - terminal 50 (TM.50)	5 — 2	· Engine:in Cranking	11 -14 (during engine cranking)	· Cable · Ignition Swith

Downloaded from www.Manualslib.com manuals search engine

Failure code	Test step	Item	Checking method	Requirement	Specified value	Possible cause
09, 10, 11,	Þ 4.0	· **HFM sensor signal**	105 — V — 81	· Ignition:ON	0.9 - 1.1V	· Þ 4.1 - 4.3 · Cable · External air inflow · HFM sensor
				· Engine:in Idle (Coolant temperature : > 70℃)	1.3 - 1.7V : voltage value is increased when engine rpm is increased	
	Þ 4.1	· **HFM sensor:** - 5V power supply	HFM sensor 105 — V — 4	· Ignition:ON · HFM sensor connector removed	4.7 - 5.2V	· Cable · ECU coupling
	Þ 4.2	· **HFM sensor:** - 5V power supply	HFM sensor 3 — V — 108	· Ignition:ON · HFM sensor connector removed	4.7 - 5.2V	· Þ 4.3 · Cable
	Þ 4.3	· **HFM sensor:** - 12V power supply	HFM sensor 104 — V — 2	· Ignition:ON · HFM sensor connector removed	11 - 14V	· Cable · OVPR
03, 04, 05,	Þ 5.0	· **Intake air temperature sensor:** - Voltage	105 — V — 80	· Ignition:ON	℃ V 10 3.1 20 2.65 30 2.18 40 1.76 50 1.4 60 1.1 ±5%	· Þ 5.1 · ECU
	Þ 5.1	· **Intake air temperature sensor:** - Resistance	105 — V — 80	· Ignition:OFF · No.2 ECU coupling removed	℃ W 10 3600 20 2420 30 1662 40 1166 50 853 60 600 ±5%	· Cable · HFM sensor

Downloaded from www.Manualslib.com manuals search engine

Failure code	Test step	Item	Checking method	Requirement	Specified value	Possible cause
34, 35,	Þ 6.0	· **Fuel pump relay:** - Operation	33 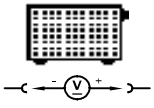 11	· Ignition:ON (Fuel pump relay will operate for 1 - 2 seconds when the ignition switch is turned to "ON" after stopping the engine) · Engine:cranking	11 - 14V (approx.1-2sec.) 11 - 14V (Cranking or driving)	· Cable · Fuel pump relay · ECU
	Þ 6.1	· **Fuel pump relay:** - Current consumption	5 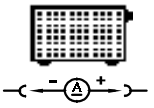 33	· Ignition:ON	0.1 - 0.3A	· Cable · Fuel pump relay · ECU
00, 01, 02, 06,	Þ 7.0	· **Coolant temperature sensor:** - Voltage	79 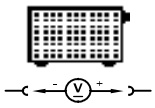 78	· Ignition:ON	℃ V 20 3.57 80 1.22 100 0.78 ±5%	· Þ 7.1 · ECU
	Þ 7.1	· **Coolant temperature sensor:** - Resistance & cable	79 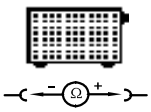 78	· Ignition:OFF (Remove the No.2 coupling from ECU)	℃ W 20 2500 80 322 100 185 ±5%	· Þ 7.2 · cable
	Þ 7.2	· **Coolant temperature sensor:** - Resistance	Coolant temperature sensor: 1 4	· Remove the connector from coolant temperature sensor and measure the resistance between No.1 and No.2 pin with multimeter.	· Þ refer to specified resistance value of 7.1.	· Coolant temperature sensor

Downloaded from www.Manualslib.com manuals search engine

Failure code	Test step	Item	Checking method	Requirement	Specified value	Possible cause
32, 33,	Þ 8.0	· **ECU:** - RPM signal output	5 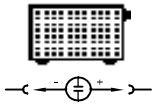 60	· Engine:in cranking or idle	refer to figure 2	· Cable · ECU
		- Voltage	5 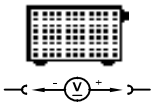 60	· Engine:in cranking or idle (above 5V in idling)	6.0 - 7.0 V	
80, 81, 82, 83, 89,	Þ 9.0	· **Oxygen sensor:** - Signal	16 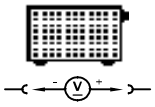 17	· Keep the engine run above 2 minutes in over 80℃ of coolant temperature	There will be a voltage fluctuation in the range of - 0.2 -1.0V.	· ECU · Cable · Oxygen sensor
85, 86, 87,	Þ 10.0	· **Oxygen sensor:** - Heating function operated	9 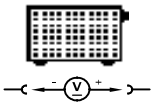 11	· Keep the engine run above 2 minutes in over 80℃ of coolant temperature.	11 - 14 V	· ECU · Cable · Oxygen sensor
		- Current consumption	5 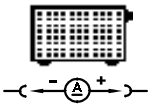 9	· Ignition:ON	0.2 - 2.0 A	
72, 73,	Þ 11.0	· **No.1 cylinder injector:** - Operating & injection time	63 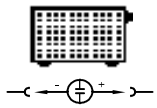 11	· When the coolant temperature is approx. 20℃: - Engine:in cranking · When the coolant temperature is approx. 80℃: - Engine:at idling speed - Engine:at sharp acceleration(full throttle) (refer to figure 3 and 4)	8.0 ms approx. 2.7 - 5.0ms approx.14ms	· Cable · ECU · No.1 Injector · Coolant temperature sensor · Oxygen sensor · Intake air temperature sensor

Downloaded from www.Manualslib.com manuals search engine

Failure code	Test step	Item	Checking method	Requirement	Specified value	Possible cause
		- Internal resistance (No.1 injector)	63 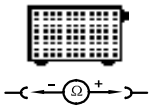 11	· Ignition:OFF (injector temperature is 20℃)	14 - 17 W	
74, 75,	Þ 12.0	· **No.2 cylinder injector:** - Operating & injection time	64 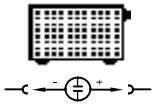 11	· When the coolant temperature is approx. 20℃: - Engine:in cranking · When the coolant temperature is approx. 80℃: - Engine:at idling speed - Engine:at sharp acceleration (full throttle) (refer to figure 3 and 4)	8.0 ms approx. 2.7 - 5.0ms approx.14ms	· Cable · ECU · No.2 Injector · Coolant temperature sensor · Oxygen sensor · Intake air temperature sensor
		- Internal resistance (No.2 injector)	64 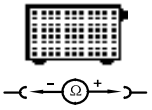 11	· Ignition:OFF (injector temperature is 20℃)	14 - 17 W	
76, 77,	Þ 13.0	· **No.3 cylinder injector:** - Operating & injection time	65 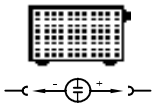 11	· When the coolant temperature is approx. 20℃: - Engine:in cranking · When the coolant temperature is approx. 80℃: - Engine:at idling speed - Engine:at sharp acceleration(full throttle) (refer to figure 3 and 4)	8.0 ms approx. 2.7 - 5.0ms approx.14ms	· Cable · ECU · No.3 Injector · Coolant temperature sensor · Oxygen sensor · Intake air temperature sensor

Downloaded from www.Manualslib.com manuals search engine

Failure code	Test step	Item	Checking method	Requirement	Specified value	Possible cause
		- Internal resistance (No.3 injector)	65 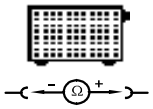 11	· Ignition:OFF (injector temperature is 20℃)	14 - 17 W	
78, 79,	Þ 14.0	· **No.4 cylinder injector:** - Operating & injection time	66 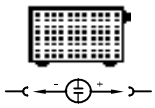 11	· When the coolant temperature is approx.20℃: - Engine:in cranking · When the coolant temperature is approx.80℃: - Engine:at idling speed - Engine:at sharp acceleration(full throttle) (refer to figure 3 and 4)	8.0 ms approx. 2.7 - 5.0ms approx.14ms	· Cable · ECU · No.4 Injector · Coolant temperature sensor · Oxygen sensor · Intake air temperature sensor
		- Internal resistance (No.4 injector)	66 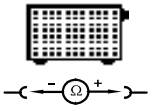 11	· Ignition:OFF (injector temperature is 20℃)	14 - 17 W	
226, 227,	Þ 15.0	· **Camshaft actuator:** Current consumption	Camshaft actuator 1 2	· Engine : using a test cable(102 589 63 00) in idling, measure the current consumption with below condition - Coolant temperature : above 70℃ - Engine rpm : increase up to 2000 rpm	1 - 1.5 A	· ECU · Þ 15.1 · Þ 16.0

Downloaded from www.Manualslib.com manuals search engine

Failure code	Test step	Item	Checking method	Requirement	Specified value	Possible cause
	Þ 15.1	· **Camshaft actuator:** Solenoid resistance (E23 only)	Diagnosis socket 73 — 2	· Ignition:OFF	8 - 12 W	· Cable · Camshaft actuator
226, 227,	Þ 16.0	· **Camshaft actuator:** Mechanical actuation (E23 only)	73 — 69	· Engine:in idling	Engine is unstable or stopped.	· Mechanical failure of camshaft actuator
40, 41, 54,	Þ 17.0	· **Purge control valve:** - Operating	34 — 11	· Engine:in idling	The purge control valve should be operated after approx. 1minute. (refer to figure 5)	· ECU · Cable · Purge control valve
		- Current consumption	10 — 34	· Ignition:ON	0.2 - 0.4 A	
40, 41, 54,	Þ 18.0	· **Purge control valve:** - Vacuum control	Connect the vacuum gauge between the control valve and canister	· Engine:in idling/ normal operating temperature	Creating above 50mbar of vacuum after approx. 1 minute	· Power supply cable · OVPR
22,23, 24,26, 27,29, 30,31, 59,60,	Þ 19.0	· **CAN data bus**	38 — 37	· Ignition:OFF	55 - 65 W	· Data bus · Þ 19.1 · Þ 19.2

Downloaded from www.Manualslib.com manuals search engine

Failure code	Test step	Item	Checking method	Requirement	Specified value	Possible cause
	Þ 19.1	· **CAN module resistance in ABS, ABD, ASR control unit**	38 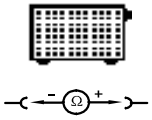 37	· Ignition:OFF - disconnect the coupling"No.1" from ECU	115 - 125 W	· Cable · ABS, ABD, ASR control unit
	Þ 19.2	· **CAN module resistance in ECU control unit**	38 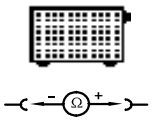 37	· Ignition:OFF - disconnect the coupling"No.1" from ECU	115 - 125 W	· ECU
	Þ 20.0	· **Diagnosis cable operating**	5 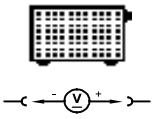 58	· Ignition:ON	11 - 14 V	· ECU · Cable

Downloaded from www.Manualslib.com manuals search engine

Reference Figures

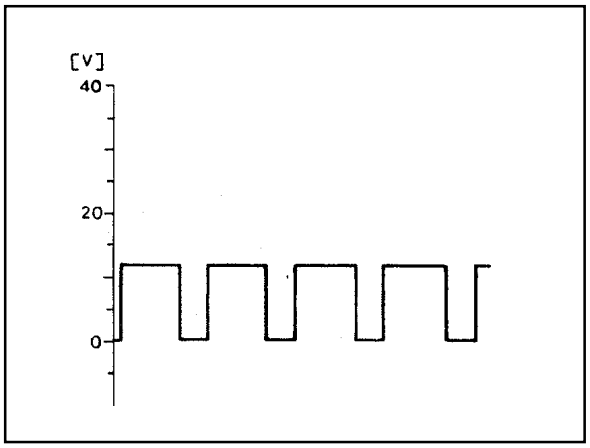

Figure1. RPM Sgnal Output

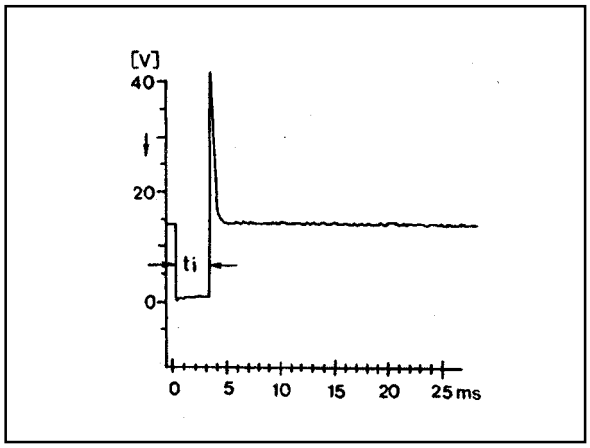

Figure 2. Injection Valve Wave(at idle speed)

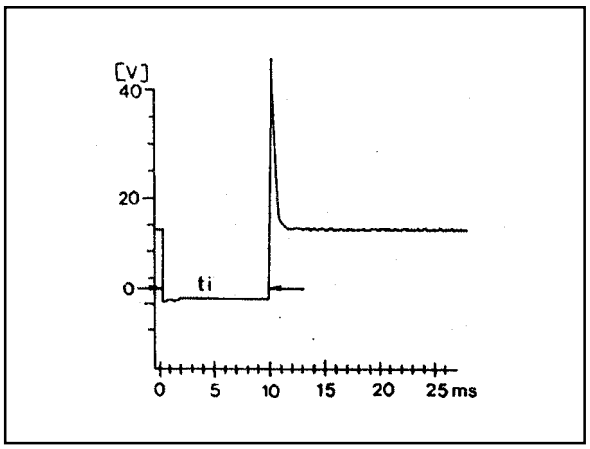

Figure 3. Injection Valve Wave(at sharp acceleration)

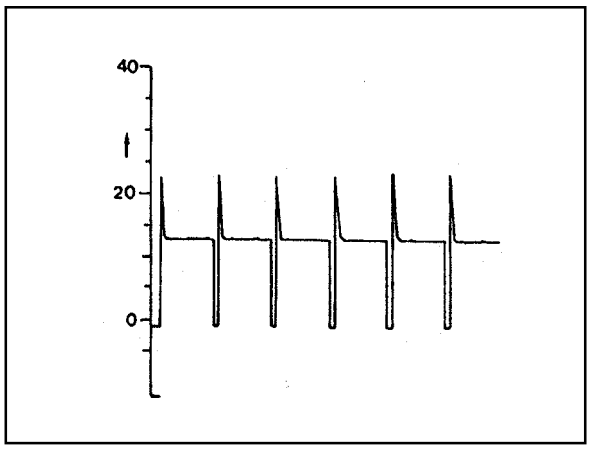

Figure 4. Purge Control Valve Operationg Wave

Downloaded from www.Manualslib.com manuals search engine

IGNITION SYSTEM TEST

Failure code	Test step	Item	Checking method	Requirement	Specified value	Possible cause
08,	Þ 1.0	· **ECU:power supply** - terminal 30 (TM.30)	10 — 12	· Ignition:ON	11 - 14V	· Þ 1.1 · Þ 1.2
	Þ 1.1	· **Ground cable:** - Battery ground	Diagnosis socket 10 — 2 Diagnosis socket 69 — 2	· Ignition:ON	11 - 14V	· Ground cable · Ground condition (figure 1)
	Þ 1.2	· **Power supply:** - terminal 30 (TM.30)	Diagnosis socket 1 — 12	· Ignition:ON	11 - 14V	· Power supply cable
08,	Þ 2.0	· **ECU:power supply** - terminal 87 (TM.87)	5 — 11	· Ignition:ON	11 -14V	· Þ 2.1 · Þ 2.2
	Þ 2.1	· **Ground cable** - Electronic ground	Diagnosis socket 5 — 2	· Ignition:ON	11 - 14V	· Ground cable
	Þ 2.2	· **Power supply:** - terminal 87 (TM.87)	Diagnosis socket 1 — 11	· Ignition:ON · Ignition:OFF	11 - 14V < 1V	· Power supply cable · OVPR
64,	Þ 3.0	· **Ignition coil(T1/1)** - No.1,4 Cylinder	69 — 72	· Ignition:ON · Engine:in cranking	11 - 14 V > 10 V	· Cable · Ignition coil(T1/1) · Fuse No.17

Downloaded from www.Manualslib.com manuals search engine

Failure code	Test step	Item	Checking method	Requirement	Specified value	Possible cause
65,	Þ 4.0	· **Ignition coil(T1/2)** - No.2,3 Cylinder	69 — 71	· Ignition:ON	11 -14 V	· Cable · Ignition coil(T1/2) · Fuse No.17
				· Engine:in cranking	> 10 V	
17, 18, 20, 67,	Þ 5.0	· **Crankshaft position sensor:** - Signal	99 — 100	· Engine:in cranking · Engine:idling	Measure the signal (refer to figure 6)	· Increament failure in driven plate · Þ 5.1
		- Voltage (alternating)	99 — 100	· Engine:in cranking	> 2.5 V -	
				· Engine:idling	> 5 V -	
	Þ 5.1	· **Crankshaft position sensor:** - Resistance	99 — 100	· Ignition:OFF - Disconnect the coupling “No.2” from ECU (engine side coupling).	1050 - 1400W	· Cable · Crankshaft position sensor
19, 58,	Þ 6.0	· **Camshaft position sensor:** (E23 only) - Signal	104 — 106	· Engine:in cranking	Measure the signal(refer to figure 8)	· Þ 6.1 · Cable · Camshaft position sensor
		- Voltage (alternating)	106 — 11	· Engine:in cranking	The value will be changed in 1.2 - 1.7 V.	
	Þ 6.1	· **Camshaft position sensor** (E23 only) - Power supply	Camshaft position sensor 1 — 3	· Ignition:ON - Remove the connector from the camshaft position sensor	11 -14 V	· Cable · OVPR

Downloaded from www.Manualslib.com manuals search engine

Failure code	Test step	Item	Checking method	Requirement	Specified value	Possible cause
64,	Þ 7.0	· **Ignition coil(T1/1)** - Primary coil voltage (No.1 , 4 cylinder)	72 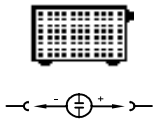 11	· Engine:in cranking (starter operating) - Measuring range: 400 V - Time range: 100 % (using engine tester)	200 - 350 V	· Þ 7.1
	Þ 7.1	· **Connection ignition coil between T1/1 and T1/2**	72 71	· Ignition:OFF	0.9 - 1.6 W The resistance of ignition coil at 20℃ is approached 0.6W.	· Cable · Ignition coil T1/1 · Ignition coil T1/2
65,	Þ 8.0	· **Ignition coil(T1/2)** - Primary coil voltage (No.2 , 3 cylinder)	71 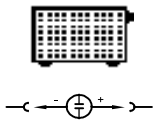 11	· Engine:in cranking (starter operating) - Measuring range: 400 V - Time range: 100 % (using engine tester)	200 - 350 V	· Þ 8.1
	Þ 8.1	· **Connection ignition coil between T1/1 and T1/2**	71 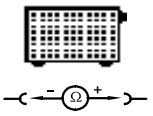 72	· Ignition:OFF	0.9 - 1.6 W The resistance of ignition coil at 20℃ is approached 0.6W.	· Cable · Ignition coil T1/1 · Ignition coil T1/2
64, 65,	Þ 9.0	· **Ignition coil** (T1/1, T1/2) - Secondary ignition voltage	Engine tester 	· Engine:in cranking - Select the ignition coil in order of T1/1, T1/2 - Measuring range : 20KV - Time range : 100%	8 - 20 KV	· Þ 9.1 · Ignition plug · ECU · High tension cable

Downloaded from www.Manualslib.com manuals search engine

Failure code	Test step	Item	Checking method	Requirement	Specified value	Possible cause
	Þ 9.1	· **Ignition coil** (T1/1, T1/2) - Secondary coil resistance	Ignition coil (T1/1, T1/2) TM.4a TM.4b	· Remove the high tension cable of T1/1, T1/2	6 - 8.5 KW	· Ignition coil T1/1 · Ignition coil T1/2
56,	Þ 10.1	· **Knock sensor** - Resistance	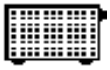 117 118	· Ignition:OFF - Disconnect the coupling "No.2" from ECU.	> 10 MW	· Connecting condition · Cable · ECU

Downloaded from www.Manualslib.com manuals search engine

Reference Figures

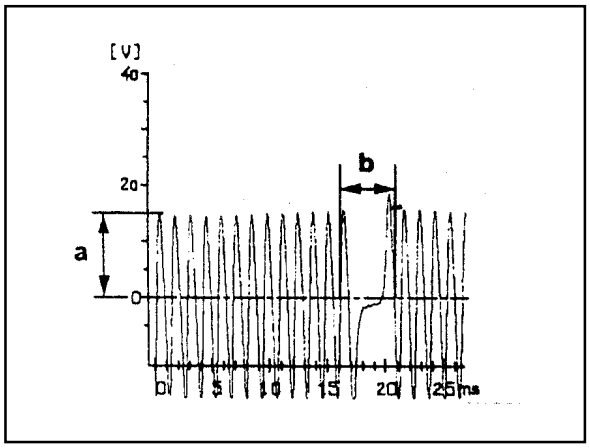

Figure 5. Crankshaft Position Sensor Signal
a Voltage
b Identifying the No.1 - 2 Missing Teeth

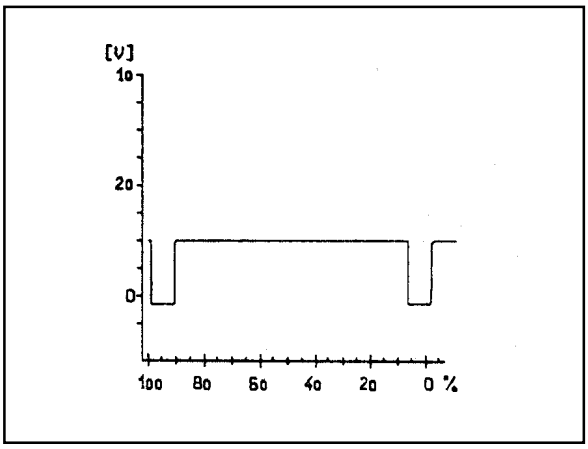

Figure 6. Camshaft Position Sensor Signal

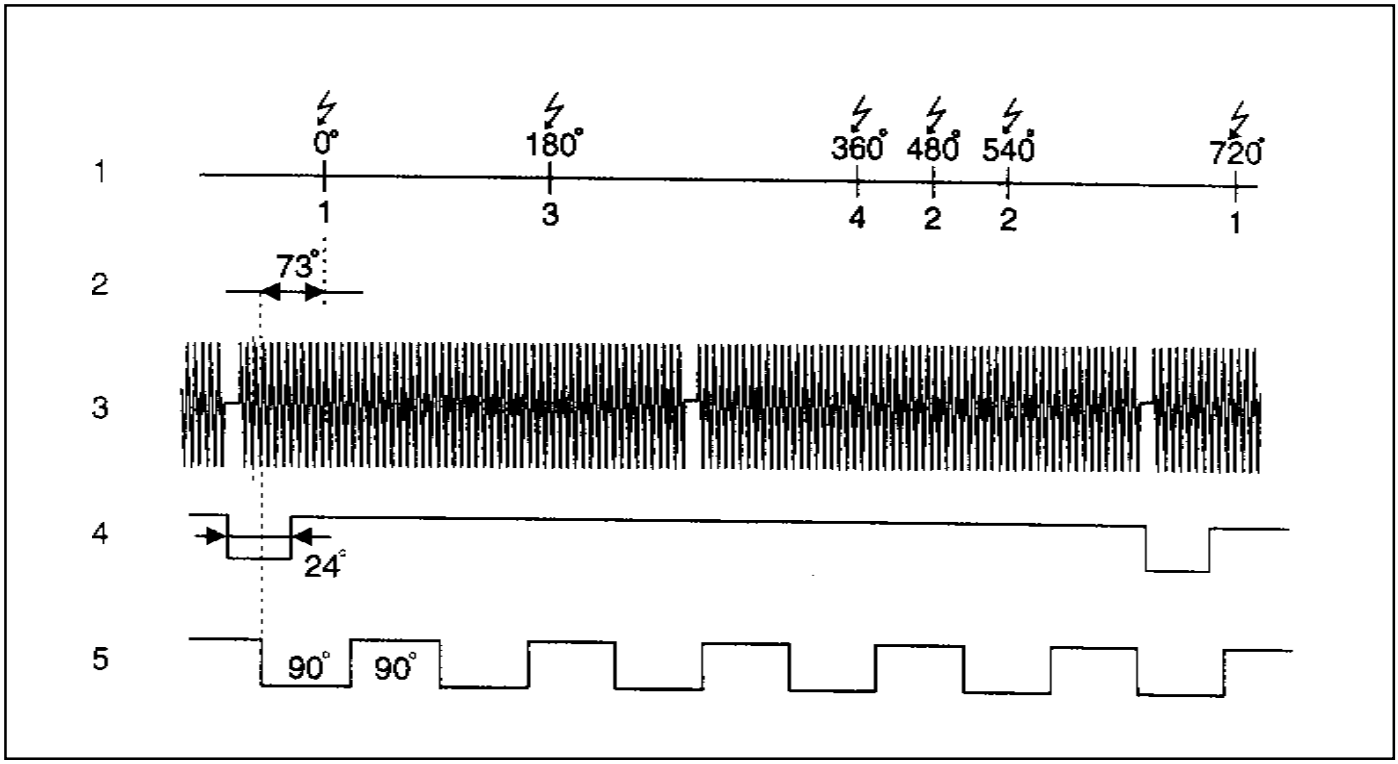

Figure 7. Signal Function
1 Crank Angle
2 Cylinder
3 Crankshaft Position Sensor Signal
4 Camshaft Position Sensor Signal
5 RPM Signal

Downloaded from www.Manualslib.com manuals search engine

IDLING CONTROL AND ELECTRONIC PEDAL SYSTEM TEST

Failure code	Test step	Item	Checking method	Requirement	Specified value	Possible cause
160, 161, 164, 167,	Þ 1.0	· **Pedal valve sensor:** - Signal (potentiometer 1)	31 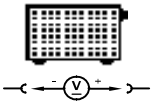 47	· Ignition:ON · Position of accelerator pedal: - Closed throttle position - Full throttle with kick down	0.2 - 0.5 V 4.3 - 4.8 V	· Þ 1.1 · Cable · Pedal valve sensor
	Þ 1.1	· **Pedal valve sensor:** - Power supply (potentiometer 1)	31 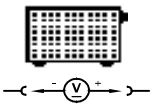 32	· Ignition:ON	4.75 - 5.25 V	· Cable · ECU
162, 163, 164, 167,	Þ 2.0	· **Pedal valve sensor:** - Signal (potentiometer 2)	50 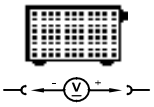 48	· Ignition:ON · Position of accelerator pedal: - Closed throttle position - Full throttle with kick down	0.1 - 0.4 V 2.1 - 2.5 V	· Þ 2.1 · Cable · Pedal valve sensor
	Þ 2.1	· **Pedal valve sensor:** - Power supply (potentiometer 2)	50 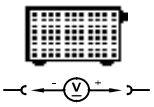 51	· Ignition:ON	2.25 - 2.75 V	· Cable · ECU
104, 105, 108, 109, 116, 119, 185,	Þ 3.0	· **Throttle valve actuator:** - Signal Throttle valve potentiometer 1	84 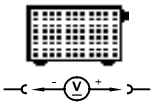 87	· Engine:in idling · Position of accelerator pedal: - Closed throttle position - Full throttle with kick down	0.3 - 0.9 V 4.0 - 4.6 V	· Þ 3.1 · Cable · E-GAS actuator

Downloaded from www.Manualslib.com manuals search engine

Failure code	Test step	Item	Checking method	Requirement	Specified value	Possible cause
		Throttle valve potentiometer 2	84 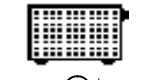 85	· Position of accelerator pedal: - Closed throttle position - Full throttle with kick down	4.0 - 4.6 V 0.3 - 0.9 V	
	Þ 3.1	· **Throttle valve actuator:** - Power supply Throttle valve potentiometer 1+2	84 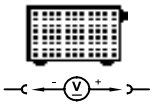 112	· Ignition:ON	4.75 - 5.25 V	· Cable · ECU
104, 105, 108, 109, 116, 119, 185,	Þ 4.0	· **Throttle valve actuator:** - Signal Throttle valve actuator motor voltage supply Throttle valve actuator motor resistance	68 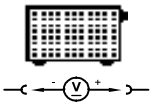 67 68 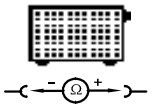 67	· Ignition:ON · Engine:in idling - Coolant temperature: > 70 °C · Ignition:OFF	0.8 - 2.3 V The value will be changed in 1.0 - 2.5V. < 10 W	· ECU · Cable · E-GAS actuator

Downloaded from www.Manualslib.com manuals search engine

AIR CONDITIONER CONTROL SYSTEM TEST

Failure code	Test step	Item	Checking method	Requirement	Specified value	
44, 45,	Þ 1.0	· **Air conditioner signal:** - Input signal (input signal from thermo amplifier)	10 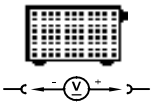 44	· Engine:In idling · Air conditioner switch:ON/OFF Air conditioner switch:OFF Air conditioner switch:ON	< 1 V 11 - 14 V	· Þ 5.1 · Cable · Thermo amp · Auto amp · Dual pressure switch · Air conditioner control panel
	Þ 1.1	· **Air conditioner compressor:** - Output signal	10 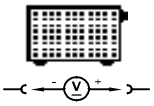 27	· Engine:In idling · Air conditioner switch:ON/OFF Air conditioner switch:OFF Air conditioner switch:ON	< 1 V 11 - 14 V	
	Þ 2.0	· **Condenser fan(HI) control:**	10 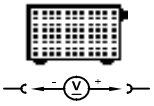 35	· Engine:In idling · Air conditioner switch:ON/OFF Air conditioner switch:OFF Air conditioner switch:ON Coolant temperature: above 150 ℃	11 - 14 V 11 - 14 V < 1 V	

Downloaded from www.Manualslib.com manuals search engine

FUEL PRESSURE AND INTERNAL LEAKAGE TEST

Preparation

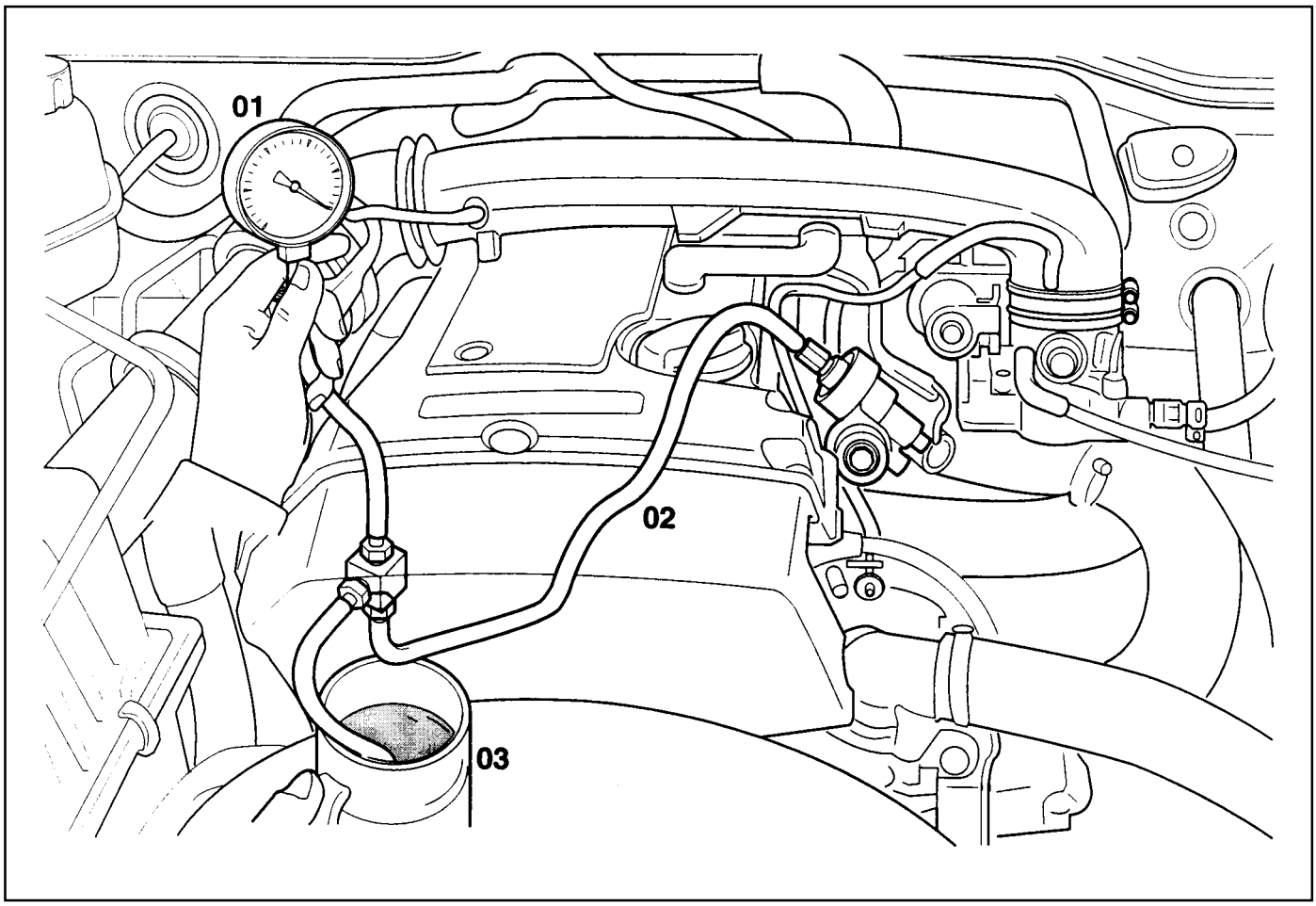

01 Pressure Tester
02 Pressure Hose
03 Measuring Beaker

Connection of the Equipment

1. Turn the ignition switch to "OFF" position.
2. Remove the air cleaner cross pipe.
3. Remove the cap on fuel pressure test plug and connect the pressure hose and pressure tester.
4. Prepare the beaker for measuring the amount of fuel.

Tools Required

103 589 00 21 00 Pressure Tester

119 589 04 63 00 Pressure Hose

Downloaded from www.Manualslib.com manuals search engine

Failure code	Test step	Item	Checking method	Requirement	Specified value	Possible cause
	Þ 1.0	· **Fuel pressure:in idling speed** - When the vacuum is applied	Connect the fuel pressure test plug to the pressure tester (refer to the flgure on previous page).	· Engine:in idling - Colse the valve screw on pressure tester	3.2 - 3.6 bar	· Þ Fuel pump test · Fuel pressure regulator
	Þ 2.0	· **Fuel pressure:in idling speed** - When the vacuum is not applied	Connect the fuel pressure test plug to the pressure tester (refer to the flgure on previous page).	· Engine:in idling - Colse the valve screw on pressure tester	3.7 - 4.2 bar	· Þ Fuel pump test · Fuel pressure regulator
	Þ 3.0	· **Fuel system internal leakage:**	Connect the fuel pressure test plug to the pressure tester (refer to the flgure on previous page).	· Engine:stop	> 3.0 bar	· The pressure drops rapidly:non-return valve in fuel pump
				· After 30 minutes from engine stop	> 2.5 bar	· The pressure drops slowly: - Injector test - Fuel pressure regulator - O-ring

Downloaded from www.Manualslib.com manuals search engine

FUEL PUMP TEST

Preparation

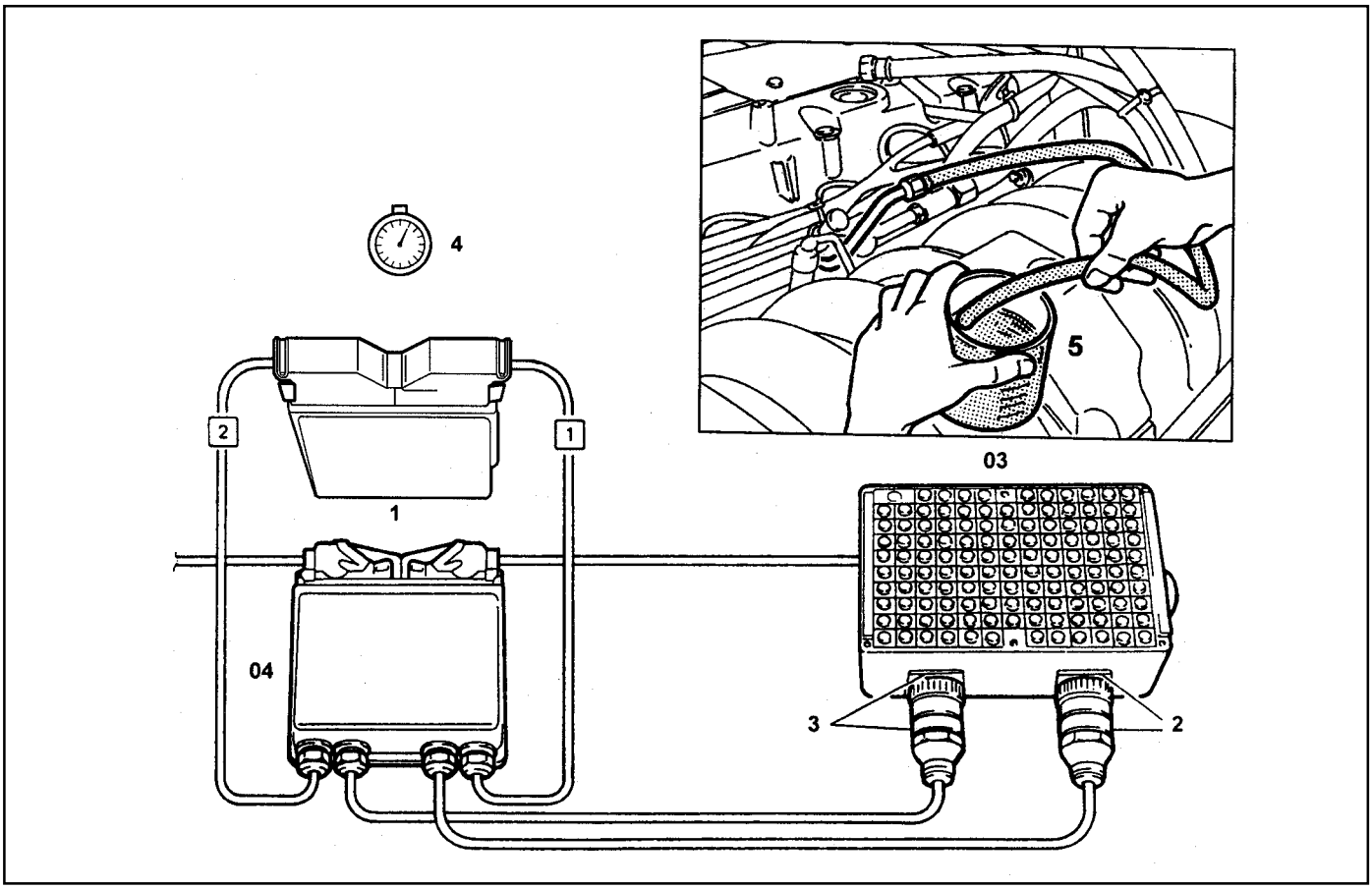

1 ECU
2 Test Coupling(No.1-60)
3 Test Coupling(No.61-120)
4 Stop Watch
5 Measuring Beaker

03 Test Box
04 ECU Test Cable

Connection of the Equipment

1. Turn the ignition switch to "OFF" position.
2. Connect the test box to the ECU.

Tools Required

103 589 00 21 00 Pressure Tester
210 589 00 99 00 Adaptor Line
129 589 00 21 00 Test Box
210 589 08 63 00 Ecu Test Cable

Downloaded from www.Manualslib.com manuals search engine

Failure code	Test step	Item	Checking method	Requirement	Specified value	Possible cause
	Þ 1.0	· **Fuel pump:** - Fuel supply ratio	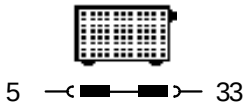	· Ignition:ON - Disconnect the fuel return pipe and connect the host to beaker to collect the supplied fuel	1 liter of fuel supply for max. 35 seconds	· Þ 2.0 · Fuel line
	Þ 2.0	· **Fuel pump:** - Current consumption	Multi tester(DC current) 	· Ignition:ON - Remove the fuel relay from the fuse and relay box in luggage compartment and connect the amperemeter between No.1 and No.3 in relay box(fuel pump relay removed position) for measuring current consumption	5 - 9 A	· Fuel pump

Downloaded from www.Manualslib.com manuals search engine

INJECTOR TEST

Preparation

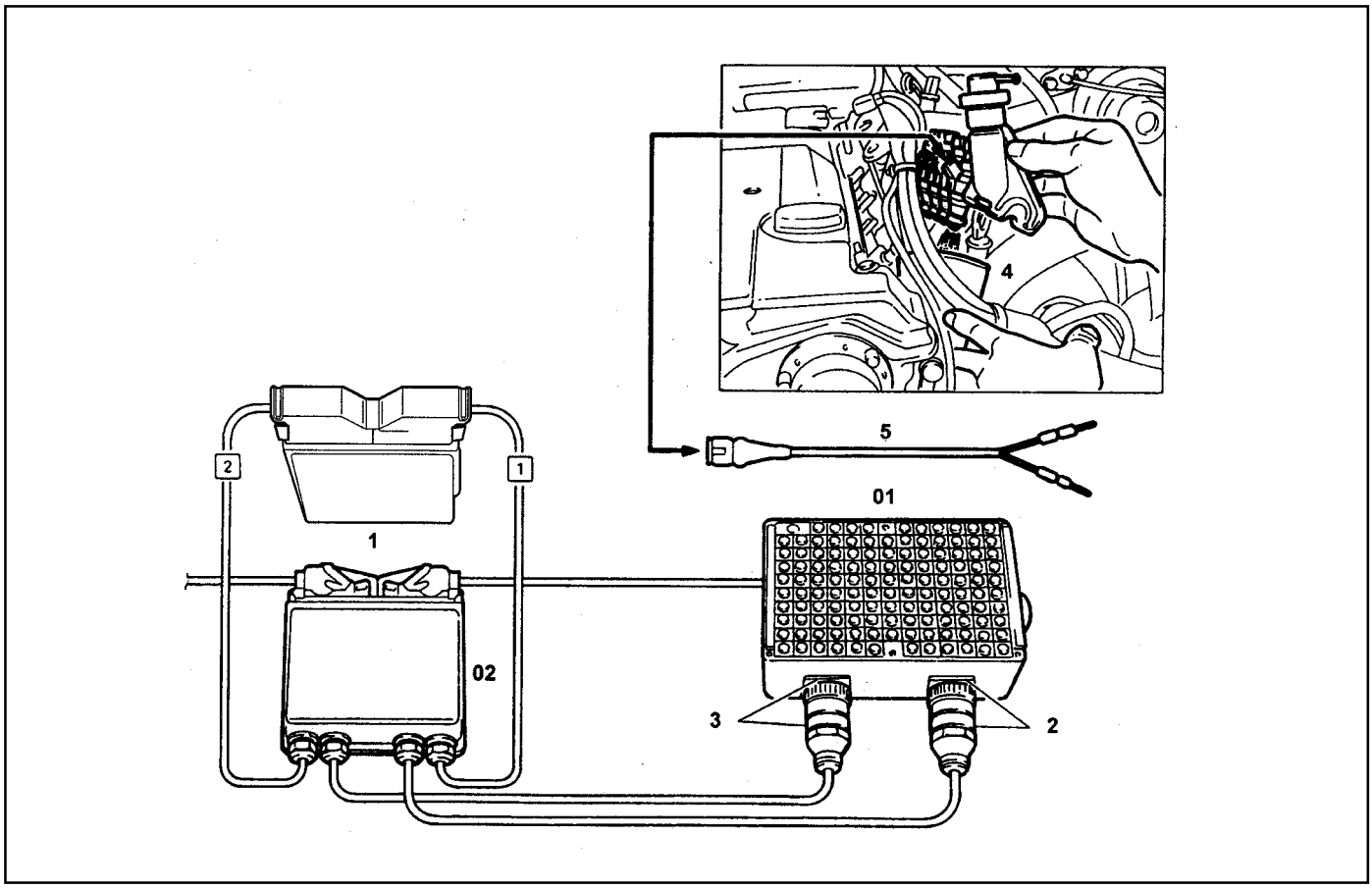

1 ECU
2 Test Coupling(No.1-60)
3 Test Coupling(No.61-120)
4 Measuring Beaker
5 Shop Made Cable
03 Test Box
04 ECU Test Cable

Connection of the Equipment

1. Connect the test box to the ECU as shown in the figure.
2. Remove the 2-pin coupling from injector.
3. Remove the fuel distributor and injector with a unit. At this time, do not remove the supply and return line.
4. Connect the shop made cable to the injector with a firing order.
5. Collect the fuel from injector.

Tools Required

129 589 00 21 00 Test Box

210 589 08 63 00 ECU Test Cable

Downloaded from www.Manualslib.com manuals search engine

Failure code	Test step	Item	Checking method	Requirement	Specified value	Possible cause
	Þ 1.0	· **Injector:** - Leakage test	5 — 33	· Ignition:ON - Remove the fuel distributor and fuel injector with a unit.	There should be no leaks and later drops from the injector	· Þ 2.0 · Injector
	Þ 2.0	· **Injector:** - Function test and spray pattern check	5 — 33	· Ignition:ON - Connect the shop made cable to the injector. - Collect the spraying fuel with a beaker - Connect the shop made cable to No.11(+) and No.5 (-) terminal in test box.	The spray pattern of the injector most show in the figure 10	· Injector

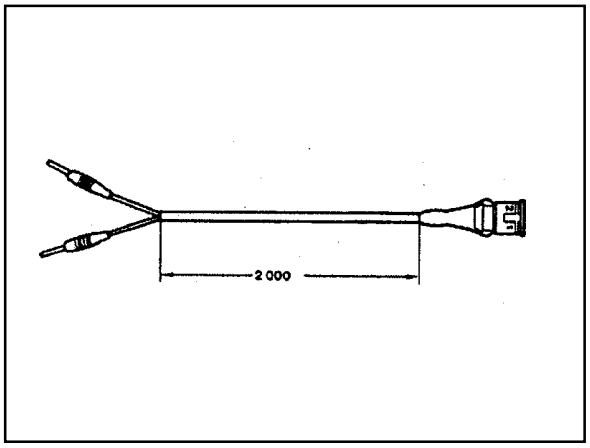

Figure 8. Shop Made Cable

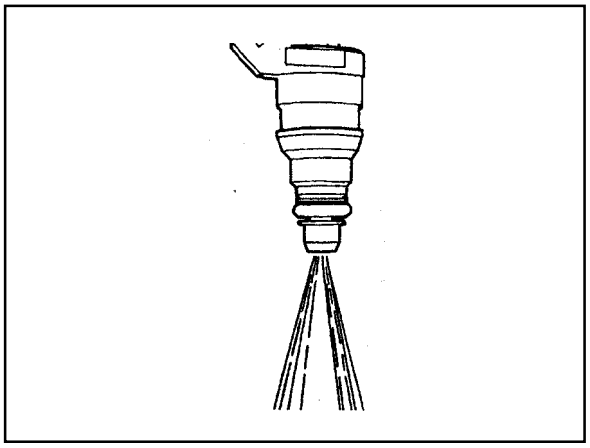

Figure 9. Fuel Injector Normal Spary Pattern

Downloaded from www.Manualslib.com manuals search engine

MAINTENANCE AND REPAIR

ON-VEHICLE SERVICE

ECU

Appearance

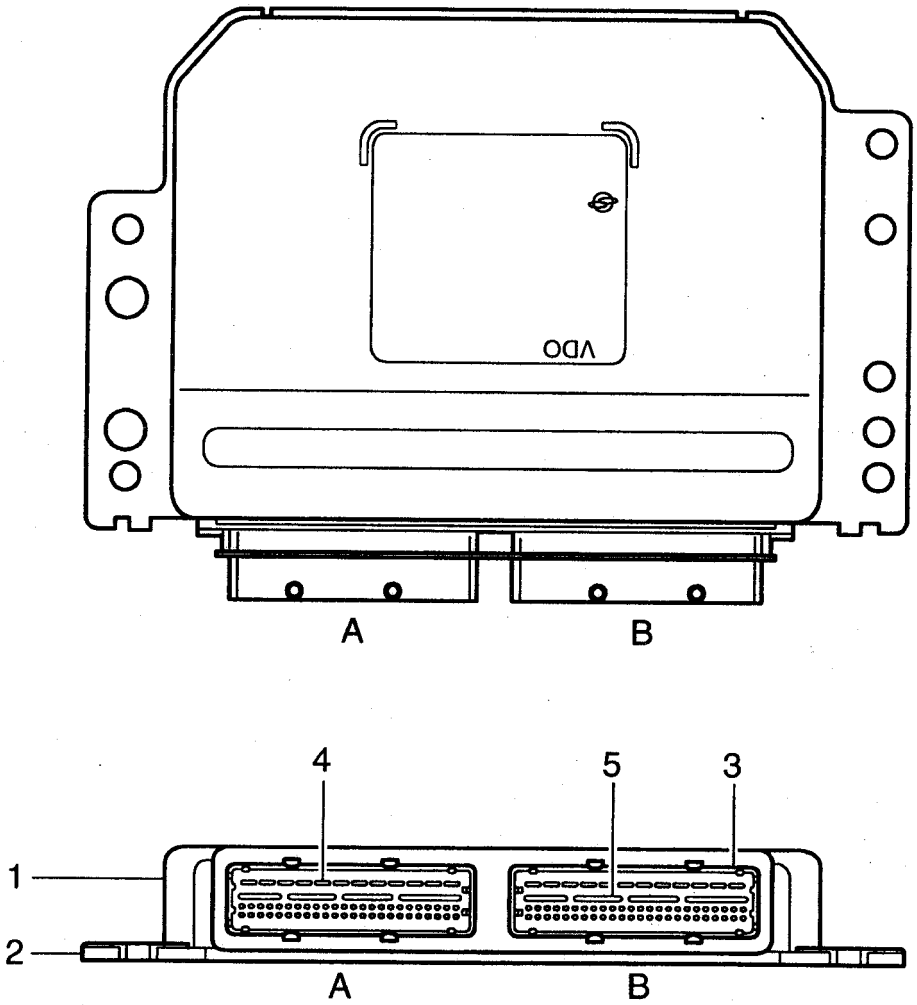

1 Cover
2 Plate
3 Connector
4 Flat pin
Vehicle side : number 1 - 12
Engine side : number 61 - 72
5 Pin
Vehicle side : number 13 - 60
Engine side : number 73 - 120
A Vehicle Connector : Black
B Engine Connector : Gray

Downloaded from www.Manualslib.com manuals search engine

Location

Engine ECU is located at the inside of cowl side trim in right bottom of instrument panel of passenger side.

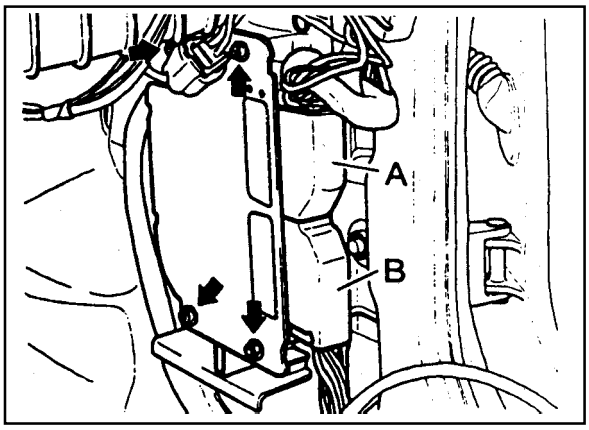

Removal & Installation Procedure

1. Turn the ignition switch to "OFF" position.
2. Disconnect the battery negative cable
3. Remove the cowl side trim form passenger side.
4. Unscrew four securing nuts for ECU from mounting bracket.

   Installation Notice

Tightening Torque	9 - 11 Nm

5. Pulling out the ECU from bracket.
6. Disconnect the vehicle side coupling(B).
7. Installation should follow the removal procedure in the reverse order.

Downloaded from www.Manualslib.com manuals search engine

ECU Pin Numbers and Descriptions

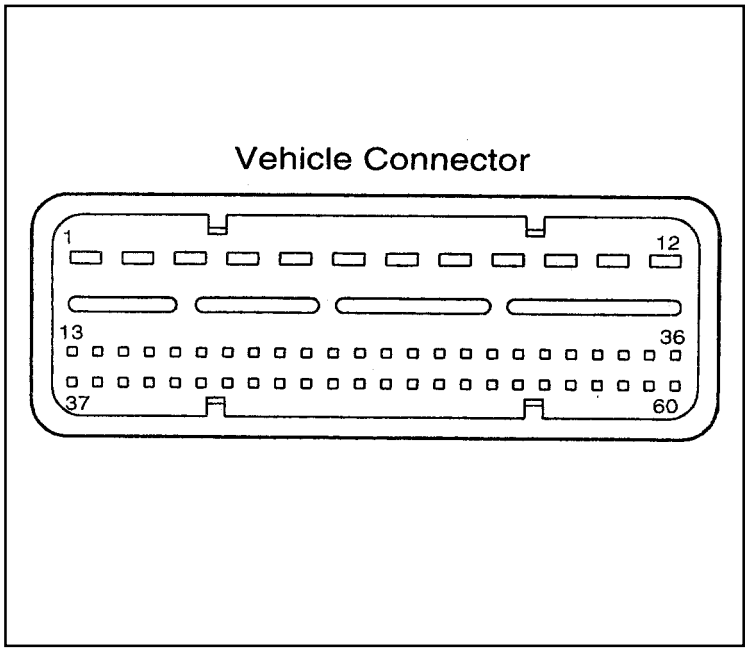

Vehecle Connector

Pin No.	Description	Abbreviation
1	-	-
2	Starter motor TM.50	TM.50
3	-	-
4	-	-
5	Electronic ground	GND
6	-	-
7	Lambda probe 2 heating	LSH2
8	-	-
9	Lambda probe 1 heating	LSH1
10	Power ground TM.31	TM.31
11	V-BATTERY TM.87	TM.87
12	V-BATTERY TM.30	TM.30
13	Immobilizer crypto read	WFS I/O
14	Immobilizer crypto write	WFS O
15	-	-
16	Lambda probe 1 ground	GND
17	Lambda probe 1 signal	LS1
18	-	-
19	Lambda probe 2 ground	GND
20	Lambda probe 2 signal	LS2

Downloaded from www.Manualslib.com manuals search engine

Pin No.	Description	Abbreviation
21	Brake switch	BRS
22	-	-
23	-	-
24	-	-
25	-	-
26	-	-
27	Air conditioning clutch relay	KLIKU
28	-	-
29	-	-
30	-	-
31	Pedal potentiometer 1 ground	GND
32	Pedal potentiometer 1 supply	SP1+5V
33	Fuel pump relay	KP
34	Tank purge valve	TEV
35	Engine fan(IGH)	ML
36	-	-
37	CAN-Low	CAN L
38	CAN-High	CAN H
39	-	-
40	-	-
41	-	-
42	-	-
43	-	KPI
44	Air conditioning	KLIMA
45	Electronic traction signal	ETS
46	-	-
47	Pedal potentiometer 1 signal	SP1S
48	Pedal potentiometer 2 signal	SP2S
49	Brake light switch	BLS
50	Pedal potentiometer 2 ground	GND
51	Pedal potentiometer 2 supply	SP2+2.5V
52	Cruise accelerate/Set	S+B
53	Cruise resume	WA
54	Cruise decelerate/Set	S-B
55	Cruise safety contact switch	KSK
56	-	-
57	Cruise off switch	AUS
58	Diagnostics(K-Line)	DIAG
59	Vehicle speed signal	V-SIG
60	Engine speed signal	TN-SIG

Downloaded from www.Manualslib.com manuals search engine

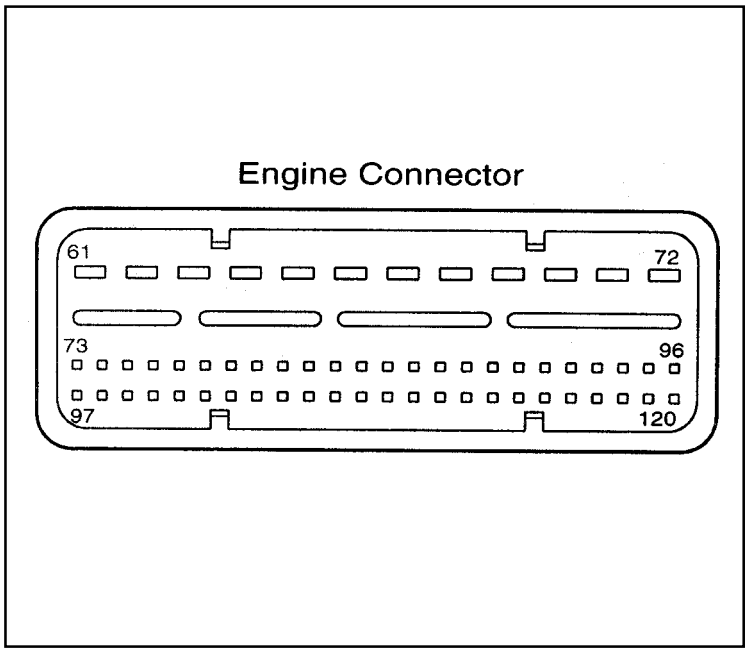

Engine Connector

Pin No.	Description	Abbreviation
61	-	-
62	-	-
63	Injector-cylinder 1	EV1
64	Injector-cylinder 2	EV4
65	Injector-cylinder 3	EV2
66	Injector-cylinder 4	EV3
67	E-GAS motor plus	M+
68	E-GAS motor minus	M-
69	Power ground TM.31	TM.31
70	-	-
71	Ignition coil cylinder 2+3	ZSB23
72	Ignition coil cylinder 1+4	ZSA14
73	Camshaft control	NWS
74	EGR (Exhaust Gas Recirculation)	EGR
75	-	-
76	Second air pump relay	SLP
77	-	-
78	Engine coolant temperature	MT
79	Intake air temperature ground	GND
80	Intake air temperature	LT

Downloaded from www.Manualslib.com manuals search engine

Pin No.	Description	Abbreviation
81	Hot film air mass signal	HFM
82	-	-
83	Pressure sensor supply	V-REF.PS
84	E-GAS potentiometer ground	-
85	E-GAS potentiometer 2 signal	IP2S
86	-	-
87	E-GAS potentiometer 1 signal	IP1S
88	-	-
89	-	-
90	-	-
91	-	-
92	-	-
93	-	-
94	-	-
95	-	-
96	-	-
97	-	-
98	-	-
99	Crankshaft sensor ground	KW-
100	Crankshaft sensor signal	KW+
101	-	-
102	Intake manifold pressure signal	PSAUG
103	Intake manifold pressure ground	GND
104	Camshaft sensor ground	NOWE-
105	Hot film air mass ground	GND
106	Camshaft sensor signal	NOWE+
107	-	-
108	Hot film air mass supply	V-REF.HFM
109	-	-
110	-	-
111	-	-
112	E-GAS potentiometer supply	V-REF.DK
113	-	-
114	-	-
115	-	-
116	-	-
117	Knock sensor 1 ground	GND
118	Knock sensor 1 signal	KS1
119	-	-
120	-	-

Downloaded from www.Manualslib.com manuals search engine

Application

Pin No.	Description	Abbreviation	E23 ENG, 5speed A/T	E23 ENG, 4speed A/T	E20 ENG, 4speed A/T
1	-	-	-	-	-
2	Starter motor TM.50	TM.50	●	●	●
3	-	-	-	-	-
4	-	-	-	-	-
5	Electronic ground	GND	●	●	●
6	-	-	-	-	-
7	Lambda probe 2 heating	LSH2	-	-	-
8	-	-	-	-	-
9	Lambda probe 1 heating	LSH1	●	●	●
10	Power ground TM.31	TM.31	●	●	●
11	V-BATTERY TM.87	TM.87	●	●	●
12	V-BATTERY TM.30	TM.30	●	●	●
13	Immobilizer crypto read	WFS I/O	●	●	●
14	Immobilizer crypto write	WFS O	●	●	●
15	-	-	-	-	-
16	Lambda probe 1 ground	GND	●	●	●
17	Lambda probe 1 signal	LS1	●	●	●
18	-	-	-	-	-
19	-	-	-	-	-
20	-	-	-	-	-
21	Brake switch	BRS	○	○	○
22	-	-	-	-	-
23	-	-	-	-	-
24	-	-	-	-	-
25	-	-	-	-	-
26	-	-	-	-	-
27	Air conditioning clutch relay	KLIKU	●	●	●
28	-	-	-	-	-
29	-	-	-	-	-
30	-	-	-	-	-

●:Standard, ○:Option

Downloaded from www.Manualslib.com manuals search engine

Pin No.	Description	Abbreviation	E23 ENG, 5speed A/T	E23 ENG, 4speed A/T	E20 ENG, 4speed A/T
31	Pedal potentiometer 1 ground	GND	●	●	●
32	Pedal potentiometer 1 supply	SP1+5V	●	●	●
33	Fuel pump relay	KP	●	●	●
34	Tank purge valve	TEV	●	●	●
35	Engine fan	ML	●	●	●
36	-	-	-	-	-
37	CAN-Low	CAN L	●	●	●
38	CAN-High	CAN H	●	●	●
39	-	-	-	-	-
40	-	-	-	-	-
41	-	-	-	-	-
42	-	-	-	-	-
43	-	-	-	-	-
44	Air conditioning	KLIMA	●	●	●
45	Electronic traction signal(ABD option only)	ETS	○	○	○
46	-	-	-	-	-
47	Pedal potentiometer 1 signal	SP1S	●	●	●
48	Pedal potentiometer 2 signal	SP2S	●	●	●
49	Brake light switch	BLS	○	○	○
50	Pedal potentiometer 2 ground	GND	●	●	●
51	Pedal potentiometer 2 supply	SP2+2.5V	●	●	●
52	Cruise accelerate/Set	S+B	○	○	○
53	Cruise resume	WA	○	○	○
54	Cruise decelerate/Set	S-B	○	○	○
55	Cruise safety contact switch	KSK	○	○	○
56	-	-	-	-	-
57	Cruise off switch	AUS	○	○	○
58	Diagnostics	DIAG	●	●	●
59	Vehicle speed signal	V-SIG	●	●	●
60	Engine speed signal	TN-SIG	●	●	●

Downloaded from www.Manualslib.com manuals search engine

Pin No.	Description	Abbreviation	E23 ENG, 5speed A/T	E23 ENG, 4speed A/T	E20 ENG, 4speed A/T
61	-	-	-	-	-
62	-	-	-	-	-
63	Injector-cylinder 1	EV1	●	●	●
64	Injector-cylinder 2	EV4	●	●	●
65	Injector-cylinder 3	EV2	●	●	●
66	Injector-cylinder 4	EV3	●	●	●
67	E-GAS motor plus	M+	●	●	●
68	E-GAS motor minus	M-	●	●	●
69	Power ground TM.31	TM.31	●	●	●
70	-	-	-	-	-
71	Ignition coil cylinder 2+3	ZSB23	●	●	●
72	Ignition coil cylinder 1+4	ZSA14	●	●	●
73	Camshaft control	NWS	●	●	●
74	EGR(Exhaust Gas Recirculation)	EGR	○	○	○
75	-	-	-	-	-
76	Second air pump relay	SLP	○	○	○
77	-	-	-	-	-
78	Engine coolant temperature	MT	●	●	●
79	Temperature ground	GND	●	●	●
80	Intake air temperature	LT	●	●	●
81	Hot film air mass signal	HFM	●	●	●
82	-	-	-	-	-
83	-	-	-	-	-
84	E-GAS potentiometer ground	-	●	●	●
85	E-GAS potentiometer 2 signal	IP2S	●	●	●
86	-	-	-	-	-
87	E-GAS potentiometer 1 signal	IP1S	●	●	●
88	-	-	-	-	-
89	-	-	-	-	-
90	-	-	-	-	-

Downloaded from www.Manualslib.com manuals search engine

Pin No.	Description	Abbreiation	E23 ENG, 5speed A/T	E23 ENG, 4speed A/T	E20 ENG, 4speed A/T
91	-	-	-	-	-
92	-	-	-	-	-
93	-	-	-	-	-
94	-	-	-	-	-
95	-	-	-	-	-
96	-	-	-	-	-
97	-	-	-	-	-
98	-	-	-	-	-
99	Crankshaft sensor ground	KW-	●	●	●
100	Crankshaft sensor signal	KW+	●	●	●
101	-	-	-	-	-
102	-	-	-	-	-
103	-	-	-	-	-
104	Camshaft sensor ground	NOWE-	●	●	●
105	Hot film air mass ground	GND	●	●	●
106	Camshaft sensor signal	NOWE+	●	●	●
107	-	-	-	-	-
108	Hot film air mass supply	V-REF.HFM	●	●	●
109	-	-	-	-	-
110	-	-	-	-	-
111	-	-	-	-	-
112	E-GAS potentiometer supply	V-REF.DK	●	●	●
113	-	-	-	-	-
114	-	-	-	-	-
115	-	-	-	-	-
116	-	-	-	-	-
117	Knock sensor 1 ground	GND	●	●	●
118	Knock sensor 1 signal	KS1	●	●	●
119	-	-	-	-	-
120	-	-	-	-	-

Downloaded from www.Manualslib.com manuals search engine

Removal & Installation Procedure

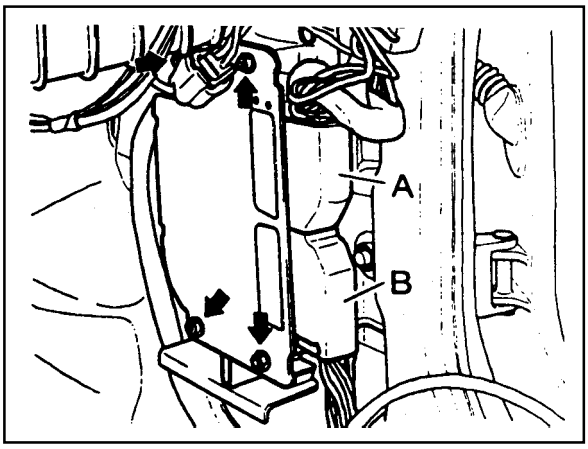

- **When removing the ECU only**

1. Turn the ignition switch to "OFF" position.
2. Disconnect the negative battery cable.
3. Disconnect the couplings from ECU.
4. Unscrew the left and right bolt (3) on bolt (1) and auxiliarly bracket and remove the auxiliarly bracket from the bracket assembly (2).

   Installation Notice

Tightening torque	(1)	6 - 8 Nm
	(3)	5 - 7 Nm

5. Unscrew the four bolts (5) and disconnect the ECU (6) from the bracket assenbly.

   Installation Notice

Tightening torque	5 - 7 Nm

6. Installation should follow the removal procedure in the reverse order.

- **When Removing the ECU with ABS or ABS/ASR Unit**

1. Turn the ignition switch to "OFF" position.
2. Disconnect the negative battery cable.
3. Disconnect the couplings from ECU.
4. Disconnect the coupling from ABS or ABS/ASR unit.
5. Unscrew the bolt (1) and the left and right flange nuts.

Tightening torque	6 - 8 Nm

6. Remove the ECU with ABS or ABS/ASR unit assembly.
7. Unscrew the left and right bolt (3) on the auxiliary bracket and remove the auxiliary bracket from the bracket assembly.

   Installation Notice

Tightening torque	5 - 7 Nm

8. Unscrew the bolts (5) and disconnect the ECU (6) from the bracket assenbly.

   Installation Notice

Tightening torque	5 - 7 Nm

9. Installation should follow the removal procedure in the reverse order.

Downloaded from www.Manualslib.com manuals search engine

FUEL PRESSURE REGULATOR

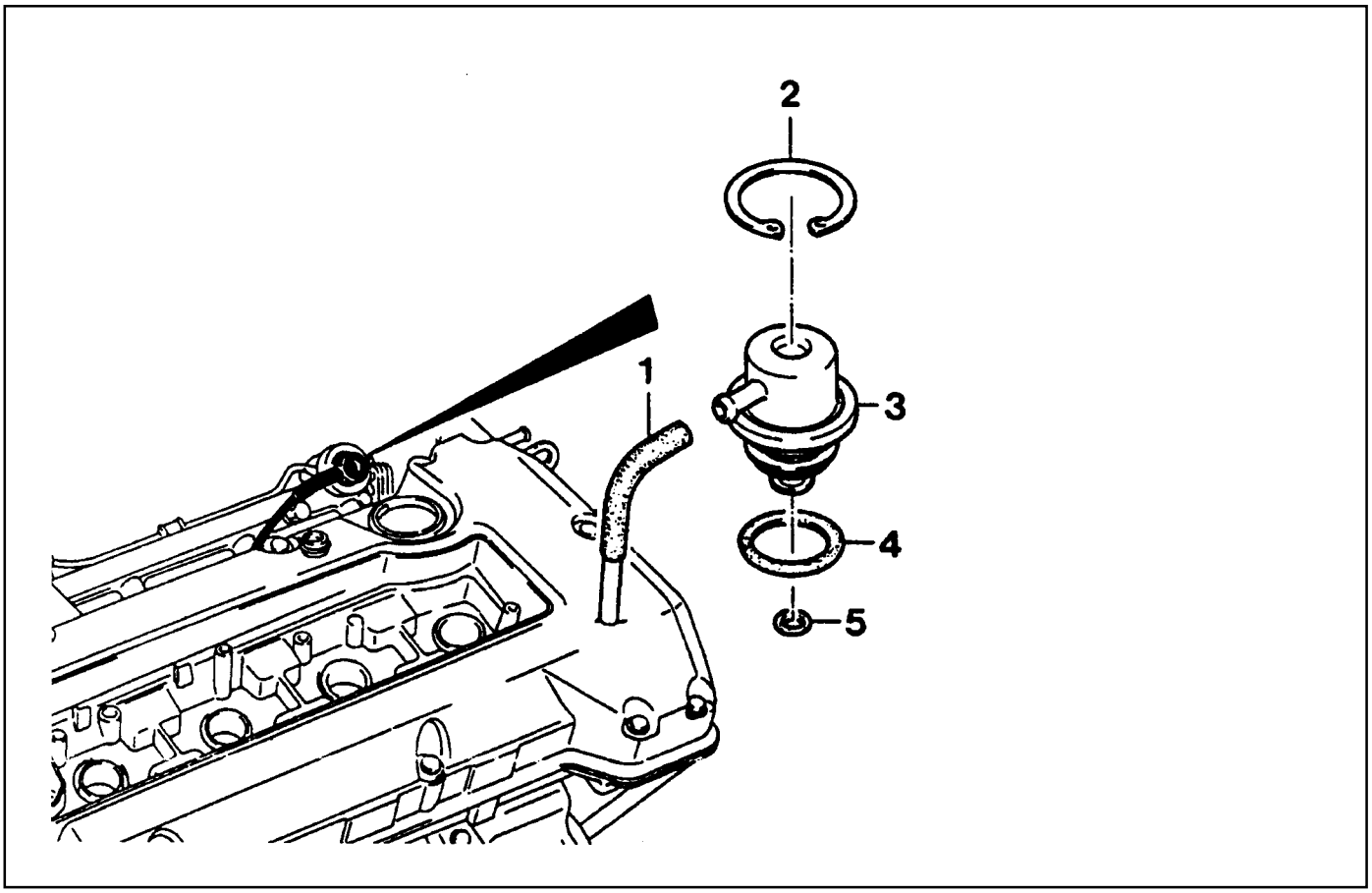

1 Vacuum Hose
2 Circlip
3 Fuel Pressure Regulator
4 O-ring ..... replace
5 O-ring ..... replace

Downloaded from www.Manualslib.com manuals search engine

Removal & Installation Procedure

1. Remove the fuel pressure test connector.

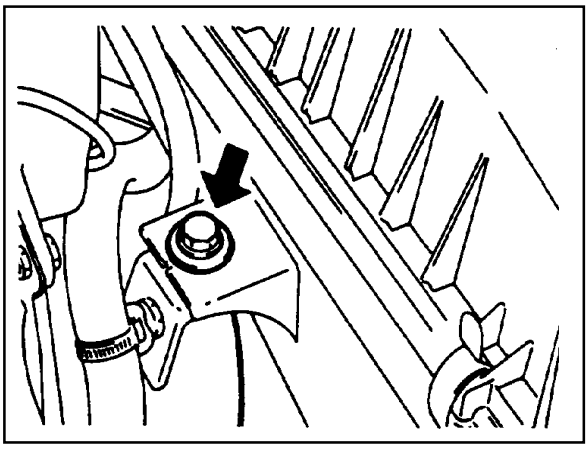

2. Discharge the pressure in fuel supply system by pressing the service valve.

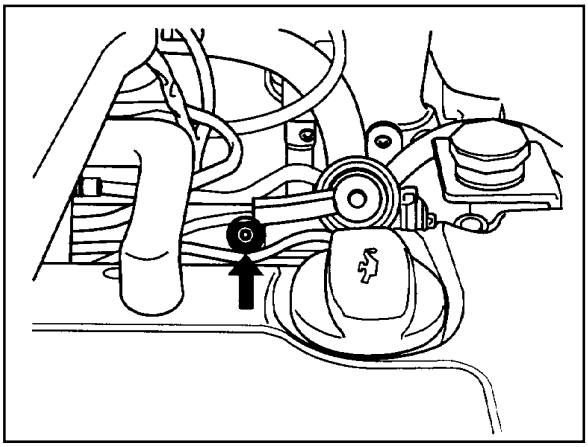

3. Disconnect the vacuum hose.
4. Disconnect the circlip and remove the fuel pressure regulator.
5. Apply the oil to O-ring lightly and then replace it.
6. Installation should follow the removal procedure in the reverse order.
7. Check for fuel pressure and internal leaks by operating the engine.

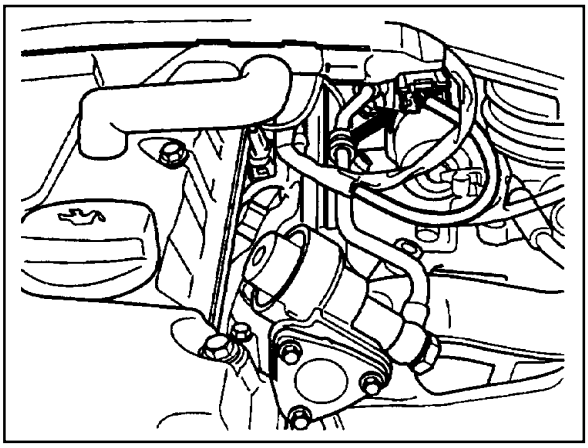

Downloaded from www.Manualslib.com manuals search engine

Function of the Fuel Pressure Regulator

The fuel pressure regulator maintains the fuel pressure in the fuel line with the pressure of 3.2 bars to 3.8 bars according to the intake manifold pressure. This operating pressure cannot be changed, and the fuel injection volume will be only determined by the injection time. Over supplied fuel returns to the fuel tank through the return line.

<Operating at full load>

There is no negative pressure applied to the spring chamber(9) during the full load, and it is separated from the fuel chamber(8) by the diaphragm(5).

When the fuel pressure goes up, the diaphragm forces the compression spring(6) in the direction of compression . At this moment, the valve(3) sticks to the diaphragm by the fuel pressure, and the fuel return line(2) opens. The fuel over supplied returns to the fuel tank through the return line.

2. Fuel return line
3. Valve
5. Diaphragm
6. Compression Spring
8. Fuel chamber
9. Spring Chamber

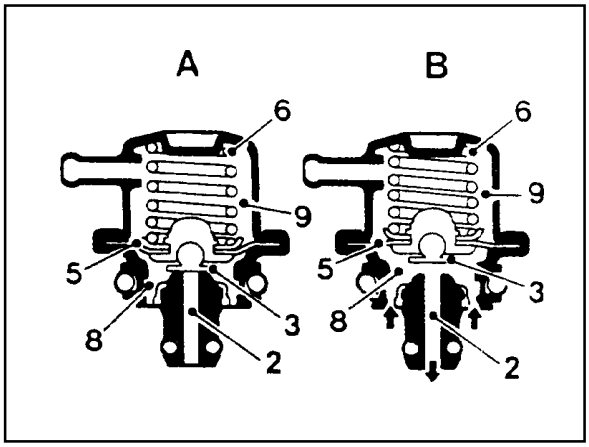

A. Valves Closed
B. Valves Opened

The pressure difference between the fuel pressure and the intake manifold is about 3.8 bars during the full load.

1. Fuel pressure Regulator
2. Intake Manifold
3. Fuel return(to fuel tank)
4. Fuel supply(form fuel pump)
5. Fuel pressure(approx. 3.8 bars)
6. Intake Manifold Negative Pressure(0 bar)

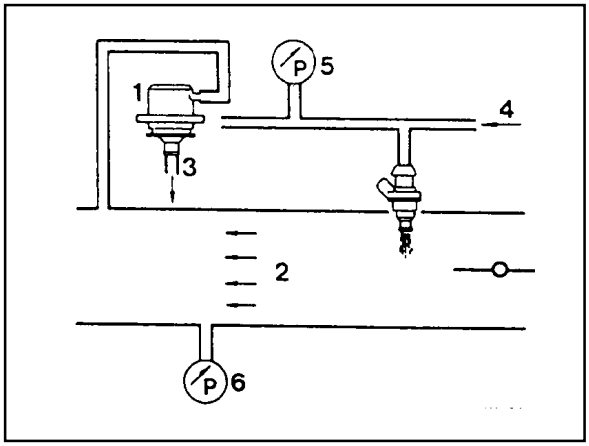

<Operating at Idle and partial load>

The spring chamber(9) is connected to the intake manifold with the vacuum hose at the intake pipe connection(7). The negative pressure generated in the intake manifold activates the diaphragm, and thus the fuel pressure gets reduced to the rate of the operating extent of the diaphragm by the intake manifold's negative pressure.

Consequently, the fuel pressure in the fuel distributor changes by the intake manifold's negative pressure, and the injector's fuel pressure gets reduced independently to the throttle valve's position. Thus, the fuel injection volume can only be determined according to the injector's injecting duration.

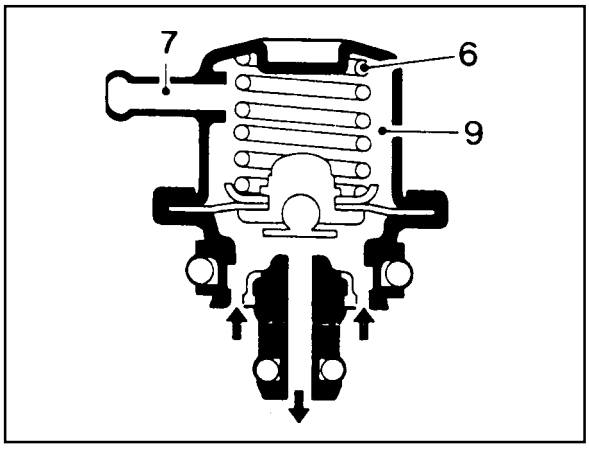

Downloaded from www.Manualslib.com manuals search engine

The pressure difference between the fuel pressure and the intake manifold is approx. 3.2 bars during idling.

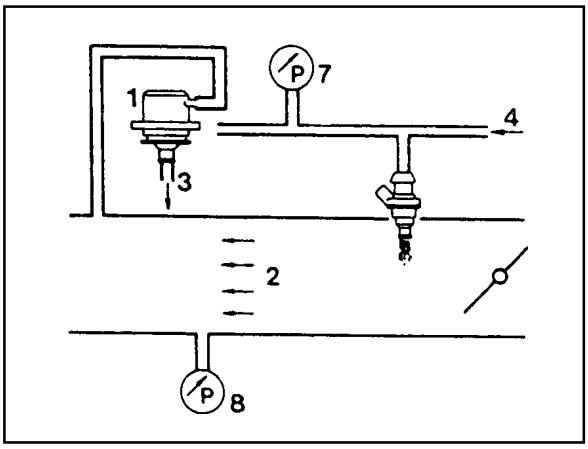

1. Fuel pressure Regulator
2. Intake Manifold
3. Fuel Return(to fuel tank)
4. Fuel Supply(from fuel pump)
7. Fuel Pressure(approx. 3.2 bars)
8. Intake Manifold Negative Pressure(0.6 bars)

<Fuel Pressure Diagram>

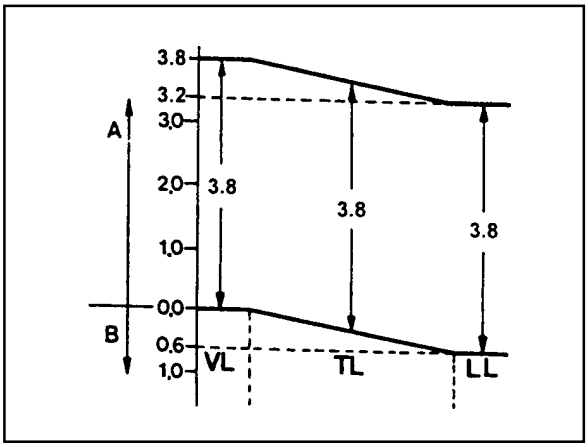

A. Fuel pressure
B. Intake Manifold Negative Pressure
LL. Idling
TL. Partial load
VL. Full load

Downloaded from www.Manualslib.com manuals search engine

FUEL DISTRIBUTOR

Preceding Work : Removal of intake air duct

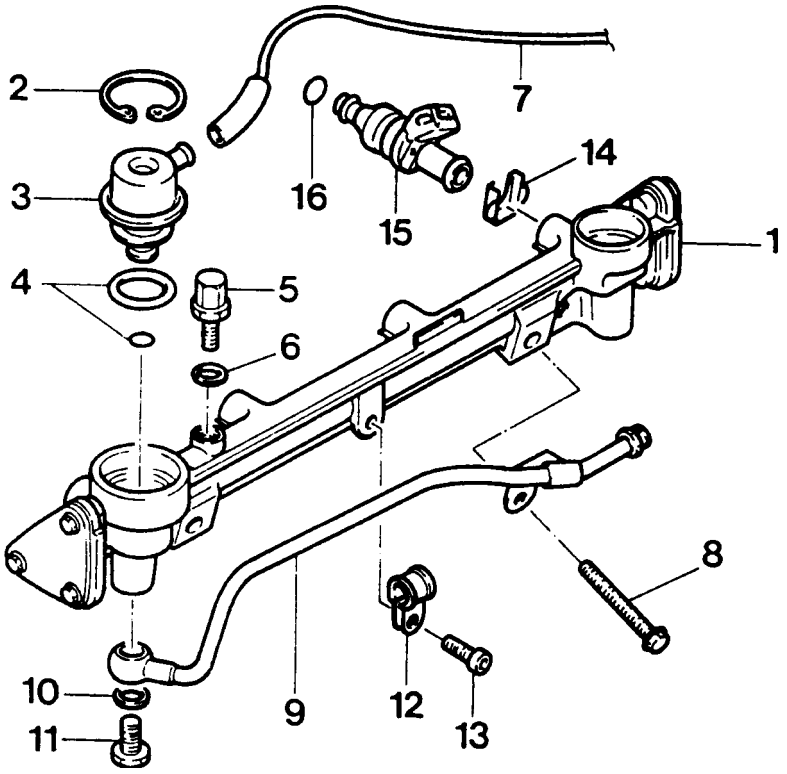

1 Fuel Distributor
2 Circlip
3 Fuel Pressure Regulator
4 O-ring
5 Fuel Pressure Test Connector
6 Seal Ring
7 Vacuum Hose
8 Combination Bolt (M8 X 120) ..... 22.5-27.5 Nm
9 Fuel Return Line
10 Seal Ring
11 Hollow Bolt ..... 22.5-27.5 Nm
12 Clamp
13 Bolt (M8 X 22) ..... 9-11 Nm
14 Injector Bracket
15 Injector
16 O-ring

Downloaded from www.Manualslib.com manuals search engine

Removal & Installation Procedure

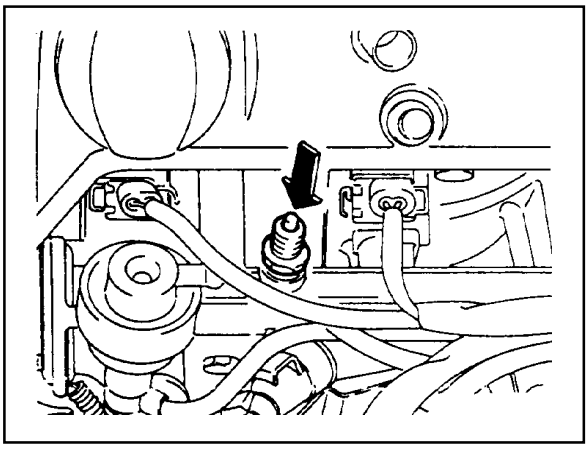

1. Discharge the fuel pressure from the fuel pressure test connector by pushing service valve (arrow).

2. Disconnect the battery ground cable.

3. Disconnect the vacuum hose from the fuel pressure regulator.

4. Disconnect the cable from ignition coil.

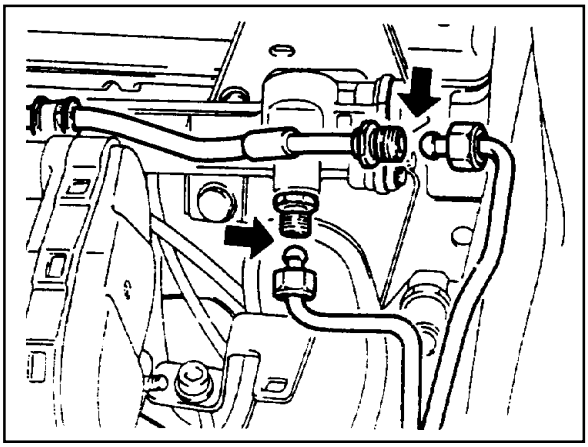

5. Remove the fuel return and supply line.

   Installation Notice

Tightening Torque	22.5 - 27.5 Nm

   Notice

   - For removal, cover around parts with cloths not to bestained by fuel.
   - In case of checking the injector only, do not remove the fuel return and supply line.

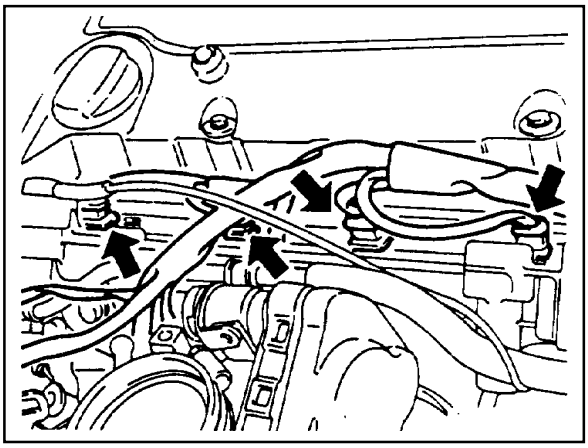

6. Remove the four injector connectors (arrows).

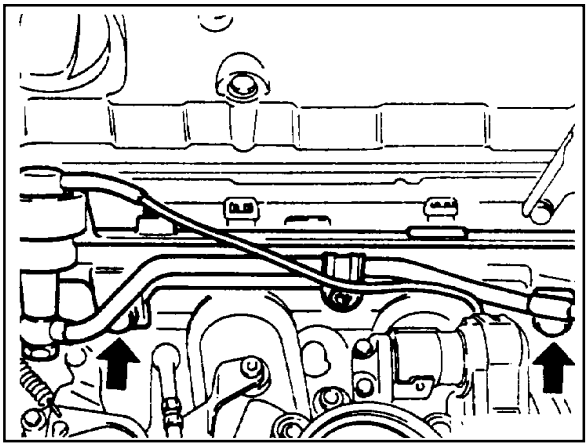

7. Unscrew the two combination bolts (8).

   Installation Notice

Tightening Torque	22.5 - 27.5 Nm

Downloaded from www.Manualslib.com manuals search engine

8. Pull out the injector from intake manifold and remove the fuel distributor.

   Notice

   Replace the injector O-ring with new one.

9. Installation should follow the removal procedure in the reverse order.

10. Check for fuel pressure and internal leakage by operating the engine.

Ignition Coil & Cable

- Ignition coil T1/1 No.1 cylinder + No.4 cylinder
- Inition coil T1/2 No.1 cylinder + No.4 cylinder

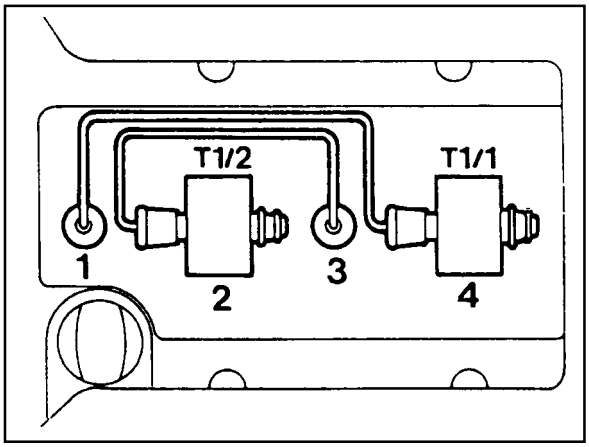

Downloaded from www.Manualslib.com manuals search engine

Fuel Pressure Test

1. Turn the ignition switch to "OFF" position.
2. Remove the fuel pressure test connector.

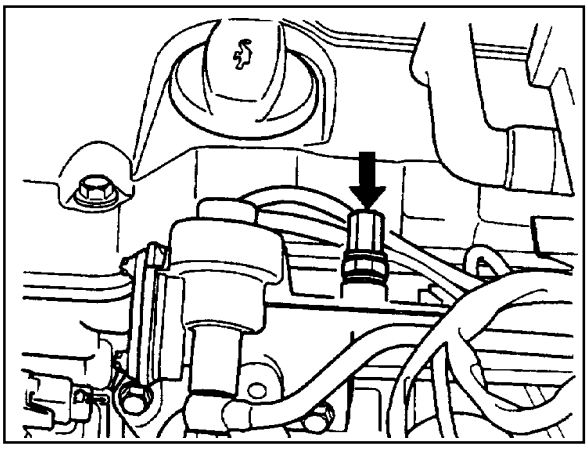

3. Connect the fuel pressure gauge to the fuel pressure test connector.
4. Test the fuel pressure at idling by operating the engine.

Vacuum Hose Connected (bar)	3.2 - 3.6
Vacuum Hose Disconnected (bar)	3.7 - 4.2

5. Replace the pressure regulator diaphragm if out of the specification.

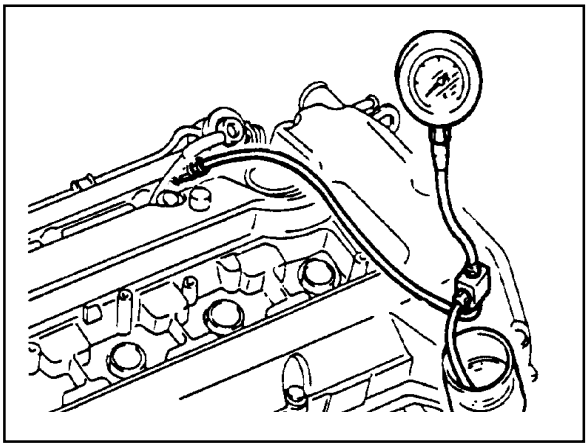

Downloaded from www.Manualslib.com manuals search engine

Internal Leakage Test

1. Connect the fuel pressure gauge to the fuel pressure test connector.
2. Stop the engine for approx. 30 minutes and then check the fuel pressure changes.

Pressure Change	Possible Cause
Fuel pressure drops slowly	· Fuel leakage at the injector • Faulty fuel pressure regulator's diaphragm and O-ring.
Fuel pressure drops rapidly	• Faulty check valve in the fuel pump.

3. If there is no change in fuel pressure and maintain the following pressure over 30 minutes, it is normal.

Fuel Pressure(bar)	≥2.5

Discharging the pressure in fuel system

1. Remove the fuel pressure test connector.

   Installation Notice

Tightening Torque	22.5 - 27.5 Nm

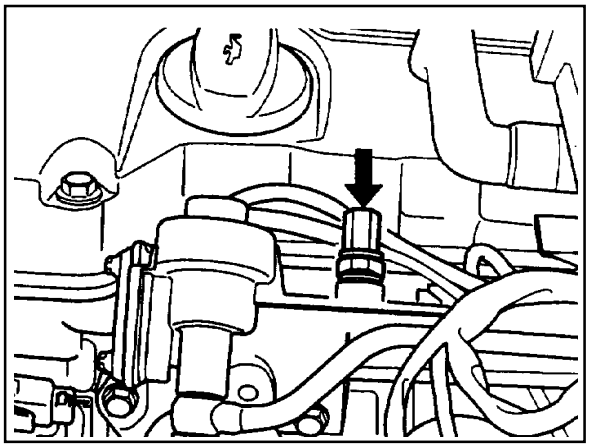

2. Remove the fuel pressure in fuel system by pressing the service valve with a clean, pointy tool.

   Notice

   Place a cloth so that the fuel doesn't stain around.

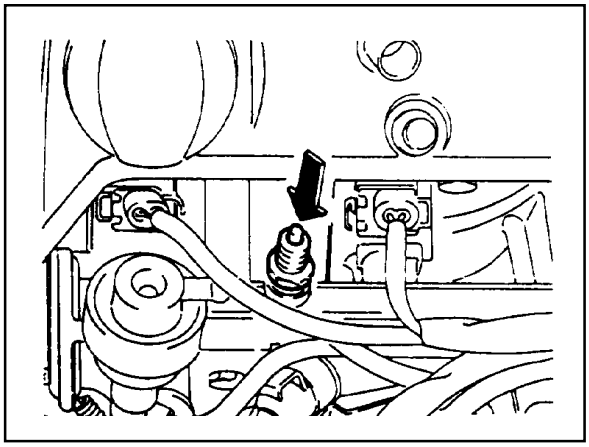

Downloaded from www.Manualslib.com manuals search engine

INJECTOR

Preceding Work : Removal of fuel distributor

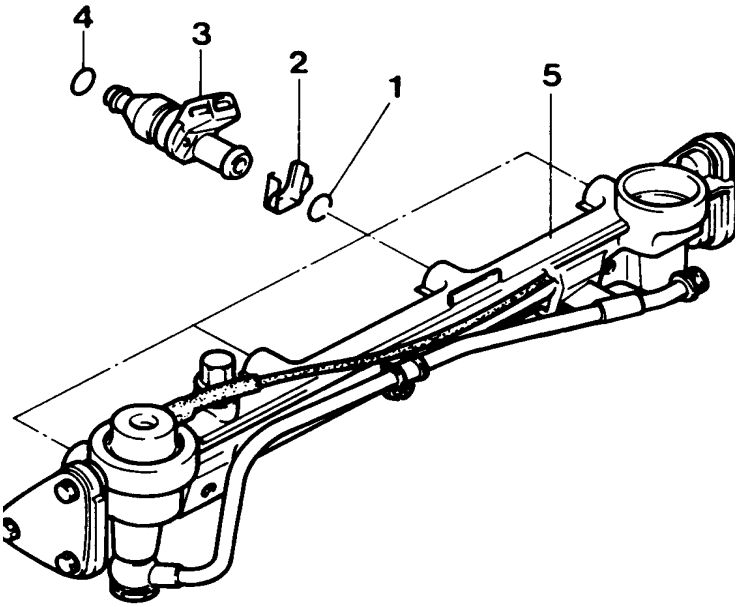

1 O-ring ..... Replace, if damaged
2 Injector Bracket
3 Injector
4 O-ring ..... Replace, if damaged
5 Fuel Distributor

Downloaded from www.Manualslib.com manuals search engine

Removal & Installation Procedure

1. Remove the O-ring.
   Check for damage and replace it if necessary.
2. Remove the injector bracket from the injector.

   Installation Notice

   Exactly seat the anti-twist lock into the square groove in injector.
3. Separate the injector from the fuel distributor.

Inspection & Maintenance

Inspection of the Injector operation and spray pattern

1. Connect the contact box to the ECU.
2. Connect the shop made test plug to the injector and place it into the tank.
3. Position the ignition switch to ON.
4. Connect the pin No.11 and No.5 of the contact box with a test cable.
5. Check the injector spray pattern.

   Notice

   Replace the injector if the injector spray pattern is abnormal or the fuel doesn't inject.

Injector Resistance Inspection

1. Remove the injector connector.
2. Measure the injector coil resistance using a resistance tester.

Specified Value	14 - 17 W

   Notice

   Replace the injector if the measured values is out of the specified values. Check the connector and wire connection between the ECU and the injector if the measured values are normal.

Downloaded from www.Manualslib.com manuals search engine

The Injector Spray Pattern Check

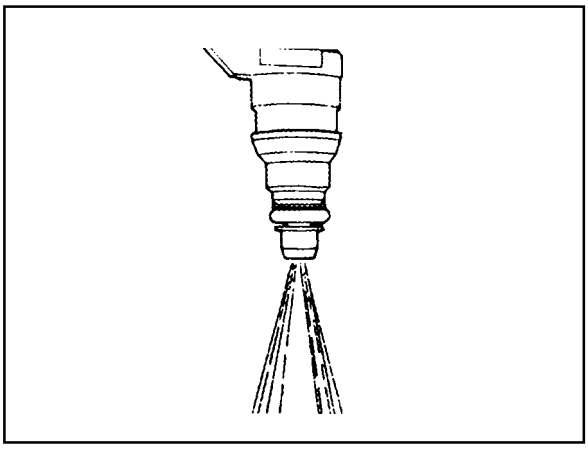

1. Connect the test box (129 589 00 21 00) to the ECU.
2. Disconnect the connector from connector.
3. Disconnect the fuel distributor and injector with a unit from engine without removing the fuel supply and return line.

   Notice

   Prepare the beaker for taking the poping fuel.
4. Connect either end of shop made cable to the injector.
5. Connect the other end of shop made cable to the No.11 and No.5 terminal of the test box.
6. Turn the ignition switch to "ON" position.
7. Check the injector for normal spray pattern as shown in the figure. Check injector for leaks or later drops.

   Notice

   Refer to fuel injector test of engine diagnosis in this section for detailed information.

Downloaded from www.Manualslib.com manuals search engine

FUEL FILTER

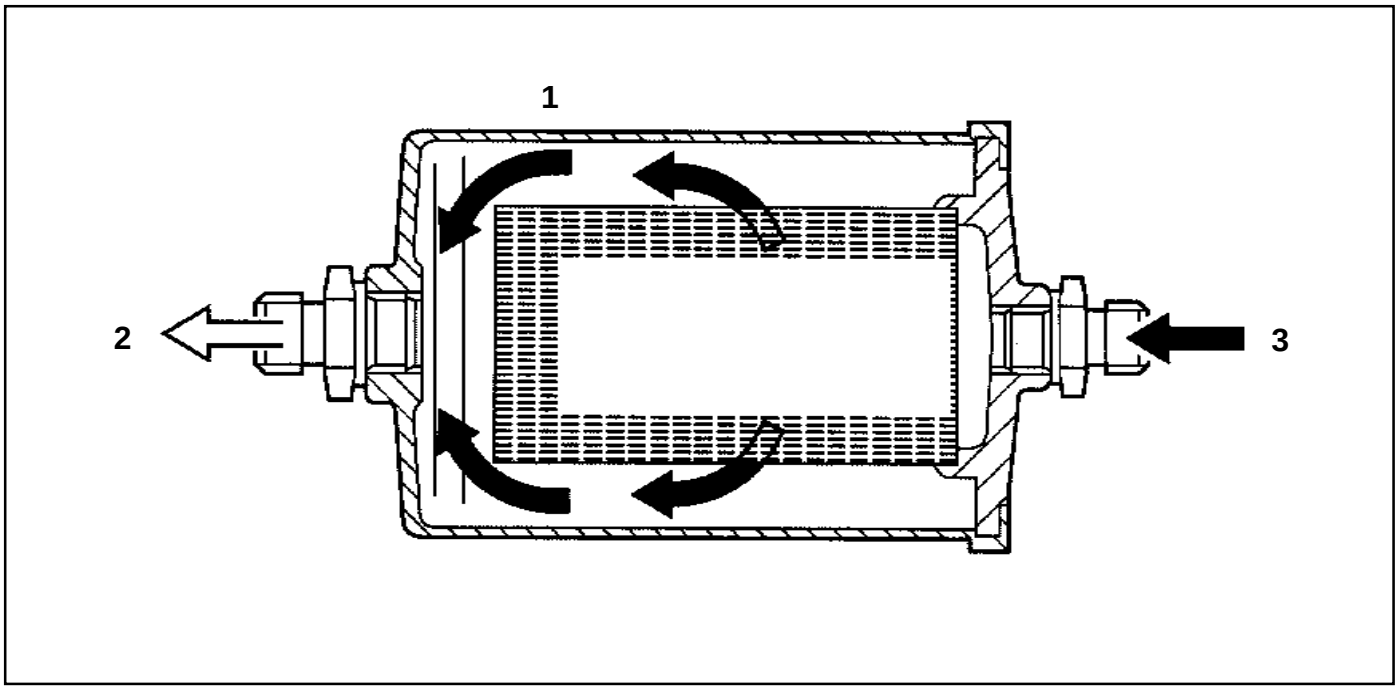

1 Fuel Filter
2 Outlet
3 Inlet

Removal & Installation Procedure

1. Open the fuel tank cap and remove the fuel tank pressure.
2. Remove the fuel out (2) and in (3).

   Installation Notice

Tightening Torque	25 - 30 Nm

3. Remove the mounting bracket bolt (4) and remove the fuel filter (1).

   Installation Notice

Tightening Torque	4 - 8 Nm

   Notice

   Place the fuel pump pad. There may be a corrosion due to the contact between the fuel filter and the bracket.

4. Check for leaks by operating the engine.

   Notice

   Installation should follow the removal procedure in the reverse order.

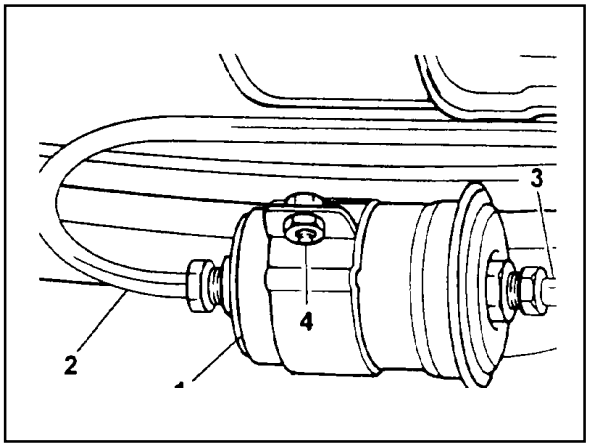

Downloaded from www.Manualslib.com manuals search engine

FUEL PUMP

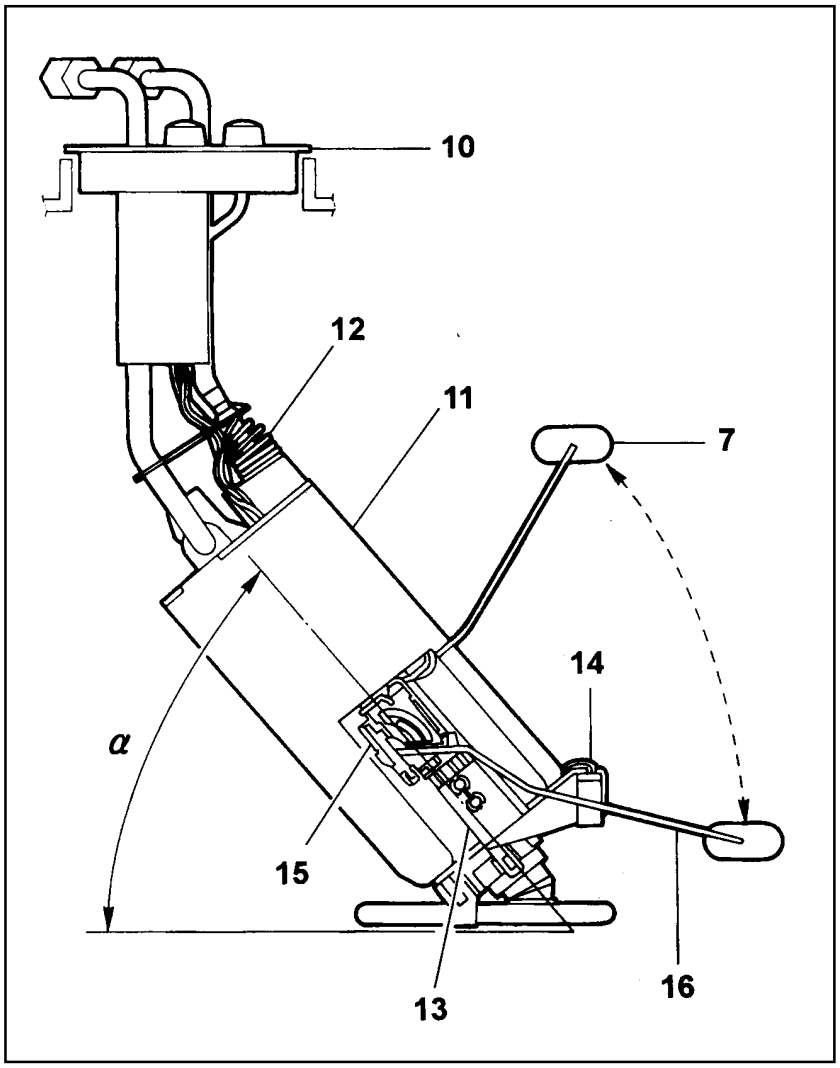

1 Reservoir Tank
2 Fuel Sensor (float/arm)
3 Resistance
4 Wiring Connector
5 Fuel Supply Pipe
7 Float
10 Flange and Harness Assembly
11 Fuel Pump
12 Spring
13 Thermister Housing
14 Thermister
15 Resistor Card and Wiper
16 Float Arm

Requirements for Fuel Pump

Item	Specified Value	Item	Specified Value
System pressure	3.8 bar	Minimum delivery at 8V	30 Litre/Hr
Maximum pressure	8.5 bar (12 V)	Operating voltage	8 V
Minimum pressure	5.0 bar (12 V)	Maximum allowable current	7.5 A
Nominal voltage	12 V	Ambient temperature	-30 ~ +70°C
Minimum amount of fuel supply	114 Liter/Hr (12 V, 3.8 bar, -30 ~ +70°C)	Maximum amount of fuel supply	165 Liter/Hr (12V, 3.8 bar, -30 ~ +70°C)

Downloaded from www.Manualslib.com manuals search engine

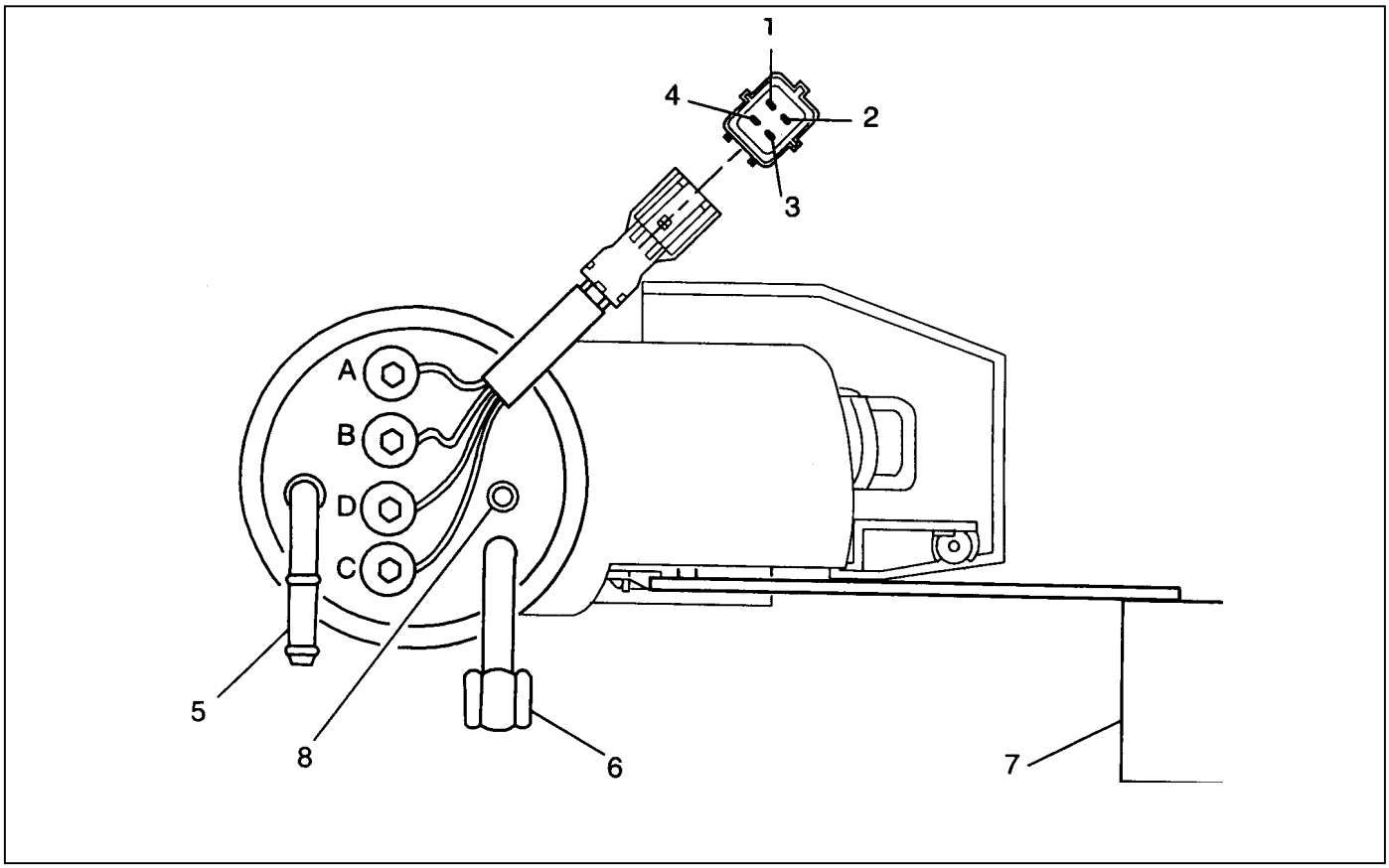

1 Fuel Pump Connector Wiring
2 Fuel Return Pipe
3 Fuel Supply Pipe
4 Bolts
5 Fuel Return Pipe
6 Fuel Supply Pipe
7 Float
8 Ground Stud (Sender "-")

Harness Location & Connector		COLOR	USE
1	A	Pump "+"	2.0 BR
2	B	Thermister "+"	0.5 W
3	C	Ground	2.0 B
4	D	Sender Unit "+"	0.5 RY

Downloaded from www.Manualslib.com manuals search engine

Tools Required

661 589 00 46 00 Cap Remover

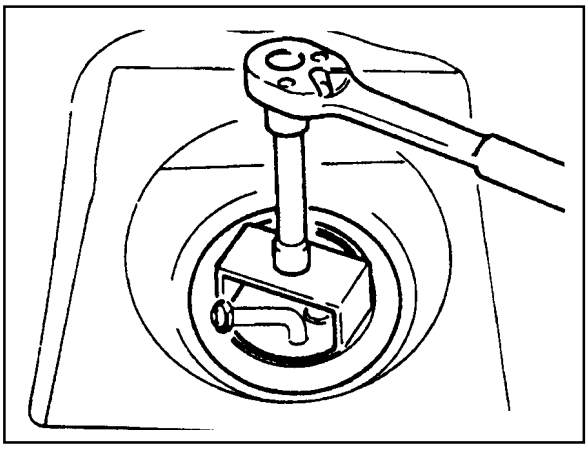

Removal & Installation Procedure

1. Disconnect the negative battery cable.
2. Disconnect the harness connector (1).
3. Disconnect the fuel supply (6) and return (5) pipes.
4. Using a special tool, Unscrew the eight fuel retaining bolts and remove the pump from fuel tank.

   Notice

   Check the condition of the seal and replace if necessary.

   Drain the fuel before removing the pump.

Downloaded from www.Manualslib.com manuals search engine

Measure the Fuel Delivery From the Fuel Pump

1. Disconnect the return pipe from fuel distributor and insert the appropriate hose into it.
2. Place the hose end into the beaker with the minimum capacity of 1Liter.
3. Turn the ignition switch to "ON" position.
4. Connect the terminal No.33 and No.5 of ECU with a service wire.
5. Measure the fuel delivery from the fuel pump.

Specifed Value	1Liter/max.35sec.

Notice

Check the fuel filter and fuel line when the fuel delivery is not within specified value.

Measure the Current Consumption of Fuel Pump

1. Remove the fuel pump relay from fuse and relay box in trunk, and turn the ignition switch to "ON" position.
2. Using a multi-tester, measure the current consumption by connecting the terminal No.1 and No.3.

Specifed Value	5 - 9

Notice

Replace the fuel pump relay if the measured value is over 9A.

Downloaded from www.Manualslib.com manuals search engine

PURGE SWITCHOVER VALVE

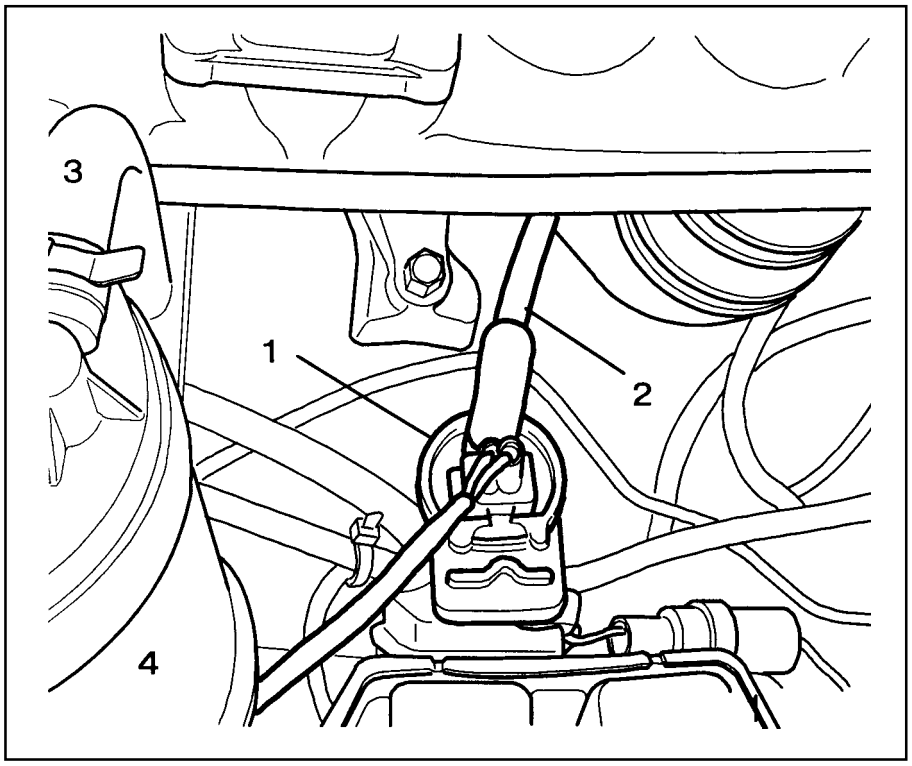

1 Purge Control valve
2 Line to engine
3 Line to canister
4 Canister

Functions

The fuel vaporization control system is installed to inhibit the fuel vaporized gas from discharging into the atmosphere. The fuel vaporized gas that is accumulated in the canister abstracts through the purge switchover valve purification during the engine combustion (except the decreasing mode) and coolant temperature of over 80℃. For this reason, the ECU transacts the engine speed, air inflow quantity, coolant temperature, and intake temperature.

The purge switchover valve is activated by the ECU frequency according with the engine rotating speed to adjust the purification rate. The purification rate is determined by the continuous valve opening interval.

The purge switchover valve is activated by the ECU for the following conditions :

- Coolant temperature of over 80℃
- Engine speed of over 1000rpm
- 2 Minutes after starting
- When the fuel cut-off mode is not activated

Downloaded from www.Manualslib.com manuals search engine

Test

1. Maintain the normal temperature and idling state by operating the engine.
2. Connect the ECU terminal No.11 and No.34 and check for normal operation through the output waves using the scanner.

   Notice

   Test during purge control switchover valve operation after the minimum of 1 minute after the engine turned on.
3. Connect the ECU terminal No.34 and No.10 and check for current consumption during the ignition switch ON.

Specified Value	0.3 - 0.5

4. Remove the line to canister and measure the pressure with the vacuum pressure gauge.

Specified Value	> 50mbar (after approx. 1min.) purge switchover valve operates at this time

   Notice

   Test while at normal temperature and at idling state by operating the engine.

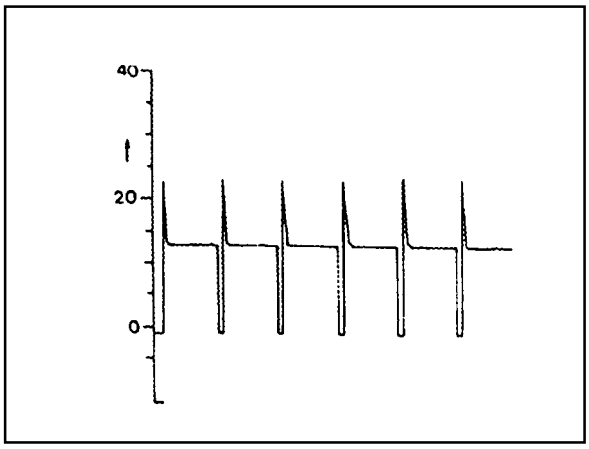

Purge switchover valve output wave

Downloaded from www.Manualslib.com manuals search engine

VACUUM SYSTEM

Manual Transmission

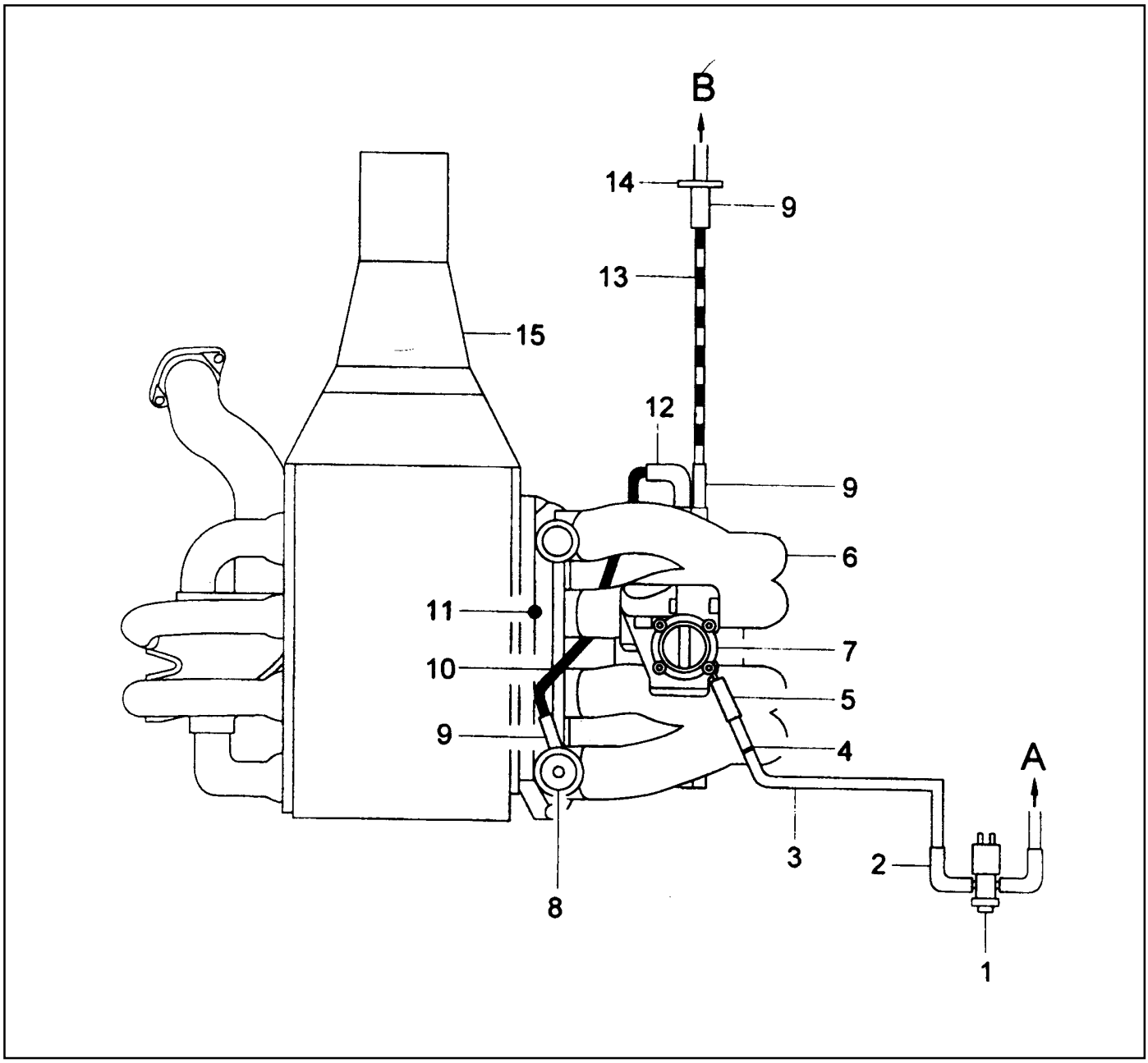

1 Purge Switchover Valve
2 Molded Hose
3 Fuel Tube (270 mm)
4 Clamp
5 Molded Hose
6 Intake Manifold
7 Throttle Body
8 Fuel Pressure Regulator
9 Vacuum Line Rubber Hose (40 mm)
10 Vacuum Tube (Gray, 540 mm)
11 Rubber Cap
12 Molded Hose
13 Vacuum Tube (Brown)
14 Connector

Downloaded from www.Manualslib.com manuals search engine

Automatic Transmission

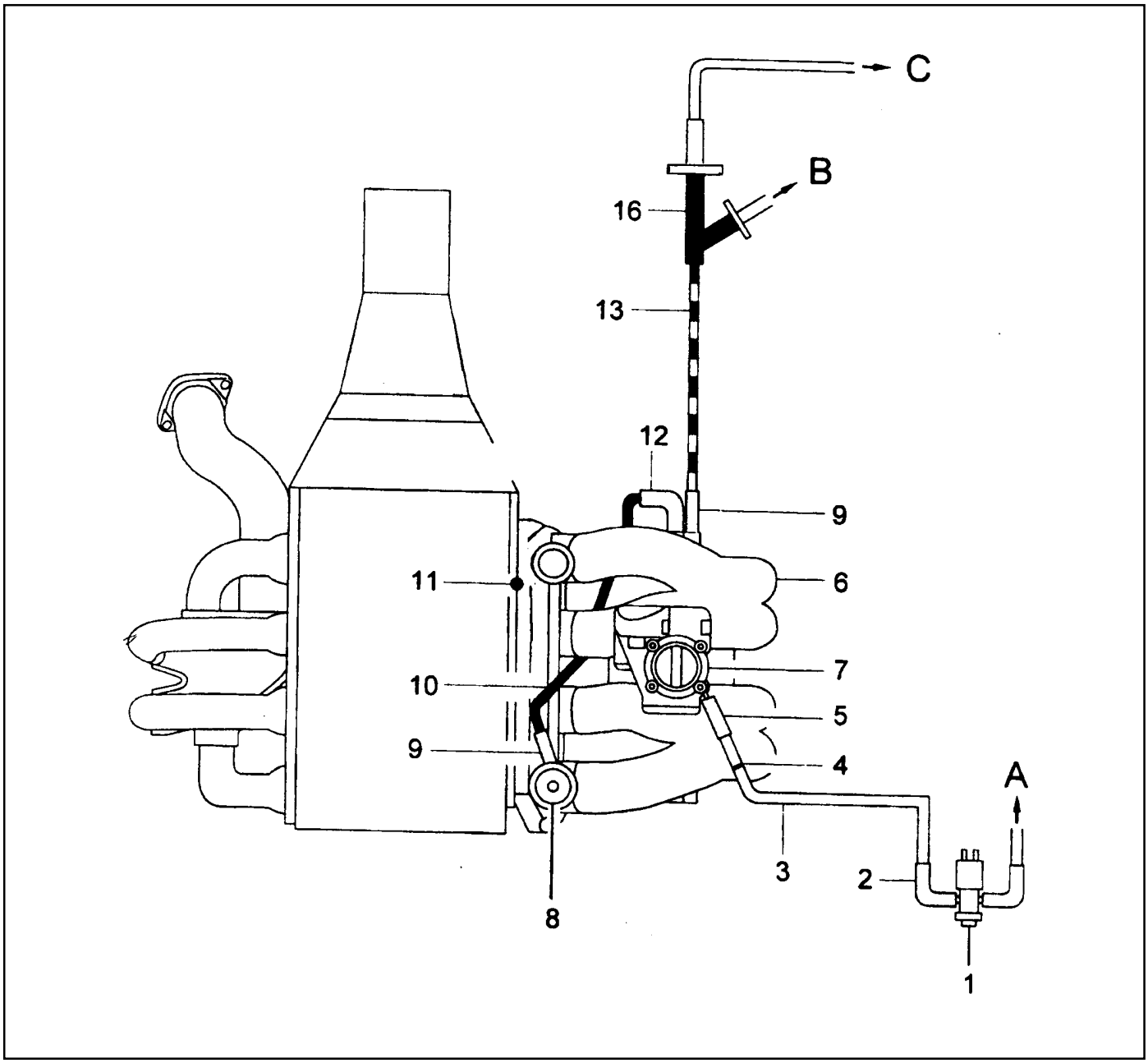

15 Manual Transmission
16 Distributor

A. To Canister
B. To Auto Locking Hub

Downloaded from www.Manualslib.com manuals search engine

CRANKSHAFT POSITION SENSOR

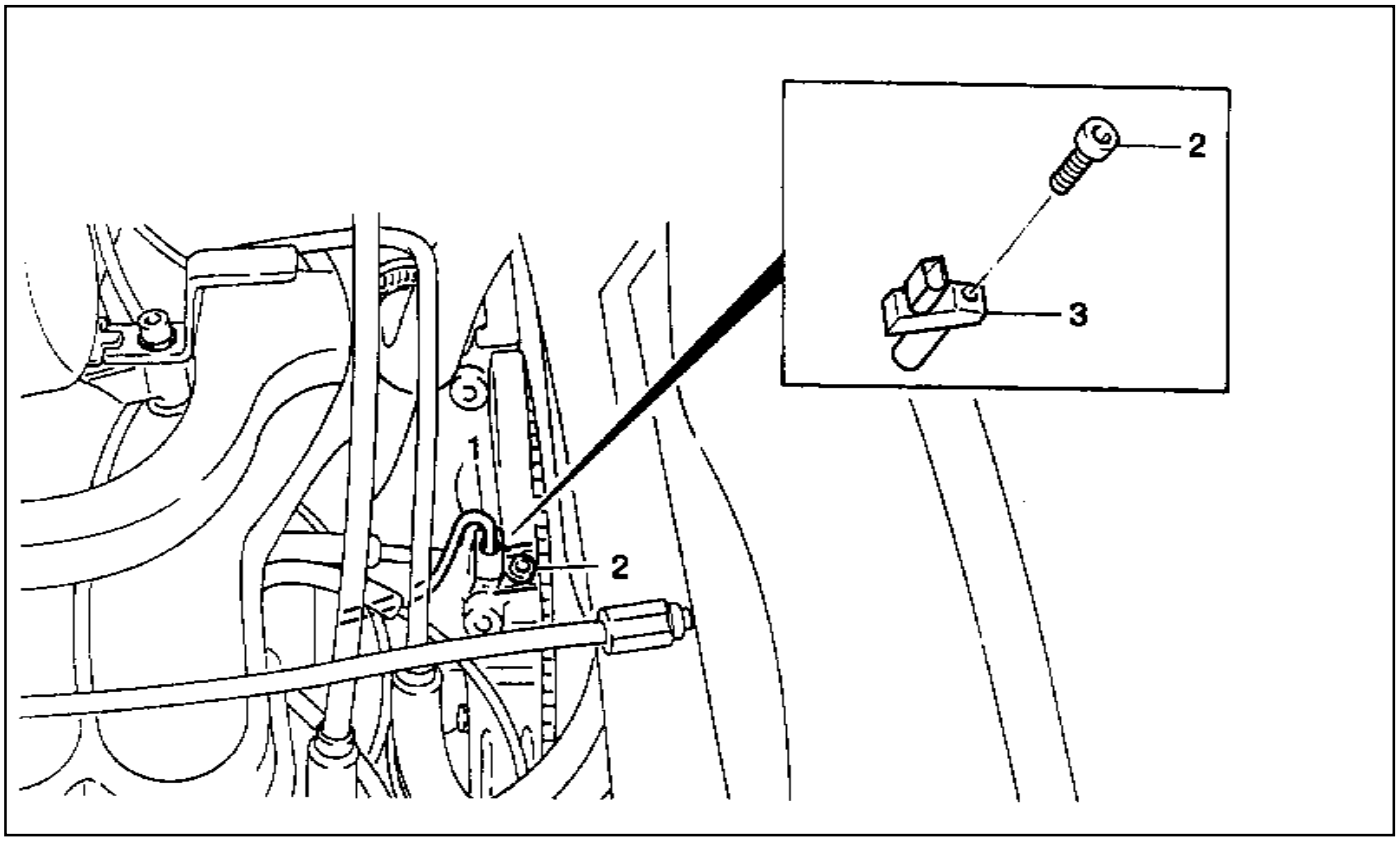

1 Crankshaft Position Sensor (connector)
2 Bolt (M6 X 14) ..... 9-11 Nm
3 Sensor Unit

Removal & Installation Procedure

1. Disconnect the wiring connector at the crankshaft position sensor.
2. Unscrew the bolt (2) and remove the crankshaft position sensor unit (3).

   Installation Notice

Tightening Torque	9 - 11 Nm

3. Installation should follow the removal procedure in the reverse order.

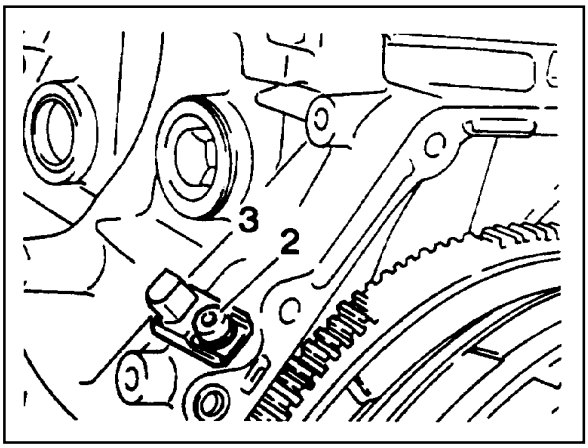

Downloaded from www.Manualslib.com manuals search engine

Crankshaft Position Sensor Resistance Inspection

1. Disconnect the coupling "E" of ECU while the ignition switch is in "OFF" position.
2. Measure the resistance between the coupling terminal pin No.99 and No.100 using a multimeter.

Specified Value	1050 - 1400 W

Notice

Measure the insulator resistance of the crankshaft position sensor if out of the specified value.

Crankshaft Position Sensor Output Wave Inspection

1. Connect the test box to the ECU.
2. Measure the output wave between the ECU terminals No.99 and No.100 using the scanner or the oscilloscope while engine cranking (starter motor activated).

Notice

Check the segment or crankshaft position sensor and air gap if cannot get the output wave as shown in the figure.

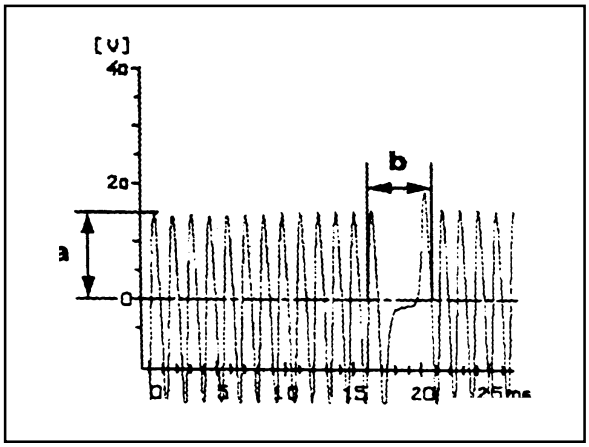

Crankshaft Position Sensor Insulator Resistance Inspection

1. Disconnect the engine coupling from ECU while the ignition switch is in "OFF" position.
2. Measure the resistance between the coupling terminal pin No.100 and No.69.

Specified Value	> 20kW

Notice

Measure the check and ground terminal of the crankshaft position sensor if out of the specified value.

Downloaded from www.Manualslib.com manuals search engine

CAMSHAFT POSITION SENSOR

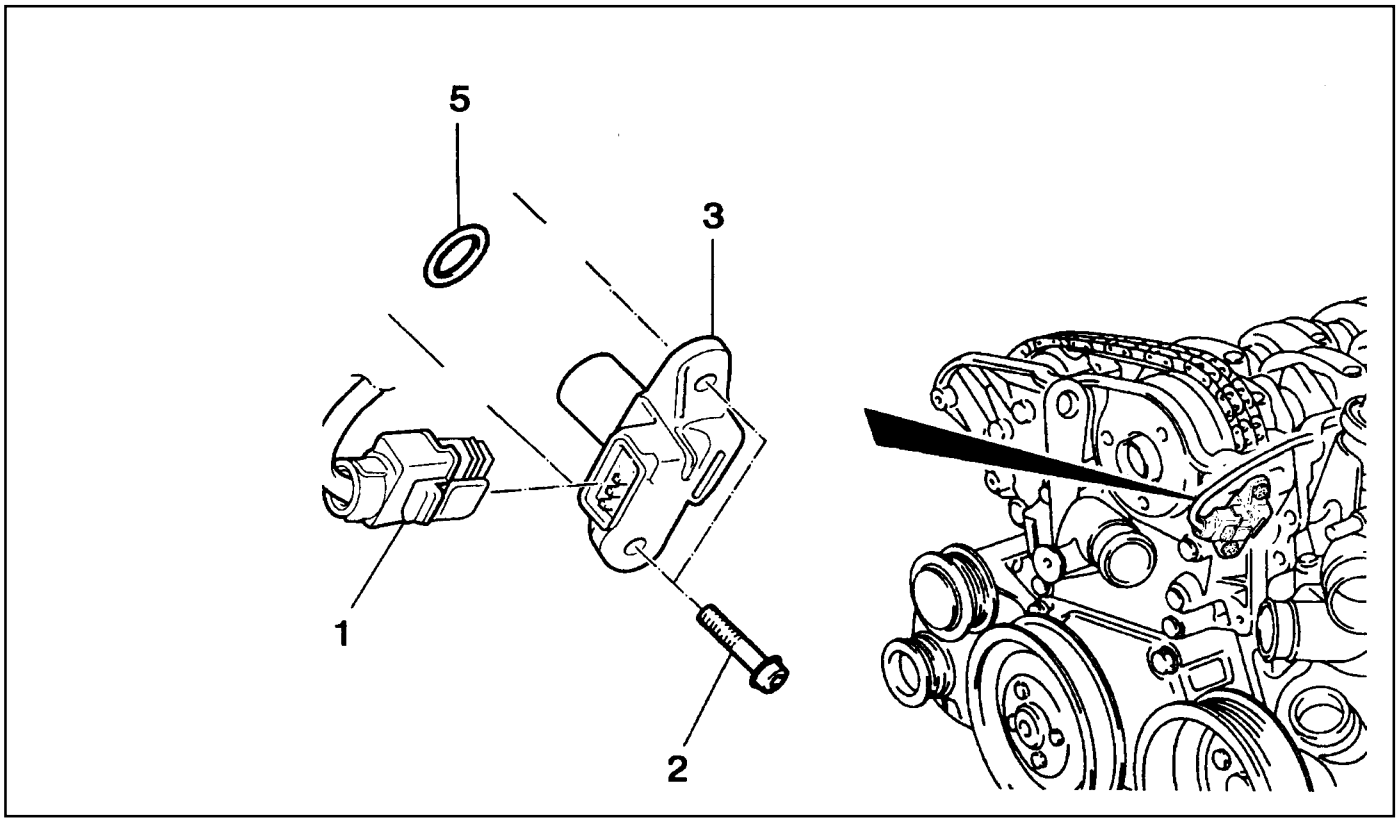

1 Bolt (M6 X 14) 9-11Nm
2 Camshaft Position Sensor
3 Shim
5 O-ring

Removal & Installation Procedure

1. Disconnect the wiring connector from the camshaft position sensor.
2. Unscrew the bolt (2) and remove the camshaft position sensor.

Installation Notice

Tightening Torque	9 - 11 Nm

3. Check the clearance and replace the shim if necessary.
4. Check the O-ring for damage and replace it if necessary.
5. Installation should follow the removal procedure in the reverse order.

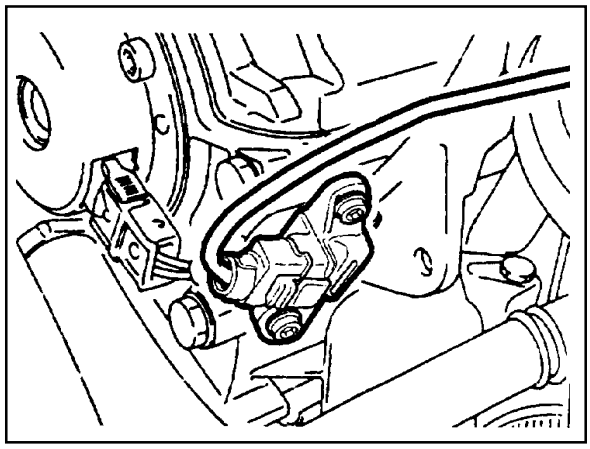

Downloaded from www.Manualslib.com manuals search engine

Camshaft Position Sensor Signal Voltage Inspection

1. Connect the test box to the ECU.
2. Measure the voltage between the ECU terminal No.11 and No.106 while the engine speed is at idle.

Specified Value	1.2 - 1.7 V

Notice

The signal voltage will be changed in the range of 1.2-1.7V.

Camshaft Position Sensor Output Wave Inspection

1. Connect the test box to the ECU.
2. Measure the output wave between the ECU terminal No.104 and No.106 using the scanner or the oscilloscope while the engine speed is at idle.

Notice

Replace the camshaft position sensor if cannot get the output wave as shown in the figure.

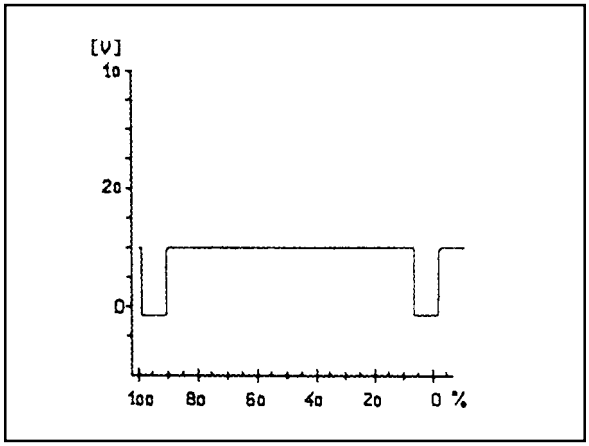

Camshaft Position Sensor Power Supply Inspection

1. Turn the ignition switch to 'ON' position.
2. Disconnect the camshaft position sensor connector.
3. Measure the voltage between the No.1 and No.3 pin of camshaft position sensor while the ignition switch is in "ON" position.

Specified Value	11 - 14 V

Notice

If the measured value is not within the specified value, check the cable.

Downloaded from www.Manualslib.com manuals search engine

HOT FILM AIR MASS (HFM) SENSOR

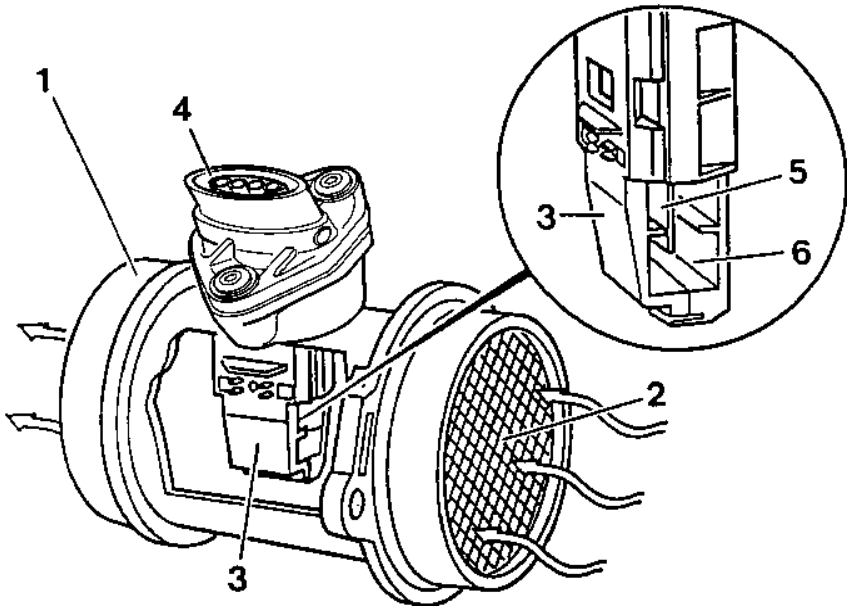

1 Housing
2 Protector Net
3 Electronic Housing
4 Connector
5 Hot film Sensor
6 Measuring Port

Removal & Installation Procedure

1. Turn the HFM sensor coupling in the direction shown in the figure in the right so that it gets separated from the contact surface.

   Notice

   Make sure the HFM sensor coupling connects completely with the contact surface Installation.
2. Remove the clip with a screw driver.
3. Pry off two tensioning clamps.
4. Remove the HFM sensor.
5. Installation should follow the removal procedure in the reverse order.

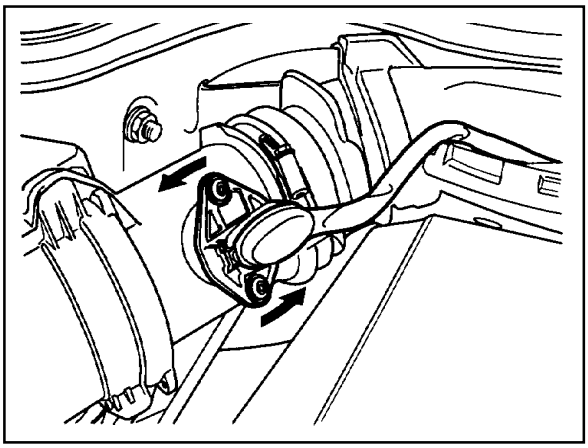

Downloaded from www.Manualslib.com manuals search engine

Circuit Diagram

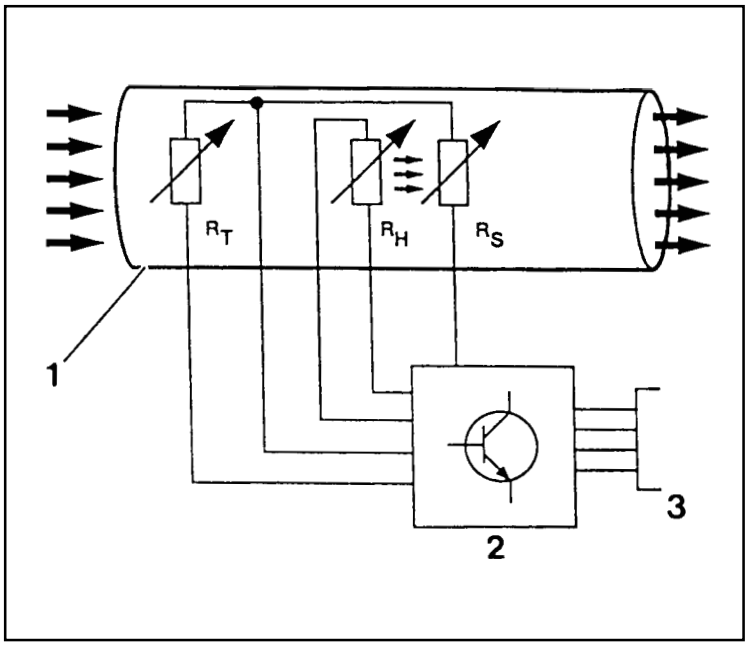

1 Housing
2 Electronic Housing
3 Connector

R_H : Heat Resistance
R_T : Temperature Resistance
R_S : Sensor Resistance

Downloaded from www.Manualslib.com manuals search engine

HFM Sensor Input Voltage Inspection

1. Measure the HFM sensor signal voltage between the ECU terminal No.81 and No.105.

Specified Value (coolant temperature is over 70°C)

Iginition"ON"	0.9 - 1.1 V
Engine at idle	1.3 - 1.7 V

If the measured value is not within the specified value, the possible cause may be in cable or HFM sensor in itself. Perform the 5V power supply inspection procedures.

HFM Sensor 5V Power Supply Inspection

1. Measure the voltage between the HFM sensor No.4 pin and No.3 after removing the HFM sensor connector.

Specified Value	4.7 - 5.2 V

If the measured value is not within the specified value, the possible cause may be in cable or ECU coupling.

HFM Sensor 12V Power Supply Inspection

1. Measure the voltage between the HFM sensor No.2 pin and No.3 after removing the HFM sensor connector.

Specified Value	11 - 14 V

If the measured value is not within the specified value, the possible cause may be in cable or over voltage protection relay.

Downloaded from www.Manualslib.com manuals search engine

OXYGEN SENSOR

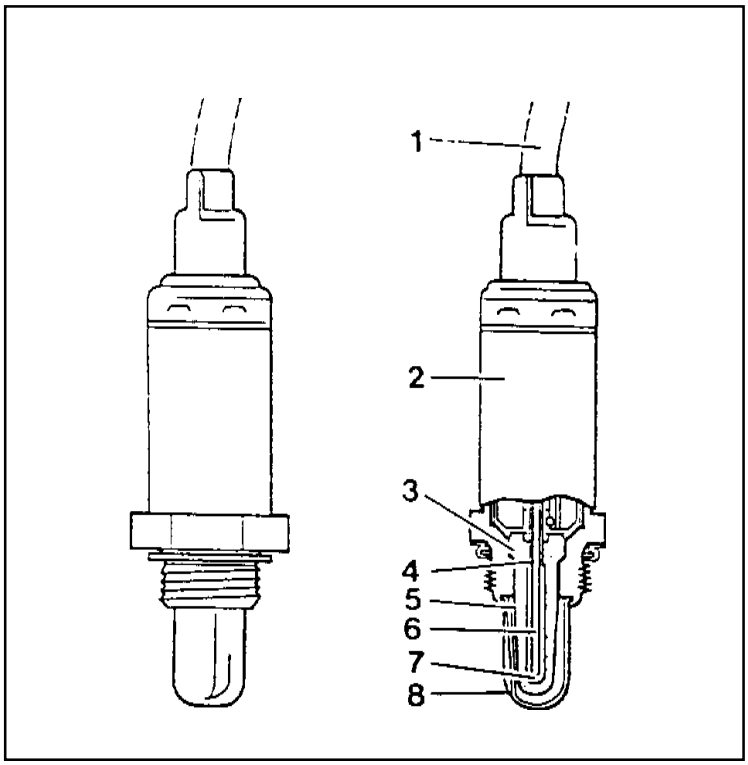

1 Electricity Wire
2 Oxygen Sensor Housing
3 Sensor Ceramic
4 Electrode (Internal)
5 Electrode (External)
6 Heating Coil
7 Open Space
8 Protector Tube

Functions

The oxygen sensor optimizes the combustion (Air-Fuel Ratio 14.7:1) and resets the Air-fuel ratio in the ECU after sensing the amount of oxygen from the exhaust gases to diminish the exhaust gases.

- Rich(<1) above approx. 450mV
- Lean(>1) below approx. 450mV

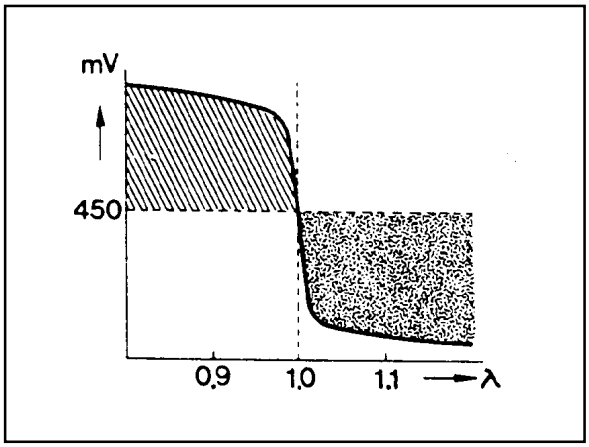

Locatoin of Sensor

Oxygen sensor is located on the front exhaust pipe.

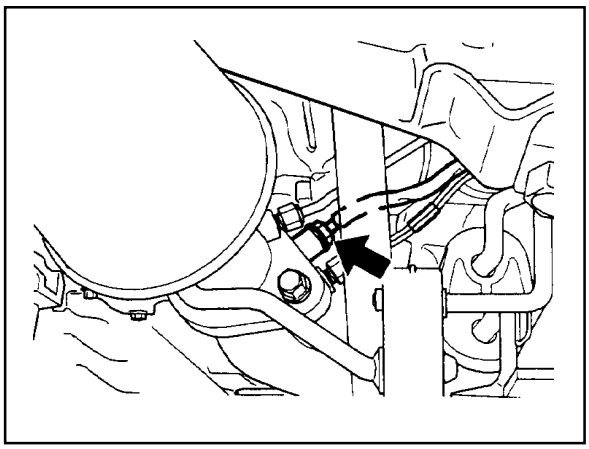

Downloaded from www.Manualslib.com manuals search engine

Oxygen Sensor Signal Voltage Inspection

1. Measure the oxygen sensor signal voltage between the ECU terminal No.11 and No.9. Maintain the engine speed ia at idle while the coolant temperature is over 80°C.

Specified Value	-0.2 - 1.0 V

If the measured value is not within the specified value, the possible cause may be in cable, oxygen sensor or ECU.

Oxygen Sensor Heating Voltage Inspection

1. Measure the oxygen sensor heating voltage between the ECU terminal No.11 and No.9. Maintain the engine speed ia at idle while the coolant temperature is over 80°C.

Specified Value	11 - 14

If the measured value is not within the specified value, the possible cause may be in cable, oxygen sensor or ECU.

Oxygen Sensor Heating Current Consumption Inspection

1. Measure the oxygen sensor heating current consumption between the ECU terminal No.9 and No.5 while the ignition switch is in "ON" position.

Specified Value	0.2 - 2.0 A

If the measured value is not within the specified value, the possible cause may be in cable, oxygen sensor or ECU.

Downloaded from www.Manualslib.com manuals search engine

KNOCK SENSOR

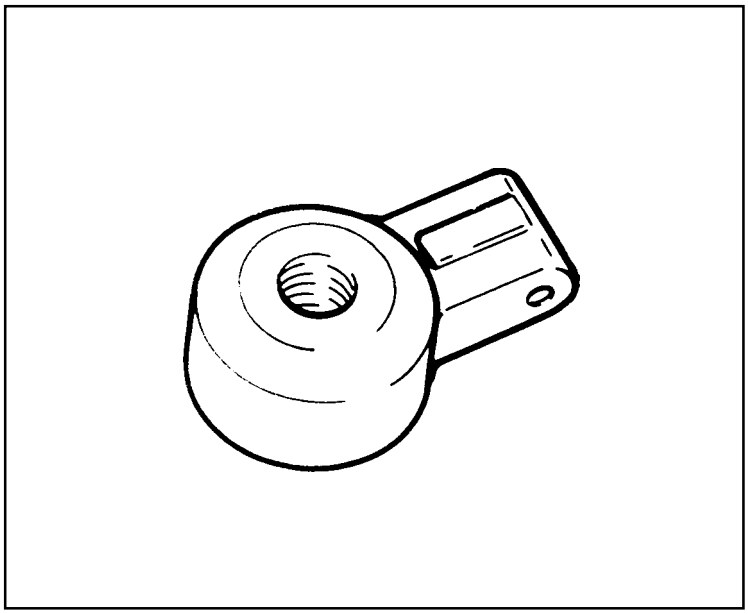

Functions

Vibration of the engine block is transmitted to the sensor and transferred to the ECU in the form of an alternating voltage signal via a shielded cable. The knock sensor is fastened to the engine block to recognize knocking in all cylinders. The ECU compares the signal and the retards firing point.

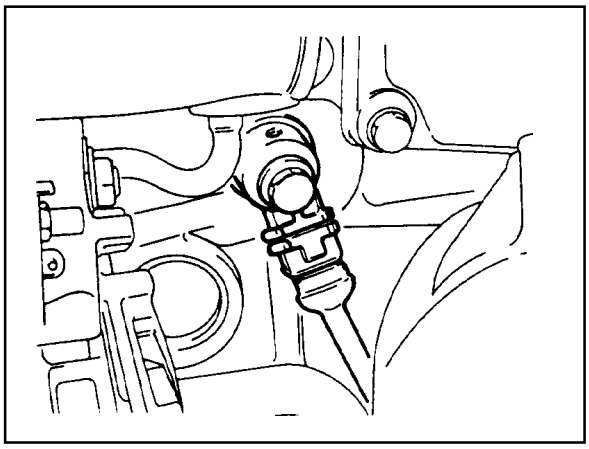

Removal & Installation Procedure

1. Disconnect the knock sensor connector from the intake manifold bracket.
2. Unscrew the mounting bolt (M8 X 28) from the knock sensor installed on the cylinder block and remove the knocking sensor.

   Installation Notice

Tightening Torque	22.5 - 27.5 Nm

3. Installation should follow the removal procedure in the reverse order.

Downloaded from www.Manualslib.com manuals search engine

COOLANT TEMPERATURE SENSOR

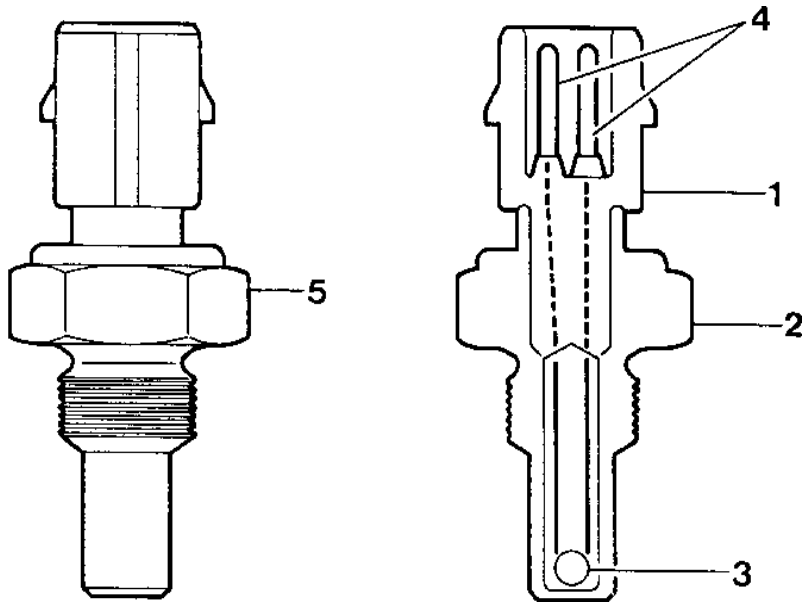

1 Artificial Resin Housing
2 Metal Housing
3 NTC (negative temperature coefficient) Resistor
4 Connector
5 Coolant Temperature Sensor

Removal & Installation Procedure

1. Remove the pressure by opening the pressure cap in the coolant subtank.
2. Disconnect the connector and remove the coolant temperature sensor.

   Installation Notice

Tightening Torque	18 - 22 Nm

   Replace the seals with new one.

3. Installation should follow the removal procedure in the reverse order.
4. Check for leaks at each connections after starting the engine.

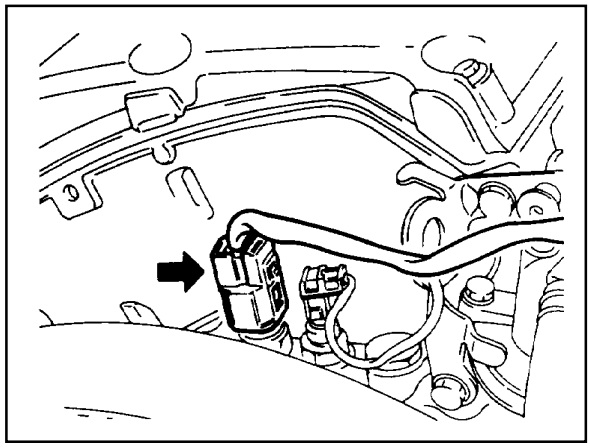

Downloaded from www.Manualslib.com manuals search engine

Inspection

1. Measure the coolant sensor input voltage between the ECU terminal No.79 and No.78 while the ignition switch in "ON" position.

Temperature (°C)	Voltage (V)
20	3.57
30	1.22
40	0.78

allowable error :±5%

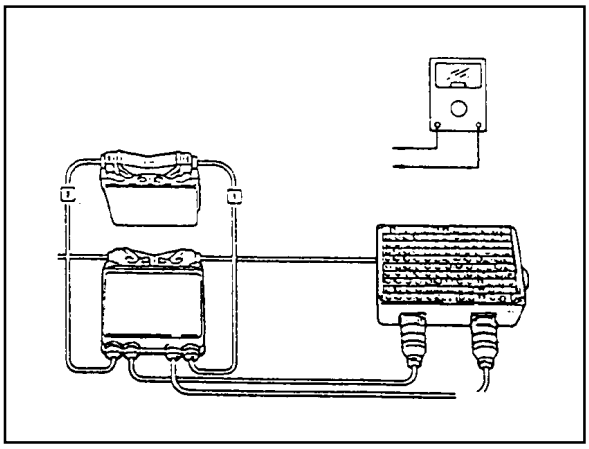

2. Measure the resistance between the coolant temperature sensor terminal No.1 and No.4 with the coolant temperature sensor disconnected.

Temperature (°C)	Resistance (W)
20	2,500
30	322
40	185

allowable error :±5%

Notice

Replace wiring and coolant temperature sensor if out of specified value.

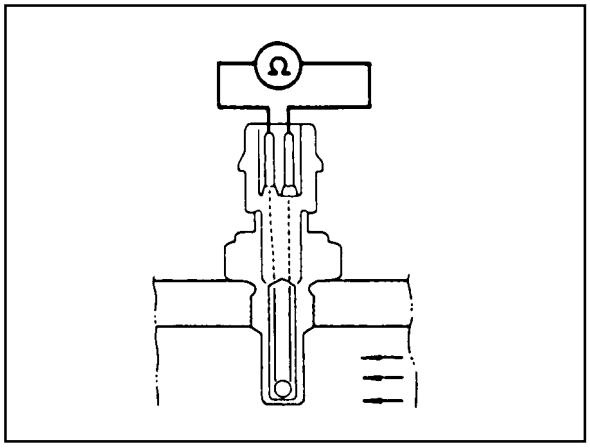

Downloaded from www.Manualslib.com manuals search engine

Service Data

Temperature(℃)	Resistance(W)	Voltage(V)	Temperature(℃)	Resistance(W)	Voltage(V)
-40	48,550	4.8991	60	594	1.8632
-30	27,000	4.8214	70	434	1.5132
-20	15,670	4.7001	80	322	1.2179
-10	9,450	4.5215	90	243	0.9775
0	5,890	4.4273	100	185	0.7806
10	3,790	3.9562	110	143	0.6255
20	2,500	3.5714	120	111.6	0.5020
30	1,692	3.1426	130	88.0	0.4044
40	1,170	2.6959	140	71.2	0.3323
50	826	2.2618	-	-	-

Resistance characteristic curve according to the coolant temperature

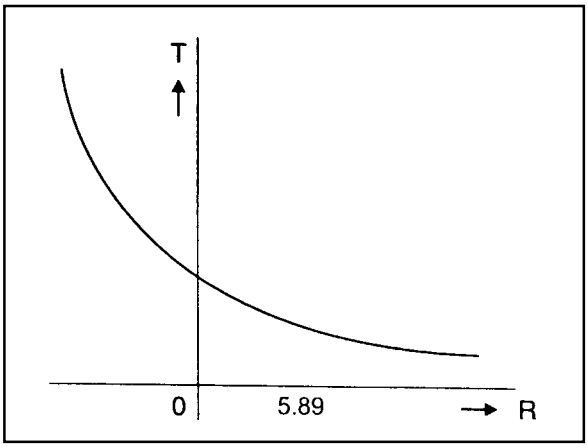

Downloaded from www.Manualslib.com manuals search engine

ACCELERATOR PEDAL MODULE

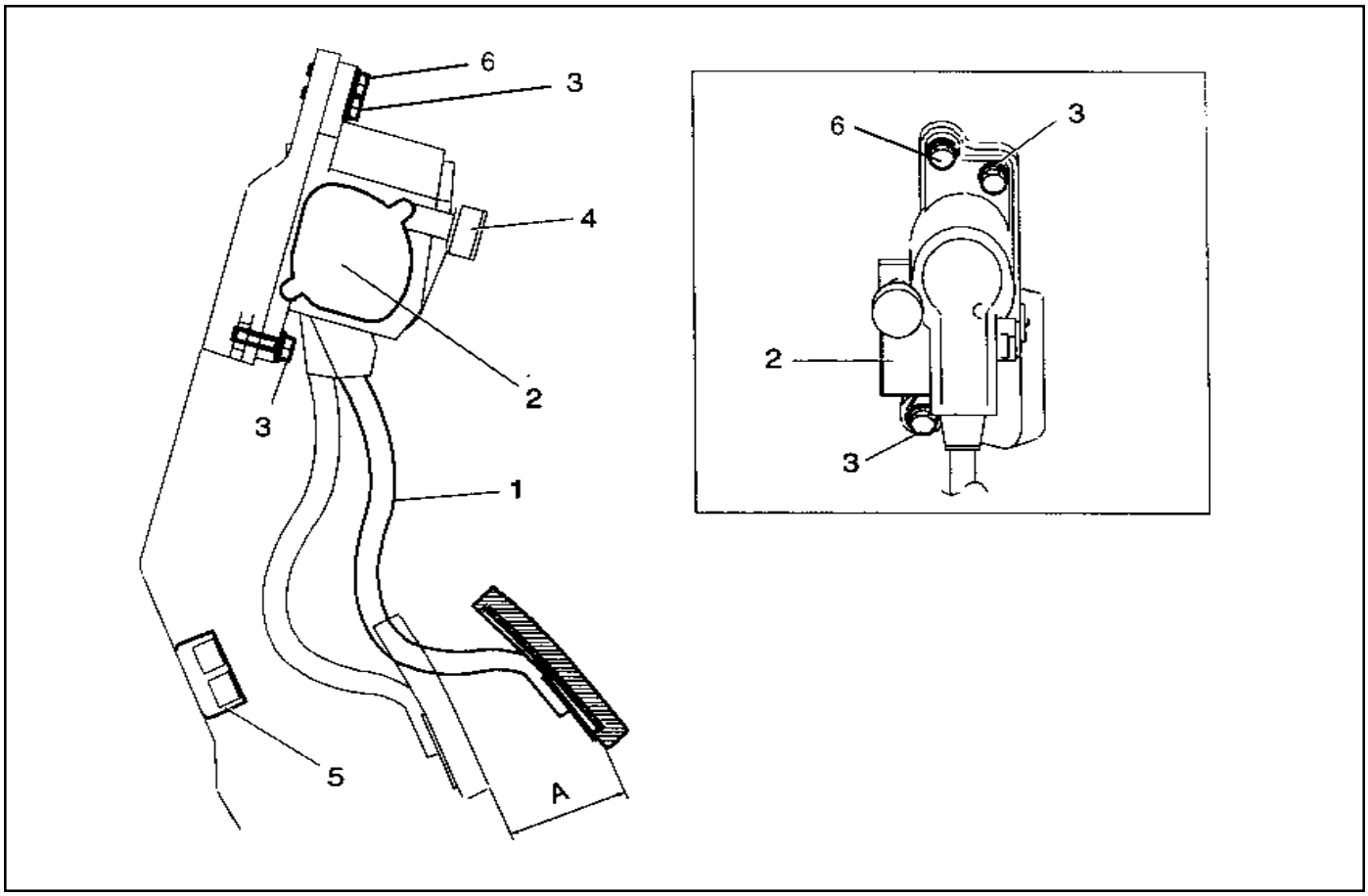

1 Accelerator Pedal
2 Accelerator Pedal Sensor
3 Bolts (2 Pieces) ..... 4-8 Nm
4 6-Pin Connector
5 Kick down Switch
6 Nut (1 piece) ..... 4-8 Nm

Removal and Installation Procedure

1. Disconnect the 6-pin connector(arrow).
2. Unscrew the 2 bolts (3) / 1 nut (6) and remove the pedal and sensor assembly.

Installatoin Notice

Tightining Torque	4 - 8 Nm

2. Installation should follow the removal procedure in the reverse order.

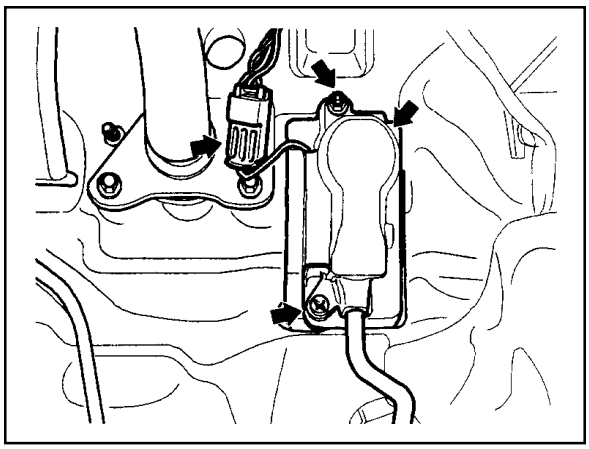

Downloaded from www.Manualslib.com manuals search engine

Accelerator Pedal Sensor Connector(Sensor Side)

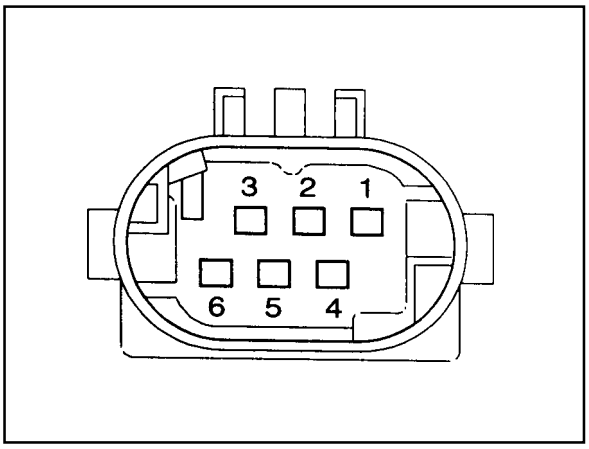

Potentiometer 1.
- Pin no. 3 :Red
- Pin no. 1 :Yellow
- Pin no. 5 :Brown

Potentiometer 2.
- Pin no. 6 :Violet
- Pin no. 4 :Green
- Pin no. 2 :White

Accelerator Pedal Sensor Connector(Vehicle Side)

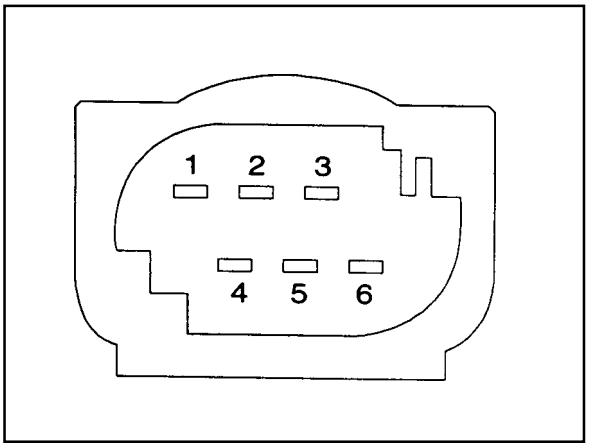

Potentiometer 1.
- Pin no. 3 :Red-Black
- Pin no. 1 :Blue-Green
- Pin no. 5 :Yellow-Green

Potentiometer 2.
- Pin no. 6 :Green
- Pin no. 4 :Blue-Red
- Pin no. 2 :LightGreen

Function

Pin no. 3	Potentiometer 1, Power Supply(+)
Pin no. 1	Potentiometer 1, Signal
Pin no. 5	Potentiometer 2, Ground
Pin no. 6	Potentiometer 2, Power Supply(+)
Pin no. 4	Potentiometer 2, Signal
Pin no. 2	Potentiometer 2, Ground

Circuit Diagram

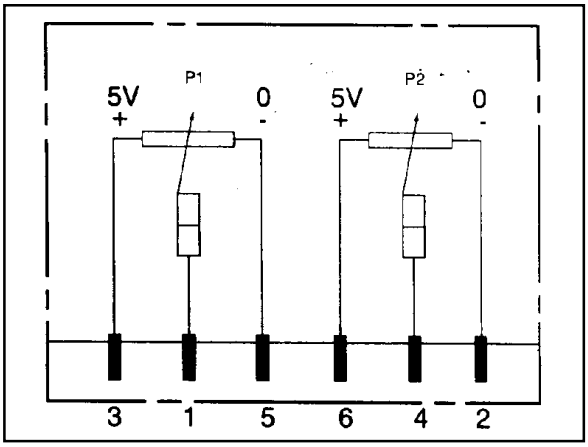

Potentiometer 1.
Potentiometer 2.

Downloaded from www.Manualslib.com manuals search engine

SECTION 1F3

OM600 ENGINE CONTROLS

Caution: Disconnect the negative battery cable before removing or installing any electrical unit or when a tool or equipment could easily come in contact with exposed electrical terminals. Disconnecting this cable will help prevent personal injury and damage to the vehicle. The ignition must also be in LOCK unless otherwise noted.

TABLE OF CONTENTS

Specifications 1F3-1
Fastener Tightening Specifications 1F3-1
Maintenance and Repair 1F3-2
On-Vehicle Service 1F3-2
Fuel System 1F3-2
Fuel Injection Pump Coding 1F3-3
Fuel Tank 1F3-4
Vacuum Control System Test 1F3-5
Vacuum Pump(Sectional View) 1F3-10
Vacuum Pump Test 1F3-11
Vacuum Pump 1F3-13
Vacuum Unit Replacement 1F3-15
Idle Speed Adjustment 1F3-16
Fuel Pump Test 1F3-18
Fuel Pump 1F3-21
Injection Nozzle Test 1F3-22
Injection Nozzles 1F3-25
Injection Nozzle Repair 1F3-27
Removal and Installation of Injection Timing Device 1F3-30
Injection Timing Device 1F3-35
Start of Delivery Test (Position Sensor, RIV Method) 1F3-37
Fuel Injection Pump 1F3-46

SPECIFICATIONS

FASTENER TIGHTENING SPECIFICATIONS

Application	N·m
Fuel Tank Mounting Nut	28 - 47
Fuel Pump Pressure Line	13
Fuel Injection Nozzle	35 - 40
Fuel Injection Pipe	18
Nozzle Tensioning Nut	80
Screw Plug	30
Left-Hand Thread Bolt	46

Downloaded from www.Manualslib.com manuals search engine

MAINTENANCE AND REPAIR

ON-VEHICLE SERVICE

FUEL SYSTEM

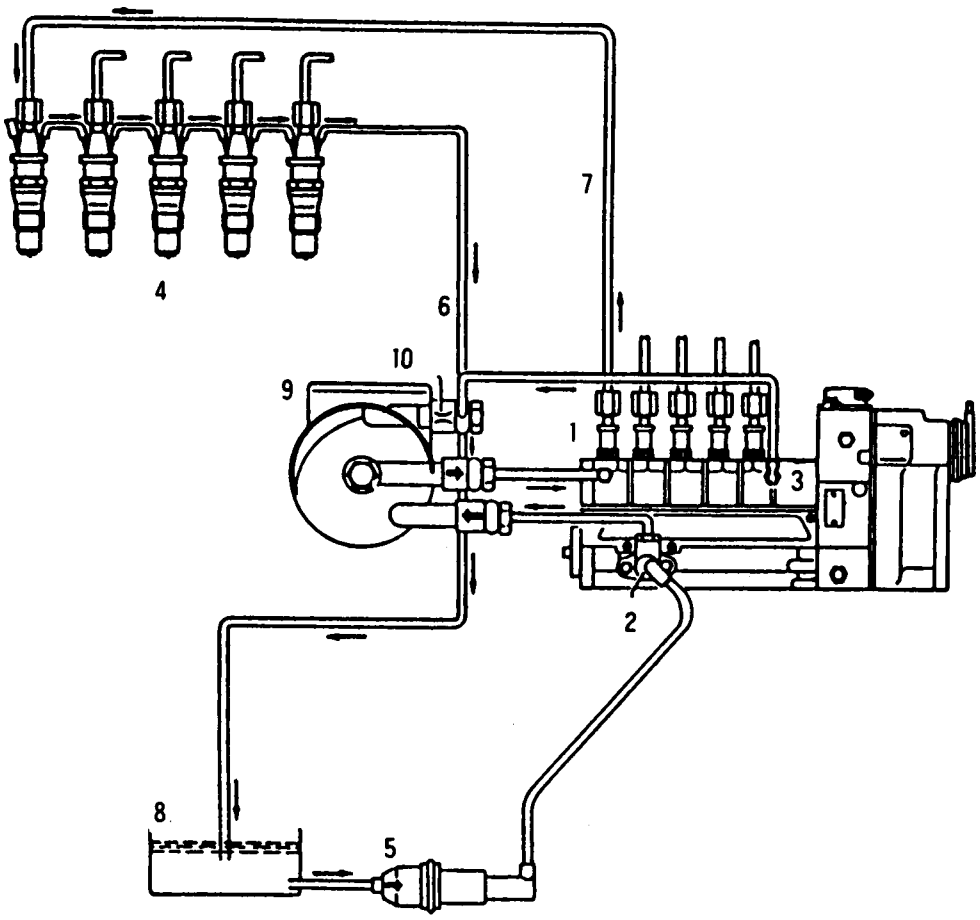

1 Fuel Injection Pump
2 Fuel Feed Pump
3 Overflow Valve
4 Injection Nozzle
5 Pre-filter
6 Fuel Return Hose
7 Injection Line
8 Fuel Tank
9 Fuel Filter
10 Choke Orifice

Downloaded from www.Manualslib.com manuals search engine

FUEL INJECTION PUMP CODING

Model Code

OM661 LA Engine	PES 4M 55C 320 RS 167
OM662 LA Engine	PES 5M 55C 320 RS 168

Fuel Injection Pump Code

Example) PES 5M 55C 320 RS 168

P	Pump
E	Self-Driven
S	End Flange Mounting
5	Number of Cylinders (5EA)
M	Pump Size
55	Element Diameter
C	Modification Letter
320	Assembly Number
R	Direction of Rotation (clockwise)
S188	Special Version

RSF	**Governor**
R	Governor
S	Coil Spring
F	Drive Governor

Component Location

1. Fuel Injection Pump
2. Vacuum Unit (Stop Unit)
3. Control Lever
4. PLA Vacuum Unit (Idle Speed Adjustment)
5. Governor
6. Fuel Pump

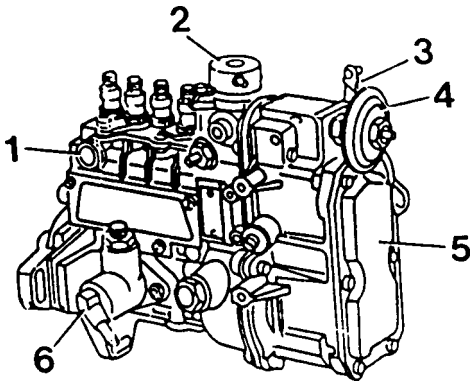

Downloaded from www.Manualslib.com manuals search engine

FUEL TANK

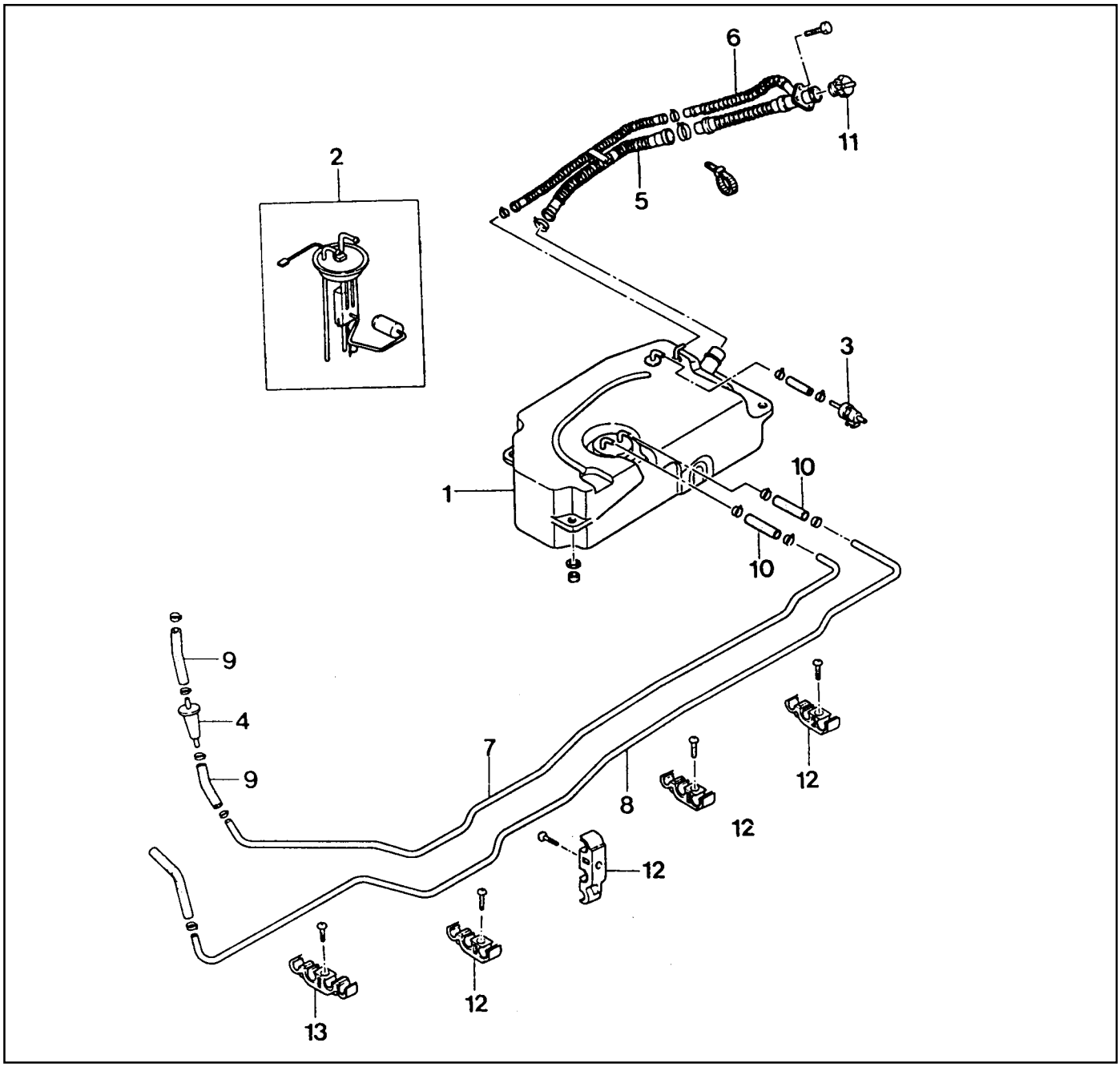

1 Fuel Tank
2 The Sender of Fuel Tank
3 2-way Check Valve
4 Pre Filter
5 Front Fuel Filler Neck
6 Rear Fuel Filler Neck
7 Fuel Supply Tube
8 Fuel Return Tube
9 Filter Hose
10 Fuel Tank Hose
11 Fuel Filler Cap
12 Clip
13 Clip

Downloaded from www.Manualslib.com manuals search engine

VACUUM CONTROL SYSTEM TEST

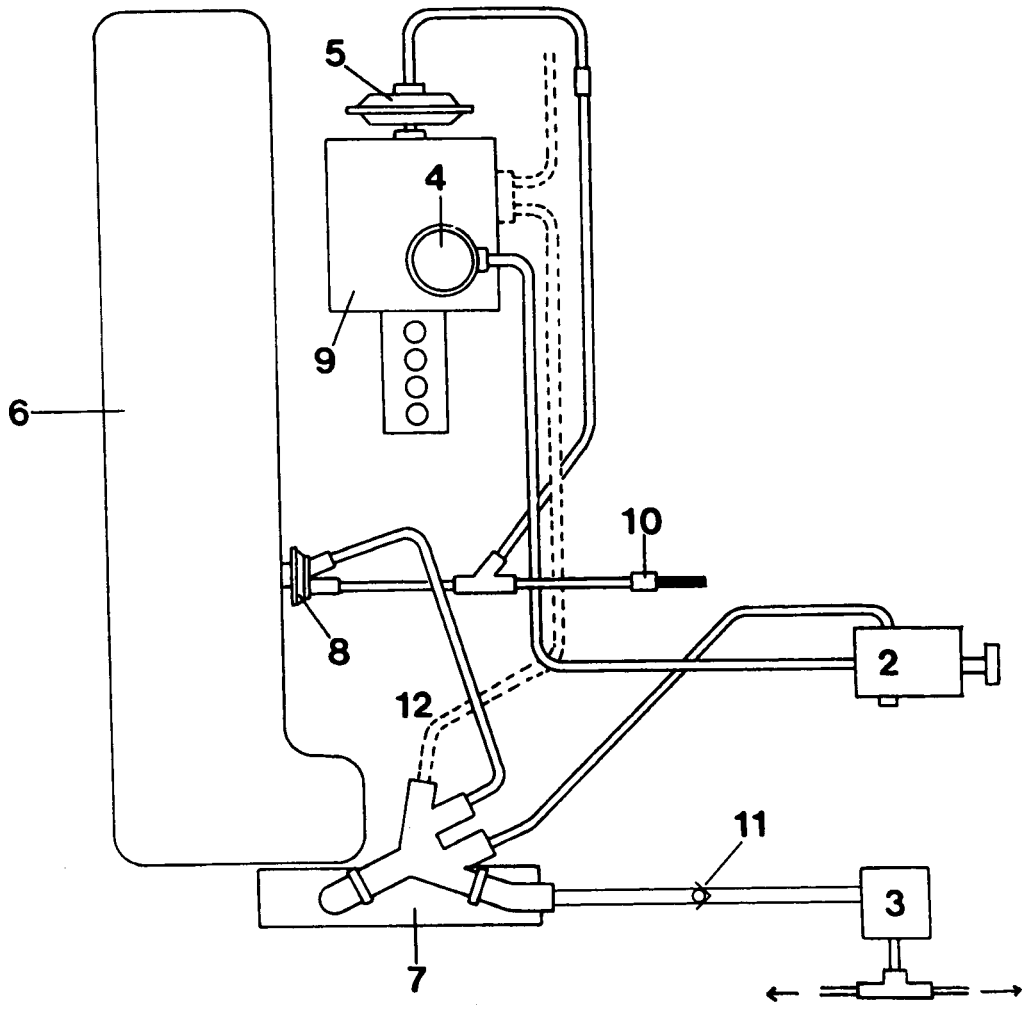

2 Engine Cut-Off Valve (Ignition Key Switch)
3 Auto-locking Hub Solenoid Valve
4 Engine Stop Valve Unit
5 PLA Vacuum Unit (Idle Speed Adjustment)
6 Engine
7 Vacuum Pump
8 30° Thermovalve
9 Fuel Injection Pump
10 Filter with Restriction
11 Check Valve
12 Modulating Pressure Line (Automatic T/M)

Test Data

Idle Speed Increase	At least 100 rpm at approx. 500mbr
Permissible Pressure Drop of System	400 - 500mbar approx. 1 min.

Downloaded from www.Manualslib.com manuals search engine

Tools Required

001 589 73 21 00 Vacuum Pump
201 589 13 21 00 Vacuum Tester
667 589 00 21 00 TDC pulse generator

Commercial Tools

Digital tester	e.g. Bosch MOT 001.03 Sun DIT 9000
Temperature measuring instrument with test probe WB24	e.g. Ahlborn, Therm 2263-2 Eichenfeldstrabe 1 - 3 D-8150 Holzkirchen

Tester Connection

11 TDC Pulse Sender Unit
12 Digital Tester

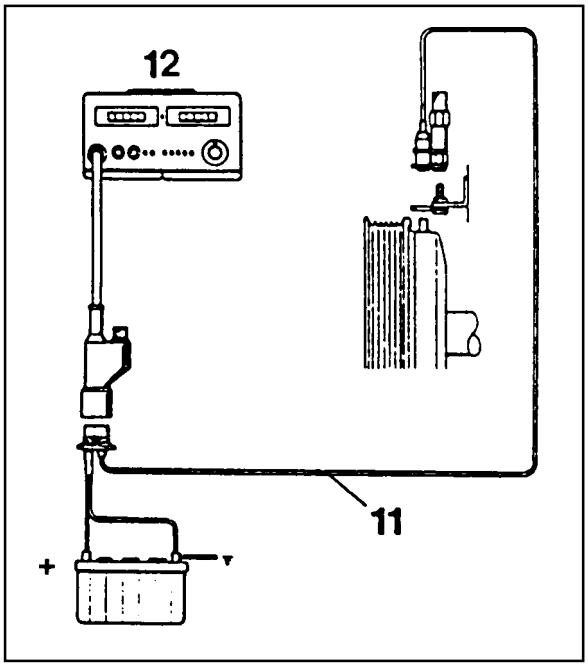

Downloaded from www.Manualslib.com manuals search engine

Test step 1

Connect vacuum pump (14) with Y adapter to PLA vacuum unit (5). Run engine at idle speed.

Vacuum ≧500 mbar

YES

NO

Lines and connections leaking. Faulty PLA vacuum unit.

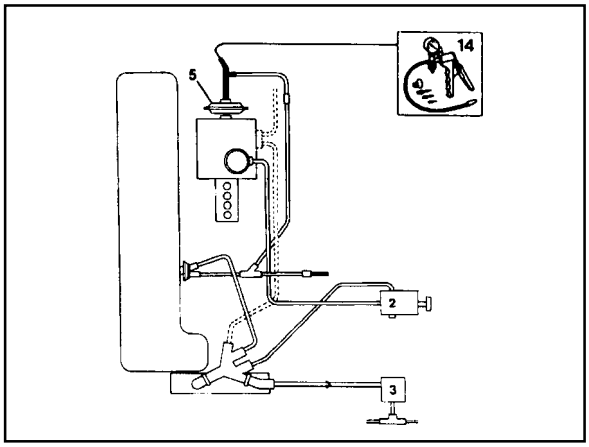

(Remove the connection hose from vacuum pump)

Connect vacuum pump (14) direct to PLA vacuum unit (5) and pressurize with vacuum.

Vacuum is built up and idle speed increases approx. 150-200 rpm

YES

NO

Faulty PLA vacuum unit

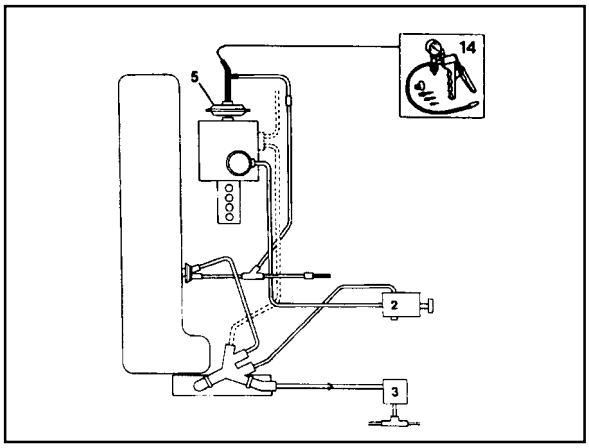

(Coolant Temperature 30°C)

Stop the engine Seal the air admission line with plug. Connect the vacuum pump to line to thermovalve and pressurize the line with vacuum.

Vacuum is built up.

YES

NO

Lines and connectors leaking. Faulty thermovalve.

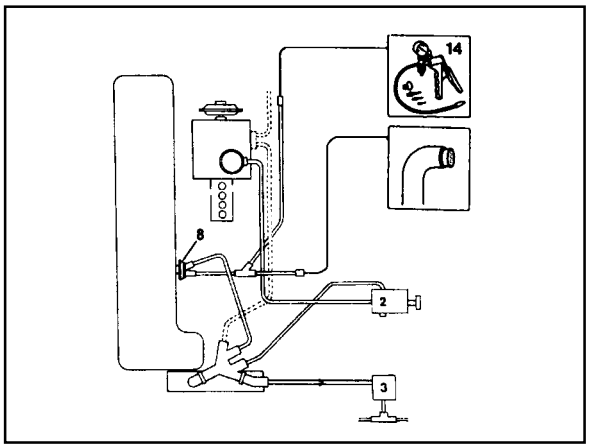

Downloaded from www.Manualslib.com manuals search engine

Detach line downstream of air admission filter (13).

Vacuum drops.

YES

NO

Faulty thermovalve

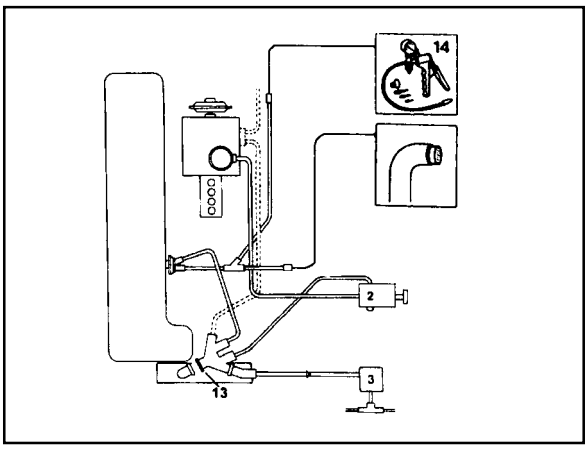

Fit the line onto air admission filter. Built up vacuum with vacuum pump. Detach the plug from air admission line.

Vacuum drops.

YES

NO

Faulty filter with restriction.

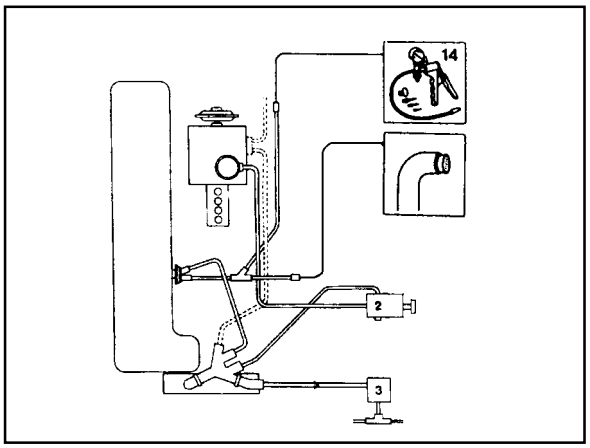

Go to test step 2.

Downloaded from www.Manualslib.com manuals search engine

Test step 2

Connect vacuum pump (14) with Y adapter to PLA vacuum unit (5). Run the engine at idle speed.

Vacuum drops to ‘0’ at approx. 30°C of the thermovalve.

YES

NO

Faulty thermovalve.
Defective filter with restriction.

Stop the engine. Detach the filter with restriction.

Filter with restriction is clear.

YES

NO

Defective filter with restriction.

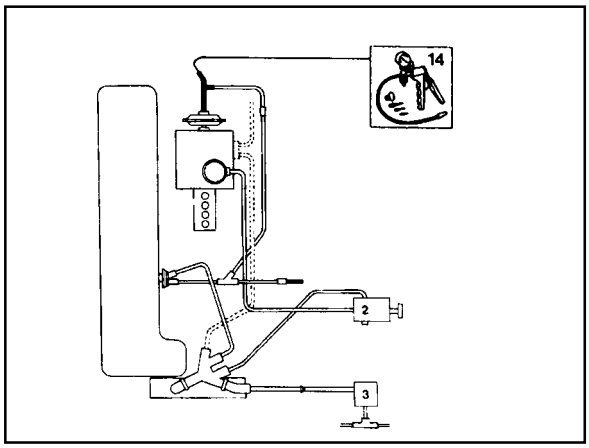

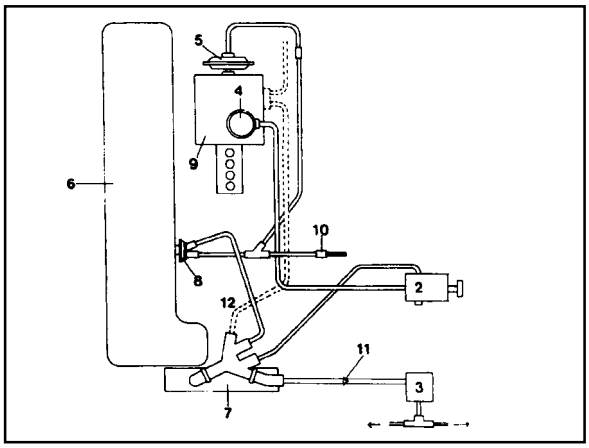

Downloaded from www.Manualslib.com manuals search engine

VACUUM PUMP (SECTIONAL VIEW)

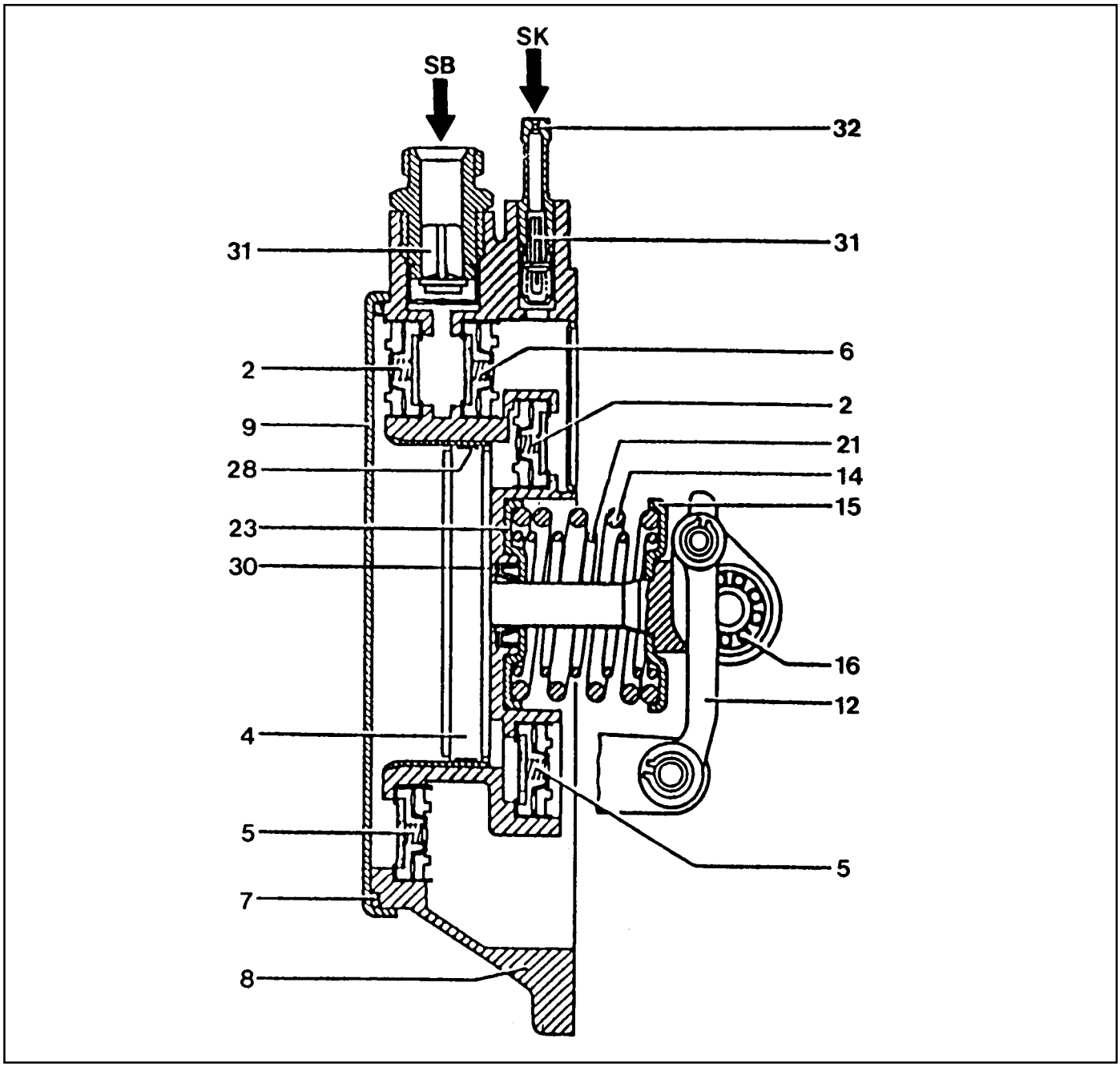

2	Suction Valve	16	Roller Cam
4	Piston	17	Piston Rod
5	Pressure Valve	21	Inner Return Spring
6	Safety Valve	23	Upper Spring Retainer
7	O-Ring	28	Piston Ring
8	Pump Housing	30	Seal Ring
9	Pump Cover	31	Oil Return Valve
12	Lever	32	Restrictor
14	Outer Return Spring	SB	To Brake Booster
15	Inner Spring Retainer	SK	To Vacuum Lines

Downloaded from www.Manualslib.com manuals search engine

VACUUM PUMP TEST

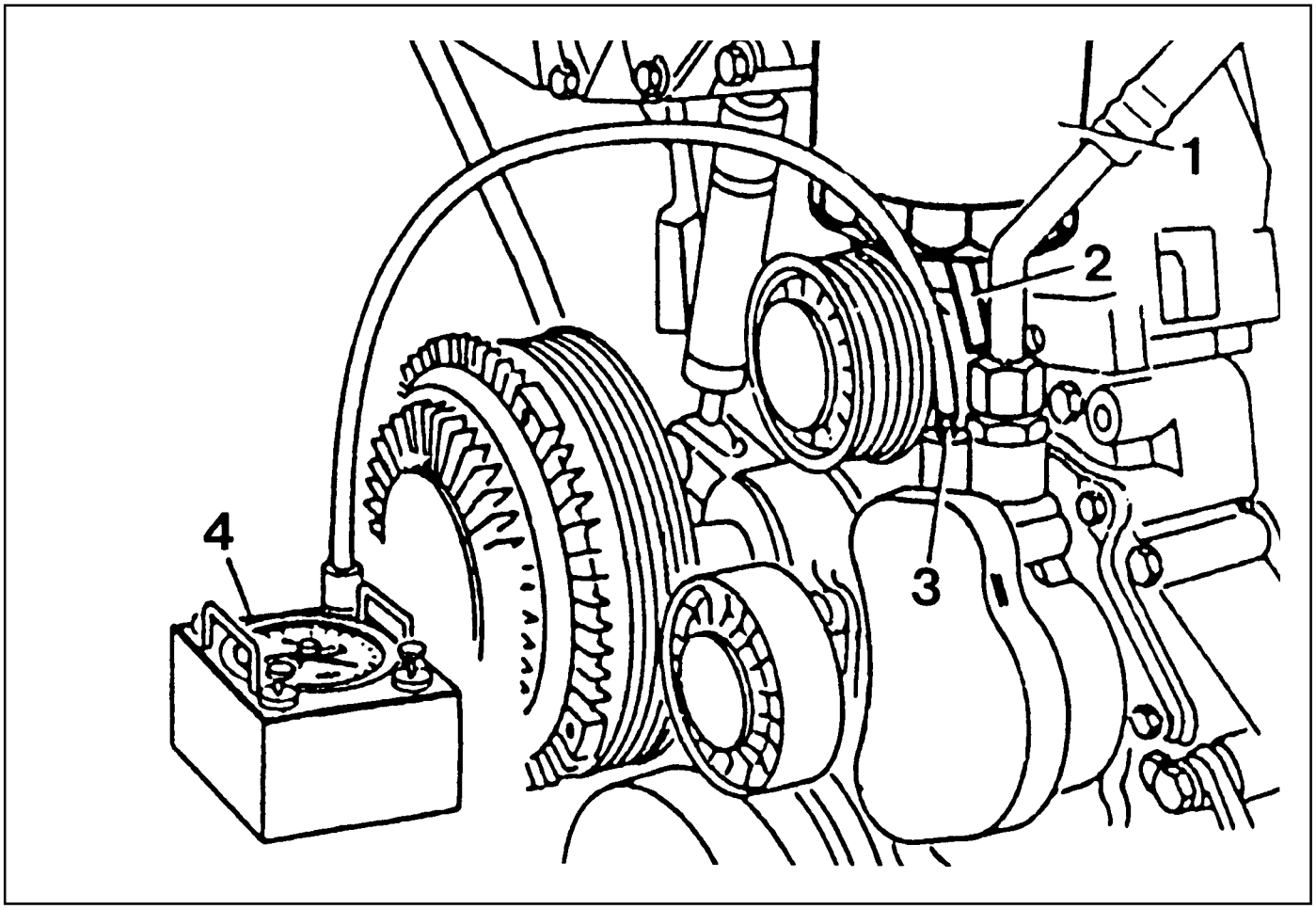

1 Fuel Filter
2 Vacuum Line
3 Ancillaries Connection
4 Vacuum Tester

Tools Required

201 589 13 21 00 Vacuum Tester

Downloaded from www.Manualslib.com manuals search engine

Test Procedure

1. Remove the fuel filter (1) and keep the filter not to be damaged from running engine.

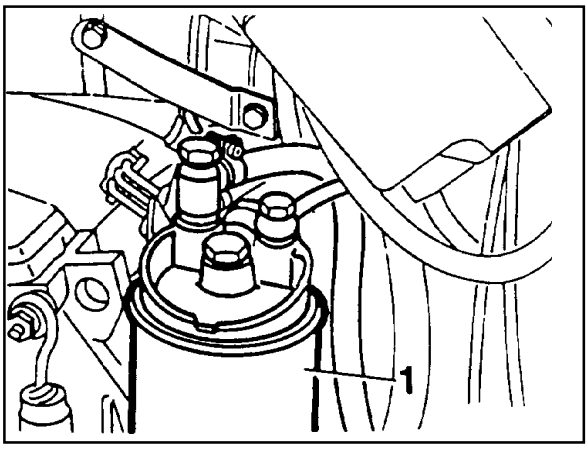

2. Remove the vacuum line (2) from ancillaries connection (3).
3. Connect the vacuum tester (4) to the ancillaries connection (3).

Vacuum Tester 201 589 13 21 00

4 Run the engine at idle and check vacuum pressure after 30 sec.

Standard	> 70 mbar

Notice

If out of standard, replace the vacuum pump.

5. Remove the vacuum tester.
6. Connect the vacuum line to the ancillaries connection.
7. Install the fuel filter.

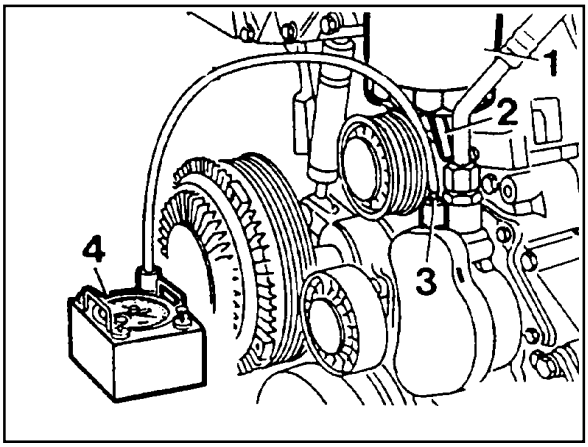

Downloaded from www.Manualslib.com manuals search engine

VACUUM PUMP

Preceding Work : Remove the poly V-belt

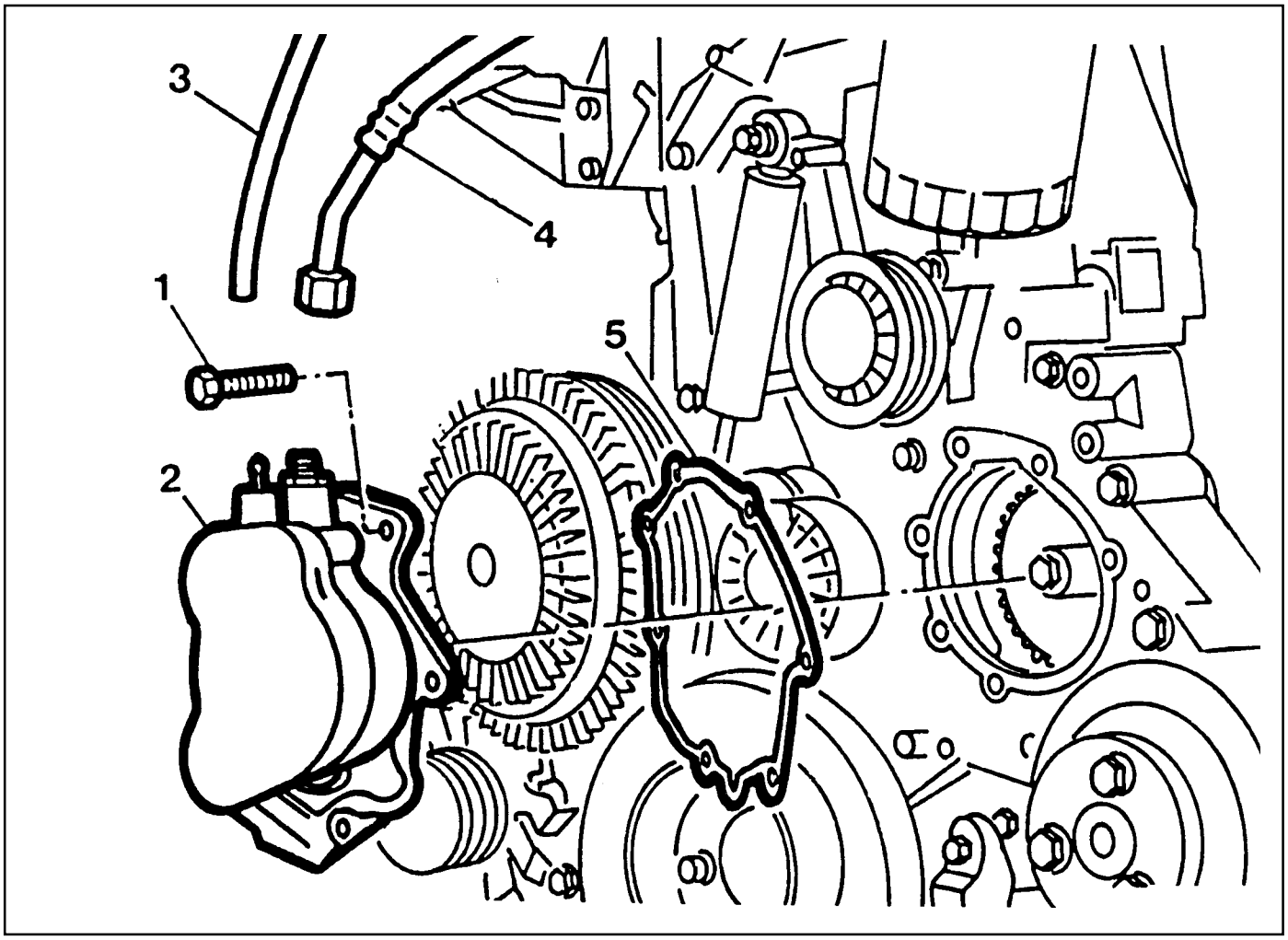

1 Bolt 10Nm
2 Vacuum Pump
3 Vacuum Line (Ancillaries)
4 Vacuum Line (Brake Booster)
5 Gasket ..... Replace

Downloaded from www.Manualslib.com manuals search engine

Removal & Installation Procedure

1. Remove the vacuum line (3, 4).

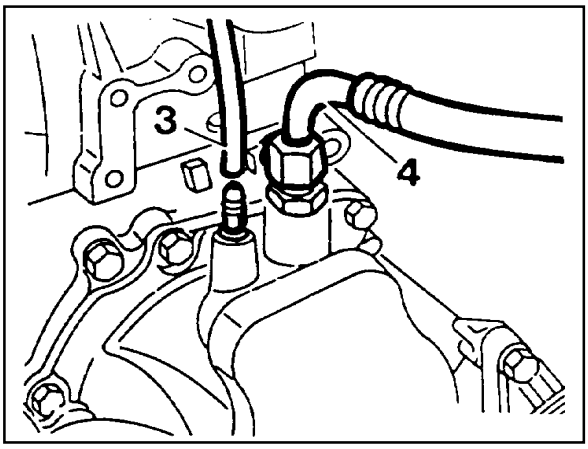

2. Remove the bolts (1) evenly.

   Notice

   If necessary, rotate the engine until the pressure on the tappet of the vacuum pump is released.

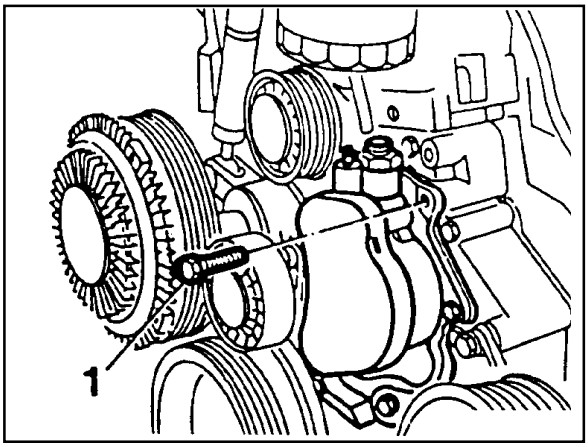

3. Remove the vacuum pump (2).

4. Install the vacuum pump (2).

Tightening Torque	10 Nm

   Notice

   Clean the gasket residues of sealing surface of vacuum pump and replace the gasket(5).

5. Connect the vacuum line (3, 4).

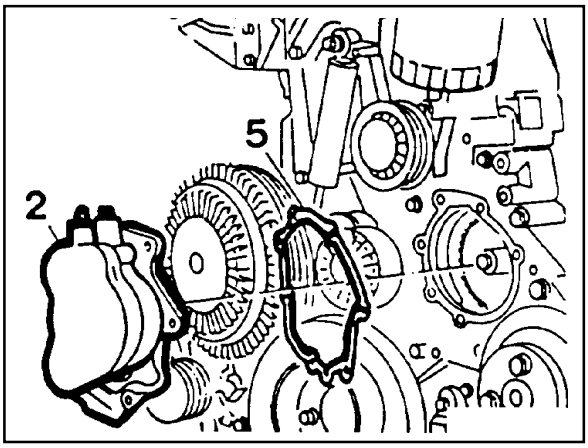

Downloaded from www.Manualslib.com manuals search engine

VACUUM UNIT REPLACEMENT

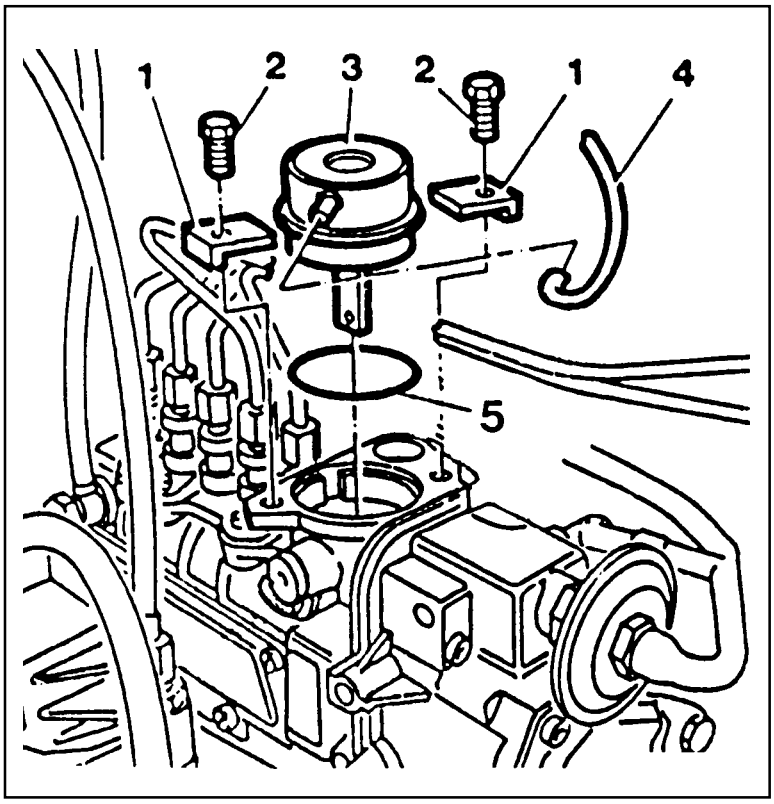

1 Bracket
2 Bolt
3 Vacuum Unit
4 Vacuum Line
5 Seal ..... Replace

Downloaded from www.Manualslib.com manuals search engine

IDLE SPEED ADJUSTMENT

Service Data

Engine	Idle Speed
OM661LA Engine	750 - 850 rpm
OM662LA Engine	720 - 820 rpm

Tools Required

667 589 00 21 00 TDC Pulse Generato

Commercial Tool

Digital tester	e.g. Bosch, MOT 001.03
	Sun, DIT 9000

Adjustment

1. Connect the digital tester (1) and TDC pulse sender unit (11).
2. Run the engine and warm up the coolant to 60~80°C.

TDC pulse generator 667 589 02 21 00

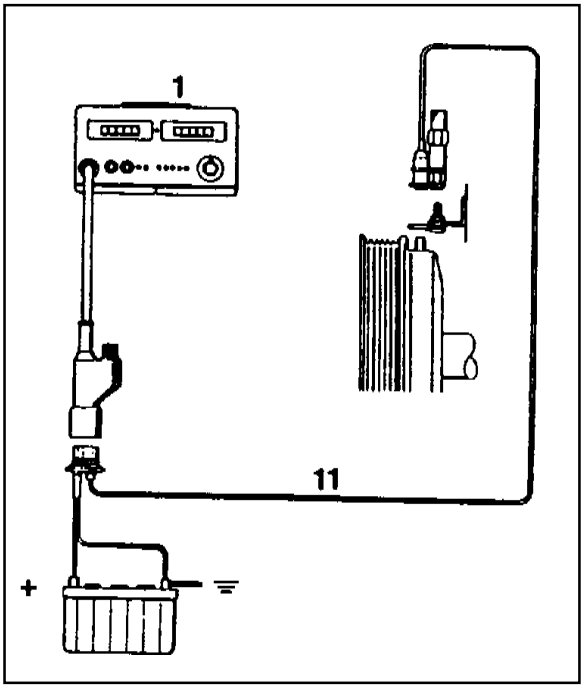

3. Disconnect the vacuum hose (4) from the PLA unit to check idle speed with tester.
4. Check idle speed with tester.

OM 661LA Engine	750 - 850rpm
OM 662LA Engine	720 - 820rpm

Notice

To adjust idle speed, loosen the locking nut (6) of PLA unit.

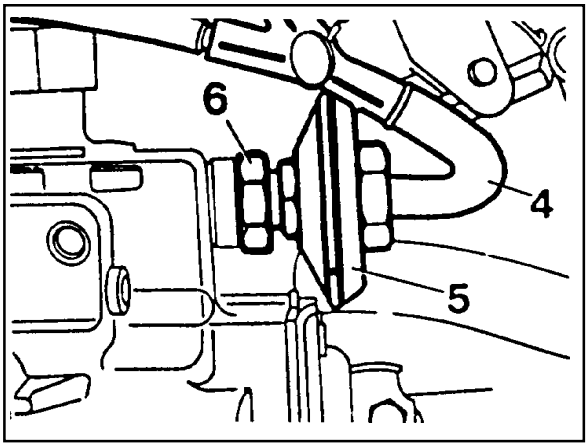

Downloaded from www.Manualslib.com manuals search engine

5. Ensure not to damage the idle spring in the governor and adjust idle speed by turning the PLA unit (5) slowly.

Clockwise	RPM Decrease
Counterclockwise	RPM Increase

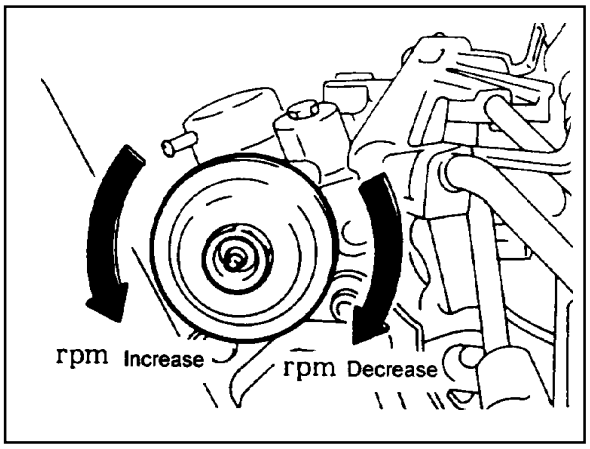

Notice

Do not rotate the PLA unit over ½ turn from the position marking. If do, idle spring in the governor will be severely damaged.

6. After adjustment, tighten the locking nut and place the position marking with different color of paint.

Notice

If there are no changes in idle speed with PLA unit adjustment, perform the service at a BOSCH Service Center.

7. Connect the vacuum pump to the PLA vacuum unit and build up vacuum approx. 500mbar. If engine rpm increases by approx. 100rpm, It is normal.

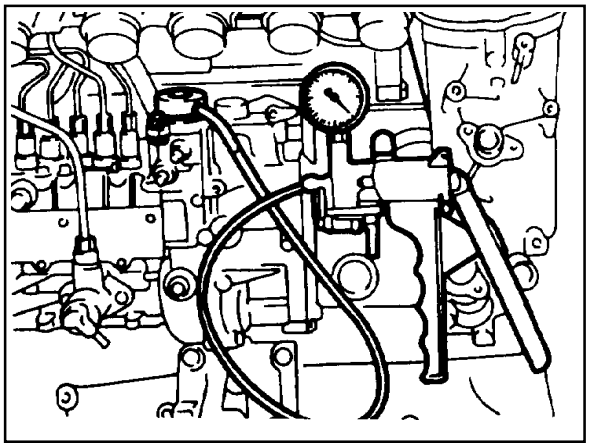

Vacuum Pump 001 589 73 21 00

8. Connect the vacuum line (4).
9. Switch on all ancillaries and check the idle speed.

Downloaded from www.Manualslib.com manuals search engine

FUEL PUMP TEST

Notice

Before test, replace the fuel filter cartridge and fuel prefilter.

Fuel Feed Test

1. Disconnect the fuel return line (1) and seal up it with plug.

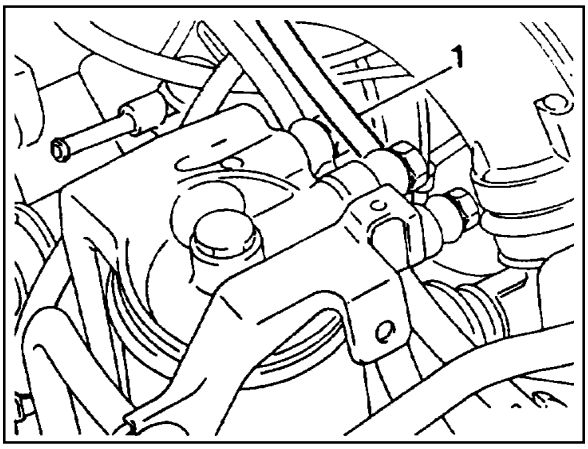

2. Insert the plastic hose (5) and put the end into the measuring beaker (6).

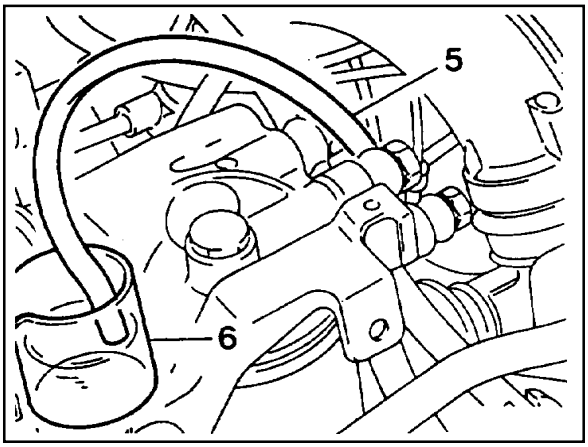

3. Disconnect the vacuum line (4) from vacuum unit (engine stop) (5) and connect the vacuum pump (7) to the vacuum unit.
4. To avoid the engine starting, build up vacuum (approx. 500 mbar).
5. Operate the starter motor for exactly 30 seconds and measure fuel volume in the beaker.

Min. volume	150cm^3 for 30 seconds

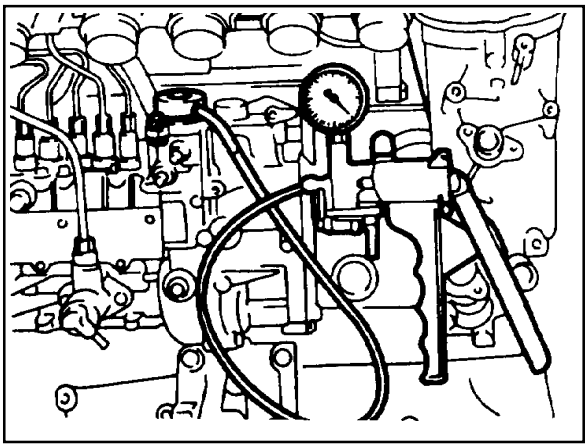

Downloaded from www.Manualslib.com manuals search engine

Fuel Pressure Test

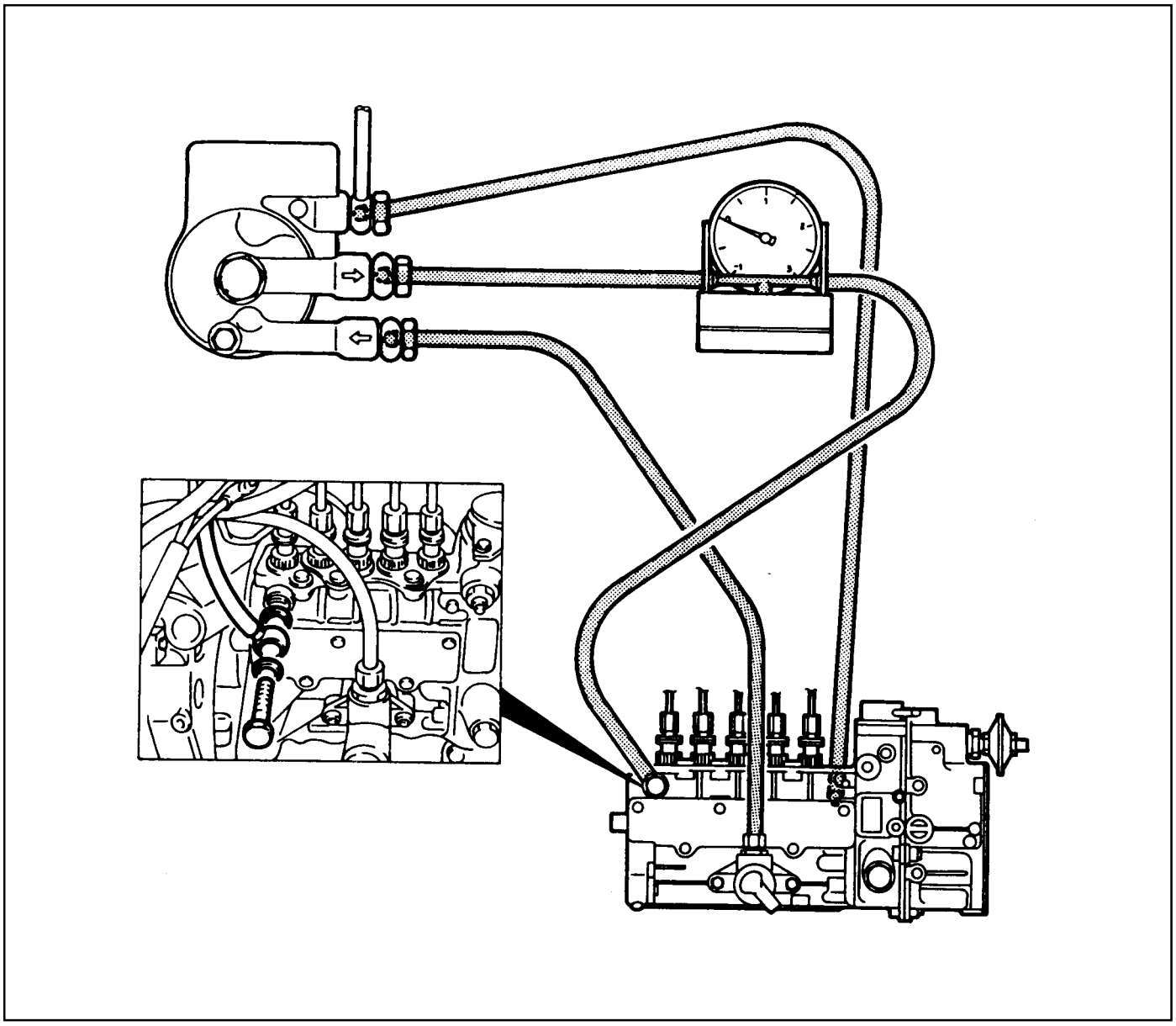

Downloaded from www.Manualslib.com manuals search engine

Tools Required

617 589 04 21 00 Tester

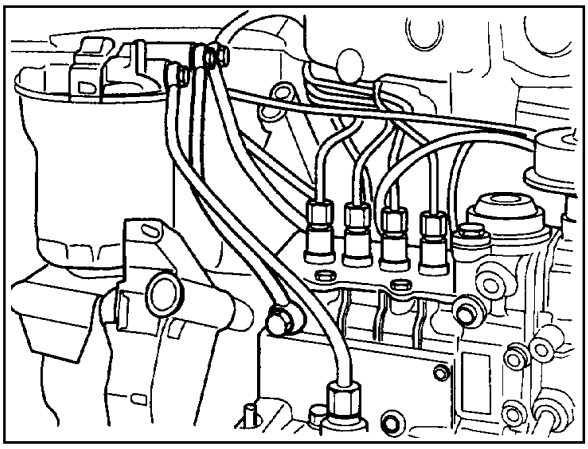

1. Disconnect the fuel line (2) from the fuel filter.
2. Remove the banjo bolt (4) from the fuel injection pump and remove the seals (3) and fuel line (2).
3. Connect the tester (5).

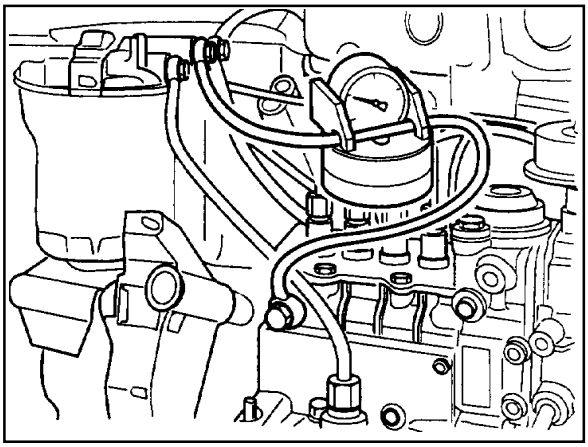

4. Start the engine and read off the fuel pressure on tester (5).

   Notice

At idle Speed	> 0.3bar
At full load	> 0.5bar

   If out of standard, replace the fuel feed pump.

   Tester 617 589 04 21 00

5. Stop the engine.

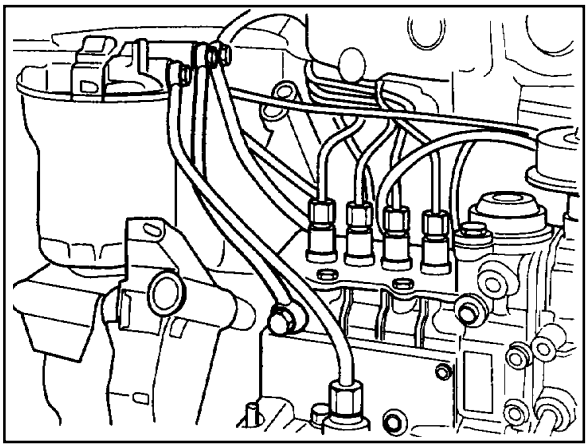

6. Remove the tester.
7. Replace the seal and connect the fuel line (2).

Downloaded from www.Manualslib.com manuals search engine

FUEL PUMP

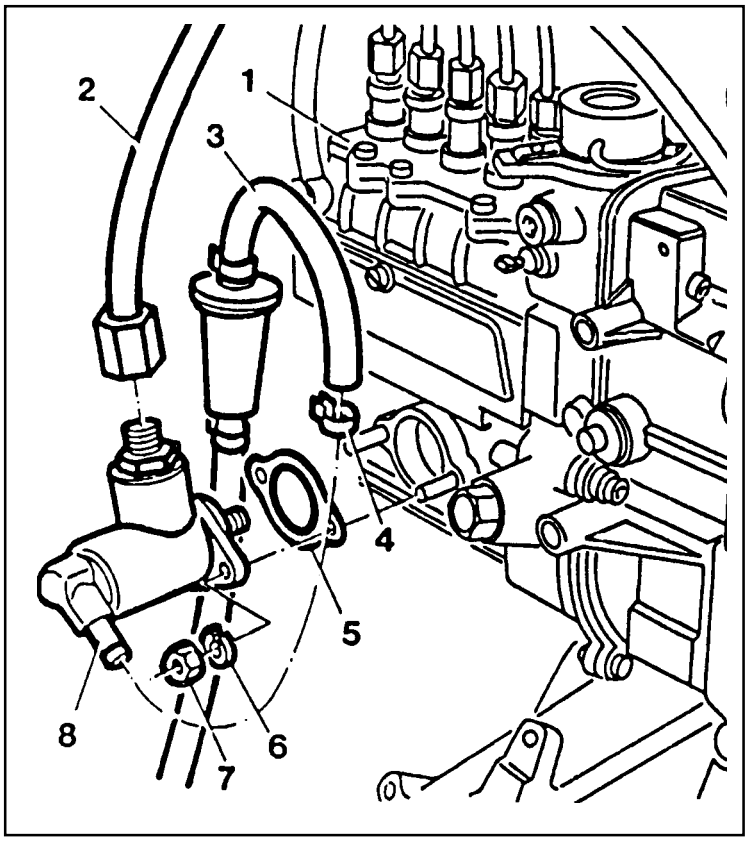

1 Fuel Injection Pump
2 Pressure Line 13Nm
3 Suction Line
4 Hose Clip ..... Replace
5 Gasket ..... Replace
6 Spring Lock Washer
7 Hexagon Nuts
8 Fuel Pump

Downloaded from www.Manualslib.com manuals search engine

INJECTION NOZZLE TEST

Preceding Work : Removal of fuel injection nozzle

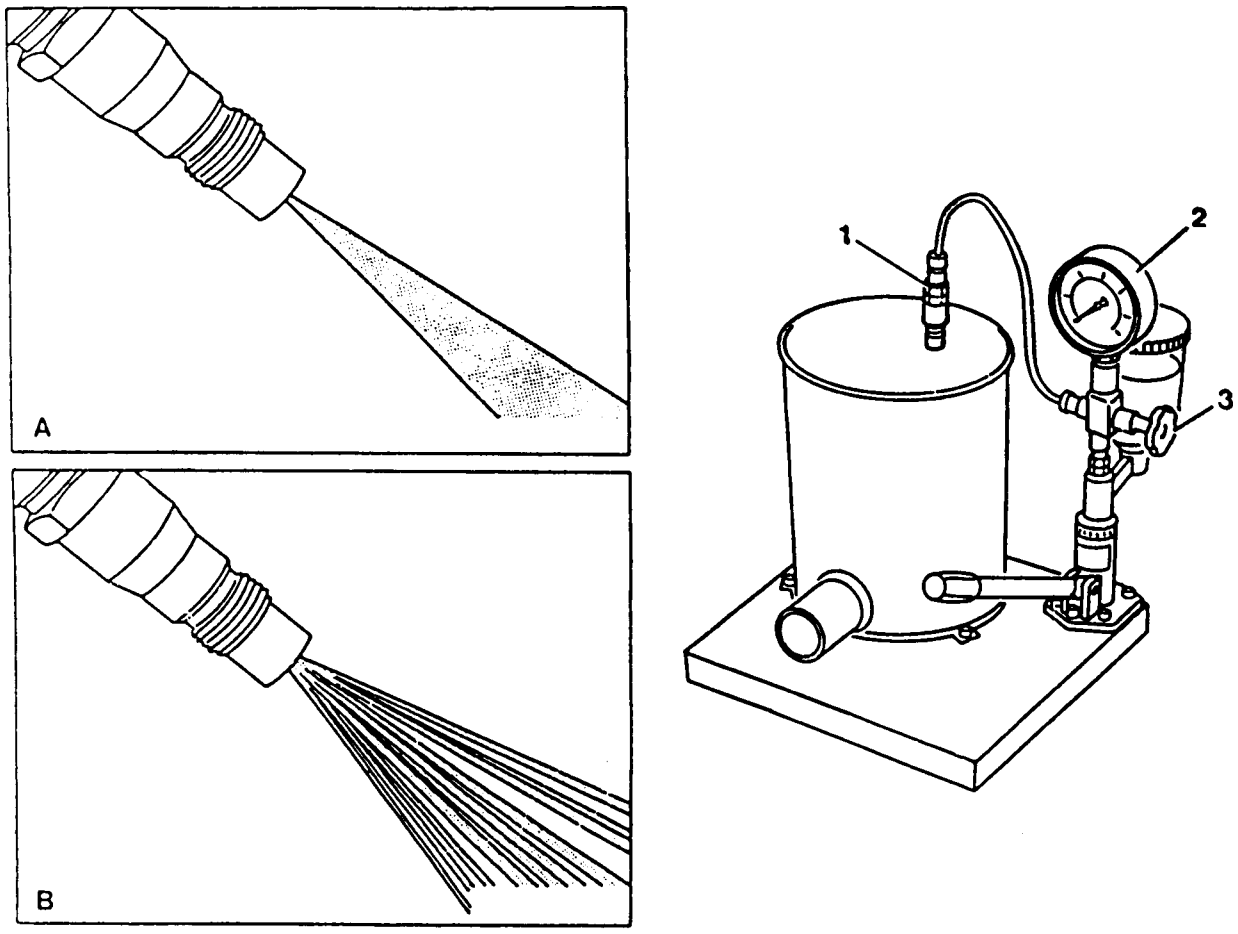

1. Fuel Injection Nozzle ..... New : 115 - 125bar
   Used : min. 100bar

A Closed Spray = good
B Stringy Spray = poor

2 Tester
3 Valve

Downloaded from www.Manualslib.com manuals search engine

Tools Required

000 589 14 27 00 Tester

Notice

When testing the injection nozzle, do not place your hand into the spray of a nozzle. The spray will penetrate deep into the skin and destroy the tissue.

1. Connect the fuel injection nozzle to the tester (2).

Tester 000 589 14 27 00

2. Close the valve (3) and pump 5 times strongly.
3. Chatter test :

   Slowly operate the hand lever at tester (approx. 1 stroke per second). The nozzle must spray with a gentle chattering.

4. Spray pattern test :

   Operate the hand lever at tester rapidly (approx. 2~3 strokes per second).

   - Good

     The spray pattern shows closed and well atomized.

   - Poor

     The spray pattern shows split, too wide and stringy.

     (Repair the fuel injection nozzle)

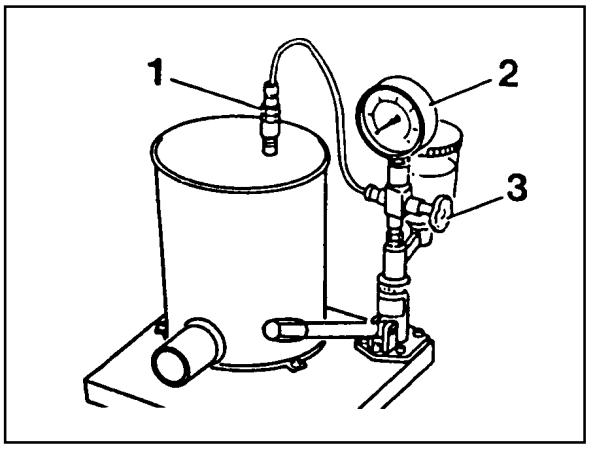

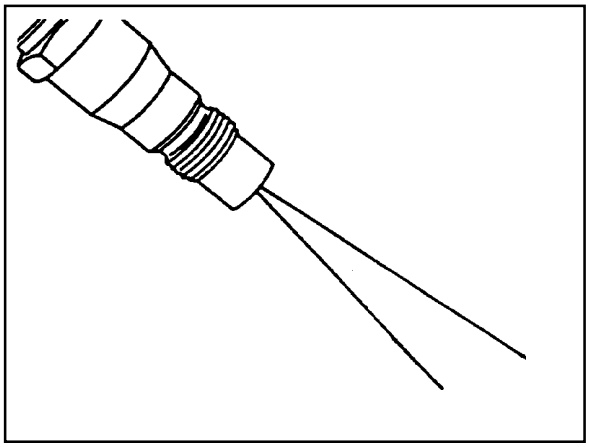

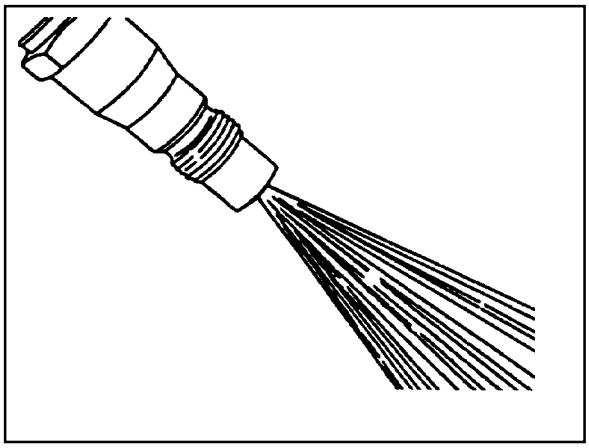

Downloaded from www.Manualslib.com manuals search engine

5. Opening pressure test :

   Open the valve (3) and slowly operate the hand lever at tester (approx. 1 stroke / second) and measure opening pressure.

New Nozzle	115 - 125bar
Used Nozzle	Min. 100bar
Difference Between Nozzles	Max. 5bar

   Notice

   If out of standard, repair the injection nozzle.

6. Leak test

   Slowly operate the hand lever at the tester until get a pressure of approx. 90bar. Maintain this pressure for more than

   20 seconds and within this period no drop of fuel should build up at the nozzle tip.

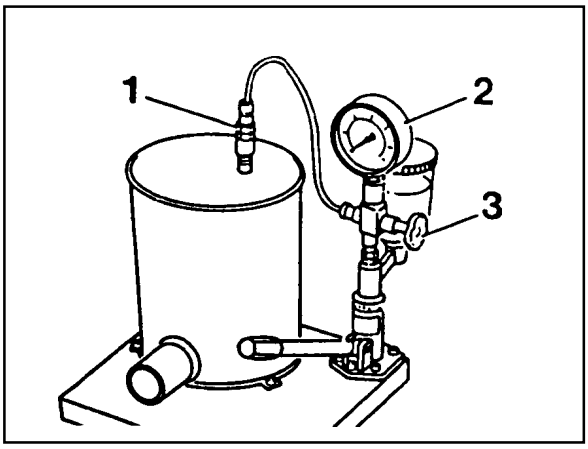

Downloaded from www.Manualslib.com manuals search engine

INJECTION NOZZLES

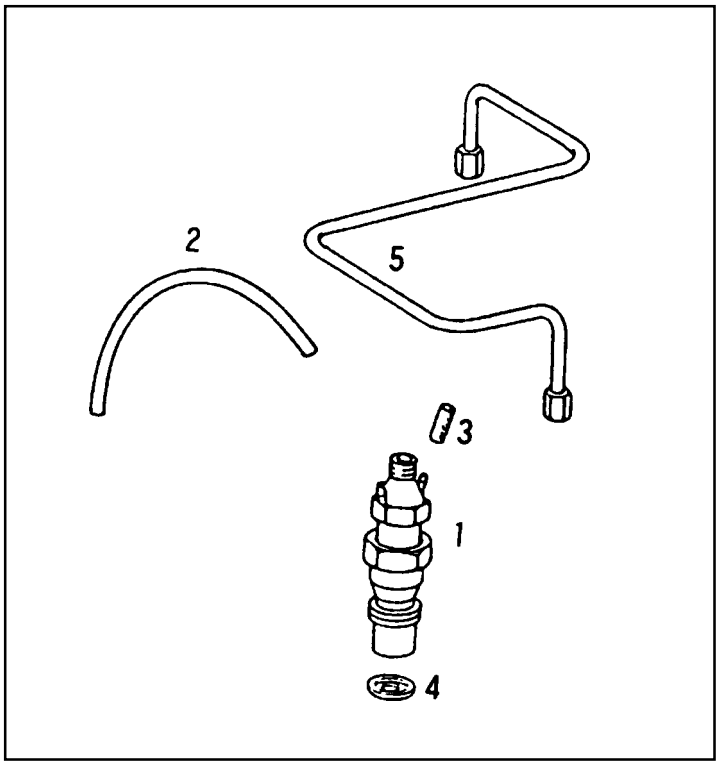

1 Fuel Injection Nozzle 35-40Nm
2 Fuel Return Hose
3 Plug
4 Nozzle Washer ..... Replace
5 Fuel Injection Pipe 18Nm

Downloaded from www.Manualslib.com manuals search engine

Tools Required

001 589 65 09 00 Serration Wrench

Removal & Installation Procedure

1. Remove the plastic clip from the injection pipe
2. Remove the fuel return hose.

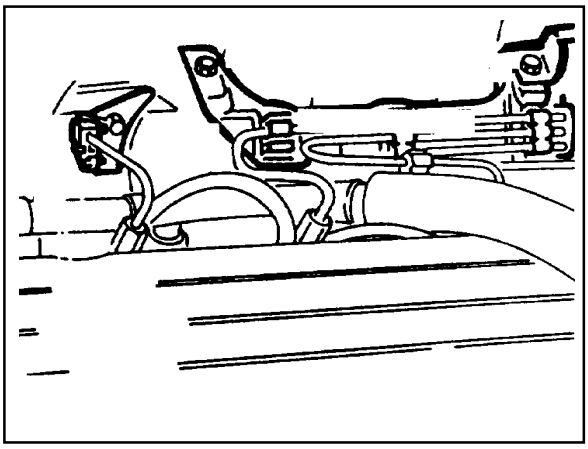

3. Disconnect the injection pipes from the injection nozzles and push them to the side.

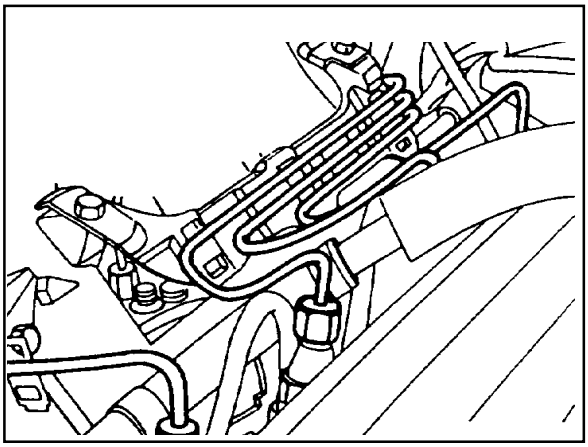

4. Remove the fuel injection nozzle.

Serration Wrench 001 589 65 09 00

Notice

Replace the washers.

5. Installation should follow the removal procedure in the reverse order.

Notice

Pay attention to the installation position of new nozzle washer and tightening torque

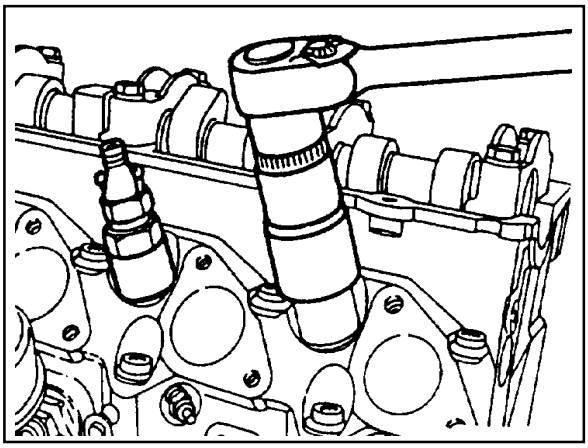

Downloaded from www.Manualslib.com manuals search engine

INJECTION NOZZLE REPAIR

Preceding Work : Removal of fuel injection nozzle

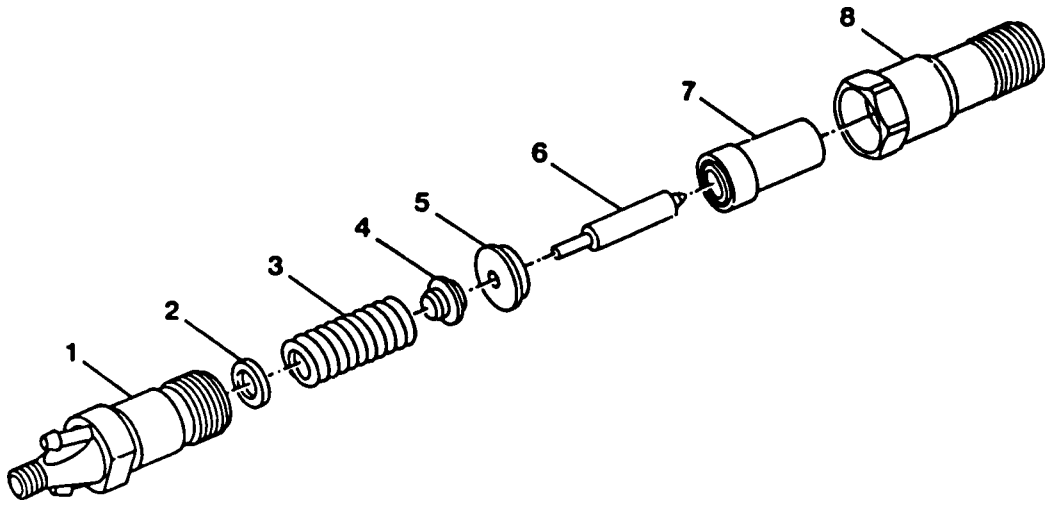

1 Nozzle Holder
2 Steel Washer
3 Compression Spring
4 Thrust Pin
5 Intermediate Disc
6 Nozzle Needle
7 Nozzle Body
8 Nozzle Tensioning Nut 80Nm

Downloaded from www.Manualslib.com manuals search engine

Tools Required

001 589 65 09 00 Socket Wrench Insert

000 589 00 68 00 Cleaning Set

Repair Procedure

1. Clamp the nozzle holder (1) in a vice and remove the nozzle tensioning nut (8).

   Notice

   Use protective jaws for clamping.

2. Disassemble the fuel injection nozzle.

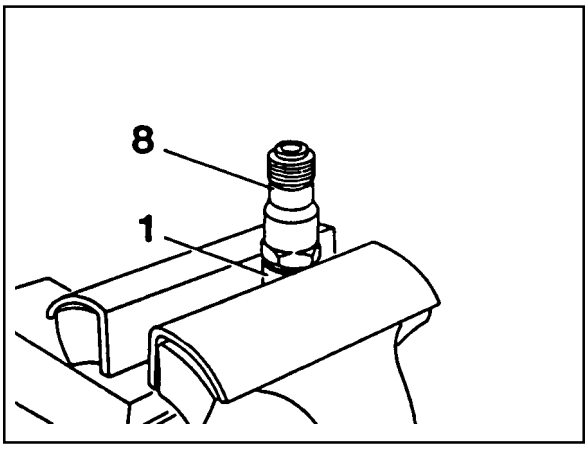

Socket Wrench Insert 001 589 65 09 00

3. Clean the nozzle needle (6) and nozzle body (7) with an abradant.
4. Clean the nozzle seat with cleaning cutter.

Cleaning Set 000 589 00 68 00

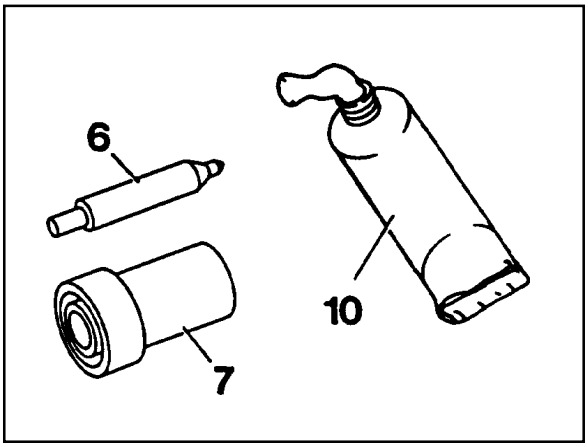

5. Immerse nozzle needle (6) and nozzle body (7) in filtered diesel fuel. When the nozzle body is held vertical, the weight of the nozzle needle must cause it to slide down toward the nozzle needle seat.

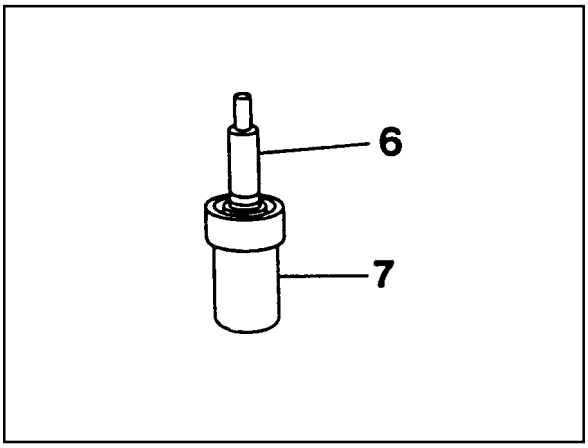

6. Assemble the injection nozzle so that the tip of the thrust (4) pin is facing toward the nozzle holder.

Tightening Torque	80 Nm

   Notice

   Nozzle needle (6) and nozzle body (7) should always be replaced as a pair.

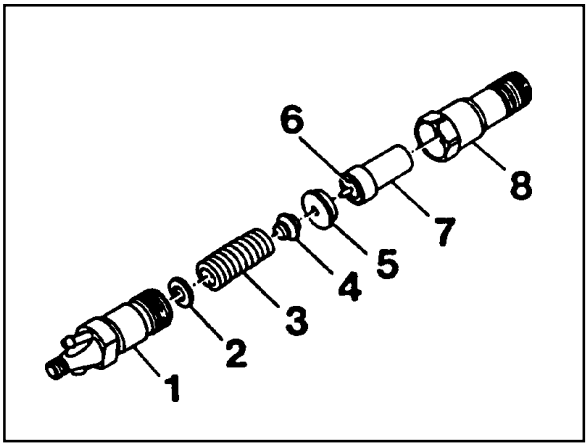

Downloaded from www.Manualslib.com manuals search engine

7. Check the fuel injection nozzle and adjust opening pressure if necessary.

Opening pressure adjustment

Disassemble the fuel injection nozzle and replace the steel washer (2).

Notice

Each 0.05mm thickness of the washer results in a pressure difference of approx. 3bar.

Downloaded from www.Manualslib.com manuals search engine

REMOVAL AND INSTALLATION OF INJECTION TIMING DEVICE

Preceding Work : Removal of vacuum pump

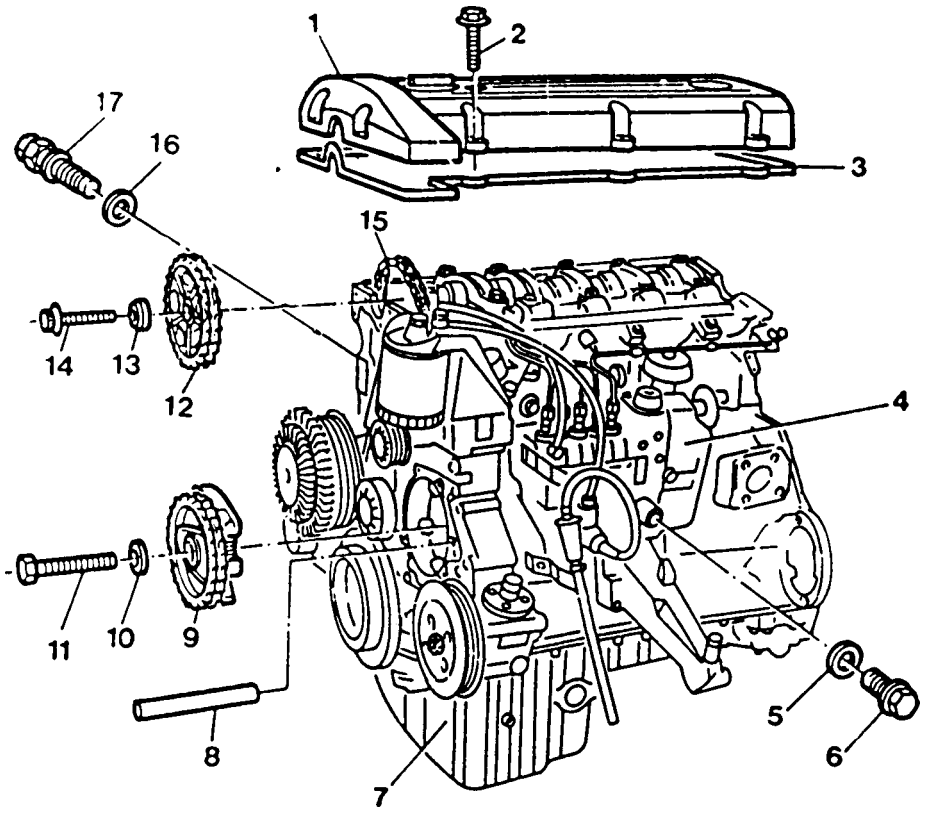

1 Cylinder Head Cover
2 Bolt 10Nm
3 Gasket ..... Replace
4 Fuel Injection Pump
5 Seal ..... Replace
6 Screw Plug 30Nm
7 Oil Pan
8 Locking Pin
9 Injection Timing Device
10 Washer
11 Bolt (Left-Hand Thread) 46Nm
12 Camshaft Sprocket
13 Washer
14 12-Sided Stretch Bolt ..... Check, 25Nm + 90°
15 Timing Chain
16 Seal
17 Chain Tensioner 80Nm

Downloaded from www.Manualslib.com manuals search engine

Tools Required

601 589 00 08 00 Flange
601 589 05 21 00 Locking Screw
116 589 20 33 00 Sliding Hammer
116 589 02 34 00 Threaded Bolt
667 589 04 63 00 Retaining Plate

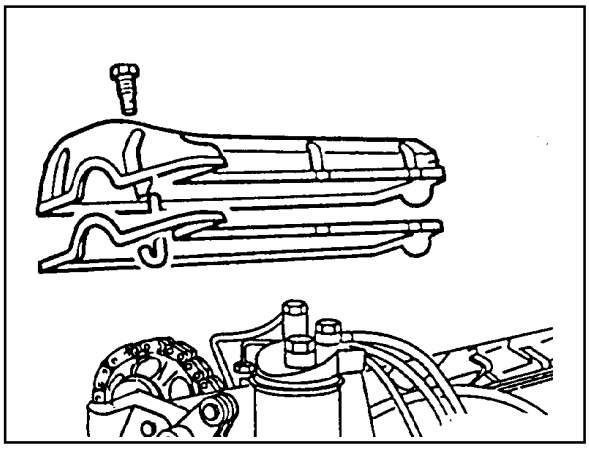

Removal & Installation Procedure

1. Remove the bolts (2) and then remove the cylinder head cover (1) and gasket (3).

   Installation Notice

Tightening Torque	10 Nm

   Notice

   Replace the gasket.

   Rotate the engine 1 revolution by hand and check TDC marking of the crankshaft and camshaft.

2. Loosen the camshaft sprocket bolt (14).

   Notice

   Do not remove the bolt.

   Installation Notice

Tightening Torque	25Nm + 90°

   Notice

   If max. length of bolt exceeds 53.6mm, replace it.

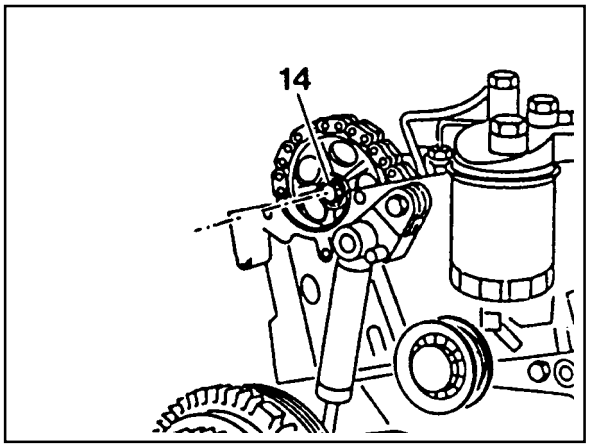

3. Loosen the bolt (11) (left-hand thread).

   Notice

   Do not remove the bolt.

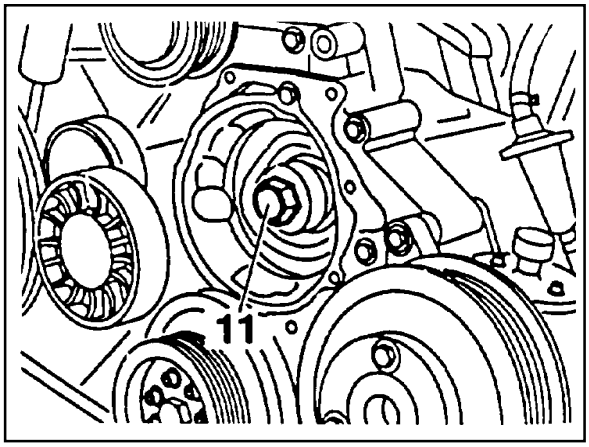

Downloaded from www.Manualslib.com manuals search engine

4. Position the no.1 cylinder at ATDC 15°.

   Notice

   Do not rotate the engine with camshaft sprocket bolt or opposite direction of the engine rotation.

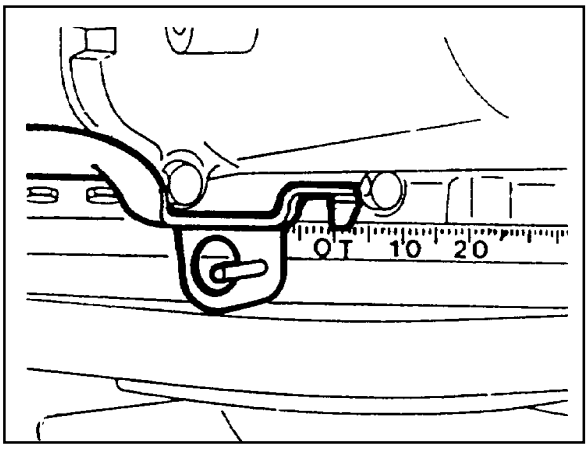

5. Remove the plug (6) and seal (5) from the fuel injection pump and collect oil in a suitable vessel.

   Installation Notice

Tightening Torque	30 Nm

   Notice

   Replace the seal.

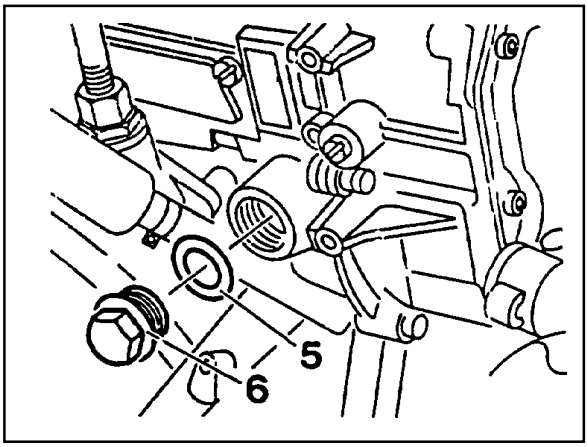

6. Install the locking screw (18) into the injection pump.

   Notice

   Before tightening the bolts for the injection timing device and the camshaft sprocket, always remove the locking screw from the injection pump and reinstall the plug.

   Locking Screw 601 589 05 21 00

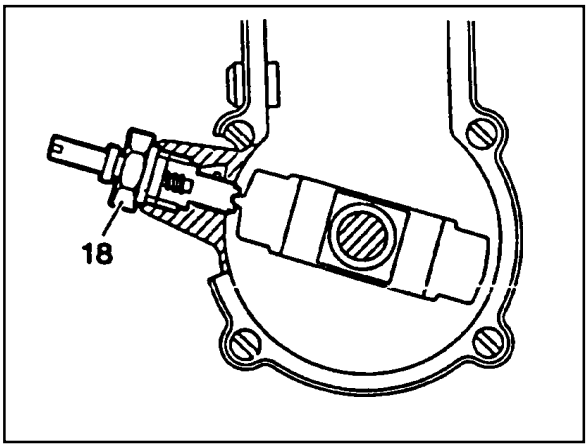

7. Place alignment marks (arrow) on the timing chain (12) and camshaft sprocket (15).

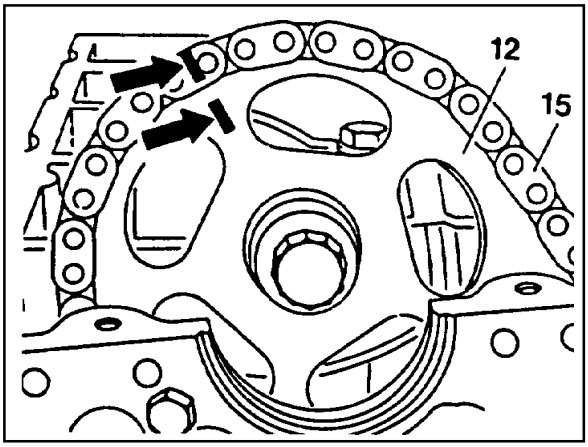

Downloaded from www.Manualslib.com manuals search engine

8. Remove the chain tensioner (17).

Installation Notice

Tightening Torque	80 Nm

Notice

Replace the seal (16).

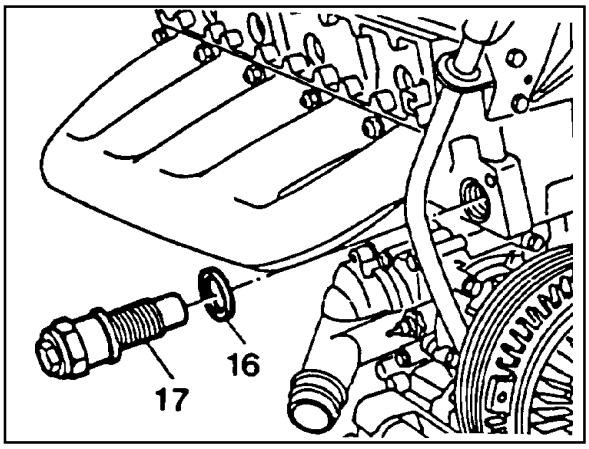

9. Pull out the 12-sided stretch bolt (14) and washer and remove the camshaft sprocket (12).

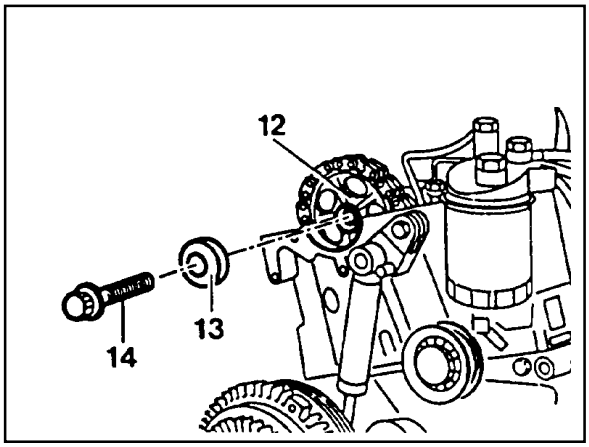

10. Pull out the bolt (11) and washer (10).

Notice

Be careful that the bolt is left-hand thread.

Installation Notice

Tightening Torque	46 Nm

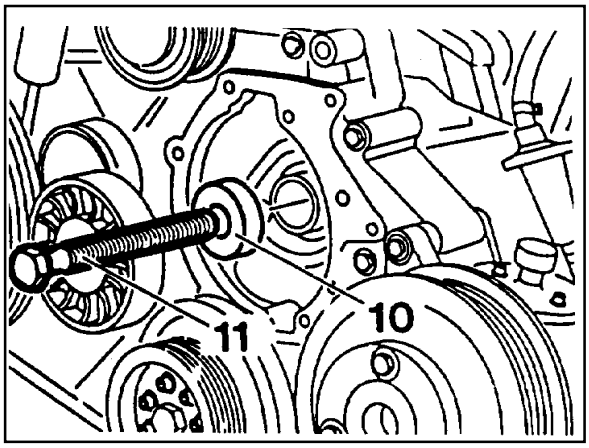

11. Using special tool (24, 25), remove the locking pin (8).

Sliding Hammer 116 589 20 33 00
Threaded Bolt 116 589 02 34 00

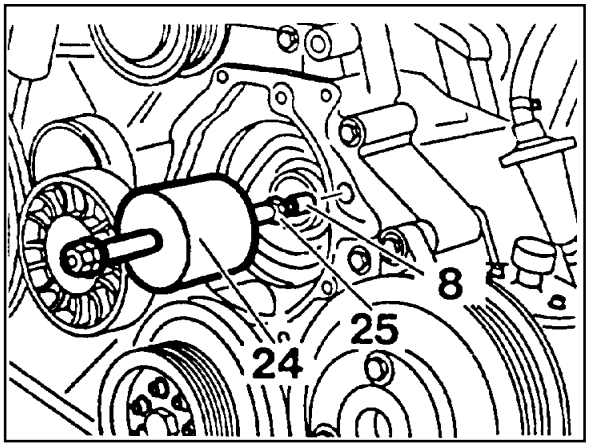

Downloaded from www.Manualslib.com manuals search engine

12. Push back the timing chain with retaining plate (26) and remove the injection timing device (9).

Retaining Plate 667 589 04 63 00

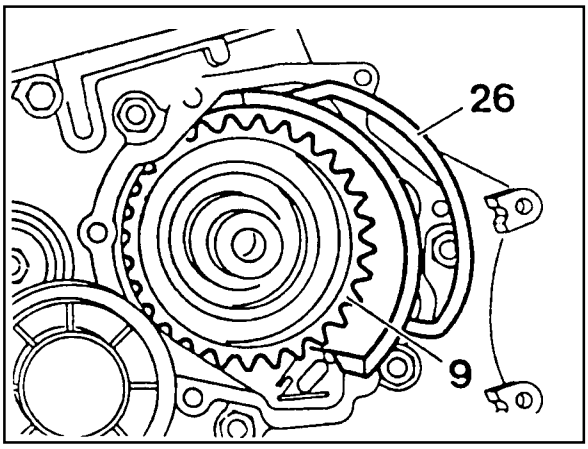

13. Installation should follow the removal procedure in the reverse order.
14. After assembling the engine, check start of delivery and adjust if necessary.

Downloaded from www.Manualslib.com manuals search engine

INJECTION TIMING DEVICE

Preceding Work : Removal of injection timing device

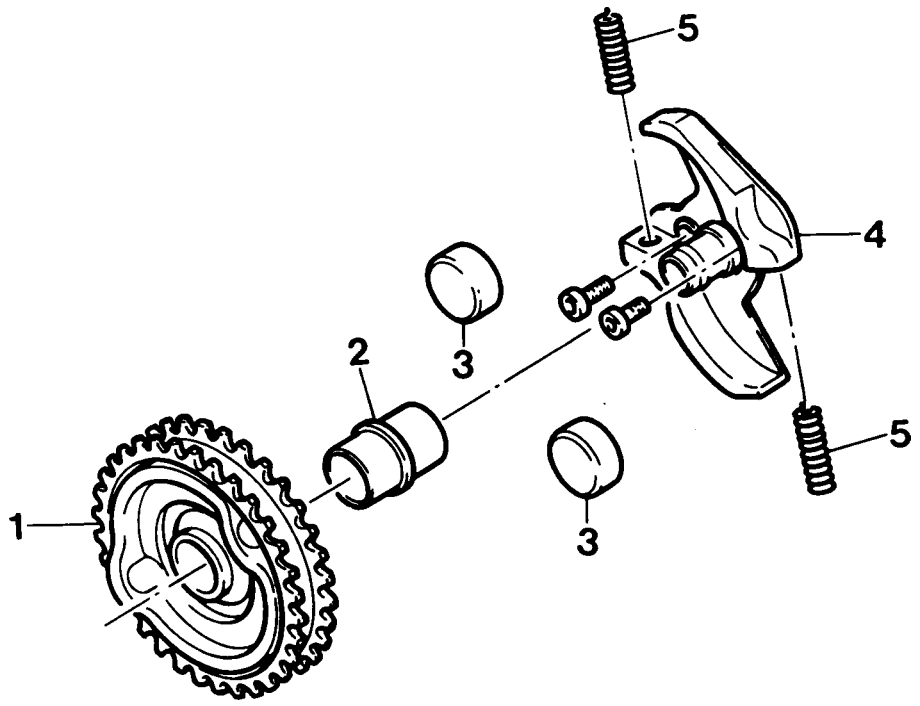

1 Cam Sprocket ..... Check
2 Bushing ..... Check
3 Governor Weights
4 Segment Flange and Drive Hub
5 Compression Springs

Downloaded from www.Manualslib.com manuals search engine

Disassembly & Assembly

1. Remove the governor weights (3).

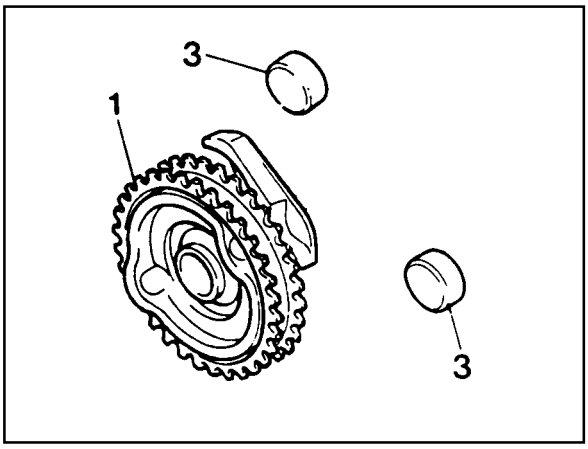

2. Pull out the compression springs (5) and cam sprocket (1) from the segment flange (4).

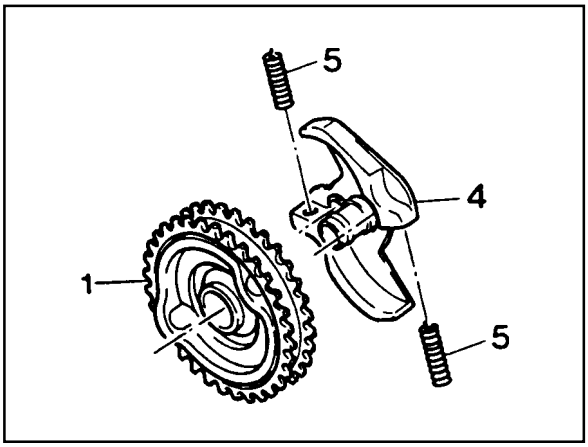

3. Knock out the bushing with a proper drift.
4. Installation should follow the removal procedure in the reverse order.

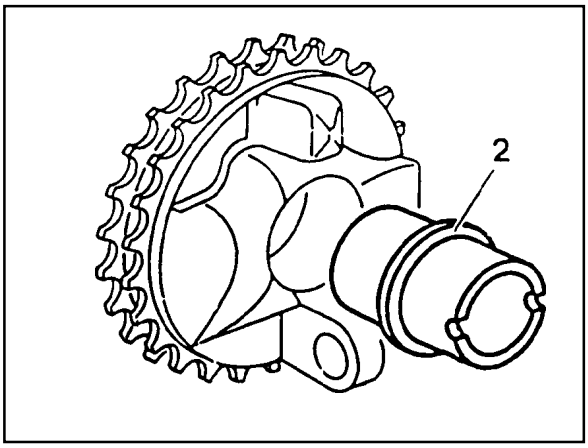

Downloaded from www.Manualslib.com manuals search engine

START OF DELIVERY TEST (POSITION SENSOR, RIV METHOD)

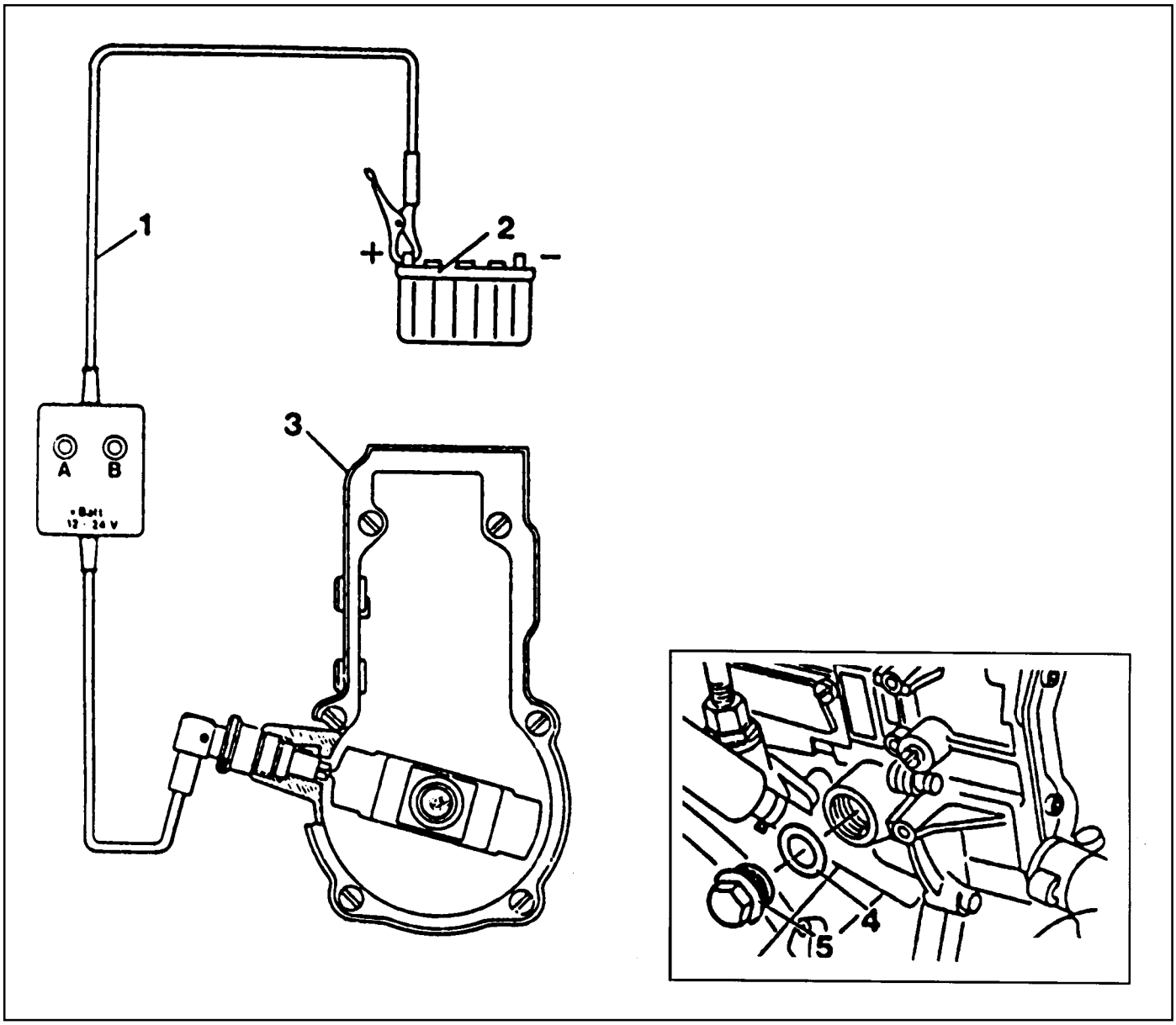

1 Position Sensor
2 Battery
3 Fuel Injection Pump
4 Seal ..... Replace
5 Screw Plug 30Nm

Service Data

Start of Delivery (RIV)	ATDC 14° - 16°

Downloaded from www.Manualslib.com manuals search engine

Tools Required

617 589 08 21 00 Position Sensor

Test Procedure

1. Remove the screw plug (5) and seal (4) and collect oil in a suitable vessel.

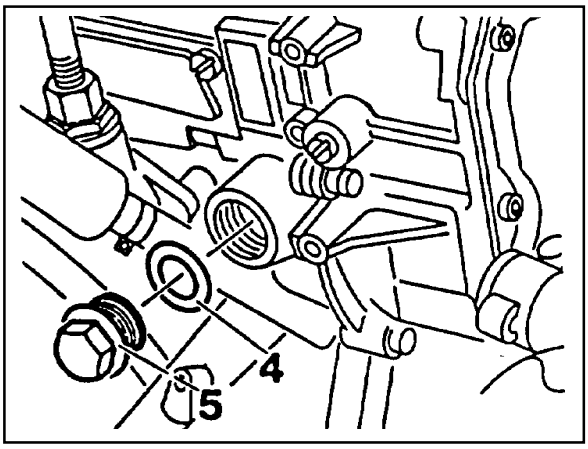

2. Install the position sensor (1) into the governor housing of the injection pump to be the guide pin of the position sensor facing up.
3. Connect the battery terminal of position sensor (1) to positive terminal (+) of battery.

Position Sensor 617 589 08 21 00

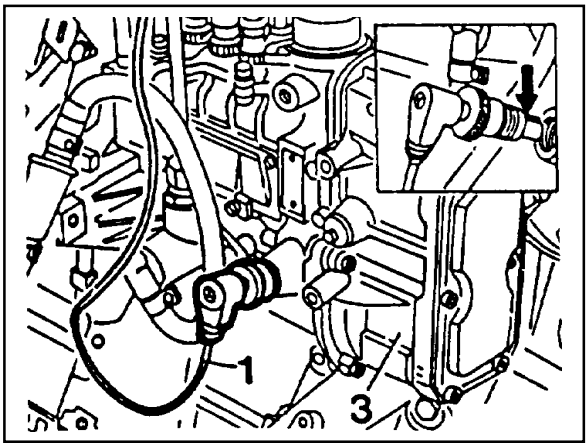

4. Rotate the crankshaft by hand (in direction of engine rotation) until the lamp ‘B’ lights up. Rotate the crankshaft carefully further until both lamps ‘A and B’ come on. In this position, check the RI value on the crankshaft vibration damper.

Specification	ATDC 14° - 16°

Notice

If only lamp ‘A’ lights up, repeat the test and if out of specification, adjust start of delivery.

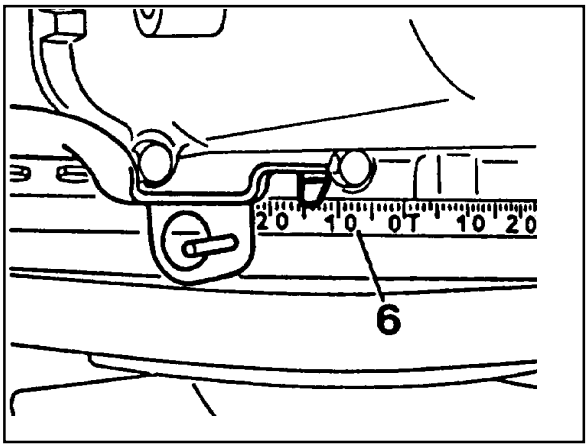

Downloaded from www.Manualslib.com manuals search engine

Digital Tester, RIV Method

(Connection Diagram for Testers Without Adapter)

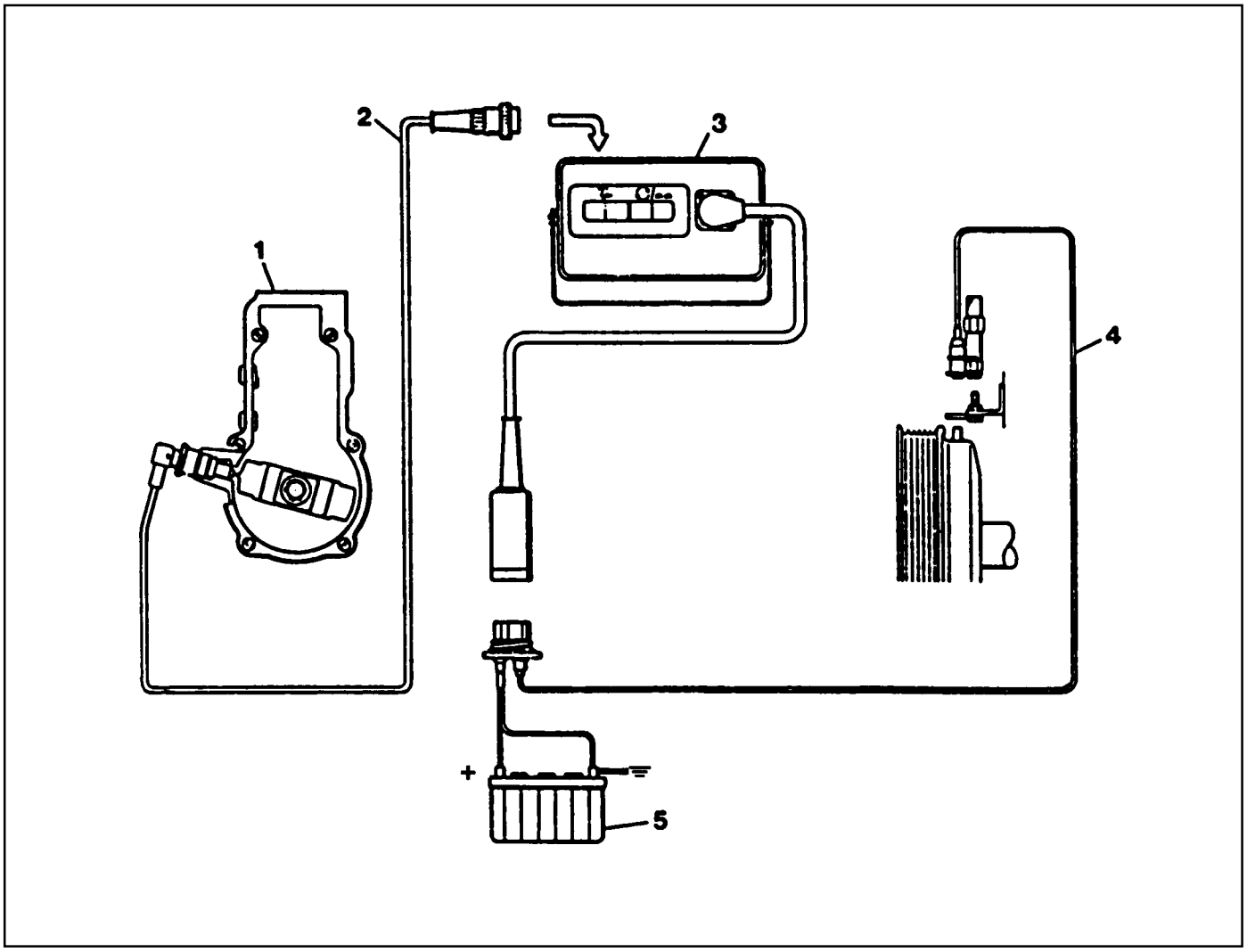

1 Fuel Injection Pump
2 RI Sensor
3 Digital Tester
4 TDC Pulse Sender Unit
5 Battery

Downloaded from www.Manualslib.com manuals search engine

(Connection Diagram for Testers With Adapter)

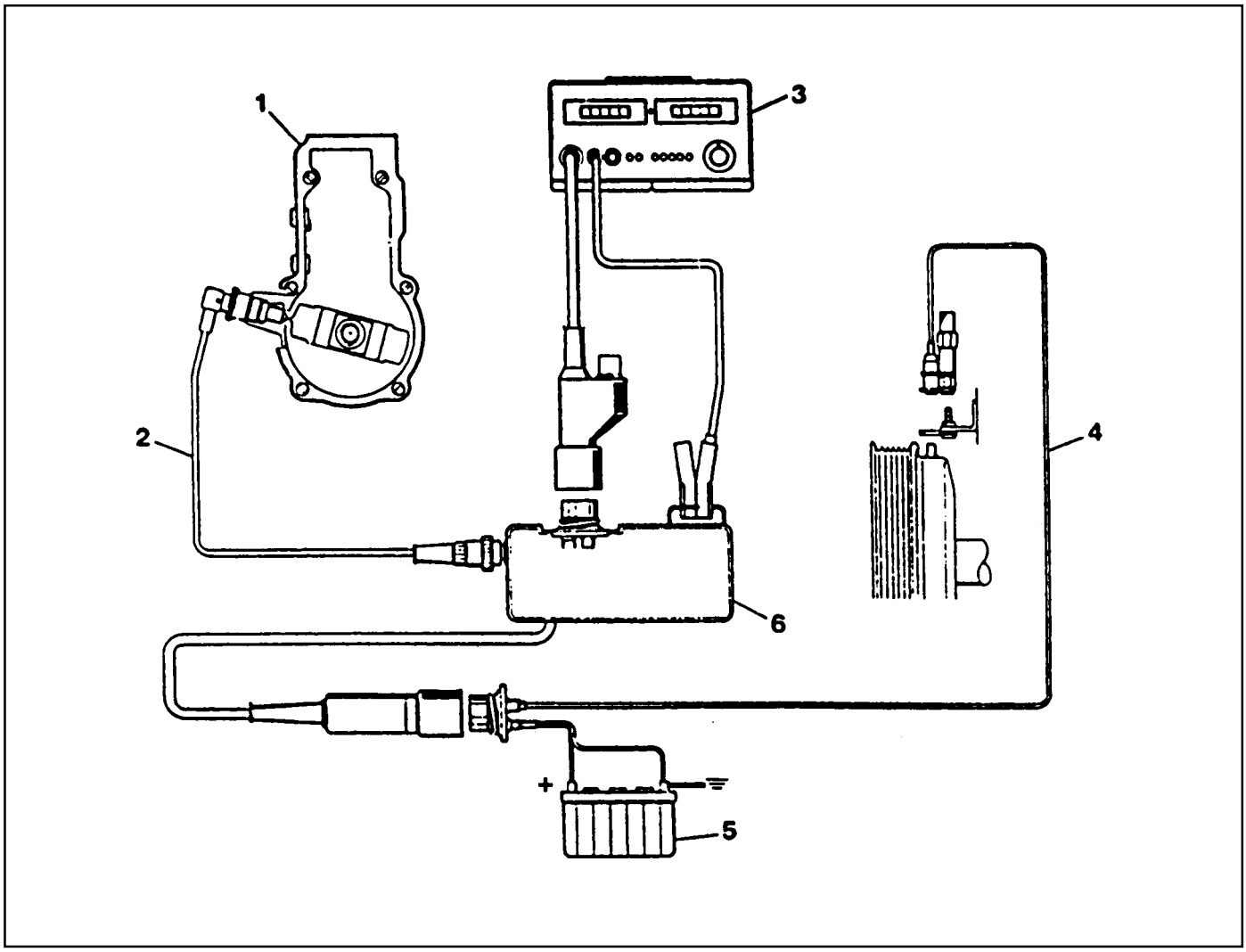

1 Fuel Injection Pump
2 Rl Sensor
3 Digital Tester
4 TDC Pulse Sender Unit
5 Battery
6 Rl Pulse Generator

Service Data

Start of Delivery (RIV)	ATDC 14° - 16°
Idle Speed	OM661LA : 720 - 820 rpm, OM662LA : 750 - 850 rpm

Downloaded from www.Manualslib.com manuals search engine

Tools Required

617 589 09 21 00 RI Sensor

617 589 10 21 00 Timing Tester

667 589 00 21 00 TDC Pulse Generator

Commercial Tools

Item		Tools
Digital Tester	With Pulse Generator	Bosch, MOT 001.03
		Hartmann & Braun, EOMT3
	Without Pulse Generator	Bosch, ETD 019.00
		Sun, DIT 9000
		ALV, Diesel - Tester 875

Test Procedure

1. Remove the screw plug (7) and seal (8) collect oil in a suitable vessel.

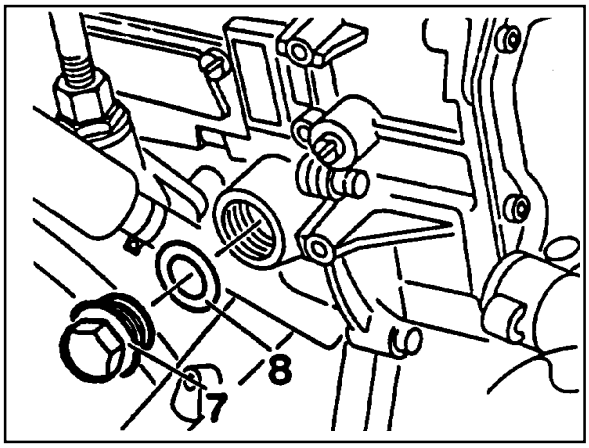

2. Install the RI sensor into the governor housing of injection pump (1).

RI Sensor 617 589 10 21 00

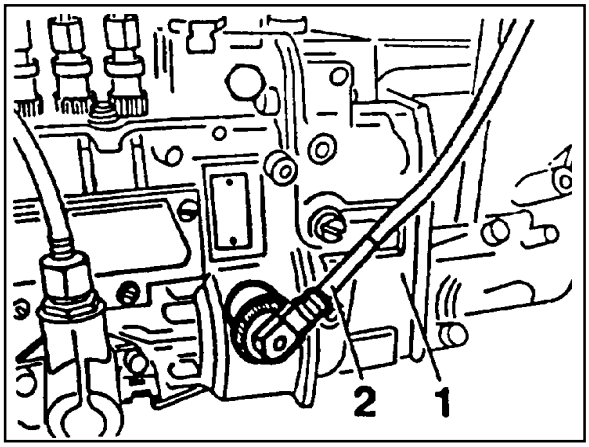

3. Connect the digital tester and TDC pulse sender unit according to connection diagram.
4. Run the engine at idle speed and check the RI value on the digital tester

RI Value	ATDC 14° - 16°

Notice

If out of standard, adjust the start of delivery.

5. Stop the engine.
6. Remove the RI sensor, digital tester and TDC pulse sender unit.
7. Replace the seal and tighten the plug.
8. Check engine oil level and adjust if necessary.

Tightening Torque	30 Nm

Downloaded from www.Manualslib.com manuals search engine

After Testing

Preceding Work : Start of delivery test

Position Sensor (RIV method)

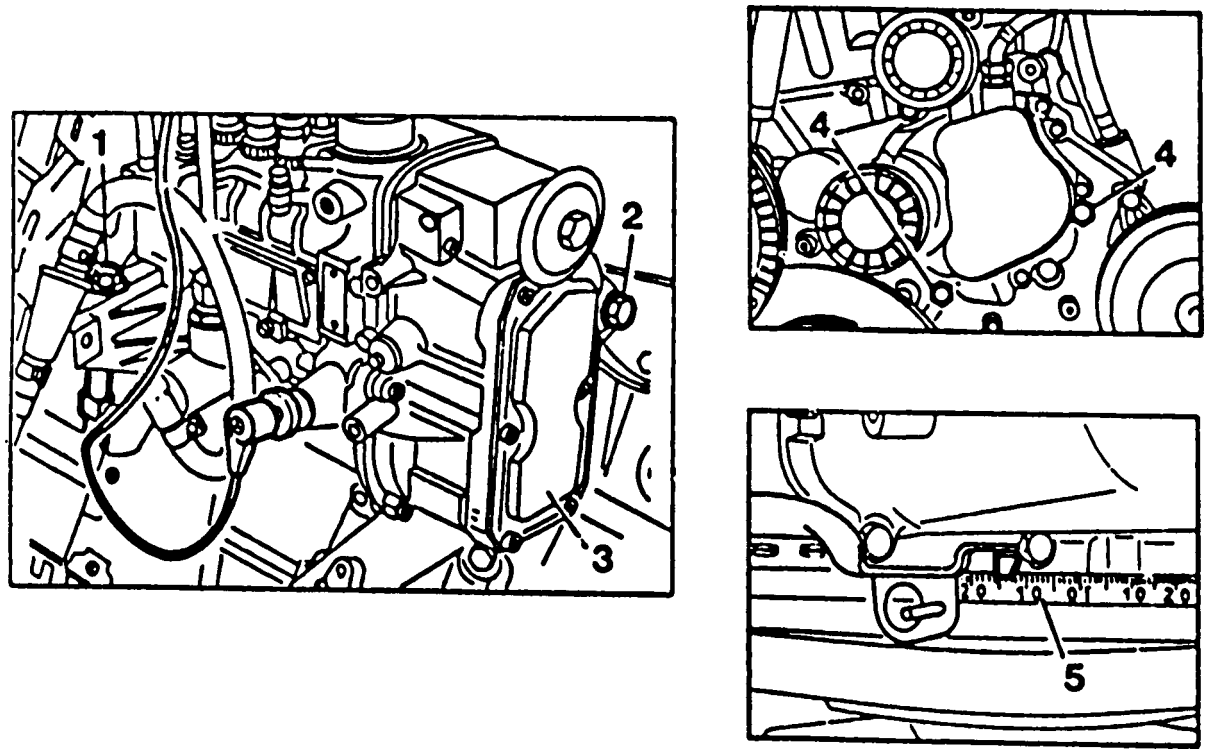

1 Adjusting Screw
2 Bolt 23Nm
3 Fuel Injection Pump
4 Bolt 23Nm
5 Scale ..... RI start of delivery = 14° - 16° ATDC

Downloaded from www.Manualslib.com manuals search engine

Tools Required

617 589 08 21 00 Position Sensor

Adjustment Procedure

1. Position the No. 1 cylinder at ATDC 15°

   Notice

   Do not rotate the engine in opposite direction of engine rotation.

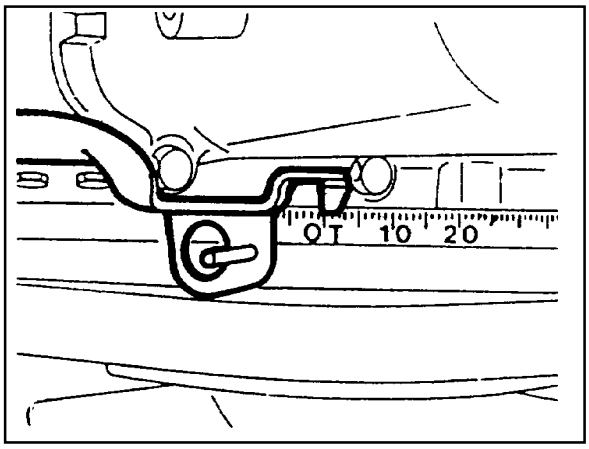

2. Remove the bolt (2) at the supporting bracket.

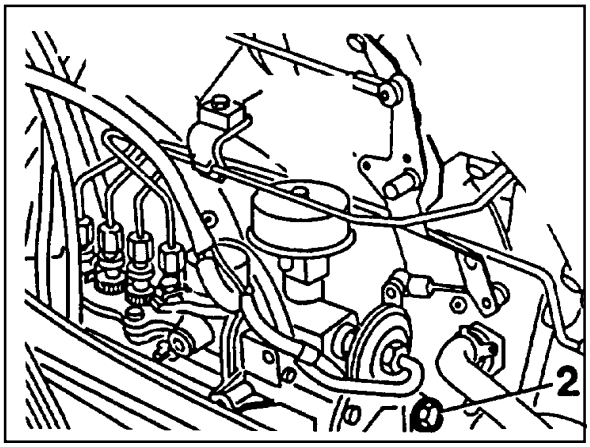

3. Remove the bolt (4).

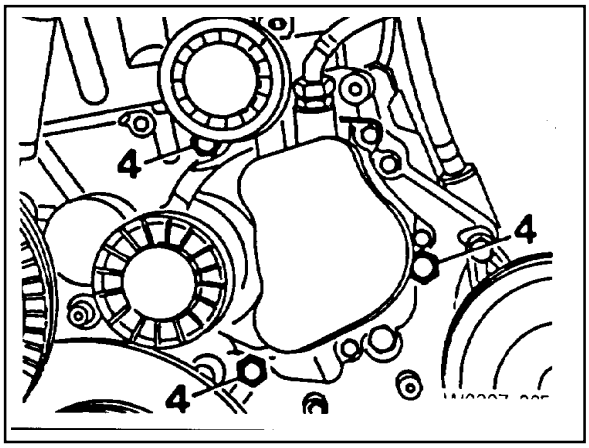

4. Turn the adjusting screw (1) until both lamps ‘A’ + ‘B’ on the position sensor light up.

To the right	Start of delivery retarded
To the left	Start of delivery advanced

   Notice

   If the adjustment range is not adequate, remove the injection pump and reinstall.

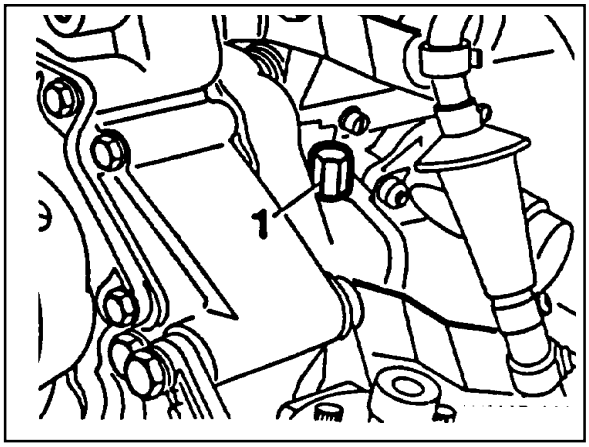

Position Sensor 617 589 08 21 00

5. After adjusting, retighten all the bolt to the specified torque.

Downloaded from www.Manualslib.com manuals search engine

Digital tester (RIV Method)

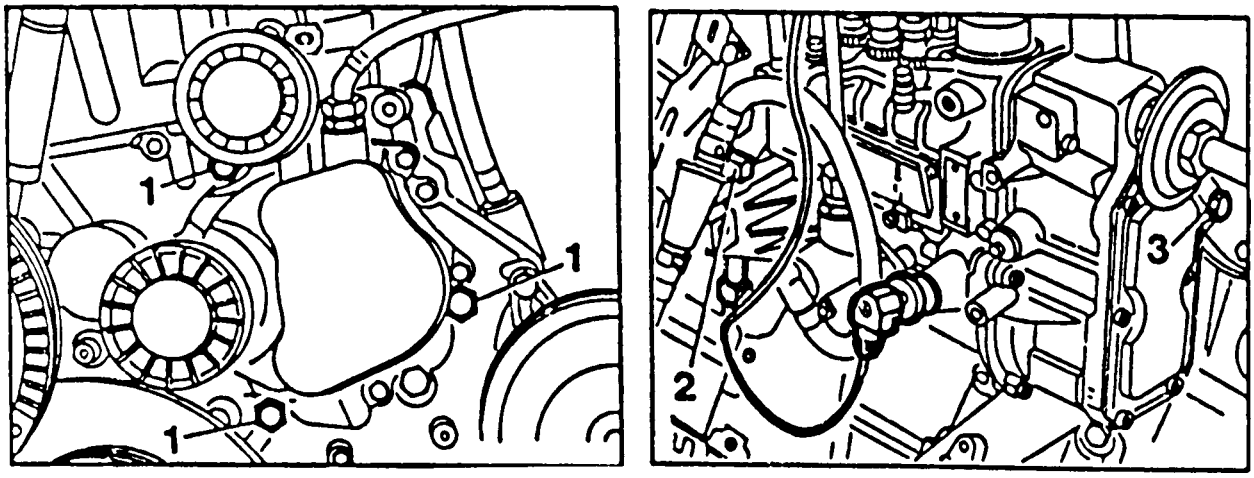

1 Bolt 23Nm
2 Adjusting
Screw ..... To the right : start of delivery retarded
To the left : start of delivery advanced
3 Bolt 23Nm

Service Data

Start of Delivery (RIV)	ATDC 14° - 16°
Ldling Speed	OM661LA : 720 - 820 rpm, OM662LA : 750 - 850 rpm

Tools Required

617 589 09 21 00 Rl Sensor
617 589 10 21 00 Timing Tester
667 589 00 21 00 TDC Pulse Generator

Commercial Tools

Item		Tools
Digital Tester	With Pulse Generator	Bosch, MOT 001.03
		Hartmann & Braun, EOMT3
	Without Pulse Generator	Bosch, ETD 019.00
		Sun, DIT 9000
		ALV, Diesel - Tester 875

Downloaded from www.Manualslib.com manuals search engine

Adjustment Procedure

1. Remove the bolt (3) at the supporting bracket.

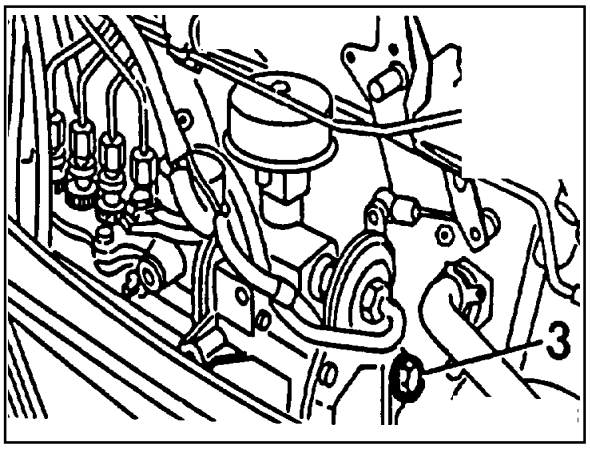

2. remove the bolts (1) at the timing case cover.

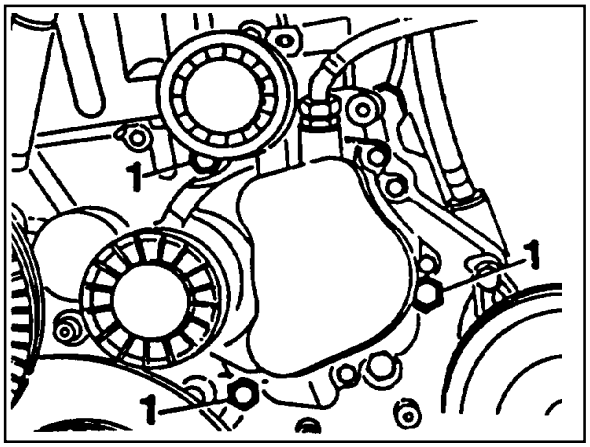

3. Run the engine at idle speed.
4. Turn the adjusting screw (2) until the specification (15° ± 1° ATDC) is indicated on the digital tester.

To the Right	Start of Delivery Retarded
To the Left	Start of Delivery Advanced

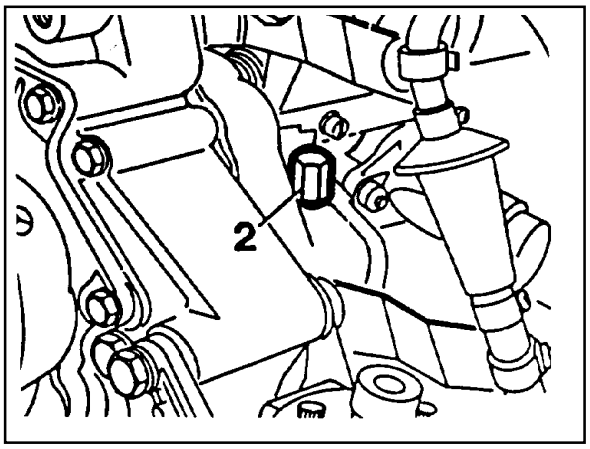

Downloaded from www.Manualslib.com manuals search engine

FUEL INJECTION PUMP

Preceding Work : Removal of vacuum pump
Removal of air cleaner housing
Removal of intake manifold

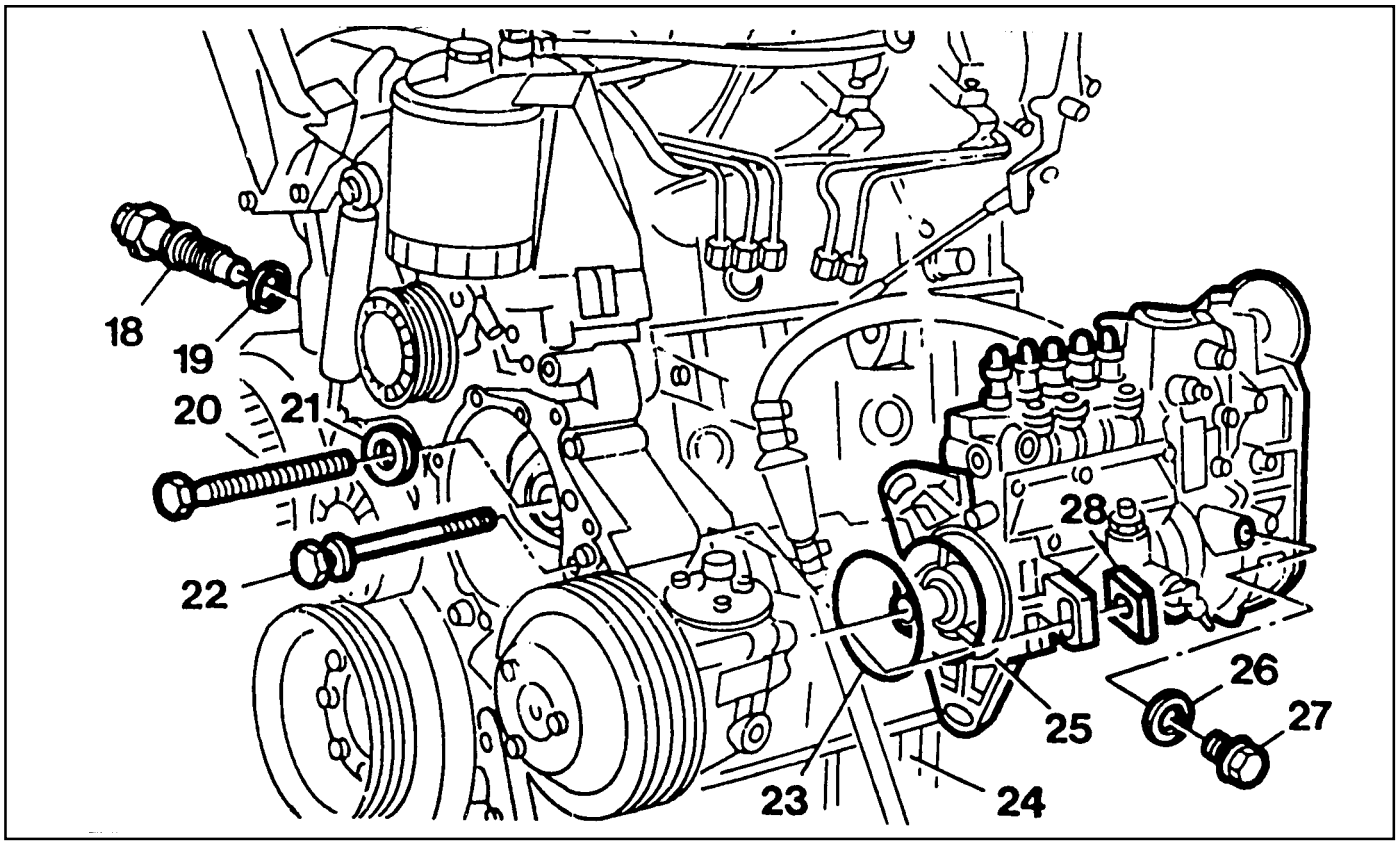

18	Chain Tensioner	80Nm
19	Seal	Replace
20	Bolt(Left-Hand Thread)	46Nm
21	Washer	
22	Bolt	23Nm
23	Seal	Replace
24	Oil Pan	
25	Fuel Injection Pump	
26	Seal	Replace
27	Screw Plug	30Nm
28	Square Nut	

Tools Required

000 589 77 03 00 Box Wrench Insert

601 589 00 08 00 Flange

601 589 05 21 00 Locking Screw

601 589 05 14 00 Assembly CageRemoval

Downloaded from www.Manualslib.com manuals search engine

Removal Procedure

1. Position then no.1 cylinder at 15° ATDC.

   Notice

   Do not rotate the engine in opposition direction of engine rotation.

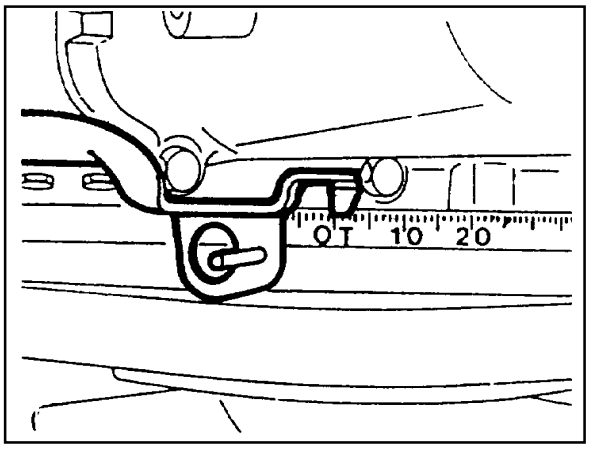

2. Remove the connecting rod (9).
3. Disconnect the vacuum lines (13, 14).
4. Remove the accelerator control damper (10).
   (Manual transmission vehicle)

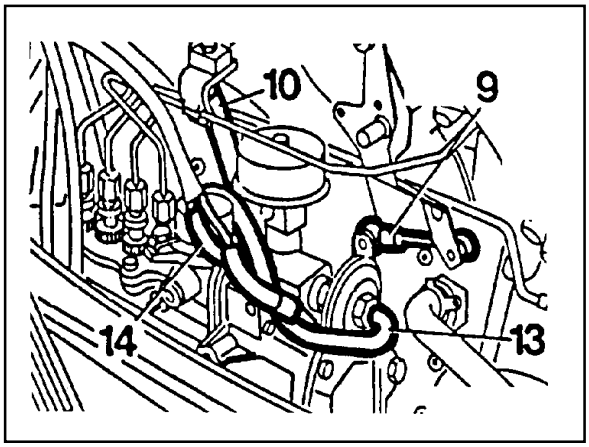

5. Remove the suction line (16) and pressure line (4).
6. Remove the banjo bolt (1) and then remove the seal (2) and fuel line (3).
7. Remove the plastic clip (8) on the injection line.

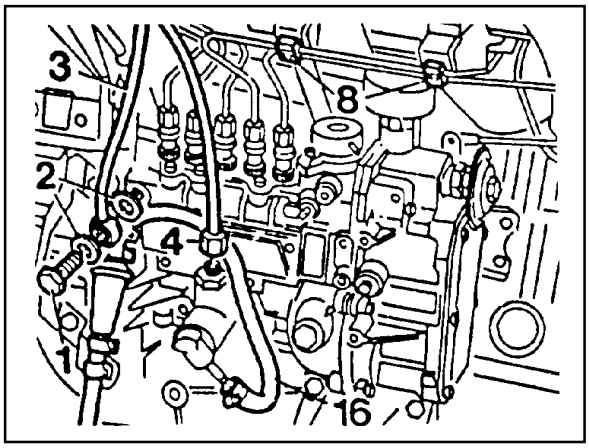

8. Disconnect the injection lines (15) from the injection pump (25).
9. Remove the banjo bolt (1) and then remove the seal (7) and return line (5).

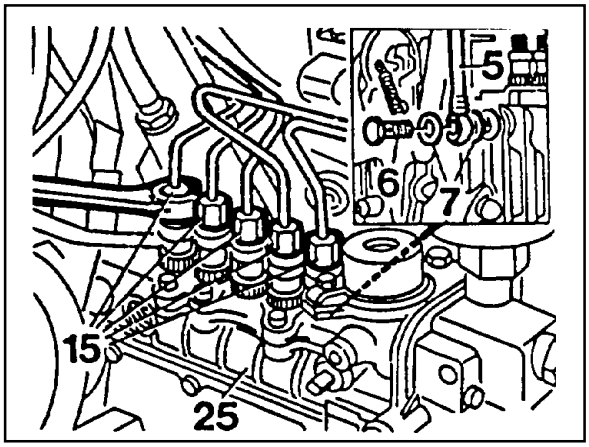

Downloaded from www.Manualslib.com manuals search engine

10. Install the assembly cage (29) and remove the bolt (20) and pull off the washer (21).

    Notice

    Be careful that the bolt (20) is left hand thread.

Assembly Cage 601 589 05 14 00

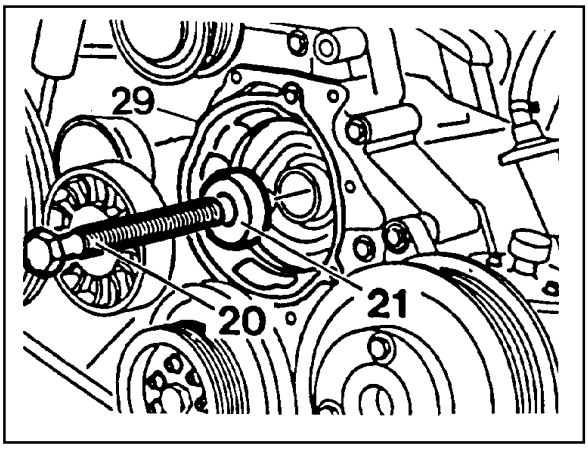

11. Remove the chain tensioner (18) and seal (19).

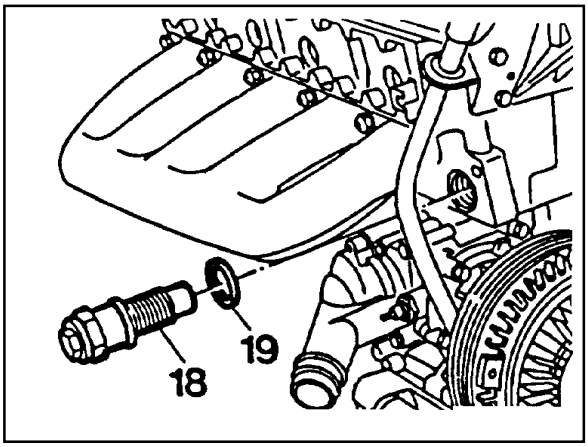

12. Remove the bolt (12) and pull off the washer (11).

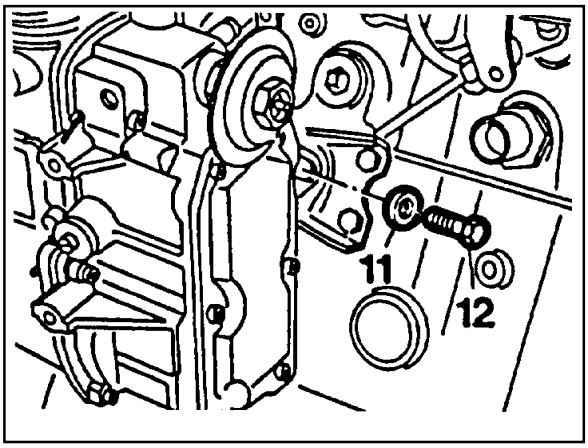

13. Remove the bolt (22) and pull off the square nut (28).
14. Pull out the fuel injection pump (25) and seal (23).

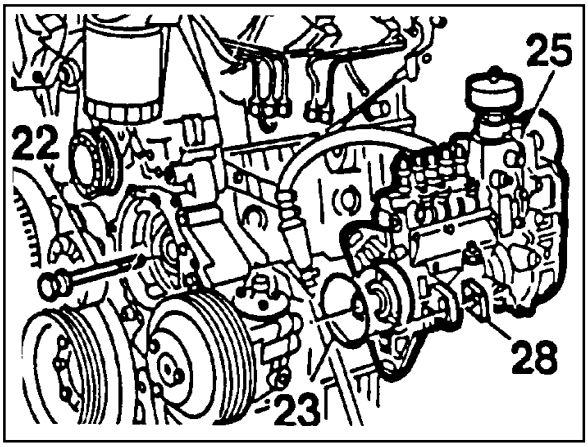

Downloaded from www.Manualslib.com manuals search engine

Installation Procedure

1. Remove the screw plug (27) and seal (26) and collect oil in a vessel.

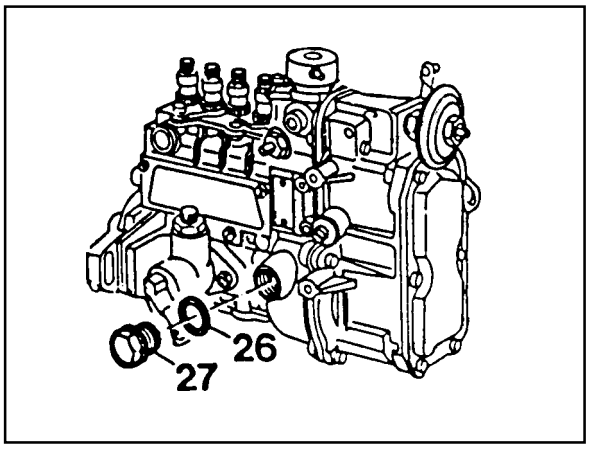

2. Insert flange (31) onto the injection pump camshaft and turn until the cam of the governor is visible in the hole.

Flange 601 589 00 08 00

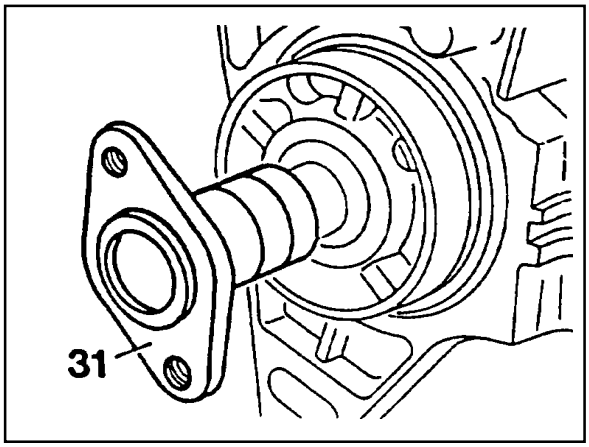

3. Tighten the locking screw.

Locking Screw 601 589 05 21 00

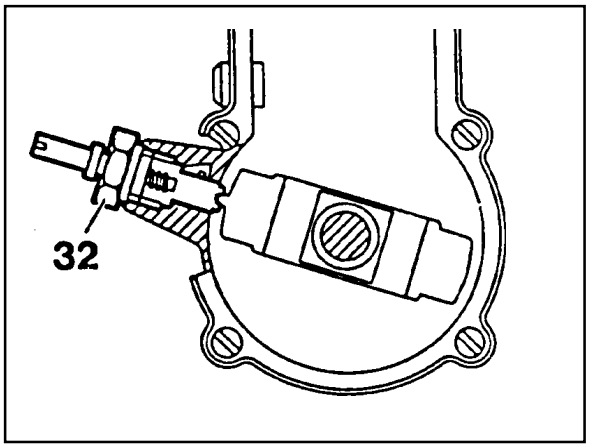

4. Ensure that the no.1 cylinder is positioned at ATDC 15°.

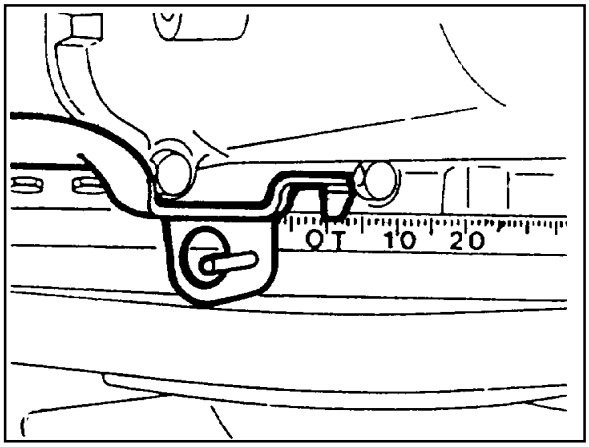

Downloaded from www.Manualslib.com manuals search engine

5. Coat the new seal (23) with engine oil and install it.
6. Insert the fuel injection pump (25) and tighten the bolts (22).

Tightening Torque	23 Nm

7. Remove the locking screw (32).

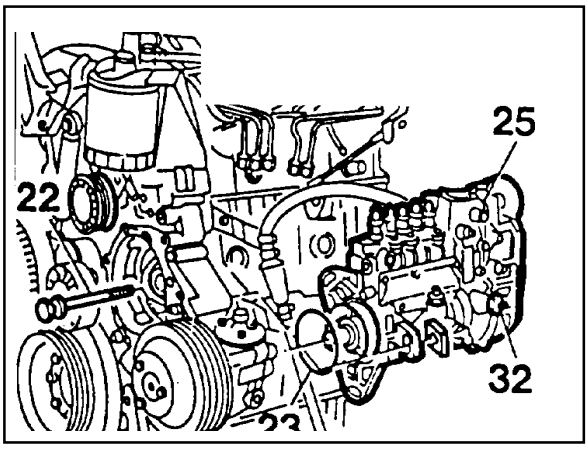

8. Tighten the bolt(12).

Tightening Torque	23 Nm

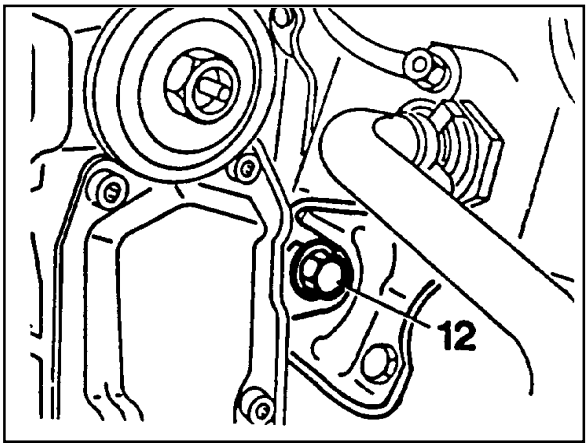

9. Insert the washer (21) and tighten the bolts (20) and then remove the assembly cage (29).

Tightening Torque	46 Nm

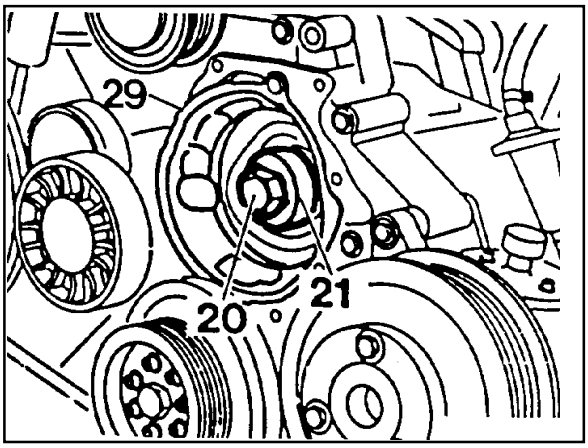

10. Connect the fuel pipes

Return Line	46 Nm
Fuel Injection Line	18 Nm
Fuel feed Line	13 Nm
Suction and Pressure Line	13 Nm

Notice

Replace the seal.

Box Wrench Insert 000 589 77 03 00

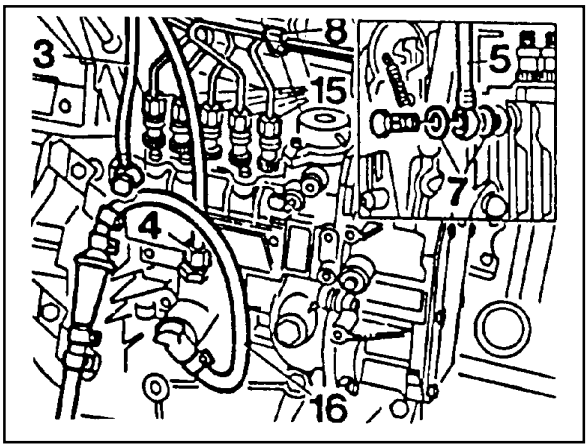

Downloaded from www.Manualslib.com manuals search engine

11. Assemble the plastic clip (8).
12. Connect the vacuum line (13, 14).
13. Connect the connecting rod (9).
14. connect the accelerator control damper (10).
    (Manual transmission vehicle)

15. Install the chain tensioner.
16. Install the vacuum pump.
17. Check the start of delivery.
18. Adjust the idle speed.

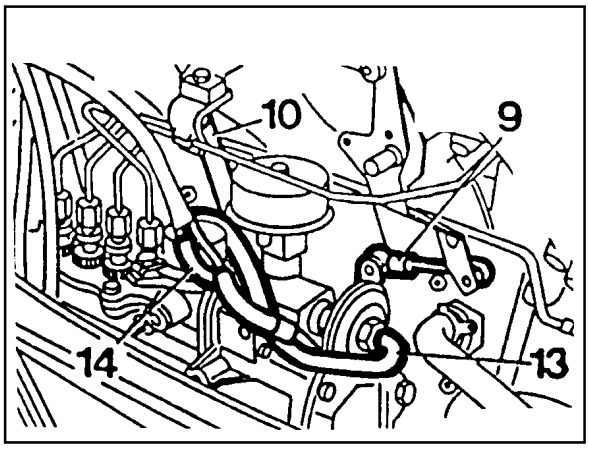

Downloaded from www.Manualslib.com manuals search engine

SECTION 1G1

M162 ENGINE INTAKE & EXHAUST

TABLE OF CONTENTS

Specifications 1G1-1
Fastener Tightening Specifications 1G1-1
Maintenance and Repair 1G1-2
On-Vehicle Service 1G1-2
Air Cleaner 1G1-2
Intake Air Duct 1G1-4
Intake Manifold 1G1-5
Resonance Flap 1G1-7
Exhaust Manifold 1G1-9

SPECIFICATIONS

FASTENER TIGHTENING SPECIFICATIONS

Application	N•m
Air Cleaner Housing Cover Nut	9 - 11
Intake Manifold Bolt (M8 x 20)	22.5 - 27.5
Intake Manifold Bolt (M8)	22.5 - 27.5
Exhaust Mainfold Stud Bolt	9.5 - 12.5
Exhaust Pipe Nut (Engine)	15 - 28
Exhaust Pipe Bolt	28 - 47

Downloaded from www.Manualslib.com manuals search engine

MAINTENANCE AND REPAIR

ON-VEHICLE SERVICE

AIR CLEANER

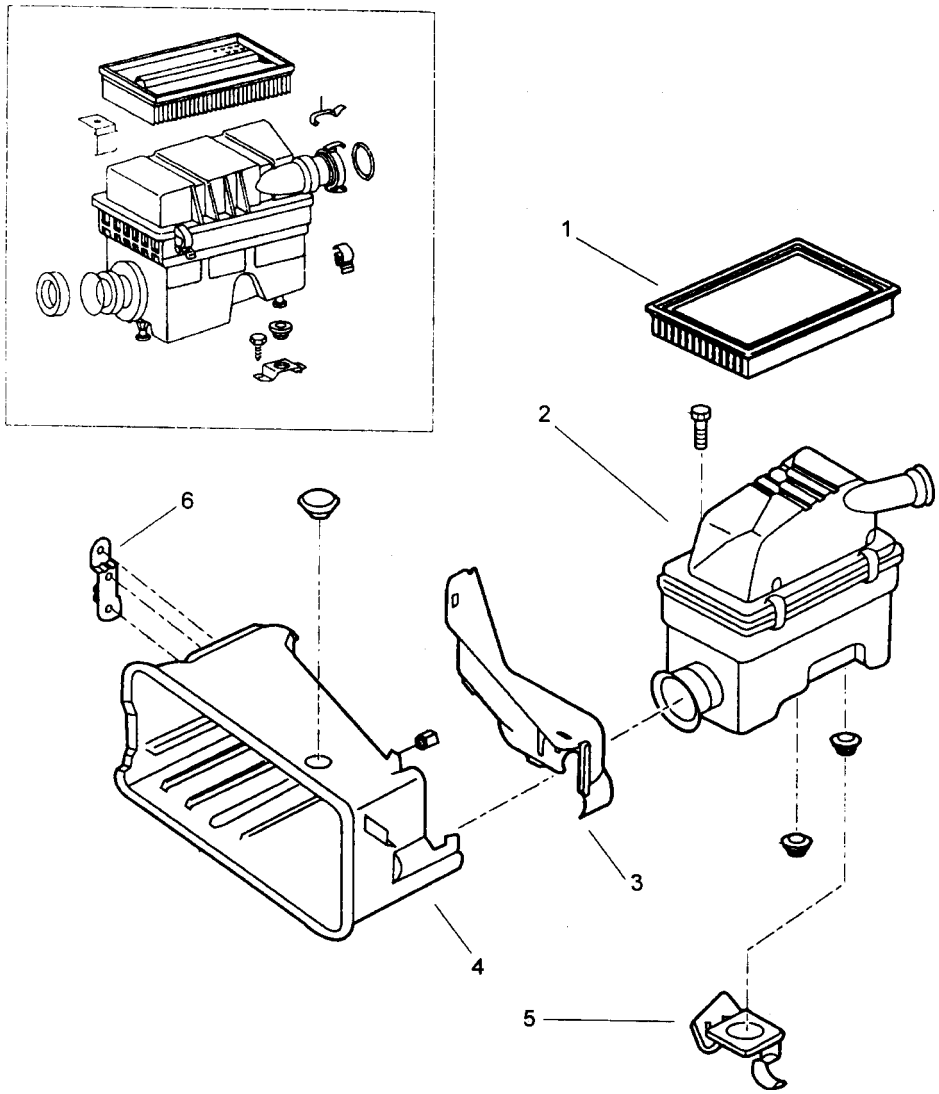

1 Element Assembly
2 Cleaner Assembly-Air
3 Shield Cover-Air Intake
4 Shield Assembly-Air Intake
5 Braket Assembly-Air Cleaner Mounting
6 Braket Assembly-Shield Surport

Downloaded from www.Manualslib.com manuals search engine

Removal & Installation Procedure

1. Release the clamp securing HFM sensor and air cleaner.
2. Disengage the air cleaner assembly and HFM sensor assembly.
3. Unserew the mounting bolt(6) from the bracket.

   Installation Notice

Tightening Torque	22.5 - 27.5 Nm

4. Release the clamp from air cleaner assembly housing and remove the cover.
5. Remove the air cleaner assembly.
6. Remove the air cleaner housing from insulator.

   Notice

   Make sure the air cleaner to be seated in insulator.
7. Disengage the air duct hose and air cleaner housing and remove the housing.
8. Remove the air duct hose.
9. Unscrew the two bolts(7) from air inlet duct.

   Installation Notice

Tightening Torque	8 - 9 Nm

10. Remove the air inlet duct.
11. Installation should follow the removal procedure in the reverse order.

Downloaded from www.Manualslib.com manuals search engine

INTAKE AIR DUCT

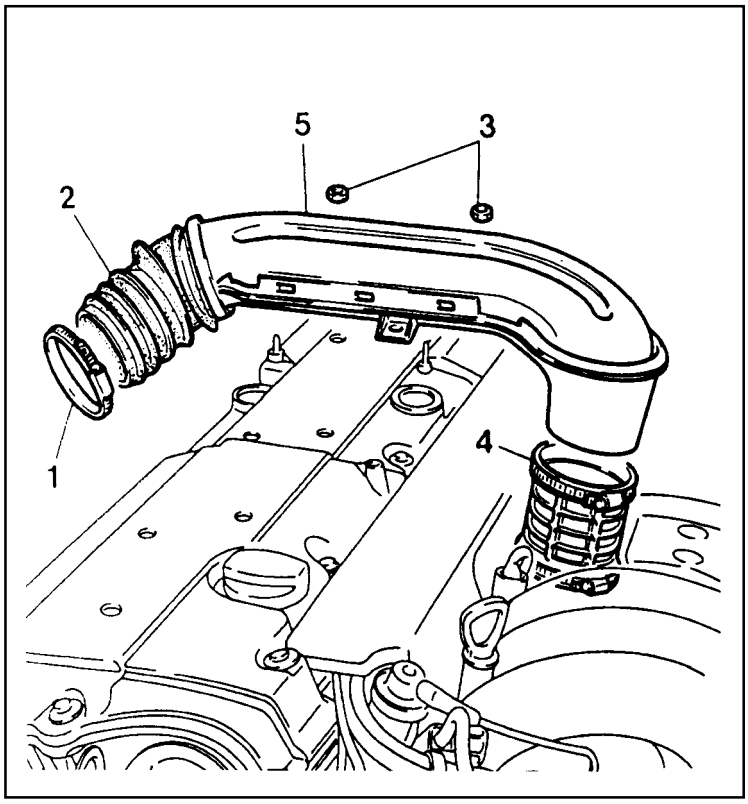

1 Clamp
2 Sleeve
3 Nut
4 Clamp
5 Intake Air Duct

Removal & Installation Procedure

1. Remove the clamp (1) and disconnect the HFM sensor.
2. Remove the nut (3) (arrow).

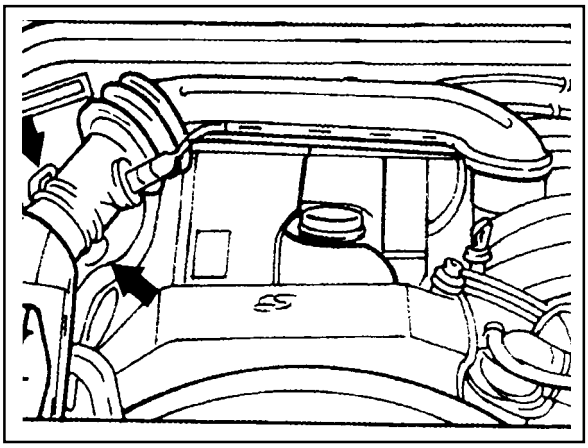

3. Remove the clamp (4).
4. Remove the intake air duct (5) carefully.

   Installation Notice

   Exactly seat the pin of intake air duct onto the crankcase ventilation rubber mount.

5. Installation should follow the removal procedure in the reverse order.

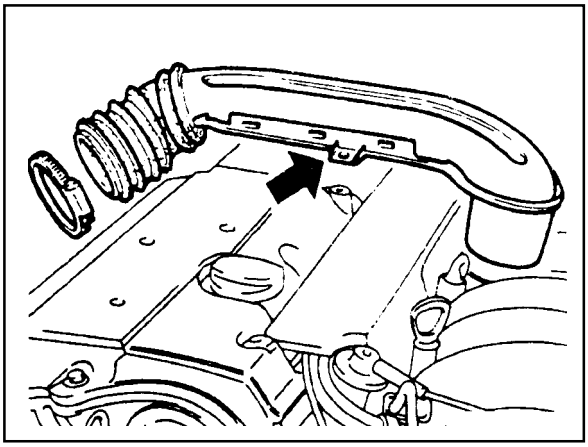

Downloaded from www.Manualslib.com manuals search engine

INTAKE MANIFOLD

Preceding Work : Removal of fuel distributor and injection valve

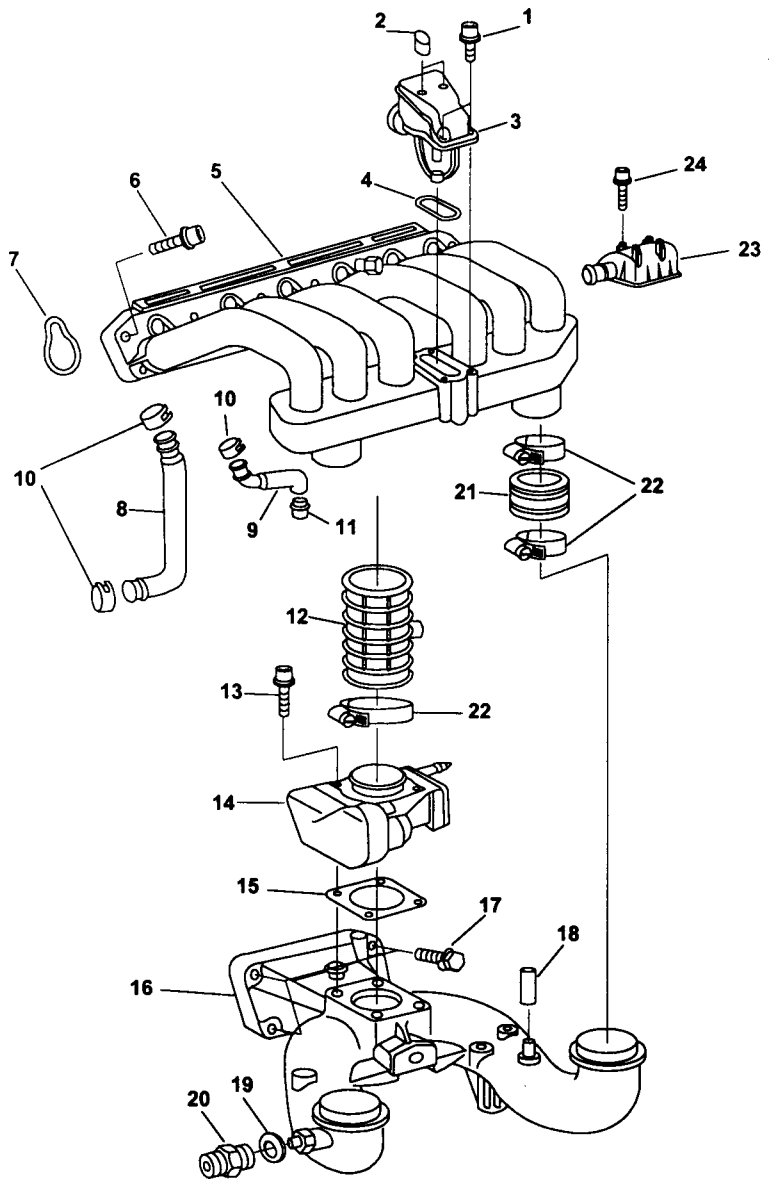

1 Bolt (M6 X 40, 4 pieces) ..... 9-11 Nm
2 Softcap
3 Resonance Flap
4 Gasket ..... Replace
5 Upper Intake Manifold
6 Bolt (M8 x 50, 9 pieces) ..... 22.5-27.5 Nm
7 Gasket ..... Replace
8 Blow-by Hose
9 Blow-by Hose
10 Clamp
11 Blow-by Nipple
12 Inlet Air Housing
13 Bolt (M6 x 40, 4 pieces) ..... 9-11 Nm
14 Throttle Body - Electric
15 Gasket ..... Replace
16 Lower Intake Manifold .....
17 Bolt (M8 x 40, 4 pieces) ..... 22.5-27.5 Nm
18 Nipple ..... Replace
19 Seal Ring
20 Connection House
21 Clamp
22 Noise Damper Assembly
23 Tapping Screw

Downloaded from www.Manualslib.com manuals search engine

Removal & Installation Procedure

- **Upper Intake Manifold**

1. Disconnect the vacuum hose (8,9).
2. Loosen the clip (22).
3. Remove the upper intake manifold (5) after unscrewing the bolt (6).

Installation Notice

Tightening Torque	22.5 - 27.5 Nm

Notice

Check the gasket and replace it if necessary.

4. Installation should follow the removal procedure in the reverse order.

- **Lower Intake Manifold**

Preceding work : removal of upper intake manifold

1. Remove the hose of brake booster vacuum line and idle speed connector.
2. Disconnect the hot water inlet pipe from the bottom of lower intake manifold.
3. Unscrew the bolt (17) and remove the lower intake manifold (16).

Installation Notice

Tightening Torque	22.5 - 27.5 Nm

4. Start the engine and check for leaks at each connection part.

Downloaded from www.Manualslib.com manuals search engine

RESONANCE FLAP

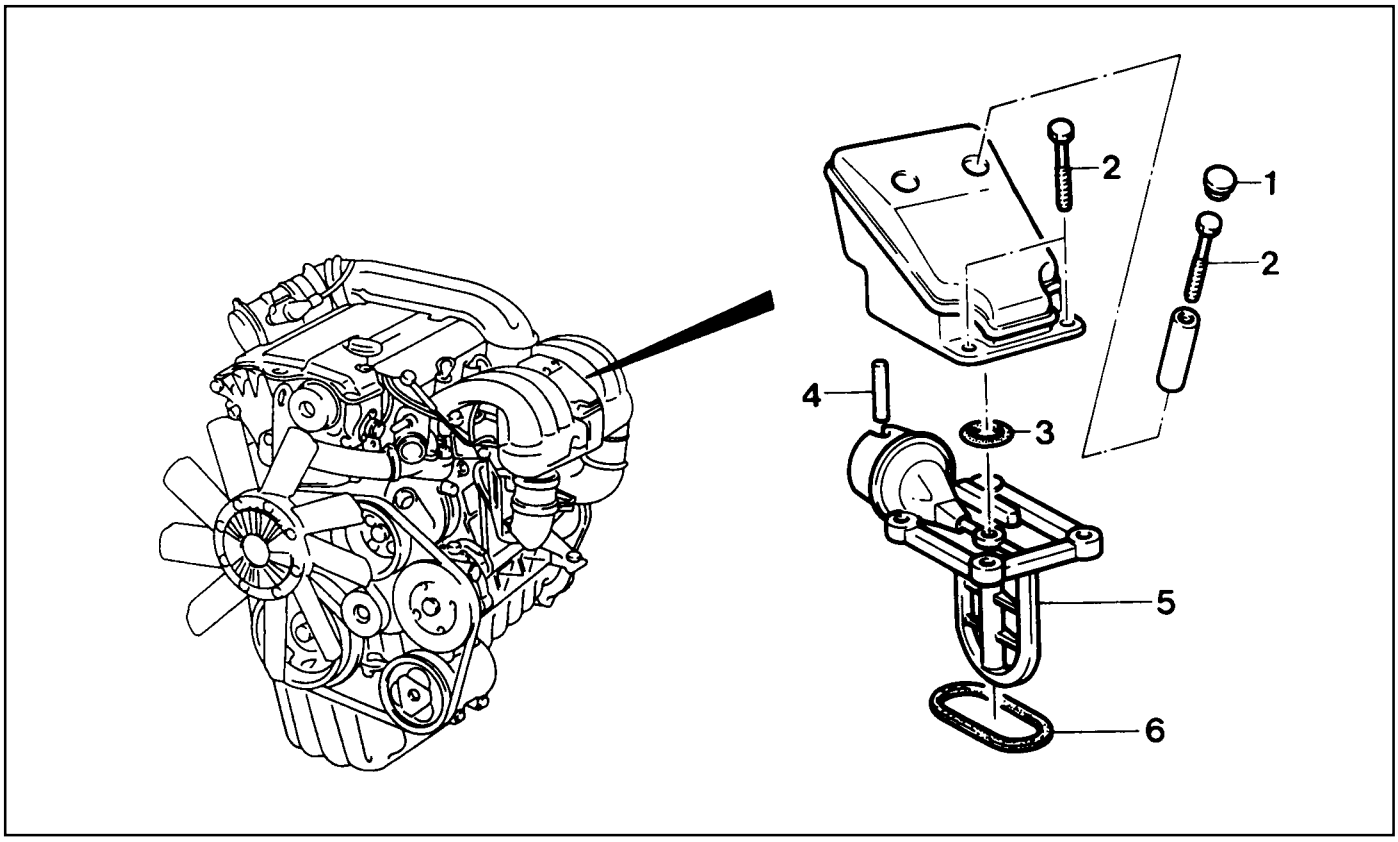

1 Soft Cap (2)
2 Bolt (M6 x 25, 4 pieces) ..... 9-11 Nm
3 O-ring
4 Vacuum Hose
5 Resonance Flap
6 Gasket ..... Replace

Removal & Installation Procedure

1. Remove the 2 soft caps (1).
2. Remove the upper resonance flap coupling after removing 4 bolts (2).

   Notice

   Connect carefully the vacuum hose (4) for installation.
3. Check the O-ring (3) and replace it if necessary.
4. Remove the lower resonance flap (5).
5. Replace the gasket (6).
6. Installation should follow the removal procedure in the reverse order.

Downloaded from www.Manualslib.com manuals search engine

Function Description

A pneumatically actuated resonance flap (5) is located on the intake manifold, and will be opened and closed by load, which operates resonance flap according to engine and controlled by ECU and rpm.

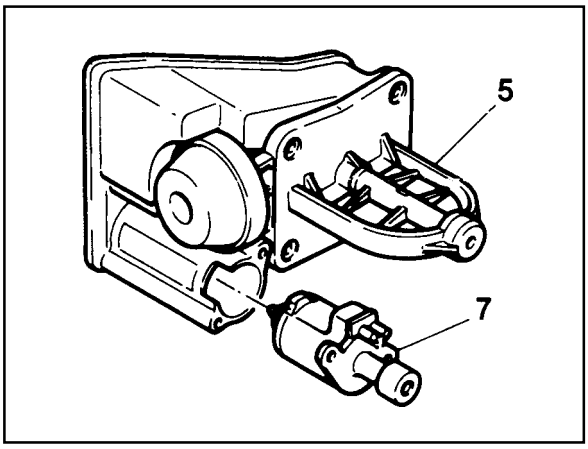

1. **Resonance flap closed (at idle/partial load : less than 3,800/rpm)**

   The switch valve (7) will be adjusted by ECU and resonance falp will be colosed. By increasing air flow passage through dividing intaking air flow toward both air collection housing (8). This leads to a signficant increase in the torque in the lower speed range.

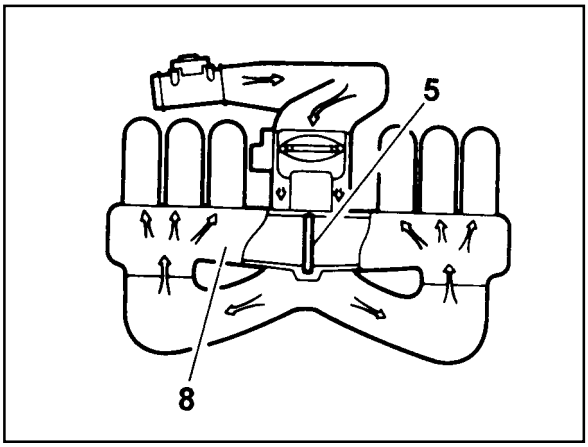

2. **Resonance flap open (at full load : over 3,800/rpm)**

   The switch valve (7) will not be adjusted by ECU and resonance falp (5) will be open. The colllected air in the air collection housing (8) will not be divided and intaking air passage will be shorten.

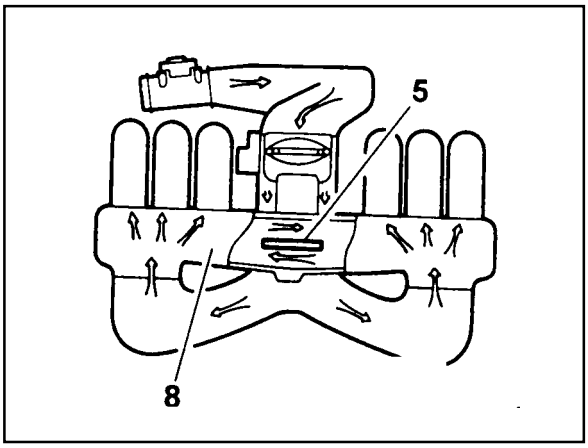

Downloaded from www.Manualslib.com manuals search engine

EXHAUST MANIFOLD

Preceding Work : Removal of air cleaner

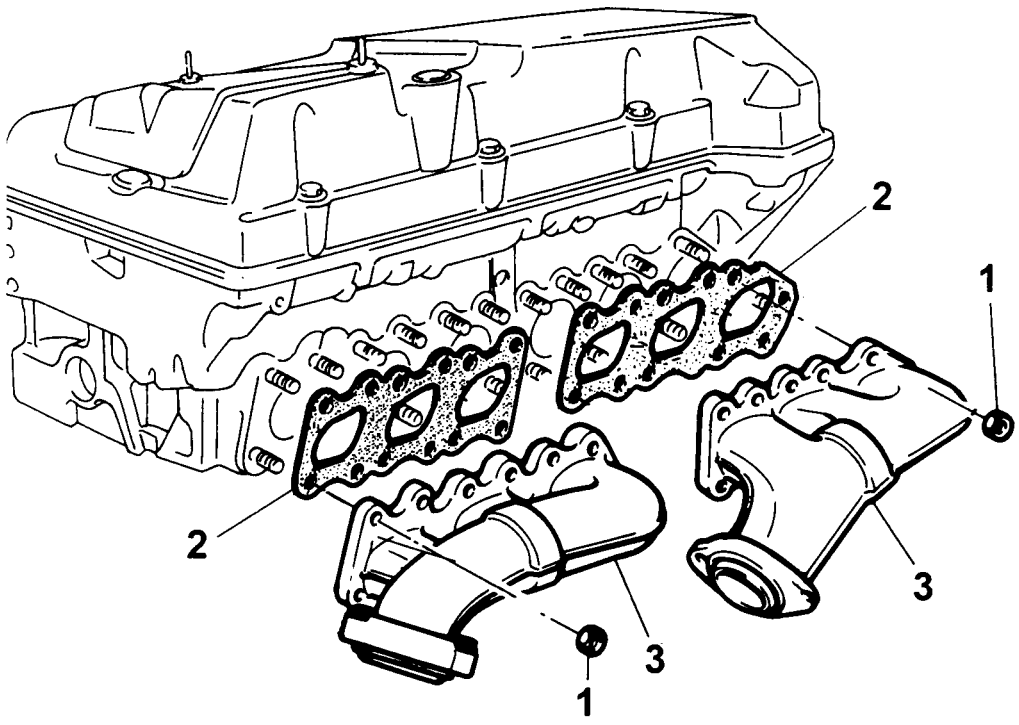

1 Nut ..... 36-44 Nm
2 Gasket ..... Replace
3 Exhaust Manifold

Downloaded from www.Manualslib.com manuals search engine

Tools Required

103 589 01 39 00 Caulking Bolt

Removal & Installation Procedure

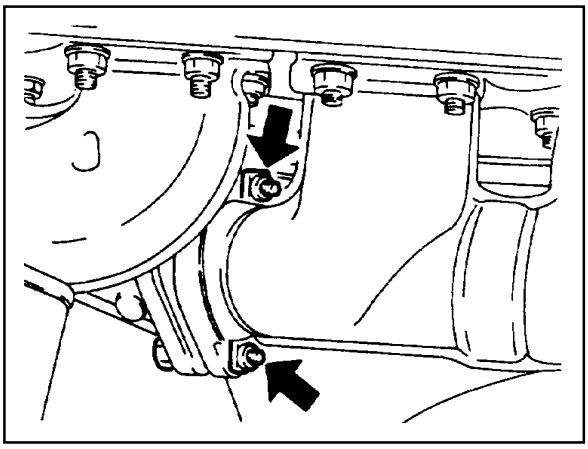

1. Remove the flange bolt from the exhaust manifold, and disconnect the front exhaust pipe.

   Installation Notice

Tightening Torque	30 Nm

   Notice

   Check for nut damages and replace the nut if necessary.

2. Remove the 23 nuts (1) from the stud bolt, and remove the exhaust manifold.

   Installation Notice

Tightening Torque	26 - 34 Nm

3. Replace the gasket (2).
4. Installation is reverse order of the removal.

Replacement of Rivet Nut

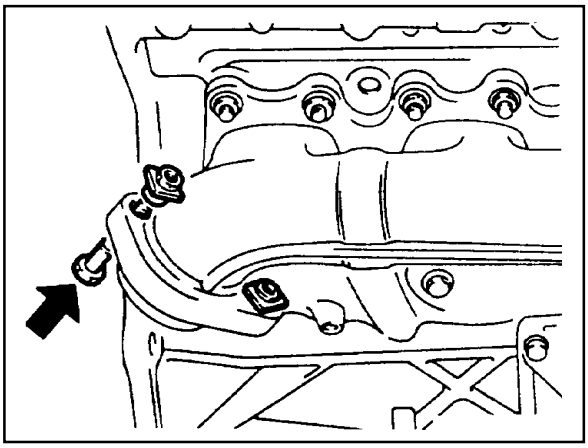

1. Pull out the rivet nut from the connecting point of the exhaust manifold and the exhaust pipe using a proper bolt (arrow).

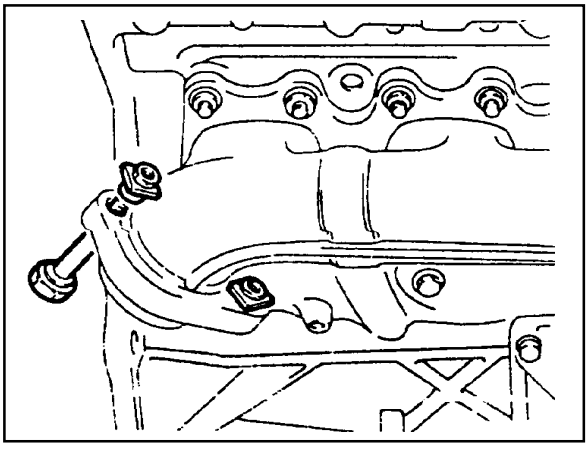

2. Insert a new rivet nut into the exhaust manifold hole, and tighten with a special tool (Caulking Bolt).

   Installation Notice

Tightening Torque	30 Nm

Caulking Bolt 103 589 01 39 00

Downloaded from www.Manualslib.com manuals search engine

Removal and Installation of Exhaust Line

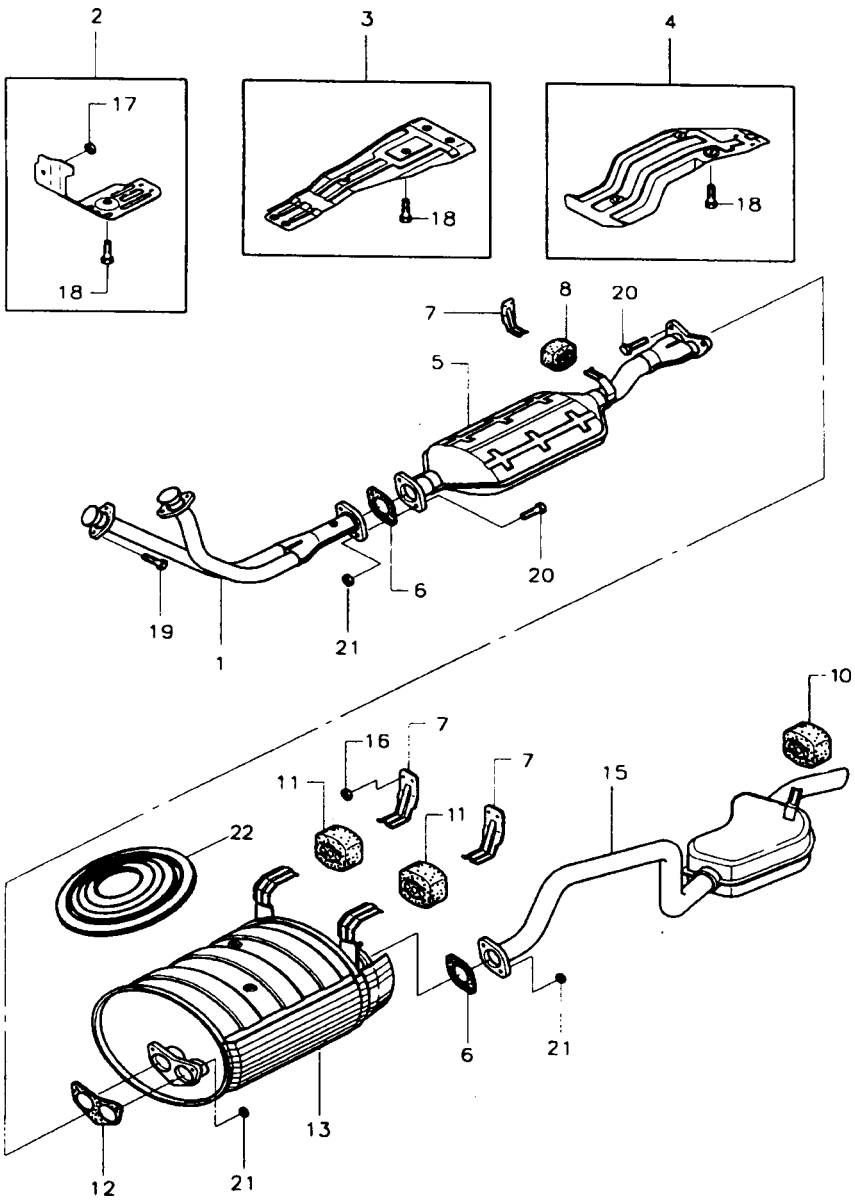

1 Exhaust Manifold
2 Rivet Nut
3 Bolt ..... 30 Nm
4 Front Pipe
5 Oxygen Sensor
6 Bolt ..... 28-47 Nm
7 Rubber Pad
8 Catalytic Converter
9 Gasket ..... Replace
10 Nut
11 Gasket ..... Replace
12 Rubber Pad
13 Nut ..... 28-47 Nm
14 Center Muffler
15 Rubber Pad
16 Tail Muffler
17 Gasket ..... Replace
18 Nut ..... 28-47 Nm

Downloaded from www.Manualslib.com manuals search engine

SECTION 1G2

M161 ENGINE INTAKE & EXHAUST

TABLE OF CONTENTS

Specifications 1G2-1
Fastener Tightening Specifications 1G2-1
Maintenance and Repair 1G2-2
On-Vehicle Service 1G2-2
Air Cleaner 1G2-2
Air Intake Shield 1G2-4
Intake Air Duct 1G2-5
Intake Manifold 1G2-7
Exhaust Manifold 1G2-9

SPECIFICATIONS

FASTENER TIGHTENING SPECIFICATIONS

Application	N•m
Air Cleaner Housing Cover Nut	9 - 11
Intake Manifold Bolt (M8 x 20)	22.5 - 27.5
Intake Manifold Bolt (M8)	22.5 - 27.5
Exhaust Mainfold Stud Bolt	9.5 - 12.5
Exhaust Pipe Nut (Engine)	15 - 28
Exhaust Pipe Bolt	28 - 47

Downloaded from www.Manualslib.com manuals search engine

MAINTENANCE AND REPAIR

ON-VEHICLE SERVICE

AIR CLEANER

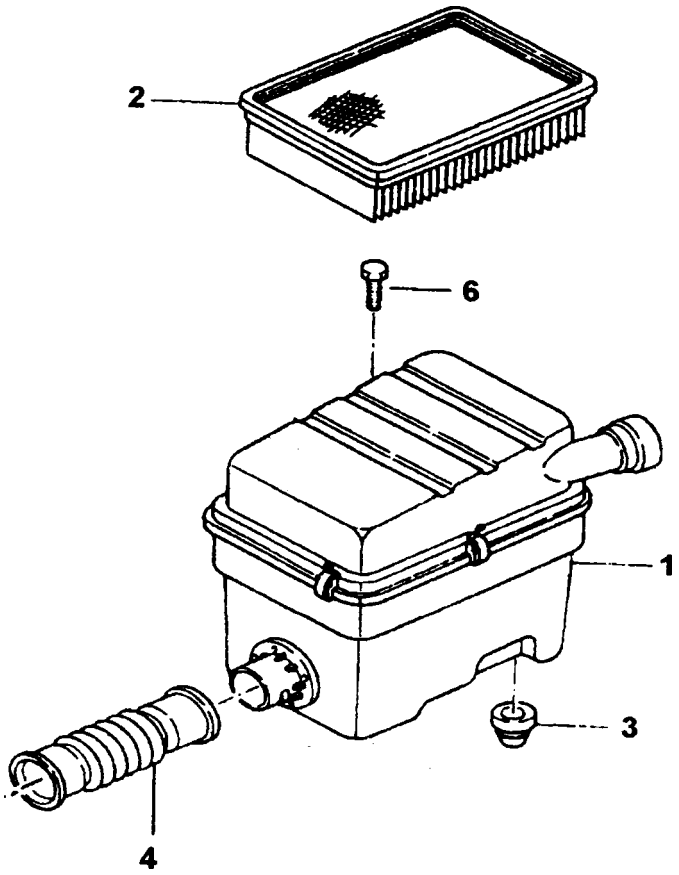

1 Air Cleaner Assembly
2 Element Assembly
3 Insulator
4 Air Duct Hose
6 Bolt (M8 × 30) ..... 22.5-27.5 Nm

Downloaded from www.Manualslib.com manuals search engine

Removal & Installation Procedure

1. Release the clamp securing HFM sensor and air cleaner.
2. Disengage the air cleaner assembly and HFM sensor assembly.
3. Unserew the mounting bolt(6) from the bracket.

   Installation Notice

Tightening Torque	22.5 - 27.5 Nm

4. Release the clamp from air cleaner assembly housing and remove the cover.
5. Remove the air cleaner assembly.
6. Remove the air cleaner housing from insulator.

   Notice

   Make sure the air cleaner to be seated in insulator.

7. Disengage the air duct hose and air cleaner housing and remove the housing.
8. Remove the air duct hose.
9. Unscrew the two bolts(7) from air inlet duct.

   Installation Notice

Tightening Torque	8 - 9 Nm

10. Remove the air inlet duct.
11. Installation should follow the removal procedure in the reverse order.

Downloaded from www.Manualslib.com manuals search engine

AIR INTAKE SHIELD

Preceding Work : Removal of air cleaner

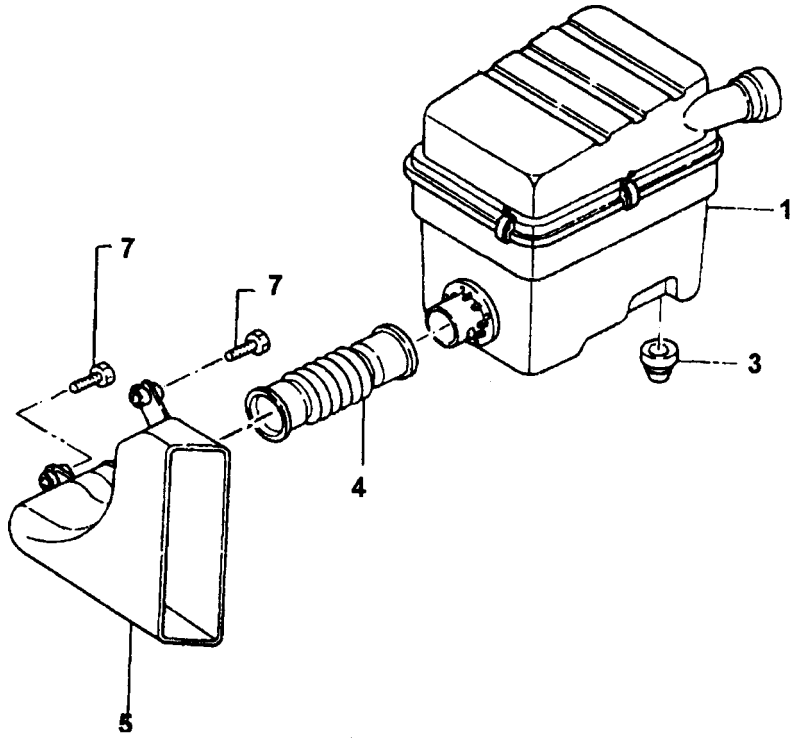

1 Air Cleaner Assembly
3 Insulator
4 Air Duct Hose
5 Air Inlet Duct
7 Bolt (M6 × 35) ..... 9-11 Nm

Removal & Installation Procedure

1. Remove the upper cover (3) from the air intake shield (5) upper mounting pin.
2. Remove the bolts (4 and 6).
3. Remove the air intake shield (5).
4. Installation should follow the removal procedure in the reverse order.

Downloaded from www.Manualslib.com manuals search engine

INTAKE AIR DUCT

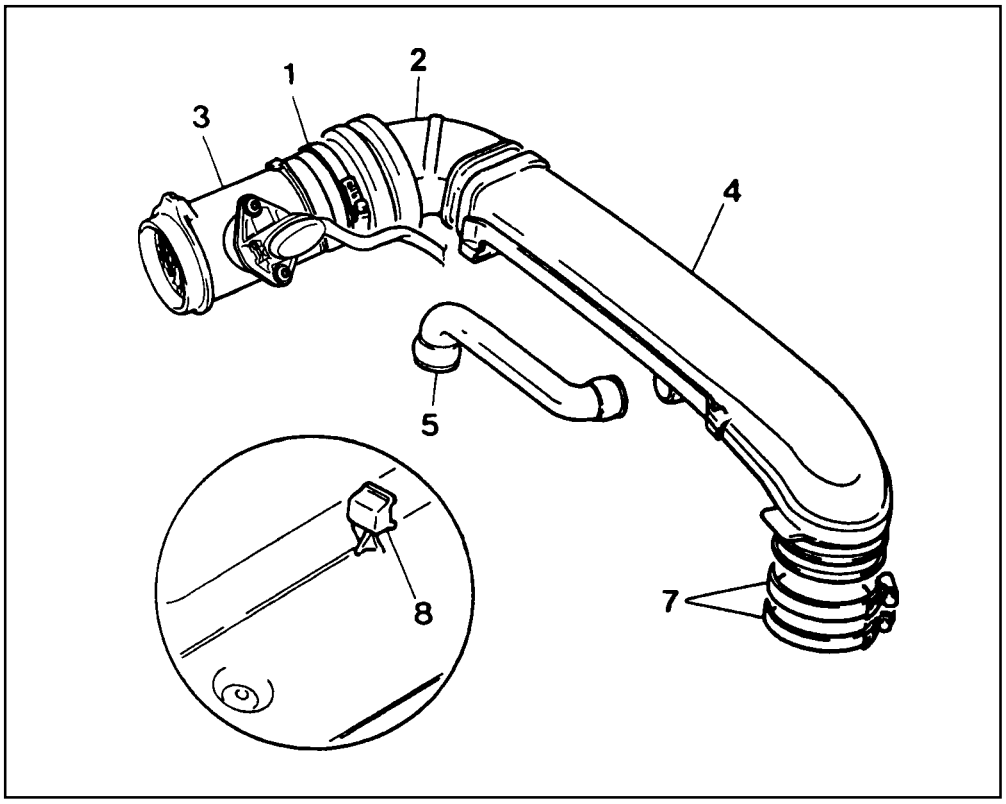

1 Clamp
2 Sleeve
3 HFM Sensor
4 Intake Air Duct
5 Blow-by Hose
7 Clamp(2 pieces)
8 Intake Air Duct Mounting Bracket

Removal & Installation Procedure

1. Release the clamp (1) and intake air duct.

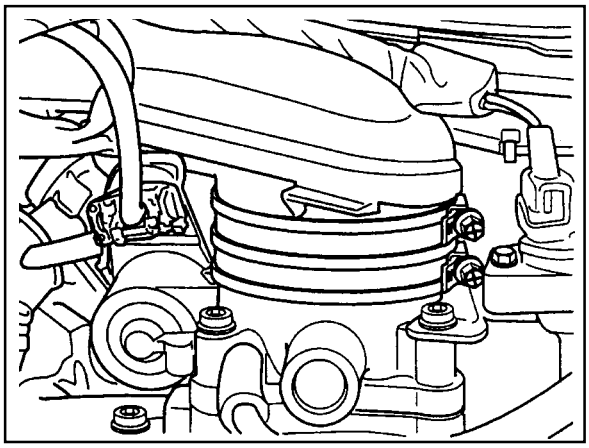

2. Remove the Blow-by hose (5) (arrow).

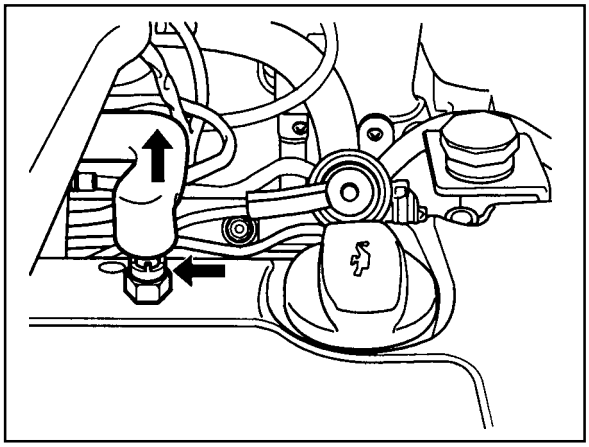

Downloaded from www.Manualslib.com manuals search engine

3. Release the clamp (7) and remove the intake air duct.

   Notice

   Completely fit the intake air duct with the mounting bracket (8).

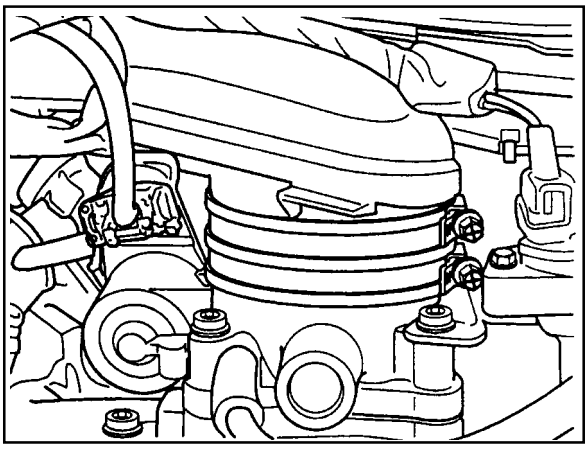

Downloaded from www.Manualslib.com manuals search engine

INTAKE MANIFOLD

Preceding Work : Removal of intake air duce
Removal of fuel distributor and injector

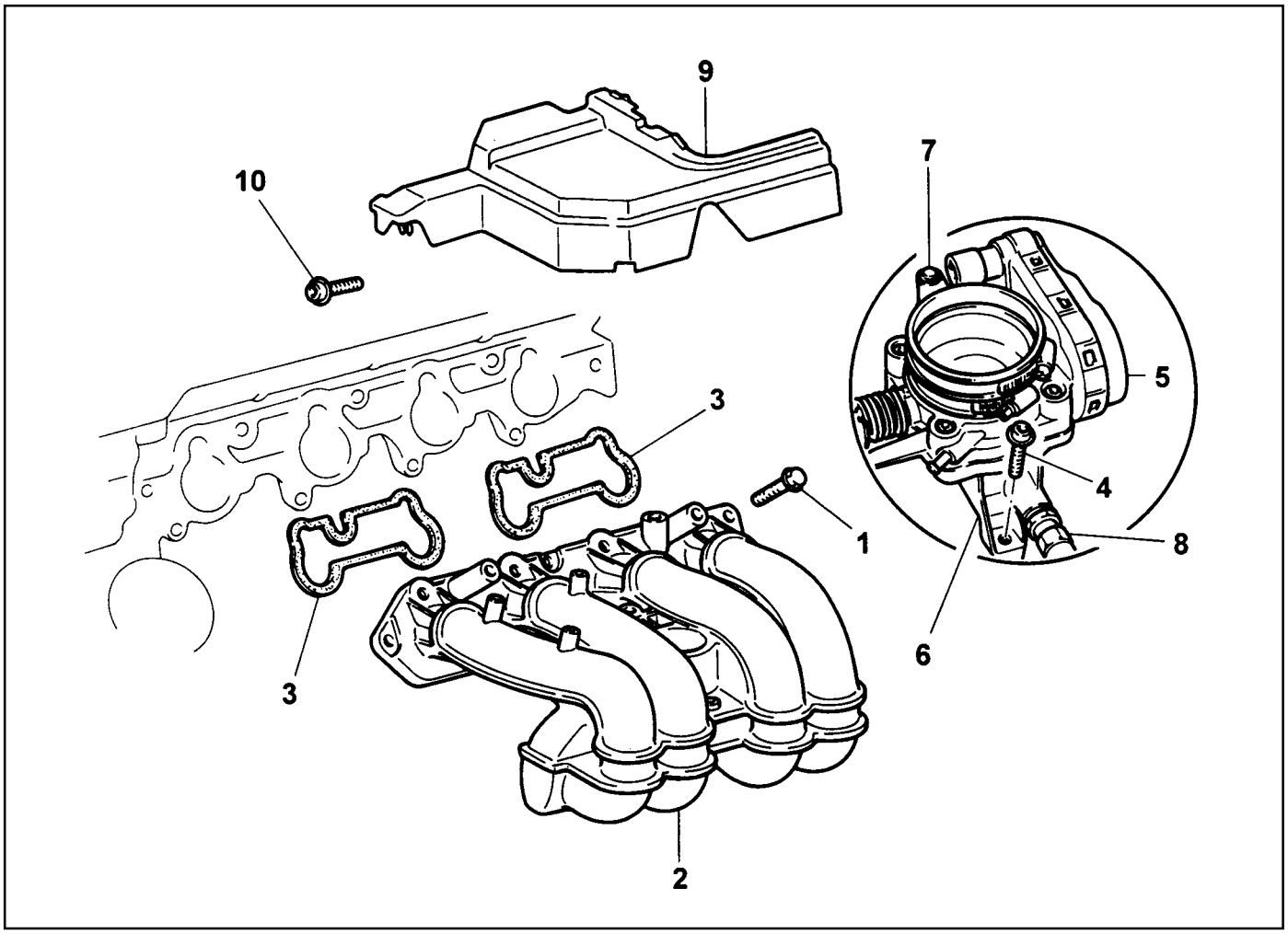

1 Bolt (M6 X 40, 6 pieces) ..... 22.5-27.5 Nm
2 Intake Manifold
3 Gasket (2 pieces) ..... Replace
4 Bolt (M8 X 40, 3 pieces) ..... 22.5-27.5 Nm
5 Idle Regulator
6 Intermediate Flange
7 Bolt (M6 X 35, 4 pieces) ..... 9-11 Nm
8 Connection Piece With Seal Ring ..... 36-44 Nm

Downloaded from www.Manualslib.com manuals search engine

Removal & Installation Procedure

1. Disconnect the battery ground cable.
2. Remove idle speed control plug connector (arrow).

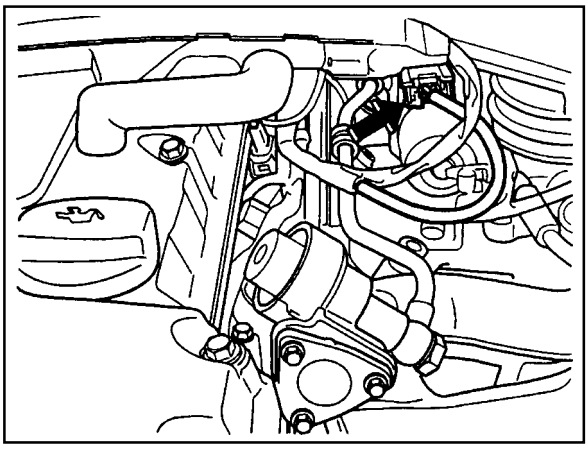

3. Disconnect the brake booster vacuum line and other vacuum lines.
4. Disconnector the rod from bearing bracket assembly and remove the connection piece (8).

Installation Notice

Tightening Torque	36 - 44 Nm

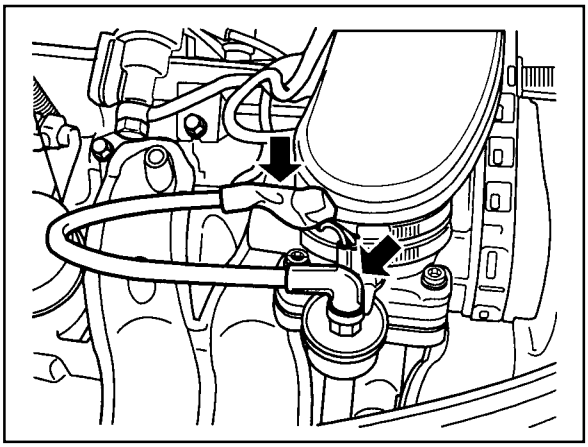

5. Unscrew the three bolts (4) and remove the idle regulator and intermediate flange (6).

Installation Notice

Tightening Torque	22.5 - 27.5 Nm

6. Unscrew the two bolts (M8 X 16) and remove the support assembly (arrow).

Installation Notice

Tightening Torque	22.5 - 27.5 Nm

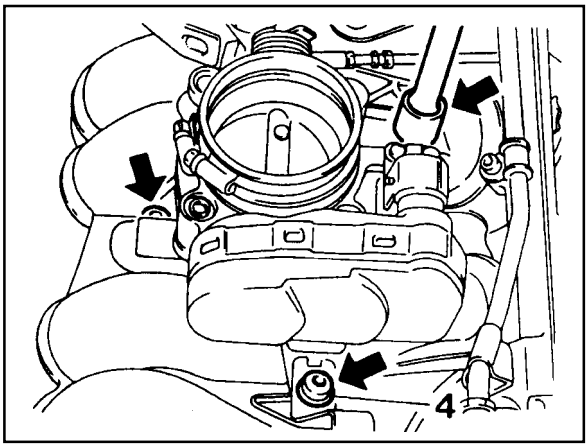

7. Unscrew the intake manifold assembly mounting bolts (1) and remove the intake manifold and gasket.

Installation Notice

Tightening Torque	22.5 - 27.5 Nm

Notice

Replace the gasket with new one.

8. Installation should follow the removal procedure in the reverse order.
9. Start the engine and check for leaks in each connection.

Downloaded from www.Manualslib.com manuals search engine

EXHAUST MANIFOLD

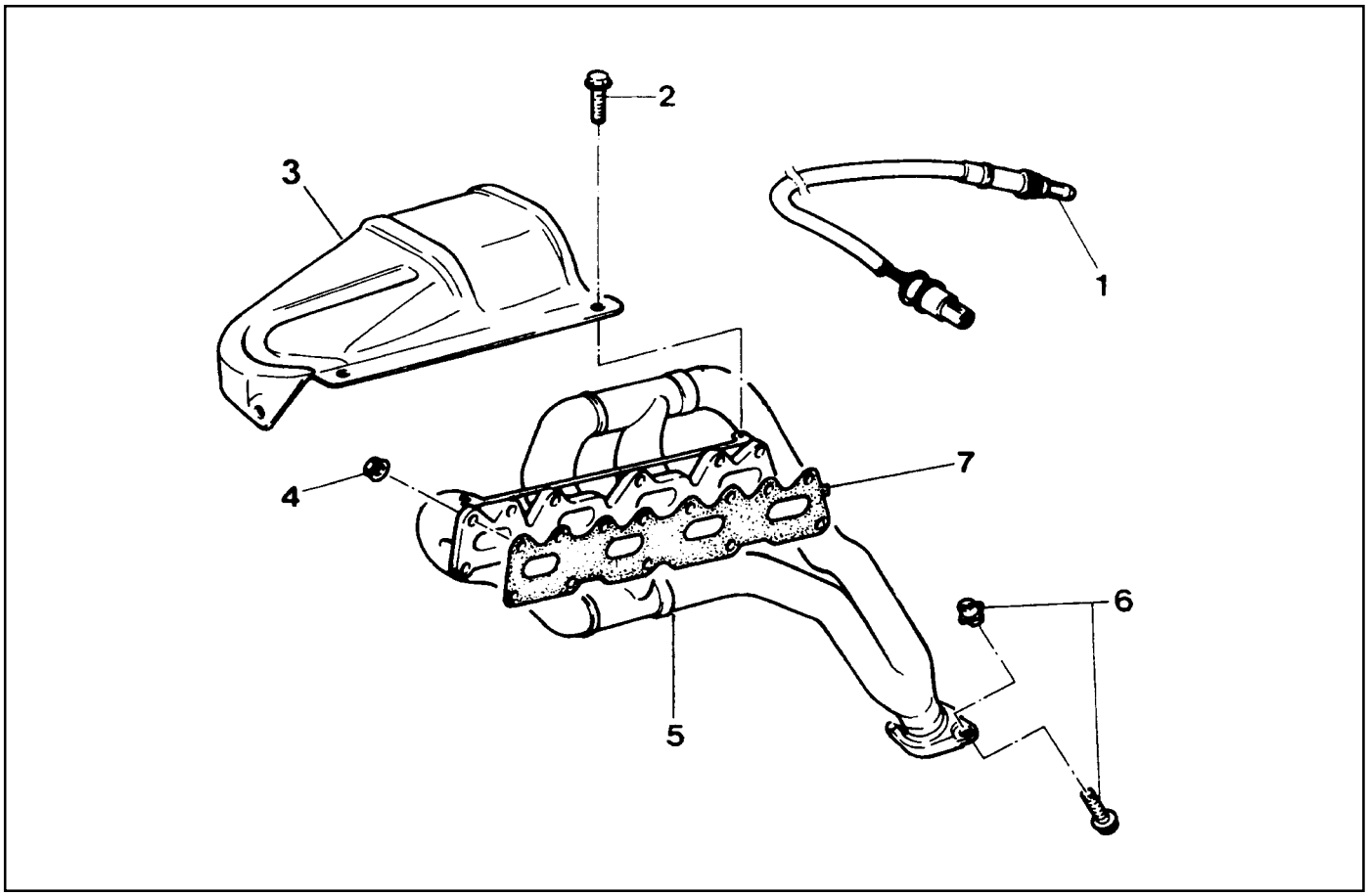

1 Oxygen Sensor ..... 49.5-60.5 Nm
2 Bolt (4 pieces) ..... 9-11 Nm
3 Upper Cover
4 Nut (11 pieces) ..... 31.5-38.5 Nm
5 Exhaust Manifold
6 Flange Bolt & Exhaust Pipe Mounting Nut ..... 30 Nm
7 Gasket ..... Replace

Removal & Installation Procedure

1. Remove the oxygen sensor if necessary.

   Installation Notice

Tightening Torque	49.5 - 60.5 Nm

2. Unscrew the bolt (2) and remove the exhaust manifold upper cover (3).
3. Unscrew the flange bolt (6) of front exhaust pipe and separate the front exhaust pipe.

   Installation Notice

Tightening Torque	30 Nm

   Notice

   Check the exhaust pipe mounting nut, and replace it with new one if necessary.

Downloaded from www.Manualslib.com manuals search engine

4. Unscrew the eleven nuts (4) and remove the exhaust manifold (5) and gasket (7).

   Installation Notice

Tightening Torque	31.5 - 38.5 Nm

5. Replace the gasket (7) with new one.
6. Installation should follow the removal procedure in the reverse order.

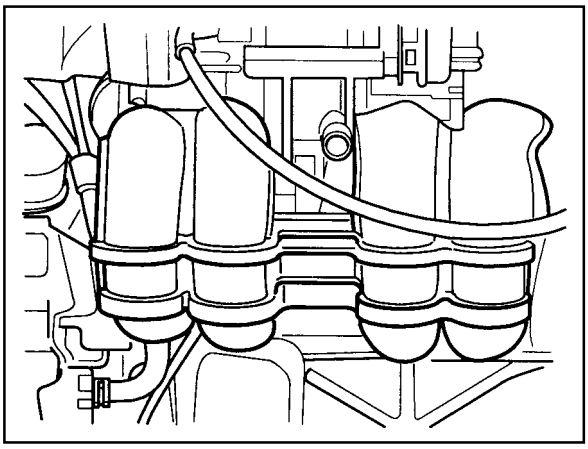

Downloaded from www.Manualslib.com manuals search engine

Removal and Installation of Exhaust Line

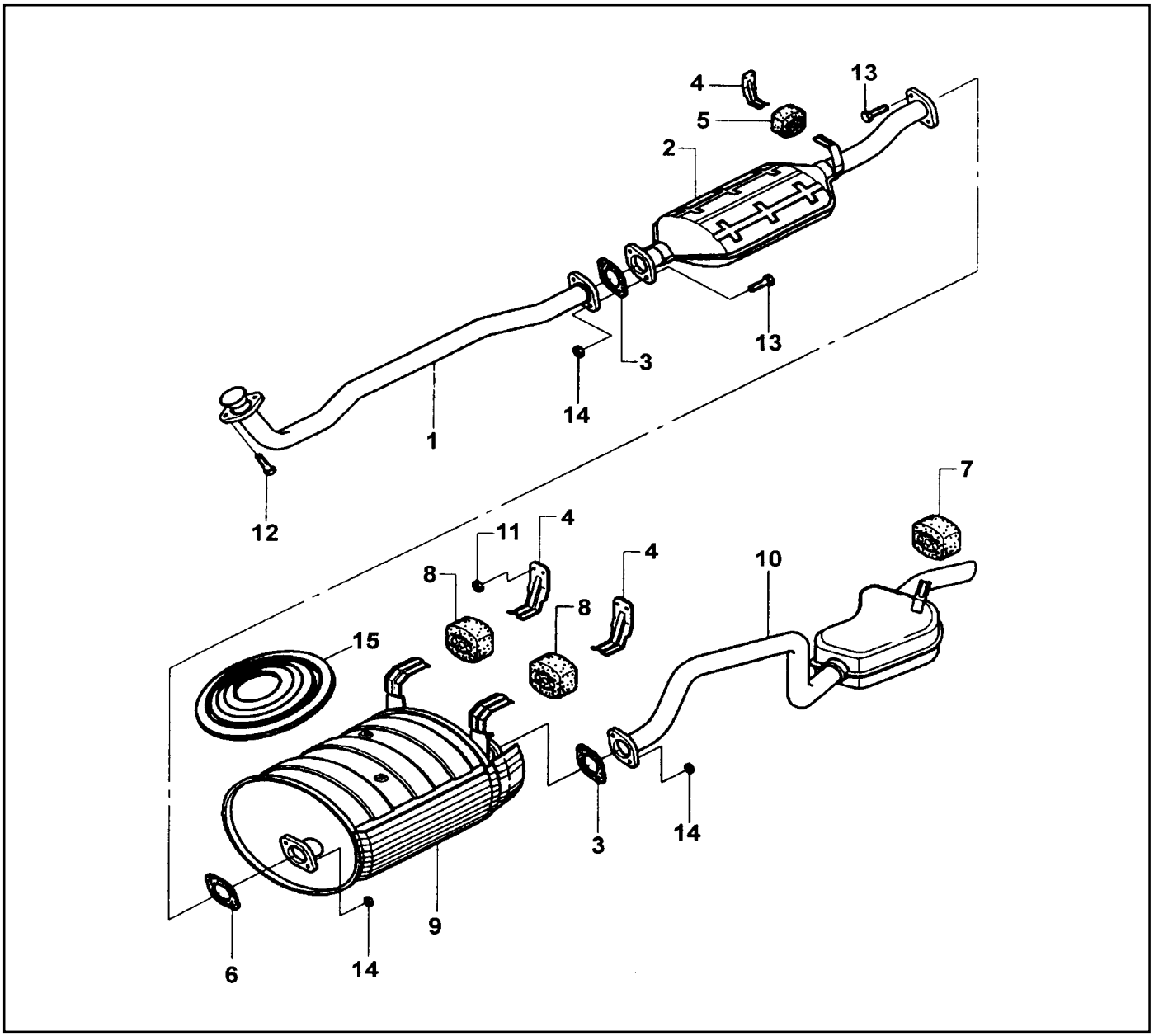

1 Pipe Assembly-Exhaust Front
2 Converter Assembly-Complete
3 Gasket
4 Hanger-Converter Mounting
5 Ring
6 Gasket-E/Pipe to Manifold
7 Ring
8 Ring-Exhaust Mounting
9 Muffler Assembly-Complete
10 Pipe Assembly-Tail Exhaust
11 Nut-Hex Flang (M8X1.25)
12 Bolt-Hex (M8X1.25X55)
13 Bolt-Hex (M10X1.25X35)
14 Nut-Hex Flang (M10X1.25)
15 Heat Protecter-L/ARM Mounting Bush

Downloaded from www.Manualslib.com manuals search engine

SECTION 1G3

OM600 ENGINE INTAKE & EXHAUST

Caution: Disconnect the negative battery cable before removing or installing any electrical unit or when a tool or equipment could easily come in contact with exposed electrical terminals. Disconnecting this cable will help prevent personal injury and damage to the vehicle. The ignition must also be in LOCK unless otherwise noted.

TABLE OF CONTENTS

Specifications 1G3-1
Fsatener Tightening Specifications 1G3-1
Maintenance and Repair 1G3-2
On-Vehicle Service 1G3-2
Air Cleaner and Inlet Duct & Hose 1G3-2
Intake and Exhaust Manifold 1G3-4
Turbocharger 1G3-7
Charge Air System Diagram 1G3-7
Intercooler 1G3-8
Turbocharger Assembly 1G3-10

SPECIFICATIONS

FASTENER TIGHTENING SPECIFICATIONS

Application	N·m
Air Cleaner Housing Cover Nut	9 - 11
Intake Manifold Bolt (M8 x 20)	22.5 - 27.5
Intake Manifold Bolt (M8)	22.5 - 27.5
Exhaust Mainfold Stud Bolt	9.5 - 12.5
Exhaust Pipe Nut (Engine)	15 - 28
Exhaust Pipe Bolt	28 - 47

Downloaded from www.Manualslib.com manuals search engine

MAINTENANCE AND REPAIR

ON-VEHICLE SERVICE

AIR CLEANER AND INLET DUCT & HOSE

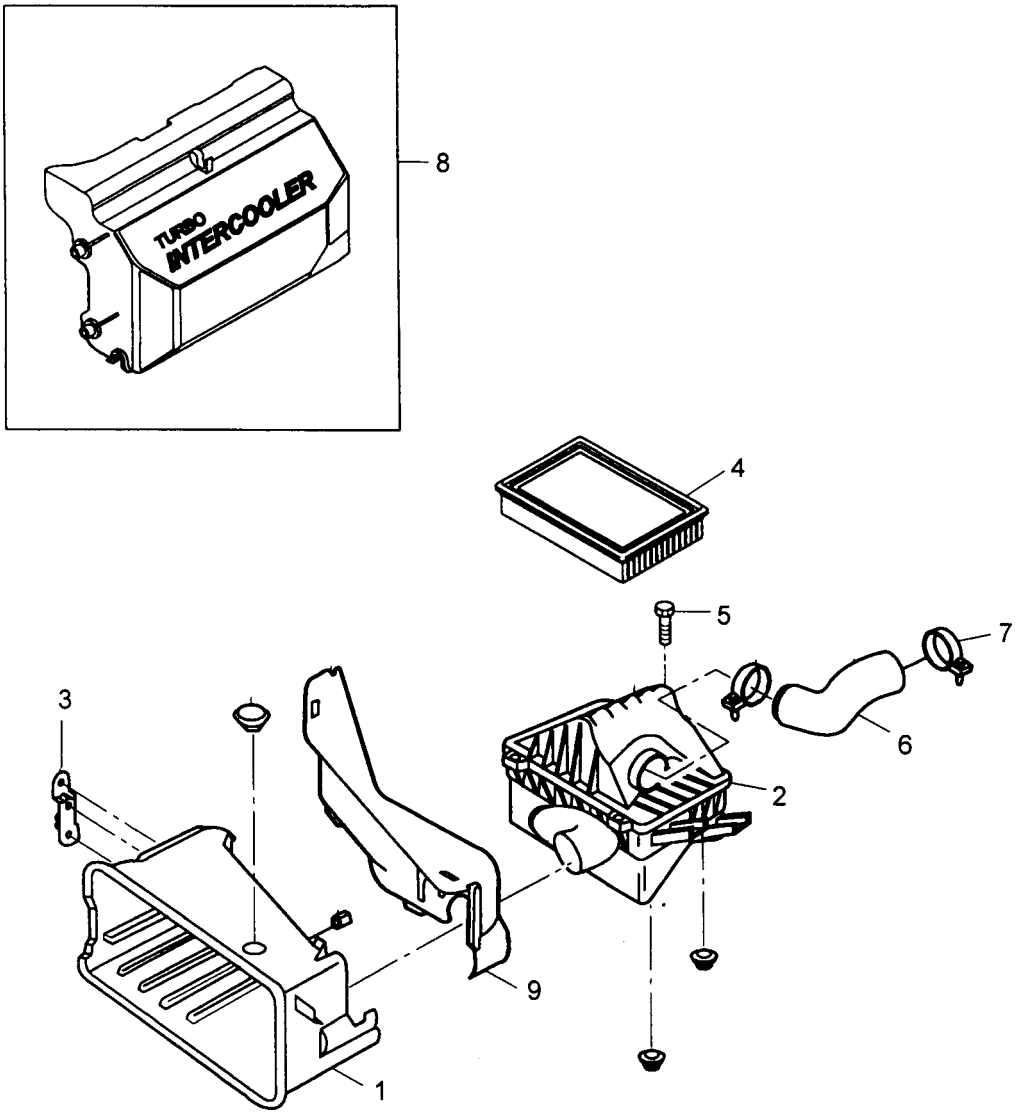

1 Air Intake Shield Assembly
2 Air Cleaner Assembly
3 Mounting Bracket
4 Air Cleaner Element ..... Clean : 20,000km
Replace : 60,000km
5 Bolt 9-11Nm
6 House
7 Clamp
8 Engine Cover Assembly (Turbo)
9 Mounting Bracket

Downloaded from www.Manualslib.com manuals search engine

Removal & Installation Procedure

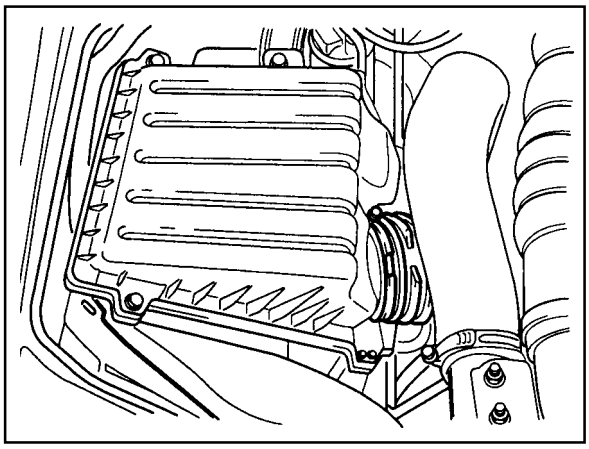

1. Loosen the air duct hose clamp and then remove the air cleaner and air duct hose.

2. Disconnect the air cleaner housing cover clamp and remove the cover and element.

Operating Interval	Clean	every 20,000km
	Replace	every 60,000km

3. Loosen the nut (4EA) and remove the air cleaner housing from the intake manifold.

Tightening Torque	9 - 11 Nm

Notice

Do not fold the rubber.

4. Loosen the clamp and remove the air duct hose.
5. Loosen the mounting nut and bolt.
6. Remove the air inlet duct and hose.
7. Installation should follow the removal procedure in the reverse order.

Downloaded from www.Manualslib.com manuals search engine

INTAKE AND EXHAUST MANIFOLD

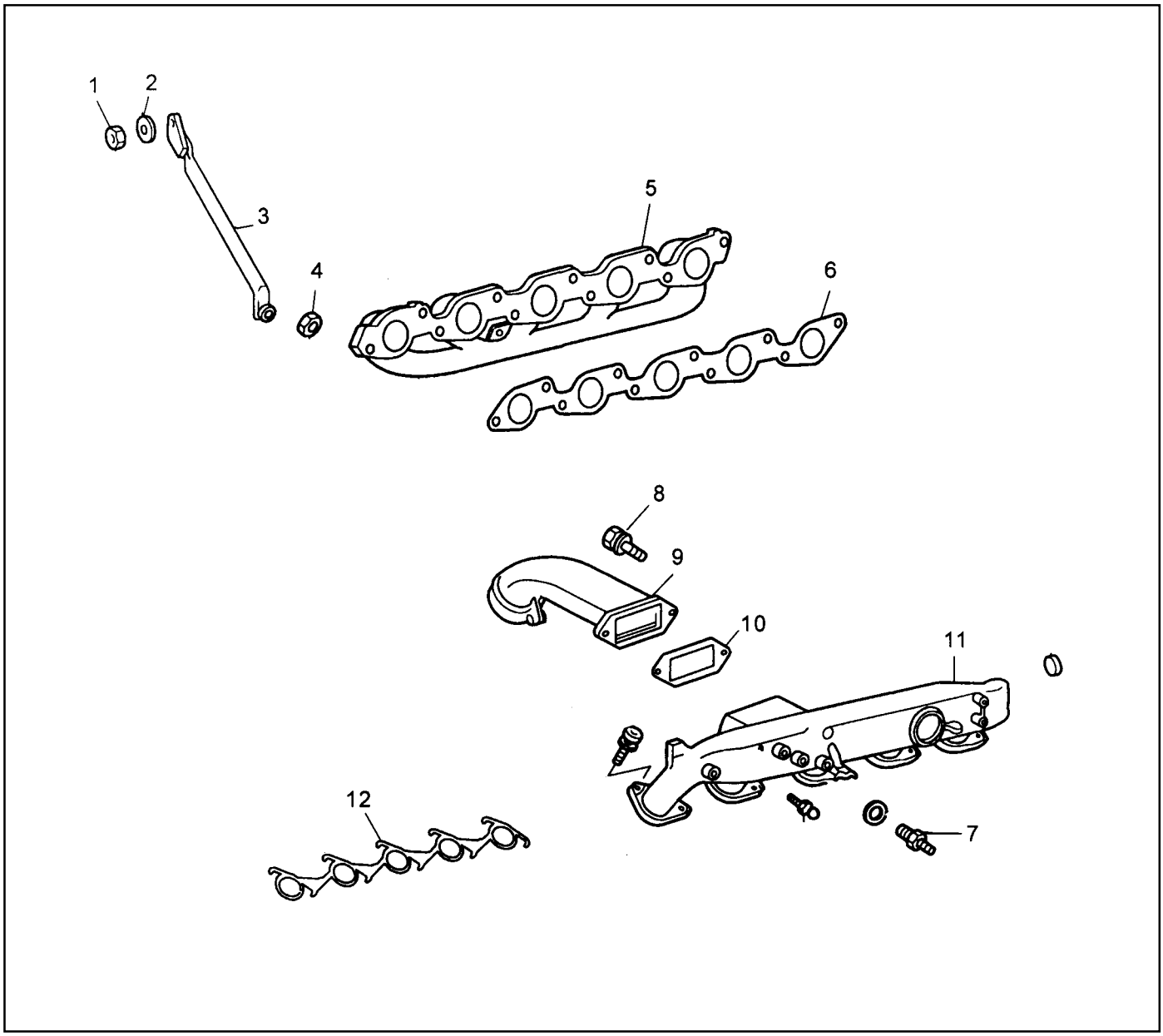

1	Nut	22.5-27.5 Nm
2	Washer	
3	Support Assembly Bar	
4	Nut	22.5-27.5 Nm
5	Exhaust Manifold Assembly	
6	Exhaust Gasket	
7	Stud Bolt	9.9-12.1 Nm
8	Bolt (M8)	22.5-27.5 Nm
9	Intake Duct	
10	Intake Duct Gasket	
11	Intake Manifold	
12	Intake Gasket	

Downloaded from www.Manualslib.com manuals search engine

Exhaust Line

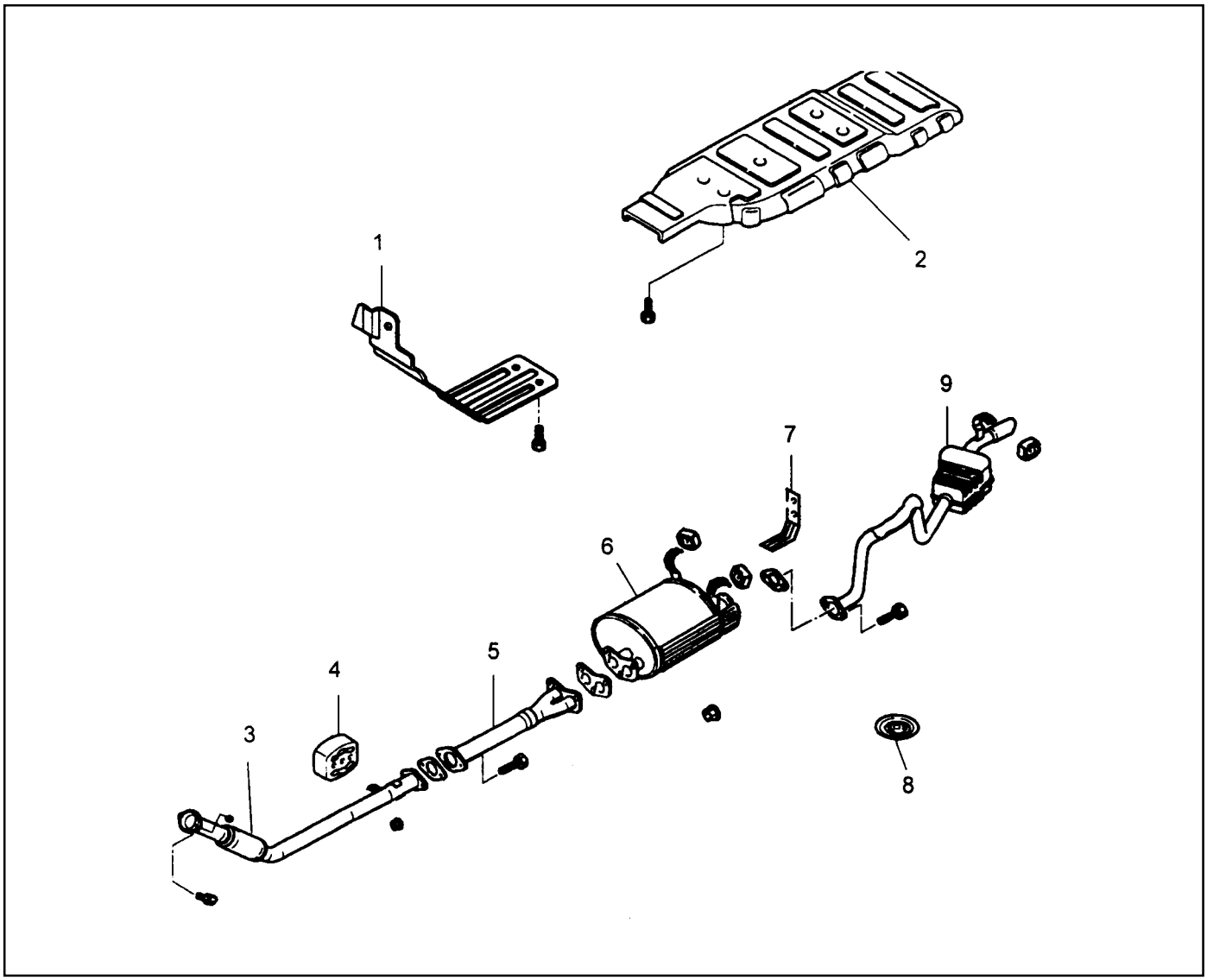

1 Heat Protector Assembly
2 Heat Protector Floor
3 Exhaust Front Pipe Assembly
4 Ring
5 Exhaust Rear Pipe Assembly
6 Muffler
7 Mounting
8 Heat Protector Front Floor
9 Tail Exhaust Pipe Assembly

Downloaded from www.Manualslib.com manuals search engine

Removal & Installation Procedure

1. Remove the bolt from the exhaust manifold and then remove the front exhaust pipe.

   Installation Notice

Tightening Torque	15 - 18 Nm

   Notice

   When tightening the nut(3), maintain the clearance between exhaust manifold(1) and front exhaust pipe.

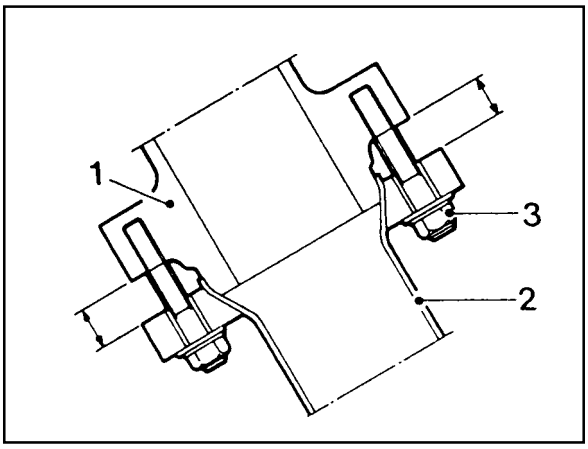

2. Remove the nut from the front of center muffler and then remove the front exhaust pipe.

   Installation Notice

Tightening Torque	28 - 47 Nm

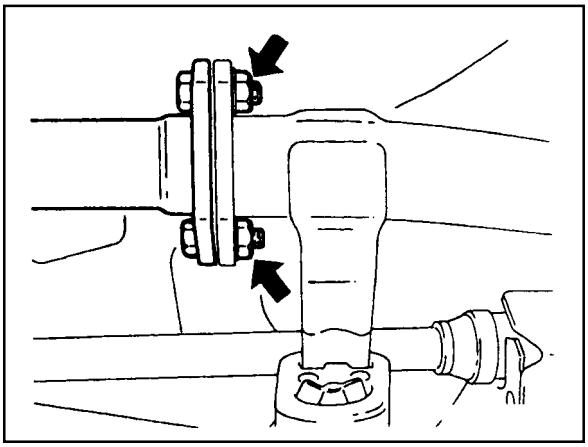

3. Remove the nut from the rear of center muffler and then remove the tail muffler.

   Installation Notice

Tightening Torque	28 - 47 Nm

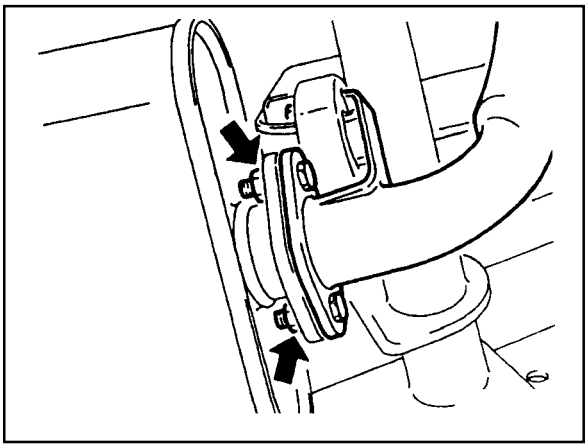

4. Remove the muffler mounting hanger from the rubber pad and remove the center muffler and tail muffler.

   Notice

   Check the gasket, if necessary, replace the new one.

5. Installation should follow the removal procedure in the reverse order.

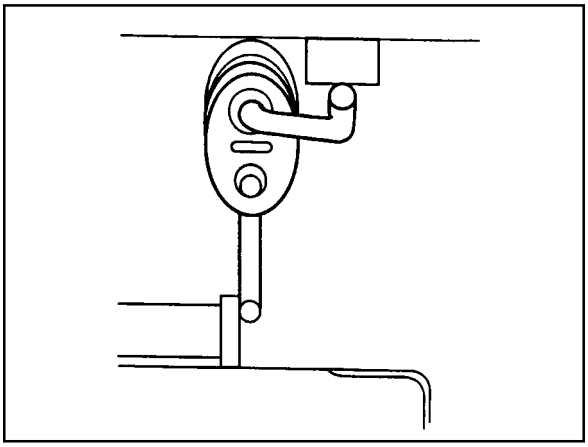

Downloaded from www.Manualslib.com manuals search engine

TURBOCHARGER

CHARGE AIR SYSTEM DIAGRAM

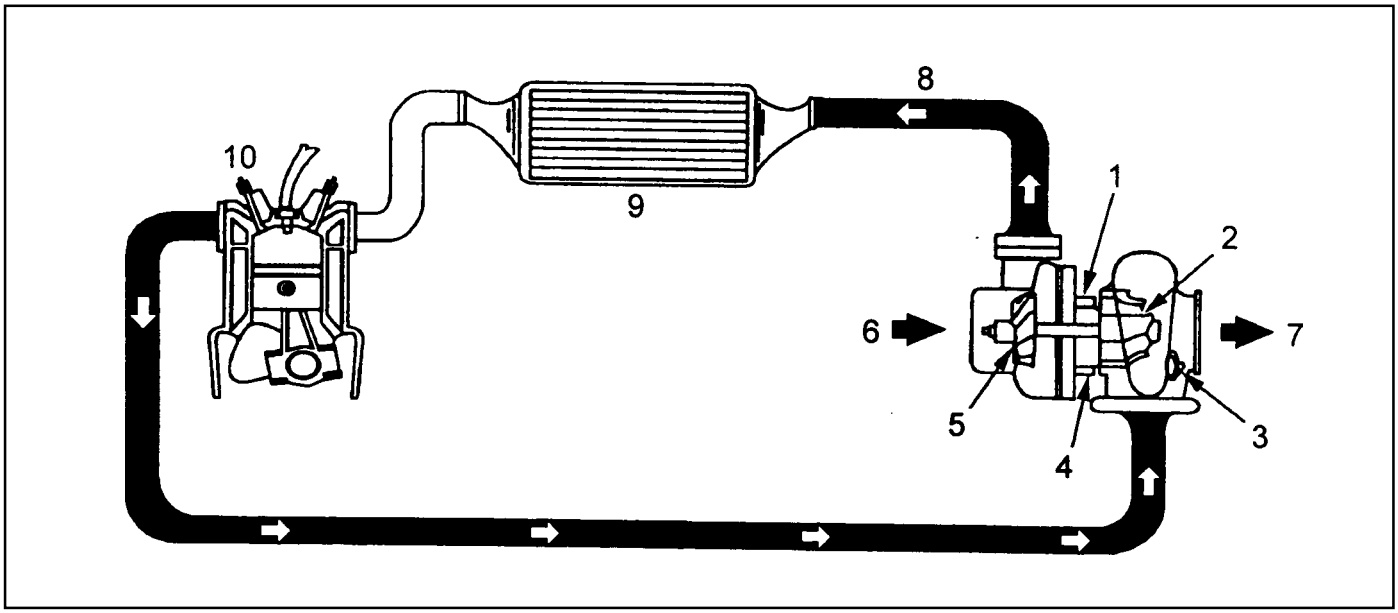

1 Turbocharger Oil Inlet
2 Turbine Wheel
3 Waste Gate
4 Oil Outlet
5 Compressor Wheel
6 Air Inlet
7 Exhaust Gas Outlet
8 Compressed Air Flow
9 Intercooler
10 Cylinder

Downloaded from www.Manualslib.com manuals search engine

INTERCOOLER

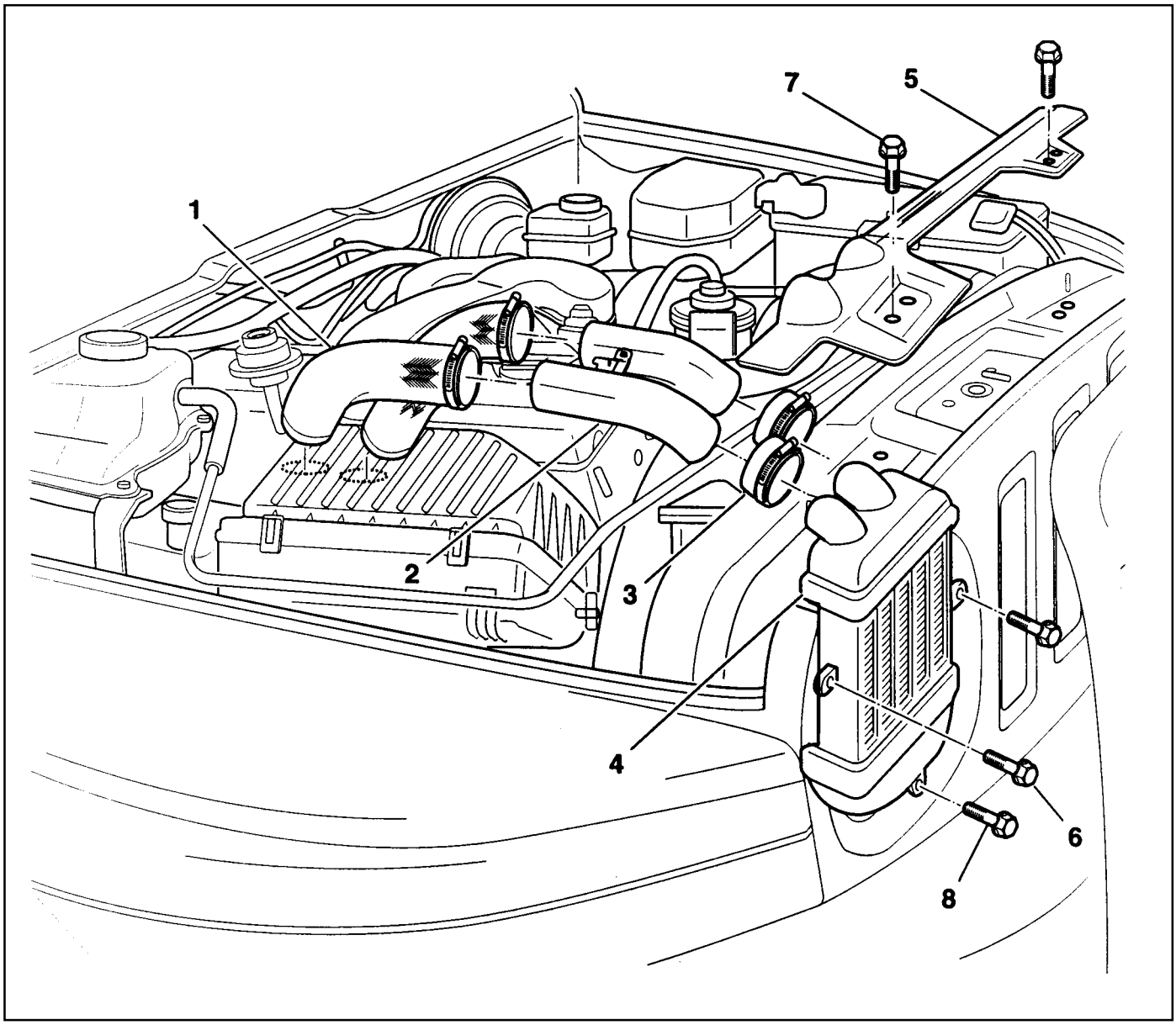

1 Hoses
2 Pipes
3 Hoses
4 Intercooler
5 Cover
6 Bolts
7 Screws
8 Bolts

Downloaded from www.Manualslib.com manuals search engine

Removal & Installation Procedure

1. Remove the hose connected to turbocharger and intake duct.

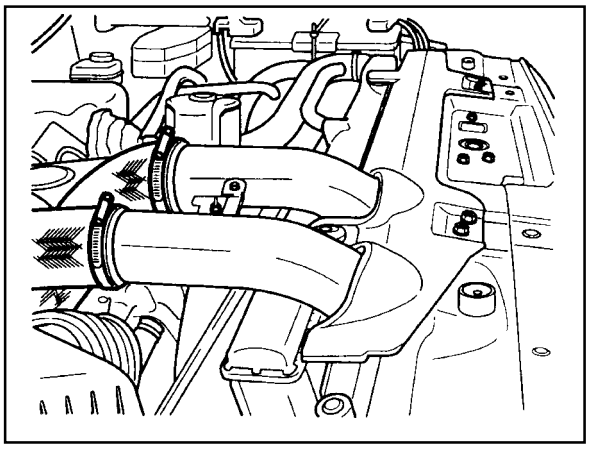

2. Remove the protective cover.

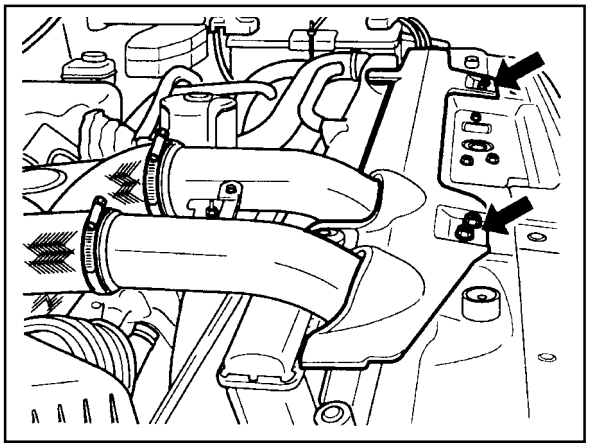

3. Loosen the clamps and remove the pipe and hose connected to intercooler.

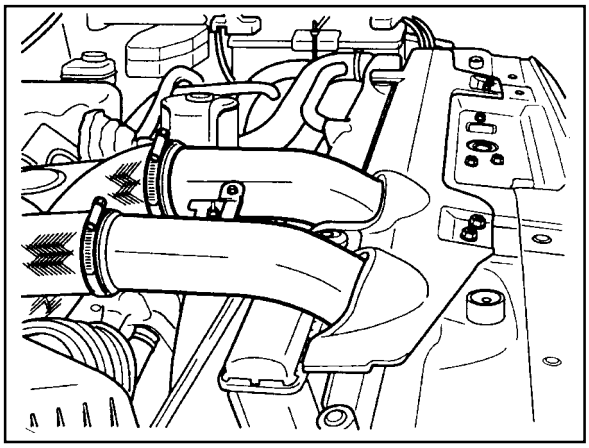

4. Unscrew the mounting bolts and remove the intercooler.
5. Installation should follow the removal procedure in the reverse order.

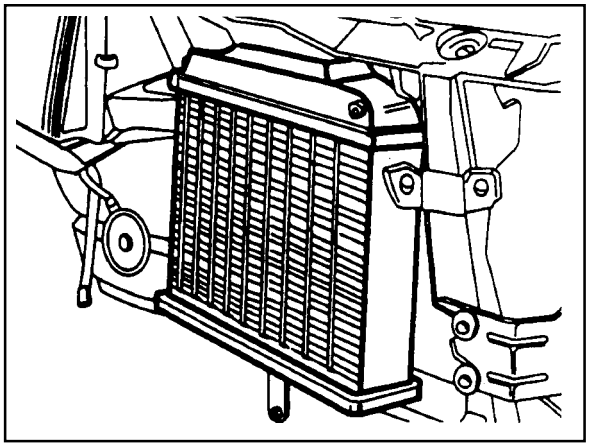

Downloaded from www.Manualslib.com manuals search engine

TURBOCHARGER ASSEMBLY

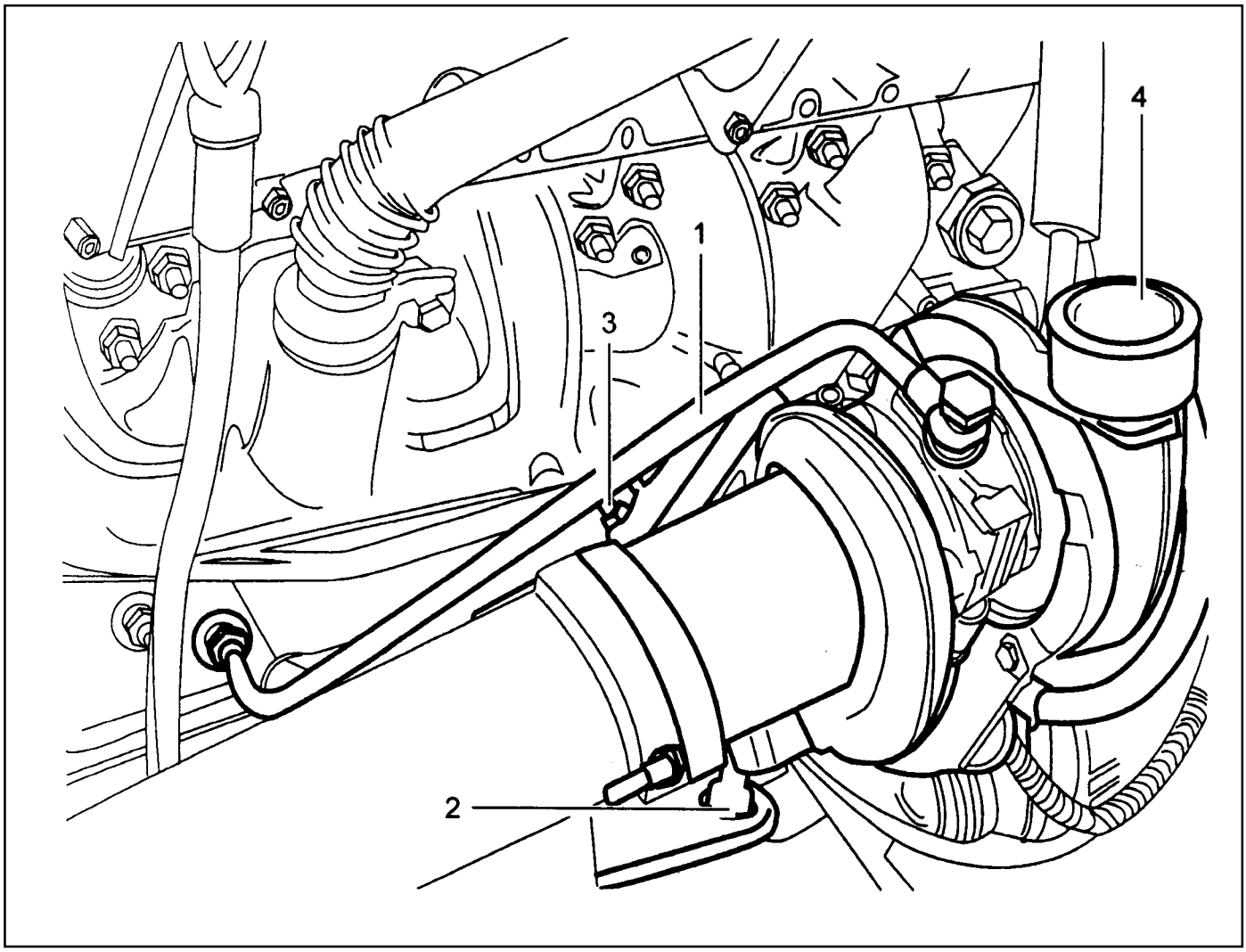

1 Oil Supply Line
2 Oil Return Line
3 Nuts
4 Turbocharger

Downloaded from www.Manualslib.com manuals search engine

Removal & Installation Procedure

1. Remove the 2 hoses connected to intercooler.

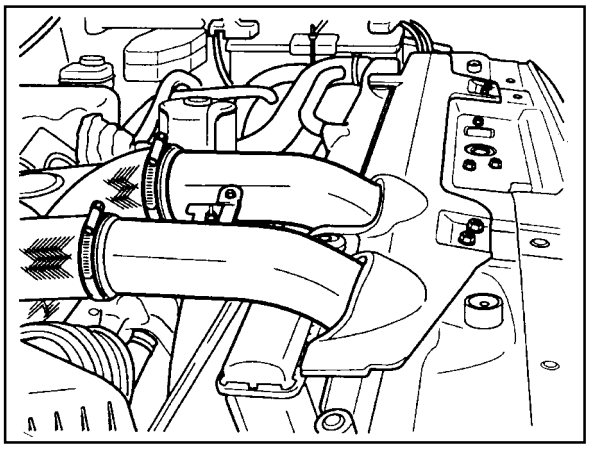

2. Remove the hose(air cleaner to turbocharger) with blow by hose.

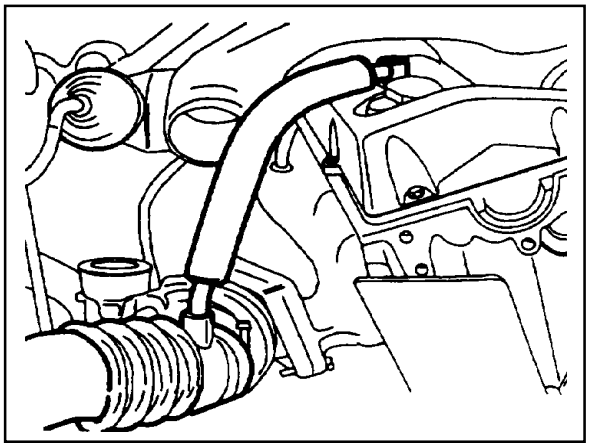

3. Disconnect the oil supply pipe.
4. Remove the oil return pipe.
5. Remove the support assembly.

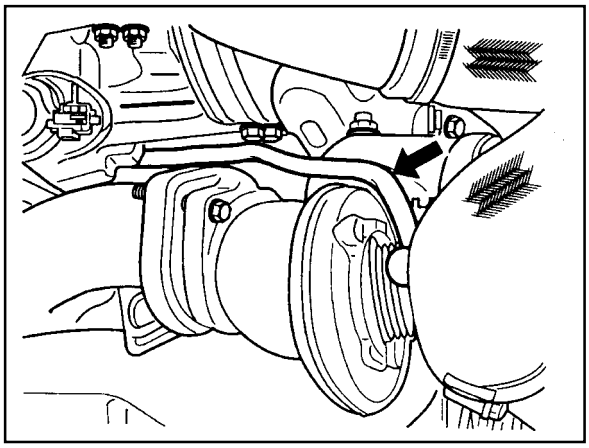

6. Remove the 3 nuts(arrows).

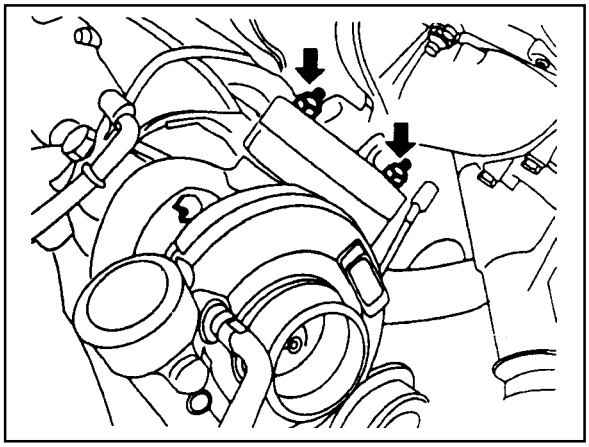

Downloaded from www.Manualslib.com manuals search engine

7. Remove the turbocharger disconnecting the exhaust pipe from the turbocharger.

8. Installation should follow the removal procedure in the reverse order.

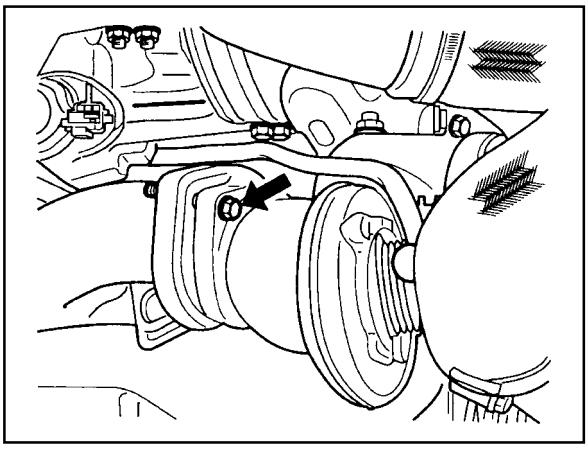

Downloaded from www.Manualslib.com manuals search engine

SECTION 2A

SUSPENSION DIAGNOSIS

TABLE OF CONTENTS

Specifications 2A-1
General Specifications 2A-1
Diagnosis 2A-3
General Diagnosis 2A-3
Input & Output Devices and Damping Force Control Logic 2A-5
Input & Output Devices 2A-5
System Layout 2A-5
Damping Force Control Logic 2A-6
Normal Control 2A-6
Self-Diagnosis 2A-7
Actuator Inspection 2A-8
Schematic and Routing Diagrams 2A-9
ECS Circuit 2A-9
Self Diagnosis Test 2A-11
Diagnosis Test 2A-11

SPECIFICATIONS

GENERAL SPECIFICATIONS

Application		Front	Rear
ECS Control Type		3-stage Variable Damping Force Control Type	
Shock Absorber	Max. Length (mm)	344 - 350	517 - 523
	Compressed Length (mm)	245 ± 3	331 ± 3
	Stroke (mm)	102	188

Downloaded from www.Manualslib.com manuals search engine

GENERAL SPECIFICATIONS (Cont'd)

Application		Description
Body Vertical and Lateral Acceleration Sensor	Power Voltage (V)	4.75 - 5.25
	Consuming Current (mA)	Less than 10
	Output Current (mA)	Less than 2.0
	Operating Characteristics 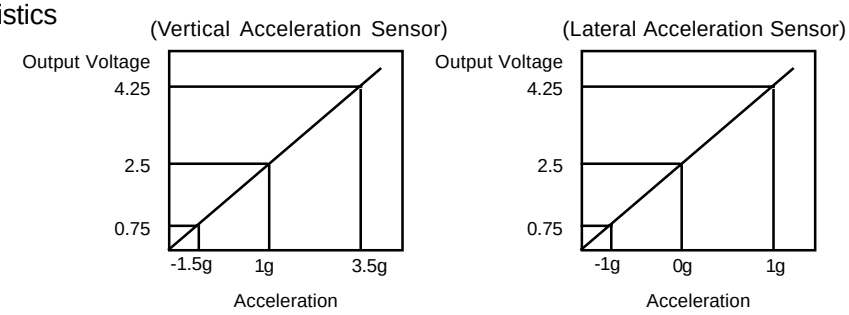	
Damping Force Switching Actuator	Type	3-stage Rotary Step Motor Type
	Voltage Rating (V)	DC12
	Current Rating (A)	Less than 2.5
	Current Time (mS)	95 - 105
Axle Vertical Acceleration Sensor (Wheel G Sensor)	Power Voltage (V)	4.75 - 5.25
	Consuming Current (mA)	Less than 10
	Output Current (mA)	Less than 2.0
	Operating Characteristics 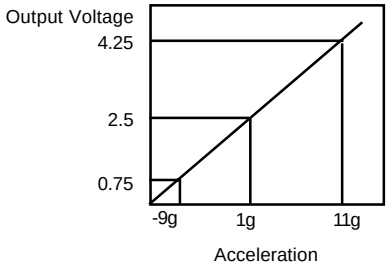	

Downloaded from www.Manualslib.com manuals search engine

DIAGNOSIS

GENERAL DIAGNOSIS

Problems in the steering, the suspension, the tires, and the wheels involve several systems. Consider all systems when you diagnose a complaint. Some problems, such as abnormal or excessive tire wear and scuffed tires, may by the result of hard driving. Always road test the vehicle first. If possible, do this road test with the customer.

Proceed with the following preliminary checks. Correct any substandard conditions.

Vehicle Rolling

Checks	Action
Broken Stabilizer Bar	Replace
Faulty Shock Absorber	Replace

Abnormal Noises

Checks	Action
Loosened Mountings	Retightening
Damaged or Worn wheel Bearing	Replace
Damaged Shock Absorber	Replace
Damaged Tire	Replace

Poor Riding

Checks	Action
Over Inflated Tire	Pressure Adjustment
Faulty Shock Absorber	Replace
Loosened wheel Nut	Tighten as Specified
Bent or Broken Coil Spring	Replace
Damaged Tire	Replace
Worn Bushing	Replace

Vehicle Pulls to Right or Left

Checks	Action
Deformed Arm Assembly	Replace
Worn Bushing	Replace
Bent or Broken Coil Spring	Replace
Difference Between L/H & R/H Heights	Adjust

Hard Steering

Checks	Action
Incorrect Wheel Alignment	Repair
Excessive Resistance of Lower Arm Ball Joint	Replace
Insufficient Tire Pressure	Adjust
Faulty Power Steering	Repair or Replace

Downloaded from www.Manualslib.com manuals search engine

Steering Instability

Checks	Action
Incorrect Front wheel Alignment	Replace
Worn or Loosened Lower Arm Bushing	Repair or Replace

Vehicle Bottoming

Checks	Action
Worn or Broken Coil Spring	Replace

Downloaded from www.Manualslib.com manuals search engine

INPUT & OUTPUT DEVICES AND DAMPING FORCE CONTROL LOGIC

INPUT & OUTPUT DEVICES

Damping force of shock absorber will rotate shock absorber control rod in 3 modes by driving actuator on the upper shock absorber when signaled from ECS.

Rotary valve in the shock absorber will control hydraulic flow according to rotation of control rod to adjust damping force of shock absorber in SOFT« MEDIUM« HARD.

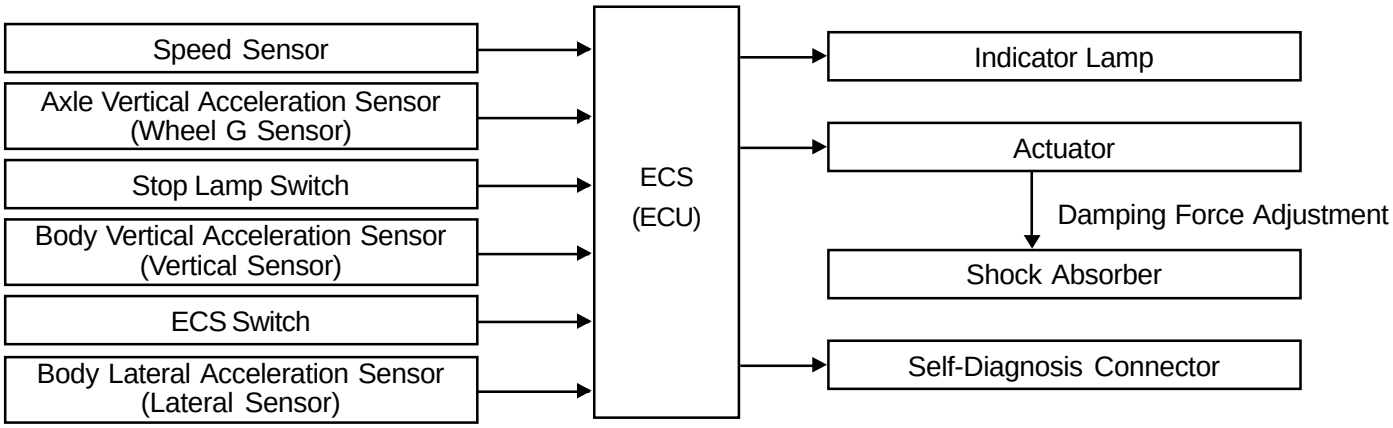

SYSTEM LAYOUT

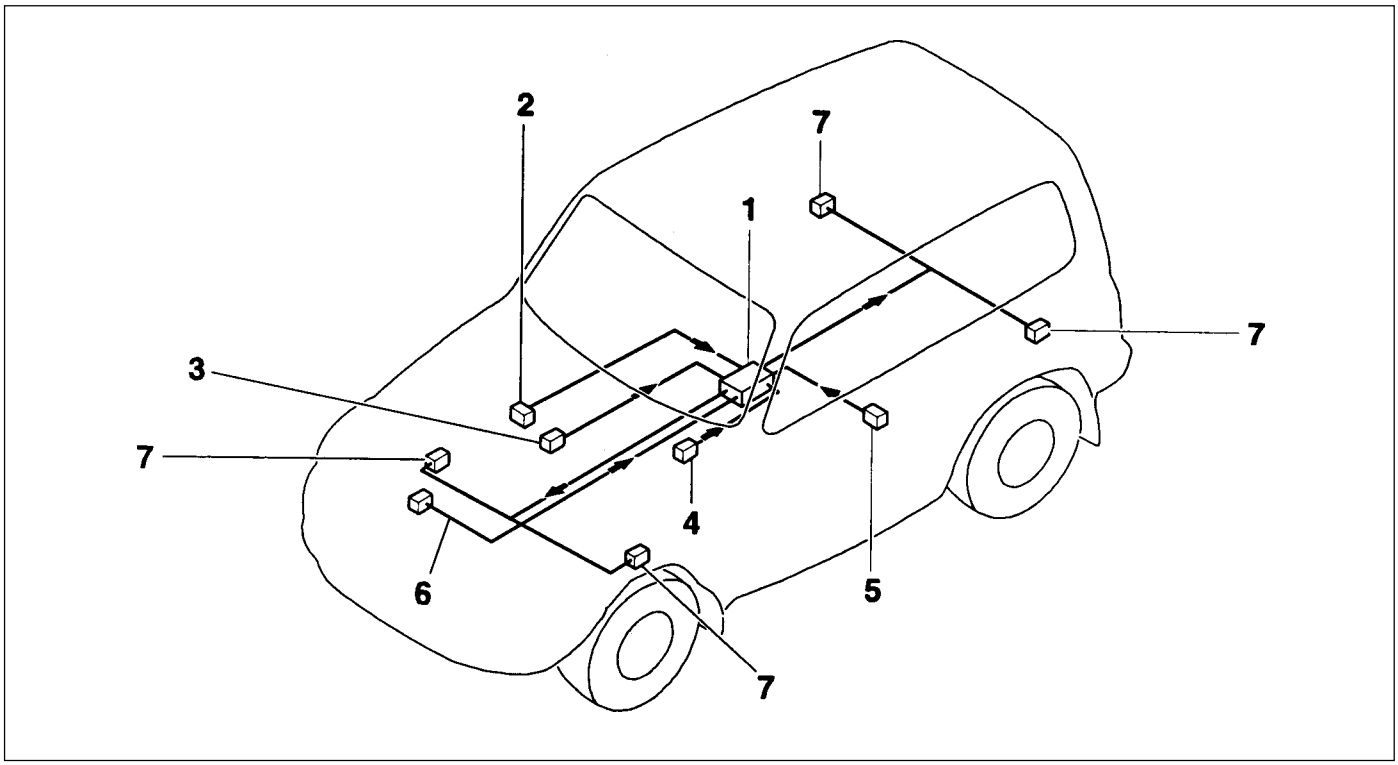

1 ECS (ECU)
2 Body Vertical Acceleration Sensor (Vertical Sensor)
3 Body Lateral Acceleration Sensor (Lateral Sensor)
4 ECS Mode Switch
5 Stop Lamp Switch
6 Axle Vertical Acceleration Sensor (Wheel G Sensor)
7 Mode Actuator

Downloaded from www.Manualslib.com manuals search engine

DAMPING FORCE CONTROL LOGIC

Control Logic that applies on damping force variable suspension is comprised of road sensing driving comfort control logic to increase driving comfort and vehicle speed sensing control logic, anti-roll control logic and anti-dive control logic to secure control safety.

Logic \ Sensor	Speed	Vertical Sensor (2.5g)	Lateral Sensor (1g)	Axle Acceleration Sensor (10g)	Brake
Road Sensing Driving Comfort Control Logic		●		●	
Anti-bounce Control Logic	●	●			
Anti-roll Control Logic	●		●		
Anti-dive Control Logic	●				●
Vehicle Speed Sensing Control Logic	●				

NORMAL CONTROL

Initial Stage

When ignition switch is "ON", system initialization will be performed for approx. 3 seconds. During this time, warning lamp will stay ON and damping force will be switched to Hard status. After 3 seconds, warning lamp will turn off and normal control status will be restored.

Normal Damping Force Control Establishment

Damping force will have Soft® Medium® Hard status in AUTO mode and Medium® Hard status in SPORT mode. When double control items are satisfied at the same time it will be Hard® Medium® Soft in order.

Normal Damping Force Control Release

Control mode release will be "Hard® Medium® Soft"or "Medium® Soft". In case that returned from Hard status to Medium status during control, it will be done after elapse of setting times. Returning from Medium status to Soft status will be done immediately without delay.

Downloaded from www.Manualslib.com manuals search engine

SELF-DIAGNOSIS

ECS-ECU indicates ECS circuit defectives to the driver by flickering ECS indicator lamp in the meter cluster 0.5 second of interval if there are defectives.

Code	Defects	Judging Conditions	Set Time	Remedy	Release Conditions	Set Time
01	Body vertical acceleration sensor	When sensor output voltage is less than 0.5-4.5V, more than 4.5V.	0.9 - 1.1sec.	Stop anti-bounce ride control	Sensor Voltage ³ 2.0 ± 0.1V ³ 3.0 ± 0.1V	0.9 - 1.1sec.
02	Body lateral acceleration sensor	When sensor output voltage is less than 0.55±0.15V, more than 4.45±0.1V.	0.9 - 1.1sec.	Stop anti-roll control	Sensor Voltage ³ 2.0 ± 0.1V ³ 3.0 ± 0.1V	0.9 - 1.1sec.
03	Axle vertical acceleration sensor (wheel G sensor)	When sensor output voltage is less than 0.5-4.5V, more than 4.5V.	0.9 - 1.1sec.	Stop ride control	Sensor Voltage ³ 2.0 ± 0.1V ³ 3.0 ± 0.1V	0.9 - 1.1sec.
04	Front actuator	Check step motor power supply detecting circuit for open and short check for relative connectors.	0.4 - 0.6sec.	Stop control after returning to the previous mode	IGN+ SW. OFF® ON	
05	Rear actuator	When defective detecting circuit has detected defectives during output OFF.	0.4 - 0.6sec.	Stop control after returning to the previous mode	IGN+ SW. OFF® ON	
06	ECU	When ECU does not work normally.	0.4 - 0.6sec.	Stop control	Reset	

1. Turn the ignition switch ON and if ECS system is normal, ECS indicator lamp will turn on for 3 seconds and then go off. However if defective, ECS indicator lamp will flicker in the interval of 0.5 second continuously.
2. Identify fault code with Scanner.

Downloaded from www.Manualslib.com manuals search engine

ACTUATOR INSPECTION

Output position of the actuator should be changed as below when battery voltage is applied between actuator connector terminals.

Connector terminal	Battery Voltage	Position of The Actuator Output	Remark
1 (White)	-	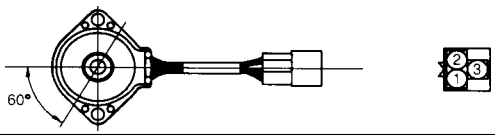	SOFT Mode
2 (Black)	OPEN		
3 (Red)	+		
1 (White)	+	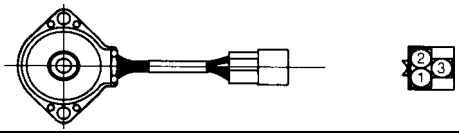	MEDIUM Mode
2 (Black)	-		
3 (Red)	OPEN		
1 (White)	OPEN	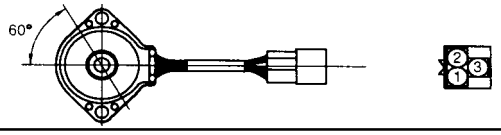	HARD Mode
2 (Black)	+		
3 (Red)	-		

Downloaded from www.Manualslib.com manuals search engine

SCHEMATIC AND ROUTING DIAGRAMS

ECS CIRCUIT

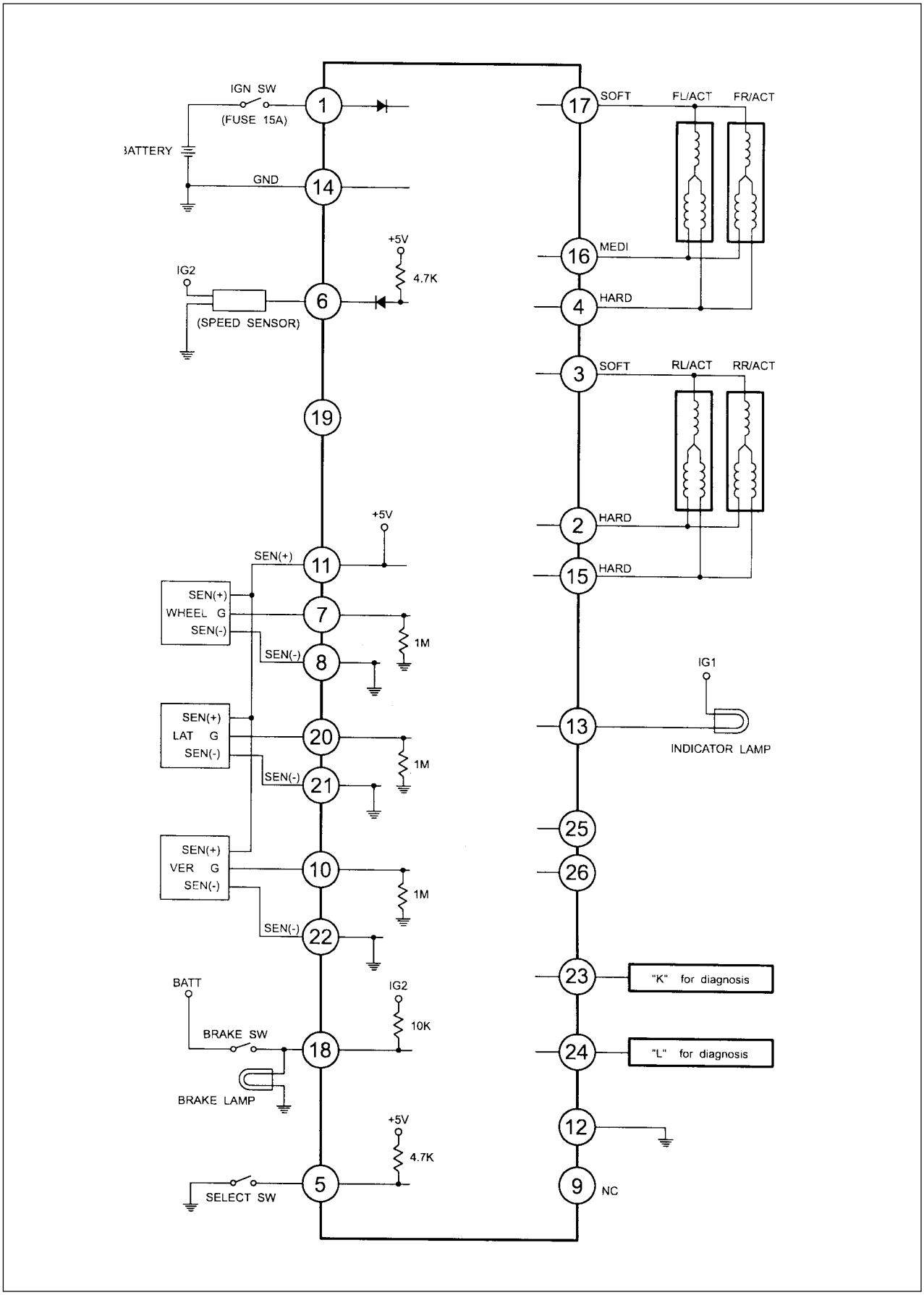

Downloaded from www.Manualslib.com manuals search engine

Connector Pin Number and Circuits

NO.	Circuit	NO.	Circuit
1	Ignition	14	Chassis Ground
2	Actuator R-MEDIUM	15	Actuator R-HEAD
3	Actuator R-SOFT	16	Actuator F-MEDIUM
4	Actuator F-HEAD	17	Actuator F-SOFT
5	Select Switch	18	Brake Switch
6	Speed Sensor	19	-
7	Wheel G Sensor	20	Lateral G Sensor
8	Wheel G Sensor Ground	21	Lateral G Sensor Ground
9	-	22	Vertical G Sensor Ground
10	Vertical G Sensor	23	Diagnosis K Line
11	Sensor +5V	24	Diagnosis L Line
12	Chassis Ground	25	-
13	Indicator Lamp	26	-

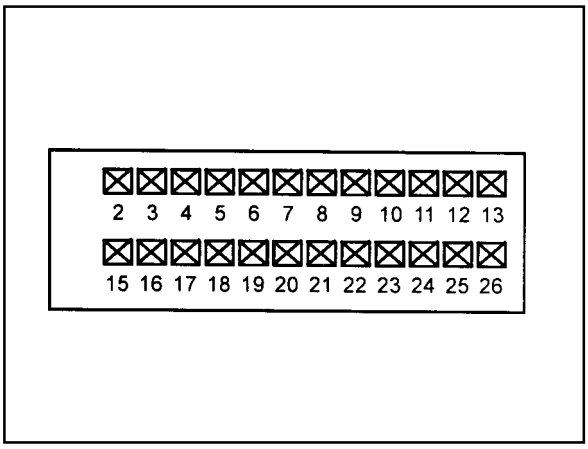

Downloaded from www.Manualslib.com manuals search engine

SELF DIAGNOSIS TEST

DIAGNOSIS TEST

Special Tool Requirements : Scanner

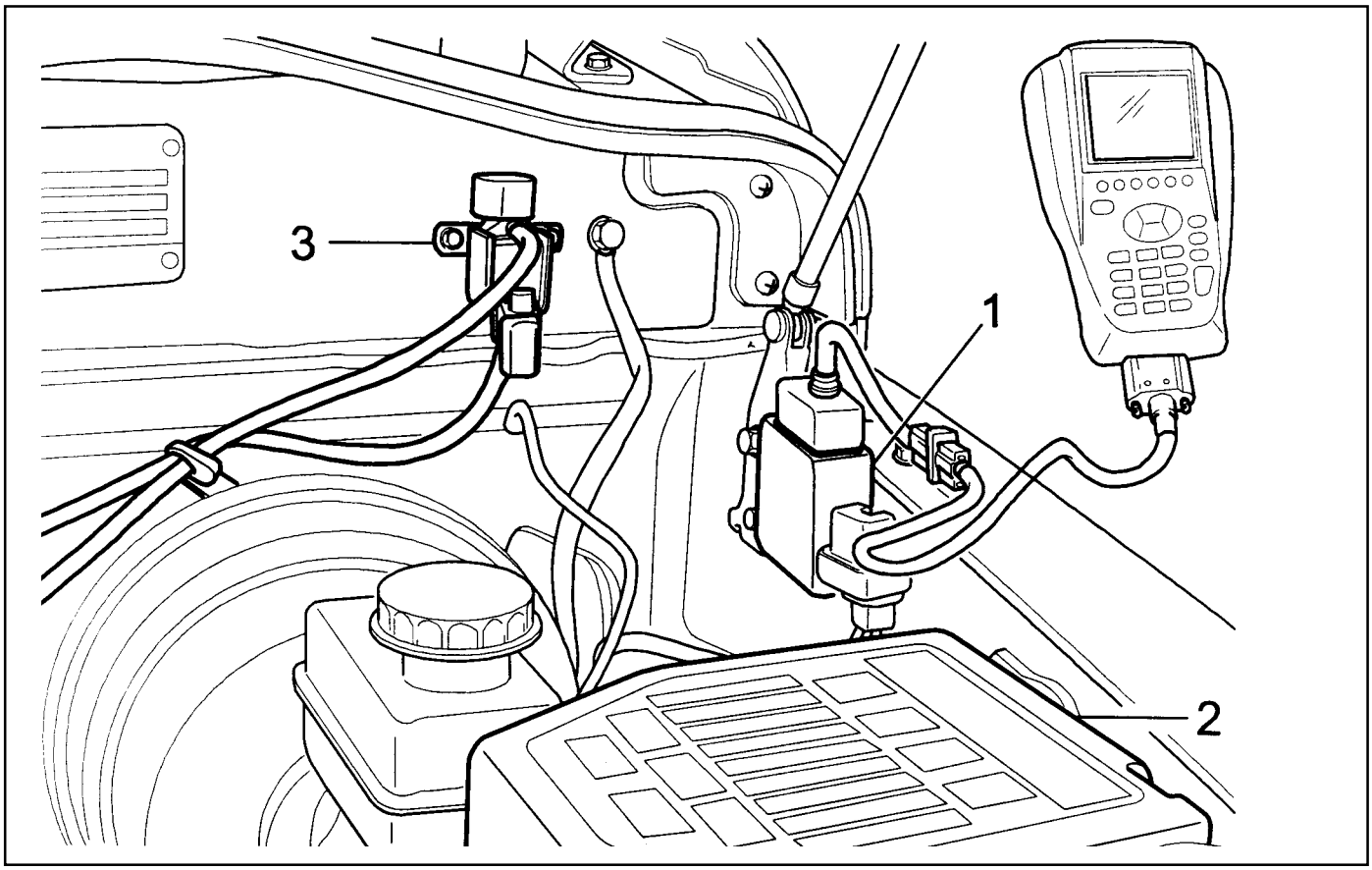

1 Diagnosis Connector
2 Fuse Box
3 Solenoid Valve

1. Position the ignition switch to 'OFF'.
2. Connect Scanner harness connector to the engine compartment diagnosis socket.
3. Turn the ignition switch to 'ON' position.
4. Select "Elctronic control vehicle diagnosis" from function selection display and press "Enter".
5. Select "Korando ('98 model year)" from vehicle model selection display and press 'Enter'.
6. Select "Elctronic suspension system (ECS)" from control system selection display and press 'Enter'.
7. Select "Self-diagnosis" from diagnosis item selection display.

   Notice

   Check sensor value output display, if necessary.

8. Determine the fault code and check defective component.

   Notice

   Refer to self-diagnosis list.

Downloaded from www.Manualslib.com manuals search engine

Self - Diagnosis List

Fault Code	Defects	Service Hint
01	Vertical Acceleration Sensor	1. Check sensor supply voltage ● Condition - IGN ON ● Standard value - voltage between pin 11 and 8 of ECU : 4.5 - 5.0V 2. Check sensor output voltage. ● Condition - IGN ON ● Standard value - voltage between pin 20 and 11 of ECU : 0.5 - 4.5V 3. Check the sensor. 4. Check circuit for open. 5. Check connection of other connectors.
02	Lateral Acceleration Sensor	1. Check sensor supply voltage. ● Condition - IGN ON ● Standard value - voltage between pin 11 and 8 of ECU : 4.5 - 5.0V 2. Check sensor output voltage. ● Condition - IGN ON ● Standard value - voltage between pin 10 and 11 of ECU : 0.5 - 4.5V 3. Check the sensor. 4. Check circuit for open. 5. Check connection of other connectors.
03	Wheel Acceleration Sensor	1. Check sensor supply voltage. ● Condition - IGN ON ● Standard value - voltage between pin 11, 8 and pin 7,11 of ECU : 4.5 - 5.0V 2. Check sensor output voltage. 3. Check the sensor. 4. Check circuit for open. 5. Check connection of other connectors.
04	Front Step Motor	1. Check step motor supply voltage. 2. Check circuit for open. 3. Check connection of other connectors.
05	Rear Step Motor	1. Check step motor supply voltage. 2. Check circuit for open. 3. Check connection of other connectors.
06	ECU	1. Check connectors of ECU. 2. Replace the ECU.

Downloaded from www.Manualslib.com manuals search engine

SECTION 2B

WHEEL ALIGNMENT

TABLE OF CONTENTS

Specifications 2B-1
Wheel Alignment Specifications 2B-1
Diagnosis 2B-2
Tire Diagnosis 2B-2
Radial Tire Lead/Pull 2B-3
Vibration Diagnosis 2B-5
Maintenance and Repair 2B-6
On-Vehicle Service 2B-6
Wheel Alignment 2B-6
General Description and System Operation 2B-9
Four Wheel Alignment 2B-9
Toe 2B-9
Caster 2B-9
Camber 2B-9

SPECIFICATIONS

WHEEL ALIGNMENT SPECIFICATIONS

Application	Description
Camber	0° ± 30'
Caster	2°30' ± 30'
Toe-in	0 - 4 mm
King Pin Inclination	12°30'

Downloaded from www.Manualslib.com manuals search engine

DIAGNOSIS

TIRE DIAGNOSIS

Irregular and Premature Wear

Irregular and premature tire wear has many causes. Some of them are incorrect inflation pressures, lack of regular rotation, poor driving habits, or improper wheel alignment.

Rotate the tires if :

- The front tire wear is different from the rear.
- The left and right front tire wear is unequal.
- The left and right rear tire wear is unequal, Check wheel alignment if :
- The left and right front tire wear is unequal.
- The wear is uneven across the tread of either front tire.
- The front tire treads are scuffed with “feather” edges on the side of the tread ribs or blocks.

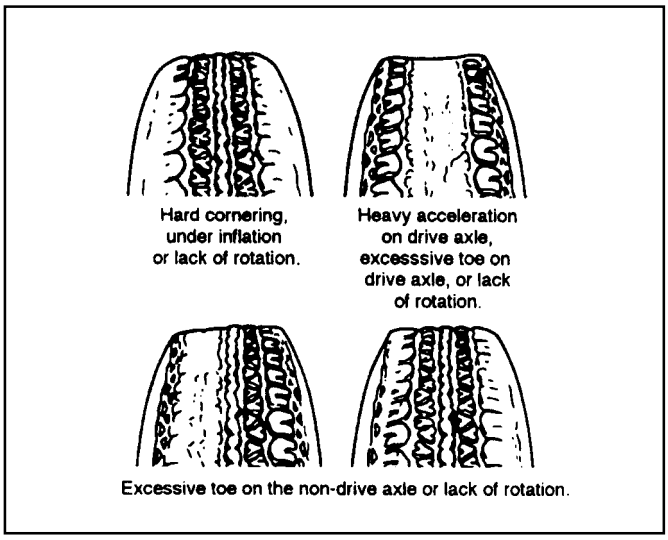

Tread Wear Indicators

The original equipment tires have built-in tread wear indicators to show when the tires need replacement. These indicators appear as bands when the tire tread depth becomes shallow. Tire replacement is recommended when the indicators appear in three or more grooves at six locations.

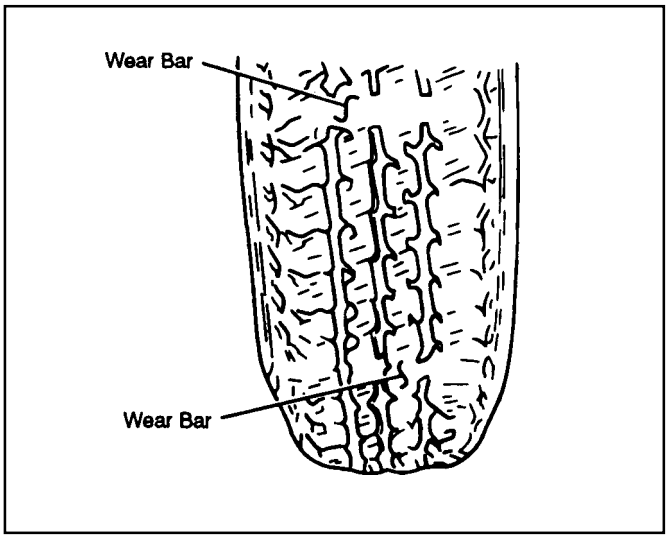

Radial Tire Waddle

Waddle is side-to-side movement at the front or rear of the vehicle. It is caused by the steel belt not being straight within the tire, or by excessive lateral runout of the tire or wheel.

The vehicle must be road tested to determine which end of the vehicle has the faulty tire. The rear end of the vehicle will shake from side to side or “waddle” if the waddle tire is on the rear of the vehicle. From the driver’s seat, it feels as though someone is pushing on the side of the vehicle. If the faulty tire is on the front of the vehicle, the waddle is more visual. The front sheet meld appears to be moving back and forth, and the drivers seat feels like the pivot point in the vehicle.

Waddle can be diagnosed using the method of substituting known good tire and wheel assemblies on the problem vehicle

1. Road test the vehicle to determine if the waddle is coming from the front or the rear of the vehicle.
2. Install good tires and wheels from a similar vehicle in place of those on the offending end of the problem vehicle. If the source of the waddle is not obvious, change the rear tires.

Downloaded from www.Manualslib.com manuals search engine

3. Road test the vehicle. If there is improvement, install the original tires to find the offending tire. If there is no a straight improvement, install good tires in place of all four offending tires.
4. Install original tires one at a time to find the offending tire.

RADIAL TIRE LEAD/PULL

Lead/pull is the deviation of the vehicle from a straight path on a level road with no pressure on the steering wheel. Lead is usually caused by:

- Incorrect alignment.
- Uneven brake adjustment.
- Tire construction.

The way in which a tire is built can produce lead/pull in the vehicle.011-center belts on radial tires can cause the tire to develop a side force while the vehicle rolls straight down the road. If one side of the tire has even a little larger diameter than the diameter of the other side, the tire will tend to roll to one side. Unequal diameters will cause the tire to develop a side force which can produce vehicle lead/pull.

The radial lead/pull diagnosis chart should be used to determine whether the problem originates from an alignment problem or from the tires. Part of the lead diagnosis procedure calls for tire rotation that is different from the proper tire rotation pattern. If a medium- to high-mileage tire is moved to the other side of the vehicle, be sure to check for ride roughness. Rear tires will not cause lead/pull.

Downloaded from www.Manualslib.com manuals search engine

Radial Tire Lead/Pull Diagnosis Chart

Step	Action	Values(s)	Yes	No
1	1. Perform wheel alignment preliminary inspection. 2. Check the brakes for dragging. 3. Road test the vehicle. Does the vehicle lead/pull?	-	Go to *Step 2*	System OK
2	1. Cross switch the front tire and wheel assemblies. 2. Road test the vehicle. Does the vehicle lead/pull?	-	Go to *Step 3*	System OK
3	1. Check the front wheel alignment. Is the alignment within specifications?	-	Go to *Step 4*	Adjust alignment
4	1. Compare the front camber and front caster to specifications. Are they within specifications?	-	Go to *Step 7*	Go to *Step 5*
5	1. Check the vehicle frame. Is the frame bent?	-	Go to *Step 6*	Go to *Step 1*
6	1. Straighten the frame. Is the repair complete?	-	Go to *Step 3*	-
7	1. The probable cause is the tires. 2. Switch the left front tire and wheel assembly with the left rear tire and wheel assembly. 3. Road test the vehicle. Does the vehicle still lead/pull?	-	Go to *Step 9*	Go to *Step 8*
8	1. Switch the left front tire and wheel assembly with the left rear tire and wheel assembly and replace the left front tire. Does the repair complete?	-	System OK	Go to *Step 1*
9	1. Switch the right front tire and wheel assembly with the right rear tire and wheel assembly. 2. Road test the vehicle. Does the vehicle still lead/pull?	-	Go to *Step 1*	Go to *Step 10*
10	1. Switch the right front tire and wheel assembly with the right rear tire and wheel assembly and replace the right front tire. Is the repair complete?	-	System OK	Go to *Step 1*

Downloaded from www.Manualslib.com manuals search engine

VIBRATION DIAGNOSIS

Wheel imbalance causes most highway speed vibration problems. A vibration can remain after dynamic balancing because:

- A tire is out of round.
- A rim is out of round.
- A tire stiffness variation exists.

Measuring tire and wheel free runout will uncover only part of the problem, All three causes, known as loaded radial runout, must be checked using method of substituting known good tire and wheel assemblies on the problem vehicle.

Preliminary Checks

Prior to performing any work, always road test the car and perform a careful visual inspection for:

- Obvious tire and wheel runout.
- Obvious drive axle runout.
- Improper tire inflation.
- Incorrect trim height.
- Bent or damaged wheels.
- Debris build-up on the tire or the wheel.
- Irregular or excessive tire wear.
- Improper tire bead seating on the rim,
- Imperfections in the tires, including: tread deformations, separations, or bulges from impact damage. Slight sidewall indentations are normal and will not affect ride quality.

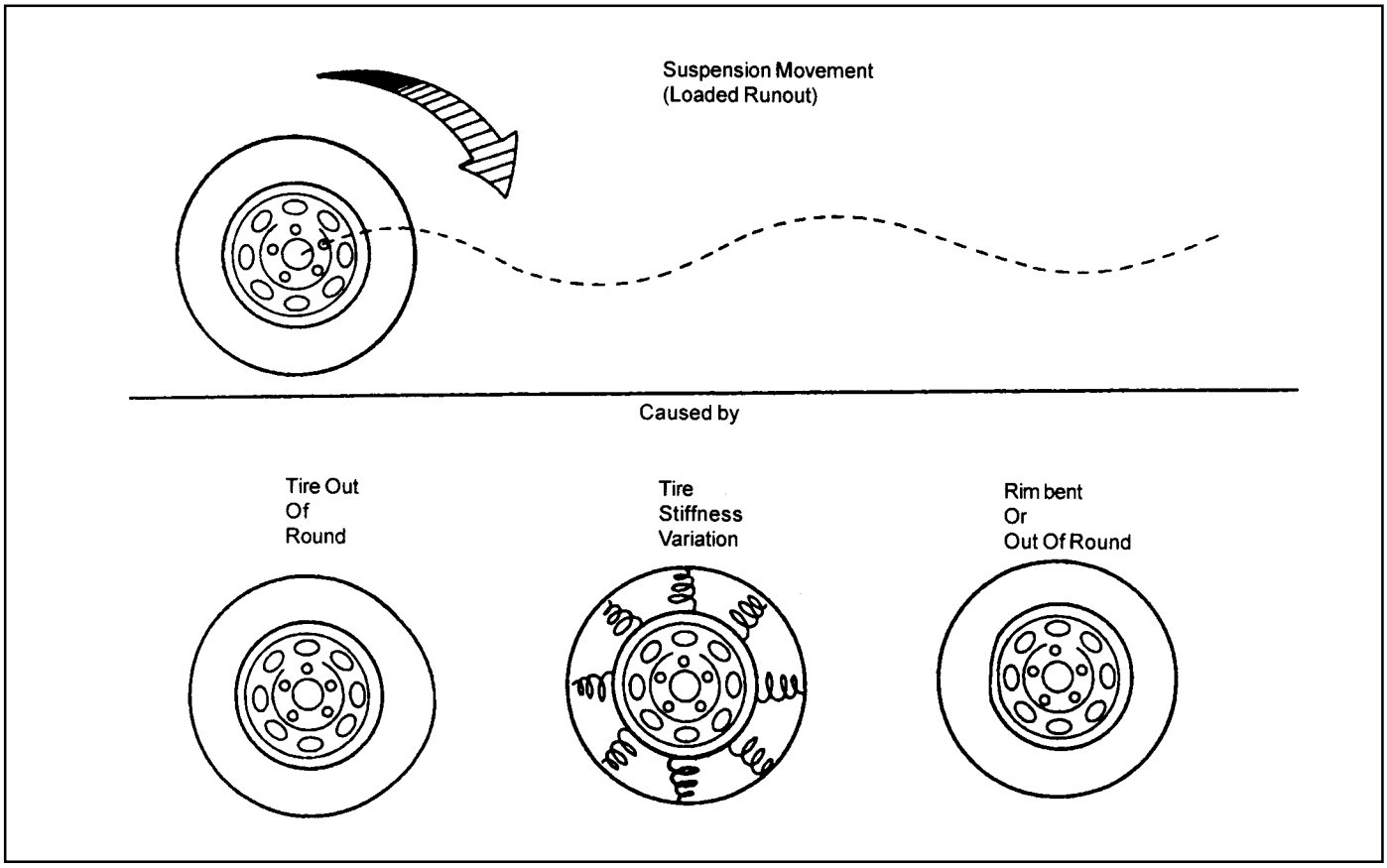

Tire Balancing

Balance is the easiest procedure to perform and should be done first if the vibration occurs at high speeds. Do an off-vehicle, two-plane dynamic balance first to correct any imbalance in the tire and wheel assembly.

An on-vehicle finish balance will correct any brake drum, rotor, or wheel cover imbalance, If balancing does not correct the high-speed vibration, or if the vibration occurs at low speeds, runout is the probable cause.

Downloaded from www.Manualslib.com manuals search engine

MAINTENANCE AND REPAIR

ON-VEHICLE SERVICE

WHEEL ALIGNMENT

Vehicle Height

1. Check the tire for proper inflation.
2. Measure 'A' from the center of the lower arm rear mounting bolt end to the ground.

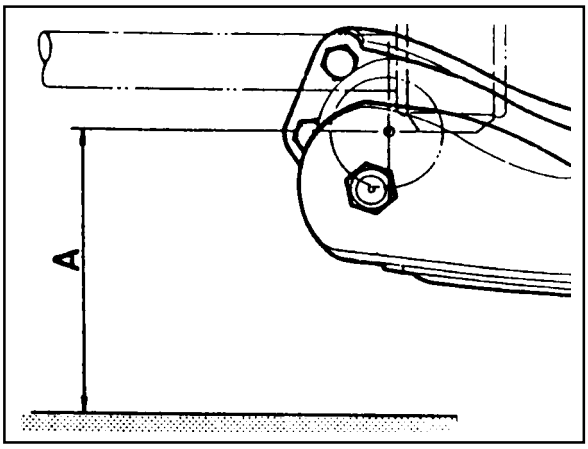

3. Measure 'B' from the center of the steering knuckle shaft to the ground.

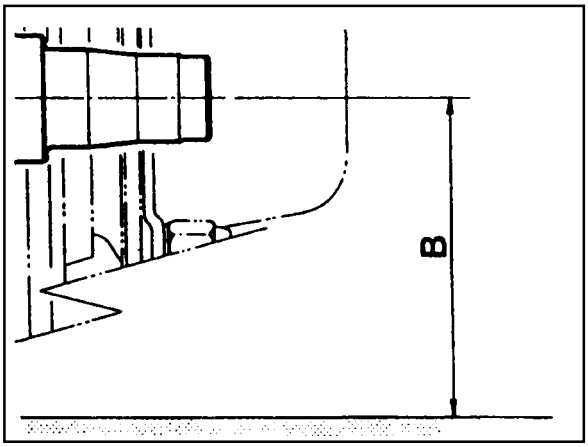

4. If the difference between 'A' and 'B' is not within specification, adjust vehicle height using torsion bar height control bolt.

'B' - 'A'	31 - 36mm

Notice

Before wheel alignment, adjust vehicle height adjustment first.

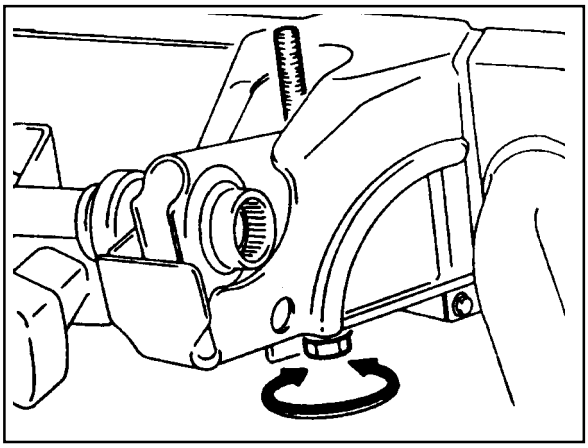

Toe-in

1. Measure toe-in.

Specification	0 - 4mm

2. If toe-in is not within specification, loosen the tie rod nuts and adjust it by turning the tie rod.

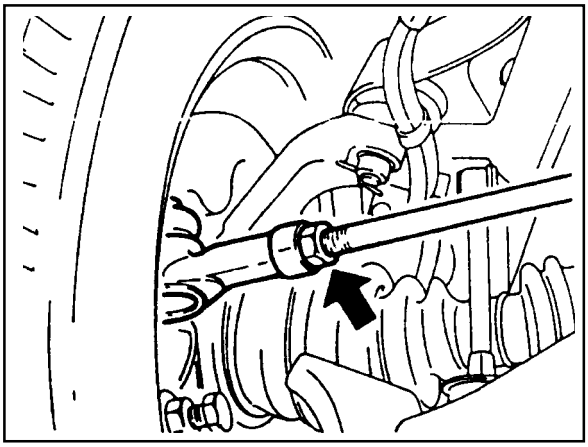

Downloaded from www.Manualslib.com manuals search engine

Camber

1. Remove the free wheel hub.
2. Measure camber with a wheel alignment equipment.

Specification	0°±30’

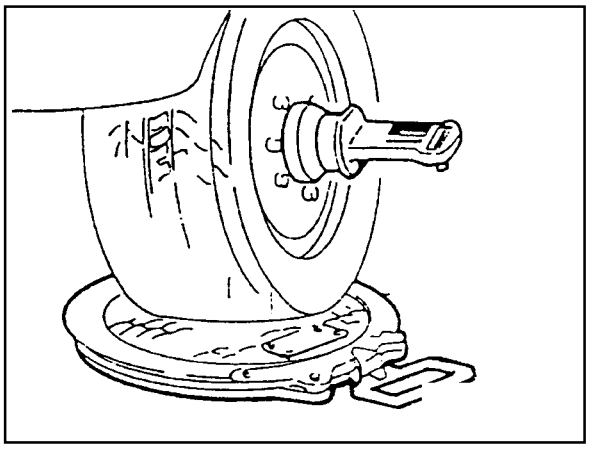

3. If camber measurements are not within specification, adjust it by increasing or decreasing the number of adjusting shims (1) inserted between the upper arm shaft and cross bracket.

Camber Change

Adjusting Shims	Increasing 1ea	Decreasing 1ea
1.6 large	+ 19’	- 19’
3.2 large	+ 38’	- 38’

Notice

Difference between the left and right should be adjusted within 30’.

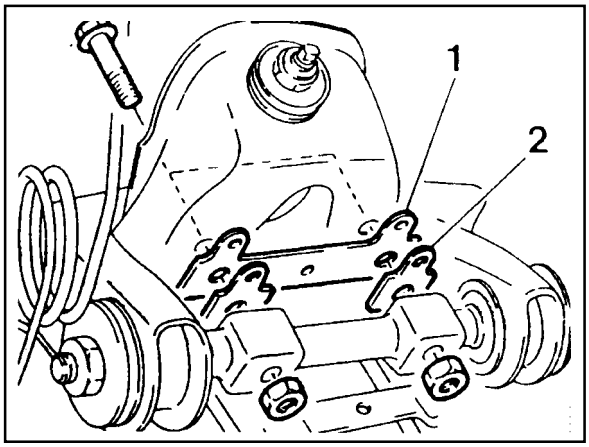

Caster

1. Remove the free wheel hub.
2. Measure caster with a wheel alignment equipment and a turning radius gauge.

Specification	2° 30’ ± 30’

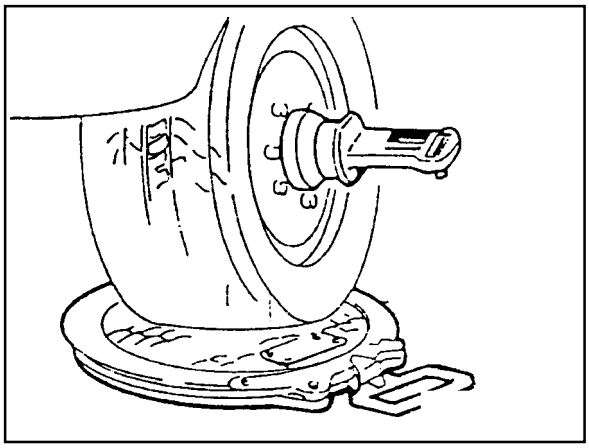

Downloaded from www.Manualslib.com manuals search engine

3. If caster measurements are not within specification, adjust it by increasing 1ea (rear) or decreasing 1ea (front).

Caster Change

Adjusting Shims	FRONT	
	Increasing 1ea	Decreasing 1ea
0.4 small	- 11’	+ 11’
1.6 small	- 43’	+ 43’
Adjusting Shims	REAR	
	Increasing 1 ea	Decreasing 1 ea
0.4 small	+ 11’	- 11’
1.6 small	+ 43’	- 43’

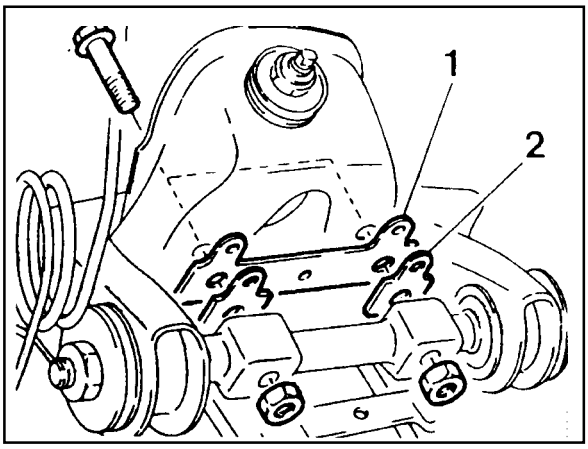

Notice

Difference between the left and right should be adjusted within 30’.

Downloaded from www.Manualslib.com manuals search engine

GENERAL DESCRIPTION AND SYSTEM OPERATION

FOUR WHEEL ALIGNMENT

The first responsibility of engineering is to design safe steering and suspension systems. Each component must be strong enough to withstand and absorb extreme punishment. Both the steering system and the front and the rear suspension must function geometrically with thebody mass.

The steering and the suspension systems require that the front wheels self-return and that the tire rolling effort and the road friction be held to a negligible force in order to allow the customer to direct the vehicle with the least effort and the most comfort.

A complete wheel alignment check should include measurements of the rear toe and camber.

Four-wheel alignment assures that all four wheels will be running in precisely the same direction.

When the vehicle is geometrically aligned, fuel economy and tire life are at their peak, and steering and performance are maximized.

TOE

Toe-in is the turning in of the tires, while toe-out is the turning out of the tires from the geometric centerline or thrust line. The toe ensures parallel rolling of the wheels.

The toe serves to offset the small deflections of the wheel support system which occur when the vehicle is rolling forward. The specified toe angle is the setting which achieves 0 degrees of toe when the vehicle is moving.

Incorrect toe-in or toe-out will cause tire wear and reduced fuel economy. As the individual steering and suspension components wear from vehicle mileage, additional toe will be needed to compensate for the wear.

Always correct the toe dimension last.

CASTER

Caster is the tilting of the uppermost point of the steering axis either forward or backward from the vertical when viewed from the side of the vehicle. A backward tilt is positive, and a forward tilt is negative. Caster influences directional control of the steering but does not affect tire wear. Weak springs or overloading a vehicle will affect caster. One wheel with more positive caster will pull toward the center of the car. This condition will cause the car to move or lean toward the side with the least amount of positive caster. Caster is measured in degrees.

CAMBER

Camber is the tilting of the top of the tire from the vertical when viewed from the front of the vehicle. When the tires tilt outward, the camber is positive. When the tires tilt inward, the camber is negative. The camber angle is measured in degrees from the vertical. Camber influences both directional control and tire wear.

If the vehicle has too much positive camber, the outside shoulder of the tire will wear. If the vehicle has too much negative camber, the inside shoulder of the tire will wear.

Downloaded from www.Manualslib.com manuals search engine

SECTION 2C

FRONT SUSPENSION

TABLE OF CONTENTS

Specifications 2C-1
General Specifications 2C-1
Fastener Tightening Specifications 2C-2
Component Locator 2C-3
Front Suspension 2C-3
Maintenance and Repair 2C-4
On-Vehicle Service 2C-4
Front Stabilizer Bar 2C-4
Torsion Bar 2C-6
Front Lower and Upper Arm 2C-8
Front Shock Absorber 2C-10
Axle Vertical Acceleration Sensor (Wheel G Sensor) 2C-12
Vertical and Lateral Sensor 2C-13
ECS (ECU) 2C-14

SPECIFICATIONS

GENERAL SPECIFICATIONS

Application		Description
Type		Double Wishbone
Spring Type		Torsion Bar Spring
Torsion Bar	Length	1,040 mm
	Outer Diameter(*f*)	24.5 mm
Shock Absorber		Cylindrical Reciprocation Type
Stabilizer Type		Torsion Bar Spring

Downloaded from www.Manualslib.com manuals search engine

FASTENER TIGHTENING SPECIFICATIONS

Stabilizer Bar

Application	N•m
Stabilizer Bar Retaining Nut	30 - 45
Stabilizer Bar Link Nut	60 - 80
Lower Arm Nut	16 - 22

Torsion Bar

Application		N•m
Torque Arm Bolt	M10	40 - 60
	M12	60 - 80

Lower and Upper Arm

Application	N•m
Upper Arm Nut	120 - 140
Upper Arm End Castle Nut	80 - 150
Lower Arm Nut	150 - 180
Lower Arm End Castle Nut	120 - 180

Steering Knuckle and Drive Shaft

Application	N•m
Brake Caliper Hose Bolt	25 - 35
Brake Caliper Mounting Bolt	85 - 105
Tie Rod Retaining Nut	35 - 45
Upper Arm Retaining Nut	80 - 150
Lower Arm Retaining Nut	120 - 180

Downloaded from www.Manualslib.com manuals search engine

COMPONENT LOCATOR

FRONT SUSPENSION

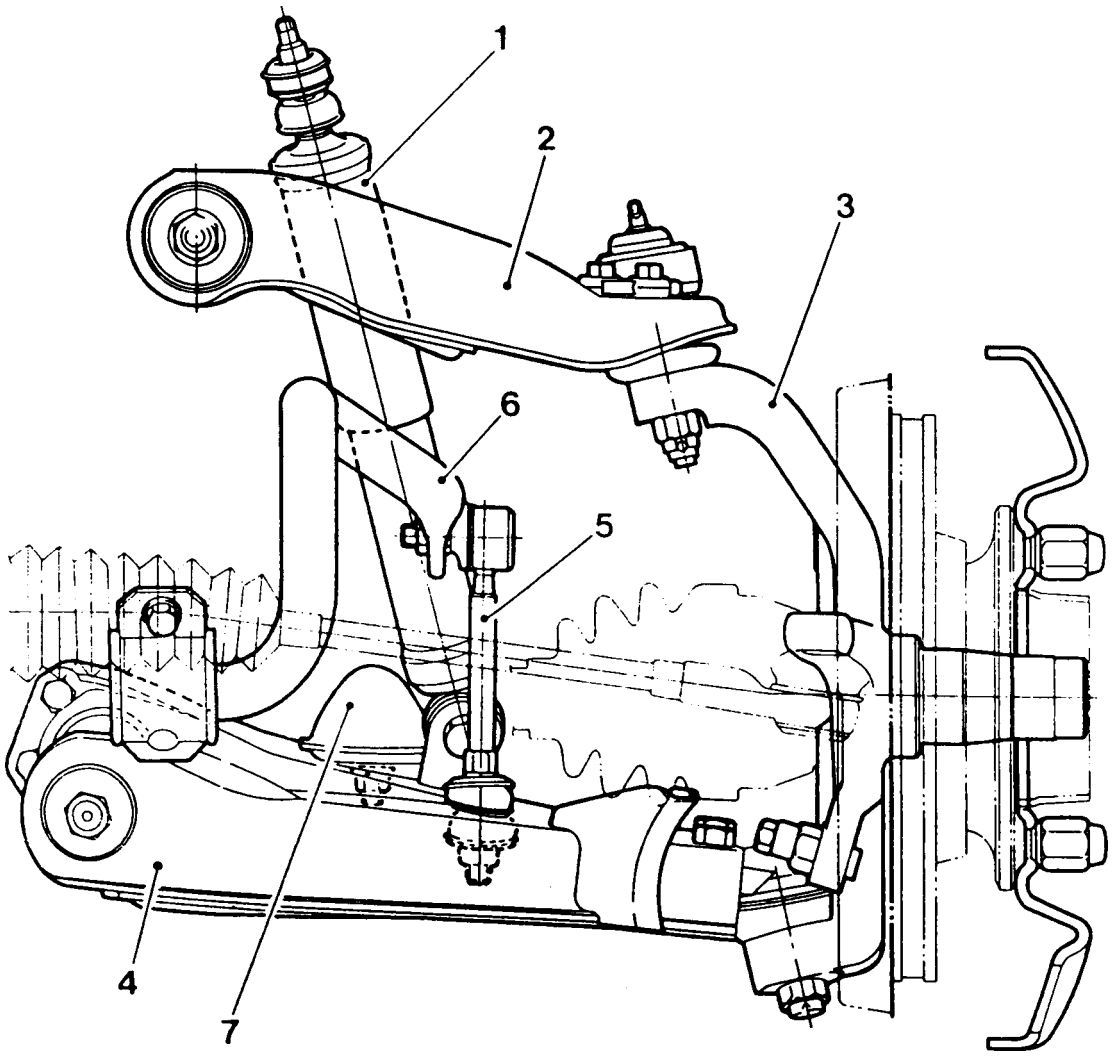

1 Shock Absorber
2 Upper Arm
3 Steering Knuckle
4 Lower Arm
5 Stabilizer Bar Link
6 Stabilizer Bar
7 Suspension Bumper

Downloaded from www.Manualslib.com manuals search engine

MAINTENANCE AND REPAIR

ON-VEHICLE SERVICE

FRONT STABILIZER BAR

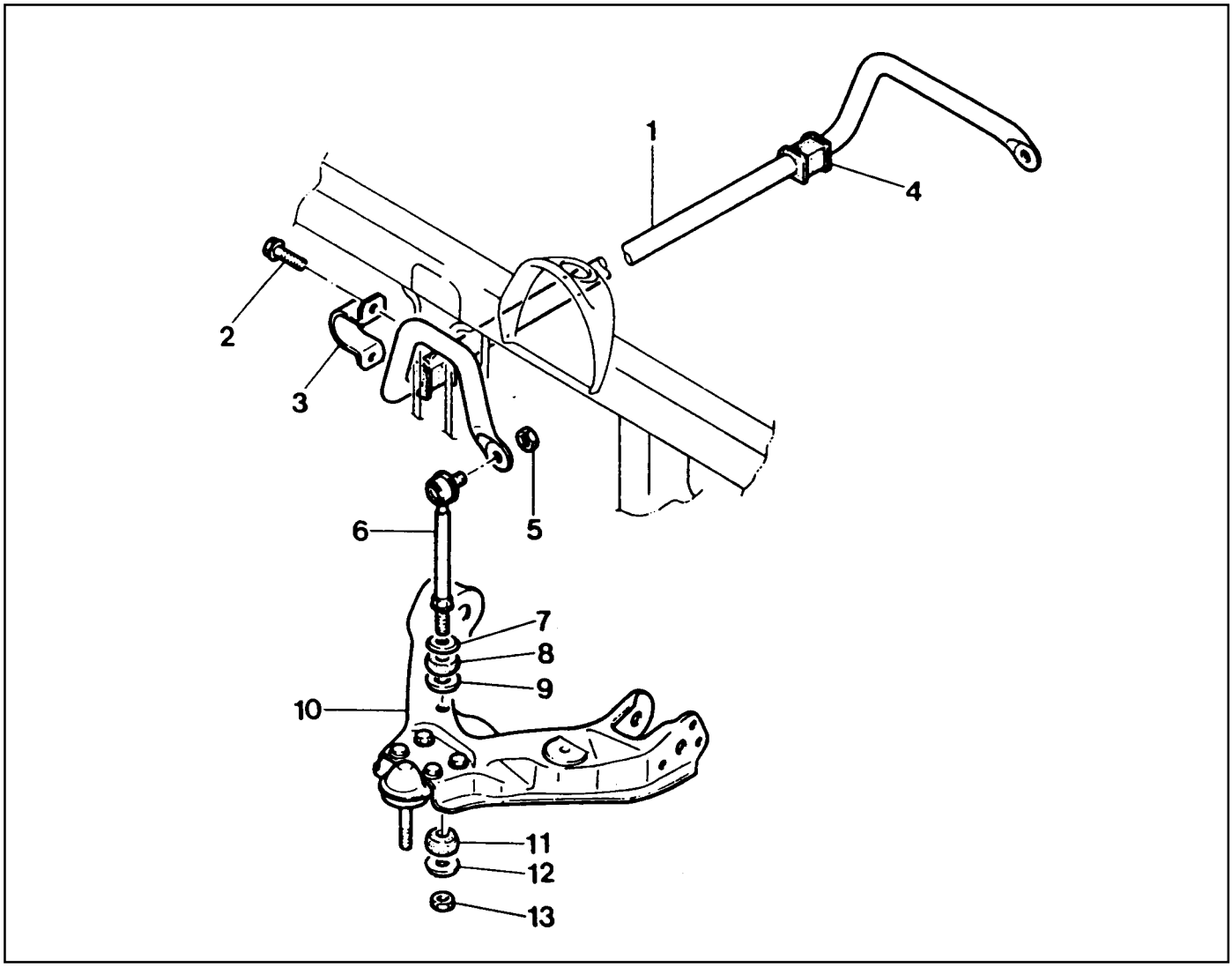

1 Front Stabilizer Bar
2 Bolt ..... 30-45 Nm
3 Fixing Cap
4 Bushing
5 Nut ..... 60-80 Nm
6 Stabilizer Bar Link Assembly
7 Outer Washer
8 Bushing
9 Center Washer
10 Lower Arm
11 Bushing
12 Outer Washer
13 Nut ..... 16-22 Nm

Downloaded from www.Manualslib.com manuals search engine

Removal & Installation Procedure

1. Remove the connecting nuts (1) from stabilizer bar link.

Tightening Torque	16 - 22 Nm

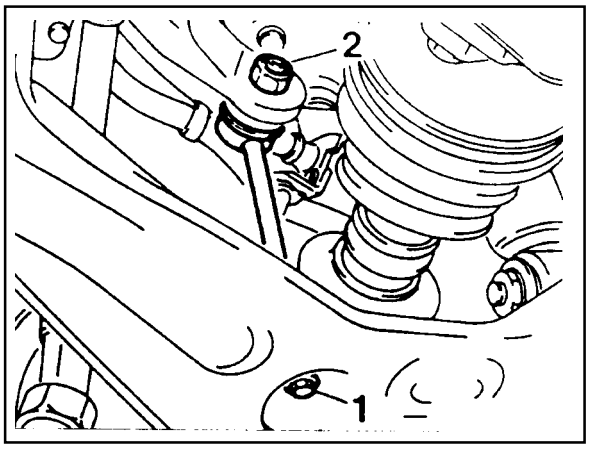

Installation Notice

2. Remove the connecting nuts (2) of the stabilizer bar and link and then remove the link.

Tightening Torque	60 - 80 Nm

Installation Notice

3. Remove the stabilizer bar fixing cap bolts (arrow) and

Tightening Torque	30 - 45 Nm

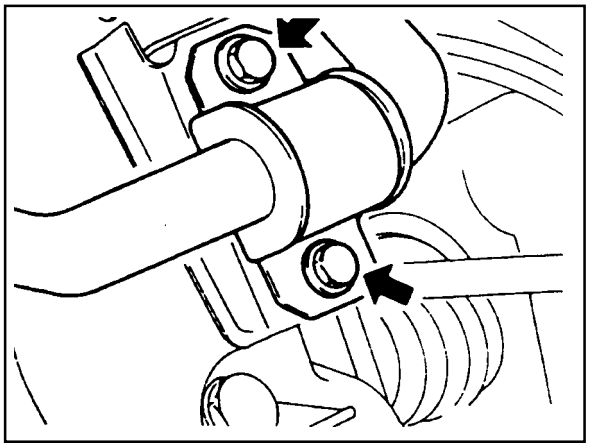

remove the stabilizer bar.

4. Installation should follow the removal precedure in the reverse order.

Notice

The distance between the end of the nut and the end of the link should be in 10-13 mm at the connection of the stabilizer bar link and lower arm.

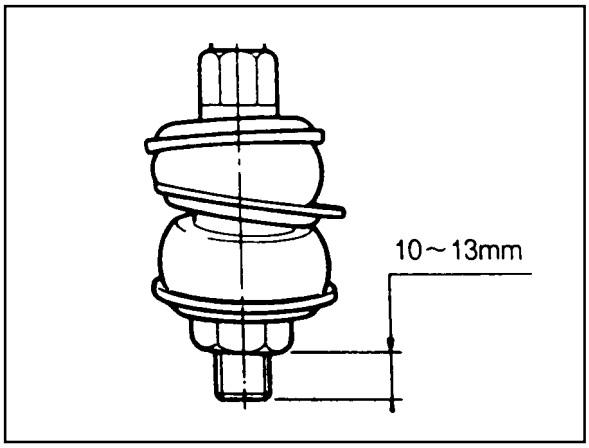

Downloaded from www.Manualslib.com manuals search engine

TORSION BAR

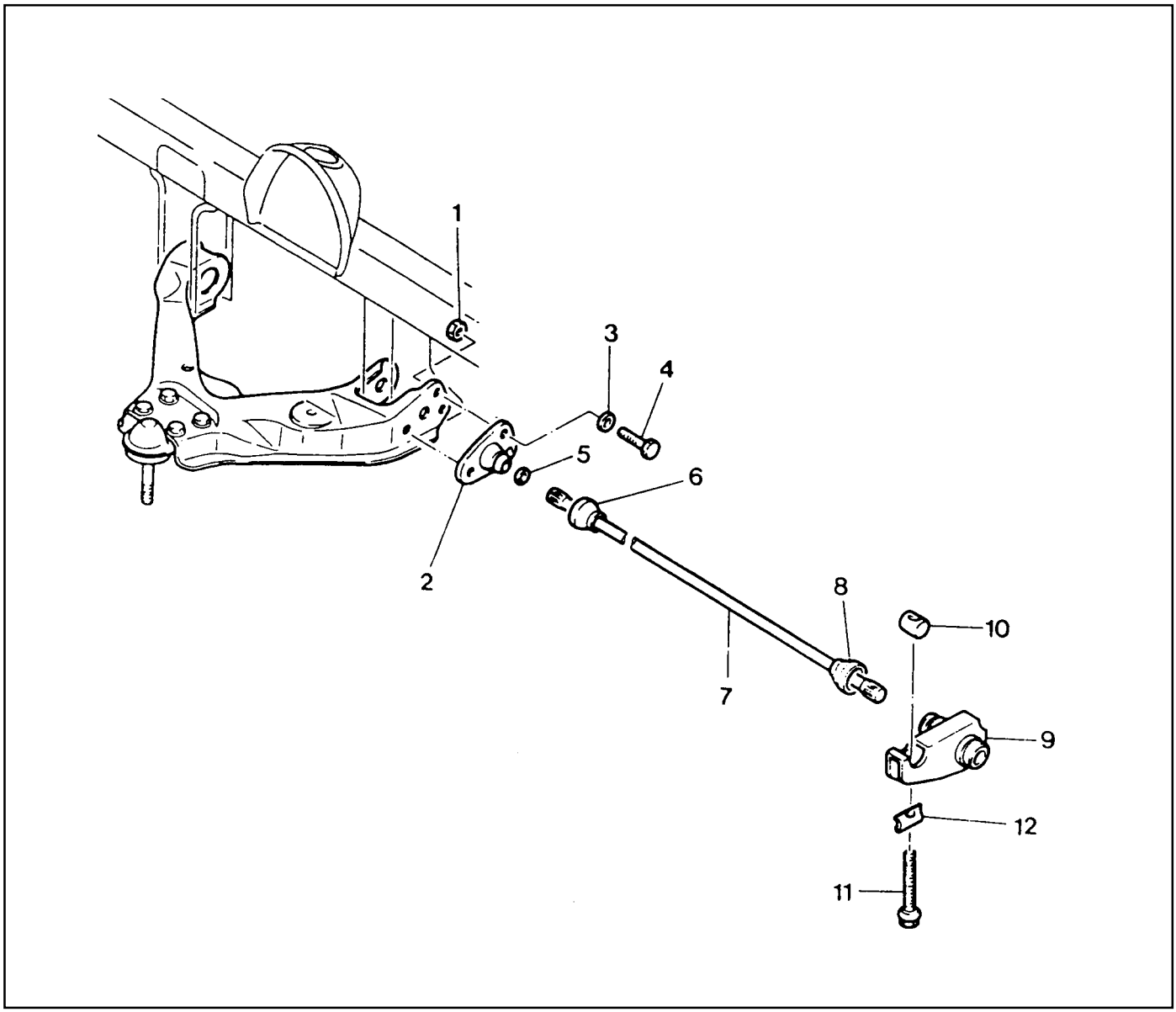

1 Nut
2 Torque Arm
3 Washer
4 Bolt ..... M10, 40-60 Nm
M12, 60-80 Nm
5 Torsion Bar End Seat
6 Dust Cover
7 Torsion Bar
8 Dust Cover
9 Height Control Arm Assembly
10 Height Control Bolt End Piece
11 Height Control Bolt
12 Height Control Seat

Downloaded from www.Manualslib.com manuals search engine

Removal & Installation Procedure

1. Remove the fixing nuts and bolts of the shock absorber and lower arm connection.

   Installation Notice

Tightening Torque	60 - 80 Nm

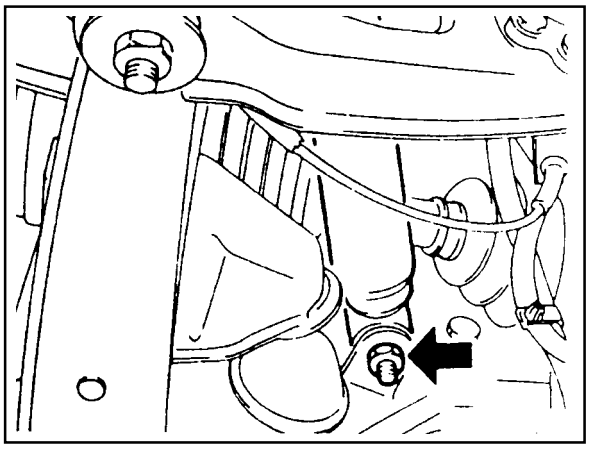

2. Remove the connecting nuts of the stabilizer bar link to the lower arm.

   Installation Notice

Tightening Torque	16 - 22 Nm

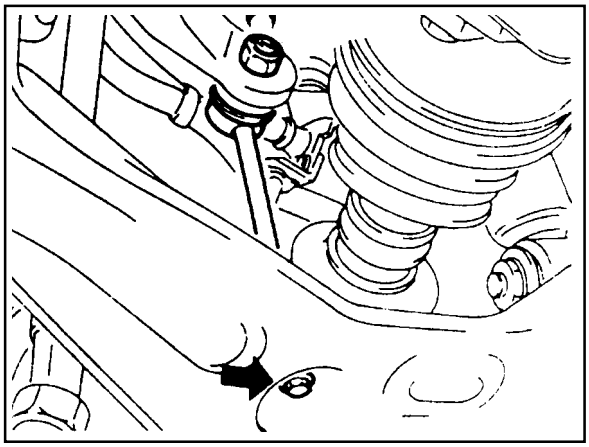

3. Turn the height control bolt until the distance between the end of the height control bolt end piece and the bolt end becomes 0-5 mm.

   Installation Notice

   Install the torsion bar spring and adjust the distance between the end of the height control bolt and piece end the bolt end to be 50-55 mm. Adjust the vehicle height.

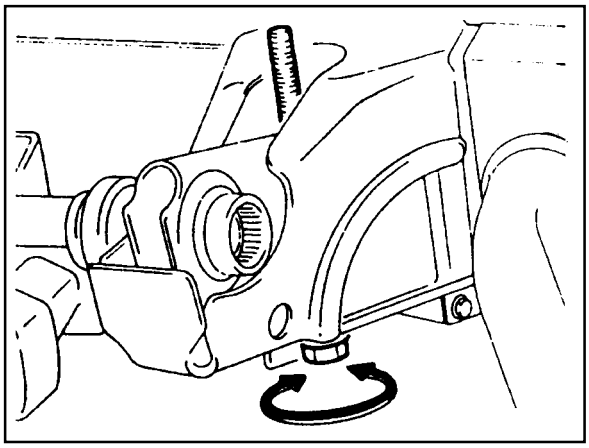

4. Remove the torque arm fixing nuts and bolts and then withdraw the torsion bar spring.

   Installation Notice

Tightening Torque	M10	40 - 60 Nm
	M12	60 - 80 Nm

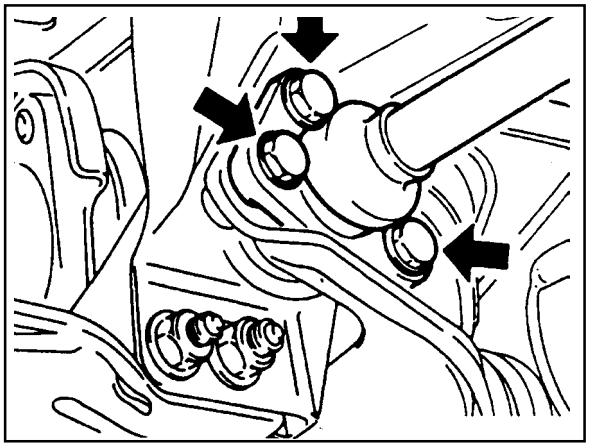

5. Installation should follow the removal precedure in the reverse order.
6. Check and adjust the wheel alignment.

Downloaded from www.Manualslib.com manuals search engine

FRONT LOWER AND UPPER ARM

Preceding Work : Removal of the torsion bar spring
Removal of the steering knuckle and drive shaft

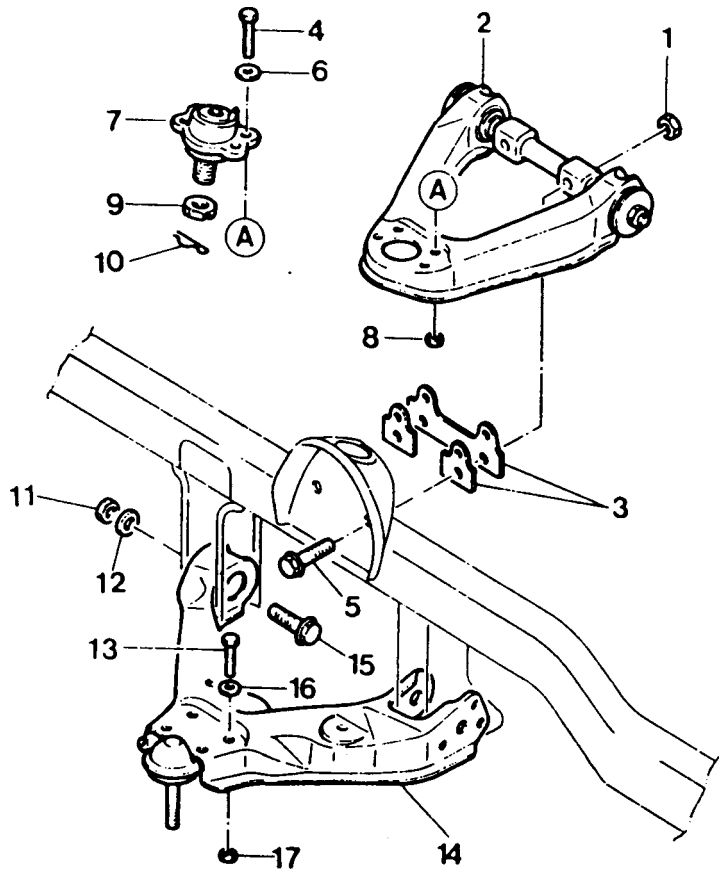

1 Nut ..... 120-140 Nm
2 Fulcrum Pin and Upper Arm Assembly
3 Camber/Caster Adjusting Shim
4 Bolt
5 Bolt
6 Washer
7 Upper Arm End
8 Nut ..... 16-22 Nm
9 Castle Nut ..... 80-150 Nm
10 Cotter Pin ..... Replace
11 Nut ..... 150-180 Nm
12 Washer
13 Bolt
14 Lower Arm Assembly and Lower Arm End
15 Bolt
16 Washer
17 Nut ..... 60-80 Nm

Downloaded from www.Manualslib.com manuals search engine

Removal & Installation Procedure

1. Remove the shock absorber.

Installation Notice

Upper	Distance between the nut end and the screw end	6 - 9 mm
Lower	Tightening Torque	60 - 80 Nm

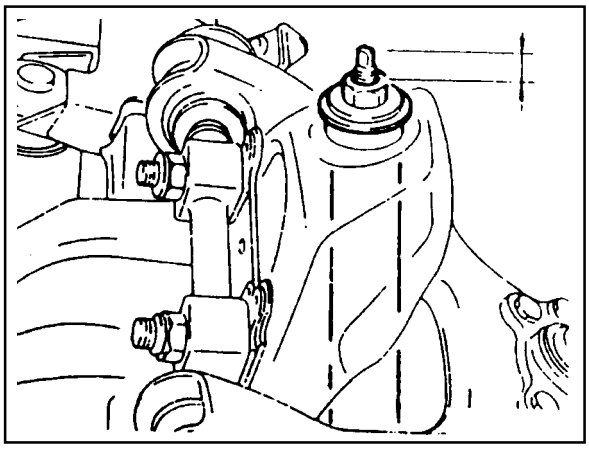

2. Remove the fulcrum pin mounting bolts and nuts and remove the upper arm assembly.

Notice

Be careful not to damage or lose the adjusting shims.

Installation Notice

Tightening Torque	120 - 140 Nm

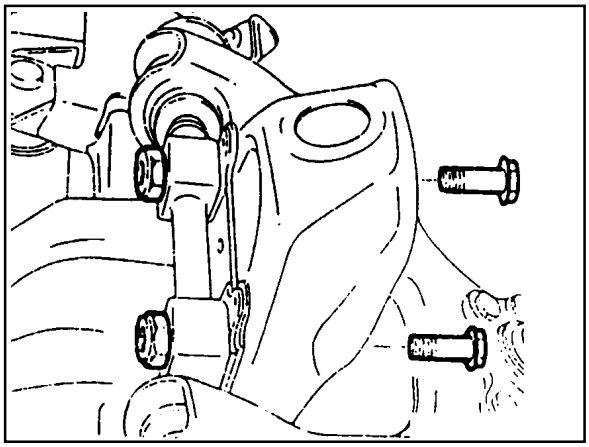

3. Remove the lower arm mounting bolts (2).

Installation Notice

Tightening Torque	150 - 180 Nm

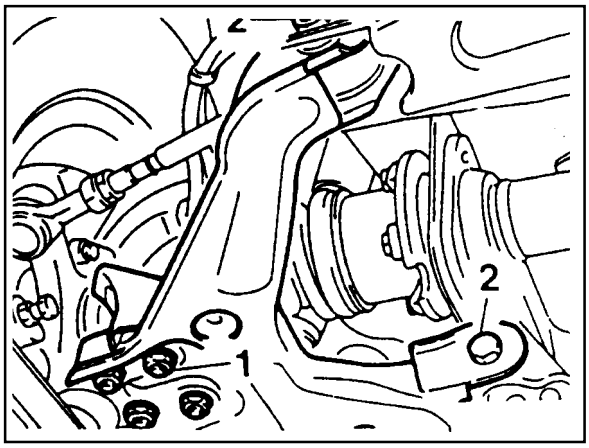

4. Pull out the cotter pin from the lower arm ball end assembly and remove lower arm after loosening the slotted nut.

Installation Notice

Tightening Torque	120 - 180 Nm

Notice

Replace the cotter pin with new one.

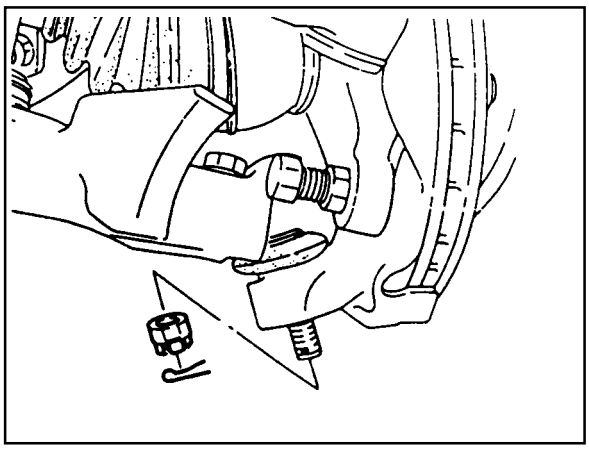

5. Installation should follow the removal precedure in the reverse order.

Downloaded from www.Manualslib.com manuals search engine

FRONT SHOCK ABSORBER

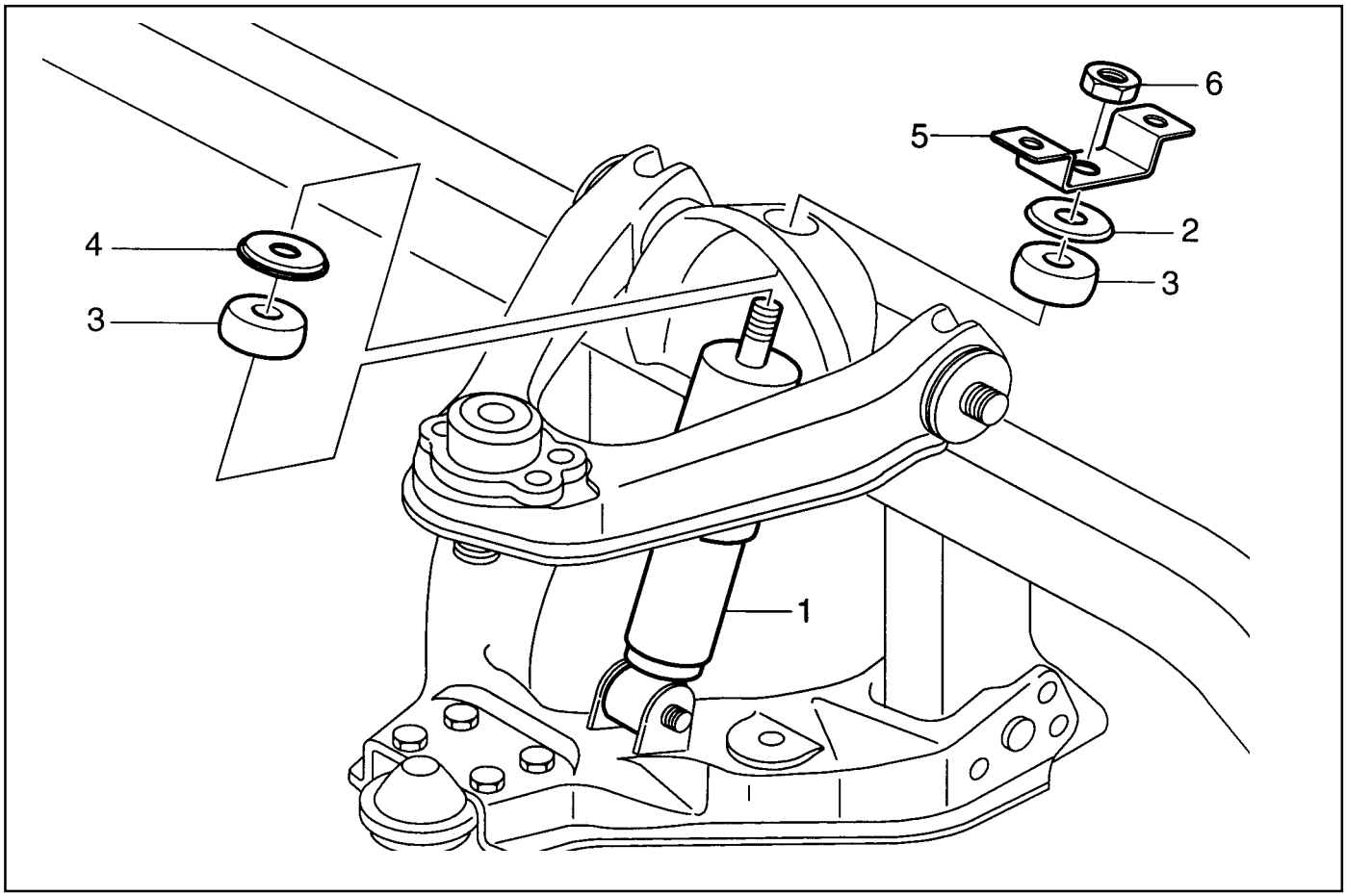

1 Front Shock Absorber
2 Washer
3 Bush
4 Center Washer
5 Actuator Mounting Bracket
6 Nut 40-60Nm

Downloaded from www.Manualslib.com manuals search engine

Removal & Installation Procedure

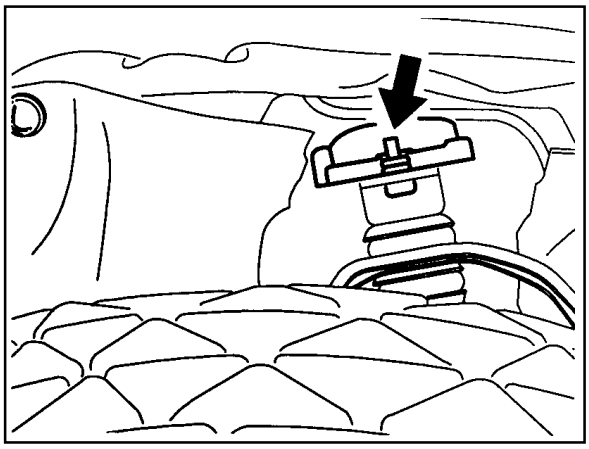

1. Disconnect actuator connector and unscrew bolt and remove actuator assembly.

   Notice

   When installing the actuator to the mounting bracket, the wiring should face the front of the frame.

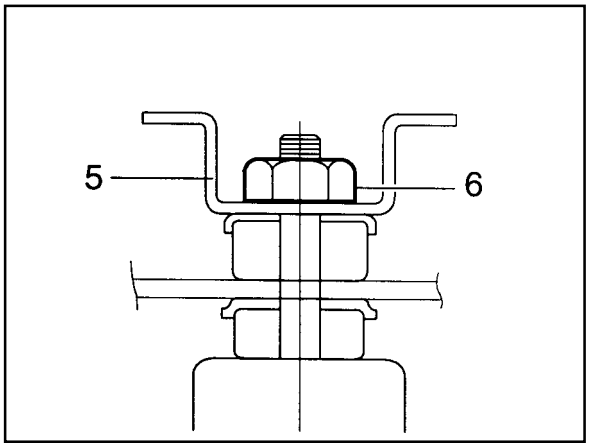

2. Unscrew the upper nut (6).

   Notice

   When screwing the nut, actuator contacting surface of the mounting bracket and rod end should be 0.5 - 1.5mm.

3. Remove the mounting bracket (5).

   Notice

   When installing the bracket, it should be vertical to the frame side member.

4. Remove the bush and check for damage and replace if necessary.

5. Unscrew shock absorber lower bolt and nut and remove the shock absorber.

   Notice

   Shock absorber is filled with gas, never attempt to cut or heat.

6. Installation should follow the removal procedure in the reverse order.

Downloaded from www.Manualslib.com manuals search engine

AXLE VERTICAL ACCELERATION SENSOR (WHEEL G SENSOR)

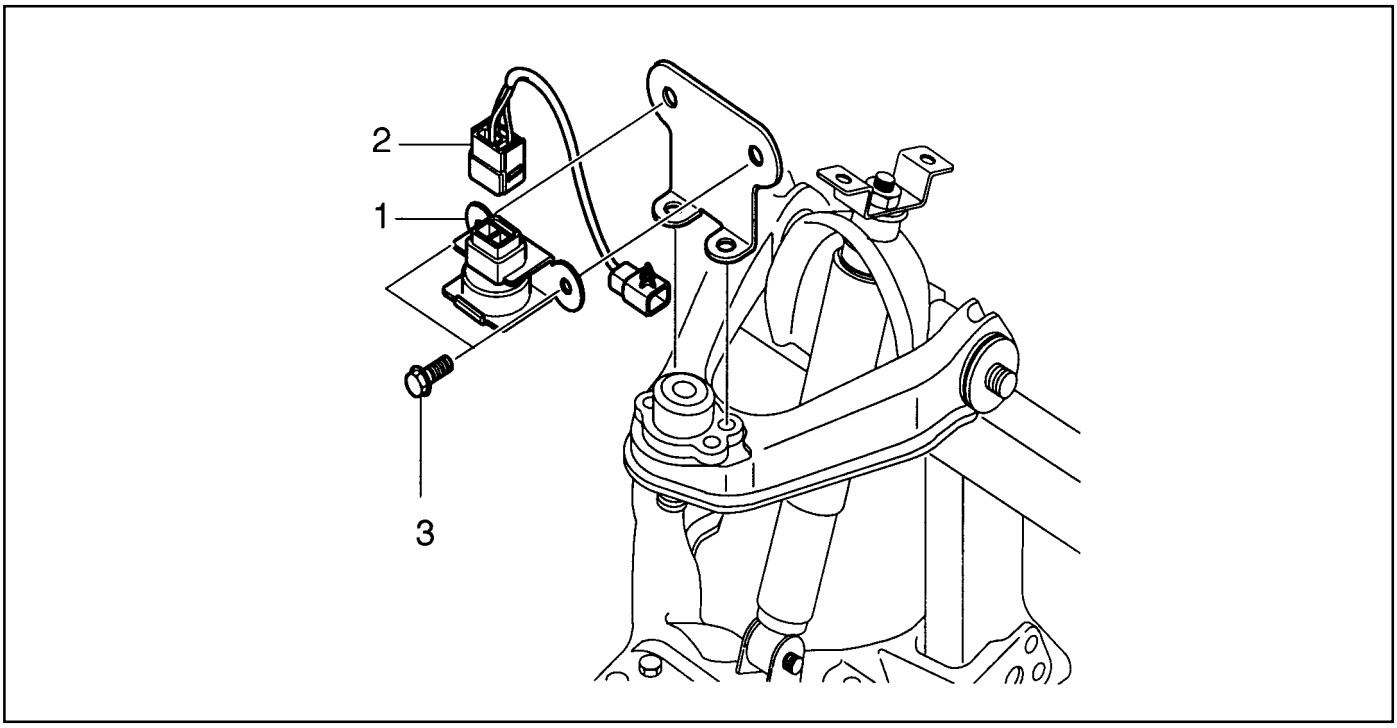

1 Axle Vertical Acceleration Sensor (wheel G sensor)
2 Extension Wiring
3 Bolt (M6) ..... 20 - 30Nm

Removal & Installation Procedure

1. Disconnect extension wiring connector (2) from the axle vertical acceleration sensor.

   Notice

   Installation of wiring connector should be as shown in the right drawing.

2. Unscrew bolts (3) and remove the axle vertical acceleration sensor (1).

   Notice

   When installing the sensor to the bracket, the sensor wiring should be upward.

3. Installation should follow the removal procedure in the reverse order.

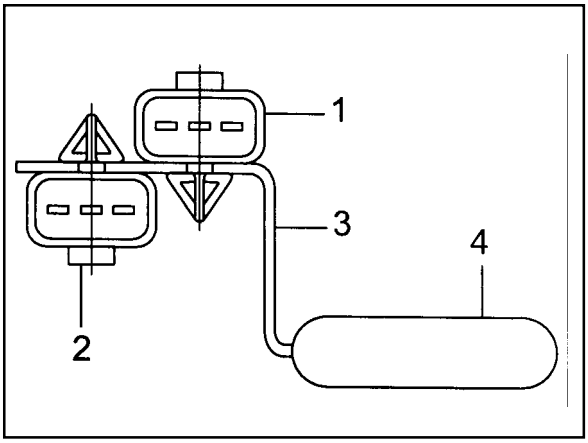

1 Actuator Connector
2 Axle Vertical Acceleration Sensor Connector
3 Front Hose Mounting Bracket
4 Frame Side Member

Downloaded from www.Manualslib.com manuals search engine

VERTICAL AND LATERAL SENSOR

Removal & Installation Procedure

1. Disconnect vertical sensor and lateral sensor connectors.

   Notice

   When connecting the connectors, connector connection of the lateral sensor (2) should be in the right and connector connection of the vertical sensor (1) should face downward.

2. Unscrew bolts and remove vertical sensor and lateral sensor.

   Installation Notice

Tightening Torque	20 - 30 Nm

3. Installation should follow the removal procedure in the reverse order.

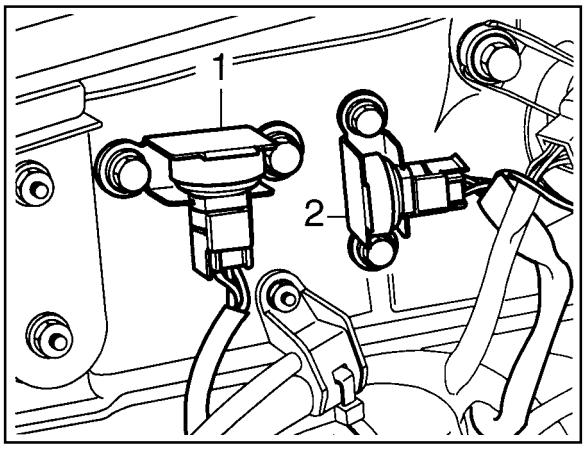

1 Body Vertical Acceleration Sensor(Vertical Sensor)
2 Body Lateral Acceleration Sensor (Lateral Sensor)

Downloaded from www.Manualslib.com manuals search engine

ECS (ECU)

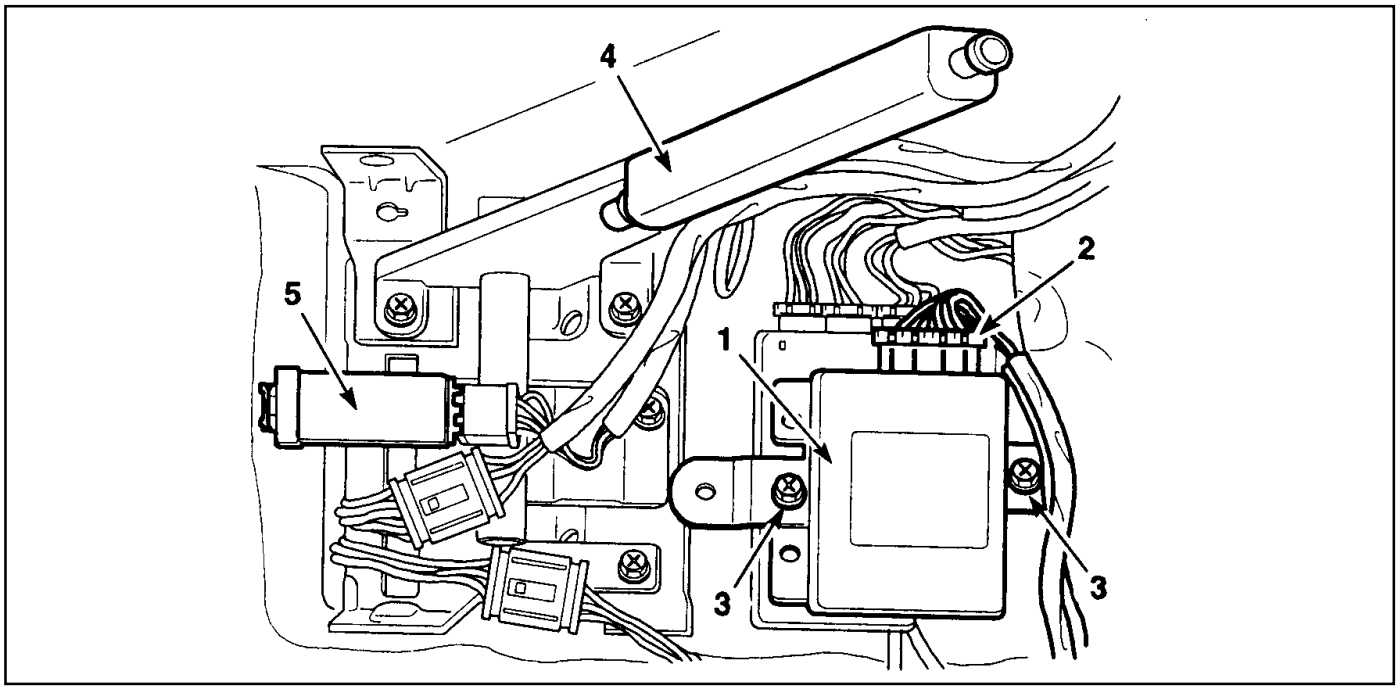

1 Electronically Controlled Suspension (ECU)
2 Connector
3 Bolts (2 pieces)
4 Parking Brake Lever
5 Over Voltage Protection Relay

Removal & Installation Procedure

1. Disconnect each connectors from the console box and remove the console box.
2. Disconnect ECU connector.
3. Unscrew 10mm x 2 bolts and remove ECS (ECU).
4. Installation should follow the removal procedure in the reverse order.

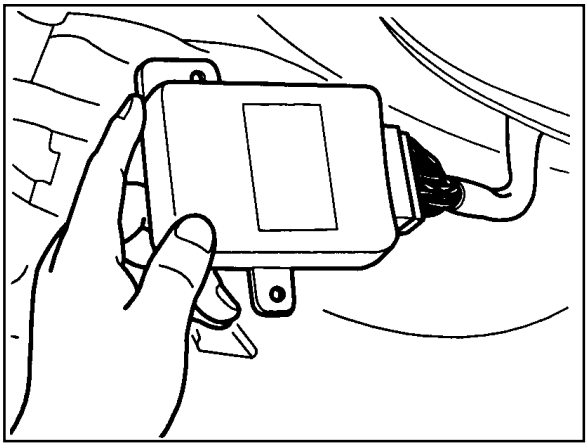

Downloaded from www.Manualslib.com manuals search engine

SECTION 2D

REAR SUSPENSION

TABLE OF CONTENTS

Specifications 2D-1
General Specifications 2D-1
Fastener Tightening Specifications 2D-1
Diagnosis 2D-2
Noise (During Straight Driving) 2D-2
Oil Leakage 2D-2
Noise (During Turning) 2D-2
Heating 2D-3
Component Locator 2D-4
Maintenance and Repair 2D-5
On-Vehicle Service 2D-5
Rear Suspension (5-Link) 2D-5
Rear Shock Absorber 2D-9

SPECIFICATIONS

GENERAL SPECIFICATIONS

Application		Description
Type		5-link
Spring Type		Coil Spring
Coil Spring	Wire Diameter (mm)	13.8 mm
	Diameter (mm)	126.8 mm
	Free Height (mm)	384.5 mm
	Outer Diameter (mm)	f139.6 mm
	Spring Constant (kg·m)	2.58 kg
Shock Absorber		Cylindrical Reciprocation Type
Stabilizer Type		Torsion Bar Type

FASTENER TIGHTENING SPECIFICATIONS

Application	N•m
Upper Nut	16 - 22
Stabilizer Bar Bolt	30 - 45
Lateral Rod Nut	150 - 180
Shock Absorber Mounting Nut Upper	50 - 65
Arm Fixing Nut	150 - 180

Downloaded from www.Manualslib.com manuals search engine

DIAGNOSIS

NOISE(DURING STRAIGHT DRIVING)

Check	Action
Lack of Oil	Replenish
Low Viscosity of Oil	Replace
Insufficient Oil	Replace
Excessive Backlash of Ring Gear	Adjust
Worn or Damaged Tooth of Ring and Pinion Gear	Replace
Worn or Damaged Drive Pinion Bearing	Replace
Worn Spline of Side Bearing and Side Gear	Replace
Bent Axle Housing	Replace
Bent Differential Case	Replace
Worn Pinion Shaft	Replace
Incorrect Drive Pinion Preload	Adjust
Incorrect Contact of Ring Gear and Pinion	Retightening

OIL LEAKAGE

Check	Action
Excessive Oil	Adjust
Faulty Seal of Carrier Contact Surface	Repair
Axle Housing Crack	Replace
Worn or Damaged Oil Seal	Replace

NOISE(DURING TURNING)

Check	Action
Worn or Damaged Tooth of Pinion or Side Gear	Replace
Worn Pinion Shaft	Replace
Excessive Backlash of Pinion Gear and Side Gear	Replace
Excessive End-play of Rear Axle Shaft	Adjust
Incorrect Contact of Side Gear and Differential Case	Replace
Axle Housing Crack	Replace
Bent or Poor Installation of Drive Pinion Oil Seal	Replace
Damaged or Torn Drive Pinion Oil Seal	Replace
Loosened Bearing Collar	Replace
Worn or Damaged Universal Joint	Replace
Worn of Damaged Axle Shaft Bearing	Replace

Downloaded from www.Manualslib.com manuals search engine

HEATING

Check	Action
Lack of Oil	Replenish
Insufficient Backlash of Gears	Adjust
Excessive Preload of Bearing	Adjust

Downloaded from www.Manualslib.com manuals search engine

COMPONENT LOCATOR

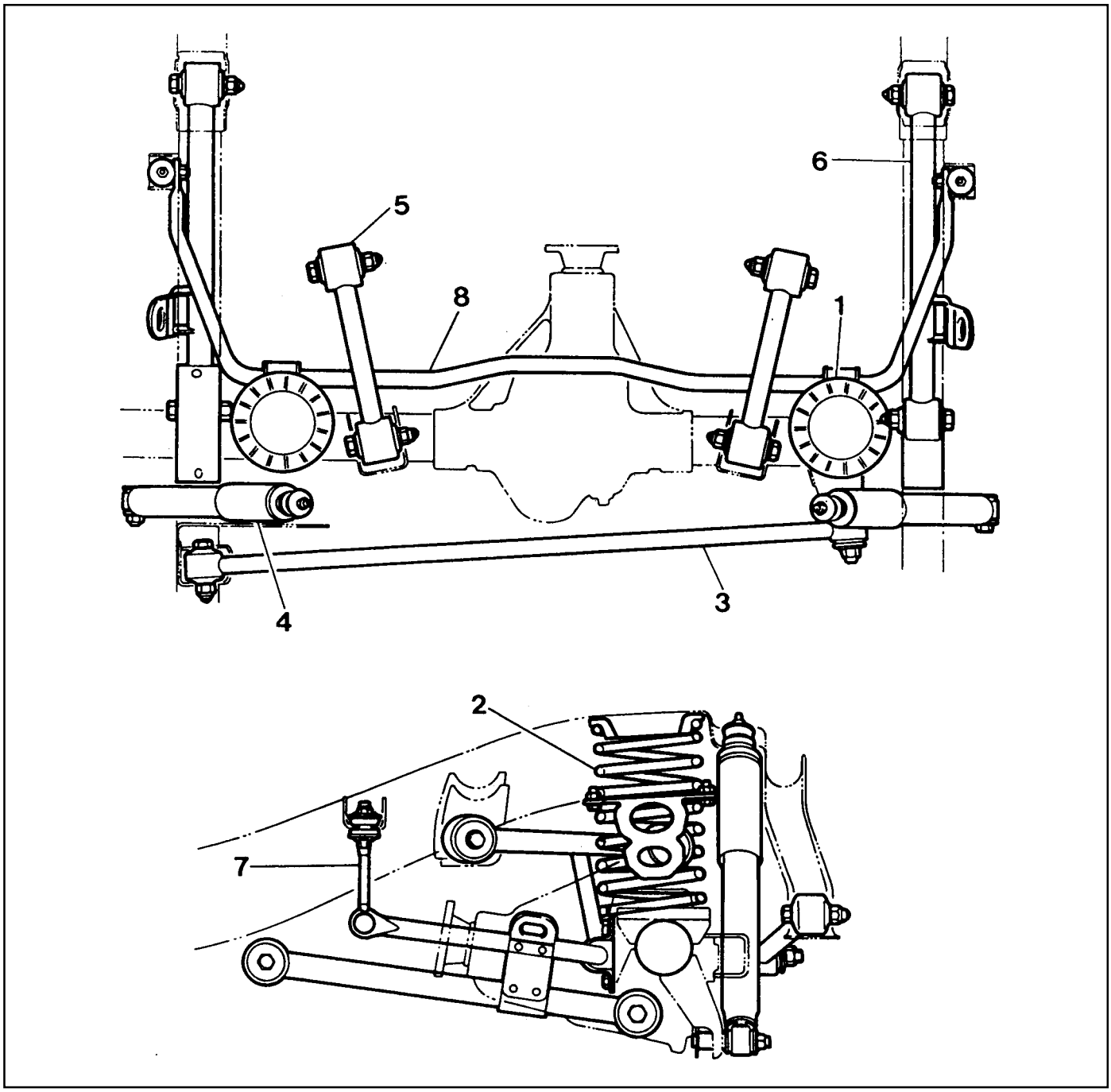

1 Spring Seat
2 Coil Spring
3 Lateral Rod
4 Shock Absorber
5 Upper Arm
6 Lower Arm
7 Connecting Link
8 Stabilizer Bar

Downloaded from www.Manualslib.com manuals search engine

MAINTENANCE AND REPAIR

ON-VEHICLE SERIVCE

REAR SUSPENSION (5 - LINK)

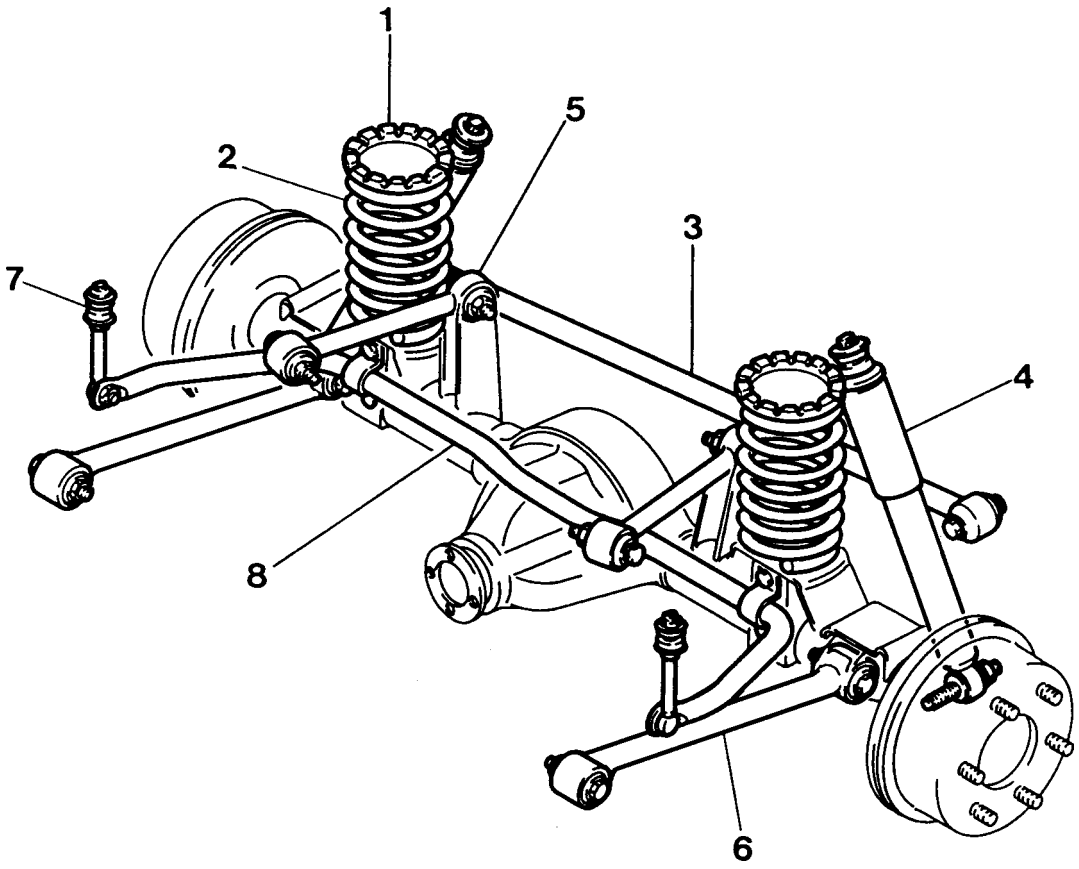

1 Spring Seat
2 Coil Spring
3 Lateral Rod
4 Shock Absorber
5 Upper Arm
6 Lower Arm
7 Connecting Link
8 Stabilizer Bar

Downloaded from www.Manualslib.com manuals search engine

Removal & Installation Procedure

- **Stabilizer bar**

1. Remove the upper nut of the connecting link.

Installation Notice

Distance Between the Nut end and the Screw end	10 - 13 mm
Tightening Torque	16 - 22 Nm

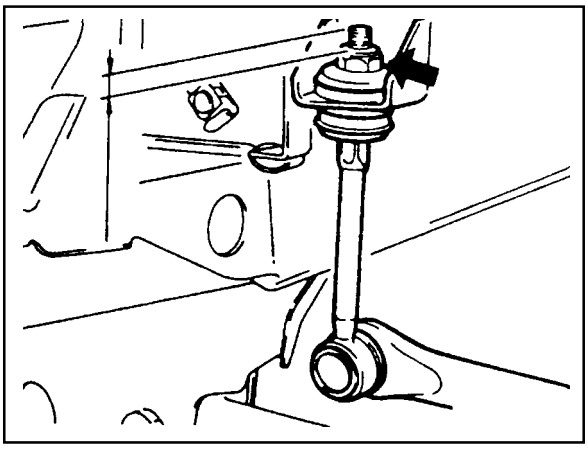

2. Remove the stabilizer bar cap fixing bolts (arrow) and remove the stabilizer bar.

Installation Notice

Tightening Torque	30 - 45 Nm

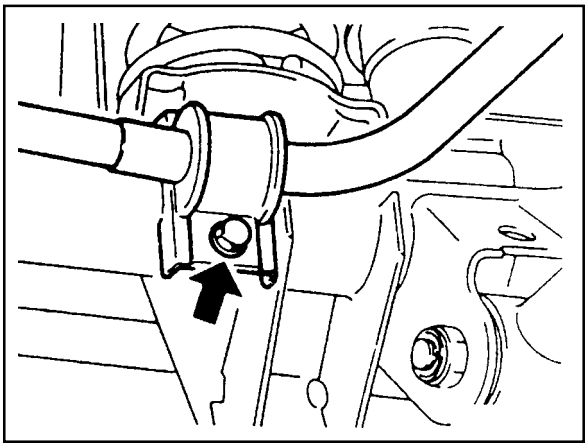

- **Lateral Rod**

1. Remove the lateral rod fixing nut from the frame.

Notice

Completely press the coil springs.

Installation Notice

Tightening Torque	150 - 180 Nm

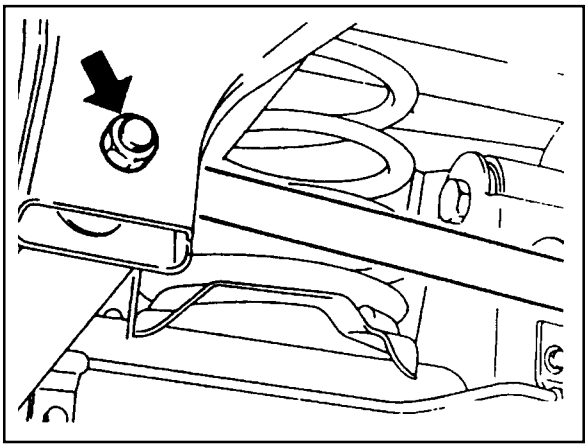

2. Remove the lateral rod fixing nut from the rear axle and remove the lateral rod.

Installation Notice

Tightening Torque	150 - 180 Nm

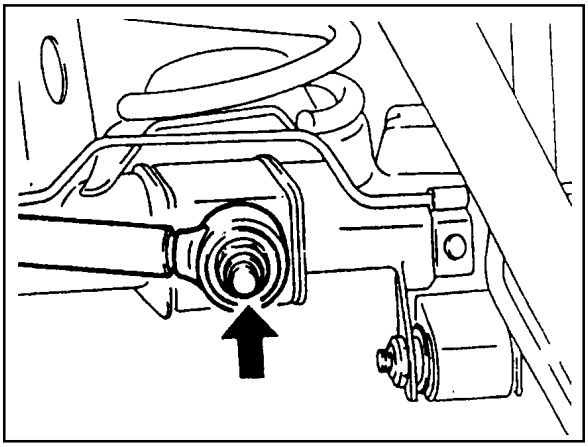

Downloaded from www.Manualslib.com manuals search engine

- Shock Absorber.

1. Remove the lower mounting nut.

Installation Notice

Tightening Torque	50 - 65 Nm

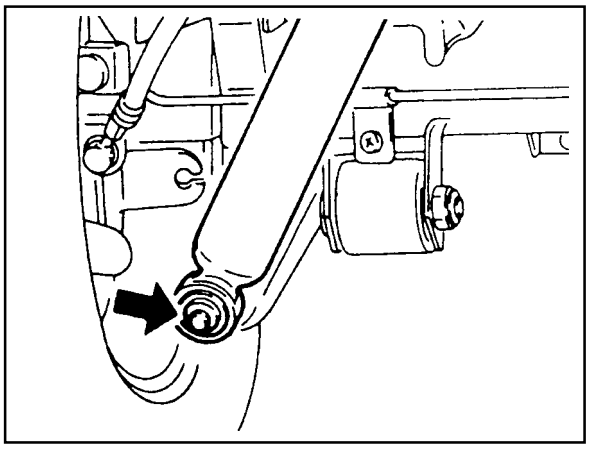

2. Remove the upper mounting nut and remove the shock absorber.

Installation Notice

Distance between the nut end and the screw end	6 - 9 mm
Tightening Torque	30 - 45 Nm

- Upper Arm

1. Remove the upper arm fixing nut from the frame.

Installation Notice

Tightening Torque	150 - 180 Nm

2. Remove the upper arm fixing nut from the rear axle and remove the upper arm.

Installation Notice

Tightening Torque	150 - 180 Nm

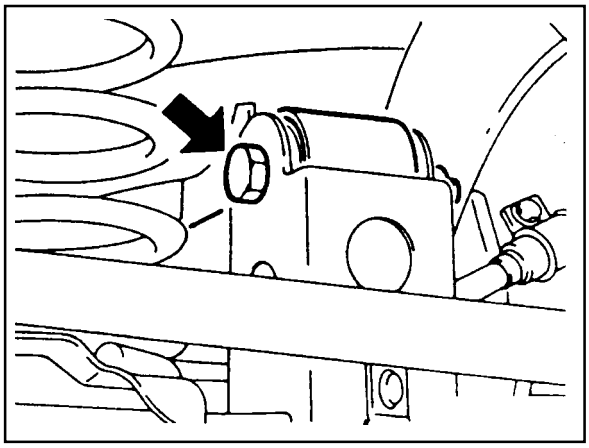

- **Lower arm**

1. Remove the parking brake cable bracket.

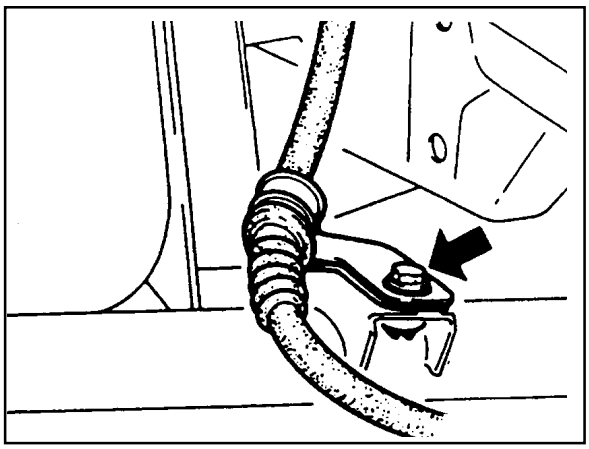

Downloaded from www.Manualslib.com manuals search engine

2. Remove the lower arm fixing nut from the frame.

Installation Notice

Tightening Torque	150 - 180 Nm

3. Remove the lower arm fixing nut from the rear axle and remove the lower arm.

Installation Notice

Tightening Torque	150 - 180 Nm

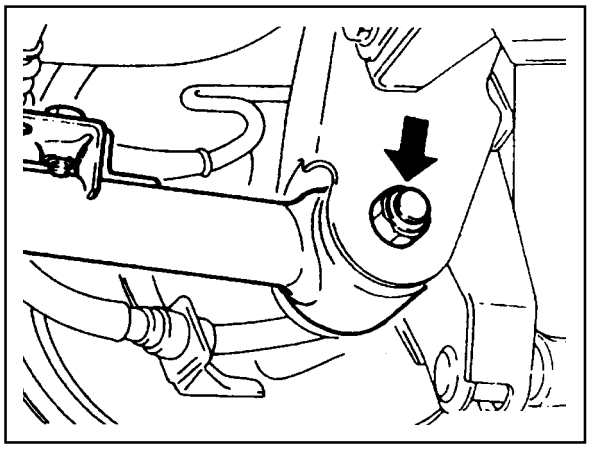

Downloaded from www.Manualslib.com manuals search engine

REAR SHOCK ABSORBER

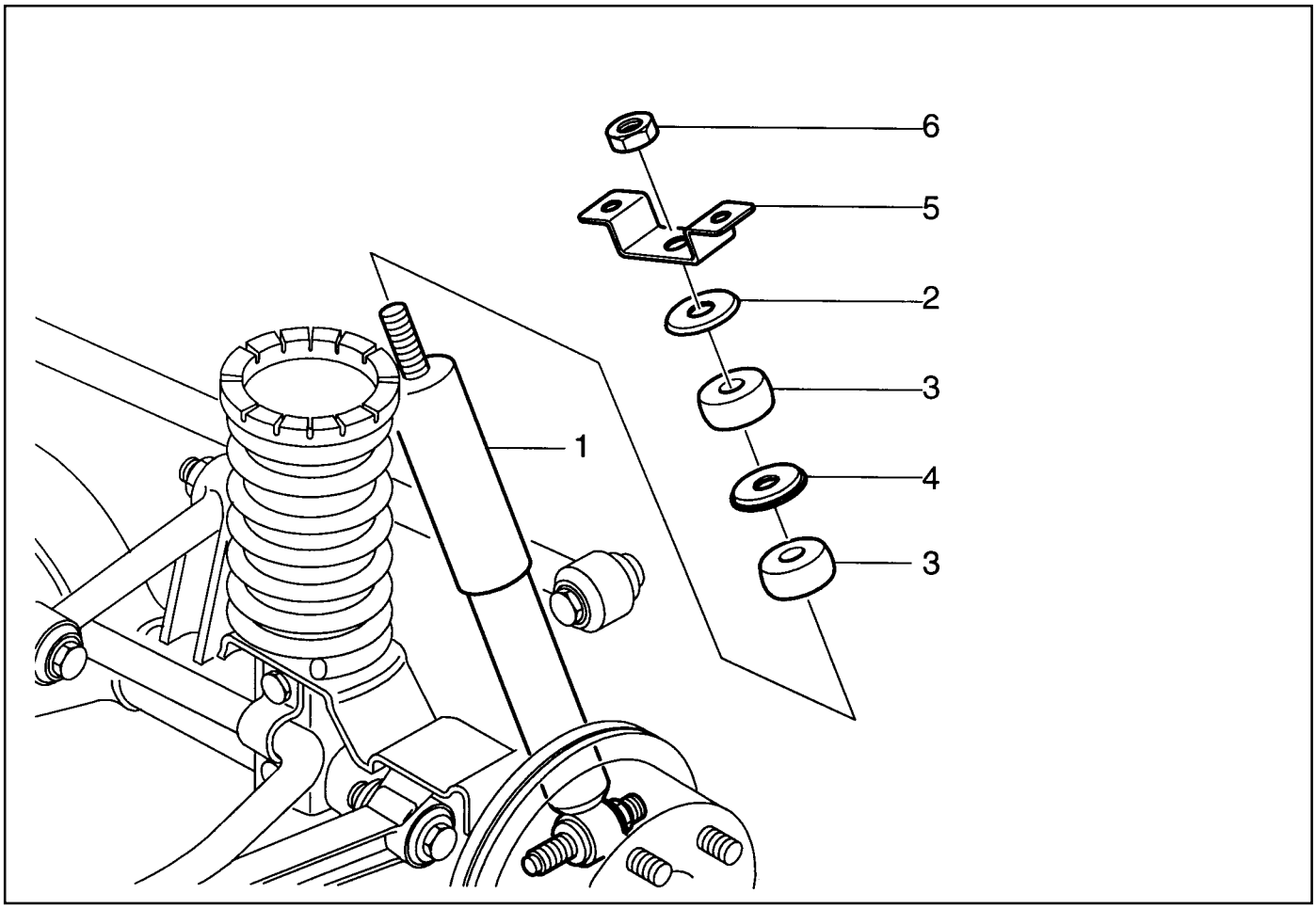

1 Rear Shock Absorber
2 Washer
3 Bush
4 Center Washer
5 Actuator Mounting Bracket
6 Nut (M12 x 1.25) ..... 40 - 60Nm

Downloaded from www.Manualslib.com manuals search engine

Removal & Installation Procedure

1. Disconnect actuator connector and unscrew bolt and remove actuator assembly.

   Notice

   - When installing the actuator to the mounting bracket, the wiring should face outward of the frame.
   - Actuator wiring should be fixed 40 - 50mm away from the wiring ends when fixing it with the frame open clip.

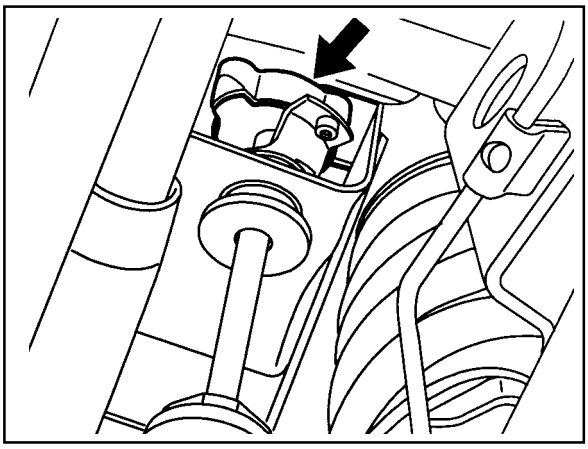

2. Unscrew the upper nut (6).

   Notice

   When screwing the nut, actuator contacting surface of the mounting bracket and rod end should be 0.5 - 1.5mm.

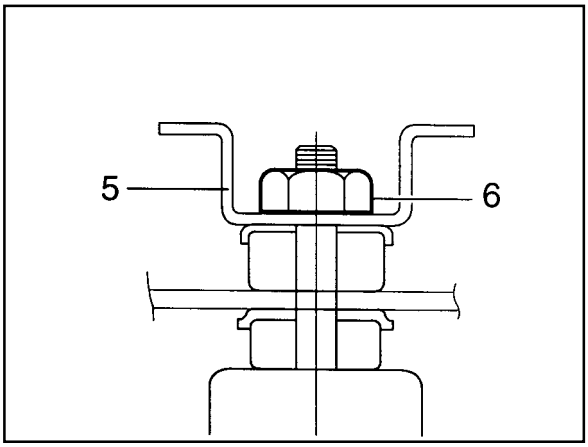

3. Remove the mounting bracket (5).

   Notice

   When installing the bracket, it should be parallel to the frame side member.

4. Remove the bush and check for damage and replace if necessary.
5. Unscrew shock absorber lower bolt and nut and remove the shock absorber.

   Notice

   Shock absorber is filled with gas, never attempt to cut or heat.

6. Installation should follow the removal procedure in the reverse order.

Downloaded from www.Manualslib.com manuals search engine

SECTION 2E

TIRES AND WHEELS

TABLE OF CONTENTS

Specifications 2E-1
General Specifications 2E-1
Fastener Tightening Specifications 2E-1
Diagnosis 2E-2
Wear Pattern Diagnosis 2E-2
Identification 2E-3
Radial Tire 2E-3
Wheel Disc 2E-3
Component Locator 2E-4
Wheel and Tire 2E-4
Maintenance and Repair 2E-5
On-Vehicle Service 2E-5
Wheels and Tires 2E-5

SPECIFICATIONS

GENERAL SPECIFICATIONS

Application		Description
Wheel	Material	Alumimun
	Size	7JJ X 15
Tire	Type	Radial Tire
	Size and Tire Pressure	P215 / 75R 15 - 30psi
		P235 / 75R 15 - 30psi
		P255 / 70R 15 - 30psi

FASTENER TIGHTENING SPECIFICATIONS

Application		N•m
Wheel Bolt	Steel	80 - 120
	Alumimum	110 - 130

Downloaded from www.Manualslib.com manuals search engine

DIAGNOSIS

WEAR PATTERN DIAGNOSIS

Wear Pattern	Possible Cause	Remedy
Wear on Both Tread Shoulders 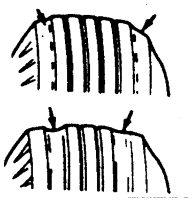	Under Inflation 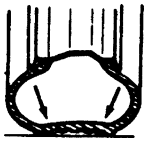	Adjust
Wear on Tread Center	Over Inflation 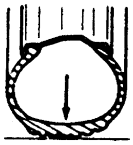	Adjust
Tread Torn Out	Under Inflation	Adjust
One-sided Tread Wear 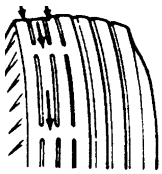	Incorrect Camber or Toe-in 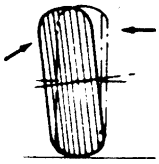	Adjust
Feather Edging of Tread 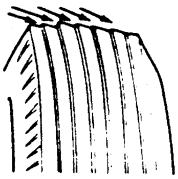	Incorrect Toe-in 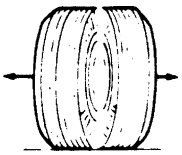	Adjust
Spotty Tread Wear	Out of Wheel Balance 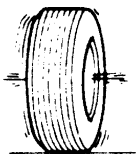	Adjust
Spotty Wear-wear Localized on Shoulder Sections 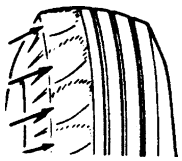	Out of Wheel Balance	Adjust
	Play in Hub Bearings	Check play Adjust preload
	Play in Ball Joint	Check
	Defective Shock Absorber	Check

Downloaded from www.Manualslib.com manuals search engine

IDENTIFICATION

RADIAL TIRE

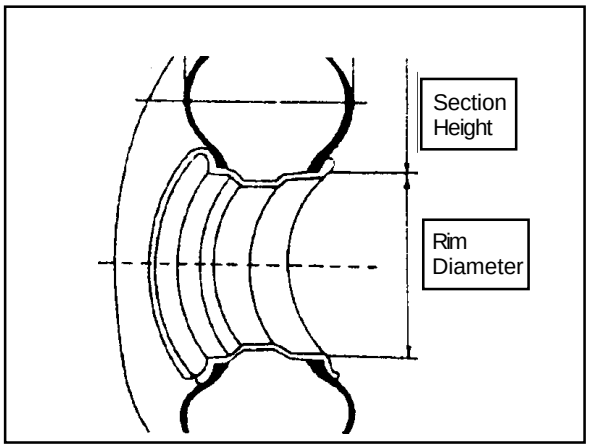

P 215/75 R 15 94 H M+S

- M+S — Four Season Mud & Snow
- H — Speed Rating (max. 210km/h)
- 94 — Load Range (below 670kg)
- 15 — Rim Diameter (inch)
- R — Radial Tire
- 75 — Aspect Ratio = (Section Height ¸ Section Width) x 100
- 215 — Section Width (mm)
- P — Passenger Car

215/65 R 16 93 V

- V — Speed Rating (max. 240km/h)
- 93 — Load Range (below 650kg)
- 16 — Rim Diameter (inch)
- R — Radial Tire
- 65 — Aspect Ratio = (Section Height ¸ Section Width) x 100
- 215 — Section Width(mm)
- Summer Tire

WHEEL DISC

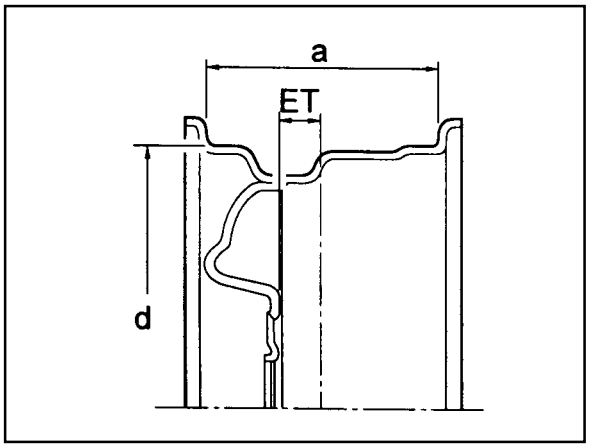

7 J x 16 ET 39

- ET 39 — Wheel Offset (mm) (Distance from rim center to wheel nave contacting surface)
- 16 — Rim Diameter (inch)
- x — Identification for One-piece Well-base Rim
- J — Code Letter for Height and Profile of Rim Flange
- 7 — Rim Width (Inch)

ET : Distance from Rim Center to Wheel have Contacting Surface (mm)

a : Rim Width (Inch)

d : Rim Diameter (Inch)

Downloaded from www.Manualslib.com manuals search engine

COMPONENT LOCATOR

WHEEL AND TIRE

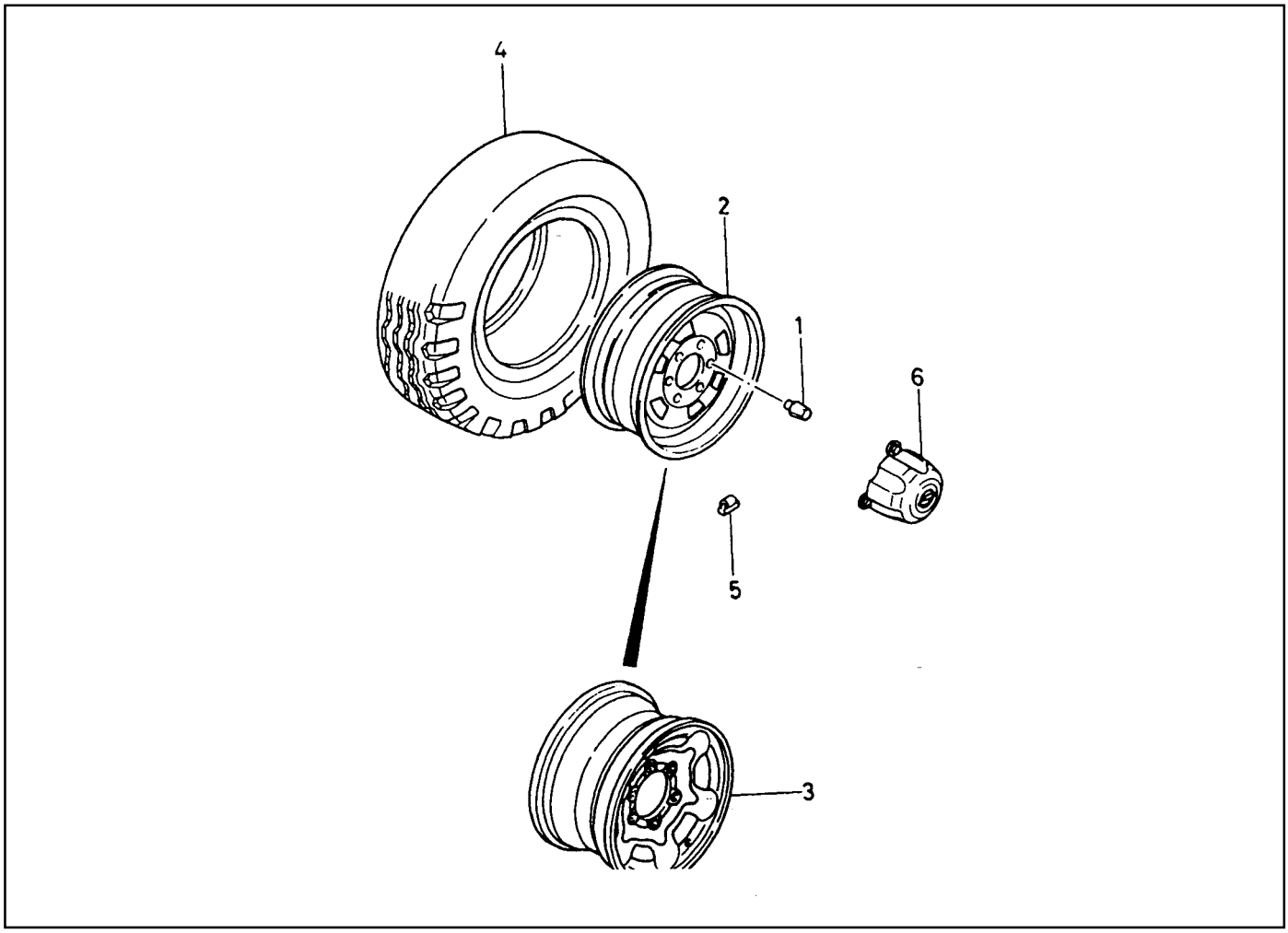

1 Wheel Bolts ..... Steel Wheel : 80-120 Nm
..... Aluminium Wheel : 110-130 Nm
2 Steel Wheel
3 Aluminium Wheel
4 Tire
5 Steel Wheel Weight Balance
6 Hub Cap

Downloaded from www.Manualslib.com manuals search engine

MAINTENANCE AND REPAIR

ON-VEHICLE SERVICE

WHEELS AND TIRES

Removal & Installation Procedure

1. Inspection of tire

   Check tread area for tread surface, crack, damage by nail in or stones. Replace or repair if necessary.

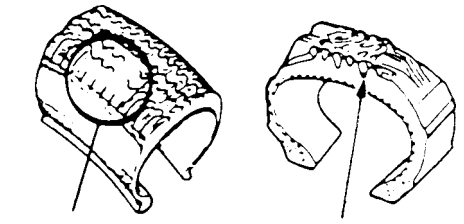

2. Wear limit.

Limit	1.6mm

- Replace the tire if tread-wear indicator of the tread grooves appears where marked '▲'.
- The wear limit of snow tire is the same as normal tire (1.6mm) and indicator location is marked '⌐'.

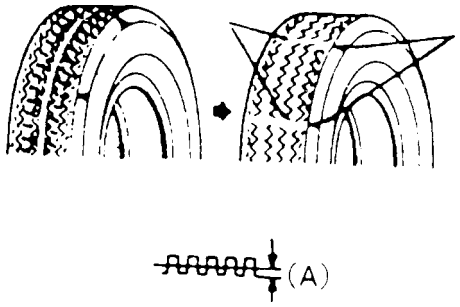

3. Runout measurement.
   - Excessive runout of tires and wheels can cause the abnormal wear of tire. Using a dial indicator, measure wheel and tire runout.
   - Measure radial runout at the rim flange and center of the tire tread area.

Standard	2.66mm

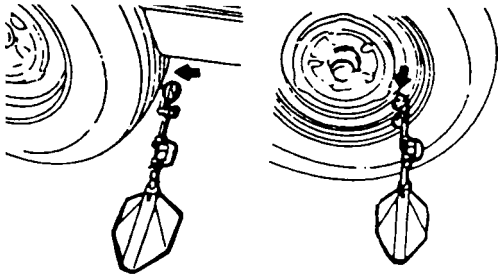

Radial runout measurement

- Measure lateral runout at the tire bead area of the wheel and tire sidewall.

Standard	2.03mm

Notice

If runout is excessive, replace the tire or wheel.

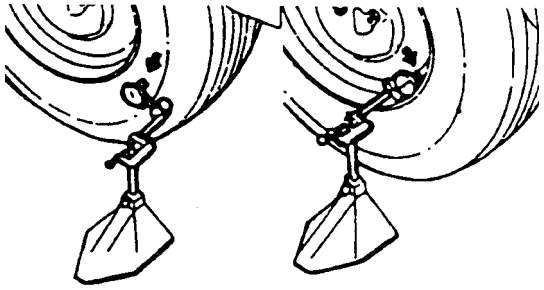

Lateral runout measurement

Downloaded from www.Manualslib.com manuals search engine

4. Tire pressure inspection.
   - Tire pressure.

Front & Rear (P235/75R15)	2.1kg/cm^2(30PSI)

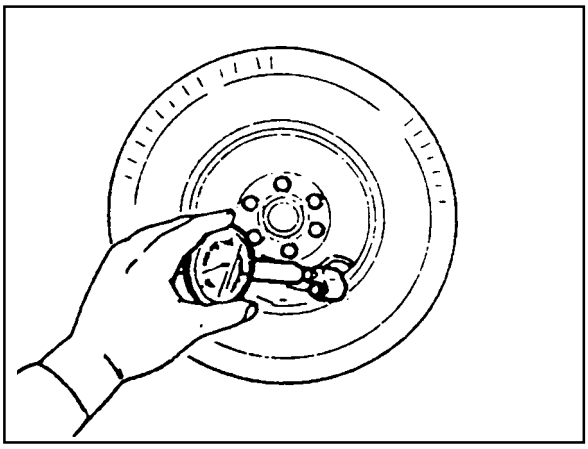

   - Check tread contact with road.

Notice

- If underinflated, tire may come away from the wheel during rapid steering.
- An overinflated tire will cause a hard riding and uneven wear.

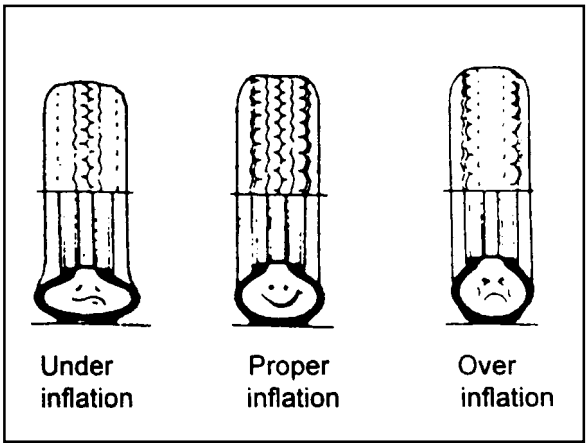

5. Wheel balance.
   - Balance weights should be on each side. When the wheel is out of balance or a tire has been repaired, be sure to balance the wheel again.

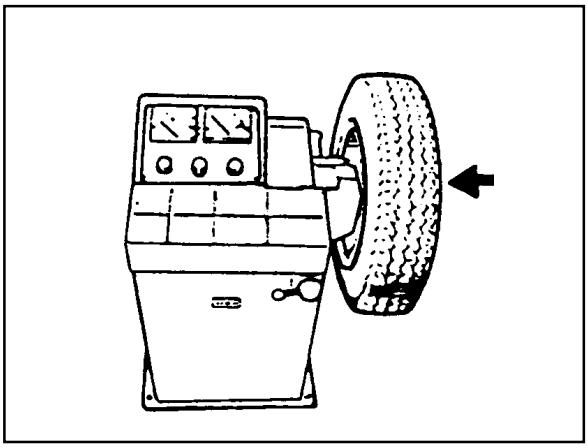

   - If total weight is over 150g, readjust the balance by reinstalling the tire on the wheel.
   - Balance weight should not protrude from the wheel rim over 3mm.
   - For aluminum wheel, use aluminum wheel balance weight only.

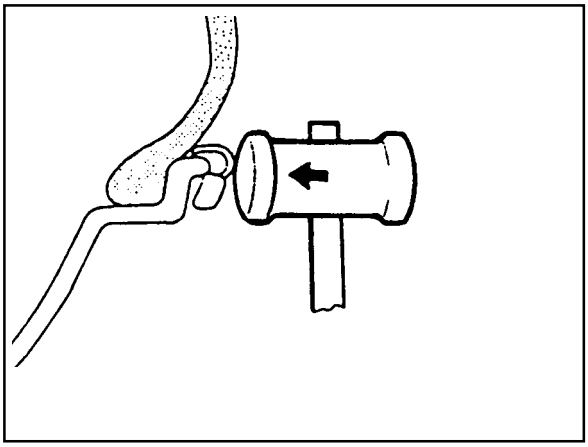

Downloaded from www.Manualslib.com manuals search engine

- To correct unbalance, install equal weights 180° opposite each other, one on the inside of the wheel and one on the outside, at the point of unbalance.
- Balance Weight

10g	20g	30g	40g	50g	60g
0.4oz	0.7oz	1.10oz	1.40oz	1.80oz	2.1oz

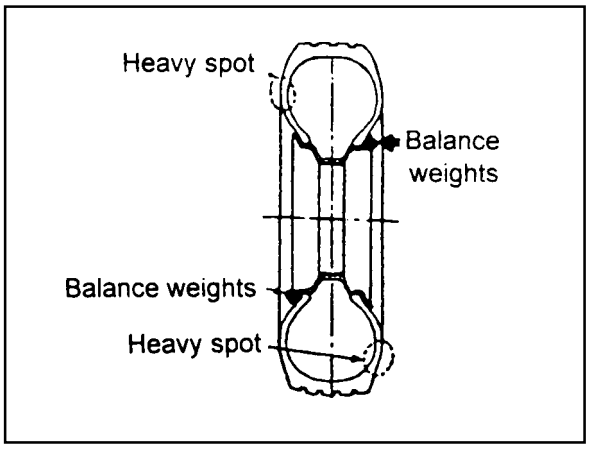

6. Cautions for installation and removal.
   - Clean the mounting surfaces of hub and wheel.
   - Do not apply grease or oil on the nuts and bolts (It will cause looseness and poor tightening).
   - Using a jack, lift up the tire about 3cm from the ground.
   - Tighten nuts in a criss-cross pattern 2-3 times.

Tighten Torque	Steel : 80 - 120Nm
	Aluminium : 110 - 130Nm

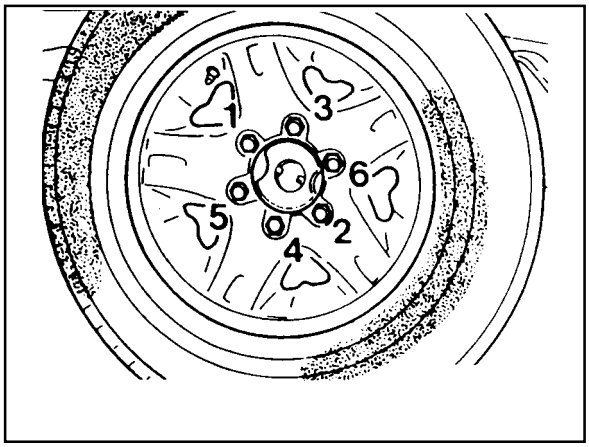

Downloaded from www.Manualslib.com manuals search engine

SECTION 3A

FRONT DRIVE AXLE

TABLE OF CONTENTS

Specifications 3A-1
General Specifications 3A-1
Fastener Tightening Specifications 3A-2
Component Locator 3A-3
Front Axle 3A-3
Auto-Locking Hub 3A-4
Vacuum Circuit 3A-5
Maintenance and Repair 3A-6
On-Vehicle Service 3A-6
Vacuum Line 3A-6
Steering Knuckle and Drive Shaft 3A-8
Front Axle 3A-14
Unit Repair 3A-16
Axle Housing 3A-16

SPECIFICATIONS

GENERAL SPECIFICATIONS

Application			Description
Drive Shaft Type			CV Joint
Axle Housing Type			Build - up
Differential Type			Conventional
Differential Gear			Hypoid Gear
Reduction Ratio	661NA	M/T	4.56
	662NA	M/T	4.56
		A/T (MB)	3.73
	661LA	M/T	4.56
		A/T (BTRA)	5.38
	662LA	M/T	4.27
		A/T (BTRA)	4.89
	E20	M/T	4.89
		A/T (MB)	4.55
	E23	M/T	4.55
		A/T (MB)	4.55
		A/T (BTRA)	5.86
	E32	M/T	3.73
		A/T (MB)	3.73
		A/T (BTRA)	4.89
Oil Capacity			1.3 L
Oil Specification			SEA 80W/90, API GL - 5

Downloaded from www.Manualslib.com manuals search engine

FASTENER TIGHTENING SPECIFICATIONS

Steering Knuckle and Drive Shaft

Application	N•m
Drive Shaft to Front Axle Inner Shaft	25 - 35
Wheel Speed Sensor	85 - 105
Drive Shaft Cover Bolt	50 - 60
Locking Hub Washer Screw	2 - 4
Hub Flange Bolt	70 - 90
Hub Nut	15

Downloaded from www.Manualslib.com manuals search engine

COMPONENT LOCATOR

FRONT AXLE

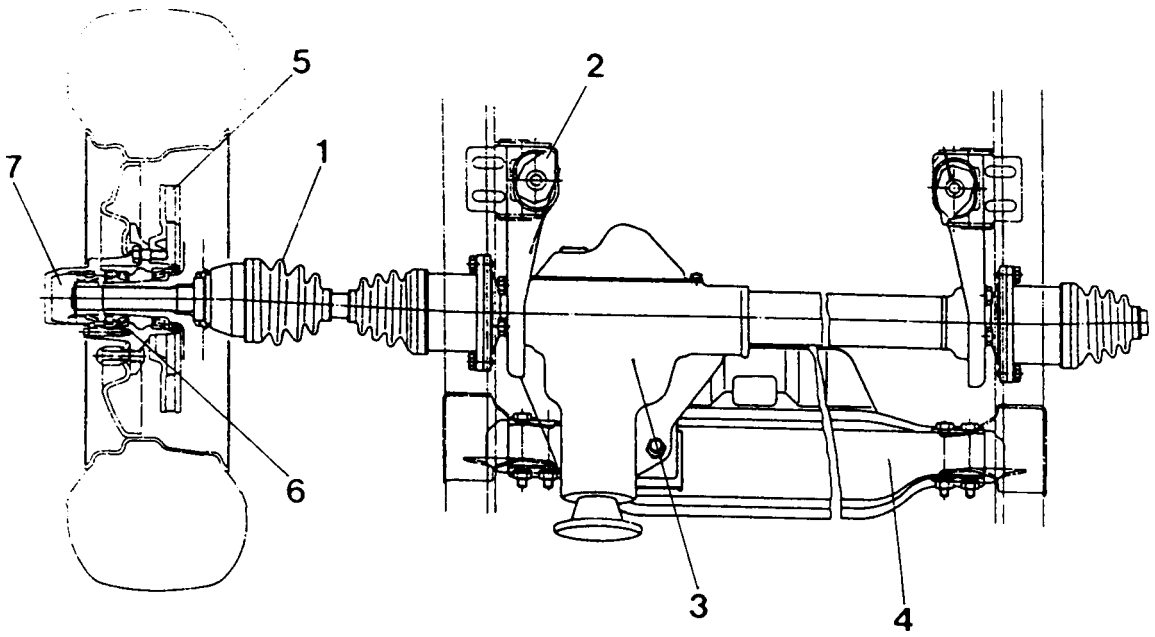

1 Drive Shaft
2 Axle Housing Mounting Bolt
3 Axle Housing
4 Cross Member
5 Brake Disc
6 Hub-Wheel
7 Locking Hub

Downloaded from www.Manualslib.com manuals search engine

AUTO-LOCKING HUB

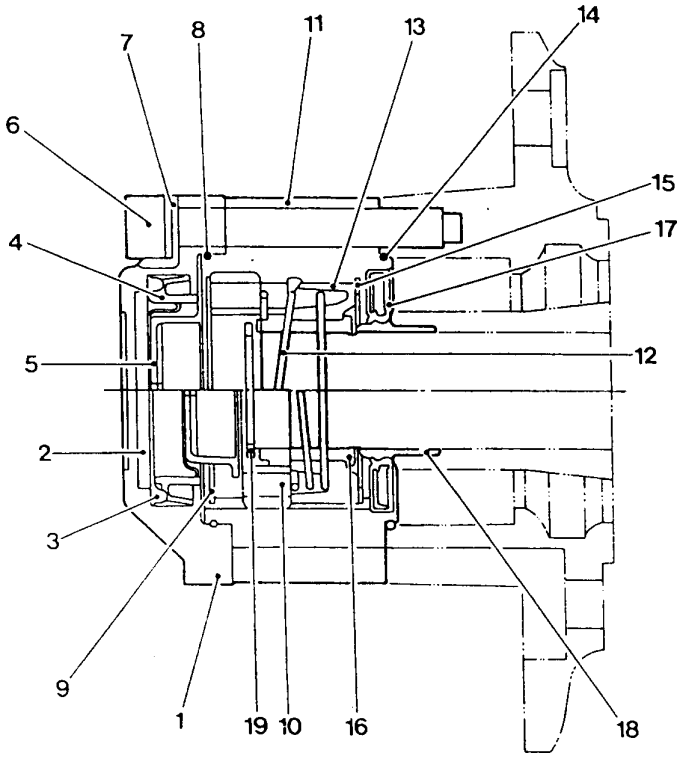

1 Cap
2 Filter
3 Vacuum Diaphragm
4 Diaphragm Retainer
5 Piston
6 Bolt (M10)
7 Lock Washer
8 O-ring
9 Retaining Ring
10 Clutch Ring
11 Body
12 Return Spring
13 Bearing
14 O-ring
15 Retaining Ring
16 Inner Drive Gear
17 Oil Seal
18 Oil Seal Race
19 Axle Retaining Ring

Downloaded from www.Manualslib.com manuals search engine

VACUUM CIRCUIT

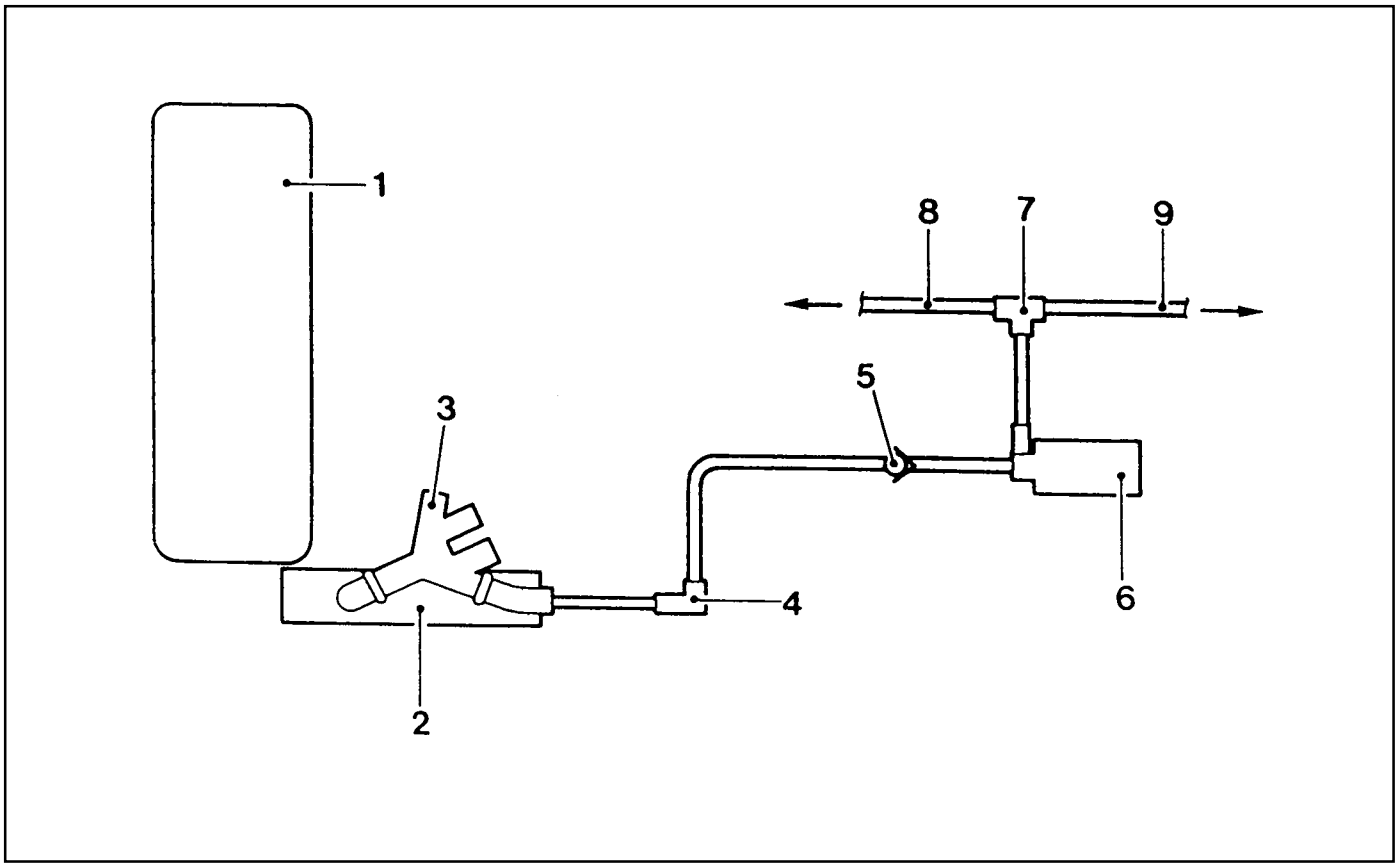

1 Engine
2 Vacuum Pump
3 3-way Connector
4 T-connector
5 Check Valve
6 Auto locking Hub Solenoid Valve
7 T-connector Hose
8 Hub Hose (left)
9 Hub Hose (right)

Downloaded from www.Manualslib.com manuals search engine

MAINTENANCE AND REPAIR

ON-VEHICLE SERVICE

VACUUM LINE

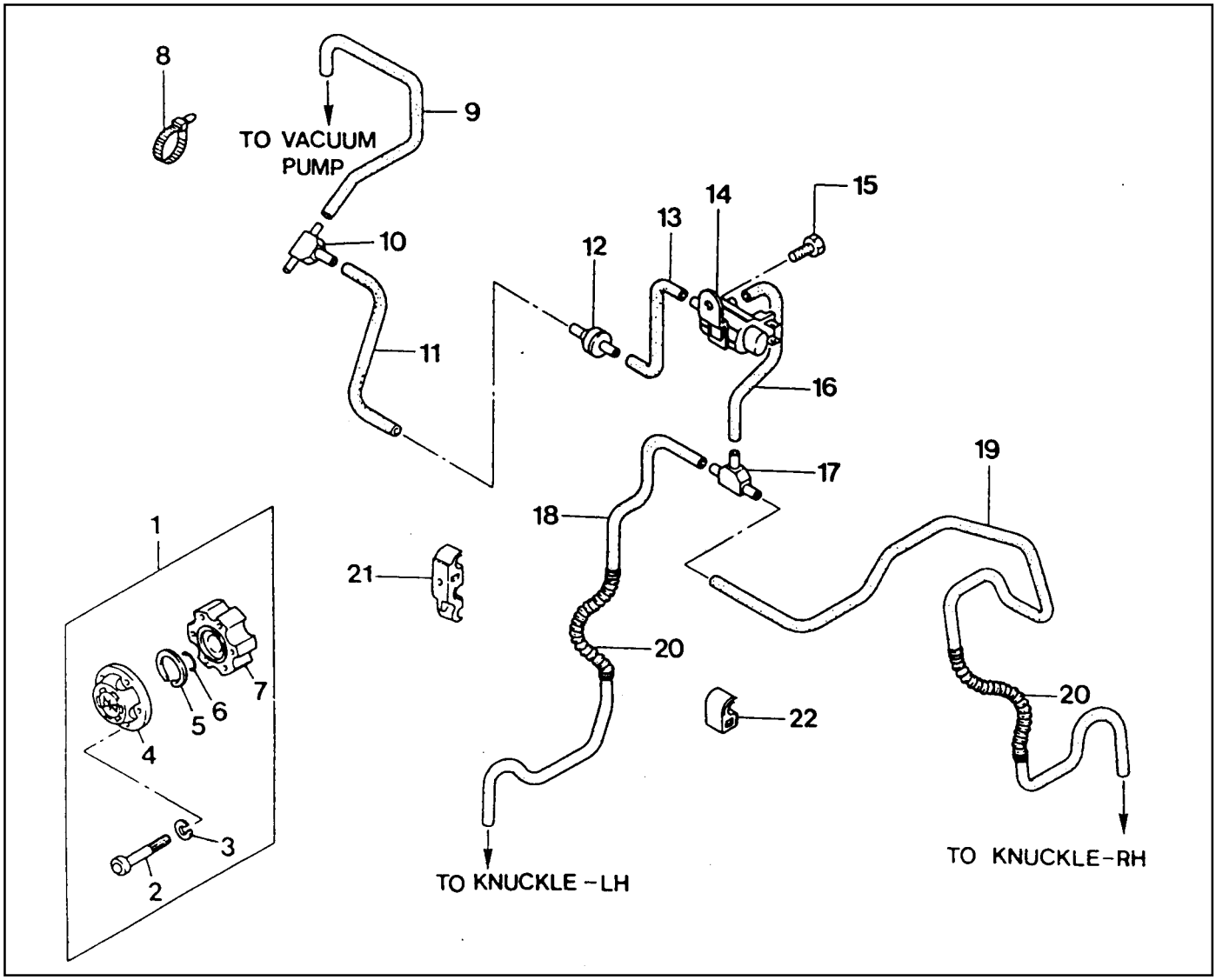

1 Vacuum Auto-locking Hub Assembly
2 Bolt ..... 50-60 Nm
3 Cam Washer
4 Auto-locking Hub Cap
5 Retainer Ring
6 Shim
7 Locking Hub
8 Band
9 Hose (L : 400)
10 T-connector
11 Hose (L : 250, white)
12 Check Valve
13 Hose (L :100, green)
14 Auto Locking Hub Solenoid Valve
15 Bolt
16 Hose (L :100, green)
17 T-connector
18 Hose (L : 720, yellow)
19 Hose (L :2, 360 , red)
20 Corrugated Tube
21 Clip
22 Clip

Downloaded from www.Manualslib.com manuals search engine

Removal & Installation Procedure

1. Be careful not to change the valve when connecting the check valve and each hose.

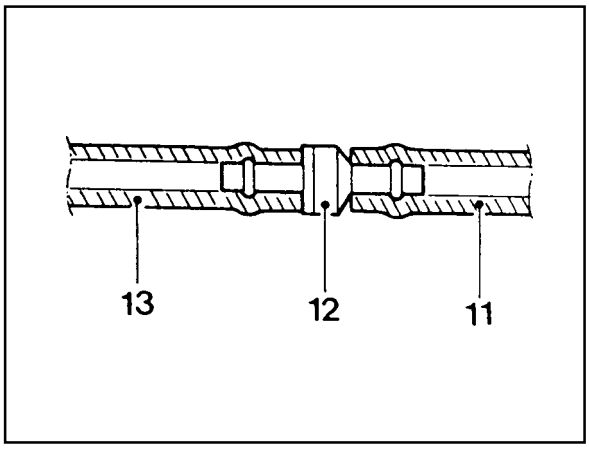

2. Adjust the clearance between the retainer ring (5) and locking hub (7) using the shim(6).

Normal	Max. 0.2 mm

Notice

Shim thickness : 0.1, 0.2, 0.3, 0.5, 1.0 mm

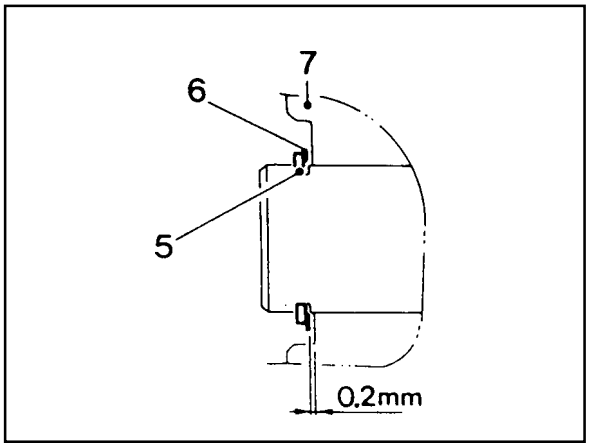

3. Tighten the auto locking hub cap bolt to the specified torque and order.

Tightening Torque	50 - 60 Nm

Downloaded from www.Manualslib.com manuals search engine

STEERING KNUCKLE AND DRIVE SHAFT

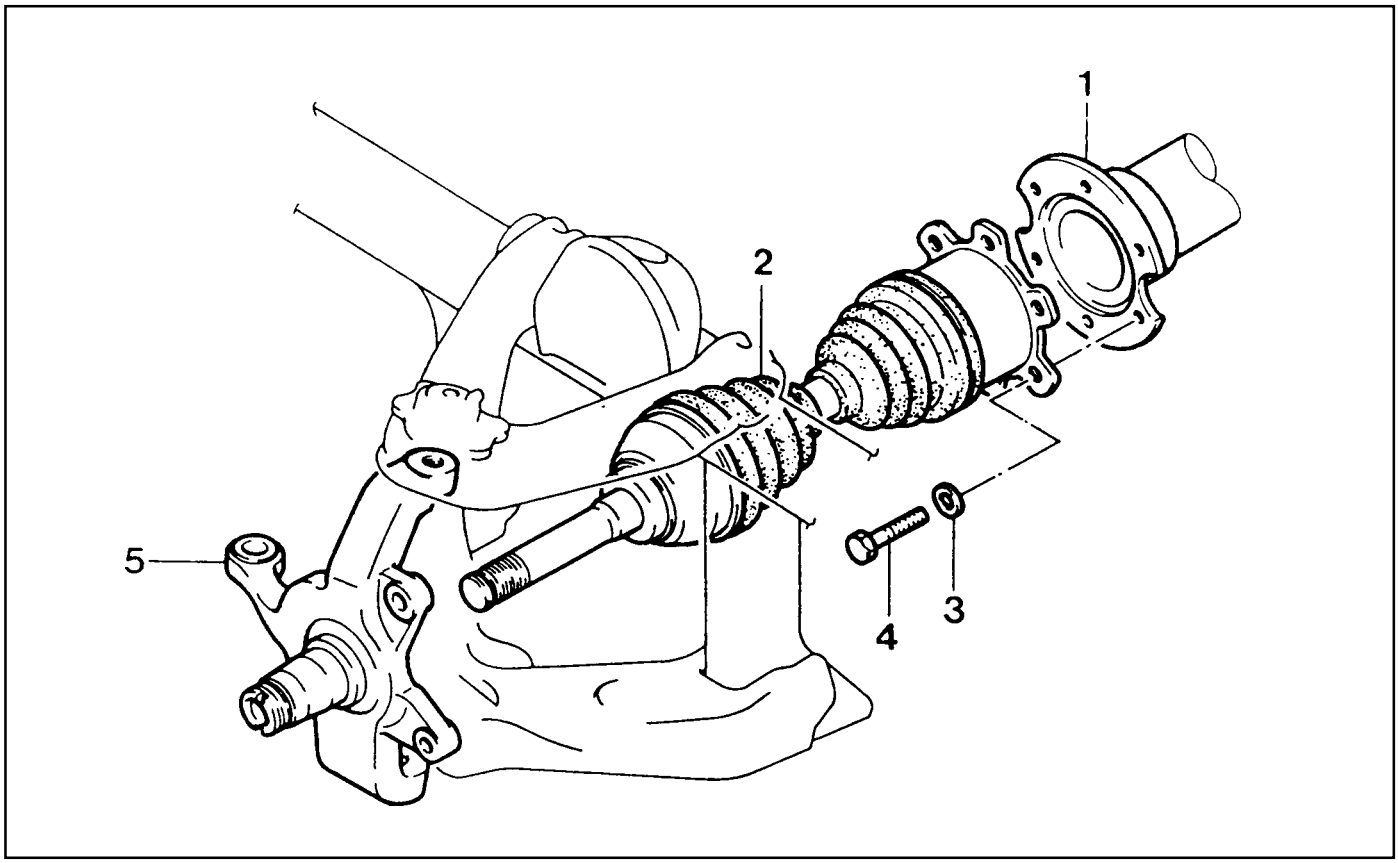

1 Front Axle Inner Shaft
2 Front Axle Drive Shaft
3 Spring Washer
4 Bolt ..... 45-60 Nm
5 Steering Knuckle

Downloaded from www.Manualslib.com manuals search engine

Removal & Installation Procedure

1. Remove the tire.

Installation Notice

Tightening Torque	Steel Wheel	80 - 120 Nm
	Aluminum Wheel	110 - 130 Nm

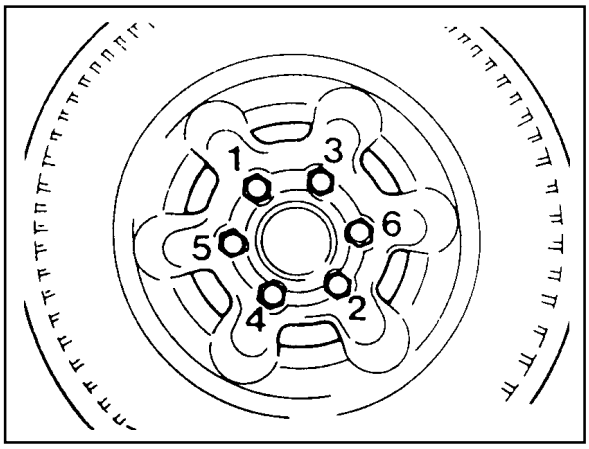

2. Remove the autolocking hub vacuum hose.

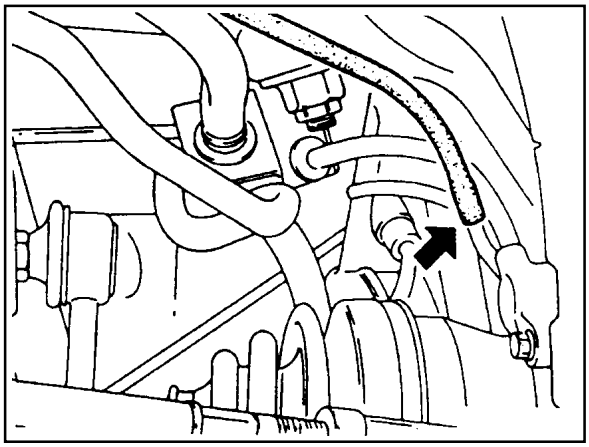

3. With ABS
   Remove the wheel speed sensor from the steering knuckle.

Installation Notice

Tightening Torque	6 - 8 Nm

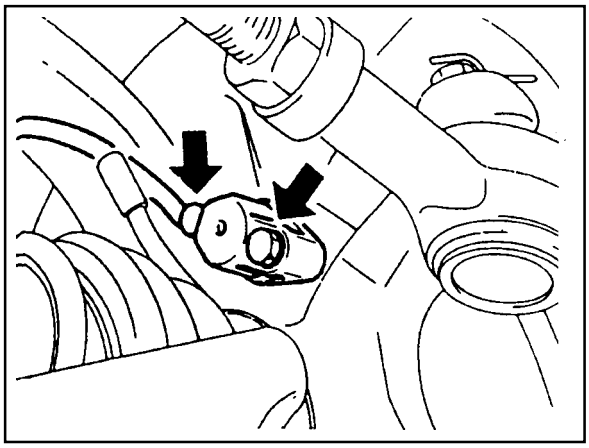

4. Remove the mounting bolts and pull off the caliper assembly.

Installation Notice

Tightening Torque	Hose Bolt	25 - 35 Nm
	Mounting Bolt	85 - 105 Nm

Notice

Be careful not to damage the brake hose.

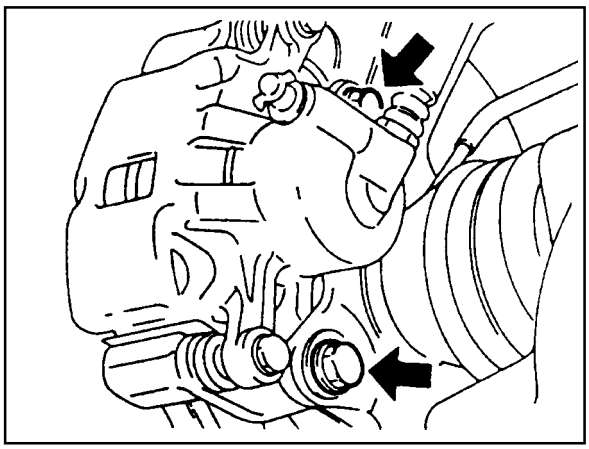

Downloaded from www.Manualslib.com manuals search engine

5. With part time transfer case.

5-1. Remove the cover mounting bolts and pull off the cover.

Installation Notice

Tightening Torque	50 - 60 Nm

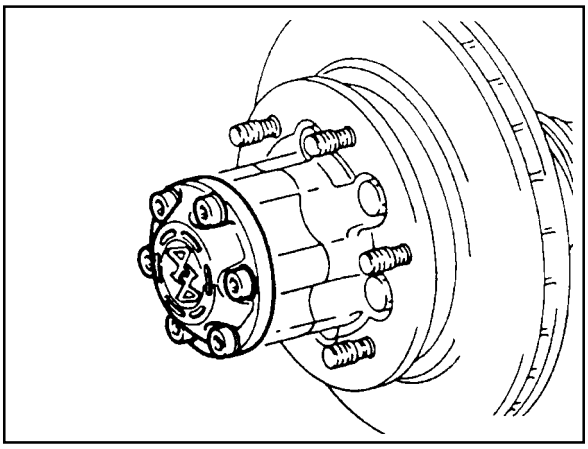

5-2. Remove the snap ring of the drive shaft and pull off the hub body.

Notice

For assembly, adjust the clearance between the snap ring and hub not to exceed 0.2 mm (Shim thickness : 0.1, 0.2, 0.3, 0.5, 1.0 mm).

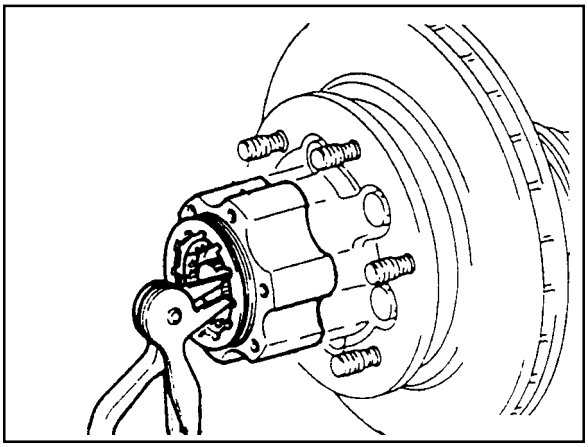

5-3. Remove the screws and pull off the locking hub washer.

Installation Notice

Tightening Torque	2 - 4 Nm

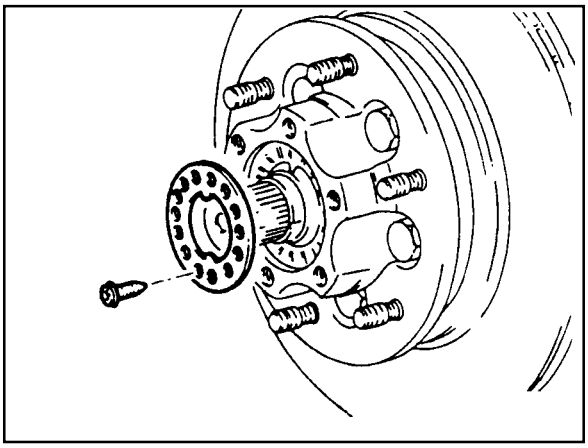

6. With full time transfer case

6-1. Detach the hub cap with screw driver and remove the snap ring on drive shaft.

Installation Notice

Tightening Torque	15 Nm

Notice

For assembly, adjust the clearance between the snap ring and hub not to exceed 0.2 mm (Shim thickness : 0.1, 0.2, 0.3, 0.5, 1.0 mm).

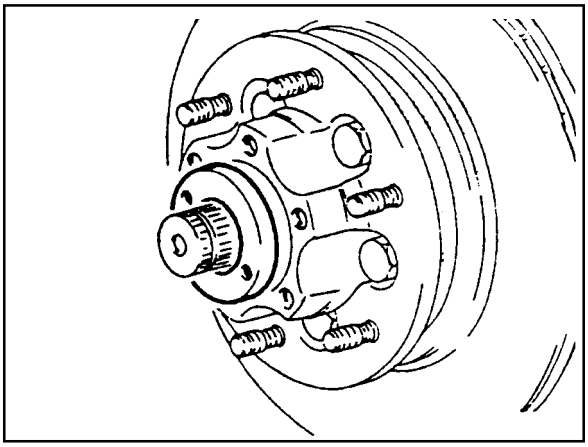

Downloaded from www.Manualslib.com manuals search engine

6-2. Unscrew the bolts and remove hub flange.

Installation Notice

Tightening Torque	70 - 90 Nm

Before installation, apply loctite on the mating surface.

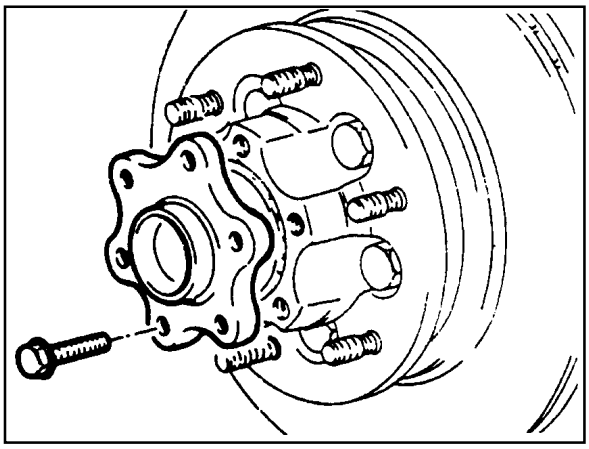

7. Remove the hub nut with special tool.

Tightening Torque	15 Nm

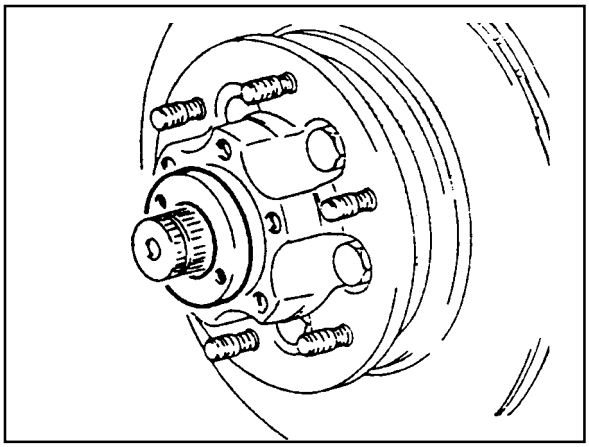

8. Remove the hub and disk assembly.

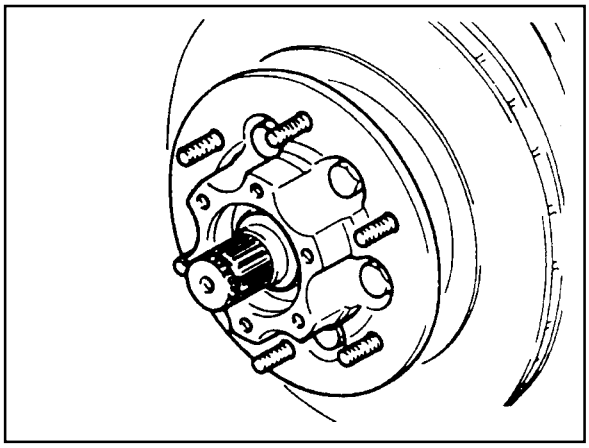

9. Remove the disk brake dust shield.

Installation Notice

Tightening Torque	4 - 6 Nm

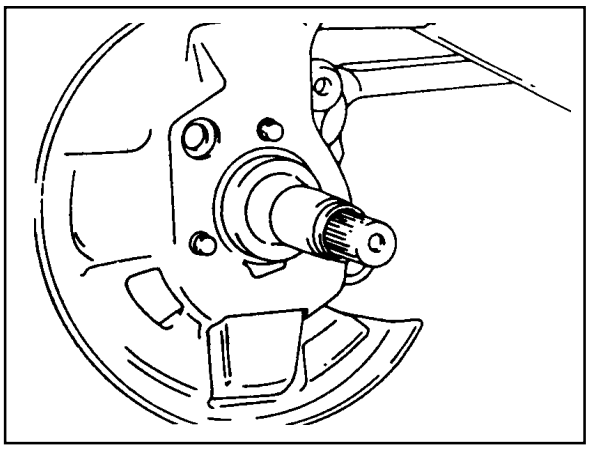

Downloaded from www.Manualslib.com manuals search engine

10. Remove the cotter pin and slotted nut and then remove the steering knuckle arm and tie-rod.

Installation Notice

Tightening Torque	35 - 45 Nm

Replace the cotter pin with new one.

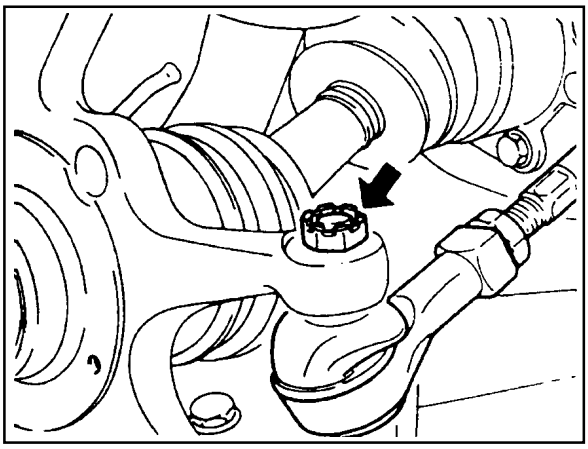

11. Remove the cotter pin and nut from the steering knuckle arm and upper arm ball joint connection.

Installation Notice

Tightening Torque	80 - 150 Nm

Replace the cotter pin with new one.

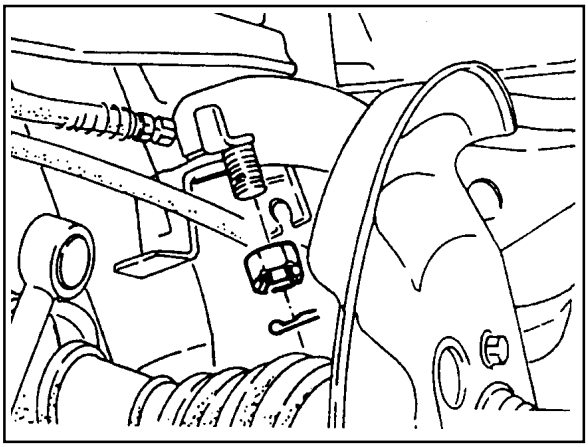

12. Remove the cotter pin and nut from the steering knuckle arm and lower and lower arm boll joint connection.

Installation Notice

Tightening Torque	120 - 180 Nm

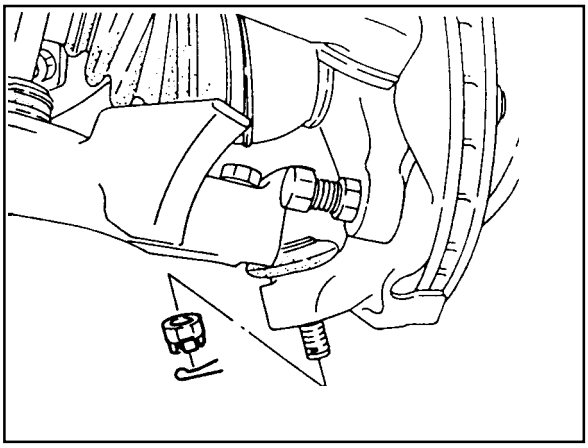

13. Carefully remove the knuckle arm.

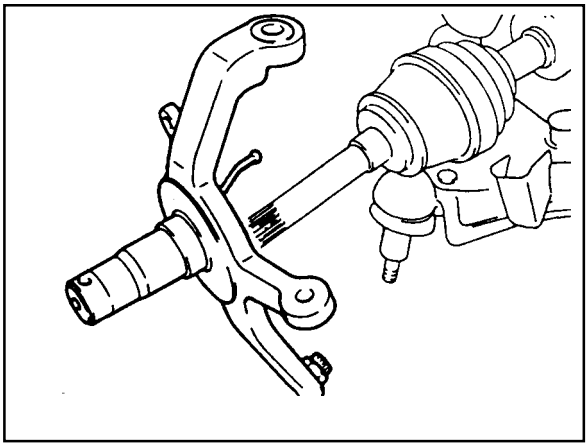

Downloaded from www.Manualslib.com manuals search engine

14. Remove the drive shaft mounting bolts and remove the drive shaft.

Installation Notice

Tightening Torque	45 - 60 Nm

Observe the tighening torque and sequence.

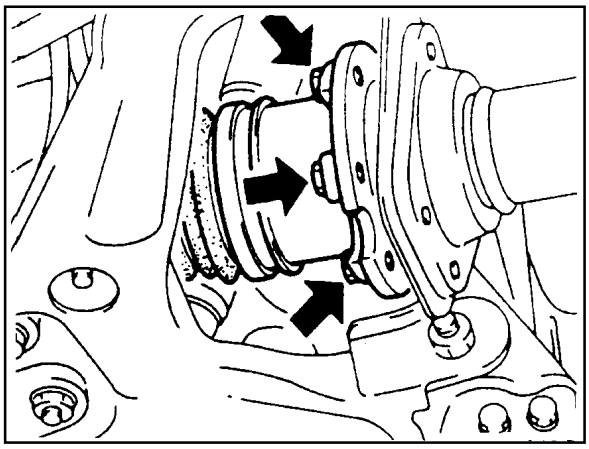

15. Installation should follow the removal precedure in the reverse order.

Downloaded from www.Manualslib.com manuals search engine

FRONT AXLE

Preceding Work : Removal of the front axle drive shaft
Removla of the steering gear box

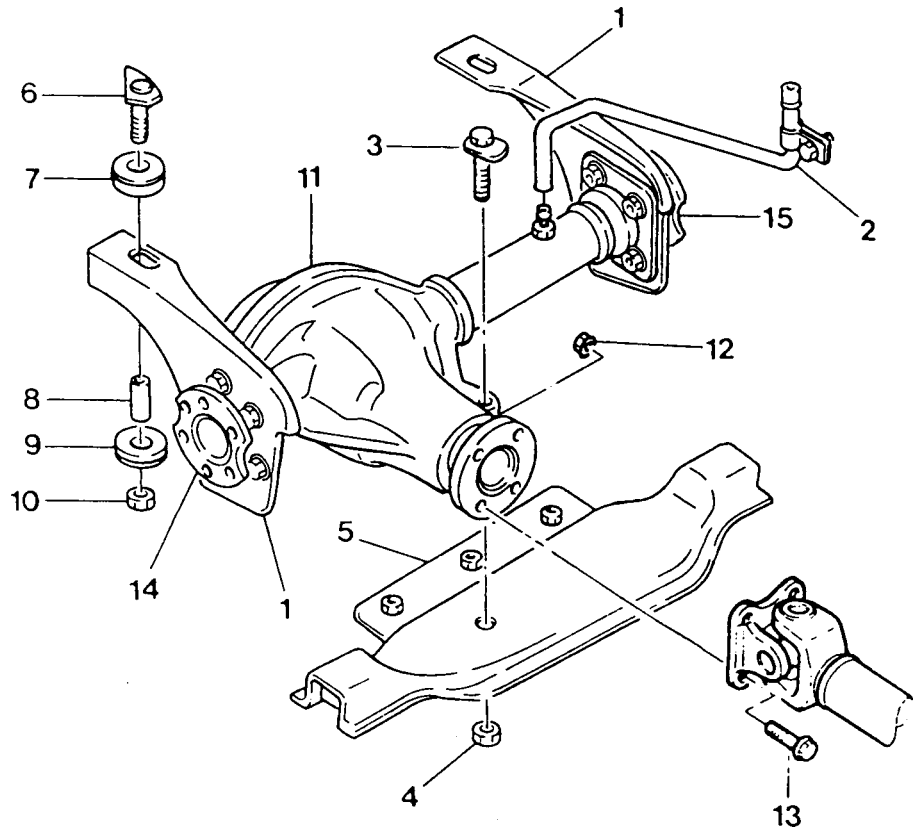

1 Axle Mounting Bracket
2 Breather Hose
3 Bolt (Rear)
4 Nut ..... 95-142 Nm
5 Cross Member
6 Bolt (Front)
7 Bushing
8 Spacer
9 Bushing
10 Nut ..... 95-142 Nm
11 Front Axle Assembly
12 Nut ..... 70-80 Nm
13 Bolt
14 Inner Axle Shaft (LH)
15 Inner Axle Shaft (RH)

Downloaded from www.Manualslib.com manuals search engine

Removal & Installation Procedure

1. Remove the propeller shaft from the front axle input shaft.

   Notice

   Before removal, place the alignment marks.

   Installation Notice

Tightening Torque	70 - 80 Nm

2. Remove the breather hose.
3. Remove the axle housing mounting nuts (1) from the cross member.

   Installation Notice

Tightening Torque	95 - 142 Nm

4. Remove the cross member mounting nuts (2) from the frame and remove the cross member.

   Installation Notice

Tightening Torque	62 - 93 Nm

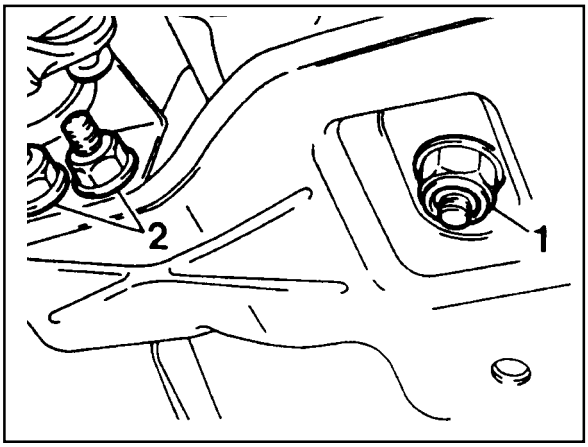

5. Support the axle housing on a suitable jack, Remove the axle housing mounting bracket nuts.

   Installation Notice

Tightening Torque	95 - 142 Nm

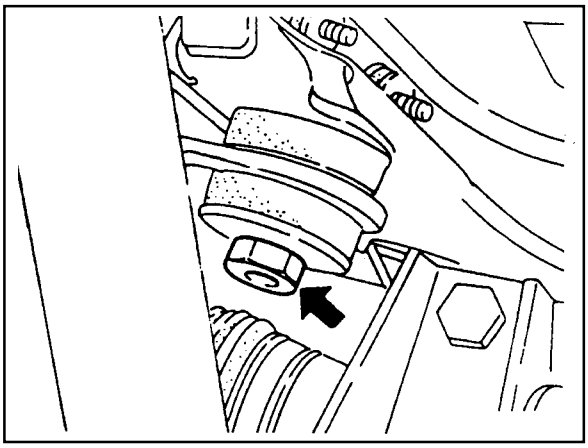

6. Lowering the jack carefully, remove the axle housing assembly.

7. Installation should follow the removal precedure in the reverse order.

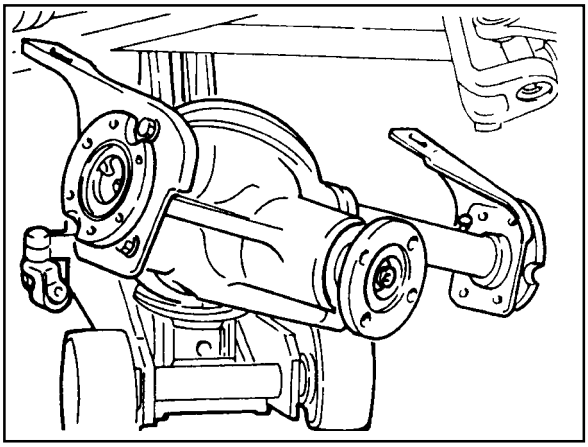

Downloaded from www.Manualslib.com manuals search engine

UNIT REPAIR

AXLE HOUSING

Preceding Work : Removal of the axle housing

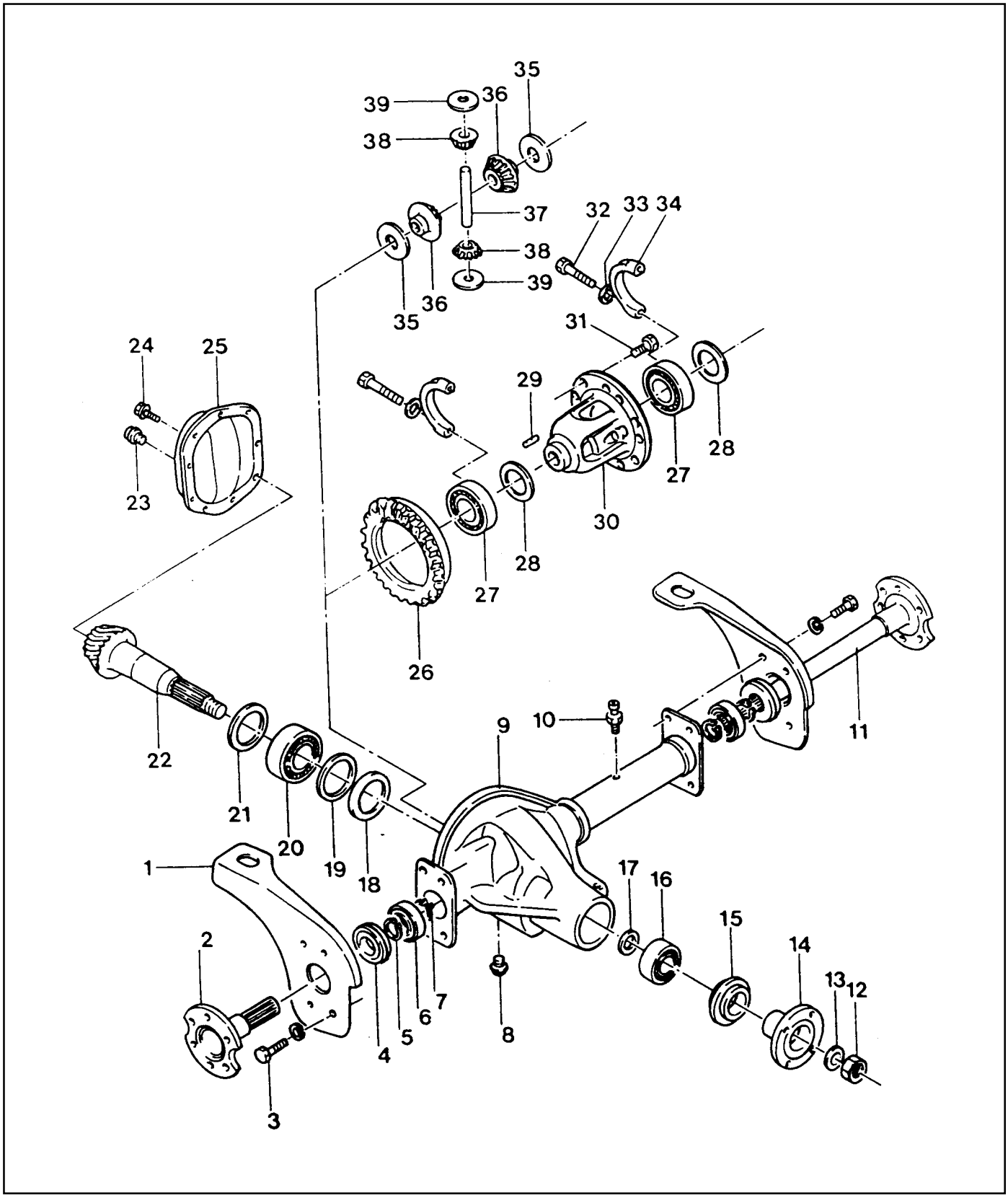

Downloaded from www.Manualslib.com manuals search engine

1 Front Axle Housing Mounting Bracket
2 Inner Shaft (Left)
3 Bolt ..... 55-65 Nm
4 Oil Seal ..... Replace
Apply Grease to the Sealing Rib
5 Snap Ring
6 Bearing
7 Snap Ring
8 Oil Drain Plug ..... 28-41 Nm
9 Front Axle Housing
10 Breather Nipple
11 Inner Shaft (Right)
12 Pinion Lock Nut ..... 240-310 Nm
13 Washer
14 Companion Flange
15 Oil Seal ..... Replace
Apply Grease to the Sealing Rib
16 Bearing
17 Shim
18 Bearing Baffle
19 Shim
20 Bearing
21 Oil Slinger
22 Drive Pinion
23 Oil Filler Plug ..... 28-41 Nm
24 Bolt ..... 39-46 Nm
25 Axle Housing Cover ..... Apply Liquid Gasket
to the Contact Surface
26 Ring Gear
27 Bearing
28 Shim
29 Shaft Lock Pin
30 Differential Case
31 Bolt ..... 75-90 Nm
32 Bolt ..... 48-69 Nm
33 Washer
34 Bearing Cap
35 Thrust Washer
36 Side Gear
37 Differential Shaft
38 Differential Pinion
39 Thrust Washer

Downloaded from www.Manualslib.com manuals search engine

Disassembly Procedure

1. Remove the drain plug and drain the oil. Reinstall the drain plug.

   Installation Notice

Tightening Torque	28 - 41 Nm

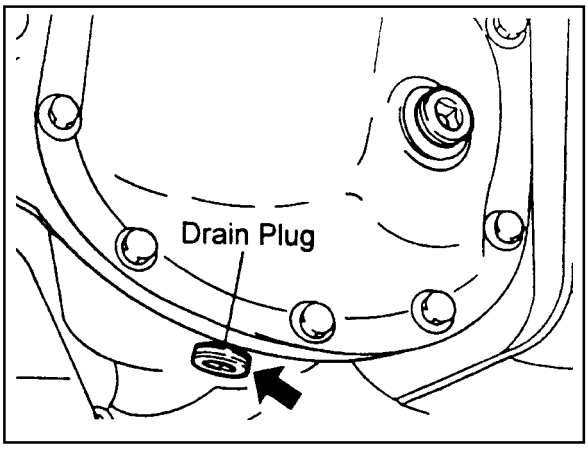

2. Unscrew the axle housing and housing mounting bracket bolts and remove the bracket and inner shaft assembly.

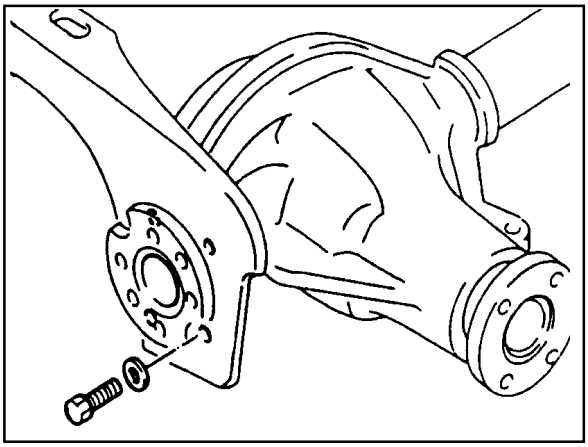

3. Remove the bearing fixing snap ring of the inner shaft and pull out the bearing. Separate the inner shaft and the mounting bracket.

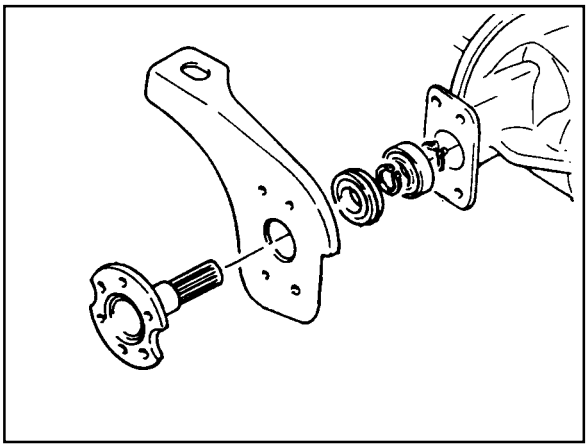

4. Remove the axle housing cover.

   Notice

   Clean the cover and housing contact surfaces.

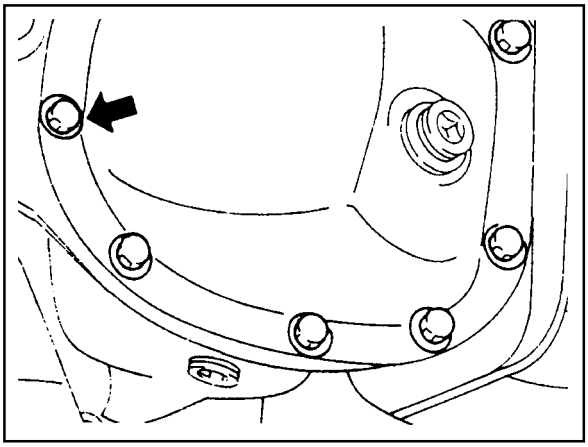

Downloaded from www.Manualslib.com manuals search engine

5. Unscrew the bearing cap bolts and remove the bearing caps. Pull out the differential carrier assembly.

   Notice

   Place alignment marks on the bearing cap not to change the caps before removal. When pulling out the differential carrier assembly, be careful not to damage the axle housing.

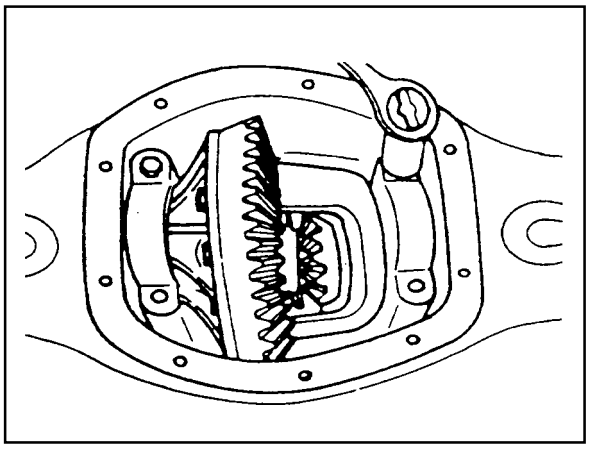

6. Disassemble the parts of the differential carrier assembly.

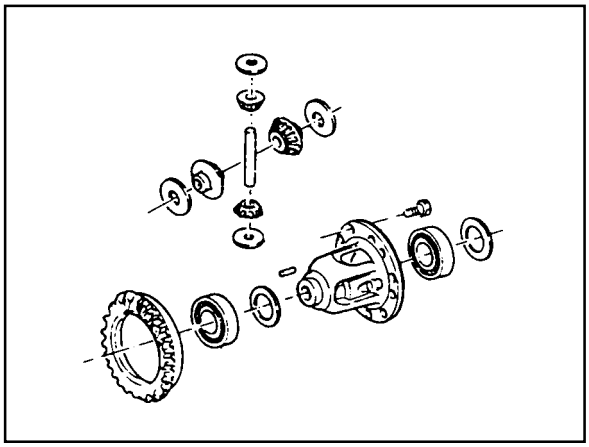

7. Remove the drive pinion lock nut. Disassemble the parts of the drive pinion.

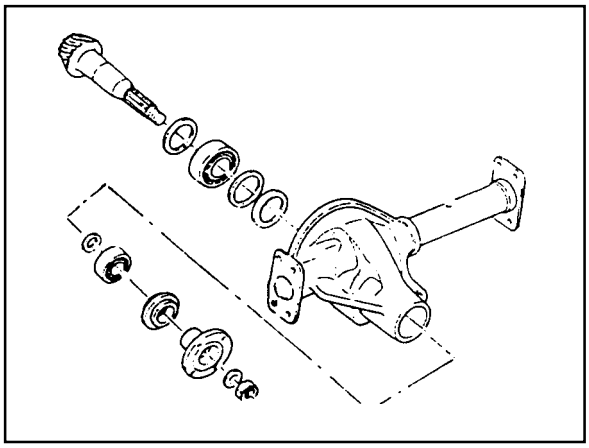

Assembly Procedure

1. Clean the all parts and check the followings :
   - Check the ring gear and drive pinion for wear and damage. If damaged, replace it as a set.
   - Check the bearing for sticks, wear, noise and turning resistance.
   - Check the side gear, pinion, pinion shaft and thrust washer for wear and damage.
   - Check the differential carrier for crack and wear (bearing contact surface). Check the gear case for crack.

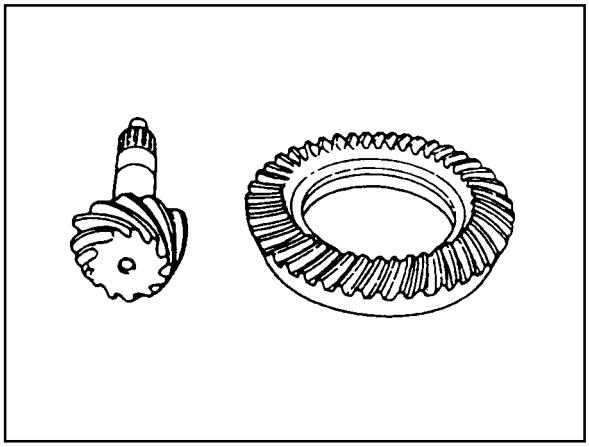

Downloaded from www.Manualslib.com manuals search engine

2. Assemble the parts of the drive pinion.

Tightening Torque of the Lock Nut	240 - 310 Nm

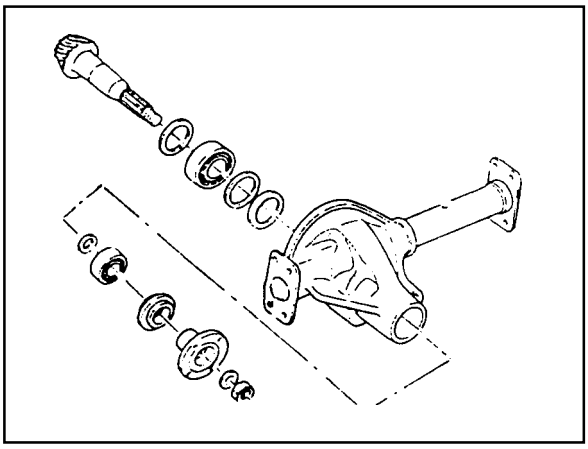

3. Assemble the parts of the differential carrier.

Tightening Torque of the Ring Gear Bolts	75 - 90 Nm

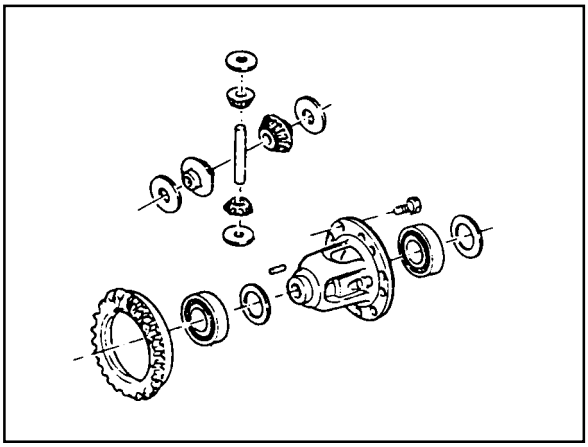

4. Measure backlash of the side gear and pinion.

Standard	0 - 0.05 mm

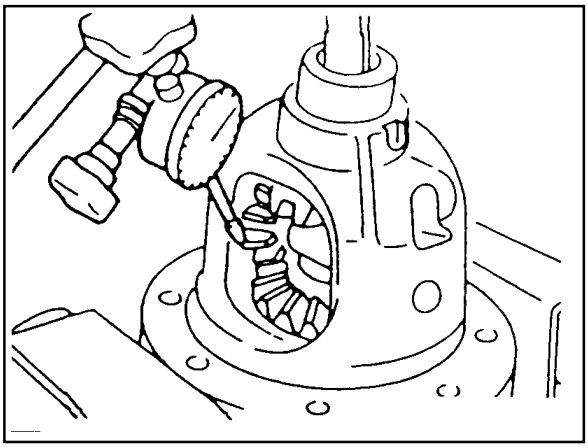

5. Install the differential carrier assembly into the axle housing.

Tightening Torque of the Bearing Cap Bolts	48 - 69 Nm

Notice

Be careful not to change the caps. Be sure to keep the original position of the caps.

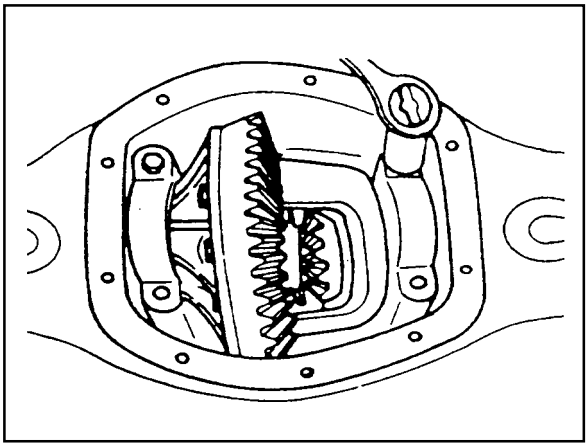

Downloaded from www.Manualslib.com manuals search engine

6. Measure backlash of the drive pinion and ring gear.

Specified Value	0.13 - 0.20 mm

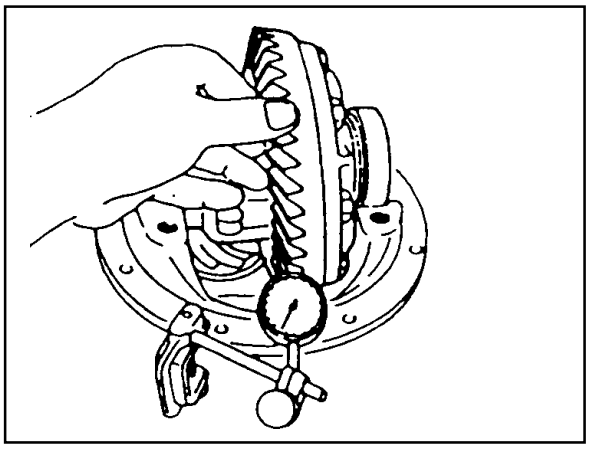

7. Install the axle housing cover.

Tightening Torque	39 - 46 Nm

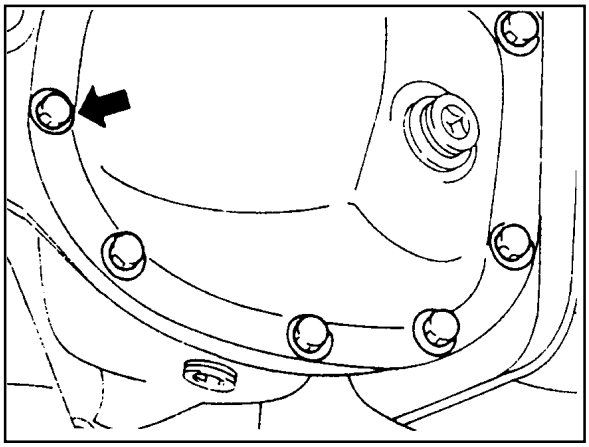

8. Assemble the parts of the front axle shaft and housing mounting bracket.

   Notice

   Apply grease to the oil seal rib.

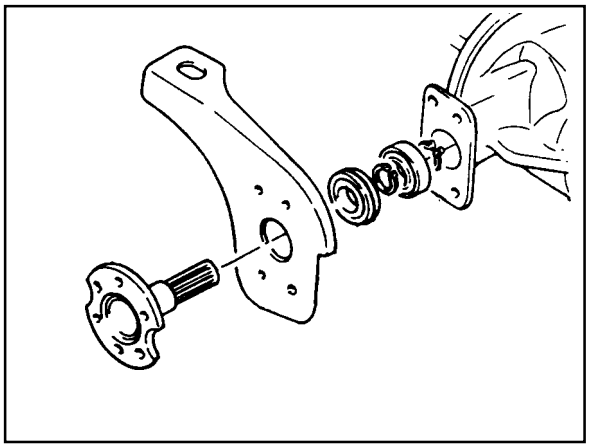

9. Align the axle shaft and differential carrier spline and insert the axle shaft. Assemble the axle housing mounting bracket to the axle housing.

Tightening Torque	55 - 65 Nm

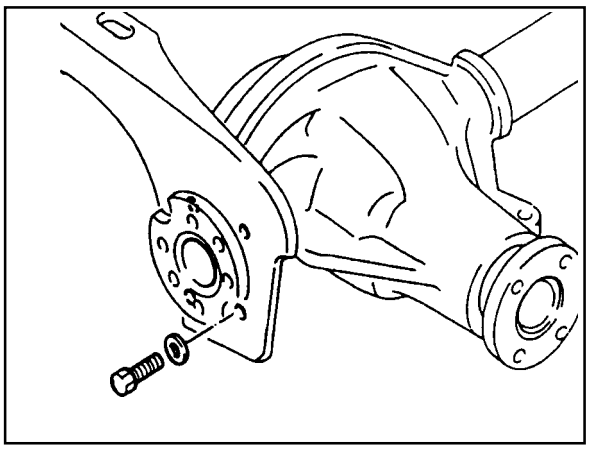

Downloaded from www.Manualslib.com manuals search engine

Inspection of Ring Gear Tooth Contact Pattern

Normal Contact

Apply gear-marking compound (prussian blue / red lead) on the ring gear teeth. Rotate the ring gear and check the tooth contact pattern.

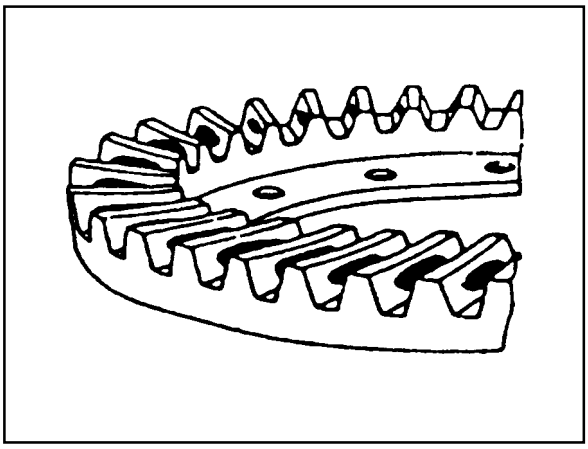

Abnormal Contact

Tooth Contact pattern	Possible Cause	Remedy
1. Heel Contact 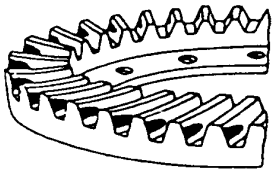	Excessive backlash (little) • Noise can be occurred	Adjust backlash(Decrease backlash) • Select proper shim(s) to move the drive pinion toward the ring gear (toward toe)
2. Toe Contact 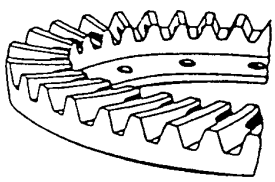	Insufficient backlash (little) • Tooth can be damaged or broken under heavy load	Adjust backlash(Increase backlash) • Select proper shim(s) to move the drive pinion against the ring gear (toward heel) 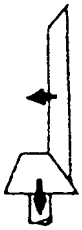
3. Face Contact 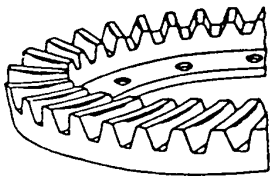	Excessive backlash (much) • Drive pinion shaft is apart from the ring gear • Noise can be occurred	Adjust backlash(Increase pinion shim) • Move the drive pinion toward the ring gear (toward center of ring gear)
4. Flank Contact 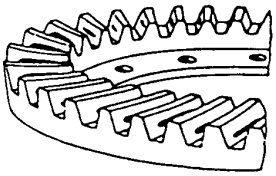	Insufficient backlash (much) • Gear contacts on the low flank • Gear can be damaged or worn • Noise can be occurred	Adjust backlash(Decrease pinion shim) • Move the ring gear toward the drive pinion (toward ring gear center line) 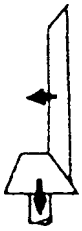

Downloaded from www.Manualslib.com manuals search engine

SECTION 3C

PROPELLER SHAFT

TABLE OF CONTENTS

Specifications 3C-1
General Specifications 3C-1
Component Locator 3C-2
M/T & A/T (Part-time T/C) 3C-2
Maintenance and Repair 3C-3
On-Vehicle Service 3C-3
Propeller Shaft 3C-3

SPECIFICATIONS

GENERAL SPECIFICATIONS

Application			Description
Construction			Universal Joint with Yoke and Spider
Joint Type			Spider (Needle Roller Bearing)
Number of Spider	Front (Part-Time T/C)		3
	Rear		2
Tube Run-Out (after installation)	E 32 Engine		Within 0.3 mm
	The Others		Within 0.4 mm
Front Shaft Dimension (L´I.D´O.D)	Diesel + M/T & A/T + 4408		579 ´ f59.5 ´ f63.5
	M161 + M/T & A/T + 4408		583.5 ´ f44.7 ´ f50.8
	M161 + M/T & A/T	Tongil	617.6 ´ f44.7 ´ f50.8
		KSC	595.6 ´ f44.7 ´ f50.8
Rear Shaft Dimension (L´I.D´O.D)	Diesel & M161 + M/T & A/T + 4408		824 ´ f59.5 ´ f63.5
	M162 + M/T & A/T + TOD		777 ´ f59.5 ´ f63.5

Downloaded from www.Manualslib.com manuals search engine

COMPONENT LOCATOR

M/T & A/T (PART-TIME T/C)

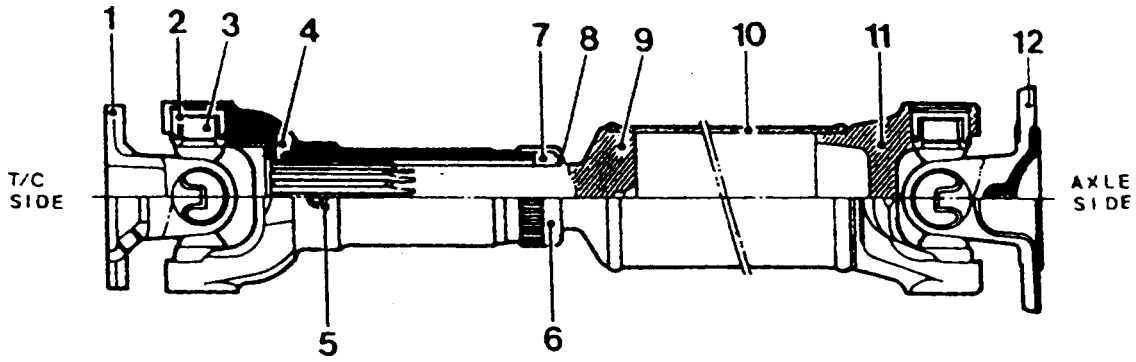

1 Flange Yoke
2,3 3-Journal Cross and Bearing Kit (Including Snap Ring)
4 Slip Yoke Assembly
5 Grease Nipple
6 Dust Cap
7 Oil Seal
8 Split Washer
9 Slip Tube Shaft
10 Tube
11 Tube Yoke
12 Flange Yoke

Notice

Only the length of shaft is different and the components of front/rear shaft are the same.
(The deadener is inserted to the inside of tube of rear shaft, both ends)

Downloaded from www.Manualslib.com manuals search engine

MAINTENANCE AND REPAIR

ON-VEHICLE SERVICE

PROPELLER SHAFT

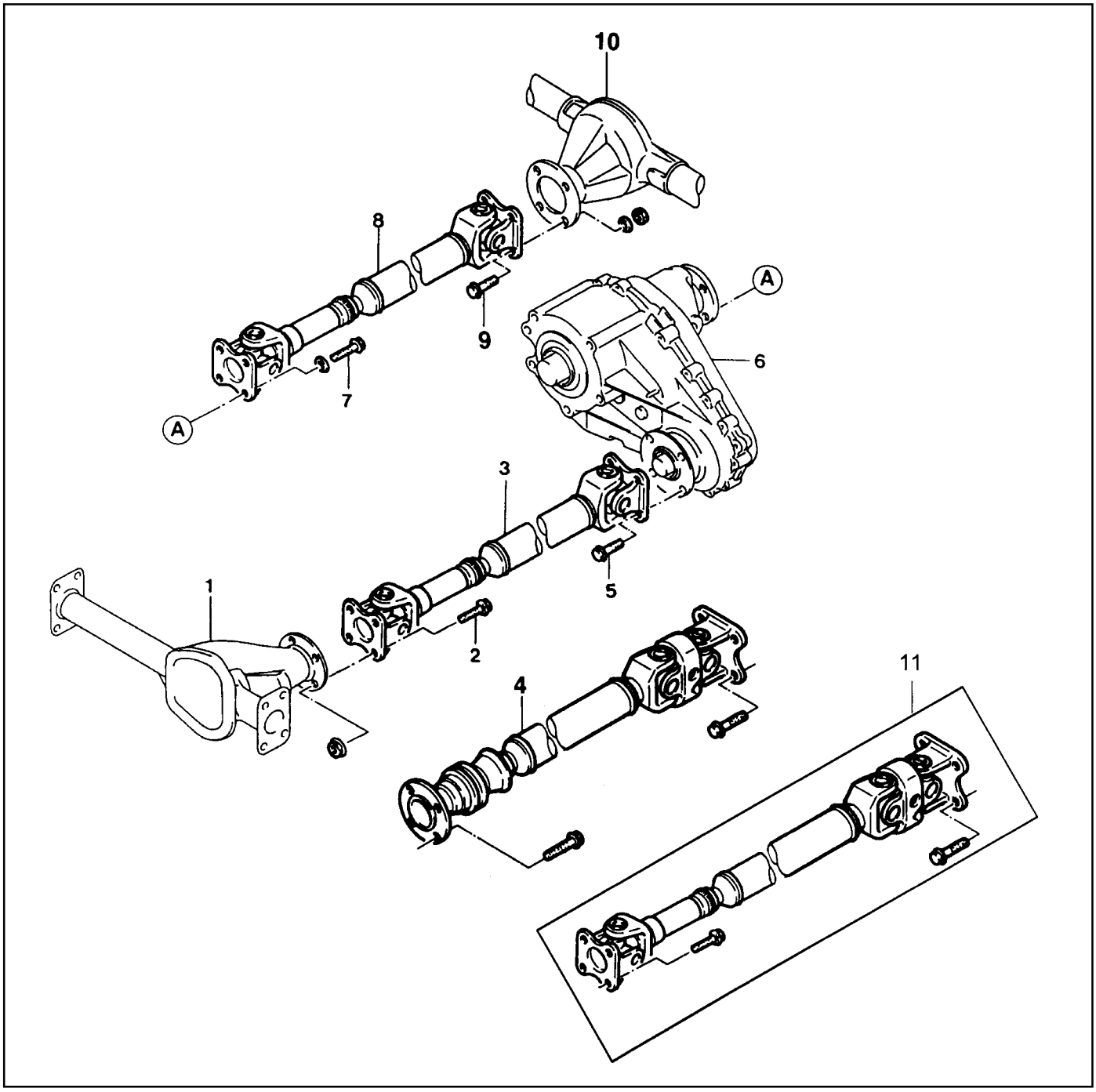

1 Front Axle
2 Bolt ..... 70-80 Nm
3 Front Propeller Shaft (661LA/662LA)
4 Front Propeller Shaft (E32)
5 Bolt ..... 81-89 Nm
6 Transfer Case
7 Bolt ..... 81-89 Nm
8 Rear Propeller Shaft
9 Bolt ..... 70-80 Nm
10 Rear Axle
11 Front Propeller Shaft (E20/E23)

Downloaded from www.Manualslib.com manuals search engine

Removal Procedure

1. Place alignment marks and remove the propeller shaft.

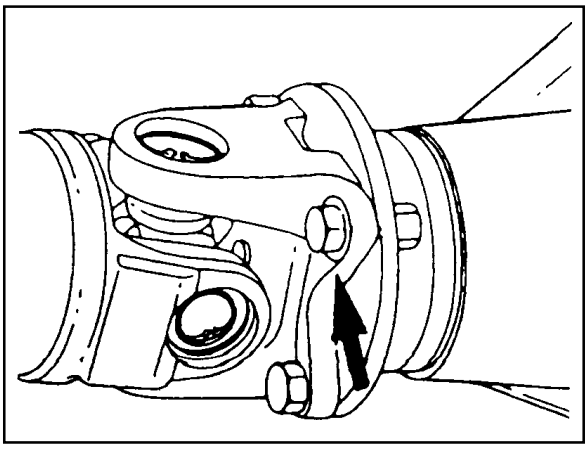

2. Place alignment marks before removing the spider.

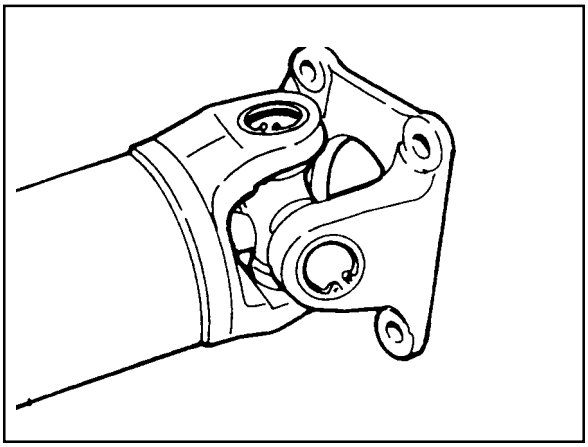

3. Using a snap ring pliers, remove the snap ring.

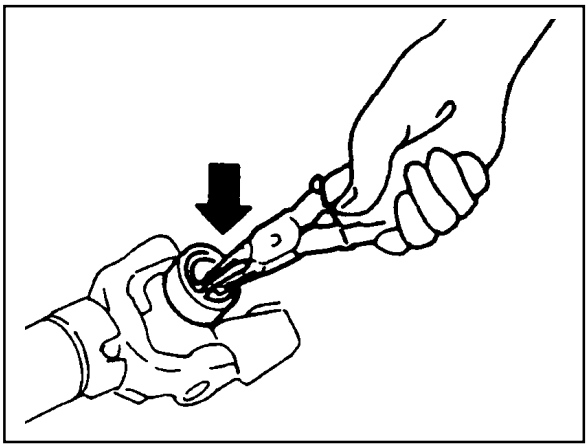

4. Slightly tapping the yoke shoulder using a brass hammer, remove the bearing. Remove the remaining bearings in the same way.

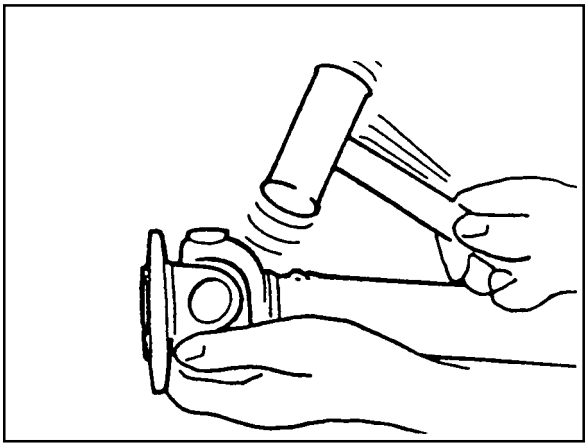

Downloaded from www.Manualslib.com manuals search engine

5. If difficult to remove, clamp the yoke side in a vise and tap off the needle bearing, using a proper tool.

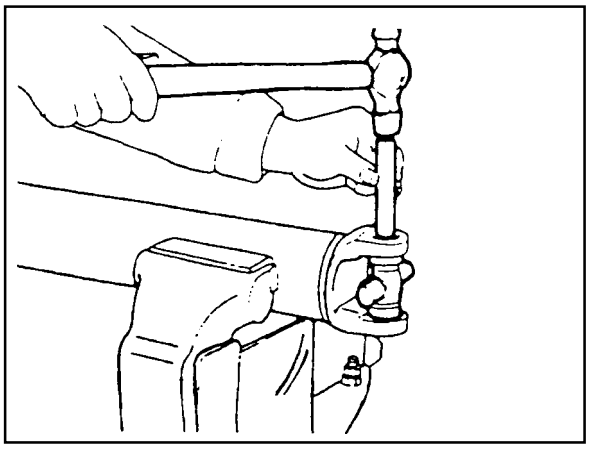

6. Disassemble the universal joint parts.
   - As axles move up and down, universal joints allow drive angles to change without binding propeller shaft.

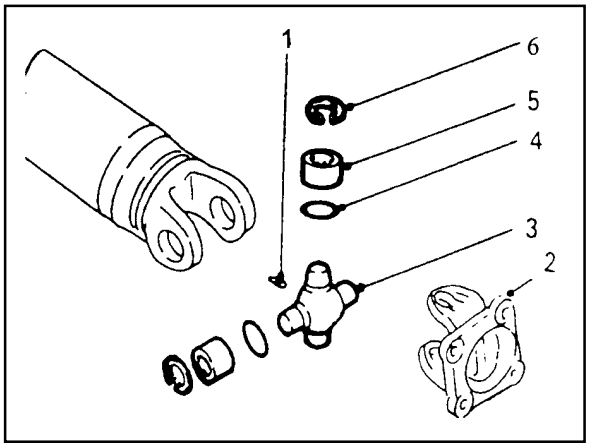

1	Grease Nipple	4	Seal
2	Flange Yoke	5	Needle Roller Bearing
3	Spider	6	Snap Ring

Inspection Procedure

1. Visual check.
   Check the disassembled parts for wear or crack.
   Replace them if necessary.

2. Spider outer diameter (mm).

Standard	Limit
16.668	16.647

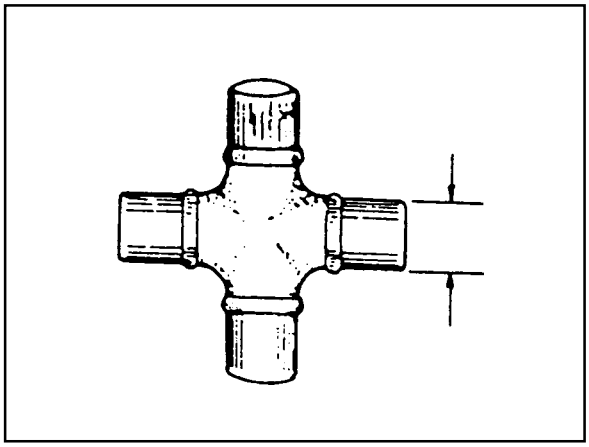

Downloaded from www.Manualslib.com manuals search engine

3. Clearance between the spider and bearing.

Standard	Limit
0.03 - 0.098 mm	0.25 mm

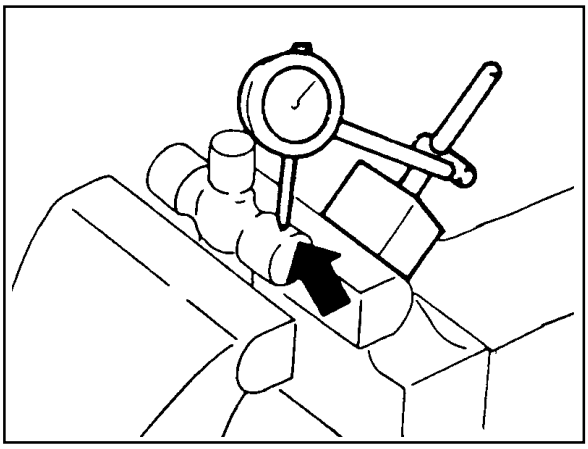

4. Propeller shaft runout
   - Using a dial indicator, measure propeller shaft runout by turning the shaft. If runout exceeds limit, replace the propeller shaft or correct it using a press.

Limit	0.4 mm

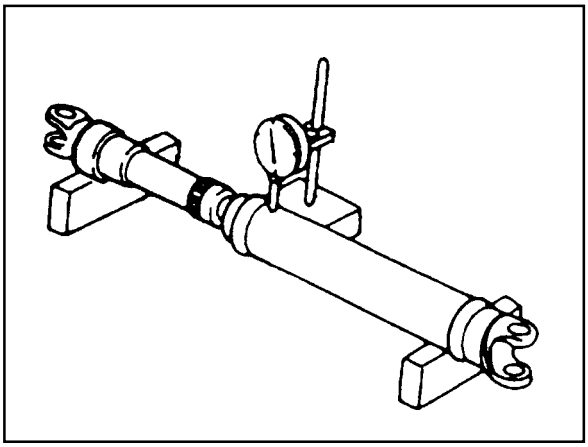

5. Universal joint starting torque.

Starting Torque	3 - 8 kg•cm

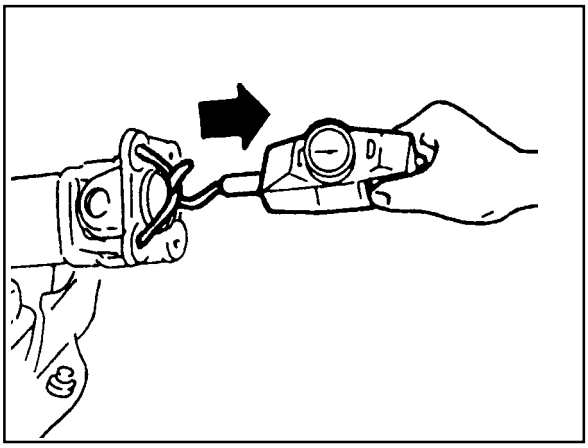

6. Possible cause of vibration.
   - Drift away of balance weights.
   - Excessive runout of the propeller shaft.
   - Using normal bolts.
   - Excessive wear of the universal joint.
   - Sticks in sleeve joint.
   - Drive angle changes in universal joints or cross causes vibration and can be detected around 60~100 km/h.

Downloaded from www.Manualslib.com manuals search engine

Installation Procedure

Clean the disassembled parts and replace them if damaged.

1. Align the alignment marks of the yoke and assemble the spider, bearing and snap ring.

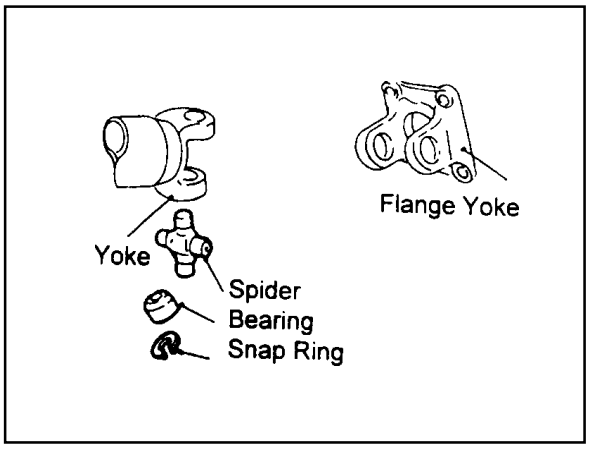

2. Apply grease to the inner of the bearing cap of the needle roller bearing and assemble the needle roller.

Grease	EP #2

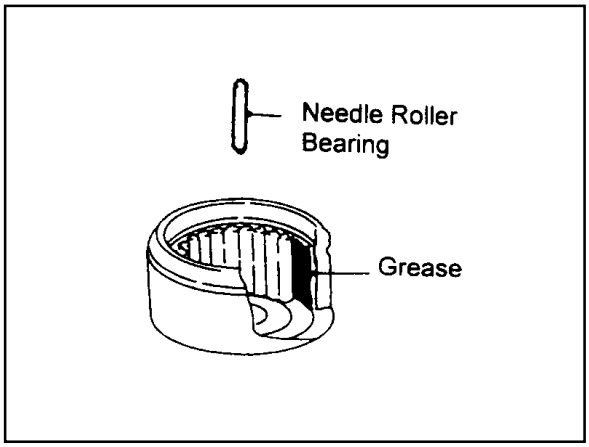

3. Install the bearing cap to the yoke and insert the spider. Install the opposite side cap by tapping with a plastic hammer. Adjust clearance of the spider pin to be within 0.1 mm and install the snap ring.

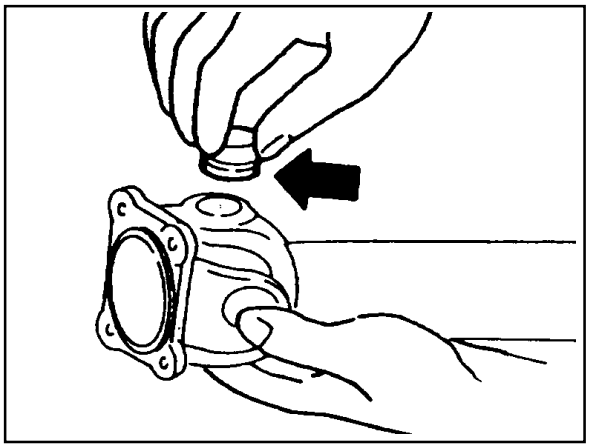

4. Align the alignment marks and install the front and rear propeller shaft. Tighten the nuts to the specified torque.

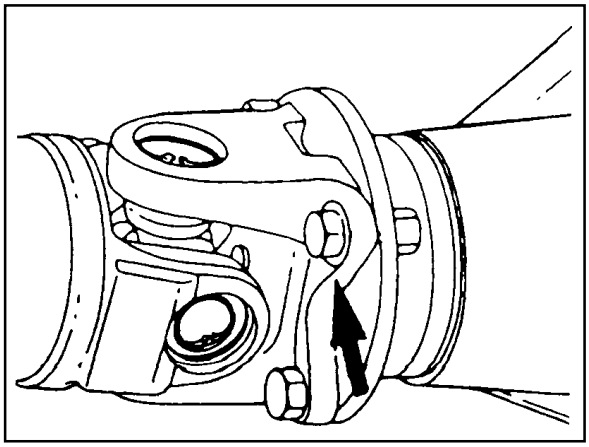

Downloaded from www.Manualslib.com manuals search engine

SECTION 3D

REAR DRIVE AXLE

TABLE OF CONTENTS

Specifications 3D-1
General Specifications 3D-1
Fastener Tightening Specifications 3D-2
Diagnosis 3D-3
Noise (During Straight Driving) 3D-3
Oil Leakage 3D-3
Noise (During Turning) 3D-3
Heating 3D-3
Vibration 3D-4
Noise 3D-4
Component Locator 3D-5
Maintenance and Repair 3D-6
On-Vehicle Service 3D-6
Axle Shaft 3D-6
Axle 3D-9
Unit Repair 3D-11
Axle Housing 3D-11
LSD (Limited Slip Diffrential) 3D-16

SPECIFICATIONS

GENERAL SPECIFICATIONS

Application			Description
Axle Shaft Type			Semi - floating
Axle Housing Type			Salibury (Build-up)
Differential		Type	Conventional Type
		Gear	Hypoid Gear
Reduction Ratio	661NA	M/T	4.55
	662NA	M/T	4.55
		A/T (MB)	3.73
	661LA	M/T	4.55
		A/T (BTRA)	5.38
	662LA	M/T	4.27
		A/T (BTRA)	4.89

Downloaded from www.Manualslib.com manuals search engine

GENERAL SPECIFICATIONS(Cont'd)

Application			Description
Reduction Ratio	E20	M/T	4.89
		A/T (MB)	4.55
	E23	M/T	4.55
		A/T (MB)	4.55
		A/T (BTRA)	5.86
	E32	M/T	3.73
		A/T (MB)	3.73
		A/T (BTRA)	4.89
Oil Capacity			1.9 L
Oil Specification			SEA 80W/90, API GL - 5

FASTENER TIGHTENING SPECIFICATIONS

Application	N·m
Inner Bracket Mounting Nut	50 - 65
Propeller Shaft to Rear Axle Input Shaft	70 - 80
Lower Arm Mounting Nut	150 - 180
Lower Shock Absorber to Axle Housing	50 - 65
Upper Arm Mounting Nut	150 - 180
Stabilizer Bar Mounting Bolt	30 - 45
Lateral Rod Mounting Nut	150 - 180
Drive Pinion Lock Nut	240 - 310
Oil Drain Plug	28 - 42
Ring Gear Mounting Bolt	75 - 90
Oil Filler Plug	28 - 42

Downloaded from www.Manualslib.com manuals search engine

DIAGNOSIS

NOISE (DURING STRAIGHT DRIVING)

Checks	Action
Lack of Oil	Replenish
Low Viscosity of Oil	Replace
Insufficient Oil	Replace
Excessive Backlash of Ring Gear	Adjust
Worn or Damaged Tooth of Ring and Pinion Gear	Replace
Worn or Damaged Drive Pinion Bearing	Replace
Bent Axle Housing	Replace
Bent Differential Case	Replace
Worn Pinion Shaft	Replace
Incorrect Drive Pinion Preload	Adjust
Incorrect Contact of Ring Gear and Pinion	Retightening

OIL LEAKAGE

Checks	Action
Excessive Oil	Adjust
Faulty Seal of Carrier Contact Surface	Repair
Axle Housing Crack	Replace
Worn or Damaged Oil Seal	Replace

NOISE (DURING TURNING)

Checks	Action
Worn or Damaged Tooth of Pinion or Side Gear	Replace
Worn Pinion Shaft	Replace
Excessive Backlash of Pinion Gear and Side Gear	Replace
Excessive End-play of Rear Axle Shaft	Adjust
Incorrect Contact of Side Gear and Differential Case	Replace
Axle Housing Crack	Replace
Bent or Poor Installation of Drive Pinion Oil Seal	Replace
Damaged or Torn Drive Pinion Oil Seal	Replace
Loosened Bearing Collar	Replace
Worn or Damaged Universal Joint	Replace
Worn or Damaged Axle Shaft Bearing	Replace

HEATING

Checks	Action
Lack of Oil	Replenish
Insufficient Backlash of Gears	Adjust
Excessive Preload of Bearing	Adjust

Downloaded from www.Manualslib.com manuals search engine

VIBRATION

Checks	Action
Faulty Connection of Sliding Joint	Adjust
Bent Propeller Shaft	Replace
Symmetry of Universal Joint Snap Ring	Adjust
Loosened Yoke Bolts	Tighten

NOISE

Checks	Action
Worn or Damaged Universal Joint Bearing	Replace
Fallen Off Universal Joint Snap Ring	Adjust or Replace
Loosened Yoke Connection	Tighten
Worn Sliding Joint Spline	Replace
Insufficient Grease	Apply as Necessary

Downloaded from www.Manualslib.com manuals search engine

COMPONENT LOCATOR

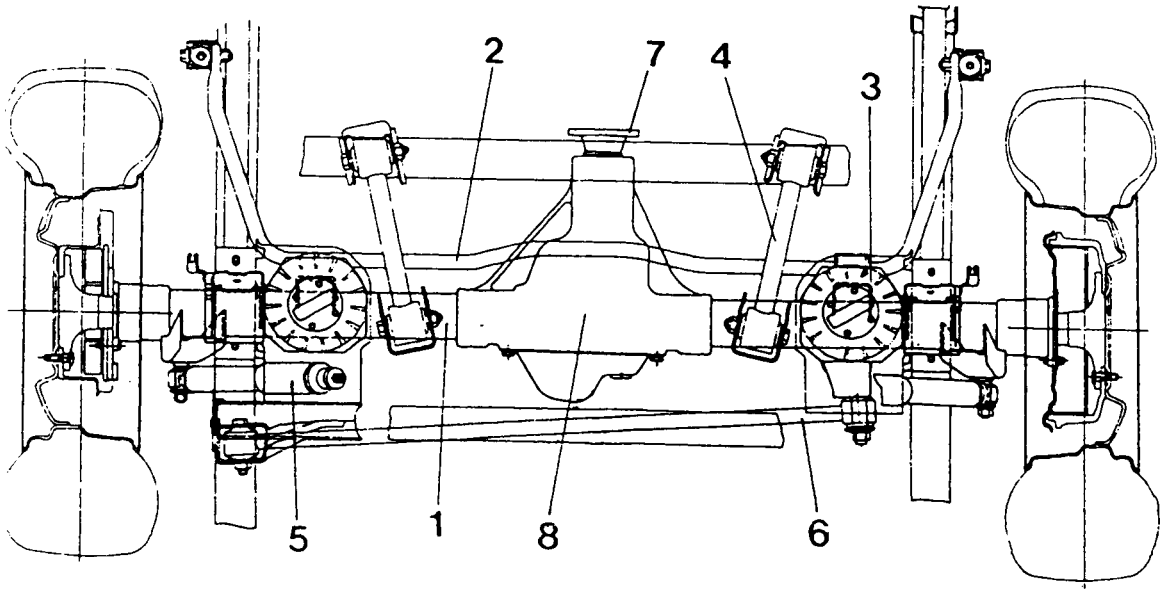

1 Spring Seat
2 Coil Spring
3 Lateral Rod
4 Shock Absorber
5 Upper Arm
6 Lower Arm
7 Connecting Link
8 Stabilizer Bar

Downloaded from www.Manualslib.com manuals search engine

MAINTENANCE AND REPAIR

ON-VEHICLE SERVICE

AXLE SHAFT

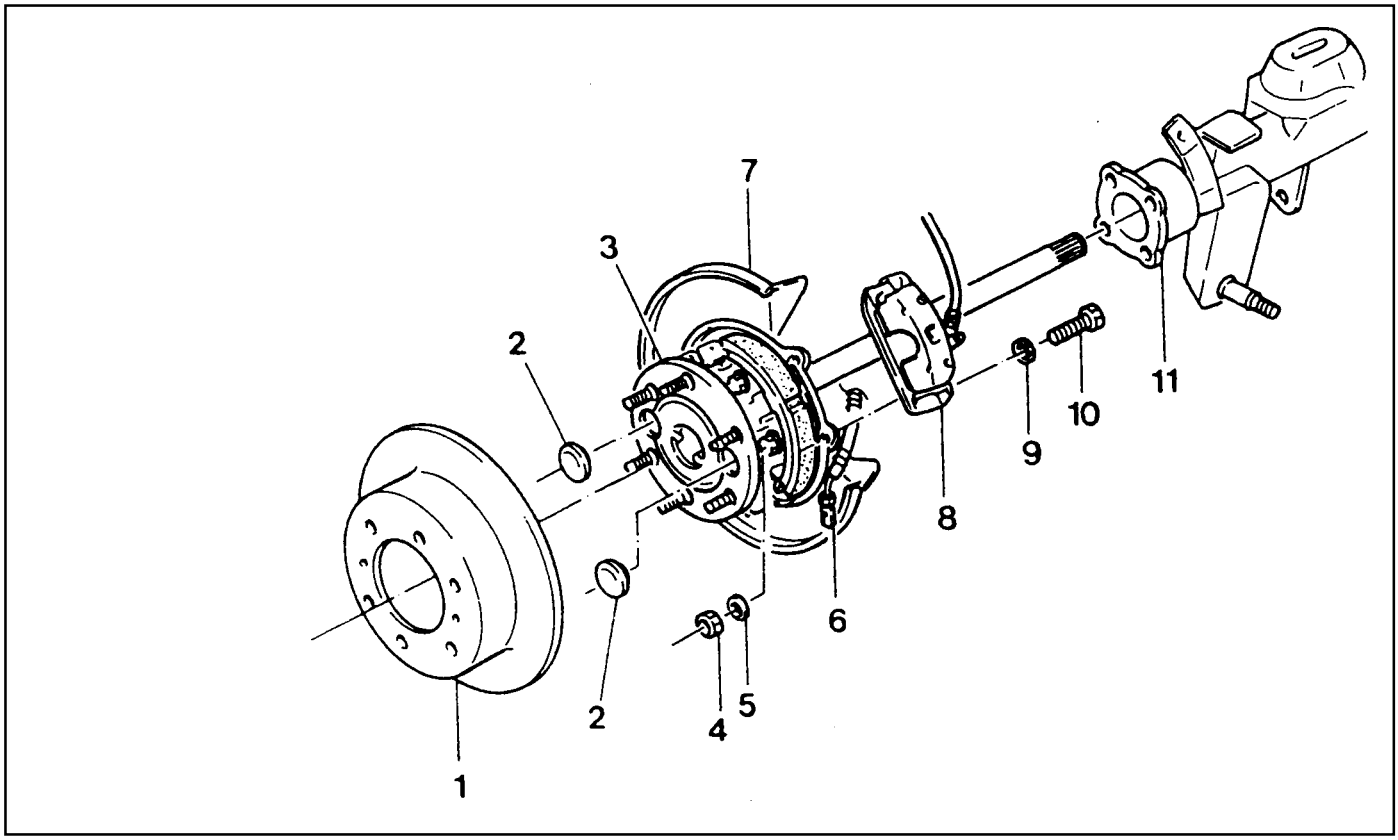

1 Brake Disc
2 Dust Plug
3 Rear Axle Shaft
4 Nut ..... 50-65 Nm
5 Washer
6 Parking Brake Cable
7 Parking Brake Lining and Back Plate Assembly
8 Caliper Assembly
9 Gasket
10 Bolt ..... 85-100 Nm
11 Rear Axle Housing

Downloaded from www.Manualslib.com manuals search engine

Removal & Installation Procedure

1. Remove the tire.

   Installation Notice

Tightening Torque	Steel Wheel	80 - 120 Nm
	Aluminum Wheel	110 - 130 Nm

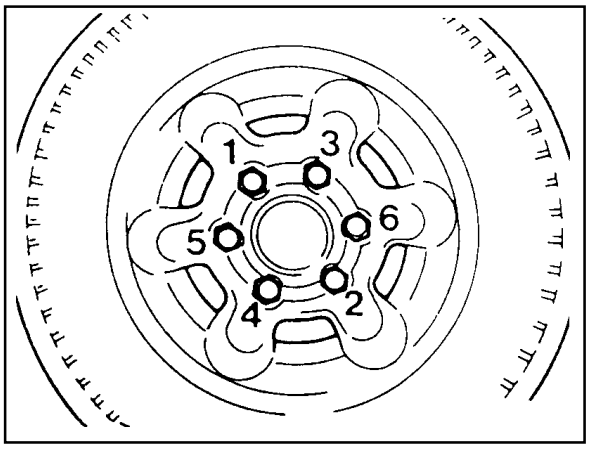

2. Release the parking brake.

3. Remove the bolts and the brake caliper.

   Installation Notice

   Be careful not to damage the brake hose.

Tightening Torque	85 - 100 Nm

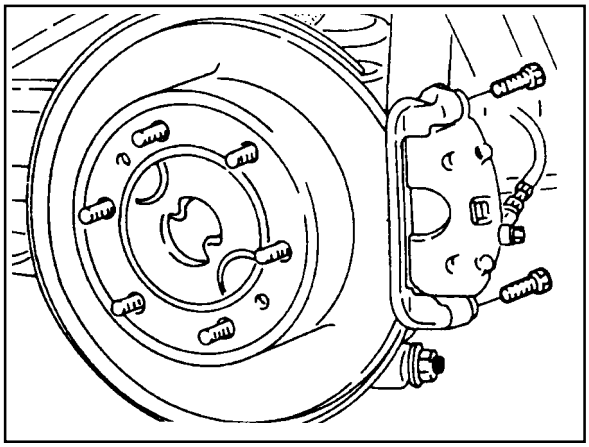

4. Remove the brake disc.

   Notice

   To remove the disc, install the bolts (M8 x 1.25) into the service hole and uniformly tighten the bolts.

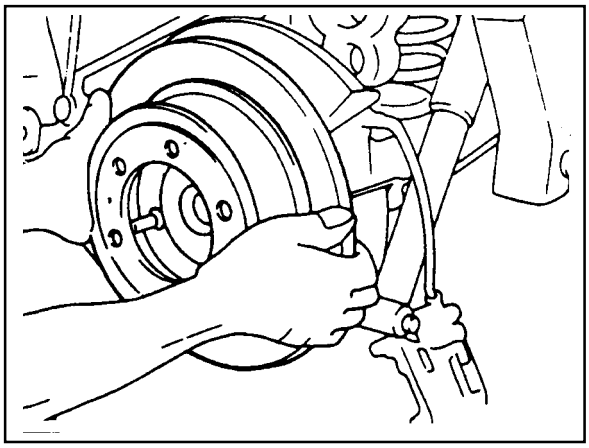

5. Disconnect the parking brake cable.

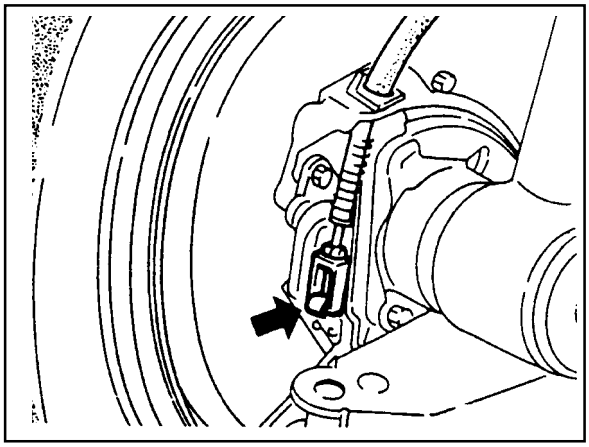

Downloaded from www.Manualslib.com manuals search engine

6. Remove the plug from the axle shaft flange and remove the inner shaft mounting nuts.

   Installation Notice

Tightening Torque	50 - 65 Nm

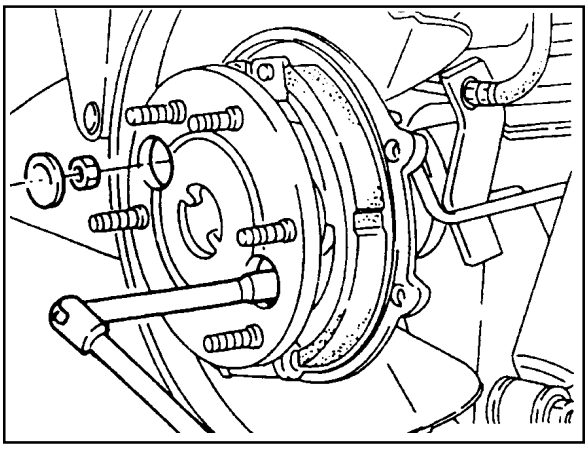

7. Remove the axle shaft, parking brake lining and back plate assembly.

8. Installation should follow the removal precedure in the reverse order.

Downloaded from www.Manualslib.com manuals search engine

AXLE

Removal & Installation Procedure

1. Lift up the vehicle and support the frame safely.
2. Remove the axle shaft.

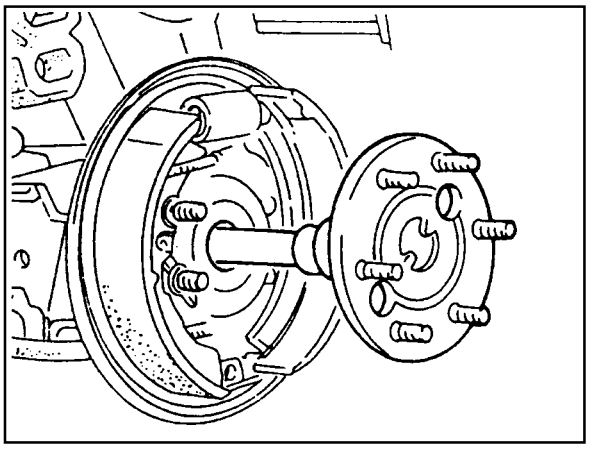

3. Remove the propeller shaft from the rear axle input shaft.

Installation Notice

Tightening Torque	81 - 89 Nm

Notice

Place alignment marks before removal.

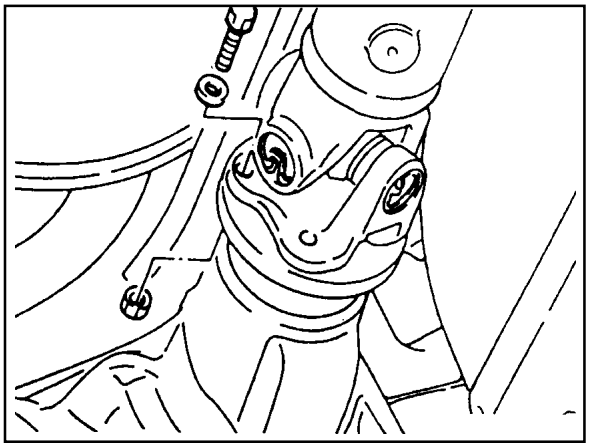

4. Disconnect the parking brake cable and brake hose.

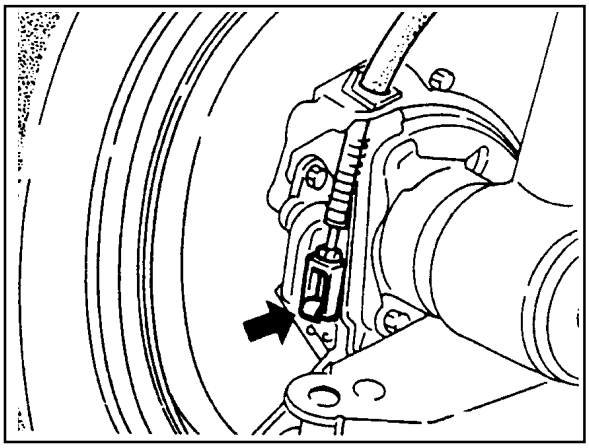

5. Remove the lower arm mounting nuts and remove the lower arm from the axle housing.

Installation Notice

Tightening Torque	150 - 180 Nm

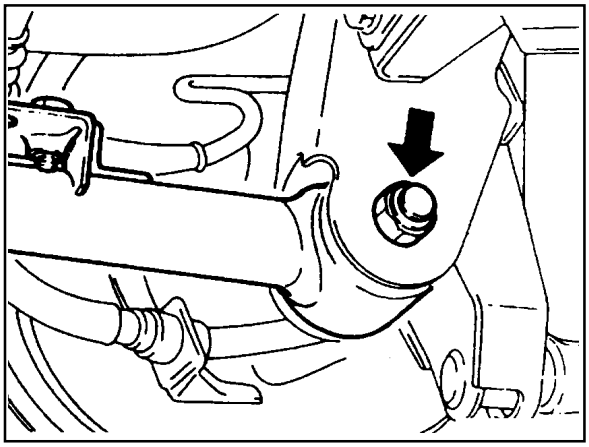

Downloaded from www.Manualslib.com manuals search engine

6. Separate the lower shock absorber from the axle housing.

Installation Notice

Tightening Torque	50 - 65 Nm

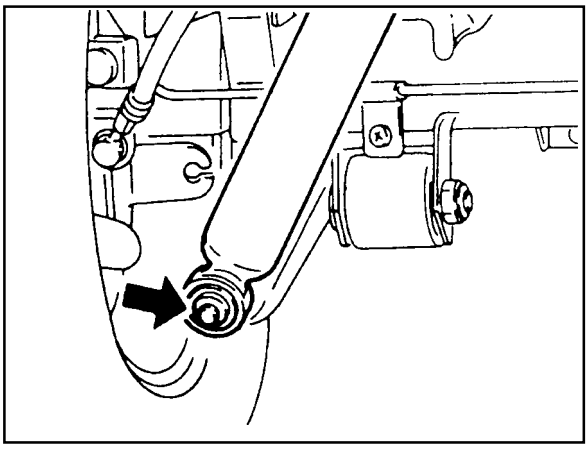

7. Remove the upper arm mounting nuts and remove the upper arm form the axle housing.

Installation Notice

Tightening Torque	150 - 180 Nm

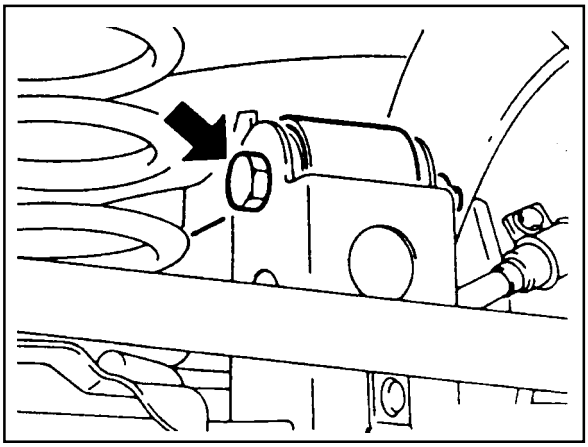

8. Remove the stabilizer bar.

Installation Notice

Tightening Torque	30 - 45 Nm

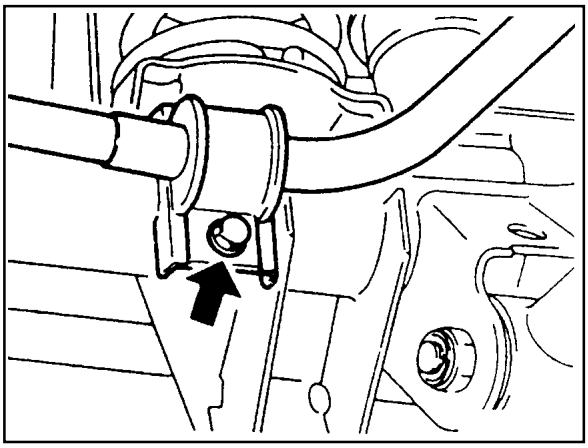

9. Remove the lateral rod mounting nuts and remove the lateral rod from the axle housing.

Installation Notice

Tightening Torque	150 - 180 Nm

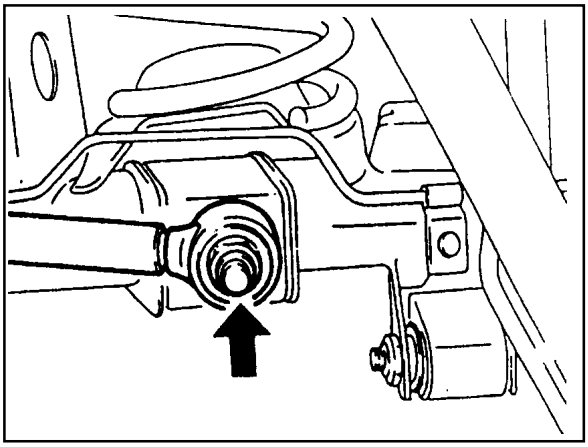

10. Lowering the axle housing slowly, remove the coil springs and spring seats.

11. Installation should follow the removal precedure in the reverse order.

Downloaded from www.Manualslib.com manuals search engine

UNIT REPAIR

AXLE HOUSING

Preceding Work : Removal of the axle shaft
Removal of the axle housing

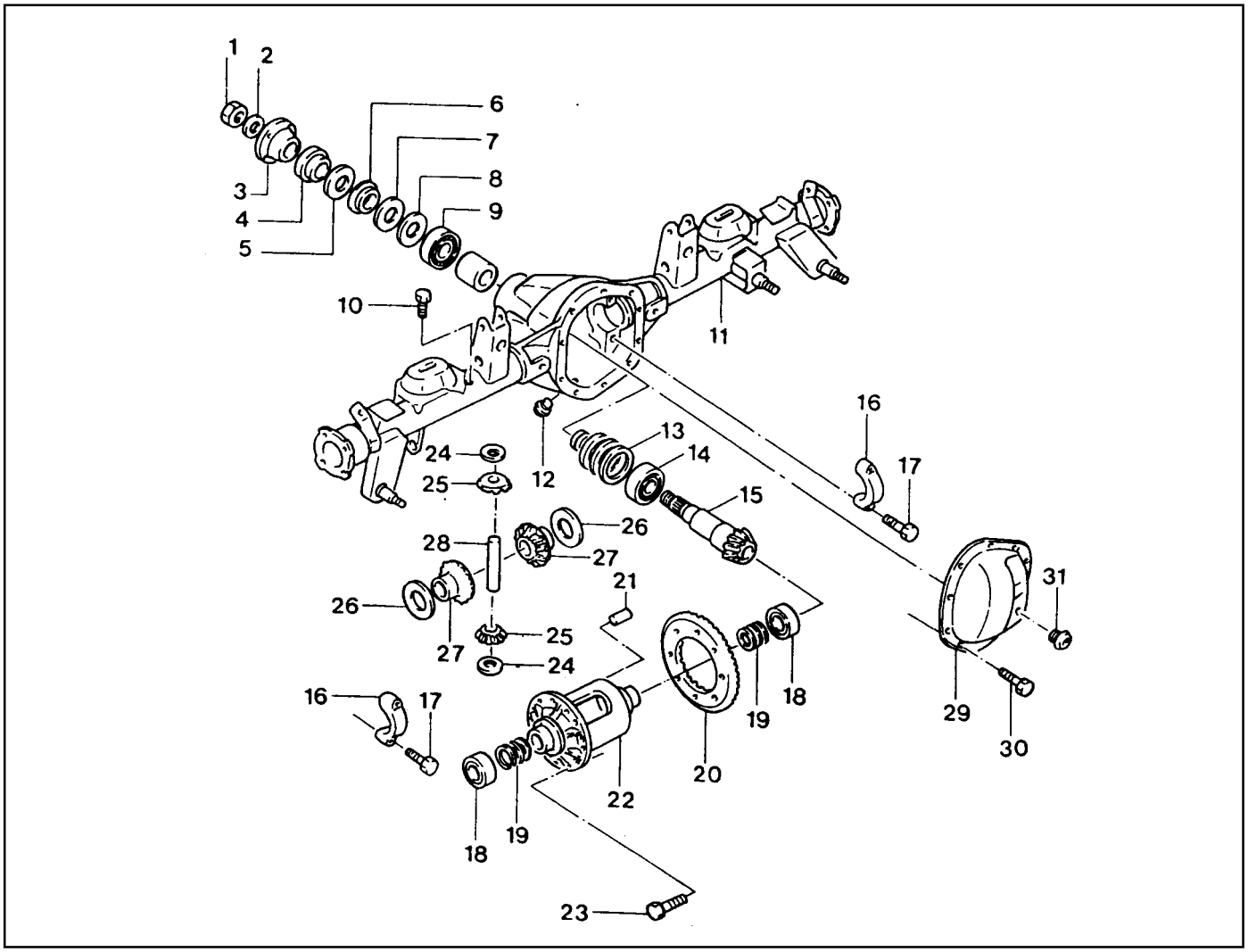

1 Drive Pinion Lock Nut ..... 240-310 Nm
2 Washer
3 Companion Flange
4 Pinion Oil Seal
5 Bearing Slinger
6 Bearing
7 Shim
8 Shim
9 Bearing Cup
10 Breather Nipple
11 Rear Axle Housing
12 Oil Drain Plug ..... 28-42 Nm
13 Shim
14 Bearing
15 Drive Pinion
16 Bearing Cap
17 Bolt ..... 87-124 Nm
18 Bearing
19 Shim
20 Ring Gear
21 Shaft Lock Pin
22 Differential Case
23 Ring Gear Mounting Bolt ..... 75-90 Nm
24 Thrust Washer
25 Differential Pinion
26 Thrust Washer
27 Side Gear
28 Differential Shaft
29 Housing Cover
30 Bolt ..... 38-46 Nm
31 Oil Filler Plug ..... 28-42 Nm

Downloaded from www.Manualslib.com manuals search engine

Disassembly Procedure

1. Remove the drain plug and drain the oil. Reinstall the drain plug.

Tightening Torque	28 - 42Nm

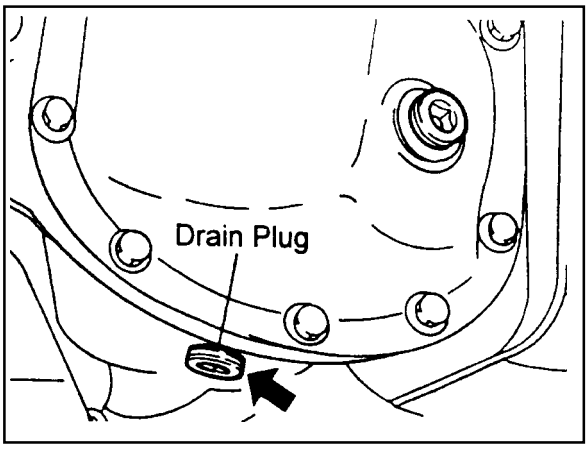

2. Remove the axle housing cover.

   Notice

   Clean the cover and housing contact surface.

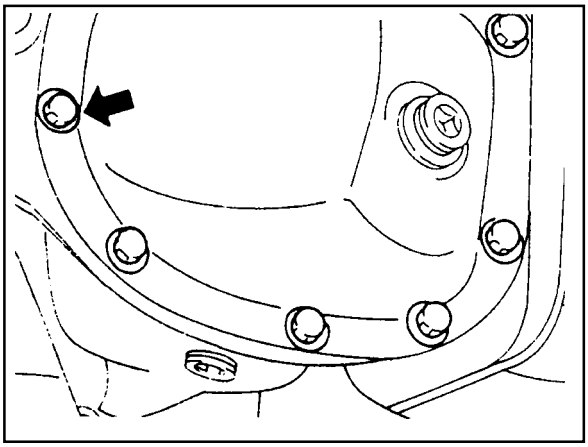

3. Remove the bearing cap bolts and remove the bearing caps. Pull out the differential carrier assembly.

   Notice

   Place alignment marks on the bearing cap not to change the caps before removal. When pulling out the differential carrier assembly, be careful not to damage the axle housing.

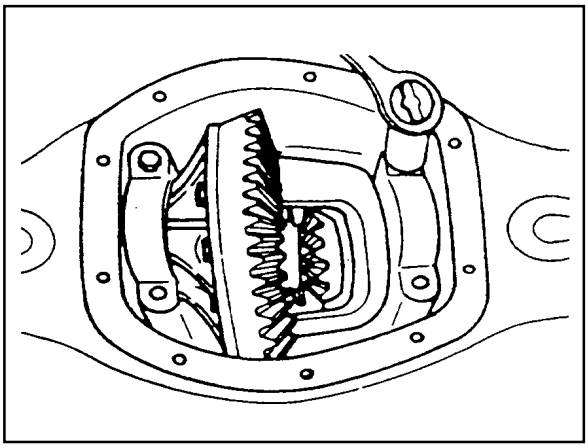

4. Disassemble the parts of the differential carrier assembly.

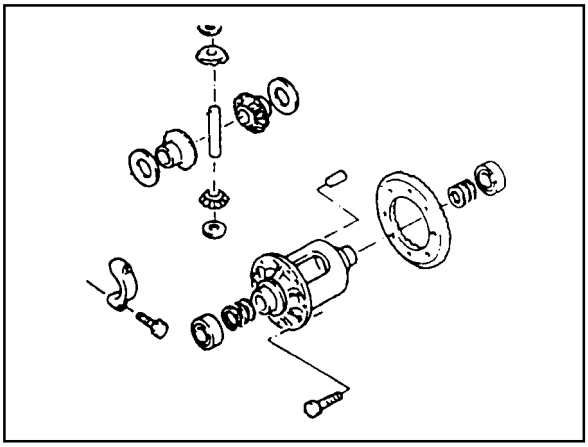

Downloaded from www.Manualslib.com manuals search engine

5. Remove the drive pinion lock nut. Disassemble the parts of the drive pinion.

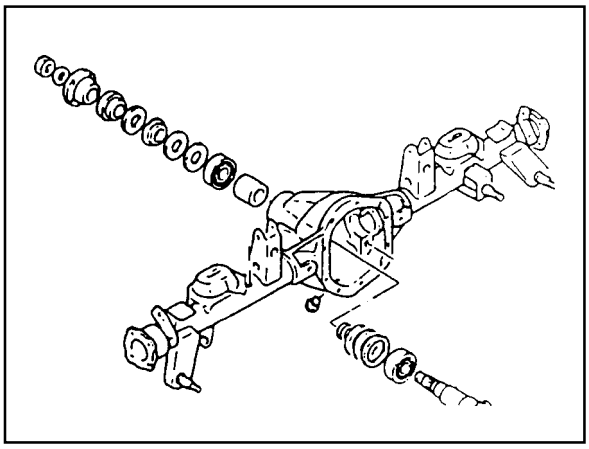

Assembly Procedure

1. Clean the all parts and check the followings.
   - Check the ring gear and drive pinion for wear or damage. If damaged, replace it as set.
   - Check the bearing for sticks, wear, noise or turning resistance.
   - Check the side gear, pinion, pinion shaft and thrust washer for wear or damage.
   - Check the differential carrier for crack or wear (bearing contact surface). Check the gear case for crack.

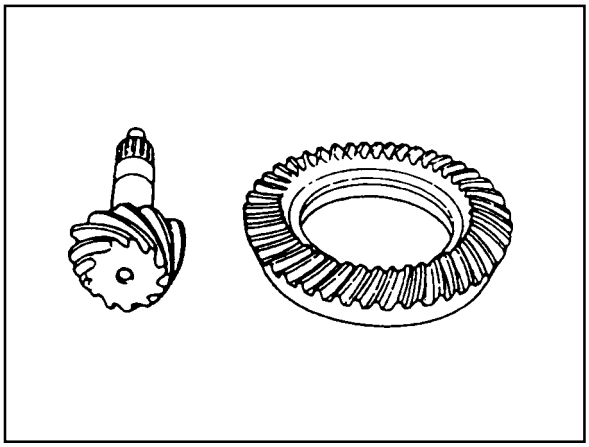

2. Assemble the parts of the drive pinion.

Tightening Torque of The Pinion Lock Nut	240 - 310 Nm

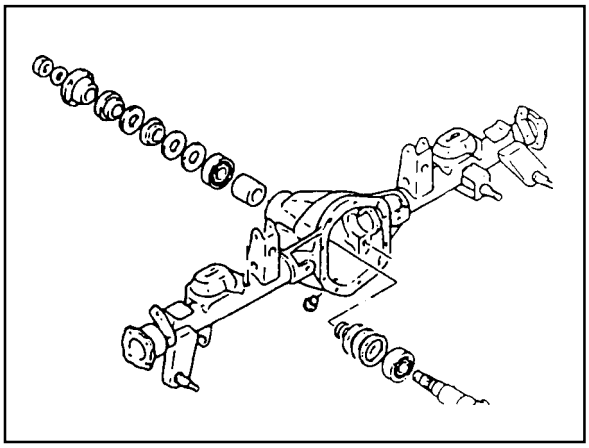

3. Assemble the parts of the differential carrier.

Tightening Torque of The Ring Gear Bolts	75 - 90 Nm

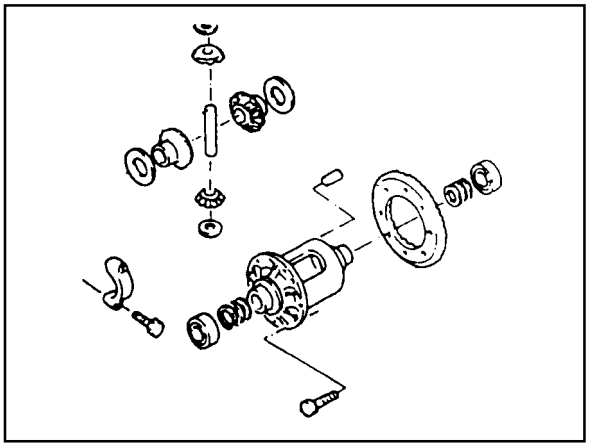

Downloaded from www.Manualslib.com manuals search engine

4. Measure backlash of the side gear and pinion gear.

Specified Value	0 - 0.05 mm

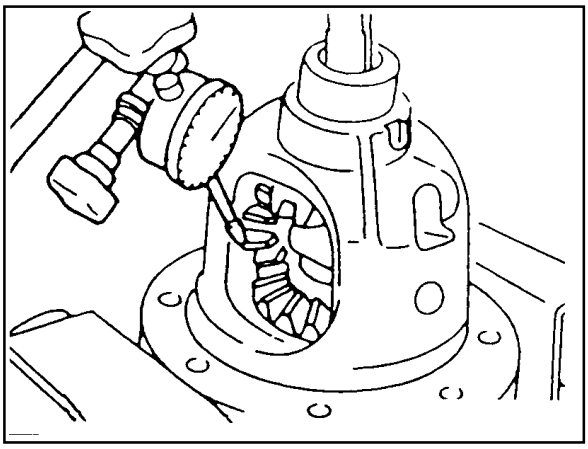

5. Install the differential carrier assembly into the axle housing.

Tightening Torque of The Bearing Cap Bolts	48 - 69 Nm

Notice

Be careful no to change the caps. Be sure to keep the original position of the caps.

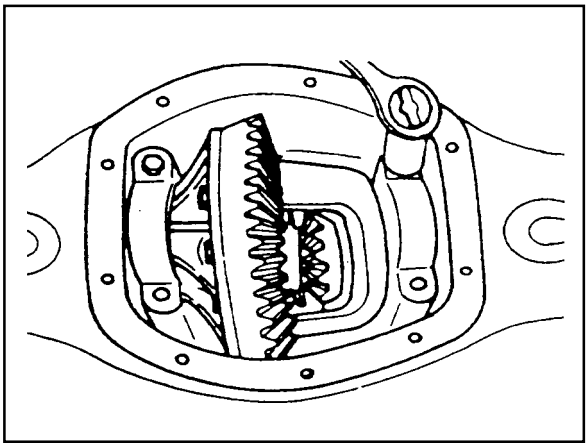

6. Measure backlash of the drive pinion and ring gear.

Specified Value	0.13 - 0.20 mm

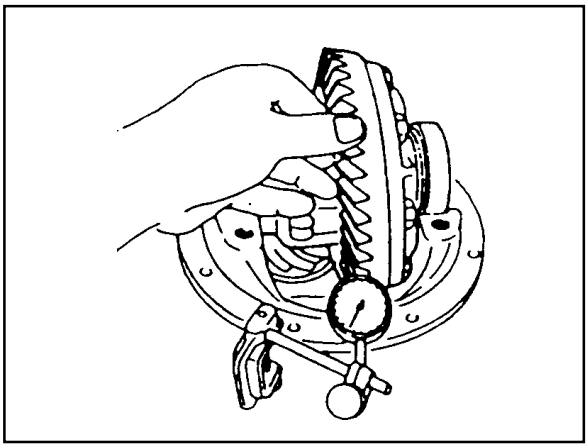

7. Install the axle housing cover.

Tightening Torque	39 - 46 Nm

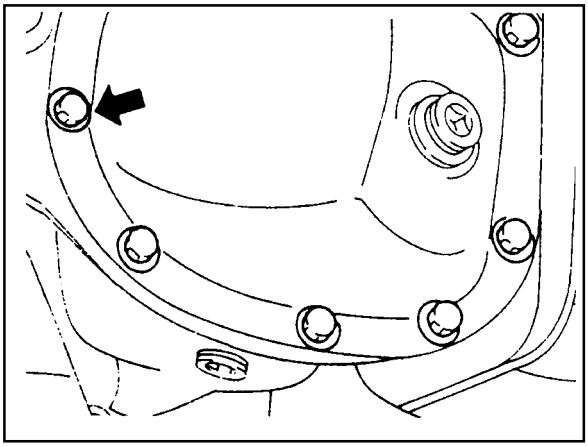

Downloaded from www.Manualslib.com manuals search engine

Inspection of Ring Gear Tooth Contact Pattern

Normal Contact

Apply gear-marking compound (prussian blue / red lead) on the ring gear teeth. Rotate the ring gear and check the tooth contact pattern.

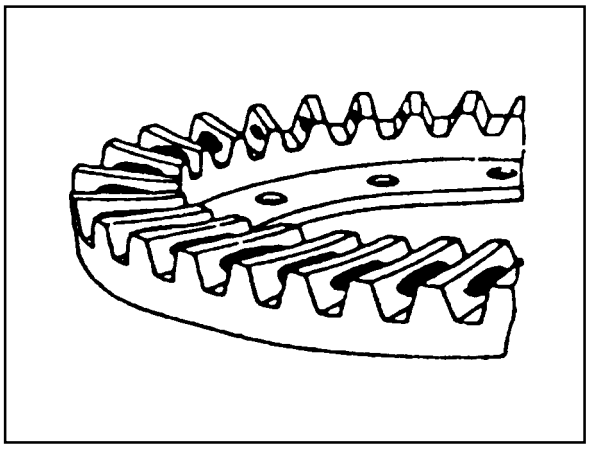

Abnormal Contact

Tooth Contact pattern	Possible Cause	Remedy
1. Heel Contact 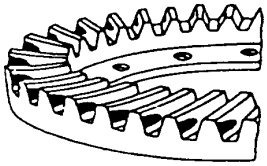	Excessive backlash (little) • Noise can be occurred	Adjust backlash(Decrease backlash) • Select proper shim(s) to move the drive pinion toward the ring gear (toward toe)
2. Toe Contact 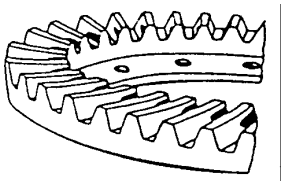	Insufficient backlash (little) • Tooth can be damaged or broken under heavy load	Adjust backlash(Increase backlash) • Select proper shim(s) to move the drive pinion against the ring gear (toward heel) 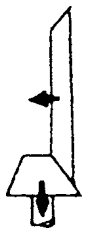
3. Face Contact 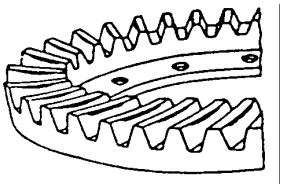	Excessive backlash (much) • Drive pinion shaft is apart from the ring gear • Noise can be occurred	Adjust backlash(Increase pinion shim) • Move the drive pinion toward the ring gear (toward center of ring gear)
4. Flank Contact 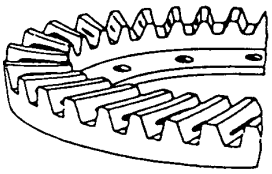	Insufficient backlash (much) • Gear contacts on the low flank • Gear can be damaged or worn • Noise can be occurred	Adjust backlash(Decrease pinion shim) • Move the ring gear toward the drive pinion (toward ring gear center line) 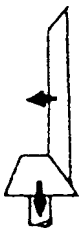

Downloaded from www.Manualslib.com manuals search engine

LSD (LIMITED SLIP DIFFERENTIAL)

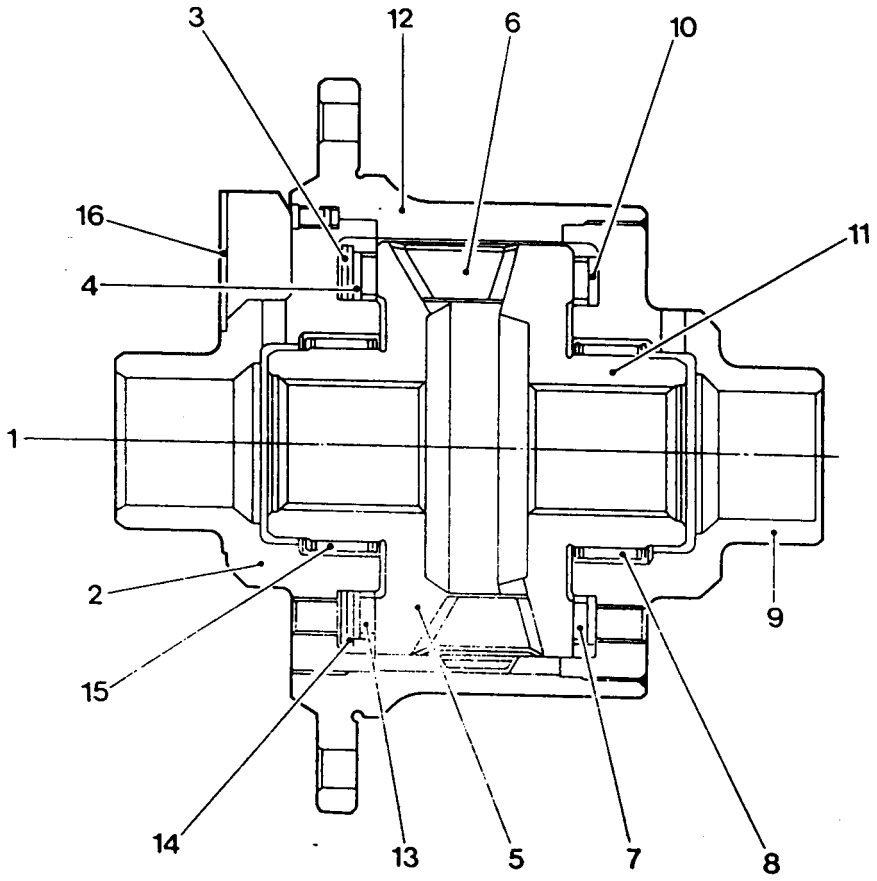

1 Limited Slip Differential Assembly
2 Shaft, Hub (Left)
3 Shim
4 Thrust Washer
5 Face Cam (Left)
6 Cam Whillom
7 Thrust Bearing
8 Radial Bearing
9 Shaft, Hub (Right)
10 Thrust Washer
11 Face Cam (Right)
12 Cage
13 Thrust Bearing
14 Plate Spring
15 Radial Bearing
16 Oil Catcher

Downloaded from www.Manualslib.com manuals search engine

Inspection

- Remove the LSD assembly and check the pre-load torque.
- If necessary, replace LSD assembly.

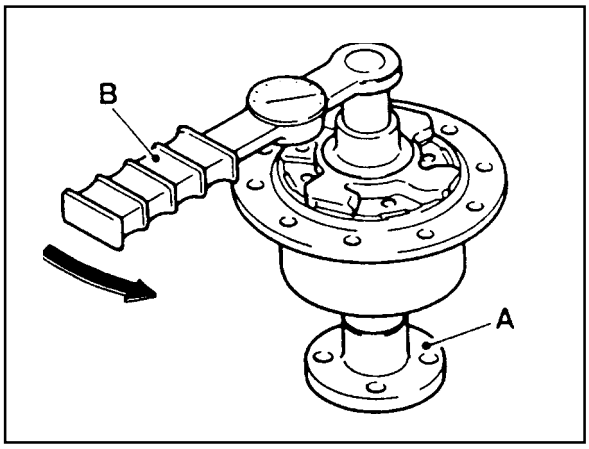

Procedure

1. Fix the right shaft of LSD to the special tool (A).
2. Install the special tool (B) to the left shaft and rotate counterclockwise and check the pre-load torque.

Normal Torque	3.6 - 9.0kgm

Notice

If necessary, replace LSD assembly.

Downloaded from www.Manualslib.com manuals search engine

SECTION 4A

HYDRAULIC BRAKES

Caution: Disconnect the negative battery cable before removing or installing any electrical unit or when a tool or equipment could easily come in contact with exposed electrical terminals. Disconnecting this cable will help prevent personal injury and damage to the vehicle. The ignition must also be in LOCK unless otherwise noted.

TABLE OF CONTENTS

Specifications 4A-1
General Specifications 4A-1
Diagnosis 4A-2
Noise or Vehicle Vibration When Applied Brake 4A-2
Pulls to One Side When Braking 4A-2
Poor Braking 4A-2
Increasing Pedal Stroke (Pedal Goes to Floor) or Brake Dragging 4A-3
Poor Braking of Parking Brake 4A-3
Component Locator 4A-4
ABS 4A-4
ABS / ABD 4A-5
Non-ABS / ABD 4A-6
Maintenance and Repair 4A-7
On-Vehicle Service 4A-7
Bleeding the Brakes 4A-7
Brake Pedal 4A-9
LCRV (Load Conscious Reducing Valve) . . . 4A-12

SPECIFICATIONS

GENERAL SPECIFICATIONS

Application		MANDO Brake	PBR Brake
Brake Pedal	Type	Suspended	
	Pedal Ratio	4.3 : 1	4.3 : 1
	Pedal Stroke	138 mm	132 mm
	Pedal Freeplay	1 - 4 mm	
Master Cylinder	Type	Tandem Type with Lever Sensor	
	Inner Diameter	f25.4 mm	f23.81 mm
Brake Booster	Type	Vacuum Booster Type	
	Ratio	5.6 : 1	5.0 : 1
Front Brake	Type	Ventilated Disc	
	I.D. of Caliper Cylinder	f60 mm	f60.4 mm
	Thickness of Brake Pad	10 mm	
	Thickness of Disc Plate	24 mm	
Rear Brake	Type	Solid Disc	¬
	I.D. of caliper Cylinder	f38.2 mm	f40.5 mm
	Thickness of Brake Pad	10.0 mm	9.5 mm
	Thickness of Disc Plate	10.4 mm	¬
Parking Brake	Type	Rear Wheel Internal Expansion Type	
	Operation	Mechanical	
Brake Fluid	Specification	SAE J1703, DOT3	

Downloaded from www.Manualslib.com manuals search engine

DIAGNOSIS

NOISE OR VEHICLE VIBRATION WHEN APPLIED BRAKE

Check	Action
Incorrectly Mounted Back Plate or Caliper	Repair
Loosened Bolt of Back Plate or Caliper	Retighten
Crack or Uneven Wear of Brake Drum or Disc	Replace
Pad or Lining Sticking to Contact Surface	Replace
Excessive Clearance Between Caliper and Pad	Repair
Uneven Contact of Pad	Repair
Lack of Lubrication	Lubricate
Loosened Suspension	Retighten

PULLS TO ONE SIDE WHEN BRAKING

Check	Action
Incorrect Tire Pressure Between Left and Right	Adjust
Poor Contact of Pad or Lining	Repair
Oil or Grease is Applied to Pad or Lining	Replace
Bent or Uneven Wear of Drum	Replace
Incorrectly Mounted Wheel Cylinder	Repair
Faulty Auto Adjuster	Replace

POOR BRAKING

Check	Action
Dirty or Lack of Fluid	Replenish or Replace(Check Eventual Leakage)
Air in Brake System	Bleeding
Faulty Brake Booster	Replace
Poor Contact of Pad or Lining	Repair
Oil or Grease on Pad	Replace
Faulty Auto Adjuster	Replace
Over Heated Rotor Due to Dragging Pad or Lining	Repair
Clogging Brake Line	Repair
Faulty Proportioning Valve	Repair (If Low cut-in : Adjust) (If Leakage : Replace)

Downloaded from www.Manualslib.com manuals search engine

INCREASING PEDAL STROKE (PEDAL GOES TO FLOOR) OR BRAKE DRAGGING

Check	Action
Air in Brake system	Bleeding
Fluid Leaking	Repair
Excessive Clearance Between Push Rod and M/cylinder	Adjust
Parking Brake is not Fully Released	Repair
Incorrect Adjustment of Parking Brake	Adjust
Weak Return Spring of Brake Pedal	Replace
Incorrect Pedal Freeplay	Repair
Broken Rear Drum Brake Shoe Return Spring	Replace
Lack of Lubrication	lubricate
Damaged Master Cylinder Check Valve or Piston Return Spring	Replace

POOR BRAKING OF PARKING BRAKE

Check	Action
Insufficient Clearance Between Push Rod and Master Cylinder	Adjust
Worn Brake Lining	Replace
Oil or Grease on Lining	Replace
Binding Parking Brake Cable	Replace
Faulty Auto Adjuster	Replace
Excessive Lever Stroke	Adjust or Check Cable

Downloaded from www.Manualslib.com manuals search engine

COMPONENT LOCATOR

ABS

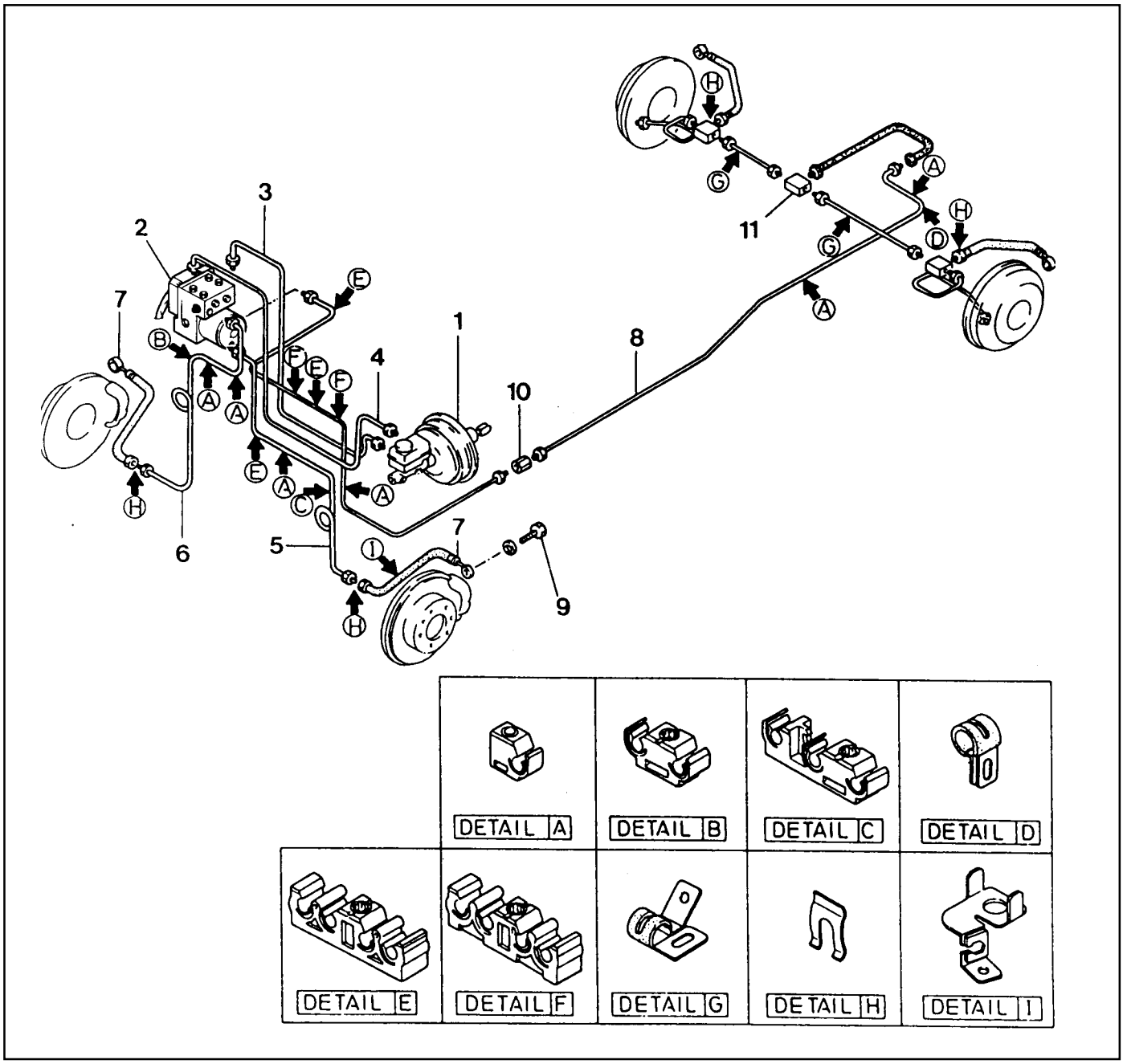

1 Actuation Assembly (Booster + TMC)
2 ABS Control Unit
3 Master Cylinder 2nd Tube (Secondary)
4 Master Cylinder 1st Tube (Primary)
5 Front Tube (LH)
6 Front Tube (RH)
7 Brake Hose
8 Rear Tube
9 Bolt ..... 25-35 Nm
10 2-way Connector
11 3-way Connector

Downloaded from www.Manualslib.com manuals search engine

ABS / ABD

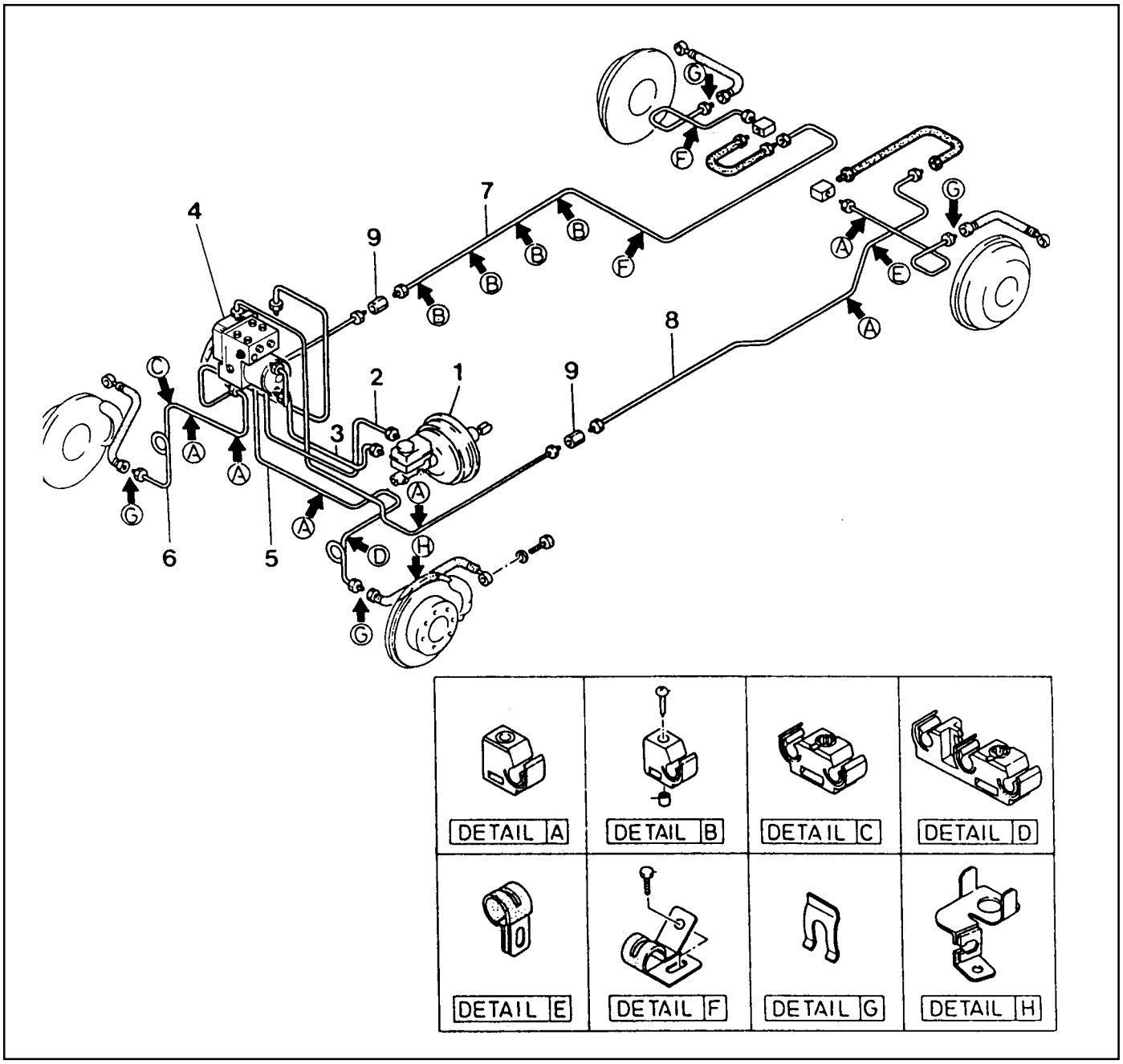

1 Actuation Assembly (Booster + TMC)
2 Master Cylinder 1st Tube (Primary)
3 Master Cylinder 2nd Tube (Secondary)
4 Hydraulic Modulator
5 Front Tube (LH)
6 Front Tube (RH)
7 Rear Tube (RH)
8 Rear Tube (LH)
9 2-way Connector

Downloaded from www.Manualslib.com manuals search engine

NON-ABS/ABD

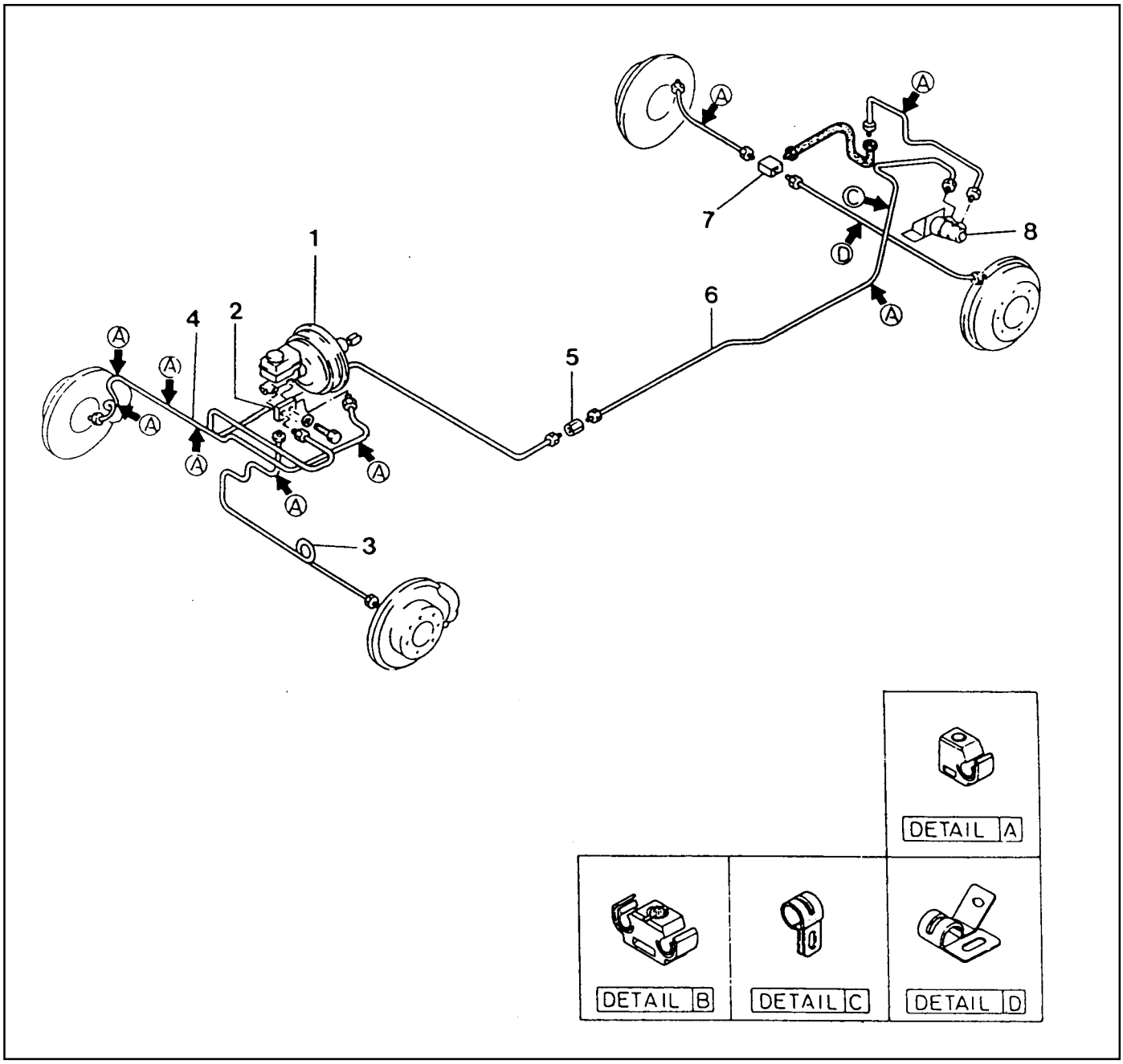

1 Actuation Assembly (Booster + TMC)
2 3-way Connector
3 Front Tube (LH)
4 Front Tube (RH)
5 2-way Connector
6 Rear Tube
7 3-way Connector
8 LCRV

Downloaded from www.Manualslib.com manuals search engine

MAINTENANCE AND REPAIR

ON-VEHICLE SERVICE

BLEEDING THE BRAKES

For Master Cylinder Replacement

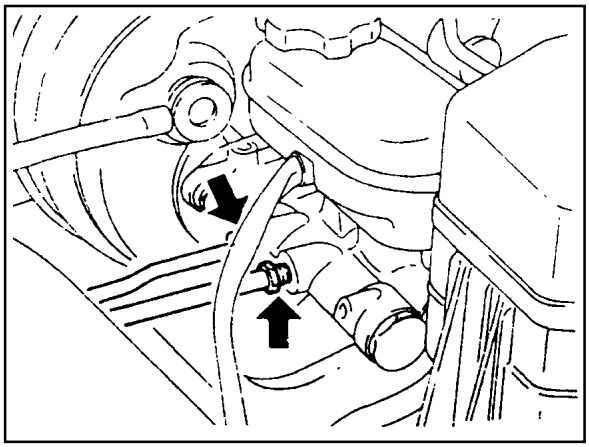

1. Add oil after master cylinder replacement.
2. Run the engine and depress the brake pedal several times to build pressure and then keep the pedal fully depressed.
3. Loosen the screws of primary and secondary pipe at the master cylinder outlets to bleed air.
4. Repeat above step No.3 several times until there are no more air bubbles.
5. Bleed air in the system at the hydraulic unit outlet pipe and wheel if pressure building is not enough by depressing the pedal only after above air bleeding.

For Caliper and Brake Hose Replacement

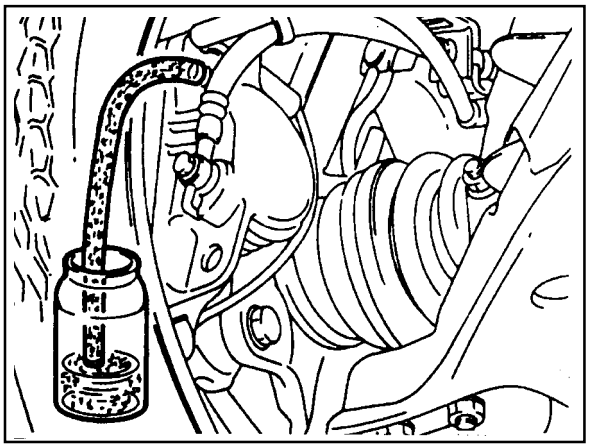

1. Check the oil level from the oil reservoir and refill if necessary.
2. Run the engine and depress the pedal several times to build pressure and then keep the pedal fully depressed.
3. Connect a vinyl tube to the caliper breather and prepare a container to coentain brake oil.
4. Loosen the breather screw until there are no more bubbles.
5. Bleed air in the system at four (4) wheels in order as shown in right figure if pressure building is not enough by depressing the pedal after above air bleeding.

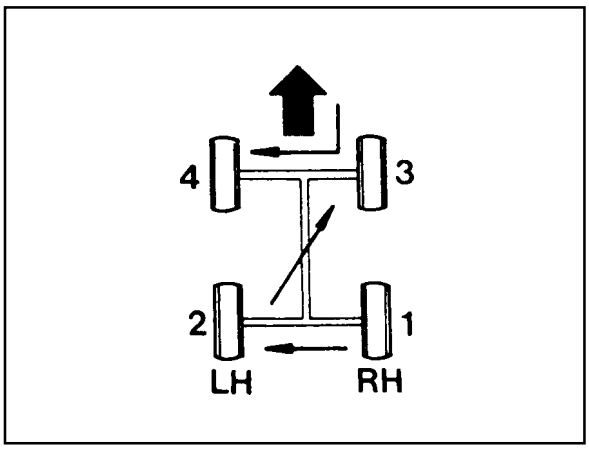

Downloaded from www.Manualslib.com manuals search engine

For Hydraulic Unit Replacement

1. Add oil after hydraulic unit replacement.
2. Run the engine and depress the pedal several times to build pressure and then keep the pedal fully depressed.

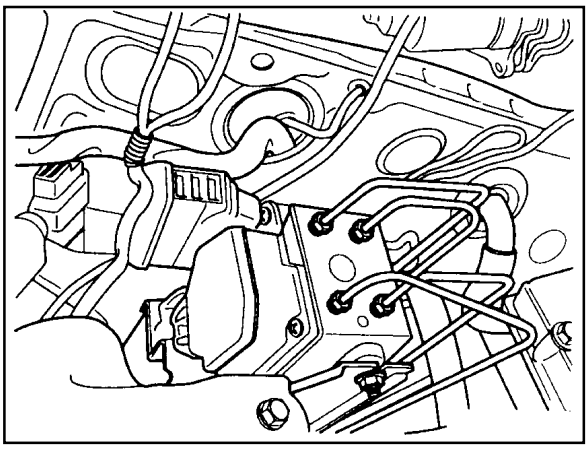

3. Loosen hydraulic pipe screws at the hydraulic unit outlets to bleed air.
4. Repeat above step No.3 several times until there are no more air bubbles.
5. Bleed air in the system from the wheels if pressure building is not enough by pressing the pedal only after above air bleeding.

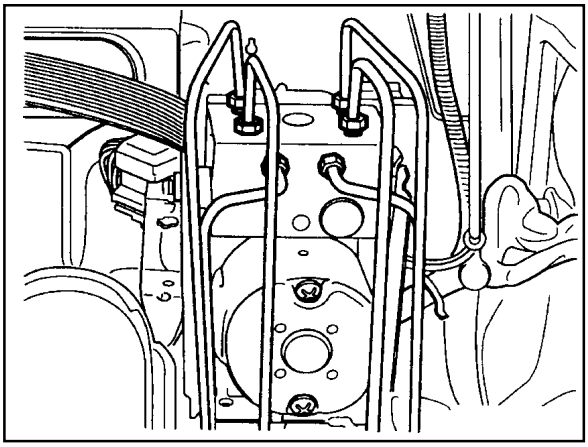

Downloaded from www.Manualslib.com manuals search engine

BRAKE PEDAL

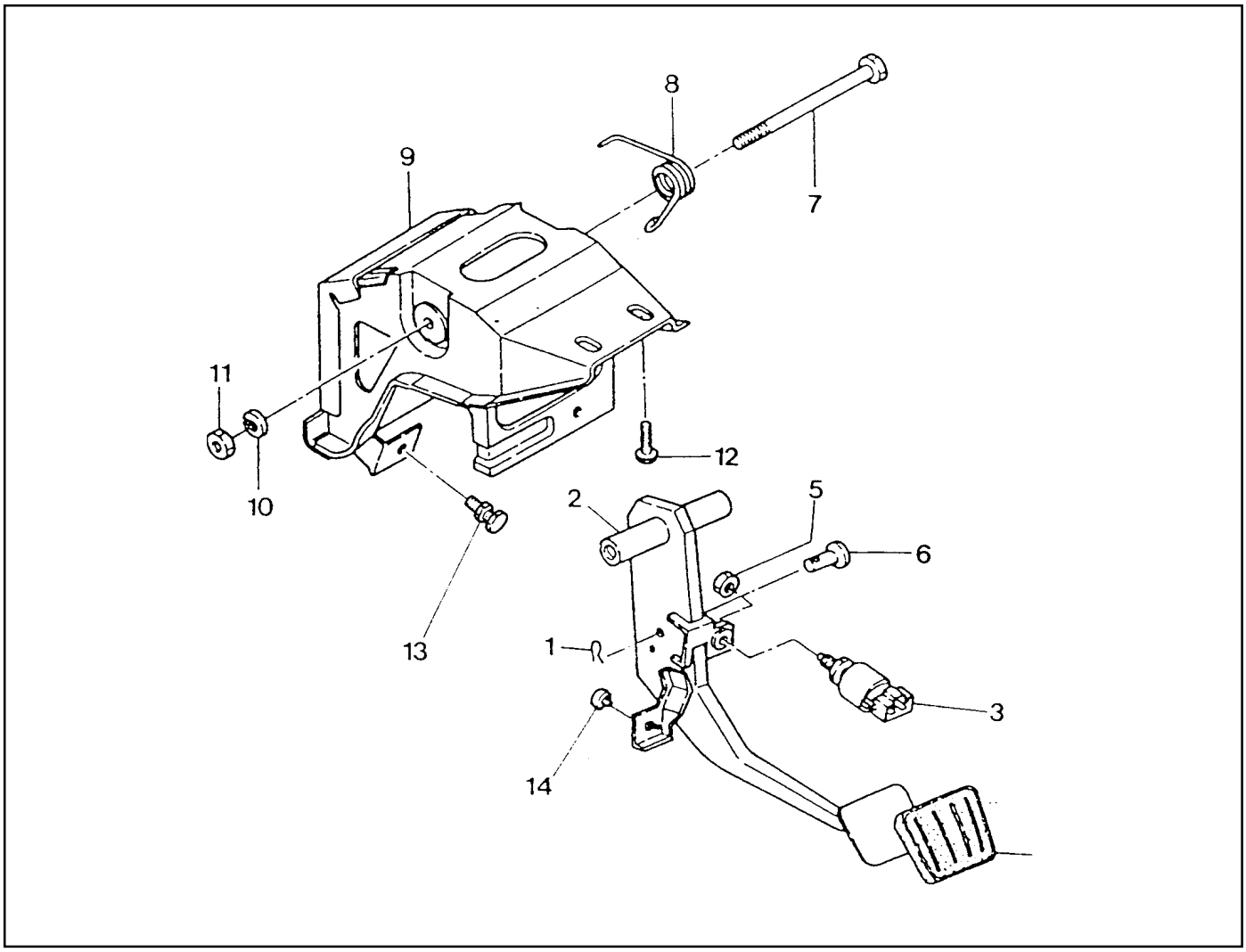

1 Clevis Pin
2 Brake Pedal
3 Stop Lamp Switch
4 Pad
5 Nut ..... 21-35 Nm
6 Yoke Pin
7 Fulcrum Pin
8 Return Spring
9 Pedal Mounting Bracket
10 Washer
11 Nut ..... 16-32 Nm
12 Bolt ..... 8-18 Nm
13 Stopper Bolt ..... Adjust
14 Rubber Pad ..... Replace

Downloaded from www.Manualslib.com manuals search engine

Removal & Installation Procedure

1. Remove the stop lamp switch connector.

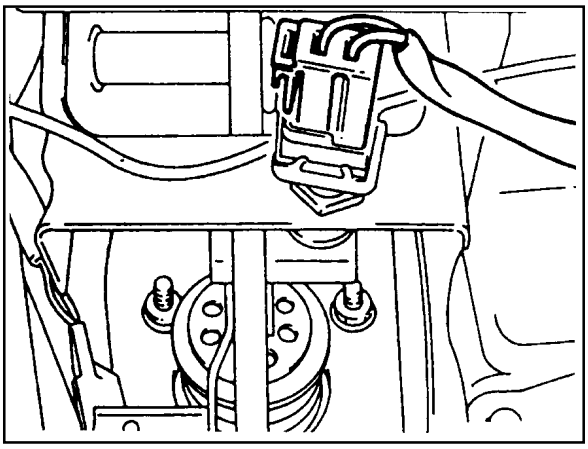

2. Remove the clevis pin and disconnect the brake booster push rod.

   Notice

   - Install in the upper hole (1), in case of Mando brake and in the below hole (2), incase of PBR brake.
   - Install the snap pin fully in the hole of clevis pin.
   - Apply the grease around the hole of clevis pin.

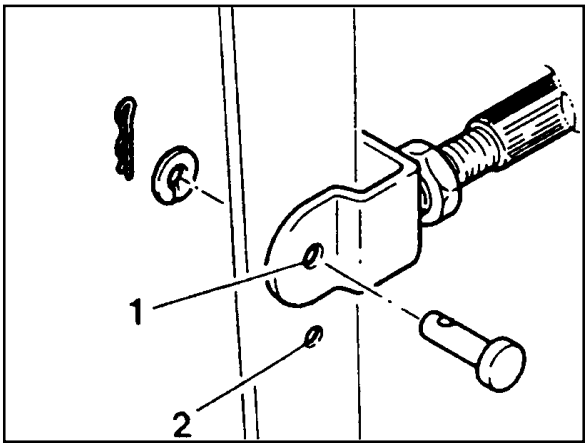

3. Loosen the nut (4EA) and bolt (2EA) and remove the brake pedal.
4. Installation should follow the removal procedure in the reverse order.

Tightening Torque	8 - 18 Nm

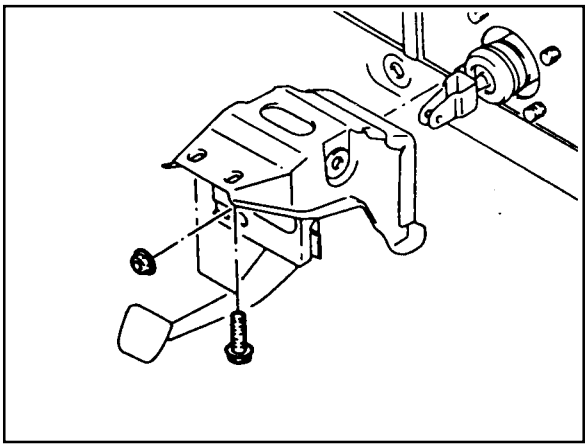

Downloaded from www.Manualslib.com manuals search engine

Adjustment Procedure

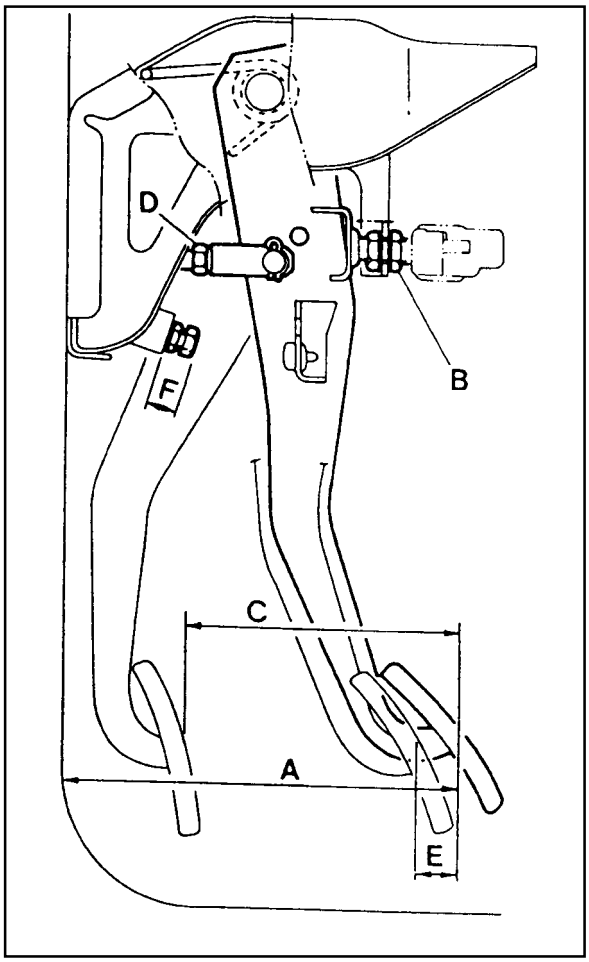

1. Pedal Height

Height (A)	150 mm (From the carpet)

Notice

If pedal height is not in specified value, loosen the stop lamp nut (B) and adjust the pedal height.

2. Pedal Stroke

Stroke (C)	Mando : 138 mm
	PBR : 132 mm

Notice

If pedal stroke is not in specified value, loosen the stop bolt and lock nut (F) and adjust the pedal stroke.

3. Free Play

Free Play (E)	1 - 4 mm

Notice

To adjust, depress the brake pedal several times until there is no more vacuum left in the vacuum line.

To adjust, loosen the lock nut (D) of the push rod and turn the rod.

Inspection Procedure

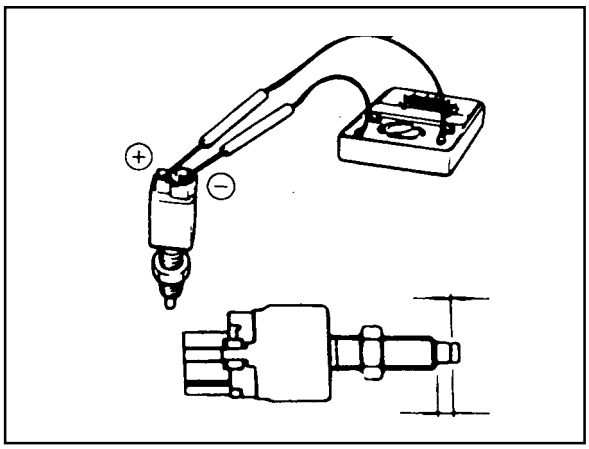

1. Inspect the wear of bushing.
2. Inspect the warp and bend of brake pedal.
3. Inspect the return spring of brake pedal.
4. Inspect the conductivity when connecting the tester to the stop lamp switch connector.

Downloaded from www.Manualslib.com manuals search engine

LCRV (LOAD CONSCIOUS REDUCING VALVE)

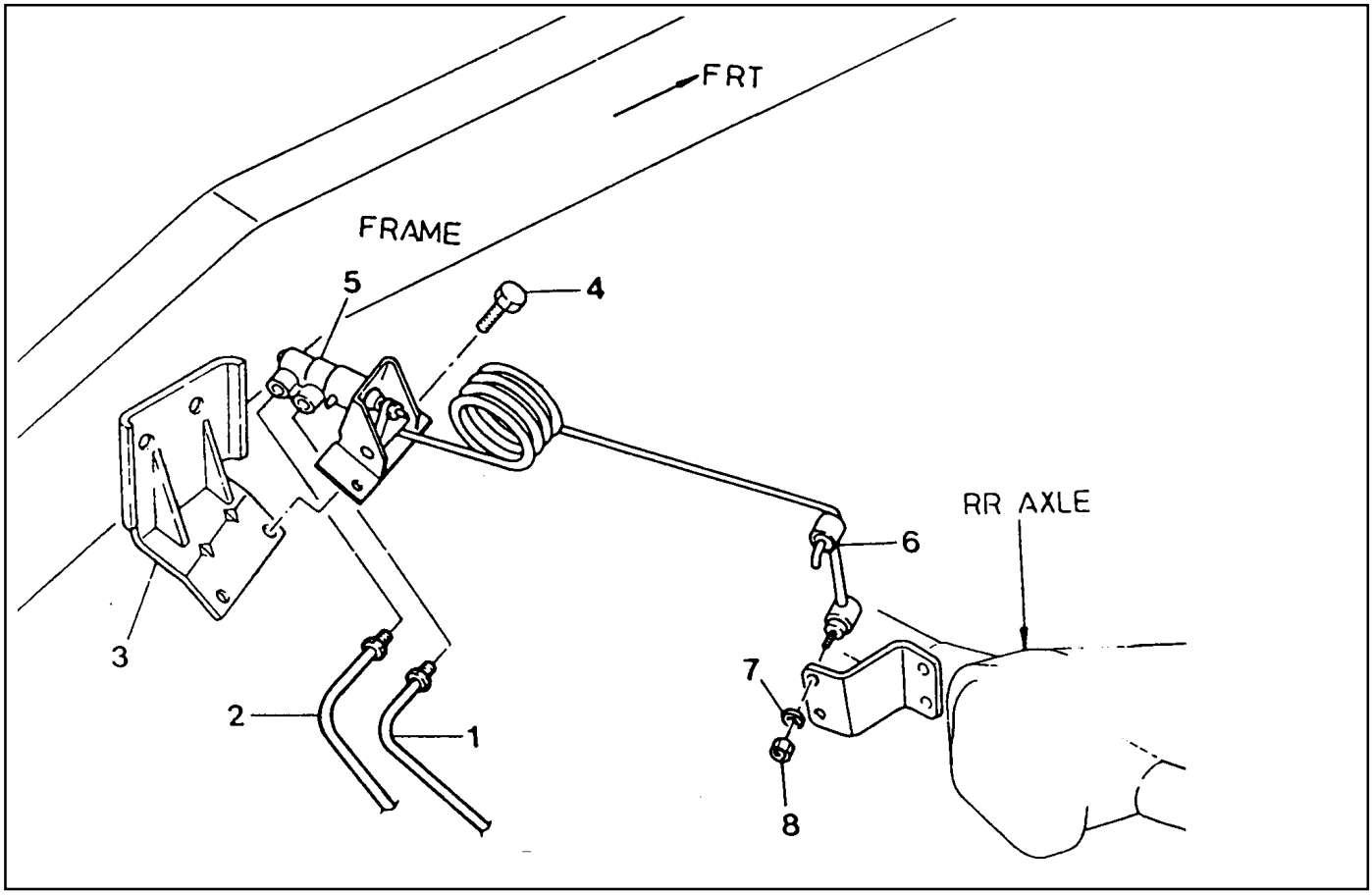

1 Brake Tube (from the master cylinder)
2 Brake Tube (from the rear brake)
3 LCRV Bracket
4 Bolt ..... 12 Nm
5 LCRV Assembly
6 Connecting Link
7 Spring Washer
8 Nut ..... 14-18 Nm

Downloaded from www.Manualslib.com manuals search engine

Construction

LCRV consists of sensing part and hydraulic control part.

1. Sensing Part

   It detects the changes of vehicle height caused by vehicle load. It consists of load sensing spring and control lever which change according to vehicle load.

2. Hydraulic Control Part

   It consists of valve stem devices which controls hydraulic pressure according to load detected by sensing part.

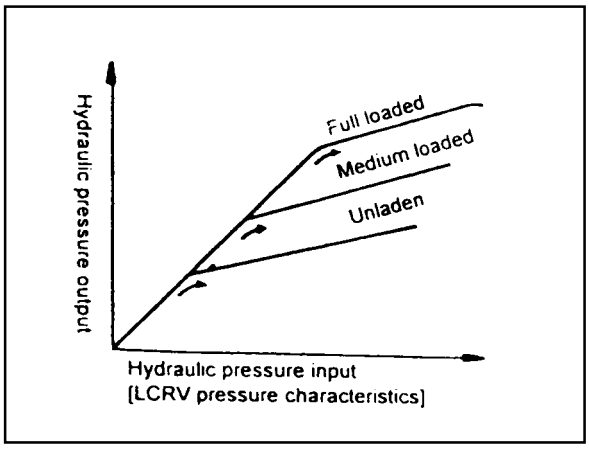

Trouble Shooting

Poor Braking

Possible Cause	Remedy
Air in Brake System	Bleeding
Poor Adjustment of Sensor Spring	Adjust
Damaged Sensor Spring	Replace
Fluid Leaking from LCRV	Replace

Abnormal Locking

Possible Cause	Remedy
Poor Adjustment of Sensor Spring	Adjust
Internal Fluid Leaking of LCRV	Replace

Downloaded from www.Manualslib.com manuals search engine

LCRV Setting Method

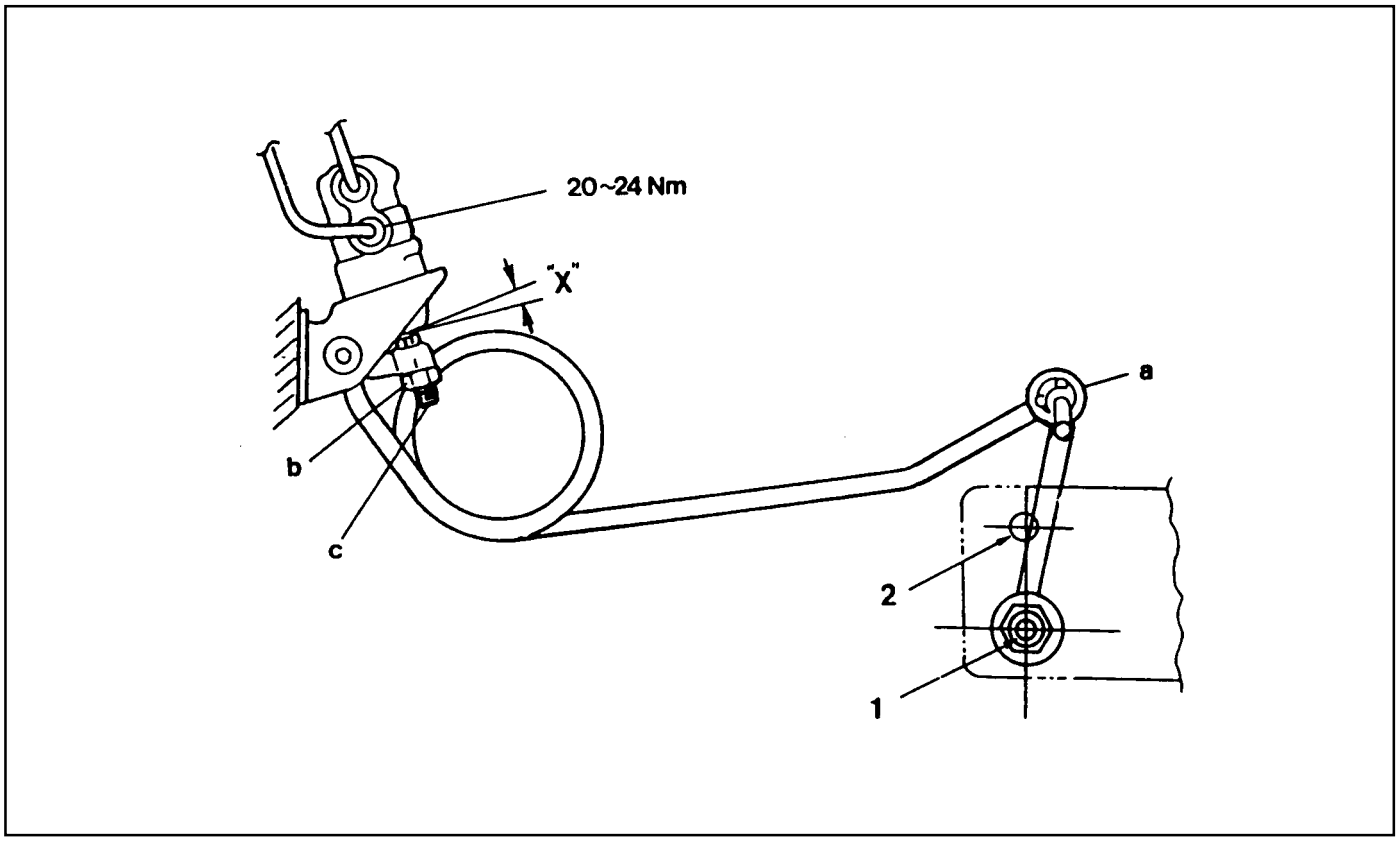

1. LCRV setting should be performed with unladen vehicle condition.
2. Install the connecting rod (a) to the No.1 hole.
3. Adjust the clearance “X” to be 0 mm and tighten the bolt (c) using the lock nut (b).

Tightening Torque	14 - 18 Nm

4. Remove the connecting rod (a) from the No. 1 hole and reinstall it to the No. 2 hole.

Tightening Torque	14 - 18 Nm

5. Place alignment marks between the lock nut (b) and adjusting screw (c) after the valve setting.

Downloaded from www.Manualslib.com manuals search engine

SECTION 4B

MASTER CYLINDER

TABLE OF CONTENTS

Specifications 4B-1
Fastener Tightening Specifications 4B-1
Maintenance and Repair 4B-2
On-Vehicle Service 4B-2
Booster & Brake Master Cylinder 4B-2

SPECIFICATIONS

FASTENER TIGHTENING SPECIFICATIONS

Application	N·m
Master Cylinder Nut	14 - 22
Booster Nut	8 - 18

Downloaded from www.Manualslib.com manuals search engine

MAINTENANCE AND REPAIR

ON-VEHICLE SERVICE

BOOSTER AND BRAKE MASTER CYLINDER

MANDO

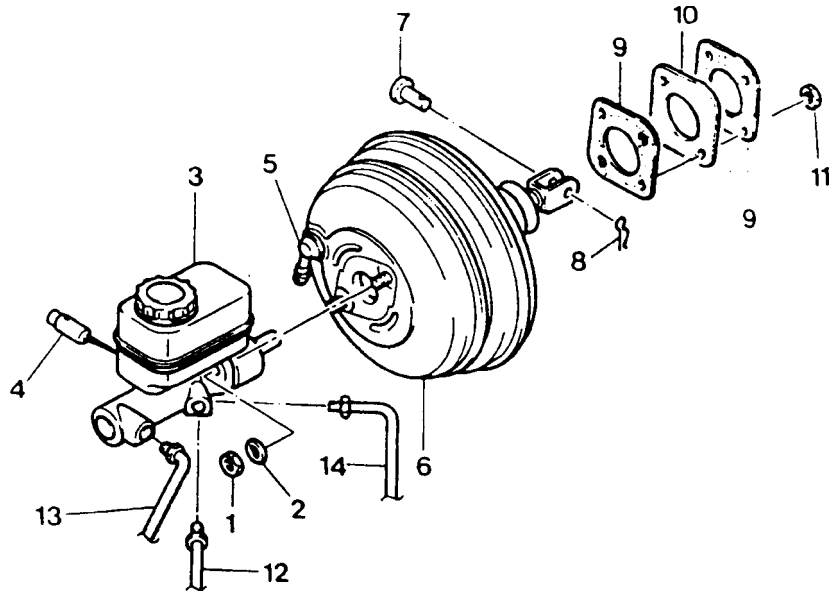

PBR

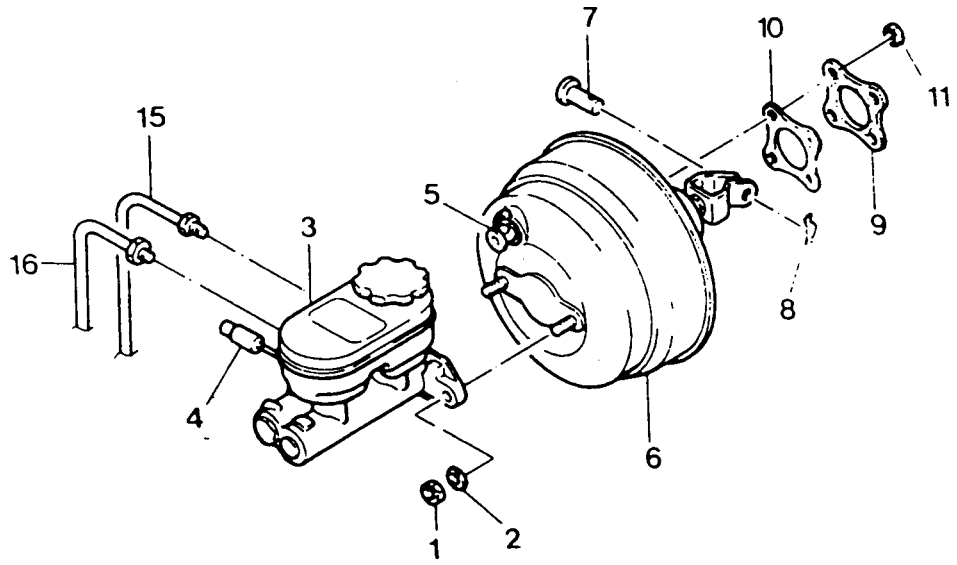

1 Nut ..... 14-22 Nm
2 Washer
3 Master Cylinder Assembly
4 Oil Level Sensor
5 Check Valve
6 Booster
7 Clevis Pin
8 Snap Pin
9 Seal
10 Spacer
11 Nut ..... 8-18 Nm
12 Front Tube (LH)
13 Front Tube (RH)
14 Rear Tube
15 1st Tube (Primary)
16 2nd Tube (Secondary)

Downloaded from www.Manualslib.com manuals search engine

Removal & Installation Procedure

1. Remove the oil level sensor connector.
2. Remove the tube from the master cylinder.

Installatione Notice

Tightening Torque	15 - 19 Nm

Notice

- Be careful not to drop the oil when removing the tube.
- If the oil is dropped, promptly sweep up.

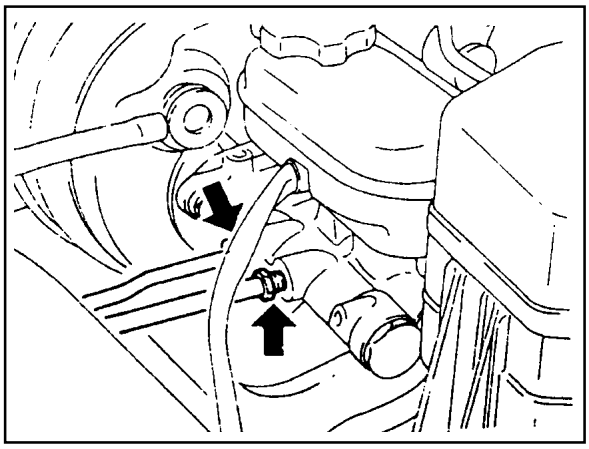

3. Remove the booster vacuum hose.

Notice

- Connect fully to the end of vacuum hose when installing.

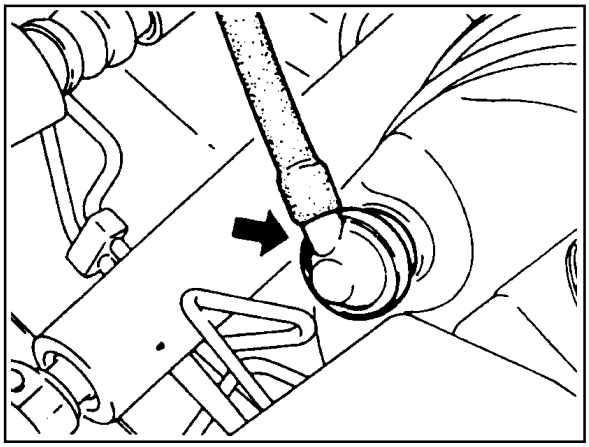

4. Loosen the nut of master cylinder.

Installatione Notice

Tightening Torque	14 - 22 Nm

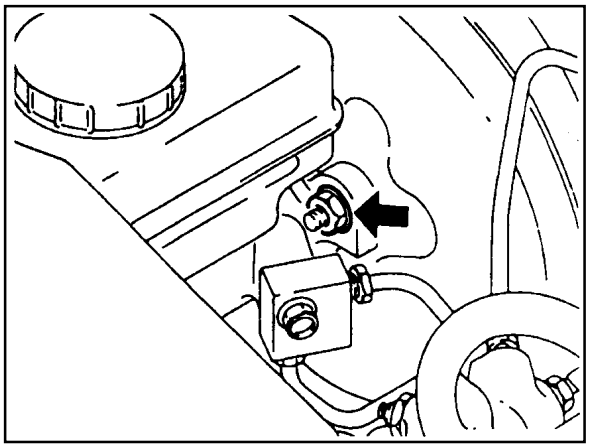

5. Remove the clevis pin and disconnect the pedal and brake booster push rod.

Notice

- Install in the upper hole when PBR brake.
- Connect the snap pin in the hole of clevis pin fully.
- Apply the grease around the hole of clevis pin.

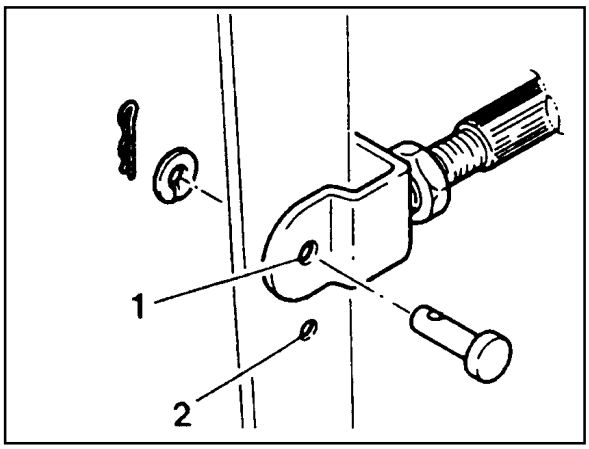

Downloaded from www.Manualslib.com manuals search engine

6. Loosen the nut of booster and remove the booster from the dash panel.

Installation Notice

Tightening Torque	8 - 18 Nm

7. Installation should follow the removal procedure in the reverse order.
8. Add the fluid and bleed.
9. If necessary, adjust the pedal height, pedal stroke and free play.

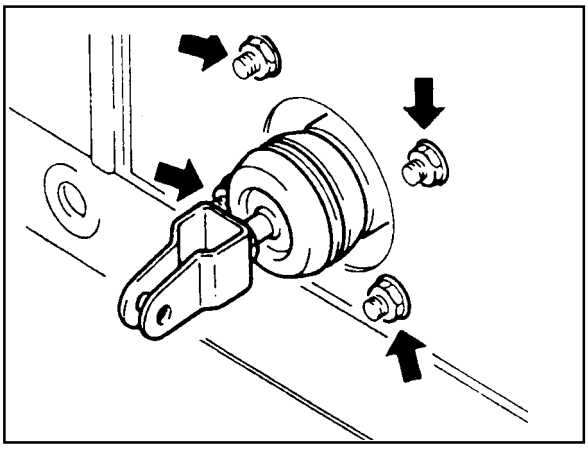

Downloaded from www.Manualslib.com manuals search engine

SECTION 4C

POWER BOOSTER

TABLE OF CONTENTS

Specifications 4C-1
General Specifications 4C-1
Maintenance and Repair 4C-2
On-Vehicle Service 4C-2
Booster & Brake Master Cylinder 4C-2
Pedal Stroke Inspection 4C-5

SPECIFICATIONS

GENERAL SPECIFICATIONS

Application	Description
Type	Vacuum Assisted
Ratio	5.6 : 1

Downloaded from www.Manualslib.com manuals search engine

MAINTENANCE AND REPAIR

ON-VEHICLE SERVICE

BOOSTER AND BRAKE MASTER CYLINDER

MANDO

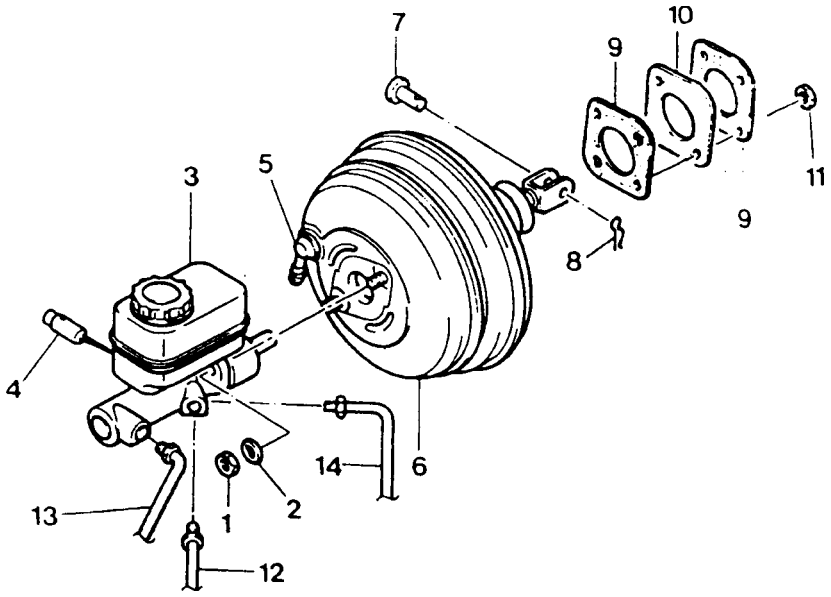

PBR

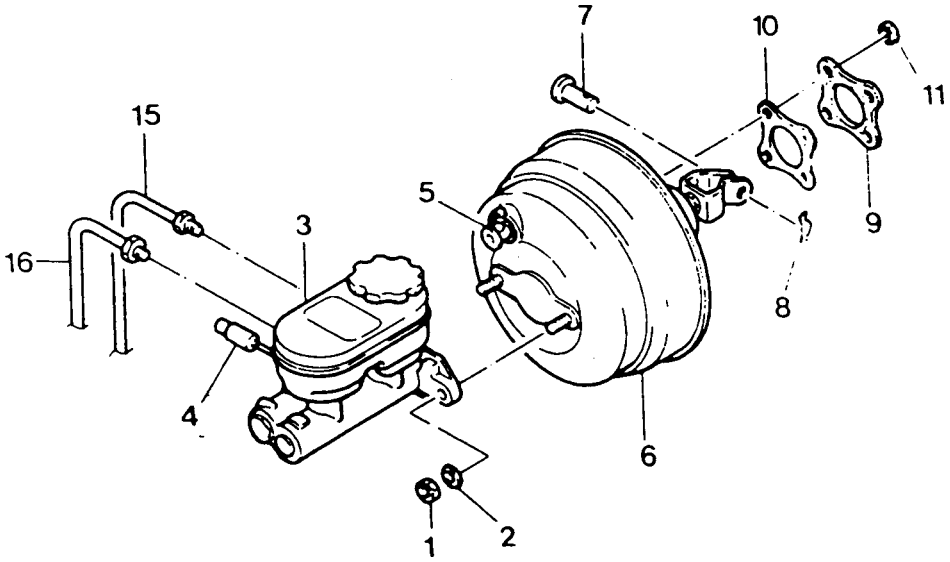

1 Nut ..... 14-22 Nm
2 Washer
3 Master Cylinder Assembly
4 Oil Level Sensor
5 Check Valve
6 Booster
7 Clevis Pin
8 Snap Pin
9 Seal
10 Spacer
11 Nut ..... 8-18 Nm
12 Front Tube (LH)
13 Front Tube (RH)
14 Rear Tube
15 1st Tube (Primary)
16 2nd Tube (Secondary)

Downloaded from www.Manualslib.com manuals search engine

Removal & Installation Procedure

1. Remove the oil level sensor connector.
2. Remove the tube from the master cylinder.

Installation Notice

Tightening Torque	15 - 19 Nm

Notice

- Be careful not to drop the oil when removing the tube.
- If the oil is dropped, promptly sweep up.

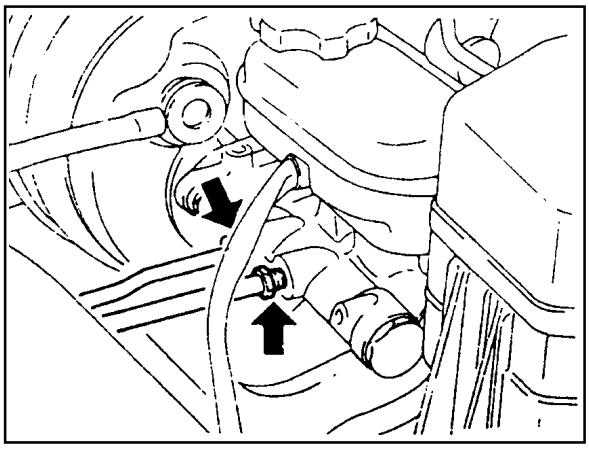

3. Remove the booster vacuum hose.

Notice

- Connect fully to the end of vacuum hose when installing.

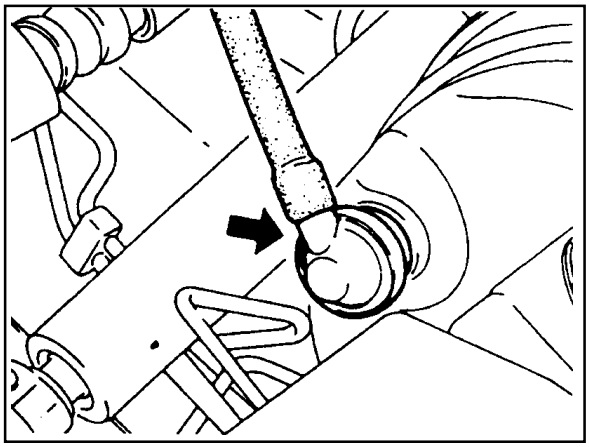

4. Loosen the nut of master cylinder.

Installation Notice

Tightening Torque	14 - 22 Nm

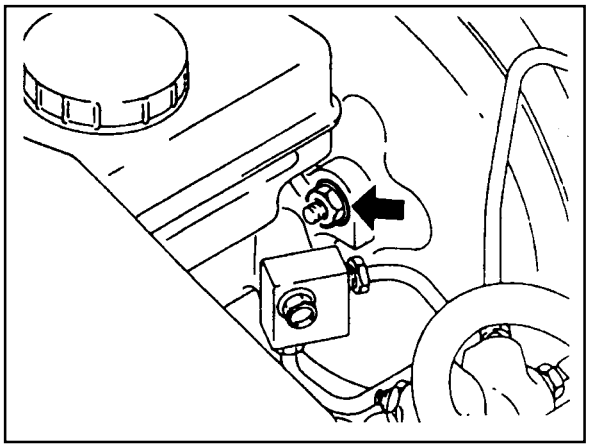

5. Remove the clevis pin and disconnect the pedal and brake booster push rod.

Notice

- Install in the upper hole when PBR brake.
- Connect the snap pin in the hole of clevis pin fully.
- Apply the grease around the hole of clevis pin.

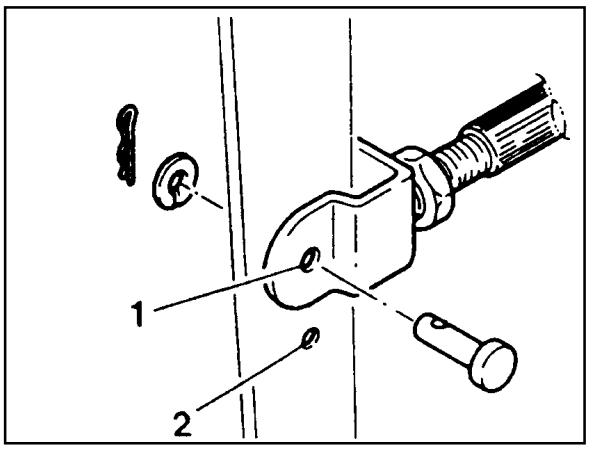

Downloaded from www.Manualslib.com manuals search engine

6. Loosen the nut of booster and remove the booster from the dash panel.

Installation Notice

Tightening Torque	8 - 18 Nm

7. Installation should follow the removal procedure in the reverse order.
8. Add the fluid and bleed.
9. If necessary, adjust the pedal height, pedal stroke and free play.

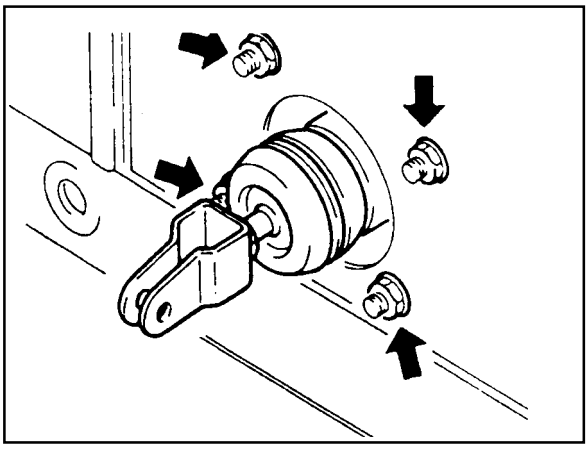

Downloaded from www.Manualslib.com manuals search engine

PEDAL STROKE INSPECTION

1. Start the engine and stop it after one or two minutes. Depress the brake pedal several times.

   If the pedal goes down furthest the first time, but gradually rises after the second or third time, brake booster is normal. If there is no change in pedal stroke, the brake booster is abnormal.

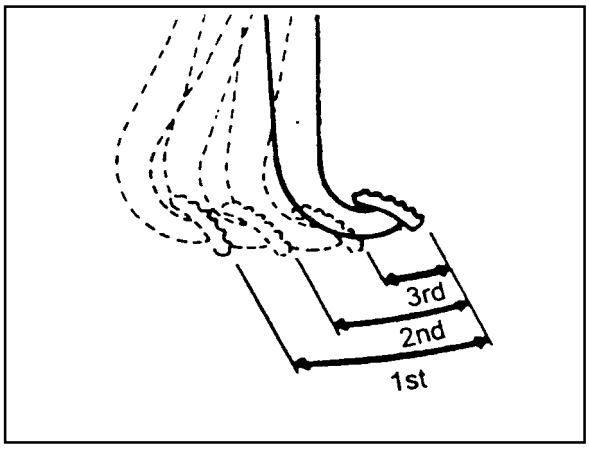

2. Depress the brake pedal several times with engine stopped, and depress the brake pedal and start the engine. If the pedal goes down slightly, the booster is normal.

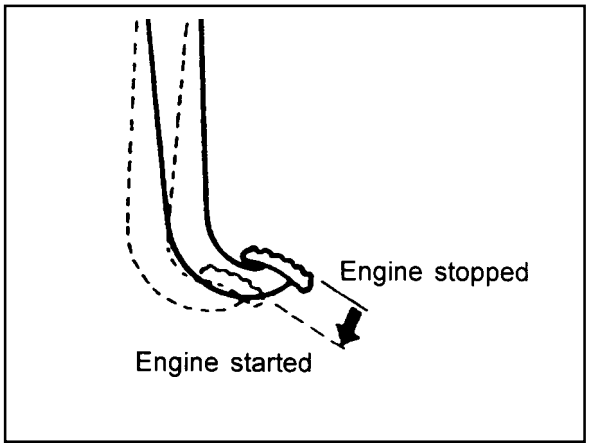

3. Depress the brake pedal with engine running, and stop it with the pedal depressed. If there is no change in pedal height during 30 sec., the booster is normal.

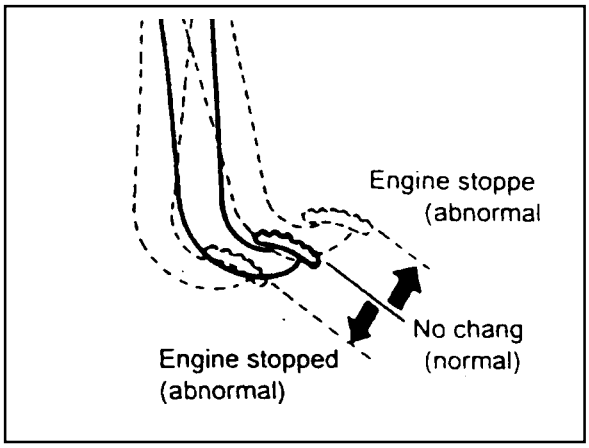

Downloaded from www.Manualslib.com manuals search engine

SECTION 4D

FRONT DISC BRAKES

TABLE OF CONTENTS

Specifications 4D-1
Fastener Tightening Specifications 4D-1
Maintenance and Repair 4D-2
On-Vehicle Service 4D-2
Front Disc Brake 4D-2
Unit Repair 4D-5
Front Disc Brake 4D-5

SPECIFICATIONS

FASTENER TIGHTENING SPECIFICATIONS

Application	N·m
Caliper Mounting Bolt	85 - 105
Brake Hose Bolt & Nut	25 - 35
Caliper Bolt	22 - 34

Downloaded from www.Manualslib.com manuals search engine

MAINTENANCE AND REPAIR

ON-VEHICLE SERVICE

FRONT DISC BRAKE

Preceding Work : Removal of wheels and tires

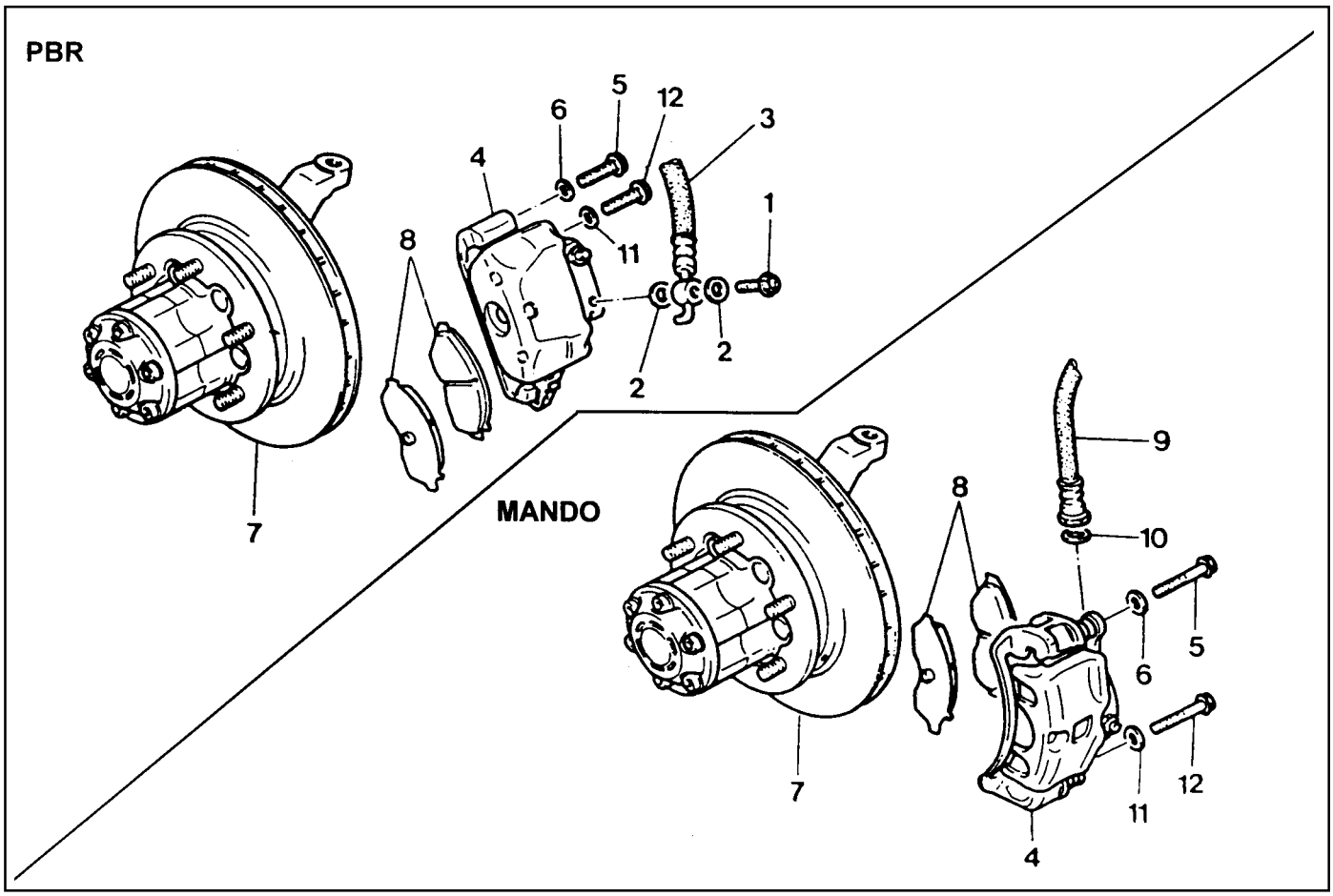

1 Eye-Hose Bolt ..... 25-35 Nm
2 Gasket ..... Replace
3 Brake Hose
4 Brake Caliper
5 Bolt ..... 20 Nm
6 Washer
7 Front Disc Assembly
8 Brake Pad
9 Brake Hose and Nut ..... 25-35 Nm
10 Gasket ..... Replace
11 Washer
12 Bolt ..... 85-105 Nm

Downloaded from www.Manualslib.com manuals search engine

Removal & Installation Procedure

1. MANDO Brake

Remove the hose mounting nut and disconnect the hose.

Installation Notice

Tightening Torque	25 - 35 Nm

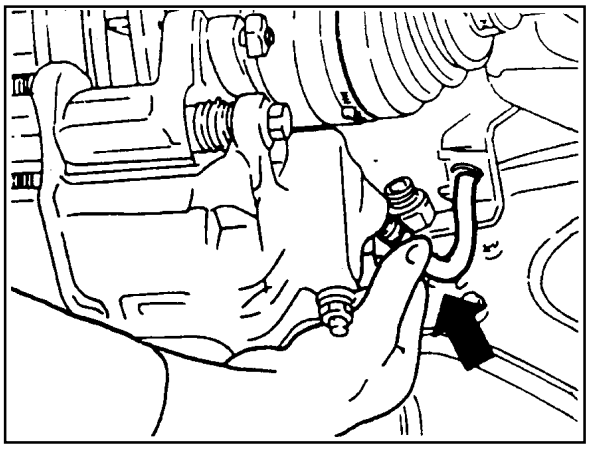

2. PBR Brake

Remove the eye-hose bolt and disconnect the hose.

Installation Notice

Tightening Torque	15 - 18 Nm

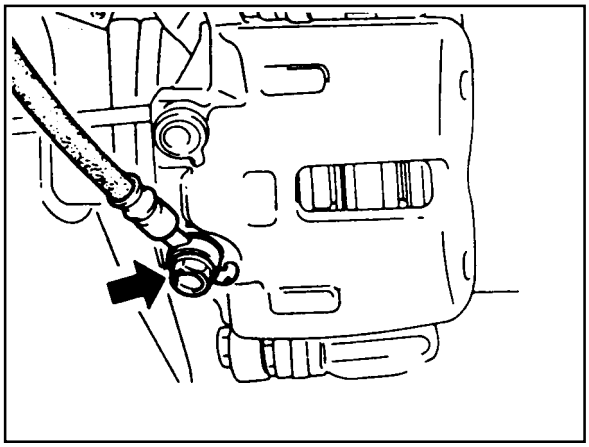

3. Remove the wheel speed sensor (for ABS vehicles).

Installation Notice

Tightening Torque	6 - 8 Nm

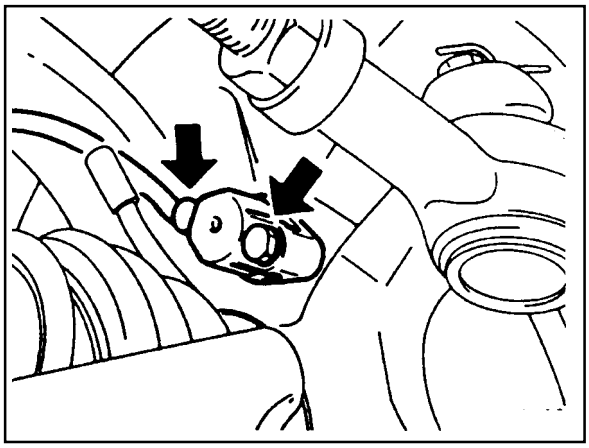

4. Remove the mounting bolts and then caliper assembly.

Installation Notice

Tightening Torque	85 - 105 Nm

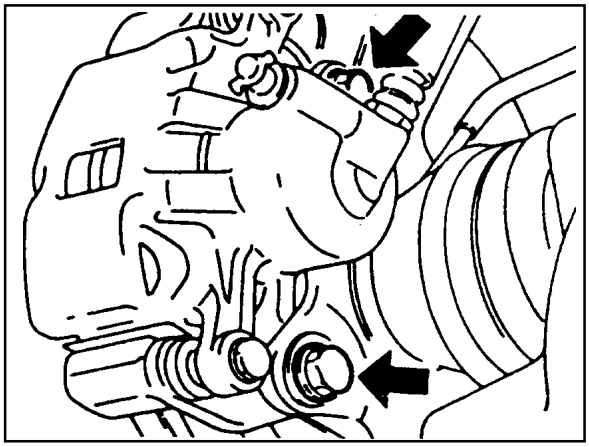

Downloaded from www.Manualslib.com manuals search engine

5. Pull out the brake pads. Replace pads if necessary.

   Notice

   Always change the all pads on one wheel at a time.

6. Installation should follow the removal procedure in the reverse order.
7. Bleed the air from the system.

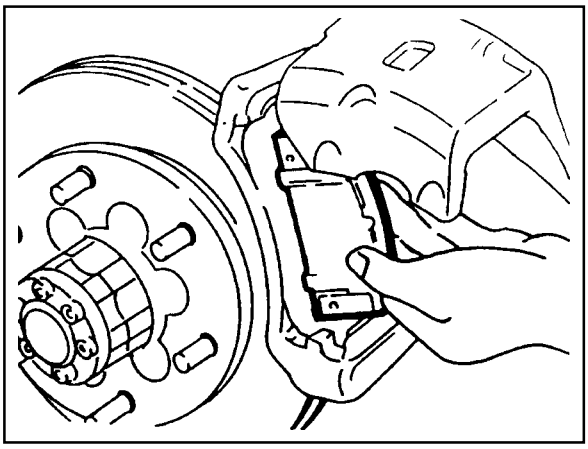

Downloaded from www.Manualslib.com manuals search engine

UNIT REPAIR

FRONT DISC BRAKE

Inspection Procedure

1. Clean all components and visually check the followings.
   - Check the cylinder and piston for wear, rust or damage.
   - Check the caliper body and guide pin for wear, damage or crank.
   - Check the pads for uneven wear or oiliness.
   - Check the boots for damage or tear.

2. Measure caliper housing inner diameter.

Item	Standard	Wear Limit
With PBR	f 60.4 mm	f 61.4 mm
With MANDO	f 60.0 mm	f 61.0 mm

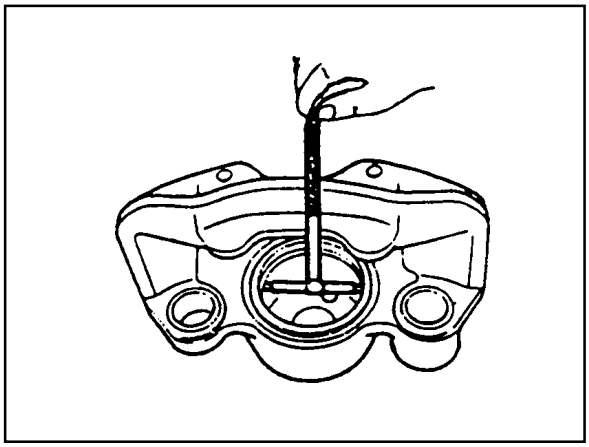

3. Measure pad thickness.

Standard	Wear Limit
10 mm	2.0 mm

Notice

Always change the all pads on one wheel at a time.

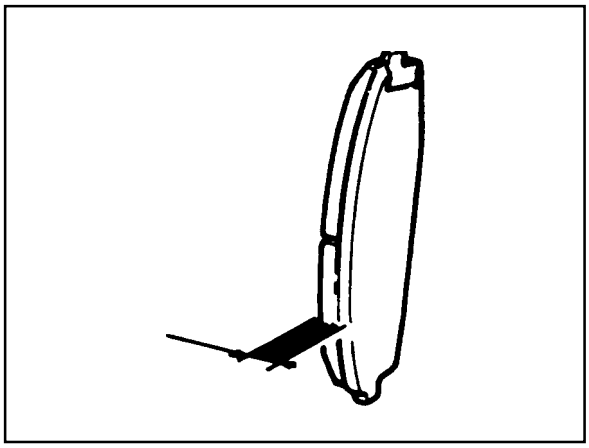

4. Measure rotor disc thickness.

Standard	Wear Limit
24 mm	22 mm

5. Check the rotor disc for score or runout.

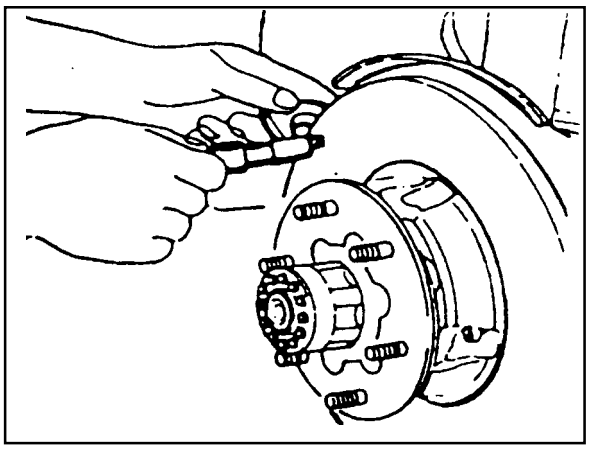

Downloaded from www.Manualslib.com manuals search engine

SECTION 4E

REAR DISC BRAKES

TABLE OF CONTENTS

Specifications 4E-1
Fastener Tightening Specifications 4E-1
Maintenance and Repair 4E-2
On-Vehicle Service 4E-2
Rear Disc Brake 4E-2
Unit Repair 4E-4
Rear Disc Brake 4E-4

SPECIFICATIONS

FASTENER TIGHTENING SPECIFICATIONS

Application	N·m
Caliper Mounting Bolt	85 - 105
Brake Hose	15 - 18
Caliper Bolt	20

Downloaded from www.Manualslib.com manuals search engine

MAINTENANCE AND REPAIR

ON-VEHICLE SERVICE

REAR DISC BRAKE

Preceding Work : Removal of wheels and tires

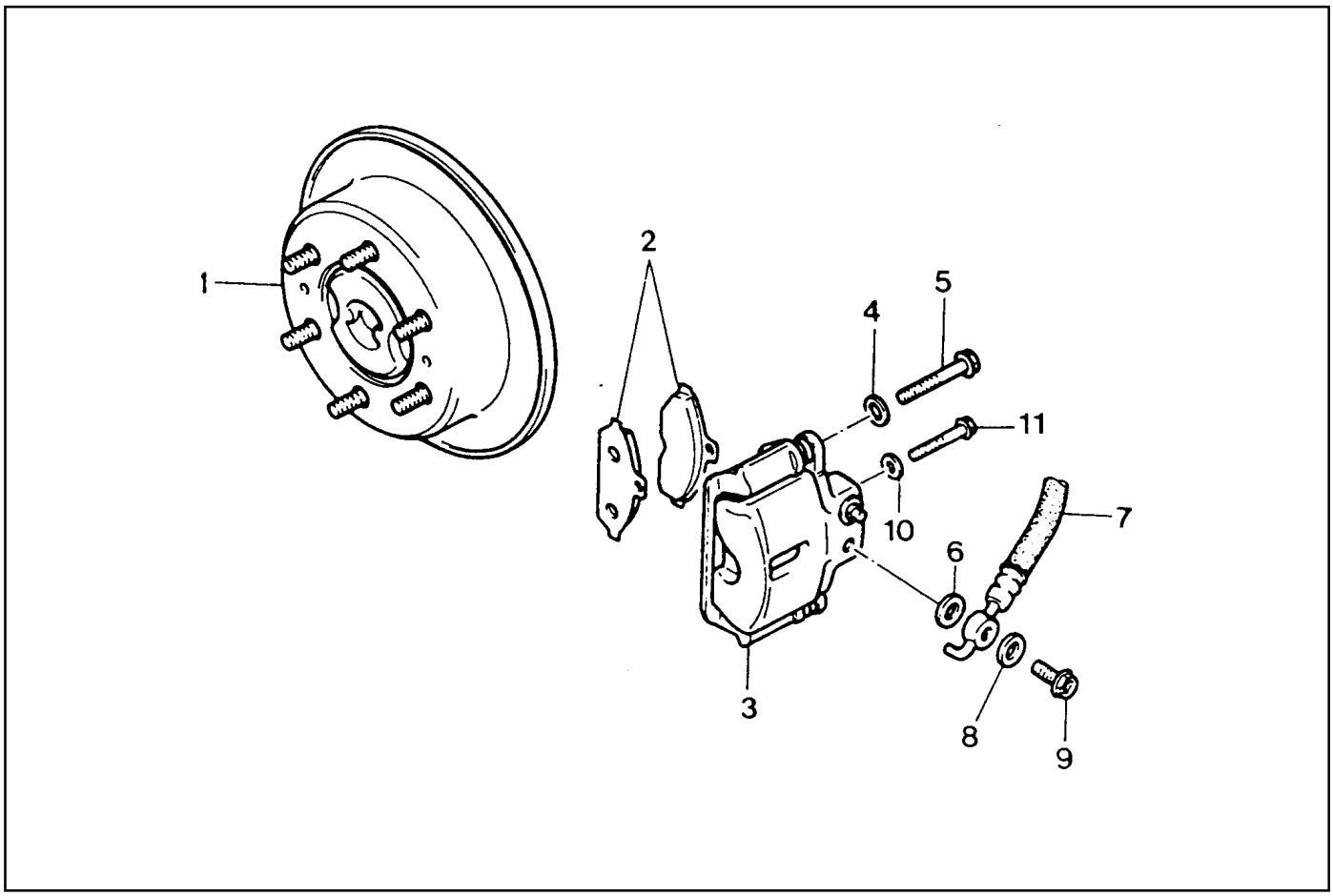

1 Rear Brake Disc Assembly
2 Brake Pad
3 Brake Caliper
4 Gasket ..... Replace
5 Bolt ..... 20 Nm
6 Gasket ..... Replace
7 Brake Hose
8 Gasket ..... Replace
9 Eye-Hose Bolt ..... 15-18 Nm
10 Washer
11 Bolt ..... 85-105 Nm

Downloaded from www.Manualslib.com manuals search engine

Removal & Installation Procedure

1. Remove the eye-hose bolt and disconnect the hose.

   Installation Notice

Tightening Torque	15 - 18 Nm

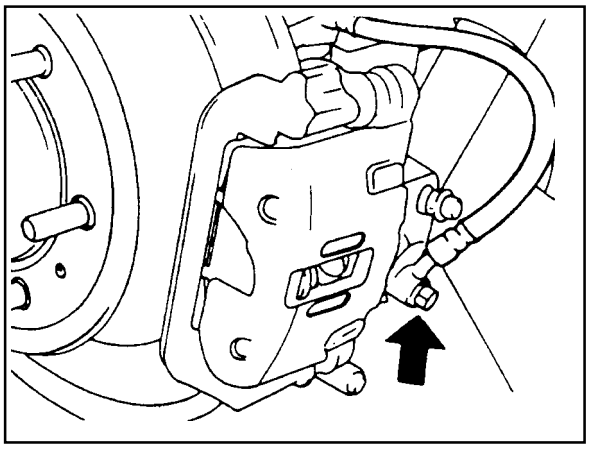

2. Unscrew the mounting bolts and remove the brake caliper assembly.

   Installation Notice

Tightening Torque	85 - 105 Nm

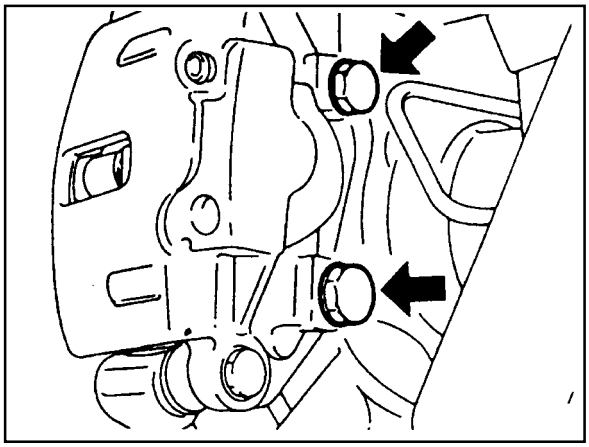

3. Pull out the brake pads. Replace pads if necessary.

   Notice

   Always change the all pads on one wheel at a time.

4. Installation should follow the removal procedure in the reverse order.
5. Bleed the air from the system.

Downloaded from www.Manualslib.com manuals search engine

UNIT REPAIR

REAR DISC BRAKE

Inspection Procedure

1. Clean all components and visually check the followings.
   - Check the cylinder and piston for wear, rust or damage.
   - Check the caliper body and guide pin for wear, damage or crank.
   - Check the pads for uneven wear or oiliness.
   - Check the boots for damage or tear.

2. Measure caliper housing inner diameter.

Item	Standard	Wear Limit
With PBR	f40.5 mm	f41.5 mm
With MANDO	f38.2 mm	f39.2 mm

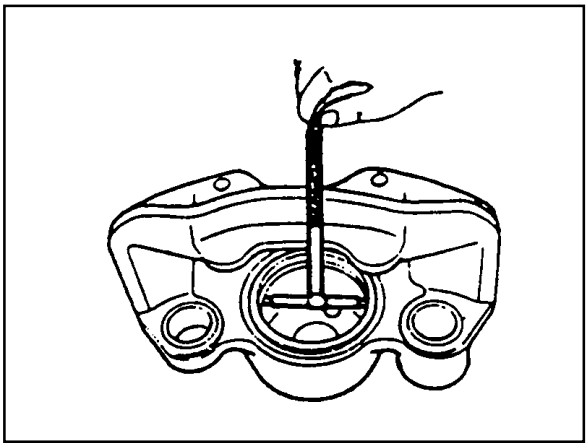

3. Measure pad thickness.

Standard	Wear Limit
9.5 mm	2.0 mm

Notice

Always change the all pads on one wheel at a time.

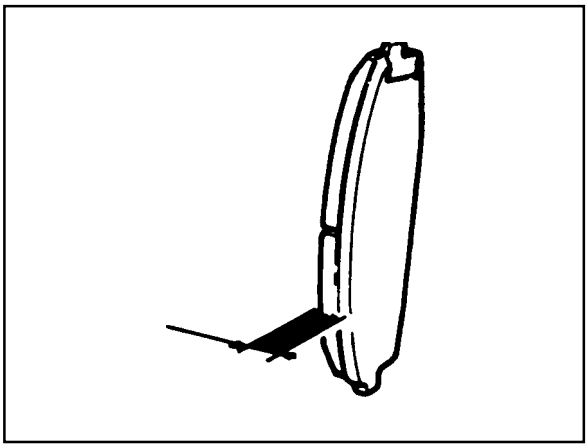

4. Measure rotor disc thickness.

Standard	Wear Limit
10.4 mm	9.3 mm

5. Check the rotor disc for score or runout.

Downloaded from www.Manualslib.com manuals search engine

SECTION 4F

ANTILOCK BRAKE SYSTEM

Caution: Disconnect the negative battery cable before removing or installing any electrical unit or when a tool or equipment could easily come in contact with exposed electrical terminals. Disconnecting this cable will help prevent personal injury and damage to the vehicle. The ignition must also be in LOCK unless otherwise noted.

TABLE OF CONTENTS

Specifications 4F-1
General Specifications 4F-1
Schematic and Routing Diagrams 4F-2
ABS 5.3 . . . . . 4F-2
ABS/ABD 5.3 . . . . . 4F-3
Component Locator 4F-4
ABS, ABS/ABD 5.3 . . . . . 4F-4
ABD System Description 4F-5
Self Diagnosis 4F-7
ABS, ABS/ABD 5.3 . . . . . 4F-7
Defect Codes 4F-9
Maintenance and Repair 4F-15
On-Vehicle Service 4F-15
Wheel Speed Sensor 4F-15
Hydraulic Circuit 4F-17
ABS 5.3 . . . . . 4F-17
ABS/ABD 5.3 . . . . . 4F-20

SPECIFICATIONS

GENERAL SPECIFICATIONS

Application			Description	
Model			ABS 5.3	ABS/ABD 5.3
ECU	Number of Pins		31	83
	Operating Temperature		-40 ~ +120℃	-40 ~ +85℃
Hydraulic System	Motor Operating Current		Below MAX 40A	Below MAX 45A
	Solenoid Coil Resistance			8.04 - 9.04W except AV, HSV 4.04 - 4.54W
Wheel Speed Sensor	External Resistance		1.28KW - 1.92KW	1.28KW - 1.92KW
Impulse Ring	Air Gap	Front	0.35 - 1.60 mm	0.35 - 1.60 mm
		Rear	0.15 - 1.20 mm	0.15 - 1.20 mm
	Number of teeth	Front	52	52
		Rear	52	52

Downloaded from www.Manualslib.com manuals search engine

SCHEMATIC AND ROUTING DIAGRAMS

ABS 5.3

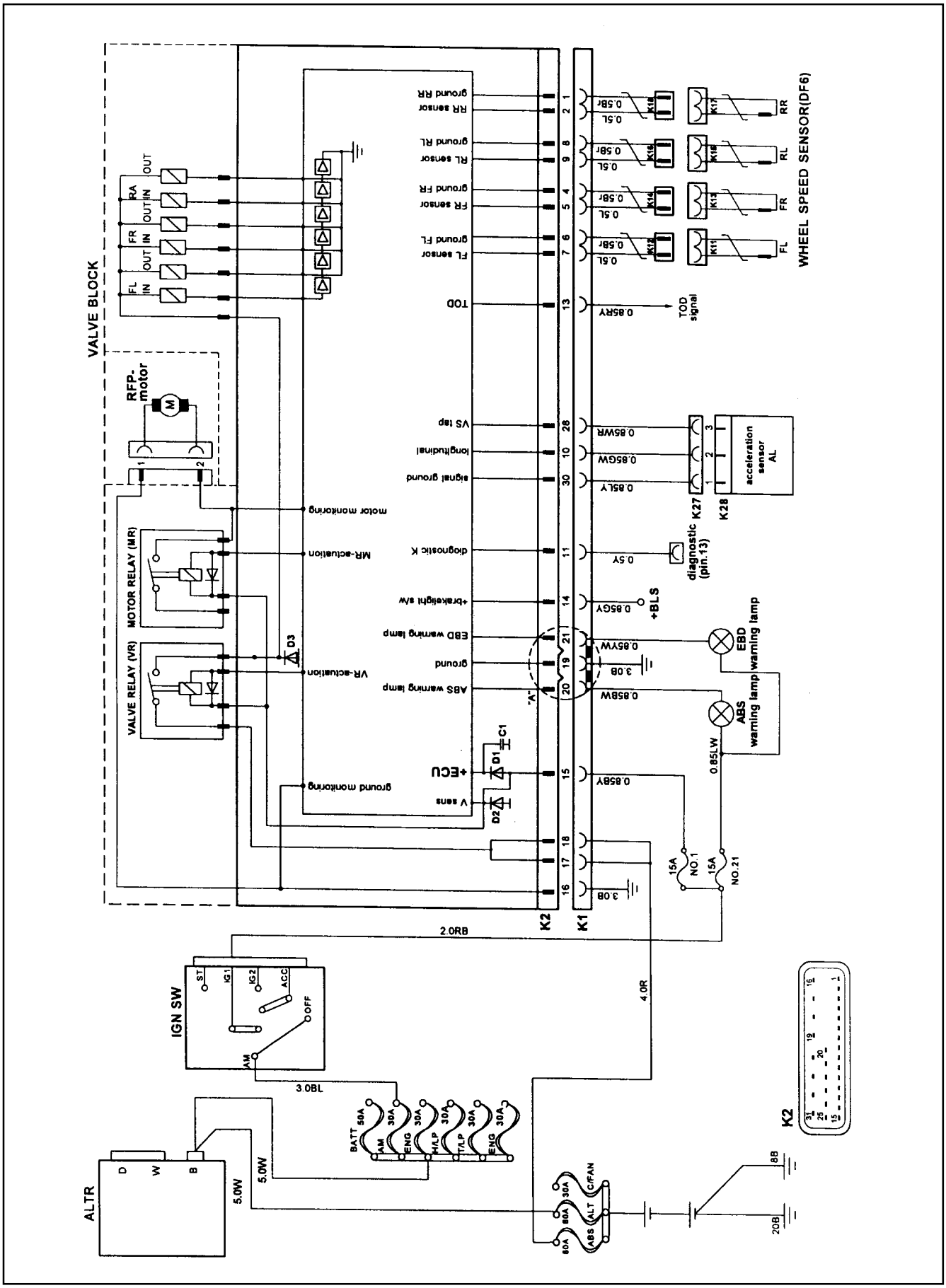

Downloaded from www.Manualslib.com manuals search engine

ABS/ABD 5.3

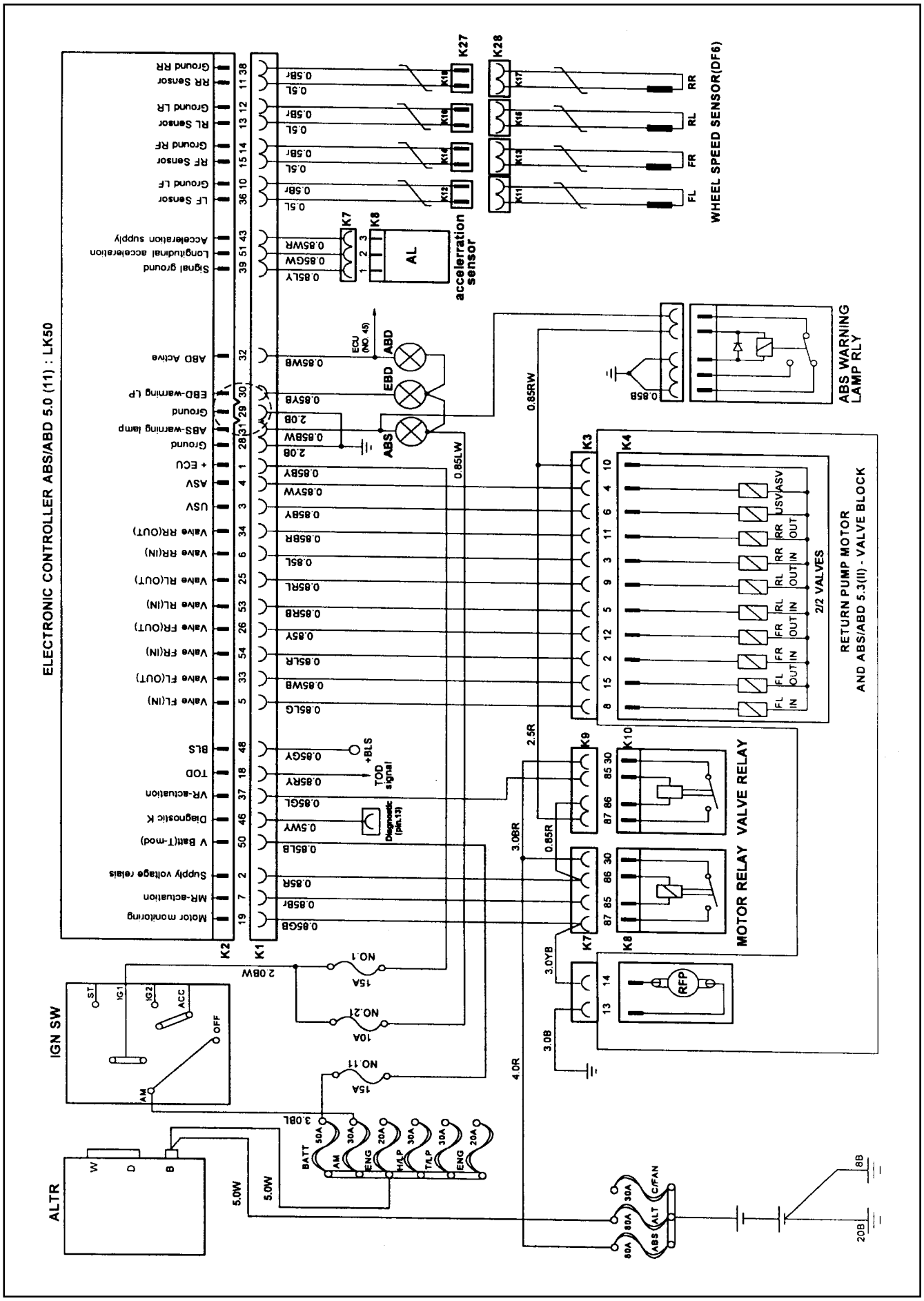

Downloaded from www.Manualslib.com manuals search engine

COMPONENT LOCATOR

ABS, ABS/ABD 5.3

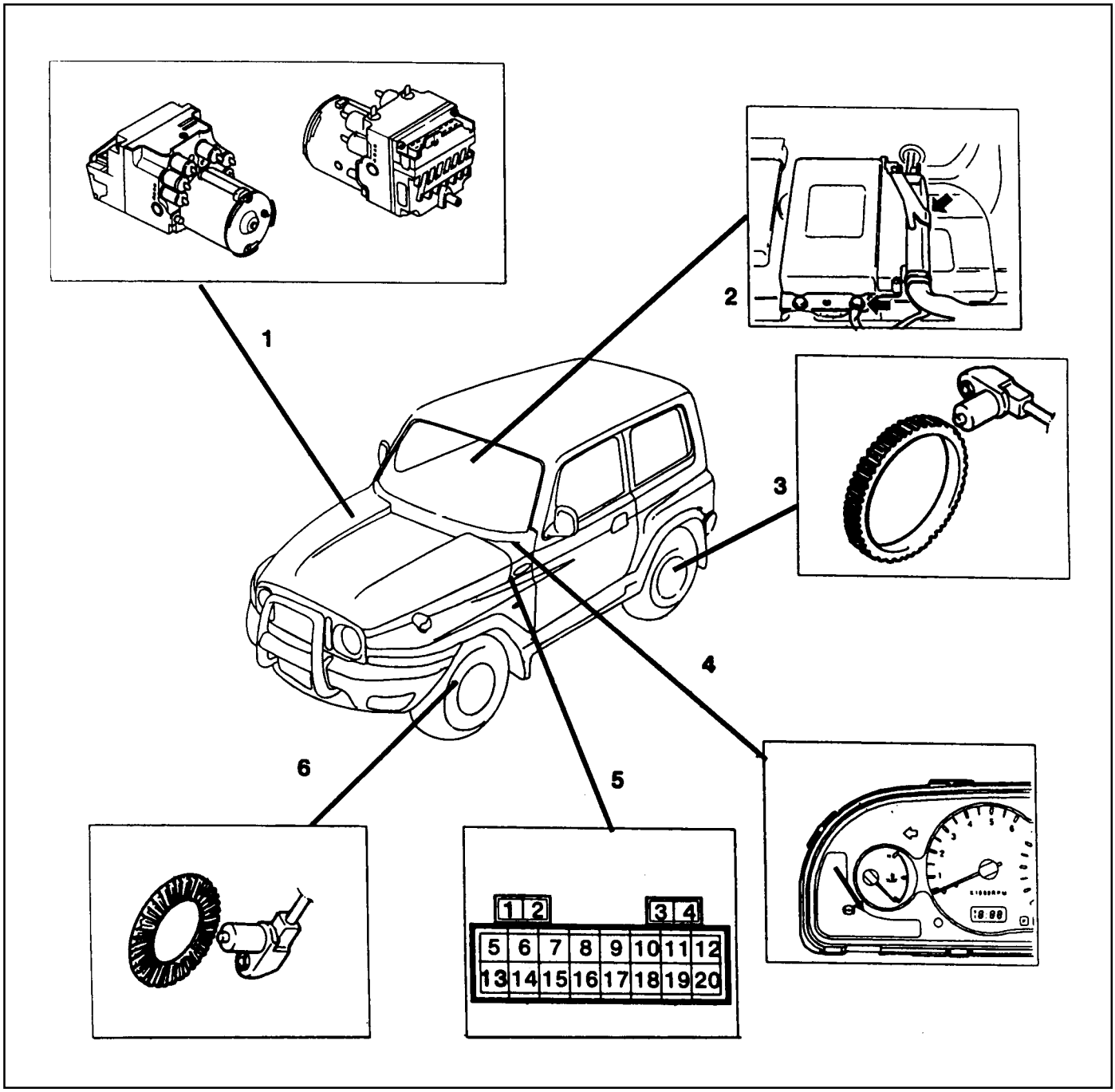

1 ABS/ABD Hydraulic Unit (with ECU in cose of ABS only)
2 ABS/ABD ECU Unit (in case of ABD)
3 Rear Wheel Speed Sensor
4 ABS Warning Indicator Light
5 Diagnosis Connector
6 Front Wheel Speed Sensor

Downloaded from www.Manualslib.com manuals search engine

ABD SYSTEM DESCRIPTION

General:

The Automatic Brake Differential Lock (ABD) is a traction system by means of brake intervention only, available in a low speed range (< 60kph).

It workes on m-split roads with sidewise different friction coefficients.

The spinning driven wheel is braked and the drive torque can be transferred to the wheel on the high- m side. During ABD active, the ABD information lamp is blinking.

The temperature of the brakes is calculated by a mathematical model and ABD is switched passive if the calculated temperature is greater than a threshold value(500℃).

ABD is permitted again, when the calculated temperature is less than 350℃.

Control Algorithm:

The input signals for the control algorithm are the filtered wheel speed signals from the ABS speed processing.

With the speed difference of the driven wheels, the control deviation is calculated.

If the control deviation exceeds a certain threshold value, the wheel with the greater slip is braked actively.

The threshold value depends on the vehicle speed:

It is reduced with increasing vehicle speed down to a constant value.

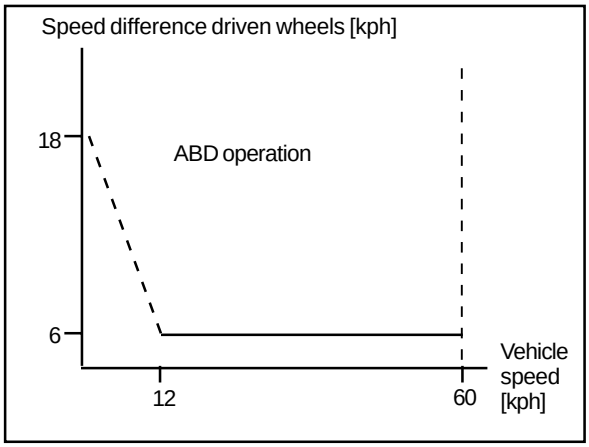

Pressure Modulation:

Depending on the control deviation and the wheel acceleration of the spinning wheel, pressure increase, hold and decrease are made.

The pressure modulation is done with the conventional control with the valves. ASV, USV, EV and AV according the the following table:

	Increase	Hold	Decrease
ASV	Open	Open	Open
USV	Closed	Closed	Closed
EV	Open	Closed	Closed
AV	Closed	Closed	Open

Speed Range:

ABD is available in the speed range £ 60 kph.

Above 60 kph vehicle speed, ABD is passive.

It is possible to initiate ABD operation up to a vehicle speed of 55kph.

Downloaded from www.Manualslib.com manuals search engine

Temperature Model:

ABD operation is a high thermal load for the brakes.

To avoid any damages at the brakes, the disk temperature is calculated with a mathematical model for each driven wheel separately. After ignition on, the calculation starts with 30℃ and then three different phases are evaluated separately and added:

ABD operation, braking and coling phase.

If the temperature is highter than 500℃, ABD is disabled for this wheel.

It is permitted again, if the model has calculated down the 350℃.

Lamp Concepts:

The system is equipped with an ABD information lamp, which is blinking during ABD operation.

The activation of the EBD, ABS warning lamp and the ABD info lampo is summarized in the following table:

	Ignition ON	**ABS Operation**	**ABD Operation**	**System failure (EBD,ABS or ABD are not distinguished)**	**ABD passive due to temperature model**
ABS warning lamp	2s on for lamp check	OFF	OFF	ON	OFF
ABD info lamp	2s on for lamp check	OFF	Dlinking (Flashing)	OFF	OFF
EBD warning lamp	2s on for lamp check	EBD operation / OFF	OFF	ON	OFF

Downloaded from www.Manualslib.com manuals search engine

SELF DIAGNOSIS

ABS, ABS/ABD 5.3

Initialization

1. Turn the ignition switch to "ON" position.
2. Using a service connector, ground the No.13 terminal of diagnosis socket and No.1 ground terminal for 3-4 seconds.

   Notice

   If it is over 5 seconds, initialization will not be performed.

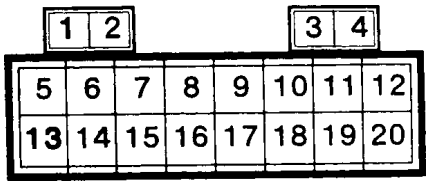

3. After completing the initialization, ABS warning lamp will be turned on until the ignition switch is turned to "OFF" position.

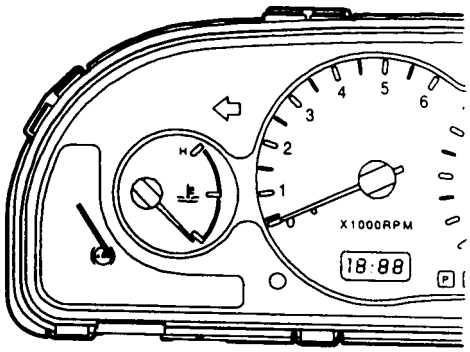

Output of Fault Code

1. Normal : 1 pulse (normal code 01)
2. Abnormal : 1 pulse (fault code)

   Notice

   - If appeared initial fault code and above 2 differnt fault code, perform again initialization.
   - Fault code will be output the numbers of fault code with a interval of 1 second.(turn on : 0.75 sec., turn off : 0.25 sec.)

Fault Code Elimination

After repairing the defect parts, eliminate the fault from ECU.

1. Ground the diagnosis No.13 terminal to No.1 ground terminal for over 5 seconds.
2. Turn the igniotion switch to "OFF" position.

   Notice

   - If not eliminate the fault code, the code will be maintained.
   - Check and find the other defect parts with performing the imitialization again, if the fault code will be output, repair the defect parts completely.

Downloaded from www.Manualslib.com manuals search engine

Diagnosis the Flash Code

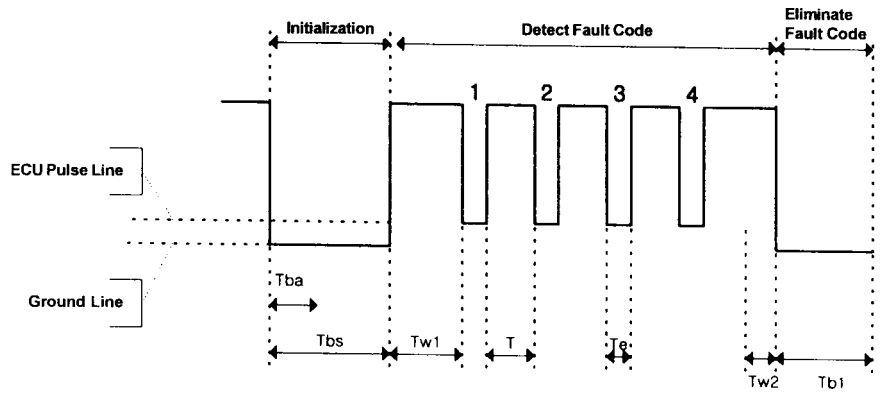

[Ex]

- Time Differences of Normal Code 01 : TW1<T<Te<TW2
- Time Differences of Fault Code 15 : TW1<T<Te<TW2

Time Characteristics

1. Initialization
   Tba < 5.0 sec.
   Tba 1.8 - 2.2 sec.
2. Output of Fault Code
   TW1 = 1.8 - 2.2 sec.
   TW2 = 1.8 - 2.2 sec.
   T = 0.75 sec., Te ³ 0.25 sec.
3. Elimination of Fault Code
   Tb1 = 5.0 sec.

Downloaded from www.Manualslib.com manuals search engine

DEFECT CODES

Defect Code	Application	Description
01	Normal	-
02	Defective ECU	Replace the ECU
03	Front/left Wheel Speed Sensor (Wire)	● Check resistance of the wheel speed sensor : 1.280KW - 1.920KW ● Check wire for ground and open. ● Replace the sensor.
04	Front/right Wheel Speed Sensor (Wire)	● Check resistance of the wheel speed sensor : 1.280KW - 1.920KW ● Check wire for ground and open. ● Replace the sensor.
05	Rear/left Wheel Speed Sensor (Wire)	● Check resistance of the wheel speed sensor : 1.280KW - 1.920KW ● Check wire for ground and open. ● Replace the sensor.
06	Rear/right Wheel Speed Sensor (Wire)	● Check resistance of the wheel speed sensor : 1.280KW - 1.920KW ● Check wire for ground and open. ● Replace the sensor.
07	Front/left Wheel Speed Sensor (Signal)	● Check wire for ground and open. ● Check connection of the wheel speed sensor connector and ECU side connector. ● Measure air gap between wheel teeth and wheel speed sensor and check installation of wheel tooth. (Standard air gap : 0.35 - 1.60 mm) ● Check output voltage of the sensor by rotating the wheel 1/2 - 1 revolution per second and shaking sensor wire. - When measured by multi - meter (AC) : output voltage > 70 mV - When measured in oscilloscope : output voltage ³ 120 mV/P-P ● Replace the sensor.
08	Front/right Wheel Speed Sensor (Signal)	● Check wire for ground and open. ● Check connection of the wheel speed sensor. connector and ECU side connector. ● Measure the air gap between wheel teeth and wheel speed sensor and check installation of wheel tooth. (Standard air gap : 0.35 - 1.60 mm) ● Check output voltage of the sensor by rotating the wheel 1/2 - 1 revolution per second and shaking sensor wire. - When measured by multi - meter (AC) :

Downloaded from www.Manualslib.com manuals search engine

Defect Code	Application	Description
		output voltage > 70 mV - When measured in oscilloscope : output voltage ³ 120 mV/P-P ● Replace the sensor.
09	Rear/left Wheel Speed Sensor (Signal)	● Check wire for ground and open. ● Check connection of the wheel speed sensor connector and ECU side connector. (Standard air gap : 0.15 - 1.20 mm) ● Check output voltage of the sensor by rotating the wheel 1/2 - 1 revolution per second and shaking sensor wire. - When measured by multi - meter (AC) : output voltage > 70 mV - When measured in oscilloscope : output voltage ³ 120 mV/P-P ● Replace the sensor.
10	Rear/right Wheel Speed Sensor (Signal)	● Check wire for ground and open. ● Check connection of the wheel speed sensor connector and ECU side connector. ● Measure air gap between wheel teeth and wheel speed sensor and check installation of wheel tooth. (Standard air gap : 0.15 - 1.20 mm) ● Check output voltage of the sensor by rotating the wheel 1/2 - 1 revolution per second and shaking sensor wire. - When measured by multi - meter (AC) : output voltage > 70 mV - When measured in oscilloscope : output voltage ³ 120 mV/P-P ● Replace the sensor.
11	Wheel Rotor	● Check number of teeth on the wheel rotor and its condition. - Number of teeth : 52
12	Valve Relay	● Check valve relay voltage. ● Check connection of connector and terminals in the ECU and hydraulic modulator. ● Check ground. ● Check terminals for open or short. (When connector is removed) ● Replace the hydraulic modulator.

Downloaded from www.Manualslib.com manuals search engine

Defect Code	Application	Description
13	Front / left INLET Valve	● Check each valve by using SCANER's solenoid valve overriding function. ● Check connection of connector and terminals in the ECU hydraulic modulator.
14	Front / left OUTLET Valve	● Check each valve by using SCANER's solenoid valve overriding function. ● Check connection of connector and terminals in the ECU hydraulic modulator. ● Check terminals for open or short. (When connector is removed) ● Replace the hydraulic modulator.
15	Front / right INLET Valve	● Check each valve by using SCANER's solenoid valve overriding function. ● Check connection of connector and terminals in the ECU hydraulic modulator. ● Check terminals for open or short. (When connector is removed) ● Replace the hydraulic modulator.
16	Front / right OUTLET Valve	● Check each valve by using SCANER's solenoid valve overriding function. ● Check connection of connector and terminals in the ECU hydraulic modulator. ● Check terminals for open or short. (When connector is removed) ● Replace the hydraulic modulator.
17	Rear / left INLET Valve (ABD)	● Check each valve by using SCANER's solenoid valve overriding function. ● Check connection of connector and terminals in the ECU hydraulic modulator. ● Check terminals for open or short. (When connector is removed) ● Replace the hydraulic modulator.
18	Rear / left OUTLET Valve	● Check each valve by using SCANER's solenoid valve overriding function. ● Check connection of connector and terminals in the ECU hydraulic modulator. ● Check terminals for open or short. (When connector is removed) ● Replace the hydraulic modulator.
19	Rear / right INLET Valve	● Check each valve by using SCANER's solenoid valve overriding function. ● Check connection of connector and terminals in the ECU hydraulic modulator. ● Check terminals for open or short.

Downloaded from www.Manualslib.com manuals search engine

Defect Code	Application	Description
		(When connector is removed) ● Replace the hydraulic modulator.
20	Rear / right OUTLET Valve	● Check each valve by using SCANER's solenoid valve overriding function. ● Check connection of connector and terminals in the ECU hydraulic modulator. ● Check terminals for open or short. (When connector is removed) ● Replace the hydraulic modulator.
21	Function and Response of The Valve	● Check solenoid internal resistance of the prime(ASV) valve and pilot valve(USV) : 8.04 - 9.04 W ● Check each valve by using SCANER's solenoid valve overriding function. ● Check connection of connector and terminals in the ECU and hydraulic modulator. ● Check terminals for open or short. (When connector is removed) ● Replace the hydraulic modulator.
22	Function and Response of The Valve	● Check solenoid internal resistance of the prime(ASV) valve and pilot valve(USV) : 8.04 - 9.04 W ● Check each valve by using SCANER's solenoid valve overriding function. ● Check connection of connector and terminals in the ECU and hydraulic modulator. ● Check terminals for open or short. (When connector is removed) ● Replace the hydraulic modulator.
24	Motor Relay / Circulation Pump	● Check each valve by using SCANER's pump motor overriding function. ● Check resistance between pump motor ground terminal and battery negative terminal : total resistance should be less than 15 mW. ● Check body ground location. ● Check relay supply voltage : IGN on : 11 - 14 V ● Relay coil internal resistance : 70 - 80 W ● Replace the hydraulic modulator.
27	Stop Lamp Switch	● Check by using SCANER's stop lamp switch diagnosing function from sensor value output function. ● Check connection of ECU connector side stop lamp switch terminal. ● Check resistance of the stop lamp switch. - Each end resistance value of the switch

Downloaded from www.Manualslib.com manuals search engine

Defect Code	Application	Description
		when switch knob (planger) is pressed by 3mm : ¥ - Each ends resistance value of the switch when switch knob(plunger) is not pressed : less than 200 mW ● When brake is applied : ECU (ABS:No.14, ABD:No.48) terminal 11 - 14 V or VBattery. When brake is released : ECU (ABS:No.14, ABD:No.48) terminal 0 V
28	Power Voltage	● Check battery voltage. ● Resistance between ECU (ABD:No.28 & 29, ABS:No.19) pins and battery negative terminal : less than 20 mW ● Resistance between ECU No.1 (ABS:No.15) pin and ignition terminal : less than 60 mW ● Check that normal voltage is applied to ECU (ABD:No.1, ABS:No.15) pin when ignition switch is turned to "ON" or "OFF". ● Check ABS fuses of 15A and 80A. ● Replace the ECU.
29	Residual Temperature Measurement (ABD only)	● Check wire (ECU No.50) for open or loose contact.
42	Acceleration Sensor Signal (wire)	● Check connection between connectors. ● Check relevant wires for open or short. (When connector is removed) ● Check voltage between ECU side ground (ABD:No.1, ABS:No.15 pin) and acceleration sensor side ground (ABD:No.1, ABS:No.15 pin / ECU side ABD:No.39, ABS:No.30 pin) (When connector is installed and power is applied) - Voltage : less than 0.25 V ● Check voltage among related terminals. (When connector is installed and power is applied) - Voltage between ECU (ABD:No.43, ABS:No.28 pin and ABD:No.39, ABS:No.30 pin) : 4.75 - 5.25 V - Signal voltage between ECU (ABD:No.51, ABS:No.10) pin and (ABD:No.39, ABS:No.30) pin : 1.95 V - 3.45 V (Measure it by laying acceleration sensor horizontally and without external force)

Downloaded from www.Manualslib.com manuals search engine

Defect Code	Application	Description
43	Acceleration Sensor Signal (Signal)	● Check connection between connectors. ● Check relevant wires for open or short. (When connector is removed) ● Check and replace the acceleration sensor. ● Replace the ECU. ● Check voltage between ECU side ground (ABD:No.1, ABS:No.15 pin) and acceleration sensor side ground (ABD:No.1, ABS:No.15 pin / ECU side ABD:No.39, ABS:No.30 pin) (When connector is installed and power is applied) - Voltage : less than 0.25 V ● Check voltage among related terminals. (When connector is installed and power is applied) - Voltage between ECU (ABD:No.51, ABS:No.10 pin and ABD:No39, ABS:No.30) pin : 4.75 - 5.25 V - Signal voltage between ECU (ABD:No.51, ABS:No.10 pin and ABD:No39, ABS:No.30) pin : 1.95 V - 3.45 V (Measure it by laying acceleration sensor horizon tally and without external force)

Downloaded from www.Manualslib.com manuals search engine

MAINTENANCE AND REPAIR

ON-VEHICLE SERVICE

WHEEL SPEED SENSOR

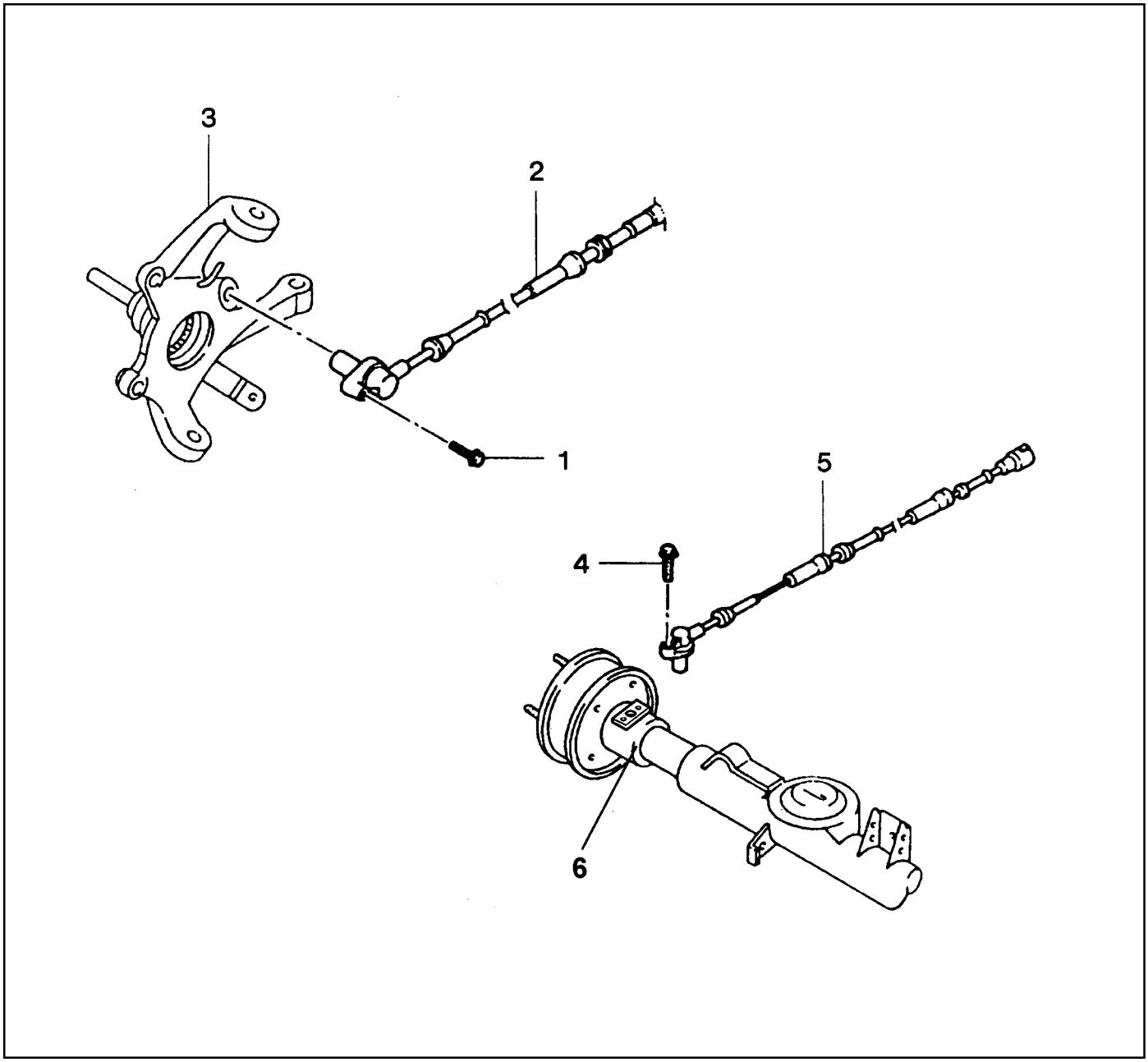

1 Bolt
2 Front Wheel Speed Sensor
3 Knuckle
4 Bolt
5 Rear Wheel Speed Sensor
6 Rear Axle

Downloaded from www.Manualslib.com manuals search engine

Removal & Installation Procedure

ABS Hydraulic Unit

1. Release the ABS wiring connector locking lever in arrow direction and remove the connector.

   Notice

   - Do not force the connector when releasing in arrow direction.
   - For installation of the connetor, align and firmly seat the connector of the hydraulic unit and wiring connector while keeping the locking lever upward and then push it down.

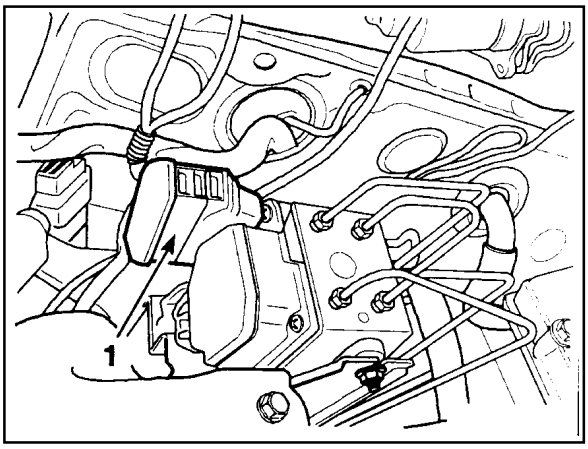

2. Remove the hydraulic lines of the hydraulic unit.

   During removal, be careful not to drip brake fuid on the body.

   Installation Notice

Tightening Torque	12 - 16 Nm

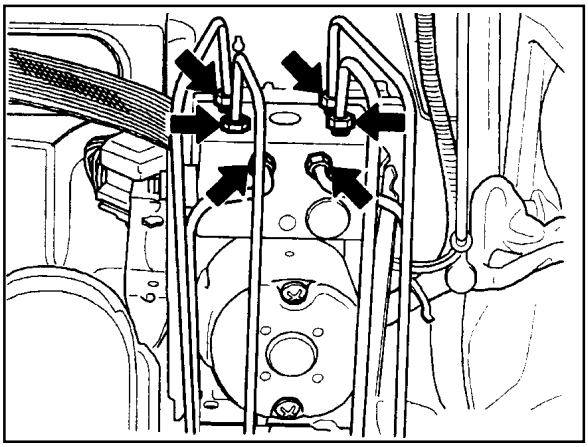

3. Unscrew hydraulic unit mounting nuts (2EA) and remove the unit from the bracket.

   Installation Notice

Tightening Torque	9 - 12 Nm

   Notice

   When carrying a new unit, never recline it over 30°.

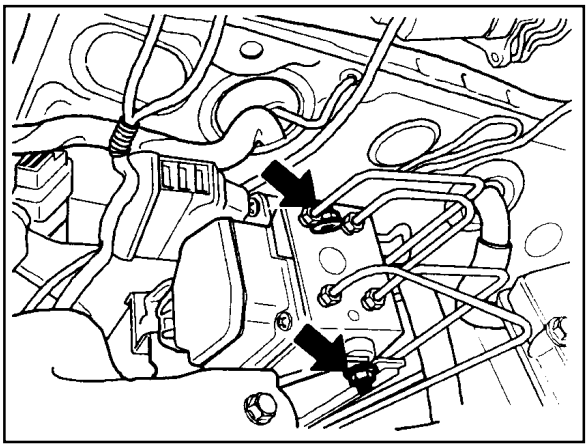

Removal of the ABS / ABD Unit

Location : Under the front passenger's seat.

1. Remove the wiring connector of the ABS/ABD(or ABS : Attached type) ECU.
2. Remove the ground wire.
3. Unscrew the mounting bolts and remove the ECU.
4. Installation should follow the removal precedure in the reverse order.

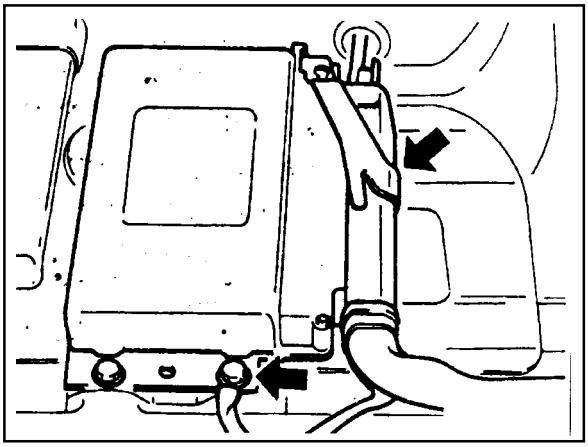

Downloaded from www.Manualslib.com manuals search engine

HYDRAULIC CIRCUIT

ABS 5.3

Pressure Increased

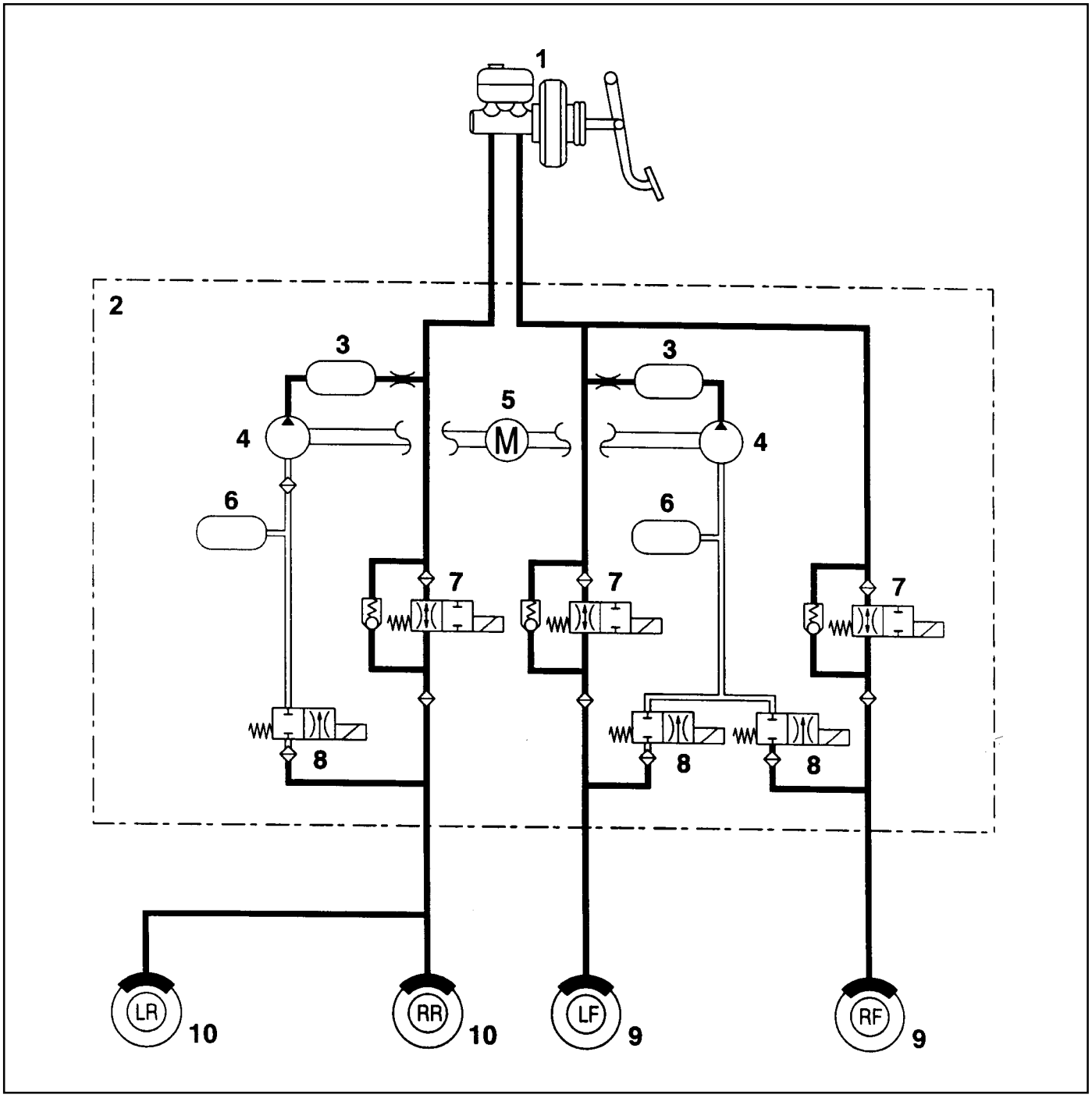

1 Master Cylinder
2 Hydraulic Unit
3 Damping Chamber
4 Return Pump
5 Return Pump Motor
6 Accumulator Chamber
7 Inlet Valve for Each Wheel
8 Outlet Valve for Each Wheel
9 Front Wheel
10 Rear Wheel

Downloaded from www.Manualslib.com manuals search engine

Pressure Decreased

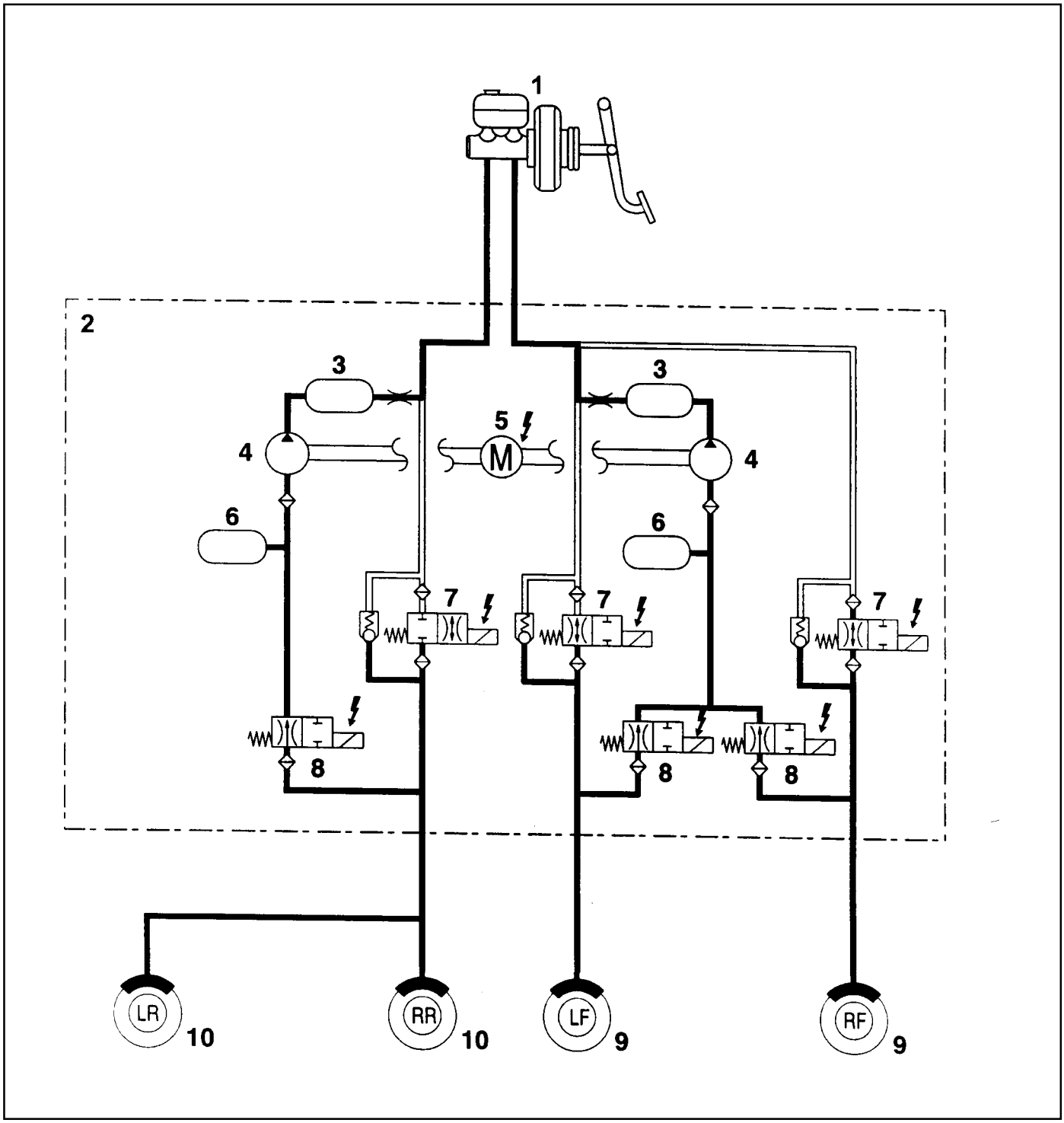

1 Master Cylinder
2 Hydraulic Unit
3 Damping Chamber
4 Return Pump
5 Return Pump Motor
6 Accumulator Chamber
7 Inlet Valve for Each Wheel
8 Outlet Valve for Each Wheel
9 Front Wheel
10 Rear Wheel

Downloaded from www.Manualslib.com manuals search engine

Pressure Maintained

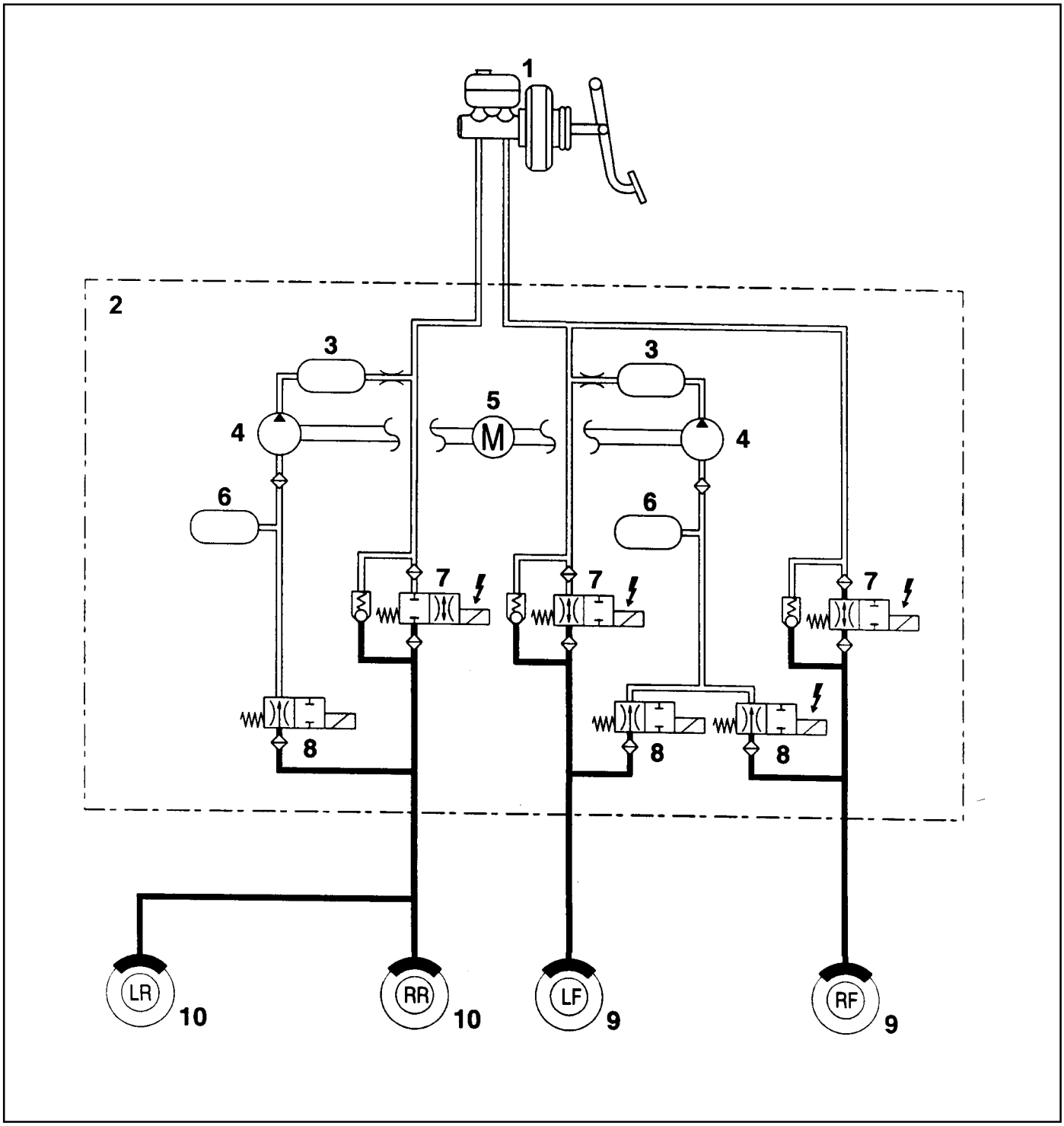

1 Master Cylinder
2 Hydraulic Unit
3 Damping Chamber
4 Return Pump
5 Return Pump Motor
6 Accumulator Chamber
7 Inlet Valve for Each Wheel
8 Outlet Valve for Each Wheel
9 Front Wheel
10 Rear Wheel

Downloaded from www.Manualslib.com manuals search engine

ABS/ABD 5.3

Pressure Increased

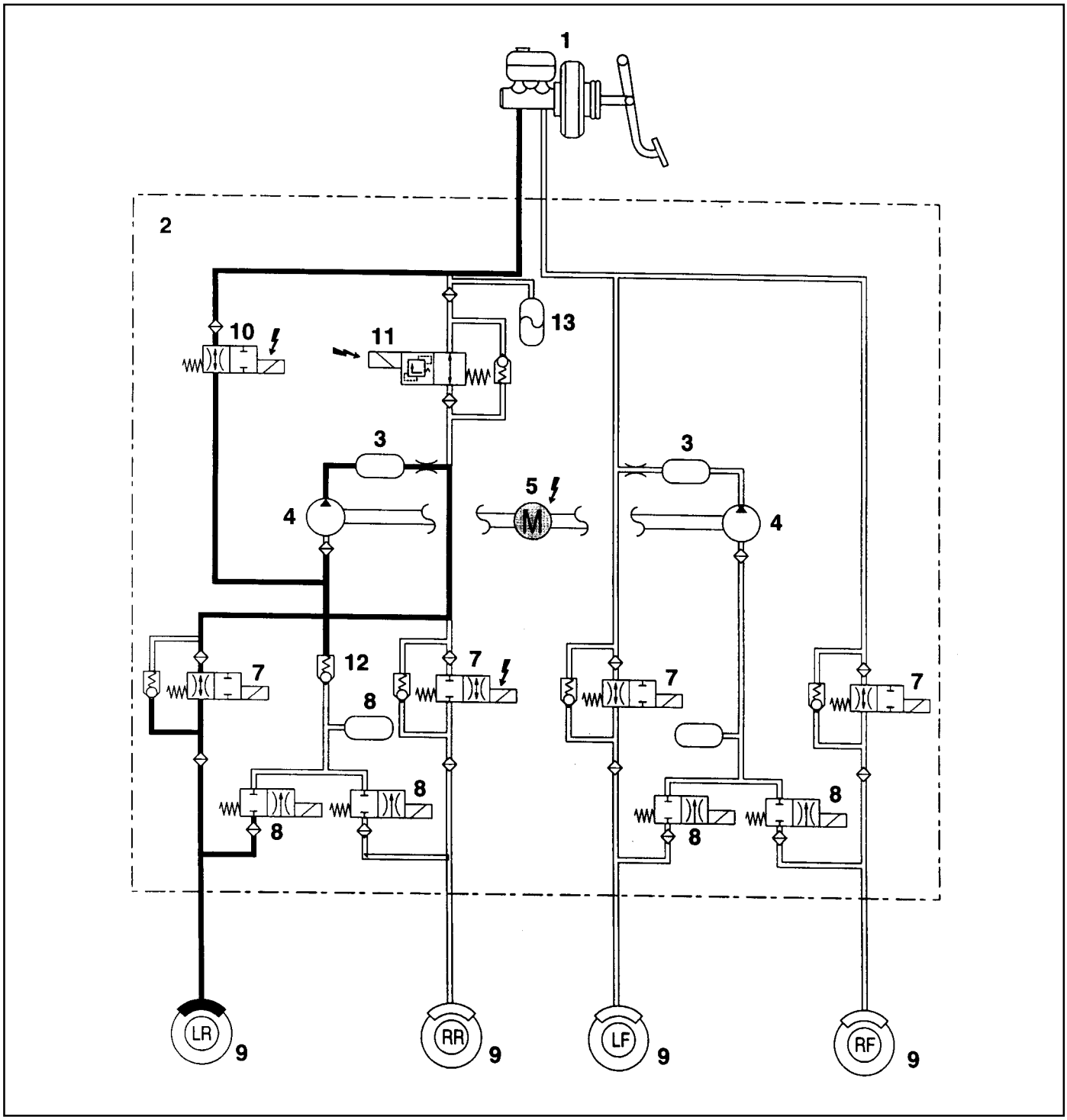

1 Master Cylinder
2 Hydraulic Unit
3 Damping Chamber
4 Return Pump
5 Return Pump Motor
6 Accumulator Chamber
7 Inlet Valve for Each Wheel
8 Outlet Valve for Each Wheel
9 Wheel
10 Prime Valve (ASV)
11 Pilot Valve (USV)
12 Check Valve
13 ISD (Integrated Suction Damper)

Downloaded from www.Manualslib.com manuals search engine

Pressure Decreased

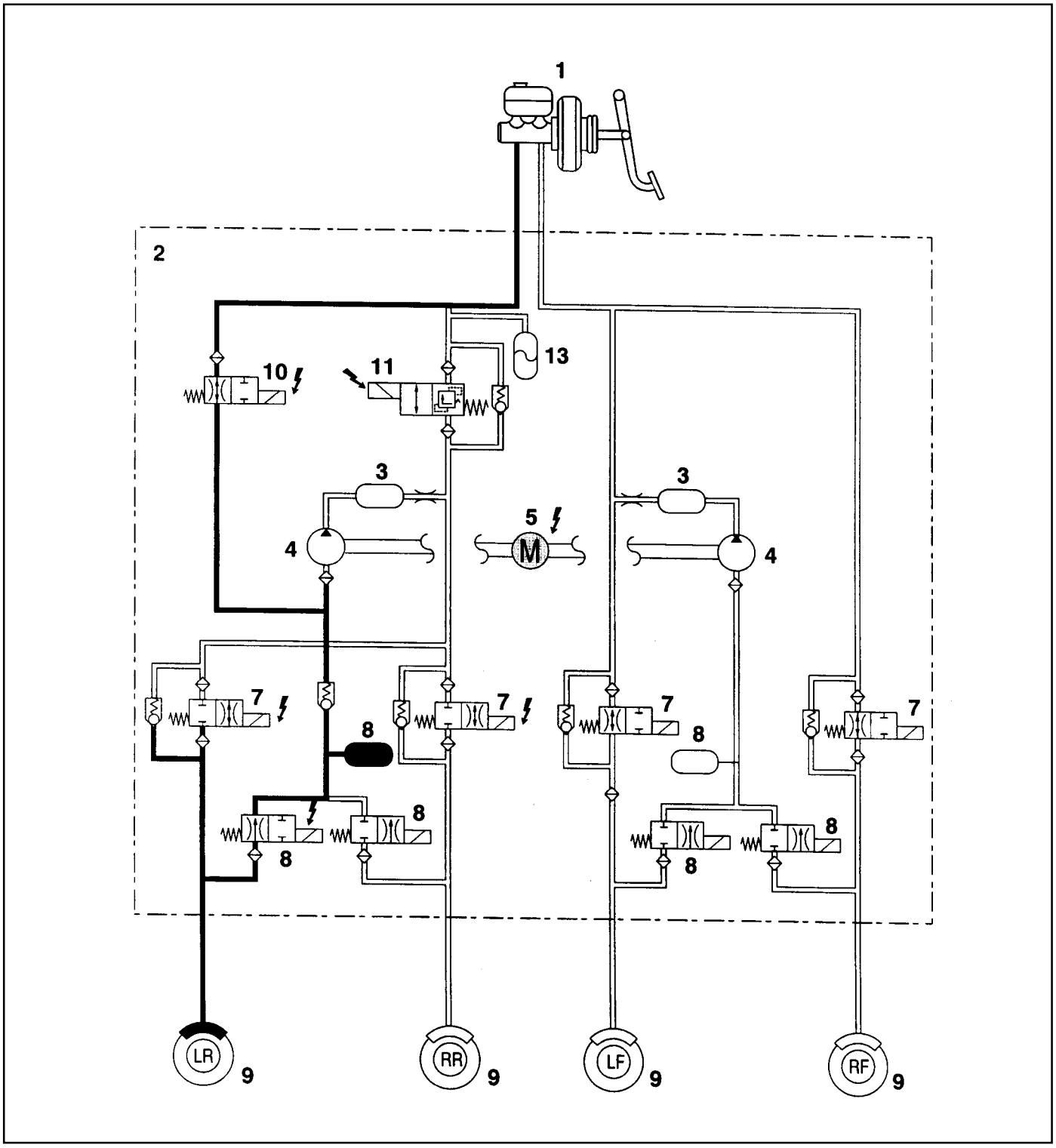

1 Master Cylinder
2 Hydraulic Unit
3 Damping Chamber
4 Return Pump
5 Return Pump Motor
6 Accumulator Chamber
7 Inlet Valve for Each Wheel
8 Outlet Valve for Each Wheel
9 Wheel
10 Prime Valve (ASV)
11 Pilot Valve (USV)
12 Check Valve
13 ISD (Integrated Suction Damper)

Downloaded from www.Manualslib.com manuals search engine

Pressure Maintained (Hold)

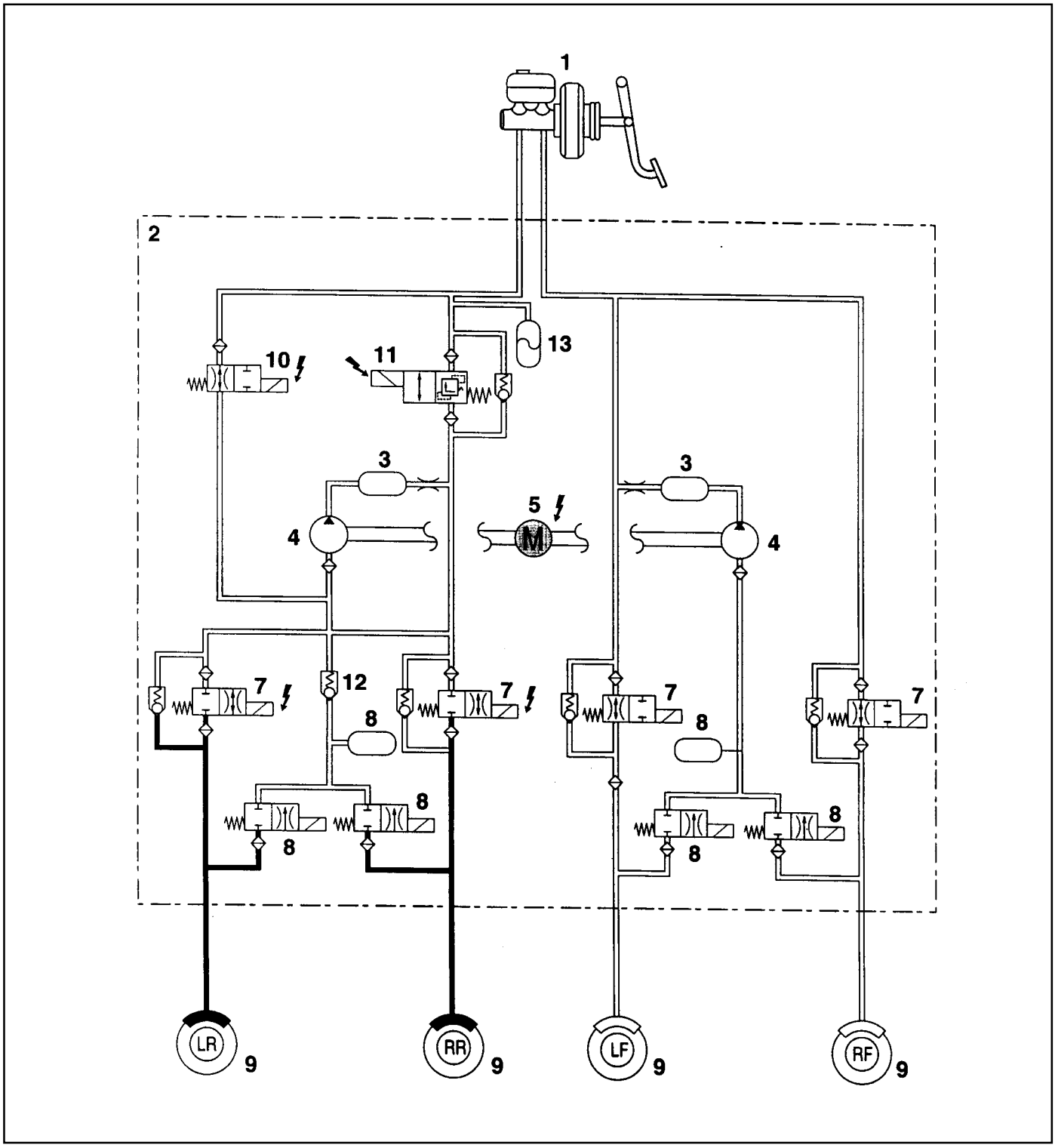

1 Master Cylinder
2 Hydraulic Unit
3 Damping Chamber
4 Return Pump
5 Return Pump Motor
6 Accumulator Chamber
7 Inlet Valve for Each Wheel
8 Outlet Valve for Each Wheel
9 Wheel
10 Prime Valve (ASV)
11 Pilot Valve (USV)
12 Check Valve
13 ISD (Integrated Suction Damper)

Downloaded from www.Manualslib.com manuals search engine

SECTION 4G

PARKING BRAKE

Caution: Disconnect the negative battery cable before removing or installing any electrical unit or when a tool or equipment could easily come in contact with exposed electrical terminals. Disconnecting this cable will help prevent personal injury and damage to the vehicle. The ignition must also be in LOCK unless otherwise noted.

TABLE OF CONTENTS

Specifications 4G-1
General Specifications 4G-1
Fastener Tightening Specifications 4G-1
Component Locator 4G-2
Parking Brake 4G-2
Maintenance and Repair 4G-3
On-Vehicle Service 4G-3
Parking Brake 4G-3

SPECIFICATIONS

GENERAL SPECIFICATIONS

Application	Description
Type	Mechanically Operated Rear Wheel Expansion
Operating Type	Manual

FASTENER TIGHTENING SPECIFICATIONS

Application	N·m
Parking Brake Lever Bolt	8 - 18
Cable Mounting Bracket Bolt	8 - 18

Downloaded from www.Manualslib.com manuals search engine

COMPONENT LOCATOR

PARKING BRAKE

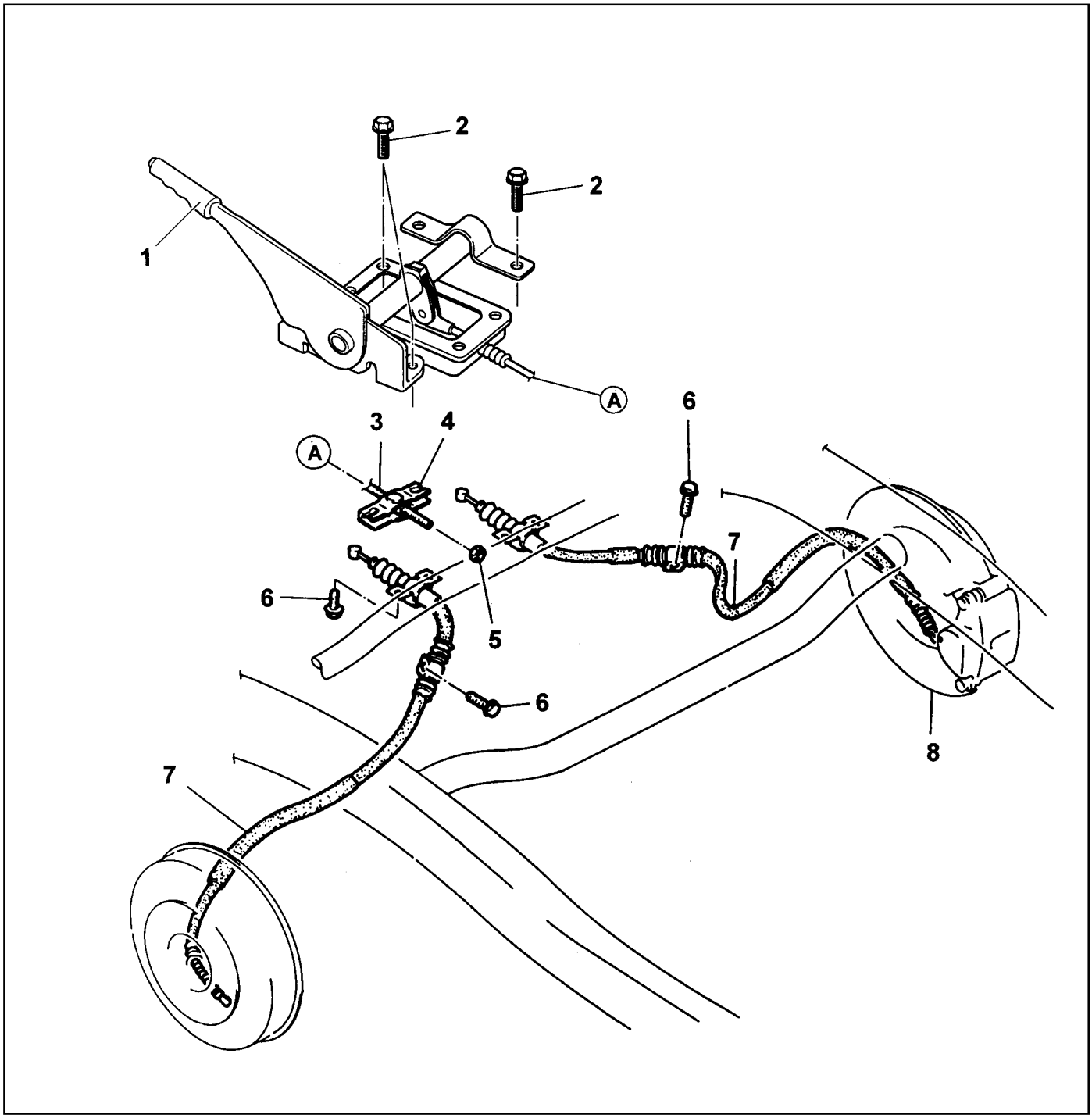

1 Parking Brake Lever
2 Bolt ..... 8-18 Nm
3 Front Parking Brake Cable
4 Equalizer
5 Nut
6 Bolt ..... 8-18 Nm
7 Rear Parking Brake Cable
8 Brake Disc

Downloaded from www.Manualslib.com manuals search engine

MAINTENANCE AND REPAIR

ON-VEHICLE SERVICE

PARKING BRAKE

Removal & Installation Procedure

1. Disconnect the parking brake indicator switch connector.

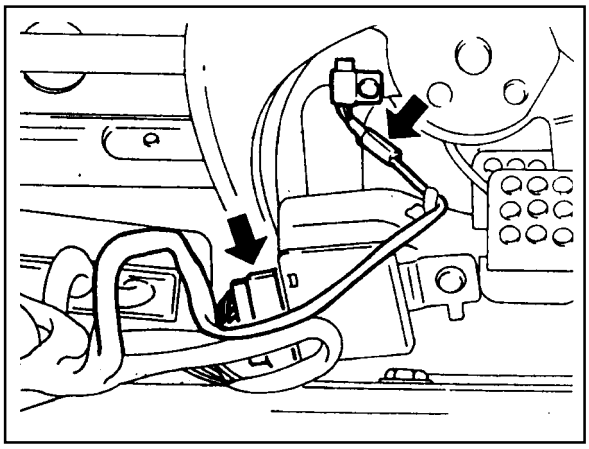

2. Disconnect the right and left cable from equalizer while parking brake lever is released.

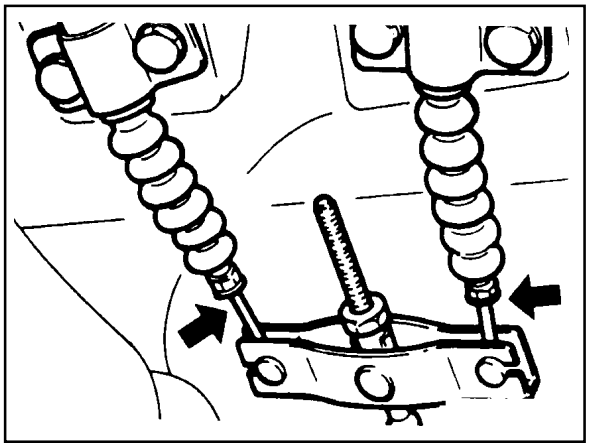

3. Unscrew 8 bolts and remove the parking brake lever assembly.

   Installation Notice

Tightening Torque	8 - 18 Nm

   Notice

   Tighten the bolts with sequence number while the lever is pulled up 4 to 6 notches.

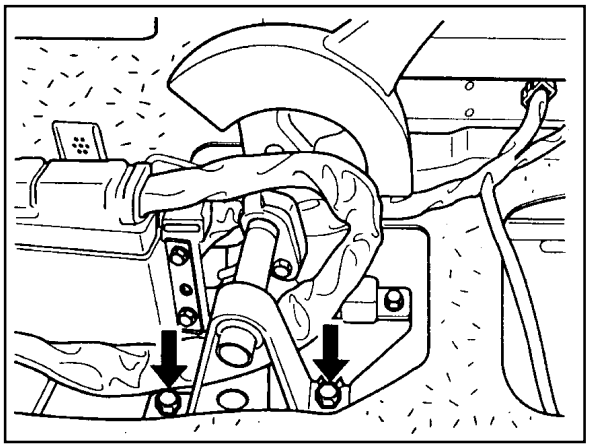

4. Unscrew the frame and lower arm side cable mounting bracket bolts.

   Installation Notice

Tightening Torque	8 - 18 Nm

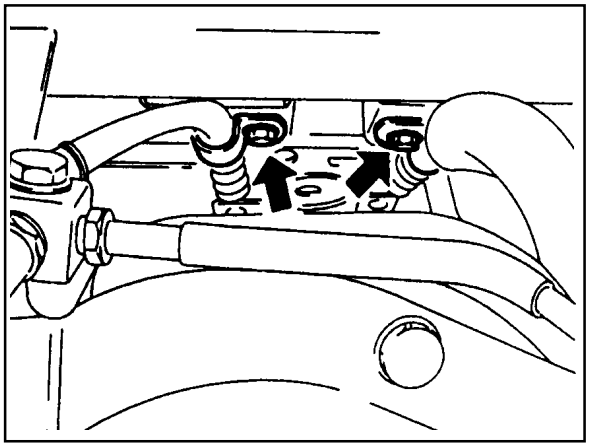

Downloaded from www.Manualslib.com manuals search engine

5. Remove the retainer with a screwdriver and disconnect the brake cable.

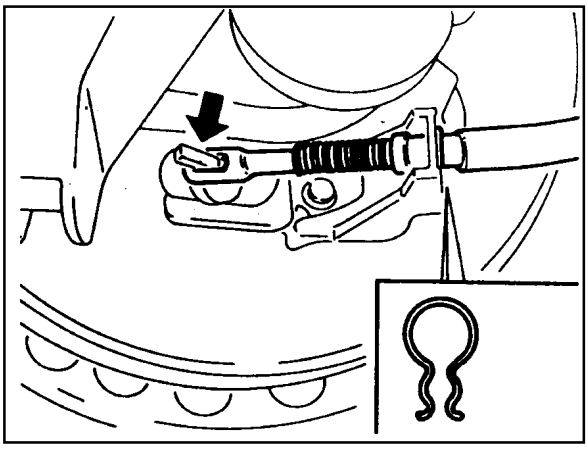

6. Installation should follow the removal procedure in the reverse order.

Downloaded from www.Manualslib.com manuals search engine

SECTION 5A

AUTOMATIC TRANSMISSION

TABLE OF CONTENTS

Specifications 5A-2
Model Part Numbers and Applications 5A-2
Model Specifications 5A-2
Clutch Pack Details 5A-3
Special Tools 5A-4
Special Tools Table 5A-4
Schematic and Routing Diagrams 5A-5
TCU Circuit (4WD-Diesel) 5A-5
TCU Circuit (4WD-Gasoline) 5A-6
Shift Pattern Diagram 5A-7
661LA Normal Mode 5A-7
661LA Power Mode 5A-8
662LA Normal Mode 5A-9
662LA Power Mode 5A-10
662LA Low Mode 5A-11
E32 Power Mode 5A-12
E32 Normal Mode 5A-13
E32 Low Mode 5A-14
E23 Power Mode 5A-15
E23 Normal Mode 5A-16
E23 Low Mode 5A-17
Introduction 5A-18
Operator Interfaces 5A-20
Gear Select Lever Operation 5A-20
Driving Mode Selector 5A-21
Control Systems 5A-22
General 5A-22
Electronic Control System 5A-22
Hydraulic Control System 5A-31
Power Train System 5A-42
Torque Converter 5A-43
Clutch Packs 5A-44
Bands 5A-45
One Way Clutches 5A-45
Planetary Gear Set 5A-45
Parking Mechanism 5A-46
Power Flows 5A-47
Introduction 5A-47
Power Flow - Park and Neutral 5A-48
Power Flow - Reverse 5A-49
Power Flow - Manual 1 . . . . . 5A-50
Power Flow - Drive 1 . . . . . 5A-51
Power Flow - Drive 2 and Manual 2 . . . . . 5A-52
Power Flow - Drive 3 and Manual 3 . . . . . 5A-54
Power Flow - Drive 3 Lock Up and Manual 3 Lock Up 5A-56
Power Flow - Drive 4 (Overdrive) 5A-57
Power Flow - Drive 4 Lock Up 5A-59
Diagnosis 5A-60
Diagnostic System 5A-60
Mechanical Tests 5A-69
Self Diagnosis Test 5A-75
Adjustments 5A-79
Hydraulic System 5A-79
Transmission Fluid Test Procedure 5A-79
Electronic Adjustments 5A-80
Maintenance and Repair 5A-82
On-Vehicle Service 5A-82
Removal and Installation of Transmission . . . 5A-82
Unit Repair 5A-85
Rebuild Warnings 5A-85
Disassembly Procedure 5A-85
Assembly Procedure 5A-94
Front and Rear Band Adjustment 5A-128

Downloaded from www.Manualslib.com manuals search engine

SPECIFICATIONS

MODEL PART NUMBERS AND APPLICATIONS

DWMC P/NO	Transmission	Engine Version	Torque Converter
36100-05420 (1)	0574-000001 (9)	661LA	179K
36100-05430 (1)	0574-000002 (8)	E32	160K
36100-05410 (1)	0574-000004 (10)	662LA(Turbo)	160K
36100-05440 (1)	0574-000005 (7)	E23	179K

MODEL SPECIFICATIONS

Application	Descriprtion
Torque Converter	
Mean diameter of fluid circuit	260
Maximum torque multiplication	2.0 : 1
Stall speed (rpm)	
0574-000001 (D23LA)	2100 - 2250
0574-000002 (E32)	2050 - 2250
0574-000004 (D29LA)	2100 - 2200
0574-000005 (E23)	1800 - 2100
0574-000020	
0574-000021	
Gear Ratios	
First	2.741 : 1
Second	1.508 : 1
Third	1.000 : 1
Fourth	0.708 : 1
Reverse	2.429 : 1
Lubricant	
Type	Castrol TQ95 or other approved fluid
Capacity	
Dry System	9.0 Litres (approx)
Service Refill	4.5 Litres (approx)
Gear Train End Float	0.50 - 0.65 mm
Gear Set Pinion End Float	0.10 - 0.50 mm

Downloaded from www.Manualslib.com manuals search engine

CLUTCH PACK DETAILS

	0574-000001, 0574-000004, 0574-000005	**0574-000002**
C1		
Composition	4	5
Steel	6(2)	5(2)
C2		
Composition	4	5
Steel	5(2)	4(2)
C3		
Composition	3	4
Steel	5(2)	4(2)
C4		
Composition	3	3
Steel	4(1)	4(1)

Note : Numbers in brackets indicate number of selective thickness steel plates required to achieve specifed clutch pack clearance

Downloaded from www.Manualslib.com manuals search engine

SPECIAL TOOLS

SPECIAL TOOLS TABLE

Part Number	Description
0555 - 332083	Solenoid / Thermistor, Electronic Tester
0555 - 336046	Solenoid, Bench Tester
0555 - 336256	Transmission Bench Cradle
0555 - 336257	Pump Puller
0555 - 336258	Pin Remover / Installer Tool (Cross Shaft / Detent Lever)
0555 - 336259	Clutch Spring Compressor
0555 - 336260	Clutch Pack Clearance Kit
0555 - 336261	Seal Removal Tool (Cross - Shaft)
0555 - 336262	Oil Seal Dolly (Cross - Shaft)
0555 - 336263	Assembly Bullet
0555 - 336264	Seal Compressor
0555 - 336265	Pin Press
0555 - 336266	Seal Dolly
0555 - 336267	Alignment Tool
0555 - 336268	Pump Seal Dolly
0555 - 336269	End Float Adaptor
0555 - 336270	End Float Shaft
0555 - 332895	Locknut Crimping Tool (W-Car Only)

Downloaded from www.Manualslib.com manuals search engine

SCHEMATIC AND ROUTING DIAGRAMS

TCU CIRCUIT (4WD-DIESEL)

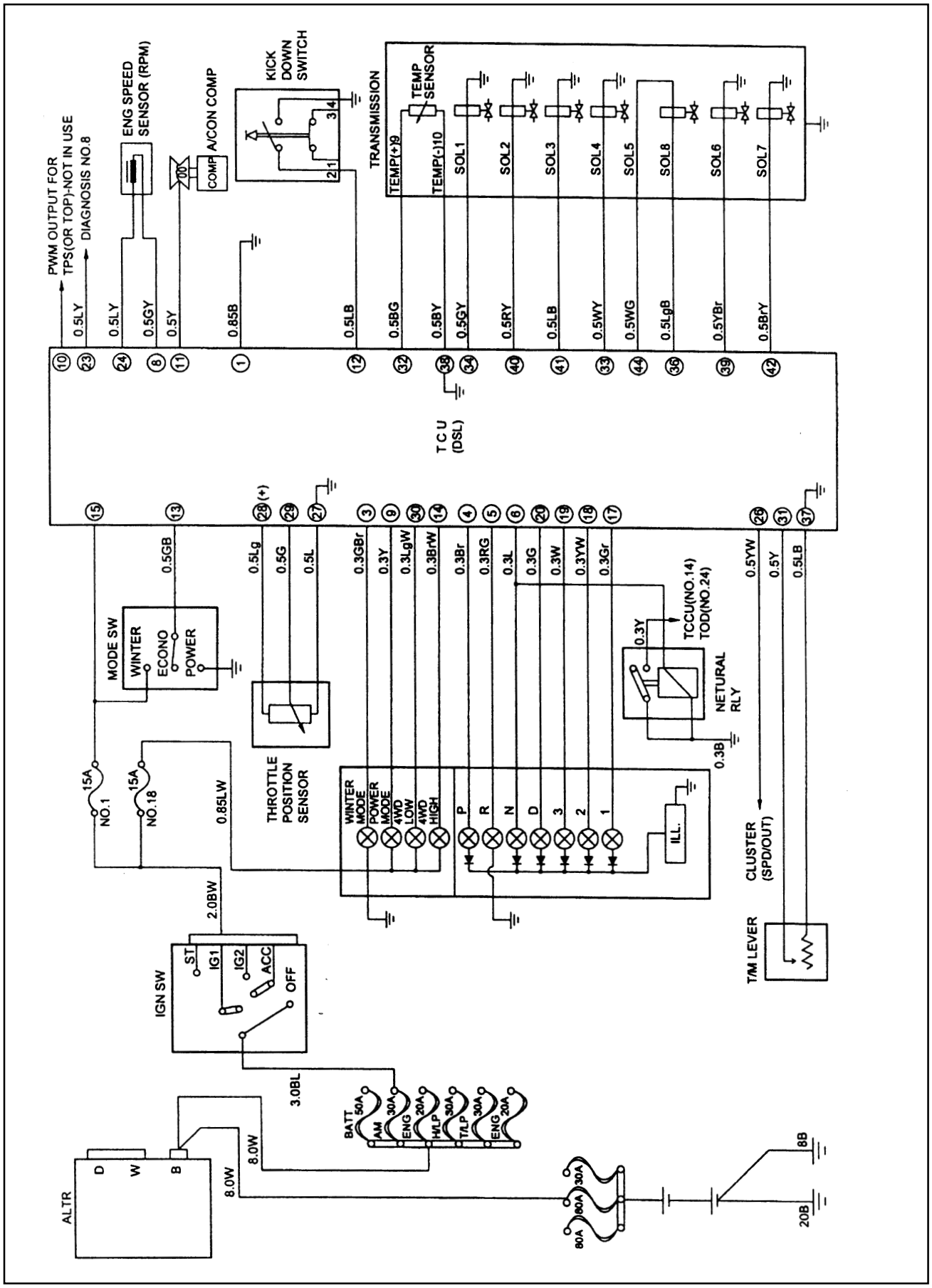

Downloaded from www.Manualslib.com manuals search engine

TCU CIRCUIT (4WD-GASOLINE)

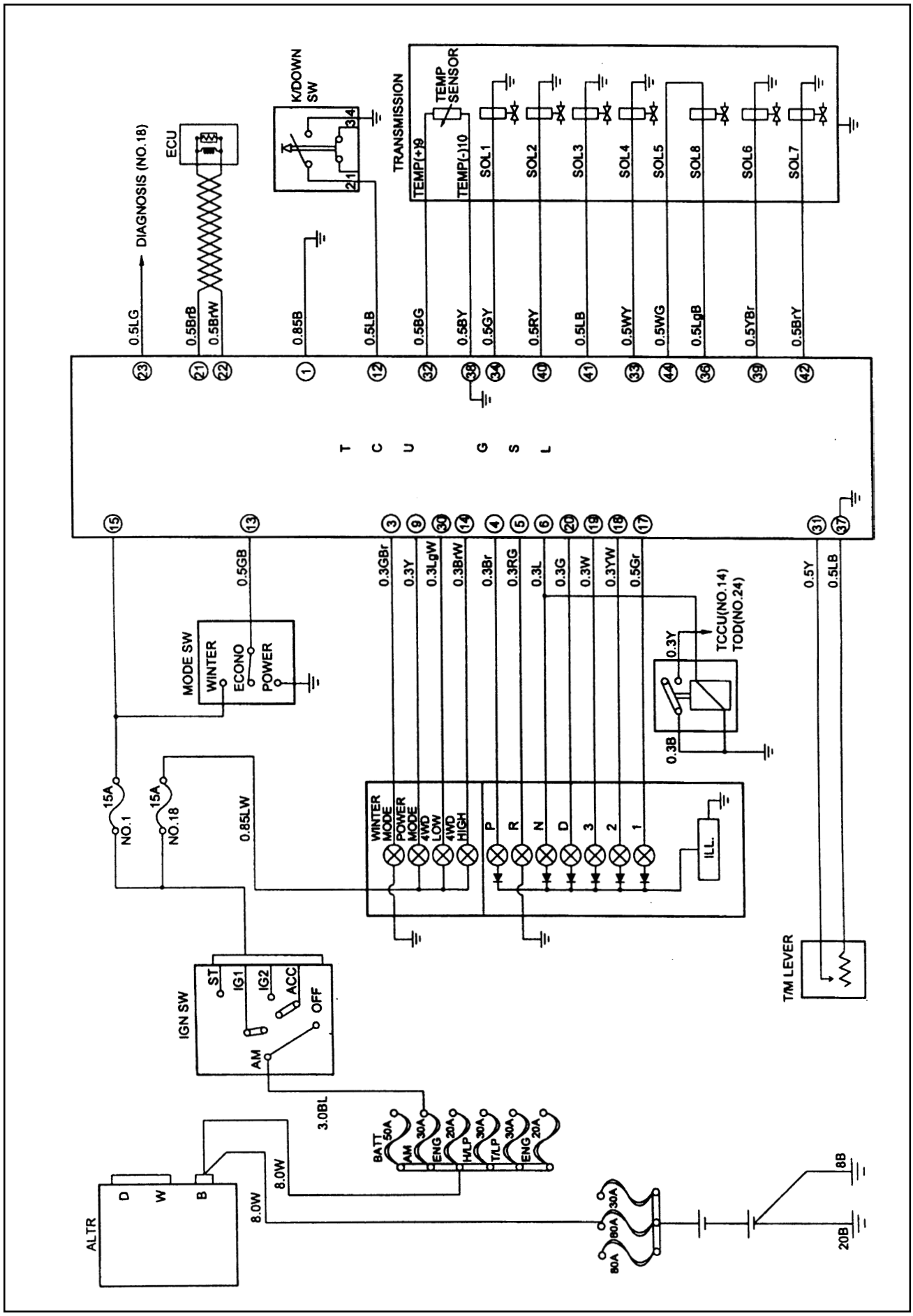

Downloaded from www.Manualslib.com manuals search engine

SHIFT PATTERN DIAGRAM

661LA NORMAL MODE

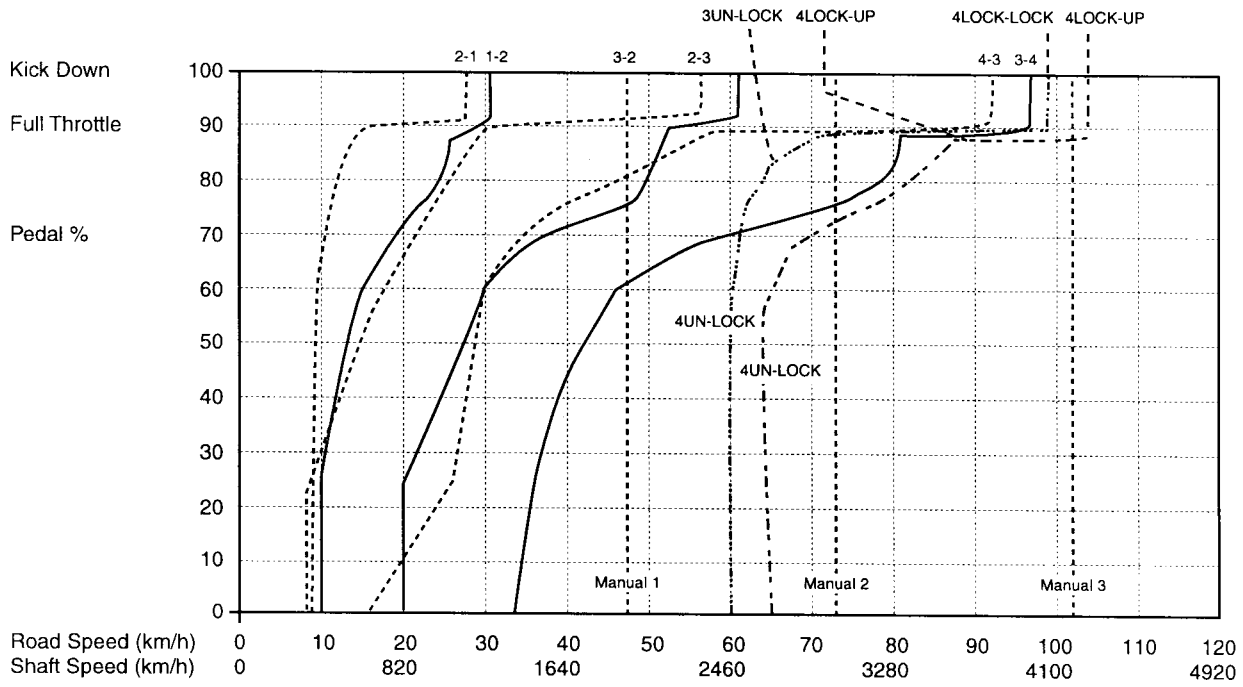

Downloaded from www.Manualslib.com manuals search engine

661LA POWER MODE

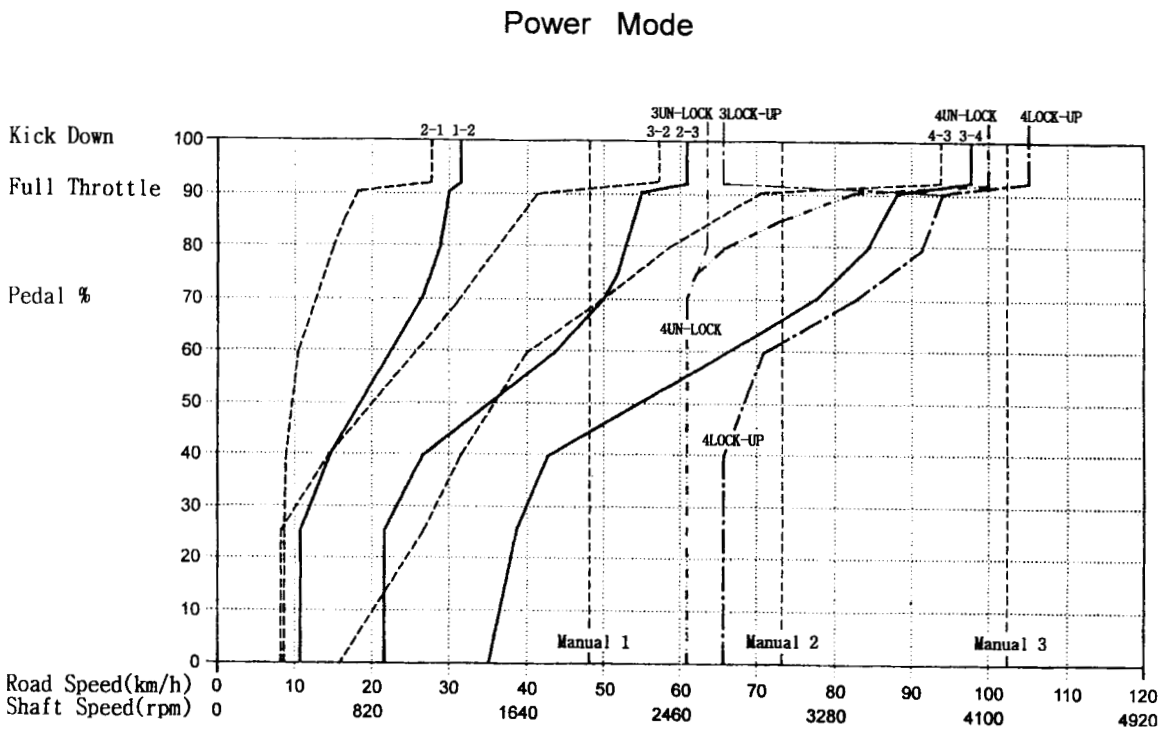

Downloaded from www.Manualslib.com manuals search engine

662LA NORMAL MODE

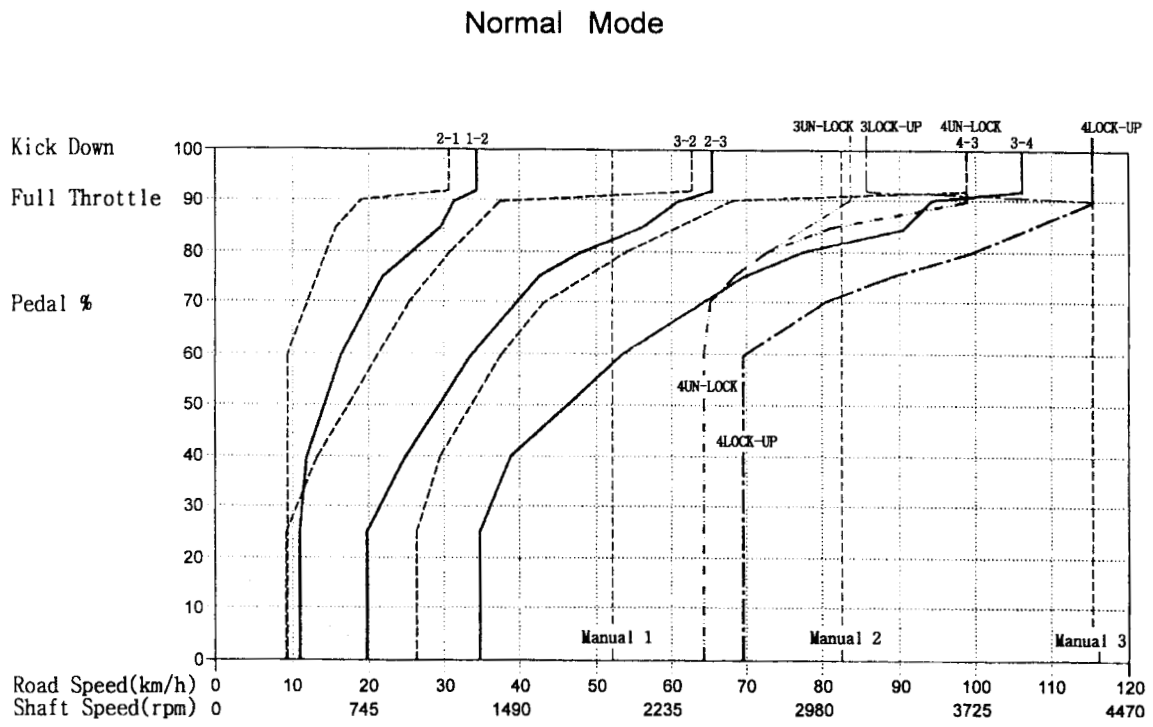

Downloaded from www.Manualslib.com manuals search engine

662LA POWER MODE

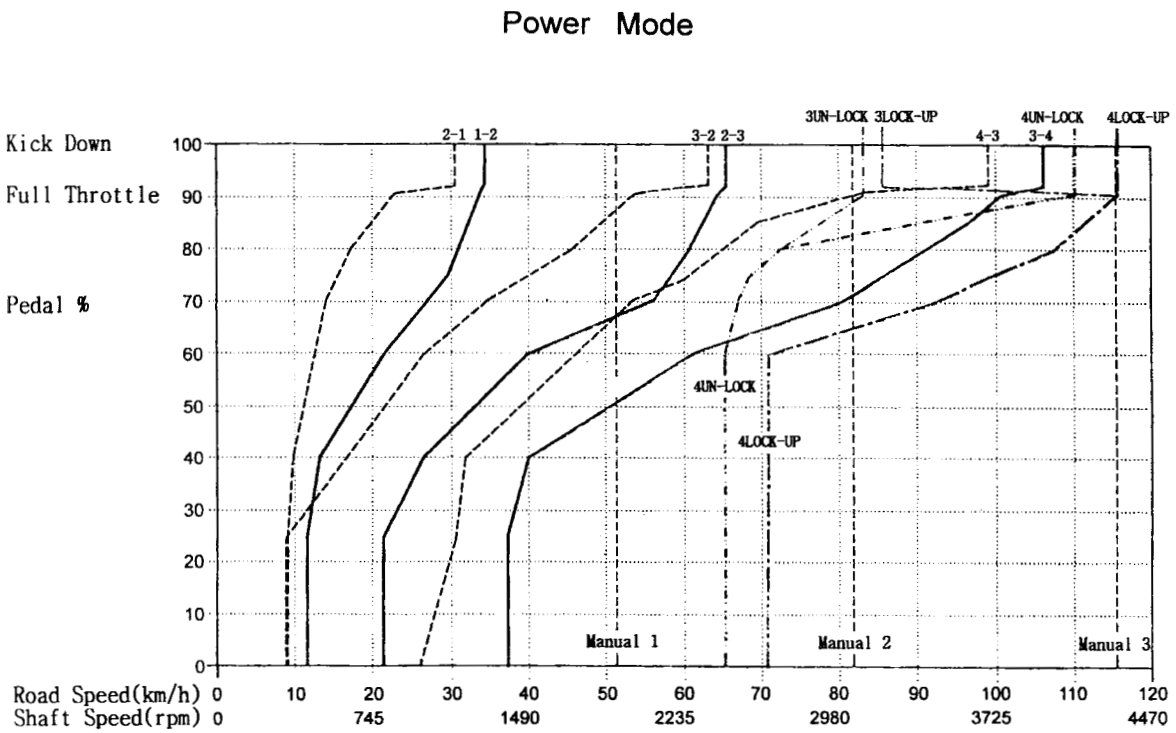

Downloaded from www.Manualslib.com manuals search engine

662LA LOW MODE

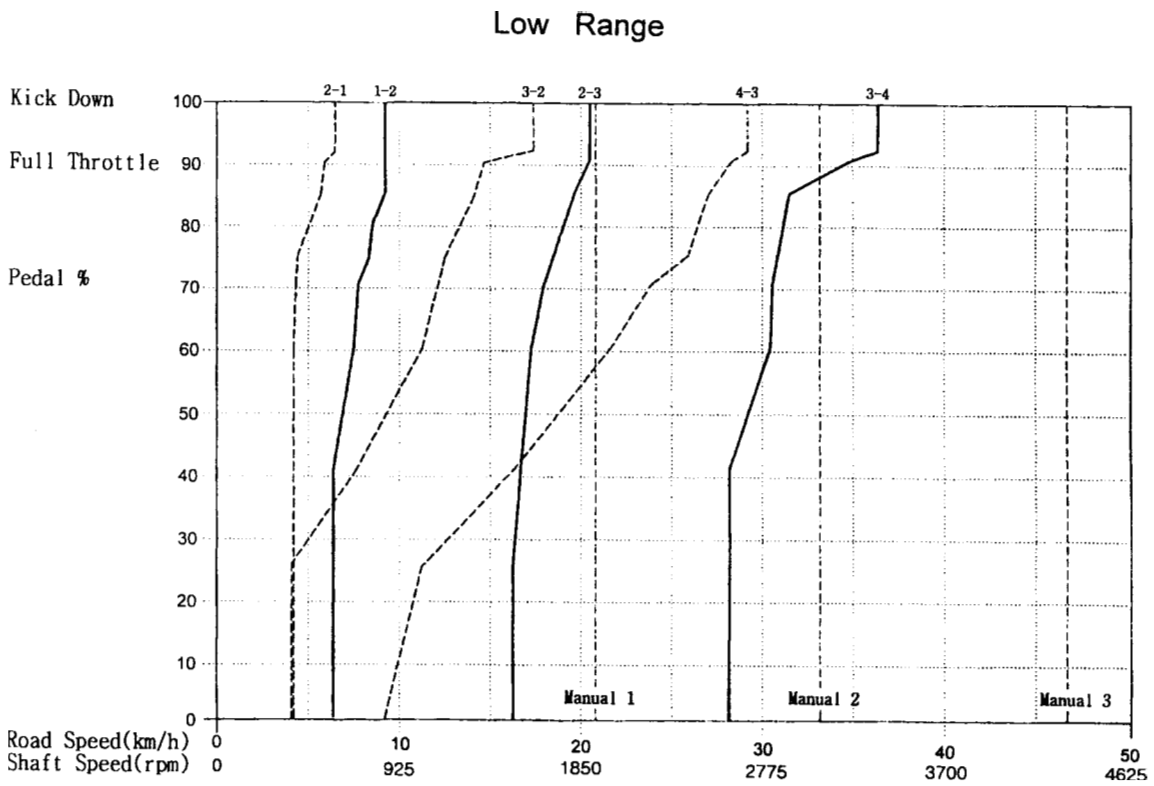

Downloaded from www.Manualslib.com manuals search engine

E32 POWER MODE

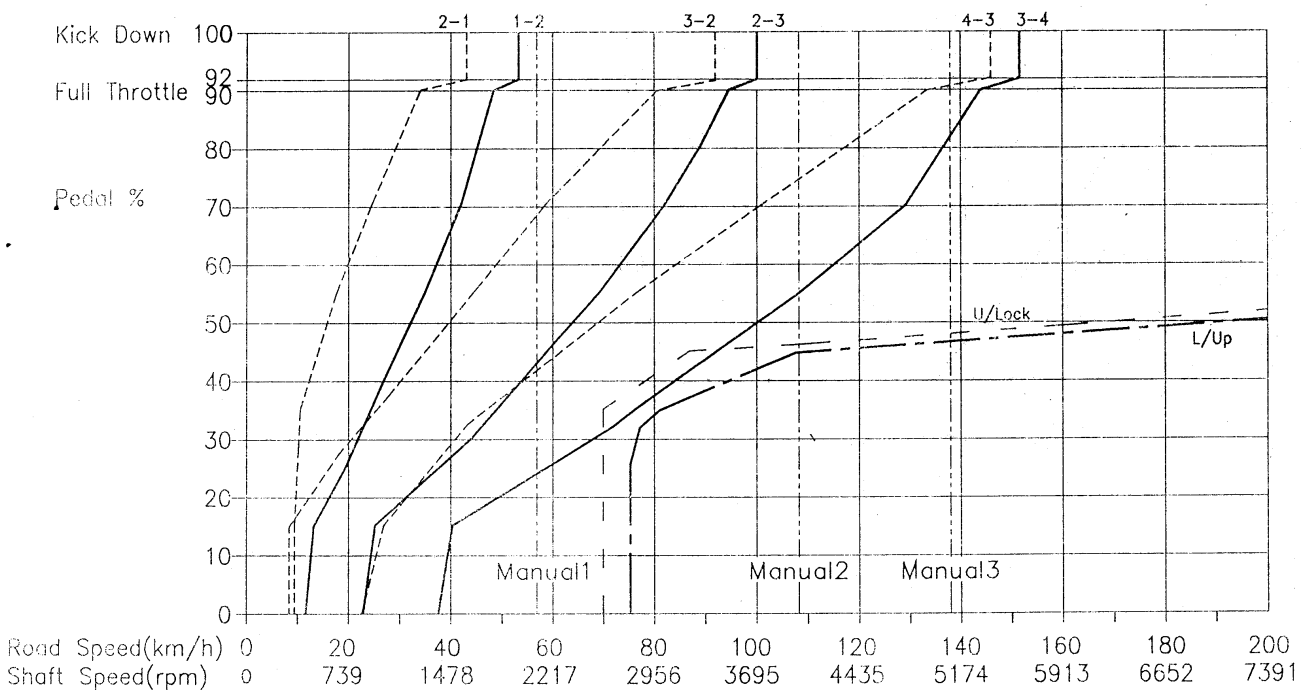

Downloaded from www.Manualslib.com manuals search engine

E32 NORMAL MODE

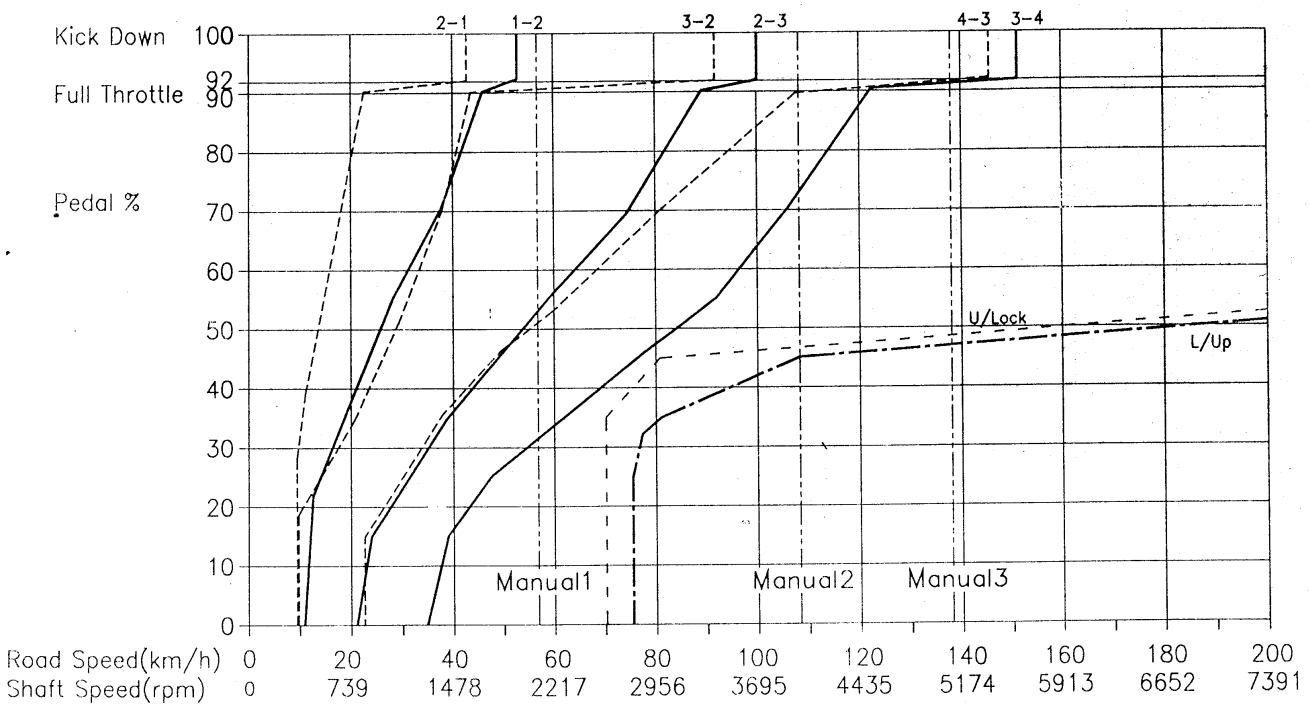

Downloaded from www.Manualslib.com manuals search engine

E32 LOW MODE

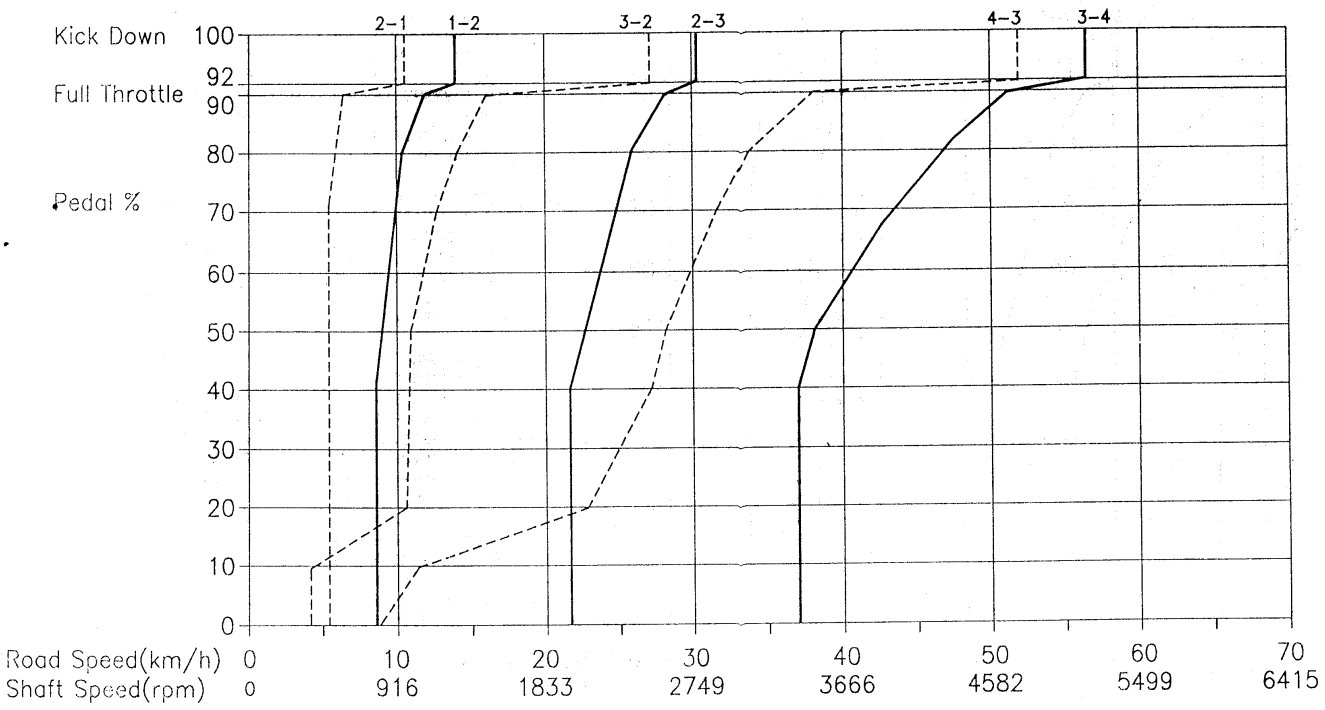

Downloaded from www.Manualslib.com manuals search engine

E23 POWER MODE

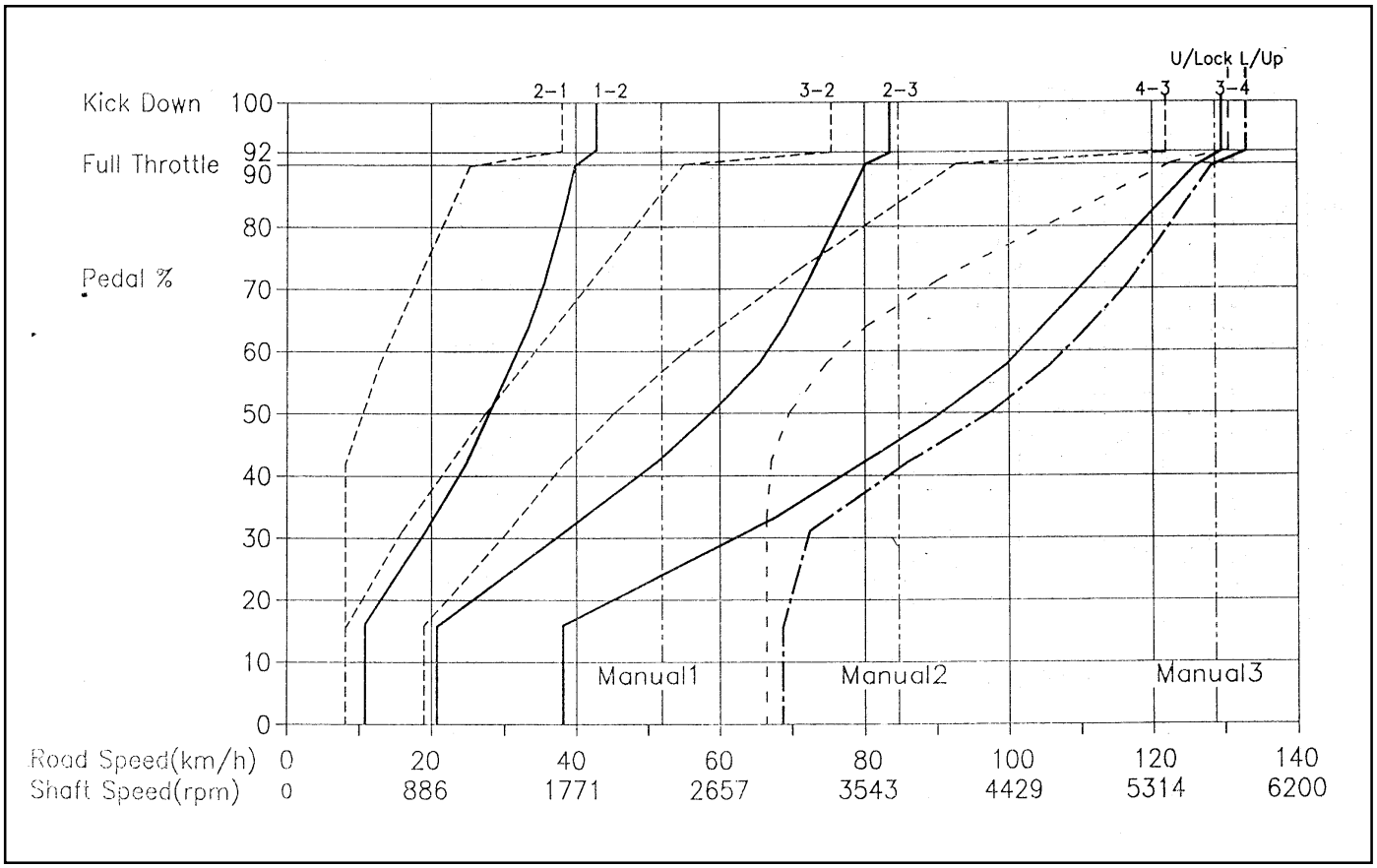

Downloaded from www.Manualslib.com manuals search engine

E23 NORMAL MODE

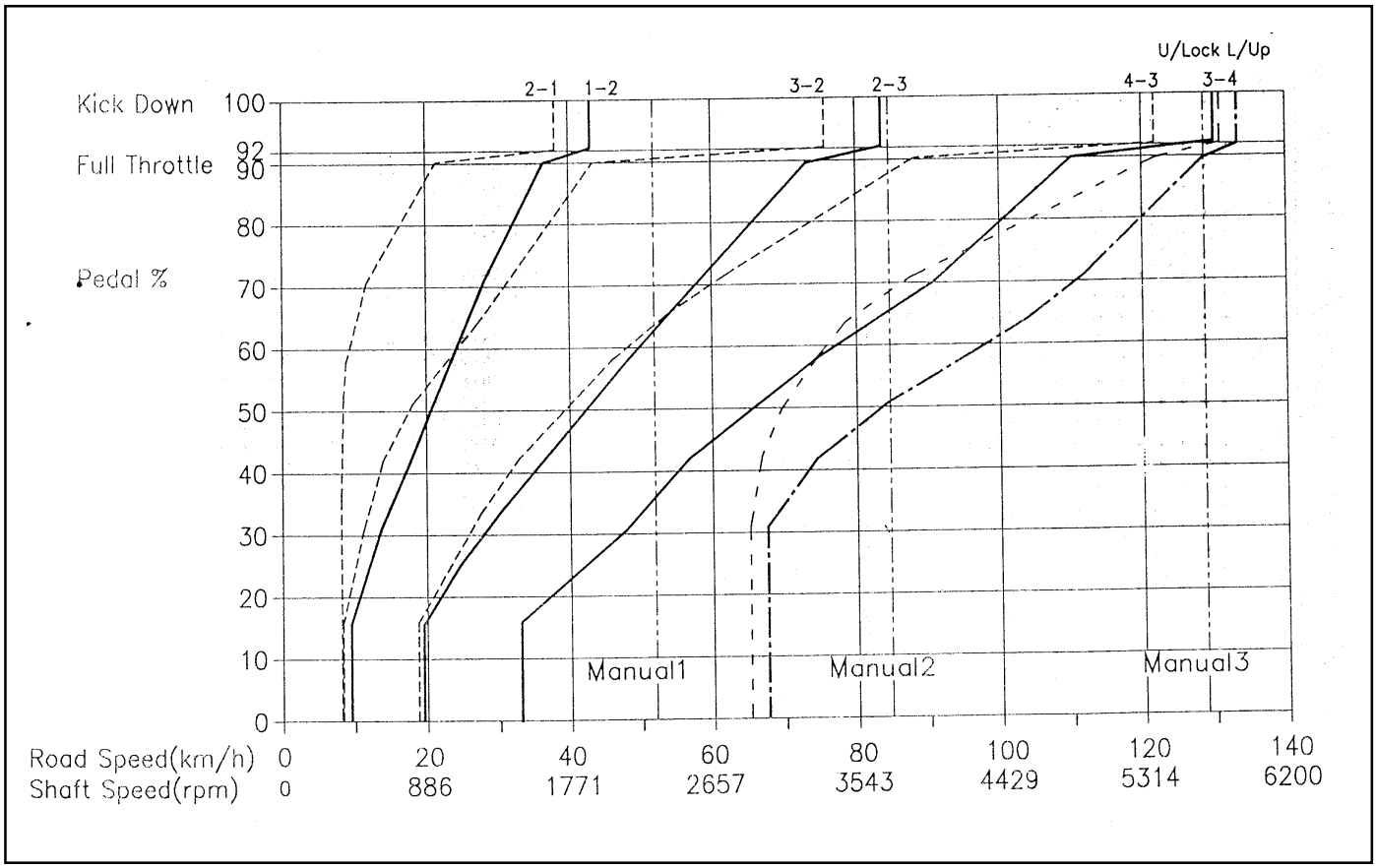

Downloaded from www.Manualslib.com manuals search engine

E23 LOW MODE

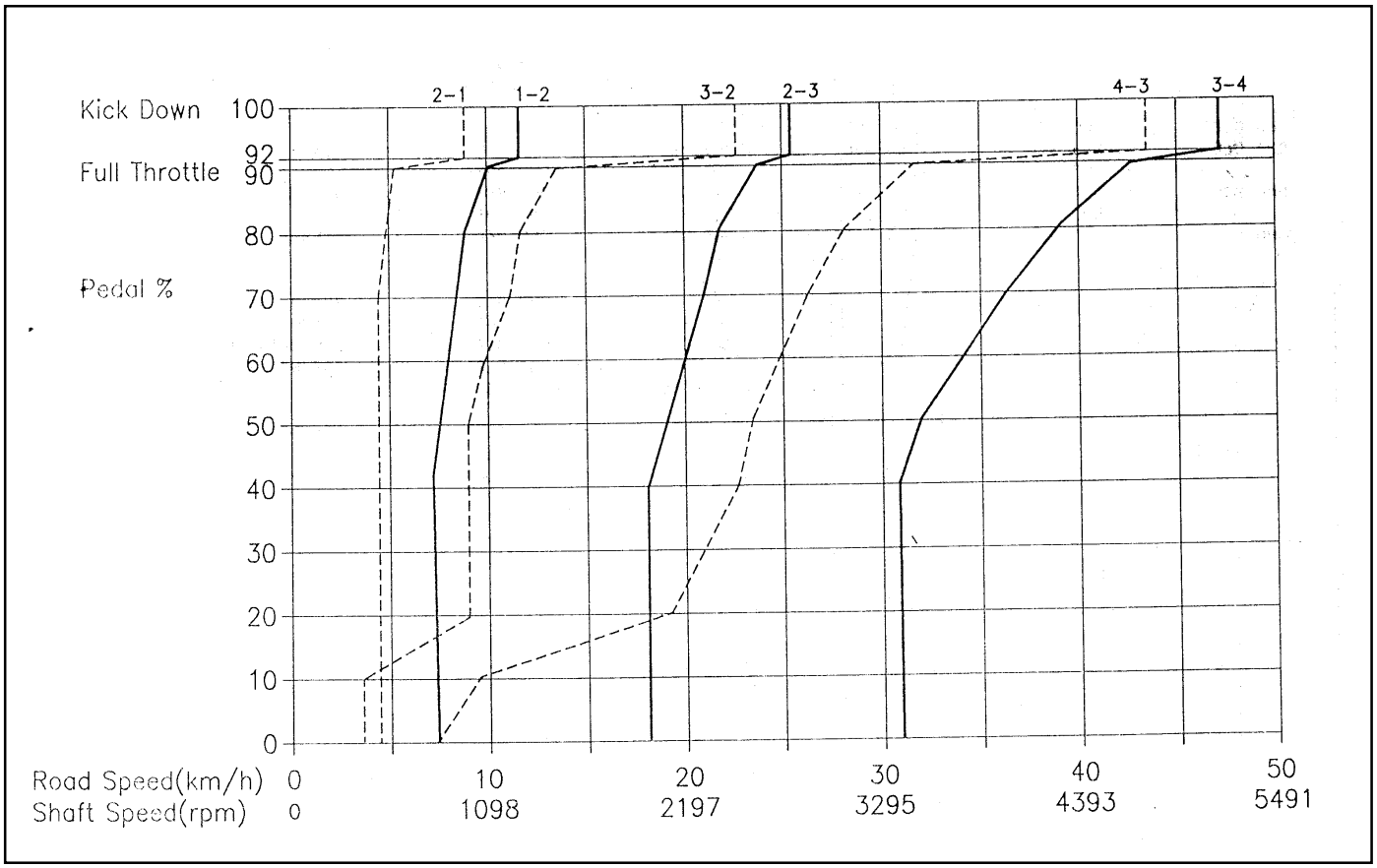

Downloaded from www.Manualslib.com manuals search engine

INTRODUCTION

The BTR Automotive Model 74 Four Speed Automatic Transmission is an electronically controlled overdrive four speed unit with a lock-up torque converter. The lock-up torque converter results in lower engine speeds at cruise and eliminates unnecessary slippage. These features benefit the customer through improved fuel economy and noise reduction. Refer to table 1.1 for details of power, torque and configuration.

Of primary significance is the transmission control unit (TCU) which is a microprocessor based control system. The TCU utilizes throttle position, rate of throttle opening, engine speed, transmission output speed, transmission sump temperature, gear selector position and mode selector inputs, and in some applications a ‘kickdown’ switch to control all shift feel and shift schedule aspects.

The TCU drives a single proportional solenoid multiplexed to three regulator valves to control all shift feel aspects. The output pressure of this solenoid is controlled as a function of transmission sump temperature to maintain consistent shift feel throughout the operating range.

Shift scheduling is highly flexible, and several independent schedules are programmed depending on the vehicle. Typically the ‘NORMAL’ schedule is used to maximise fuel economy and driveability, and a ‘POWER’ schedule is used to maximise performance. ‘WINTER’ schedule is used to facilitate starting at second gear.

Figure 1.1 details the differences between conventional and electronic transmission control systems.

Table 1.1 - M74 Torque, Power and Configuration

Model	Max Torque (Nm)	Min Torque (Nm)	Configuration
M74 4WD Transmission	320	160	260 mm Torque Converter Wide Ratio Gear Set Splined Output for Transfer Case

Downloaded from www.Manualslib.com manuals search engine

Figure 1.1 - Conventional VS Electronic Transmission Control System

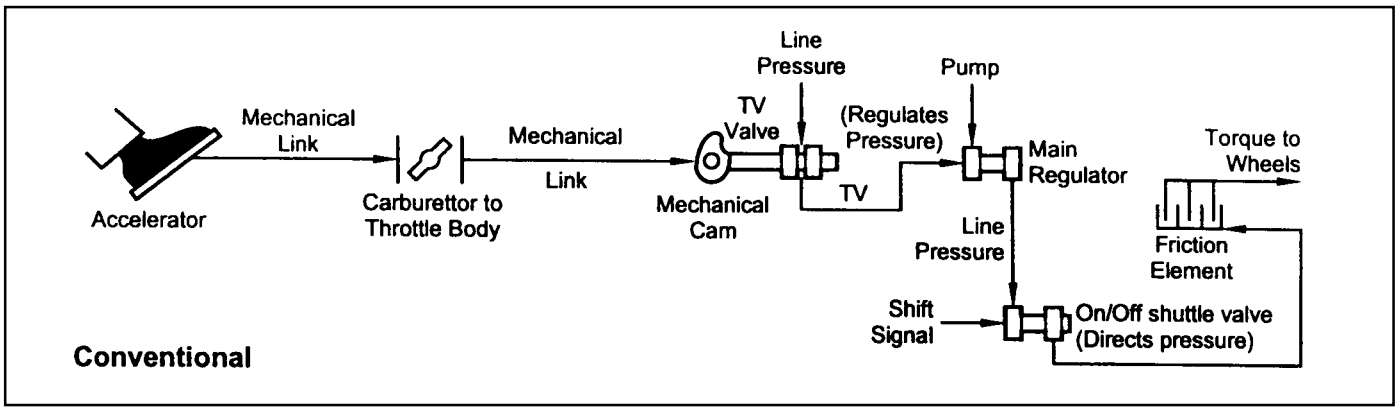

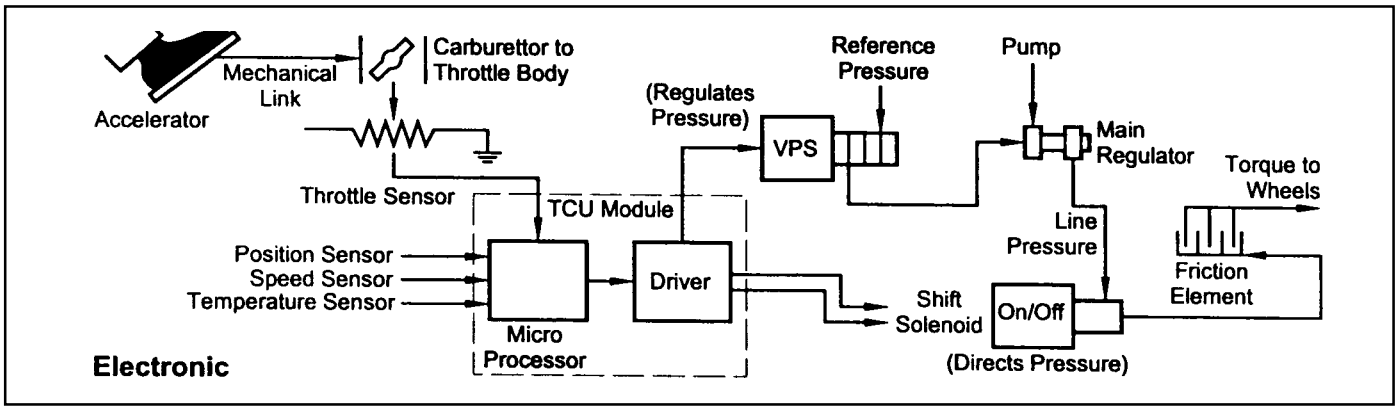

Downloaded from www.Manualslib.com manuals search engine

OPERATOR INTERFACES

There are three operator interfaces associated with the four speed transmission.

They are:

- The gear select lever
- The driving mode selector
- The indicator light

These operator interfaces are described below.

GEAR SELECT LEVER OPERATION

The transmission uses a conventional selector lever. The selector lever can be moved from one position to another within the staggered configuration of the selector lever gate to positively indicate the gear -selection as shown on figure 2.1. For information about the gear selections available refer to table 2.1.

Figure 2.1 - Typical Gear Selector and Mode Switch

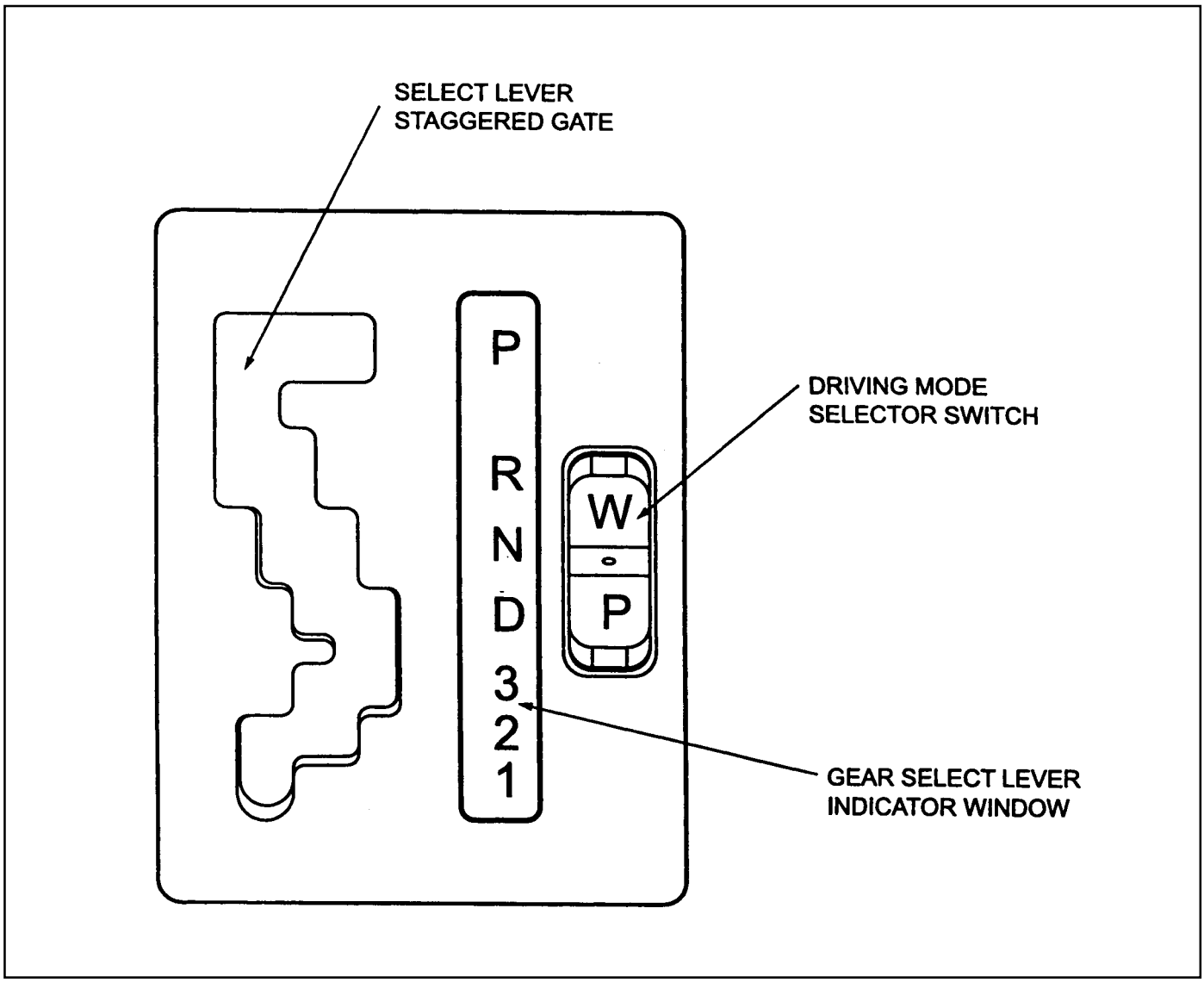

Downloaded from www.Manualslib.com manuals search engine

Table 2.1 - Gear Selections

Downshift Type	Inhibited Above
RANGE '1' (MANUAL '1'):	First gear operation only with inhibited engagement as a function of vehicle speed. Engine braking is applied with reduced throttle.
RANGE '2' (MANUAL '2'):	First and second gear operation with inhibited engagement of second gear, as a function of vehicle speed. Engine braking is applied with reduced throttle.
RANGE '3' (MANUAL '3'):	First, second and third gear operation with an inhibited third gear engagement at high vehicle speed. Refer to the vehicle owner's manual.
RANGE 'D' (DRIVE):	Engine braking is applied with reduced throttle. First, second, third and fourth gear operation. First to second (1-2), first to third (1-3), second to third (2-3), second to fourth (2-4), third to fourth (3-4), fourth to third (4-3), fourth to second (4-2), third to second (3-2), third to first (3-1) and second to first (2-1), shifts are all available as a function of vehicle speed, throttle position and the time rate of change of the throttle position (forced downshift). Lockup clutch may be enabled in 3rd and 4th gears depending on vehicle type. Refer to the owner's manual.
RANGE 'N' (NEUTRAL):	Rear band applied only, with inhibited engagement as a function of vehicle speed, engine speed and throttle position. The inhibitor switch allows the engine to start.
RANGE 'R' (REVERSE):	Reverse gear operation, with inhibitor engagement as a function of vehicle speed, engine speed and throttle position. The inhibitor switch enables reverse lamp operation.
RANGE 'P' (PARK):	Rear band applied only, with inhibited engagement as a function of vehicle speed, engine speed and throttle position. The transmission output shaft is locked. The inhibitor switch allows the engine to start.

DRIVING MODE SELECTOR

The driving mode selector consists of a mode selection switch and indicator light. The driving mode selector is located on the centre console. See figure 2,1.

The schedules available to be selected vary with vehicle types. Typically the driver should have the option to select between 'NORMAL' , 'POWER' or 'WINTER' modes.

When 'NORMAL' mode is selected upshifts will occur to maximise fuel economy and the indicator lights remain extinguished. When 'POWER' mode is selected upshifts will occur to give maximum performance and the 'POWER' mode indicator light is switched on. When 'WINTER' mode is selected, starting at second gear is facilitated, the 'WINTER' mode indicator light is switched on and the 'POWER' mode indicator light is switched off.

Refer to the vehicle owner's manual for specific modes for each vehicle type.

Downloaded from www.Manualslib.com manuals search engine

CONTROL SYSTEMS

GENERAL

There are two control systems associated with the transmission. The electronic control system monitors vehicle parameters and adjusts the transmission performance. The hydraulic control system implements the electronic control system commands.

ELECTRONIC CONTROL SYSTEM

The electronic control system is comprised of sensors, a TCU and seven solenoids. The TCU reads the inputs, and under software control activates the outputs according to values stored in read only memory (ROM).

The TCU controls the hydraulic control system. This control is via the hydraulic valve body, which contains seven electro-magnetic solenoids. Six of the seven solenoids are used to control the line pressure, operate the shift valves and the torque converter lock-up clutch, and to turn on and off the two regulator valves (The two regulator valves control the shift feel.).

The seventh solenoid is the proportional or variable pressure solenoid (VPS) which works with the two regulator valves to control shift feel.

Figure 3.1 details a typical TCU control system schematic.

The individual component locations, operation and specifications which make up the electronic control subsystem are covered in this section.

Figure 3.1 - Typical TCU Control System Schematic

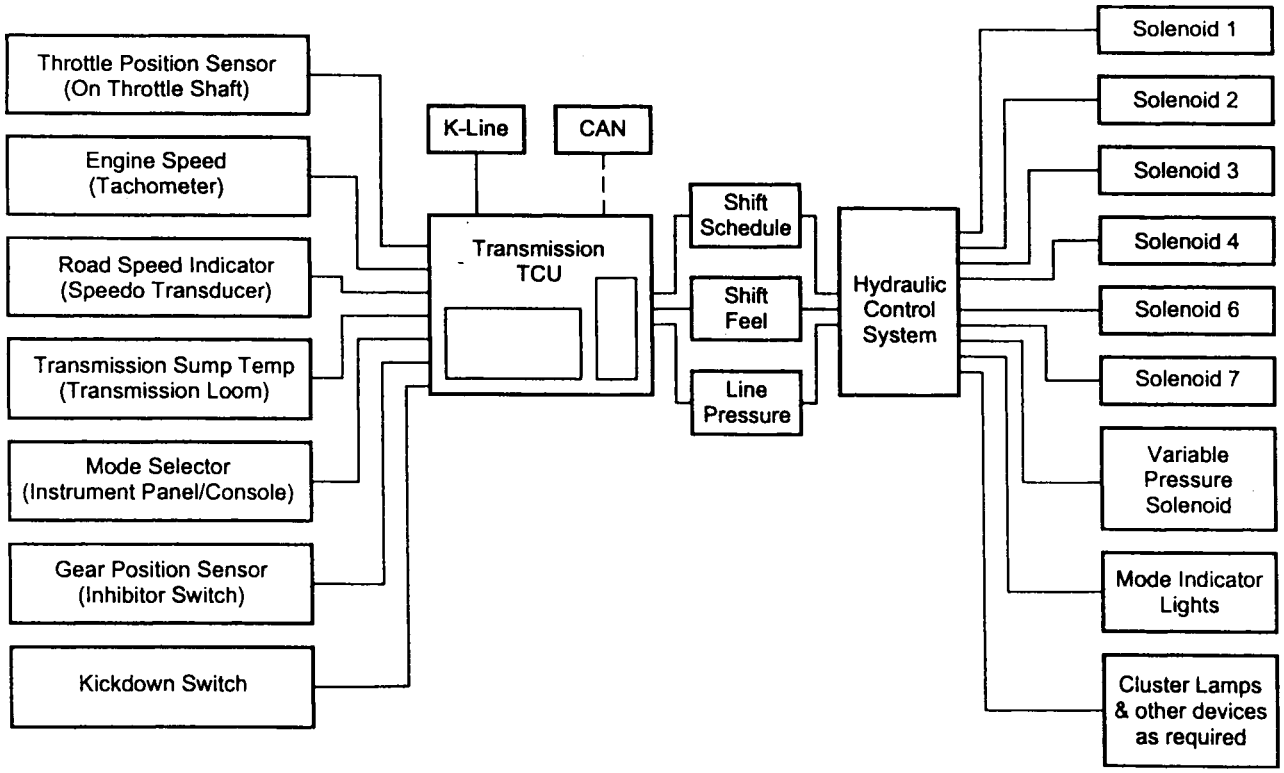

Downloaded from www.Manualslib.com manuals search engine

Table 3.1 - Temperature / Resistance Characteristics

Temperature (℃)	Resistance (Ohms)	
	Minimum	Maximum
-20	13,638	17,287
0	5,177	6,616
20	2,278	2,723
100	177	196
135 (Overheat Mode Threshold)	75	85

Figure 3.2 - Temperature / Resistance Characteristics

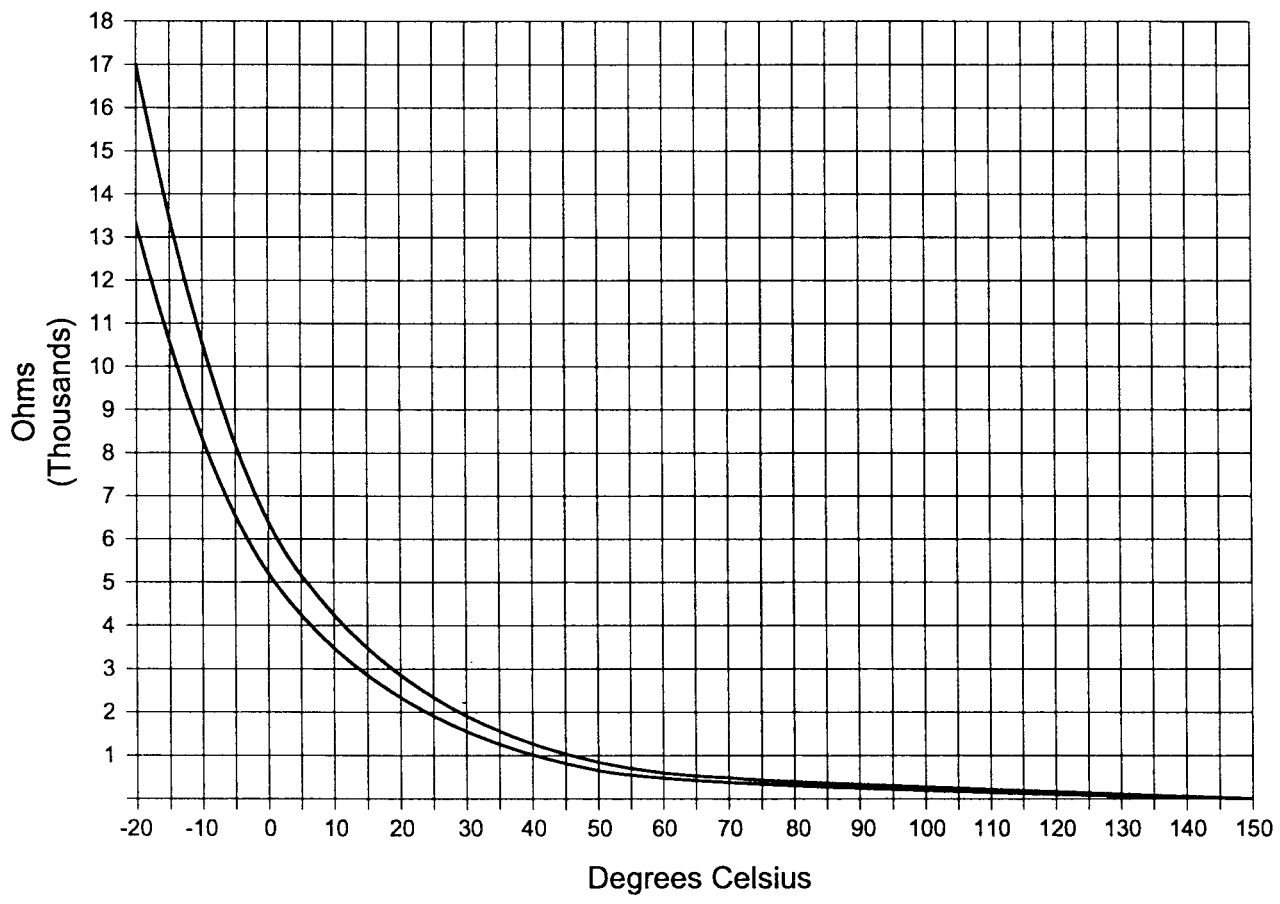

Downloaded from www.Manualslib.com manuals search engine

Transmission Control Unit(TCU)

The TCU is an in-vehicle micro-processor based transmission management system. It is usually mounted in the vehicle cabin, under the instrument panel, under the seat, behind the side kick panels or under the floor in the footwell on the passenger side. Different control units are supplied for different vehicle applications.

The TCU contains:

- Processing logic circuits which include a central microcontroller and a back-up memory system.
- Input circuits.
- Output circuits which control external devices such as the variable pressure solenoid (VPS), on/off solenoid drivers, a diagnostics output and the driving mode indicator light.

The various items which make up the TCU are discussed below.

Processing Logic

Shift schedule and calibration information is stored in an erasable programmable read only memory (EPROM). Throttle input calibration constants and the diagnostics information are stored in electrically erasable programmable read only memory (EEP ear state is different to the current gear state, the TCU initiates a gear shift to bring the two states back into line.

Once the TCU has determined the type of gearshift required the software accesses the shift logic, estimates the engine torque output, adjusts the variable pressure solenoid ramp pressure then executes the shift.

The TCU continuously monitors every input and output circuit for short or open circuits and operating range. When a failure or abnormal operation is detected the TCU records the condition code in the diagnostics memory and implements a limp mode, The actual limp mode used depends upon the failure detected with the object to maintain maximum driveability without damaging the transmission. In general input failures are handled by providing a default value. Output failures, which are capable of damaging the transmission, result in full limp mode giving only third or fourth gear and reverse. For further details of limp modes and memory retention refer to the Diagnostic Section.

The TCU is designed to operate at ambient temperatures between -40 and 85°C . It is also protected against electrical noise and voltage spikes, however all the usual precautions should be observed, for example when arc welding or jump starting.

TCU Inputs

To function correctly, the TCU requires engine speed, road speed, transmission sump temperature, throttle position and gear position inputs to determine the variable pressure solenoid current ramp and on/off solenoid states. This ensures the correct gear selection and shift feel for all driving conditions.

The inputs required by the TCU are as follows:

- Engine Speed

The engine speed signal is derived from the tachometer signal line, a dedicated sensor or a Controlled Area Network (CAN).

- Road Speed

4WD (Diesel) - The shaft speed signal is derived from the speedo sensor located on the transfer case. This signal is transmitted directly to the TCU.

4WD (Gasoline) - The speedo sensor sends the shaft speed signal to the engine control module (ECM). The information is then transferred to the TCU via the CAN.

- Transmission Sump Temperature

The transmission sump temperature sensor is a thermistor located in the solenoid wiring loom within the transmission. This sensor is a typical NTC resistor with low temperatures producing a high resistance and high temperatures producing a low resistance.

Temperature/Resistance characteristics and location within the solenoid wiring loom are given in tables 3-1 and 3-2, and figures 3.2 and 3.3.

Downloaded from www.Manualslib.com manuals search engine

If the transmission sump temperature exceeds 135°C, the TCU will impose converter lock-up at lower vehicle speeds and in some vehicles flashes the mode indicator lamp. This results in maximum oil flow through the external oil cooler and eliminates slippage in the torque converter. Both these actions combine to reduce the oil temperature in the transmission.

Table 3.2 - Pin No. Codes for Temperature Sensor Location In Solenoid Loom

Pin No.	Wire Color	Connects To
1	Red	Solenoid 1
2	Blue	Solenoid 2
3	Yellow	Solenoid 3
4	Orange	Solenoid 4
5	Green	Solenoid 5
6	Violet	Solenoid 6
7	Brown	Solenoid 7
8	Green	Solenoid 5
9	White	Temp Sensor
10	White	Temp Sensor

Figure 3.3 - Temperature Sensor Location in Solenoid Loom

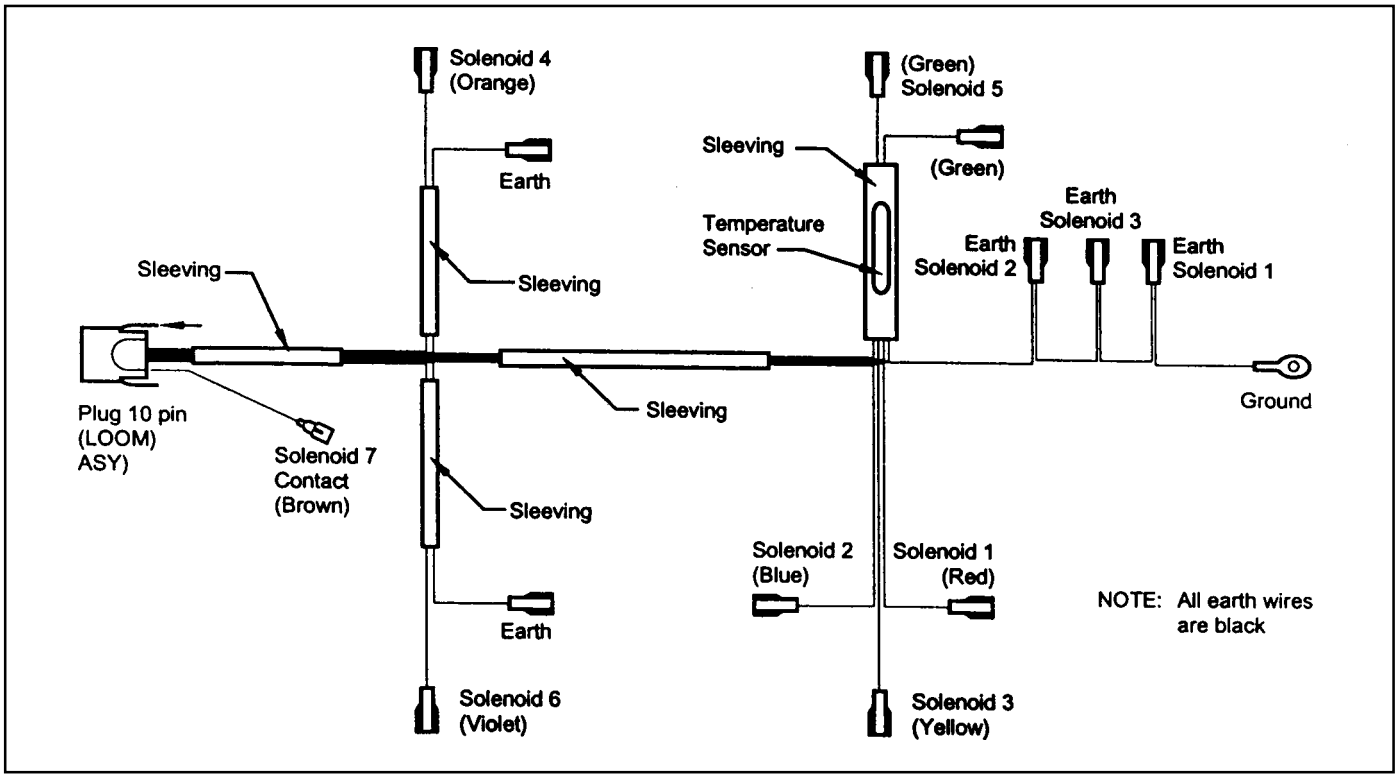

Downloaded from www.Manualslib.com manuals search engine

Throttle Position Sensor

The throttle position sensor(TPS) is a resistance potentiometer mounted on the throttle body of the engine.

It transmits a signal to the TCU proportional to the throttle plate opening.

The potentiometer is connected to the TCU by three wires:

5 volts positive supply, earth and variable wiper voltage.

Throttle voltage adjustments are as follows:

- Closed throttle voltage is 0.2V to 1.0V.
- Wide open throttle voltage is 3V -4.7V.

These measurements are taken between pins 29 and 27 of the TCU.

Maintaining good shift feel through the transmission life span is dependant on having an accurate measure of

the engine throttle position. To achieve this the TCU continuously monitors the maximum and minimum throttle

potentiometer voltages and, if a change occurs, stores the new voltage values.

However these limits will be lost and will require relearning should a new TCU be installed, or the throttle calibration data is cleared by the execution of a particular sequence, This last instance depends on the installation, and reference should be made to the Diagnostics Section of this manual. The relearning will happen automatically

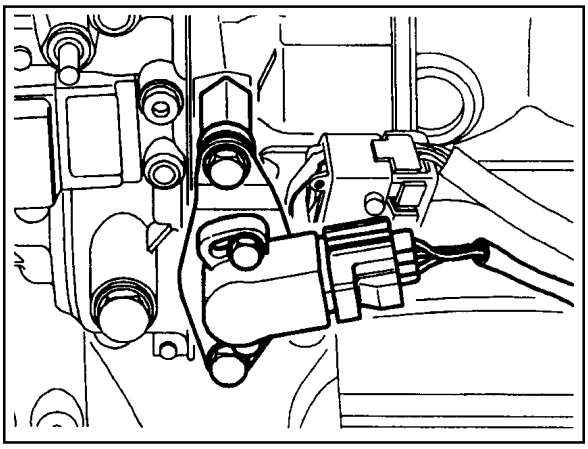

Notice

Above figure of T.P.S. is for the diesel engine which is installed on the injection pump.

Gear Position Sensor

The gear position sensor is incorporated in the inhibitor switch mounted on the side of the transmission case.

(Refer to figure 3.5.) The gear position sensor is a multi-function switch providing three functions:

- Inhibit starting of the vehicle when the shift lever is in a position other than Park or Neutral
- Illuminate the reversing lamps when Reverse is selected indicate to the TCU which lever position has been selected by way of a varying resistance (Refer to table 3.3.)

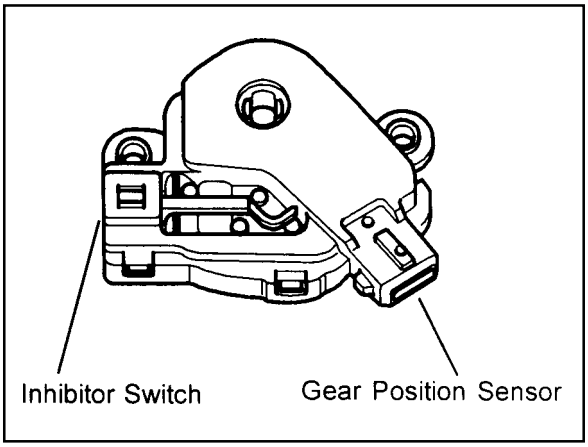

Figure 3.5 - Inhibitor Switch

Downloaded from www.Manualslib.com manuals search engine

Table 3.3 - Readings for Resistance/Shift Lever Positions

Shift Lever Position	Resistance (OHMS)
Manual 1	1k - 1.4k
Manual 2	1.8k - 2.2k
Manual 3	3k - 3.4k
Drive	4.5k - 4.9k
Netural	6.8k - 7.2k
Reverse	10.8k - 11.2k
Park	18.6k - 19k

Diagnostics Inputs

The diagnostics control input or K-line is used to initiate the outputting of diagnostics data from the TCU to a diagnostic test instrument. This input may also be used to clear the stored fault history data from the TCU's retentive memory. Connection to the diagnostics input of the TCU is via a connector included in the vehicle's wiring harness or computer interface. Refer to the vehicle manufacturer's manual for the location of the self test connectors.

Battery Voltage Monitoring Input

The battery voltage monitoring input connects to the positive side of the battery. The signal is taken from the main supply to the TCU.

If operating conditions are such that the battery voltage at the TCU falls below 11.3V the transmission will adopt a 'low voltage' mode of operating in which shifts into first gear are inhibited. All other shifts are allowed but may not occur because of the reduced voltage. This condition normally occurs only when the battery is in poor condition.

When system voltage recovers, the TCU will resume normal operation after a 3 second delay period.

TCU Outputs

The outputs from the TCU are supplied to the components described below:

Solenoids

The TCU controls seven solenoids. Solenoids 1 to 6 (S1 to S6) are mounted in the valve body, while Solenoid 7 (S7) is mounted in the pump cover. The normal state (OPEN/CLOSED) and the functions associated with the solenoids are detailed in table 3.4. Table 3.5 details the S1 and S2 logic for static gear states. The logic during gear changes for S1 to S4 and S7 is detailed in table 3.6.

Downloaded from www.Manualslib.com manuals search engine

Table 3.4 - Solenoid States and Functions

Solenoids 1 and 2	S1 and S2 are normally open On/off solenoids that set the selected gear. These solenoids determine static gear position by operating the shift valves. Refer to table 3.5. Note that S1 and S2 solenoids also send signal pressure to allow or prohibit rear band engagement.
Solenoids 3 and 4	S3 and S4 are normally open On/off solenoids that combine to control shift quality and sequencing. S3 switches the clutch regulator valve off or on. S4 switches the front band regulator valve off or on.
Solenoid 5	S5 is a variable force solenoid that ramps the pressure during gear changes. This solenoid provides the signal pressure to the clutch and band regulator, thereby controlling the shift pressures.
Solenoid 6	S6 is a normally open On/off solenoid that sets the high/low level of line pressure, Solenoid off gives high pressure.
Solenoid 7	S7 is a normally open On/off solenoid that controls the application of the converter clutch. Solenoid on activates the clutch.

Table 3.5 - Solenoid Logic for Static Gear States

Gear	**S1**	**S2**
1st	ON	ON
2nd	OFF	ON
3rd	OFF	OFF
4th	ON	OFF
Reverse	OFF	OFF
Neutral	OFF	OFF
Park	OFF	OFF

Downloaded from www.Manualslib.com manuals search engine

Table 3.6- Solenoid Operation During Gearshifts

Shift	To Initiate Shift	Typical S5 Current Ramp	To Complete Shift
1-2	S1 OFF S4 ON	750mA to 600mA	S4 OFF
1-3	S1 OFF S2 OFF S3 ON S4 ON	850mA to 750mA	S3 OFF S4 OFF
1-4	S2 OFF S3 ON S4 ON	850mA to 750mA	S3 OFF S4 OFF
2-3	S2 OFF S3 ON S4 ON	700mA to 500mA	S3 OFF S4 OFF
3-4	S1 ON S4 ON	750mA to 600mA	S4 OFF
4-3	S4 ON	750mA to 900mA	S1 OFF S4 OFF
4-2	S3 ON	750mA to 950mA	S1 OFF S2 ON S3 OFF
4-1	S3 ON S4 ON	600mA to 1000mA	S2 ON S3 OFF S4 OFF
3-2	S2 ON S4 ON	600mA to 450mA @ 20 kph. 550mA to 400mA @ 60 kph. 800mA to 650mA @ 100 kph.	S4 OFF
3-1	S3 ON S4 ON	700mA to 950mA	S1 ON S2 ON S3 OFF S4 OFF
2-1	S4 ON	800mA to 950mA	S1 ON S4 OFF
Conv. Clutch ON OFF	S7 ON	700mA to 400mA 600mA to 100mA	S7 OFF

Downloaded from www.Manualslib.com manuals search engine

Solenoid Valve Symbols (On/off Solenoids)

The solenoid symbol shown adjacent to each solenoid on the hydraulic system schematics indicates the state of the oil flow through the solenoid valve with the power On or 0ff. Refer to figure 3.6 for the On/off operational details of NO solenoid valves.

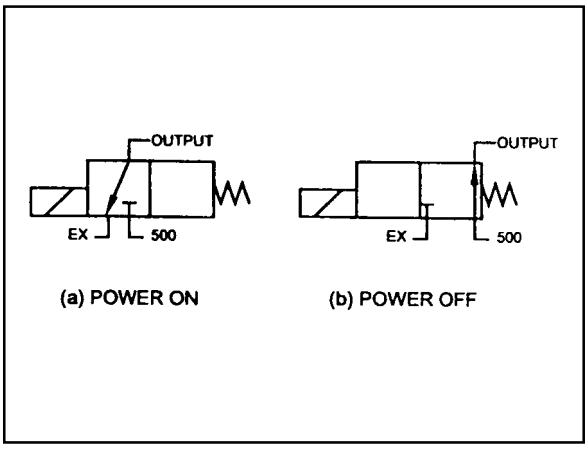

Figure 3.6- Normally Open (NO) Symbols

Normally Open (NO) Solenoid

POWER ON

Line 500 port is closed. The output port is open to exhaust at the solenoid valve.

POWER OFF

The exhaust port is closed. The output port is open to line 500,

Variable Pressure Solenoid Multiplexing System

Friction element shifting pressures are controlled by the variable pressure solenoid (VPS).
Line pressure is completely independent of shift pressure and is a function of throttle position, gear state and engine speed.
S5 is a proportional or variable pressure solenoid that provides the signal pressure to the clutch and band regulator valves thereby controlling shift pressures.
VPS pressure is multiplexed to the clutch regulator valve, the band regulator valve and the converter clutch regulator valve during automatic gearshifts.
A variable pressure solenoid produces a hydraulic pressure inversely proportional to the current applied. During a gearshift the TCU applies a progressively increasing or decreasing (ramped) current to the solenoid. Current applied will vary between a minimum of 200 mA and a maximum of 1000 mA, Increasing current decreases output (55) pressure. Decreasing current increases output (55) pressure.
Line 500 pressure, (approximately 440 to 560 kPa), is the reference pressure for the VPS, and the VPS output pressure is always below line 500 pressure.
When the VPS is at standby, that is no gearshift is taking place, the VPS current is set to 200 mA giving maximum output pressure.
Under steady state conditions the band and clutch regulator valve solenoids are switched off. This applies full Line 500 pressure to the plunger and because Line 500 pressure is always greater than S5 pressure it squeezes the S5 oil out between the regulator valve and the plunger. The friction elements are then fed oil pressure equal to Line 500 multiplied by the amplification ratio.
When a shift is initiated the required On/off solenoid is switched on cutting the supply of Line 500 to the plunger.
At the same time the VPS pressure is reduced to the ramp start value and assumes control of the regulator valve by pushing the plunger away from the valve. The VPS then carries out the required pressure ramp and the timed shift is completed by switching Off the On/off solenoid and returning the VPS to the standby pressure.
This system enables either the band or clutch or both to be electrically controlled for each gearshift.

Mode Indicator Light

Depending on the application, the mode indicator light may be used to indicate the mode that has been selected or if an overheat condition exists. The mode indicator light is usually located on the instrument cluster.

Communication Systems

CAN

The controller area network (CAN) connects various control modules by using a twisted pair of wires, to share common information. This results in a reduction of sensors and wiring. Typical applications include using the engine controller to obtain the actual engine speed and throttle position, and adding these to the network. The ABS controller (if fitted) can be used to obtain the road speed signal. This information is then available to the TCU without any additional sensors.

Downloaded from www.Manualslib.com manuals search engine

K-Line

The K-line is typically used for obtaining diagnostic information from the TCU. A computer with a special interface is connected to the TCU and all current faults, stored faults, runtime parameters are then available. The stored fault codes can also be cleared.

The K-line can be used for vehicle coding at the manufacturer's plant or in the workshop. This allows for one TCU design to be used over different vehicle models. The particular code is sent to the microprocessor via the K line and this results in the software selecting the correct shift and VPS ramp parameters.

HYDRAULIC CONTROL SYSTEM

The hydraulic controls are located in the valve body, pump body and main case.

The valve body contains the following:

- Manual valve,
- Three shift valves,
- Sequence valve,
- solenoid supply pressure regulator valve,
- line pressure control valve,
- clutch apply regulator valve,
- band apply regulator valve,
- S1 to S6, and
- Reverse lockout valve.
- The pump body contains the following:
- Primary regulator valve for line pressure,
- converter clutch regulator valve,
- converter clutch control valve,
- S7,and
- C1 bias valve.

The main case contains the following:

- B1R exhaust valve

The hydraulic control system schematic is shown at figure 3.7.

All upshifts are accomplished by simultaneously switching on a shift valve(s), switching VPS pressure to the band and/or clutch regulator valve, and then sending the VPS a ramped current. The shift is completed by switching the regulators off and at the same time causing the VPS to reach maximum . pressure. All downshifts are accomplished by switching VPS pressure to the band and/or clutch regulator valve and sending a ramped current to the VPS. The shift is completed by simultaneously switching the regulators off, switching the shift valves and at the same time causing the VPS to return to stand-by pressure.

The primary regulator valve is located in the pump cover and supplies four line pressures; high and low for forward gears, and high and low for reverse. This pressure has no effect on shift quality and merely provides static clutch capacity during steady state operation. Low pressure can be obtained by activating an On/off solenoid with high line pressure being the default mode.

Torque converter lock-up is initiated by toggling the converter clutch control valve with an On/off solenoid. The actual apply and release of the clutch is regulated by the VPS via the converter clutch regulator valve. As an additional safety feature, the lock-up is hydraulically disabled in first and second gear by the bias valve which only supplies oil to the lock-up solenoid when C1 is applied in third and fourth gears. This prevents the vehicle from being rendered immobile in the unlikely event of S7 becoming stuck.

The solenoid supply valve provides reference pressure for all the solenoids.

Downloaded from www.Manualslib.com manuals search engine

Figure 3.7 - Hydraulic Control Circuit

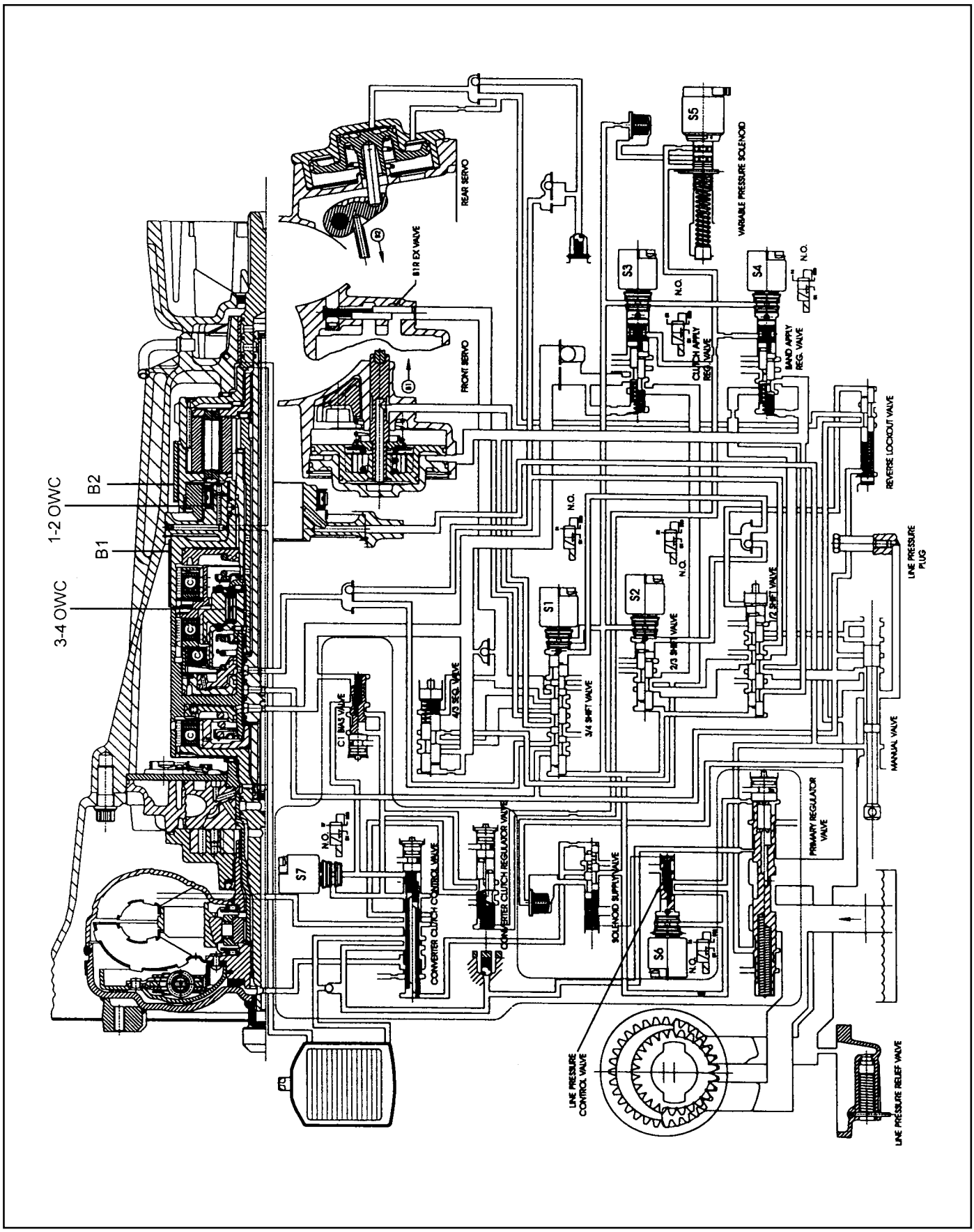

Downloaded from www.Manualslib.com manuals search engine

Valve Body

Figure 3.8 depicts the valve body as a unit as viewed from the transmission sump. Figure 3.9 depicts the pump cover.

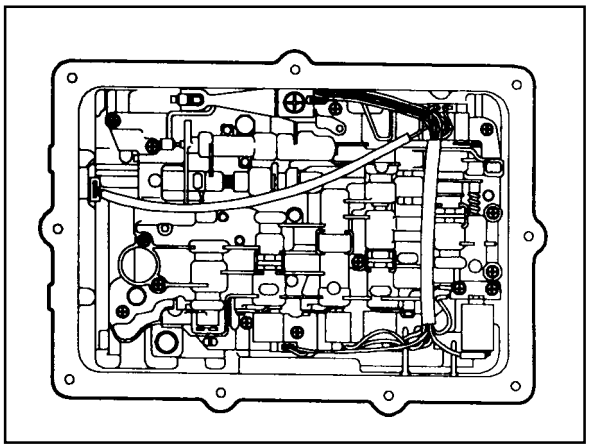

Figure 3.8 - Valve Body

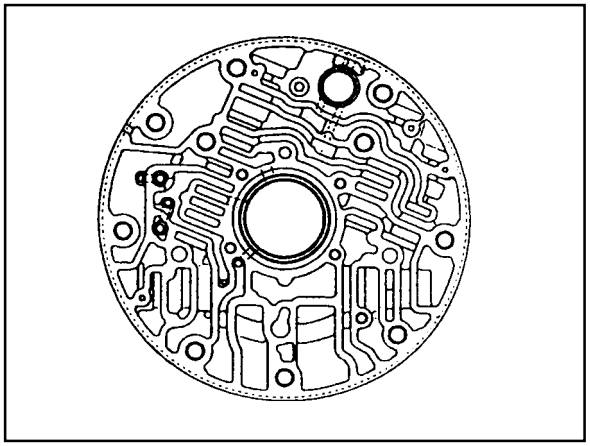

Figure 3.9 - Pump Cover

Downloaded from www.Manualslib.com manuals search engine

Manual Valve

The manual valve (refer to figure 3.10) is connected to the vehicle selector mechanism and controls the flow of oil to the forward and reverse circuits. The manual valve function is identical in all forward gear positions except that in the Manual 1 position an additional supply of oil is directed to the 1-2 shift valve for application of the rear band and the C4 overrun clutch.

Figure 3.10 - Manual Valve

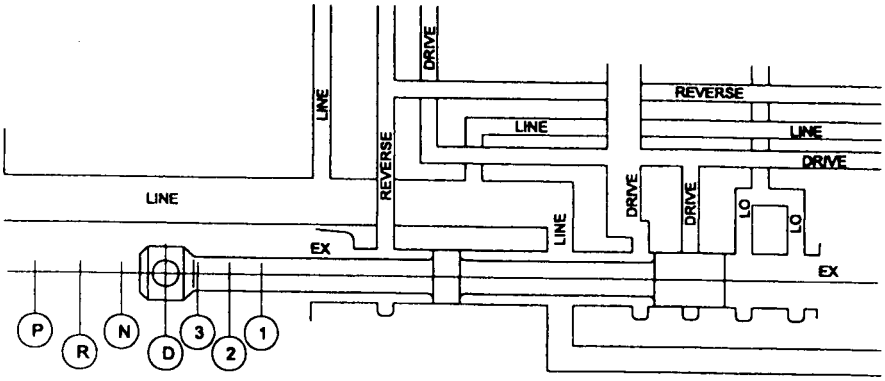

1-2 Shift Valve

The 1-2 shift valve (refer to figure 3.11) is a two position valve that must be switched to the (2,3,4) position in order to get any forward gear other than first gear. It is used for all 1-2 and 2-1 gearshifts.

The switching of this valve is achieved by using S1 and/or S2.

During a 1-2 gearshift drive oil from the manual valve passes through to the second gear circuit. During a 2-1 gearshift the band apply feed oil is allowed to exhaust via the 1-2 shift valve.

The 1-2 shift valve works in conjunction with the 3-4 shift valve (described below) to disengage the C4 clutch in first gear, and engage C4 in second gear. When Manual 1 is selected the C4 clutch and rear band (B2) are engaged.

Figure 3.11 - 1-2 Shift Valve

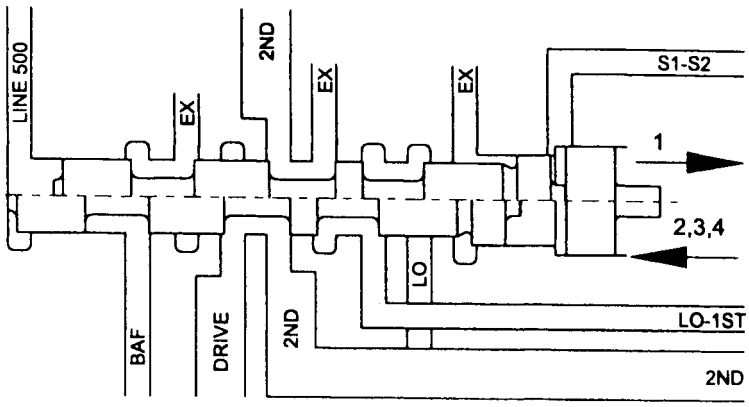

Downloaded from www.Manualslib.com manuals search engine

2-3 Shift Valve

The 2-3 shift valve (refer to figure 3.12) is a two position valve. It is used on all 2-3 and 3-2 gearshifts.

The switching of this valve is achieved by S2 which is located at the end of the valve spool.

When in the (1,2) position, second gear oil from the 1-2 shift valve is prevented from entering the third gear circuit. When the valve is moved to the (3,4) position, oil from the second gear circuit is routed to the third gear circuit and the transmission changes to third gear.

Figure 3.12 - 2-3 Shift Valve

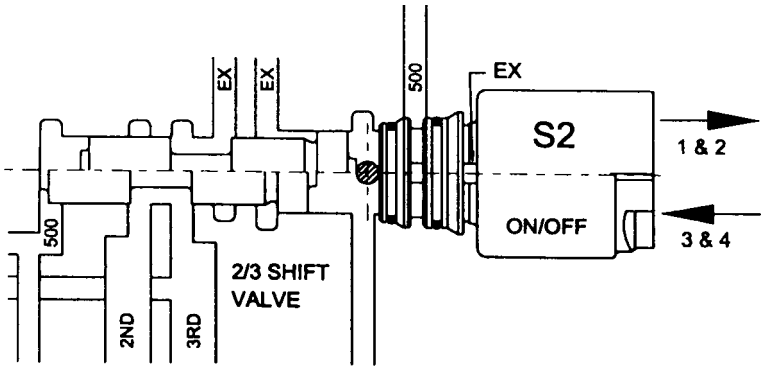

3-4 Shift Valve

The 3-4 shift valve (refer to figure 3,13) is a two position valve. It is used for all 3-4 and 4-3 gearshifts.

The switching of this valve is achieved by S1 which is located at the end of the valve spool.

During a 3-4 gearshift the 3-4 shift valve:

- Exhausts the front band release circuit (B 1R) thereby allowing the application of the front band (B1).
- Connects the inner apply area of the front servo (B 1AI) to the band apply feed circuit (BAF) thus allowing greater apply forces to the front band.
- Exhausts the overrun clutch circuit (OC) which allows the C4 clutch to disengage.

During a 4-3 gearshift, the C4 clutch is engaged and the front band (B1) is released. These actions are sequenced by the 4-3 sequence valve (described below).

The 3-4 shift valve also switches during 1-2 and 2-1 gearshifts (see 1-2 shift valve above) where its function is to apply the overrun clutch (C4) in second gear but to release it in first gear. Note that the C4 clutch is applied in Manual 1 by virtue of the manual valve and the 1-2 shift valve (as described in the 1-2 shift valve section).

Figure 3.13 - 3-4 Shift Valve

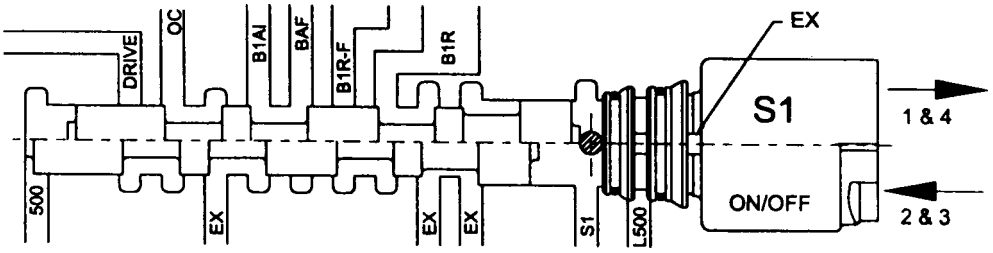

Downloaded from www.Manualslib.com manuals search engine

4-3 Sequence Valve

The 4-3 sequence valve (refer figure 3.14) is a two position spring loaded valve. It switches during 3-4 and 4-3 gearshifts although it performs no function during the 3-4 shift.

During the 4-3 shift the 4-3 sequence valve delays the connection of the clutch apply feed circuit (CAF) to the BIR circuit until the BIR circuit has been fully pressurised by using the third gear circuit. This prevents objectionable engine flare on completion of the 4-3 gearshift.

Figure 3.14 - 4-3 Sequence Valve

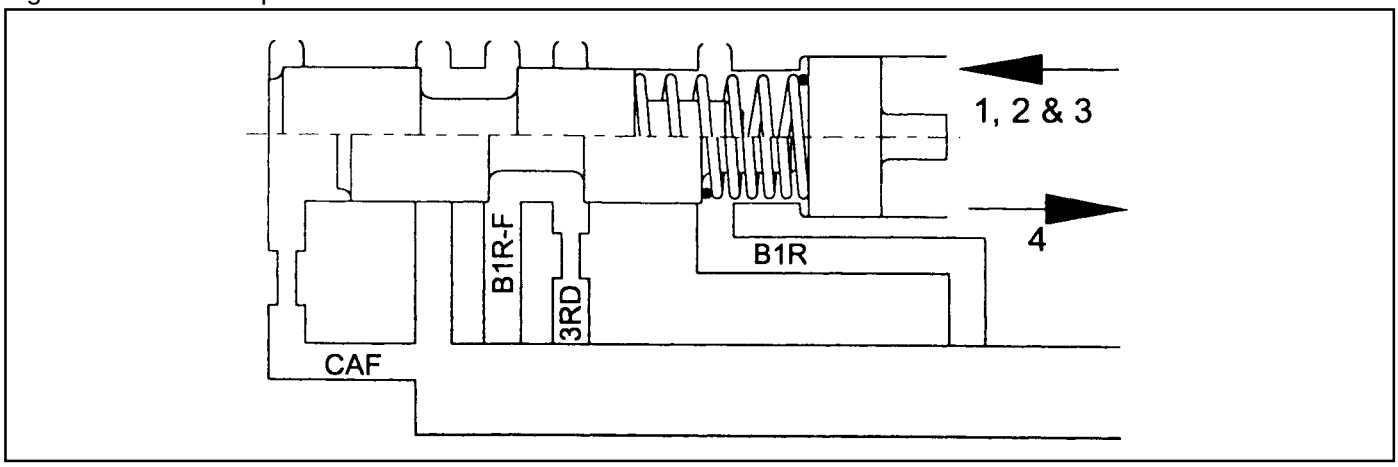

Solenoid Supply Pressure Regulator Valve

The solenoid supply valve (refer figure 3.15) supplies a constant pressure to all solenoids (51 to 57). Line pressure is used as the feed oil to this regulator and the output is termed line 500.

Line Pressure Boost Valve

Line pressure is controlled by 56, which acts as the line pressure boost valve (refer figure 3.15). When 56 pressure is applied to the end of the PRV it is opposed by spring force and causes LOW line pressure for light throttle application and cruising.

Heavy throttle application causes the normally open 56 to open (switch Off) thus closing line 500 and opening 56 to exhaust. Removal of 56 pressure from the PRV results in HIGH line pressure.

Figure 3.15 - Solenoid Supply Pressure Regulator Valve and Line Pressure Control Valve

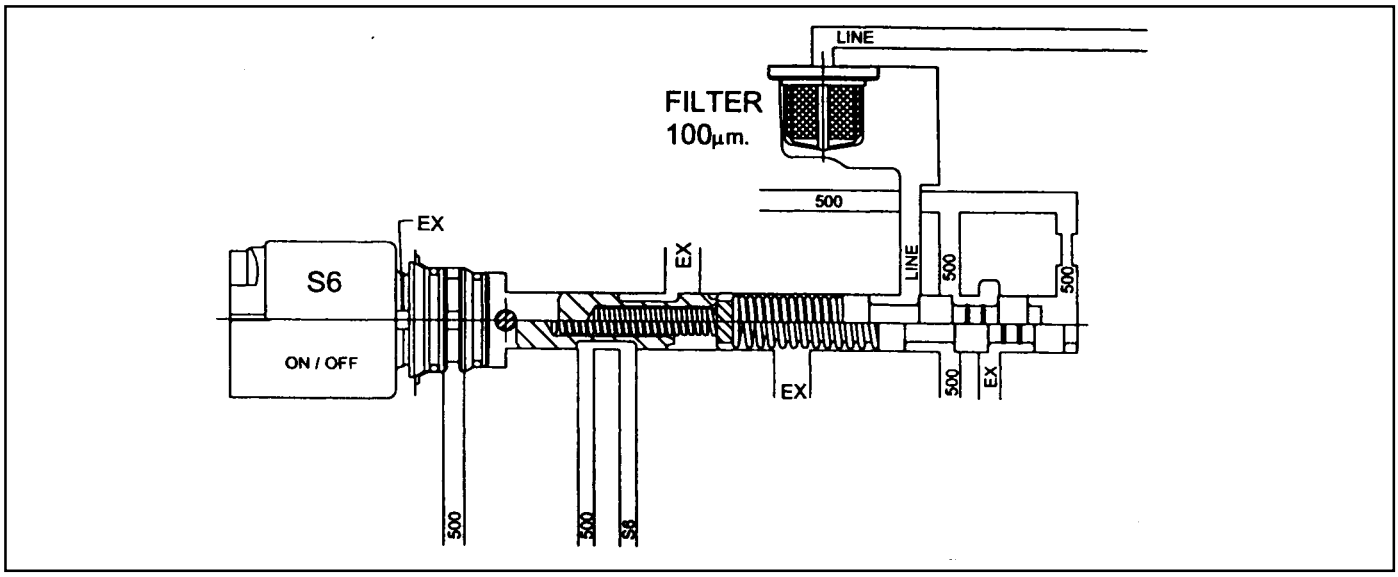

Downloaded from www.Manualslib.com manuals search engine

Clutch Apply Regulator Valve

The clutch apply regulator valve (refer figure 3.16) is a fixed ratio valve. This valve provides a regulated pressure to the C1 clutch and controls the rate of change of state of the clutch to give the desired shift quality.

This ratio is 2.25 : 1.

Third gear oil supplied to the valve is regulated to provide an output pressure (CAF) of 2.25 times the S5 signal pressure when S3 is On. When S3 is Off the output pressure is 2.25 times the line 500 pressure.

Figure 3.16 - Clutch Apply Regulator Valve

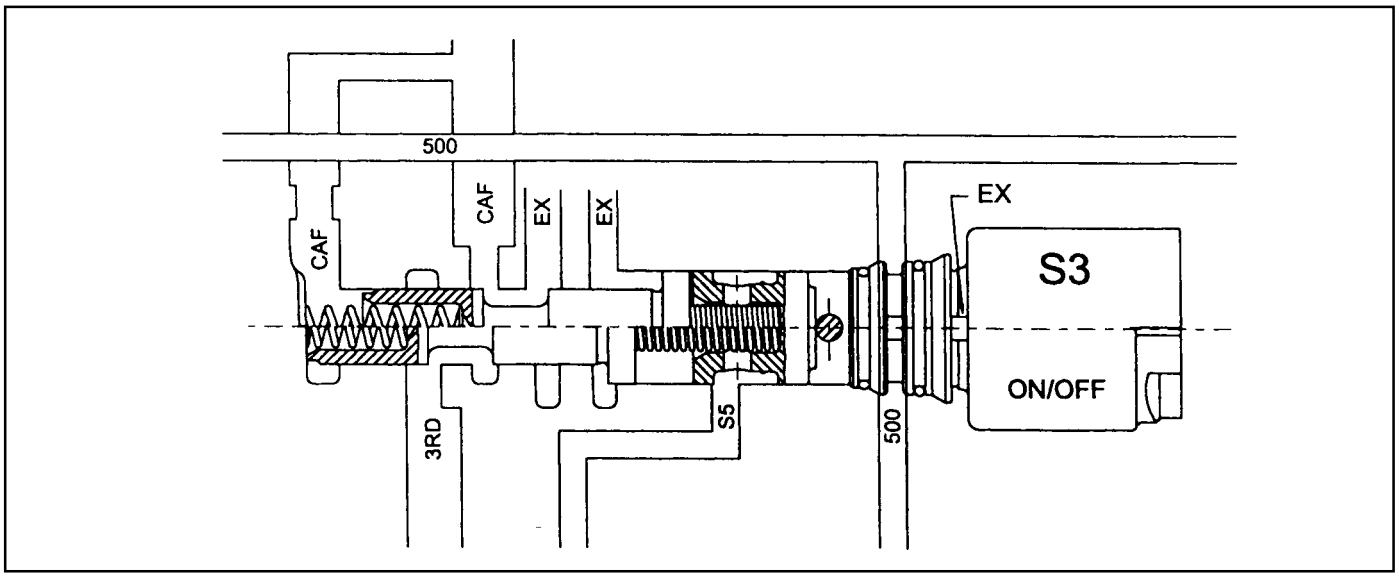

Band Apply regulator Valve

The band apply regulator valve (refer figure 3.17) is a fixed ratio valve. It provides a regulated pressure to the front servo, and controls the rate of change of state of the front band (B1) to give the desired shift quality.

This ratio is 1.4 : 1.

Second gear oil supplied to the valve is regulated to provide an output pressure (BAF) of 1.4 times the S5 signal pressure when S4 is On. When S4 is Off the output pressure is 1.4 times the line 500 pressure.

Figure 3.17 - Band Apply Regulator Valve

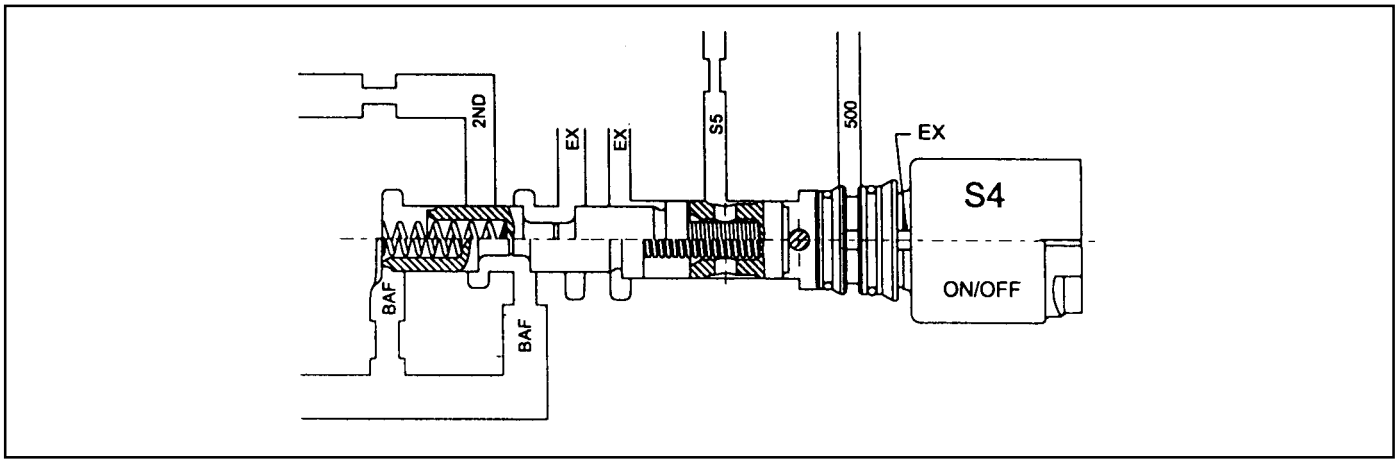

Downloaded from www.Manualslib.com manuals search engine

Reverse Lockout Valve

The reverse lockout valve (refer figure 3.18) is a two position valve contained in the upper valve body. This valve uses 51-52 pressure as a signal pressure and controls the application of the rear band (B2).

While the manual valve is in D,3,2, or 1 positions, drive oil is applied to the spring end of the valve, overriding any signal pressures and holding the valve in the lockout position. This prevents the application of B2 in any of the forward driving gears.

When the manual valve is in P, R or N positions, drive oil is exhausted and the reverse lockout valve may be toggled by S1-S2 pressure.

B2 is applied in P, R, and N provided that the following conditions are satisfied:

1. In P or N, roadspeed ≤ 3 km/h.
2. In R, road speed ≤ 10 km/h.
3. Engine speed ≤ 1400 rpm.
4. For diesel vehicles, throttle ≤ 25%.
5. For gasoline vehicles, throttle ≤ 12%.

Under these conditions, the TCU switches solenoids S1 and S2 to Off. The reverse lockout valve toggles under the influence of the S1-S2 pressure, to connect the line pressure to the B2 feed. Oil is fed to both the inner and outer apply areas of the rear servo piston, applying B2.

If any of the above conditions are not satisfied, the TCU switches solenoids S1 and S2 to On. S1- S2 pressure is exhausted and the valve is held in the lockout position by the spring. In this position, engagement of B2 is prohibited.

This feature protects the transmission from abuse by preventing the undesirable application of B2 at high speed, and by providing a reverse lockout function.

Note that if the transmission is in failure mode, the rear band will be applied at all times in P, R and N.

Figure 3.18 - Reverse Lockout Valve

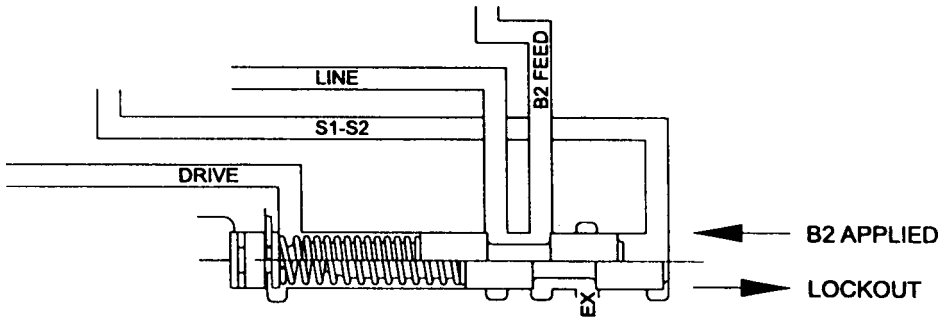

Downloaded from www.Manualslib.com manuals search engine

Primary Regulator Valve

The primary regulator valve (PRV) (refer to figure 3.19) regulates the transmission line pressure (or pump output pressure). This valve gives either high or low line pressure depending on whether S6 is switched Off or On, When S6 is switched On,S6 pressure is applied to the PRV moving it against spring pressure and opening the line pressure circuit to the pump suction port resulting in reduced line pressure. Low line pressure is used during light throttle applications and cruising. Heavy throttle will cause S6 to switch Off and thereby cause high line pressure.

This stepped line pressure control has no detrimental effect on shift feel because all shifting pressures are controlled by separate band and clutch regulator valves, and the output of S5.

When reverse gear is selected, both the low and high line pressure values are boosted to guard against slippage. This is achieved by applying reverse oil line pressure to the PRV to assist the spring load. The other end of the valve contains ports for line pressure feedback and 56 pressure.

The PRV also regulates the supply of oil to the converter via the converter feed port. The cascade effect of the PRV ensures the first priority of the valve is to maintain line pressure at very low engine speeds. When the engine speed increases and the pump supplies an excess of oil the PRV moves to uncover the converter feed port thereby pressurising the converter. If there is an excess of oil for the transmission's needs then the PRV moves further to allow oil to return to the suction port.

Figure 3.19 - Primary Regulator Valve

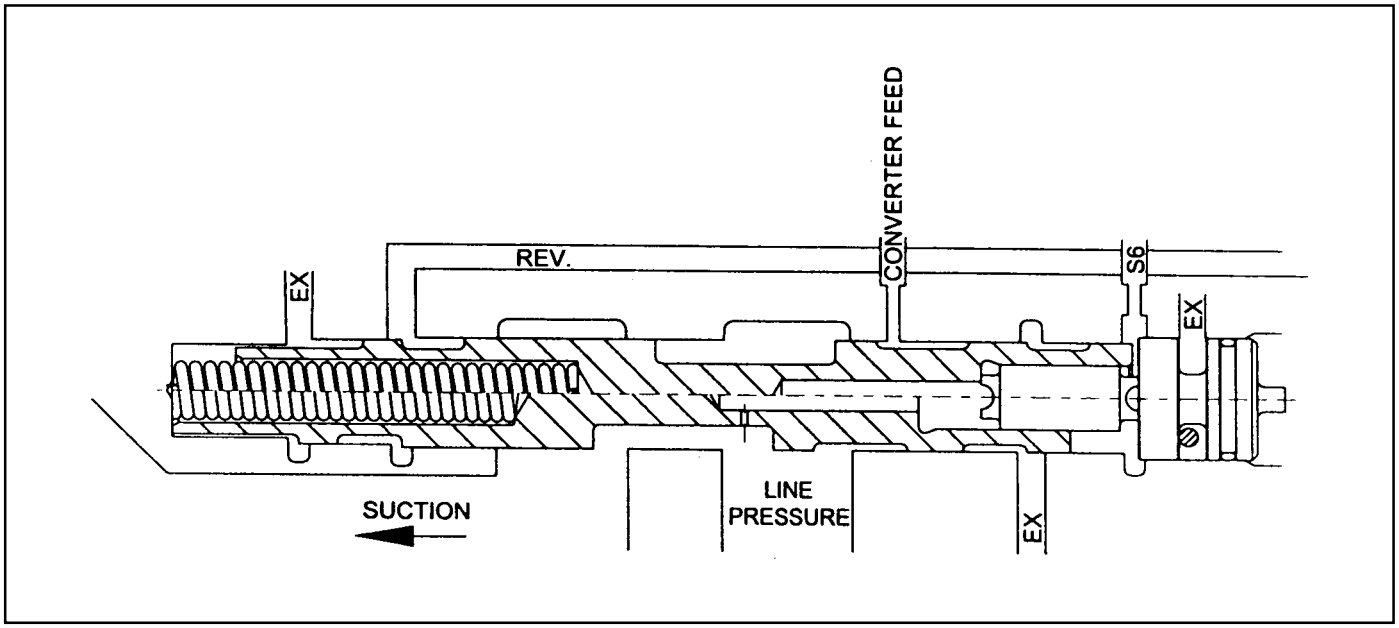

Downloaded from www.Manualslib.com manuals search engine

Converter Clutch Regulator Valve

The converter clutch regulator valve (refer figure 3.20) regulates the pressure of the oil which applies the converter clutch. Input oil from the line 500 circuit is regulated within the valve, with the output pressure being variable according to the signal pressure from the S5 circuit. Converter clutch apply and release application is smoothed by electronically varying the S5 circuit pressure.

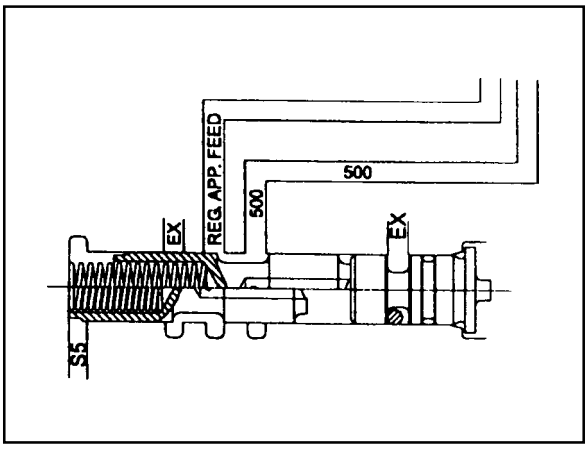

Figure 3.20 - Converter Clutch Regulator Valve

Converter Clutch Control Valve

The converter clutch control valve (refer figure 3.21) is a two position valve which applies or releases the converter clutch.

The switching of this valve is governed by the signal pressure from S7.

When the valve is in the off or released position, converter feed oil from the PRV is directed to the release side of the converter clutch. After flowing through the converter, oil returns to the converter clutch control valve and is then directed to the oil cooler.

When the valve is in the on or applied position, regulated oil from the converter clutch regulator valve is directed to the apply side of the converter clutch. This oil remains within the converter because the converter clutch piston is sealed against the flat friction surface of the converter cover. To provide oil flow to the cooler the converter clutch control valve directs converter feed oil from the PRV directly to the cooler circuit.

Figure 3.21- Converter Clutch Control Valve

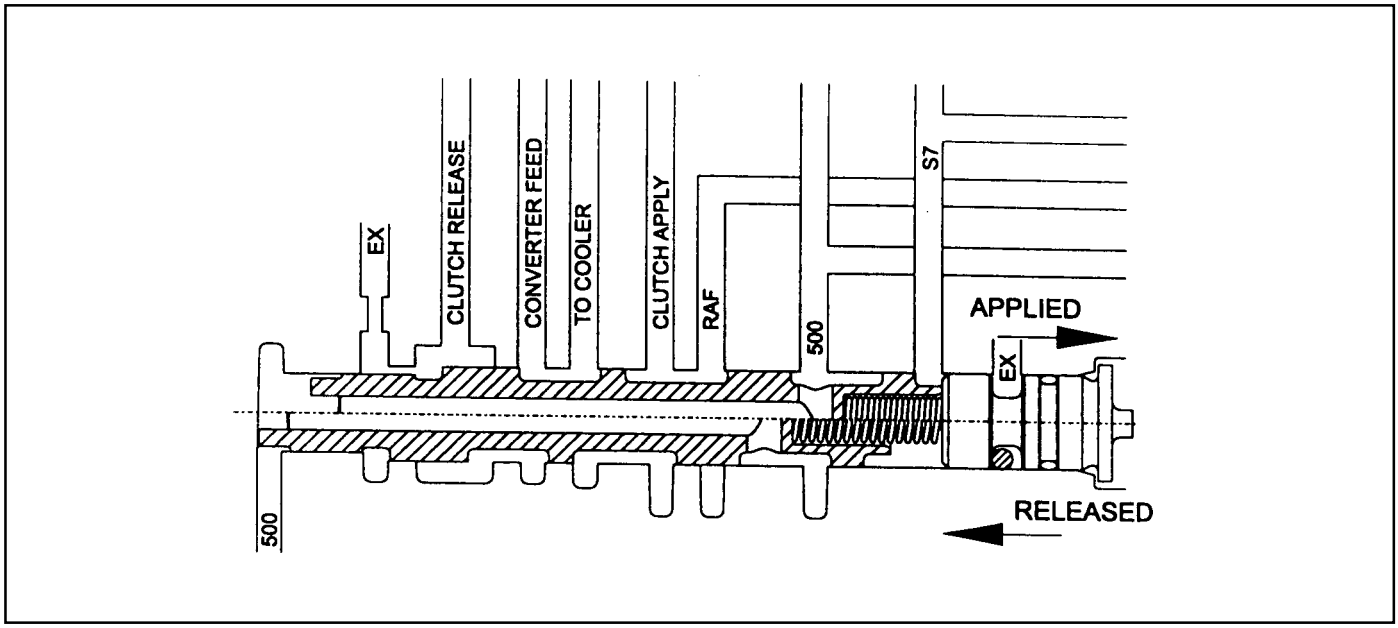

Downloaded from www.Manualslib.com manuals search engine

C1 Bias Valve

The C1 bias valve (refer figure 3.22) ensures that the converter lock-up clutch is only applied in third and fourth gears. It uses C1 clutch oil pressure as the switching signal since C1 is only applied in third and fourth gears.

Line to 500 oil is routed through the C1 bias valve to S7. The C1 bias valve therefore acts as a safety feature to ensure drivability in the event of S7 failure.

Figure 3.22- C1 Bias Valve

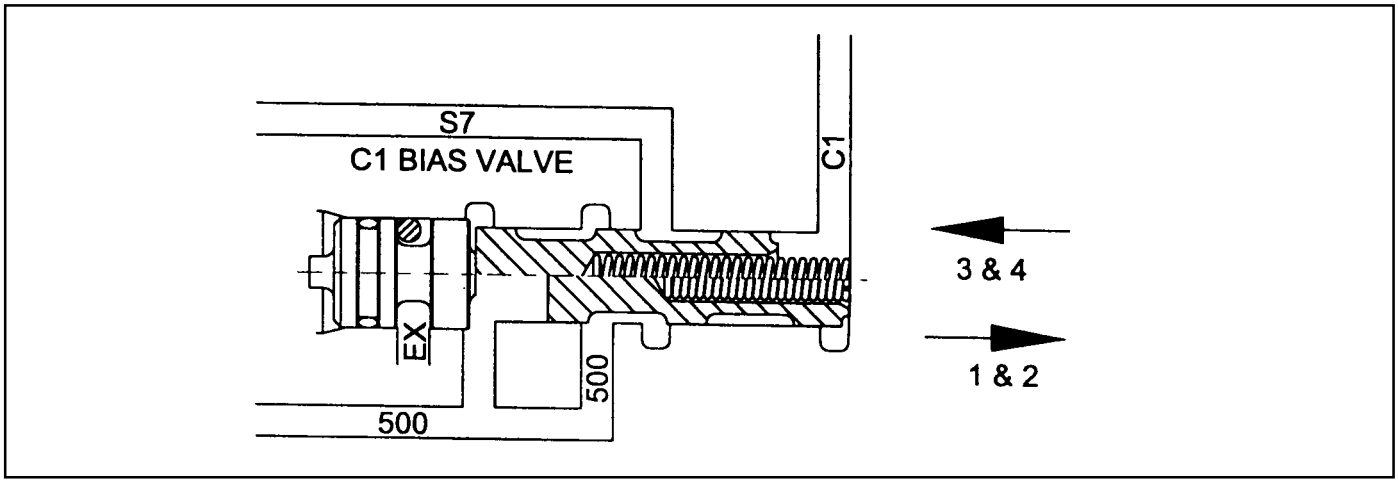

B1R Exhaust Valve

The B1R exhaust valve (refer figure 3.23) is a two position spring loaded valve located in the transmission case directly adjacent to the front servo. It permits the servo release oil to be rapidly exhausted into the transmission case during application of the front band (B1). This prevents the need to force the oil back from the front servo through the valve body and through the 3-4 shift valve. The spring positions the valve to prevent oil entering the release area of the servo until the B1R circuit oil pressure reaches approximately 100 kPa.

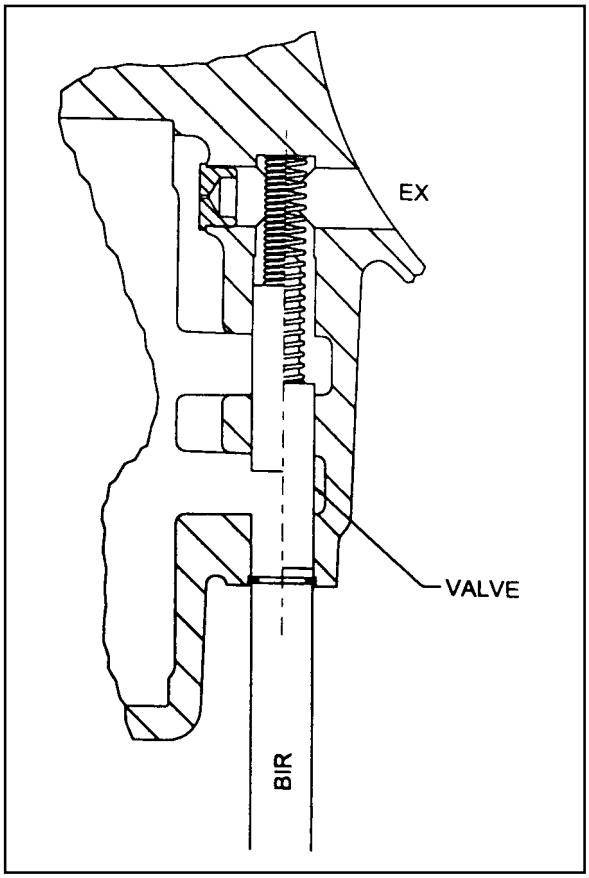

Figure 3.23 - B1R Exhaust Valve

Downloaded from www.Manualslib.com manuals search engine

POWER TRAIN SYSTEM

The Power Train System consists of:

- A torque converter with single face lock-up clutch
- Four multi-plate clutch assemblies
- Two brake bands
- Two one-way clutches
- Planetary gearset
- Parking mechanism

A conventional six pinion Ravigneaux compound planetary gearset is used with overdrive (fourth gear) being obtained by driving the carrier.

The cross-sectional arrangement is very modular in nature. Four main sub-assemblies are installed within the case to complete the build. These sub-assemblies are:

- Gearset-sprag-centre support
- C1 -C2-C3-C4 clutch sub-assembly
- Pump assembly
- Valve body assembly

One, or a combination of selective washers are used between the input shaft flange and the number 4 bearing to control the transmission end float. This arrangement allows for extensive subassembly testing and simplistic final assembly during production.

A general description of the operation of the Power Train System is detailed below. Refer to table 4.1 and figure 4.1.

First gear is engaged by applying the C2 clutch and locking the 1-2 One Way Clutch (1-2 OWC). The 1-2 shift is accomplished by applying the B1 band and overrunning the 1-2 OWC. The 2-3 shift is accomplished by applying the C1 clutch and releasing the B1 band. The 3-4 shift is accomplished by re-applying the B1 band and overrunning the 3-4 OWC. Reverse gear is engaged by applying the C3 clutch and the B2 band.

The C4 clutch is applied in the Manual 1,2 and 3 ranges to provide engine braking. In addition, the C4 clutch is also applied in the Drive range for second and third gears to eliminate objectionable freewheel coasting. The B2 band is also applied in the Manual 1 range to accomplish the low-overrun shift.

Both the front and rear servos are dual area designs to allow accurate friction element matching without the need for secondary regulator valves. All the friction elements have been designed to provide low shift energies and high static capacities when used with the new low static co-efficient transmission fluids. Non-asbestos friction materials are used throughout.

Table 4.1 - Engaged Elements vs Gear Ratios

		ELEMENTS ENGAGED								
Gear	**Gear Ratio**	**C1**	**C2**	**C3**	**C4**	**B1**	**B2**	**1-2 OWC**	**3-4 OWC**	**LU CLUTCH**
First	2.741		X					X	X	
Second	1.508		X			X			X	
Third	1.000	X	X		X	X			X	X*
Fourth	0.708	X	X		X					X
Reverse	2.428			X			X			
Manual 1	2.741		X			X	X			
* For Certain Vehicle Applications, Refer to the Owner's Manual.										

Downloaded from www.Manualslib.com manuals search engine

Figure 4.1 - Power Flow Diagram

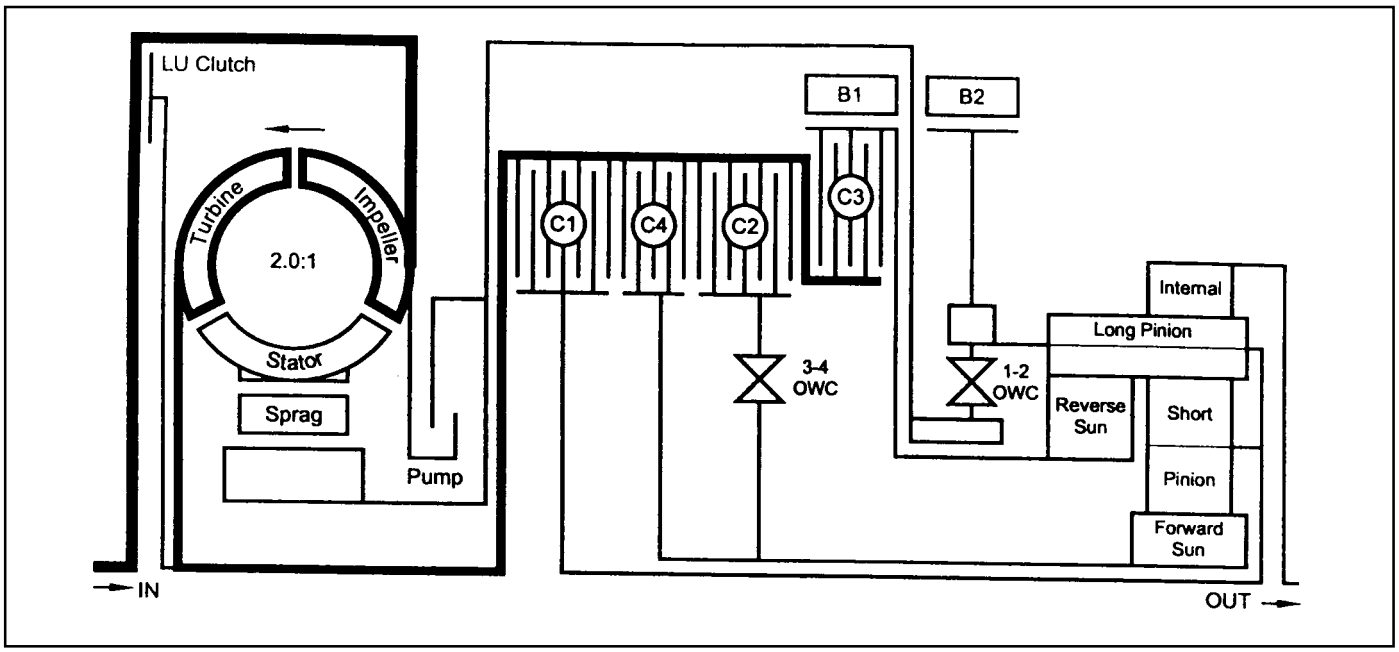

TORQUE CONVERTER

The torque converter (refer figure 4.2) consists of a turbine, stator pump, impeller and a lock-up damper and piston assembly. As in conventional torque converters, the impeller is attached to the converter cover, the turbine is splined to the input shaft and the stator is mounted on the pump housing via a one way clutch (sprag).

The addition of the damper and piston assembly enables the torque converter to 'lock-up' under favourable conditions. Lock-up is only permitted to occur in third and fourth gears under specified throttle and road speed conditions.

Lock-up is achieved by applying hydraulic pressure to the damper and piston assembly which couples the turbine to the converter cover, locking-up the converter and eliminating unwanted slippage. Whenever lock-up occurs, improved fuel consumption is achieved. Torsional damper springs are provided in the damper and piston assembly to absorb any engine torque fluctuations during lock-up.

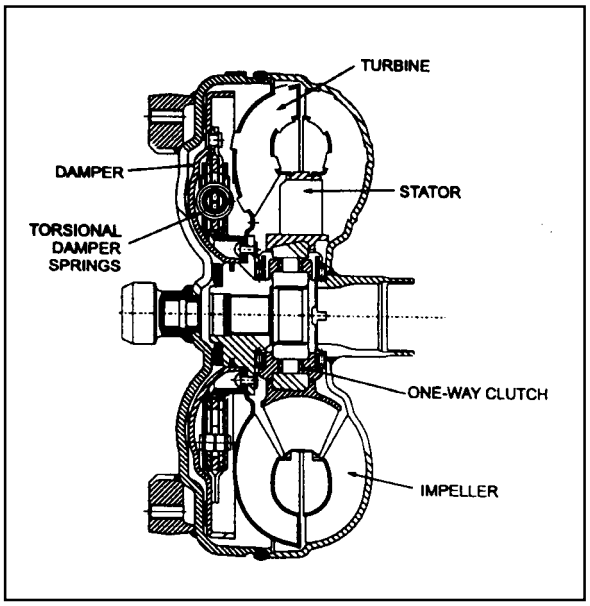

Figure 4.2 - Torque Converter Cross Section

Downloaded from www.Manualslib.com manuals search engine

CLUTCH PACKS

There are four clutch packs (refer to figure 4.3). All clutch packs are composed of multiple steel and friction plates.

C1 CLUTCH When applied, this clutch pack allows the input shaft to drive the planet carrier.

This occurs in third and fourth gears.

C2 CLUTCH When applied this clutch pack allows the input shaft to drive the forward sun gear via the 3-4 OWC. This occurs in all forward gears.

C3 CLUTCH When applied this clutch pack allows the input shaft to drive the reverse sun gear. This only occurs in reverse gear.

C4 CLUTCH When applied this clutch provides engine braking on overrun. This occurs in Manual 1, 2 and 3 and also Drive 2 and Drive 3 to prevent objectionable free wheel coasting.

Figure 4.3 - Clutch Packs

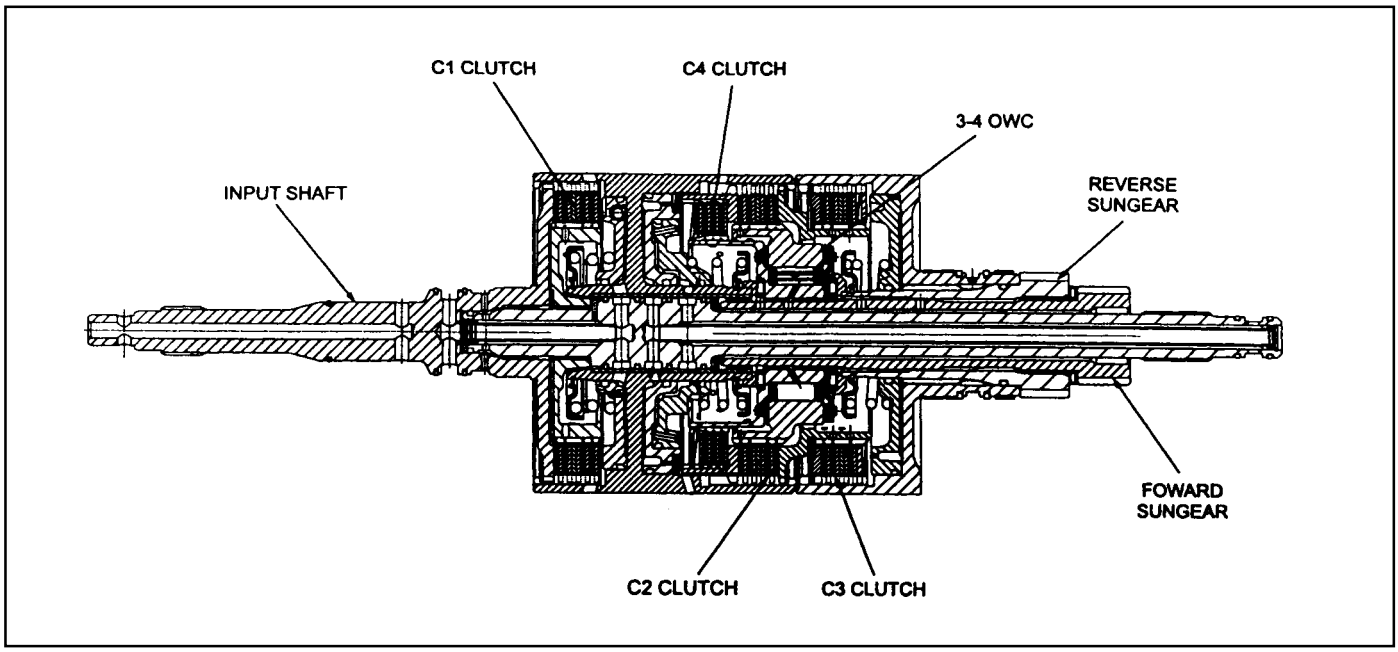

Downloaded from www.Manualslib.com manuals search engine

BANDS

The transmission utilises two bands, the B1 band (sometimes known as the 24 band), and the B2 band (sometimes known as the low-reverse band). Refer to figure 4.4.

The B1 band is a flexible band which is engaged by the front servo piston. B1 is activated in second and fourth gear. When activated B1 prevents the reverse sun gear from rotating by holding the C3 clutch assembly stationary. In second gear only the outer area of the apply piston is utilised. In fourth gear both areas are utilised for greater clamping force.

The B2 band is a solid band which is engaged by the rear servo piston. B2 is activated in Park,

Reverse, Neutral and Manual 1. When activated B2 prevents the planet carrier assembly from rotating. In Manual 1 only the inner area of the apply piston is utilised. In Park, Reverse and Neutral, both areas are utilised for greater clamping force.

Figure 4.4- Bands

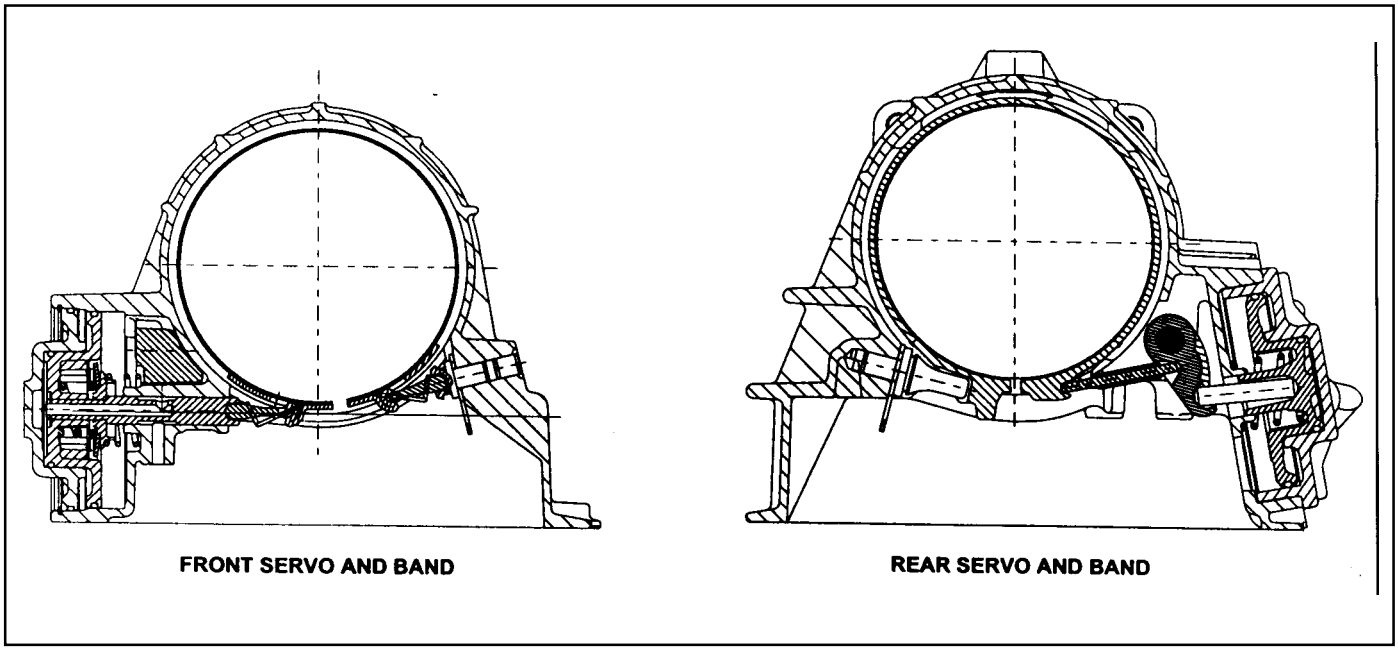

ONE WAY CLUTCHES

The transmission uses two OWCs, the 1-2 OWC and the 34 OWC. (Note that a third OWC is located in the torque converter, also known as a sprag.)

The 1-2 OWC is located between the planetary carrier assembly and the centre support. This allows the carrier to rotate around the centre support in one direction only. The one way clutch is engaged only in Drive 1.

The 3-4 OWC is located between the C4 and the C2 clutch assemblies. This allows the C2 clutch to drive the forward sun gear in first, second and third gears but unlocks in fourth gear and during overrun.

PLANETARY GEAR SET

The planetary gear set used in the transmission is a conventional six pinion Ravigneaux compound gear set.

Downloaded from www.Manualslib.com manuals search engine

PARKING MECHANISM

When Park is selected the manual lever extends the park rod rearwards to engage the parking pawl (refer to (figure 4.5). The pawl will engage the external teeth on the ring gear thus locking the output shaft to the transmission case. When Park is not selected a return spring holds the parking pawl clear of the output shaft, preventing accidental engagement of Park.

Figure 4.5 - Park Rod and Cross Shaft

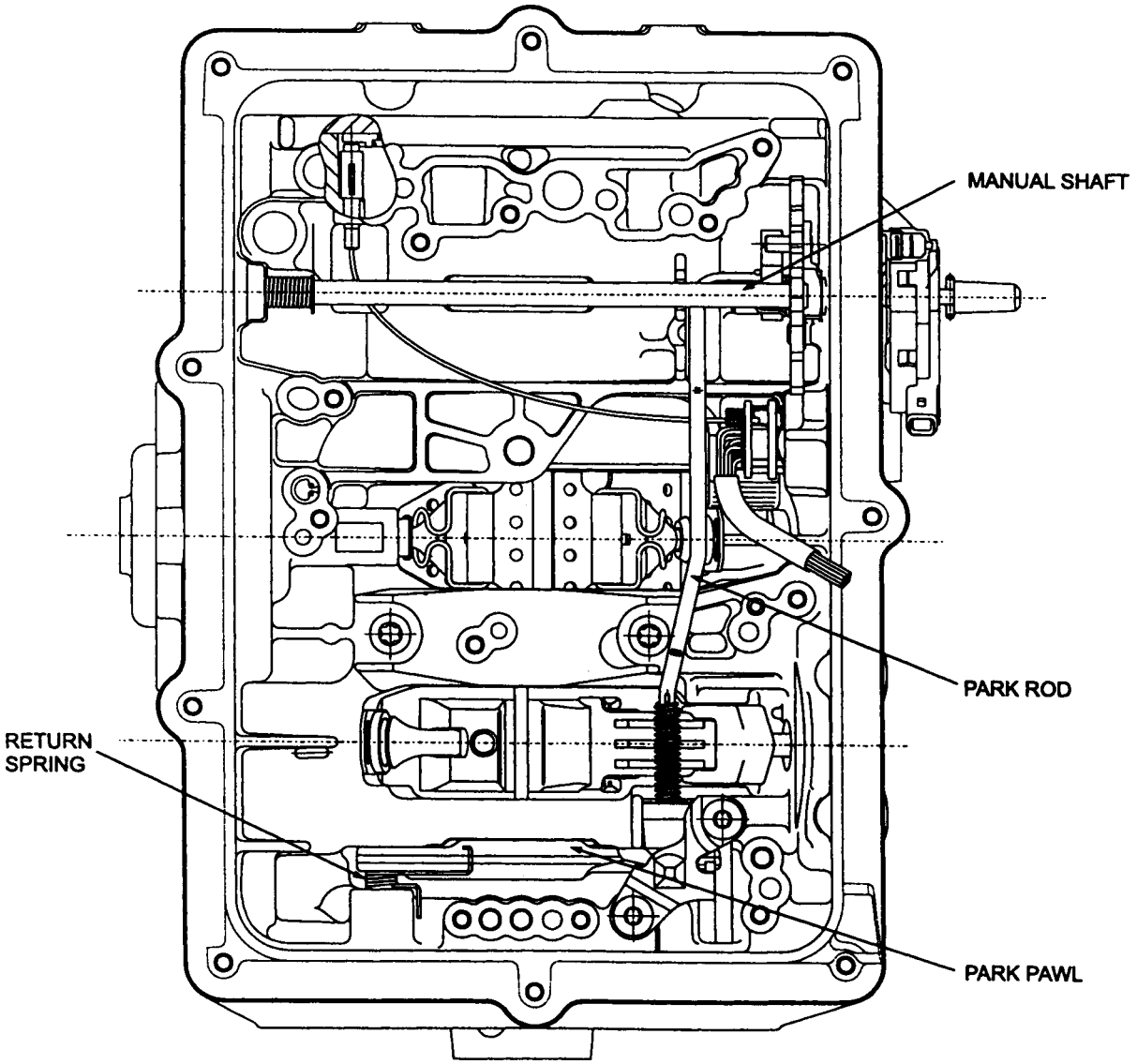

Downloaded from www.Manualslib.com manuals search engine

POWER FLOWS

INTRODUCTION

The power flows for the various transmission selections are listed below:

- Power Flow - Neutral and Park
- Power Flow - Reverse
- Power Flow - Manual 1
- Power Flow - Drive 1
- Power Flow - Drive 2
- Power Flow - Drive 3
- Power Flow - Drive 3 Lock Up
- Power Flow - Drive 4 (Overdrive)
- Power Flow - Drive4 Lock Up

Each power flow is described in the following sections.

Table 5.1 details the engaged elements versus the gear selected for all transmission selections.

Figure 5.1 - Engaged Elements vs Gear Selected

	ELEMENTS ENGAGED								
Gear State	**C1**	**C2**	**C3**	**C4**	**B1**	**B2**	**1-2 OWC**	**3-4 OWC**	**LU CLUTCH**
Park and Neutral	-	-	-	-	-	X	-	-	-
Reverse	-	-	X	-	-	X	-	-	-
Manual 1	-	X	-	X	-	X	-	X	-
Drive 1	-	X	-	-	-	-	X	X	-
Drive 2 and Manual 2	-	X	-	X	X	-	-	X	-
Drive 3 and Manual 3	X	X	-	X	-	-	-	X	-
Drive 3 Lock Up and Manual 3 Lock Up	X	X	-	X	-	-	-	X	X
Drive 4 Overdrive	X	X	-	-	-	-	-	-	-
Drive 4 Lock Up	X	X	-	-	-	-	-	-	X

Planetary Gear Set

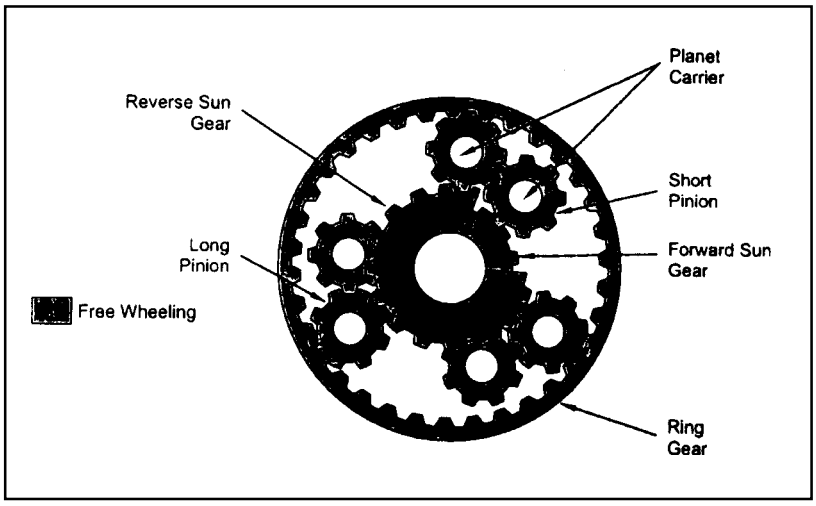

Downloaded from www.Manualslib.com manuals search engine

POWER FLOW - PARK AND NEUTRAL

In Park and Neutral, there is no drive to the planetary gear set. The rear band is applied to eliminate 'clunk' on engagement of the reverse gear, and to improve the low range engagement for 4WD applications. No other clutches or bands are applied.

In Park the transmission is mechanically locked by engaging a case mounted pawl with teeth on the output shaft ring gear.

Control

To maintain this arrangement in the steady state solenoids and valves are activated as follows:

- Solenoids S1 and S2 are switched off.
- Line (pump) pressure is applied to the primary regulator valve (PRV) and to the solenoid supply valve.
- The converter, oil cooler, and lubrication circuits are charged from the primary regulator valve.
- The line 500 circuit is charged by the solenoid supply valve.
- The S5 circuit is charged by the variable pressure solenoid (S5).
- Line pressure is prevented from entering the drive circuit by the manual valve.
- The B1 circuit and all clutch circuits are open to exhaust.

Refer to figure 5.1 and table 5.2.

Table 5.2 - Engaged Elements - Park arid Neutral

	ELEMENTS ENGAGED								
Gear State	**C1**	**C2**	**C3**	**C4**	**B1**	**B2**	**1-2 OWC**	**3-4 OWC**	**LU CLUTCH**
Park and Neutral	-	-	-	-	-	X	-	-	-

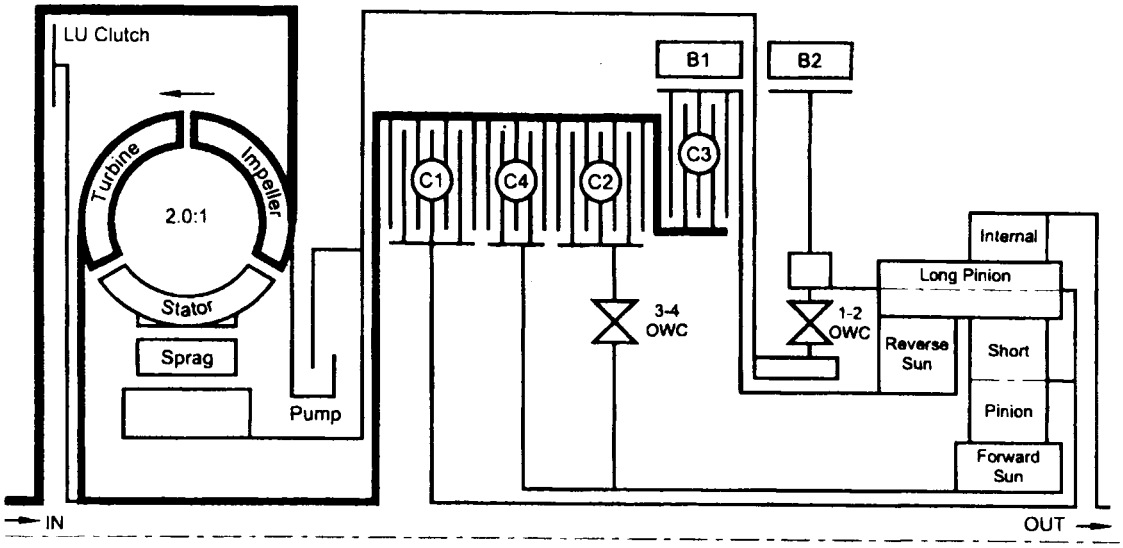

Downloaded from www.Manualslib.com manuals search engine

POWER FLOW - REVERSE

In Reverse, transmission drive is via the input shaft and the forward clutch cylinder to the hub of the C3 clutch. The elements of the transmission function as follows :

- The C3 clutch is engaged and drives the reverse sun gear in a clock-wise direction.
- The B2 band is engaged and holds the planetary gear carrier stationary causing the long pinion to rotate anti-clockwise about its axis on the pinion shaft.
- The long pinion drives the internal ring fear in the same direction.
- The internal ring being splined to the output shaft drives it in an anti-clockwise or reverse direction.

Control

To maintain this arrangement in the steady state

solenoids and valves are activated as follows:

- Solenoids S1 and S2 are switched off.
- Line pressure is directed through the reverse lockout valve to both the inner and outer apply areas of the rear servo piston for B2 band application.
- Line pressure feeds the reverse oil circuit via the manual valve.
- Reverse oil is routed from the manual valve to the C3 clutch.
- Reverse oil is also applied to the spring end of the primary regulator valve to assist the spring and to boost the line pressure value.
- All other clutch and band apply circuits are open to exhaust.

Refer to figure 5.2 and table 5.3

Table 5.3 - Engaged Elements - Reverse

	ELEMENTS ENGAGED								
Gear State	**C1**	**C2**	**C3**	**C4**	**B1**	**B2**	**1-2 OWC**	**3-4 OWC**	**LU CLUTCH**
Reverse	-	-	X	-	-	X	-	-	-

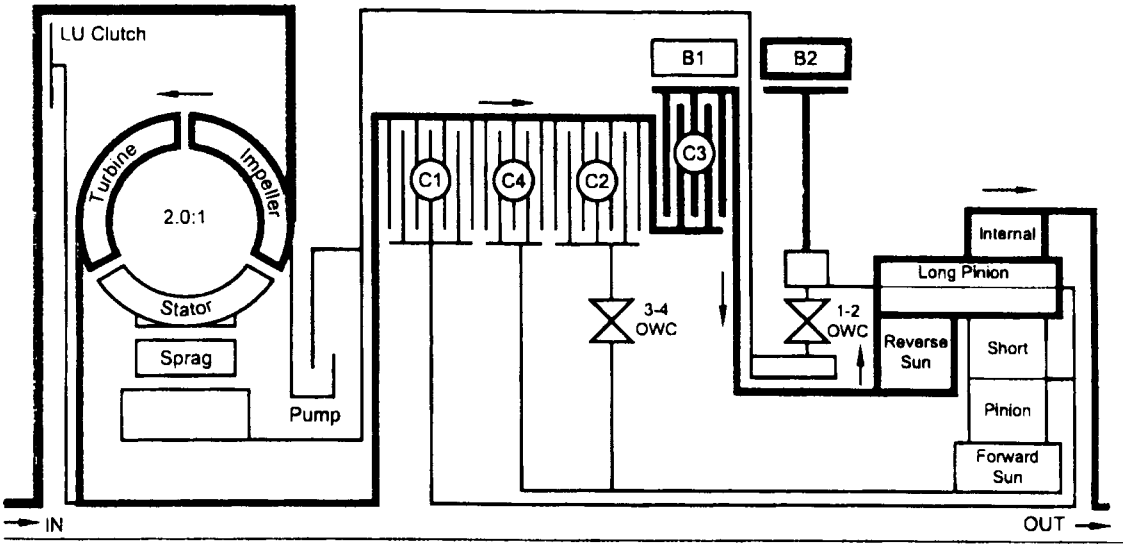

Downloaded from www.Manualslib.com manuals search engine

POWER FLOW - MANUAL 1

In Manual 1, transmission drive is via the input shaft to the forward clutch cylinder. The elements of the transmission function as follows :

- The C2 clutch is engaged to drive the forward sun gear, via the 3-4 OWC.
- The B2 band is engaged to hold the planetary gear carrier stationary.
- The forward sun gear drives the short pinion anti-clockwise.
- The short pinion drives the long pinion clockwise.
- The long pinion rotating about its axis drives the internal ring gear and the output shaft in a clockwise or forward direction.
- The C4 clutch provides engine braking through the 3-4 OWC on overrun.

Control

To maintain this arrangement in the steady state solenoids and valves are activated as follows:

- Solenoids S1 and S2 are switched ON.
- The 1-2,2-3, and 34 shift valves are held in their first gear positions by line 500 pressure.
- Drive (line pressure) oil from the manual valve engages the C2 clutch.
- Lo-1st (line pressure) oil is routed through the 1-2 shift valve to the C4 clutch, and to the inner apply area of the rear servo piston for B2 band application.

Refer to figure 5.3 and table 5.4.

Table 5.4 - Engaged Elements - Manual 1

	ELEMENTS ENGAGED								
Gear State	**C1**	**C2**	**C3**	**C4**	**B1**	**B2**	**1-2 OWC**	**3-4 OWC**	**LU CLUTCH**
Manual 1	-	X	-	X	-	X	-	X	-

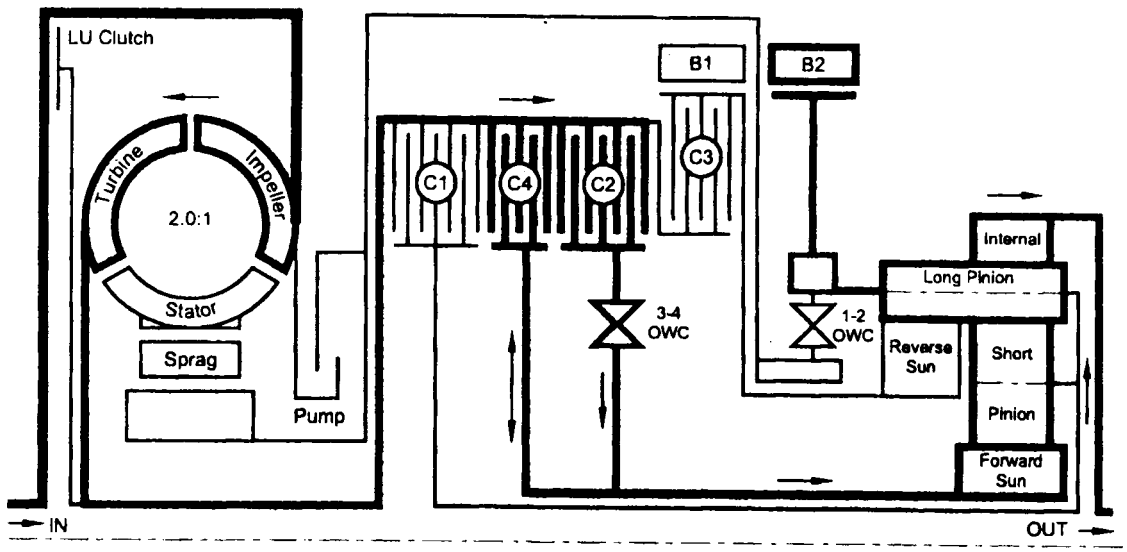

Downloaded from www.Manualslib.com manuals search engine

POWER FLOW - DRIVE 1

In Drive 1, transmission drive is via the input shaft to the forward clutch cylinder. The elements of the transmission function as follows :

- The C2 clutch is engaged to drive the forward sun gear.
- The forward sun gear drives the short pinion anti-clockwise.
- The short pinion drives the long pinion clockwise.
- The 1-2 OWC prevents the planetary gear carrier from rotating under reaction force and the long pinion rotates on its axis driving the internal ring gear and output shaft in a clockwise or forward direction.
- There is no engine braking on overrun.

Control

To maintain this arrangement in the steady state solenoids and valves are activated as follows:

- Solenoids S1 and S2 are switched On.
- The 1-2, 2-3, and 3-4 shift valves are held in their first gear positions by line 500 pressure.
- Drive (line pressure) oil from the manual valve engages the C2 clutch.

Refer to figure 5.4 and table 5.5

Table 5.5 - Engaged Elements - Drive 1

	ELEMENTS ENGAGED								
Gear State	**C1**	**C2**	**C3**	**C4**	**B1**	**B2**	**1-2 OWC**	**3-4 OWC**	**LU CLUTCH**
Drive 1	-	X	-	-	-	-	X	X	-

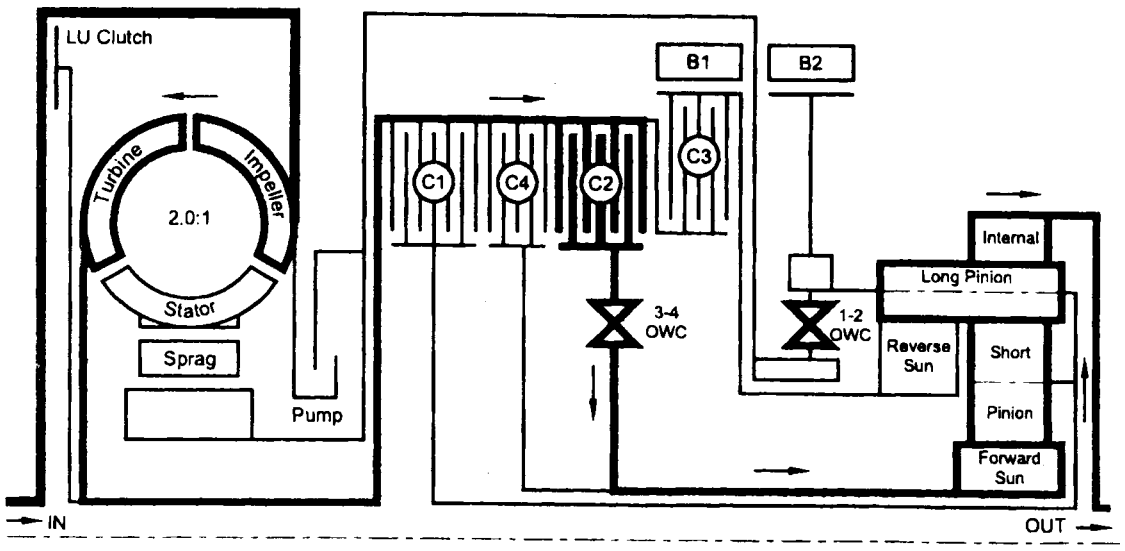

Downloaded from www.Manualslib.com manuals search engine

POWER FLOW - DRIVE 2 AND MANUAL 2

In Drive 2 and Manual 2, transmission drive is via the input shaft and forward clutch cylinder. The elements of the transmission function as follows :

- The C2 clutch is applied to drive the forward sun gear.
- The forward sun gear drives the short pinion anti-clockwise.
- The short pinion drives the long pinion clockwise.
- The B1 band is applied holding the reverse sun gear stationary therefore the long pinion 'walks' around the reverse sun gear taking the internal ring gear and output shaft with it in a clockwise or forward direction.
- The C4 clutch is applied to bypass the 3-4 OWC and provide engine braking on overrun.

Control

To maintain this arrangement in the steady state solenoids and valves are activated as follows: Solenoid S1 is switched Off. S2 is switched On.

- Solonoid S1 is switched Off. S2 is switched On.
- Drive (line pressure) oil from the manual valve engages the C2 clutch.
- When S1 switches off , S1 oil pressure, which is derived from line 500 pressure, moves the 3-4 shift valve to the left. At the same time S1 oil is directed to the 1-2 shift valve which moves the valve to the second gear position.
- 2nd oil (line pressure) from the 1-2 shift valve is directed to the band apply regulator valve, and to the 2-3 shift valve.
- The band apply regulator valve supplies 2nd oil (regulated to line pressure multiplied by the valve ratio) to the band apply feed (BAF) circuit.
- Band apply feed oil is directed to:
  - The outer apply area of the front servo
  - The 1-2 shift valve to provide an exhaust port when the transmission is shifted to first gear
  - The 3-4 shift valve for use when the transmission is shifted into fourth gear
- Drive (line pressure) is routed through the 3-4 shift valve to apply the C4 clutch.

Refer to figure 5.5 and table 5.6.

Table 5.6 - Engaged Elements - Drive 2 and Manual 2

	ELEMENTS ENGAGED								
Gear State	**C1**	**C2**	**C3**	**C4**	**B1**	**B2**	**1-2 OWC**	**3-4 OWC**	**LU CLUTCH**
Drive 2 and Manual 2	-	X	-	X	X	-	-	X	-

Downloaded from www.Manualslib.com manuals search engine

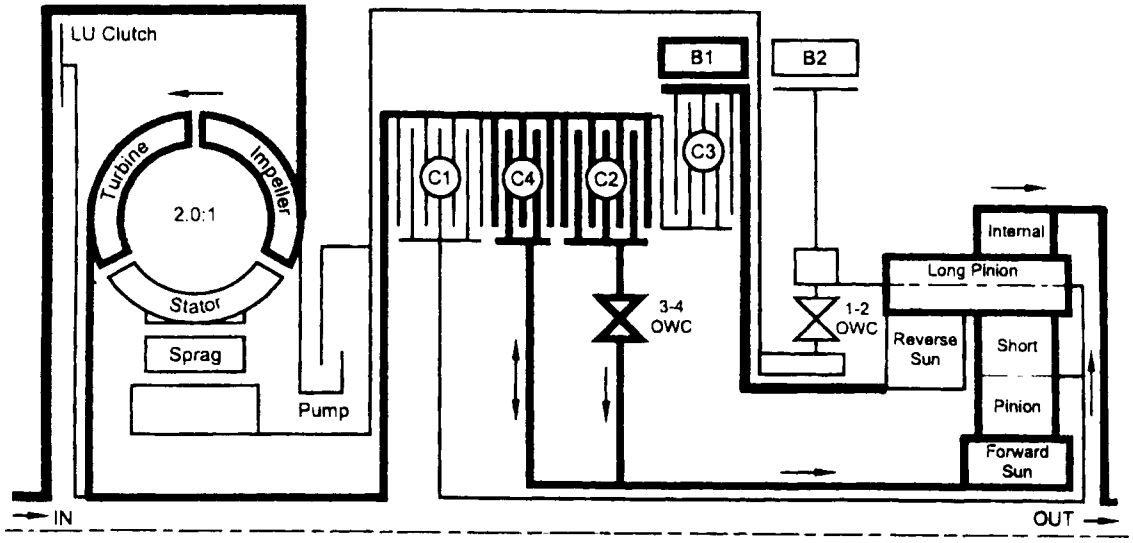

Downloaded from www.Manualslib.com manuals search engine

POWER FLOW - DRIVE 3 AND MANUAL 3

In Drive 3 and Manual 3, transmission drive is via the input shaft to the forward clutch cylinder. The elements of the transmission function as follows :

- The C2 clutch is engaged to drive the forward sun gear.
- The C1 clutch is engaged to drive the planet carrier.
- The forward sun gear and the planet carrier are driven clockwise at the same speed therefore there is no relative motion between the sun gear and the pinions.
- The ring gear and output shaft are driven in a clockwise or forward direction at input shaft speed.
- The C4 clutch is applied to bypass the 3-4 OWC and provide engine braking on overrun.

Control

To maintain this arrangement in the steady state solenoids and valves are activated as follows:

- Solenoid S1 is switched Off. S2 is switched Off.
- With S1 and S2 switched Off, the 2-3 and 3-4 shift valves are held in the third gear position by line 500 pressure.
- The 1-2 shift valve is held in the third gear position by S1-S2 oil pressure.
- 2nd oil (line pressure) from the 1-2 shift valve is directed to the band apply regulator valve. and to the 2-3 shift valve.
- The band apply regulator valve supplies 2nd oil (regulated to line pressure multiplied by the valve ratio) to the band apply feed (BAF) circuit.
- Band apply feed oil is directed to:
  - The outer apply area of the front servo
  - The 1-2 shift valve to provide an exhaust port when the transmission is shifted to first gear
  - The 3-4 shift valve for use when the transmission is shifted into fourth gear
- 2nd oil at the 2-3 shift valve is directed to the 3rd oil circuit.
- 3rd oil from the 2-3 shift valve is directed to the clutch apply regulator valve, and to the 4-3 Sequence Valve.
- The clutch apply regulator valve supplies oil (regulated to line 500 pressure multiplied by the valve ratio) to the clutch apply feed (CAF) circuit.
- The CAF oil is directed to:
  - The C1 clutch
  - The C1 bias valve
  - The 4-3 sequence valve
- At the 4-3 sequence valve the CAF oil becomes band 1 release feed (B1R-F) oil, and is directed through the 3-4 shift valve to the spring end of the 4-3 sequence valve, and to the release side of the front servo piston to hold band 1 off.
- Drive (line pressure) is routed through the 3-4 shift valve to apply the C4 clutch.

Refer to figure 5.6 and table 5.7.

Table 5.7 - Engaged Elements - Drive 3 and Manual 3

	ELEMENTS ENGAGED								
Gear State	**C1**	**C2**	**C3**	**C4**	**B1**	**B2**	**1-2 OWC**	**3-4 OWC**	**LU CLUTCH**
Drive 3 and Manual 3	X	X	-	X	-	-	-	X	-

Downloaded from www.Manualslib.com manuals search engine

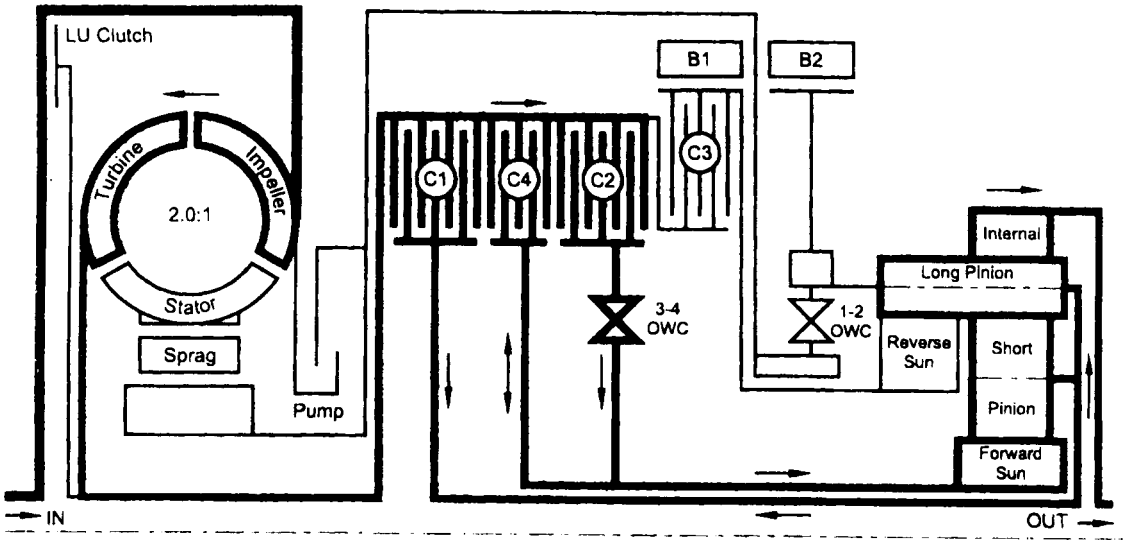

Downloaded from www.Manualslib.com manuals search engine

POWER FLOW - DRIVE 3 LOCK UP AND MANUAL 3 LOCK HP

In Drive 3 Lock Up and Manual 3 Lock Up, transmission drive is the same as for Drive 3 but with the application of the converter lock up clutch to provide positive no-slip converter drive.

Control

Control for Drive 3 Lock Up and Manual 3 Lock Up is the same as for Drive 3 with the addition of the converter clutch circuit activated by solenoid S7.

- When S7 is switched On, S7 feed oil to the converter clutch control valve is switched off and allowed to exhaust through the S7 solenoid. This allows the valve to move to the clutch engage position.
- Regulated apply feed oil, derived from line 500 oil at the converter clutch regulator valve, is directed by the converter clutch control valve to the engage side of the converter clutch.
- Converter clutch release oil is exhausted at the converter clutch control valve.
- Converter feed oil is re-routed by the converter clutch control valve directly to the oil cooler and lubrication circuit.

Refer to figure 5.7and table 5.8.

Table 5.8 - Engaged Elements - Drive 3 Lock Up and Manual 3 Lock Up

	ELEMENTS ENGAGED								
Gear State	**C1**	**C2**	**C3**	**C4**	**B1**	**B2**	**1-2 OWC**	**3-4 OWC**	**LU CLUTCH**
Drive 3 Lock Up and Manual 3 Lock Up	X	X	-	X	-	-	-	X	X

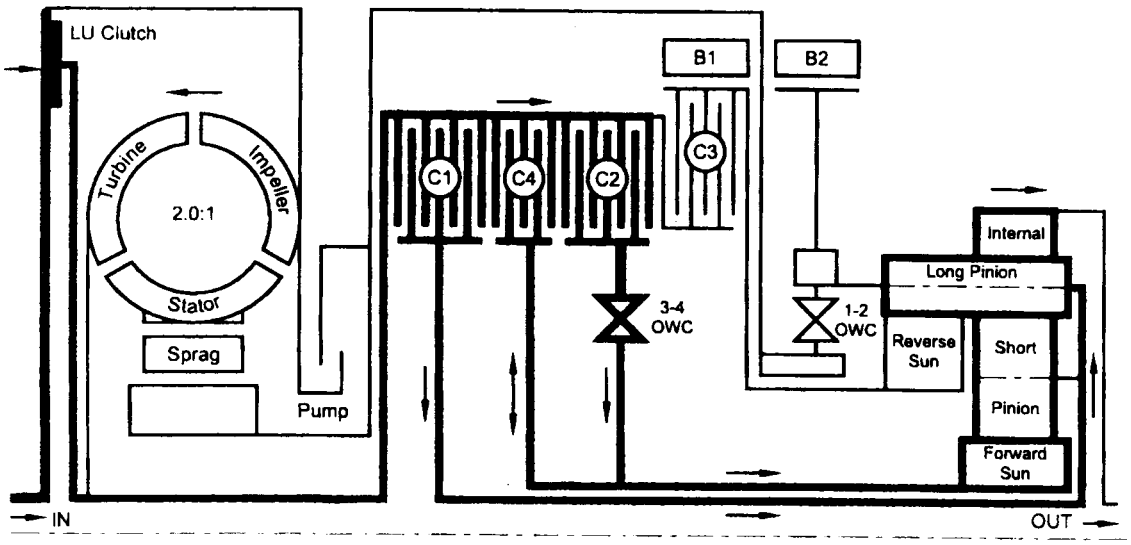

Downloaded from www.Manualslib.com manuals search engine

POWER FLOW - DRIVE 4 (OVERDRIVE)

In Drive 4 (Overdrive), transmission drive is via the input shaft to the forward clutch cylinder.

The elements of the transmission function as follows :

- The C1 clutch is applied to drive the planet carrier clockwise.
- The B1 band is applied to hold the reverse sun gear stationary.
- As the planet carrier tuns, the long pinion 'walks' around the stationary reverse sun gear and rotates around its axis driving the internal ring gear and output shaft in a clockwise or forward direction at a speed faster than the input shaft i.e. in overdrive ratio.
- The forward sun gear is also driven faster than the input shaft and overruns the 3-4 OWC.
- The C2 clutch is engaged to reduce the speed differential across the 3-4 OWC.

Control

To maintain this arrangement in the steady state solenoids and valves are activated as follows:

- Solenoid S1 is switched On. S2 is switched Off.
- With S1 switched On the 3-4 shift valve is held in the fourth gear position by line 500 pressure on the small end of the valve.
- With S2 switched Off the 2-3 shift valve is held in the fourth gear position by line 500 pressure on the large end of the valve.
- The 1-2 shift valve is held in the fourth gear position by S2 oil pressure.
- 2nd oil (line pressure) from the 1-2 shift valve is directed to the band apply regulator valve, and to the 2-3 shift valve.
- The band apply regulator valve supplies 2nd oil (regulated to line pressure multiplied by the valve ratio) to the band apply feed (BAF) circuit.
- Band apply feed oil is directed to:
  - the outer apply area of the front servo
  - the inner apply area of the front servo piston via the 3-4 shift valve
  - the 1-2 shift valve to provide an exhaust port when the transmission is shifted to first gear
- 2nd oil at the 2-3 shift valve is directed to the 3rd oil circuit.
- 3rd oil from the 2-3 shift valve is directed to the clutch apply regulator valve, and to the 4-3 Sequence Valve.
- The clutch apply regulator valve supplies oil (regulated to line 500 pressure multiplied by the valve ratio) to the clutch apply feed (CAF) circuit.
- The CAF oil is directed to:
  - the C1 clutch
  - the C1 bias valve
  - the 4-3 sequence valve
- Drive oil (line pressure) from the manual valve engages the C2 clutch

Refer to figure 5.8 and table 5.9.

Table 5.9 - Engaged Elements - Drive 4 (Overdrive)

	ELEMENTS ENGAGED								
Gear State	**C1**	**C2**	**C3**	**C4**	**B1**	**B2**	**1-2 OWC**	**3-4 OWC**	**LU CLUTCH**
Drive 4 (Overdrive)	X	X	-	-	X	-	-	X	-

Downloaded from www.Manualslib.com manuals search engine

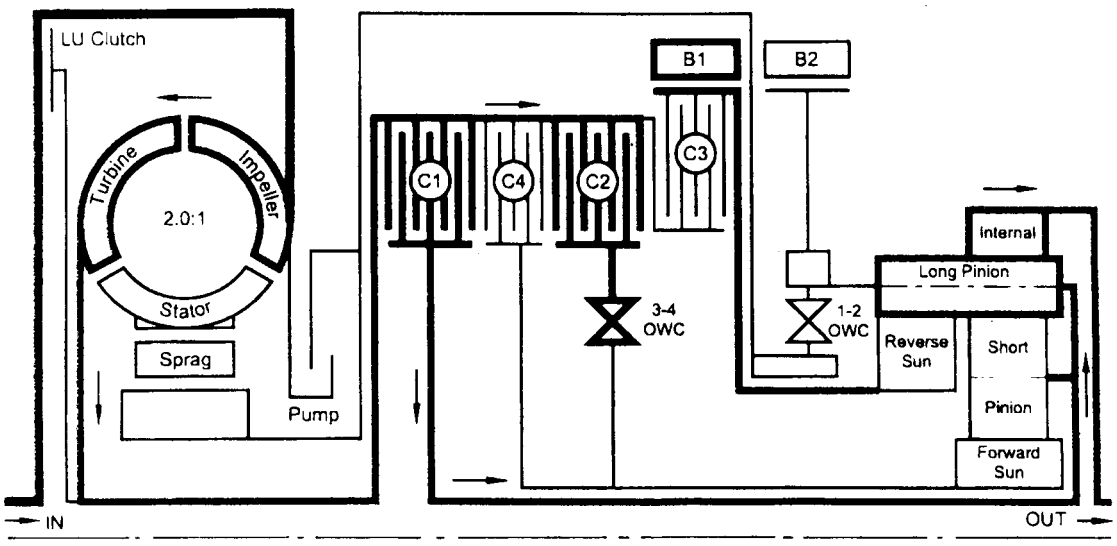

Downloaded from www.Manualslib.com manuals search engine

POWER FLOW - DRIVE 4 LOCK UP

In Drive 4 Lock Up, transmission drive is the same as for Drive 4 but with the application of the converter lock up clutch to provide positive no-slip converter drive.

Control

Control for Drive 4 Lock Up is the same as for Drive 4 with the addition of the converter clutch circuit activated by solenoid S7.

- When S7 is switched On, S7 feed oil to the converter clutch control valve is switched off and allowed to exhaust through the S7 solenoid. This allows the valve to move to the clutch engage position.
- Regulated apply feed oil, delved from Line 500 oil at the converter clutch regulator valve, is directed by the converter clutch control valve to the engage side of the converter clutch.
- Converter clutch release oil is exhausted at the converter clutch control valve.
- Converter feed oil is re-routed by the converter clutch control valve directly to the oil cooler and lubrication circuit.

Refer to figure 5.9 arid table 5.10.

Table 5.10 - Engaged Elements - Drive 4 Lock Up

	ELEMENTS ENGAGED								
Gear State	**C1**	**C2**	**C3**	**C4**	**B1**	**B2**	**1-2 OWC**	**3-4 OWC**	**LU CLUTCH**
Drive 4 Lock Up	X	X	-	-	X	-	-	-	X

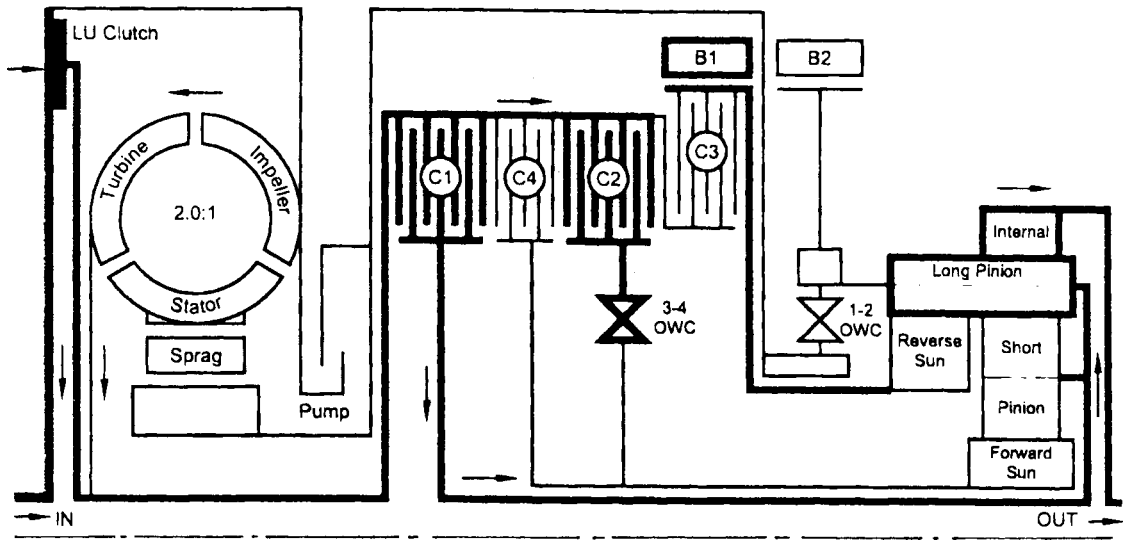

Downloaded from www.Manualslib.com manuals search engine

DIAGNOSIS

DIAGNOSTIC SYSTEM

Recommended Test Equipment and Procedure

The test equipment is designed to be used with the control modules in all vehicles. The components used in the transmission application are:

- Multi Function Tester, and
- Appropriate vehicle for testing.

Multi Function Tester (MFT)

The MFT is programmed with the special vehicle diagnostic software that allows selection of the unit under test.

The program allows the proper communication to the Transmission Control Unit (TCU).

It then requests information from the user via a menu system to select the required set up.

Examples are viewing codes, clearing error codes, and real-time operation. Set up and operation instructions are detailed in the user manual.

This equipment can be used by trained personnel such as technicians and mechanics to diagnose electronic and wiring problems relating to the vehicle transmission. Information that is available includes engine and road (shaft) speed, transmission oil temperature, throttle position, solenoid/gear status and gear lever position. Current and stored faults detected by the electronics are also available.

TCU Pin Description

The TCU pin descriptions are listed in table 6.1.1.

The wiring loom pins are shown in figure 6.1.1

Table 6.1.1 - TCU Pin Description

Pin No.	Identification	Type	4WD (Diesel)	4WD (Gas)	Description
1	Common Ground	GND	●	●	Main power ground (or the module. Connects directly to the battery negative terminal.
2	Do not use	-	O	O	
3	Mode Indicator Lamp - 'Winter'	OP	●	●	Indicates 'WINTER' mode shift schedule is selected.
4	Gear Position 'Park' Lamp	OP	●	●	Drives the jewel in the instrument cluster to indicate 'PARK' gear lever position.
5	Gear Position 'Reverse' Lamp	OP	●	●	Drives the jewel in the instrument cluster to indicate 'REVERSE' gear lever position.
6	Gear Position 'Neutral' Lamp	OP	●	●	Drives the jewel in the instrument cluster to indicate 'NEUTRAL' gear lever position.
7	Do not use	-	O	O	
8	Engine Speed Input Sensor (-Ve)	IP	●	O	Flywheel/Ring gear pulses to indicate engine speed.

Downloaded from www.Manualslib.com manuals search engine

Pin No.	Identification	Type	4WD (Diesel)	4WD (Gas)	Description
9	Mode Indicator Lamp - 'Power'	OP	●	●	Indicates 'POWER' mode shift schedule is selected.
10	Throttle Position Sensor Output as Pulse Width Modulation for TOD	OP	O	O	Provides an analogue signal of the throttle position for the Torque on Demand (TOD) Control Module.
11	Air Conditioner Input Signal	-	●	O	Input
12	Kickdown Switch	IP	●	●	Switch to indicate when a kickdown is required at high throttle position.
13	Mode Switch	IP	●	●	Switch to select 'NORMAL', 'POWER' or 'WINTER' shift schedule. Voltage varies from OV to 12V.
14	Transfer Case Input (High) -4WD Lamp High	IP	●	●	Switch to indicate 4WD'HIGH RANGE' is selected.
15	Ignition Switch	IP	●	●	Ignition power is used as the main power source to drive the unit and the solenoids.
16	Do not use	-	O	O	
17	Gear Position '1' Lamp/ Gear Position Code 1	OP	●	●	Drives jewel in the instrument cluster to indicate
18	*Gear Position '2' Lamp/ Gear Position Code 2*	OP	●	●	gear leverposition'1'. Drives jewel in the instrument cluster to indicate
19	Gear Position '3' Lamp/ Gear Position Code 3*	OP	●	●	gear lever position'2'. Drives jewel in the instrument cluster to indicate gear lever position'3'.
20	Gear Position 'Drive' Lamp/ Gear Position Code 4*	OP	●	●	Drives jewel in the instrument cluster to indicate 'DRIVE'. gear lever position.
21	CAN (-ve)	I/O	O	●	CAN low side bus communication (CANL).
22	CAN (+ve)	I/O	O	●	CAN high side bus communication (CANH).
23	K-line Communication Link	I/O	●	●	Diagnostic information and vehicle coding.
24	Engine Speed Input Sensor (+ve)	IP	●	O	Flywheel/Ring gear pulses to indicate engine speed.
25	Road Speed Pulses	OP	●	●	Road speed signals derived from shaft speed sensors.
26	Shaft Speed Sensor Signal	IP	●	O	This sensor transmit shaft speed signal to the TCU.
27	Throttle Position Sensor - Ground	GND	●	O	Throttle position sensor ground.
28	Throttle Position Sensor - Reference	REF	●	O	This is the 5V reference voltage supply generated by the unit for the throttle position sensor.
29	Throttle Position Sensor - Input Signal	IP	●	O	This sensor is a resistance potentiometer indicating throttle position. Voltage varies 0V to 5V.
30	Transfer(or Case Input (Low) - 4WD Lamp Low	IP	●	●	Switch to indicate 4WD'LOW RANGE' is selected.

Downloaded from www.Manualslib.com manuals search engine

Pin No.	Identification	Type	4WD (Diesel)	4WD (Gas)	Description
31	Gear Lever Position	IP	●	●	This switch has discreet values indicating the positions selected by the gear shift lever (PRNDL). Voltage varies 0V to 5V.
32	Transmission Oil Temperature	IP	●	●	Resistive sensor indicates transmission temperature . High R = low temp Low R = high temp Voltage varies 0V to 5V.
33	Solenoid 4	OP	●	●	On/Off solenoid normally open, combines with other On/off solenoid 3 for shift quality and sequencing.
34	Solenoid 1	OP	●	●	On/off solenoid normally open, combines with other On/off solenoid to set the selected gear.
35	Do not use	-	O	O	
36	Solenoid 5 Return (-ve)	IP	●	●	This ensures the earth path for the VPS and the current in this line is monitored to give feedback control of the VPS.
37	Gear Lever Position - Ground	GND	●	●	PRNDL switch ground.
38	Transmission Oil Temperature - Ground	GND	●	●	Ground reference for temperature sensor input.
39	Solenoid 6	OP	●	●	On/Off solenoid normally open, sets low/high line pressure.
40	Solenoid 2	OP	●	●	On/off solenoid normally open, combines with other On/off solenoid to set the selected gear.
41	Solenoid 3	OP	●	●	On/off solenoid normally open, combines with On/off solenoid 4 for shift quality and sequencing.
42	Solenoid 7	OP	●	●	On/off solenoid normally open, locks up the torque converter to Increase cruising efficiency.
43	Do not use	-	O	O	
44	Solenoid 5 (+ve)	OP	●	●	This is the variable force solenoid which ramps the pressure during gear changes and solenoid switching, to enhance transmission shift quality.

Notice :
- ● = circuit connected
- O = circuit not connected
- * = unique
- OP = Output
- IP = Input
- I/O = Input/output
- GND = Ground
- REF = Reference

Downloaded from www.Manualslib.com manuals search engine

Figure 6.1.1 - Wiring Loom Pins

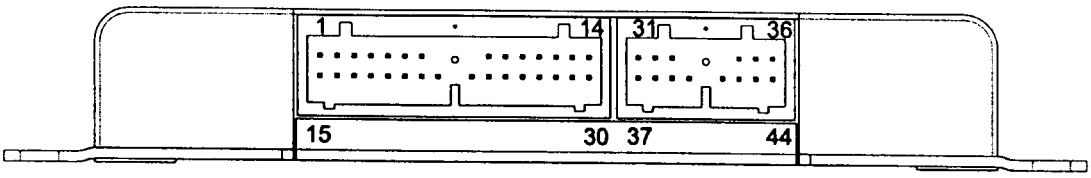

Transmission Control Unit (TCU) Pin Numbers

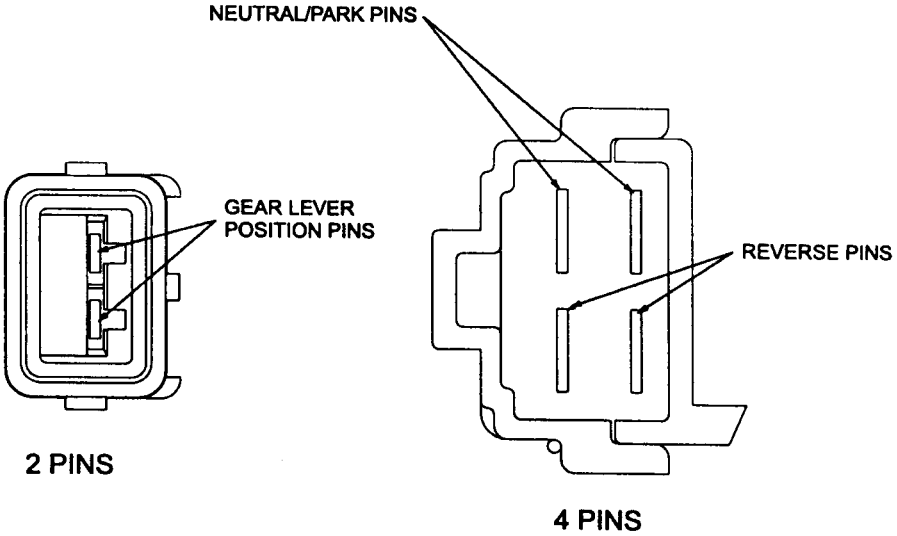

Inhibitor Switch Pins

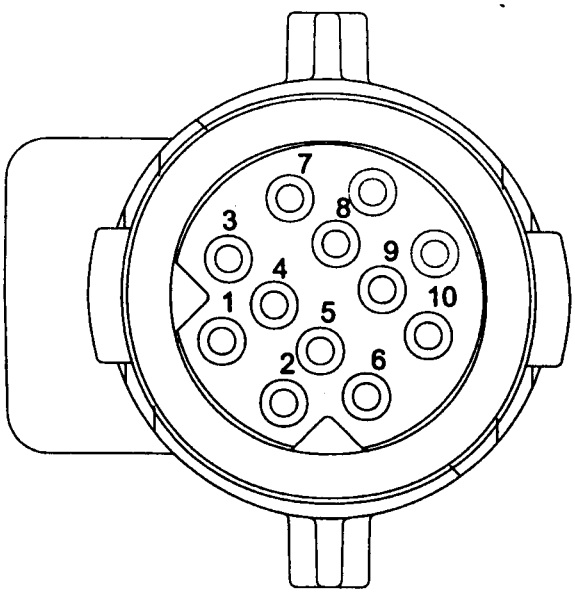

4WD

Ten Pin Plug Pin Numbers

Downloaded from www.Manualslib.com manuals search engine

Default Transmission Operating Modes

The TCU relies on accurate information from its inputs and complete control of its outputs to effectively control the transmission. To ensure that it has both valid inputs and functioning outputs, the TCU carries out both hardware and software fault detection routines. The TCU will respond to any faults detected by adopting the operating modes which are detailed below.

The following symptoms of faults are the most obvious results of each fault under 'normal' conditions.

There is always the possibility that a fault may not be detected. If undetected fault conditions are present, the operation of the transmission is difficult to predict.

1 Throttle Fault

- All shifts will occur as if a nominal throttle (approx. 44%) were applied for shift scheduling.
- All shifts will be firm as full throttle and hence high engine torque is assumed.
- The torque converter will be unlocked at all times.
- All downshifts initiated by the shift lever will occur as though they were 'automatic' shifts. That is the engine braking effect will not occur until near the end of the shift.
- Line pressure will always stay high (solenoid 6 OFF) to cope with assumed high throttle/torque.

If a fault is undetected, the percent throttle is most likely to be interpreted as higher than actual, resulting in late upshifts, early downshifts, firm shifting and a harsh 3-1 shift when stopping.

2 Throttle Not Learnt Fault

The transmission operates from default throttle calibration values which results in the evaluation of the throttle being higher (more open) than it is. There(ore at zero throttle settings, the transmission may calculate that sufficient throttle opening is present to justify high line pressure and switch solenoid 6 to OFF.

Other symptoms are:

a. late upshifts and

b. lock-up maintained at zero throttle when the vehicle speed is sufficiently high.

3 Engine Speed Fault

- All shifts will be firm because an engine speed corresponding to peak engine torques is assumed.

If a fault is undetected, the engine speed is likely to be interpreted as stalled resulting in soft shifting possibly with an end of shift bump.

4 Vehicle Speed Sensor Fault

- All shifts will be controlled by the shift lever with skip downshifts disabled and downshifts only allowed if the engine speed is low. Fourth gear will be inhibited.
- The torque converter will be unlocked at all times.

If a fault is undetected, the vehicle is likely to be interpreted as being stationary resulting in first gear operation at all times. Note that speedometer transducer faults are likely to cause the vehicle's speedometer to become inoperative.

5 Gear Lever Fault (Inhibitor/PRNDL Switch)

- The gear lever is assumed to be in the Drive position.
- The transmission is limited to 2nd,3rd, and R gears only.
- The rear band will apply at all times when the lever is shifted to P, R or N. (B2 inhibition and reverse lockout protection is disabled.)
- The torque converter will be unlocked at all times.
- Manually (gear lever) initiated downshifts will not be available.

If a fault is undetected, the gear lever position is likely to be interpreted as being higher than actual. Where Park is the highest position and Manual 1 is the lowest, the result being the availability of higher gears than selected by the gear lever.

Downloaded from www.Manualslib.com manuals search engine

If the gear lever is incorrectly adjusted, the transmission may shift gears on bumpy road surfaces.

6 Transmission Oil Temperature Sensing Fault

- All shifts will be firm until the transmission has warmed up, because a high transmission oil temperature is assumed.

If a fault is undetected, the temperature is likely to be evaluated as being lower than actual, resulting in softer shifts with ‘end bump’ (very firm feel at the end of the shift).

7 Mode Setting Fault

- All shifts will occur as if the mode is set to ‘NORMAL’.
- The mode indicator will always be off indicating that ‘NORMAL’ mode is selected.
- The mode indicator will not respond to changes in switch setting.

If a fault is undetected, the mode as indicated by the mode indicator is not likely to respond to the mode switch.

8 Battery Voltage Sensing Fault

If the battery voltage is low then shifts to first gear are inhibited.9 the battery voltage is high (>16.5V) then the transmission goes into limp home (LHM) mode.

If a fault is undetected, the transmission is likely to incorrectly evaluate an ON/OFF solenoid fault resulting in limp home mode (LHM) operation.

9 ON/OFF Solenoid Fault (Solenoids 1,2,3 and 4)

The transmission adopts its limp home mode (LHM) operation, described above. However, if solenoid 1 is faulty then the fourth gear LHM strategy will be adopted independent of vehicle speed.

If a fault is undetected, the operation of the transmission is dependent on which solenoid is actually faulty. The characteristics for different solenoid fault conditions are listed in table 6.1.2.

10 ON/OFF Solenoid Fault (Solenoids 6,7)

If solenoid 6 is found faulty it is always disabled resulting in high line pressure being applied continuously.

If solenoid 7 is found faulty it is disabled resulting in the transmission being locked always.

The transmission does not go into LHM.

11 Variable Pressure Solenoid Fault

The transmission adopts its LHM operation.

If a fault is undetected, the transmission shift feel is likely to be poor for all shifts.

12 Software Fault

The transmission adopts the third gear LHM strategy of operation, independent of vehicle speed. The operation of the TCU under this condition is difficult to predict. Its operation may be erratic.

If a fault is undetected, the operation of the TCU is likely to be erratic.

13 Power Supply Fault

The transmission adopts the third gear LHM strategy of operation, independent of vehicle speed. If there is an intermittent power supply connection, the TCU will power-up in fourth gear and then shift to the appropriate gear to satisfy the conditions present. The power supply is not monitored for fault evaluation.

All faults except for solenoid faults can be recovered without having to turn the TCU off and back on. However, in general the recovery requires that no faults are present for a period of time (approx. 3 or 30 seconds). Recovery from a fault will not clear the fault from the keep alive memory

14 Transmission Sump Temperature Exceeding 135°C

- The converter lockup clutch will be applied at lower speeds, causing a shudder through the vehicle.
- The mode indicator will flash in some vehicles.

These faults can be due to the transmission oil overheating or due to an incorrect signal received from the temperature sensor.

Downloaded from www.Manualslib.com manuals search engine

Diagnostic Trouble Messages

The diagnostic trouble messages generated by the TCU and their possible causes are listed in table 6.1.3.

Table 6.1.2 - Transmission Operations for On/Off Solenoid Faults

Solenoid	Condition	Transmission Operation
1	Always ON	First gear instead of second and fourth gear instead of third. This results in a 1® 4 shift as the vehicle accelerates from rest.
	Always OFF	Second gear instead of first and third gear instead of fourth. This results in second gear starts.
2	Always OFF	Fourth gear instead of first and third gear instead of second. This results in fourth gear starts.
	Always ON	Second gear instead of third and first gear instead of fourth. This results in a 1® 2 then 2® 1 (overrun) downshift as the vehicle accelerates from rest.
3	Always OFF	The following shifts become poor: 1® 3, 1® 4, 2® 1 2® 3, 2® 4, 4® 2, 4® 1.
	Always ON	The following shifts become poor: 3® 4, 4® 3, 3® 2. There may be slippage in the gears during torque converter locking.
4	Always OFF	The following shifts become poor: 1® 2, 1® 3, 1® 4, 2® 3, 2® 4, 3® 1, 3® 2 (All Including Manual), 3® 4, 4® 1,4® 3.
	Always ON	The following shifts become poor: 2® 4, 3® 2. There may be slippage in the gears during torque converter locking.
6	Always OFF	Line pressure always high.
	Always ON	Line pressure always low thus resulting in risk of slippage in gears.
7	Always OFF	Torque converter always unlocked.
	Always ON	Torque converter always locked in 3rd and 4th gears, causing the vehicle to shudder at lower speeds,

Downloaded from www.Manualslib.com manuals search engine

Table 6.1.3 - Diagnostic Trouble Messages

Solenoid	Condition	Description / Cause
1	Test Pass	There have been no faults recorded since the TCU was last cleared. If the fault history has never been cleared, then there have been no faults recorded since the TCU was originally powered up.
2	Transmission Control Module Fault	There is an internal fault within the TCU.
3	Battery Voltage Input Fault	The voltage measured by the TCU corresponding to the battery supply voltage has been outside the range of the maximum operating voltage of 16.5 volts. The minimum operating voltage depends on the transmission temperature but is typically between 8-9 V for a warm transmission.
4	Throttle Input Fault	The voltage measured by the TCU from the throttle potentiometer has been outside acceptable levels. This would typically indicate a loose connection in the wiring to, or within, the throttle sensor which has caused the signal at the TCU to read 0V or 5V.
5	Temperature Input Fault	The voltage measured by the TCU across the temperature Input terminals has been outside acceptable levels. This would typically be caused by a loose connection or short to ground in the wiring to, or within, the temperature sensor which has caused the signal at the TCU to read 0V or 5V.
6	Shift Lever Position Input Fault (Inhibitor/PRNDL Switch)	The voltage measured by the TCU across the shift lever input terminals has been outside acceptable levels for a significant length of time. This would typically be caused by a loose connection or short to ground in the wiring to, or within, the inhibitor switch which has caused the signal at the TCU to read 0V or 5V.
7	Engine Speed Sensor Fault	The signal from the ignition, of ignition pulses, has either been non-existent or has been unreliable. There are two reasons this fault could occur. The first is due to a lack of ignition pulses when other TCU inputs would indicate that the engine is running, that is the gear lever is in a driving position, the throttle is applied and vehicle speed increasing. The second cause of this (aunt is the frequency of the pulses of the ignition pulse input to the TCU indicate an unachievable engine speed.
8	Shaft Speed Sensor Fault (Speedo Sensor)	The pulses from the shaft speed sensor have either been non-existent or have been unreliable. There are three reasons this fault could occur. The first is due to a sudden loss of speedometer pulses at a time when they were fre quent, thus indicating an unachievable degree of deceleration of the drive line. The second cause of this fault is that the frequency of the pulses on the shaft speed sensor input to the TCU indicate an unachievable propeller shaft speed. The third is the presence of a high engine speed in a driving gear with no speedometer pulses.

Downloaded from www.Manualslib.com manuals search engine

Solenoid	Condition	Description / Cause
9	Mode Switch Input Fault (Power/Economy Mode)	The signal from the mode switch is unreliable. This fault is caused by too many changes in the mode input signal over a period of time. Typical causes would be an intermittent connec tion in the switch or wiring or an intermittent short to ground in the wiring.
10	Data Output Link Fault	The data link between the TCU and the engine management module is found to be unreliable because the checksum, or the data received, did not match the correct checksum. This could be caused by an open circuit, short circuit to ground or a loose connection in the link wire itself.
11	On/off Solenoid Fault (Solenoid 1,2,3,4,6,7)	Each solenoid in turn is switched off if it was energised, or switched on if it was not energised by a very small 100 ms pulse. This pulse is too short for the solenoid to react so transmission operation is not af fected. The solenoid feedback voltage is measured before the 100 ms pulse and again during the pulse. If the difference is outside the acceptable limits the relevant fault messages are set. Typical causes would be an open circuit in the wiring to or within the solenoid, or a short circuit to ground in the wiring to, from or within the solenoid in question. If several of these fault codes are presents check the wiring or connectors that are common to the selected solenoids, especially the earth connections. The state of the solenoid feedback voltage is outside acceptable limits but the faulty solenoid could not be isolated.
12	Solenoid 5 Fault (Variable Pressure Solenoid)	The current to solenoid 5 was outside acceptable limits. This fault results from a mismatch between the current set point for solenoid 5 and the current measured by the feedback within the TCU. Typical causes would be an open circuit or short circuit to ground in the wiring to, from or within the solenoid. It is also possible that there has been a fault in the solenoid output circuit. If this is the case however, the fault should be continually present.
13	Throttle Not Learnt	The closed throttle position has not been learnt. This fault may be caused by the transmission not having reached normal operating temperature or the engine idle speed being incorrect. The TCU will learn the closed throttle position automatically when the transmission is brought to normal operating temperature and the engine is allowed to idle in Drive with the 'base idle' correctly set and the air conditioner (if fitted) switched off.

Downloaded from www.Manualslib.com manuals search engine

MECHANICAL TESTS

In Vehicle Transmission Checks

Carry out the following tests before removing the transmission.

- See Checking Transmission Fluid Level, Section 7.2.1.
- Check that the transmission oil is not burnt (colour and smell are correct).
- Ensure that the transmission is not in limp home mode (LHM).
- Check that the battery terminals and the earth connections are not corroded or loose.
- Check the engine stall speed is within the handbook value.
- Check that the cooler flow is not restricted.
- Check that all electrical plug connections are tight.
- Carry out a road test to confirm the symptoms, if necessary.
- Inspect the oil, ensure that there are no metal or other contaminants in the oil pan.

Diagnosing Oil Leaks

Determine the source of oil leaks by firstly cleaning down the affected area, then driving the vehicle.
Inspect the seals to confirm the source of the leak.

- To determine the source of a rear servo oil leak, raise the vehicle on a hoist, then carry out a reverse stall.
- To determine the source of a front servo leak, raise the vehicle on a hoist, then run the vehicle in second gear.

Troubleshooting Charts

The troubleshooting charts are set out as follows:

- Table 6.2.1 Drive Faults,
- Table 6.2.2 Faulty Shift Patterns.
- Table 6.2.3 Shift Quality Faults.
- Table 6.2.4 After Teardown Faults.

Table 6.2.1 - Drive Faults

Symptom	Possible Cause	Action
No Drive in D	Insufficient auto transmission fluid.	Check the fluid level. Top up as necessary.
	Blocked feed in C1/C2 cylinder.	Inspect and clean C1/C2 feed.
	'Z' link displaced.	Reinstall/renew the 'z' link.
	Primal regulator valve (PRV) jammed open.	Remove, clean and re-install the PRV.
	Overdrive shaft or input shaft seal rings failed.	Inspect and replace as necessary.
	3-4 or 1-2 one way clutch (OWC) installed backwards or failed.	Inspect and replace as necessary.
	C2 piston broken or cracked.	Inspect and replace as necessary.
No Drive in Reverse		
No engine braking in Manual 1	Rear band or servo faulty.	Check servo adjustment or replace rear band as necessary.
Engine braking in Manual 1 is OK	Failure in C3, C3 hub or C1/C2 cylinder.	Check for failure in C3, C3 hub or C1/C2 cylinder. Repair as necessary.
No drive in Drive and Reverse	Jammed primary regulator valve (PRV).	Inspect and clean PRV.
	Damaged/broken pump gears.	Inspect and replace pump gears as necessary.
	Dislodged output shaft snap ring.	Inspect and repair as necessary.

Downloaded from www.Manualslib.com manuals search engine

Symptom	Possible Cause	Action
2-3 shift only (no 4th or 1st)	S1 always OFF.	Inspect S1. Repair or replace as necessary. Check for 12 Volts applied to S1 at all times or for wiring fault.
1-4 shift only 1-3-4 (Delayed 1-2shift)	S1 always ON.	Inspect S1. Repair or replace as necessary. Check for 12 Volts applied to S1 at all times or for wiring fault.
4-3 shift only	S2 always OFF.	Inspect S2. Repair or replace as necessary. Check for open circuit or wiring fault.
1-2-Neutral (1st over run)	S2 always ON.	Inspect S2. Repair or replace as necessary. Check for open circuit or wiring fault.
1-3 shift only	B1 failed. Loose band adjustment. Front servo piston or seal failed. S1/S2 ball misplaced,	 Inspect and adjust as necessary. Inspect and repair as necessary. Inspect and replace or refit as necessary.
1-3-4 only	Smaller'0'ring on front servo piston failed or missing. 2-3 shift valve jammed.	Inspect 'O' ring. Refit or replace as necessary. Inspect the 2-3 shift valve. Repair or replace as necessary.
1-2-1 only	C1 clutch failed or slipping in 3rd and 4th. (Gives 1st in 3rd and 2nd in 4th.)	Inspect C1 clutch. Repair or replace as necessary.
No manual 4-3,3-2 or 2-1	Over-run clutch (OC)/low ball misplaced. C4 failed or C4 wave plate broken.	Inspect ball. Refit or replace as necessary. Inspect C4. Repair C4 or replace C4 wave plate as necessary.
No manual 1st	Rear band slipping when hot. Reverse/Low-1st ball misplaced. Rear servo inner 'O' ring missing. C4 failed or C4 wave plate broken.	Inspect rear band adjustment. Adjust as necessary. Inspect ball- Refit or replace as necessary. Inspect'0'ring. Refit or replace as necessary. Inspect C4 and C4 wave plate. Repair or replace as necessary.
1st gear only or 2nd,3rd, and 4th only	Inhibitor switch faulty. 1-2 shift valve jammed.	Inspect inhibitor switch. Repair or replace as necessary. Inspect the 1-2 shift valve. Repair or replace as necessary
1st and 2nd only or 1st, 3rd and 4th only	Inhibitor switch fault, 1-2 only. 2-3 shift valve jammed.	Inspect inhibitor switch. Repair or replace as necessary. Inspect the 2-3 shift valve. Repair or replace as necessary.

Downloaded from www.Manualslib.com manuals search engine

Table 6.2.2 - Faulty Shift Patterns

Symptom	Possible Cause	Action
1st,2nd and 4th only or 1st,2nd, and 3rd (tied up in 3rd)	Inhibitor switch fault, 1-2-3 only.	Inspect inhibitor switch. Repair or replace as necessary.
	3-4 shift valve jammed.	Inspect the 3-4 shift valve. Repair or replace as necessary.
Harsh 2-3 shift	Jammed band 1 release valve.	Inspect the release valve. Repair or replace as necessary.
	Faulty S3 or S2 solenoid.	Inspect S3 or S2. Repair or replace as necessary.
	Faulty clutch apply regulator valve.	Inspect the regulator valve. Repair or replace as necessary.
	Missing or damaged clutch apply feed ball.	Inspect the ball. Refit or replace as necessary.
	Damaged input shaft sealing rings.	Inspect the sealing rings. Refit or replace as necessary.
	Damaged C1 piston ‘O’ rings.	Inspect the ‘O’ rings. Refit or replace as necessary.
	Damaged or dislodged C1 piston bleed ball.	Inspect the bleed ball. Refit or replace as necessary.
	Faulty S1 or S4 solenoid.	Inspect S1 or S4. Repair or replace as necessary.
Harsh 3-4 shift	Jammed band 1 release valve.	Inspect the release valve. Repair or replace as necessary.
	Incorrect front band adjustment.	Inspect the band. Adjust as necessary.
	Damaged front servo piston ‘O’ rings.	Inspect the ‘O’ rings. Refit or replace as necessary.
	Faulty or damaged variable pressure solenoid (S5).	Inspect S5. Repair or replace as necessary.
	Faulty band apply regulator valve.	Inspect the regulator valve. Repair or replace as necessary.

Downloaded from www.Manualslib.com manuals search engine

Symptom	Possible Cause	Action
All Shifts Firm	Incorrect auto transmission fluid (ATF). S5 faulty won, or incorrectly fitted. Band apply and clutch apply regulator springs misplaced.	Drain and fill with specified ATF. Check that S5 is fitted correctly, or replace S5. Inspect band apply and clutch apply regulator springs. Refit or replace as necessary.
Manual 4-3-2-1 is soft delayed or missing	Over-run clutch (OC)/Low-1st ball misplaced. C4 clutch worn or burnt. C4 wave plate not lined up with the holes in the piston. C4 wave plate failed.	Inspect the ball. Refit or replace as necessary. Inspect C4 clutch. Replace or repair as necessary. Check the alignment.]Realign as necessary. Inspect wave plate. Replace as necessary.
Firm 1-2 Hot	S5 worn. S5 damper spring broken. Front servo belleville spring broken.	Inspect S5 and replace as necessary. Inspect the damper spring and replace as necessary. Replace spring as necessary.
4th Tied up	Incorrect C4 pack clearance. Damaged C4 clutch. Cracked C2 piston (leaking into C4).	Check the clearance and adjust as necessary. Inspect C4. Repair or replace as necessary. Inspect piston. Repair or replace as necessary.
Tied up on 2-3	Incorrect band adjustment Front servo plastic plug missing B1R spring broken.	Inspect and adjust band as necessary. Replace the plug. Replace the spring.
Flare on 2-3	B1R spring/plug left out. C1/B1R ball misplaced. C1 clutch damaged. Restriction in C1 feed. C1 piston check ball jammed. Overdrive or input shaft sealing rings damaged.	Replace the spring/plug. Refit the ball. Inspect the clutch. Repair the clutch as necessary. Inspect and clean C1 feed. Replace the piston. Inspect and replace the sealing rings and/or shaft as necessary.
Slips in 4th	C1/B1R ball misplaced. Overdrive or input shaft sealing rings damaged. C1 clutch damaged.	Inspect and replace the ball. Inspect and replace the sealing rings and/or shaft as necessary. Inspect and repair the C1 clutch as necessary.
Flare on 4-3, Flare on 3-2	4-3 sequence valve in backwards.	Refit the valve.
Firm Manual low shift-high line press.	Low-1st check ball misplaced.	Replace the ball.

Downloaded from www.Manualslib.com manuals search engine

Table 6.2.3 - Shift Quality Faults

Symptom	Possible Cause	Action
Harsh 1-2 shift	Faulty inhibitor switch.	Check the resistance. Replace the inhibitor switch as necessary.
	Faulty throttle position sensor.	Inspect and replace the sensor as necessary.
	Incorrect front band adjustment.	Inspect and adjust the band as necessary.
	Damaged front servo piston'0'rings.	Inspect and replace the'0'rings as necessary.
	Faulty or damaged variable pressure solenoid (S5).	Inspect, repair or replace S5 as necessary.
	Faulty S1 or S4 solenoid.	Inspect, repair or replace S1 or S4 as necessary.
	Faulty band apply regulator valve (BAR).	Inspect, repair or replace the BAR as necessary.
	Misassembled front servo return spring.	Inspect and repair as necessary.
stalls when Drive or Reverse	Jammed converter clutch control valve (CCCV).	Inspect and clean CCCV.
selected Shudder on Rolldown	Faulty solenoid 7.	Inspect, repair or replace as necessary.

Downloaded from www.Manualslib.com manuals search engine

Table 6.2.4 - After Teardown Faults

Symptom	Possible Cause	Action
C2 burnt	T-bar linkage out of adjustment.	Inspect, repair C2 and adjust the linkage as necessary.
	56 foiled - stuck low.	Repair C2. Inspect, repair or replace S6 as necessary.
	Overdrive/output shaft sealing rings damaged.	Repair C2. Inspect, replace the sealing rings and/or shaft as necessary.
	C2 piston cracked.	Repair C2. Inspect, repair or replace the C2 piston as necessary.
C4 burnt	Incorrect C4 pack clearance.	Inspect C4 and repair as necessary. Inspect and adjust the C4 pack clearance as necessary.
	C4 wave plate broken.	Repair C4. Inspect and replace the wave plate as necessary.
	C4 wave plate not lined up properly.	Repair C4. Inspect and realign the wave plate as necessary.
	Overdrive or output shaft sealing rings damaged.	Repair C4. Inspect and realign the sealing rings and/or shaft as necessary.
	3-4 one way clutch (OWC) in backwards.	Repair C4. Inspect and refit the OWC as necessary.
	C2 piston cracked.	Repair C4. Inspect and replace the C2 piston as necessary.
	Over-run clutch (OC)/low-1st ball misplaced.	Repair C4. Inspect and refit the ball as necessary.
B1 burnt	B1R spring broken.	Inspect and repair B1 and replace the spring as necessary.
	Input shaft sealing ring cut.	Replace sealing ring.
	C1/B1R ball misplaced.	Repair B1. Refit the ball as necessary.
C1 burnt	B1R spring left out.	Inspect and repair C1 and replace the spring.
	Overdrive or input shaft sealing rings damaged.	Repair C1. Inspect and replace the sealing tongs and/or shaft as necessary.
	C1 piston cracked.	Repair C1. Inspect and replace the C1 piston as necessary.
	Ball capsule jammed.	Repair C1. Inspect and refit the capsule as necessary.
	4-3 sequence valve in backwards.	Repair C1. Inspect and refit the valve as necessary.
	Clutch apply feed (CAF)/B1R ball left out.	Repair C1. Inspect and replace the ball as necessary.
Slips in reverse - no manual 1st	Rear band incorrectly adjusted or damaged.	Inspect and adjust the band as necessary.
	Reverse-low/first ball misplaced.	Inspect and refit the ball as necessary.
Firm converter lock or unlock	Input shaft ‘O’ ring missing or damaged.	Inspect and replace the ‘O’ ring as necessary.
	Converter clutch regulator valve in backwards.	Inspect and refit the valve as necessary.
No lock up at light throttle	Input shaft ‘O’ ring missing or damaged.	Inspect and replace the ‘O’ ring as necessary.
	C1 bias valve in backwards.	Inspect and refit the valve as necessary.

Downloaded from www.Manualslib.com manuals search engine

SELF DIAGNOSIS TEST

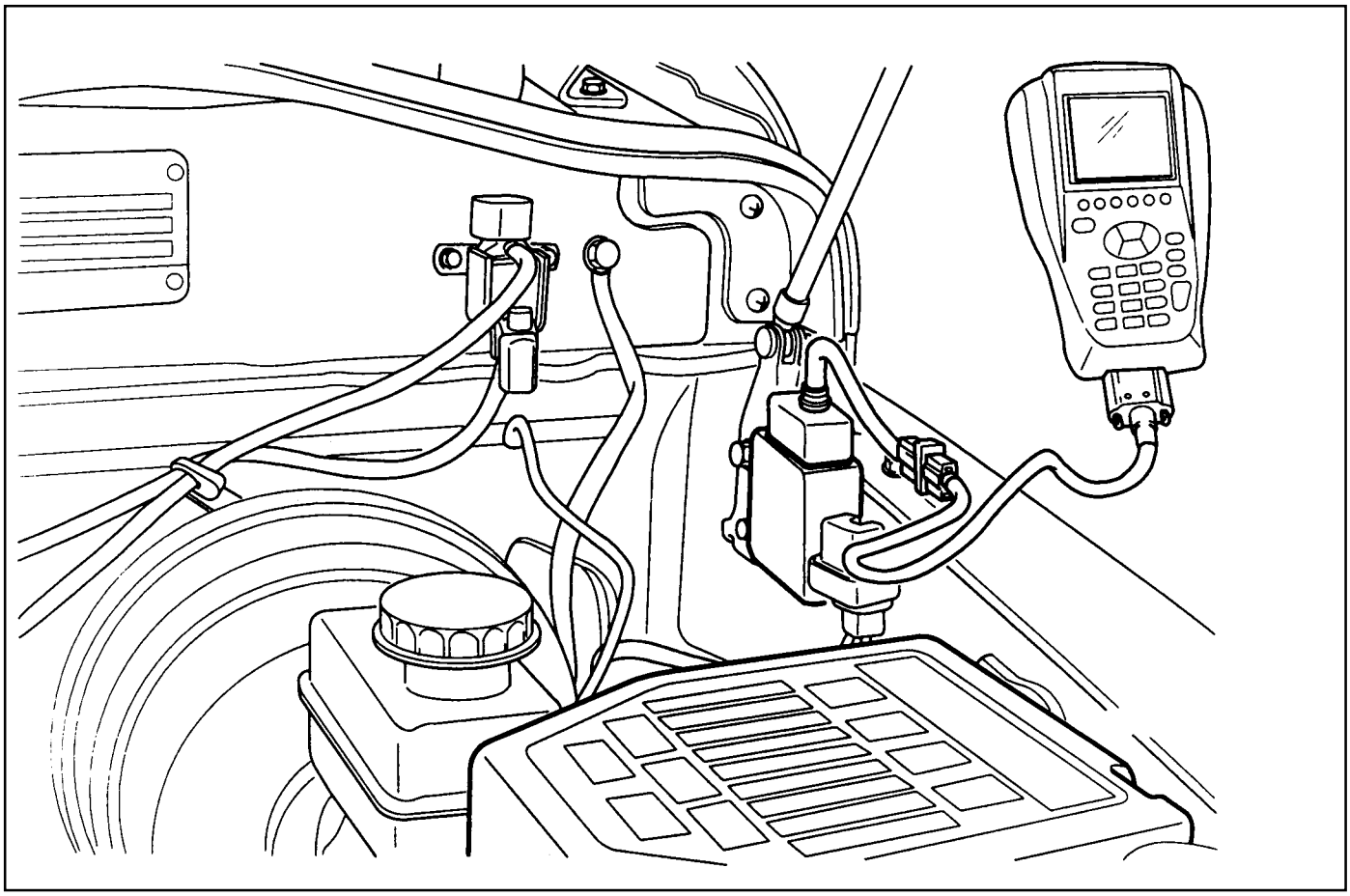

1. Turn the ignition switch to “OFF” position.
2. Connect the scanner harness connector to the engine compartment diagnosis socket.
3. Turn the ignition switch to “ON” position.
4. Select “Electronics control vehicle diagnosis” from the function selection display and press “Enter”.
5. Select “Korando (98 face lift)” from the vehicle model selection model selection display and press “Enter”.
6. Select “Transmission control unit(TCU)” from the control system selection and press “Enter”.
7. Select “Self-diagnosis” from diagnosis items.

   Notice

   Check sensor output value displays if necessary.
8. Determine the fault code and check the detective Items.

   Notice

   Refer to sefadf3fnosfs list.

Downloaded from www.Manualslib.com manuals search engine

Self-diagnosis List

Symptom	Possible Cause	Action
P1702	Throttle position sensor	● Check cable for open / short. ● Check connection of other connectors. ● Check voltage between terminal 27 and 29 of TCU, - Standard value : 0.2 - 4.7V ● Check TPS.
P1703	Engine RPM	● Check cable for open / short. ● Check connection of other connectors. ● Check engine speed sensor. ● Check resistance between terminal 8 and 24 of TCU (when the connector is disconnected). - Standard value : 1 .9 - 0.2 kw
P1704	Vehicle speed	● Check cable for open / short. ● Check connection of other connectors. ● Check vehicle speed sensor.
P4705	Shift lever	● Check cable for open / short. ● Check connection of other connectors. ● Check engine speed sensor. ● Check inhibitor switch resistance between terminal 34 and 37 of TCU(when the connector is disconnected). - Standard value : 1st gear - 4 - 4.4 kw 2nd gear - 4,8 - 2.2 kw 3rd gear - 3 - 3.4 kw D gear - 4.5 - 4.g kw N gear - 6.8 - 7.2 kw R gear - 10.8 -11.2 kw P gear - 18.6 - 19 kw ● Check voltage between terminal 31 and 37 of TCU. - Standard value : 0-5V(P,R,N,D,L)
P1706	W, E, P mode switch	● Check cable for open / short. ● Check connection of other connectors. ● Check mode switch. ● Check condition between terminal 1 and 13 of TCU. Winter mode :12V, Normal mode : Open status, Power mode : 0V
P1707	T/M oil temperature	● Check cable for open / short. ● Check connection of other connectors. ● Check voltage between terminal 32 and 38 of TCU. - Standard value : 0-5V ● Check oil temperature sensor.
P1708	Battery voltage	● Check cable for open / short. ● Check connection of other connectors. ● Check battery condition. ● Check alternator.

Downloaded from www.Manualslib.com manuals search engine

Symptom	Possible Cause	Action
P1710	Air conditioner switch	● Check cable for open / short. ● Check connection of other connectors. ● Check voltage between terminal 4 and 11 of TCU. - Standard value : when the A/C compressor is ON : 12V when the A/C compressor is OFF : 0V
P1712	Kick down switch	● Check cable for open / short, ● Check connection of other connectors. ● Check voltage between terminal 1 and 12 of TCU. - Standard value : when the kick down switch is ON : 12V when the kick down switch is OFF : 0V
P1713	Pedal	
P1714	Vehicle ID	
P1715	VPS offset	
P1716	Throttle position sensor initialization	● Fully depress accelerator pedal for 5 seconds(ignition key is ON). ● Release accelerator pedal. ● Depress brake pedal and start the engine in 'P' position. ● Depress brake pedal and idle the engine for 5 seconds in 'D' position. ● Shift into 'D' position and determine fault code for throttle initialization. ● Complete the initialization.
P1733	Solenoid 1	● Check cable for open / short. ● Check connection of other connectors. ● Check resistance between terminal 1 and 34 of TCU(when the connector is disconnected). - Standard value : 26 - 30w ● Check solenoid.
P1734	Solenoid 2	● Check cable for open / short. ● Check connection of other connectors, ● Check resistance between terminal 1 and 40 of TCU (when the connector is disconnected). - Standard value : 26 - 30w ● Check solenoid.
P1735	Solenoid 3	● Check cable for open / short. ● Check connection of other connectors. ● Check resistance between terminal 1 and 41 of TCU (when the connector is disconnected). - Standard value : 26 - 30w ● Check solenoid.
P1736	Solenoid 4	● Check cable for open / short. ● Check connection of other connectors. ● Check resistance between terminal 1 and 33 of TCU (when the connector is disconnected), - Standard value : 26 - 30w

Downloaded from www.Manualslib.com manuals search engine

Symptom	Possible Cause	Action
		● Check solenoid.
P1737	Solenoid 5	● Check cable for open / short. ● Check connection of other connectors. ● Check resistance between terminal 36 and 44 of TCU (when the connector is disconnected). - Standard value : 3.6 - 4.2w ● Check solenoid.
P1738	Solenoid 6	● Check cable for open / short. ● Check connection of other connectors. ● Check resistance between terminal 1 and 39 of TCU (when the connector is disconnected). - Standard value : 26 - 30w ● Check solenoid.
P1739	Solenoid 7	● Check cable for open / short. ● Check connection of other connectors. ● Check resistance between terminal 1 and 42 of TCU (when the connector is disconnected). - Standard value : 26 - 30w ● Check solenoid.
P1741	Short of solenoid 1	● Check cable for short. ● Check connection of other connectors, ● Check solenoid.
P1742	Short of solenoid 2	● Check cable for short. ● Check connection of other connectors. ● Check solenoid.
P1743	Short of solenoid 3	● Check cable for short. ● Check connection of other connectors. ● Check solenoid.
P1744	Short of solenoid 4	● Check cable for short. ● Check connection of other connectors. ● Check solenoid.
P1745	Short of solenoid 5	● Check cable for short. ● Check connection of other connectors. ● Check solenoid.
P1746	Short of solenoid 6	● Check cable for short. ● Check connection of other connectors, ● Check solenoid.
P1747	Short of solenoid 7	● Check cable for short. ● Check connection of other connectors. ● Check solenoid.

Downloaded from www.Manualslib.com manuals search engine

ADJUSTMENTS

HYDRAULIC SYSTEM

The procedures detailed below should be followed in the event that the self test procedure detailed in section 6, or a defect symptom, indicates that there is a fault in the hydraulic system.

When making adjustments to the transmission, select the appropriate procedures from the following preliminary checks.

- Conduct a transmission fluid test procedure, refer to section 7.2.
- Check the manual linkage adjustment (refer to the vehicle workshop manual).
- Check engine idle speed (refer to Section 7.3).
- Conduct a stall test (it is outside the scope of this publication to detail this procedure)
- conduct a road test (it is outside the scope of this publication to detail this procedure).

TRANSMISSION FLUID TEST PROCEDURE

Checking Transmission Fluid Level

This procedure is to be used when checking a concern with the fluid level in a vehicle. A low fluid level will result in gearshift loss or delay if driven when the vehicle is cold.

The vehicle is first checked for transmission diagnostic messages (refer to section 6). If the vehicle has a speedo fault it is possible for the oil level to be low.

The vehicle is to be test driven to determine if there is an abnormal delay when selecting drive or reverse, or loss of drive. One symptom of low oil level is a momentary loss of drive when driving the vehicle around a comer. Also when the transmission fluid level is low, a loss of drive may occur when the transmission oil temperature is low.
If there is no loss of drive when the vehicle is driven warm and a speedo fault is registered, then fluid should be added to the transmission.

Checking, Adding Fluid and Filling

When adding or changing transmission oil use only Castrol TQ 95 automatic transmission fluid (ATF) or other approved fluids. The use of incorrect oil will cause the performance and durability of the transmission to be severely degraded. Do not underfill the transmission. Incorrect tilling may cause damage to the transmission. The fluid level setting procedure is detailed below.

Notice

When a transmission is at operating temperature hot transmission fluid may come out of the case if the fill plug is removed. 9 the transmission is at operating temperature allow two hours for cooling prior to removing the plug.

1. If the vehicle is at operating temperature allow the vehicle to cool down for two, but no greater than four hours before adding transmission fluid (this will allow the transmission to be within the correct temperature range).

   While hot the ATF level is higher and removing the plug may result in oil being expelled from the filler hole. This will result in the level being low.
2. The transmission selector is to be in Park.

   Switch the engine off.
3. Raise the vehicle on a hoist (or leave over a service pit).
4. Clean all dirt from around the service fill plug prior to removing the plug. Remove the oil service fill plug. Clean the fill plug and check that there is no damage to the ‘O’ ring.

   Install the filler pump into the filler hole.
5. Lower the vehicle with the filler pump still connected and partially fill the transmission.

   Start the vehicle in Park with the Parking brake and foot brake applied with the engine idling, cycle the transmission gear selector through all positions, adding ATF until gear application is felt.

Downloaded from www.Manualslib.com manuals search engine

6. Switch off the engine and raise the vehicle on the hoist, if applicable, ensuring that the vehicle is level.
7. Three minutes after the engine has stopped, but no longer than one hour, remove the filler pump, The correct level is reached when ATF is aligned with the bottom of the filler hole. If the correct level is not reached, then add a small quantity of ATF to the correct level.
8. Replace the transmission filler plug and clean all remnants of ATF on the transmission and vehicle.
9. Tighten the transmission filler plug to specification.

Checking, Adding Fluid and Filling - Drained or Dry Transmission

To set the correct fluid level proceed as follows.

1. Set the transmission selector to Park and switch the engine off.
2. Raise the vehicle on a hoist (or leave over a service pit).
3. Clean all dirt from around the service fill plug prior to removing the plug, Remove the oil service fill plug. Clean the fill plug and check that there is no damage to the 'O' ring. Install the filler pump into the filler hole.
4. Lower the vehicle with the filler pump still connected and partially fill the transmission. This typically requires approximately :
   a. If the transmission torque converter is empty:
      9.0 litres - 4WD
      9.0 litres - RWD
   b. If the transmission torque converter is full:
      4.5 litres - 4WD
      4.5 litres - RWD
5. Start the vehicle in Park with the Parking brake and foot brake applied with the engine idling, cycle the transmission gear selector through all positions, adding ATF until gear application is felt.
6. Then add an additional 0.5 litres of ATF.
7. Switch off the engine and raise the vehicle on the hoist. Remove the filler pump and replace the filler plug. The plug shall be tightened to specification.
8. The vehicle is then to be driven between 3.5 and 4.5 kilometers at light throttle so that the engine does not exceed 2500 rpm. This should result in the transmission temperature being in the range 50 to 60°C.
9. With the engine idling, cycle the transmission selector through all gear positions with the brake applied.
10. Stop the engine. Raise the vehicle on the hoist, if applicable ensuring the vehicle is level.
11. Three minutes after the engine has stopped, but no longer than one hour, remove the filler plug. The correct level is reached when ATF is aligned with the bottom of the filler hole. If the correct level is not reached, then add a small quantity of ATP to the correct level.
12. Replace the transmission filler plug and clean all remnants of ATF on the transmission and vehicle. Tighten the transmission Filler plug to specification.

ELECTRONIC ADJUSTMENTS

Idle Speed Adjustment

Carry out the adjustments to the idle speed as detailed in the workshop manual.

Throttle Position Calibration

Should the throttle position data stored in the TCU be lost or be out of specification, as indicated by a diagnostic trouble message, it may be re-established by the following procedure.

- Check that the hot engine idle speed is within specification.
- Allow the engine to idle in 'Drive' for 60 seconds with the air conditioner (if fitted) turned off. The closed throttle reference point in the TCU has now been set.

Switch the engine off but leave the ignition on. Hold the accelerator pedal on the floor for 60 seconds. The wide open throttle reference point in the TCU has now been set.

Downloaded from www.Manualslib.com manuals search engine

Throttle Clearing

The leant throttle clearing routine uses the mode switch and gear lever. Carry out the following steps to complete the automated throttle clearing procedure:

1. Switch ignition ‘ON’ with handbrake applied and engine ‘OFF’.
2. Select ‘M1’ and ‘WINTER’ mode.
3. Move the T-bar to ‘M2’ and then select ‘NORMAL’ or ‘POWER’ mode.
4. Move the T-bar to ‘M3’ and then select ‘WINTER’ mode.

Vehicle Coding

The vehicle coding is integrated as part of the diagnostic software. The coding applies to the following vehicle models:

1. 4WD Gasoline E32.
2. 4WD Gasoline 523
3. 4WD Gasoline 520.
4. 4WD Diesel D29NA.
5. 4WD Diesel D29LA.
6. 4WD Diesel D23LA.
7. RWD E20.
8. RWD E23.

Downloaded from www.Manualslib.com manuals search engine

MAINTENANCE AND REPAIR

ON-VEHICLE SERVICE

REMOVAL AND INSTALLATION OF TRANSMISSION

1. Disconnect the negative battery cable.
2. Disconnect the connectors from transfer case.
3. Disconnect the speedometer connector from transfer case.
4. Disconnect the inhibitor and Sear position sensor connector.

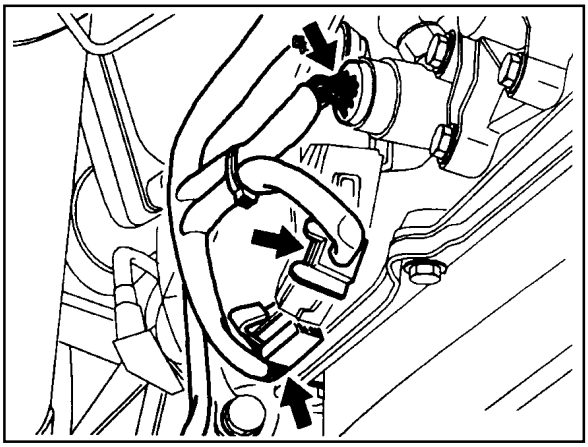

5. Remove the rear propeller shaft .

   Installation Notice

Tightening Torque	70 - 80 Nm

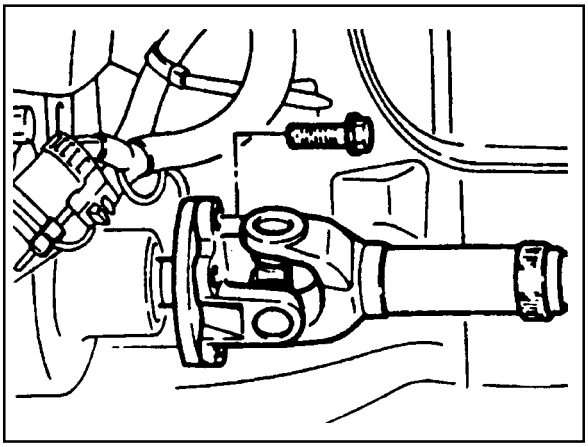

6. Unscrew the eight bolts and two nuts, and remove the cross member.

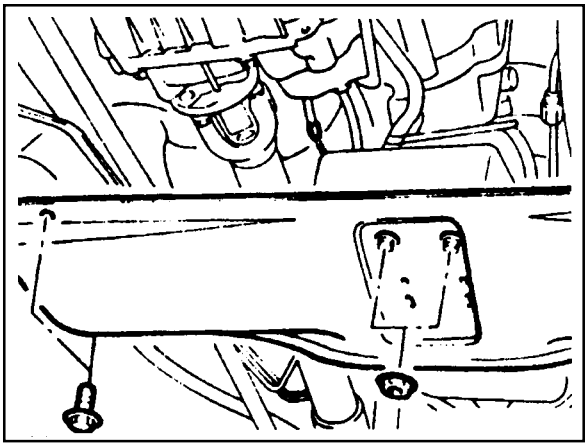

Downloaded from www.Manualslib.com manuals search engine

7. Remove the rear propeller shaft.

Installation Notice

Tightening Torque	70 - 80 Nm

8. Unscrew the five bolts and remove the transfer case.
9. Disconnect the 10-Pins Plug connector from transmission.

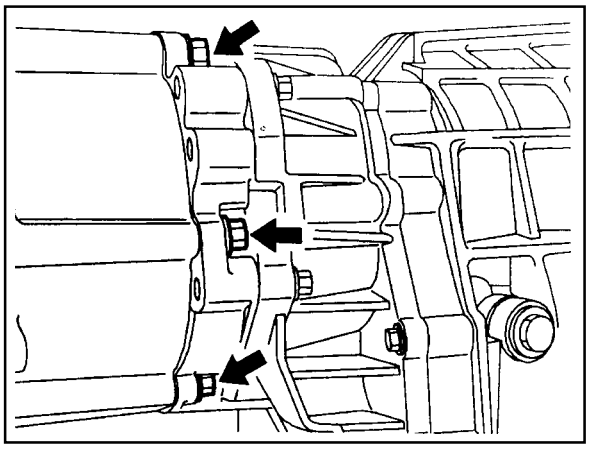

10. Separate the locking clip on shift lever and remove the shift rod.

Notice

Removal and installation performed when the shift procedure should be lever is in “D” range.

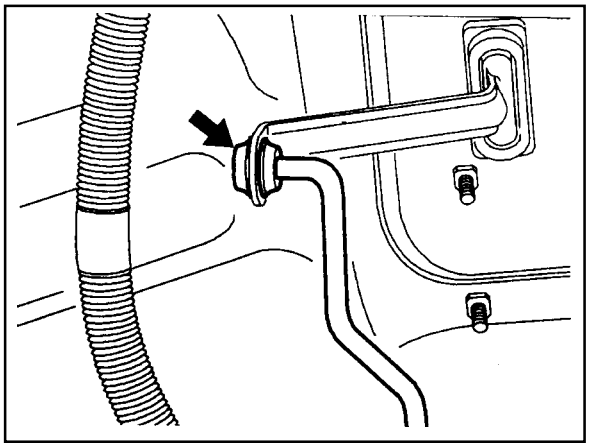

11. Remove the two pipes for oil cooler.

Installation Notice

Tightening Torque	24.5 - 34.3 Nm

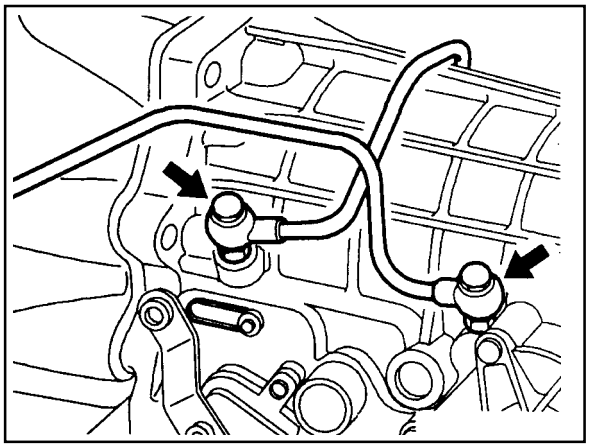

12. Remove the service hall cover on torque converter.
13. Put the alignment mark for installation, and unscrew the six mounting bolts for torque converter from drive plate through the service hole (arrow) by rotating the engine and remove the torque converter.

Installation Notice

Tightening Torque	42 Nm

Screw the six bolts mounting the torque converter through the service hole by using a mirror and rotating the engine.

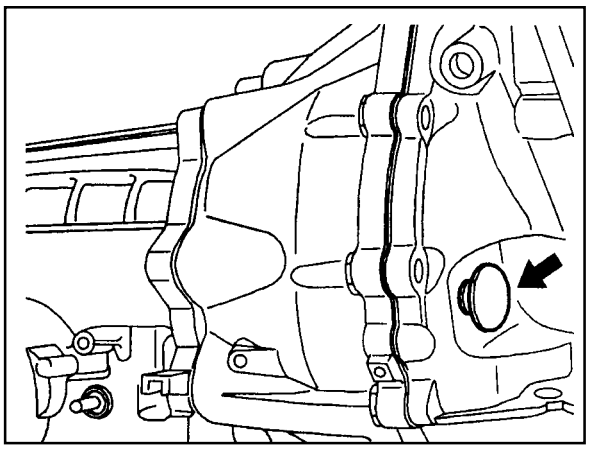

Downloaded from www.Manualslib.com manuals search engine

14. Remover the starter.
15. Unscrew the eight transmission housing bolts and remove the transmission assembly.

Installation Notice

Tightening Torque	55 - 65 Nm

Be careful not to drop the torque converter while removing the transmission.

16. Installation should follow the removal procedure in the reverse order.

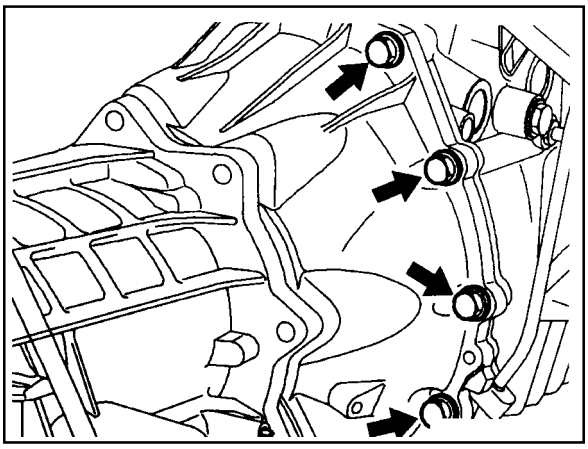

Downloaded from www.Manualslib.com manuals search engine

UNIT REPAIR

REBUILD WARNINGS

Prior to rebuilding a transmission system, the following warnings are to be noted.

- Ensure that, before replacing a transmission the cooler lines are flushed out to remove any debris. This can be done by applying compressed air to the rear cooler line forcing oil and any contaminants out of the front cooler line.
- The cooler flow should be checked after the transmission has been fitted. With the front cooler line connected and the rear line run into a suitable container, measure the flow over 15 seconds with the vehicle idling in park.
- The flow rate should exceed 1 liter in 15 seconds.
- Be wary of any situation where water enters the transmission. This may result in fluid foaming and leaking through the breather.
- Ensure that both earth straps (one at the batted terminal and one on the vehicle body) are connected in the vehicle before connecting the positive side of the battery.
- Follow the throttle position calibration procedure in section 7 of this manual if the powertrain control module transmission control unit (PCM/TCU) is swapped.

DISASSEMBLY PROCEDURE

Transmission

Notice

Remove the inhibitor switch before washing the transmission in solvent or hot wash.

It is assumed that the transmission fluid has been drained when the transmission was removed from the

vehicle and that the ‘special tools’ quoted are available.

The transmission is dismantled in a modular fashion, and the details of disassembly for each module are given under the appropriate subject. Refer to table 9.10 in section 9.6 for details of all special tools required when performing disassembly procedures.

Technicians overhauling these transmissions will also require a selection of good quality Torx bit sockets, in particular numbers 30, 40 and 50, and an 8 mm,10 mm and 12 mm double hex socket.

To disassemble the transmission, proceed as follows:

1. Remove the converter and the converter housing.
2. Mount the transmission on the bench cradle No.0555-331895.
3. Remove the sump and the sump seal.

Downloaded from www.Manualslib.com manuals search engine

4. Detach each end of the filter retaining clip from the valve body and remove the filter.
5. Detach the wires from each solenoid and lay the wiring to one side.
6. Remove the valve body securing screws and remove the valve body from the case.
7. Remove the front servo cover circlip.

   Remove the cover and piston.

   Notice

   The plastic servo block is retained by the piston return spring only.
8. Where fitted, remove the flange yoke, and then remove the extension housing (RWD model).

   Remove the adaptor housing (4WD model).
9. Remove the pump to case bolts using a multi-hex 8 mm spanner.
10. Using the pump puller No. 0555-332941, remove the pump.

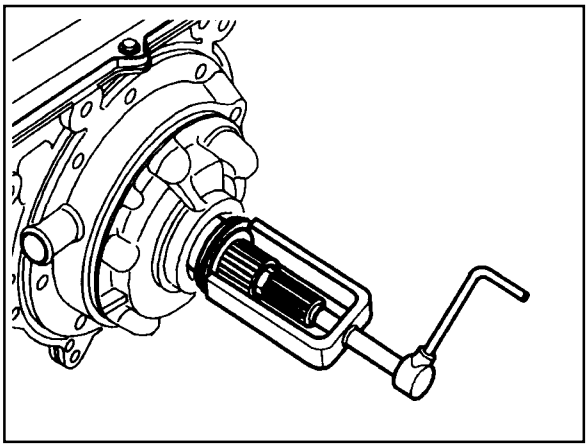

11. Remove the input shaft, forward clutch cylinder, and the overdrive shaft as an assembly, withdrawing them through the front of the case.
12. Remove the C3 clutch cylinder and sun gears.
13. Remove the fronts band struts. Remove the front band.
14. Remove the two centre support retaining bolts using a T50 Torx bit.
15. Remove the centre support retaining circlip.

    Notice

    Do not hammer the output shaft to remove the centre support as this will cause permanent damage to the thrust bearing surfaces.
16. Remove the centre support, 1-2 one way clutch, planetary gear set and output shaft as an assembly.
17. Remove the parking rod cam plate. (T40 Torx bit).
18. Remove the rear band struts and remove the band.

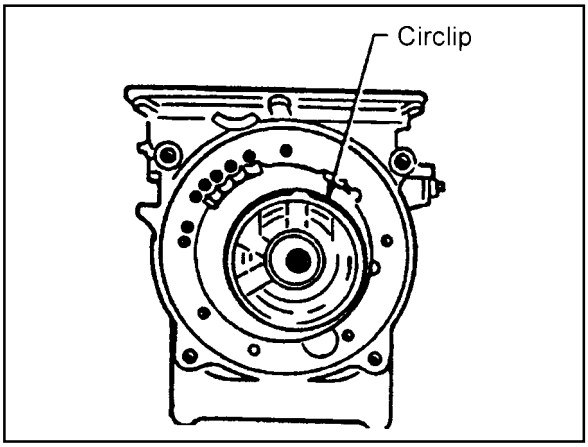

Downloaded from www.Manualslib.com manuals search engine

Transmission Case

To teardown the transmission case, proceed as follows:

1. Remove the pin from the cross shaft inhibitor switch side (4WD models) using tool No.0555-332942.

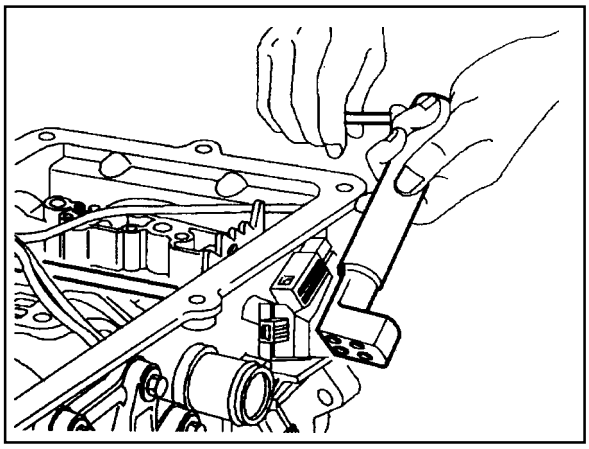

2. Remove the inhibitor switch from the case.

   Remove the cross shaft seals with special tool No.0555-331893.

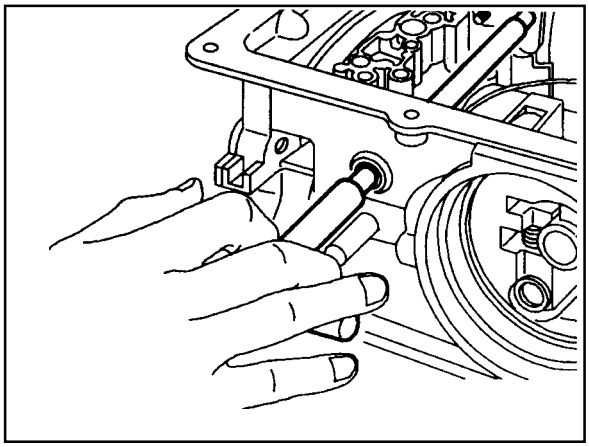

3. Remove the circlip from the cross-shaft. Pull the shaft to release the drive pin from the selector quadrant.

4. Using tool No. 0555-331897, press the pin from the cross-shaft and withdraw the shaft from the case. Retrieve the spring and pin

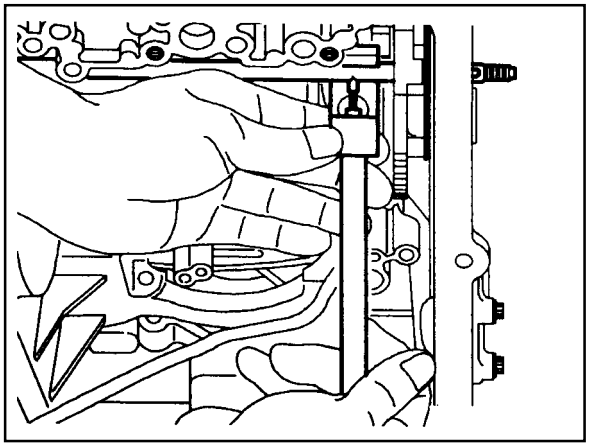

5. Remove the manual valve lever and the park rod.
6. Remove the 10 pin plug from the wiring loom bracket adjacent to the inhibitor switch(RWD models),
7. Depress the tangs and withdraw the 10 pin connector from the case. Remove the loom assembly.

Downloaded from www.Manualslib.com manuals search engine

8. Detach the No.7 solenoid wire from the front of the case.

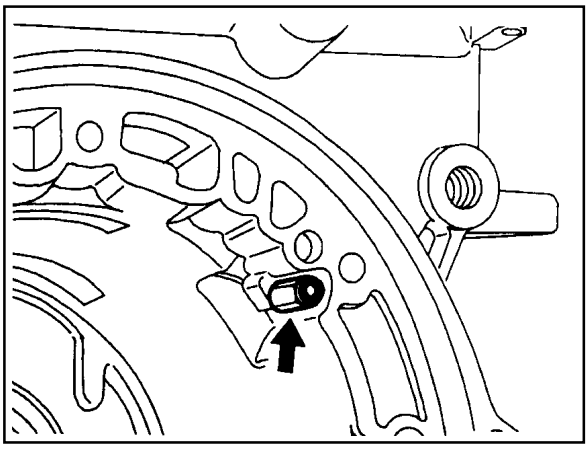

9. Remove the parking pawl pivot pin and the pawl and spring from the case.
10. Remove the shaft and the rear servo lever.
11. Remove the rear servo cover and piston assembly.
12. Remove the B1R circlip, valve and spring.
13. Remove both band adjustment shims.
14. Inspect the output shaft bushing in the case and replace if necessary.
15. Inspect cooler line fittings and replace as necessary.
16. Inspect the case for damage.

17. To remove the park rod lever: Remove the circlip from the inner end of the pivot shaft and tap the outer end of the shaft until it moves free from the case, then using a wide shallow tapered drift as a wedge, drive the pin out from the inside of the case and remove the lever and spring.

    Notice

    Do not remove the park rod lever unless absolutely necessary.

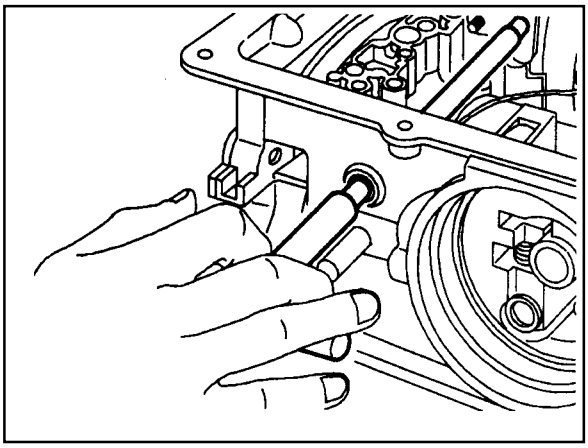

Downloaded from www.Manualslib.com manuals search engine

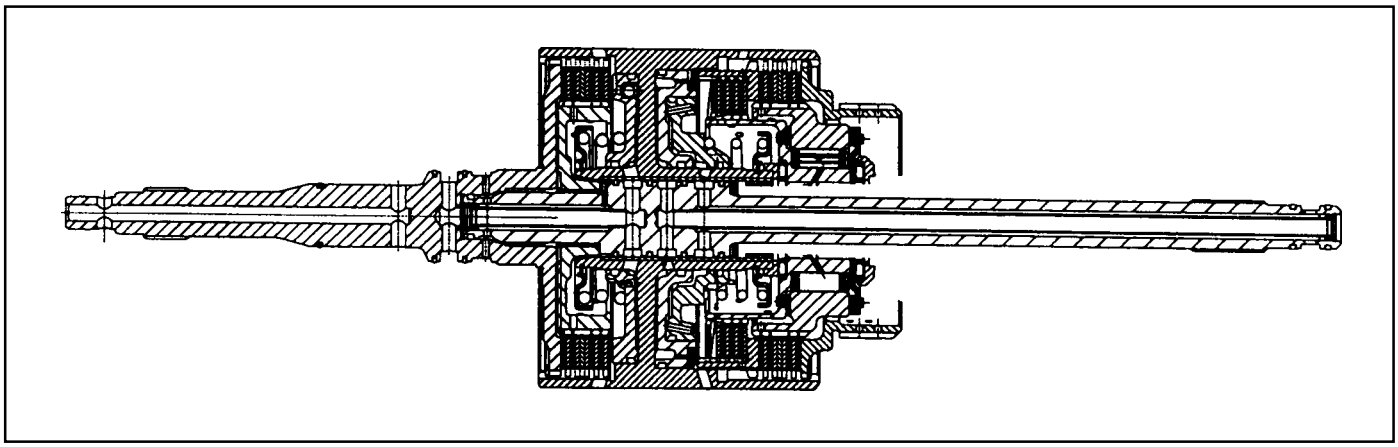

Figure 8.4 - Forward Clutch Cylinder Assembly

Forward Clutch Cylinder

To remove the forward clutch cylinder, refer to figure 8.4, proceed as follows.

1. Place the assembly in a horizontal position.
2. Remove the thrust bearing and adjustment shims from the input shaft.
3. Remove the circlip from the front of the clutch cylinder and remove the input shaft.
4. Remove the overdrive shaft and the C1 clutch hub assembly from the clutch cylinder.
5. Remove the C1 clutch plates from the cylinder.
6. Remove the circlip retaining the C3 clutch hub in the rear of the clutch cylinder and remove the hub.
7. Remove the C2/C4 clutch hub assembly and remove the thrust bearing from the C4 hub.
8. Remove the C2 clutch plates.
9. Invert the clutch cylinder and remove the C4 clutch sleeve, clutch plates and the two wave washers. The 3-4 one way clutch is located between the C2 and C4 clutch hubs, and the hubs may be separated by rotating one hub clockwise and withdrawing it from the other.

Downloaded from www.Manualslib.com manuals search engine

10. Remove the thrust block from the C4 clutch cylinder hub.

    Notice

    Make sure that the spring keeper is not caught in the circlip groove, and that all the spring pressure is released, before removing the tool.

11. Mount the clutch cylinder on tool No.0555-331899 with the C2/C4 end uppermost and compress the piston return spring. Remove the spring retaining circlip. Release the tool and remove the circlip, keeper and spring.
12. Invert the clutch cylinder on the compressor tool and remove the C1 clutch piston return spring in a similar manner.

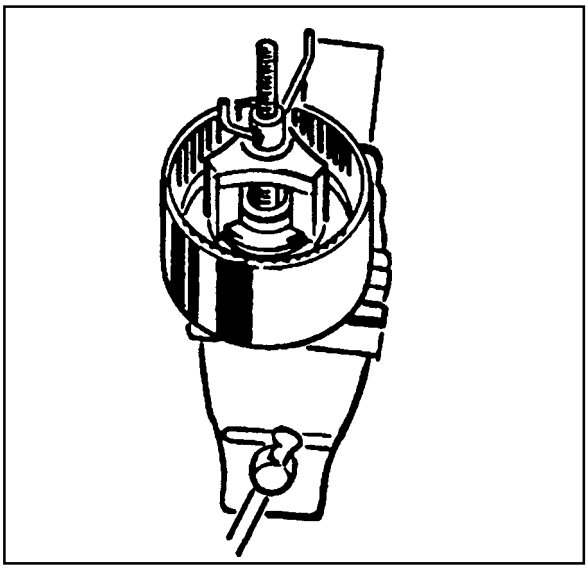

13. To remove the clutch pistons from the clutch cylinder, apply air pressure to the apply ports in the bore of the cylinder.

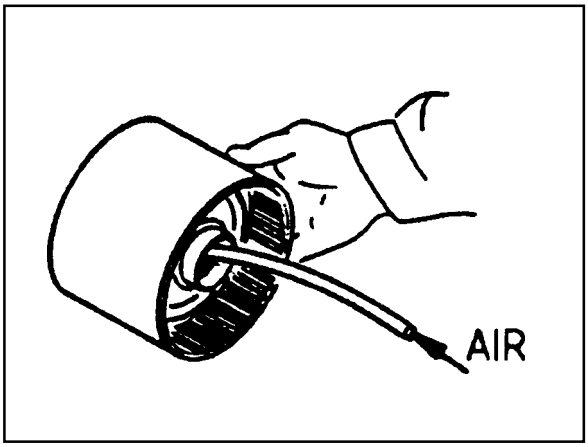

Downloaded from www.Manualslib.com manuals search engine

C3 Clutch Cylinder

To remove the C3 clutch cylinder, proceed as follows:

1. Remove the forward sun gear and thrust bearing from the C3 clutch cylinder.
2. Remove the nylon thrust bearing, bearing support, needle thrust bearing and thrust block from the clutch cylinder hub.

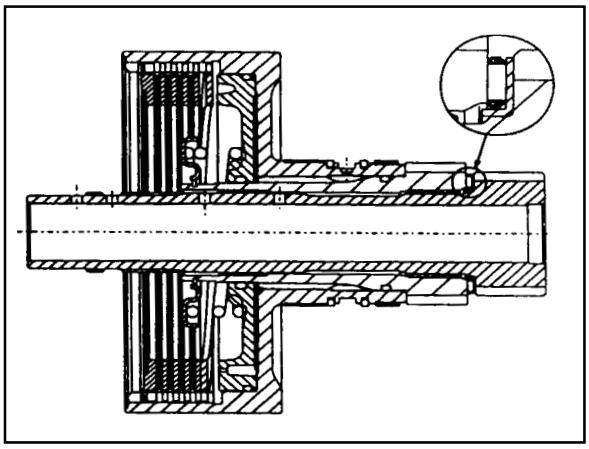

3. Mount the clutch assembly on tool No.0555-331899 and compress the piston return spring.

   Remove the circlip and release the spring.

   Notice

   Make sure that the spring keeper has not been caught in the circlip groove, and that all spring pressure has been released, before removing the tool.
4. Remove the tool, circlip, keeper and spring.
5. Remove the sealing rings from the C3 clutch cylinder.
6. Remove the clutch plate retaining circlip and remove the clutch plates.
7. To remove the clutch piston from the clutch cylinder, apply air pressure to the port between the iron sealing rings on the bearing journals of the cylinder.

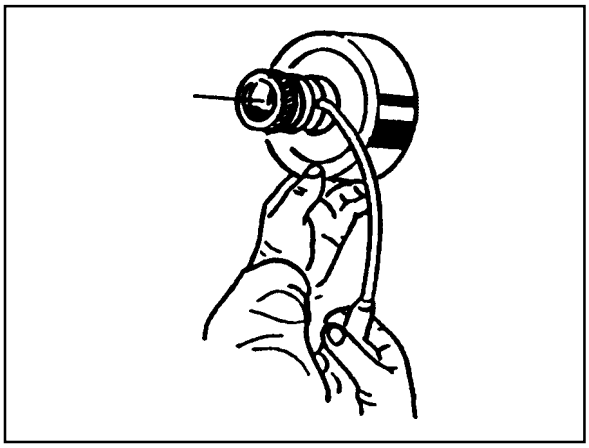

8. Remove the reverse sun gear from the cylinder.

Downloaded from www.Manualslib.com manuals search engine

Planet Carrier and Centre Support

To remove the planet carrier and centre support, proceed as follows.

1. Separate the planet carrier and centre support from the output shaft. Remove the thrust bearings from the output shaft and the planet carrier.
2. Separate the centre support from the planet carrier by rotating it anti-clockwise.
3. Lift the one way clutch from the planet carrier.
4. Remove the circlip retaining the one way clutch outer race in the planet carrier and remove the race.
5. Remove the one way clutch retainer from the planet carrier.

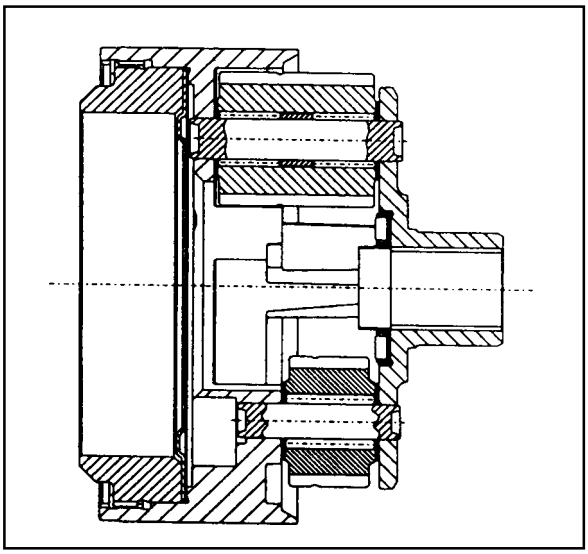

Pump

Note that the following valves are housed in the pump cover:

- Solenoid 7
- C1 bias valve
- Converter clutch control valve
- Converter clutch regulator valve
- Primary regulator valve

To remove the pump, proceed as follows.

1. Remove the wiring loom retainer plate and remove solenoid 7 with a T30 Torx bit.
2. Remove the five washer head bolts from the cover plate using a multi-point 8 mm socket.
3. Remove the five Torx head screws from the cover plate (Torx bit No. 30). Note that the odd screw holds the pump body to the pump body cover.

   Notice

   Do not strike the converter support tube to loosen the pump body.
4. Separate the pump body from the pump cover.
5. Lift the cover plate from the cover.
6. Remove the two ball check valves and one spring from the pump cover.

   Notice

   Some of the valves and plugs are preloaded by springs and may unexpectedly fall out of the cover when the pins are removed.
7. Depress the plug inward and remove the retaining pin for each of the four valves.
8. Remove the four valves, plugs and springs.
9. Remove the pump gears from the pump body.
10. Remove the lip seal from the front of the pump body.

Downloaded from www.Manualslib.com manuals search engine

Valve Body

To disassemble the valve body, proceed as follows.

1. Remove the detent spring and retainer plate using a T40 Torx bit.

   Notice

   Be aware that the manual valve will fall out of the valve body.
2. Take note of the angular relationship of the solenoid terminals to the valve body, then slide the manual valve out of the lower valve body.
3. Remove the solenoid and valve assembly as follows:
   - solenoid 1
   - solenoid 2
   - solenoid 3
   - solenoid 4
   - solenoid 5
   - solenoid 6
4. Place the valve body assembly on the bench with the upper body uppermost.
5. Remove the 24 clamping screws with a No. 30 Ton bit. Separate the upper and lower valve bodies by lifting the upper body and the separator plate together.
6. Upper body over and place it on the bench with the separator plate uppermost.
7. Lift the separator plate and gaskets from the upper valve body.
8. Remove the five nylon check balls exposed in the valve body.
9. Remove the retainer plate, plug, spring and reverse lockout valve.
10. Remove the two filters (and the large nylon check ball) from the lower valve body.

    Notice

    Once the pins are removed, the plates are loose in the valve body and will drop out when the valve body is turned over.
11. Remove the keeper plates and pins from the 1-2,2-3,3-4, BAR and CAR valves. The pins can be removed with a magnet.
12. Remove the 1-2,2-3 and 3-4 shift valves.

    Notice

    The plug is preloaded by the spring and may unexpectedly fall out of the valve body.
13. Depress the 4-3 sequence valve plug and remove the keeper plate.
14. Remove the plug, valve and spring.
15. Depress the solenoid 5 valve. Remove the keeper pin and remove the valve and spring.

    Notice

    The valve is preloaded by the spring and may unexpectedly fall out of the valve body.
16. Depress the line pressure release valve, remove the keeper pin, disc (if fitted), spring and valve.
17. Drive out the roll pin and remove the spring and ball check valve adjacent to the BAR valve.

Downloaded from www.Manualslib.com manuals search engine

ASSEMBLY PROCEDURE

The transmission is assembled in modular fashion and details of assembly for each module are given under the appropriate subject. Refer to table 8.1 (at the end of Section 8.3) for the torque specifications to be applied, and to table 9.10 in section 9.6 for details of all special tools required, when performing assembly procedures. Technicians overhauling these transmissions will also require a selection of good quality Torx bit sockets, in particular numbers 30,40 and 50, and an 8 mm,10 mm and 12 mm double hex socket.

Transmission

Notice

1. Ensure that the B1R circlip is fitted to the case. (If this is not fitted, the valve will peen its way into and through the separator plate.)
2. Ensure that the 'E' clip is fitted to the cross shaft.
3. Ensure that all aspects of the parking mechanism are working.

To assemble the transmission, proceed as follows:

1. Turn the transmission case upside down on the bench and mount it to the transmission cradle No.0555-331895.
2. Install all fittings, plugs and the breather, applying a sealant where applicable, Tighten the fittings to specifications. Ensure that the breather is clear, and check that the lube fitting in the rear of the case is fitted and clear of obstruction.
3. Assemble the B1R valve and spring, and secure with the irclip. Refer to Ensure that the circlip is completely seated in its groove.

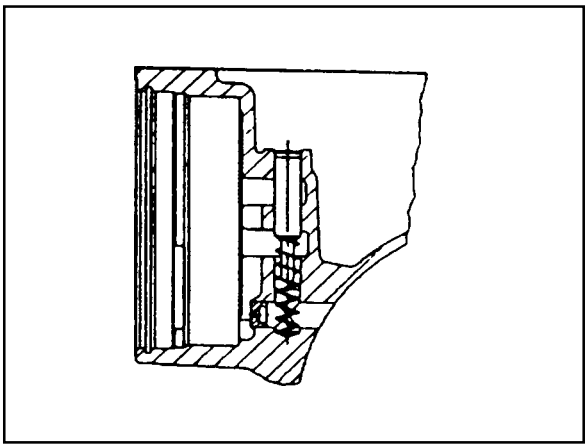

4. Install the rear servo lever and pivot pin.

   Notice

   The lever must pivot freely on its pin.

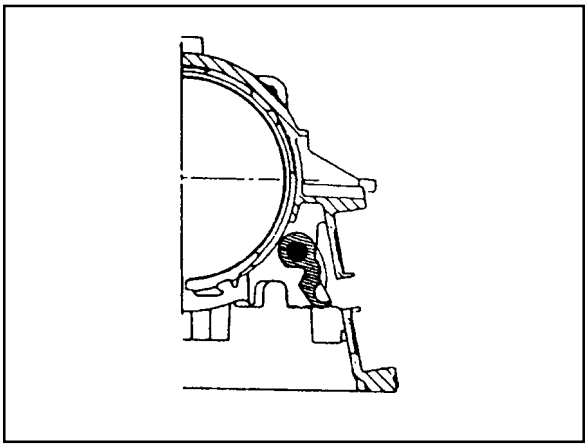

Downloaded from www.Manualslib.com manuals search engine

Notice

Care must be taken when applying sealant to ensure that it is not applied between the pin and the lever.

5. Assemble the park rod lever, complete with the return spring and pivot pin, applying a small amount of sealant to the outer end of the pivot pin.

   Notice

   That the lever must pivot freely on its pin and the spring must return the park rod lever to its correct location.

6. Secure the pivot pin with the circlip.

   Notice

   The pawl must pivot freely on its pin.

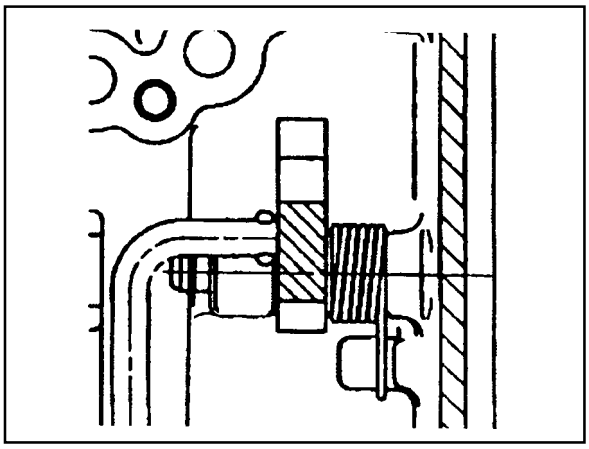

7. Install the parking pawl pivot pin and spring.

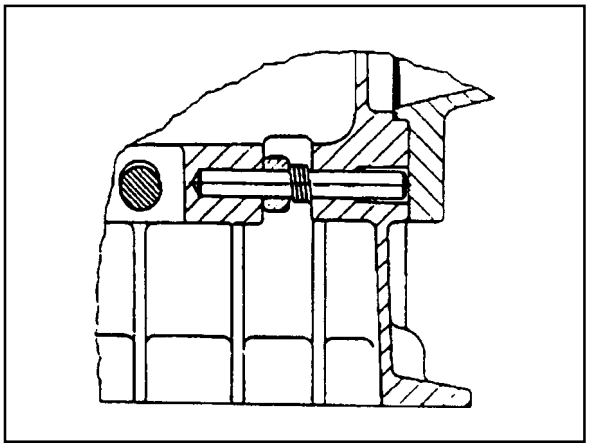

8. Connect the park rod to the manual valve detent lever.

   Ensure the spring and cam collar is firmly installed on the rod.

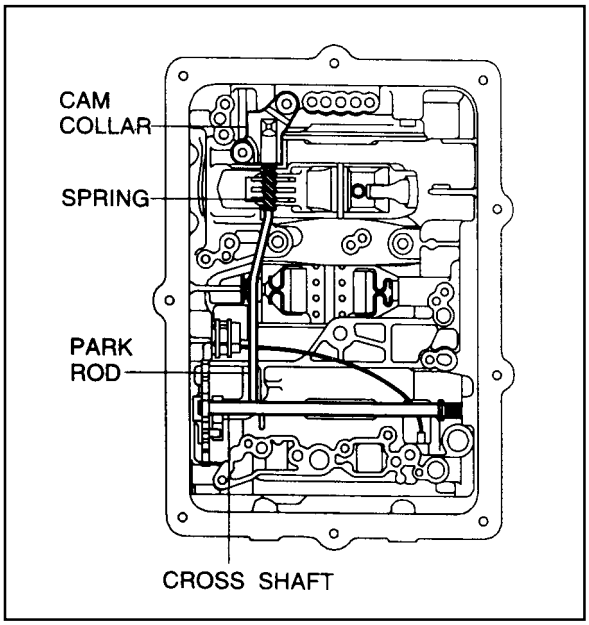

Downloaded from www.Manualslib.com manuals search engine

9. Check that the cam collar slides freely on the rod.
10. Insert the cross shaft into the case, from the side opposite to the inhibitor switch, then install the anti-rattle spring on the shaft.
11. Position the manual valve detent lever, aligning it with the cross-shaft bore in the case.
12. Push the shaft through the detent lever until it starts in the detent lever side of the case.
13. Install the detent lever drive pin in the shaft using tool No. 0555-331897 with the adaptor over the pin.
14. Press the pin into the shaft until the tool bottoms.
15. Remove the tool and fit the spring retaining circlip to the shaft.

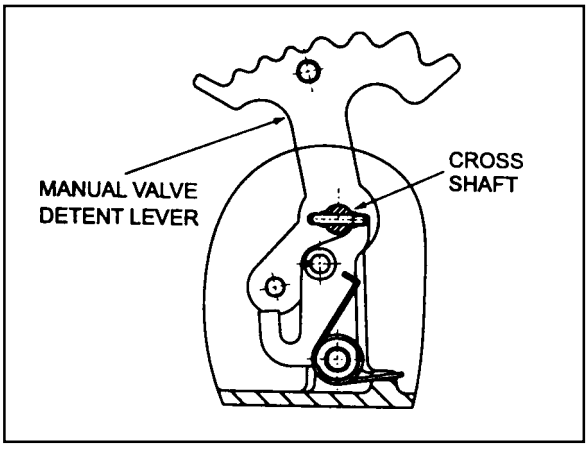

16. Install the new cross shaft seals using tool No. 0555-331894.

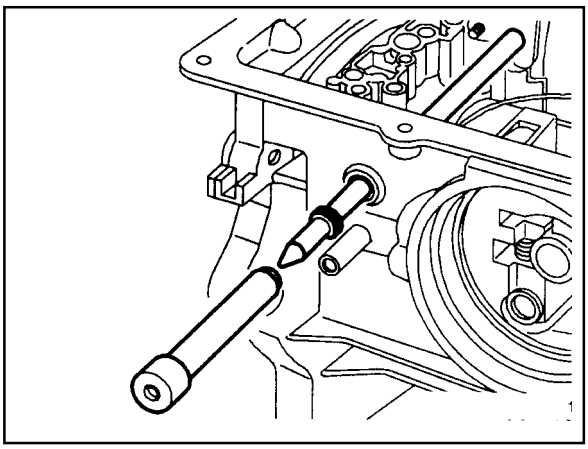

17. Install the inhibitor switch on the case. Torque the screws as per specifications. Press the pin into the shaft until the tool bottoms (4WD models) using tool No.0555-332942.
18. Thoroughly check the terminal wiring loom for condition and continuity.
19. Position the loom and locate the solenoid 7 contact and terminal in the pump mounting flange at the front of the case. The solenoid 7 wire is routed under the park rod and cross shaft in the case.

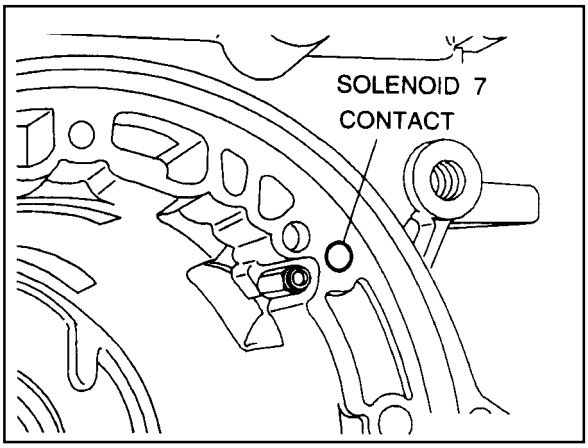

Downloaded from www.Manualslib.com manuals search engine

20. Install the ten pin connector in the case engaging the tangs on the connector in the notches in case.

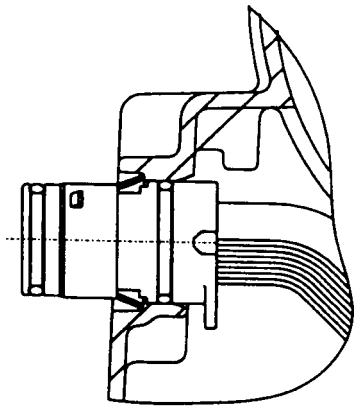

4WD MODELS ONLY

21. Route the portion of the wiring loom coming out of the case down between the inhibitor switch and the case. Position the ten pin plug on the wiring loom bracket .

Downloaded from www.Manualslib.com manuals search engine

Rear Band Assembly

To assemble the rear band assembly proceed as follows:

1. Check the rear band for any cracks or damage along the lining and metal backing.
2. Install the reaction anchor strut into the main case, without shims.

   Notice

   If fitting a new band, soak the new band in automatic transmission fluid (or a minimum of five minutes prior to assembly.
3. Carefully install the rear band into the transmission case and ensure that it is properly fitted in the case.
4. Position the apply strut on the rear band then engage the apply strut in the servo lever.
5. Install the cam plate and tighten the screws to specification.

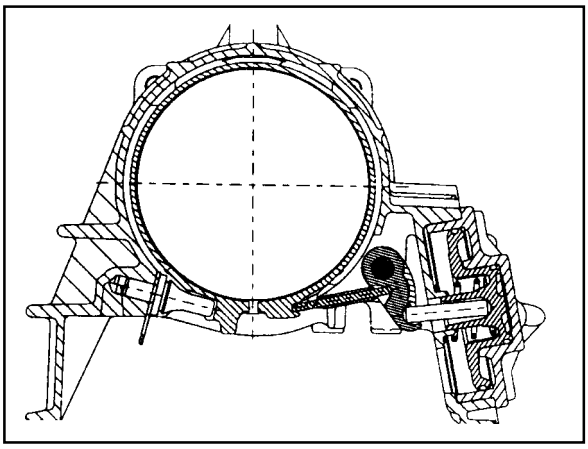

Figure 8.18 - Rear Servo and Band

Figure 8.19 - Thrust Bearing and Washer Locations

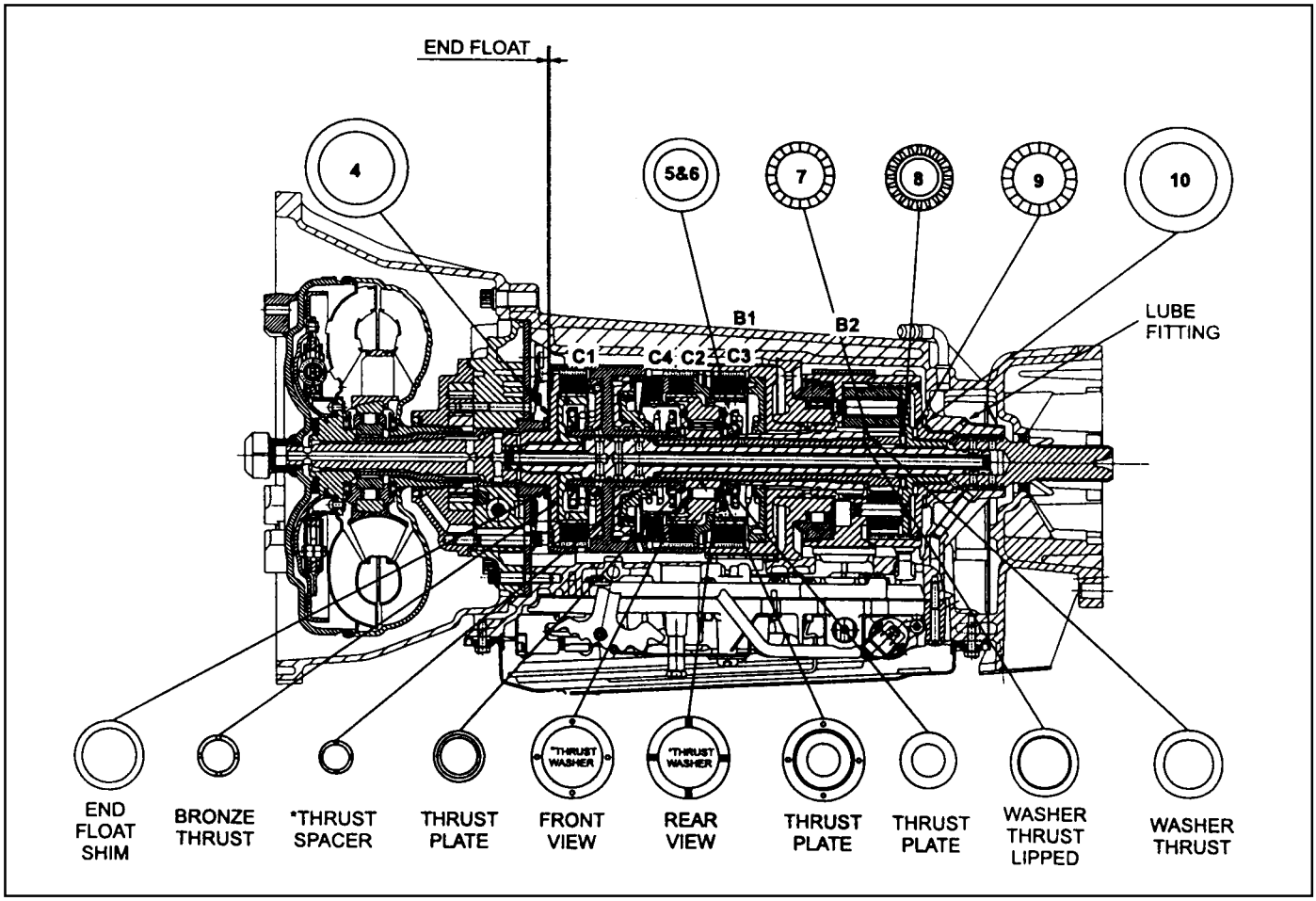

Downloaded from www.Manualslib.com manuals search engine

Output Shaft and Gear Assembly

To assemble the output shaft and gear assembly (refer to (figure 8.19), proceed as follows:

1. Check that the output shaft bush is not won or damaged. Replace if necessary.
2. Check for damage to parking pawl teeth on the ring gear. Replace if necessary.
3. Check that the sealing ring grooves have not been damaged.
4. Lubricate the sealing rings with automatic transmission fluid.
5. Assemble the sealing rings to the output shaft with the scat cut uppermost.
6. If previously dismantled, assemble the ring gear to the output shaft and secure with circlip. Ensure that the circlip is firmly seated in its groove.
7. Fit the thrust bearing assembly No. 10 onto the output shaft using petroleum jelly.
8. Carefully install the output shaft assembly in the case to prevent damage to the sealing rings.

Rear Servo Assembly

To assemble the rear servo assembly (refer to figure 8.18), proceed as follows.

1. Check the servo piston ‘O’ rings and gasket for any damage.
2. Lubricate the servo piston ‘O’ rings with automatic transmission fluid, and fit the ‘O’ rings to the piston grooves.
3. Assemble the piston to the cover, ensuring that ‘O’ ring compression is adequate but not excessive.
4. Align the spring on the piston spigot, then position the rear servo rod into the spigot.

   Notice

   Do not use petroleum jelly on the gasket.
5. Assemble the gasket to the cover and fit the assembly to the case.
6. Apply Loctite 567 sealant to the bolts. Install the bolts and tighten to specification.

Downloaded from www.Manualslib.com manuals search engine

Planet Carrier Assembly and Centre Support

To assemble the planet carrier assembly and centre support, proceed as follows.

1. Check the carrier and planet assembly for any damage or irregularity and ensure that all pinions rotate freely and that the pinion end float is within the tolerance stated in section 9.2.
2. Install the one way clutch (OWC) retainer to the planet carrier with the inner edge pointing downwards. Inspect the OWC race and the sprag assembly for wear or damage. Replace if necessary.
3. Install the outer race in the drum. Press the race to the bottom of the drum and install the retaining circlip. Ensure the circlip is firmly seated in its groove.

   Refer to figure 8.21.
4. Install the OWC into the outer race with the lip edge uppermost. Lubricate the sprags with automatic transmission fluid. Refer to figure 8.20.
5. Check that the plugs are fitted to the centre support, then assemble the centre support into the OWC, ensuring that the support will rotate in an anti-clockwise direction only. Refer to figure 8.21.

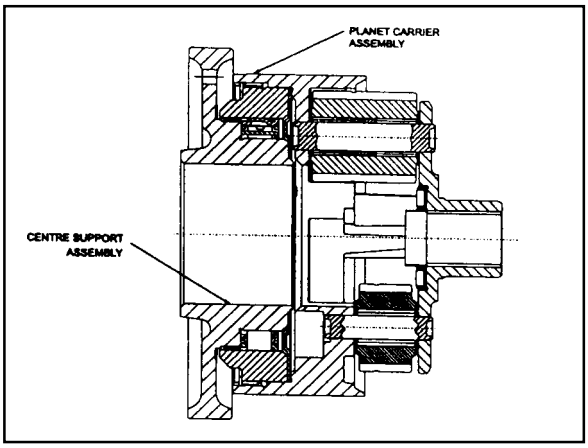

Figure 8.20 - Planet Carrier Assembly and Centre Support

6. Lubricate the No.9 needle thrust bearing and the thrust washer with petroleum jelly and fit them to the rear face of the planet carrier. Refer to figure 8.19.
7. Install the planet assembly and the centre support into the case, and align the centre support mounting bolt holes.
8. Install the centre support bolts finger tight.
9. Install the circlip retainer ensuring that the circlip is completely seated in the groove of the case.
10. Remove the centre support bolts and apply Loctite 222 or equivalent to the threads. Install the bolts and torque to specifications.

Downloaded from www.Manualslib.com manuals search engine

Extension Housing Assembly

To assemble the extension housing assembly, proceed as follows.

1. Check the condition of the extension housing roller bearing. Replace if necessary (RWD models). Install the new bearing from rear of extension housing. Press on the branded face of bearing only.
2. Install a new seal to the extension housing or adaptor housing. Refer to figure 8.21.

   Notice

   Do not use petroleum jelly to hold the gasket in position.
3. Position a new gasket onto the extension housing or adaptor housing.

   Notice

   See section 8.3.17 for the procedure to assemble the output flange assembly - RWD models.
4. Install the extension housing (RWD) or adaptor housing (4WD) and torque the bolts to specification.

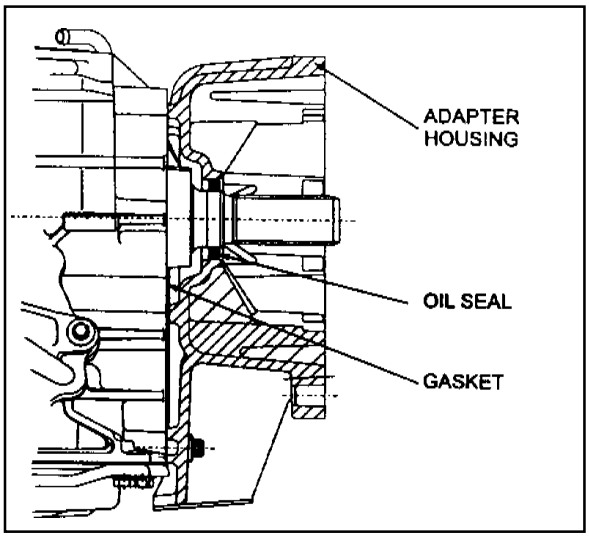

Figure 8.21 - Extension Housing

Front Servo Assembly

NOTICE

Ensure that the front servo snap ring is installed correctly. Orient the circlip with the gap at the bottom, near the pan rail. Refer to figure 8.22.

To assemble the front servo assembly (refer to figure 8.22), proceed as follows.

1. Lubricate the cover 'O' ring with automatic transmission fluid and fit to the cover.
2. Lubricate the piston 'O' rings with automatic transmission fluid and fit to the piston.
3. Assemble the piston, push rod, spring, belleville washer, seat and retaining ring.
4. Fit the piston push rod assembly into the front servo cover.
5. Install the front servo block and spring into the case.
6. Install the front servo assembly into the case.
7. Compress the servo cover and fit the servo cover retaining circlip, aligning the gap with the pan rail, and ensuring that it is completely seated in its groove.

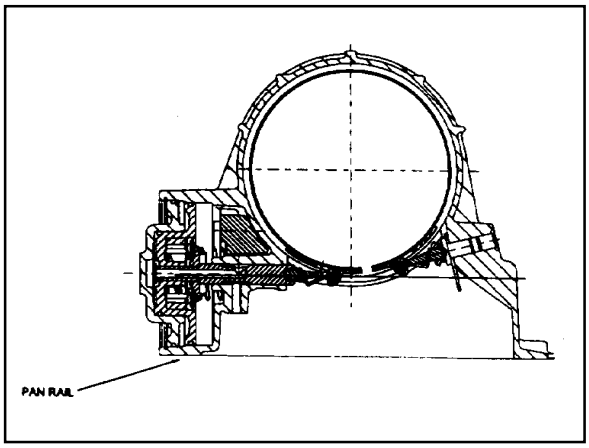

Figure 8.22 - Front Servo and Band

Downloaded from www.Manualslib.com manuals search engine

Front Band Assembly

To assemble the front band assembly, proceed as follows.

1. Install the reaction anchor strut to the case.
2. Check the band for ally cracks or damage along its lining and metal backing.
3. Position the strut retainers on the band (refer to figure 8.23).

   NOTICE

   If fitting a new band, soak the band in automatic transmission fluid for a minimum of 5 minutes prior to assembly.
4. Install the front band into the transmission case, ensuring that it is properly seated in place.
5. Position the reaction strut in its retaining clip and engage it with the band and anchor strut.

   Position the apply strut in its retaining clip and engage it with the band and the servo piston rod.

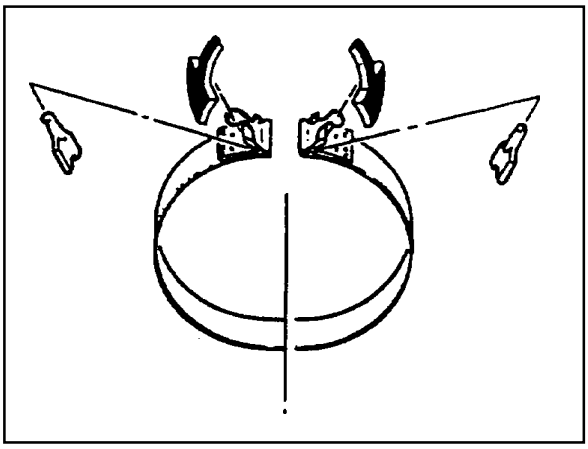

Figure 8.23 - Front Band Strut Installation

C2/C4 Clutch Assembly

Notice

1. Check pistons for cracks.
2. Do not mix the clutch piston return springs.
3. Ensure that the snap rings are fitted correctly.

To assemble the C2/C4 clutch assembly (refer to figure 8.24), proceed as follows.

1. Check the feed orifices in the cylinder bore are clear of obstructions.
2. Check the C2 piston bleed orifices are clear of obstructions.
3. Lubricate the ‘O’ rings with automatic transmission fluid.

   Notice

   ‘O’ rings must not be twisted in the grooves.
4. Fit the small ‘O’ ring onto the inner groove, and the large ‘O’ ring onto the outer groove of the piston.
5. Check the C4 piston bleed orifices are clear of obstructions.
6. Lubricate the ‘O’ rings with automatic transmission fluid.
7. Fit the small ‘O’ rings onto the inner groove and the large ‘O’ rings onto the outer groove of the piston.
8. Position the clutch cylinder with the C2/C4 cavity facing upwards.
9. Fit the C4 piston into the C2 piston with the bleed orifices in alignment.
10. Install the C2/C4 piston assembly into the cylinder, with the piston bleed orifices aligned with the holes on the outside of the cylinder, until the outer diameter of the C2 piston enters the inner diameter of the cylinder.

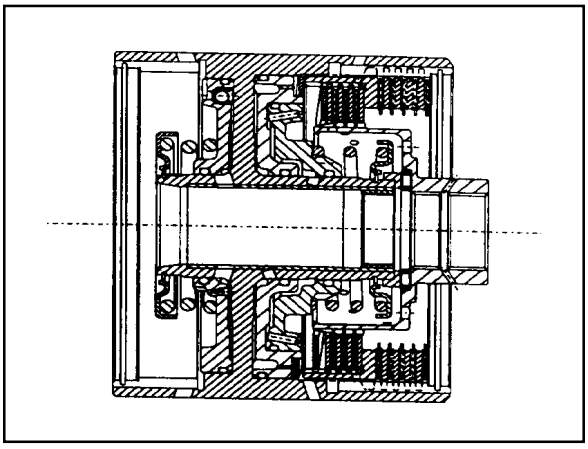

Figure 8.24 - Typical C2/C4 Clutch Assembly

Downloaded from www.Manualslib.com manuals search engine

11. Assemble the piston return spring to the piston, and fit the spring retainer over the spring.

    Notice

    The wire diameter of this spring is 4.3 mm.

12. Using special tool No. 0555-331899, compress the spring sufficiently to enable the installation of the retaining circlip ensuring that the circlip is firmly seated in its groove, then remove the tool.
13. Check the C1 piston check valves are not damaged and are free to move, and that the cylinder feed orifices are clear of obstructions.
14. Lubricate the'0'rings with automatic transmission fluid and fit them to their respective grooves.

    Notice

    'O' rings must not be twisted in the grooves.

15. Position the cylinder with the C1 cavity upwards. Install the piston into the cylinder until the outer diameter of the piston enters the inner diameter of the cylinder.
16. Install the spring and spring retainer onto the piston.

    Notice

    The wire diameter of this spring is 5.26 mm.

17. Using special tool No. 0555-331899, compress the spring sufficiently to enable the installation of the retaining circlip ensuring that the circlip is firmly seated in its groove, then remove the tool.
18. Install the C2 wave washer into the cylinder with the crest of one wave covering one of the bleed orifices in the C2 piston.
19. Measure and record the thickness of the flange of the C2 sleeve. Refer to figure 8.25.
20. Install the C4 clutch plates and wave washer into the C2 actuating sleeve, with the rounded edge of the steel plates down, in the following sequence:
    - Steel plate (selective)
    - Friction disc
    - Steel plate
    - Friction disc
    - Steel plate
    - Friction disc
    - Steel plate
    - Wave washer

Downloaded from www.Manualslib.com manuals search engine

Figure 8.25 - C4 Clutch Pack Clearance

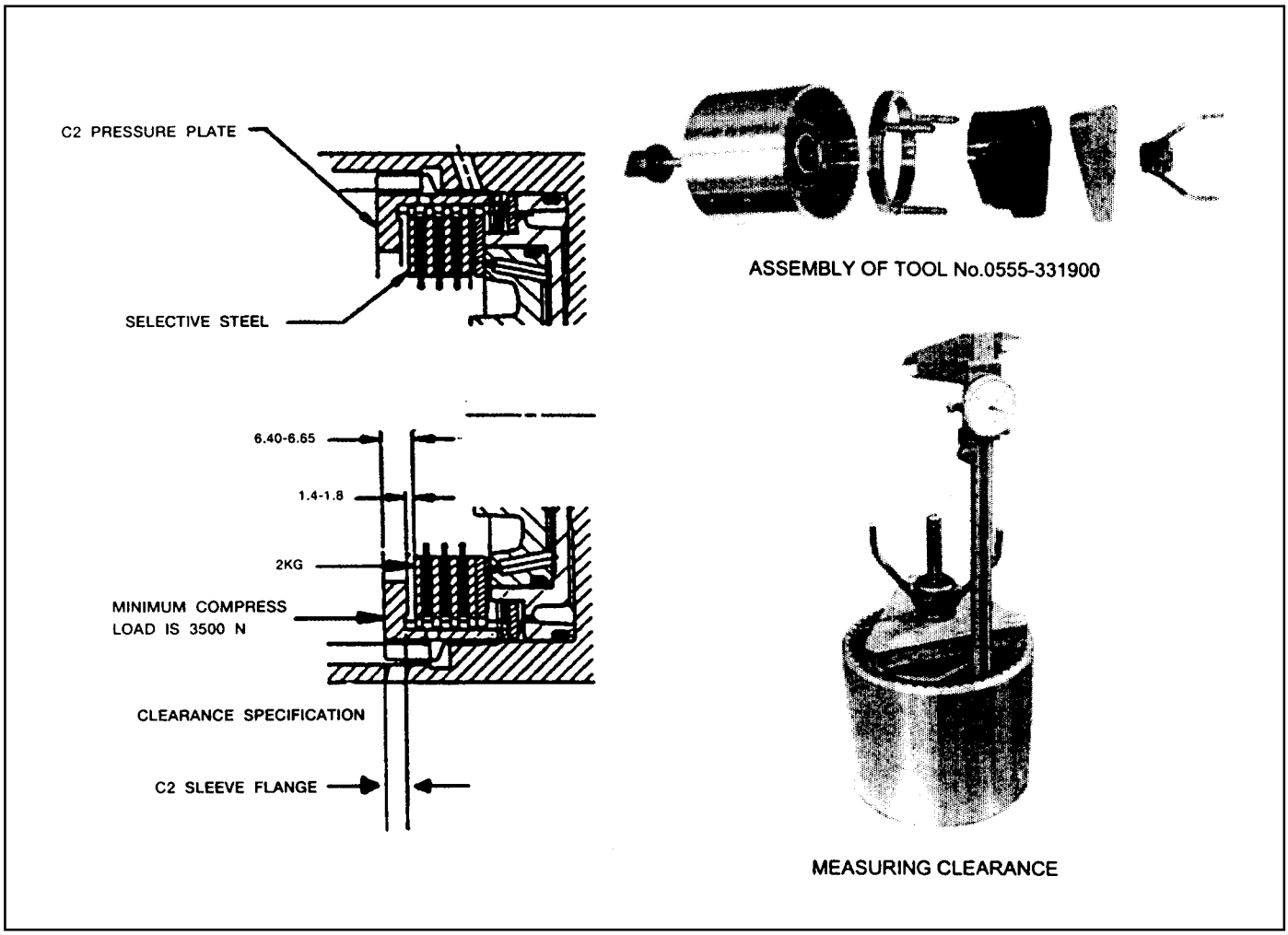

Downloaded from www.Manualslib.com manuals search engine

21. Holding the cylinder horizontal, install the sleeve and clutch plate assembly into the cylinder, with the crest of one wave of the washer In line with one of the holes in the outside of the cylinder, until the sleeve contacts the C2 wave washer.
22. Check the C4 clutch pack clearance using special tool No. 0555-331900. Refer to figure 8.25.

    Notice

    With the C2 wave spring compressed, and the clutch Pack supporting a 2 k9 weight, the dimension from the underside of the C2 pressure plate to the selective steel is to be between 1.4- 1.8 mm. If the clutch is to be gauged from the top of the pressure plate, then the dimension is to be the actual thickness of the pressure plate plus 1.4-1.8 mm.
23. Use selective plates to achieve the correct specification. If new friction plates are being fitted, remove the clutch pack and soak the friction plates in ATF for a minimum of 5 minutes prior to reassembly.

    Notice

    The clutch pack clearance must be taken before the elements are soaked in Automatic Transmission Fluid (ATF).
24. Reassemble the sleeve and clutch pack into the cylinder. Observe the alignment of the wave washer to the hole in the cylinder.
25. Install the C2 clutch plates in the cylinder in the following sequence:
    - Friction disc
    - Steel plate
    - Friction disc
    - Steel plate
    - Steel plate - 0574-000001, 0574-000003, 0574-000004, 0574-000005, 0574-000020, 0574-000021, or friction disc -0574-000002
    - Steel plate (selective)
    - Friction disc
    - Steel plate (selective)
    - Friction disc

Downloaded from www.Manualslib.com manuals search engine

26. Check the clutch pack clearance using only the weight from tool No.0555-331900. Refer to figure 8.26.

    Notice

    With the clutch pack supporting a 2 kg weight, the dimension from the C3 clutch hub locating step to the friction plate is to be between 0.80-1.05 mm.

27. Use selective plates to achieve the correct specification. If new friction plates are being fitted, remove the clutch pack and soak the friction plates in ATF for a minimum of 5 minutes prior to reassembly.

    Notice

    The clutch pack clearance must be taken before the elements are soaked in ATF.

28. Lubricate and fit the 3-4 OWC and end caps to the C2 hub.

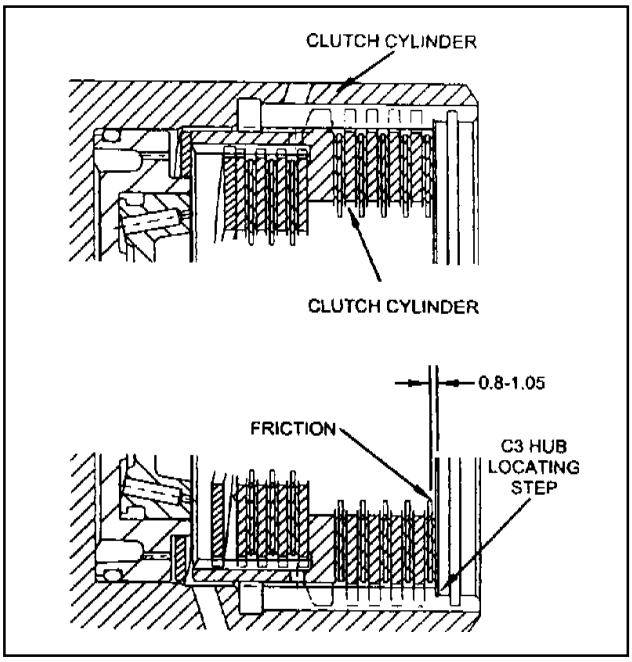

Figure 8.26 - Typical C2 Clutch Pack Clearance

29. Align the tangs and fit the nylon thrust washer onto the C4 hub. Refer to figure 8.27.
30. Align and fit the C4 hub to the C2 clutch and the OWC assembly.
31. Check the rotation of the C2 hub. While holding the C4 hub, the C2 hub should rotate in the clockwise direction and lockup in the anti-clockwise direction when viewed from the C2 hub. Refer to figure 8.27.

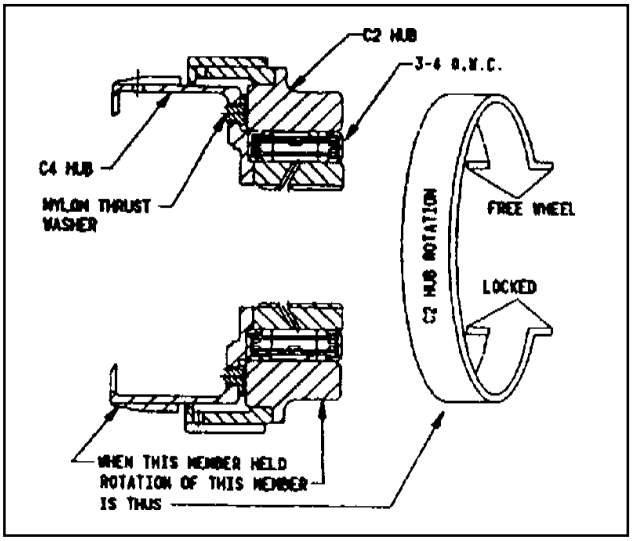

Figure 8.27 - C2 - Hub Rotation

32. Apply petroleum jelly to the No. 5 thrust bearing and fit it to the C4 hub. Refer to figure 8.19.
33. Remove the C2 clutch plates from the clutch cylinder.
34. Fit the thrust plate over the cylinder inner hub. Refer to figures 8.24 and 8.19.
35. Engage the C2/C4 clutch hub assembly in the C4 clutch plates.
36. Install the C2 clutch plates.
37. Install the C3 hub and secure it with the circlip, ensuring that the circlip is firmly seated in its groove.

    Refer to figure 8.32.

Downloaded from www.Manualslib.com manuals search engine

C3 Clutch and Reverse Sun Gear Assembly

To assemble the C3 clutch and reverse sun gear assembly (refer to figure 8.28), proceed as follows.

1. Check the orifices in the cylinder are clear of obstructions.
2. Check the C3 cylinder bush outside diameter and the centre support inside diameter are in good condition and not damaged. Coat the sealing rings with automatic transmission fluid and fit into the C3 cylinder grooves.
3. Check the reverse sun gear splines, grooves and thrust face for condition. Coat the 'O' ring with automatic transmission fluid and fit it to the groove of the reverse sun gear.
4. Install the reverse sun gear in the C3 cylinder, ensuring that the 'O' ring compression is adequate but not excessive.

   Notice

   'O' rings must not be twisted in the grooves.
5. Coat the C3 piston 'O' rings with automatic transmission fluid and fat the small 'O' ring onto the inner ring and the large 'O' ring onto the outer ring of the C3 piston.
6. Check that the bleed orifices of the piston are clean and clear of obstructions.
7. Install the C3 piston in the cylinder until the outside diameter of the piston enters the inside diameter of the cylinder.

   Notice

   Take care not to cut the 'O' ring.
8. Assemble the spring and spring retainer on the piston. Using tool No. 0555-331899 compress the spring sufficiently to enable the installation of the retaining circlip, ensuring that the circlip is firmly seated in the groove, and remove the tool.
9. Fit the C3 wave plate to the C3 piston face, ensuring that one crest of the wave plate of the C3 piston face is aligned over one of the piston orifices.
10. Assemble the clutch plates and discs into the cylinder in the following sequence :
    - Steel plate
    - Friction disc
    - Steel plate
    - Steel plate - 0574-000001, 0574-000003, 0574-000004,0574-000005,0574-000020, 0574-000021, or friction disc -0574-000002
    - Steel plate (selective)
    - Friction disc
    - Steel plate (selective)
    - Friction disc
11. Align and fit the pressure plate with the counterbore facing away from the clutch plates.

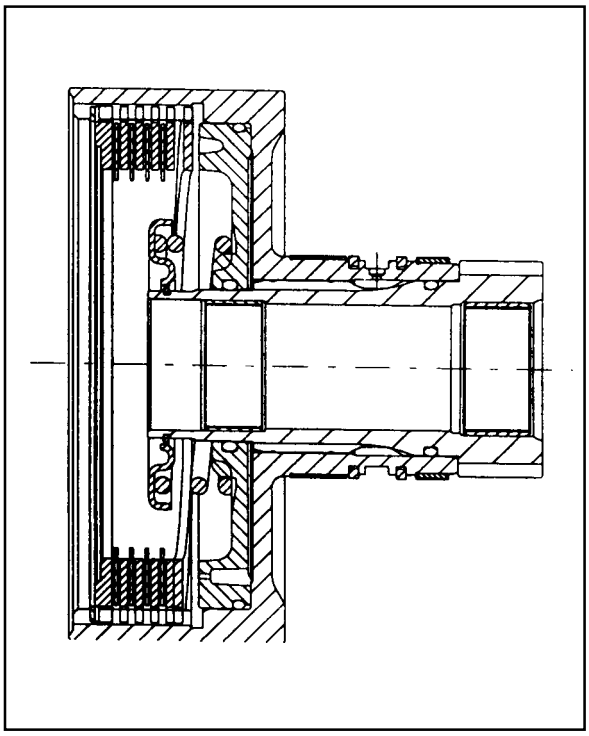

Figure 8.28 - C3 Clutch and Reverse Sun Gear

Downloaded from www.Manualslib.com manuals search engine

12. Install the circlip.
13. Check the C3 clutch clearance (refer to figure 8.29) using special tool No.0555-331900 in the following manner (weight only).
    a. Place the weight on the pressure plate and measure the distance from the end of the cylinder to the top of the pressure plate.
    b. Record this figure.
    c. Remove the weight.
    d. Lift the pressure plate up against the circlip and measure the distance from the end of the cylinder to the top of the pressure plate.
    e. Record this figure.
    f. Subtract the second reading from the first reading to obtain the clutch pack clearance.

    Notice

    With the clutch pack supporting a weight of 2 kg, the clearance between the snap ring and the top of the pressure plate is to be between 1.20-1.45 mm.
14. If new friction plates are being fitted, remove the clutch pack and soak the friction elements in automatic transmission fluid for a minimum of five minutes prior to reassembly.

    Notice

    The clutch pack clearance must be taken before the elements are soaked in automatic transmission fluid.

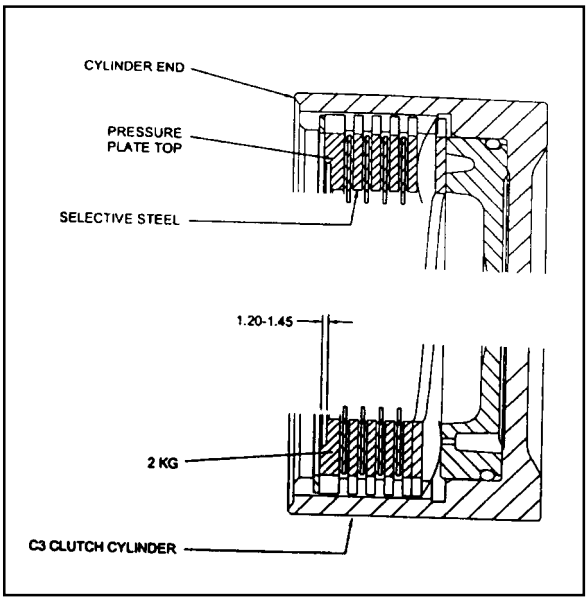

Figure 8.29 - Typical C3 Clutch Assembly Clearance

Downloaded from www.Manualslib.com manuals search engine

Forward Sun Gear and C3 Clutch Pack Assembly

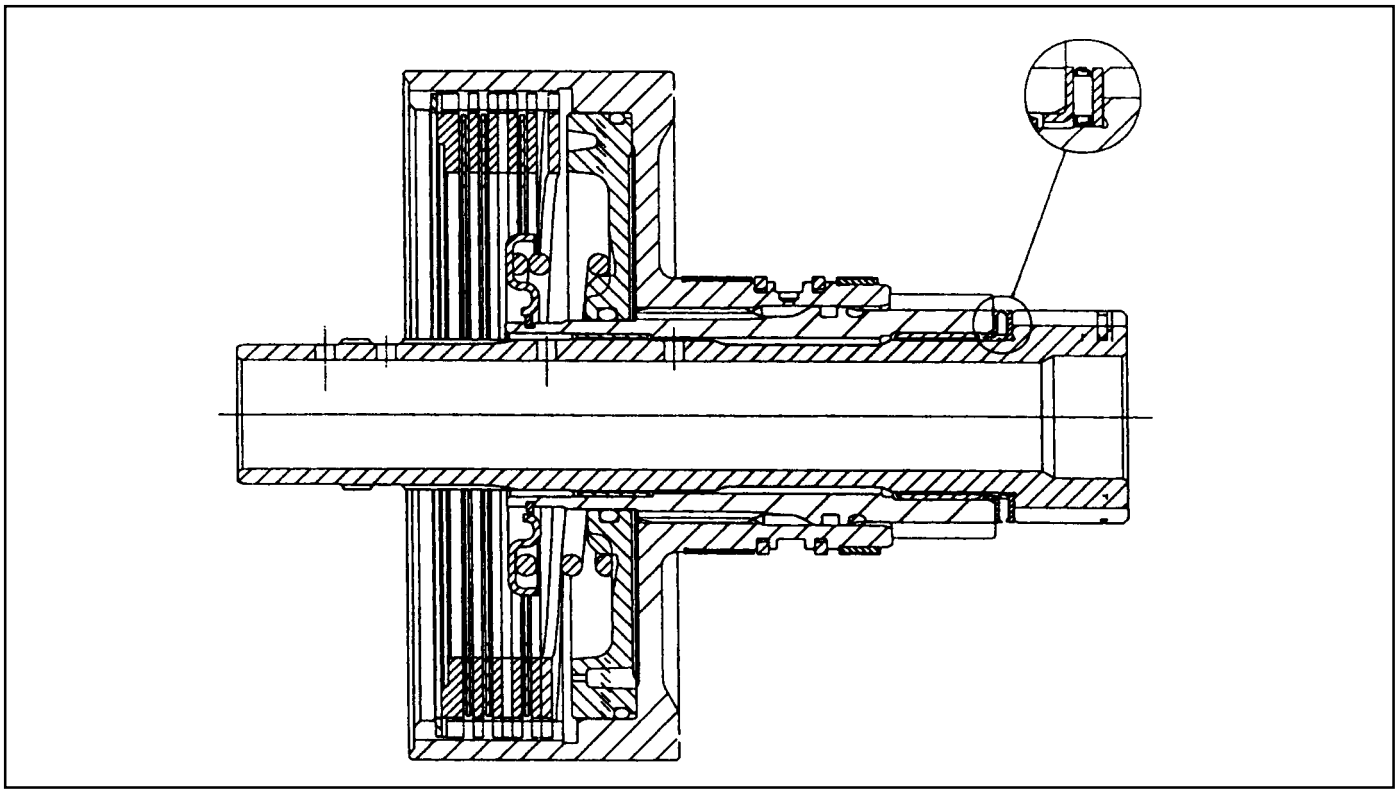

Figure 8.30 - Typical forward Sun Gear add C3 Clutch Assembly

To assemble the forward sun gear and C3 clutch pack assembly (Refer to figure 8.30), proceed as follows:

1. Fit the No. 7 needle thrust bearing assembly over the forward sun gear, ensuring that the thrust washer is between the bearing and the sun gear.
2. Lubricate the thrust plate with petroleum jelly and fit the thrust plate onto the reverse sun gear.

   Refer to figure 8.33.
3. Align and fit the C3 clutch assembly over the forward sun gear.
4. Lubricate the No. 6 needle thrust bearing with petroleum jelly and fit it to the thrust plate. Ensure the lugs on the outside diameter of the bearing fit in the thrust plate counterbore.

   Refer to figure 8.19.
5. Align and fit the plastic thrust washer to the thrust plate with petroleum jelly.

   Refer to to figures 8.19.
6. Install the assembly over the forward sun gear shaft against the No.6 thrust bearing.

   Refer to figure 8.19.
7. Place the assembly to one side.

Downloaded from www.Manualslib.com manuals search engine

C1 Clutch Overdrive Shaft and Input Shaft Assembly

Notice

1. Ensure that the snap rings are fitted correctly.
2. Check pistons for cracks, especially the C1 piston.
3. Do not mix clutch piston return springs.
4. If the C1/C2 clutch packs separate from the C3 clutch pack, make sure the No. 6 bearing doesn't drop out of the bearing retainer.

To assemble the C1 clutch overdrive shaft and input shaft assembly, proceed as follows:

1. Check the overdrive shaft grooves for any defect.
2. Coat the sealing rings, large and small, with petroleum jelly and fit them to the overdrive shaft. The sealing rings may be held in place with a small amount of petroleum jelly.
3. Assemble the clutch plate and disc into the cylinder in the following sequence:
   - steel plate
   - friction disc
   - steel plate
   - friction disc
   - steel plate
   - steel plate - 0574-GOOGOl, 0574-000003, 0574-000004, 0574-000005, 0574-000020, 0574-000021, or friction disc -0574-000002
   - steel plate (selective)
   - friction disc
   - steel plate (selective)
   - friction disc
4. Check the clutch pack clearance using special tool No.0555-331900. Refer to figure 8.31.

   Use selective plates to achieve the correct specification.

   Notice

   The clutch pack supporting a 2 kg weight, the dimension from the input shaft locating stop to the friction disc must be 0.70-0.90 mm.
5. If new friction plates are being fitted, remove the clutch pack and soak the friction elements in automatic transmission fluid for a minimum of five minutes prior to assembly.

   Notice

   The clutch pack clearance must be taken before elements are soaked in automatic transmission fluid.
6. Check the fit of the C1 clutch hub on the overdrive shaft. If it is loose, the hub and shaft assembly must be replaced.

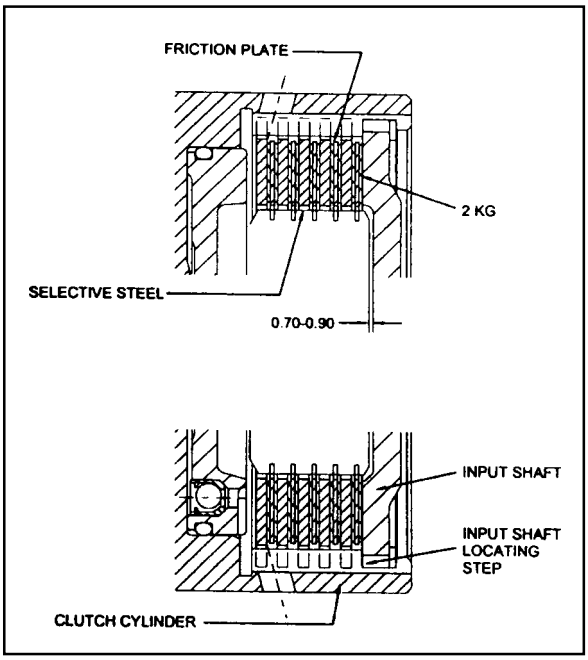

Figure 8.31 - Typical C1 Clutch Assembly Clearance

Downloaded from www.Manualslib.com manuals search engine

7. Coat the small nylon thrust spacer with petroleum jelly and install it over the overdrive shaft. Refer to figure 8.19.
8. Carefully fit the overdrive shaft into the C1 cylinder so as not to damage the sealing ring.
9. Fit the small bronze C1 hub thrust washer in place with petroleum jelly. Refer to figure 8.19.
10. Check the input shaft for any defect. Fit the input shaft into the cylinder and secure it with the circlip, ensuring that the circlip is completely seated in the groove.
11. Coat the sealing rings with petroleum jelly and fit onto the input shaft.
12. Assemble the C1/C2/C4 clutch assembly to the C3 clutch and sun gear assembly. Refer to figures 8.32 and 8.33.
13. Install this assembly in the transmission case.

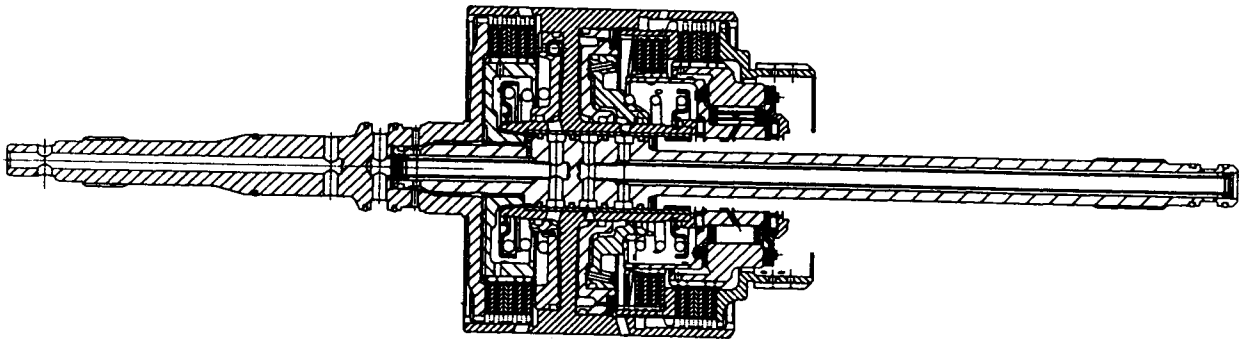

Figure 8.32 - C1, C4 and C2 Clutch

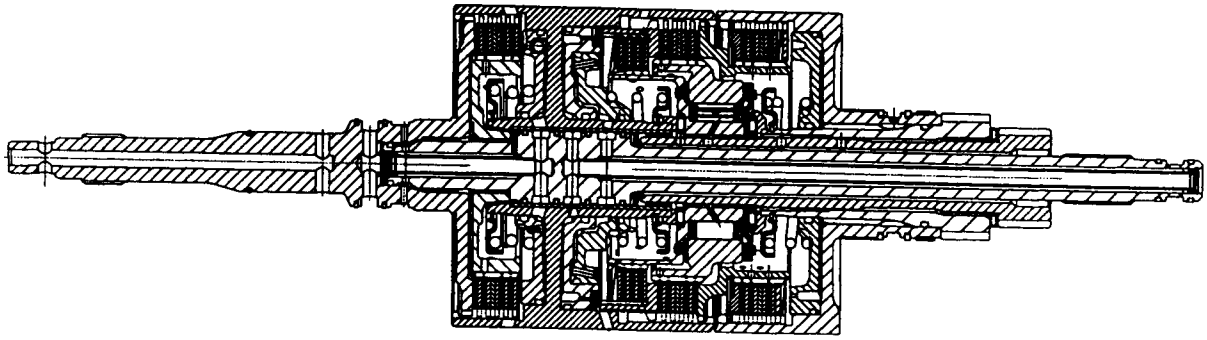

Figure 8.33 - C1, C4, C2 and C3 Clutch

Downloaded from www.Manualslib.com manuals search engine

Pump Cover and Converter Support

Notice

1. Do not wash the nose of solenoids in solvent.
2. Ensure that the correct 'O' ring is fitted for the application.
3. Do not mix up the low first blow-off and the torque converter blow-off ball springs.
4. Be careful not to damage the needle bearings on the assembly. Avoid any axial impact loads during assembly.
5. Check the transmission end float. This will help to detect any missing parts or incorrect assembly.

   Notice

   Figure 8.35 shows the orientation of the cross- sections for figures 8.36 to 8.42.

To assemble the pump cover and converter support (refer to figures 8.34 and 8.35), proceed as follows.

1. Check the pump body for any damage, chips or irregularity. Check that the bush is firmly staked in the drive gear.
2. Install the seal flush with the front face of the pump body.
3. Lubricate the pump bush, and the drive and driven gears, with automatic transmission fluid.
4. Install the pump driven gear and the pump drive gear into the pump body.
5. Using a straight edge and thickness gauge, check that the clearance between pump face and gears is 0.04 - 0.018 mm.
6. Lubricate the pump body 'O' ring with automatic transmission fluid and fit it to the pump body. Put the pump body to one side.
7. Ensure that the pump cover cavities, ports and holes are clean and free of any obstruction.
8. Lubricate all loose parts with automatic transmission fluid prior to assembly.

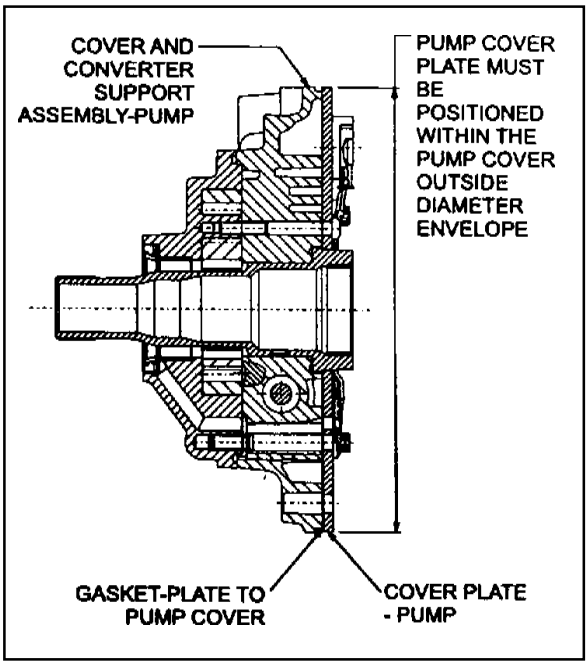

Figure 8.34 - Pump, Cover and Converter Support

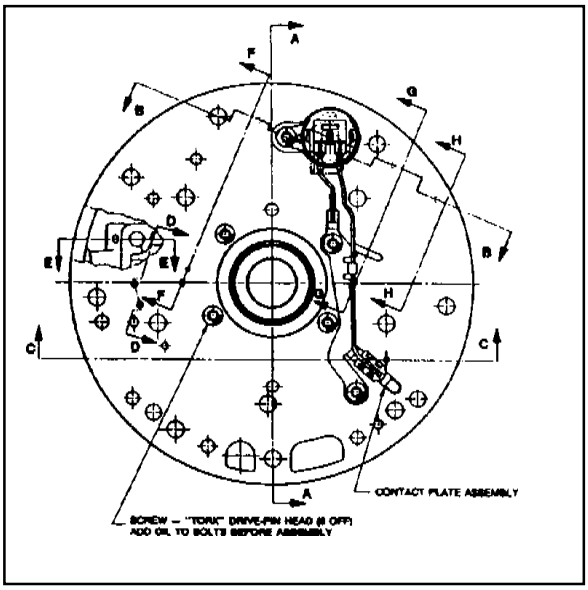

Figure 8.35 - Pump Cover Assembly

Downloaded from www.Manualslib.com manuals search engine

9. Assemble the primary regulator valve and plunger (refer to figure 8.36) to the pump cover, ensuring that the regulator valve slides freely, then fit the regulator valve plug and 'O' ring.

Figure 8.36 - Primary Regulator Valve

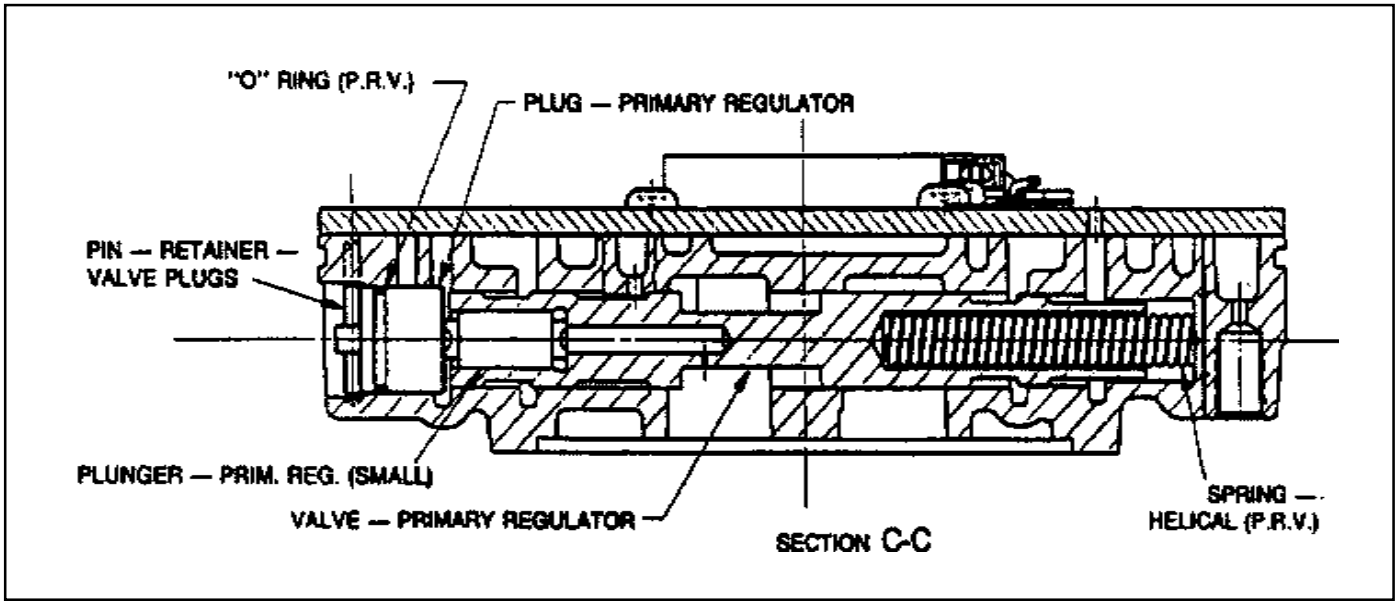

10. Install the retaining pin.

11. Install the converter clutch regulator valve (refer to figure 8.37), plug, and 'O' ring.

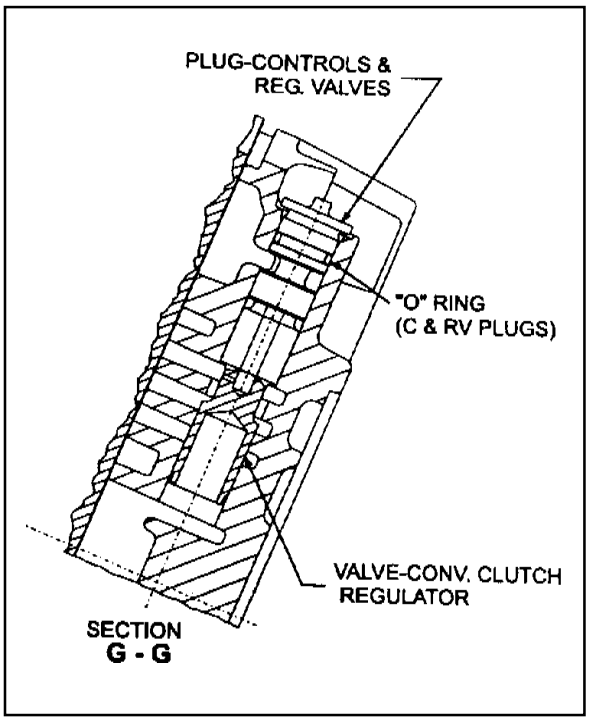

Figure 8.37 - Converter Clutch Regulator Valve

Downloaded from www.Manualslib.com manuals search engine

12. Install the retaining pin. Refer to figure 8.39.

Figure 8.39 - Valve Retaining Plugs and Pins

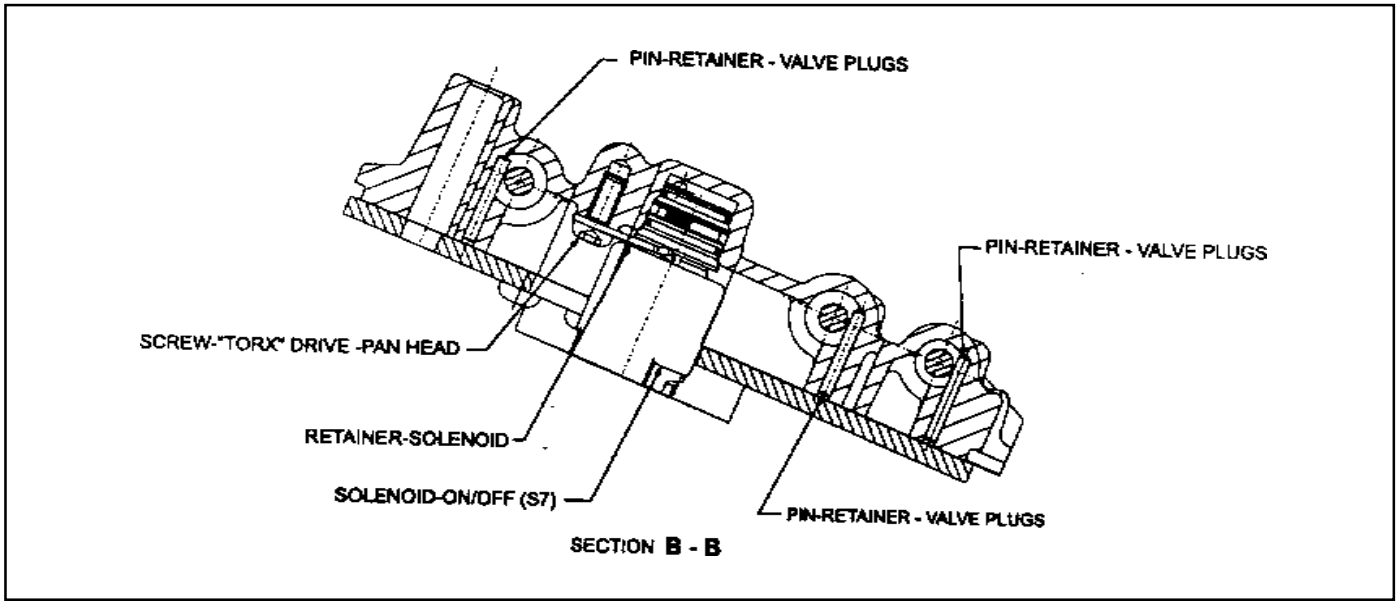

13. Install the converter clutch control valve (refer to figure 8.38), spring, plug, and 'O' ring.

14. Install the retaining pin. Refer to figure 8.39.

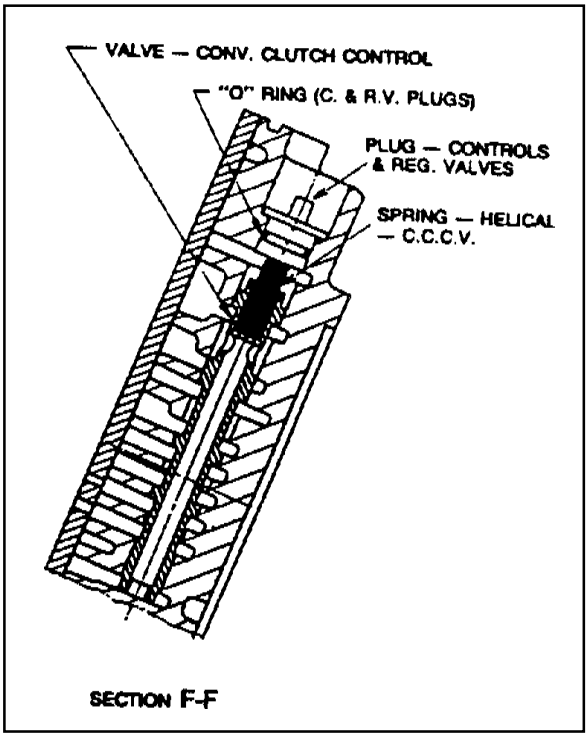

Figure 8.38 - Converter Clutch Control Valve

Downloaded from www.Manualslib.com manuals search engine

15. Install the C1 bias valve spring, valve, plug and ‘O’ ring. Refer to figure 8.40.
16. Install the retaining pin. Refer to figure 8.39.

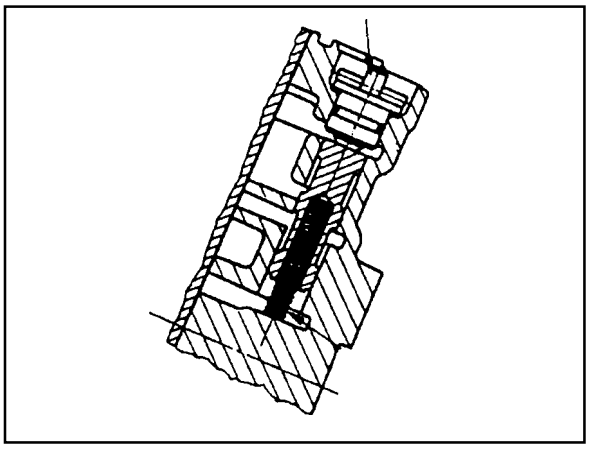

Figure 8.40 - C1 Bias Valve

17. Install the converter release check ball and spring and the feed ball. Refer to figures 8.41, 8.42 and 8.43.

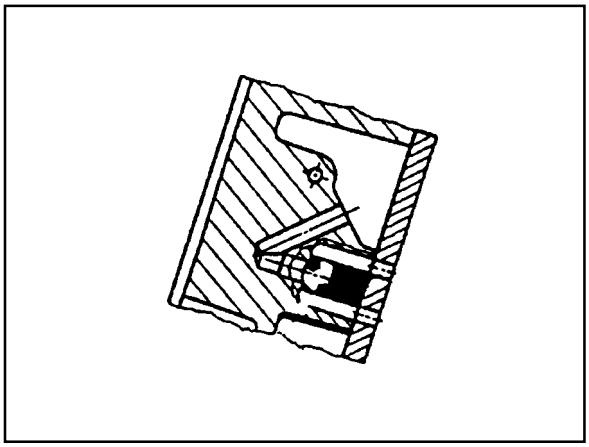

Figure 8.41 - Converter Relief Ball and Spring

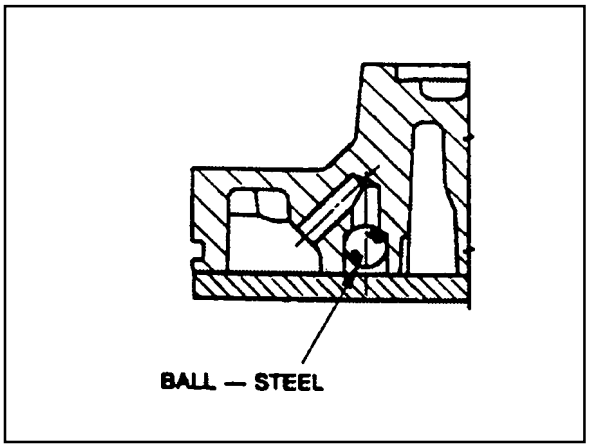

Figure 8.42 - Peed Ball

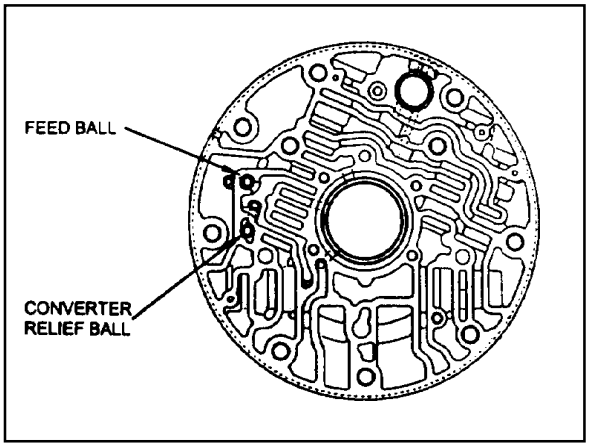

Figure 8.42 - Feed Ball

Downloaded from www.Manualslib.com manuals search engine

18. Install the gasket on the pump cover.
19. Install the cover plate, solenoid 7 with the retainer and the solenoid wiring retainer to the pump cover, ensuring that the periphery of the cover plate is flush with the periphery of the pump cover. Refer to figure 8.34.

    Tighten the screws to specification in the order (1-5), shown in figure 8.44.

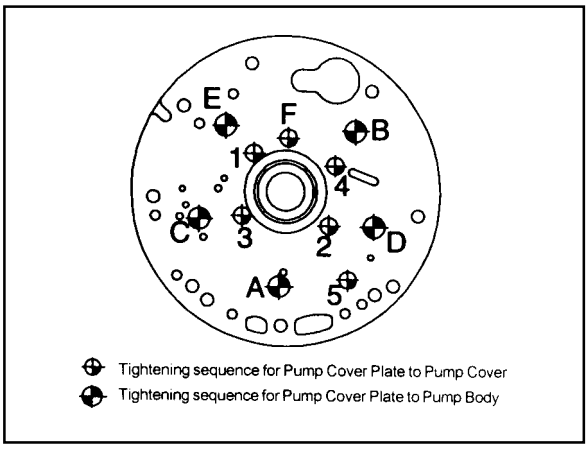

Figure 8.44 - Pump Bolt Tightening Sequence

20. Tighten the solenoid 7 screw. Refer to figure 8.39.

    Notice

    Check that neither the wiring nor the connector protrudes excessively, in order that at assembly neither the wiring and the connector contacts or rubs on the input shaft or the C1/C2 clutch cylinder.
21. Assemble the pump to the pump cover.

    Tighten all bolts and the crescent screw finger tight, ensuring that the pump is flush against the pump cover. Tighten the bolts and the screw to specification in the order (A - F), shown in figure 8.44.
22. Install the pump to transmission case gasket onto the case.
23. Fit the ‘O’ ring to the pump cover outer diameter.

24. Install the pump and cover assembly over the input shaft being careful not to damage the sealing rings. Tighten the pump cover to case bolts to specification. Refer to figure 8.45.

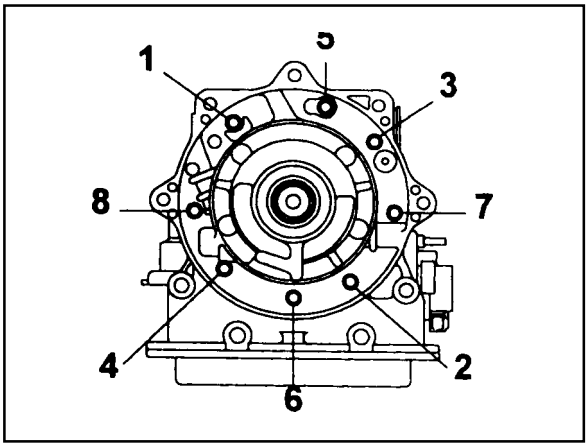

Figure 8.45 - Tightening Sequence Pump to Case

Downloaded from www.Manualslib.com manuals search engine

25. Check that the transmission end float is set to the tolerance stated in section 9.2. Refer to figure 8.46. If the unshimmed end float clearance is greater than specification, shims are to be placed between the No. 4 bearing and the input shaft bearing surface. Refer to figure 8.19. If the end float clearance is less than 0.5 mm then the transmission has been assembled incorrectly or the parts are out of specification.
26. Perform the following steps to check the end float :
    a. Attach a dial indicator to the front of the transmission case with the stylus resting on the end of the input shaft.
    b. Apply a force of approximately 250 newtons or 25 kg to the input shaft.
    c. Zero the dial indicator.
    d. Place a small lever behind the forward clutch cylinder and lever the cylinder forward.
    e. The measurement recorded on the dial indicator is the transmission end float or clearance between the No.4 bearing and the converter support tube.
27. On completion of this procedure, adjust the front and rear bands to specifications detailed in section 8.4.

Figure 8.46 - Gear Train End Float Check

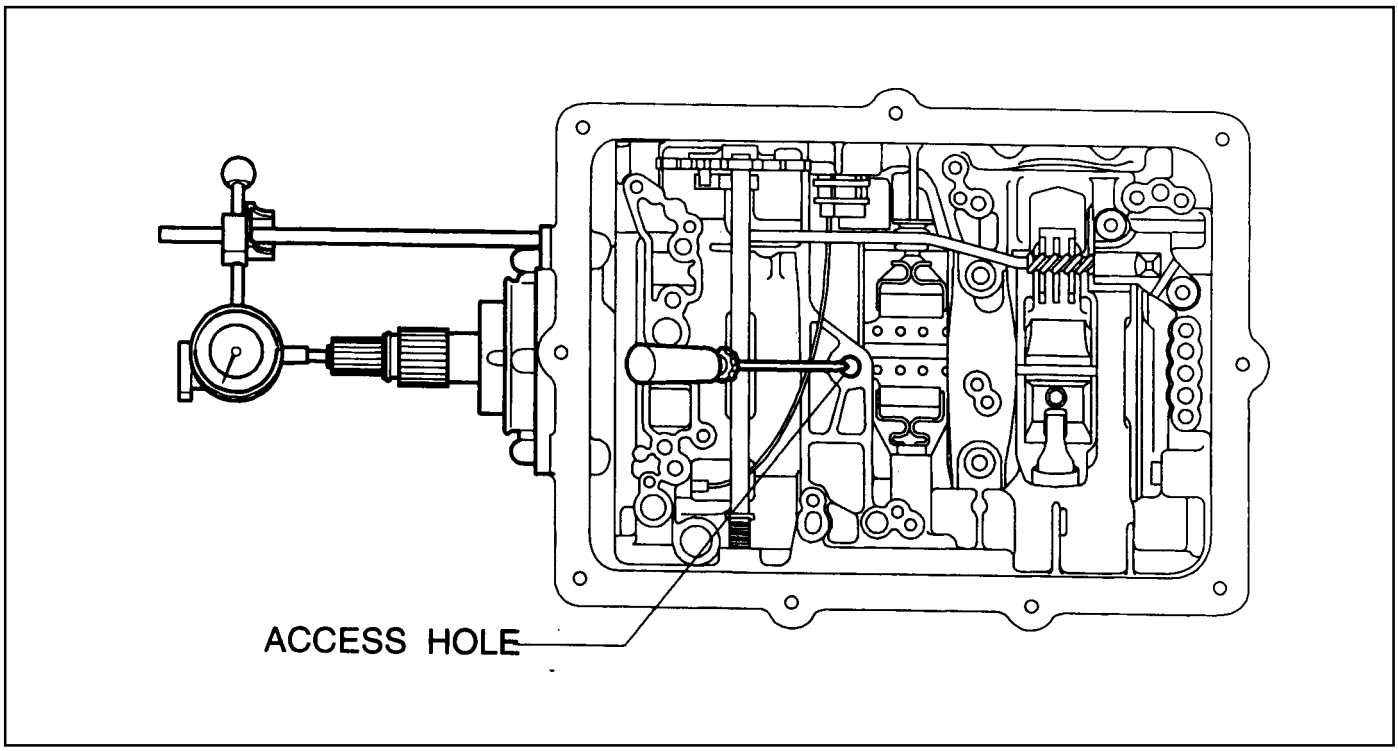

Downloaded from www.Manualslib.com manuals search engine

Valve Bodies

Notice

1. Do not wash the nose of solenoids in solvent.
2. Be aware of ball positions in the upper valve body.
3. Be aware of 1-2 and 3-4 shift valve positions, they can be swapped.
4. Check the 4-3 sequence valve and spring orientation.
5. Check that the 12 mm ball is in the lower body.
6. Do not mix up the low first blow-off and the torque converter blow-off ball springs.
7. Check the line pressure relief valve for swarf, and be aware of replacing the shims.
8. The orifices in the valve body are for stability and safeguard; do not drill them any larger.
9. When servicing the transmission, ensure that the solenoid 5 damper spring is not broken.
10. Locate the detent spring central to the detent lever.

To assemble the valve bodies, proceed as follows.

1. Wash the upper and lower valve bodies (refer to figures 8.47 and 8.48) thoroughly with cleansing solvent and blow dry.
2. Check the valve body cavities, ports and holes for damage or obstructions.
3. Install the detent lever locating pin.
4. Thoroughly wash all loose components.
5. Check that all valves slide freely in their location.

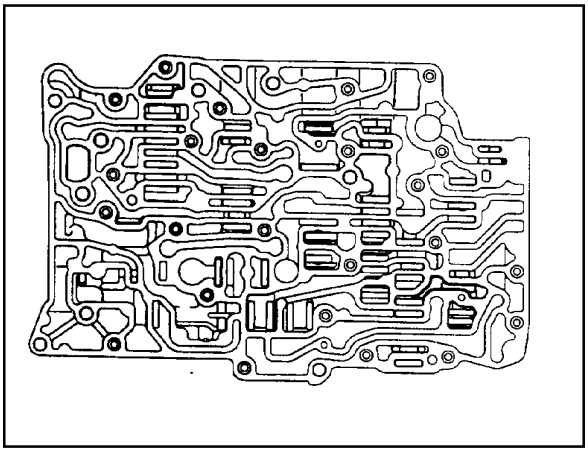

Figure 8.47 - Lower Valve Body

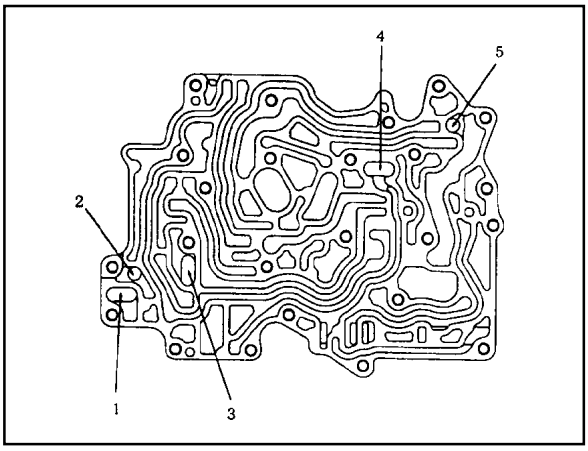

Figure8.48 - Upper Valve Body Showing Check Ball Locations

Downloaded from www.Manualslib.com manuals search engine

6. Install the lo-1st spring, ball check valve and roll pin. Refer to figure 8.49.
7. Install the solenoid 5 damper guide spring, piston and retaining pin. Refer to figure 8.49.

Figure 8.49 - Solenoid 5 and Damper, Lo-1st Check Valve Assemblies

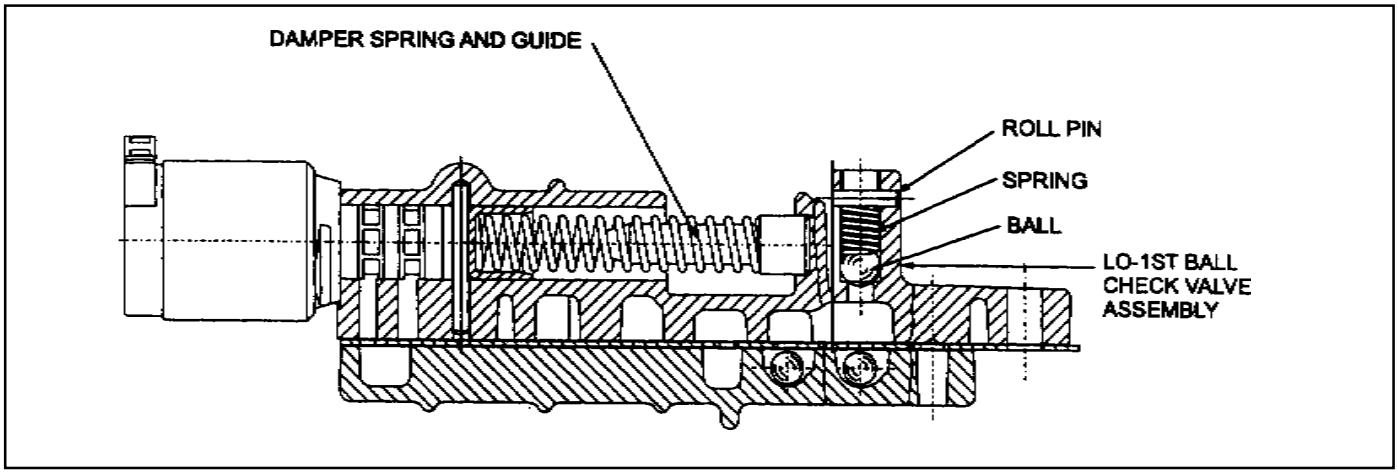

8. Install the 1-2 shift valve, plug and retaining pin. Refer to figure 8.50.

Figure 8.50 - 1-2 Shift Valve

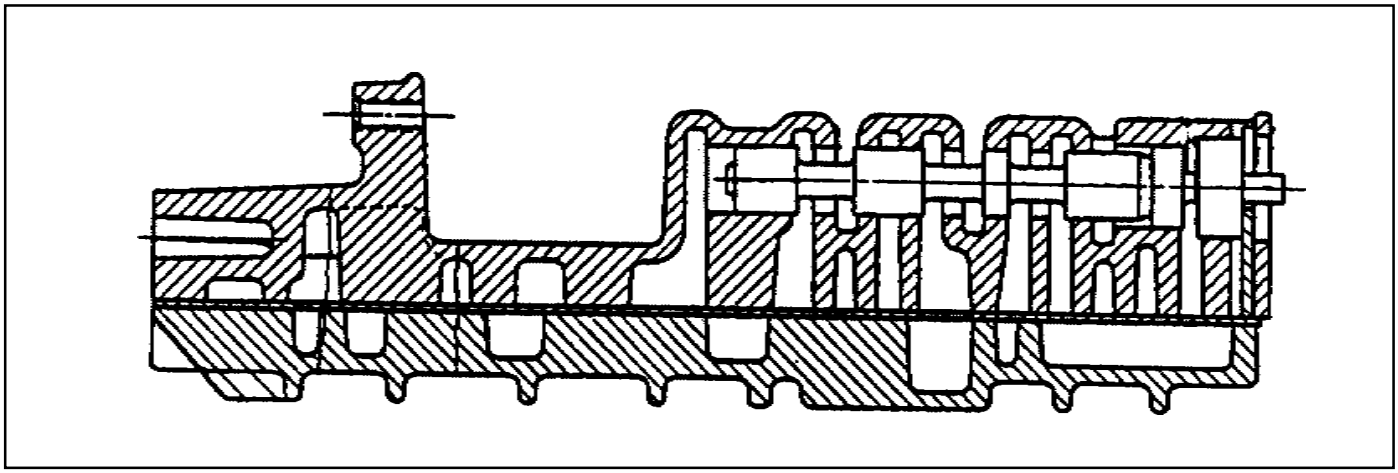

Downloaded from www.Manualslib.com manuals search engine

9. Install the 3-4 shift valve and retaining pin. Refer to figure 8.51.

Figure 8.51 - 3-4 Shift Valve

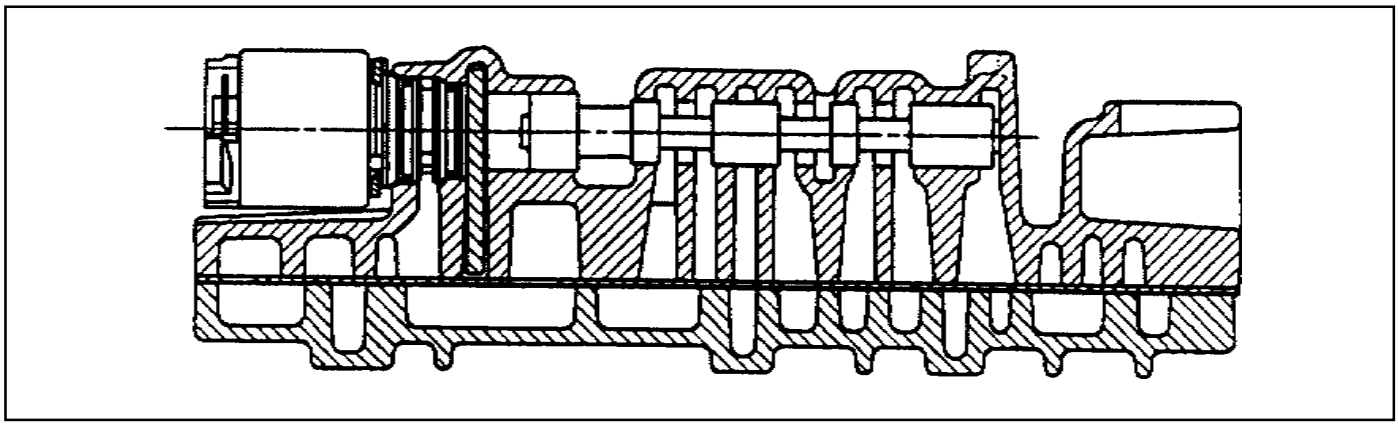

10. Install the 2-3 shift valve and retaining pin. Refer to figure 8.52.

Figure 8.52 - Solenoid 2 and 2-3 Shift Valve

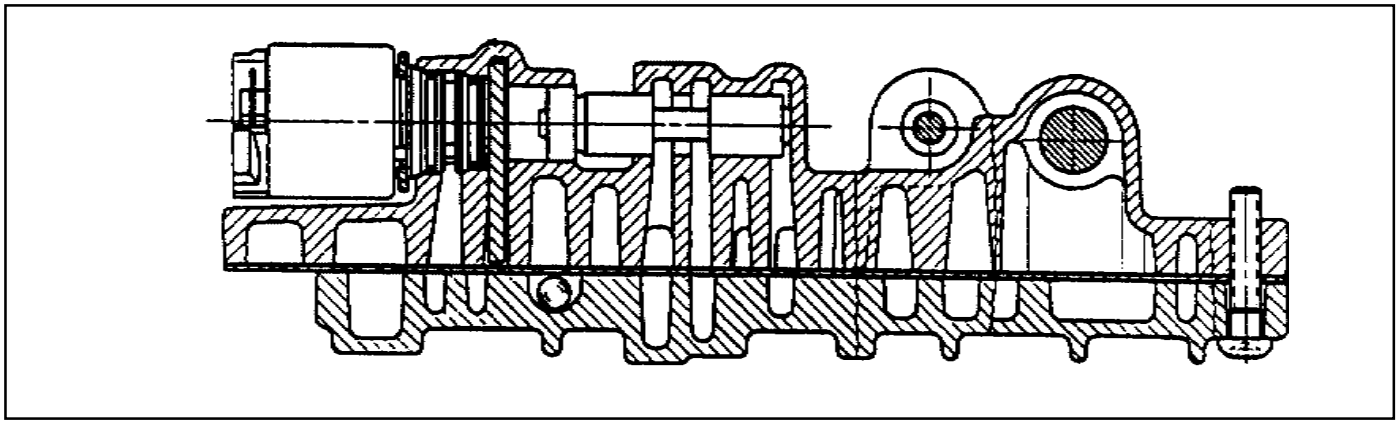

11. Install the 4-3 sequence valve, spring, plug and retaining plate. Refer to figure 8.53.

Figure 8.53 - 4-3 Sequence Valve

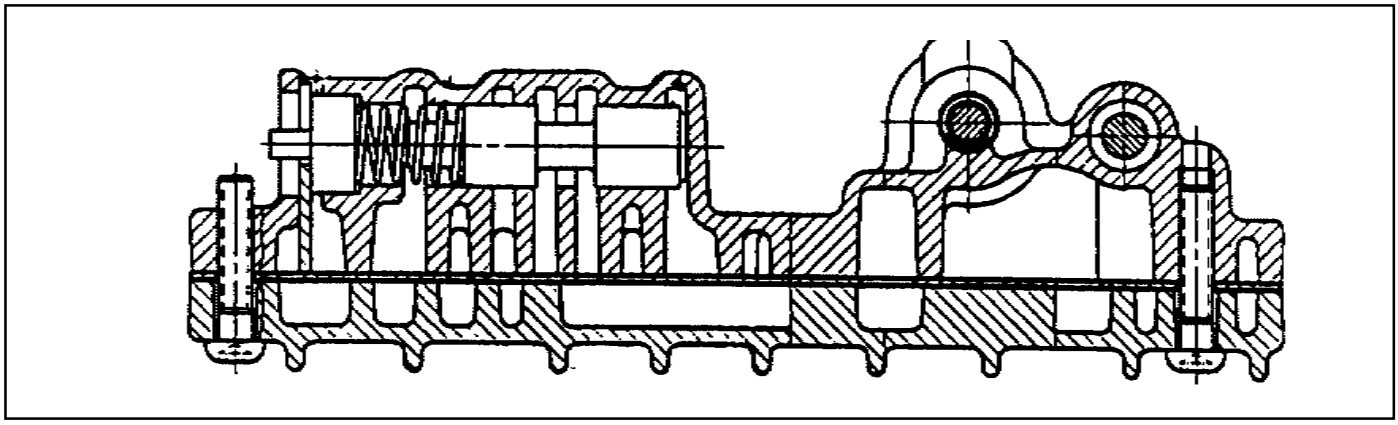

Downloaded from www.Manualslib.com manuals search engine

12. Install the band apply regulator (BAR) valve (refer to figure 8.54), springs, plunger and retainer pin.

Figure 8.54 - Band Apply Regulator Valve and Solenoid 4

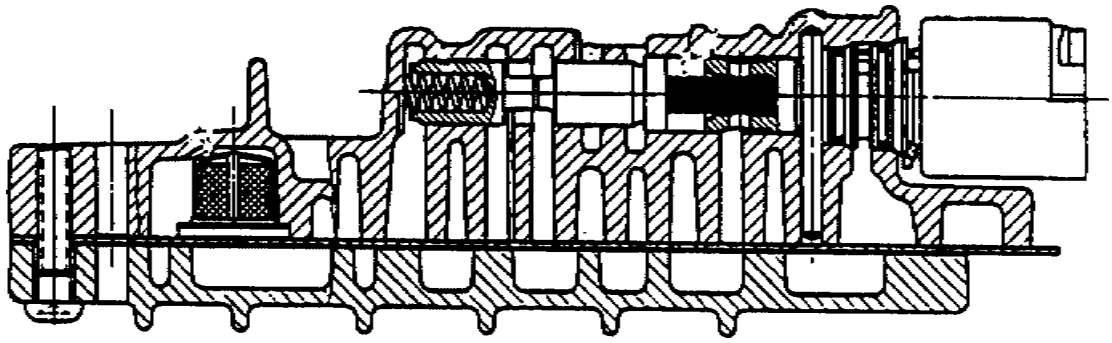

13. Install the clutch apply regulator (CAR) valve (refer to figure 8.55), springs, plunger and retainer pin.

Figure 8.55 - Clutch Apply Regulator Valve and solenoid 3

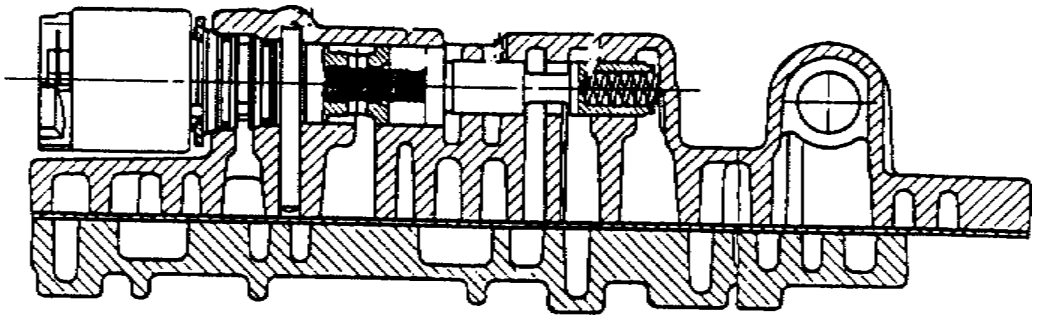

14. Install the solenoid supply valve, spring and retainer plate. Refer to figure 8.56.

Notice

This aluminum valve is easily damaged.

Figure 8.56 - Solenoid Supply Valve and Solenoid 6

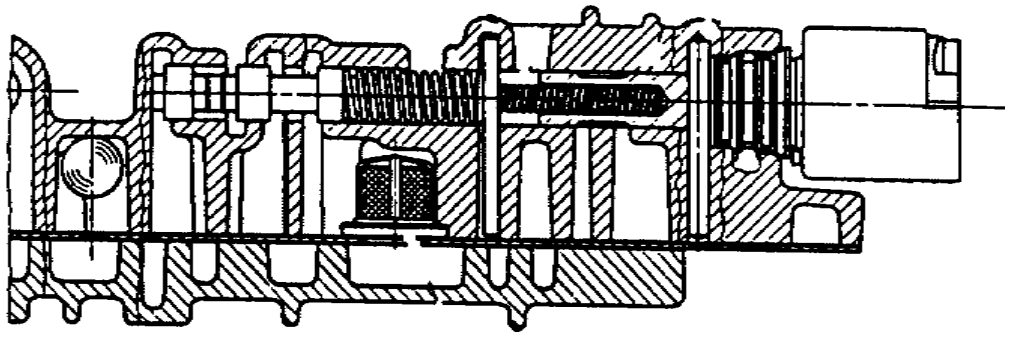

Downloaded from www.Manualslib.com manuals search engine

15. Install solenoid 6 plunger, spring and retaining pin.
16. Position the third feed ball (large nylon) in the valve body and install the solenoid 5 filter and the solenoid 6 filter. Refer to figures 8.5 and 8.56.
17. Check the separator plate for burrs and damage. Repair or replace the separator plate as necessary.
18. Check the upper and lower valve body gaskets for damage. Replace the gaskets as necessary.
19. Install the lower valve body gasket on the lower valve body.
20. Install the reverse lockout valve, spring, plug and retainer plate. Ensure that the valve is correctly oriented. Refer to figure 8.57.

Figure 8.57 - Reverse Lockout Valve

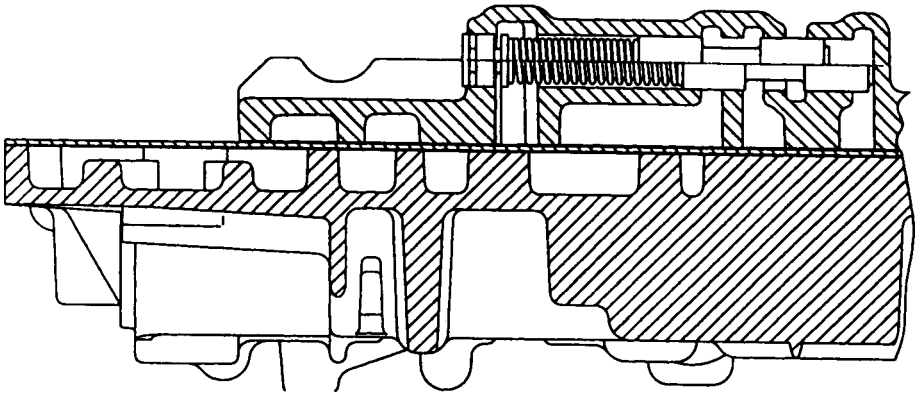

21. Position the five nylon ball checks in the upper valve body. Refer to figure 8.48.
22. Fit the upper valve body gasket. Install the separator plate over the upper valve body.

Downloaded from www.Manualslib.com manuals search engine

23. Holding the separator plate to the upper valve body to prevent the check balls from falling out, install the upper valve body on the lower valve body. Install all screws finger tight then tighten the screws to specification in the prescribed sequence. Refer to figure 8.58.

Figure 8.58 - Tightening Sequence Upper to Lower Valve Body

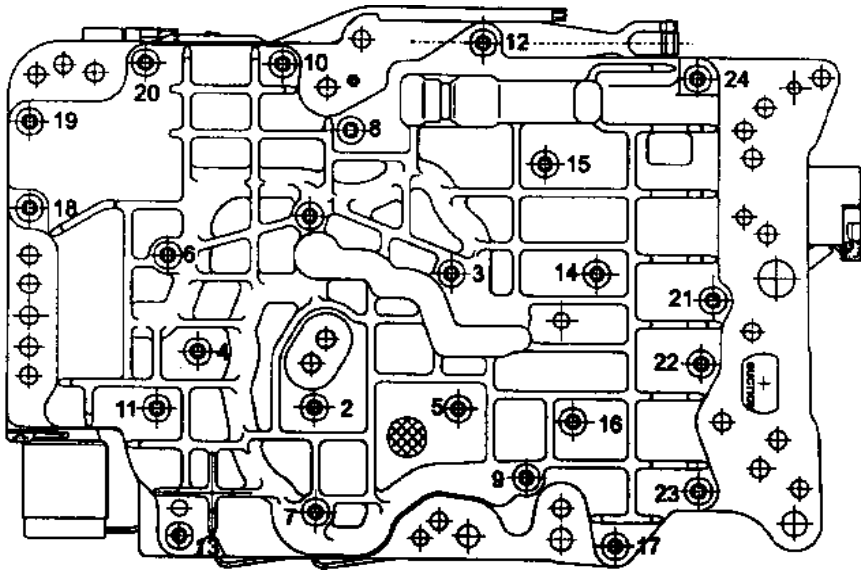

24. Install solenoids 1,2,3,4 and 6. Ensure the solenoid is firmly secured by the retainer and that the screw is tightened to specification.
25. Install solenoid 5. Ensure that the solenoid is pushed firmly into the valve body by the retainer.

    Notice

    The wiring loom ground wire eyelet terminal is secured beneath the solenoid retainer.
26. Install the line pressure relief valve, tapered end first, (refer to figure 8.59), and the spring and disc. Secure with the retaining pin.

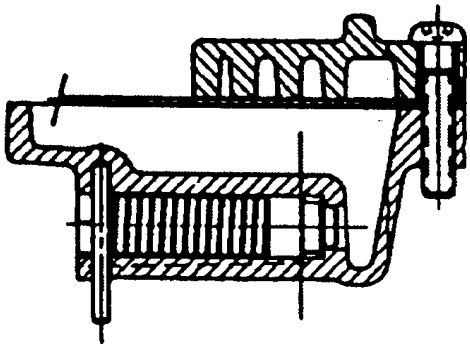

Figure 8.59 - Line Pressure Relief Valve

Downloaded from www.Manualslib.com manuals search engine

27. Install the line pressure plug and tighten to specification. Refer to figure 8.62.

Figure 8.62 - Wiring Installation

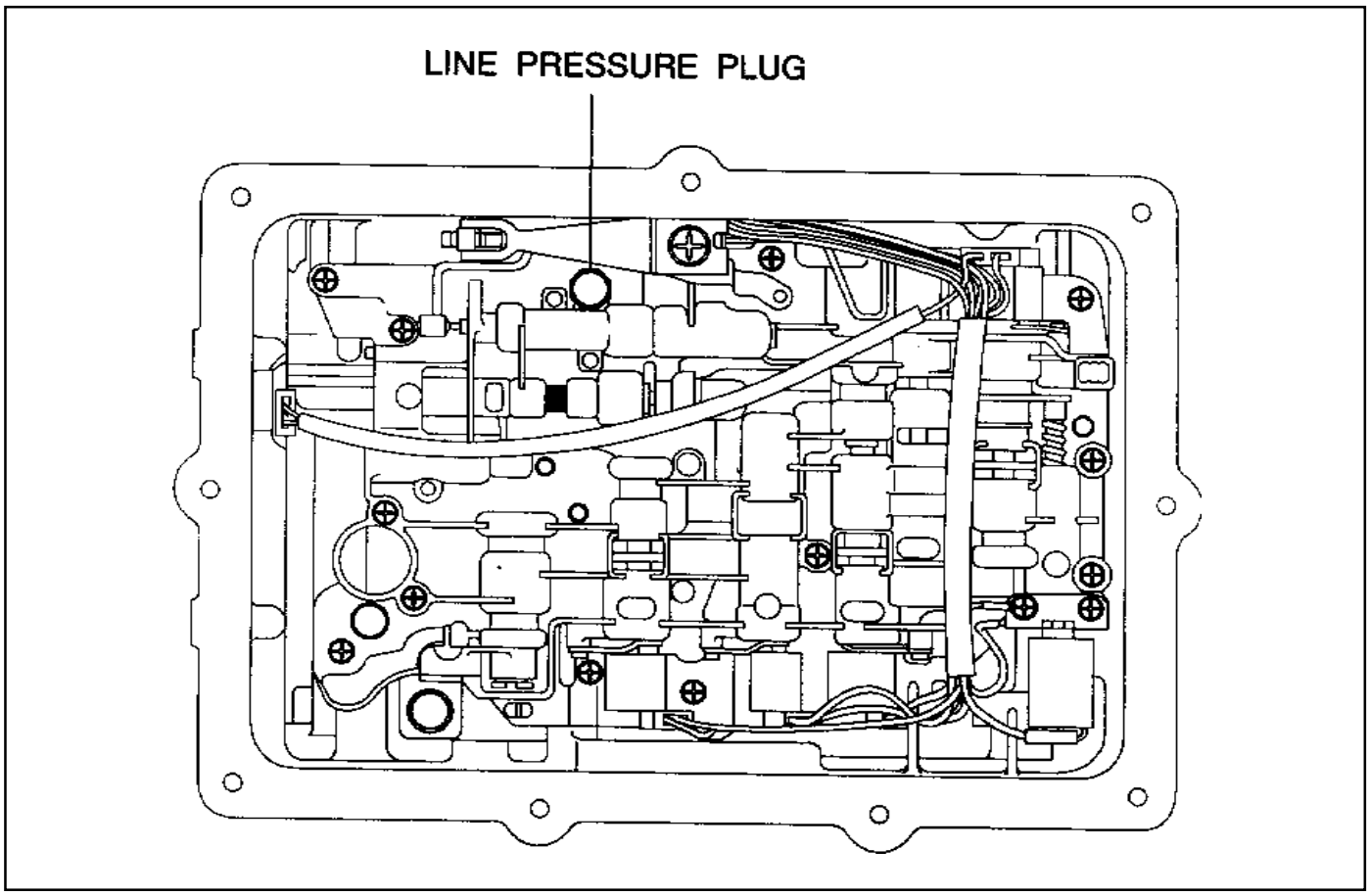

28. Install the detent spring assembly (spring, support plate and screw), ensuring that the screw is tightened to specification. Check the spring for wear or damage.
29. Install the manual shift valve. Refer to figure 8.60.

    Notice

    Be aware that the manual valve will fall out of the valve body.

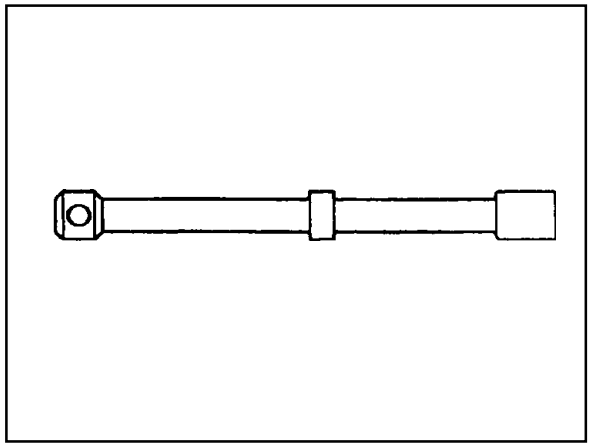

Figure 8.60 - Manual Shift Valve

Downloaded from www.Manualslib.com manuals search engine

30. Align the valve body assembly on the transmission case and install the manual valve lever to manual valve link. Fit the long end of the link to the manual valve first. Install the securing bolts and tighten to specification in the specified sequence. Refer to figure 8.61.

Figure 8.61 - Tightening Sequence Valve Body to Case

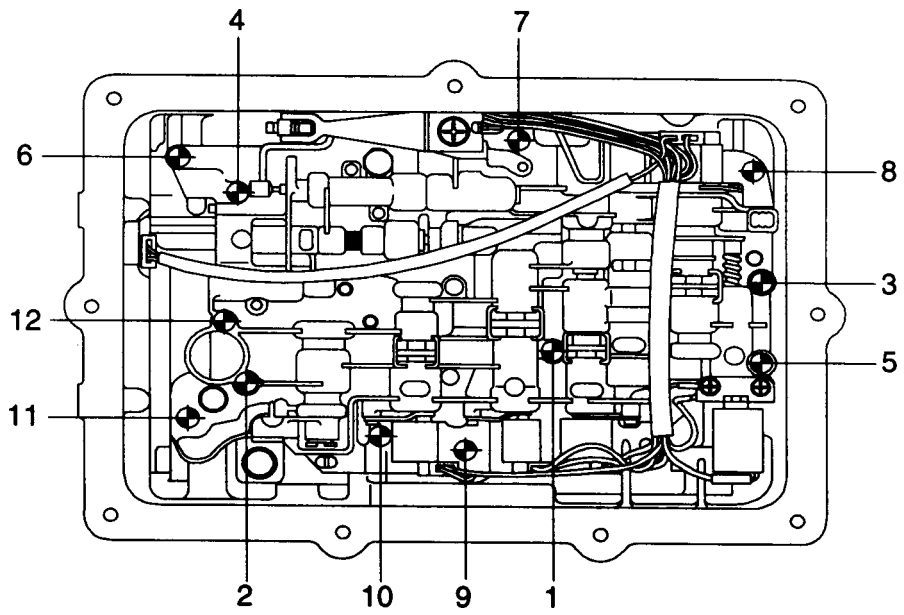

31. Check the alignment of the detent roller and the manual lever quadrant.
32. Connect the solenoid wiring as detailed below:
    - Solenoid 1 - red
    - Solenoid 2 - blue
    - Solenoid 3 - yellow
    - Solenoid 4 - orange
    - Solenoid 5 - green
    - Solenoid 6 - violet (Refer to figure 8.62.)

    Notice

    All hardware must be correctly installed and torqued to specification.

Downloaded from www.Manualslib.com manuals search engine

Oil Filter and Pan Assembly

Notice

1. Replace the filter whenever rebuilding a transmission where a significant amount of mechanical damage has occurred.
2. To aid the assembly of the pan gasket, use a small amount of Vaseline at the pan/gasket interface. This ensures that the gasket remains on the pan ridge. Do not over torque pan bolts as this may distort the pan and cause leaks.
3. Ensure that the internal line pressure plus in the valve body is fitted.

To assemble the oil filter and pan assembly (refer to figures 8.63 and 8.64), proceed as follows.

1. Lubricate the oil filter sealing ring with automatic transmission fluid.
2. Carefully assemble the oil filter to the valve body. The spigot must not lean on one side while being fitted. Refer to figure 8.63.
3. Secure the oil falter assembly with the retainer.
4. Check that the magnet is located in the dimple in the comer of the oil pan.
5. Assemble the gasket on the pan lip. The gasket must be free of any distortion when installed.
6. Fit the oil pan assembly to the transmission case and tighten the securing bolts to specification and sequence (refer to figure 8.65). Do not over torque.

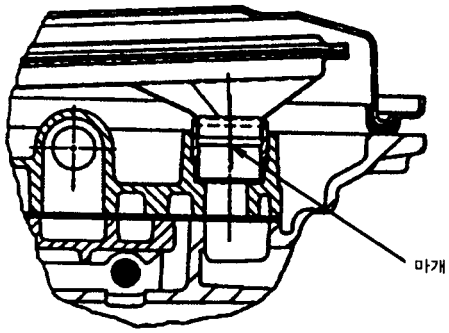

Figure 8.63 - Oil Filter Spigot

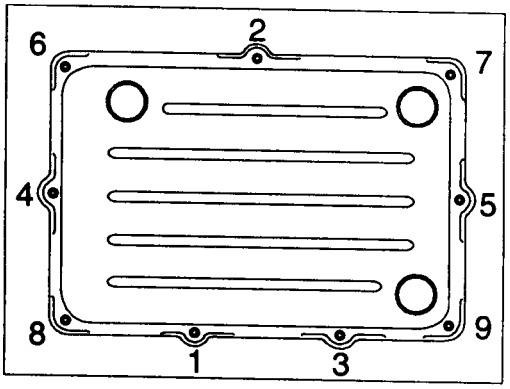

Figure 8.65 - Oil Pan Tightening Sequence

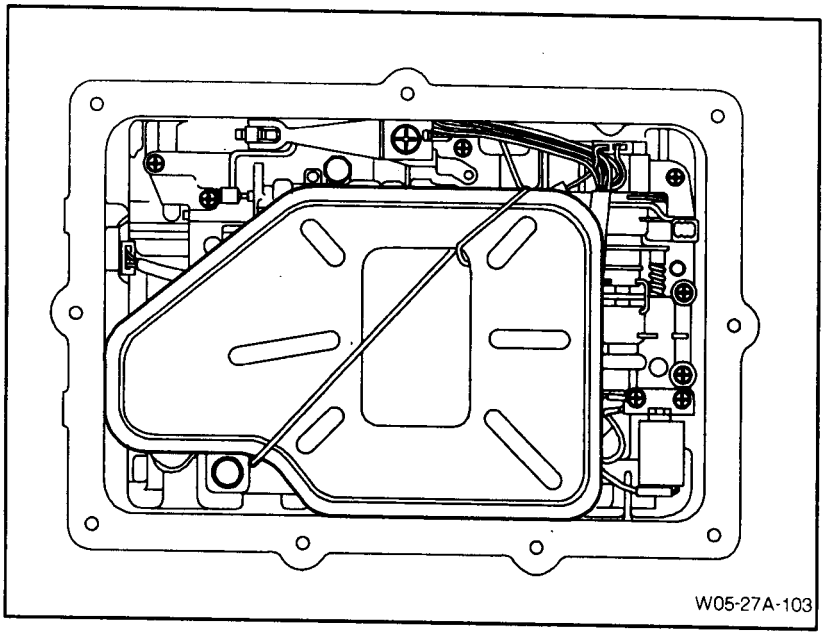

Figure 8.64 - Oil Filter Installation

Downloaded from www.Manualslib.com manuals search engine

Torque Converter and Housing Assembly

To assemble the torque converter and housing assembly, proceed as follows.

1. Locate the torque converter housing on the transmission main case.
2. Install and tighten the securing bolts to specification.

   Notice

   All the hardware must be correctly installed and torqued to specification.
3. Fit the converter ensuring that the tangs are engaged in the pump gear. Ensure that the tangs do not contact the pump seal.

Figure 8.1 - Torque Specifications

Torque Specifications	N●m
Torque converter housing to case	54 - 68
Extension housing to case	54 - 68
Rear servo cover	25 - 35
Pan to case	4 - 6
Inhibitor switch to case	2.3 - 3.4
Cooler connectors	30 - 35
Transmission filler plug	30 - 35
Output flange lock nut (RWD models)	100 - 110
Centre support to case	20 - 27
Cam plate to case (parking pawl)	16 - 22
Valve body to case	8 - 13
Upper valve body to lower valve body	11 - 16
ON/OFF solenoid retainers	8 - 12
Variable pressure solenoid retainer	8 - 12
Line pressure plug	4 - 7
Detent spring	20 - 22
Pump cover to case	24 - 34
Pump cover plate to pump cover	13 - 16
Pump to pump adaptor	24 - 27
Pump cover plate to crescent	13 - 16
Adaptor to case	25 - 35

Downloaded from www.Manualslib.com manuals search engine

FRONT AND REAR BAND ADJUSTMENT

Front Band Setting Procedure

To set the front band, proceed as follows.

1. Measure the projection of the front servo push rod from the transmission case. Refer to figure 8.66, dimension A.
   a. Apply air at 650/700 kPa to the front servo apply area (B1 outer). (Refer to figure 8.67.)
   b. Measure the travel of the push rod and subtract 3 mm to find the shim size required.
   c. Release the air.

   Notice

   A minimum of one shim is required at all times - minimum shim size is 1 mm. The thicknesses of available shims are listed in table 8.2.
2. Fit the selected shim(s) to the shank of the anchor strut as follows:
   a. Inspect the shim(s) for damage, wear or corrosion. Replace as necessary.
   b. The shim(s) are to be installed between the case abutment face and the anchor strut flange. Refer to figure 8.66.
   c. The shim(s) are to be fitted by hand and under no circumstances to be hammered or forced.
   d. Shim(s) are to be pressed on by hand until an audible click is heard. The click indicates that the shim is clipped home correctly.
3. Re-check that the push rod travel is 3 mm ± 0.25 mm.

Figure 8.66 - Front Band Settings

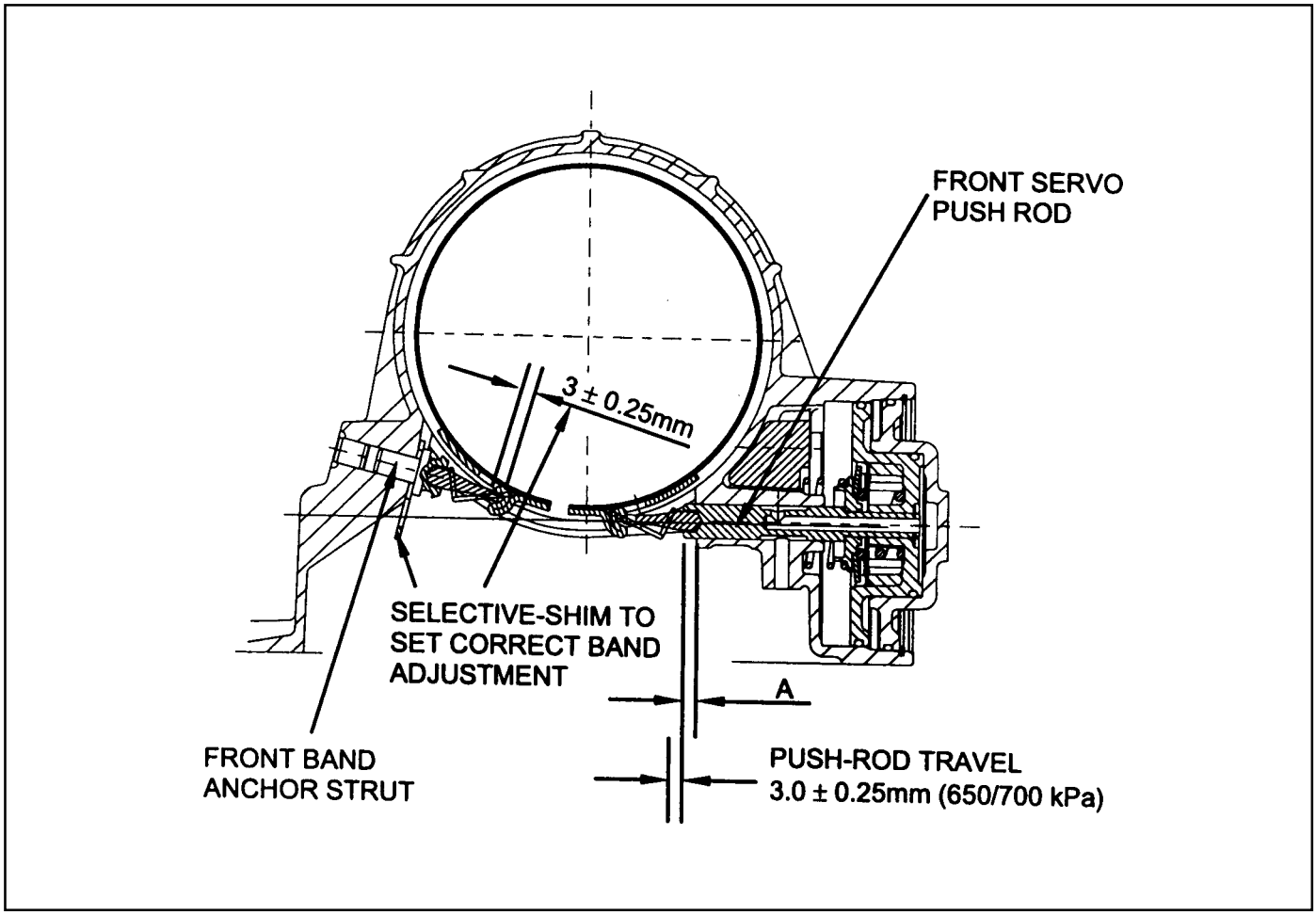

Downloaded from www.Manualslib.com manuals search engine

Rear Band Setting Procedure

To set the rear band, proceed as follows.

1. Measure distance ‘A’ from the rear servo piston to the inner face of the transmission case using vernier calipers. Refer to figure 8.68.
   a. Apply air at 650/700 kPa to the rear servo apply area (B2 outer). Refer to figure 8.67.
   b. Measure the travel of the piston, subtract 3.75 mm and divide the remainder by 2.5 to find shim size.
   c. Release the air.

      Notice

      A minimum of one shim is required at all times - minimum shim size is 1 mm. The thickness of available shims are listed in table 8.2.
2. Fit the selected shim(s) to the shank of the anchor strut as follows.
   a. Inspect the shim(s) for damage, wear or corrosion and replace as necessary. The shim(s) are to be installed between the case abutment face and the anchor strut flange. Refer to figure 8.68.
   c. The shim(s) are to be fitted by hand and under no circumstances to be hammered or forced.
   d. The shim(5) are to be pressed on by hand until an audible click is heard. The click indicates that the shim is clipped home correctly.
3. Re-check that the piston travel is 3.75 mm ± 0.625 mm.

Figure 8.68 - Rear Band Settings

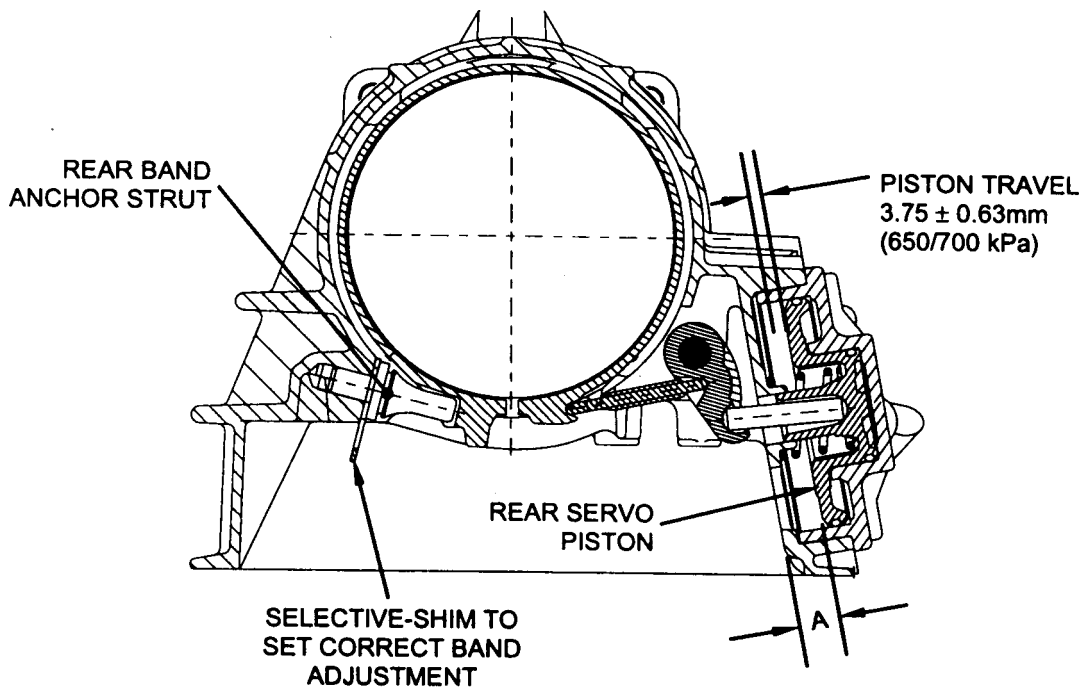

Downloaded from www.Manualslib.com manuals search engine

Table 8.2 - Thickness of Available Shims

Thickness	Part Number	Thickness	Part Number
0.95/1.05	0574-037017	1.93/2.07	0574-037021
1.15/1.25	0574-037018	2.12/2.28	0574-037022
1.44/1.56	0574-037019	2.42/2.58	0574-037023
1.73/1.87	0574-037020	2.61/2.79	0574-037024

Figure 8.68 - Thickness of Available Shims

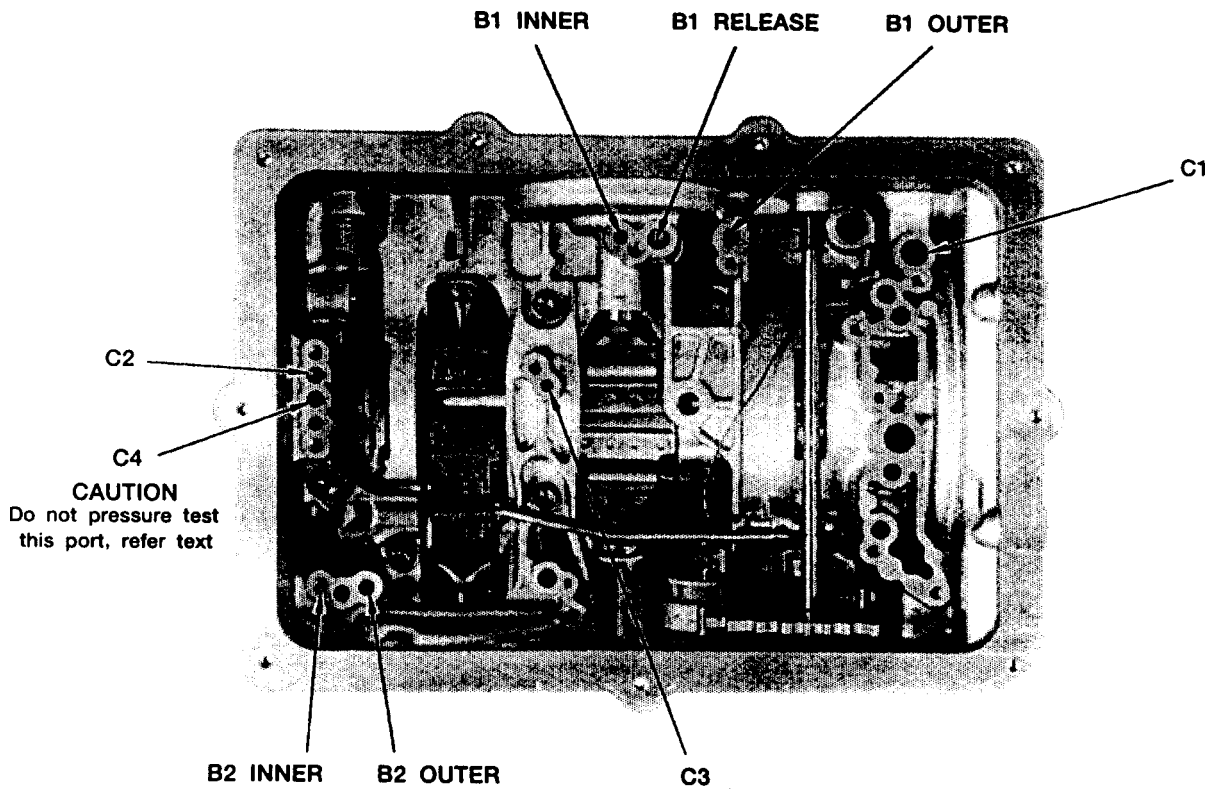

Downloaded from www.Manualslib.com manuals search engine

SECTION 5B

MANUAL TRANSMISSION

TABLE OF CONTENTS

Specifications 5B-1
General Specifications 5B-1
Fastener Tightening Specifications 5B-2
External View 5B-3
Gear Train 5B-3
Power Flow 5B-4
Diagnosis 5B-5
Will not Shift (Control Lever Moves) 5B-5
Hard Shift or Control Lever Will not Move Into Gear 5B-5
Gears Crash When Shifting 5B-5
Transmission Jumps Out 5B-6
Transmission Locked in One Gear 5B-6
Transmission Noise 5B-6
Transmission Leakage 5B-7
Diagnosis Table 5B-8
Component Locator 5B-9
Maintenance and Repair 5B-11
On-Vehicle Service 5B-11
Shift Control Cable 5B-11
Transmission 5B-14
Unit Repair 5B-17
Major Unit 5B-17
Main Shaft 5B-27
Input Shaft 5B-32
Counter Shaft 5B-34
Extension Housing 5B-35
Shift Cover 5B-36
Inspection of Components 5B-40
Pre-Installation Checks 5B-45

SPECIFICATIONS

GENERAL SPECIFICATIONS

Application		Description
Model		T5WC
Type		Floor Change
Gear Ratio	1st	3.97 : 1
	2nd	2.34 : 1
	3rd	1.46 : 1
	4th	1.00 : 1
	5th	0.85 : 1
	Reverse	3.71 : 1
Oil	Specification	ATF DEXRON II / III
	Capacity(litre)	3.4 L
	Change Interval	Check : Every 15,000km, Replace : Every 50,000km
Weight (Dry)		33kg

Notice

Add LUBRIZOL (280cc) in oil after overhauling.

Downloaded from www.Manualslib.com manuals search engine

FASTENER TIGHTENING SPECIFICATIONS

Application	N●m
Transmission	
Oil Filler Plug	25
Transmission Mounting Bolt (Housing)	77 - 87
Oil Drain Plug	25
Front Propeller Shaft (T/C)	81 - 89
Rear Propeller Shaft (T/C)	70 - 90
Cross Member Bolt (Center)	21 - 35
Cross Member Bolt (Side)	62 - 93
Control Cable	
Shift Lever Bolt	20 - 30

Downloaded from www.Manualslib.com manuals search engine

EXTERNAL VIEW

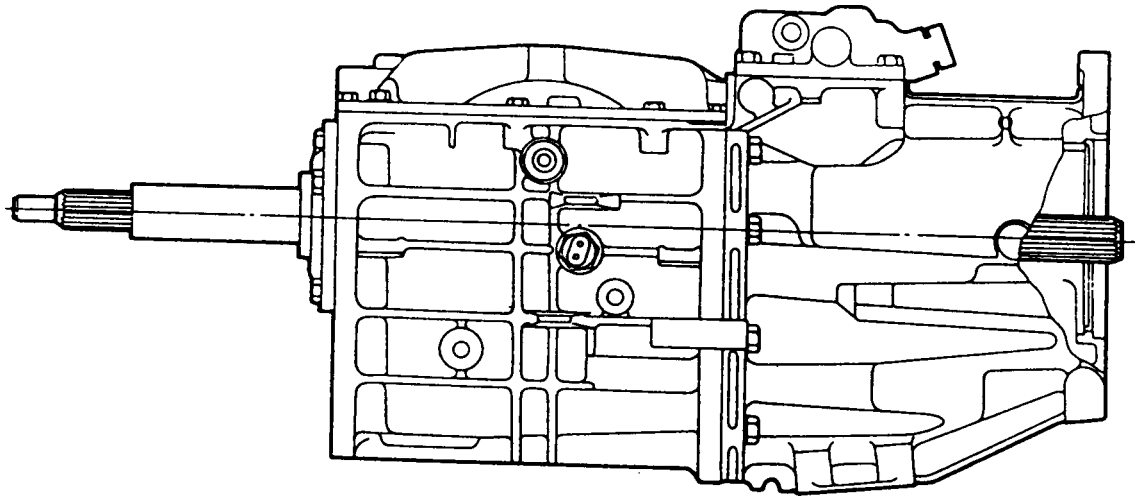

GEAR TRAIN

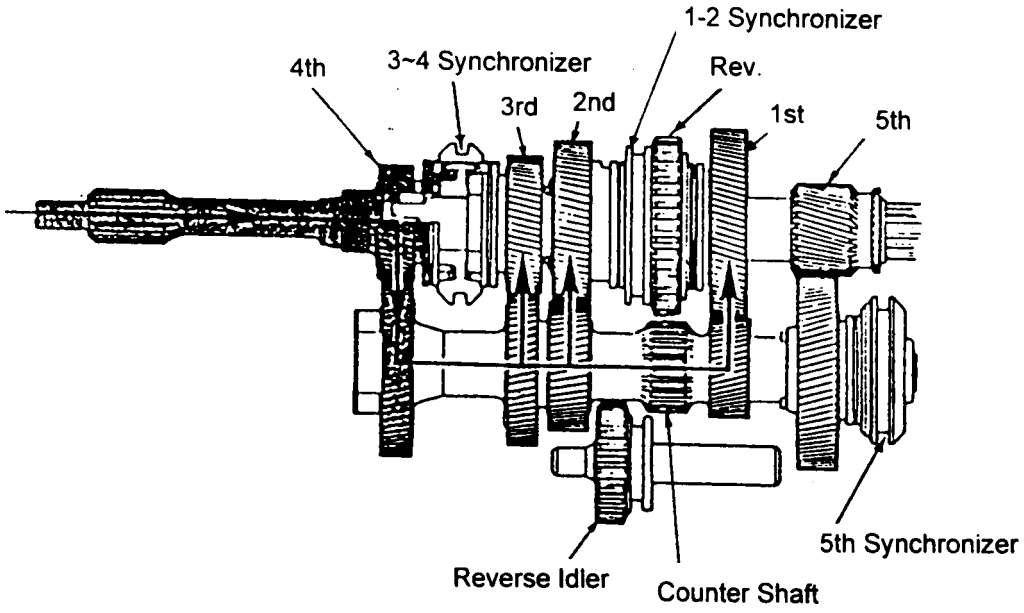

Downloaded from www.Manualslib.com manuals search engine

POWER FLOW

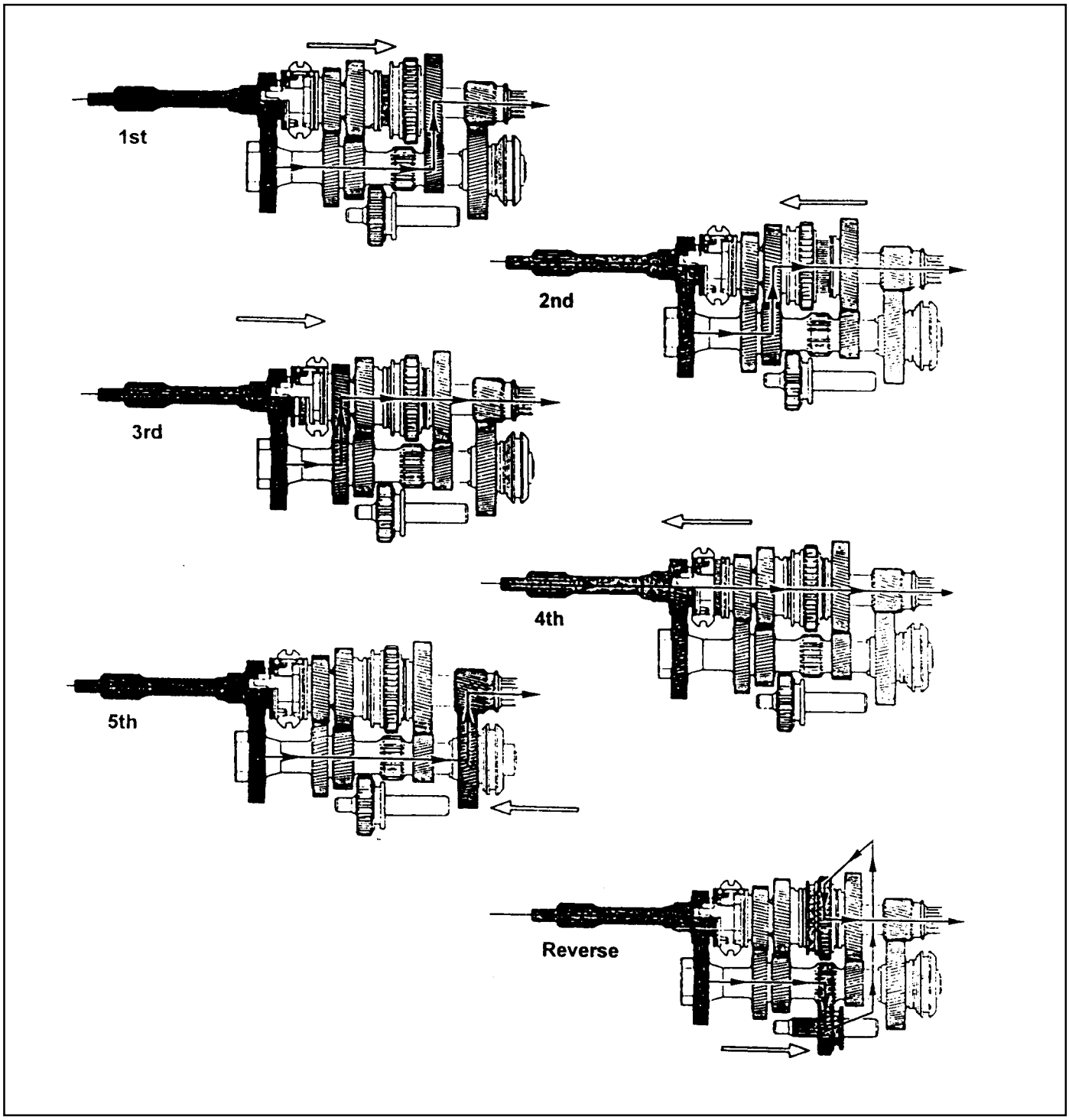

Downloaded from www.Manualslib.com manuals search engine

DIAGNOSIS

WILL NOT SHIFT(CONTROL LEVER MOVES)

Check	Action
Control lever assembly broken or damaged.	Replace control lever and housing assembly.
Damaged offset lever, shift fork, selector place or selector arm.	Remove extension, adapter or case cover. Check or replace damaged parts.

HARD SHIFT OR CONTROL LEVER WILL NOT MOVE INTO GEAR

Check	Action
Clutch not releasing.	Adjust or replace clutch.
Improper or low transmission oil.	Add or replace with specified oil.
Shift or shift rail binding.	Remove extension, adapter or case cover. Check or replace damaged parts.
Binding of sliding synchronizers or gears.	Remove extension, adapter or case cover. Check synchronizers and gears and replace damaged parts.
If reverse only, faulty backup switch.	Check or replace backup switch.
Worn or damaged flywheel pilot bushing.	Replace pilot bushing.

GEARS CRASH WHEN SHIFTING

Check	Action
Engine idle speed too high.	Adjust idle speed to specified speed.
Damaged or faulty clutch.	Adjust or replace clutch.
Pilot bearing between input shaft and output shaft binding.	Replace or check roller bearings.
Damaged synchronizer.	Check or replace synchronizer parts.
Bell housing misaligned.	Align bell housing and bore.
Damaged gear(s).	Check or replace gear(s).
Worn or damaged flywheel pilot bushing.	Replace pilot bushing.

Downloaded from www.Manualslib.com manuals search engine

TRANSMISSION JUMPS OUT

Check	Action
Loosened transmission or flywheel housing bolts, improper alignment.	Tighten bolts to specified value. Realign if necessary.
Synchronizer damaged or excessively worn.	Check or replace synchronizer parts.
Blocking ring damaged, worn index slots or friction surfaces worn or damaged.	Check or replace blocking ring.
Excessive countershaft end play.	Check worn or damaged parts. Adjust shim thickness using roller bearings if necessary.
Worn or damaged fork due to loosened shaft, rail or shifting fork.	Check for wear or damaged. Replace worn or damaged parts.

TRANSMISSION LOCKED IN ONE GEAR

Check	Action
Fork or offset lever loose on shaft or rail.	Replace extension, adapter or case cover. Check or replace loose parts on shaft or rail. Replace roll pin(s).
Worn or damaged forks, offset lever, shaft or rail.	Remove extension, adapter or case cover. Check for wear or damaged. Replace damaged parts.
Worn or damaged synchronizer.	Check worn or damaged synchronizer parts and replace if necessary.
Worn or damaged gears.	Check worn or damaged gears and replace if necessary.

TRANSMISSION NOISE

Check	Action
Improper or low transmission oil.	Add or drain and replace with proper oil.
Loose bolts or other attaching parts.	Tighten as specified.
Improper flywheel housing to engine crankshaft alignment.	Realign correctly.
Noisy transmission bearing.	Check bearings, bearing rollers and parts for wear or damage. Replace if necessary.
Noisy gears.	Check for worn or damaged gears (including speedometer gear). Replace if necessary.

Downloaded from www.Manualslib.com manuals search engine

TRANSMISSION LEAKAGE

Check	Action
Leakage from transmission.	Clean all exposed surfaces, then check for leaks.
Vent or breather clogged.	Clean or replace vent or breather.
Too much oil.	Check oil level.
Loose bolts at sealing faces.	Tighten as specified.
Improperly applied sealant.	Clean leaking surfaces. Reapply sealant.
Worn or damaged oil seal.	Replace oil seal.

Downloaded from www.Manualslib.com manuals search engine

DIAGNOSIS TABLE

Condition														
1 Shift Hop-out														
	2 Shift Gear Crash													
		3 Shift Block-out												
			4 Hard Shift											
				5 Noise in Reverse Gear										
					6 Noise in 5th Gear									
						7 Noise in 4th Gear								
							8 Noise in 3rd Gear							
								9 Noise in 2nd Gear						
									10 Noise in 1st Gear					
										11 Noise in All Speeds				
											12 Leak at Transmission Rear Part			
												13 Leak at Transmission Center Part		
													14 Leak at Transmission Front Part	
														Possible Faulty Part
												●	●	Transmission Case
											●	●		Extension Housing
●			●									●	●	Shift Cover / Shift Shift
●			●											Shift Control Lever
			●										●	Input Bearing Retainer
										●				Input Gear Set
●							●			●				3rd Speed Gear Set
●								●		●				2nd Speed Gear Set
				●										Reverse Speed Gear Set
●									●	●				1st Speed Gear Set
●										●				5th Speed Gear Set
			●							●				Clutch Housing and Release Derive
			●							●				Crankshaft Pilot Bushing and Release Bearing
										●				Input Bearing
										●				Main Shaft Input Bearing
●										●				Main Shaft Thrust Bearing
							●			●				3rd Speed Gear Bearing
								●		●				2nd Speed Gear Bearing
									●	●				1st Speed Gear Bearing
				●										Reverse Idler Gear Bushing
										●				Counter Shaft Front Bearing
										●				Counter Shaft Rear Bearing
●		●								●				Counter Shaft Thrust Bearing
					●					●				5th Speed Drive Gear Bearing
											●			Slip Yoke Bushing
											●			Slip Yoke Seal
											●			Speedometer Drive / Driven Gears
											●			Speedometer Driven Gear Housing
													●	Input Shaft Seal
●	●	●						●	●	●				1 - 2 Synchronizer Assembly
●	●	●				●	●			●				3 - 4 Synchronizer Assembly
●	●	●				●				●				5th Synchronizer Assembly

Downloaded from www.Manualslib.com manuals search engine

COMPONENT LOCATOR

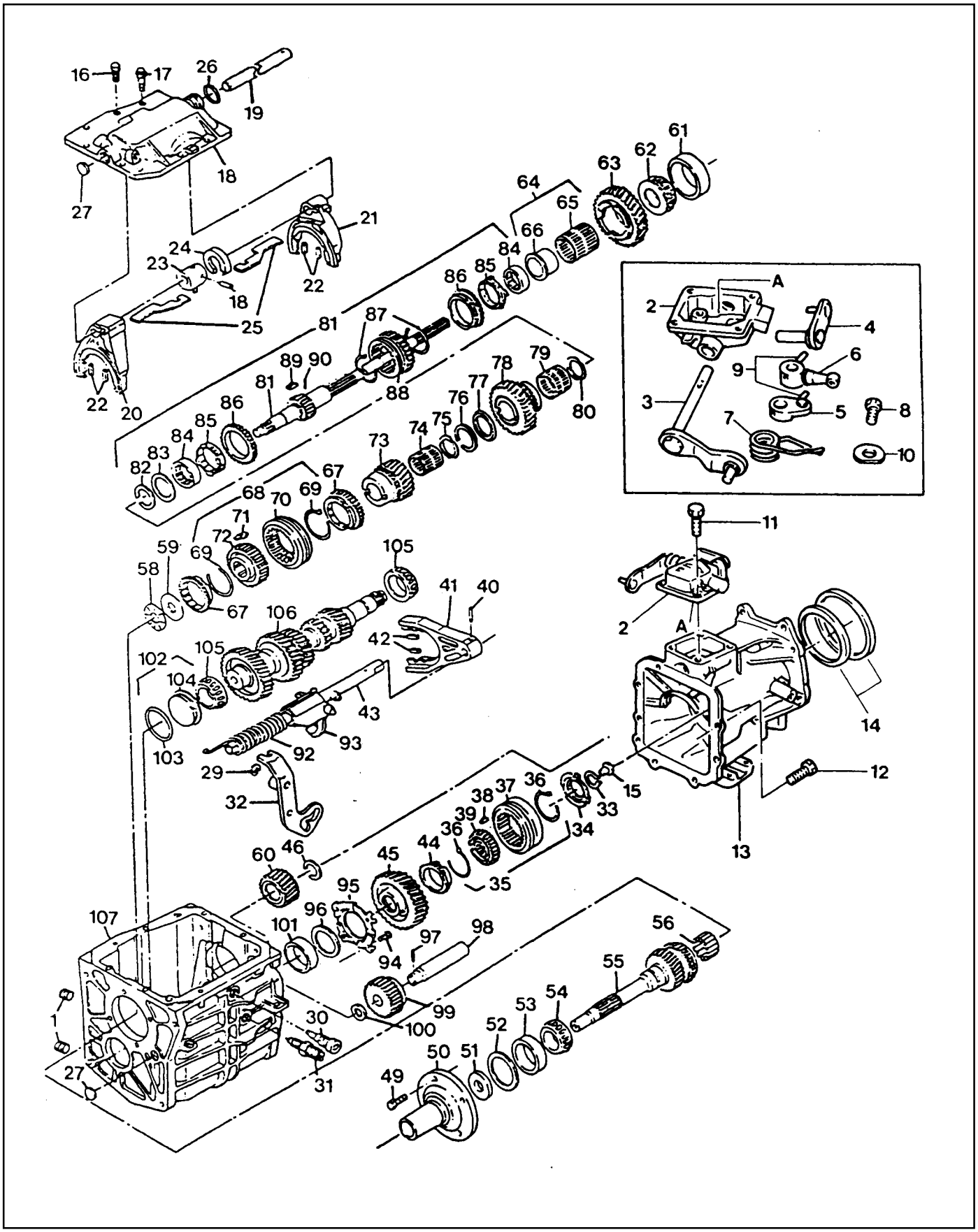

Downloaded from www.Manualslib.com manuals search engine

1 Filler/Drain Plug
2 Shift Mechanism Cover
3 Shift Shaft Lever
4 Outer Select Lever
5 Inner Select Lever
6 Offset Control Lever
7 Bias Spring
8 Bolt
9 Pin
10 Washer
11 Bolt
12 Bolt
13 Extension and Plate Assembly
14 Oil Seal
15 Oiling Funnel
16 Bolt
17 Alignment Bolt
18 Selector Arm Pin
19 Shift Shaft
20 3/4 Shift Fork
21 1/2 Shift Fork
22 Insert
23 Selector Arm Assembly
24 Interlock Plate Assembly
25 Selector Plate
26 O-ring
27 Plug
28 Case Cover
29 Retaining Ring
30 Pivot Pin
31 Back-up Switch
32 5/Reverse Shift Lever
33 Snap Ring
34 5th Synchronizer Retainer
35 5th Synchronizer Assembly
36 Synchronizer Spring
37 Synchronizer Assembly
38 Insert
39 Synchronizer Hub
40 Roll Pin
41 5th Shift Fork
42 Insert
43 Shift Rail Assembly
44 Blocking Ring
45 5th Speed Drive Gear
46 Snap Ring
47 Speed Gear
48 Speed Gear Clip
49 Bolt
50 Input Bearing Retainer
51 Oil Seal
52 Shim
53 Bearing Cup
54 Bearing Cone
55 Input Shaft
56 A. Roller Bearing
56 B. Bearing Assembly
57 Spacer
58 Thrust Bearing
59 Thrust Bearing Race
60 5th Speed Driven Gear
61 Bearing Cup
62 Bearing Cone
63 1st Speed Gear
64 Bearing Sleeve Assembly
65 A. Bearing
65 B. Bearing
65 C. Spacer
66 Sleeve
67 Blocking Ring Assembly
68 3/4 synchronizer Assembly
69 Synchronizer Spring
70 Synchronizer Sleeve
71 Insert
72 Synchronizer Sleeve
73 3rd Speed Gear
74 Needle Bearing
75 Spacer
76 Snap Ring
77 Thrust Washer
78 2nd Speed Gear
79 2nd Speed Gear Bearing
80 Spacer
81 Output Shaft Assembly
82 Retaining Ring
83 Thrust Washer
84 Inner Cone
85 Outer Cone Race
86 1/2 Blocking Ring
87 Spring
88 Reverse Sliding Gear
89 Insert
90 Pin
91 Shaft and Hub Assembly
92 Spring
93 Pin Fork and Reverse Roller Assembly
94 Bolt
95 Rear Retainer
96 Shim
97 Roll Pin
98 Reverse Idler Shaft
99 Reverse Idler Gear Assembly
100 O-ring
101 Bearing Cup
102 Bearing Cup Assembly
103 O-ring
104 Bearing Cup
105 Bearing Cone
106 Counter Shaft Gear
107 Transmission Case Assembly

Downloaded from www.Manualslib.com manuals search engine

MAINTENANCE AND REPAIR

ON-VEHICLE SERVICE

SHIFT CONTROL CABLE

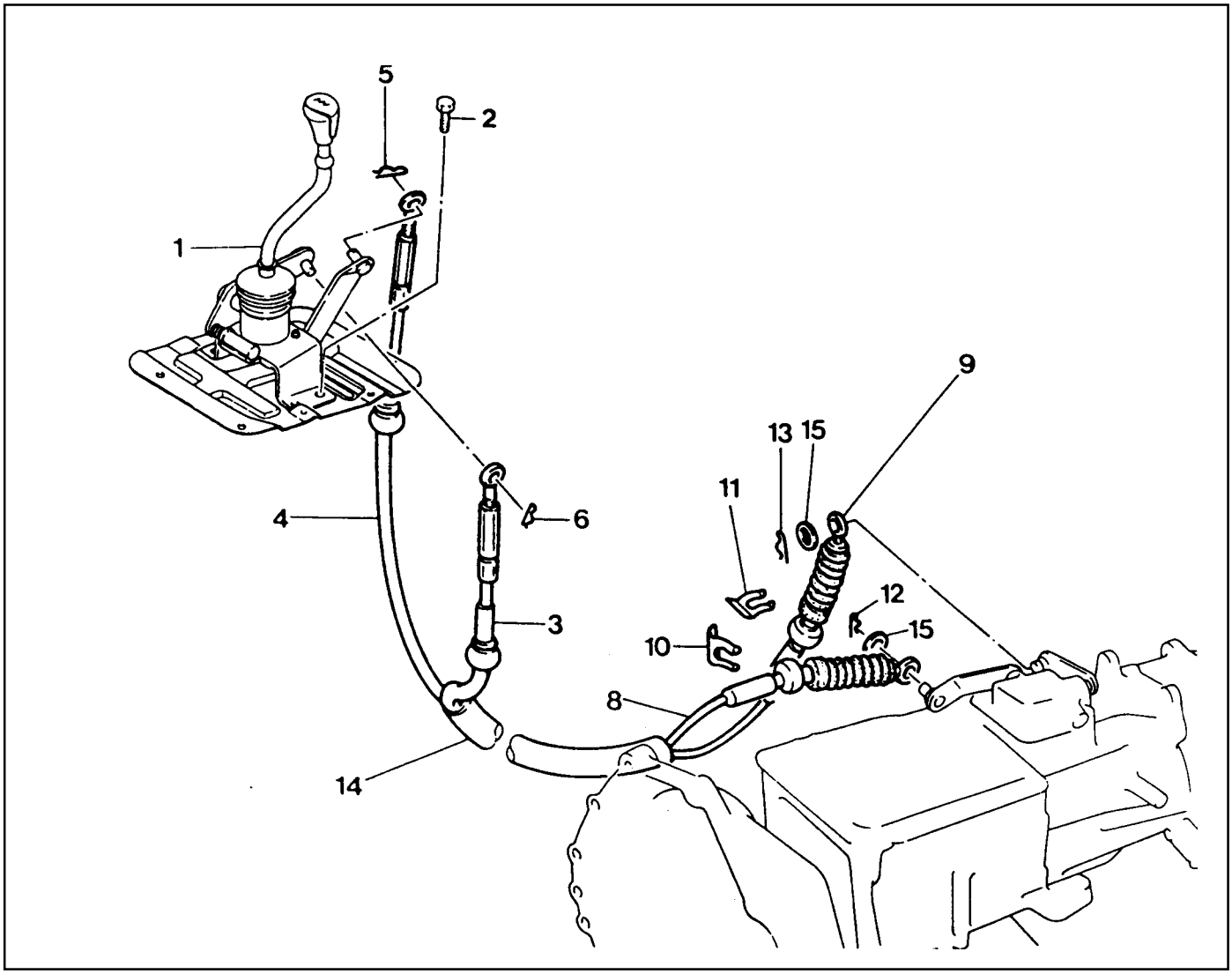

1 Shift Lever Assembly
2 Bolt ..... 20-30 Nm
3 Select Cable
4 Shift Cable
5 Snap Pin
6 Snap Pin
7 Transmission
8 Shift Cable
9 Select Cable
10 Clip
11 Clip
12 Snap Pin
13 Snap Pin
14 Protector
15 Washer

Downloaded from www.Manualslib.com manuals search engine

Removal & Installation Procedure

1. Position the shift lever in neutral and remove the knob.

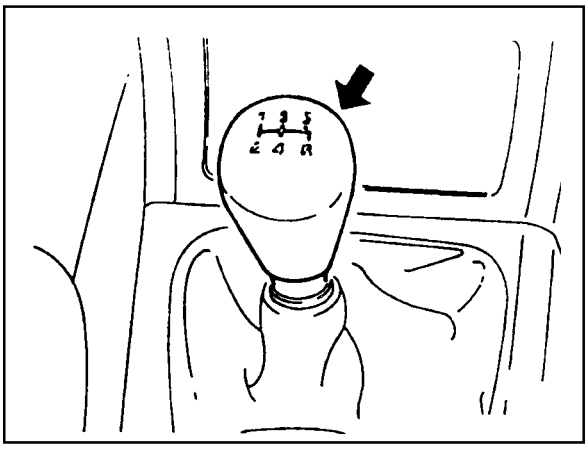

2. Remove the screw from the console box side and remove the shift lever cover.

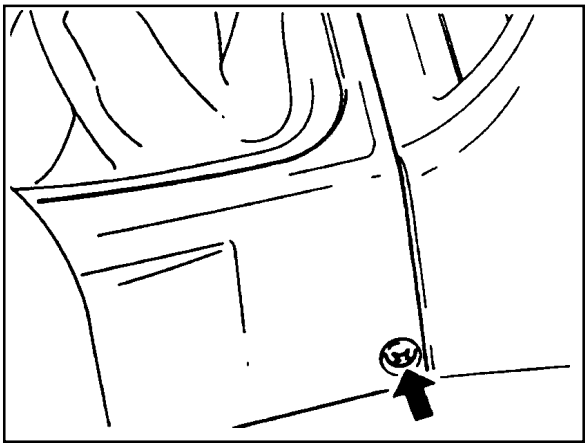

3. Disconnect the cables by removing the snap pins from the control cable connections to the select lever and shift lever.
4. Remove the shift lever an cable mounting snap pin and

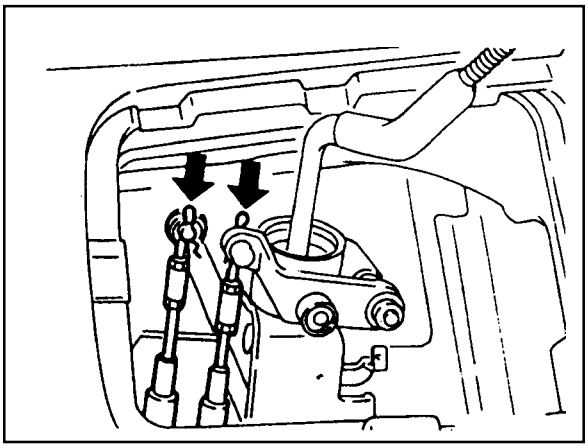

washer of the select lever.

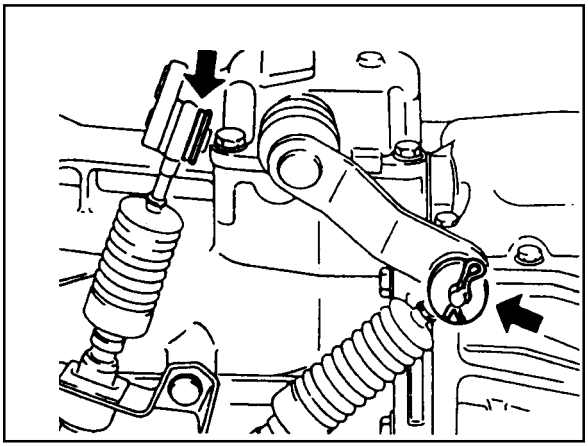

Downloaded from www.Manualslib.com manuals search engine

5. Pull out the clip from the bracket and remove the shift cable and select cable.
6. Installation is reverse order of the removal.

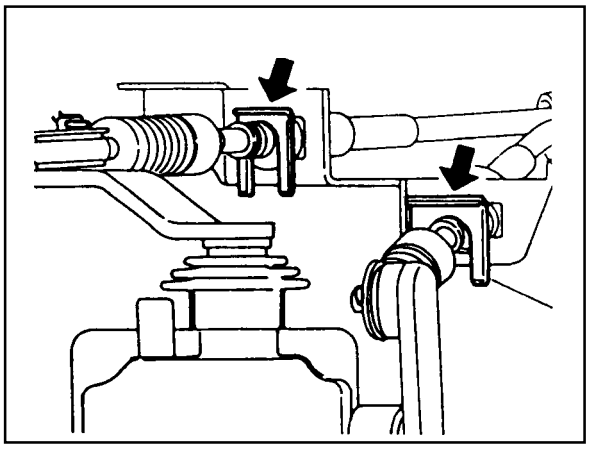

Inspection Procedure

1. The shift lever should be positioned in neutral.
2. Apply liquid gasket on the cable contact surface.
3. Keep 130 mm between the center of the cable end-eye and floor.

Standard	130 mm

Notice

If necessary, adjust the adjust nut.

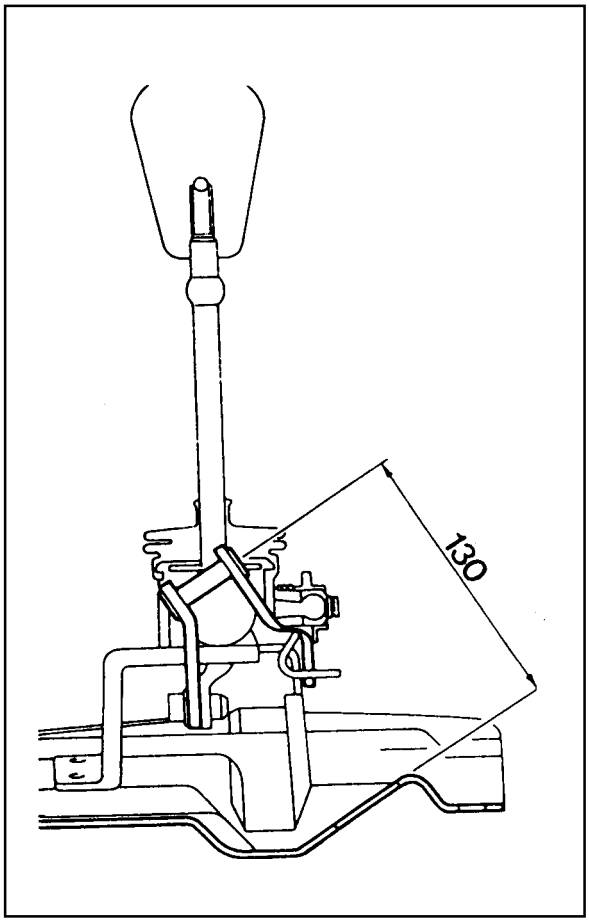

Downloaded from www.Manualslib.com manuals search engine

TRANSMISSION

Preceding Work : Removal of the shift control cable

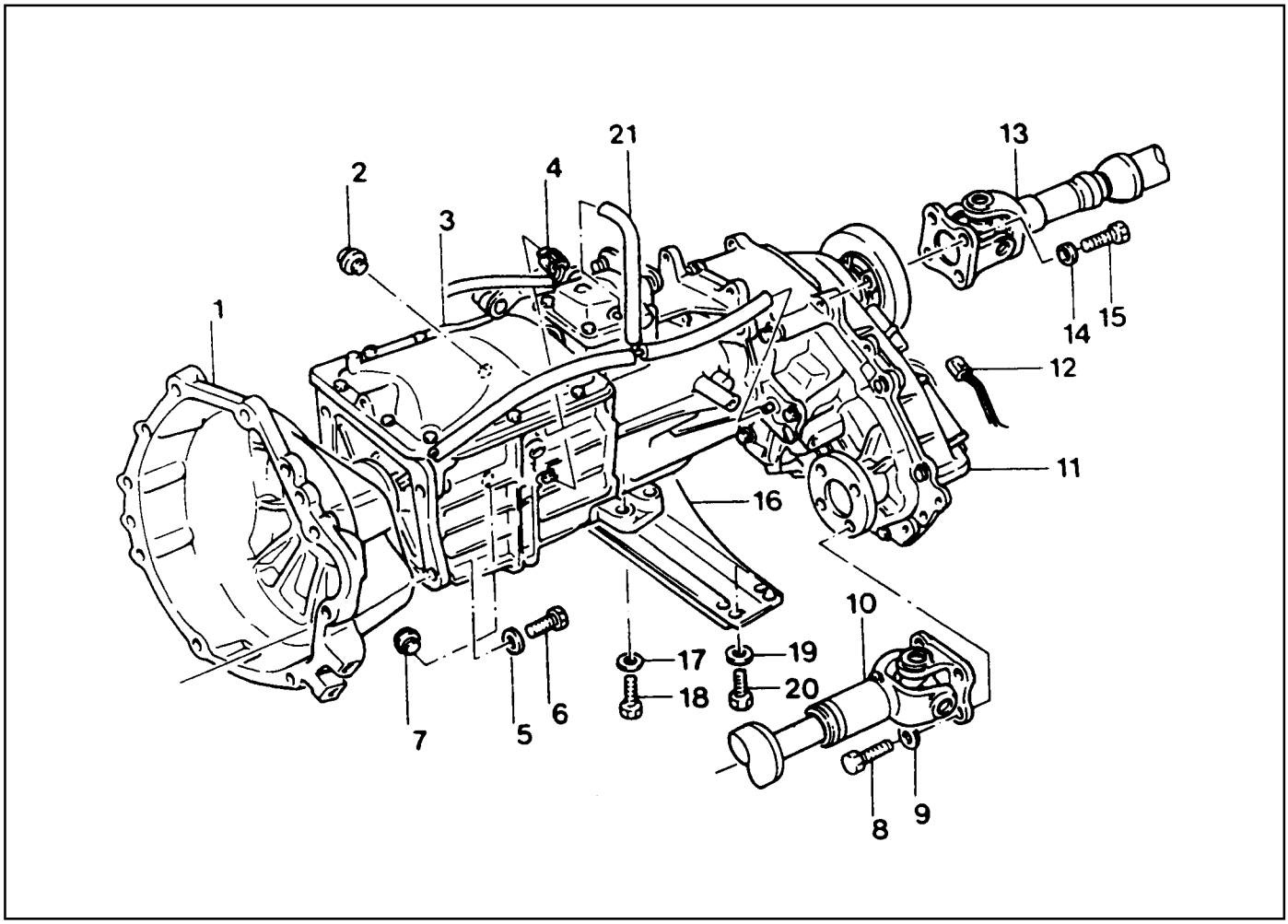

1 Clutch Housing
2 Oil Filler Plug ..... 25 Nm
3 Transmission Assembly
4 Back-up Switch
5 Washer
6 Bolt ..... 77-87 Nm
7 Oil Drain Plug ..... 25 Nm
8 Bolt ..... 81-89 Nm
9 Washer
10 Front Propeller Shaft
11 Transfer Case Assembly
12 Speedometer Cable
13 Rear Propeller Shaft
14 Washer
15 Bolt ..... 70-80 Nm
16 Cross Member
17 Washer
18 Bolt ..... 21-35 Nm
19 Washer
20 Bolt ..... 62-93 Nm
21 Breather Hose

Downloaded from www.Manualslib.com manuals search engine

Removal & Installation Procedure

1. Disconnect the negative terminal from the battery.
2. Lift up the vehicle and fix it safely.
3. Remove the drain plug from the transmission housing and drain the oil. Reinstall the drain plug.

   Installation Notice

Tightening Torque	25 Nm

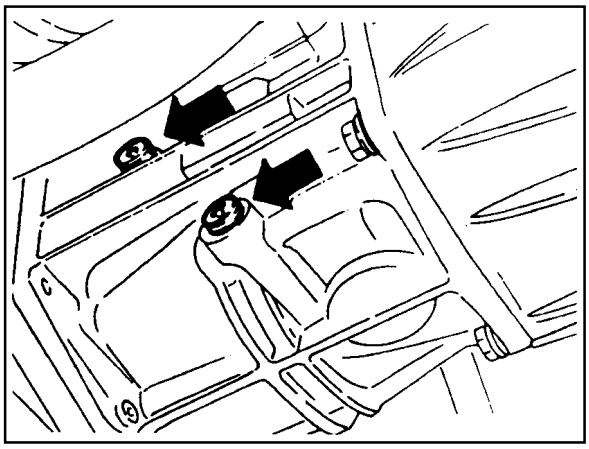

4. Disconnect the back-up switch connector.

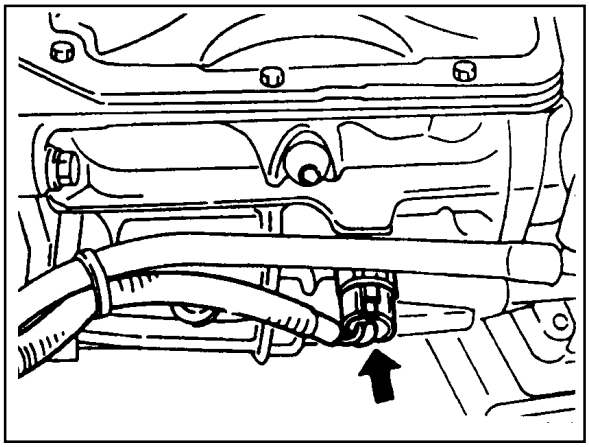

5. Remove the breather hose.

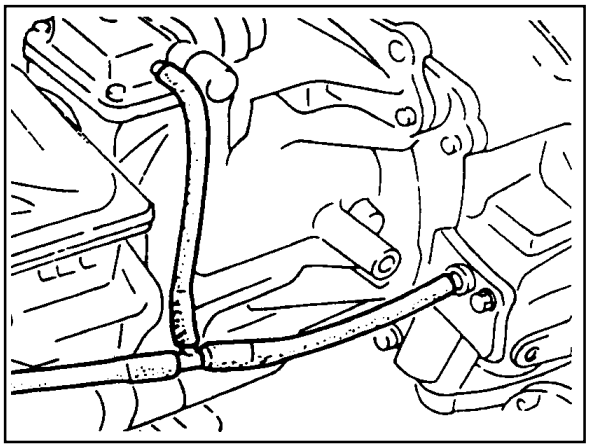

6. Remove the speedometer connector and other wiring harnesses and connectors.

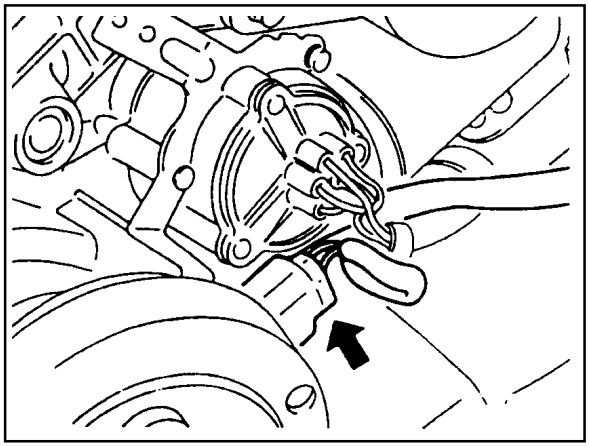

Downloaded from www.Manualslib.com manuals search engine

7. Remove the front and rear propeller shafts from the transmission.

Installation Notice

Tightening Torque	Front	81 - 89 Nm
	Rear	70 - 90 Nm

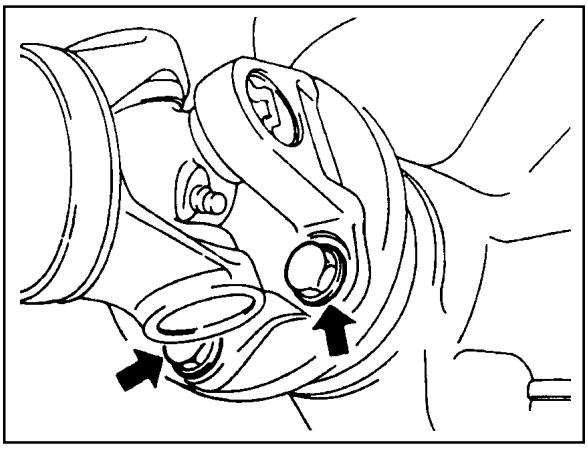

8. Support the transmission on an suitable jack.

Unscrew the center mounting nuts and each sides mounting bolts and remove the cross member.

Installation Notice

Tightening Torque (1)	21 - 35 Nm
Tightening Torque (2)	62 - 93 Nm

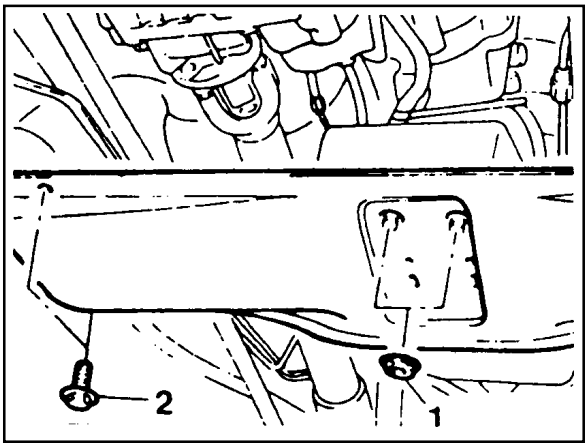

9. Unscrew the transmission mounting bolts.

Installation Notice

Tightening Torque	77 - 87 Nm

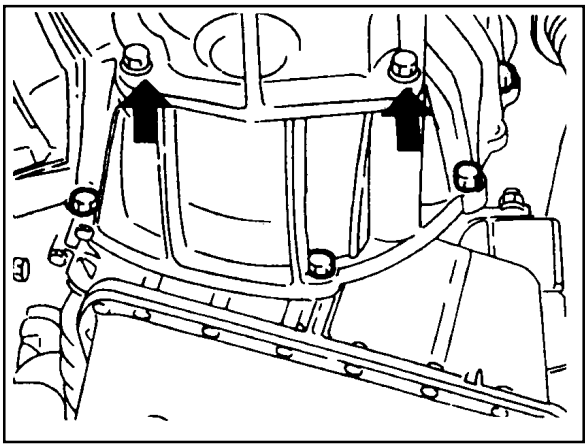

10. Move the transmission jack backward careful and disengage the transmission input shaft from the engine.

Remove the transmission.

11. Installation should follow the removal procedure in the reverse order.

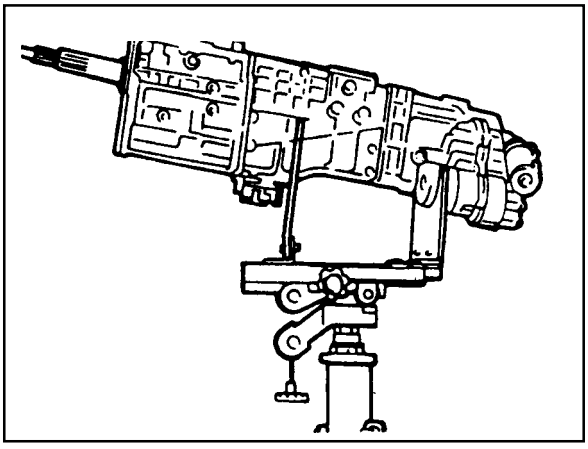

Downloaded from www.Manualslib.com manuals search engine

UNIT REPAIR

MAJOR UNIT

Preceding Work : Removal of the transmission
Removal of the transfer case

Disassembly Procedure

1. Install the removed transmission into a fixture.
2. Remove the drain plug and drain the oil. Using a 13 mm wrench, remove the clamp bolt and position the offset lever in the 3-4 position of neutral.

   Notice

   Removal of the offset lever in a position other than 3-4 of neutral will be difficult.
3. Using a pin punch and a hammer, remove the roll pin to remove the shift lever from the offset lever.
4. Using a 15 mm wrench, remove the 8 bolts from the extension housing.

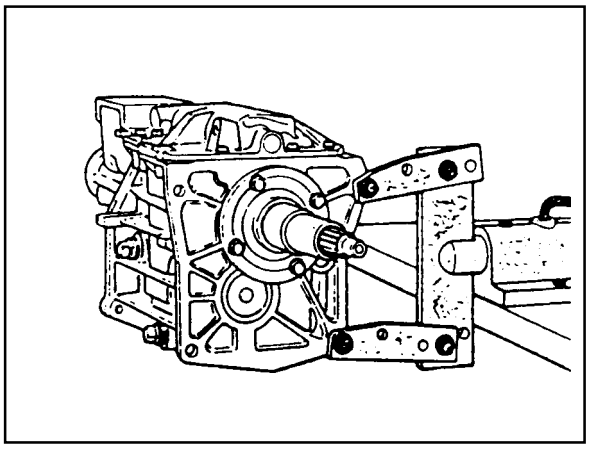

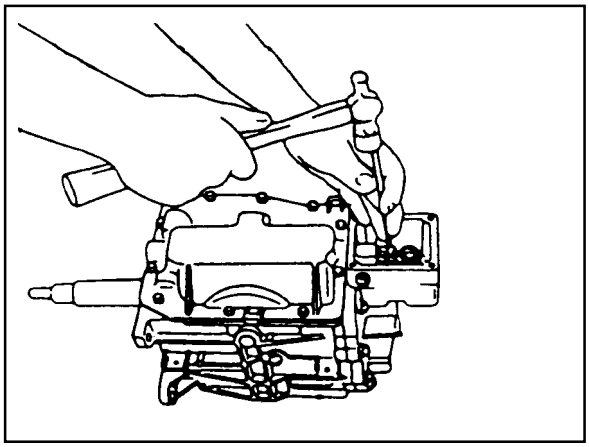

5. Separate the extension housing from the case and shift cover.

   Separate the offset lever from the shift.

   Notice

   Do not remove the offset lever while the extension housing is still assembled to the case.

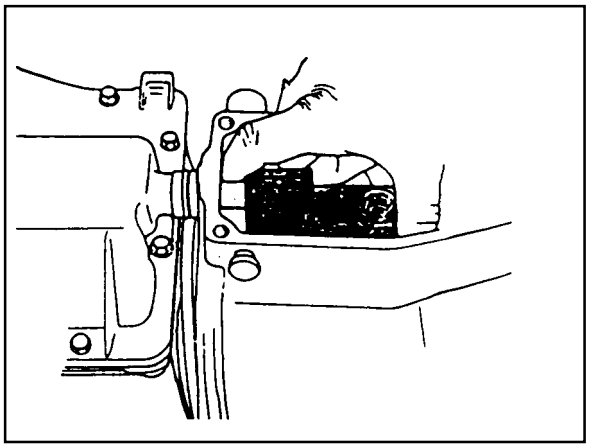

6. Remove the offset lever from the extension housing with the detent ball and spring.
7. Remove the roll pin from either the offset lever or extension housing.

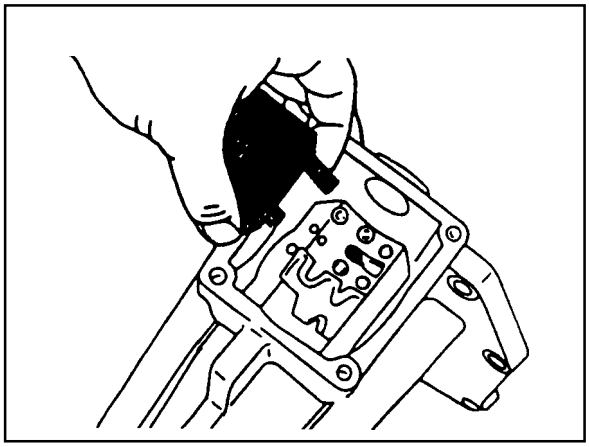

Downloaded from www.Manualslib.com manuals search engine

8. Remove the counter shaft thrust race and bearing.

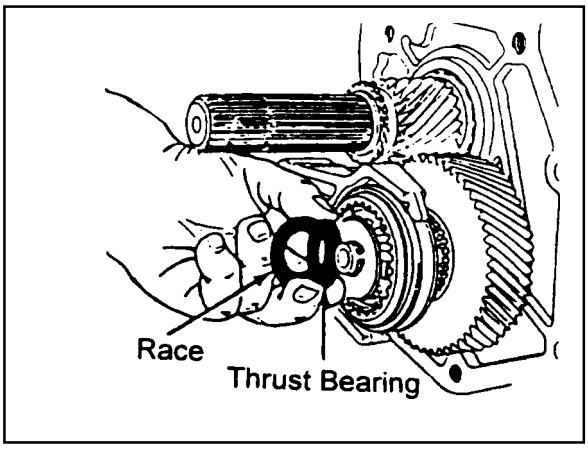

9. Carefully remove the oiling funnel from the end of the counter shaft.

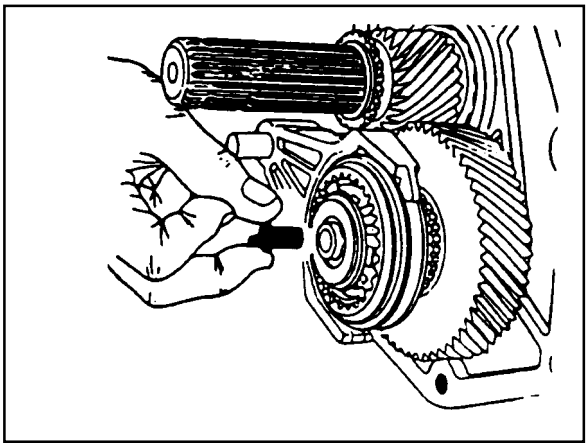

10. Using a 10 mm wrench, remove the 10 bolts from the shift cover.

    Notice

    For assembly, note the location of the two bolts.

11. Lift up the shift cover after sliding it toward the drain plug about 3 cm. At this time remove sealer bond.

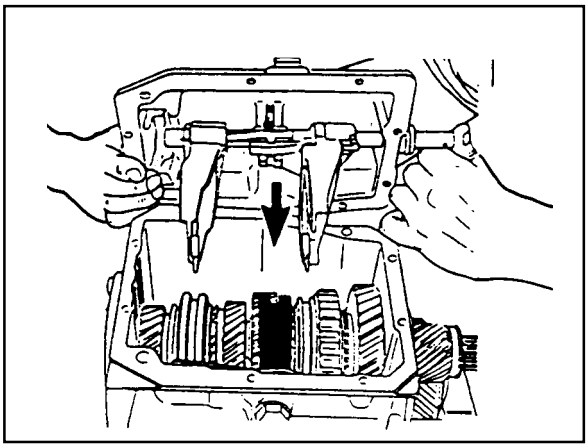

12. Using a needle nose pliers, remove the 5-R lever clip.

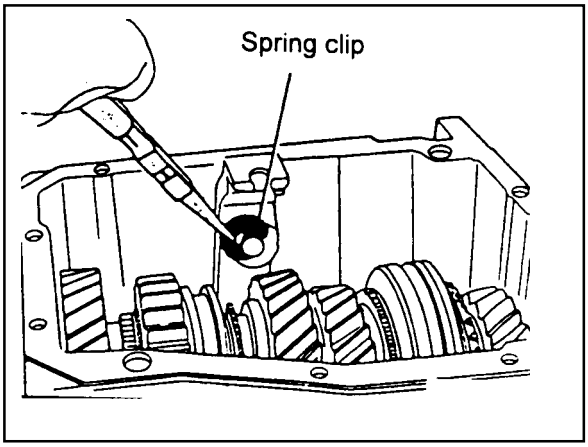

Downloaded from www.Manualslib.com manuals search engine

13. Using a 21 mm wrench or a T-50 bit, remove the 5-R lever pivot bolt.

    Notice

    Apply sealer bond to this bolt during assembly.

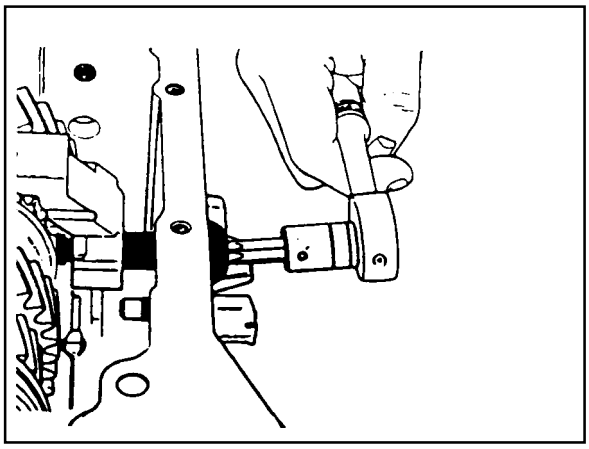

14. Using a 22 mm wrench, remove the back-up lamp switch from the 5-R lever side.

    Notice

    Apply sealer to the threads.

15. Pull out the 5-R lever out of the transmission.

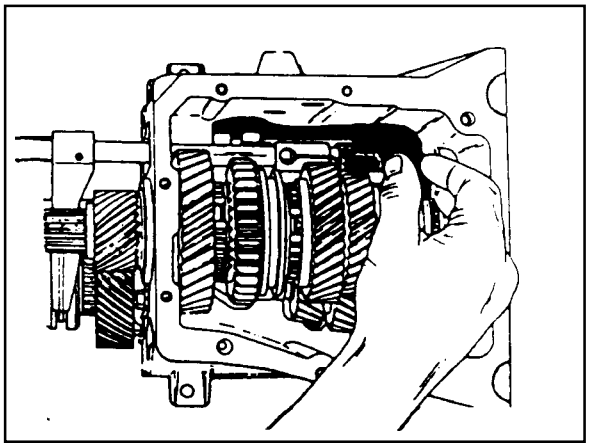

16. Using a snap ring pliers, remove the 5th synchronizer snap ring from the end of the counter shaft.

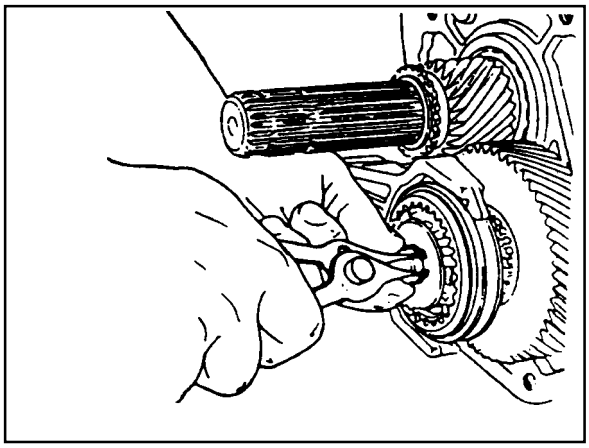

17. Remove the 5th synchronizer assembly with its fork and rail assembly from the counter shaft.

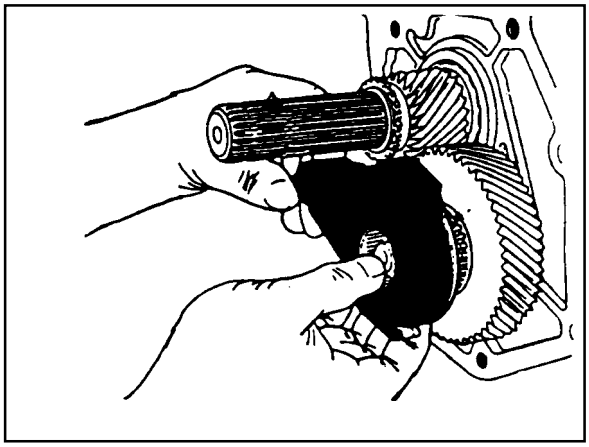

Downloaded from www.Manualslib.com manuals search engine

18. Remove the slip yoke snap ring from the main shaft.

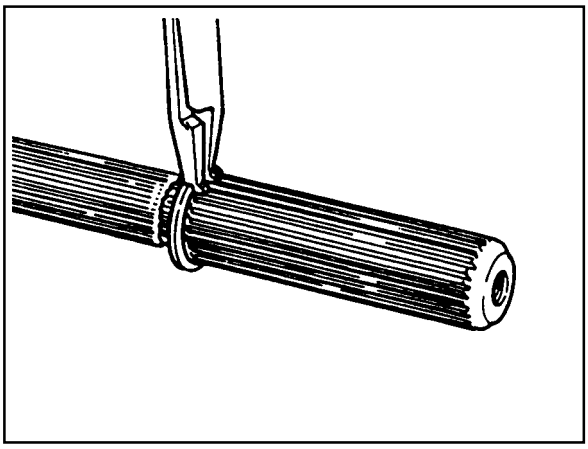

19. Remove the 5th speed drive gear snap ring from the main shaft.

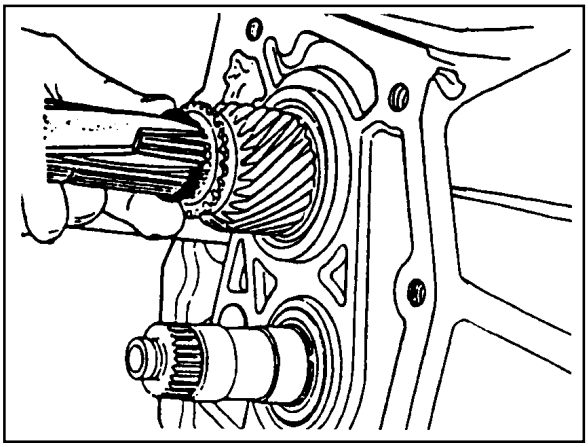

20. Make alignment marks on the case and input bearing retainer and remove the 4 input shaft bearing retainer bolts, using a 13 mm wrench.

    Notice

    Apply sealer on these bolts during assembly.

    Remove the input bearing retainer with the bearing outer race and shim.

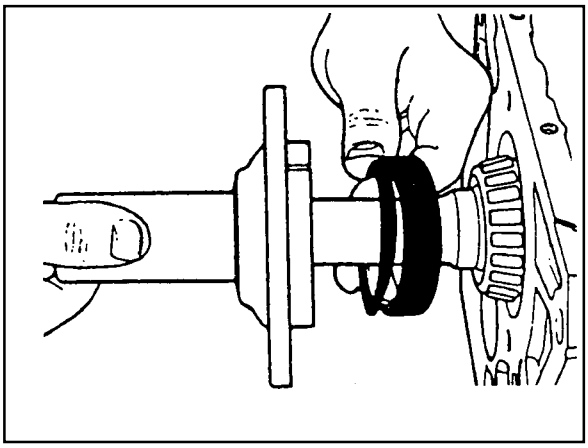

21. Remove the input shaft from the case by rotating it until the flat surface appears.
22. Remove the following parts from the input shaft.
    - 4th speed gear blocking ring.
    - Main shaft thrust race and bearing.
    - Main shaft pilot bearing rollers (15 rollers).

    Notice

    Be careful not to dissipate the pilot bearing rollers.

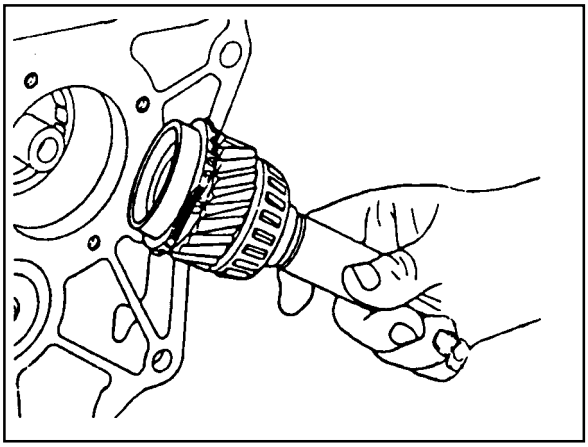

Downloaded from www.Manualslib.com manuals search engine

23. Remove the main shaft in 2 steps.
    - To remove the rear bearing outer race, push the main shaft rearward.

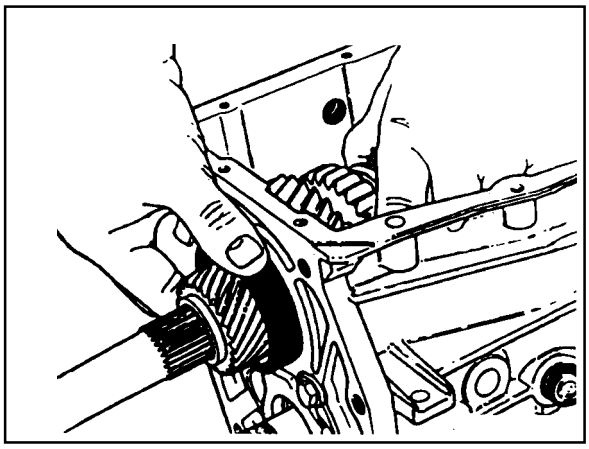

    - Tilt and lift the main shaft from the case.

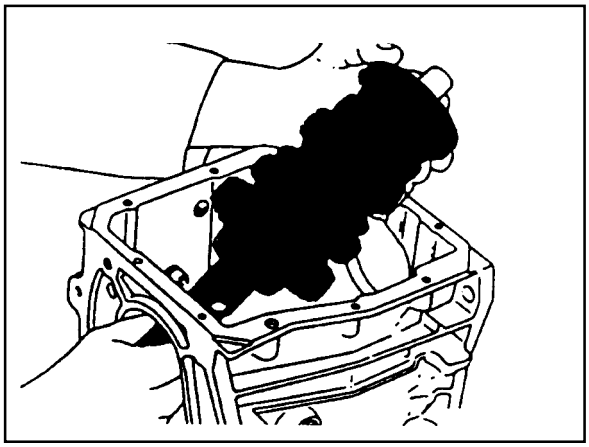

24. Remove the reverse fork and spring from the case.

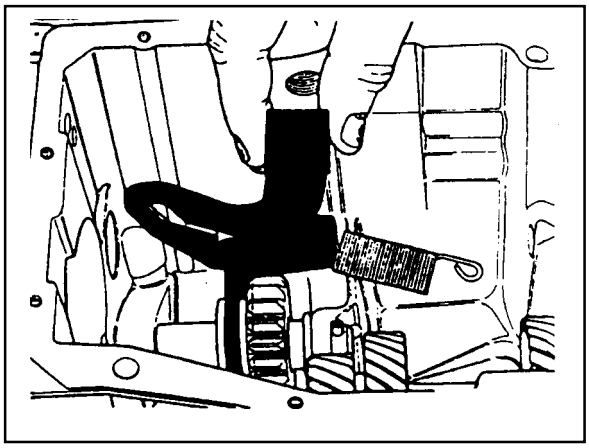

25. Remove the counter shaft as follows:
    - Using a punch and hammer, pry up the lock tabs.
    - Using a 13 mm wrench or T-40 bit, remove the 4 bolts.
    - Remove the retainer and shim from the case.
    - Push the counter shaft rearward to remove the rear bearing outer race.

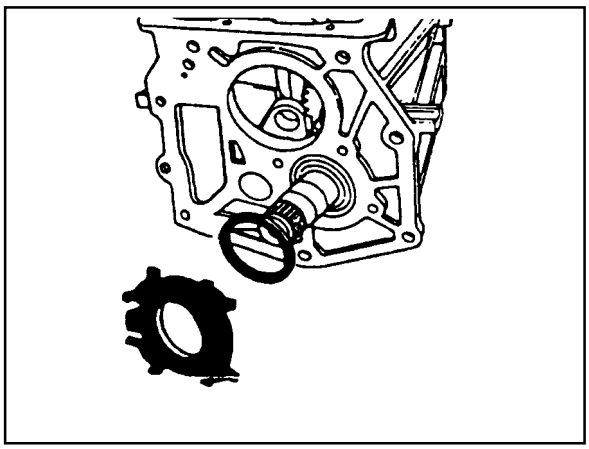

Downloaded from www.Manualslib.com manuals search engine

26. Using a pin punch and a hammer, remove the roll pin fixed on the reverse idler shaft.

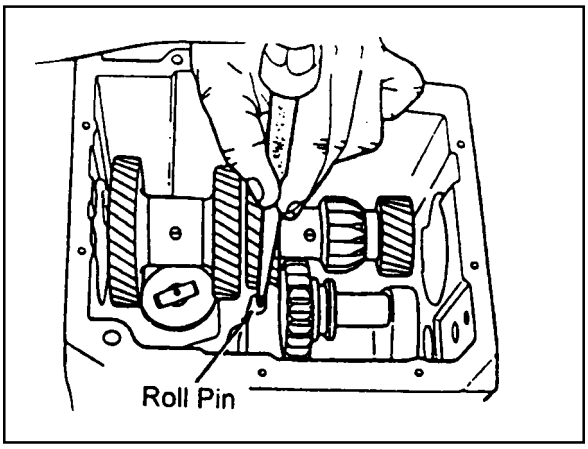

27. By pushing the reverse idler shaft rearward and out of the case, remove the reverse idler gear and O-ring.

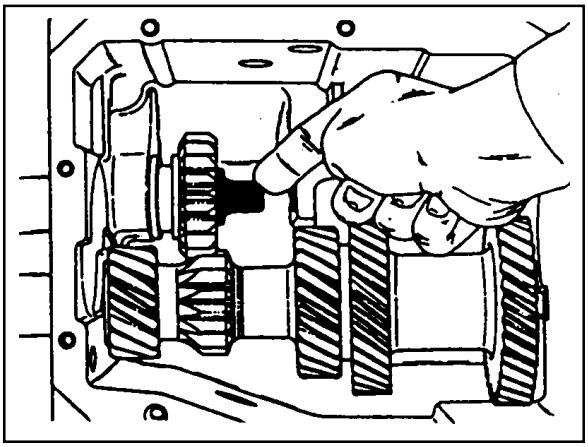

28. Using a puller, remove the rear bearing assembly from the counter shaft.

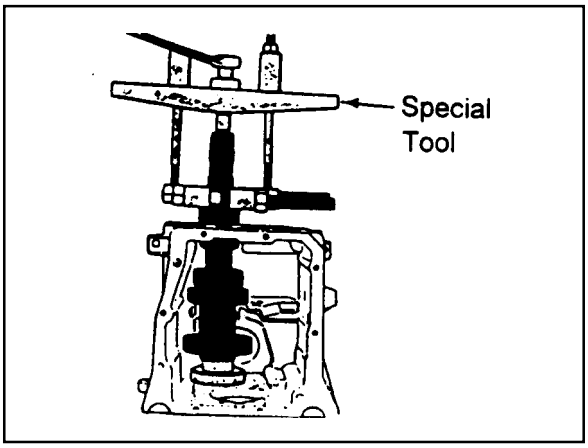

Downloaded from www.Manualslib.com manuals search engine

Assembly Procedure

1. Using a hydraulic press and a supporting tool, press the counter shaft rear bearing into the case. Be sure that the supporting tool inside of the case should support the counter shaft.

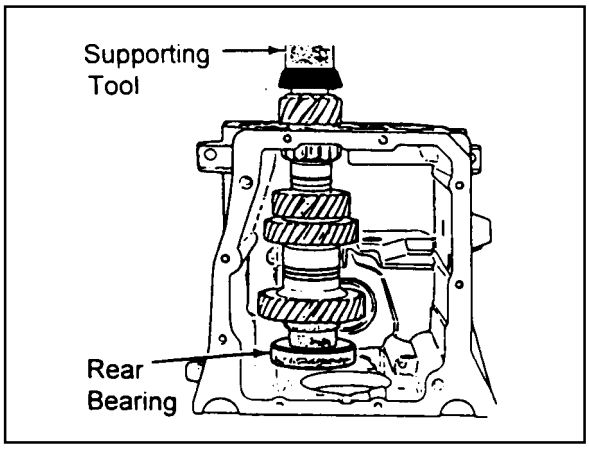

2. Without the shim, install the retainer and counter shaft rear bearing outer race. Tighten the 4 retainer bolts.

Tightening Torque	20 Nm

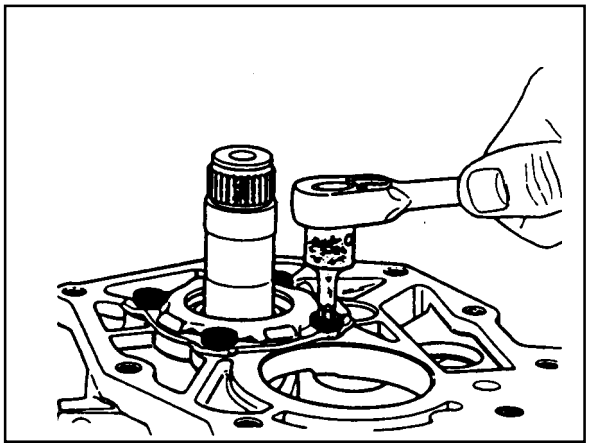

3. Place a dial indicator on the case and measure counter shaft end play by moving up and down.

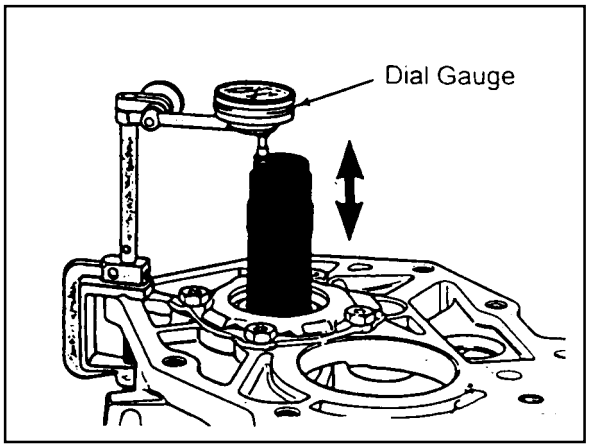

4. Select a shim which is the same thickness as the indicator rearing (up to 0.004 inch) and assemble it.
5. When the end play is correctly adjusted, remove the counter shaft rear bearing retainer and outer race.
6. Using a pin punch and rubber hammer, install the reverse idler shaft, gear and O-ring.

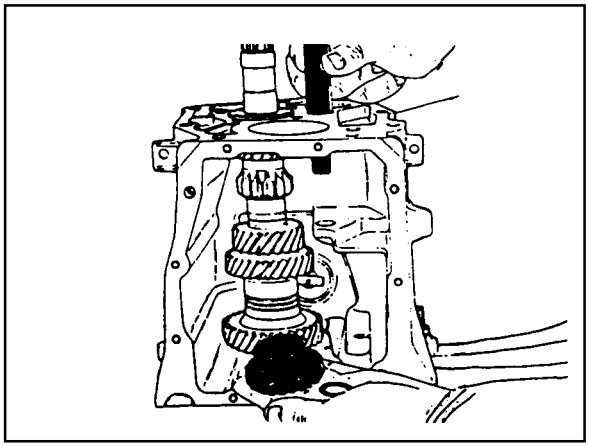

Downloaded from www.Manualslib.com manuals search engine

7. Install the counter shaft rear bearing outer race, shim and retainer.

Tightening Torque	39 - 52 Nm

- Using a punch and hammer, bend the lock tabs on the retainer.

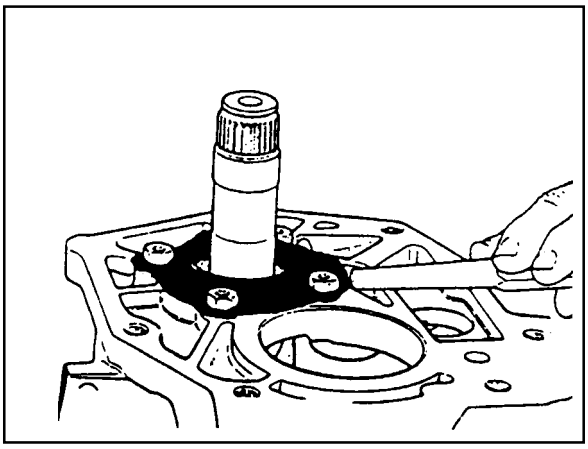

8. Install the following parts :
   - Install the main shaft into case.
   - Install the main shaft rear bearing outer race into the rear of the case.
   - Install the 4th speed blocking ring onto the front of the main shaft.
   - Install the input shaft onto the front of the main shaft.
   - Install the input bearing retainer without shim onto the front of the case.
   - Using a torque wrench, tighten the 4 bolts.

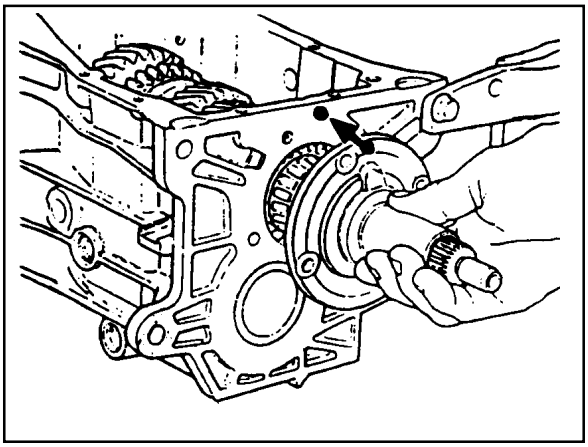

9. Install the 5th speed drive gear and blocking ring on the counter shaft.
10. Install the 5th synchronizer and rail/fork.
11. Install the 5th synchronizer snap ring and oiling funnel.

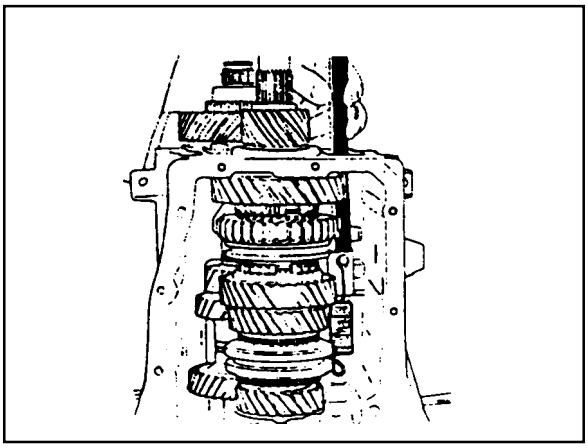

12. Align the slots of the lever with the rollers of the reverse fork and 5th shift rail. Apply sealer on the 5-R lever pivot bolt and install it into the case.

Tightening Torque	28 Nm

13. Using a needle nose pliers, install the 5-R lever clip.

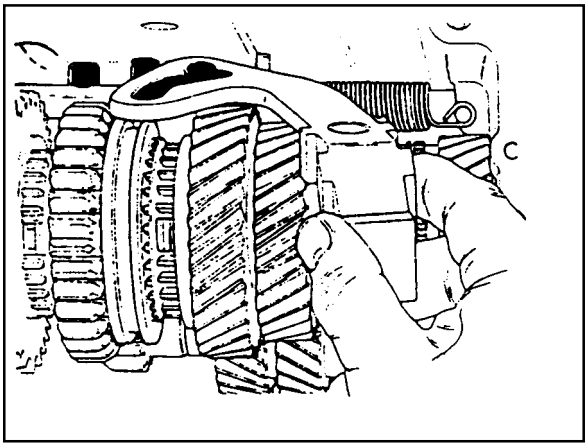

Downloaded from www.Manualslib.com manuals search engine

14. Using a needle nose pliers, install the reverse fork spring to its pin inside the case. Check the operation of the 5-R shift mechanism at this time.

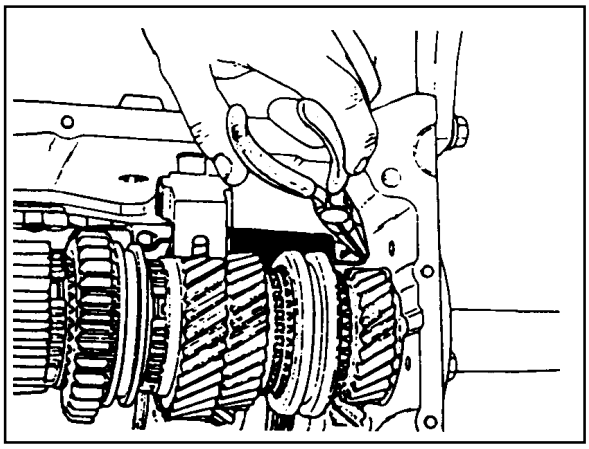

15. Using a snap ring piers, install the slip yoke snap ring onto the end of the main shaft.
16. Make sure that the 1-2 and 3-4 synchronizer sleeves and 5-R shift lever are in neutral position.

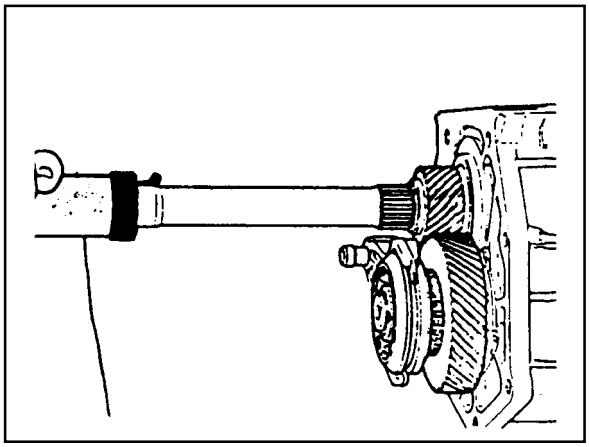

17. Align the holes the case and cover with alignment-type bolts. Tighten the 10 bolts.
18. Apply 'RTV' sealant on the sealing surface of the extension housing.
19. Apply grease on the detent/guide plate in the extension housing. Install the detent ball in the 3-4 position.

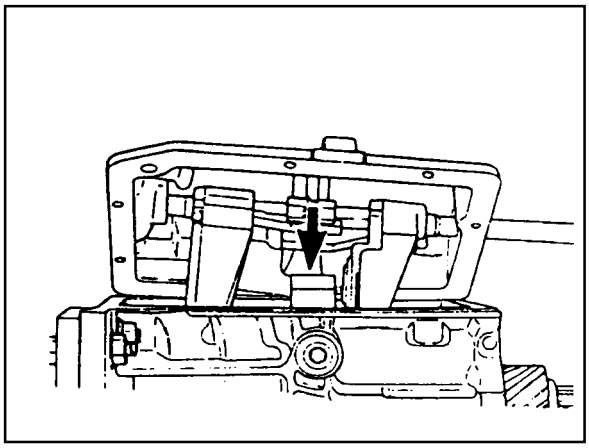

20. Place the detent spring and offset lever in the extension housing and push the extension against the case and shift cover.

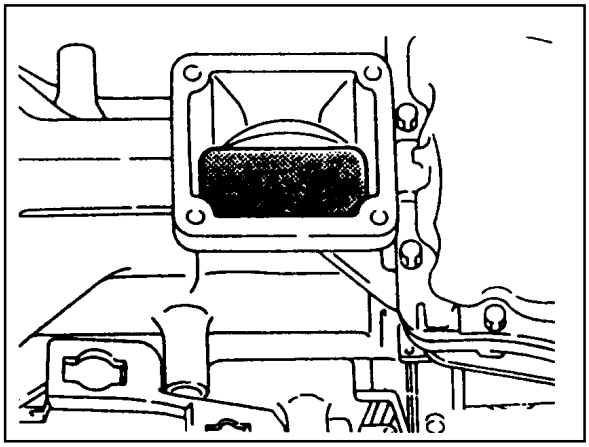

Downloaded from www.Manualslib.com manuals search engine

21. Completely compress the detent spring.
22. To install the extension housing to the case, apply sealer to the top two bolts and tighten them and tighten the 6 bolts.
23. Apply sealer to the back-up lamp switch and drain plug and tighten them.
24. Using a hammer, install the offset lever-to-shift roll pin.

25. Turn the transmission case reversely and place a dial indicator on the extension housing. Move the input and main shift up and down and measure end play. Select a shim which is the same thickness as the measurement (± 0.001 inch). After shim installation, the end play should be '0'.

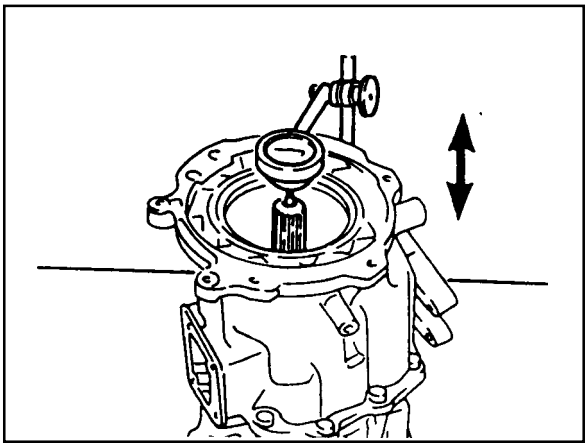

26. Remove the input bearing retainer and do the following :
    - Install the adjusting shim behind the input bearing outer race in the retainer and if 2 shims are used, install the thinner one in first.
    - Install the retainer to the case and tighten the bolts.
    - If end play is not '0'change the shim again.
    - Apply RTV sealant to the sealing surface of the retainer.
    - Apply sealer to the 4 retainer bolts and tighten them.

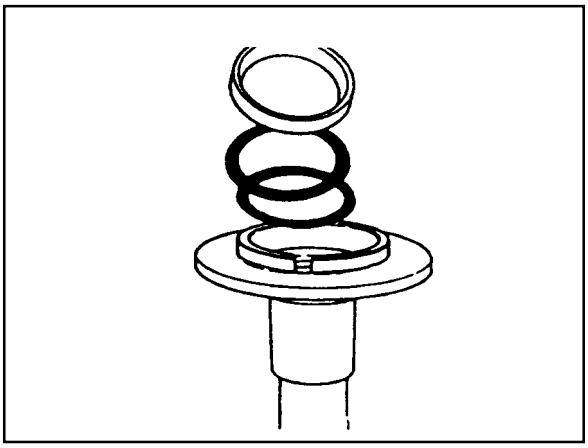

27. Remove the fill plug.
28. Remove the transmission from the holding fixture and install it to the vehicle.
29. Clean the sealing surface of the shift control lever.
30. Install the control cables to the shift lever.

Downloaded from www.Manualslib.com manuals search engine

MAIN SHAFT

Disassembly Procedure

1. For correct reassemble, place an alignment mark on the 3-4 Synchronizer hub and sleeve.
2. Using a hydraulic press and puller plate, remove the 3-4 Synchronizer assembly and the 3rd speed gear.

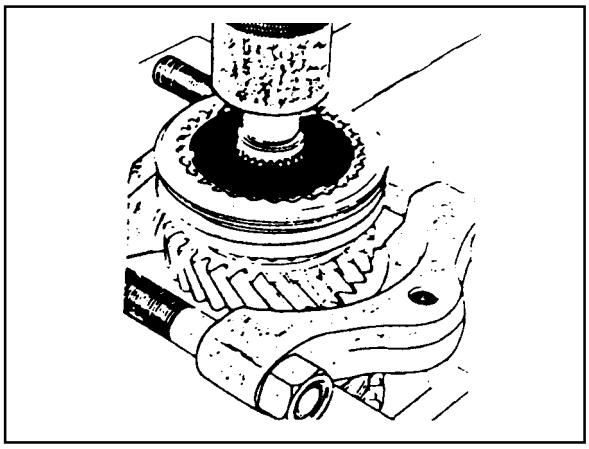

3. Remove the 3rd speed gear bearing and spacer.

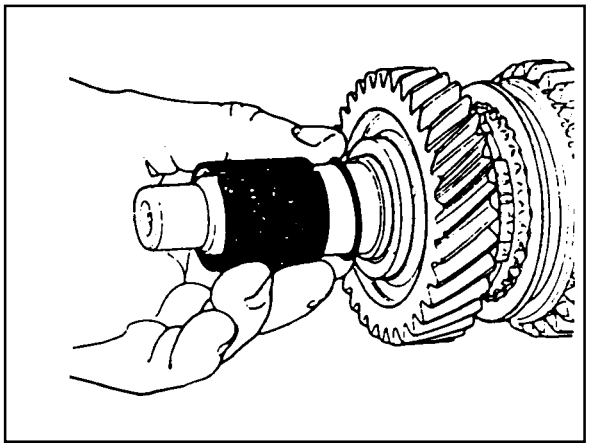

4. Using a snap ring pliers, remove the 2nd speed gear snap ring.
5. Remove the 2nd speed gear thrust washer.

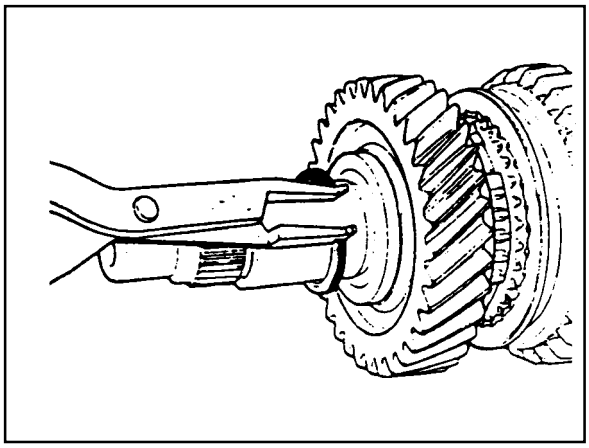

6. Remove the 2nd speed gear, bearing and spacer.

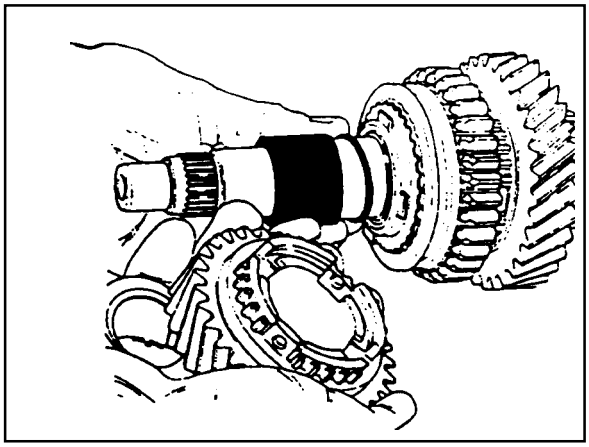

Downloaded from www.Manualslib.com manuals search engine

7. Using a screwdriver, remove the spiral retaining ring.

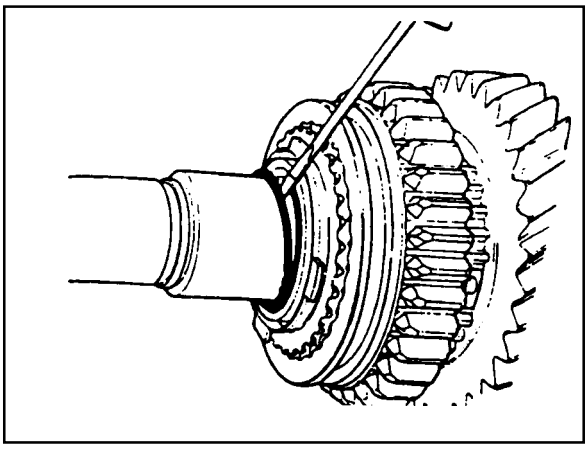

8. Remove the thrust washer and three-piece 2nd speed blocking ring assembly.

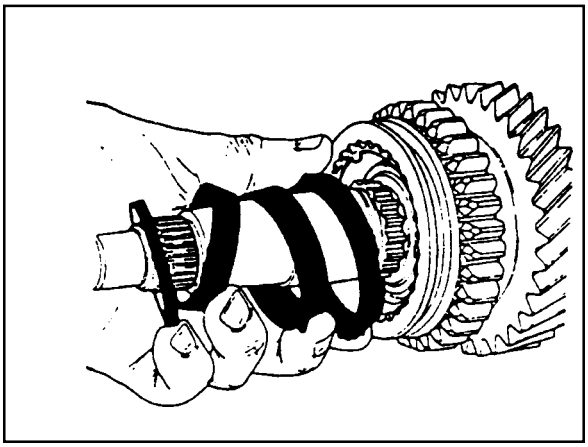

9. For correct reassembly, place an alignment mark on the 1-2 synchronizer hub and sleeve.
10. Remove the 1-2 synchronizer sleeve from the hub with following parts :
    - The anti-rattle ball and spring.
    - The three keys.
    - One of the 3 springs.

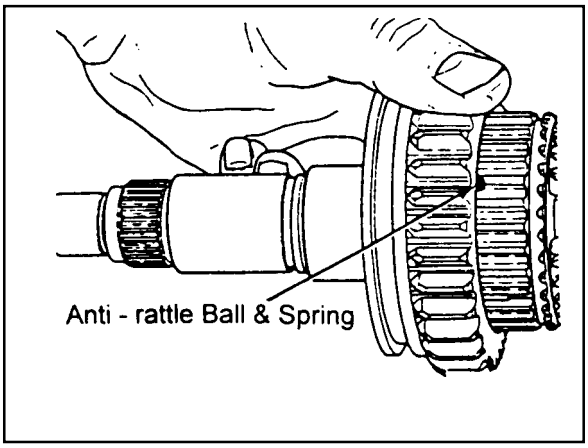

11. Using a hydraulic press and puller plate, remove the 5th speed driven gear from the main shaft.

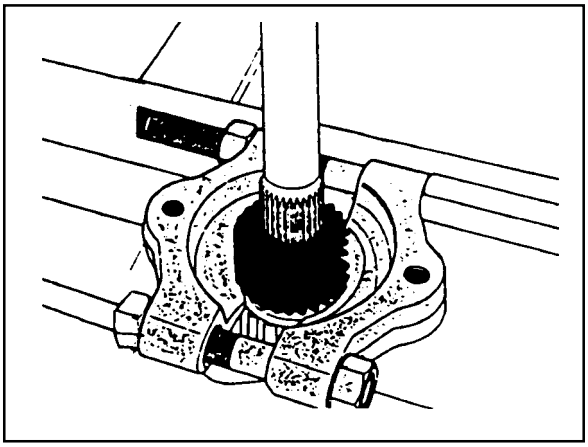

Downloaded from www.Manualslib.com manuals search engine

12. Remove the main shaft rear bearing assembly from the shaft.

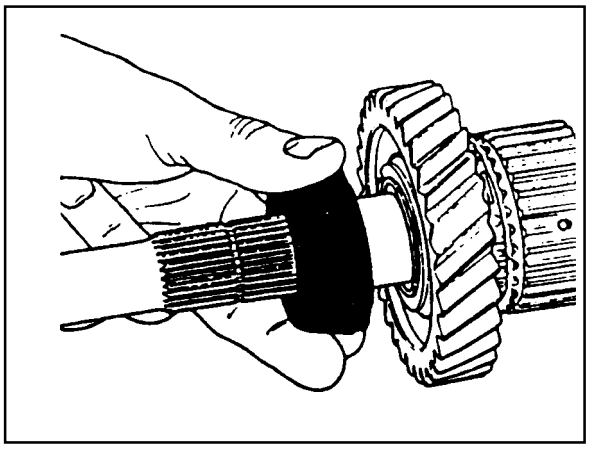

13. Remove the 1st speed gear and bearing.

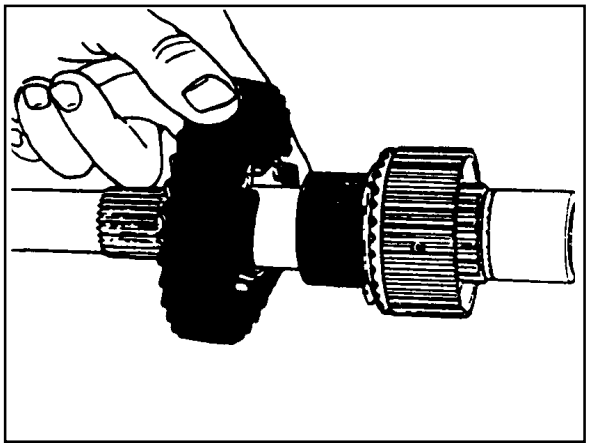

14. Remove the inner race.

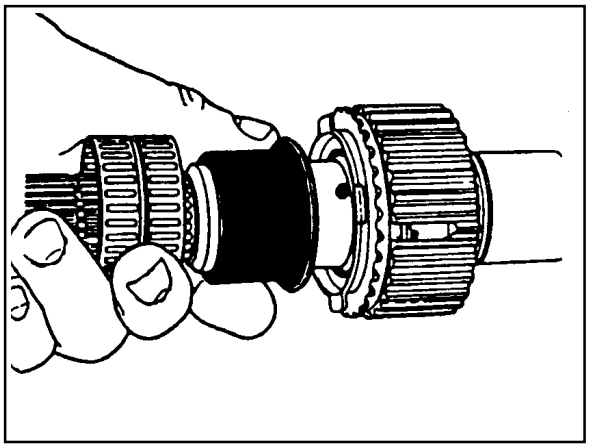

15. Remove the tree-piece 1st speed blocking ring assembly and remaining synchronizer spring.
16. Check and clean all removed parts and replace if necessary.

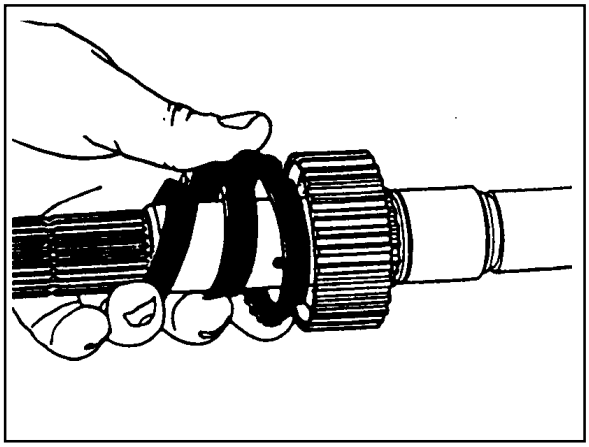

Downloaded from www.Manualslib.com manuals search engine

Assembly Procedure

1. When assemble the synchronizer, make sure that the hubs and sleeves are matched and the 3 keys are installed properly. Also align blocking rings with keys during installation.

   Notice

   Before assembly, coat all parts with lubricant. In case of the paper-lined blocking rings, soak them in Dexron II before installation.

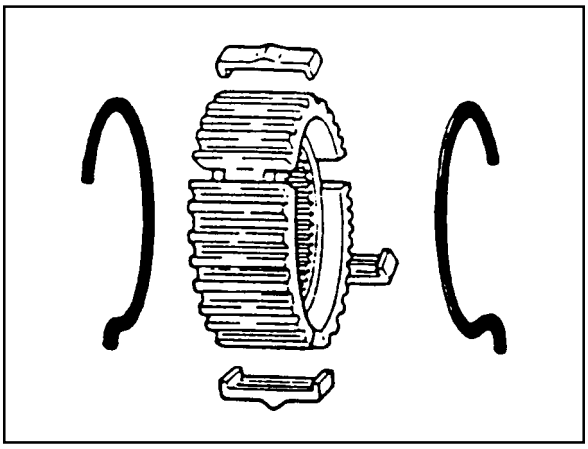

2. Assemble the following parts :
   - 1st speed blocking ring.
   - Alignment pin and 1st speed gear bearing race.
   - 1st speed gear and its bearing.
3. Install the rear bearing assembly to the main shaft.

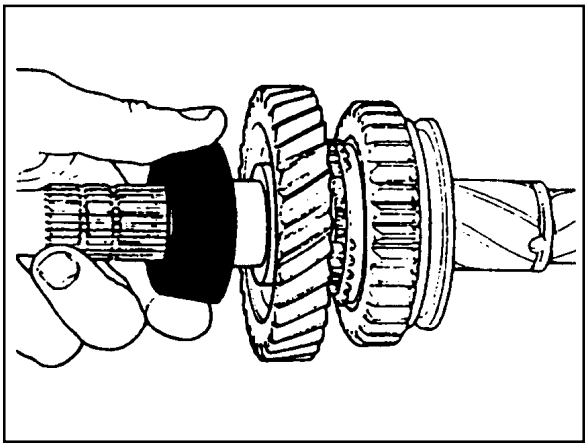

4. Using a hydraulic press and installer, press the 5th driven gear onto the main shaft. While the main shaft is still on the press bed, install the 5th driven gear snap ring. If the snap ring does not fit completely, continue pressing the 5th driven gear.

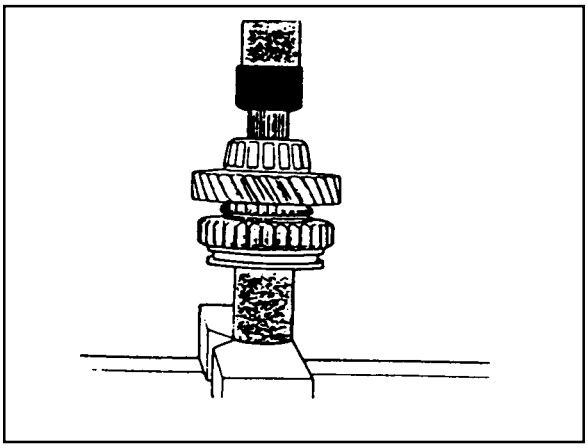

5. Install the following parts :
   - 2nd speed blocking ring assembly.
   - Thrust washer for the blocking ring inner cone.
   - Spiral retaining ring (Use special tools).
   - 2nd speed gear spacer, bearing and gear.
   - 2nd gear thrust washer and snap ring.
   - 3rd speed gear spacer, bearing and gear.
   - 3rd speed blocking ring.

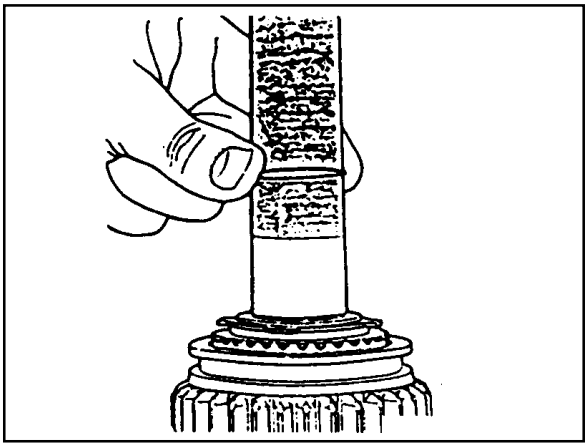

Downloaded from www.Manualslib.com manuals search engine

6. Using a hydraulic press and installer, install the 3-4 synchronizer hub onto the main shaft.

Notice

Align the blocking ring with the synchronizer keys while installing the hub.

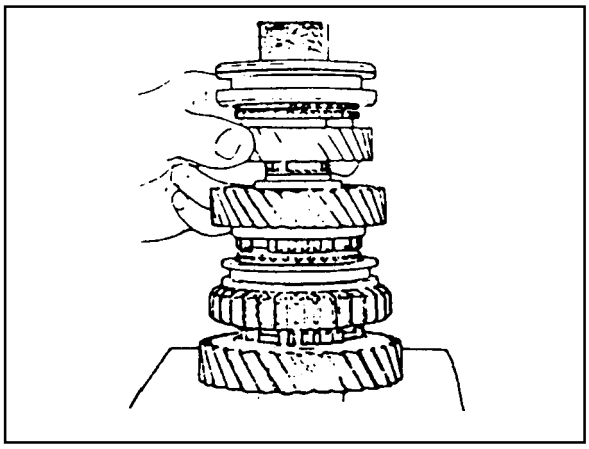

Downloaded from www.Manualslib.com manuals search engine

INPUT SHAFT

Disassembly Procedure

1. Remove the following parts from the input shaft :
   - Main shaft thrust race and bearing.
   - Main shaft pilot bearing rollers (15 rollers).

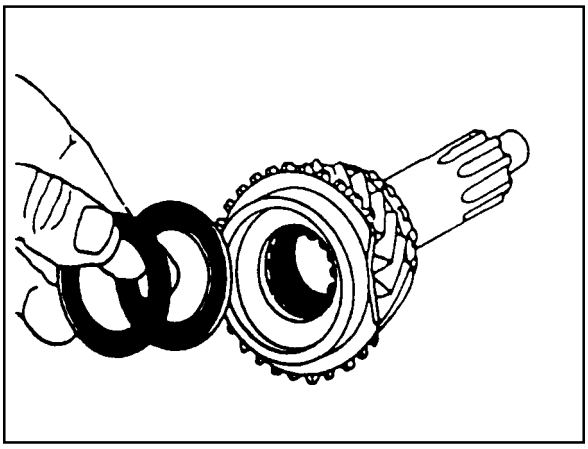

2. Using a hydraulic press and puller plate, remove the input shaft bearing assembly from the shaft.

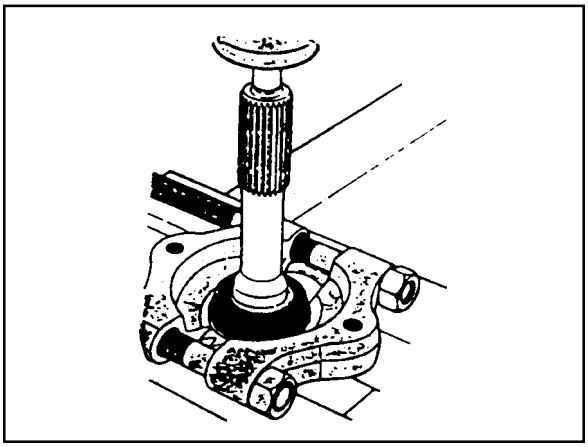

3. Remove the input bearing.

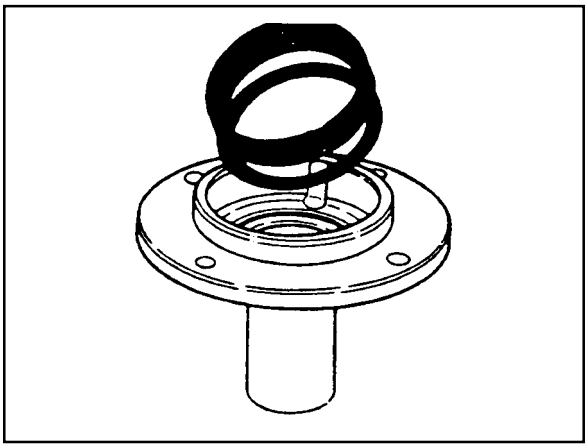

4. Remove the input shaft seal.
5. Check and clean all removed parts and replace if necessary.

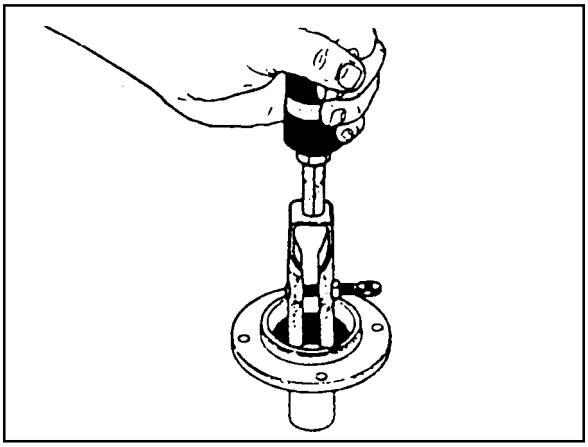

Downloaded from www.Manualslib.com manuals search engine

Assembly Procedure

1. Using a hydraulic press and installer, press the input shaft bearing onto the input shaft.
2. Apply grease to the thrust bearing inner roller (15 rollers) and install the main shaft thrust bearing and its race in the rear of the input shaft.

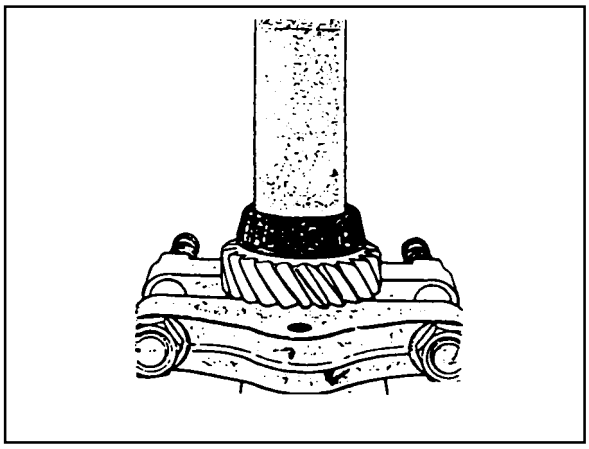

3. Using a rubber hammer and installer, install the input bearing retainer and input shaft seal after applying grease.
4. Install the bearing outer race to the retainer without end play adjusting shim.

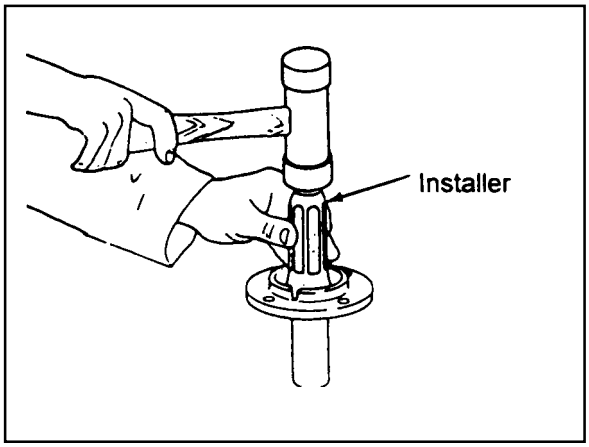

Downloaded from www.Manualslib.com manuals search engine

COUNTER SHAFT

Disassembly Procedure

1. Using a hydraulic press and special tool, remove the front bearing assembly from the counter shaft.
2. Check and clean all removed parts and replace if necessary.

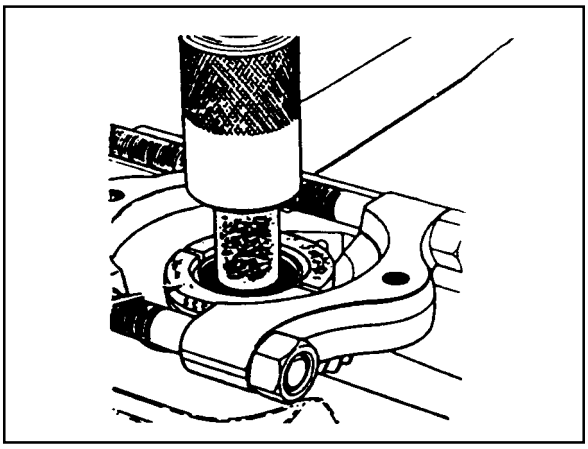

Assembly Procedure

1. Using a hydraulic press and installer, press the front bearing assembly onto the counter shaft.

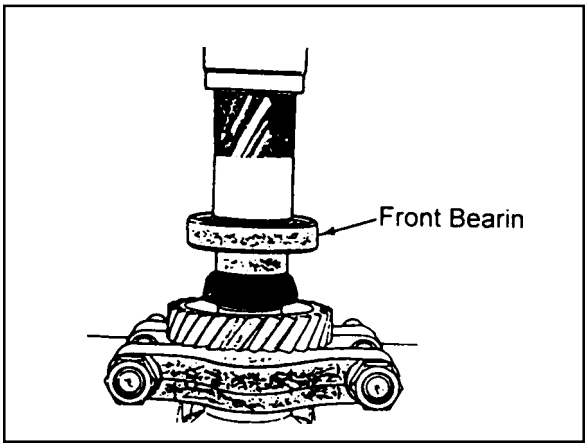

2. Install is as follows :
   - Install a new O-ring on the counter shaft outer race and lubricate it.
   - Using a installer, lightly tap the race into its bore until the O-ring is compressed.
   - Install the race to be fully seated on the inside of the case.

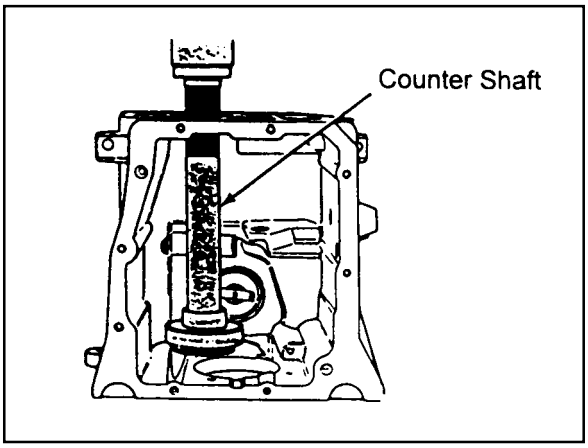

Downloaded from www.Manualslib.com manuals search engine

EXTENSION HOUSING

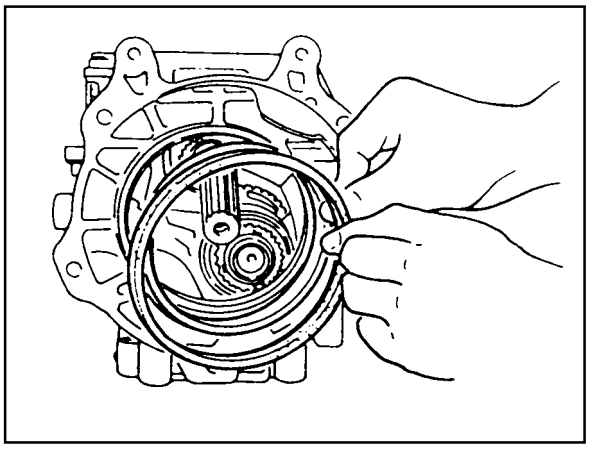

Disassembly Procedure

1. Remove the vent from the extension housing.
2. Remove the O-ring and steel ring from the rear of the extension housing.
3. Check and clean all removed parts and replace if necessary.

Assembly Procedure

1. Install the O-ring and steel ring to the rear of the extension housing.
2. Install the vent to the extension housing.

Downloaded from www.Manualslib.com manuals search engine

SHIFT COVER

Disassembly Procedure

1. Using a hammer and a pin punch (3/16) remove the selector arm roll pin.

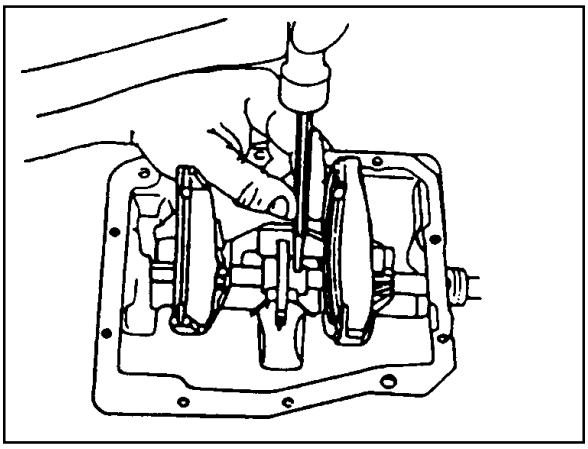

2. Before removal, note the correct position of the interlock plate and selector arm and remove the shift shaft.
3. Check and clean all removed parts and replace if necessary.

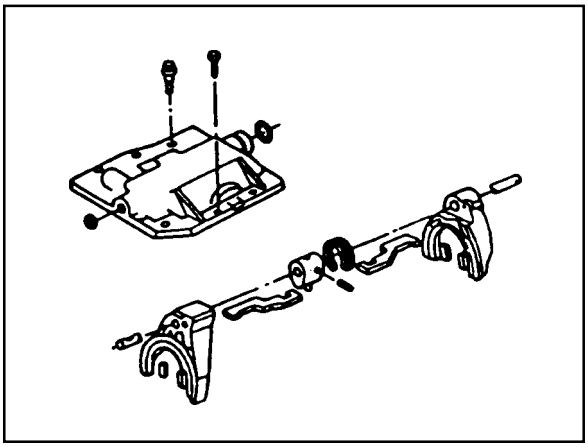

Assembly Procedure

1. If the shaft cup plug was removed, apply plug outer surface with sealer and install it into the cover.
2. Install the fork pads and selector plates onto the 1-2 and 3-4 shift forks.

3. Assemble the sift cover parts as follows :

   Push the shift shaft into the cover until the front of the shaft is at the inside of the cover.

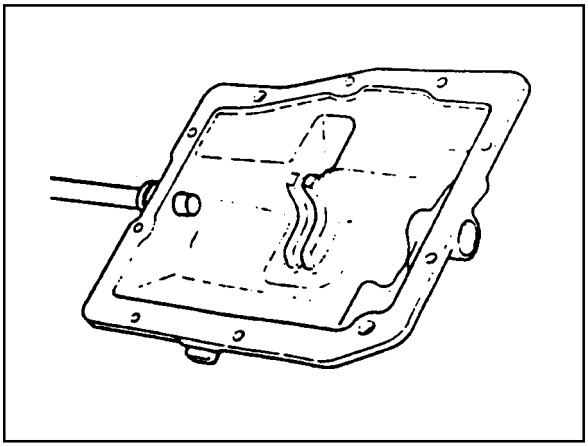

Downloaded from www.Manualslib.com manuals search engine

- Install the 1-2 shift fork and its selector plate.

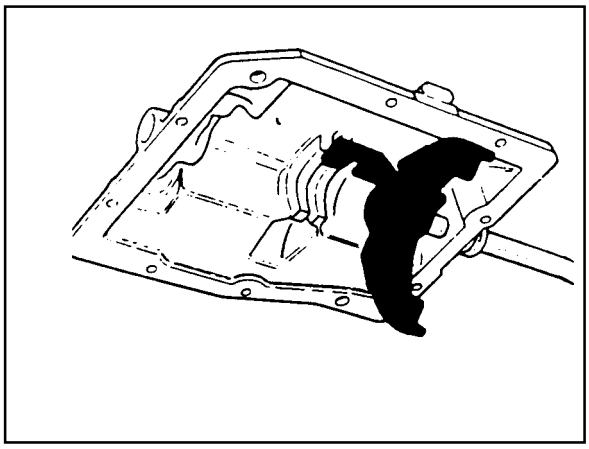

- Push the shift shaft through the 1-2 shift fork.

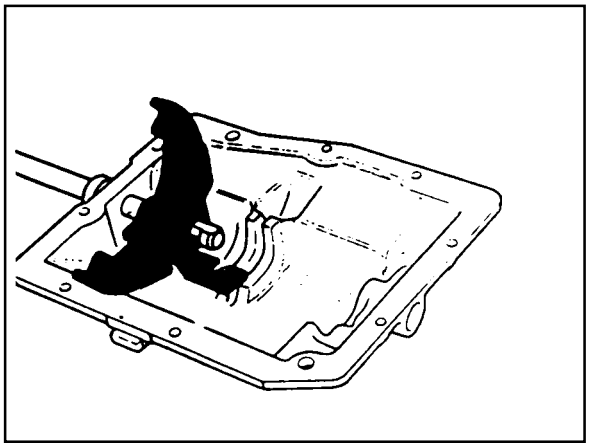

- Place the selector arm and interlock plate in the cover
  Note the position of the interlock plate and selector arm.

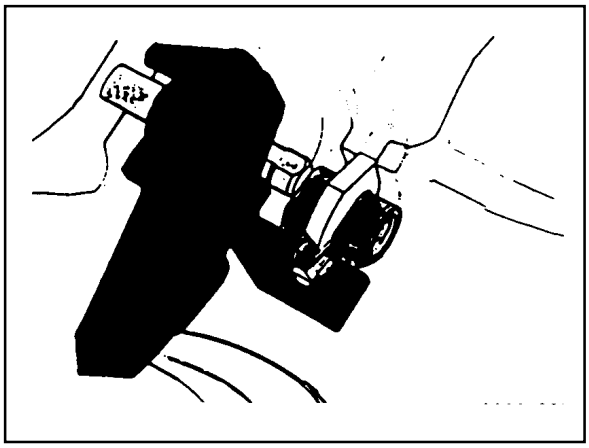

- Push the shift shaft through the 3-4 shift fork.

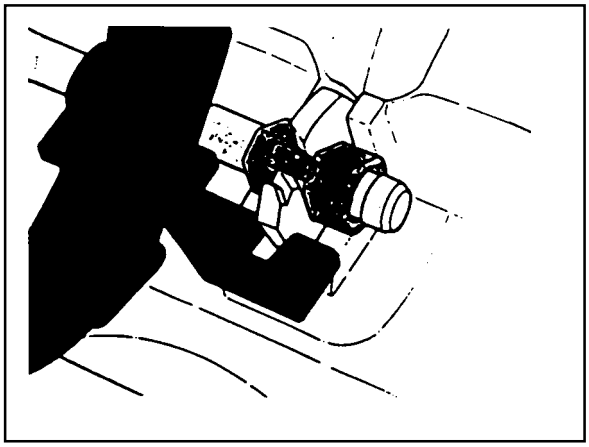

Downloaded from www.Manualslib.com manuals search engine

- Install the 3-4 shift fork and its selector plate.

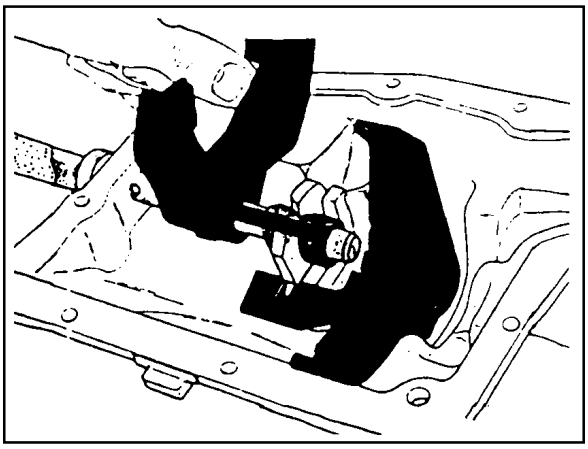

- Push the shift shaft through the 3-4 shift fork.

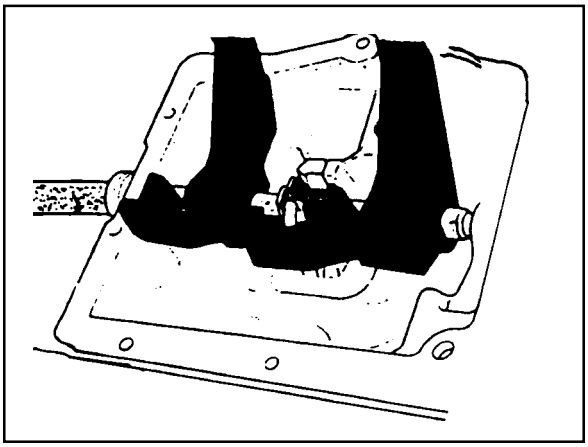

- Install the roll pin that fixes the selector arm to the shift shaft.

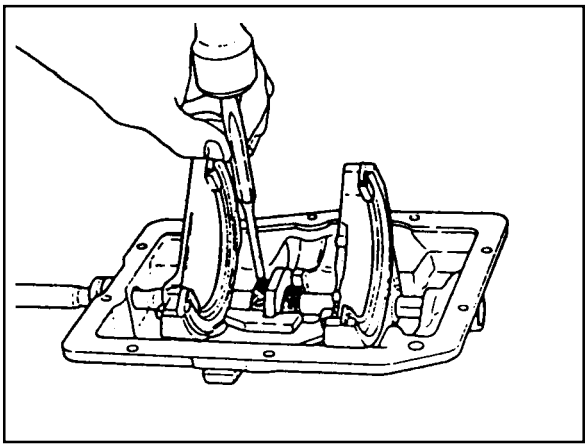

4. Check the shift cover parts for proper assembly as follows :
   - Insert a pin punch (3/16) into the offset lever hole of the shift shaft.
   - Place the shift cover to the flat ground and rotate the shift shaft so that the punch is vertical.

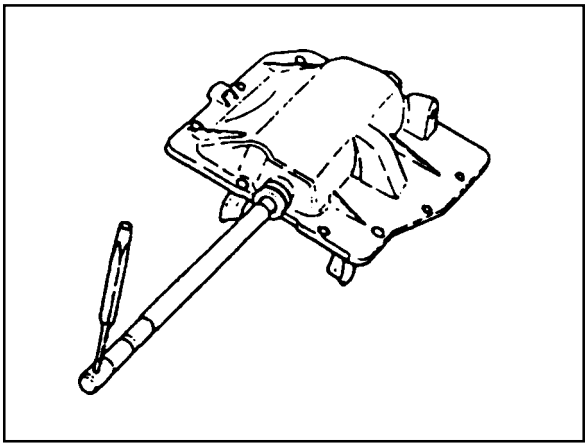

Downloaded from www.Manualslib.com manuals search engine

- Selector arm should be aligned with the 3/4 shift fork selector plate.

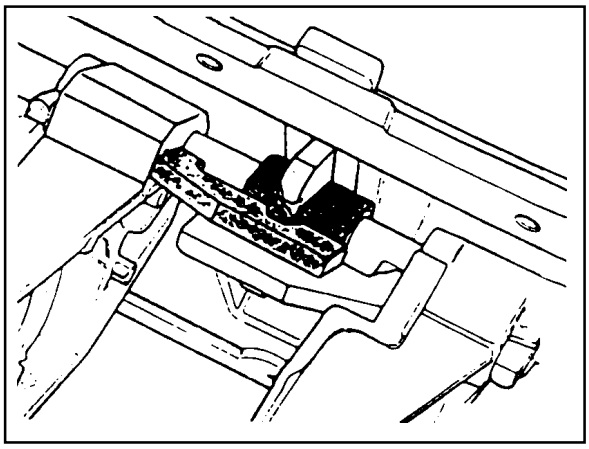

5. Lubricate and install the O-ring on the rear of the shift cover.

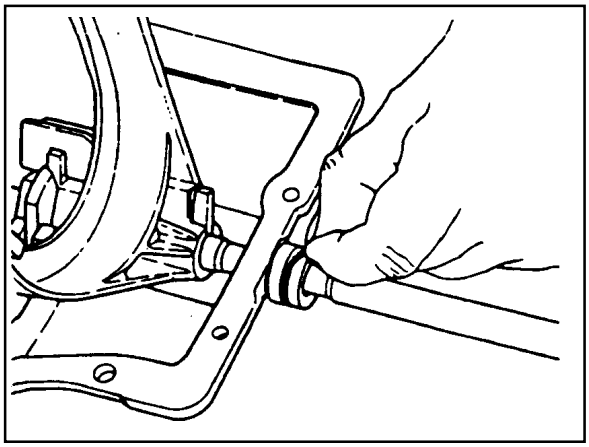

Downloaded from www.Manualslib.com manuals search engine

INSPECTION OF COMPONENTS

Inspection Procedure

1. Clean all parts with solvent and dry them with compressed air. Check the following parts for cracks and damaged sealing surfaces.
   - Case
   - Extension housing
   - Shift Cover
   - Input bearing retainer
   - Counter shaft rear bearing retainer

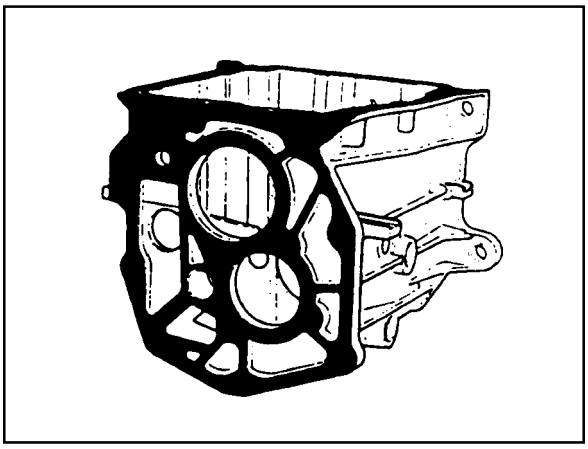

2. Check the parts which support bearings and shafts for excessive wear and replace them if necessary.

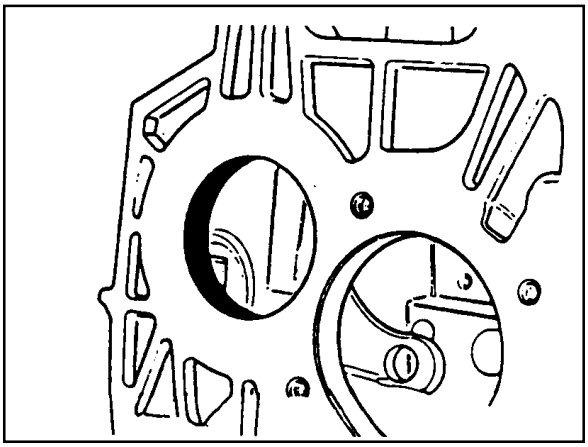

3. Check the bearing surfaces of the following parts ;
   - Input shaft
   - Main shaft and its gears
   - Counter shaft and 5th drive gear

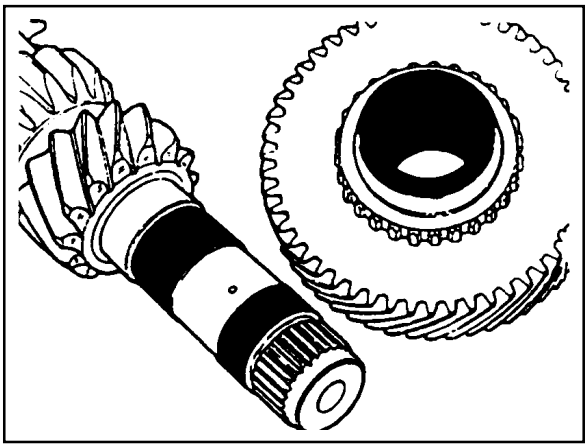

4. Check the reverse idler shaft and its gears.

   Notice

   Replace excessive wear parts and do not file on the hardened surface and precision ground.

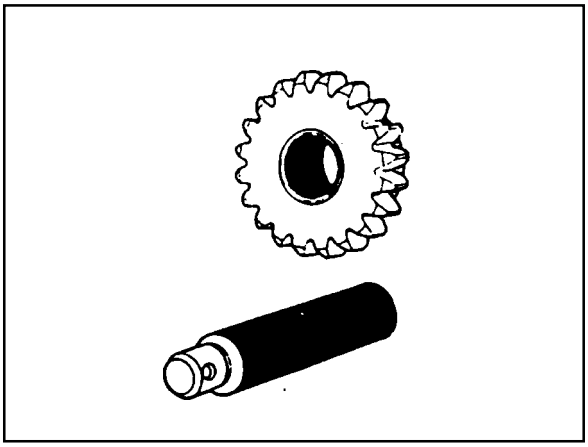

Downloaded from www.Manualslib.com manuals search engine

5. Check the shift mechanism parts as follows :
   - Wear of the shift shaft.
   - Wear of the detent/guide plate and offset lever.

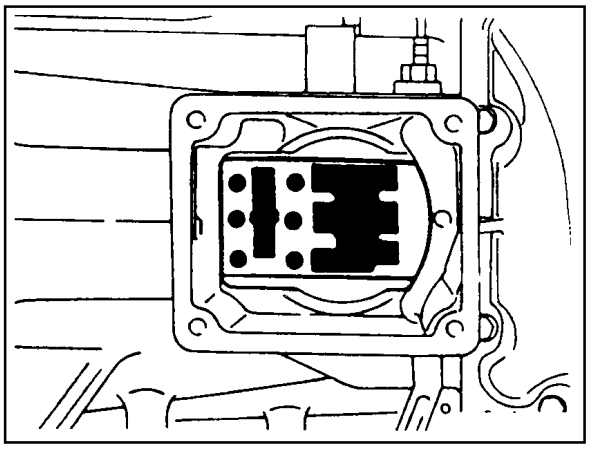

   - Check worn edges on the following parts :
     - Selector arm.
     - Interlock plate.
     - Selector plates for the 1-2 and 3-4 shift forks.

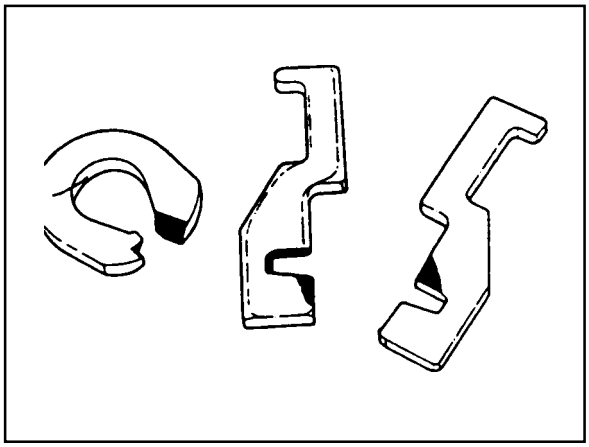

     - 5-R shift lever and the rollers on the reverse fork and the 5th shift rail/fork.

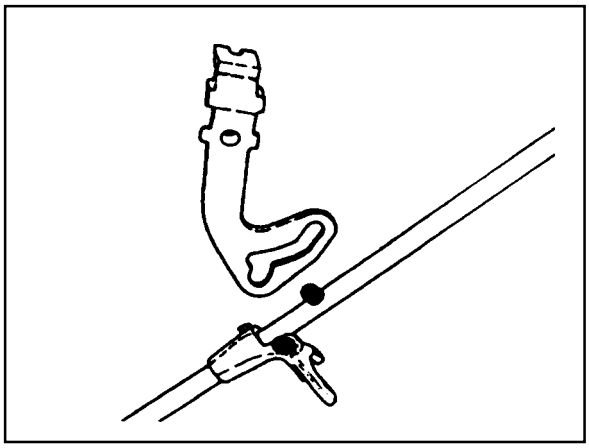

   - Check worn mating surfaces on the following parts :
     - 1-2 shift fork, pads and synchronizer sleeve.
     - 3-4 shift fork, pads and synchronizer sleeve.
     - 5th shift rail/fork pads and synchronizer sleeve.
     - Reverse fork and reverse idler gear sleeve.

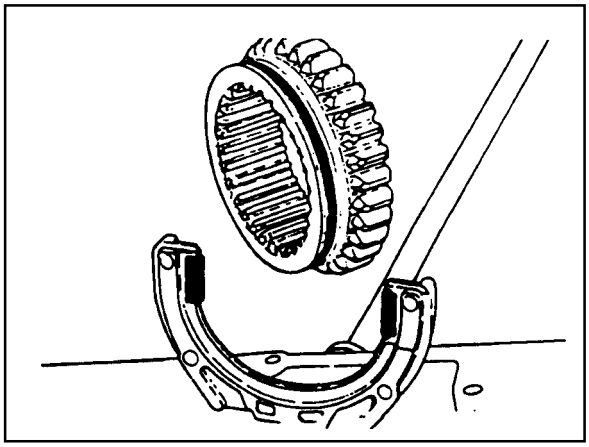

Downloaded from www.Manualslib.com manuals search engine

6. Check the following Bearing for excessive war:
   - Crankshaft pilot bushing for the front of the input shaft.
   - Clutch release bearing.
   - Input shaft bearing.
   - Main shaft pilot bearing rollers.
   - Main shaft thrust Bearing and its surfaces.

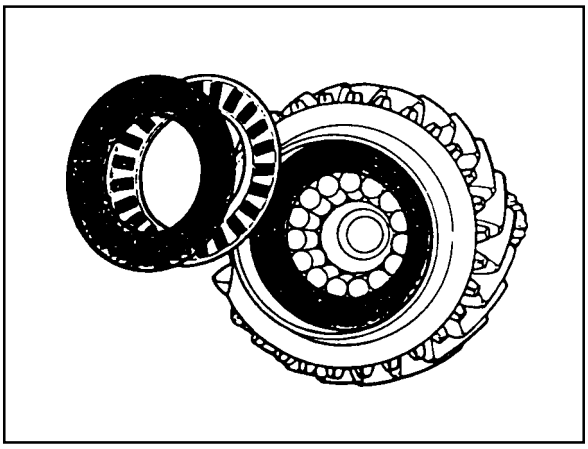

   - Speed gear roller bearing on the main shaft.
   - Main shaft rear bearing.
   - Counter shaft front and rear bearings.

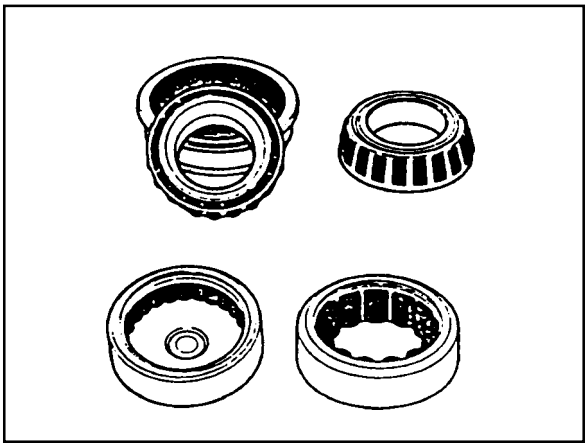

7. Check the gear tooth surfaces of all gear sets.

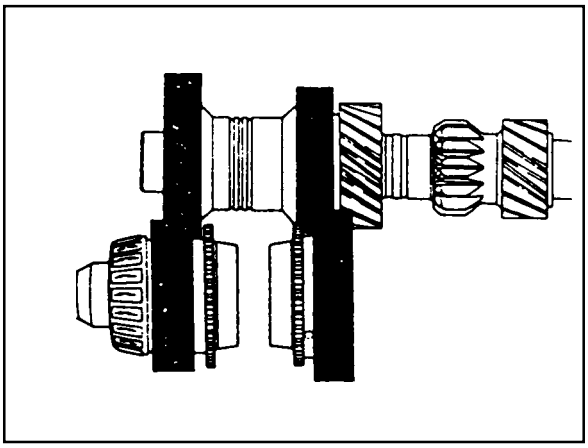

8. Check the reverse gear set surfaces. Check the surfaces of gear teeth for excessive wear, pitting, scoring and spalling and replace if necessary.

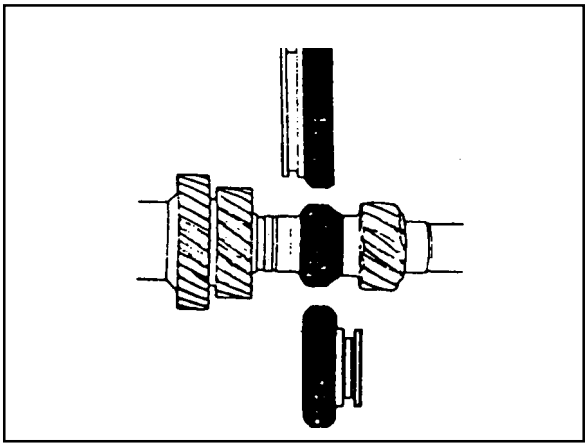

Downloaded from www.Manualslib.com manuals search engine

9. Take apart the three synchronizer assemblies and check :
   - The 1-2 synchronizer.

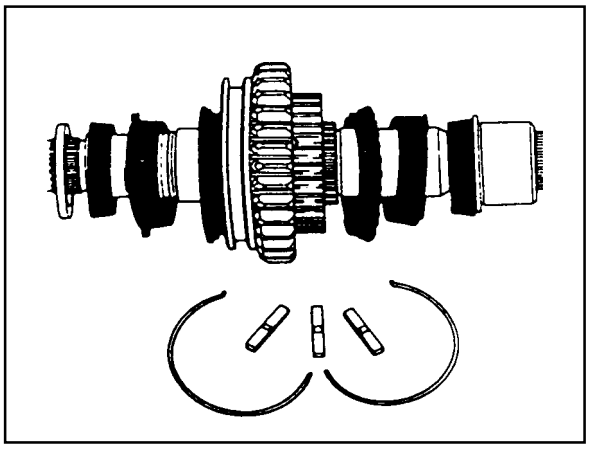

   - The 5th blocking ring.

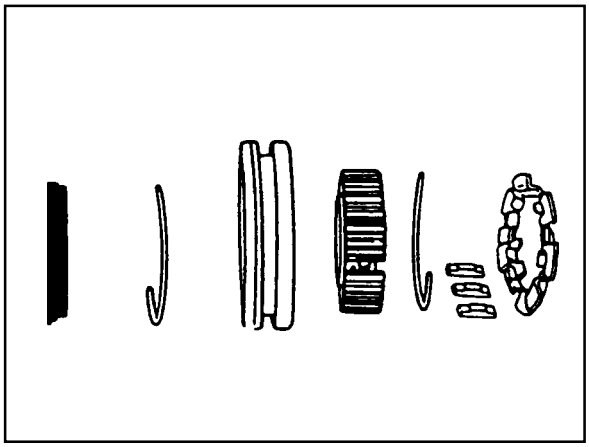

10. Check the fit between the hub and sleeve of each synchronizer
    - Excessively tight or loose hub-to-sleeve fit.
    - Wear of the cone clutch surfaces of brass blocking rings and gears.

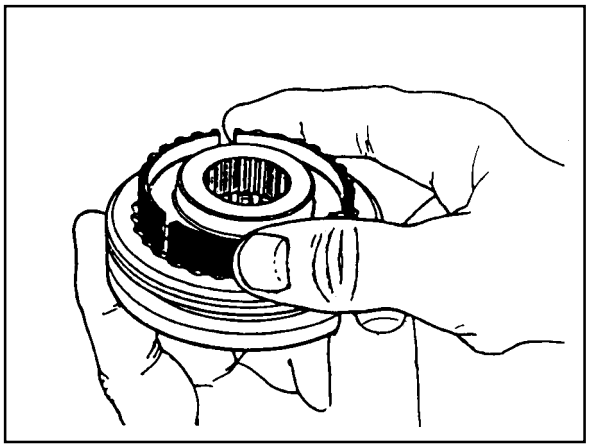

11. Measure the clearance between the blocking ring and the speed gear
    - New 1-2 blocking ring : 0.87-1.4mm
    - New 3-4 blocking ring : 0.88-1.5mm

    Notice

    Excessive wear of the blocking ring or the speed gear cone surface will cause shift block-out gear clash.

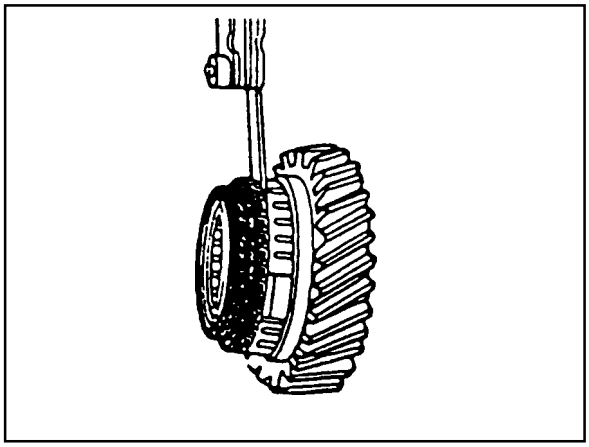

Downloaded from www.Manualslib.com manuals search engine

12. Check for gear clash on the synchronizer sleeve teeth or the clutch teeth on the speed gear.

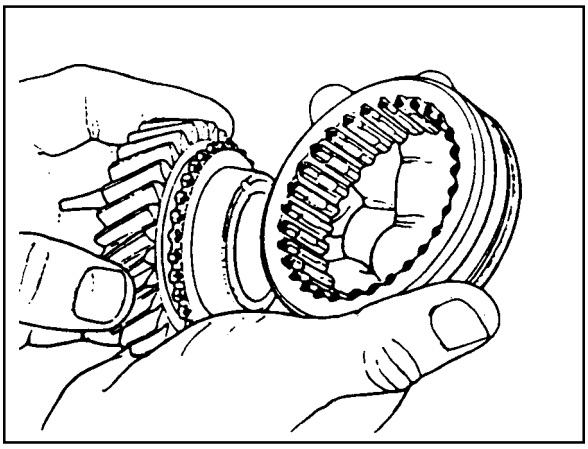

13. Check the synchronizer sleeve and gear clutch tooth for hop-out.

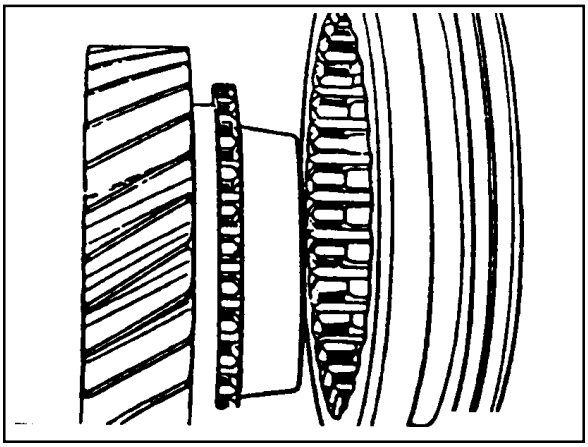

Downloaded from www.Manualslib.com manuals search engine

PRE-INSTALLATION CHECKS

Checking Procedure

1. Separate the clutch release fork from the pivot and remove the pivot from the clutch housing.
2. Check the pivot. Fork and release bearing.

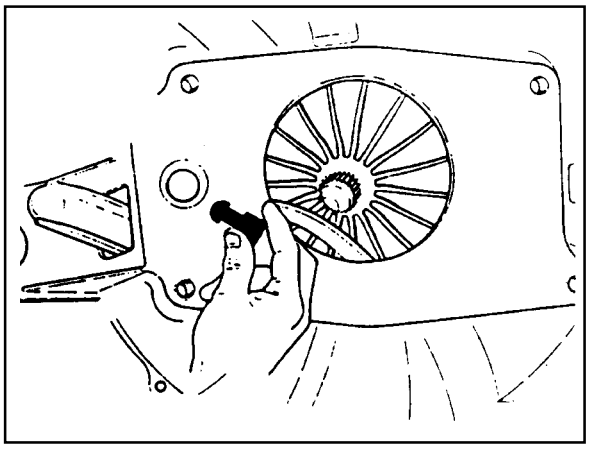

3. Check the pressure plate spring.

   Notice

   Inspect each parts and replace the excessively worn parts.

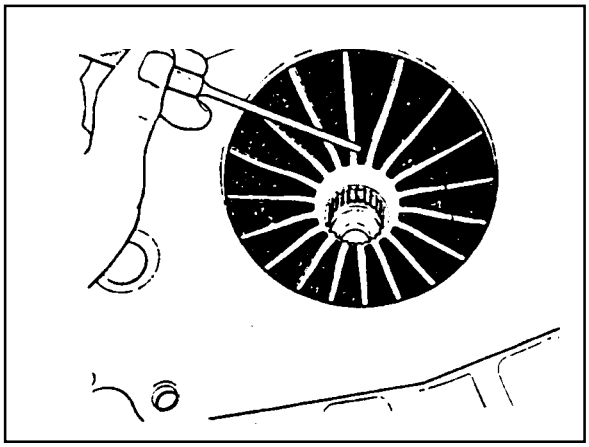

4. Check the clutch housing alignment as follows :
   - Place the magnetic base on the pressure plate spring.

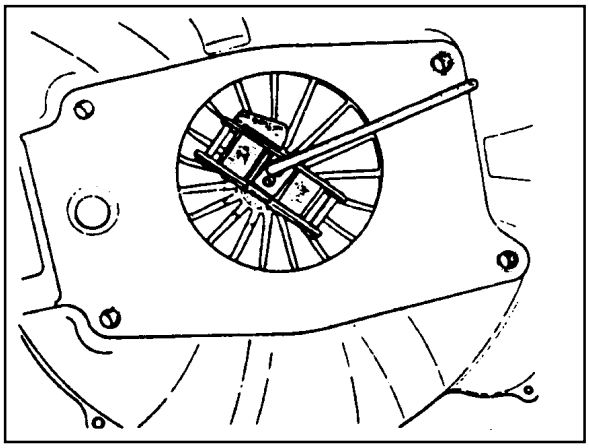

   - Check the housing bore alignment.
     - Place the dial indicator on the bore.
     - By rotating the crankshaft one revolution, record the dial indicator reading.

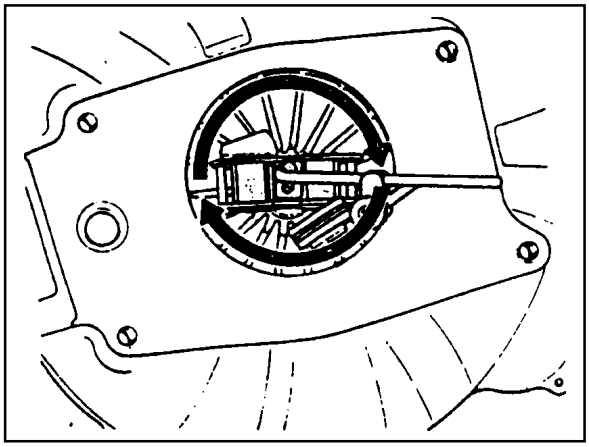

Downloaded from www.Manualslib.com manuals search engine

- Check the housing face alignment.
  - Place the dial indicator on the housing face.
  - By rotating the crankshaft one revolution, record the dial indicator reading.

Notice

If the reading is greater than 0.010 inch, insert the shim between the engine and clutch housing and adjust the alignment.

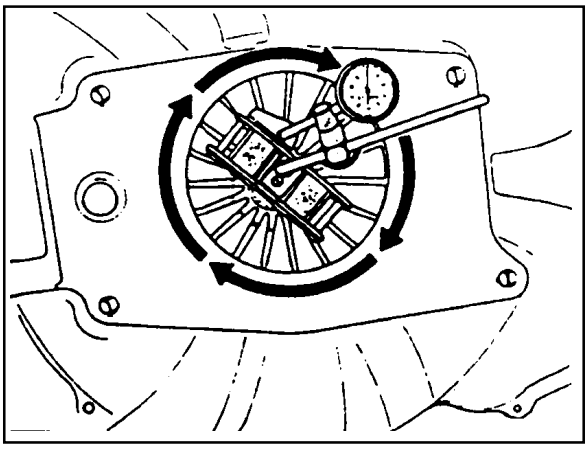

5. Check the following parts :
   - Pressure plate spring assembly
   - Disc
   - Flywheel
   - Input shaft pilot bearing

   Notice

   Replace the excessively worn parts.
6. Lubricate the clutch release bearing bore, fork pivot head during assembly.

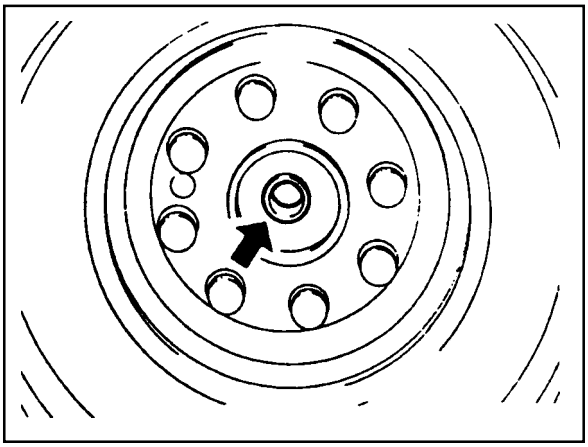

Downloaded from www.Manualslib.com manuals search engine

SECTION 5C

CLUTCH

Caution: Disconnect the negative battery cable before removing or installing any electrical unit or when a tool or equipment could easily come in contact with exposed electrical terminals. Disconnecting this cable will help prevent personal injury and damage to the vehicle. The ignition must also be in LOCK unless otherwise noted.

TABLE OF CONTENTS

Specifications 5C-1
General Specifications 5C-1
Fastener Tightening Specifications 5C-2
Special Tools 5C-3
Special Tools Table 5C-3
Diagnosis 5C-4
Clutch Slips 5C-4
Poor Disengagement 5C-4
Hard to Shift or Will not Shift 5C-4
Clutch Chatters When Starting 5C-4
Difficult Pedal Operation 5C-5
Clutch Noisy 5C-5
Component Locator 5C-6
Clutch Assembly 5C-6
Pedal and Master Cylinder 5C-7
Maintenance and Repair 5C-8
On-Vehicle Service 5C-8
Bleeding of Clutch System 5C-8
Clutch Disc 5C-9
Master Cylinder 5C-13
Clutch Pedal 5C-15
Clutch Oil Chamber 5C-17

SPECIFICATIONS

GENERAL SPECIFICATIONS

Application			Description
Type			Hydraulic
Clutch Pedal	Type		Suspended
	Max. Pedal Stroke		158 mm
	Pedal Free Play		5 - 10 mm
Clutch Disc	Type		Single Dry Diaphragm
	Thickness of Disc	Free	9.85 - 10.2 mm
		With Load	9.2 mm
Clutch Master Cylinder	Stroke		19.8 mm
	Inner Diameter		ƒ15.87 mm
Clutch Release Cylinder	Stroke		14.0 mm
	Inner Diameter		ƒ17.46 mm
Clutch Fluid			SAE J1703 / DOT3

Downloaded from www.Manualslib.com manuals search engine

FASTENER TIGHTENING SPECIFICATIONS

Application	N·m
Clutch Cover Bolt	37
Clutch Housing Bolt	47
Clutch Release Cylinder	30 - 40
Master Cylinder Nut	8 - 18
Clutch Tube Nut	15 - 18
Pedal Push Rod Nut	16 - 22
Pedal Mounting Bracket Bolt	8 - 18
Stopper Bolt	21 - 25

Downloaded from www.Manualslib.com manuals search engine

SPECIAL TOOLS

SPECIAL TOOLS TABLE

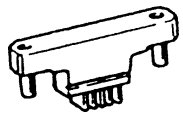	**602 589 00 40 00** **Engine Lock**		**661 589 00 15 00** **Centering Pin**

Downloaded from www.Manualslib.com manuals search engine

DIAGNOSIS

CLUTCH SLIPS

Checks	Action
Excessive Wear of Facing	Replace
Hard or Oily Facing	Repair or Replace
Damaged Pressure Plate or Flywheel	Replace
Damaged or Burnt Diaphragm Spring	Replace
Clutch Pedal Freeplay Insufficient	Adjust
Faulty Operation of Clutch Pedal	Repair or Replace
Worn or Damaged Clutch Disc	Replace

POOR DISENGAGEMENT

Checks	Action
Vibration or Excessive Run-out of Disc	Replace
Rust or Wear of Disc Spline	Repair or Replace
Oily Facing	Repair or Replace
Damaged Diaphragm Spring	Replace
Excessive Clutch Pedal Freeplay	Adjust

HARD TO SHIFT OR WILL NOT SHIFT

Checks	Action
Excessive Clutch Pedal Freeplay	Adjust Pedal Freeplay
Faulty Clutch Release Cylinder	Repair Release Cylinder
Worn Disc, Excessive Run-out, Damaged Lining	Repair or Replace
Dirty or Burred Splines on Input Shaft or Clutch Disc	Repair as Necessary
Damaged Clutch Pressure Plate	Replace

CLUTCH CHATTERS WHEN STARTING

Checks	Action
Oily Facing	Repair or Replace
Hard or Faulty Facing	Replace
Burnt Torsion Spring	Replace
Faulty Pressure Plate	Replace
Bent Clutch Diaphragm Spring	Replace
Hard or Bent Flywheel	Repair or Replace
Engine Mounts Loose or Burnt Lever	Tighten or Replace

Downloaded from www.Manualslib.com manuals search engine

DIFFICULT PEDAL OPERATION

Checks	Action
Poor Lubrication on Clutch Cable	Lubricate or Replace
Poor Lubrication on Pedal Shaft	Lubricate or Replace
Poor Lubrication on Clutch Pedal	Repair

CLUTCH NOISY

Checks		Action
Not Using the Clutch	Insufficient Clutch Pedal Freeplay	Adjust
	Excessive Wear of Facing	Replace
After Disengagement	Worn or Damaged Release Bearing	Replace
When Disengaging	Poor Lubricationon Contact Surface of Bearing	Replace
	Faulty Installation of Clutch Assembly or Bearing	Repair
Clutch pedal is partially depressed and vehicle speed is reduced	Damaged Pilot Bushing	Replace

Downloaded from www.Manualslib.com manuals search engine

COMPONENT LOCATOR

CLUTCH ASSEMBLY

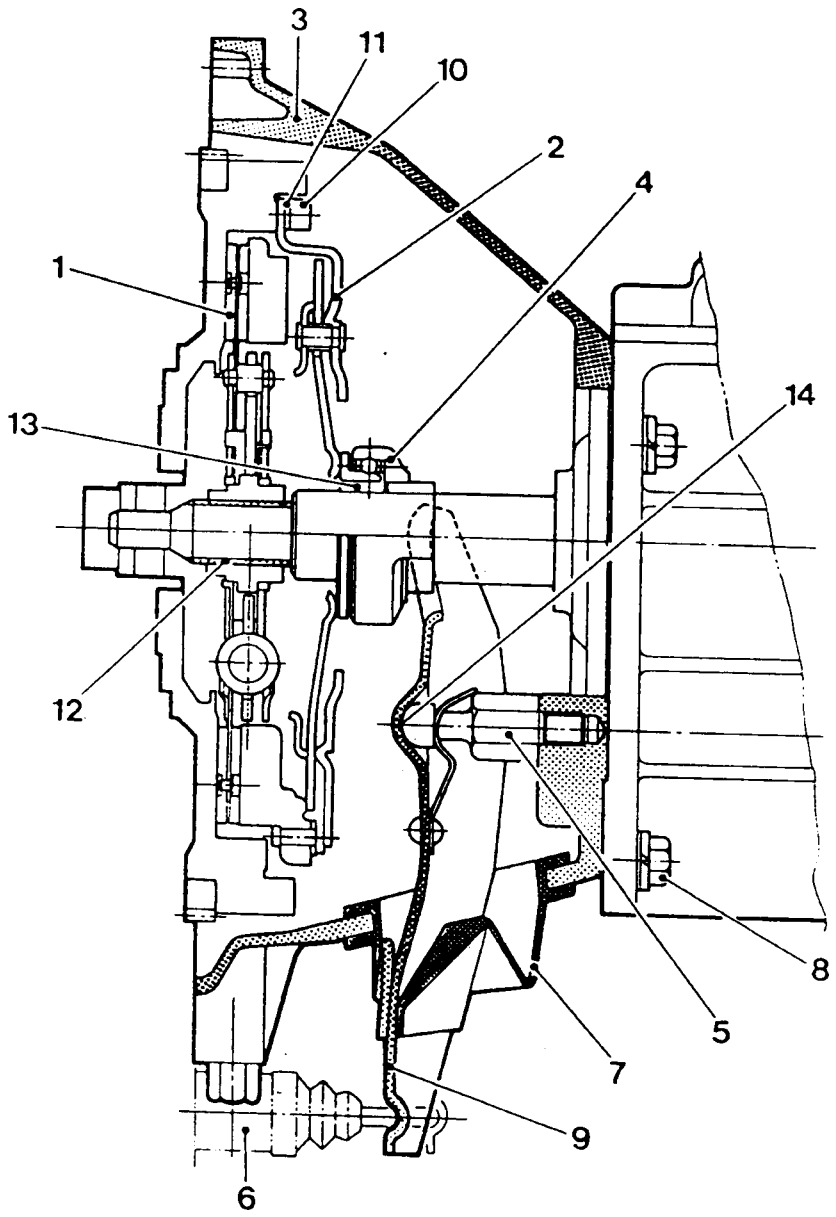

1 Clutch Disc
2 Clutch Cover
3 Clutch Housing
4 Release Bearing
5 Release Fork Pivot
6 Release Cylinder
7 Release Fork Boot
8 Bolt
9 Release Fork
10 Bolt
11 Spring Lock Washer
12 Transmission Input Spline
13 Release Bearing Contacting Surface
14 Contacting Point of Release Fork and Pivot

Notice

Apply the long-term grease (DBL 6811.00) to No.12,13 and 14.

Downloaded from www.Manualslib.com manuals search engine

PEDAL AND MASTER CYLINDER

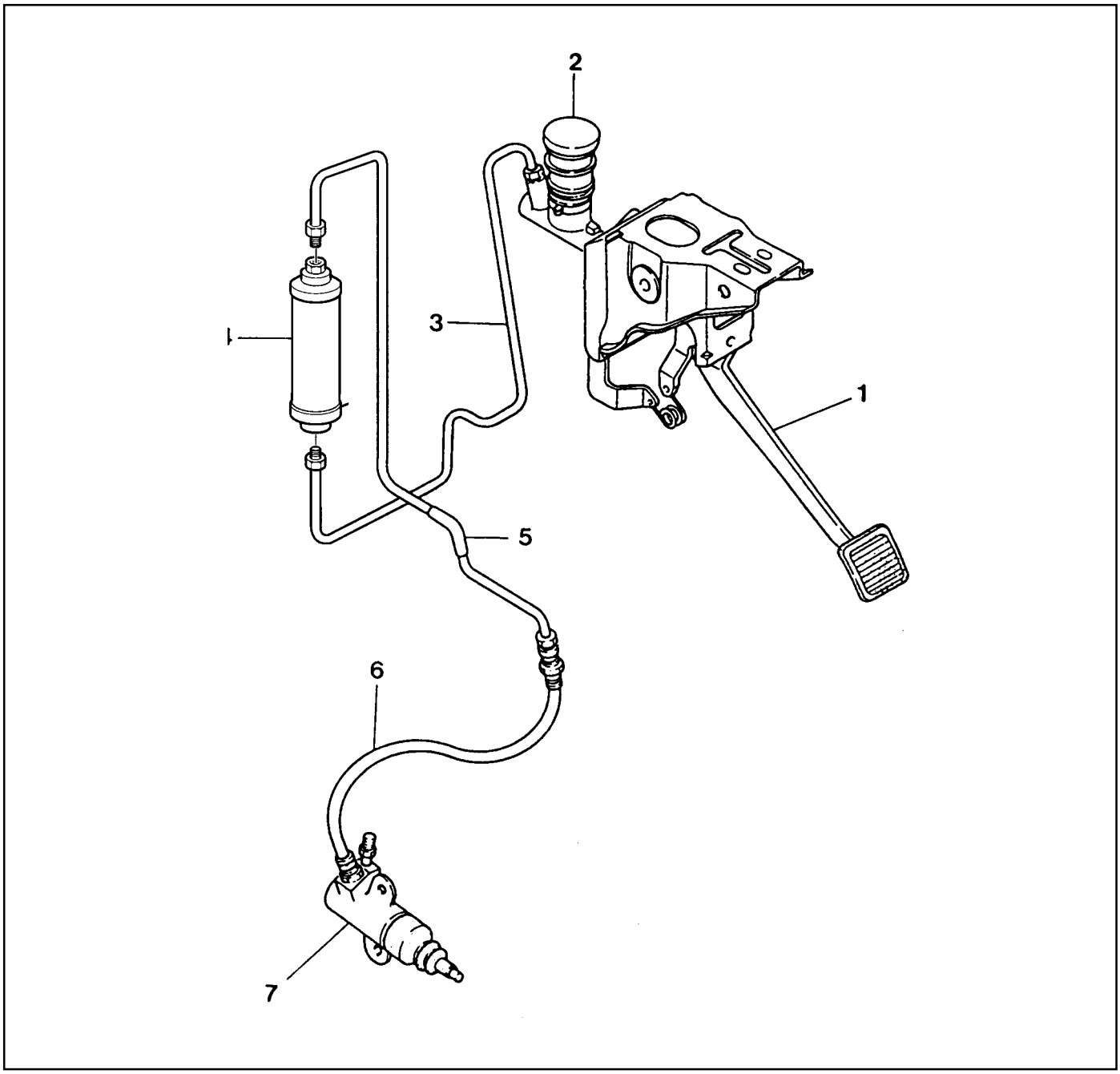

1 Clutch Pedal
2 Clutch Master Cylinder
3 Clutch Tube
4 Clutch Damper Cylinder
5 Clutch Tube
6 Clutch Hose
7 Clutch Release Cylinder

Downloaded from www.Manualslib.com manuals search engine

MAINTENANCE AND REPAIR

ON-VEHICLE SERVICE

BLEEDING OF CLUTCH SYSTEM

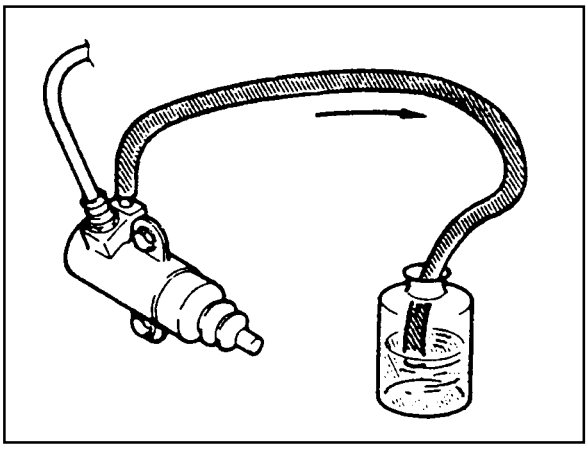

Bleeding Procedure

Notice

Keep the fluid level over 'MAX' in reservoir during bleeding operation.

Do not let fluid contact a painted surface.

1. Remove the air bolt cap of the release cylinder.
   Connect a vinyl tube to the bolt.
2. Insert the other end of the tube in a vacant container.
3. Slowly depress the clutch pedal sever81 times.
4. With clutch pedal fully depressed, open the air bolt and release air rind fluid in the fluid line,
5. Repeat this procedure until there are no more air bubbles in the fluid flows.

Downloaded from www.Manualslib.com manuals search engine

CLUTCH DISC

Preceding Work : Removal of the transmission

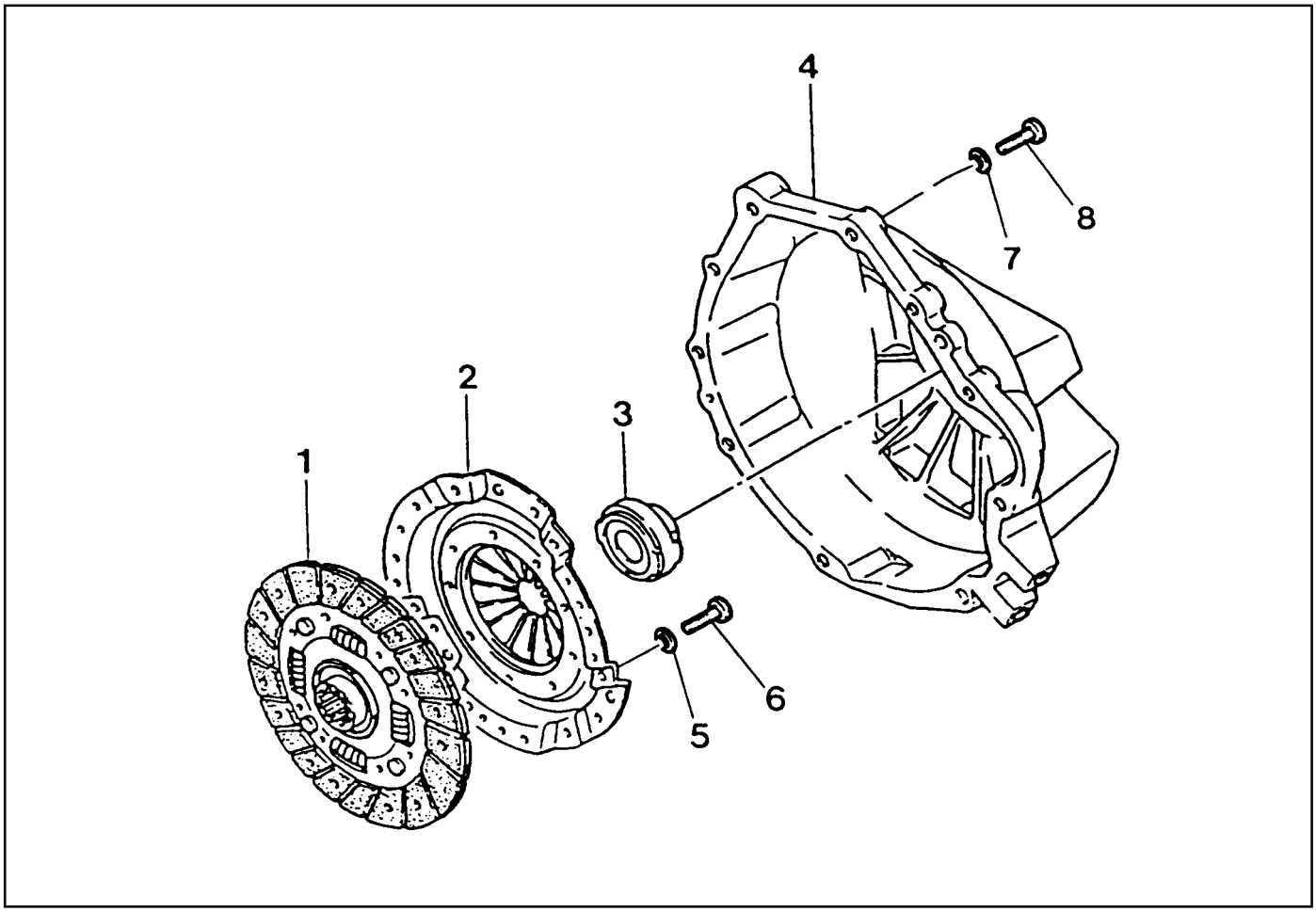

1 Clutch Disc
2 Clutch Cover Assembly
3 Release Bearing
4 Clutch Housing
5 Washer
6 Bolt ..... 23 Nm
7 Washer
8 Bolt ..... 44 Nm

Tools

602 589 00 40 00 Engine Lock

661 589 00 15 00 Centering Pin

Downloaded from www.Manualslib.com manuals search engine

Removal & Installation Procedure

1. Remove the starter motor. Install the special tool to the flywheel through the starter motor mounting holes.

   Engine Lock 602 589 00 40 00

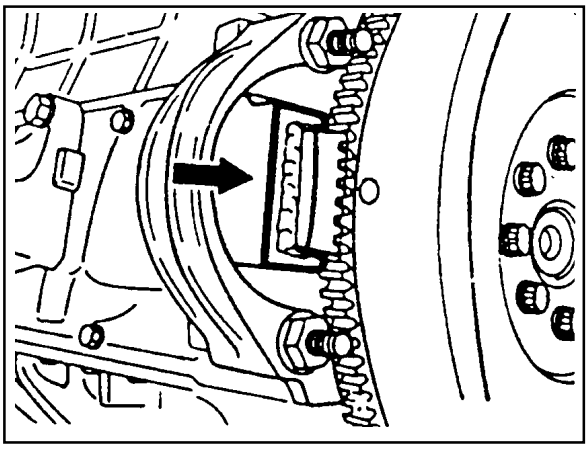

2. Unscrew the release cylinder mounting bolts and remove the release cylinder.

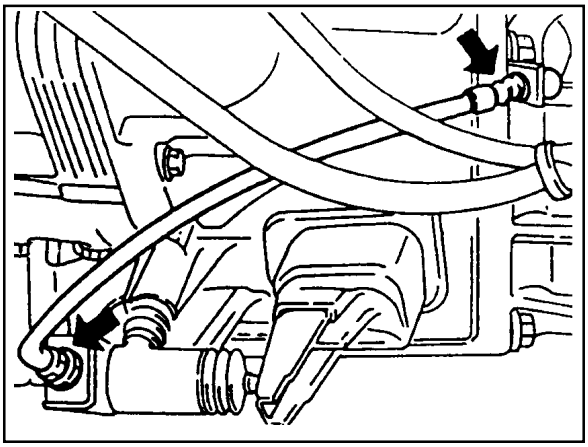

3. Unscrew the clutch housing bolts and remove the clutch housing, release fork and release bearing.

   Installation Notice

Tightening Torque	44 Nm

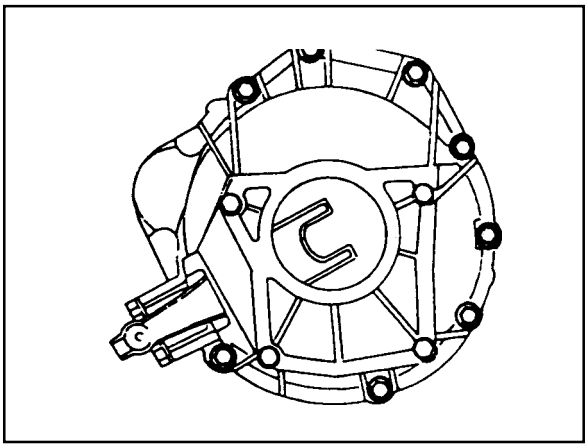

4. Insert the centering pin into the clutch spline.

   Loosen the clutch cover bolts 1/2 turn in crisscross sequence until the spring tension is released.

   Notice

   Do not remove the bolts at a time, or clutchcover can be damaged or deformed.

   Centering Pin 661 589 00 15 00

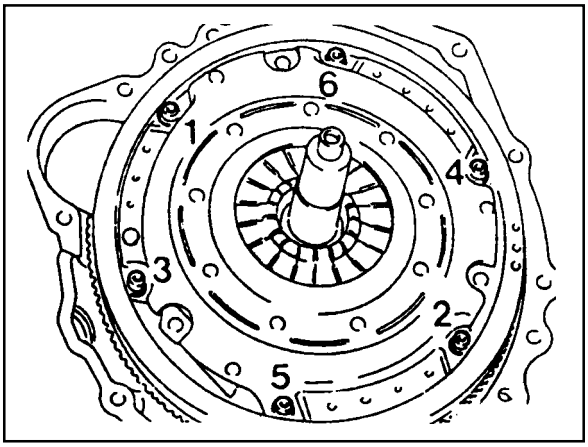

Downloaded from www.Manualslib.com manuals search engine

5. Unscrew the bolts and remove the clutch cover, pressure plate and clutch disc.

   Notice

   Be careful not to drop the pressure plate and clutch disc.

   Installation Notice

Tightening Torque	23 Nm

6. Installation should follow the removal procedure in the reverse order.

   Notice

   - Before installation, clean oil and grease on the flywheel surface.
   - Do not clean the clutch disc and release bearing in solvent.

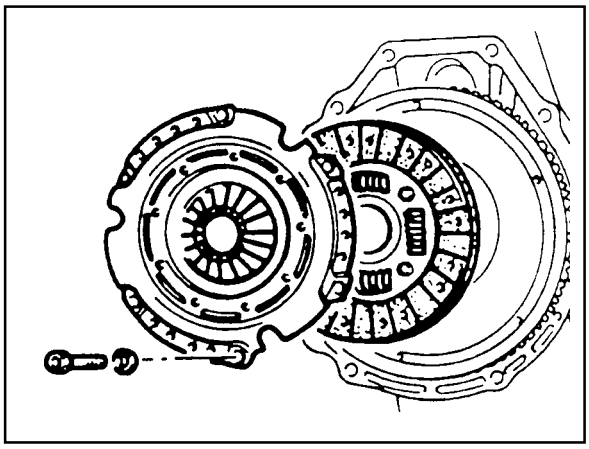

Downloaded from www.Manualslib.com manuals search engine

Inspection Procedure

1. Clutch Cover
   - Check the diaphragm spring tip for wear and height unevenness.

Unevenness Limit	0.8 mm

   - Check the pressure plate surface for wear, crack and discoloration.
   - Check the strap plate rivet for looseness and replace the clutch cover if loosened.

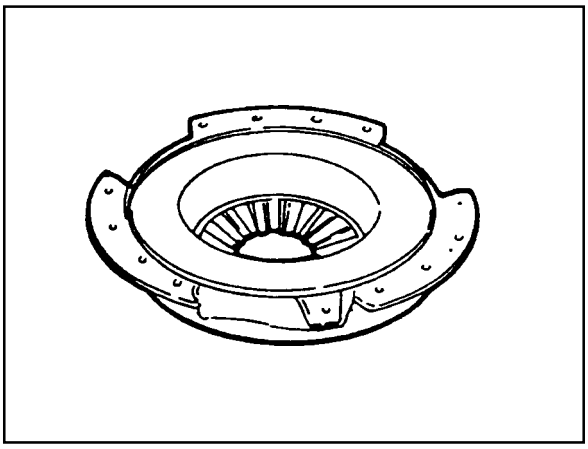

2. Clutch Disc
   - Check the facing for rivet looseness, excessive runout, sticks, oil and grease.
   - Measure the rivet head depth.

     If out limit, replace the disc.

Wear Limit	0.3 mm

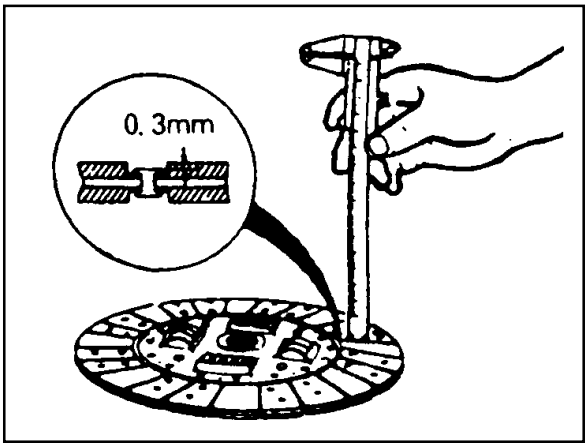

3. Clutch Release Bearing
   - The release bearing is permanently lubricated and requires no cleaning.
   - Check the bearing for sticks, damage, abnormal noise, turning drag and wear.

4. Release Fork
   - If there is abnormal wear in contact point with bearing, replace the release fork.

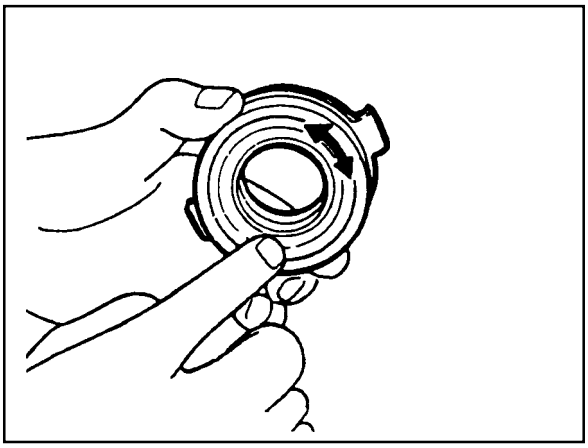

Downloaded from www.Manualslib.com manuals search engine

MASTER CYLINDER

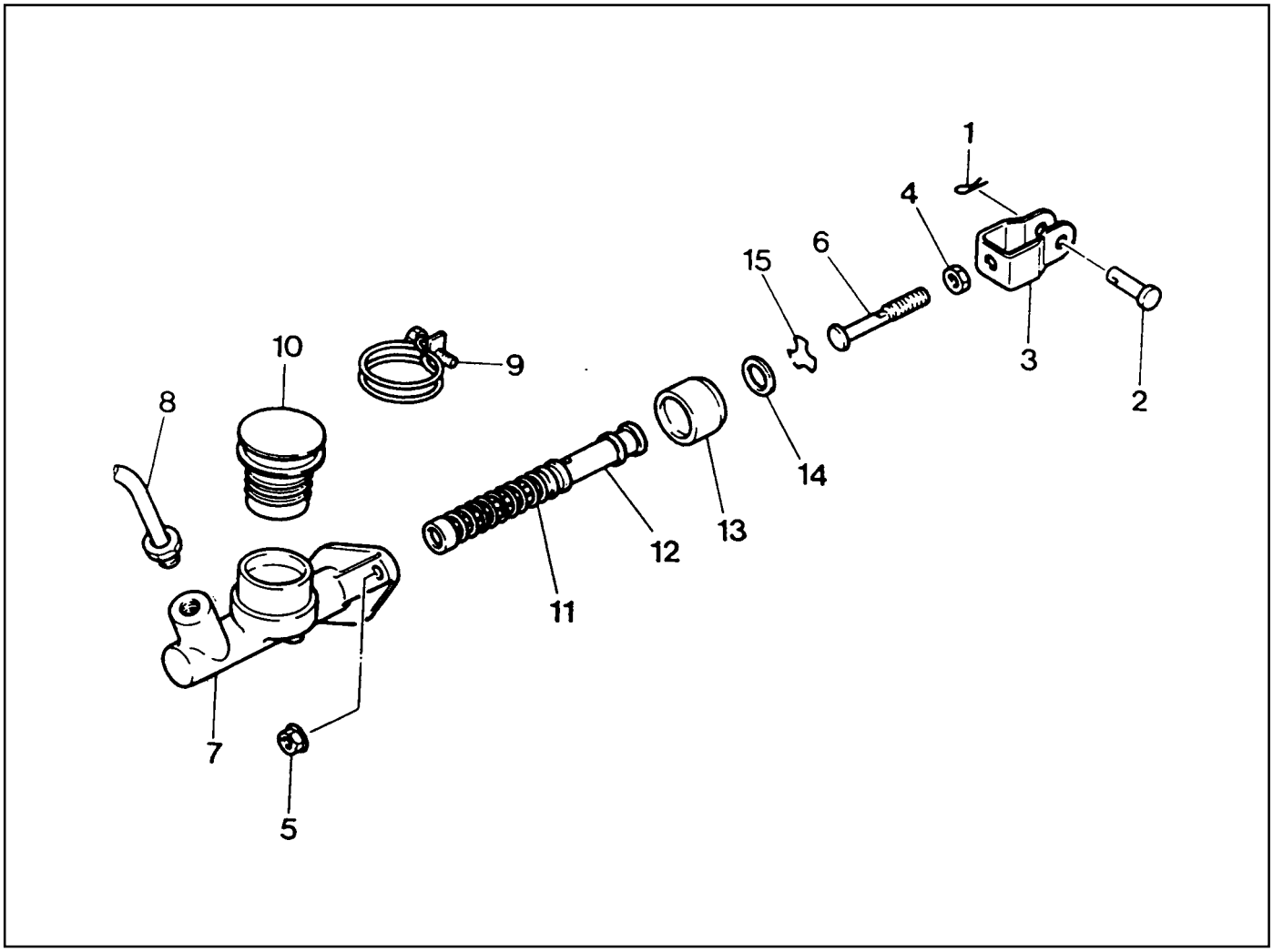

1 Snap Pin
2 Clevis Pin
3 Clevis
4 Lock Nut
5 Flange Nut ..... 30-40 Nm
6 Push Rod
7 Cylinder Body
8 Oil Pipe ..... 15-18 Nm
9 Clamp
10 Reservoir
11 Spring
12 Piston Assembly
13 Boot
14 Plate
15 Snap Ring

Notice

Do not disassemble the No.12.

Downloaded from www.Manualslib.com manuals search engine

Removal & Installation Procedure

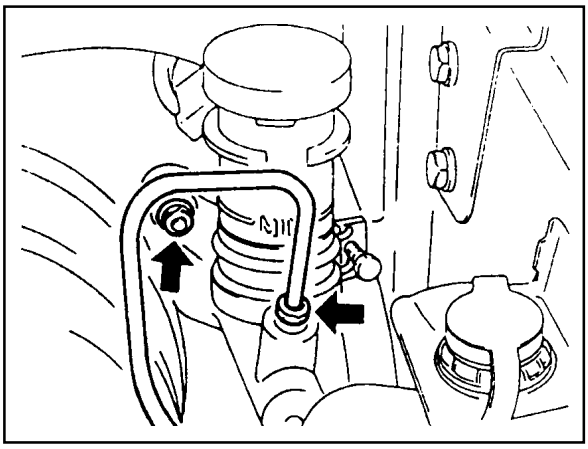

1. Draw out the fluid.
2. Pull out the snap pin and clevis pin from the clutch pedal connection.
3. Remove the oil pipe.

   Installation Notice

Tightening Torque	15 - 18 Nm

   Notice

   Be careful not the fluid contact a painted surface.

4. Remove the master cylinder mounting nuts and pull off the master cylinder.

   Installation Notice

Tightening Torque	8 - 18 Nm

5. Installation should follow the removal procedure in the reverse order.
6. Check the clutch pedal operation.
7. Bleed the clutch system.

Downloaded from www.Manualslib.com manuals search engine

CLUTCH PEDAL

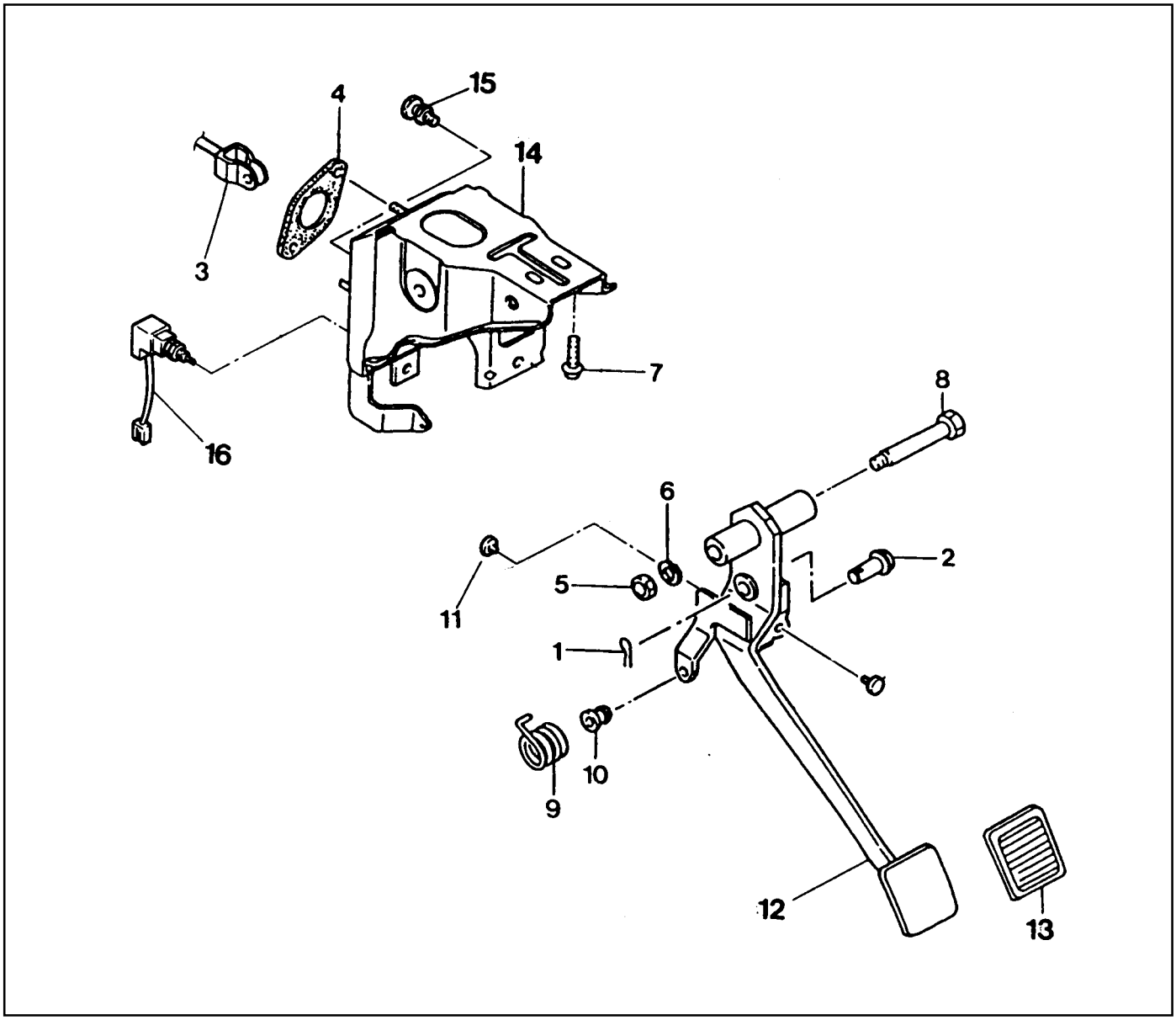

1 Snap Pin ..... Replace
2 Clevis Pin ..... Apply Grease
3 Master Cylinder Push Rod
4 Gasket
5 Nut ..... 16-22 Nm
6 Spring washer
7 Bolt ..... 8-18 Nm
8 Fulcrum Pin
9 Turn Over Spring ..... Apply Grease
10 Bushing ..... Replace, Apply Grease
11 Full Stroke Stopper Contact Pad
12 Clutch Pedal
13 Pedal Pad
14 Pedal Mounting Bracket
15 Stopper Bolt 21-25Nm
16 Clutch Interlock Switch

Notice

Assembly should follow the disassembly procedure in the reverse order.

Grease specification : Long - term grease (T/Mn DBL6611.00)

Downloaded from www.Manualslib.com manuals search engine

Inspection Procedure

1. Pedal Stroke (A).

Max. Stroke	148 mm

Notice

To adjust the pedal stroke, loosen the lock nut (H) of the interlock switch (G) and turn the two lock auto until the stroke is correct.

2. Pedal Height (B).

Height (From the Floor Carpet)	169.5 - 172.5 mm

Notice

To adjust the pedal height, loosen the lock nut (C) of the stopper bolt (D) and turn the stopper bolt until the height is correct.

3. Pedal free play (E).

Free Play	5 - 15 Nm

Notice

To adjust the pedal free play, loosen the lock nut (F) of the master cylinder and turn the push rod until the free play is correct.

4. Check the fulcrum pin and the bushing for wear, the pedal for bending and the spring for damage.

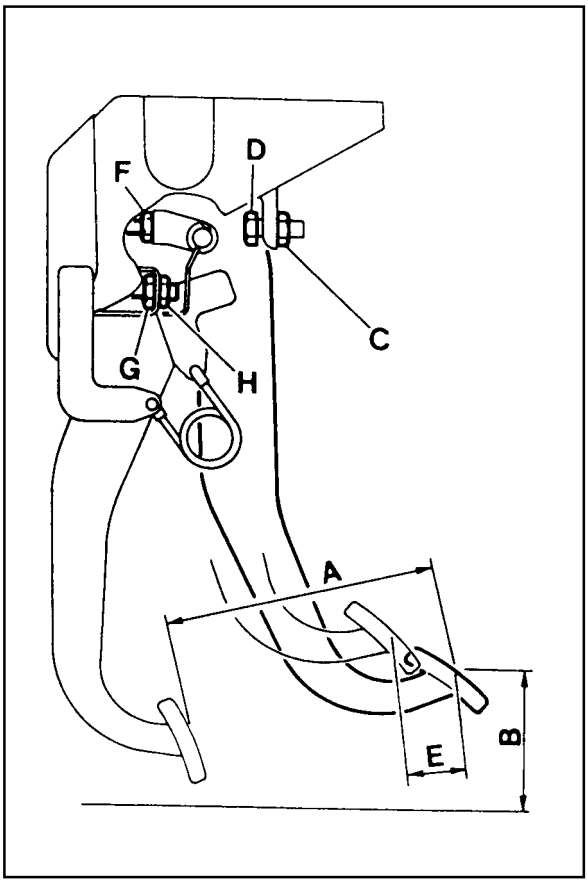

Downloaded from www.Manualslib.com manuals search engine

CLUTCH OIL CHAMBER

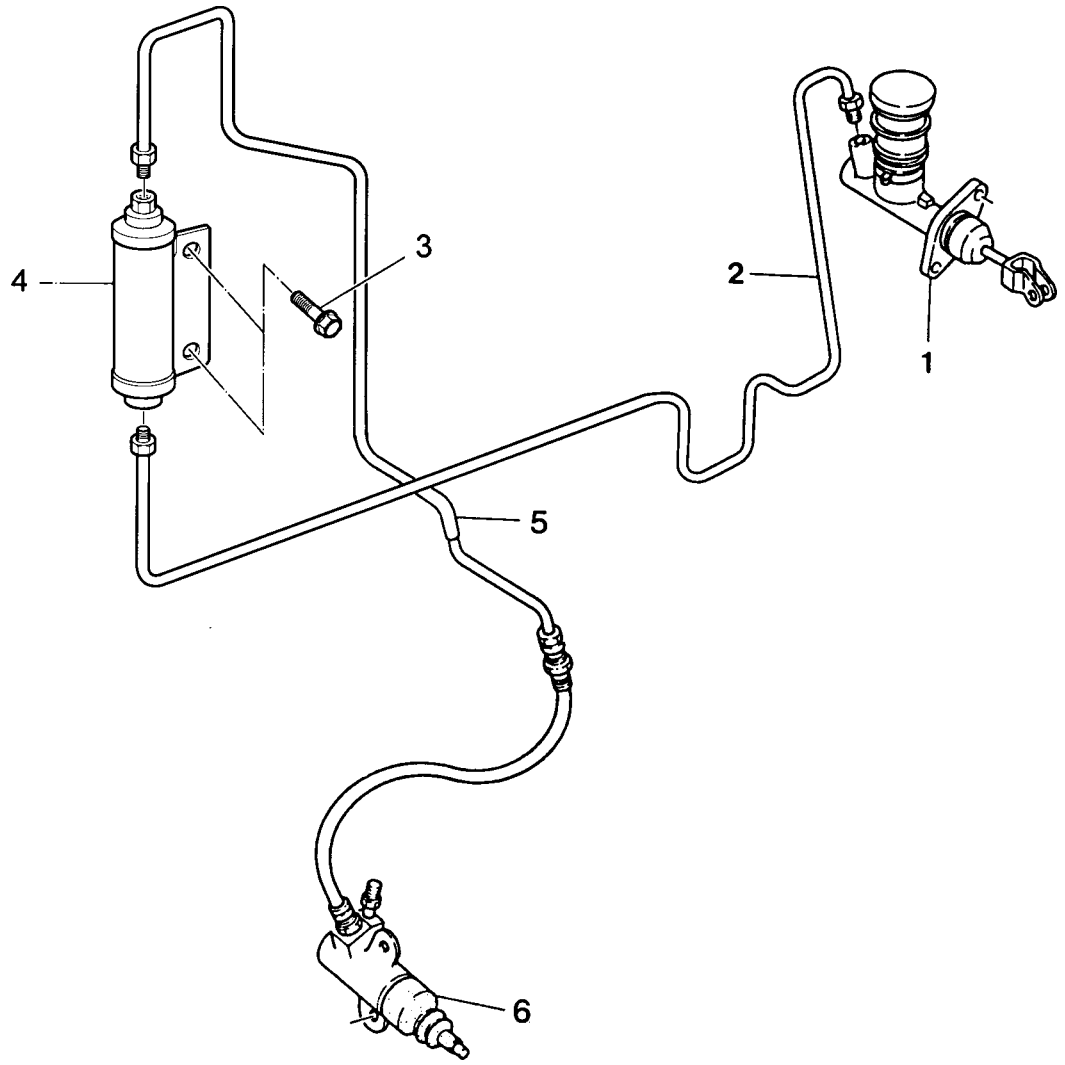

1 Clutch Master Cylinder
2 Hydraulic Tube
3 Bolt
4 Clutch Oil Chamber
5 Hydraulic Tube
6 Clutch Release Cylinder

Notice

- Installation should follow the removal procedure in the reverse order.
- When installing, perform the bleeding procedures from chamber cylinder and release cylinder.

Downloaded from www.Manualslib.com manuals search engine

SECTION 5D1

TRANSFER CASE (PART TIME 4408)

Caution: Disconnect the negative battery cable before removing or installing any electrical unit or when a tool or equipment could easily come in contact with exposed electrical terminals. Disconnecting this cable will help prevent personal injury and damage to the vehicle. The ignition must also be in LOCK unless otherwise noted.

TABLE OF CONTENTS

Specifications 5D1-1
General Specifications 5D1-1
Schematic and Routing Diagram 5D1-2
Part Time Transfer Case - 4408 . . . . . 5D1-2
Diagnosis 5D1-3
Self- Diagnosis 5D1-4
System Description 5D1-4
Self-Diagnosis Test 5D1-8
Diagnostic Diagram 5D1-9
Maintenance and Repair 5D1-10
On-Vehicle Service 5D1-10
Maintenance of Transfer Case Lubricant . . 5D1-10
Transfer Case 5D1-11
Unit Repair 5D1-14
Transfer Case 5D1-14
Transfer Case Control Unit (TCCU) 5D1-36

SPECIFICATIONS

GENERAL SPECIFICATIONS

Application		Description
Model		Part-Time 4408 (E)
Type		E.S.O.F. Type
Gear Ratio	High	1 : 1
	Low	2.48 : 1
Oil	Specification	ATF S - 3, S - 4 or DEXRON II, III
	Capacity	1.2 L
	Lubrication	Check : Every 15,000 km Replace : Every 50,000 km
Manufacturer		Borg Warner
Weight		30 kg

Downloaded from www.Manualslib.com manuals search engine

SCHEMATIC AND ROUTING DIAGRAM

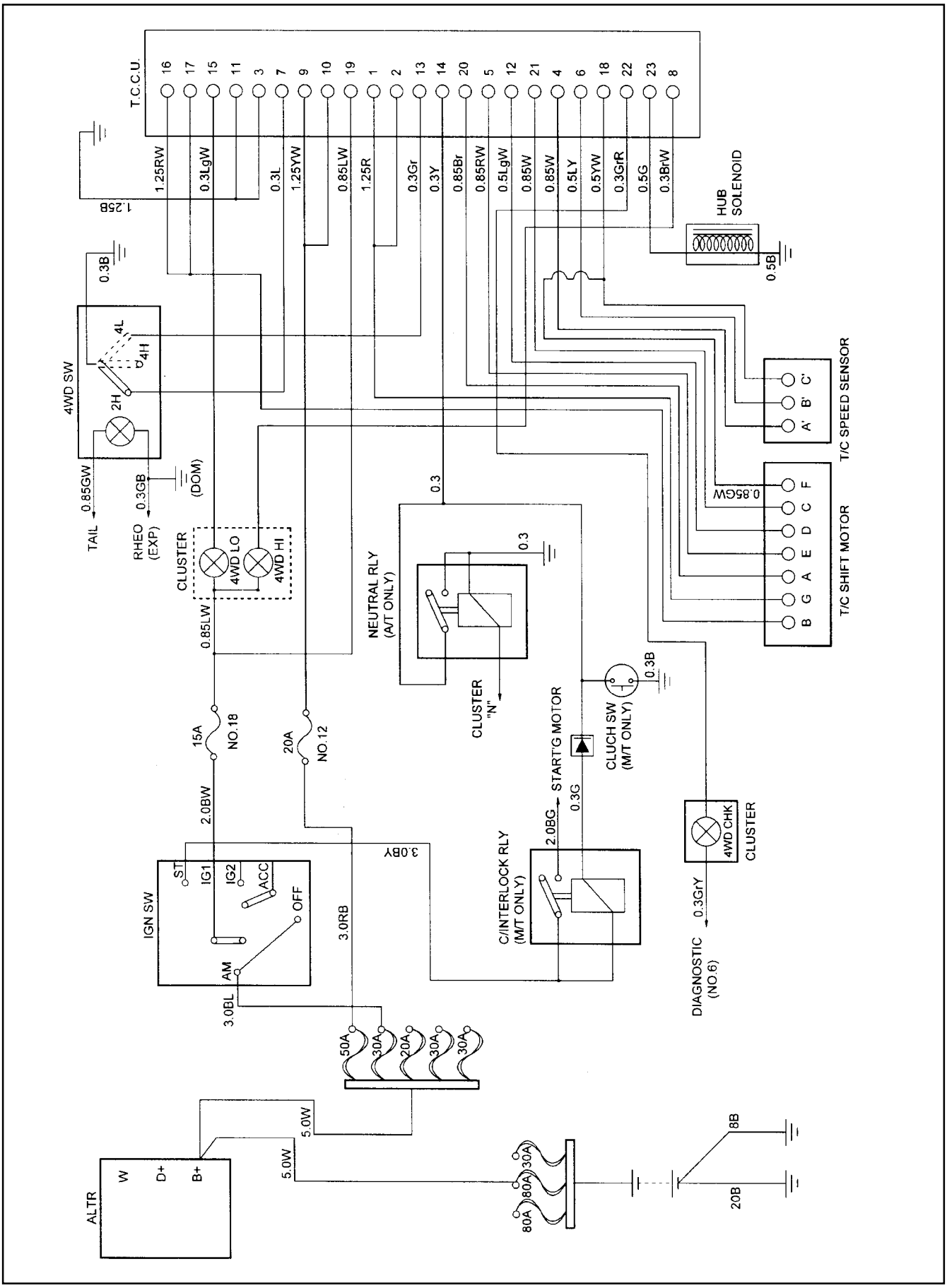

Downloaded from www.Manualslib.com manuals search engine

DIAGNOSIS

Electric Shift Problems

Checks	Action
Faulty or Damaged TCCU, Speed Sensor, Motor, Clutch or Internal Wirings	Overhaul and check, replace if necessary.
Damaged or Worn Shift Cam, Hub, Fork and Rail Shift	Overhaul and check for wear and damage. Replace if necessary.
Binding Shift Fork, Hub Collar or Gear	Check sliding parts, replace if necessary.

Cannot Front Wheel Drive when Shifted 4H,4L

Checks	Action
Broken Drive Chain	Check sliding parts, replace if necessary.

Noise in 4WD Operation

Checks	Action
Improper or low oil	Drain and replace with specified oil.
Loosened bolts or mounted parts	Retighten as specified.
Noisy T/C bearing	Disassemble bearings and parts and check for wear or damage. Replace if necessary.
Noisy gears	Check for wear and damage including speedometer gear, replace if necessary.

Noise in 4H or 4L

Checks	Action
Worn or Damaged Sprockets or Drive Chain	Disassemble and check for wear and damage, replace if necessary.
Incorrect Tire Pressure	Adjust tire pressure.

Transfer Case Oil Leakage

Checks	Action
Cracked Transfer Case	Replace the case.
Leakage from Other Parts	Clean case and parts and check for leakage.
Breather Clogging	Remove breather hose and clean, replace if necessary.
Improper or too much Oil	Use specified oil and adjust oil level.
Loosened Sealing Bolts	Retighten
Improperly Applied Sealant	Use specified sealant and retighten.
Worn or Damaged Oil Seal	Replace

Downloaded from www.Manualslib.com manuals search engine

SELF- DIAGNOSIS

SYSTEM DESCRIPTION

1. TCCU detects transfer case system malfunctions and indicates malfunctioning part(s) through flashing 4H,4L indicator lights.

   Using a service connector, connect it to the diagnosis box in the engine room and read the flashing of the ‘4WD CHECK’ indicator light.

   The flashing indicator light will show you defective code(s).
2. Identify 7 defective codes after reading the flashing indicator light.
   - TCCU
   - Shift motor
   - Magnetic synchronizer clutch
   - Speed sensor
   - Hub solenoid
   - Selector switch
   - Motor position sensor
3. Transfer case system is malfunctioning when:
   - 4H ,4L indicator lights are remain on after 0.6 second when turning the ignition switch ‘ON’
   - 4H,4L indicator lights are continuously come on during driving.
4. If only 1 part is malfunctioning, ‘4WD CHECK’ indicator light will display defective code 3 times continuously.
5. If more then 2 part is malfunctioning, the first malfunctioning part will be displayed 3 times and following malfunctioning parts will be displayed .
6. To read defective code, connect the service connector and turn the ignition switch 'ON'.
7. After repairing, eliminate the defective code stored in the TCCU.

   Notice

   Before replacing the malfunction parts with defective code, check the wires and connectors for proper condition.

Downloaded from www.Manualslib.com manuals search engine

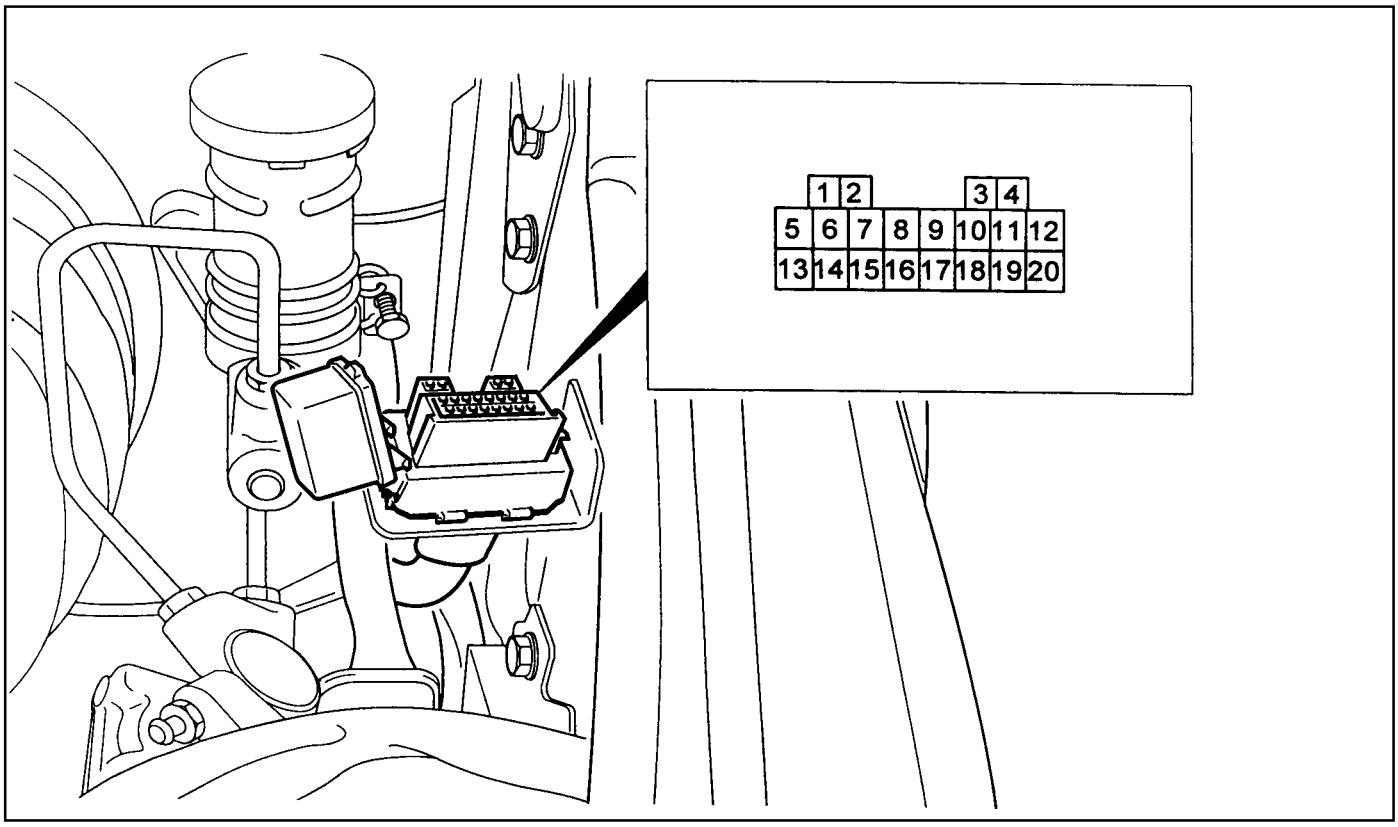

Defective Code Reading

1. Position the ignition switch to ‘OFF’
2. Using a service connect the No.2 pin (Ignition) and No.6 pin (TCCU) of the diagnosis socket in the engine room.
3. Position the ignition switch to 'ON'.
4. Read the flashing ‘4WD CHECK’ indicator light and identify the malfunctioning part.

How to Eliminate the Falut Code

1. Position the ignition switch to ‘OFF’
2. Using a service connector, connect the No.2 pin (GND) and No.6 pin (TCCU) of the diagnosis socket in the engine room.
3. Position the ignition switch to ‘ON’ over 5 seconds.
4. Do defective code reading and make sure that all defective codes are eliminated.

Downloaded from www.Manualslib.com manuals search engine

Diagnostic Table

Connect a service connector. If turn the ignition switch 'ON' '4WD CHECK' indicator light will come on for 0.6 second and turn off for 3 seconds and then display a defective code 3times continuously.

No.	Defective Code	Malfunctioning Part
1	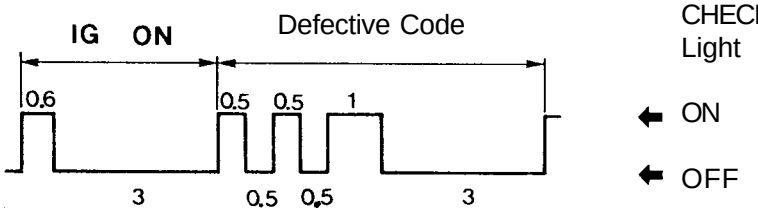	TCCU
2	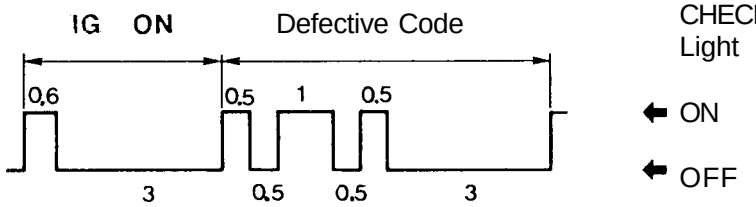	Shift Motor
3	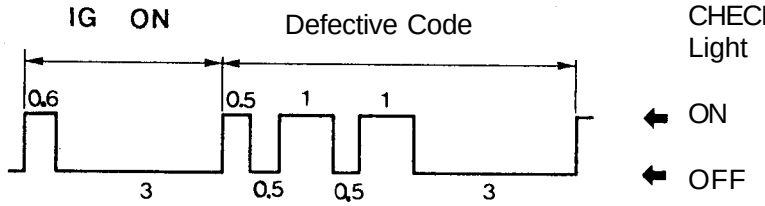	Synchronizer Clutch
4	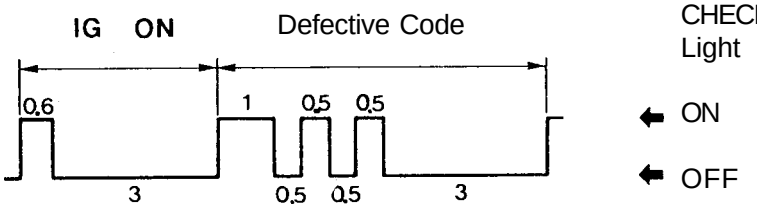	Speed Sensor
5	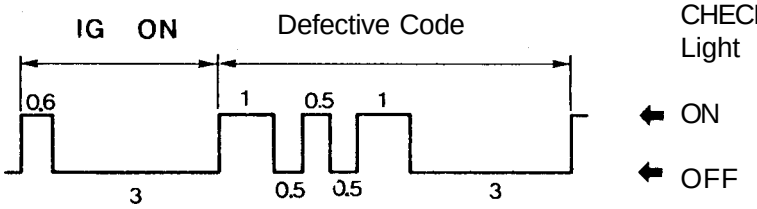	Hub Solenoid

Downloaded from www.Manualslib.com manuals search engine

No.	Defective Code	Malfunctioning Part
6	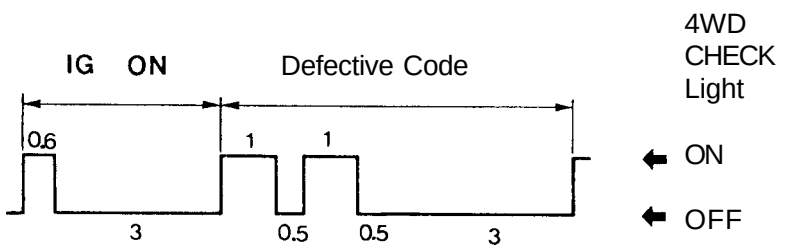	Selector Switch
7	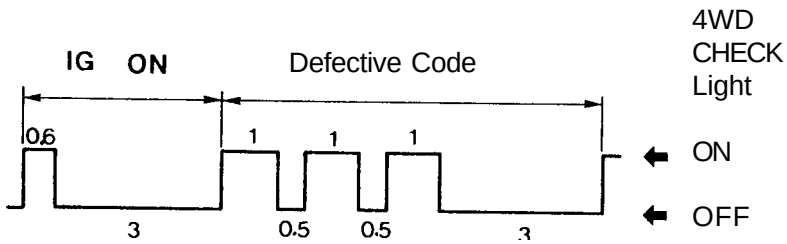	Motor Positon Sensor

Downloaded from www.Manualslib.com manuals search engine

SELF-DIAGNOSIS TEST

Test Procedure

1. Connect the scanner harness connector to the engine compartment diagnosis socket.
2. Turn the ignition switch to "ON" position.
3. Select "Electronic control vehicle diagnosis" from the function selection display and press "Enter".
4. Select "Korando" from vehicle model selection display and press "Enter".
5. Select "TCCU" from control system selection display and press "Enter".
6. Select "TCCU Part Time" from TCCU diagnosis selection display.

   Notice

   Check sensor valve output display if necessary.
7. Select "Self-diagnosis" from diagnosis items selection display.
8. Turn the ignition switch to "OFF" position and press "ENTER". Turn the ignition swtich to "ON" position again and press "ENTER".
9. Determine fault code and check the defective component.

   Notice

   Refer to self-diagnosis list.

Downloaded from www.Manualslib.com manuals search engine

DIAGNOSTIC DIAGRAM

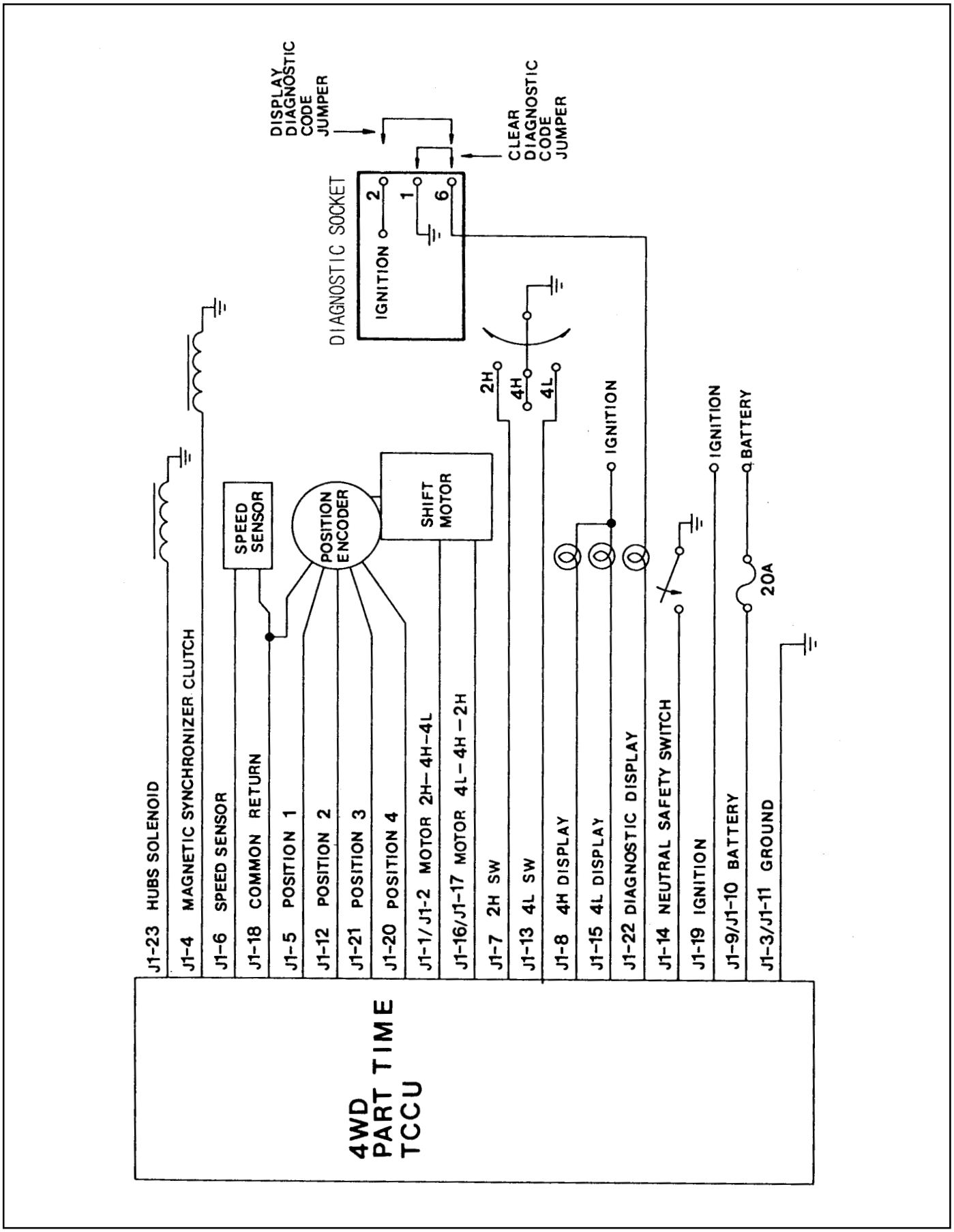

Downloaded from www.Manualslib.com manuals search engine

MAINTENANCE AND REPAIR

ON-VEHICLE SERVICE

MAINTENANCE OF TRANSFER CASE LUBRICANT

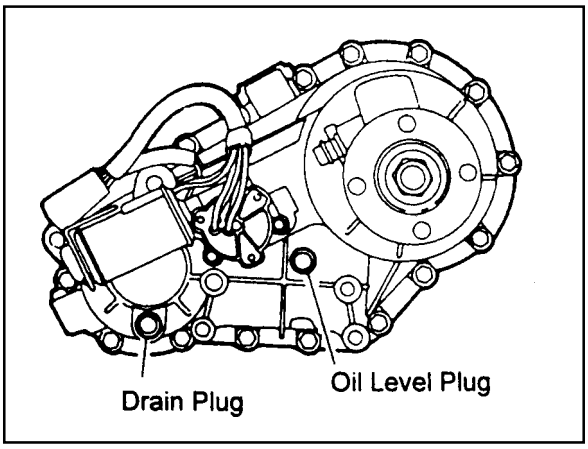

Oil Level Check

- Clean the oil level plug and surrounding area.
- Remove the oil level plug and check whether oil is drip out or not.

Tightening Torque	20 - 30 Nm

- Tighten the oil level plug.

Oil Change

- Clean the oil level plug and surrounding area
- Place a suitable container under the transfer case.
- Remove the oil and tighten the drain plug.
- Fill the oil through the oil level plug until oil begins to drip out.
- Tighten the oil level plug.

Cautions for oil level check and plugs tightening

- Do not use an impact wrench to remove or tighten the oil level plug or drain plug since this will damage the threads in the transfer case.

Downloaded from www.Manualslib.com manuals search engine

TRANSFER CASE

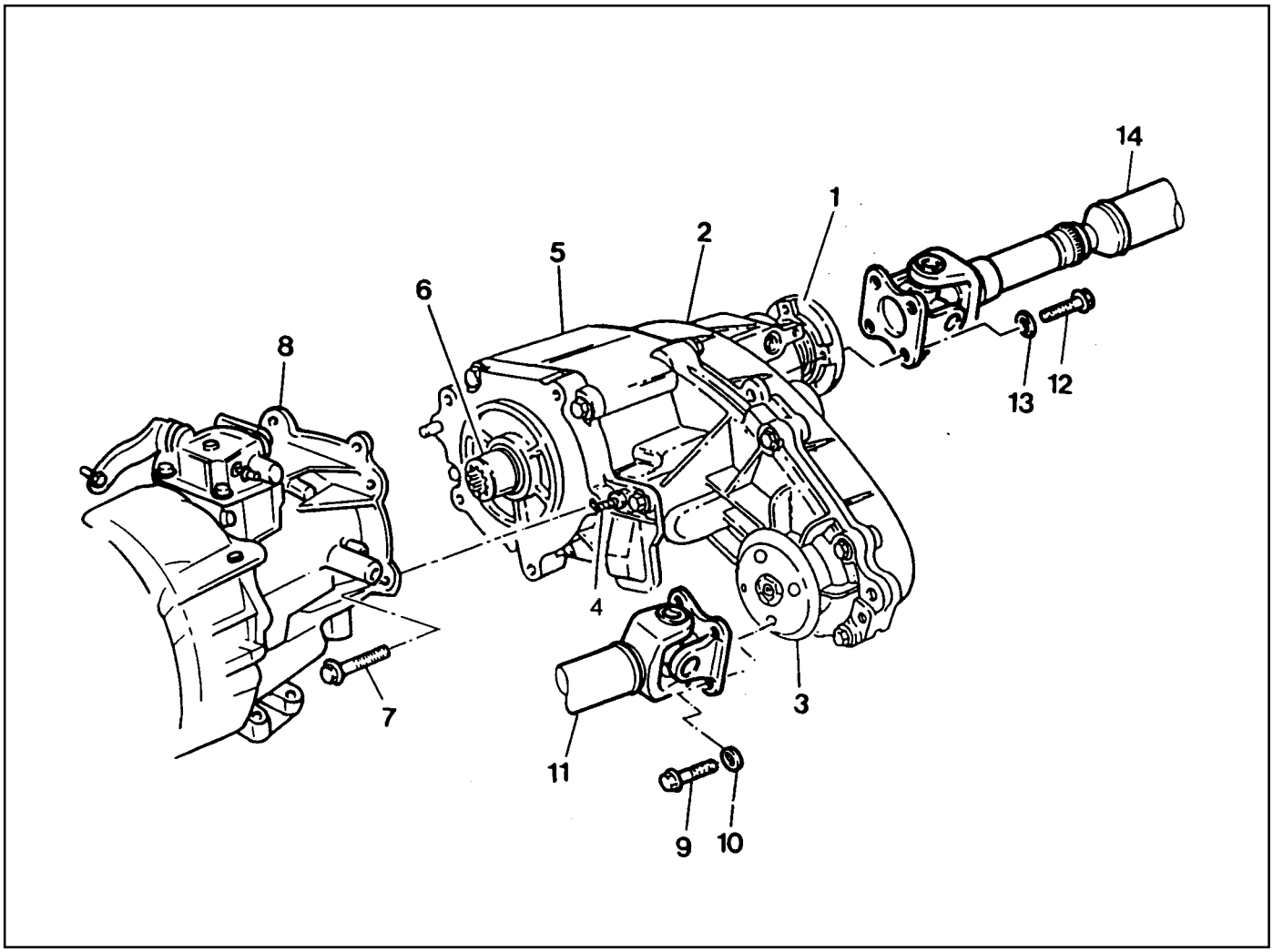

1 Rear Companion Flange
2 Case Cover
3 Front Companion Flange
4 Breather Plug
5 Case
6 Input Shaft
7 Mounting Bolt ..... 38-52 Nm
8 Transmission Adapter
9 Bolt ..... 81-59 Nm
10 Washer
11 Front Propeller Shaft
12 Bolt ..... 81-89 Nm
13 Washer
14 Rear Propeller Shaft

Downloaded from www.Manualslib.com manuals search engine

Removal & Installation Procedure

1. Disconnect the negative terminal from the battery.
2. Lift up the vehicle and fix it safely.
3. Remove the drain plug and drain the oil.
   Reinstall the drain plug.
   * If planal damper is installed, unscrew 4bolts and remove the planar damper.

   Installation Notice

Tightening Torque	19 - 30 Nm

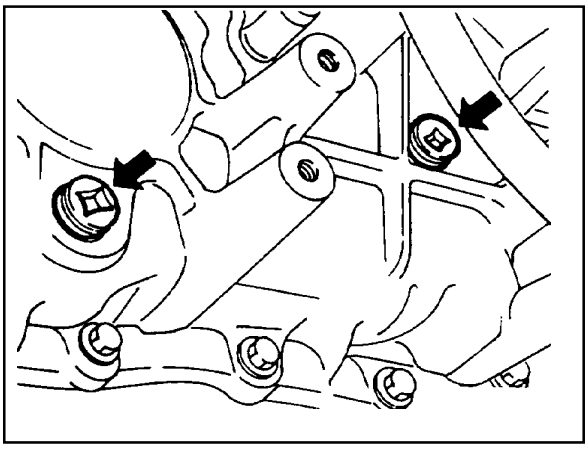

4. Remove the breather hose.

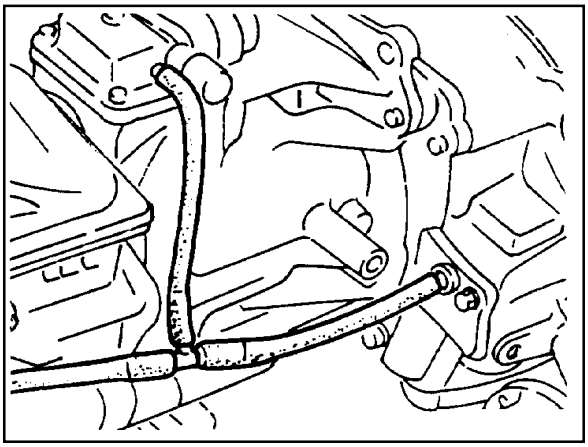

5. Disconnect the speedometer cable connector and other cable connectors and wiring harnesses.

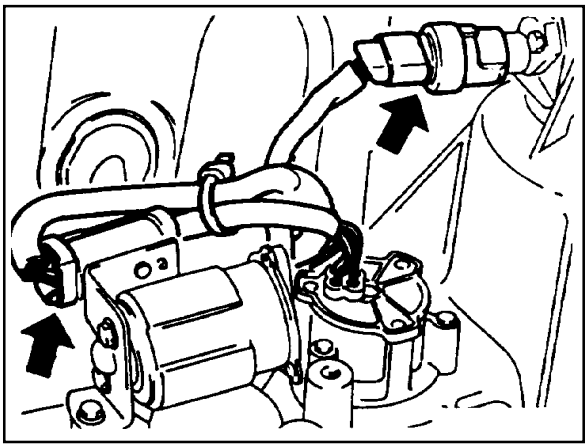

6. Support the transfer case with jack and remove the front and rear propeller shafts from the transfer case.

   Installation Notice

Tightening Torque	Front	81 - 89 Nm
	Rear	70 - 80 Nm

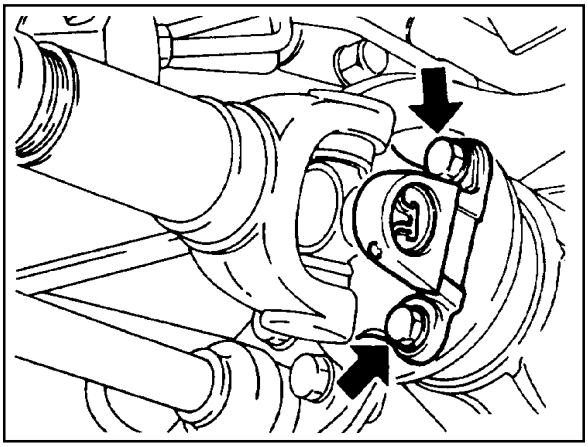

Downloaded from www.Manualslib.com manuals search engine

7. Remove the center mounting nuts and end sides mounting bolts of the cross member and then remove the cross member.

Installation Notice

Tightening Torque(1)	21 - 35 Nm
Tightening Torque(2)	62 - 93 Nm

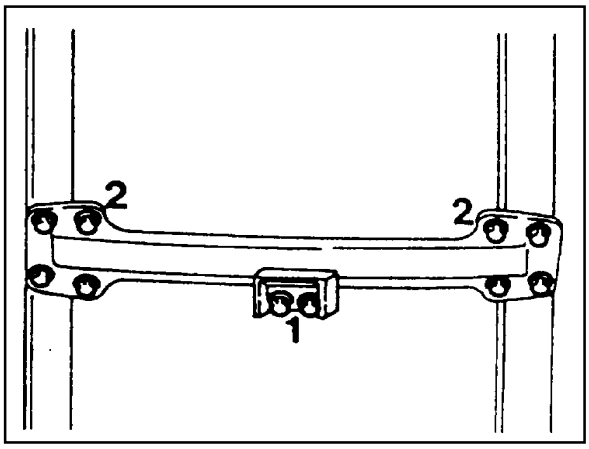

8. Remove the transfer case by removing the bolts attaching the transfer case to the transmission.

Installation Notice

Tightening Torque	38 - 51 Nm

Notice

Apply long-term grease to the inner spline of the transfer case input shaft.

9. Installation should follow the removal procedure in the reverse order.

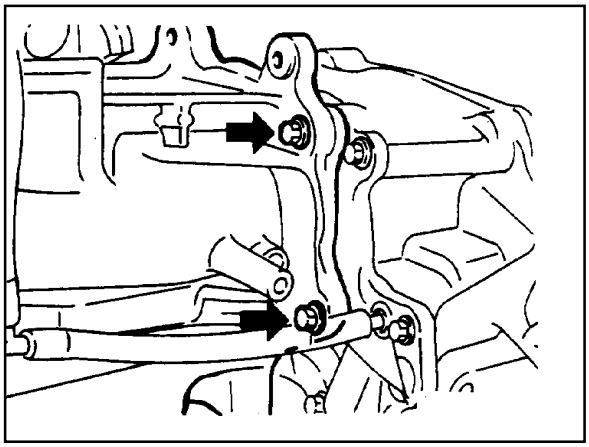

Downloaded from www.Manualslib.com manuals search engine

UNIT REPAIR

TRANSFER CASE

Preceding Work : Removal of the transfer case

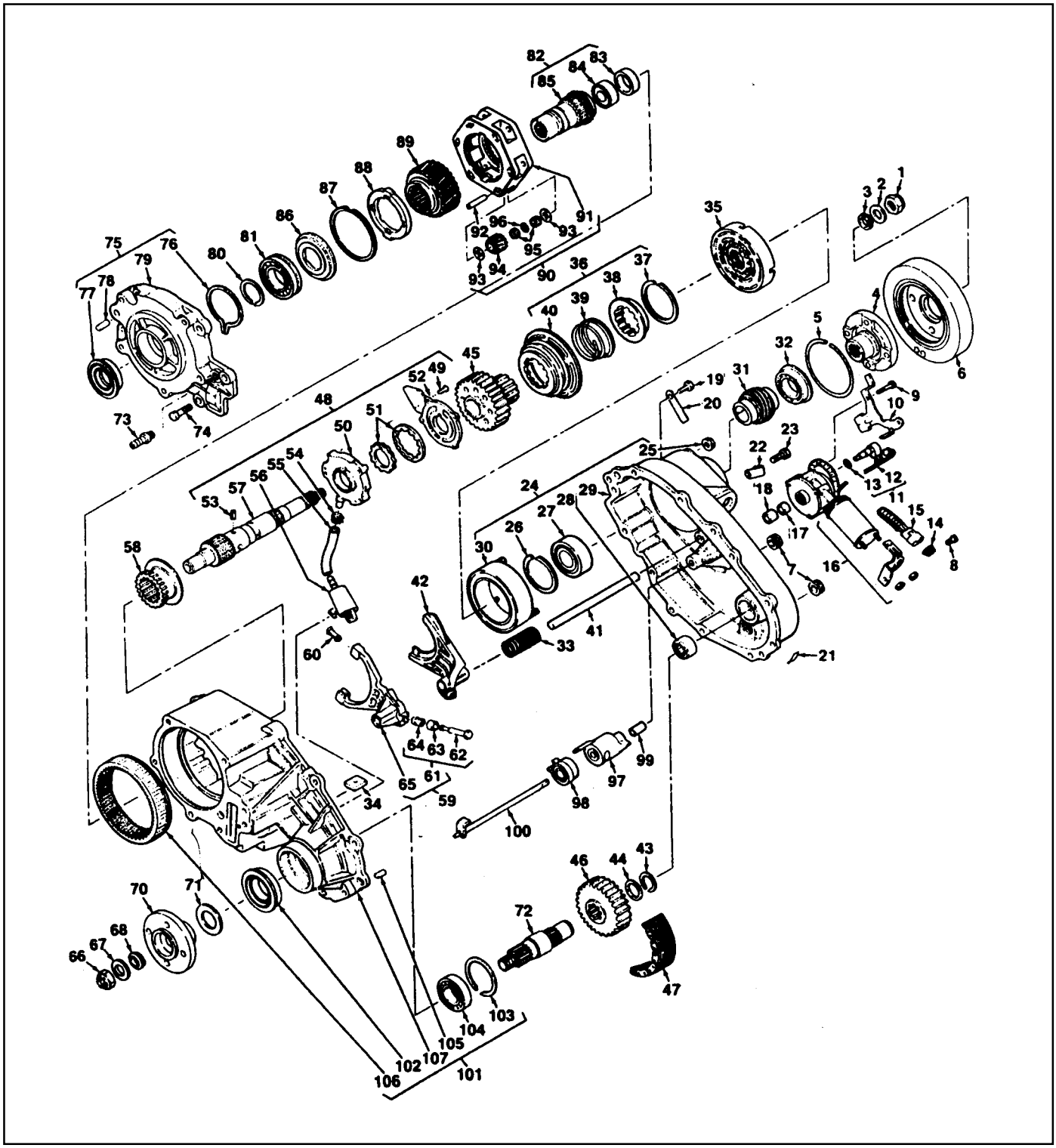

Downloaded from www.Manualslib.com manuals search engine

1 Nut
2 Spring Washer
3 Oil Seal
4 Companion Flange
5 Snap Ring
6 Torsional Damper
7 Pipe Plug
8 Bolt
9 Bolt
10 Speed Sensor and Harness Bracket
11 Speed Sensor Assembly
12 Speed Sensor
13 O-Ring
14 Locking Clip
15 Connector
16 Motor Assembly
17 Oil Seal
18 Bearing
19 Bolt
20 Tag
21 Decal
22 Wiring Harness Clip
23 Bolt
24 Cover Assembly
25 Nut
26 Snap Ring
27 Bearing
28 Needle Bearing
29 Cover
30 Clutch Coil Assembly
31 Speed Gear
32 Oil Seal
33 Return Spring
34 Magnet
35 Clutch Housing
36 Lock-up Assembly
37 Snap Ring
38 Lock-up
39 Sleeve Return Spring
40 Lock-up Collar
41 Rail Shaft
42 Lock-up Fork
43 Snap ring
44 Spacer
45 Drive Sprocket
46 Driven Sprocket
47 Drive Chain
48 Shaft and Pump Assembly
49 Screw
50 Pump Housing
51 Pump Gear Set
52 Pump Cover
53 Spring Pin
54 Hose Clamp
55 Hose Coupling
56 Oil Strainer
57 Output Shaft
58 Reduction Hub
59 Shift Fork Assembly
60 Shift Fork Facing
61 Pin, Roller and Retainer
62 Pin
63 Cam Roller
64 Retainer
65 Reduction Shift Fork
66 Nut
67 Plane Washer
68 Oil Seal
70 Companion Flange
71 Spacer
72 Front Output Assembly
73 Breather Hose
74 Bolt
75 Front Adapter Assembly
76 Snap Ring
77 Oil Seal
78 Spiral Pin
79 Front Adapter
80 Snap Ring
81 Bearing
82 Input Shaft Assembly
83 Sleeve Assembly
84 Needle Bearing
85 Input Shaft
86 Thrust Washer
87 Retaining Ring
88 Thrust Plate
89 Sun Gear
90 Gear Carrier Assembly
91 Planet Carrier
92 Pinion Shaft
93 Thrust Washer
94 Pinion Gear
95 Needle Roller Bearing
96 Pinion Needle Spacer
97 Electric Shift Cam
98 Torsion Spring
99 Spacer
100 Shift Shaft
101 Case Assembly
102 Oil Seal
103 Snap Ring
104 Bearing
105 Dowel Pin
106 Ring Gear
107 Case

Downloaded from www.Manualslib.com manuals search engine

Disassembly Procedure

<Companion Flange>

1. Holding the companion flange, remove the nut and washer and then remove the companion flange and oil seal.
2. Remove the 2 plugs from the cover.

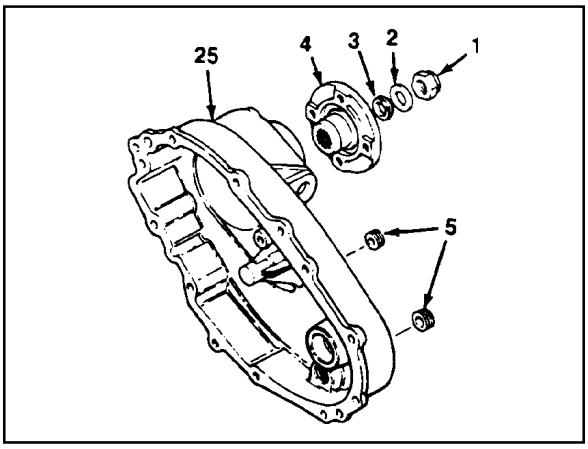

1 Nut
2 Washer
3 Oil Seal
4 Companion Flange
5 Plug
25 Cover

<Extension Electric Shift>

1. Remove the bolt, washer,3 bolts and harness bracket.
2. Remove the sensor assembly and remove the O-ring from the speed sensor.
3. Remove the motor assembly.

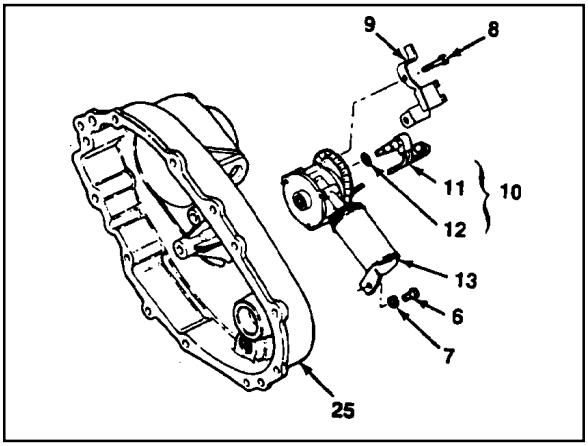

6 Bolt
7 Washer
8 Bolt
9 Sensor and Harness Bracket
10 Sensor Assembly
11 Speed Sensor
12 O-ring
13 Motor Assembly
25 Cover

Downloaded from www.Manualslib.com manuals search engine

<Cover Assembly>

1. Remove the 9 bolts, wiring harness clip and identification tag.

   Notice

   Identification tag has information required for ordering replacement parts, so be careful not to lose it.

2. Using a screw driver, pry and disconnect the sealant bond of the cover and case.
3. Remove the oil seal, bearing, 3 nuts and clutch coil assembly of the electric shift unit.
4. Remove the snap ring and pull out the ball bearing from the cover to remove the speed gear.
5. Pull out the needle bearing from the cover.
6. Pull out the oil seal from the slot in cover.
7. Remove the magnet form the slot in case.
8. Remove the return spring from the rail shaft.
9. Be careful not to damage the metal surface when removing the sealant of the cover and case.

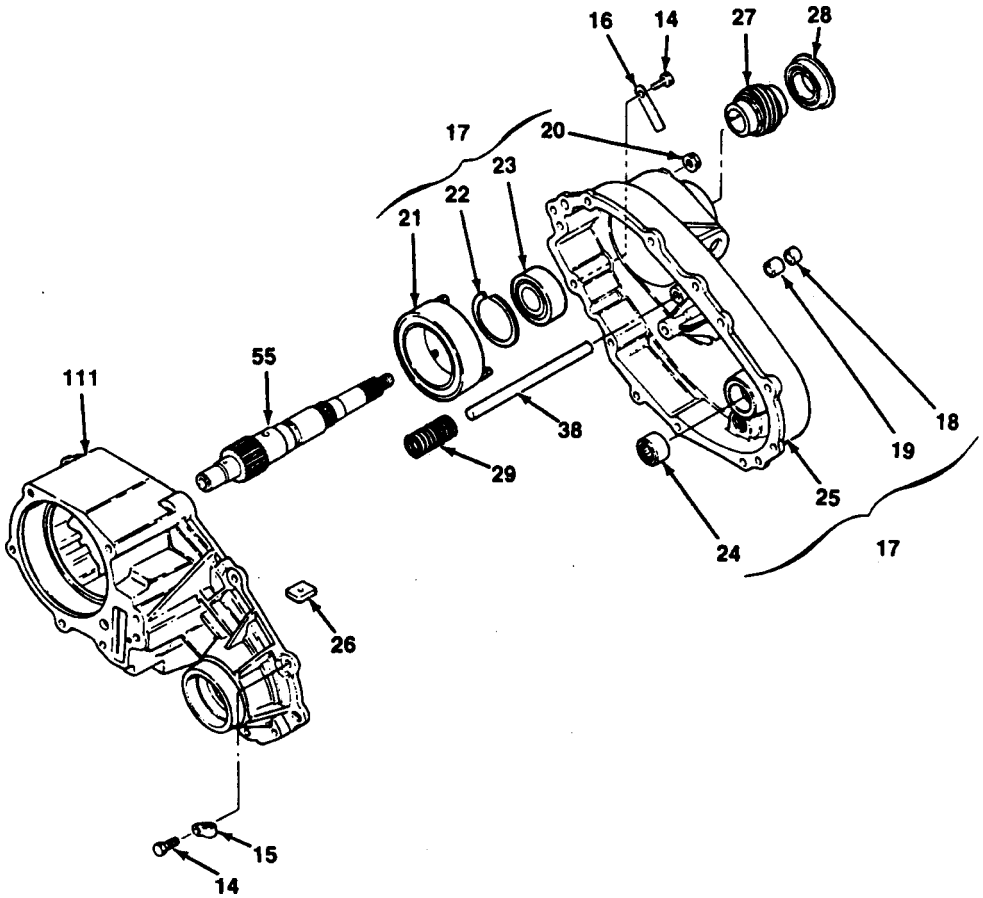

14	Bolt	24	Needle Bearing
15	Wiring Clip	25	Cover
16	Identification Tag	26	Magnet
17	Cover Assembly	27	Speed Gear
18	Oil Seal	28	Oil Seal
19	Bearing	29	Return Spring
20	Nut	38	Rail Shaft
21	Clutch Coil Assembly	55	Output Shaft
22	Snap Ring	111	Transfer Case
23	Ball Bearing		

Downloaded from www.Manualslib.com manuals search engine

<Lock-up Shift Parts>

1. Remove the retaining ring and clutch housing from the shift collar hub.
2. Remove the shift collar hub from the output shaft.
3. Separate the 2WD - 4WD lock-up assembly and lock-up fork from the output shaft and remove the rail shaft.
4. To remove the 2WD - 4WD lock-up assembly, separate the return spring, lock-up hub and snap ring from the lock-up collar.

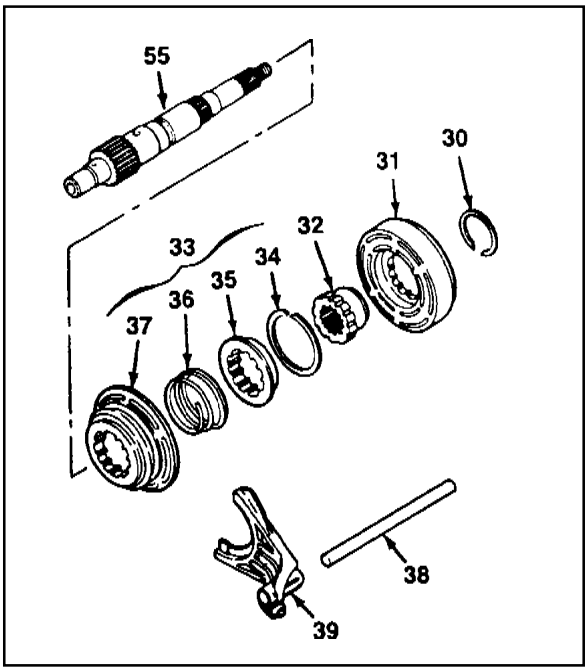

30	Retaining Ring
31	Clutch Housing
32	Shift Collar Housing
33	2WD/4WD Lock-up Assembly
34	Snap Ring
35	Lock-up Hub
36	Return Spring
37	Lock-up Collar
38	Rail Shaft
39	Lock-up Fork
55	Output Shaft

<Drive Chains>

1. Remove the snap ring and spacer from the output shaft.
2. Remove the drive chain, driven sprocket and drive sprocket from the output shaft.
3. Separate the chain and sprocket when removing the assembly.

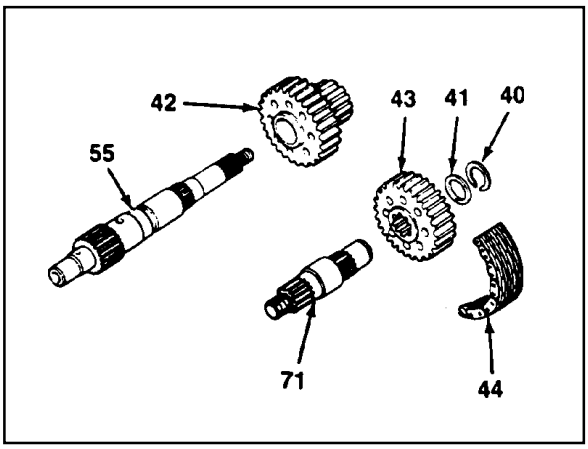

40	Snap Ring
41	Spacer
42	Drive Sprocket
43	Driven Sprocket
44	Drive Chain
55	Output Shaft(Rear)
71	Output Shaft(Front)

<Pump Parts>

1. Remove the 4 bolts and retainer and separate the output shaft and rear pump cover.
2. Loosen the hose clamp and remove the hose coupling from the pump housing.
3. Remove the hose clamp, hose coupling and strainer.
4. Remove 2 pump pins and spring from the output shaft.
5. Separate the front pump and remove the output shaft.

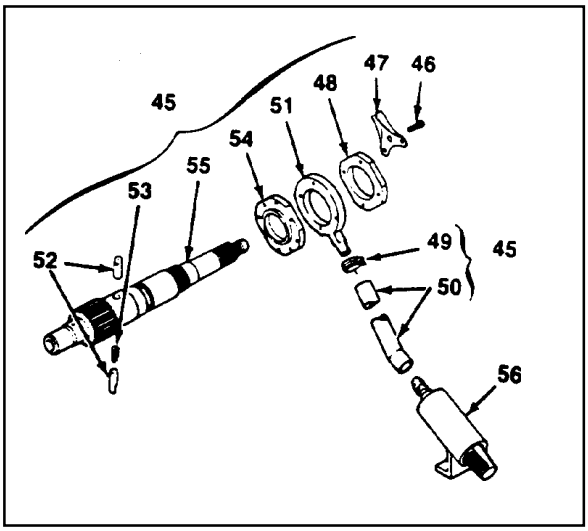

45	Shaft and Pump Assembly
46	Bolt
47	Pump Retainer
48	Rear Pump Cover
49	Hose Clamp
50	Hose Coupling
51	Pump Housing
52	Pump Pin
53	Spring
54	Front Pump Cover
55	Output Shaft
56	Strainer

Downloaded from www.Manualslib.com manuals search engine

<Reduction Shift Parts>

1. Remove the reduction hub and reduction shift fork assembly from the case.
2. Remove the 2 shill fork facings from the shift fork assembly.
3. To remove the roller cam and pin, cut elf the plastic retainer when disassembling the fork assembly.

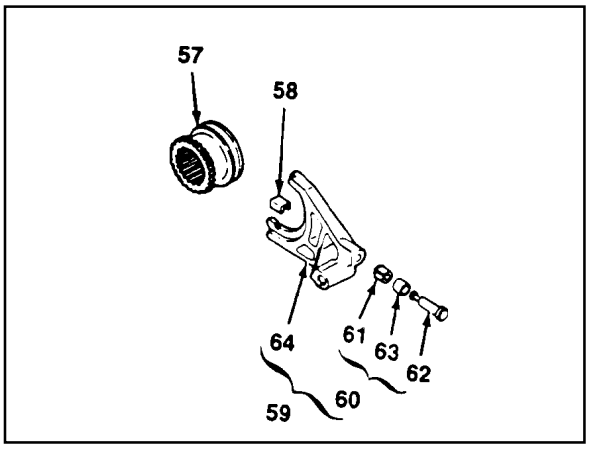

57 Reduction Hub
58 Shift Fork Facing
59 Reduction Shift Fork Assembly
60 Roller Pin and Retainer Assembly
61 Retainer
62 Pin
63 Roller Cam
64 Reduction Shift Fork

<Front Output Assembly>

1. Holding the companion flange, remove the nut and washer and then remove the companion flange and oil seal.
2. Remove the output shaft.

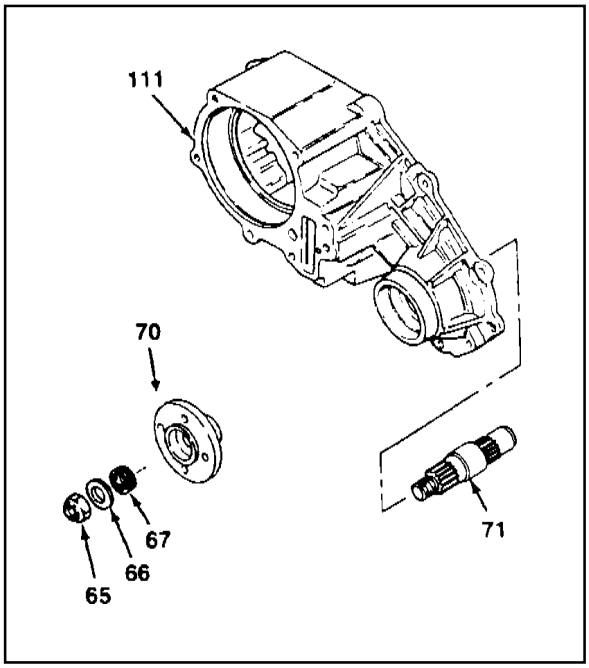

65 Nut
66 Washer
67 Oil Seal
70 Companion Flange
71 Output Shaft (front)
111 Case

Downloaded from www.Manualslib.com manuals search engine

<Adapter, Input Shaft and Carrier Gear>

1. Remove the breather.
2. After removing 6 bolts, remove the front adopter by separating the adapter sealer bond from the case using a screw driver.

   Notice

   Be careful not to damage the contacting surface of the case and adapter.
3. Remove the adapter assembly, input shaft assembly and carrier gear assembly.
4. Remove the snap ring and oil seal from the front adapter.
5. After removing snap ring, pull out the bearing and thrust washer from the input shaft assembly and separate the input shaft assembly from the carrier gear assembly.
6. Remove the needle bearing and sleeve bearing from the input shaft assembly.
7. Remove the retaining ring, thrust plate rind sun gear from the planet carrier assembly.

   Notice

   Do not disassemble the planet carrier assembly.

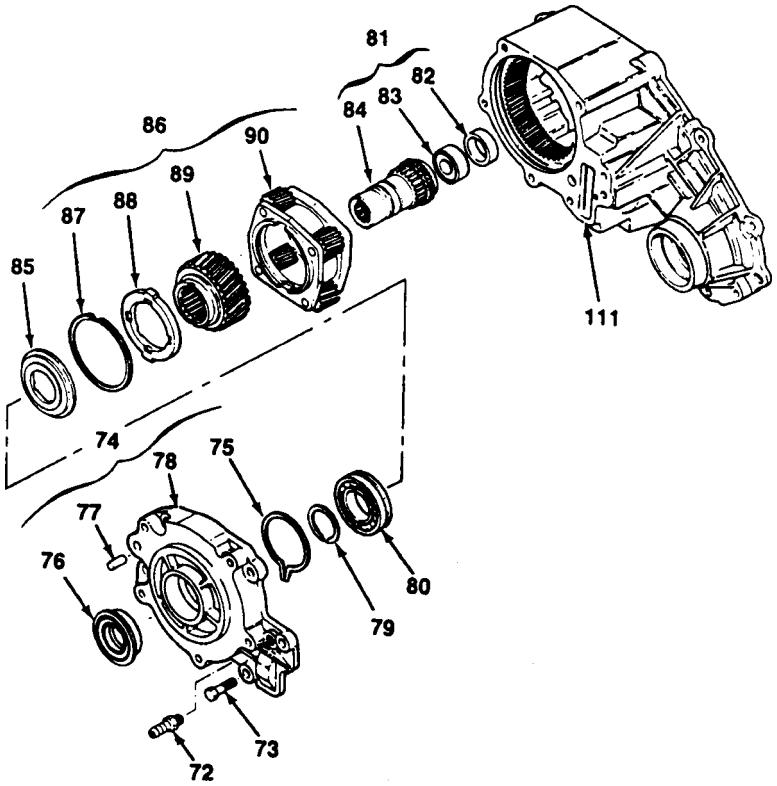

72 Breather
73 Bolt
74 Adapter Assembly
75 Snap Ring
76 Oil Seal
77 Spiral Pin
78 Front Adapter
79 Retaining Ring
80 Bearing
81 Input Shaft Assembly
82 Sleeve Bearing
83 Needle Bearing
84 Input Shaft
85 Thrust Bearing
86 Carrier Gear Assembly
87 Retaining Ring
88 Thrust Plate
89 Sun Gear
90 Planet Carrier Assembly
111 Case

Downloaded from www.Manualslib.com manuals search engine

<Electric Shifts Cam Parts>

1. Remove the electric shift cam parts from the case assembly.
2. Separate the electric shift cam from the shift shaft.
3. Holding the shift shaft in a vise, remove the torsion spring and spacer from the shift shaft using a screw driver.

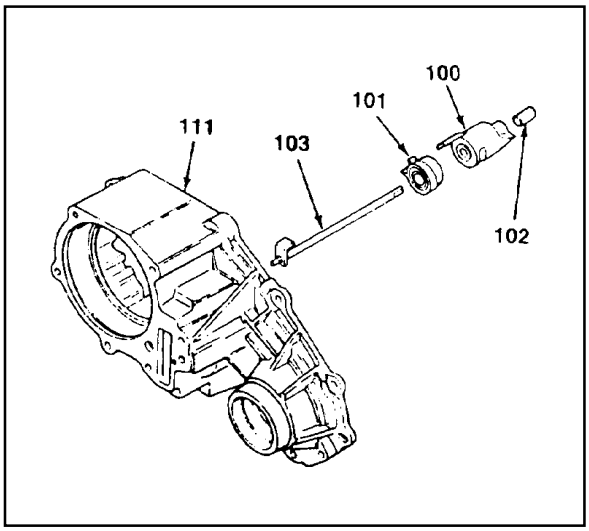

100	Electric Shift Cam
101	Torsion Spring
102	Spacer
103	Shift Shaft
111	Case

<Case Assembly>

1. Remove the oil seal.
2. Remove the retaining ring and bearing.
3. Remove the pin from the transfer case.

   Notice

   Be careful not to damage the pin.
4. Using a press, remove the ring gear from the case.

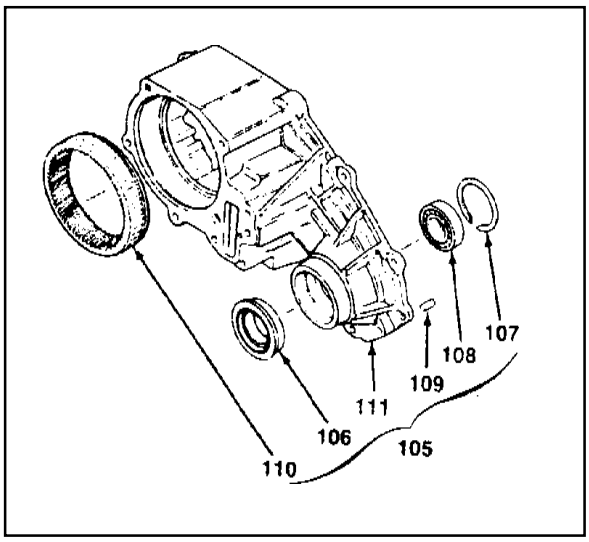

105	Transfer Case Assembly
106	Oil Seal
107	Retaining Ring
108	Ball Bearing
119	Pin
110	Ring Gear
111	Case

Downloaded from www.Manualslib.com manuals search engine

Cleaning Procedure

Notice

Before cleaning, check the magnet for the presence of metal particles which indicate internal chipping of the transfer case.

1. Using cleaning solvent, clean the residual oil and dirt deposits.

   Notice

   During cleaning, be careful not to damage the metal surfaces.
2. After cleaning, dry the parts with low pressure (Max. 20 psi) compressed air.
3. Lubricate the ball bearings and needle bearings with transfer case oil after cleaning.

   Notice

   Protect the lubricated bearings from dust.

Inspection Procedure

1. Visually check the all removed parts.

   Notice

   Always replace the hose coupling, O-ring and oil seal with new parts.
2. Inspection Terms
   - Burr : Local rise of material forming protruding sharp edge
   - Chip : An area from which a small fragment has been broken off or cut
   - Crack : Surface break of line nature indicating partial or complete separation of material.
   - Excessive wear : Heavy or obvious wear beyond expectations considering conditions of operation.
   - Indentation : Displacement of material caused by localized heavy contact.
   - Galling : Breakdown of metal surface due to excessive friction between parts. Particles of the softer material are torn loose and welded to the harder material.
   - Nick : Local break or notch, usually displacement of material rather than loss.
   - Scoring : Tear or break in metal surface from contact under abnormal pressure.
   - Step wear : Heavy wear that produces a step that can be seen or felt between adjacent contact and noncontact surfaces.
   - Uneven wear : Condition of localized, unevenly distributed wear Includes hollows, shiny spots, uneven polish and other visual indications.

Downloaded from www.Manualslib.com manuals search engine

3. Specific Inspection
   - Referring to normal gear tooth face, specifically inspect the uneven wear and chips of gear tooth.
     Replace or repair if necessary.

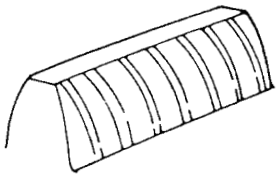

Normal gear shave marks

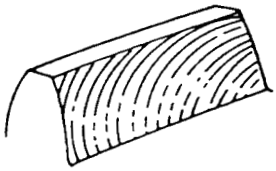

Normal gear grind marks

According to tooth face marks decide whether reuse or not.

4. Inspection of Contact Patterns

Description	Normal	Abnormal
Normal Wear	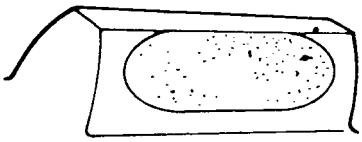	
End Face Wear	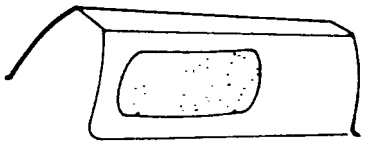	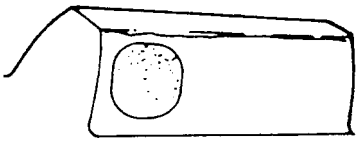
Traveling Face Wear	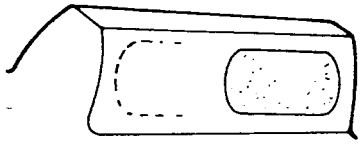	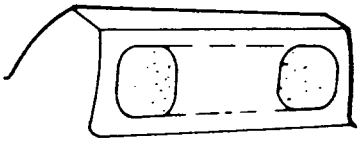
Upper Face Wear	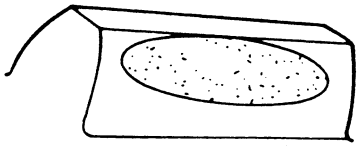	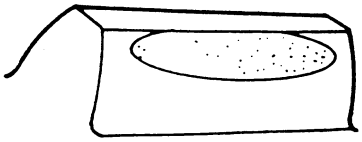
Lower Face Wear	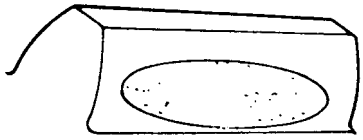	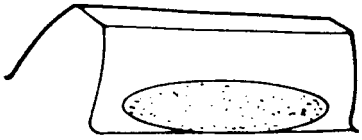

Downloaded from www.Manualslib.com manuals search engine

Description	Repair	Description	Repair
Corner chip at drive face	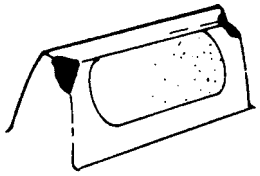	Chip within contact pattern	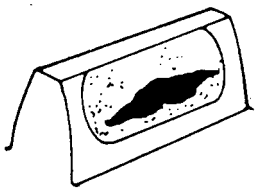
Edge chip at drive face	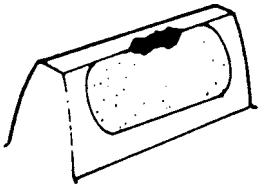	Chip completely through tooth	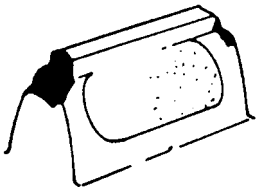
Corner chip at coast face	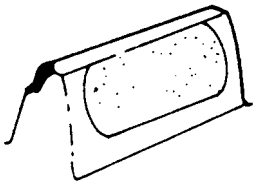	Side edge chip at drive face	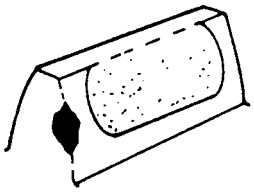

Downloaded from www.Manualslib.com manuals search engine

Assembly Procedure

General Information

1. Use special tools during assembly of oil seals and bearings.
2. Lubricate bearings, oil seals and bushings before assembly.

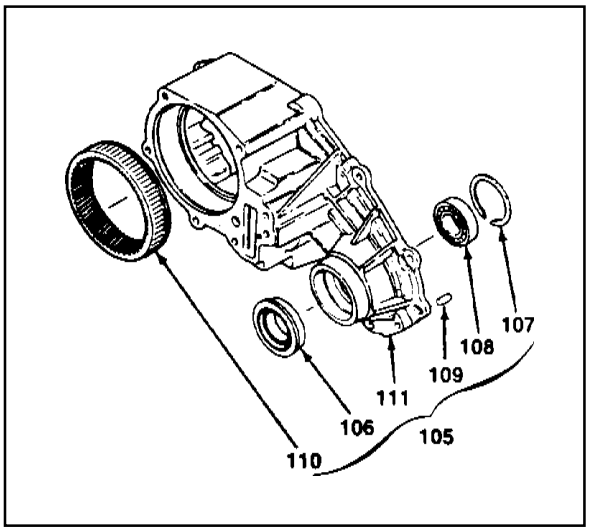

105	Case Assembly
106	Oil Seal
107	Retaining Ring
108	Ball Bearing
109	Pin
110	Ring Gear
111	Case

Transfer Case

1. If the ring gear was removed, align the outer diameter of the new replaced ring gear with transfer case and assemble it.
2. Insert the pin.
3. Insert the ball bearing to the case and install the retaining ring.
4. Install the new oil seal by pressing into the case.
5. Make sure that all parts are correctly and firmly installed into the case.

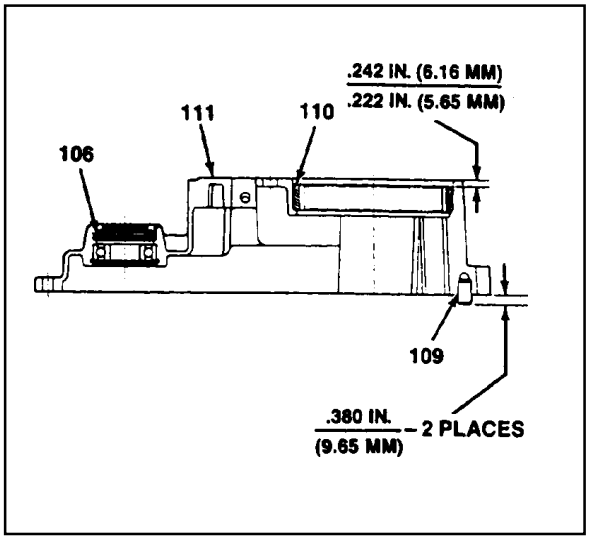

106	Oil Seal
109	Pin
110	Ring Gear
111	Case

Electric Shift Cam Parts

1. Insert the spacer into torsion spring.
2. Insert the end of the shift shaft into the spacer smoothly.

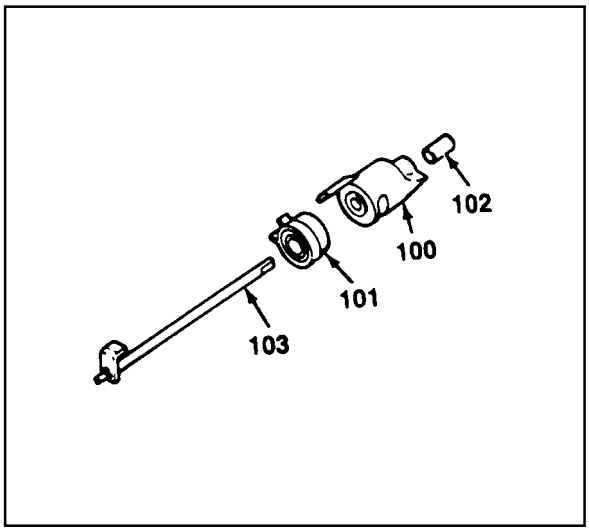

100	Electric Shift Cam
101	Torsion Spring
102	Spacer
103	Shift Shaft

Downloaded from www.Manualslib.com manuals search engine

3. Slide the torsion spring and spacer to the left of the shift shaft and position the end of the first spring to fix on the drive tang.

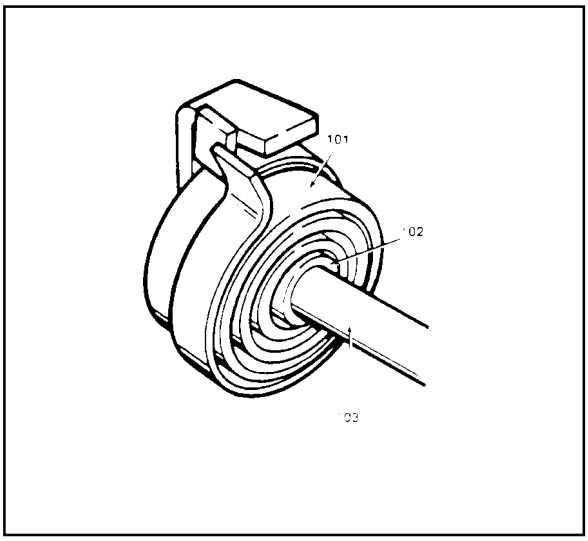

101 Torsion Spring
102 Spacer
103 Shift Shaft

4. Push the end of the second spring to right and fix it on the drive tang.

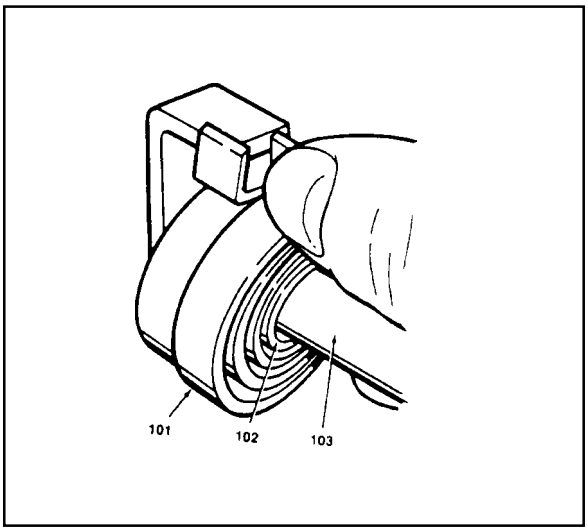

101 Torsion Spring
102 Spacer
103 Shift Shaft

5. Push the torsion spring and spacer together back them completely.
6. Slide the electric the electric shift cam onto the shift shaft.
7. Install the electric shift cam assembly into the transfer case after installation of the shift fork.

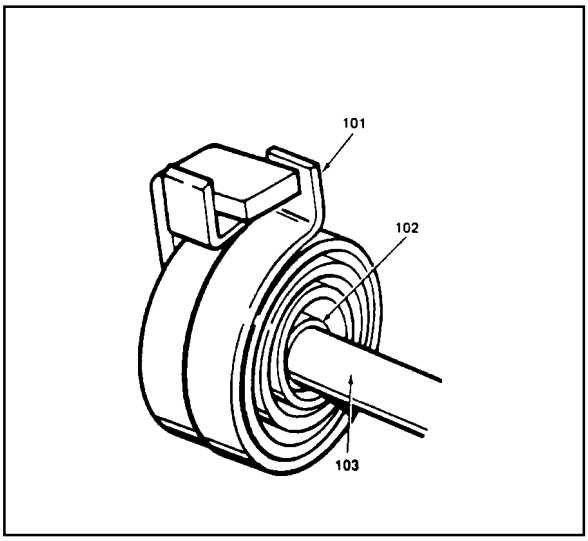

101 Torsion spring
102 Spacer
103 Shift Shaft

Downloaded from www.Manualslib.com manuals search engine

Adapter, Input Shaft and Carrier

1. Place the planet carrier assembly on work bench to be the retaining ring mounting groove upward.
2. Install the sun gear with the hub end up into the planet carrier assembly and rotate the sun gear to make sure that gears are fully engaged.
3. Align the tabs and install the thrust plate into the planet carrier assembly.
4. Install the retaining ring to the planet carrier assembly.
5. Press the needle bearing into the input shaft and press the new sleeve bearing into the input shaft assembly.

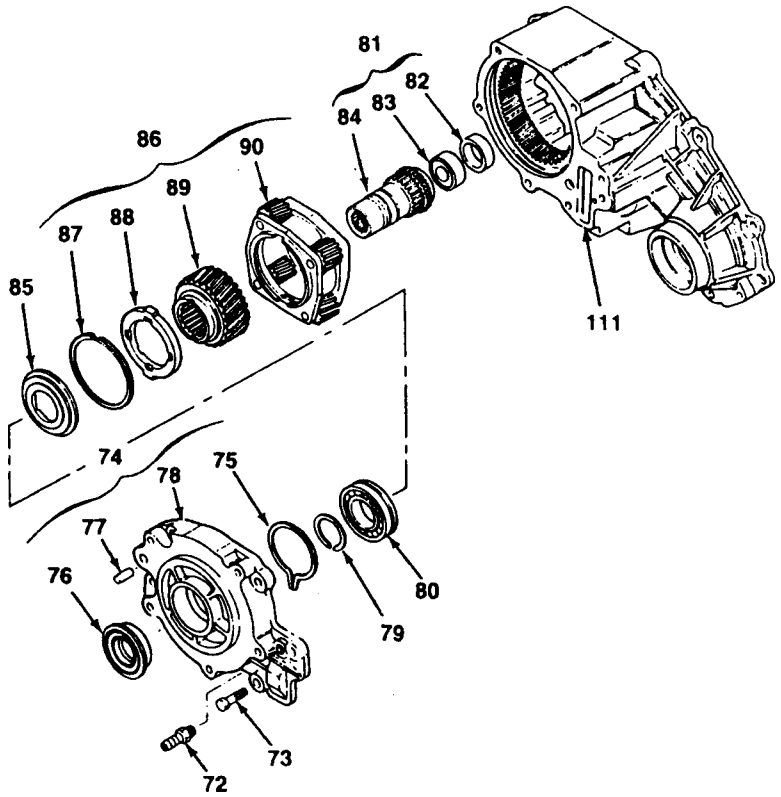

72	Breather	82	Sleeve Bearing
73	Bolt	83	Needle Bearing
74	Adapter Assembly	84	Input Shaft
75	Snap Ring	85	Thrust Washer
76	Oil Seal	86	Carrier Gear Assembly
77	Spiral Pin	87	Retaining Ring
78	Front Adapter	88	Thrust Plate
79	Retaining Ring	89	Sun Gear
80	Bearing	90	Planet Carrier Assembly
81	Input Shaft Assembly	111	Case

Downloaded from www.Manualslib.com manuals search engine

6. Install the planet carrier assembly onto the input shaft and install the thrust washer. Press the bearing over input shaft.
7. After pressing the bearing, install the retaining ring.
8. Press the pin into the front adapter.
9. Slowly press the oil seal into the front adapter.
10. Install the front adapter assembly.

    Notice

    After installation, make sure that snap ring is correctly installed into the groove.
11. Position the input shaft assembly over front cover and engage into the bearing groove by expanding the ends of snap ring.
12. Apply 1.6mm bead of sealant on the mounting face for the transfer case and tighten the 6 bolts.
13. Install the breather.

Item	Tightening Torque
6 Bolts	28 - 48 Nm
Breather	8 - 20 Nm

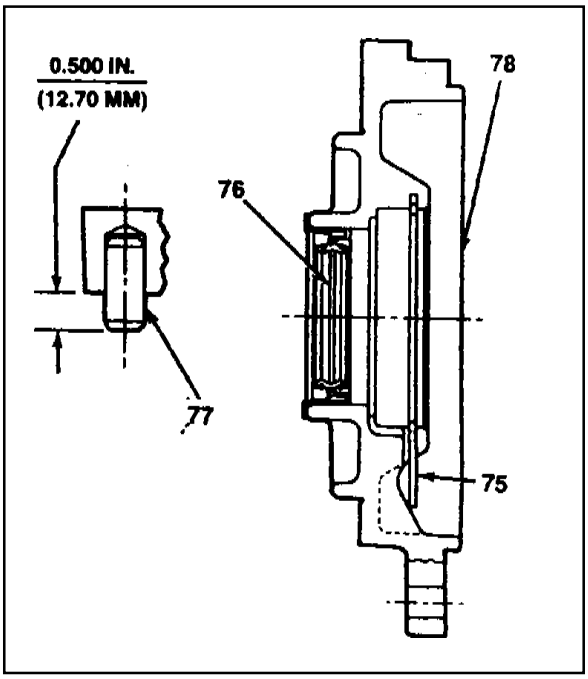

75 Snap Ring
76 Oil Seal
77 Spiral Pin
78 Front Adapter

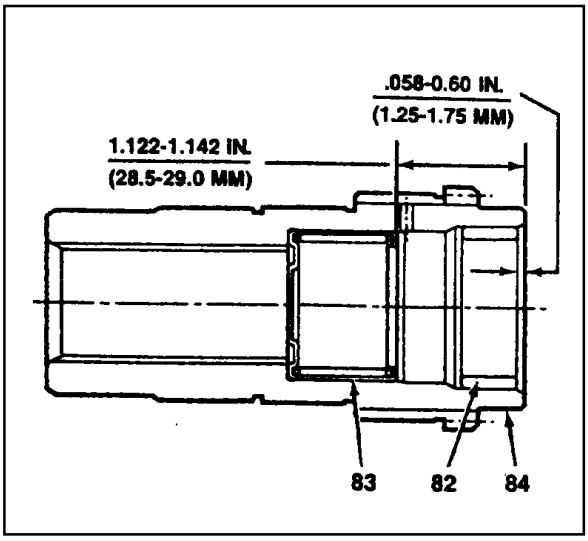

82 Sleeve Bearing
83 Needle Bearing
84 Input Shaft

Downloaded from www.Manualslib.com manuals search engine

Front Output Shaft

1. Press the deflector onto yoke.
2. Position the output shaft in transfer case and install the companion flange assembly, oil seal, washer and nut.
3. Holding the companion flange, tighten the nut.

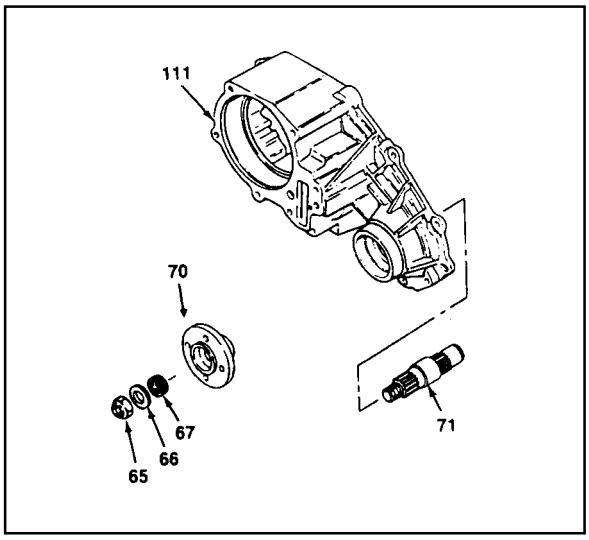

65 Nut
66 Washer
67 Oil Seal
70 Companion Flange
71 Output Shaft (Front)
111 Transfer Case

Reduction Shift Parts

1. Install the new pin, roller and retainer into the reduction shift fork.
2. Press the pin, roller and retainer into the reduction spilt fork bore completely.

   Notice

   Make sure that the cam roller turns freely.
3. Install the 2 fork facing on the reduction shift fork assembly.
4. Install the reduction shift fork onto the previously installed reduction hub in the transfer case.
5. Install the output shaft spline into the reduction hub and engage the output shaft end with input shaft bearing.

   Notice

   For installation of the output shaft, assemble the oil pump temporarily.

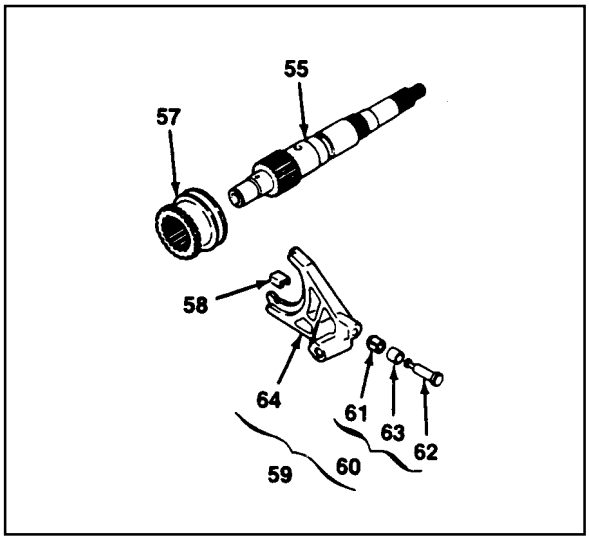

55 Output Shaft
57 Reduction Hub
58 Shift Fork Facing
59 Reduction Shift Fork Assembly
60 Roller, Pin and Retainer Assembly
61 Retainer
62 Pin
63 Roller Cam
64 Reduction Shift Fork

Downloaded from www.Manualslib.com manuals search engine

Oil Pump

1. Install the pump front cover to be the ‘TOP’ mark down and turn the cover to be the ‘TOP’ mark up when installed in vehicle.
2. Install the 2 pump pins and spring to the output shaft.

   Notice

   Flat surface of the pins must point out and align the center line of pins and spring.
3. Connect the hose coupling to the strainer coupling and install the strainer foot into the transfer case slot.

   Notice

   The hose coupling must face the pump assembly.
4. Install the pump housing to be the 'REAR' mark up and seat the 2 pump pins inside of the pump housing by moving pump pins inward and compressing the spring.
5. Tighten the hose to pump housing by hose clamp.
6. Position the pump rear cover to be the ‘TOP REAR’ mark up and located at the top of transfer case when installed in vehicle. Position the pump retainer on the cover so that tab on the retainer is in notch in the transfer case. Apply Loctite to the bolts and tighten the bolts with turning the output shaft by hand to make the pump pins move freely.

Tightening Torque	4 - 8.5 Nm

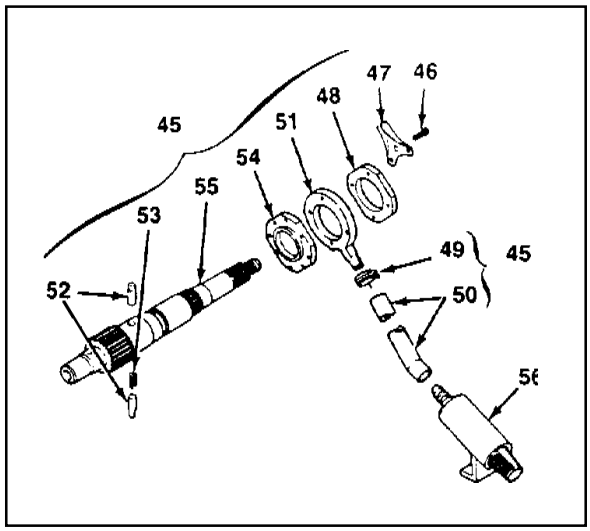

45 Shaft and Pump Assembly
46 Bolt
47 Pump Retainer
48 Rear Pump Cover
49 Hose Clamp
50 Hose Coupling
54 Pump Housing
52 Pump Pin
53 Spring
54 Front Pump Cover
55 Output Shaft
56 Strainer

Drive Chain

1. Position the drive sprocket to the rear output shaft end and driven sprocket to the front output shaft end.
2. Install the drive chain onto the sprocket.
3. Holding each sprocket to be the drive chain tight and parallel with transfer case, install the drive chain assembly to the output shafts.
4. Rotate the driven sprocket slightly to engage splines on the front output shaft.
5. Install the spacer to the front output shaft and insert the snap ring into the shaft groove over spacer.

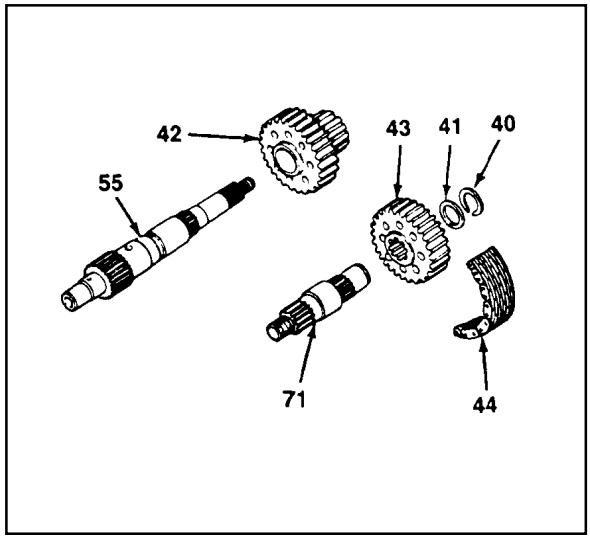

40 Snap Ring
41 Spacer
42 Drive Sprocket
43 Driven Sprocket
44 Drive Chain
55 Output Shaft (Rear)
71 Output Shaft (Front)

Downloaded from www.Manualslib.com manuals search engine

Lockup Shift

1. Install the lockup hub and return spring to the lockup collar and insert the snap ring.
2. Install the rail shaft through reduction shift fork assembly previously installed and into the blind hole in case.
3. Engage the lockup fork into the 2WD/4WD groove and check operation.
4. Install the shift collar hub to the output shaft spline.
5. Install the previously assembled electric shift cam and assemble the clutch housing as follows.
   - Rotate the shift cam assembly to right so that the end of the torsion spring contacts with reduction shift fork side.
   - Holding the rail shaft, lift up the fork assembly slightly.

     Adjust electric shift cam assembly so that the roller on reduction shift fork assembly is in groove in shift cam and button on lockup fork is on cam end.
   - Install the clutch housing over shift collar hub and insert the retaining ring into the clutch collar hub groove.

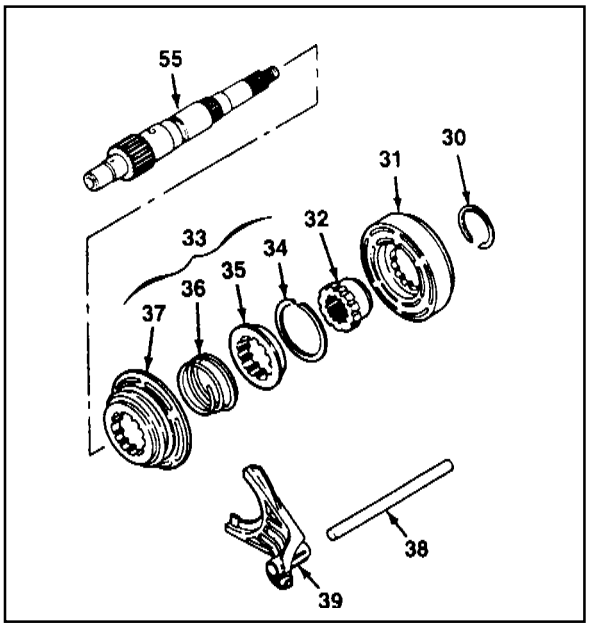

30	Retaining Ring	35	Lockup Hub
31	Clutch Housing	36	Return Spring
32	Shift Collar Housing	37	Lockup Collar
33	2WD/4WD Lockup Assembly	38	Rail Shaft
		39	Lockup Fork
34	Snap Ring	55	Output Shaft

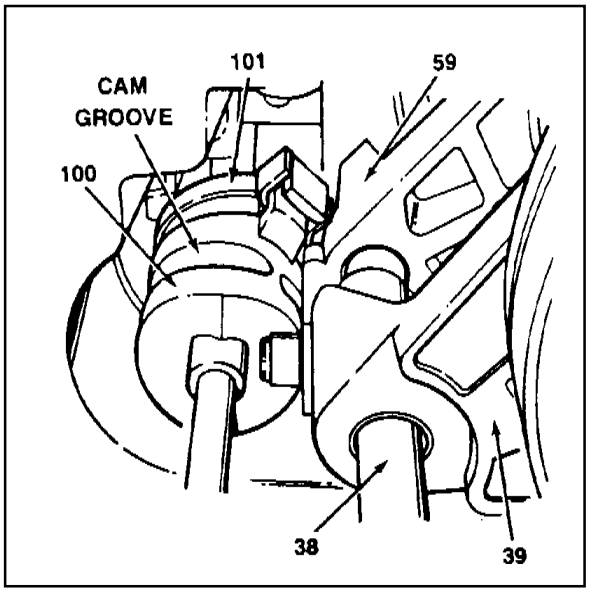

38	Rail Shaft
39	Lockup Fork
59	Reduction Shift Fork Assembly
100	Electric Shift Cam
101	Torsion Spring

Downloaded from www.Manualslib.com manuals search engine

Cover

1. Position the cover to be the open end up on the work table.
2. Position the end of needle bearing to be identification mark up and press into the cover until upper end of bearing is 40.47 - 40.97mm below cover face that contacts with transfer case.
3. Press the ball bearing into the cover and install the snap ring .
4. Install remaining parts as follows.
   - Install the 4 O-rings on the stud bolts of the clutch coil assembly.
   - Install the clutch coil assembly inside the cover and tighten 3 nuts.

Tightening Torque	8 - 11 Nm

   - Install the bearing and motor bearing into the cover.

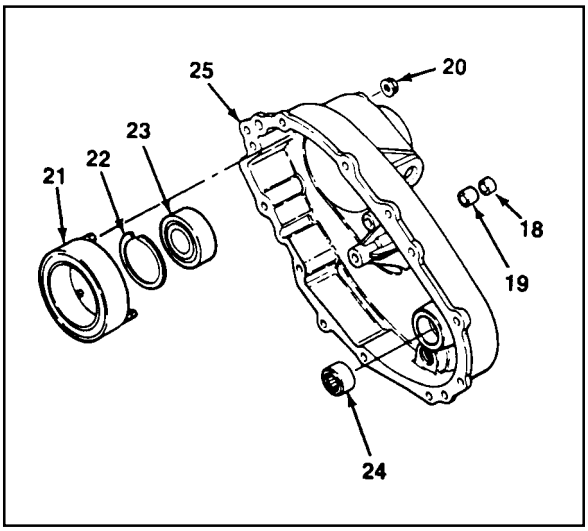

18 Oil Seal
19 Bushing
20 Nut
21 Clutch Coil Assembly
22 Snap Ring
23 Ball Bearing
24 Needle Bearing
25 Cover

Downloaded from www.Manualslib.com manuals search engine

Cover Assembly

1. Install the return spring over rail shaft in the transfer case.
2. Insert the magnet into the transfer case slot.
3. Apply 1.6mm bead of Loctite RTV 598 to the transfer case mounting surface.

   Notice

   For installation of cover, align the transfer case with cover not to use excessive force.

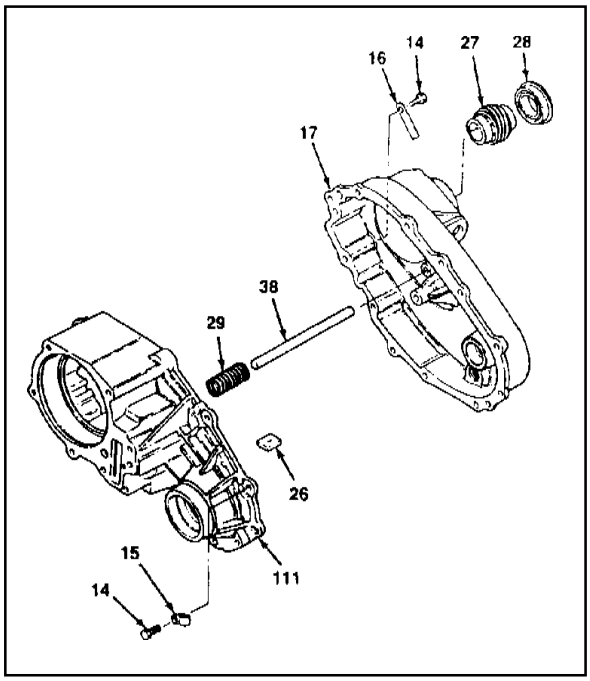

14	Bolt
15	Wiring Clip
16	Identification Tag
17	Cover Assembly
26	Magnet
27	Speed Gear
28	Oil Seal
29	Return Spring
38	Rail Shaft
111	Case

4. Install the cover onto the transfer case as follows :
   - Align the cover bores with transfer case pins.
   - Align the cover bearings with output shafts.
   - Align the cover blind hole with rail shaft and make sure that return spring is not cocked.

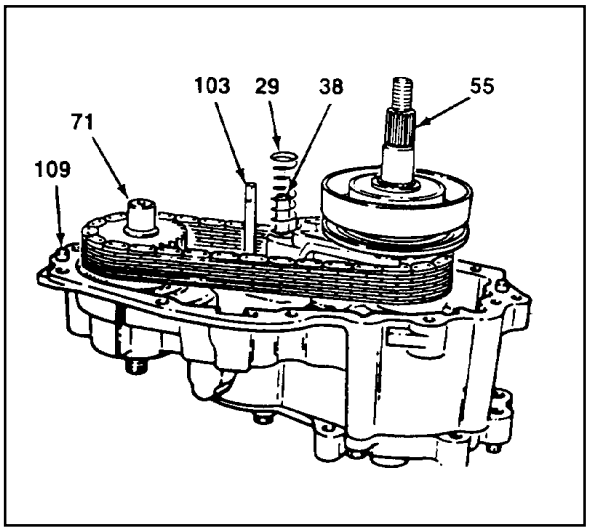

29	Return Spring
38	Rail Shaft
55	Output Shaft
71	Front Output Shaft
103	Shift Shaft
109	Dowel Pin

5. Tighten 9 bolts positioning identification tag and wiring clip.

Tightening Torque	28 - 48 Nm

6. Install the speed gear over output shaft spline in the cover assembly.
7. Press the new oil seal into the cover assembly.

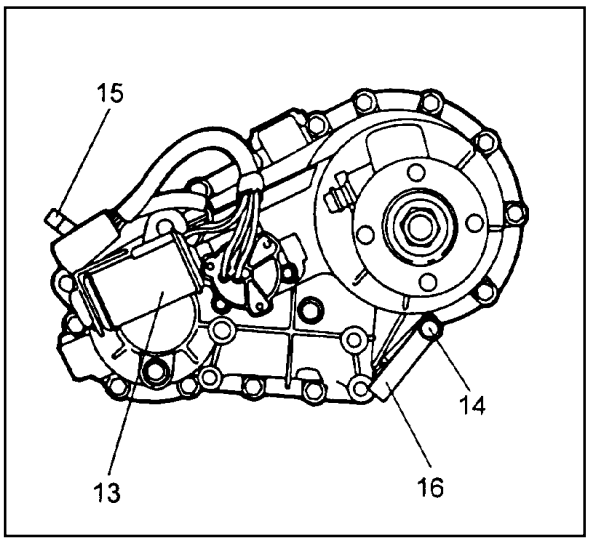

13	Motor Assembly
14	Bolt
15	Wiring Clip
16	Identification Tag

Downloaded from www.Manualslib.com manuals search engine

External Electric Shift

1. Align the motor with shift shaft and position the motor assembly onto the cover.
2. Install the motor to the shift shaft and contact cover androtate the motor clockwise direction to check correctengagement.

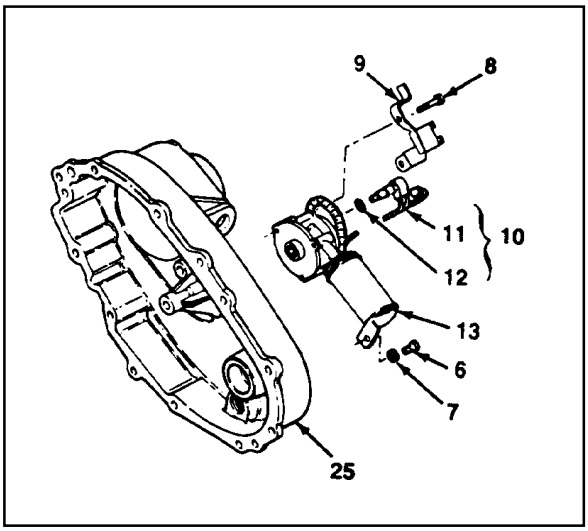

6 Bolt
7 Washer
8 Bolt
9 Sensor and Harness Bracket
10 Sensor Assembly
14 Speed Sensor
12 O-ring
13 Motor Assembly
25 Cover

3. Insert the 0-ring on the speed sensor speed sensor assembly to the cover.
4. Install the bracket to the motor assembly and tighten 3bolts.

Tightening Torque	8 -11 Nm

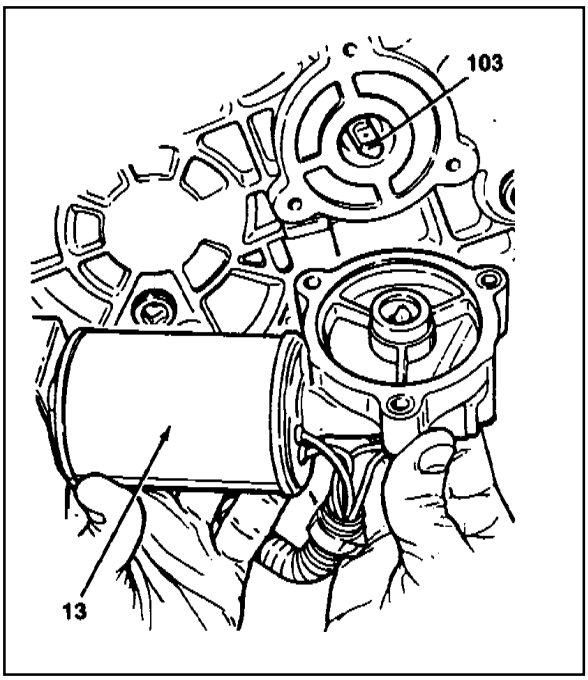

13 Motor Assembly
103 Shift Shaft

Downloaded from www.Manualslib.com manuals search engine

Companion Flange

1. Install the 2 plugs to the cover.
2. Install the companion flange, oil seal and washer.
3. Holding the companion flange, tighten the nut.

Tightening Torque	346 - 380 Nm

Notice

Apply loctite 262 to nut before installation.

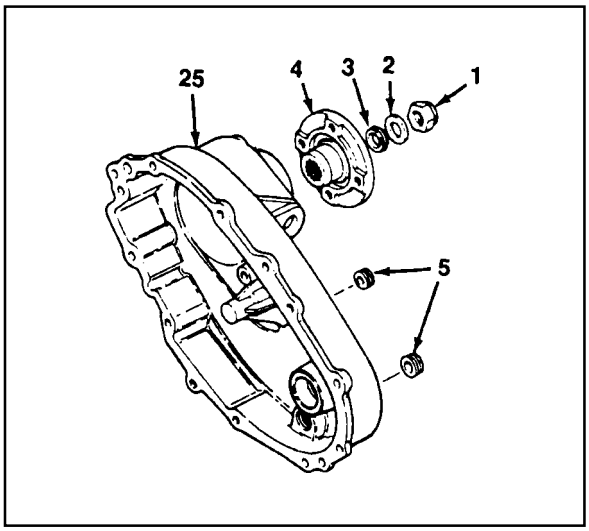

1 Nut
2 Washer
3 Oil Seal
4 Companion Flange
5 Plug
25 Cover

Downloaded from www.Manualslib.com manuals search engine

TRANSFER CASE CONTROL UNIT (TCCU)

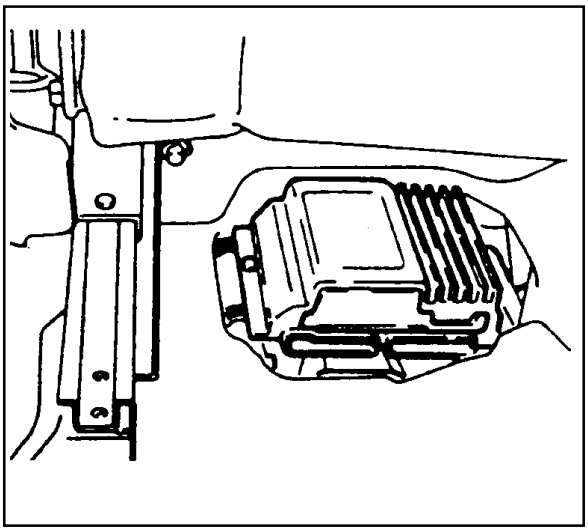

System Description

TCCU is located under the driver's seat and permits the vehicle to shift from two-wheel drive to four-wheel drive (and back shift) according to driver's switch operation during driving (For the shifting between 4WD HIGH and 4WD LOW, stop the vehicle).

1. Shifting from 2H to 4H
   - Position the transfer case switch from '2H' to '4H'.
   - Shifting is possible during driving.
   - '4WD HI' indicator light will turn on.

2. Shifting from 4H to 2H
   - Position the transfer case switch from '4H' to '2H'.
   - Shifting is possible during driving.
   - '4WD HI' indicator light will turn off.

3. Shifting between 4H and 4L
   - Shifting is possible when the vehicle is almost stopped (approx. 2 km/h), so it would be better stop the vehicle.
   - In case of manual transmission equipped vehicle, apply clutch pedal.
   - In case of outo transmission equipped vehicle, put the lever position into 'N'.
   - Position the transfer case switch '4H' to '4L' or '4L' to '4H'.
   - According to the shifted position, indicator light will turn on.

   Notice

   If there are malfunctions in shifting,'4H' or '4L' indicator light will flash.

Downloaded from www.Manualslib.com manuals search engine

Inspection and Repair

1. 4H and 4L indicator light inspection
   - When turn the ignition switch to "ON" position, 4H and 4L indicator light will turn on for 0.6 second and will turn off immediately.

   Notice

   If indicator light does not turn on, check bulb, wiring harness and TCCU.
2. TCCU inspection

Pin No.	Operation Condition	Voltage(V)
J1 - 7	4H or 4L	4.75 - 5.35
	2H	0 - 0.50
J1 - 8	4H indicator light ON	< 1.00
	4H indicator light OFF	> 11.00
J1 - 13	2H or 4H	4.75 - 5.35
	4L	0 - 0.50
J1 - 14	Clutch pedal applied	< 0.50
	Clutch pedal released	> 11.00
J1 - 15	4L indicator light ON	< 1.00
	4L indicator light OFF	> 11.00
J1 - 16	Motor OFF	< 1.00
	Motor ON	> 11.00
J1 - 17	Motor OFF	< 1.00
	Motor ON	> 11.00
J1 - 23	Auto locking hub ON	> 11.00
	Auto locking hub OFF	< 1.00

Notice

- DC 12V for the TCCU operation should be maintained.
- In case of J1-8 and J1-15, indicator light will turn on for 0.6 second when turn the ignition switch ON.
- If 4H and 4L indicator lights remain turned on when turn the ignition switch on or during driving, perform the TCCU diagnosis.

Downloaded from www.Manualslib.com manuals search engine

SECTION 5D2

TRANSFER CASE (TOD)

TABLE OF CONTENTS

Specifications 5D2-1
General Specifications 5D2-1
Function Description 5D2-2
TOD Control Unit 5D2-10
Schematic and Routing Diagrams 5D2-12
TOD Control Unit 5D2-12
Diagnosis 5D2-13
Diagnostic Tests 5D2-13
Diagnostic Trouble Codes (DTC's) 5D2-15
Coding 5D2-16
Eliminate the Memorized Fault Code 5D2-18
Diagnosis 5D2-19
Maintenance and Repair 5D2-31
On-Vehicle Service 5D2-31
TOD Control Unit 5D2-31
Transfer Case (TOD) 5D2-32
Speed Sensor in Front and Rear Propeller Shaft 5D2-36
Replacement of Oil 5D2-38
Unit Repair 5D2-39
Transfer Case 5D2-39

SPECIFICATIONS

GENERAL SPECIFICATIONS

Application		Description
Model		TOD(Torque On Demand) Transfer Case (4423E)
Length (mm)		343.0
Weight (kg)		36.6
Shift Mode		4H and 4L
Gear Ratio	High	1 : 1
	Low	2.48 : 1
Oil	Specification	ATF S-3, S-4 or Dexron II, III
	Capacity	≒ 1.4 L
	Interval	Inspect Every 15,000km, Replace Every 50,000km
Max. Torque		550 lb·ft (≒ 76kg·m)

Downloaded from www.Manualslib.com manuals search engine

FUNCTION DESCRIPTION

- **TOD System Select Mode (4H and 4L)**

  4H is the mode when drive normally of which gear ratio is 1:1 and 4L mode distributes power to front and rear wheels 50:50 of which gear ratio is 2.48:1.

- **TOD System Function (select 4H mode)**

  TOD system controls clutch mechanism to comply with rotation in front and rear propeller shaft and if its difference exceeds the permissible range, corresponding power is distributed into front wheel through EMC (Electro-Magnetic Clutch).

  Hall effect sensor signals speed on front and rear propeller shafts going through with TOD control unit.

  Transfercase clutch coil is activated by variable current on exceeding difference of speed in front and rear propeller shafts.

- **Function of 4L Mode**

  When select 4L mode, EMC is locked to apply maximum torque into front and rear propeller shafts. Shift motor rotates also 4L position by rotation of cam thus propeller shaft torque changes from 1:1 to 2.48:1 by planetary gear set.

- **Shift Motor**

  It locates backside transfer case, which drives rotary helical cam.

  When mode select switch changes to 4L, shift fork is on position for 2.48:1 by rotation of helical cam.

- **Transfer Case**

  TOD transfer case distributes power into front and rear axle by operation of 4H/4L switch and shift motor.

  Shifting 4H to 4L, is performed towards reducing HI-LO collar by means for connection HI-LO shift fork with output shaft in order to join with planetary gear. Torque transmits input shaft then sun gear rotating front planetary gear. Front planetary gear join with output shaft and drives LO position.

Downloaded from www.Manualslib.com manuals search engine

Definitions

Rear Speed Sensor	A Hall Effect speed sensor which produces a square wave. 0-5Vdc signal in response to a rotating 30 tooth wheel coupled to the rear propshaft inside the Transfer Case. Each rotation of the rear propshaft will result in 30 speed sensor pulse. 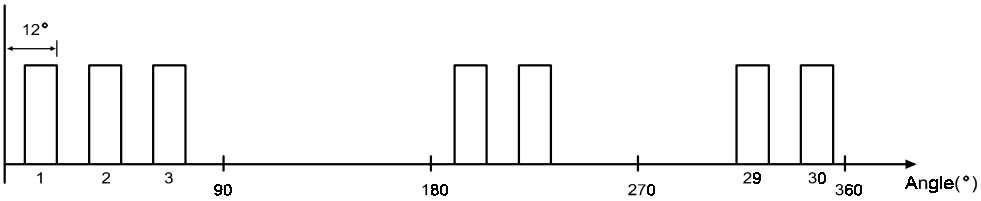
Front Speed Sensor	A Hall Effect speed sensor which produces a square wave. 0-5Vdc signal in response to a rotating 30 tooth wheel coupled to the front propshaft inside the Transfer Case. Each rotation of the front propshaft will result in 30 speed sensor pulse.
EMC	An Electromagnetic clutch used to control the amount of torque applied to the front propshaft.
TOD™	Torque on Demand™.
Duty Cycle	Duty Cycle is the time the EMC is on divided by the period in which it is being modulated.
Touch-off	A minimum amount of duty cycle applied to the EMC.
Front Overrun	A condition where the front propshaft is turning at a rate which is faster than the rear propshaft.
Rear Overrun	A condition where the rear propshaft is turning at a rate which is faster than the front propshaft.
High Range	The highest (numerically lowest = 1 :1) gear ratio between the input and outputs of the Transfer Case.
Low Range	The lowest (numerically highest = 2.48:1) gear ratio between the input and outputs of the Transfer Case.
4H/4L Switch	A switch which selects the desired gear ratio.
Shift Motor	Electric motor which changes the Transfer Case range.
Position Encoder	A set of 4 Gray code switches which provide feedback to the TCCU indicating the position of the Shift Motor.
Clutch Interlock Switch	A switch on vehicles equipped with a manual transmission which indicates that the clutch pedal is depressed.
Neutral Safety Switch	A switch on vehicles equipped with an automatic transmission which indicates that the transmission is in neutral.
Shift Inhibit Speed	The vehicle speed above which Transfer Case shifts are disallowed. Vehicle speed is indicated by propshaft speed measurement.

Downloaded from www.Manualslib.com manuals search engine

Input/Output diagram

TOD control unit and main wiring harness is linked by 30 pin connector. Each pin joins with switche and actuator whose details refer to the below diagram.

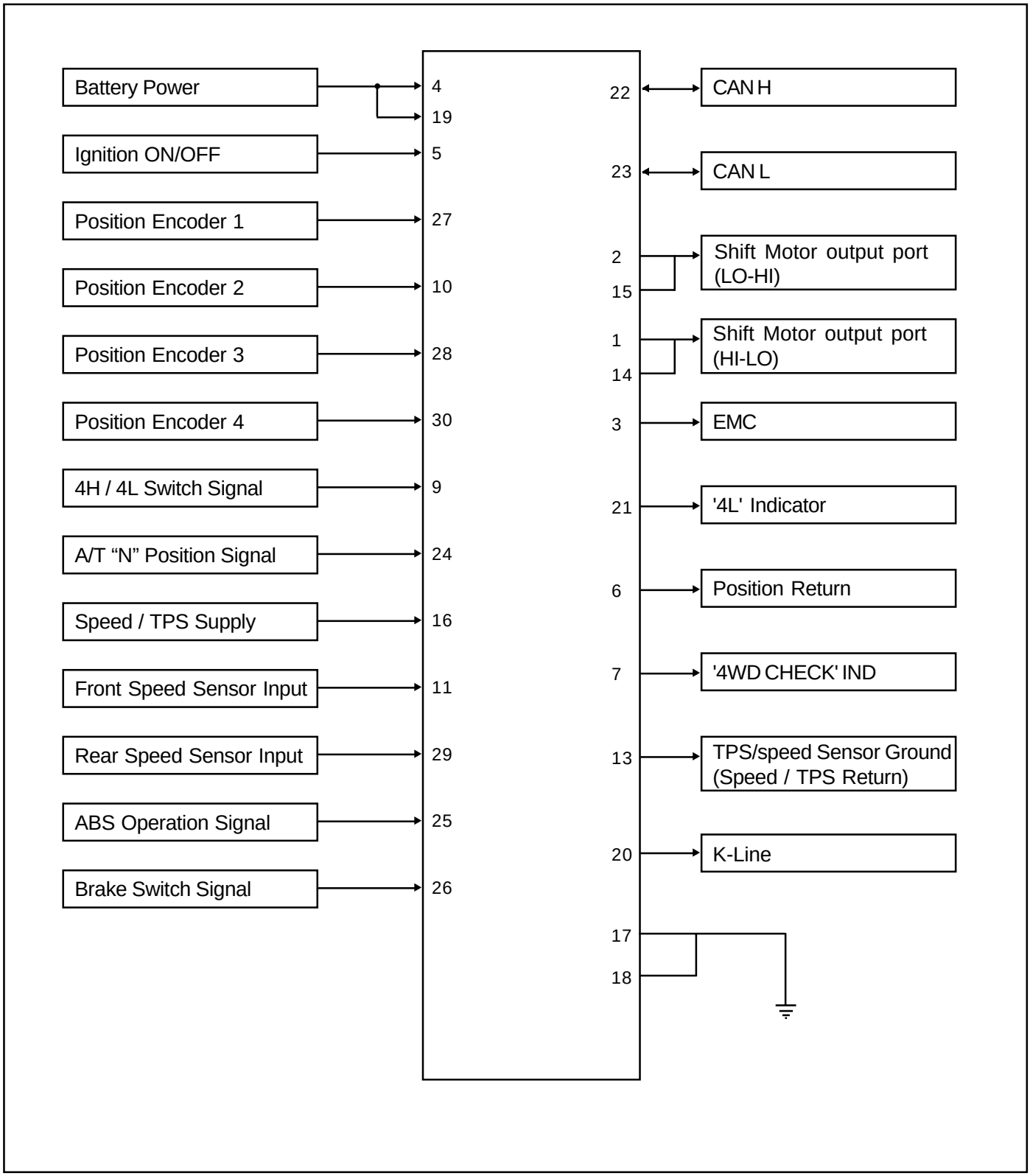

Downloaded from www.Manualslib.com manuals search engine

Classification of Pin No.

Classification	Pin No.	Pin Name	Description
Power Supply	17,18	Ground	TOD control unit ground
	4,19	Battery	TOD control unit battery supply : (Fuse No 13,20A)
Signal Input	5	Ignition	Ignition ON / OFF
	27	Position 1	Position encoder 1 : check of shift motor position
	10	Position 2	Position encoder 2 : check of shift motor position
	28	Position 3	Position encoder 3 : check of shift motor position
	30	Position 4	Position encoder 4 : check of shift motor position
	9	4H/4L Switch	Transfer case mode input
	24	Auto T/M Neutral	Check of neutral gear position in Auto T/M
	16	Speed	5V supply (TPS / speed sensor)
	11	Front Speed	Front speed sensor signal input
	29	Rear Speed	Rear speed sensor signal input
	25	ABS Operation	ABS ON / OFF
	6	Position Return	Position encoder ground
	13	Speed / TPS Return	Ground for speed sensor / TPS
	22	CAN-L	CAN bus low line
	23	CAN-H	CAN bus high line
Signal Output	2,15	Motor LO-HI	Motor output port - LO to HI : join with battery - HI to LO (or motor brake) : join with ground
	1,14	Motor HI-LO	Motor output port - HI to LO : join with battery - LO to HI (or motor brake) : join with ground
	3	EMC	TOD output
	21	4L Illumination	Illuminates “4L” indicator
	7	Diagnosis Display	4WD check lamp illuminator - Upon defect ; Ground circuit
	20	K-LINE[1)]	Diagnosis

1. K-LINE : Communication line for coding and diagnosis with SCANNER.

Downloaded from www.Manualslib.com manuals search engine

Initial Operation of TOD Control Unit

When ignition “ON”, “4L” and "4WD check" lamps illuminates for 0.6second to check bulb in instrument panel, then perform diagnosis of system.

Position Encoder

The Position Encoder is used by the TCCU to determine the position of the Shift Motor. Each motor position is identified by a position code as shown.

Position Code 1/2/3/4	Motor Position	Position Code 1/2/3/4	Motor Position
1110	Left Stop	1001	Neutral
1010	Left of High	0001	Zone 2
0010	High	0101	Low
0000	Right of High	0100	Right Stop
1110	Zone 1		

Notice

1. All other position codes are invalid
2. Position Input Open Circuit (> 4.5V) = 1
3. Position Input shorted to Speed/Position Return (< 0.5V) = 0

Downloaded from www.Manualslib.com manuals search engine

Position Sensor Interpretation

1. When the module powers up, it will read the position sensor and the 4H/4L switch input and respond to the possible codes as follows

4H/4L Switch Input	Motor Position	Action
4H	Left Stop	No action required. 4L bulb off.
4H	Left of High	No action required. 4L bulb off.
4H	High	No action required. 4L bulb off.
4H	Right of High	Blink 4L bulb. After the shift conditions are met, attempt a shift to 4H under conditions of below 87 rpm in front and rear propshaft and “Neutral” position. After succesfully shifting into 4H, stop blinking 4L bulb.
4H	Zone 1	Same as above
4H	Neutral	Same as above
4H	Zone 2	Same as above
4H	Low	Same as above
4H	Right Stop	Same as above
4L	Left Stop	Blink 4L bulb. After the shift conditions are met, attempt a shift to 4L. After succesfully shifting into 4L, stop blinking 4L bulb.
4L	Left of High	Same as above
4L	High	Same as above
4L	Right of High	Same as above
4L	Zone 1	Same as above
4L	Neutral	Same as above
4L	Zone 2	Same as above
4L	Low	No action required. 4L bulb on.
4L	Right Stop	No action required. 4L bulb on.

2. A command to shift will only be acted upon if the TCCU is reading a valid code at the time the command to shift is made.
3. After a shift has started, the TCCU will power the shift motor until the code for the requested position is read. If an invalid code is read, the TCCU will go into a default mode.
4. During a shift attempt, the shift motor will be energized for a maximum of 5 seconds.

Downloaded from www.Manualslib.com manuals search engine

Electric Shift System Operation

The Electric Shift System is responsible for changing the Transfer Case gear ratio by controlling the electric shift motor. The TCCU monitors the 4H/4L switch, neutral switch, speed sensors, position encoder, and ignition switch.

A range change is initiated when

1. The 4H/4L Switch is changed from 4H to 4L or from 4L to 4H.
2. The motor position (as indicated by the position encoder) does not match the 4H/4L Switch immediately after the ignition is turned on.

1. Shift Criteria

When a range change is initiated a Diagnostic Test will be completed on the motor, speed sensors, and position encoder. If the Diagnostic Test fails, the shift will not be attempted. If all components are operating properly, the TCCU will attempt a range change after the following shift criteria are met:

a. The transmission is in neutral for 2 seconds after the shift is requested.

b. Both propshaft speeds are below 87 rpm (2580 pulses/minute).

If the transmission is taken out of neutral before 2 seconds has elapsed, or either propshaft speed increases above the limit, the shift will be suspended and the 4L Indicator will continue to blink until the criteria are met again or the 4H/4L Switch is returned to the original position.

2. Range Change

When the shift criteria are met, the motor is rotated in the appropriate direction (as determined by the selector switch) until one of the following occurs:

a. The motor reaches its destination.

b. The motor is on for 5 seconds without reaching its destination. The shift has failed and the TCCU will respond as default mode.

c. A fault occurs with either the motor or position encoder. Refer to the diagnosis requirement.

When the motor is energized, the Ignition, 4H/4L Switch, propshaft speeds, and transmission neutral inputs are ignored.

3. Indicator Function

Once a range change has been initiated the 4L Indicator will begin to blink at a rate of 0.3 seconds on, 0.3 seconds off until the shift is completed or canceled.

If a successful shift has been completed, the 4L Indicator will be illuminated if the motor is in Low and it will be turned off if the motor is in High.

4L Indicator illuminates as below figure.

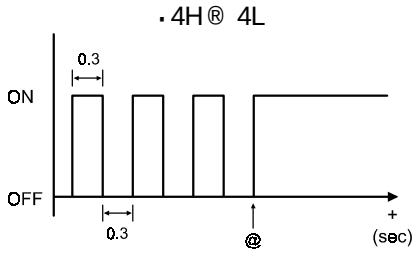

@ : shift is completed

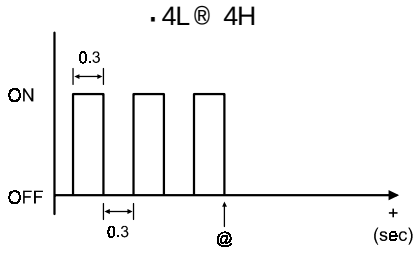

@ : shift is completed

Downloaded from www.Manualslib.com manuals search engine

4. Electric Shift Default Mode

If the motor fails to reach its destination, the TCCU will attempt the following (in order):

a. The TCCU will wait 3 seconds then attempt the shift again.

b. If the second attempt to reach the destination fails the TCCU will wait 3 seconds then attempt to rotate the motor back to the original position. If successful, all future shifts will be inhibited until the Ignition is cycled.

c. If the attempt to return to the original position fails, the TCCU will wait 3 seconds then attempt to rotate the motor to the original position again. If the second attempt to return to the original position is successful, the "4WD CHECK" lamp will be illuminated, and all future shifts will be inhibited until the Ignition is cycled.

d. If the second attempt to return to the original position fails the motor will be turned off, the "4WD CHECK" lamp will be illuminated, and all future shifts will be inhibited until the Ignition is cycled.

TOD™ System Operation

The TOD™ System is responsible for distributing torque between the front and rear axles. The TCCU monitors the propshaft speeds, operating range (High/Low), and ABS activity and then applies a calculated amount of torque to the front axle by Pulse Width Modulating the current applied to the EMC.

1. Touch-off Torque

The minimum EMC Duty Cycle is based on the vehicle speed and throttle position

The TCCU receives the TPS signal from the following sources:

On vehicles equipped with CAN, the TCCU receives the TPS signal from the CAN bus.

2. When Slip Detection

The TCCU continuously monitors the front and rear propshaft speeds to detect wheel slip.

3. Wheel Slip Control

When wheel slip is detected the TCCU controls the EMC duty cycle as necessary until the wheel slip is reduced below the allowable limit. The EMC Duty Cycle will then be reduced to the Touch-Off value.

4. Brake/ABS Strategy

When the ABS System is active, the EMC Duty Cycle is set to a fixed duty cycle (30%) to aid in braking without counteracting the ABS System.

5. 4L Strategy

When the system is operating in 4L, the TCCU continues TOD™ (operation provided that the propshaft speed is below 175 rpm (5220 pulses/minute)). When the speed increases above 175 rpm, the EMC Duty Cycle is set to the maximum value (88%) which applies the maximum available torque to the front axle.

Downloaded from www.Manualslib.com manuals search engine

TOD CONTROL UNIT

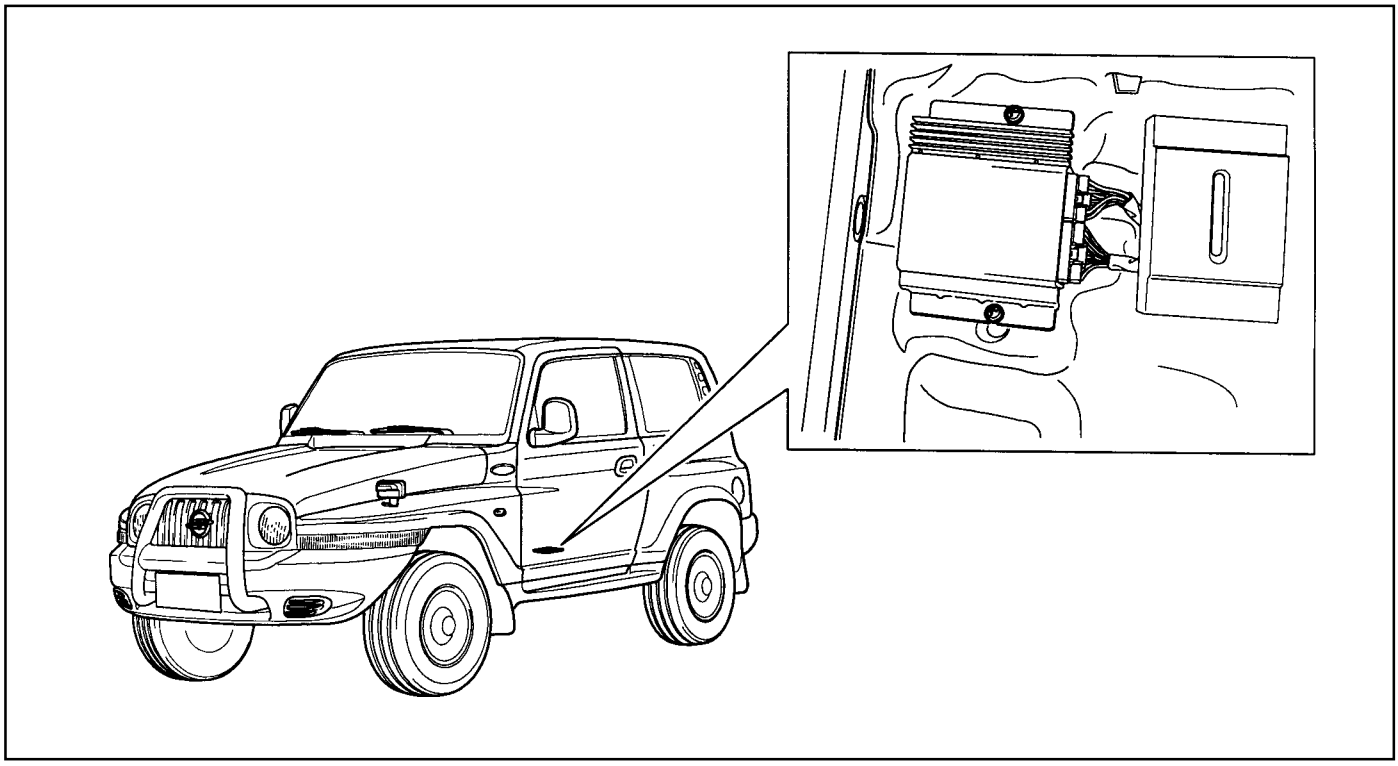

Location of TOD Control Unit

It locates below front left handed seat towards door side, which is beside rear heating duct on the floor.

Shape and function of TOD Control Unit

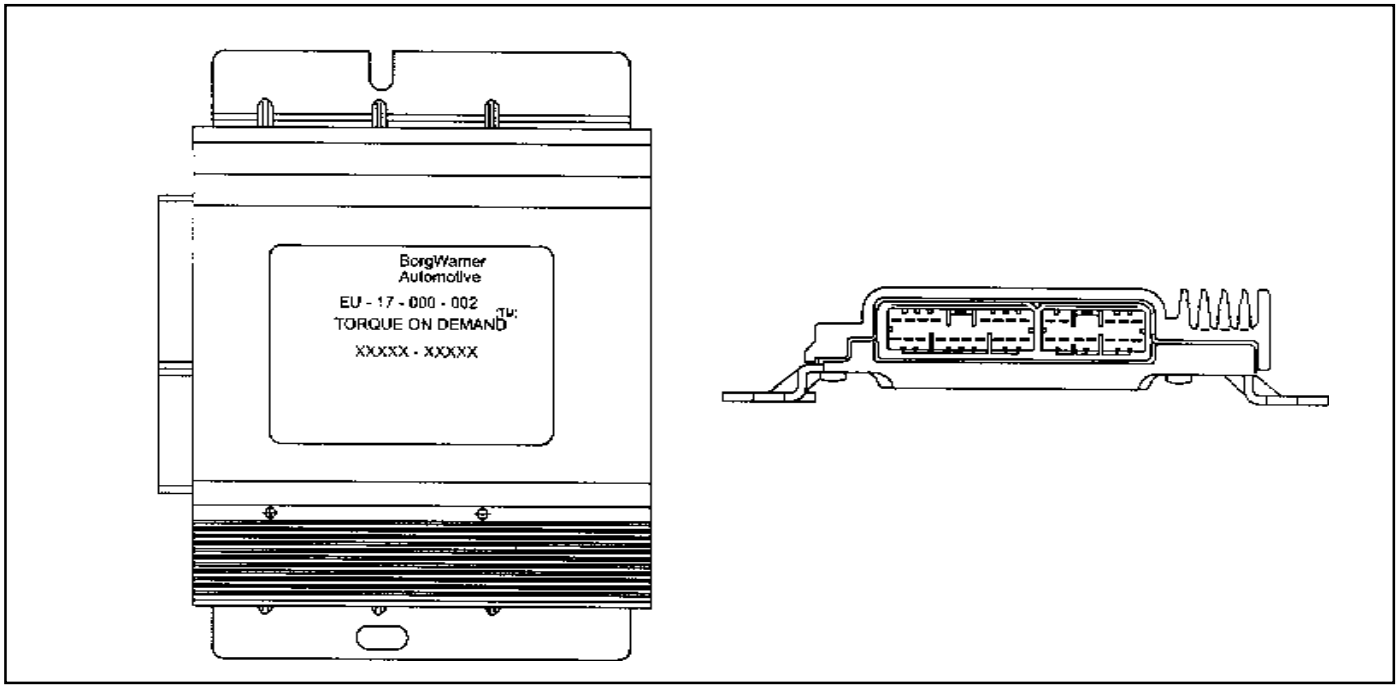

Downloaded from www.Manualslib.com manuals search engine

Pin	Function	Pin	Function	Pin	Function	Pin	Function
1	Motor HI-LO	9	HI / LO Switch	17	Ground	25	ABS Input
2	Motor LO-HI	10	Position 2	18	Ground	26	Brake Switch
3	EMC	11	Front Speed	19	Battery (+)	27	Position 1
4	Battery (+)	12	TPS Supply (Diesel)	20	K-LINE	28	Position 3
5	Ignition	13	Speed/TPS Return	21	4L Illumination	29	Rear Speed
6	Position Return	14	Motor HI-LO	22	CAN-H	30	Position 4
7	Diagnosis Display	15	Motor LO-HI	23	CAN-L	-	-
8	-	16	Speed Reference	24	Auto T/M, Neutral	-	-

Speed Sensor/Clutch Coil and Motor Connector

Speed senso /clutch coil and shift motor connector locate upper backside transfer case (upper part of shift motor).

- Shift motor connector : Black
- Speed sensor and clutch coil connector : White

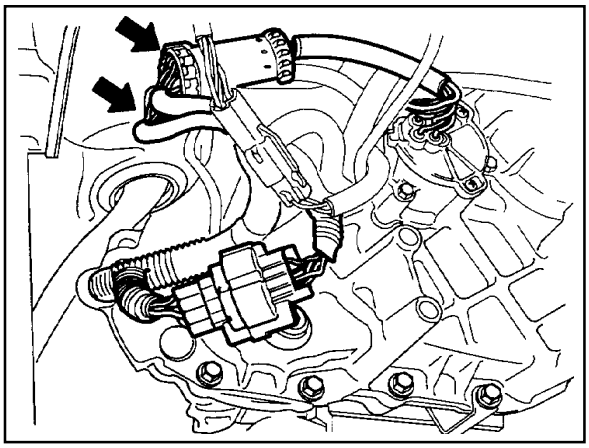

Shift Mtor Connector		Speed Sensor/Clutch Coil Connector	
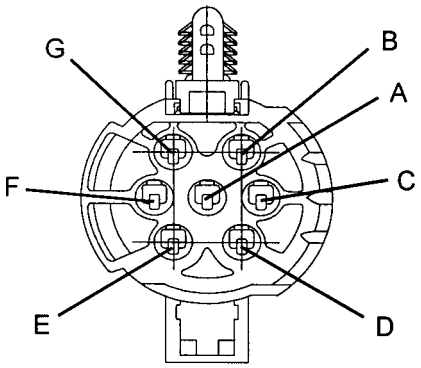 Rear View for Connector		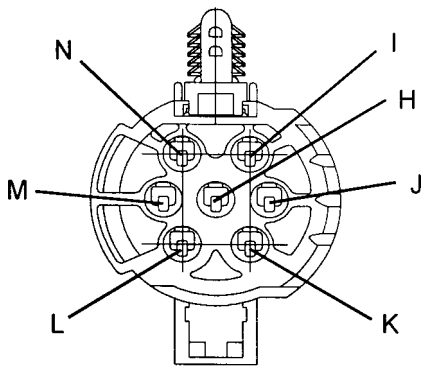 Rear View for Connector	
Pin	**Function**	**Pin**	**Function**
A	Position 4	H	Clutch Coil (EMC)
B	Motor (Counter-Clockwise)	I	Front Speed Return
C	Position 3	J	Front Speed
D	Position 2	K	Front Speed Sensor Supply
E	Position 1	L	Rear Speed Sensor Supply
F	Position Retum	M	Rear Speed
G	Motor (Clockwise)	N	Rear Speed Return

Downloaded from www.Manualslib.com manuals search engine

SCHEMATIC AND ROUTING DIAGRAMS

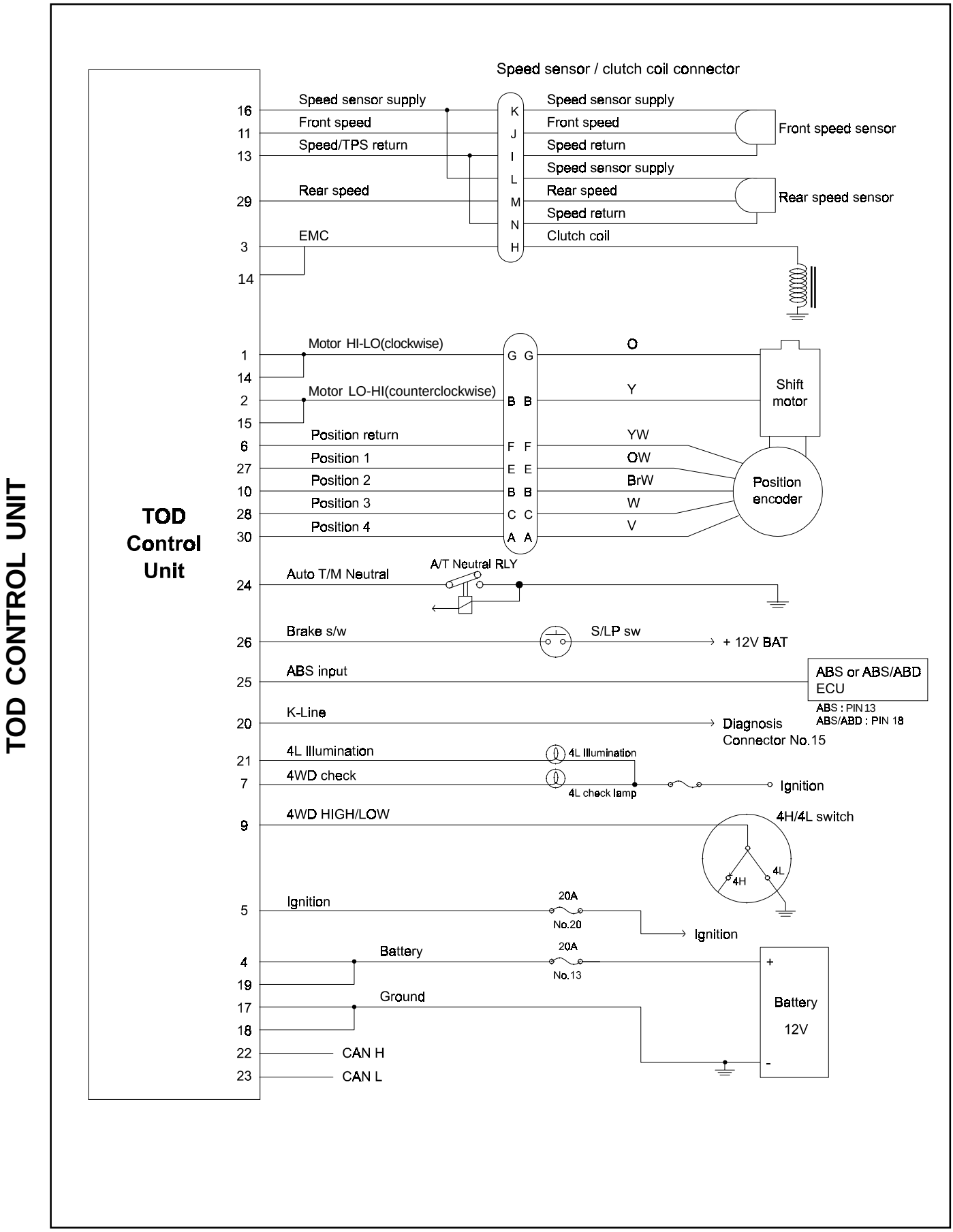

Downloaded from www.Manualslib.com manuals search engine

DIAGNOSIS

While the TCCU is active it periodically monitors its inputs and outputs. If a fault is detected the “4WD CHECK” lamp is illuminated and a fault code is stored in the TCCU memory.

When requested, fault codes are downloaded to a diagnostic connector (K-line) serial communications using SCAN-100.

DIAGNOSTIC TESTS

1.TCCU Internal Function

When the Ignition is turned on the TCCU tests its ROM and RAM. If there is a fault, the TCCU immediately resets itself and re-tests the ROM and RAM. If the fault persists the TCCU continues to reset and re-test until the fault is corrected or the ignition is turned off. All TCCU functions are inhibited until the fault is corrected. The “4WD CHECK” lamp is not illuminated if there is a ROM or RAM fault.

If the ROM/RAM passes the EEPROM memory is tested. If there is a fault the “4WD CHECK” lamp is illuminated and the TCCU continues to operate using the default calibration data stored in ROM. Fault codes are not stored when there is an EEPROM fault.

An EEPROM fault can only be cleared by cycling ignition off-on.

2.Shift Motor Assembly Test

If the TCCU detects a shift motor or position encoder fault continuously for one second the ‘4WD CHECK” lamp is turned on and the appropriate fault code is stored in memory.

a. A shift motor fault when the motor is off is defined as follows:

   Motor H-L shorted to Ground

   Motor L-H shorted to Ground

   Motor open circuit

b. A shift motor fault when the motor is energized is defined as follows:

   Motor H-L shorted to Ground

   Motor L-H shorted to Ground

   Motor H-L shorted to Motor L-H

   Motor open circuit

c. A position encoder fault is defined as follows:

   Any position code which does not correspond to the valid 9 codes.

   A short to ground on any of the encoder lines.

d. If no shifts are in progress when a failure occurs the TCCU will not respond to any shift commands.

e. If a shift command has been received, but not acted upon when a failure occurs the TCCU will cancel the command and not respond to any subsequent shift commands.

f. If a shift command is in progress when an invalid position code is confirmed it will be halted and the TCCU will turn the motor toward the high position. Afterwards the TCCU will not respond to any shift commands.

Downloaded from www.Manualslib.com manuals search engine

g. If the shift motor/position encoder assembly failure (other than a motor failure which occurs when the motor is energized) recovers continuously for one second the TCCU will function normally. The “4WD CHECK” lamp is turned off but the fault code will remain in memory.

h. A motor failure (i.e. open or short circuit) which occurs when the motor is energized can only be cleared by cycling the ignition off-on.

3. Front Speed Sensor Test

If a Front Speed Sensor fault is detected continuously for 0.5 second the “4WD CHECK” lamp is illuminated. The TCCU then responds as follows:

a. If the system is in High Range the TCCU uses the Rear Speed Sensor to determine the EMC Touch Off level and wheel slip control is suspended.

b. If the system is in Low Range, the EMC Duty Cycle is set to maximum (independent of vehicle speed) until the system is shifted out of 4L.

c. All Electric Shift activity is halted until the Ignition is cycled. If a shift is in progress it will be completed.

If the Front Speed Sensor recovers continuously for O.5 second the TCCU will function normally. The “4WD CHECK” lamp is turned off but the fault code will remain in memory.

4. Rear Speed Sensor Test

If a Rear Speed Sensor fault is detected continuously for 0.5 second the “4WD CHECK” lamp is illuminated. The TCCU then responds as follows:

a. If the system is in High Range the TCCU uses the Front Speed Sensor to determine the EMC Touch Off level and wheel slip control is suspended.

b. If the system is in Low Range, the EMC Duty Cycle is set to maximum (independent of vehicle speed) until the system is shifted out of 4L.

c. All Electric Shift activity is halted until the Ignition is cycled. If a shift is in progress it will be completed.

If the Rear Speed Sensor recovers continuously for 0.5 second the TCCU will function normally. The “4WD CHECK” lamp is turned off but the fault code will remain in memory.

5. Both Speed Sensor Faulty

If both the Front and Rear Speed Sensors are faulty continuously for 0.5 seconds the “4WD CHECK” lamp is illuminated. The TCCU then responds as follows:

a. If the system is in High Range the TCCU sets the EMC Touch Off level based on a vehicle speed of 0 and wheel slip control is suspended.

b. If the system is in Low Range, the EMC Duty Cycle is set to maximum until the system is shifted out of 4L.

c. All Electric Shift activity is halted until the Ignition is cycled. If a shift is in progress it will be completed.

If both Speed Sensors recover continuously for 0.5 second the TCCU will function normally. The “4WD CHECK” lamp is turned off but the fault code will remain in memory.

6. EMC Test

The EMC is tested for open circuit or short circuit to ground. If a fault is detected continuously for 0.8 second the “4WD CHECK” lamp is turned on and all TOD™ activity is halted.

If the EMC recovers continuously for 0.8 second the TCCU will function normally. The “4WD CHECK” lamp is turned off but the fault code will remain in memory.

Downloaded from www.Manualslib.com manuals search engine

DIAGNOSTIC TROUBLE CODES (DTC'S)

1. Diagnostic Trouble Code Retention

The first time a fault is detected a DTC is stored in the TCCU's Non-Volatile memory. This DTC will remain in memory until the TCCU is instructed to erase DTC's by SCAN-100. DTC's will not be erased by disconnecting power to the TCCU.

2. Diagnostic Trouble Code Assignments

Classification	Code	Description
TCCU	1714	EEPROM Checksum Fault
	1715	TPS Loss of Signal
	1716	TPS Out of Range
EMC	1721	EMC Open / Short to Battery
	1722	EMC Short to ground
Speed Sensor	1731	Front Speed Sensor Voltage Low
	1732	Front Speed Sensor Voltage High
	1733	Rear Speed Sensor Voltage Low
	1734	Rear Speed Sensor Voltage High
	1735	Speed Sensor Reference Voltage Low
	1736	Speed Sensor Reference Voltage High
Shift Motor	1741	Motor Open / Shorted to Battery
	1742	Motor Output Shorted to Ground
	1743	Shift System Timeout
Position Encoder	1750	General Position Encoder Fault (Invalid Code)
	1751	Position 1 Shorted to Ground
	1752	Position 2 Shorted to Ground
	1753	Position 3 Shorted to Ground
	1754	Position 4 Shorted to Ground

Downloaded from www.Manualslib.com manuals search engine

CODING

Coding Tool

SCANNER

Connection of Coding Tool

Construct SCANNER into diagnosis connector (20 pins) near fuse box in engine room as below figure.

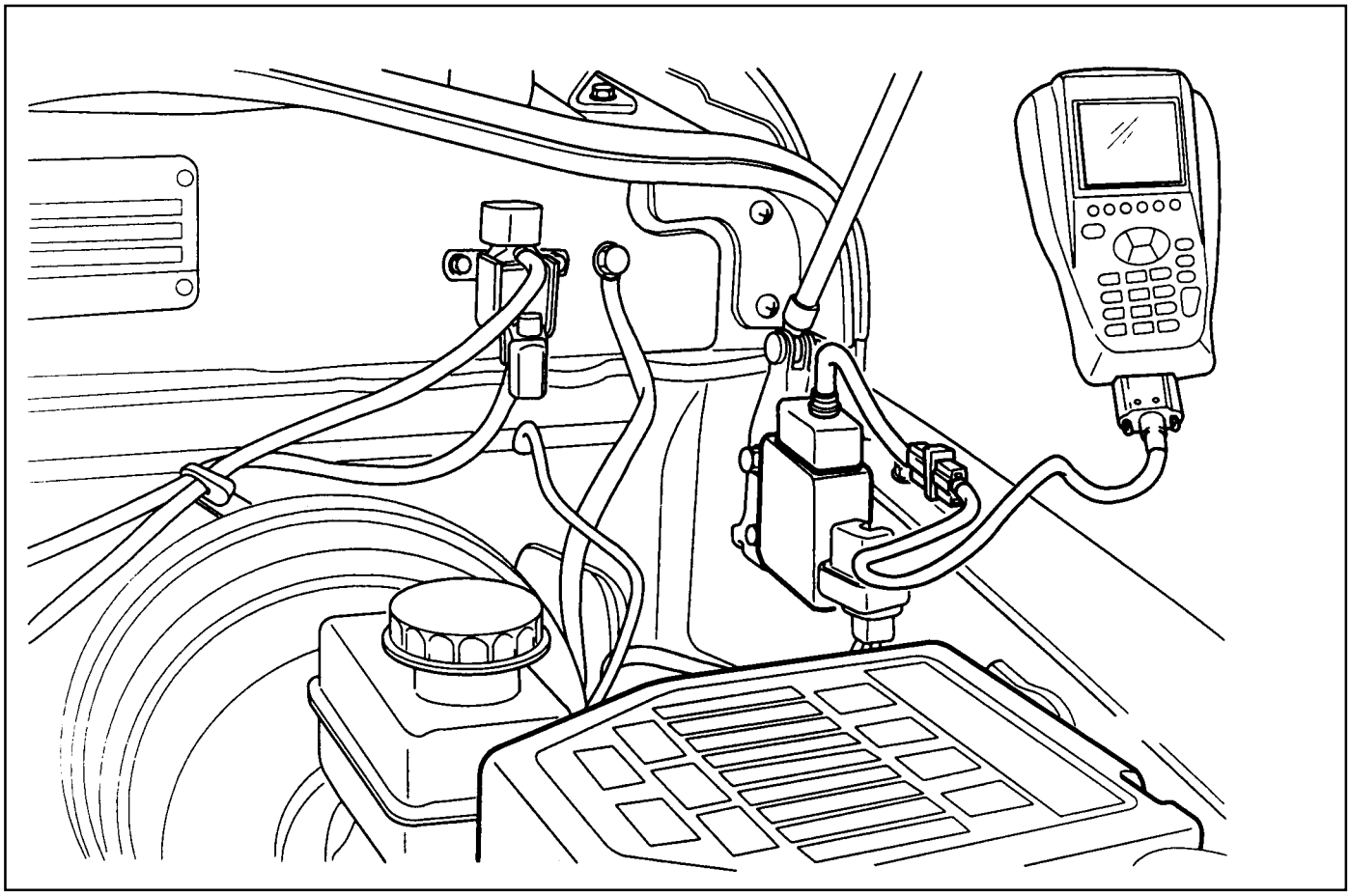

1 Diagnosis Connector

2 SCANNER

Notice

Coding ; An input activity of data for the proper performance by matching specification, devices and system with control unit.

Downloaded from www.Manualslib.com manuals search engine

Coding Required

1. Replacement of TOD control unit.
2. Adjustment by input error.
3. Change of tire specification.

Coding items

Classification	Items
Engine Type	Gasoline Engine (E32)
	661 Diesel Engine
	661LA Diesel Turbo Engine
	662 Diesel Engine
	662LA Diesel Turbo Engine
Transmission/Vehicle Type	Manual Transmission
	Automatic Transmission
	MUSSO
	KORANDO
Axle Ratio	3.73
	4.55
	4.89
	5.38
	5.86
Tire Size	P215
	P235
	P255
	P275

Coding Method

1. Check and record engine type, axle ratio and tire size.
2. Ignition “OFF”.
3. Connect SCANNER with diagnosis connector in engine room.
4. Ignition “ON”.
5. Read the current memorized specification in TOD control unit.
6. Compare memorized specification with the checked record. If not matched, perform a coding.
7. Read again memorized coding specification in TOD control unit for confirmation of coding.
8. Check coding specification whether it matches with vehicle or not. If not, perform a coding again.

Downloaded from www.Manualslib.com manuals search engine

ELIMINATE THE MEMORIZED FAULT CODE

When diagnose by SCANNER, it is required that you make adequate service on defects against all fault codes. And then you should delete the memorized fault codes in TOD control unit using SCANNER as follows;

1. Connect SCANNER with diagnosis connector.
2. Select “trouble code clear” in SCANNER.
3. In “trouble code clear” screen, press “enter” key to erase the fault code.
4. Confirm deletion of fault code and, if not, repeat 2.-3. process.

Downloaded from www.Manualslib.com manuals search engine

DIAGNOSIS

Malfunction interior TOD control unit ; fault code 1714

- Phenomenon
  1. When ignition “ON”, “4WD CHECK” lamp illuminates continuously.
  2. On diagnosis by SCAN-100, it displays fault code “1714”.
- Cause ; Error of EEPROM checksum in TOD control unit

Test Stage / Contents		Result	Countermeasure
Stage	**Test Contents and Procedure**	**Specified Value /Yes/No**	
A1	Check power supply for TOD control unit.		
	1. Disconnect 30 pin connector from TOD control unit. 2. Ignition “ON”. 3. Using multi-tester, measure voltage between pin 5(+) and 17/18 (-). - Specified value - Measured value is within specified range ?	11-14 Vdc Yes No	 Perform A2 stage Perform A3 stage
A2	Check connection status in TOD control unit connector.		
	1. Check connection status. - Is it connected exactly? 2. In case of mal-connection, connect tightly then perform the follows. a. Delete fault code using Scan-100. b. Ignition “OFF”. c. Ignition “ON”. d. Diagnose by Scan-100. - Does it display fault code “1714”?	Yes No Yes No	Perform A3 stage Perform A2 stage Perform A3 stage Normal system
A3	Check short of 10A fuse (fuse No.20).		
	1. Detach No.20 fuse from engine room fuse box. 2. Check the existence of short. - Is fuse normal?	Yes No	Perform A4 stage Replace fuse, then perform A1 stage
A4	Check ground of TOD control unit.		
	1. Ignition “ON”. 2. Check voltage between 4/19 (+) pin and 17/18 (-) using multi-tester (keep connection status). - Specified value (battery is good) - Measured value 3. Check short between 17/18 pin and body after disconnect 30 pin connector. - Is resistance "¥"?	12Vdc (battery voltage) Yes No Yes No	 Perform A4-3 stage Replace TOD control unit Repair ground wiring Ground is O.K., perform A5 stage

Downloaded from www.Manualslib.com manuals search engine

Test Stage / Contents		Result	Countermeasure
Stage	**Test Contents and Procedure**	**Specified Value /Yes/No**	
A5	Check function of TOD control unit.		
	1. Even A1, A2, A3 and A4 test, if you could not find defect, it is required to replace TOD control unit on basis of below phenomena. a. ”4WD CHECK” lamp illuminates continuously when ignition “ON”. b. Shift is not possible even 4H/4L switch operation. c. Upon diagnosis by Scan-100, it displays on “impossible communication with TOD control unit” or fault code “1714, 1715, 1716”. - Do occur the above defects?	Yes No	Replace TOD control unit Normal system

Downloaded from www.Manualslib.com manuals search engine

Error of signal in engine throttle position ; fault code 1715, 1716

- **Phenomenon**
  1. Upon diagnosis by SCAN-100, it display on 1715, 1716 codes.
- **Cause**
  1. Bad communication line between E/G ECU and CAN.
  2. Defect of TOD control unit.
  3. Defect of E/G ECU.

Test Stage / Contents		Result	Countermeasure
Stage	**Test Contents and Procedure**	**Specified Value /Yes/No**	
B1	Check connection status of connector through CAN communication line.		
	1. Check connection of connector. - Does connector connect correctly between TOD control unit and E/G ECU? 2. In case of bad connection, connect correctly then perform the follows ; a. Delete the memorized fault code using SCANNER. b. Ignition “OFF”. c. Ignition “ON”. d. Diagnose by SCANNER. - Does it display fault codes “1715” or “1716”.	Yes No Yes No	Perform B2 stage Perform B1-2 stage Perform B2 stage Normal system
B2	Check connection status of CAN communication line towards E/G ECU.		
	1. Ignition “OFF”. 2. Disconnect 30 pin connector towards TOD control unit. 3. Measure resistance between pin No.22 and 23 in wiring connector using multi-tester. - Specified value - Measured value is within specified range?	115-125W Yes No	Perform B3 STAGE Perform B4 stage, check and replace E/G ECU
B3	Check connection status of CAN communication line towards TOD control unit.		
	1. Ignition “OFF”. 2. Disconnect coupling of E/G ECU (gray, 1-60 pin). 3. Measure resistance between pin No.37 and 38 in coupling using multi-tester. - Specified value - Measured value is within specified range?	115-125W Yes No	Perform B5 STAGE Replace TOD control unit

Downloaded from www.Manualslib.com manuals search engine

Test Stage / Contents		Result	Countermeasure
Stage	**Test Contents and Procedure**	**Specified Value /Yes/No**	
B4	Check CAN communication line by diagnosis of E/G ECU. 1. Diagnose E/G ECU with SCANNER. 2. Does it display on fault code “27”?	Yes No	Perform B1, B2, B3 stages Perform B5 stage
B5	Check power supply and signal output on throttle valve position sensor (potentiometer) 1,2. 1. Diagnose E/G ECU with SCANNER. - Fault codes : 104, 105, 108, 109, 119, 185 Does it display on above code ?	Yes No	Perform B6 stage Replace TOD control unit or perform A1-A5 stages
B6	Check power supply (5V) of throttle valve position sensor. 1. Ignition “ON” 2. Measure voltage between pin 112(+) and 84(-) keeping coupling connection status using multi - tester. - Specified value - Measured value is within specified range?	4.75-5.25Vdc Yes No	Perform B7 stage Replace E/G ECU or perform B1-2 stage after checking cable.
B7	Check output signal from throttle position sensor 1 and 2. 1. Keep E/G idle status. 2. Measure output voltage between pin 87 (+) and 84 (-) keeping E/G ECU coupling connection status using multi-tester. (potentiometer 1) - Specified value min. acc. Pedal max. acc. Pedal - Measured value is within specified range? 3. Measure output voltage between pin 85 (+) and 84 (-) keeping E/G ECU coupling connection status using multi-tester. (potentiometer 2) - Specified value min. acc. Pedal max. acc. Pedal - Measured value is within specified range ?	0.3-0.9Vdc 4.6-4.9Vdc Yes No 4.6-4.9Vdc 0.3-0.9Vdc Yes No	Perform B7-3 stage Replace throttle body actuator or check cable. Replace TOD control unit Replace throttle body actuator or check cable

Downloaded from www.Manualslib.com manuals search engine

Error in electro - magnetic clutch : fault code "1721", "1722"

- **Phenomenon**
  1. Upon diagnosis by SCAN-100, it displays on fault codes "1721,1722".
- **Cause**
  1. Defect in electro - magnetic clutch
  2. Defect in connector or wiring
     - Open or short from EMC to the supply : 1721
     - Short EMC to ground : 1722

Test Stage / Contents		Result	Countermeasure
Stage	**Test Contents and Procedure**	**Specified Value /Yes/No**	
C1	Check relevant connector connection status.		
	1. Check relevant connector connection status with TOD control unit. - Does it connect correctly ?	Yes No	Perform C1-2 stage Perform C1-3 stage
	2. Check connection status of speed sensor and clutch coil connector (7 pin) in transfer case. - Does it connect correctly ?	Yes No	Perform C2 stage Perform C1-3 stage
	3. In case of bad connection, connect it correctly then perform the follows : a. Delete the memorized fault code in control unit with Scan - 100. b. Ignition "OFF". c. Ignition "ON". d. Diagnose by SCAN-100 - Does it display on fault codes "1721,1722" ?	Yes No	Perform C2 stage Normal system
C2	Check supply voltage into electro-magnetic clutch.		
	1. Ignition "ON" 2. Measure voltage between pin 4/19(+) and 17/18(-) in TOD control unit connector. - Specified value - Measured value is within specified range ?	11-15Vdc Yes No	Perform C3 stage Perform C2-3 stage
	3. If the specified value would not be measured, perform the follows : a. Check battery voltage (charging condition) b. Check open circuit on No.13 fuse (20A) c. Check relevant wires. - Is the above 3a, 3b, 3c normal ?	Yes No	Perform C3 stage ● Charging/ Replace battery ● Replace fuse ● Repair wires

Downloaded from www.Manualslib.com manuals search engine

Test Stage / Contents		Result	Countermeasure
Stage	**Test Contents and Procedure**	**Specified Value /Yes/No**	
C3	Check resistance of electro-magnetic clutch. 1. Disconnect 30 pin connector from TOD control unit. 2. Measure resistance between pin 3 and 7 in wiring connector using multi-tester. - Specified value - Measured value is within specified range?	2.5W Yes No	Perform C4 stage ● 0W : short ● ¥W : open

Downloaded from www.Manualslib.com manuals search engine

Defect in speed sensor : fault code 1731, 1732, 1733, 1734, 1735,1736

- **Phenomenon**
  1. Upon diagnosis by SCANNER, it displays on fault code 1731, 1732, 1733, 1734, 1735 and 1736.
  2. “4WD CHECK” lamp illuminates continuously when ignition “ON”.
- **Cause**
  1. Defect of speed sensor (front, rear).
  2. Defect of power supply.

Test Stage / Contents		Result	Countermeasure
Stage	**Test Contents and Procedure**	**Specified Value /Yes/No**	
D1	Check power supply of speed sensor.		
	1. Ignition “ON” or driving mode 2. Measure supply voltage between pin 16 (+) and 13 (-) in TOD control unit connector using digital multi-tester. - Specified value - Measured value is within specified range ?	4.75-5.25Vdc Yes No	 Perform D3 stage Perform D2 stage
D2	Check connection status of connector.		
	1. Check connection status of speed sensor/clutch coil connector and TOD control unit connector. - Does it connect correctly ? 2. In case of bad connection, connect it correctly then perform the follows: a. Delete the memorized fault code in control unit by SCANNER. b. Ignition “OFF”. c. Ignition “ON”. d. Diagnose by SCANNER. - It does not display fault code. - It displays one or more fault code among 1731 to 1736.	Yes No Yes Yes	Perform D3 stage Perform D2-2 stage Normal system Perform D3 stage
D3	Check output wave of front and rear speed sensor.		
	1. Upon driving mode. 2. Check output wave of each speed sensor by SCANNER. 3. Is it normal on output wave?	Yes No	Perform D4 stage Replace speed sensor then perform D2-2 stage

Downloaded from www.Manualslib.com manuals search engine

Test Stage / Contents		Result	Countermeasure
Stage	**Test Contents and Procedure**	**Specified Value /Yes/No**	
D4	Check output voltage of front and rear speed sensor. 1. Upon driving mode 2. Measure output voltage of front and rear speed sensor by multi-tester. Check voltage whether it varies within specified range. - Specified value • Front speed sensor : Pin 11(+), 13(-) in TOD control unit connector • Rear speed sensor : Pin 29(+), 13(-) in TOD control unit connector - Measure value is within specified range ?	Yes No	Check function of control unit. It necessary, replace then delete fault codes and re-diagnose . Perform D5 stage

Downloaded from www.Manualslib.com manuals search engine

Shift motor malfunction : Fault code ® 1741, 1742, 1743

- **Phenomenon**
  1. When change the 4H/4L switch from 4H to 4L, '4L' indicator lamp turn off after blinking for a time and then '4WD CHECK' indicator lamp turn on.
  2. Fault codes display by diagnosis of SCAN-100 : 1741, 1742, 1743
  3. The shifting operation is not occurred when 4H / 4L switch, is operating.
- **Cause**

  Defect in shift motor, improper voltage provided, incorrect connection in connector, short of wiring.

Test Stage / Contents		Result	Countermeasure
Stage	**Test Contents and Procedure**	**Specified Value /Yes/No**	
E1	Check the input voltage of shift motor.		
	1. Turn the ignition switch to "ON" position. 2. Measure the Hi/Low voltage of motor which is located between No.1/No.14 and No.2/No.15 connector of TOD control unit with digital Multi-tester or which is located between No.G connector and body after detaching T/C motor connector. - The specified value (When operates 4H/4L switch)	11-14 V (Battery voltage)	
	- Measured value is within specified range ?	Yes No	Perform E1-3 stage Perform E2 stage
	3. Measure the Hi/Low voltage of motor which is located between No.2/No.5 and No.1/No.14 connector or which is located No.B connector and body after detaching T/C motor connector - The specified value (When operates 4H/4L switch)	11-14 V (Battery voltage)	
	- Measured value is within specified range ?	Yes No	Perform E4 stage Perform E2 stage
E2	Check the fault condition of the relevant connector.		
	1. Check the installation condition of TOD control unit 30pin connector and T/C shift motor connector. - Is it installed properly ?	Yes No	Perform E3 stage Perform E2-2 stage
	2. If the connector installation is improper, install properly and then perform follows : a. Delete the fault code of control unit by scan scope b. Turn off the ignition switch c. Turn on the ignition switch d. Re-diagnosis of system It displays one or more fault code among 1741 to 1743.	Yes No	Perform E3 stage Normal system

Downloaded from www.Manualslib.com manuals search engine

Test Stage / Contents		Result	Countermeasure
Stage	**Test Contents and Procedure**	**Specified Value /Yes/No**	
E3	Check the wiring of shift motor whether it is shorted or not.		
	1. Turn off the ignition switch. 2. Detach the 30pin connector from TOD control unit 3. Perform short test between the wiring connector No.1/ No.14 and No.2/No.5. - Is there resistance of 0W?	Yes No	Hi-Low motor and Lo-Hi wiring are shorted each other. Repair or replace. Perform E3-4 stage.
	4. Perform the short test between No.1/No.14 Connector and body, No2/No.15 connector and body. - Is there resistance of 0W?	Yes No	Related wiring is shorted with ground. Repair or replace. Perform E3-5 stage.
	5. Execute E1 stage to check whether wiring is shorted between Hi-Low motor and LOW-HI motor. - Is the provided voltage proper?	Yes No	Perform E4 stage. Wiring is shorted. Repair or replace.
E4	Check the resistance of shift motor		
	1. Turn off the ignition switch. 2. Measure the resistance between No.1/No.14 and No.2/ No.15 connector after detaching 30pin connector of TOD control unit Or, check the resistance between No.G and No.B after detaching motor connector of T/C side. - Specified value - Measured value is within specified range ?	Yes No	The defective T/C or perform E5 stage. Replace the shift motor.
E5	Execute the test after detaching shift motor, when the fault is not solved after executing E1~E4 stage.		
	1. Detach the motor connector from T/C. 2. Remove the shift motor. 3. Connect motor connector with the removed shift motor. 4. Operate the 4H/4L switch. - Does motor rotate ?	Yes No	Check and fix due to the defective T/C ass'y. Replace the motor or delete fault code and rediagnosis system.

Downloaded from www.Manualslib.com manuals search engine

Position incoder and position 1,2,3,4 malfunction :Fault code®1750,1751,1752,1753, 1754

- **Phenomenon**

  The ‘4WD check’ lamp can not go out when the ignition switch positioned to ‘ON’.

  The fault code display 1750, 1751, 1752, 1753, 1754 by diagnosis of SCAN-100.

- **Cause**

  The portion of position incoder malfunction, each wiring is shorted with ground.

Test Stage / Contents		Result	Countermeasure
Stage	**Test Contents and Procedure**	**Specified Value /Yes/No**	
F1	Check the installation condition of connector.		
	1. Check the installation condition between 30 pin connector of TOD control unit and motor connector of T/C portion. - Is it installed properly ?	Yes No	Perform F2 stage Perform F1-2 stage
	2. If the connector installation is improper, install properly and then execute follow procedure. a. Delete the all fault code from memory by scan scope. b. Turn off ignition switch. c. Turn on ignition switch. d. Rediagnosis the system. - Does the fault codes display one or more among 1750 ~ 1754.	Yes No	Perform F2 stage Normal system
F2	Check the each wiring whether it is shorted or not.		
	1. Turn off the ignition switch 2. Detach the 30 pin connector of TOD control unit. 3. Perform short test each connector, No.27 (Position 1), No.10 (Position 2), No.28 (Position 3),No.30 (Position 4), No.6 with body. - Is there resistance of 0W ?	Yes No	Repair or replace due to wiring short 1. Replace the motor Ass’y due the defective position incoder portion. 2. And then, perform F1-2 stage.

Downloaded from www.Manualslib.com manuals search engine

- **Phenomenon**

  "4L" lamp on cluster continuous blinking and can not go off, when operated 4H/4L switch as 4L« 4H.

- **Cause**

  Shifting failure.

Test Stage / Contents		Result	Countermeasure
Stage	**Test Contents and Procedure**	**Specified Value /Yes/No**	
G1	1. Stop the vehicle 2. Return the 4H/4L switch to first position (before operating). - The blinking of 4L indicator lamp is stopped. **Note** **If the first position before switch operating is '4L', lamp goes on after stopping blink, otherwise it is '4H' lamp goes off.** 3. Reoperate 4H/4L switch to 4H«4L on the below condition. • Positioned Auto T/M to neutral. • At this time, keep the neutral position for 2 second. • Stop the vehicle (The R.P.M of front & Rear propeller shaft is below 80). 4. '4L' lamp blinks based on 0.3 second. 5. When the shifting is engaged, the blinking of '4L' lamp is stopped. - 4H®4L : goes on '4L' lamp - 4L®4H : goes on '4L' lamp 6. When the '4L' indicator lamp continuous blinking, repositioned to first position and diagnose the system and then fix it.	Yes No Yes No	Perform 2 stage Diagnose TOD control unit Normal system Perform system test Auto T/N positioned to neutral Check/Replace the relay

Downloaded from www.Manualslib.com manuals search engine

MAINTENANCE AND REPAIR

ON-VEHICLE SERVICE

TOD CONTROL UNIT

TOD Electric Characteristics

Voltage	Normal Operation Range	9 - 16 Vdc
	CAN communication Operation Range	6 - 16 Vdc
Parasitic Current (Under max. operation Voltage)	Ignition “OFF”	2 mA
	Ignition “ON”	1 A
Max. Operation Current (Under max. operation Voltage)	Motor “OFF”	7 A
	Motor “ON”	20 A

Removal & Installation Procedure

1. Turn the ignition switch to "OFF" position.
2. Remove 30 pin connector from TOD control unit.
3. Unscrew 2 bolts (1).

   Installation Notice

Tightening Torque	9 - 11 Nm

4. Installation should follow the removal procedure in the reverse order.

   Notice

   When replace TOD control unit, it is required to make a coding correspondent with vehicle specification.

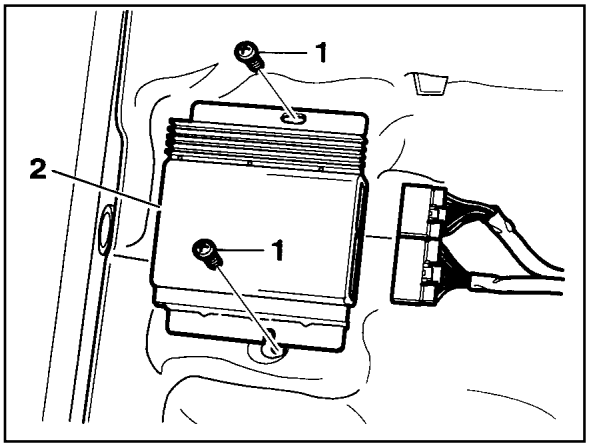

1 Bolt (M6 x 16, 2pieces) ..... 9-11 Nm
2 TOD control unit

Downloaded from www.Manualslib.com manuals search engine

TRANSFER CASE (TOD)

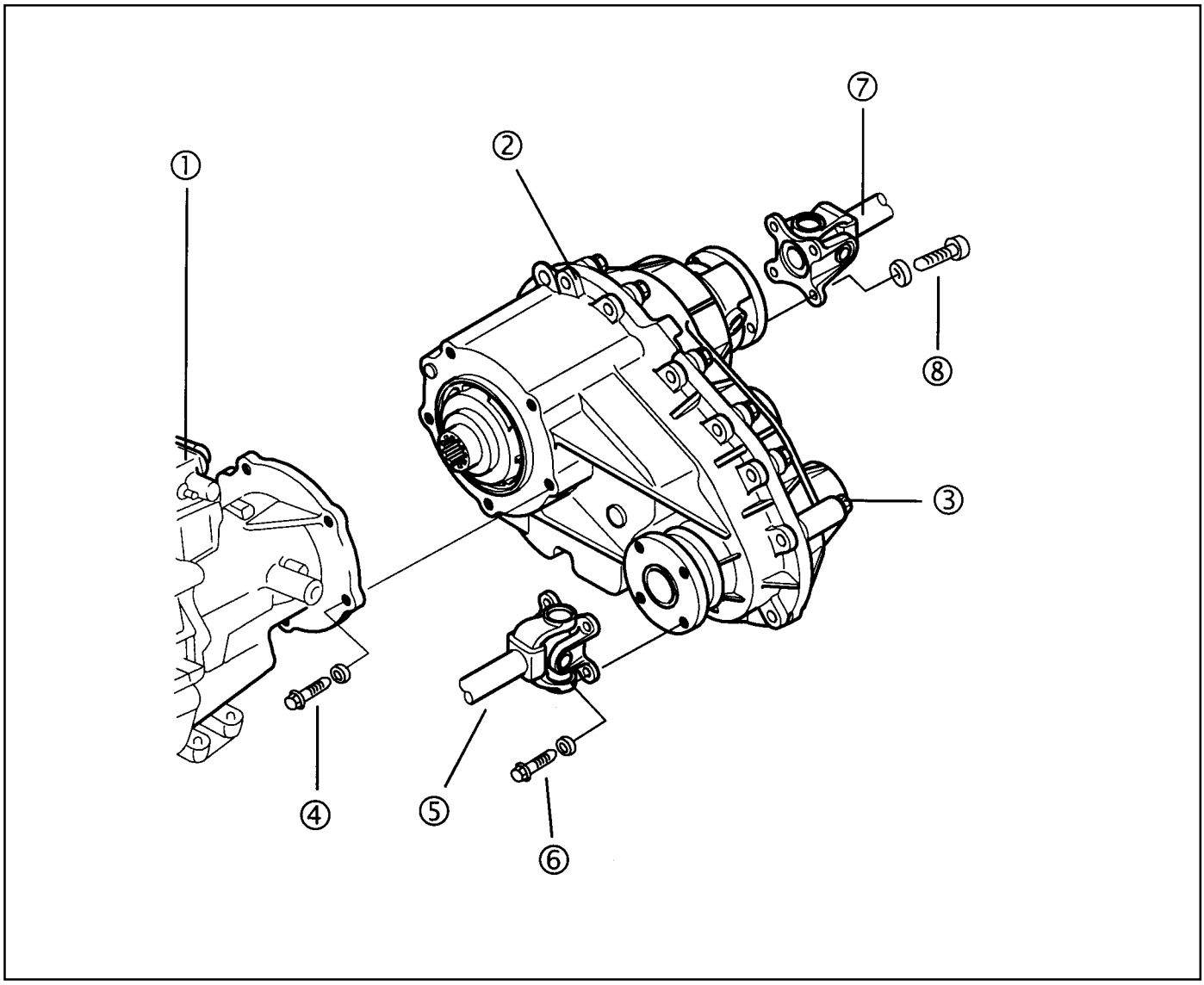

1 Transmission
2 TOD Transfer Case
3 Extension Housing
4 Bolt 35-60Nm
5 Front Propeller Shaft
6 Bolt 81-89Nm
7 Rear Propeller Shaft
8 Bolt 81-89Nm

Downloaded from www.Manualslib.com manuals search engine

Removal & Installation Procedure

1. Disconnect (-) cable from battery.
2. Lift on vehicle and make sure on safety.

   Notice

   Be careful for catalytic converter due to high temperature after driving or engine running.
3. Prepare a vessel to drain transfer case and manual transmission oil.
4. Release drain plug and drain transfer case and manual transmission oil.

   If planar damper is installed, unscrew 4 bolts and remove the planar damper.

   Notice

   Oil drain should be along with whole transfer case disassembly and assembly.

5. Disconnect transmission extension wiring connector back side transfer case.

   Notice

   When disconnect connector, make sure on direction of locking tab towards inside.
6. Disconnect shift motor/clutch coil connect (Black 7 pin) connector upper backside.
7. Disconnect front and rear speed sensor connector (white 7 pin).
8. Disconnect speedometer sensor connector right upper side.

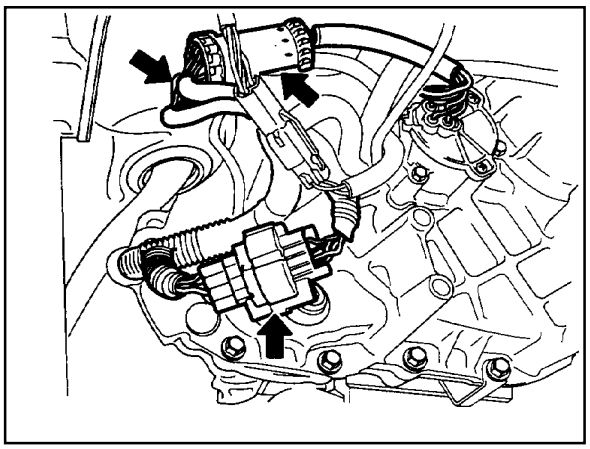

9. Disconnect breather tube front upper side transfer case (upper connecting point of transfer case and front propeller).

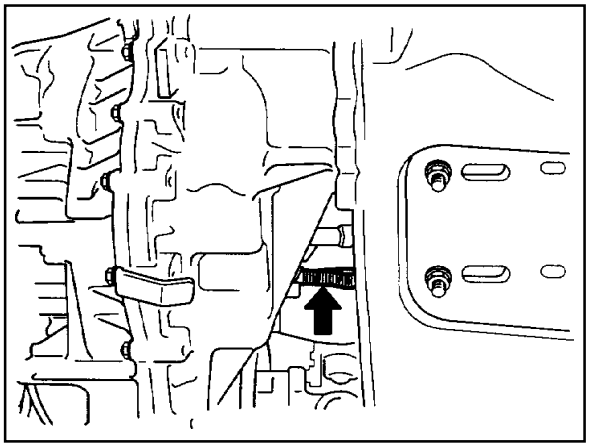

10. Prepare hydraulic jack and support transfer case assembly.

Downloaded from www.Manualslib.com manuals search engine

11. Unscrew 4 units of M12 bolts from case flange then disconnect front propeller shaft from transfer case.

Installation Notice

Tightening Torque	81 - 89 Nm

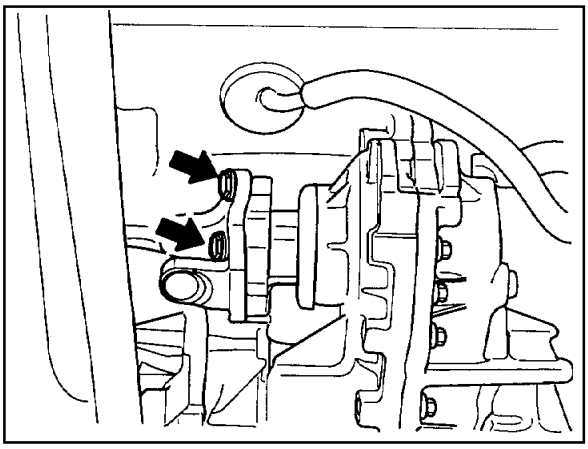

12. Unscrew 4 units of M12 bolts from case flange then disconnect rear propeller shaft from transfer case.

Installation Notice

Tightening Torque	81 - 89 Nm

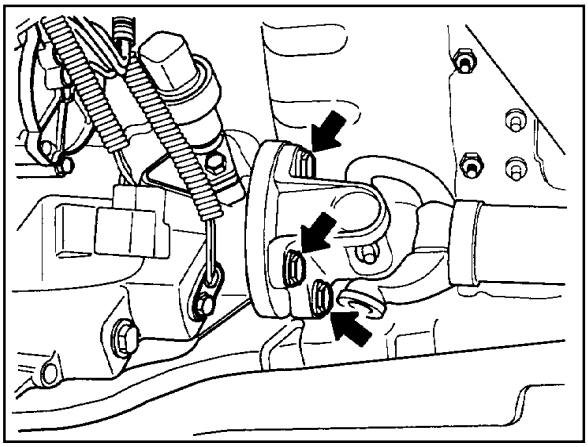

13. Unscrew 5 units of mounting bolt (M12) from extension housing in transmission.

Installation Notice

Tightening Torque	35 - 60 Nm

Notice

Make sure the connecting surface is clean.

Applying long-life grease spline inside transfer case input shaft.

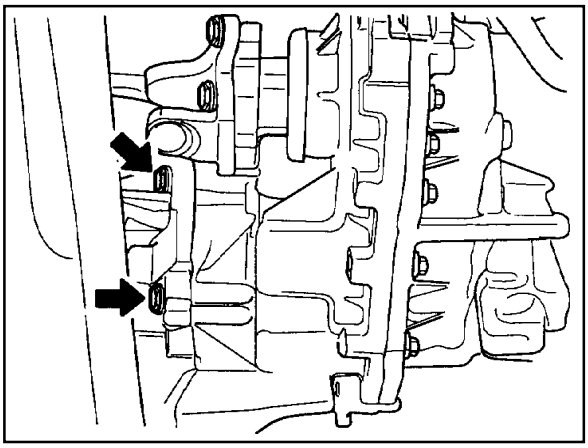

14. Installation should follow the removal procedure in the reverse order.

Downloaded from www.Manualslib.com manuals search engine

Replacement of Shift Motor

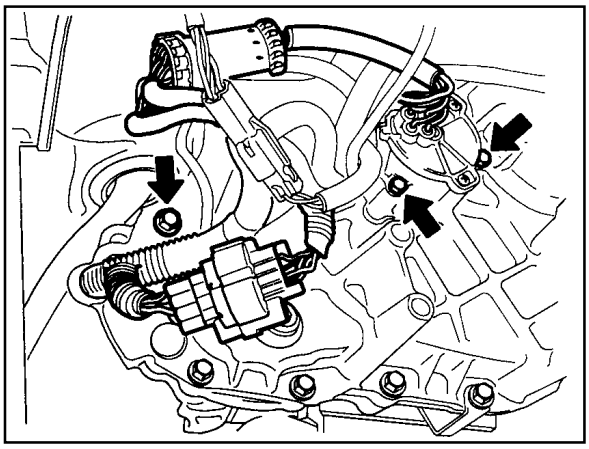

1. Disconnect (-) cable from battery.
2. Disconnect shift motor/clutch coil connector (black pin7) upper backside.
3. Unscrew 3 units of shift motor mounting bolts (M10).
4. Unscrew 1unit of bracket mounting bolt (M10).

   Installation Notice

Tightening torque	9 - 11 Nm

   Notice

   When disconnecting shift motor and mounting bracket, it is required to unscrew 2 units of adjusting bolts (M10) form motor and bracket.

5. Keep shift motor even then pull rearward.
6. Clean connection surface of transfer case and shift motor.
7. If necessary, make a test by SCAN-100 with shift motor assembly.

   Notice

   Do not disassemble shift motor. If necessary, replace by shift motor assembly unit.

8. Applying sealant into connecting surface for new shift motor.
9. Installation should follow the removal procedure in the reverse order. Before installation, make sure that motor position match with mode of 4H/4L switch.

   Reference

   When accord position of motor with 4H/4L switch and transfer case match position of the disconnected motor and new one.

Downloaded from www.Manualslib.com manuals search engine

SPEED SENSOR IN FRONT AND REAR PROPELLER SHAFT

Replacement Procedure

1. Disconnect (-) cable from battery.
2. Detach shift motor assembly.
3. Disconnect front and rear speed sensor connector (white 3 pin) upper backside transfer case.
4. Disconnect speed sensor connect from locking sleeve by pushing.
5. Disconnect wire stick cap from the detached connector.

6. Unscrew rear speed sensor mounting bolt (M10) from upper side of rear case flange.

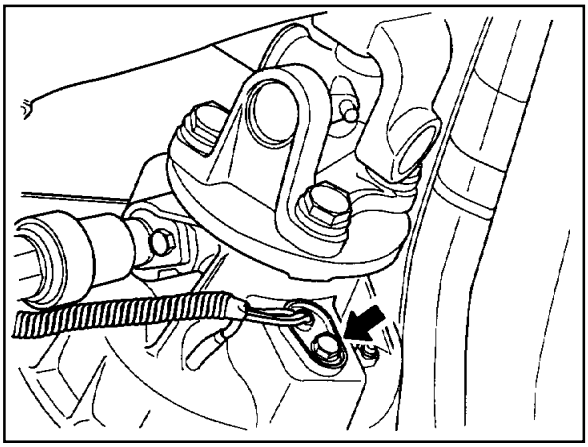

7. Detach sensor from transfer case by lifting up using tool.

   Notice

   When disconnect sensor, make sure on adequate pressure due to sensitiveness with shock.

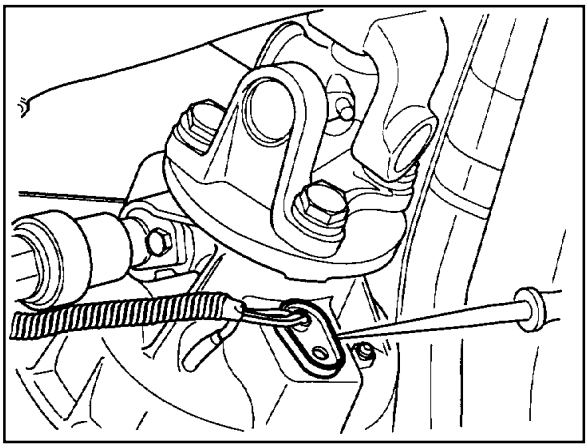

8. Disconnect taping from both protection tube ends that wrap 3 wires of speed sensor and 1 wire of clutch coil.
9. Disconnect tube.

Downloaded from www.Manualslib.com manuals search engine

10. Disconnect pin and wire from speed sensor connector by pulling sticking long-nose plier into “L” pin in connector.
11. On the same way, disconnect pin and wire “M” and “N” from connector.

    Notice

    Do not touch the wires related with EMC.

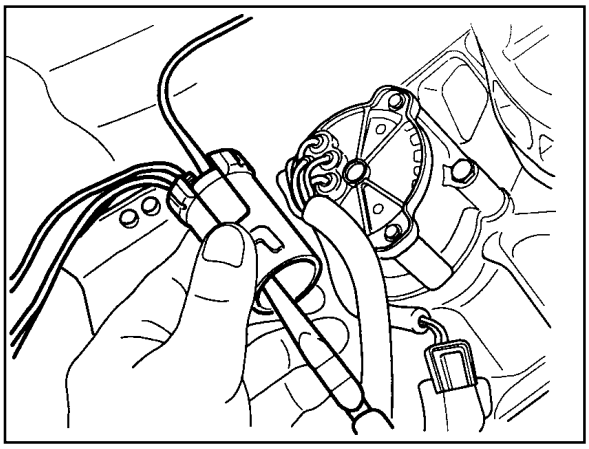

12. Prepare new speed sensor.
13. Connect 3 pins with wires of speed sensor to coincide with each connection position.
14. Using long-nose plier, connect tightly by pulling pins.
15. Apply rubber cap into connector using long-nose plier not to detach.
16. Connect protection tube with wire.
17. Tape both ends of tube.
18. Putting rear speed sensor into hole, connect exactly pushing both ends.
19. Screw 1 unit of bolt (M10).

    Installation Notice

Tightening Torque	9 - 11 Nm

20. Connect speed sensor connector, then locking sleeve.

    Reference

    Front propeller shaft should be premised by removal of shift motor.

    After disconnecting shift motor, procedure of replacement on sensor assembly of accords with one of rear speed sensor.

Downloaded from www.Manualslib.com manuals search engine

REPLACEMENT OF OIL

Oil Specification

Specification	Standard	A.T.F S-3, S-4 or Dexron II, III
	Capacity	≒1.4 Litre
	Service	Inspection every 15,000km, Replacement every 50,000km

Specified Oil Level

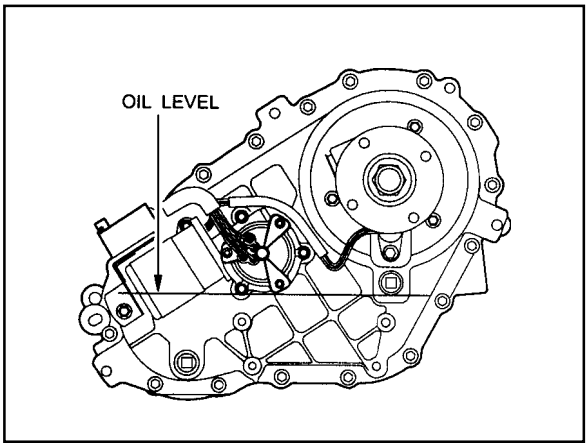

Oil Replacement

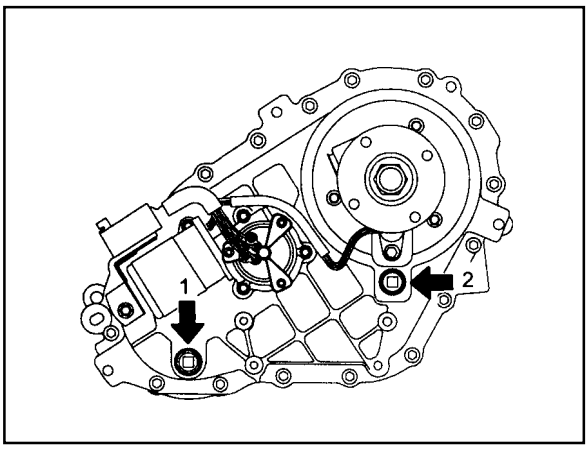

1. Lift on vehicle then make sure on safety.
2. Prepare a vessel to drain transfer case oil.
3. Release filler plug.
4. Drain oil completely.
5. Wash drain plug and than tighten.

   Installation Notice

Tightening Torque	19 - 30 Nm

6. Replenish standardized oil by specified level through filler plug hole.
7. Tighten filler plug after washing.

   Installation Notice

Tightening Torque	19 - 30 Nm

8. Check oil leakage.

Downloaded from www.Manualslib.com manuals search engine

UNIT REPAIR

TRANSFER CASE

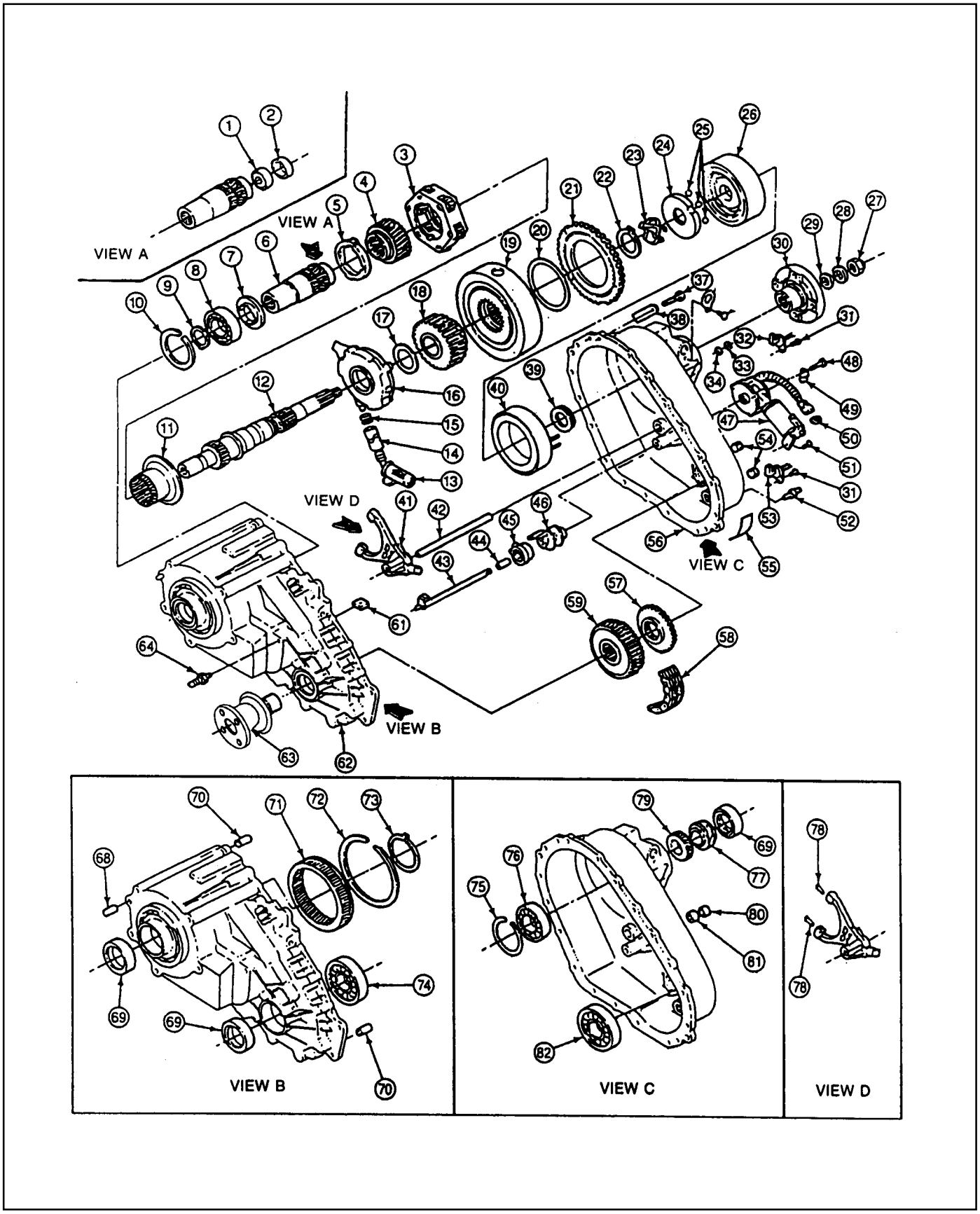

Downloaded from www.Manualslib.com manuals search engine

1 Bearing
2 Bushing
3 Carrier Assembly
4 Sun Gear
5 Thrust Plate
6 Input Shaft
7 Output Shaft Thrust Washer
8 Bearing
9 Retaining Ring
10 Snap Ring
11 High-low Collar
12 Rear Output Shaft
13 Oil Strainer
14 Coupling Hose
15 Hose Clamp
16 Pump Assembly
17 Thrust Washer
18 Sprocket, Drive (24T)
19 Clutch Pack Assembly
20 Insulator Washer
21 Armature
22 Snap Ring
23 Wave Washer
24 Apply Cam
25 Ball
26 Cam and Coil Assembly
27 Nut, Metric
28 Output Shaft Yoke Washer
29 Oil Seal
30 Case Flange
31 Bolt
32 Upper Speed Sensor (Rear)
33 Nut
34 Washer
37 Bolt
38 Tag, Identification
39 Thrust Bearing
40 Clutch Coil Assembly
41 Fork, Reduction Shift
42 Shift Rail
43 Shaft, Shift
44 Spacer
45 Torsion Spring
46 Shift Cam
47 Transfer Case Shift Motor
48 Bolt
49 J-clip
50 Connector Retainer
51 Bolt
52 Support Stud
53 Lower Speed Sensor (Front)
54 Plug
55 Identification Decal
56 Cover
57 Tone Wheel, Lower
58 Chain, Drive
59 Sprocket, Driven (24T)
61 Magnet
62 Case
63 Case Flange and Output Shaft
64 Barb, Breather
68 Spiral Pin
69 Oil Seal
70 Pin, Dowel
71 Ring Gear
72 Retaining Ring
73 Snap Ring
74 Bearing
75 Snap Ring
76 Bearing
77 Speedometer Drive Gear
78 Facing, Shift Fork
79 Upper Tone Wheel
80 Oil Seal
81 Bearing Sleeve
82 Bearing

Downloaded from www.Manualslib.com manuals search engine

Disassembly Procedure

1. Disconnect transfer case from vehicle
2. Using a 30mm thin-wall socket, first remove the rear output nut, output shaft yoke washer, oil seal then the case flange.

   Installation Notice

3. Disconnect shift motor/clutch coil connector and speed sensor connector from upper bracket of transfer case.

Tightening Torque	137 - 196 Nm

   Notice

   When disconnect connector, pull forwards grasping connector housing.

4. Remove outer tube on speed sensor connector.
5. Remove wire supporting cape back side of speed sensor connector.
6. Disconnect pin of clutch coil wire (yellow) from speed sensor connector (white 7 pin) using long-nose plier.
7. Remove shift motor.

   Notice

   When remove shift motor, pay attention to the location of triangular slot and shaft in transfer case inside motor.

8. Disconnect front and rear speed sensor.

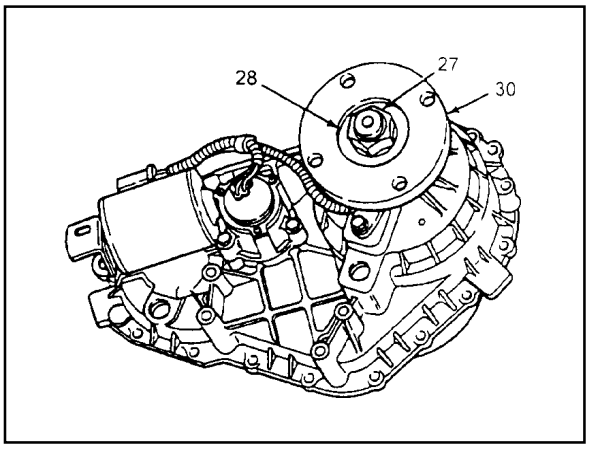

27 Nut
28 Washer
30 Case Flange

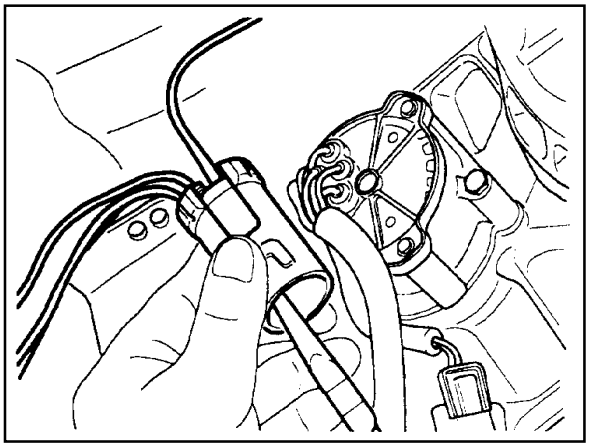

Downloaded from www.Manualslib.com manuals search engine

9. Remove the bolts that retain the front case to the rear case. Make sure that the front case is facing downward so that the rear cover is facing upwards. Pry on the bosses and separate the front case from the rear case. Remove all traces of gasket sealant from the mating surfaces of the front case and rear case.
10. If the speedometer drive gear is to be replaced, first remove the flange seal by prying and pulling the curved-up lip of the flange seal. Do not damage the bearing, bearing cage or case. Remove and discard the flange seal. Remove the speedometer drive gear and upper tone wheel.

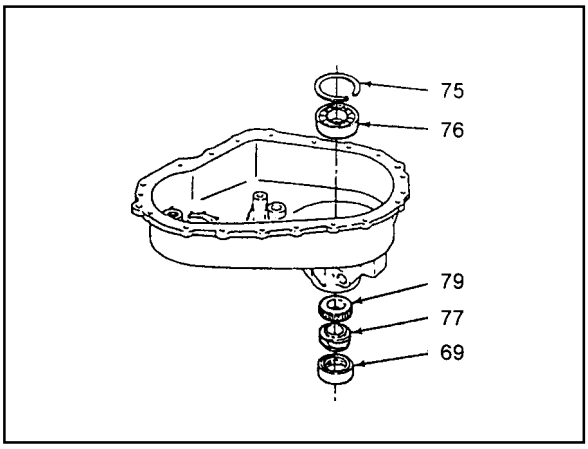

69 Yoke to Flange Seal
75 Snap Ring
76 Bearing
77 Speedometer Drive Gear
79 Upper Tone Wheel

11. If the rear output shaft bearing requires replacing, remove the internal snap ring that retains the bearing in the bore. From the outside of the case, drive out the bearing.
12. Remove the three nuts and washers retaining the clutch coil assembly to the rear case. Pull the assembly, along with the O-ring and wire, from the case.

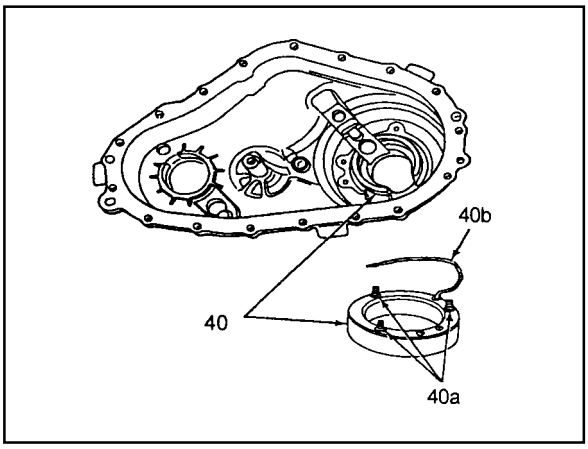

40 Clutch Coil
40a Clutch Coil Retaining Bolts
40b Wire

13. Remove bearing assembly from output shaft.

    Remove the clutch housing from the output shaft.

    Remove the balls and apply cam and wave washer from the output shaft.

    Remove snap ring from output shaft. Remove clutch pack assembly from output shaft.

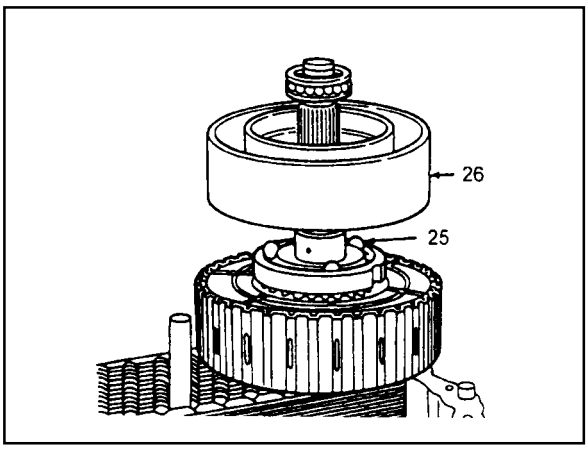

25 Ball
26 Cam and Coil Assembly

Downloaded from www.Manualslib.com manuals search engine

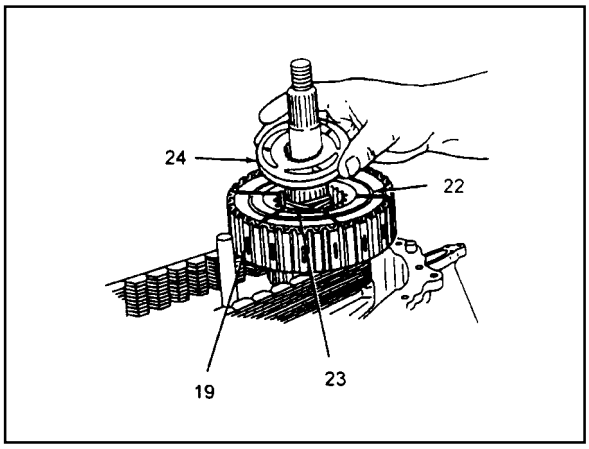

19 Clutch Pack Assembly
22 Snap Ring
23 Wave Washer
24 Apply Cam

14. Remove the chain, driven sprocket and drive sprocket as an assembly.
15. Remove thrust washer from output shaft.
16. Remove the magnet from the slot in the front of the case bottom. Remove the output shaft and oil pump as an assembly.

    Notice

    If there is removal resistance, do not pound or use force to disassemble the pump.
17. If required, to remove the pump from the output shaft, rotate the pump to align.
18. Pull out the shift rail.

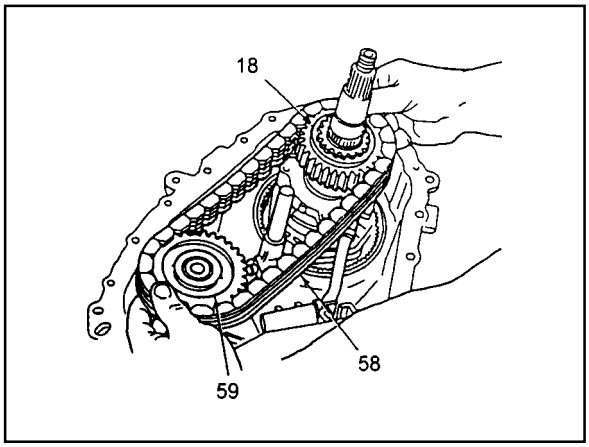

18 Drive Sprocket
58 Drive Chain
59 Driven Sprocket

19. Remove the helical cam from the front case. If required, remove the helical cam, torsion spring and sleeve from the shaft.
20. Remove the high-low range shift fork and collar as an assembly.
21. Expand the tangs of the large snap ring in the case. With the input shaft against a bench, push the case down and slide the main drive gear bearing retainer off the bearing. Lift the input shaft and front planet from the case.
22. If required, remove the oil seal from the case by prying and pulling on the curved-up lip of the oil seal. Do not damage the bearing, bearing cage or case.

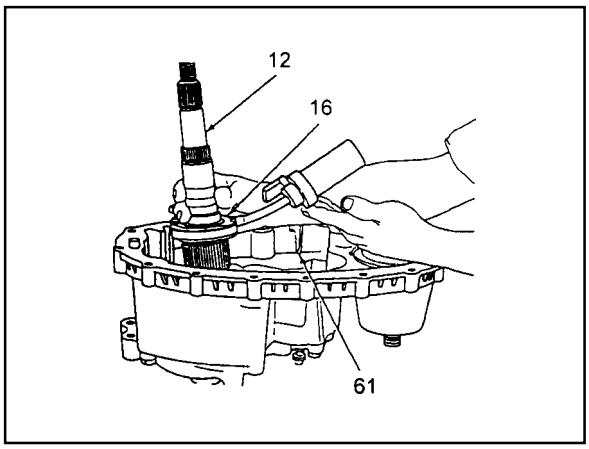

12 Rear Output Shaft
16 Oil Pump
61 Magnet

Downloaded from www.Manualslib.com manuals search engine

23. Remove the internal snap ring from the planetary carrier and separate the front planet from the input shaft.

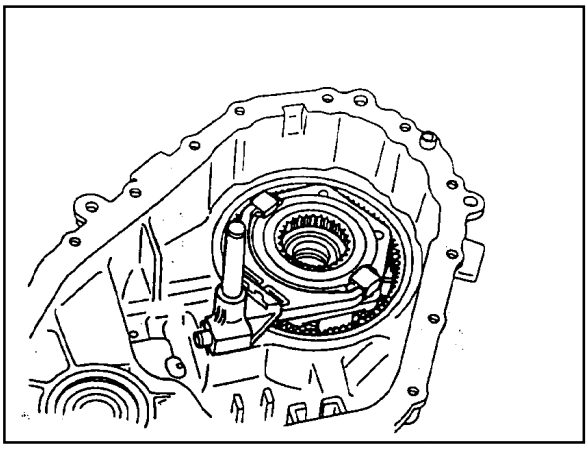

24. Remove the external snap ring from the input shaft. Place the input shaft in a vise and remove the bearing. Remove the thrust washer, thrust plate and the sun gear off the input shaft.
25. Inspect the bushing and needle bearing in the end of the input shaft for wear or damage.

    Notice

    Under normal use, the needle bearing and bushing should not require replacement. If replacement is required, the bushing and needle bearing must be replaced as a set.

26. If replacement of the needle bearing and bushing is required, press the bearing and bushing is required, press the bearing and bushing out as follows:
    a. Position the input shaft on Axle Bearing/Seal plate,and using Pinion Bearing Cone Replacer as a spacer.
    b. Insert Input Shaft Bearing Remover into the input shaft so it is resting on top of the bearing cage.
    c. Tighten the actuator pin until it stops, then press the bearing and bushing out together.

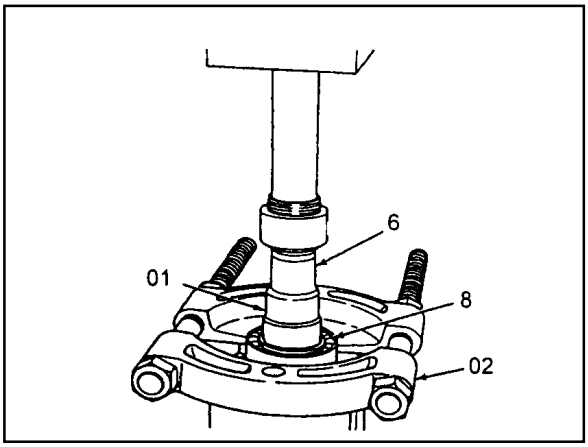

6 Input Shaft
8 Bearig
01 Pinion Bearing Cone Remover
02 Compress the Dowel

27. If required, remove the front yoke to flange seal by prying and pulling on the curved-up lip of the yoke to flange seal. Do not damage the bearing, bearing cage or case.
28. If required, remove the internal snap ring retaining the front output shaft ball bearing and remove the bearing.

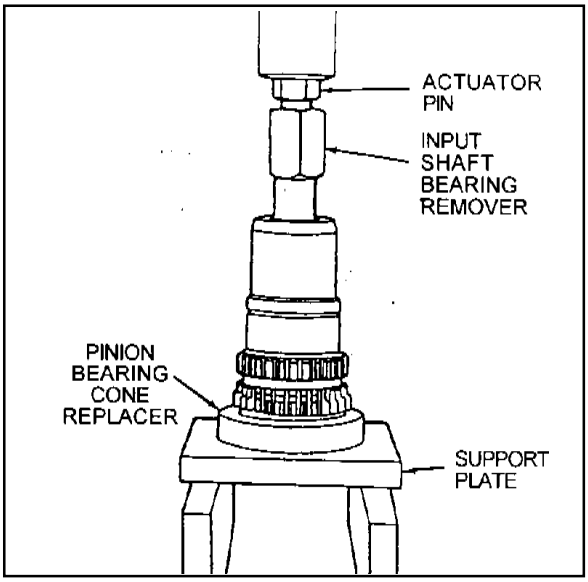

Downloaded from www.Manualslib.com manuals search engine

Assembly Procedure

Assembly

Before assembly, lubricate all parts with Automatic Transmission Fluid or equivalent.

1. If removed, drive the bearing into the front output case bore. Drive the bearing in staight, making sure it is not cocked in the bore. Install the internal snap ring that retains the bearing to the front case.
2. If removed, install the front yoke to flange seal in the front case bore.
3. If removed, install the yoke to flange seal into the mounting adapter bore.

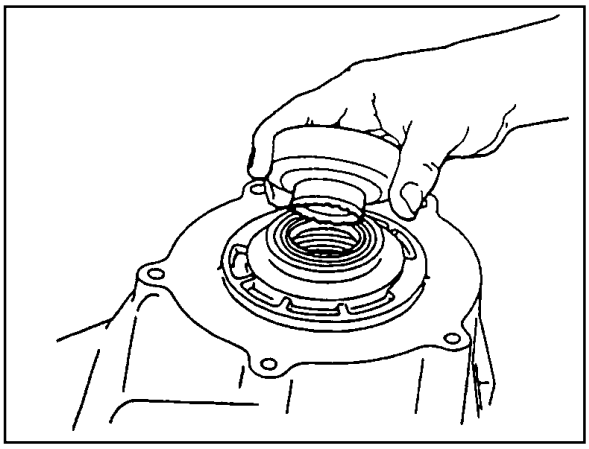

4. If the input shaft needle bearing and bushing were removed, install a new bearing and bushing as detailed in the following steps:

   Press a new needle bearing, then a new bushing in the input shaft as follows:

   a. Position the input shaft on Axle Bearing/Seal Plate or equivalent, and Pinion Bearing Cone Replacer as a spacer.
   b. Press a new needle bearing into the end of the input shaft until it seats in the input shaft.
   c. Press in a new bushing.

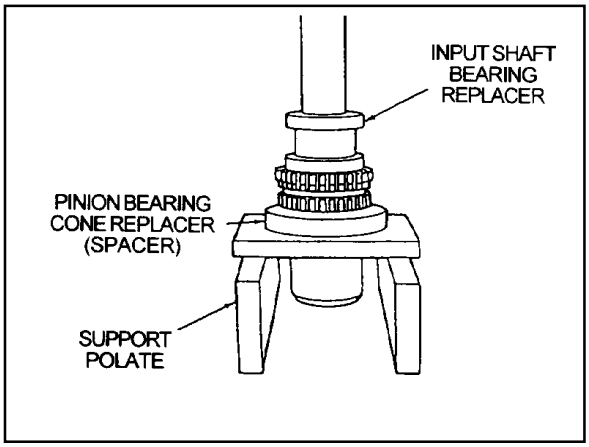

5. The recessed face of the sun gear and the snap ring groove on the bearing outer race should be toward the rear of the transfer case. The stepped face of the thrust washer should face toward the bearing.

   Slide the sun gear, thrust plate and thrust washer into position on the input shaft. Press the bearing over the input shaft. Install the external snap ring to the input shaft.

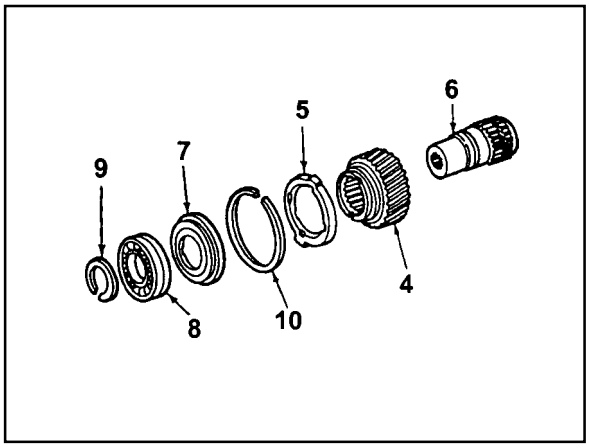

4 Sun Gear
5 Thrust Plate
6 Input Shaft
7 Thrust Washer
8 Bearing
9 External Snap Ring
10 Internal Snap Ring

Downloaded from www.Manualslib.com manuals search engine

6. Install the front planet to the sun gear and input shaft. Install the internal snap ring to the planetary carrier.
7. Place the tanged snap ring in the case. Expand snap ring with snap ring pliers and install planetary carrier assembly. Check installation by holding the case and carefully tapping the face of the input shaft against a wooden block to make sure the snap ring is installed.
8. Remove all traces of gasket sealant from the front case and mounting adapter mating surfaces. Install a bead of gasket sealant on the surface of the front case.
9. Install the high-low shift fork and high-low collar as an assembly into the front planet.

   Notice

   Make sure that the nylon wear pads are installed on the shift fork and snapped securely into place.

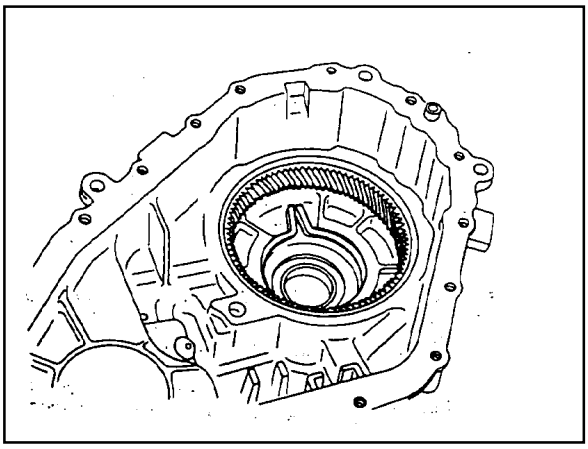

10. If new pump is used, align the flat of the output shaft and the flat of the pump. Slide the pump onto the output shaft.

    Notice

    Do not disassemble oil pump. It is serviced only as an assembly. Check the pump to make sure the pump rotates freely.

    Notice

    Do not remove the plastic insert from the bore of the new pump. Discard it after it slides out during pump installation to the rear output shaft.

    Notice

    While turning the output shaft, prime the pump through the oil filter pickup tube or housing inlet hole with clean Automatic Transmission Fluid or equivalent.

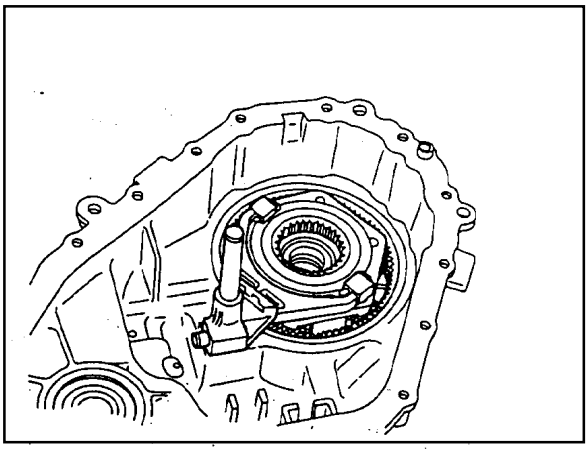

11. Inspect the outside surfaces and bore of the oil pump. If there is no discoloration in the pump housing, gear or cover, and the pump bore and the lube holes of the output shaft show evidence of oil, the pump is working.

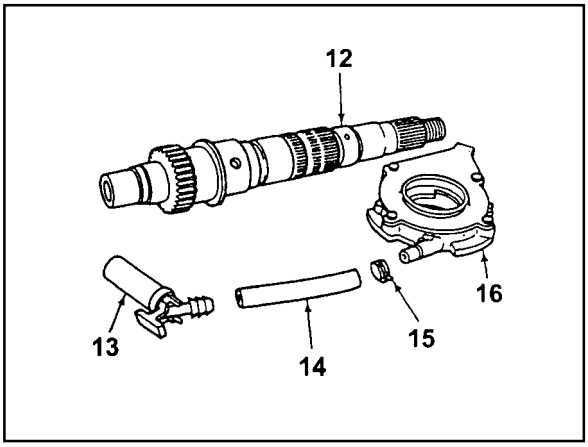

12 Rear Output Shaft
13 Oil Strainer
14 Coupling Hose
15 Hose Clamp
16 Pump Body

Downloaded from www.Manualslib.com manuals search engine

12. Install the output shaft and oil pump in the input shaft. Make sure that the internal splines of the ouput shaft engage the internal splines of the high-low shift collar. Make sure that the oil pump retainer arm and oil filter leg are in the groove and slot of the front case.

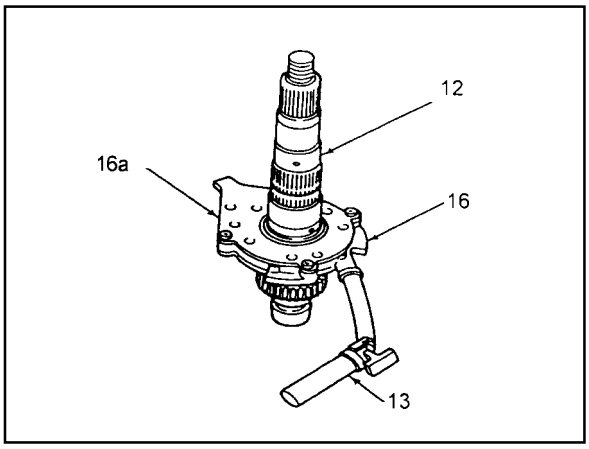

12 Rear Output Shaft
13 Oil Strainer
16 Oil Pump
16a Pump Retainer

13. Install the magnet in the slot in the front case just above the oil filter leg.
14. Install the front output shaft in the front case.
15. Install the thrust washer on the rear output shaft. Install the chain, drive sprocket and driven sprocket as an assembly over the output shaft.

Notice

The driven sprocket (on the front output shaft) must be installed with the marking REAR facing toward the rear case, if so marked.

Notice

Drive sprocket has a bushing pressed into it.

16. Install tone wheel onto the front output shaft. Make sure the spline on the tone wheel engages the spline on the front output shaft.
17. Install clutch pack assembly onto the rear output shaft. Make sure the spline of the clutch pack engages to the spline of the sprocket.

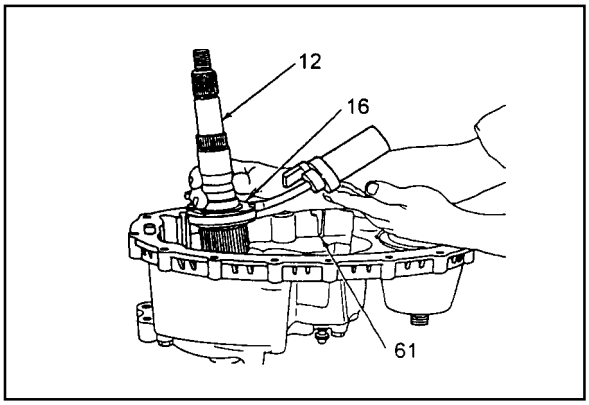

12 Rear Output Shaft
16 Oil Pump
61 Magnet

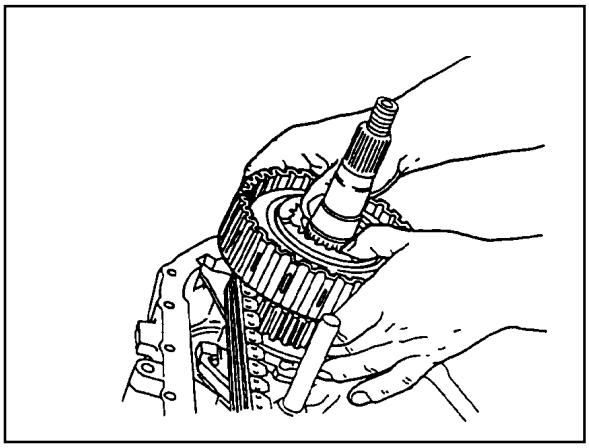

18. Install snap ring onto the rear output shaft. Start the snap ring over the spline and use the wave spring to seat the snap ring in the snap ring groove. If the snap ring will not install, the thrust washer inside the clutch pack may not be seated properly.

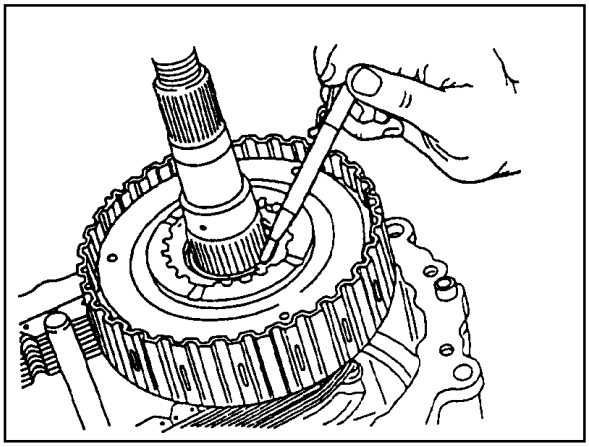

Downloaded from www.Manualslib.com manuals search engine

19. Install wave spring, insulator washer and armature. (Three offset slots must align with housing to be installed)

    Notice

    Three slots on the thrust washer must be aligned with the three tabs on the clutch pack housing.

20. Install apply cam onto the rear output shaft, install three balls into the apply cam, install cam and coil housing assembly onto rear output shaft. Install thrust bearing assembly onto output shaft.

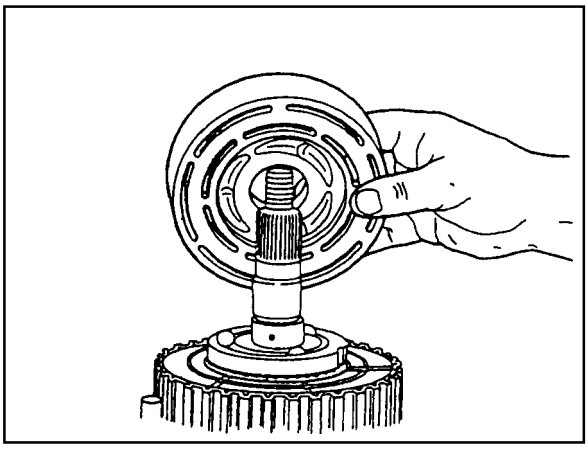

21. If removed, drive the front output shaft ball bearing into the rear cover bore with Front Shaft Needle Bearing Replacer and Driver Handle.
22. If removed, install the rear output bearing in the rear case bore. Drive the bearing into the rear case bore with Output Shaft Bearing Replacer and Driver Handle. Make sure that the bearing is not cocked in the bore. Install the internal snap ring that retains the bearing to the rear case.

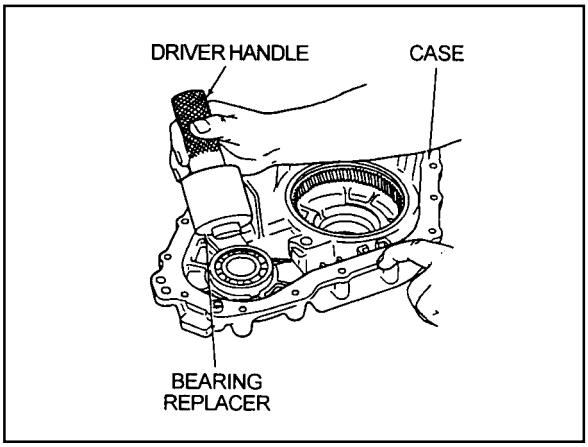

23. Install the clutch coil from inside the rear case until the wire and studs extend through the cover. Install the washers and nuts and tighten.

    CAUTION

    Do not kink or trap the wire while seating the clutch coil to the case.

24. Slide the spring spacer on the camshaft and position it beneath the drive tang. Place the torsion spring on the camshaft. Position the first spring tang to the left of the camshaft drive tang(View A). Wind the second spring tang clockwise past the drive tang(View B). Push the torsion spring and sleeve in as far as it will go (View C). This will seat the second spring tang on the right side of the drive tang. Install the helical cam and slide the drive tang between the torsion spring tangs as far as it will go.

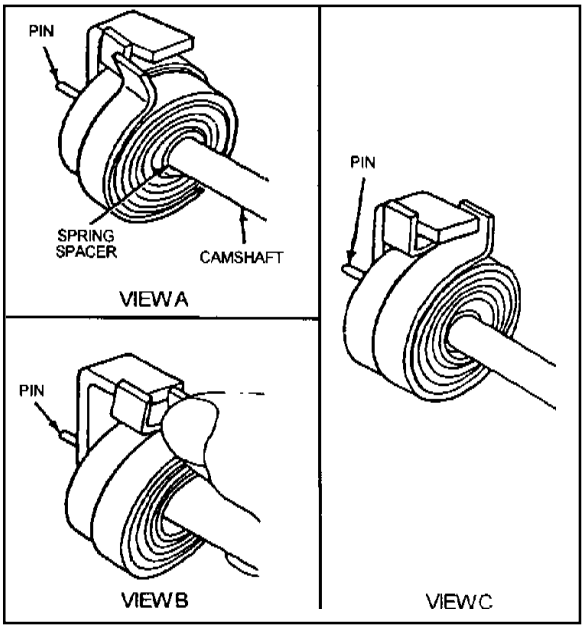

Downloaded from www.Manualslib.com manuals search engine

25. Install the pin on the tang end of the helical cam into the hole in the front case. Position the torsion spring tangs so that they are pointing toward the top side of the transfer case and just touching the high-low shift fork.

    CAUTION

    Do not bend the helical cam during installation to the front case because of possible damage to the pin at the tang end of the motor shaft.
26. Install the shift rail through the high-low shift fork and make sure that the reverse gear shift rail is seated in the front case bore.
27. Install upper and lower speed sensors into the cover. Feed the coil wire through the upper speed sensor wire shield.

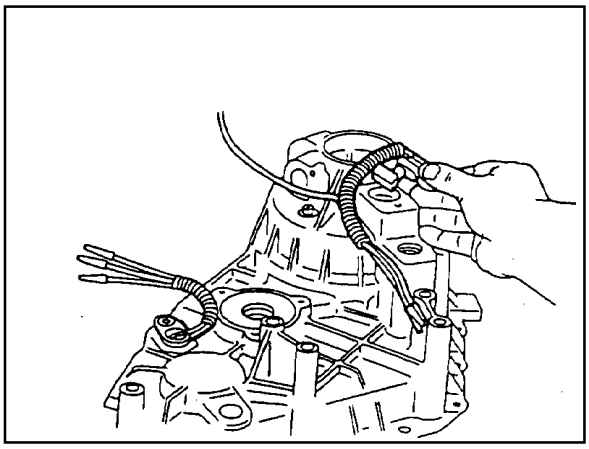

28. Install upper tone wheel, speedometer gear and rear output seal. Use Output Shaft Seal Replacer and Driver or equivalent to install seal.
29. Coat the mating surface of the front case with a bead of Black Non-Acid Cure Silicone Rubber or equivalent.
30. The following procedure must be followed prior to installing the rear case onto the front case half:
    a. Align the output shaft with the rear case output shaft bore.
    b. Align the helical cam with the rear case motor bore.

    If difficulty is encountered with seating the rear case, tap the rear output shaft with a sharp blow using a rubber mallet in a direction away from the triangular shaft while pushing down on the rear case.

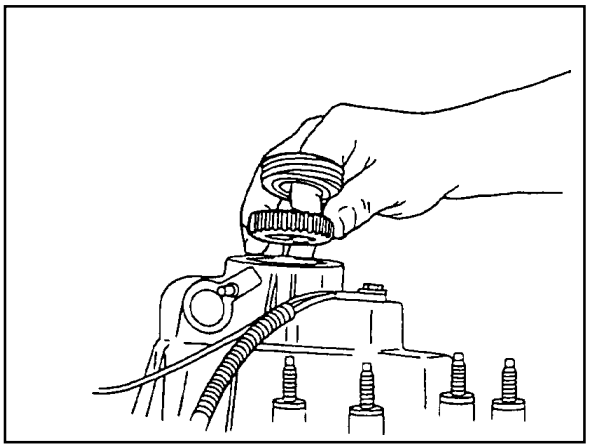

31. Install the bolts retaining the case halves and tighten.

Tightening Torque	25 - 37 Nm

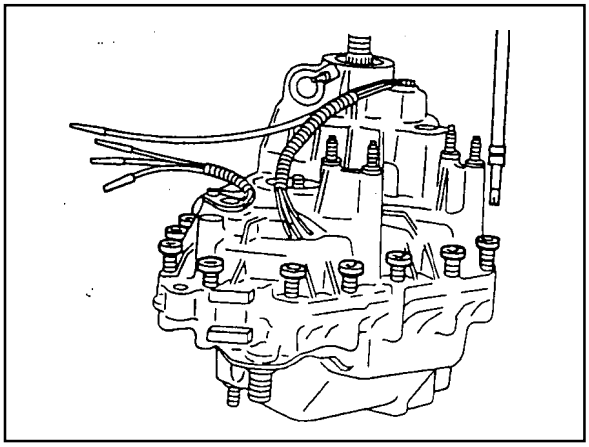

Downloaded from www.Manualslib.com manuals search engine

32. Install shift shaft oil seal if it is not installed.
33. Using pliers equipped with soft jaws, rotate the triangular shaft so it is aligned with the triangular slot in the transfer case shift motor. If triangular shaft will not rotate, rotate the rear output shaft.

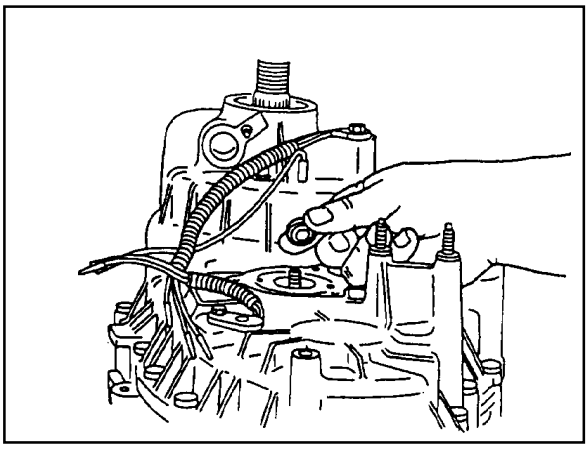

34. Slightly loosen the two nuts that attach the slotted support bracket to the end of the motor house.
35. Apply Black Non-Acid Cure Silicone Rubber or equivalent to motor housing base and install on transfer case.
36. Install the transfer case shift motor and three bolts along with speed sensor wire harness bracket and tighten.

    Notice

    The wire harness must be routed as shown to provide clearance and to prevent the wire harness from grounding the damper.
37. Holding the slotted support bracket tight against the motor housing end, secure the bracket to the transfer case, tightening the bolt with lockwasher to 8-11 Nm (72-96 lb-in).
38. Retighten the two nuts that attach the slotted support bracket to the end of the motor.
39. Install the clutch coil wire terminal and sensor wires.

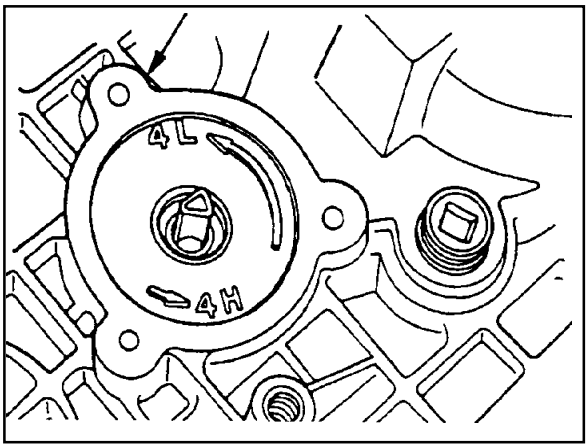

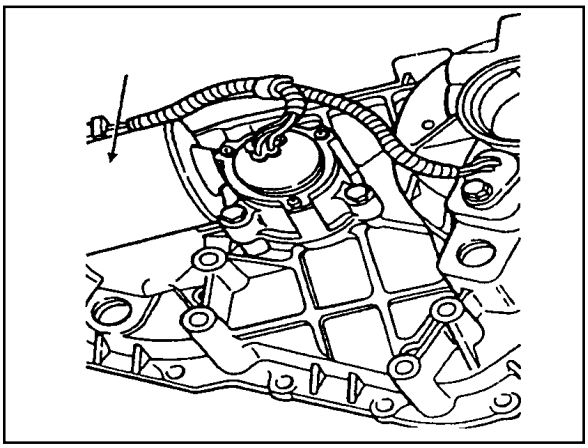

Downloaded from www.Manualslib.com manuals search engine

40. Install the rear case flange on the output shaft. Install the rubber seal, output shaft yoke washer and nut. Tighten the nut.

Tightening Torque	137 - 196 Nm

41. Install the drainplug and tighten.

Tightening Torque	19 - 30 Nm

42. Fill the transfer case with 1.4 liters of Automatic Transmission Fluid or equivalent.

    Notice

    Fluid level should be just below the filler plug hole.

43. Install the fill pulg and tighten.

Tightening Torque	19 - 30 Nm

44. Install the transfer case as outlined in removal and Installation, transfer case in the section.

    Notice

    Make sure proper drain and fill plugs are installed if case is replaced.

Downloaded from www.Manualslib.com manuals search engine

SECTION 6A

POWER STEERING SYSTEM

TABLE OF CONTENTS

Specifications 6A-1
General Specifications 6A-1
Fastener Tightening Specifications 6A-1
Diagnosis 6A-2
Hard Steering 6A-2
Steering Pulls to One Side 6A-2
Excessive Wheel Play 6A-2
Poor Return of Steering Wheel 6A-2
Steering Wheel Shimmy 6A-3
Abnormal Noise From Steering System 6A-3
Component Locator 6A-4
Steering System 6A-4
Maintenance and Repair 6A-5
On-Vehicle Service 6A-5
Inspection 6A-5
Oil Pump Pressure Check 6A-6
Bleeding of Power Steering System 6A-6
Steering Gear Box 6A-7

SPECIFICATIONS

GENERAL SPECIFICATIONS

Application		Description
Steering Wheel	Number of Spoke	4
	Outer Diameter	396 mm
Steering Gear Box	Type	Rack and Pinion
	Gear Ratio	¥
	Inner Steering Angle	33°37'
	Outer Steering Angle	31°50'
Oil Pump	Type	Vane
	Maximum Pressure	75-82 kg/cm^2
Steering Column	Upper Tilting Angle	4.646°
	Lower Tilting Angle	6.969°
Minmum Turning Radius		5.7m
Oil	Type	ATF DEXRON II
	Capacity	1 L
	Change Interval	Every 24,000 km

FASTENER TIGHTENING SPECIFICATIONS

Application	N•m
Steering Shaft Bolt	30-40
Pressure Hose Bolt	12-18
Return Pipe Nut	12-18
Slotted Nut	35-45
Steering Gearbox Bolt	35-45

Downloaded from www.Manualslib.com manuals search engine

DIAGNOSIS

HARD STEERING

Checks	Action
Lack of Lubrication	Lubricate
Abnormal Wear or Binding of Steering Ball Joint	Replace
Damaged or Faulty Steering Gear	Replace gear assembly
Improper Preload of Steering Pinion	Adjust
Faulty Steering Shaft Joint	Replace
Steering Fluid Leaks	Repair or replace
Lack of Fluid or Air-in System	Replenish or bleed
Faulty Steering Oil Pump	Replace
Damaged or Loosened Pump Drive Belt	Adjust or replace
Clogging Oil Line	Repair or replace
Damaged Wheel or Tire	Repair or replace
Faulty Suspension System	Repair or replace

STEERING PULLS TO ONE SIDE

Checks	Action
Damaged Steering Linkage	Repair
Damaged Wheel and Tire	Repair or replace
Faulty Brake System	Repair or replace
Faulty Suspension System	Repair or replace

EXCESSIVE WHEEL PLAY

Checks	Action
Worn Steering Gear	Replace gear assembly
Worn or Damaged Steering Ball Joint	Replace
Loosened Steering Gearbox Bolts	Retighten

POOR RETURN OF STEERING WHEEL

Checks	Action
Damaged or Binding Steering Ball Joint	Replace
Improper Preload of Steering Pinion	Replace gear assembly
Damaged Wheel or Tire	Repair or replace
Faulty Suspension System	Repair or replace

Downloaded from www.Manualslib.com manuals search engine

STEERING WHEEL SHIMMY

Checks	Action
Damaged Steering Linkage	Replace
Loosened Steering Gearbox Mounting Bolt	Retighten
Damaged or Binding Steering Ball Joint	Replace
Worn or Damaged Front Wheel Bearing	Replace
Damaged Wheel or Tire	Repair or replace
Faulty Suspension System	Repair or replace

ABNORMAL NOISE FROM STEERING SYSTEM

Checks	Action
Loosened Steering Gearbox Mounting Bolt	Retighten
Faulty Steering Gear	Replace gear assembly
Steering Column Linterference	Replace
Loosened Steering Linkage	Retighten
Damaged or Loosened Oil Pump Drive Belt	Adjust or replace
Loosened Oil Pump Bracket	Retighten
Loosened Oil Pump Mounting Bolt	Retighten
Air-in System	Bleed
Faulty Oil Pump	Replace

Downloaded from www.Manualslib.com manuals search engine

COMPONENT LOCATOR

STEERING SYSTEM

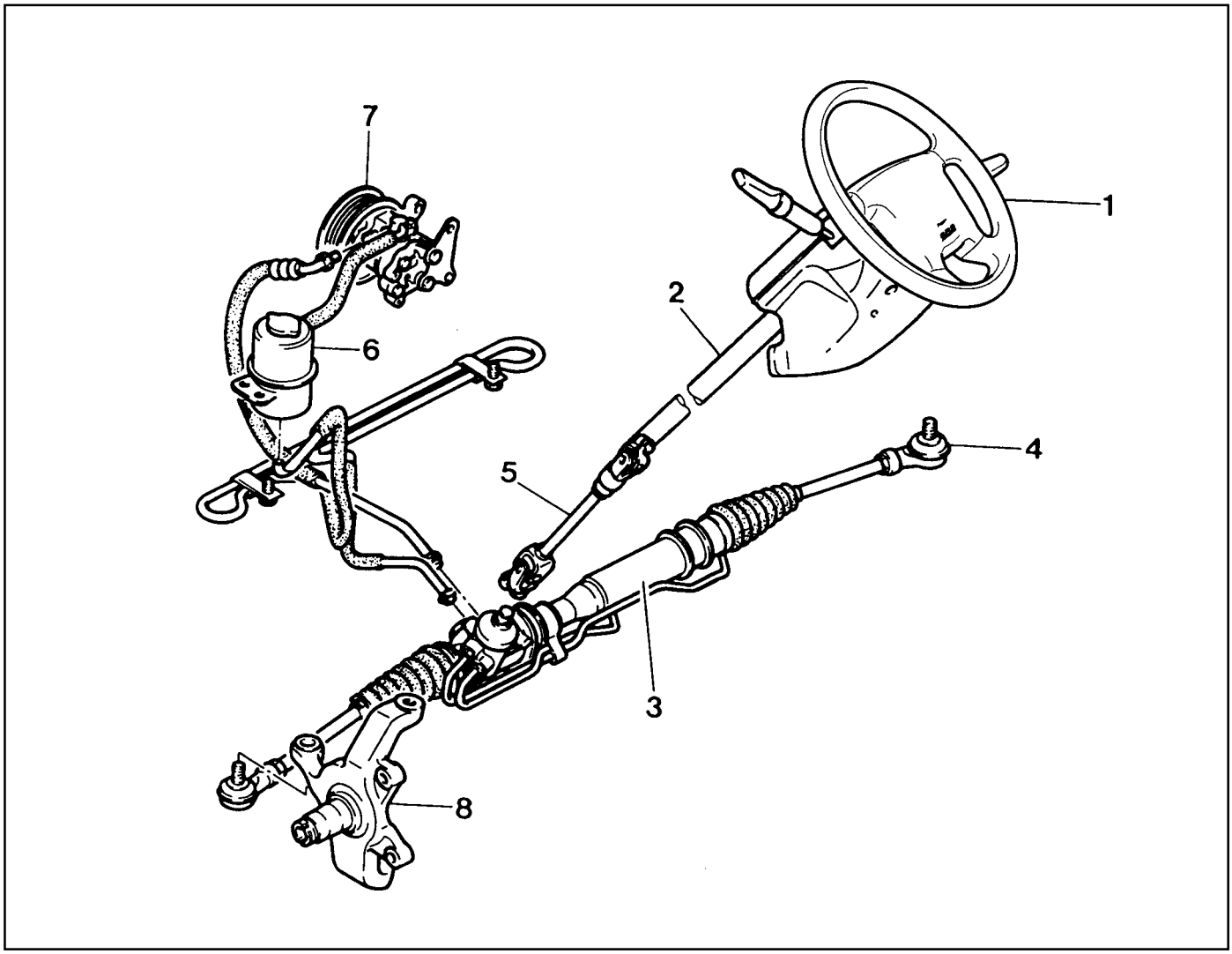

1 Steering Wheel
2 Steering Column Shaft
3 Steering Gear Box
4 End Ass'y - Tie Rod
5 Lower Shaft
6 Oil Reservoir
7 Oil Pump
8 Steering Knuckle

Downloaded from www.Manualslib.com manuals search engine

MAINTENANCE AND REPAIR ON-VEHICLE SERVICE

INSPECTION

Steering Wheel Freeplay Inspection Procedure

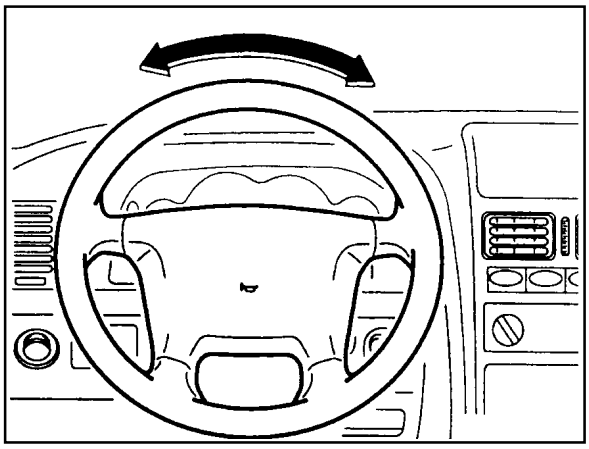

1. Start the engine and set the wheels in straight ahead position.
2. Slightly move the steering wheel to the left and right and measure steering wheel free play when the front wheel is start to move.

Standard	Max. 30mm

Notice

If exceeds specification, the steering column shaft connections and steering linkage .clearance. Replace or repair if necessary.

Steering Angle Inspection Procedure

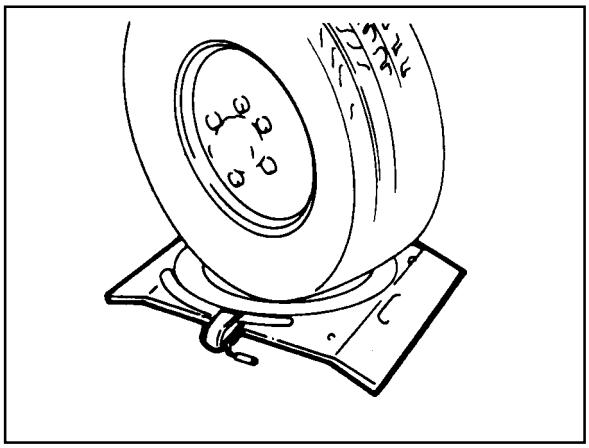

1. Place the front wheel on a measuring tool.
2. Rotate steering wheel all the way right and left and measure steering angle

Standard	Inner	33°37'
	Outer	31°50'

Notice

If out of standard, check or adjust toe-in.

Steering Effort Inspection Procedure

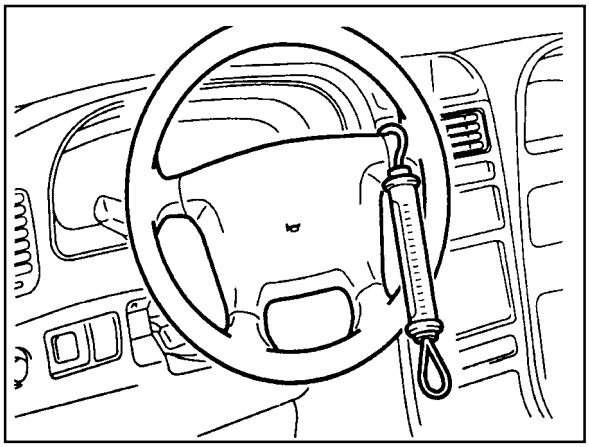

1 Place a vehicle on the paved flat ground with front wheels in a straight ahead position.

2 Start the engine and run it at 1,000rpm.

3 Using a scale, measure the steering effort in both directions.

Standard	Max. 3.0kg

Notice

The difference in steering effort of left and right should be within 0.6 kg.

Downloaded from www.Manualslib.com manuals search engine

OIL PUMP PRESSURE CHECK

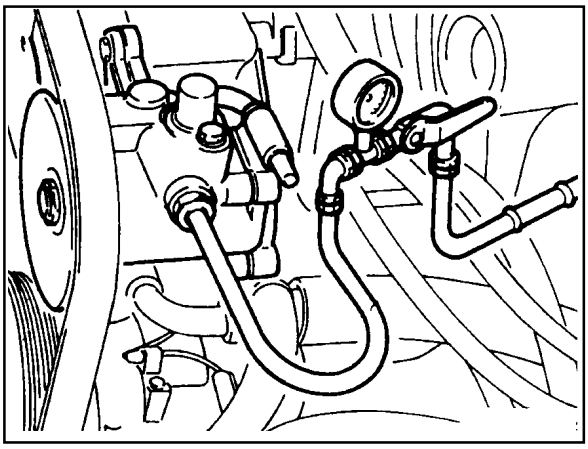

Oil Pump Pressure Check

1. Disconnect the pressure hose from the oil pump connect a pressure gauge between the oil pump and pressure hose
2. Bleed the system . Start the engine and turn the steering wheel form lock several times until oil temperature is up to 50°C
3. Run the engine at 1,000 rpm.
4. Close the pressure gauge valve and check oil pressure.

Relief Pressure	75 -82 kg/cm^2

Notice

Do not keep the valve closed for more than 10 seconds.

5. Remove the pressure gauge and connect the pressure hose.
6. Do bleeding procedure.

BLEEDING OF POWER STEERING SYSTEM

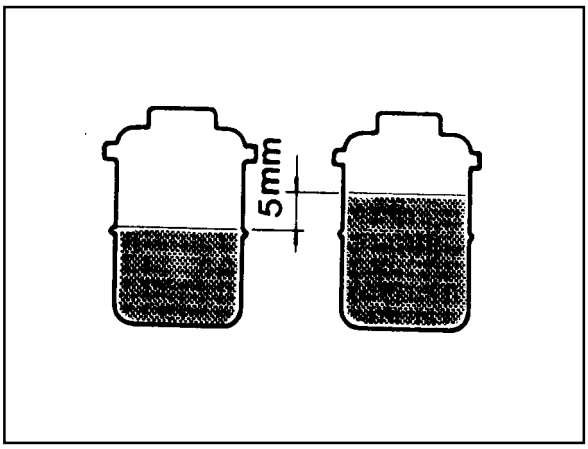

Bleeding of Power Steering System

1. Disconnect the fuel line. Using a starter motor, crank the engine and turn the steering wheel from lock to lock 5 or 6times.

Notice

Do bleeding with engine cranking. If bleed with idling, there can be a air contact with oil.

2. Connect the fuel feed line and start the engine at idle speed.
3. Turn the steering wheel from lock to lock until there is no more air in oil reservoir.
4. Connect the oil level is within specification.
5. By turning the steering wheel left to right, check the oil level change.

Notice

- If oil is not changes more than 5mm, do bleeding again.
- If oil level rises suddenly when stopped engine, again.

Downloaded from www.Manualslib.com manuals search engine

STEERING GEAR BOX

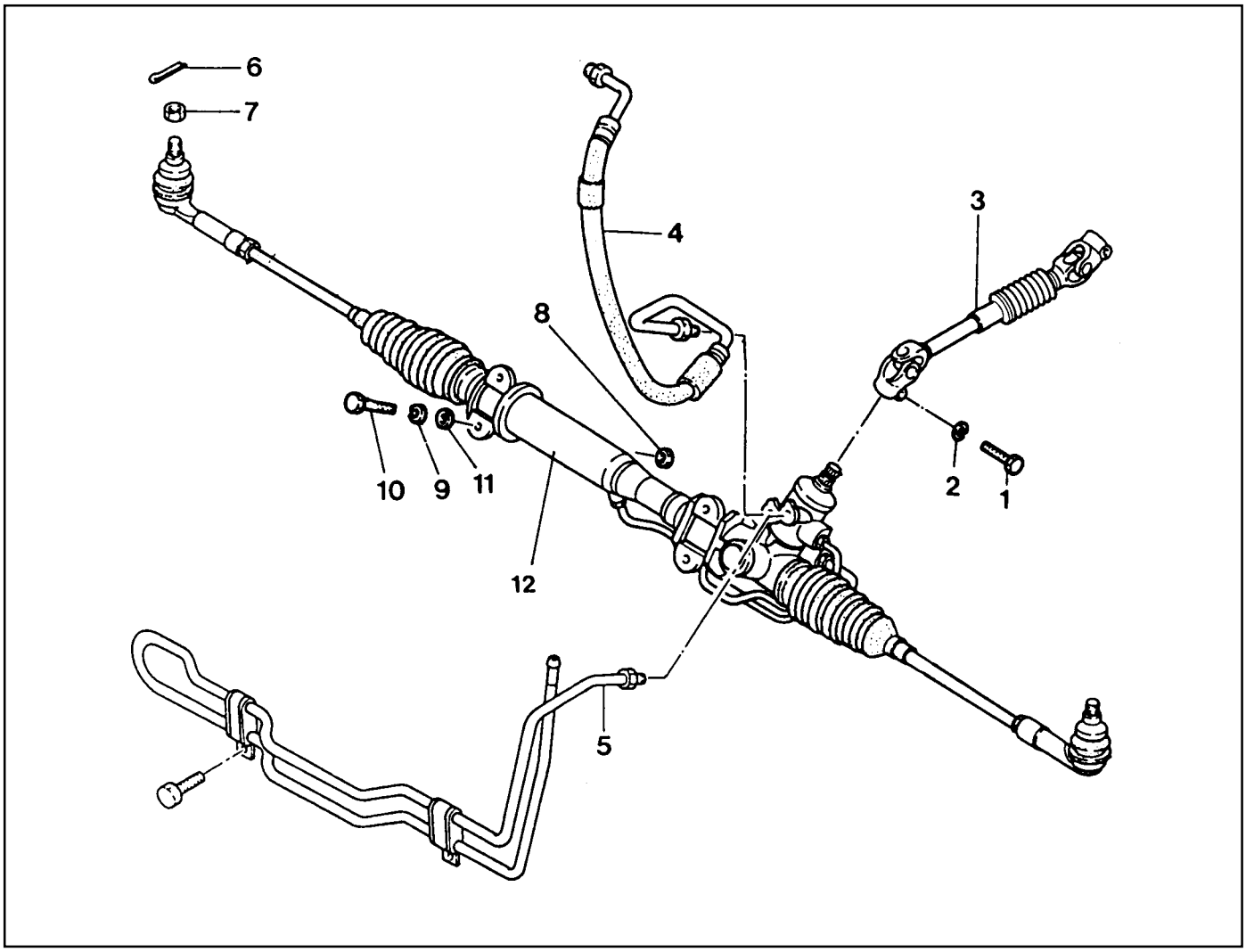

1	Bolt	30-40Nm
2	Spring Washer	
3	Lower Shaft	
4	Pressure Hose	12-18Nm
5	Return Pipe	12-18Nm
6	Cotter Pin	
7	Slotted Nut	35-45Nm
8	Nut	
9	Spring Washer	
10	Bolt	35-45Nm
11	Washer	
12	Steering Gearbox Assembly	

Downloaded from www.Manualslib.com manuals search engine

Removal & Installation Procedure

1. Remove the cotter pin and nut and separate the steering gear box tie rod from the steering knuckle arm.

   Installation Notice

Tightening Torque	35 - 45 Nm

   Bend both ends of the split pin after installation.

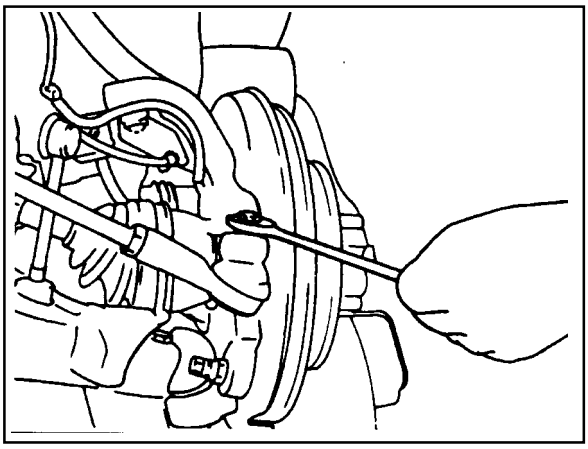

2. Remove the coupling bolt and separate the lower sha from the steering gear box.

   Installation Notice

Tightening Torque	30 - 40 Nm

   Tighten the bolt toward threadless side of lower shaft coupling.

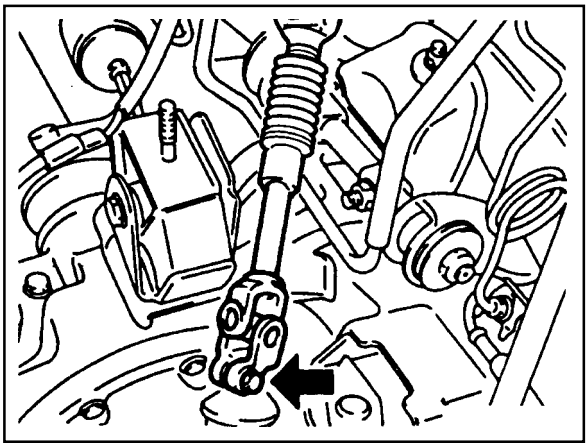

3. Remove the oil pipe from the steering gear box and drain the oil.

   Installation Notice

Tightening Torque	12 - 18 Nm

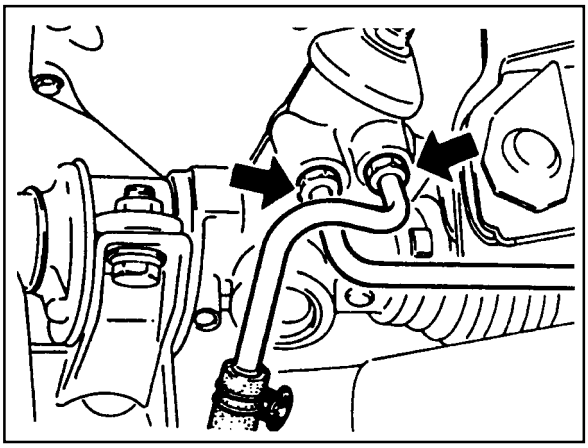

4. Remove the clamp bolts and remove the steering gear box assembly.

   Installation Notice

Tightening Torque	70 - 90 Nm

   Notice

   - Be careful not to damage the rubber(1).
   - When installing tighten the bolt (3) with the rubber (2)being inserted to the hole of clamp.

5. Bleed the air from system.
6. Check the toe-in.

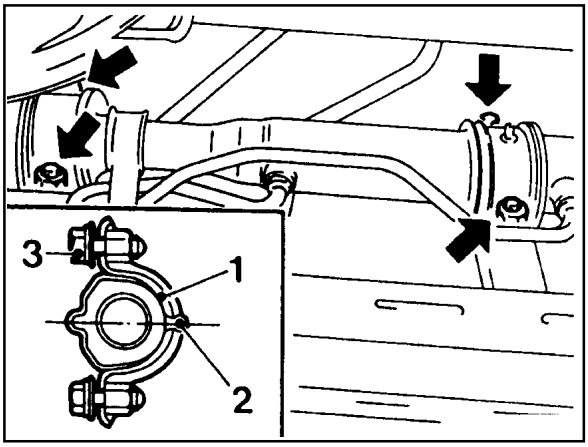

Downloaded from www.Manualslib.com manuals search engine

Inspection Procedure

1. Check the distance of tie rod and toe-in data and, if necessary, adjust as below.
2. Adjustment
   - Unscrew the adjuster nut (1) and adjust the distance by turning the rod (2) counterclockwise.

Distance of Tie Rod	152mm

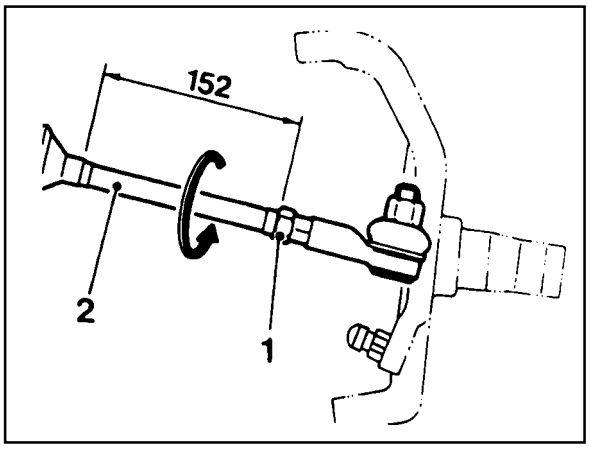

   - Check the toe-in date (A~B)

Toe-in	0 - 4 mm

   - If the ton-in is normal, tighten the adjuster nut (1) to the specified toque with tie rod (2) being fixed.

Tightening

Torque	65 - 80Nm

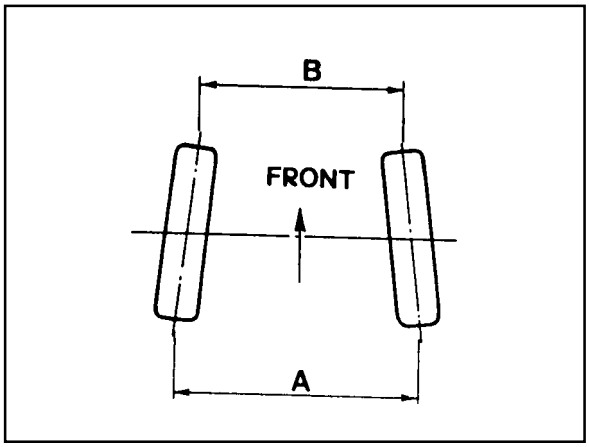

Downloaded from www.Manualslib.com manuals search engine

SECTION 6E

STEERING WHEEL AND COLUMN

TABLE OF CONTENTS

Specifications 6E-1
Fastener Tightening Specifications 6E-1
Maintenance and Repair 6E-2
On-Vehicle Service 6E-2
Steering Column 6E-2

SPECIFICATIONS

FASTENER TIGHTENING SPECIFICATIONS

Application	N•m
Steering Wheel Mounting Nut	50-80
Shaft Bolt	30-40
Steering Column Shaft Bolt	9-14
Steering Column Mounting Bolt	15-20

Downloaded from www.Manualslib.com manuals search engine

MAINTENANCE AND REPAIR

ON-VEHICLE SERVICE

STEERING COLUMN

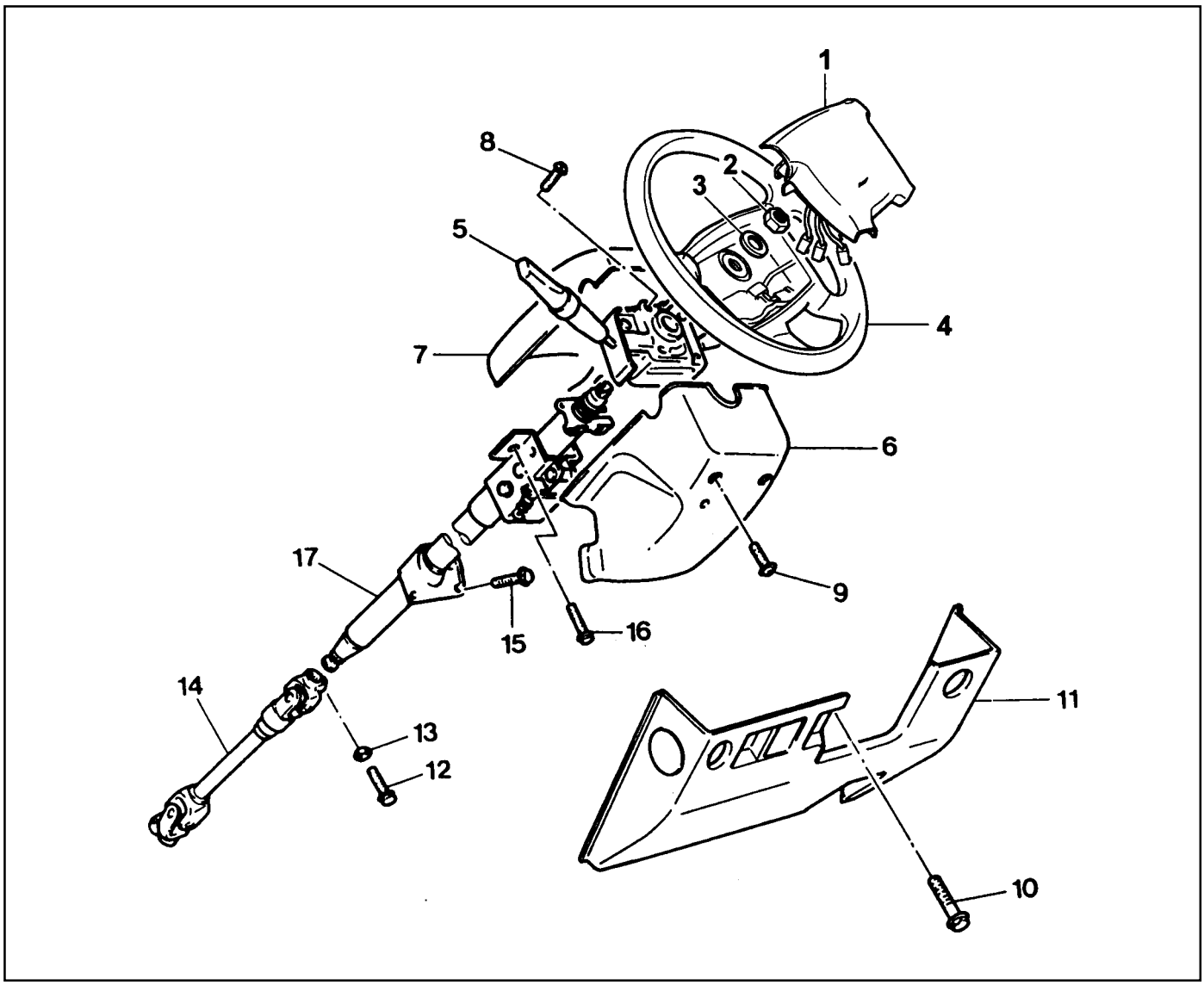

1 Horn Pad
2 Nut ..... 50-80 Nm
3 Washer
4 Steering Wheel
5 Combination Switch Assembly
6 Combination Switch Lower Cover
7 Combination Switch Upper Cover
8 Bolt
9 Bolt
10 Bolt
11 Crash Pad Panel
12 Bolt ..... 30-40 Nm
13 Spring Washer
14 Lower Shaft
15 Bolt ..... 9-14 Nm
16 Bolt ..... 13-40 Nm
17 Steering Column Shaft

Downloaded from www.Manualslib.com manuals search engine

Removal & Installation Procedure

1. Remove the horn pad from the steering wheel and disconnect the connectors .

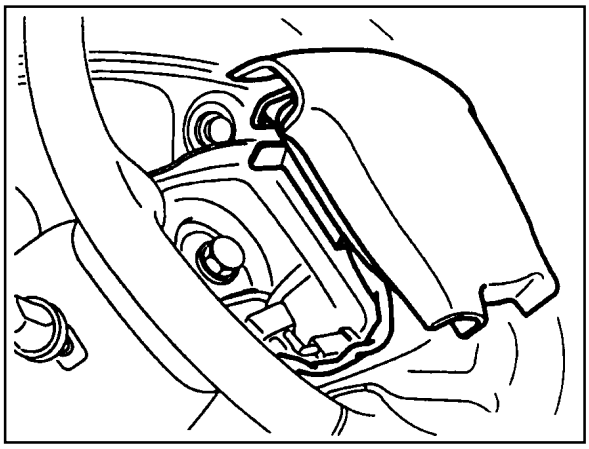

2. Place an alignment marks on the column shaft end and fixing nut and then remove the fixing nut.

   Installation Notice

Tightening Torque	50 - 80 Nm

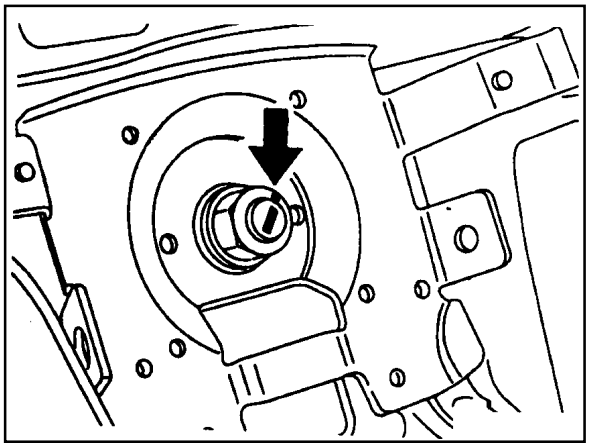

3. Remove the steering wheel and combination switch covers.

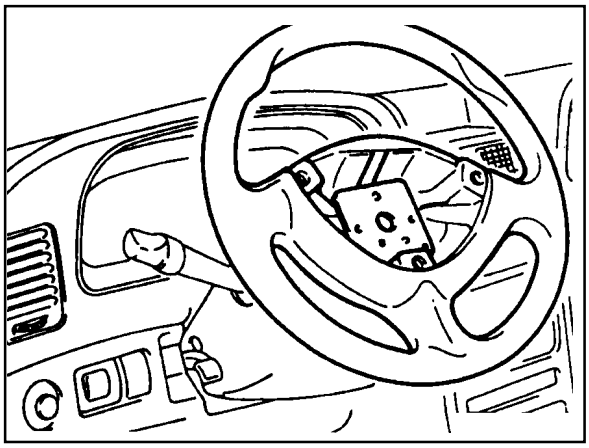

4. Remove the crash pad panel.

   Notice

   Remove the hood release wire and the other switch connectors.

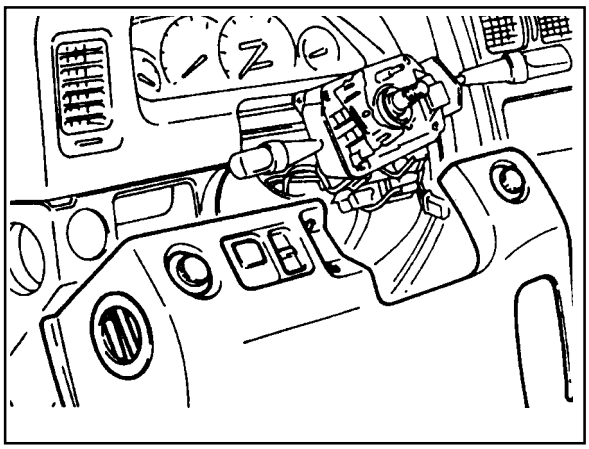

Downloaded from www.Manualslib.com manuals search engine

5. Release the weld clip and disconnect the wire connectors.
6. Disconnect the vacuum hose from ignition switch (Diesel only).

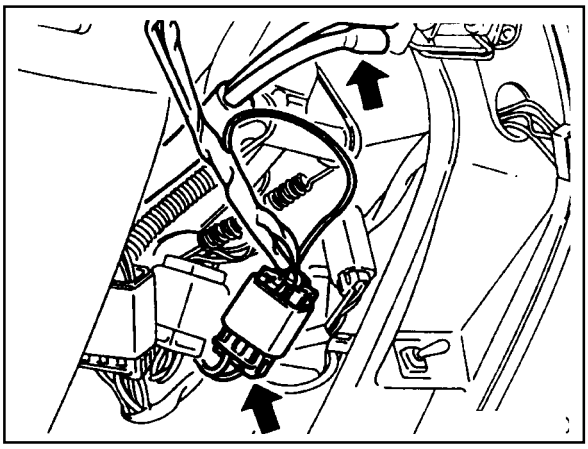

7. Remove the combination switch assembly.

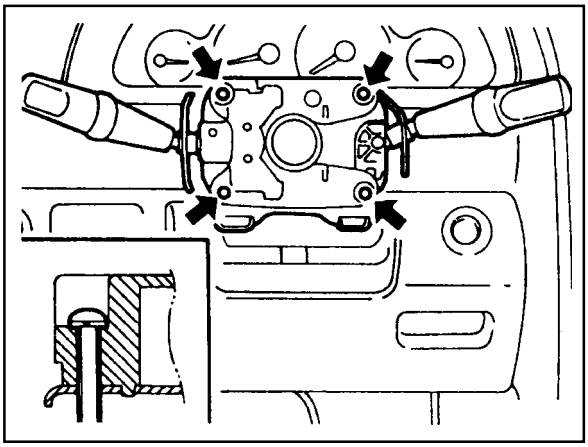

8. Disconnect the steering column shaft from lower shaft by unscrewing the bolt.

Installation Notice

Tightening Torque	30 - 40 Nm

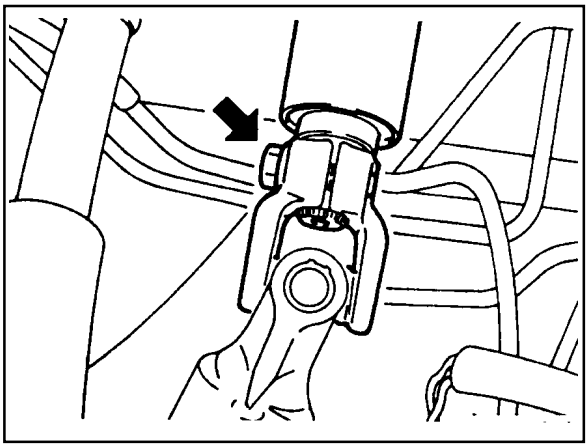

9. Unscrew the steering column housing fixing bolts to fixing bolts to floor.

Installation Notice

Tightening Torque	9 - 14 Nm

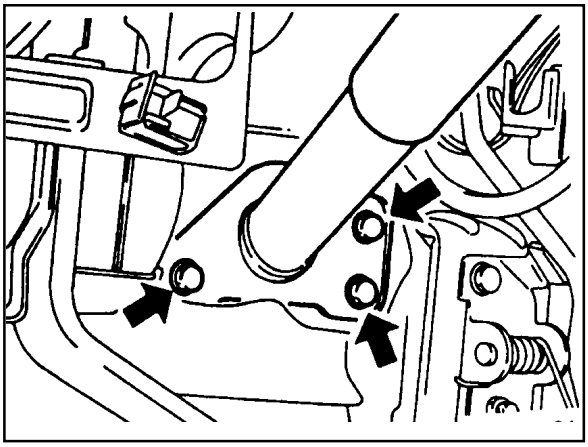

Downloaded from www.Manualslib.com manuals search engine

10. Unscrew the steering column upper bolt and remove the column assembly.

Installation Notice

Tightening Torque	15 - 20 Nm

11. Installation should follow the removal procedure in the reverse order.

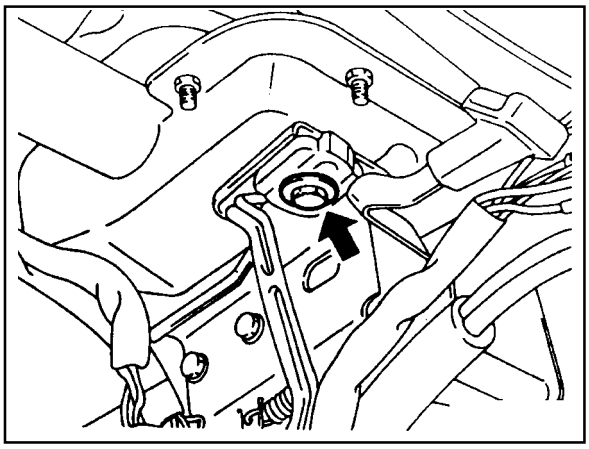

Downloaded from www.Manualslib.com manuals search engine

SECTION 7B/C

MANUAL CONTROL / SEMIAUTO TEMPERATURE CONTROL HEATING, VENTILATION AND AIR CONDITIONING SYSTEM

Caution: Disconnect the negative battery cable before removing or installing any electrical unit or when a tool or equipment could easily come in contact with exposed electrical terminals. Disconnecting this cable will help prevent personal injury and damage to the vehicle. The ignition must also be in LOCK unless otherwise noted.

TABLE OF CONTENTS

Specifications 7B/C-2
- Cooling Capacity 7B/C-2
- Compressor 7B/C-2
- Condenser 7B/C-2
- Receiver Drier 7B/C-2
- Dual Pressure Switch 7B/C-2
- Evaporator 7B/C-3
- Heater Unit 7B/C-3
- Fastener Tightening Specifications 7B/C-3

Diagnosis 7B/C-4
- Defectives in Fan Motor Circuit 7B/C-5
- Defectives in Compressor Circuit 7B/C-5

Component Locator 7B/C-6
- Ventilation 7B/C-6

Air Conditioner System 7B/C-8
- Diesel Engine 7B/C-8
- Gasoline Engine 7B/C-9
- Heater System 7B/C-10

Maintenance and Repair 7B/C-11
- Refrigerant Charging 7B/C-11
- Condenser 7B/C-15
- Receiver Drier 7B/C-17
- Air-Conditioner Compressor 7B/C-19
- Heater and Air Conditioner Control Box . . 7B/C-20

Downloaded from www.Manualslib.com manuals search engine

SPECIFICATIONS

COOLING CAPACITY

Application	Description
Type	Air mix type
Max. Capacity	4,500kcal/h
Max. Blowing Capacity	7.Om^3/mim
Refrigerant	R134a
Refrigerant Amount	650 - 75Og

COMPRESSOR

Application	Description
Model	FK- ll
Type	Vane rotary type
Output	140.5cc/rev
Oil	ZXL 200PG (PAG oil)
Magnetic Clutch Output	45W

CONDENSER

Application	Description
Type	Parallel type (Multi Flow Condenser)
Capacity	11,000 kcal/h
Condenser Fan Motor Output	160W

RECEIVER DRIER

Application	Description
Desiccant	XH - 9 (30g)
Type	Aluminum type
Capacity	240cc

DUAL PRESSURE SWITCH

Application	Description
High	OFF: 27±2kgf / cm^2, DIFF : 6±2kgf / cm^{2}G
Low	OFF : 1.8±0.2kgf / cm^2, ON 1.9±0.3kgf/ cm^{2}G

Downloaded from www.Manualslib.com manuals search engine

EVAPORATOR

Application	Description
Type	Tank laminated
Expansion Valve	Uniform external pressure type (1.5 RT)
Resistance	4 stage (Coil resistance)
Thermo Amp	Sensor type OFF : 2±0.5°C, DIFF : 2±0.5°C

HEATER UNIT

Application	Description
Heater Core Type	2-ROW
Heating Capacity	4,600 kcal/h (AT 300 CMH)
Heater Core Size (LxWxT)	219.5x151.8x52.0

FASTENER TIGHTENING SPECIFICATIONS

Application	N•m
Condenser Bolt	4-6
Condenser Fan Nut	4-6
Condenser Bolt	4-6
Receiver Drier Pipe Bolt	5-8
Receiver Drier Pipe Bolt (Condenser)	4-6
Pressure Pipe Bolt	20-30
Pressure Mounting Bolt	20-26

Downloaded from www.Manualslib.com manuals search engine

DIAGNOSIS

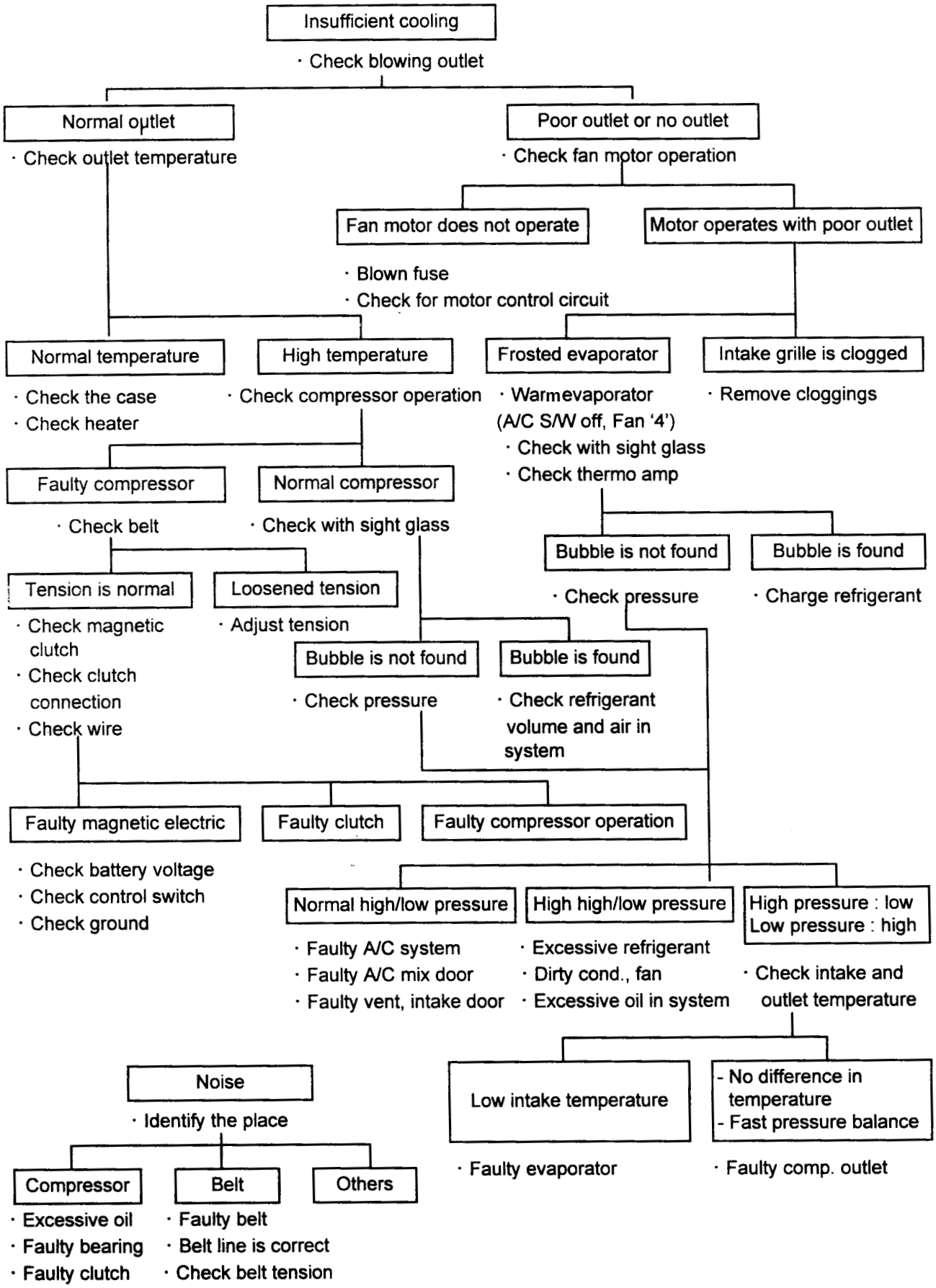

Downloaded from www.Manualslib.com manuals search engine

DEFECTIVES IN FAN MOTOR CIRCUIT

Fan Motor Does Not Run

Checks	Action
Blown fuse	Check for short and replace fuse.
Battery voltage is low	Check battery voltage.
Faulty wiring	Check connectors' connection. Do not apply grease. This can cause voltage down.
Faulty ground	Remove body painting and completely ground, Tighten ground bolts and make sure body ground connection.

Fan Motor Runs in '4'position Only ('3', '2', '1' : Does Not Run)

Checks	Action
Blown resister temperature fuse	Replace resistor.
Air leakage in parts connection	Check heater, cooling unit and blower for proper connection.

Motor Runs With Poor Blowing

Checks	Action
Clogged or blocked intake grille	Clogged or blocked intake grille reduces blowing capacity.

Frosted Evaporator

Checks	Action
Faulty thermo amp	Frosted evaporator reduces cooling capacity.
	Off compressor and maximize blowing capacity

DEFECTIVES IN COMPRESSOR CIRCUIT

Compressor Does Not Run

Checks	Action
Faulty high/low pressure	Check compressor magnet voltage supply.
Faulty A/C relay	A/C relay.

Magnetic Clutch Slips /Idles

Checks	Action
Oily clutch plate	Clean oily plate using cleaning agent.
Low voltage	Charge battery or check for cause.
Faulty electric connection or operation	Check wire continuity Check A/C switch and fan switch for continuity and ground.

Magnetic Clutch Plays By Hand Only

Checks	Action
Excessive clearance between	Adjust clutch clearance (0.2-0.6mm).
Clutch plate and clutch coil	

Downloaded from www.Manualslib.com manuals search engine

COMPONENT LOCATOR

VENTILATION

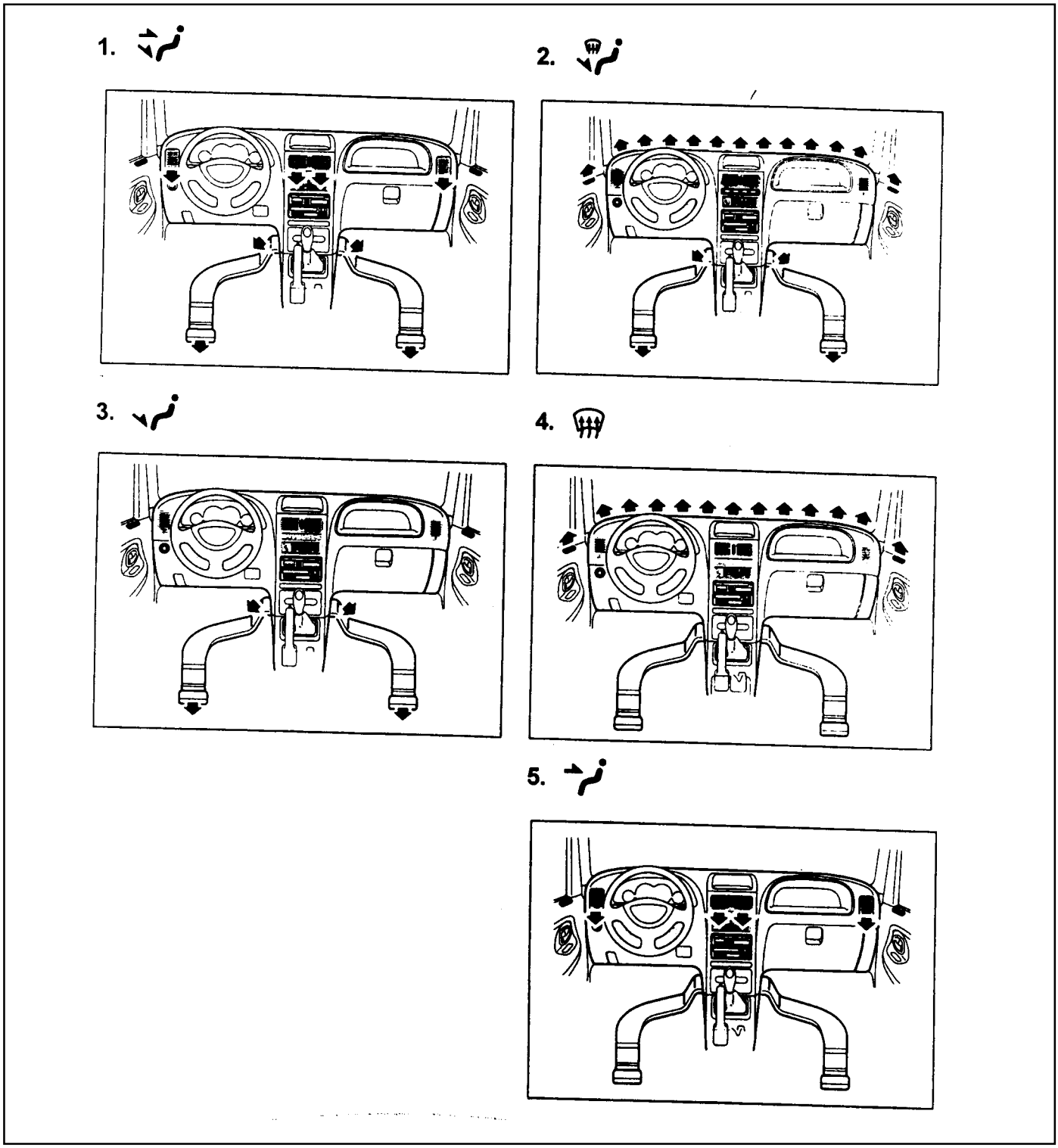

1 Foot / Face
2 Foot / Defroster
3 Foot
4 Defroster
5 Face

Downloaded from www.Manualslib.com manuals search engine

Air Flow

Switch / Door	Mode Switch					Recirculation Switch		Temperature Control Lever		
	VENT	B/L	FOOT	D/F	DEF	REC	FRE			
						INDI. On	INDI. Off	[MANUAL] COLD HOT / [SEMI AUTO]		
VENT Door	A	B	C	C	C	-	-	-		
FOOT Door	C	B	A	B	C	-	-	-		
DEF Door	D	D	D	B	A	-	-	-		
INTAKE Door	-					A	B	-		
AIR MIX Door	-							A	B	C

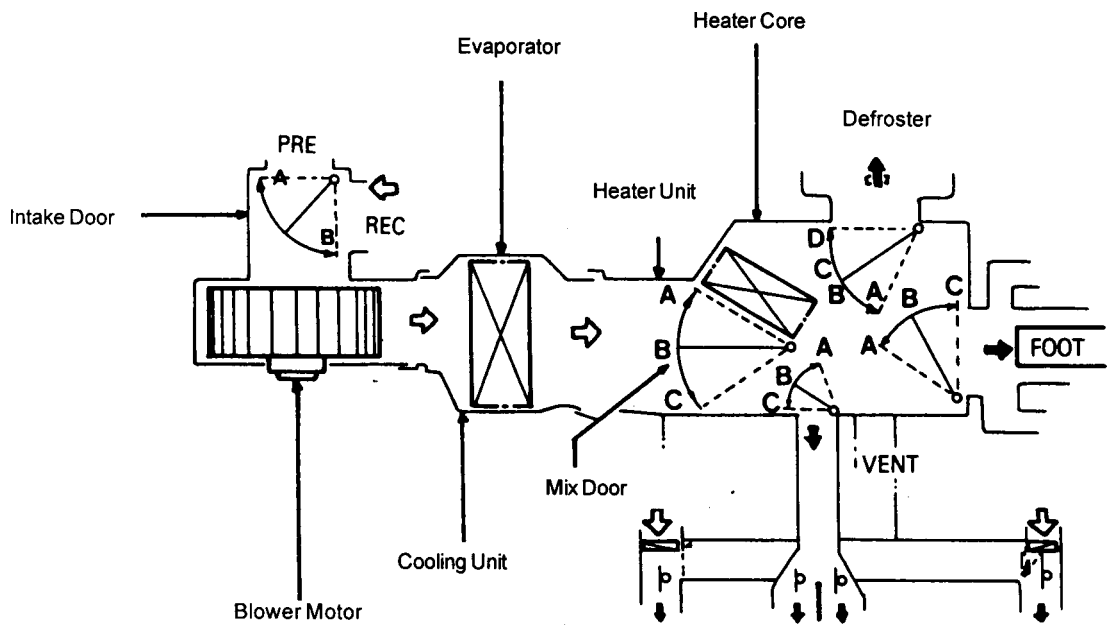

Downloaded from www.Manualslib.com manuals search engine

AIR CONDITIONER SYSTEM

DIESEL ENGINE

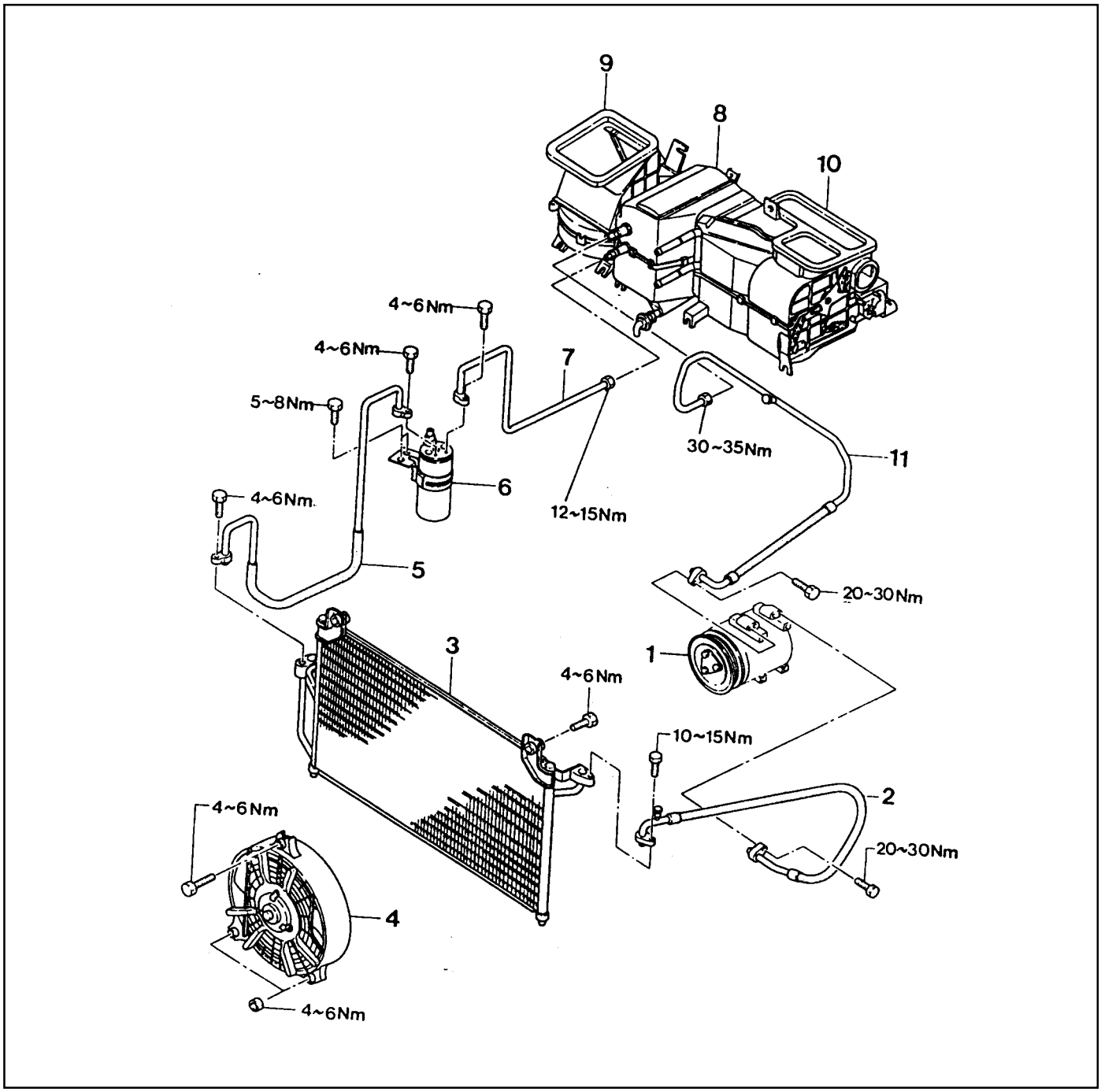

1 Compressor
2 High Pressure Hose
3 Condenser
4 Condenser Fan
5 Liquid Pipe (A)
6 Receiver Drier
7 Liquid (B)
8 Evaporator Assembly
9 Blower Unit
10 Heater Unit
11 Low Pressure Hose

Downloaded from www.Manualslib.com manuals search engine

GASOLINE ENGINE

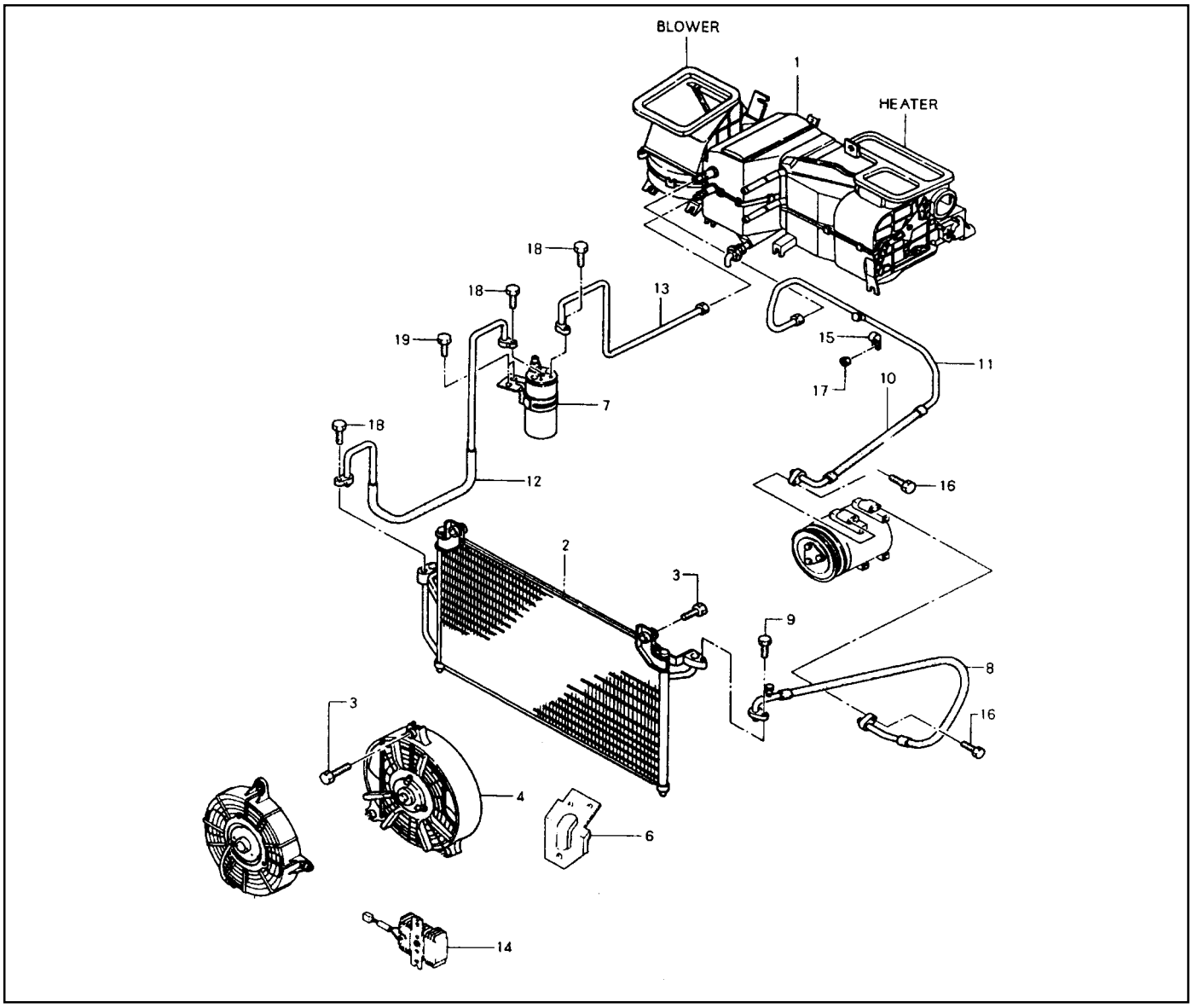

1 Evaporator Assembly
2 Condenser Assembly
3 Screw-Hex SEMS(M8x1.5x35)
4 Fan & Shroud Assembly-Main
5 Fan & Shroud Assembly-Add
6 Supplement Assembly-c/fan Mounting
7 Receiver & Bracket Assembly
8 Hose-Discharge
9 Bolt-Hex Sems(M8x1.25x30)
10 Hose Assembly-Suction
11 Pipe Assembly-Suction
12 Pipe-Liquid-A
13 Pipe-Liquid-B
14 Resister-Condenser Fan
15 Clip-Closed-CT(M8)
16 Bolt-Hex FLG(M8x1.25x25)
17 Nut-Hex(M6x1.0)
18 Screw-Hex SEMS(M6x1.0x25)
19 Screw-Hex SEMS(M6x1.0x16)

Downloaded from www.Manualslib.com manuals search engine

HEATER SYSTEM

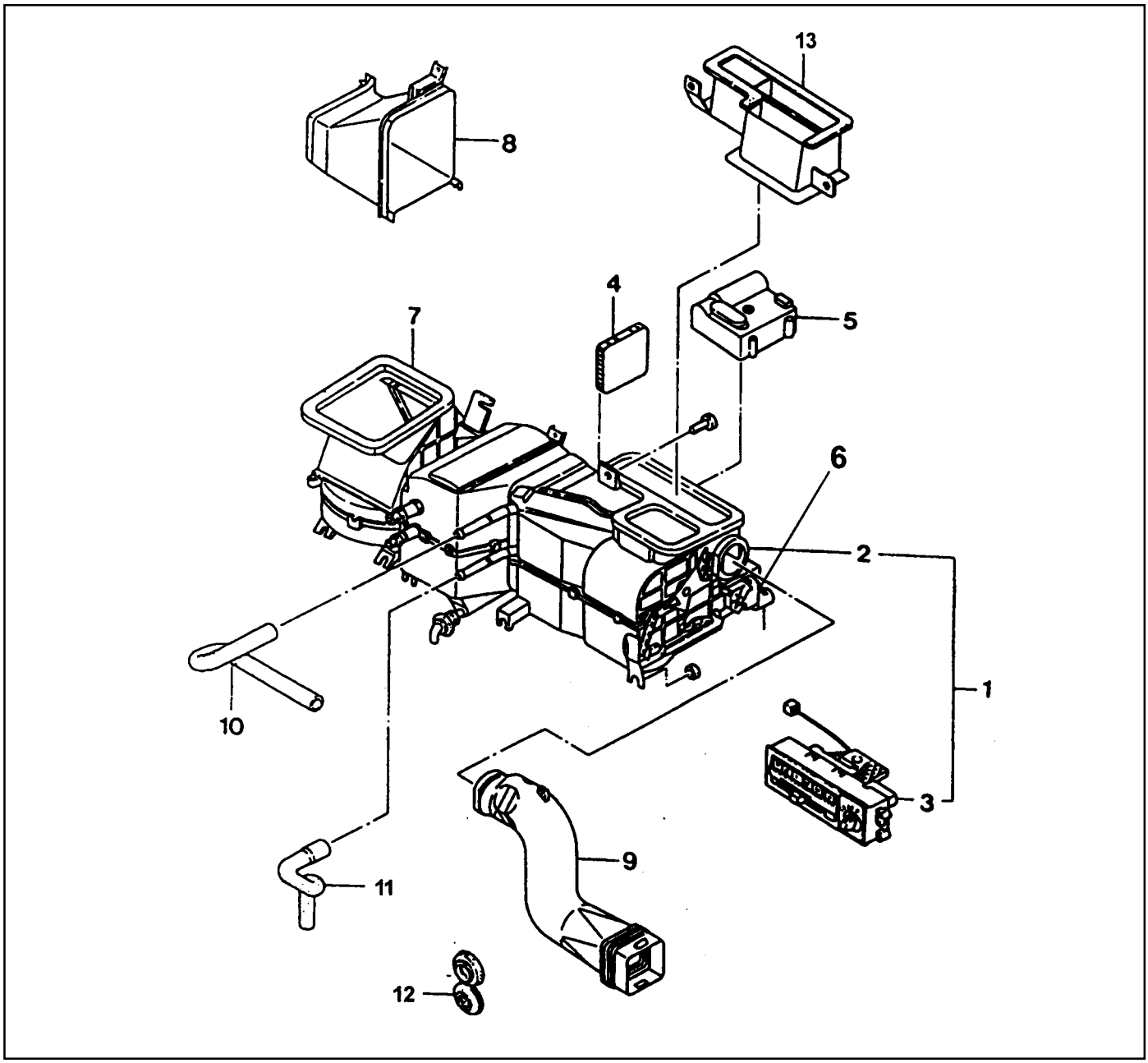

1 Heater/Heater Control Assembly
2 Heater Unit
3 Heater Control Box Assembly
4 Heater Unit Amp.
5 Mix Actuator Assembly
6 Mode Actuator Assembly
7 Blower Unit
8 Duct Assembly-HTR to Blower
9 Duct Assy-Side A/VENT No.1-LH
10 Water Inlet Hose
11 Water Outlet Hose
12 Heater Pipe Gromet
13 Duct Assy-HTR Connector

Downloaded from www.Manualslib.com manuals search engine

MAINTENANCE AND REPAIR

REFRIGERANT CHARGING

Installation of Manifold Gauge

1. Close both high/low pressure hand valve of gauge before installation of gauge to the charging valve.

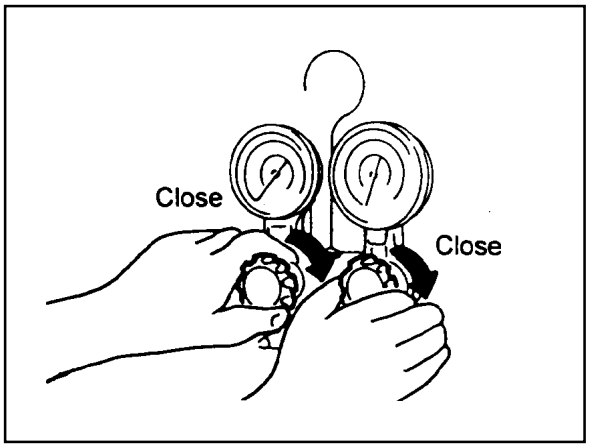

2. Connect the low pressure hose of the gauge to the low pressure charging valve and the high pressure hose of the gauge to high pressure charging valve. Tighten the hose nuts by hand.

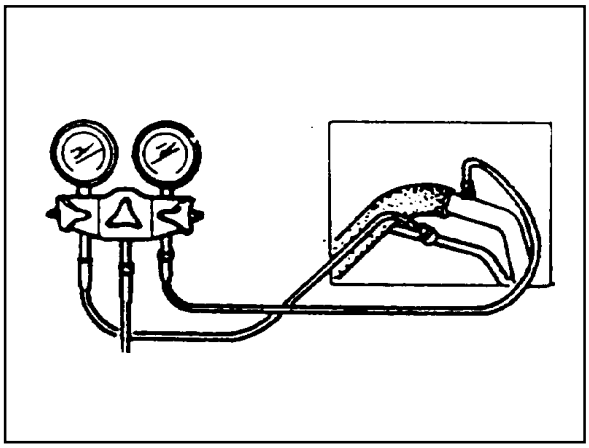

Discharging of Refrigerant

1. Connect the manifold gauge to the charging valve.
2. Place the free end of center hose in a shop towel.
3. Slowly open the high pressure hand valve and discharge refrigerant.

   Notice

   If refrigerant is allowed to escape too fast, compressor oil will be drawn out of the system.

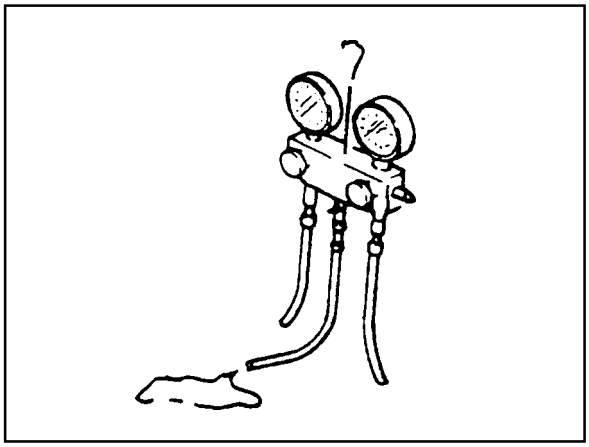

Downloaded from www.Manualslib.com manuals search engine

4. After the high pressure gauge reading drops below 3.5kg/cm2 , slowly open the low pressure valve.
5. When both high and low pressure gauges reading drops to 0 kg/cm, discharging is completed.

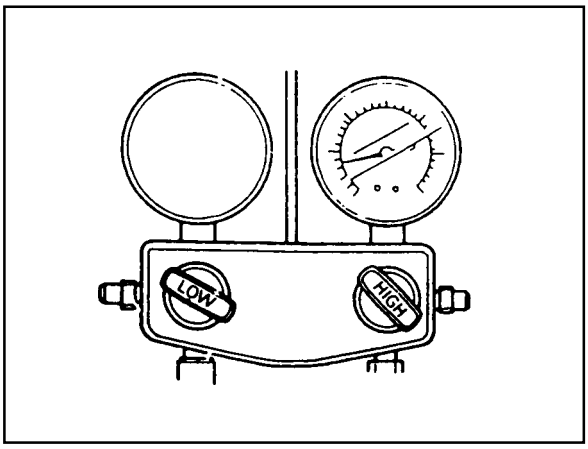

Evacuating Refrigeration System

1. Connect the manifold gauge to the charging valves.
2. Connect the center hose of the gauge to the vacuum pump.
3. Run the vacuum pump and open both high and low pressure hand valves.
4. Run the vacuum pump 15-20 minutes.
5. Check that both high and low pressure gauge reading is more than (-) 750mmHg of vacuum and close both valves.

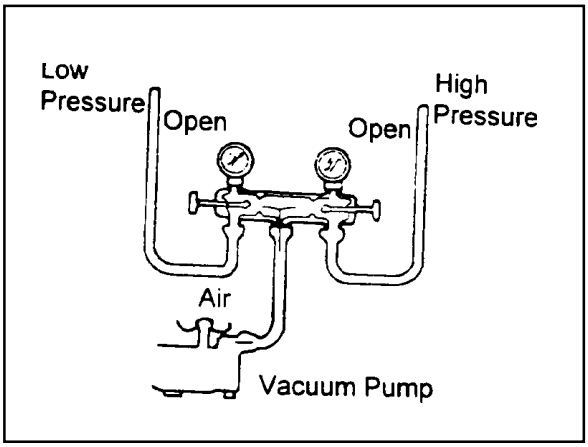

6. Stop the vacuum pump and wait about 5 minutes.
7. After 5 minutes, check that low pressure gauge reading is changed or not.
8. If low pressure gauge reading is changed, check the system for leaks and repair as necessary and repeat steps from ‘1’ to ‘7’.
9. If there are no changes in low pressure gauge reading, disconnect the vacuum pump.

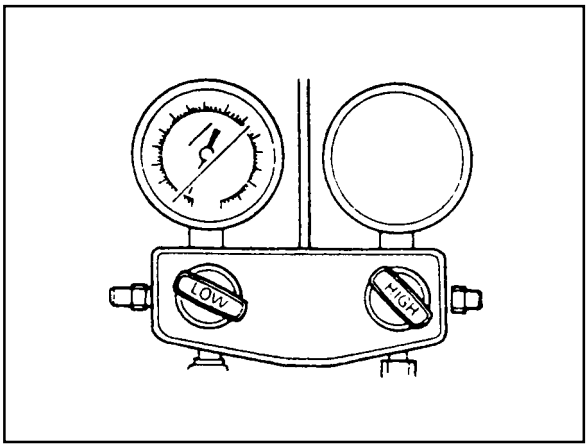

Check for Refrigerant Leaks

1. Connect the center hose of the gauge to the refrigerant tank.
2. Open the high pressure valve of the gauge to charge with refrigerant gas.
3. Charge until the low pressure gauge reads 1.0kg/cm^2 and close the valve.
4. Using a gas leak detector, check the system for leaks.
5. If a leak is found, replace a O-ring or repair the faulty connection

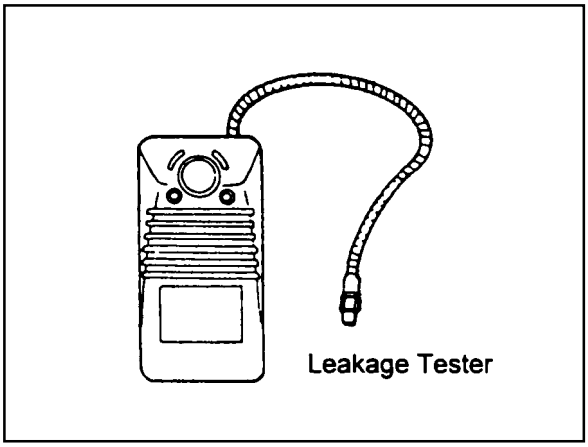

Downloaded from www.Manualslib.com manuals search engine

Charging Refrigerant

1. Connect the manifold gauge to the charging valve and evacuate the system.
2. Connect the center hose of the gauge to the refrigerant tank.
3. Open the high pressure valve and charge the system with 350g of refrigerant.
4. Close the high pressure valve and start the engine and run the compressor.

   Notice

   Never open the high pressure valve when the compressor is running. Refrigerant gas will be charged reverse.

5. Slowly open the low pressure valve and charge the system with refrigerant.

Standard	650 - 750 g

6. Close the low pressure valve after charging.

   Notice

   Checking the pressure through the sight glass is impossible by applying & R-134a.

7. Stop the engine and disconnect the manifold gauge from the system.

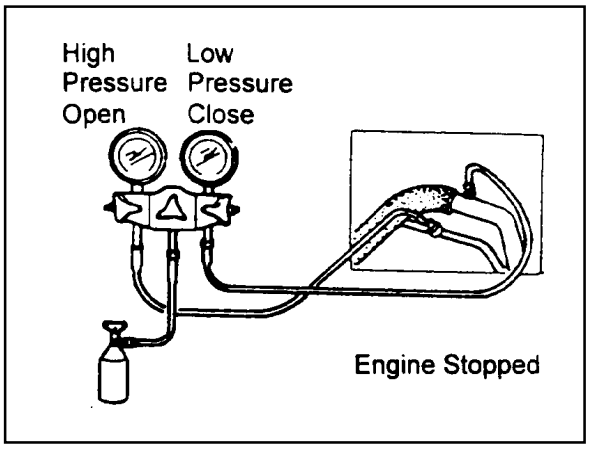

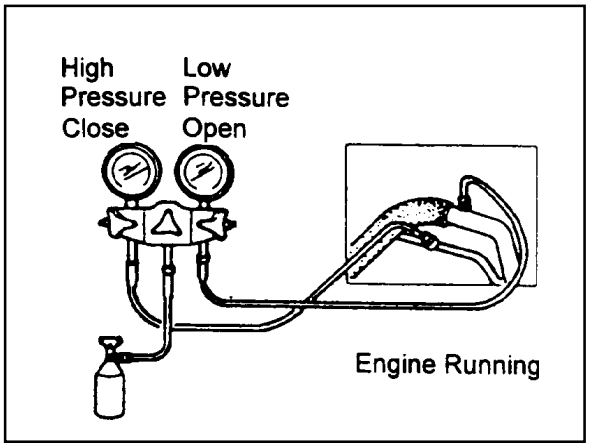

Operation Check

1. Place a dry bulb thermometer to the front duct.
2. Place a psychrometer close to the inlet of the cooling unit (under the glove box).
3. Run the engine at 1,500 rpm.
4. Set the blower switch at ‘HI’ and A/C switch ‘ON”.
5. Set the temperature control lever at ‘COOL’.
6. Set the air flow control at ‘REC’.
7. Check that air conditioning system is stabilized.

Temperature of Air Inlet	25 - 35°C
High Pressure Gauge Reading	13.2 - 18.5 kg/cm^2

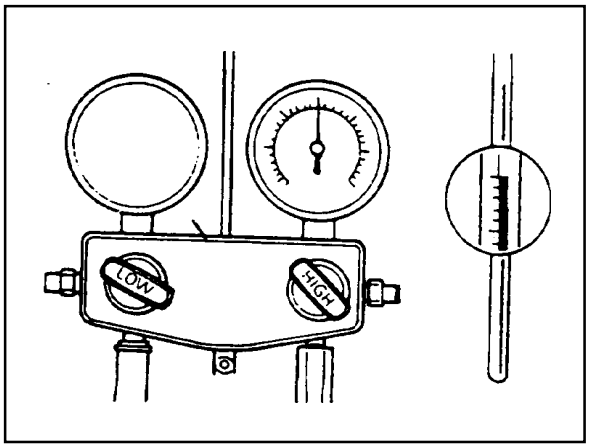

Downloaded from www.Manualslib.com manuals search engine

Replacement of Refrigerant Connection (O-ring Type)

1. When connecting a O-ring type, apply compressor oil to portions shown in illustration. Be careful not to apply oil to threaded portion.

   Notice

   Use specified compressor oil.

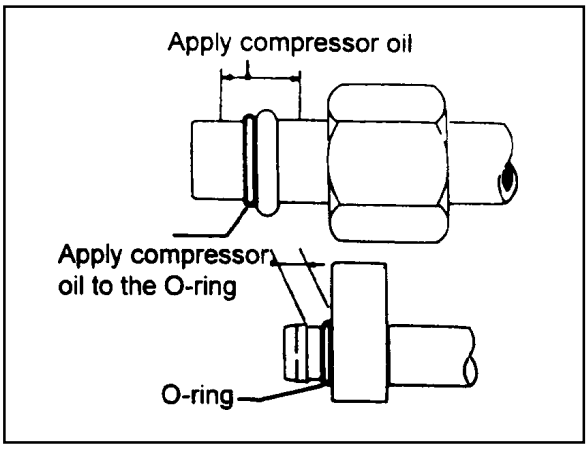

2. O-rings must be closely attached to inflated portion of pipe and always replace used O-rings.

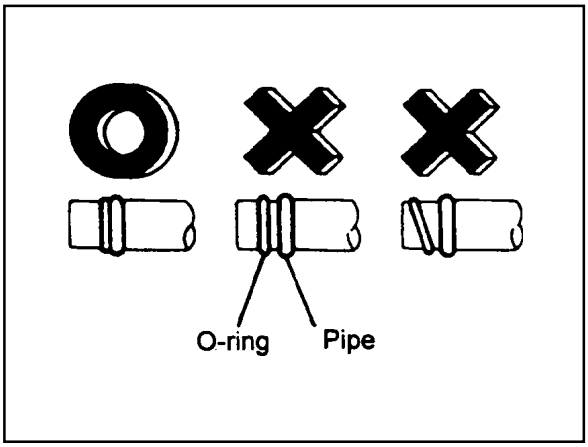

3. After inserting the pipe to the union, tighten the nut by hand as much as possible and tighten the nut to specified torque.

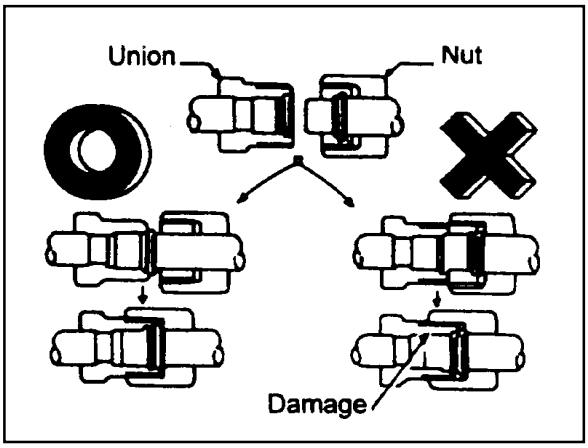

4. When connecting liquid pipe(B) and low pressure hose(A) to evaporate pipe, apply compressor oil to the O-ring.
5. When tightening, set the center of pipe and tighten fully.
6. Tighten the nut by specified wrench.

   Installation Notice

Tightening Torque	Inlet Side to 12 - 15Nm
	Low Pressure Hose (A) 30 - 35 Nm

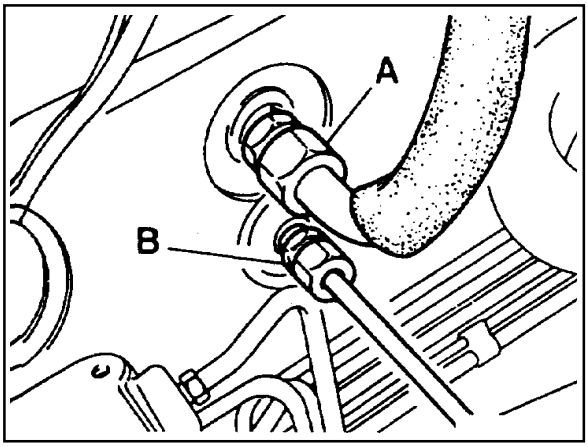

Downloaded from www.Manualslib.com manuals search engine

CONDENSER

Preceding Work : Removal of the radiator

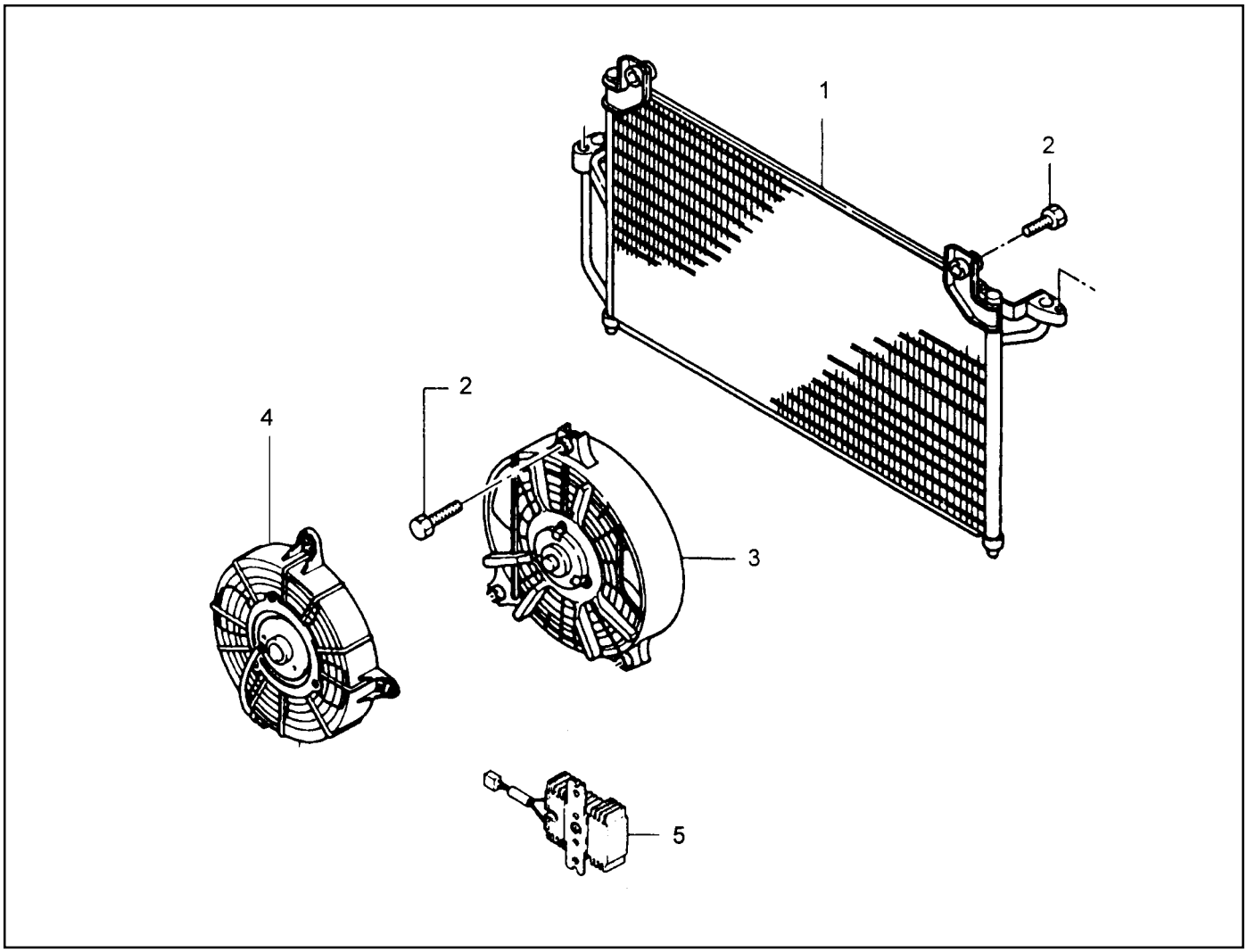

1 Condenser
2 Bolt ..... 4-6 Nm
3 Condenser Fan
4 Sub Fan (Gasoline Engine)
5 Resister (Gasoline Engine)

Downloaded from www.Manualslib.com manuals search engine

Removal & Installation Procedure

1. Disconnect the inlet and outlet pipes of condenser.

   Notice

   Before disconnection, evacuate the refrigerant from the system.

Tightening Torque	Inlet Side to 10 - 15 Nm
	Outlet Side to 4 - 6 Nm

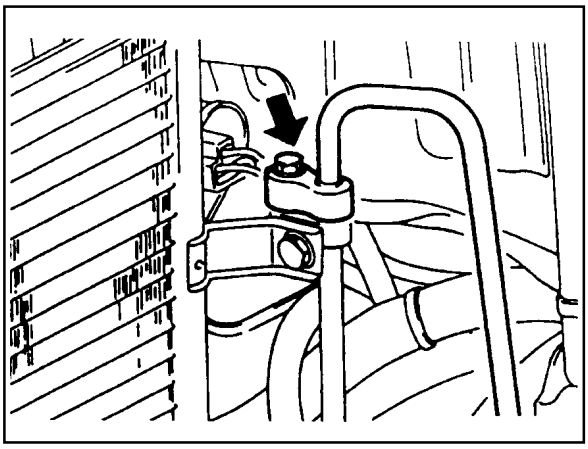

Notice

When installing, check the O-ring and apply compressor oil.

2. Remove the mounting bolts (2EA) and condenser assembly.

   Installation Notice

Tightening Torque	4 - 6 Nm

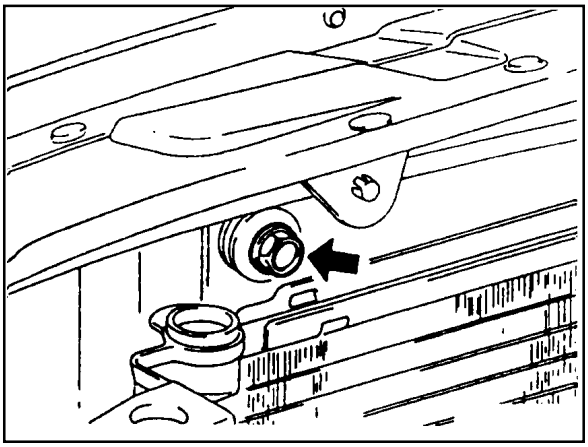

3. Remove the main condenser fan from condenser.

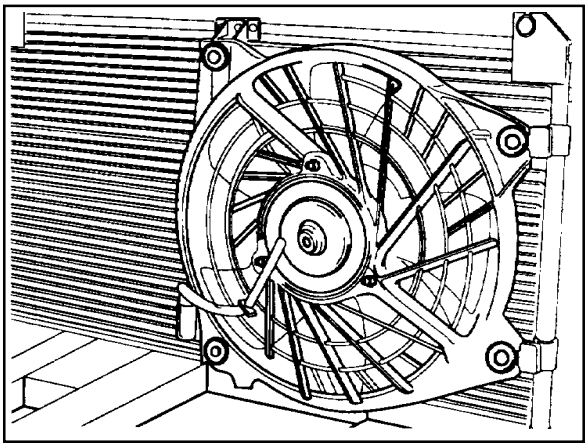

4. Installation should follow the removal procedure in the reverse order.

Downloaded from www.Manualslib.com manuals search engine

RECEIVER DRIER

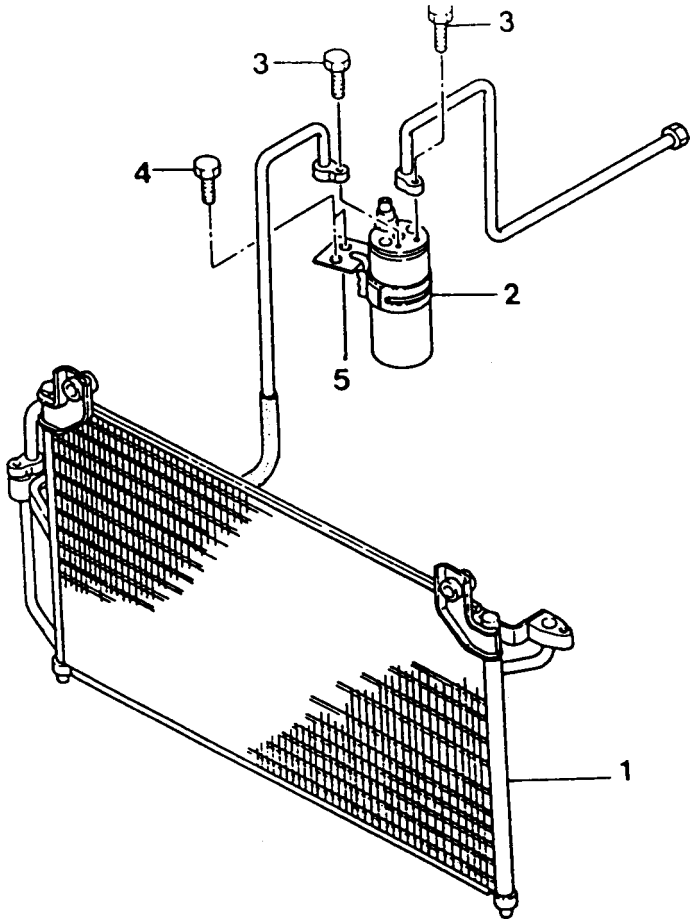

1 Condenser
2 Receiver Drier
3 Bolt ..... 4-6 Nm
4 Bolt ..... 5-8 Nm
5 Bracket

Downloaded from www.Manualslib.com manuals search engine

Removal & Installation Procedure

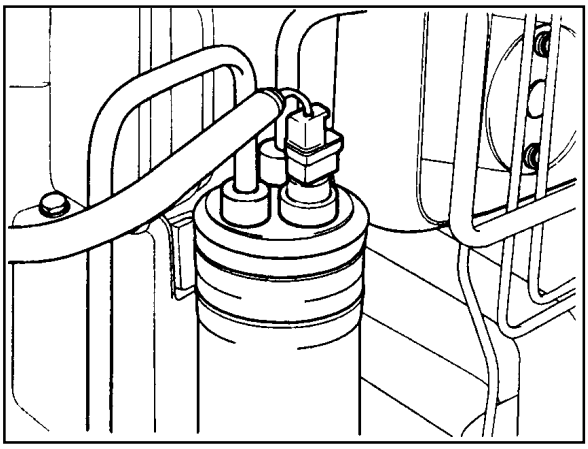

1. Disconnect the negative(-) terminal from the battery.
2. Discharge refrigerant from the system.

   Notice

   By connecting a manifold gauge connection hose to High/ Low pressure line, discharge the refrigerant.

3. Disconnect the inlet and outlet pipes of receiver drier.

   Notice

   When installing, check the O-ring and apply the compressor oil.

   Installation Notice

Tightening Torque	4 - 6 Nm

4. Remove the bracket bolt and then remove the receiver drier.

   Installation Notice

Tightening Torque	5 - 8 Nm

5. Installation should follow the removal procedure in the reverse order.

Downloaded from www.Manualslib.com manuals search engine

AIR-CONDITIONER COMPRESSOR

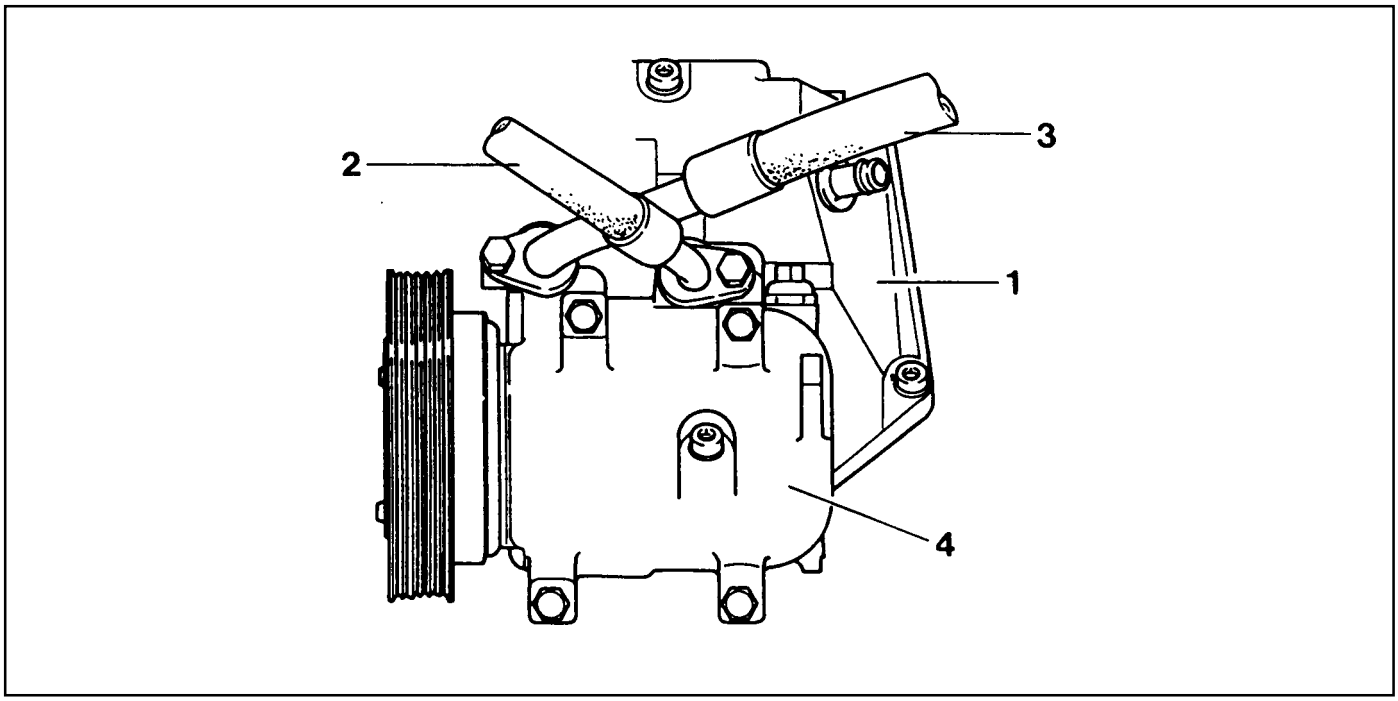

1 Compressor Bracket
2 High Pressure Hose
3 Low Pressure Hose
4 Compressor

Removal & Installation Procedure

1. Disconnect the negative(-) terminal from the battery.
2. Discharge refrigerant from the system.

   Notice

   By connecting a manifold gauge connection hose to High/ Low pressure line, discharge the refrigerant.

3. Disconnect the high / low pressure pipe and wire connectors.

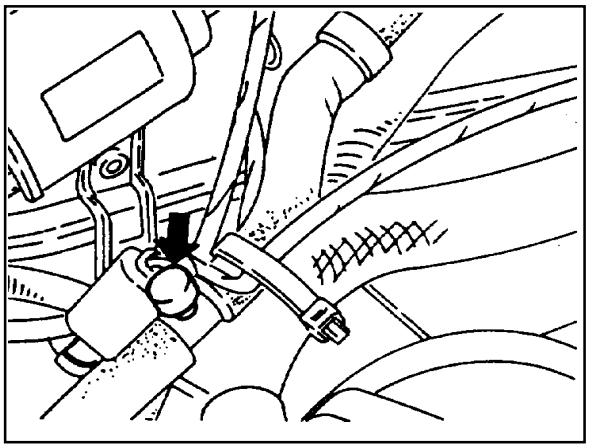

4. Remove the mounting bolt from the compressor bracket and remove compressor assembly.

   Notice

   Place the removed compressor in vertical position.

5. Installation should follow the removal procedure in the reverse order.

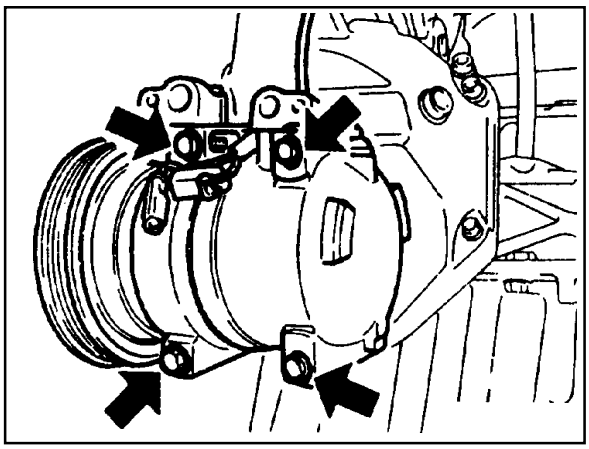

Downloaded from www.Manualslib.com manuals search engine

HEATER AND AIR CONDITIONER CONTROL BOX

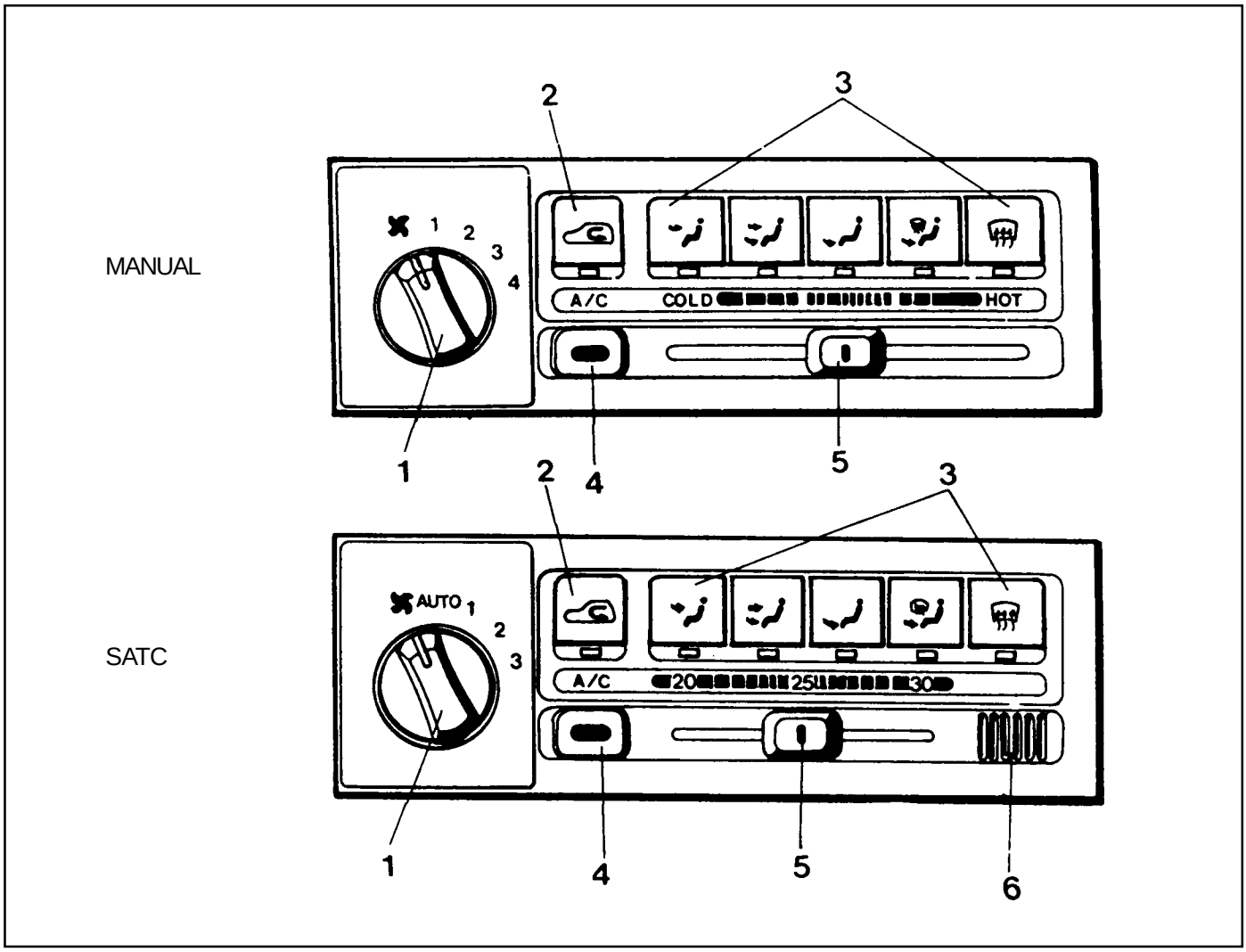

1 Blower Switch
2 Recirculation Switch
3 Mode Switch
4 A/C Switch
5 Temperature Control Lever
6 In-vehicle Sensor

Downloaded from www.Manualslib.com manuals search engine

Removal & Installation Procedure

1. Remove the switch panel.

   Notice

   Be careful not to damage the switch panel.

2. Remove the fixing screws (4 screws) of the control box.

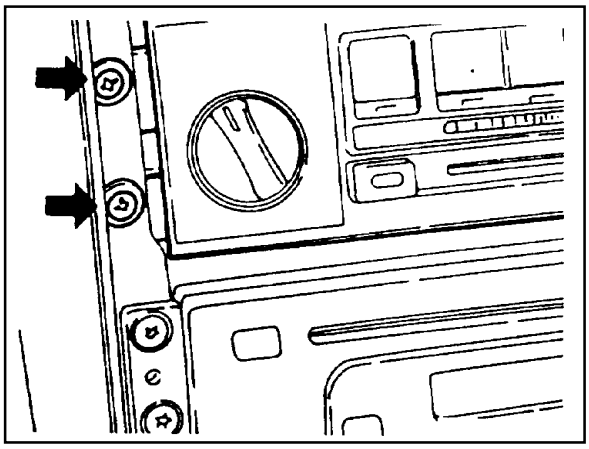

3. Disconnect the wire connectors and remove the control box.
4. Installation is reverse order of the removal.

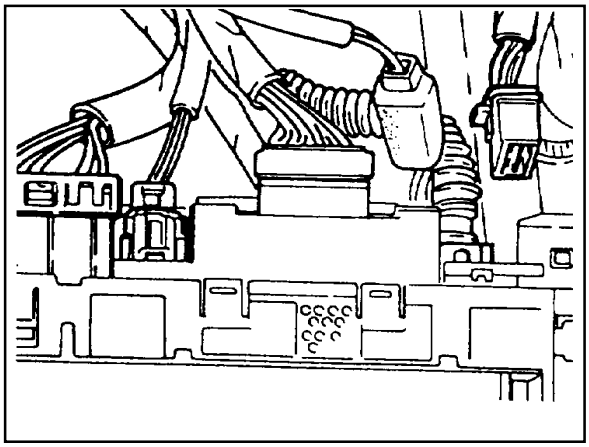

Downloaded from www.Manualslib.com manuals search engine

SECTION 7D

FULL AUTOMATIC TEMPERATURE CONTROL HEATING, VENTILATION AND AIR CONDITIONING SYSTEM

FATC (Full Automatic Temperature Control) is full automatic heater and airconditioning system that detects incar temperature, ambient temperature, sun load and coolant temperature and controls airconditioner system blowing capacity, outlet temperature and intaking/outlet mode to maintain interior comfort.

TABLE OF CONTENTS

Specifications 7D-1
Specifications 7D-1
Service Specifications 7D-3
Schematic and Routing Diagrams 7D-4
Circuit Diagram 7D-4
FATC Block Diagram 7D-5
Component Locator 7D-6
Ventilation System 7D-6
Function Description 7D-7
Diagnosis 7D-8
Diagnosis Test 7D-8
Maintenance and Repair 7D-11
FATC Control Panel 7D-11
Troubleshooting 7D-15

SPECIFICATIONS

SPECIFICATIONS

Refrigerant

Application	Description
Capacity	650-750 g
Type	R134a

Evaporator Unit

Application	Description
Core Size (LxWxT)	237.0x232.0x92.0
Core Type	Aluminum plate
Expansion Valve Type	Angle
Thermostat	ON:4.5±0.6°C, OFF:1.5±0.6°C
Resister Type	Aluminum plate
Cooling Capacity	4,300 Kcal/h(AT 420 CMH)

Downloaded from www.Manualslib.com manuals search engine

Blower Unit

Application	Description
Motor Type	Magnetic
Motor Size	f70 x 145

Compressor

Application	Description
Model	FK-II(DKV 14C)
Type	Vane rotary
Displacement (cc/rev.)	140.5
Pulley	f143.0
Oil	ZXL 200 PG (PAG Oil)

Condenser

Application	Description
Size (WxHxT)	650x339.2x22.0
Capacity	11,000 Kcal/h
Type	Parallel Flow

Receiver Drier

Application	Description
Material	Aluminum
Capacity	250cc
Desiccant	XH-9 or equivalent 35g

Pressure Switch

Application	Description
Type	Direct
High (OFF)	OFF : 27±2Kgf/cm^2, DIFF : 6±2Kgf/cm^2
Low (ON)	OFF : 1.8±2Kgf/cm^2, ON : 1.9±0.3Kgf/cm^2

Air Filter

Application	Description
Replacement	Every 10,000 km (replace earlier if air pollution is heavy)

Heater Unit

Application	Description
Heater Core Type	2-ROW
Heating Capacity	4,600 Kcal/h (AT 300 CMH)
Heater Core Size (LxWxT)	219.5 x 151.8 x 52

Downloaded from www.Manualslib.com manuals search engine

SERVICE SPECIFICATIONS

Input Section

Application	Description	
Incar Sensor	Resistance (25°C)	2.186kW ±0.07kW
	Voltage Rating	5V
	Current Rating	3mA
Ambient Sensor	Resistance (25°C)	1.0kW ±0.03kW
	Voltage Rating	5V
	Current Rating	3mA
Coolant Temperature Sensor	Resistance (25°C)	0.55kW ±0.02kW
	Voltage Rating	5V
	Current Rating	3mA

Output Section

Application	Description	
Intake Actuator	Current Rating (at 12V)	70±30mA
	LOCK Current	Less than 500mA
Mode Actuator	Current Rating (at 12V)	100±40mA
	LOCK Current	Less than 500mA
Mix Actuator	Current Rating (at 12V)	100±40mA
	LOCK Current	Less than 500mA
Power TR	Ic	30A
	Pc	200W
Blower Motor Power Consumption		220W

Downloaded from www.Manualslib.com manuals search engine

SCHEMATIC AND ROUTING DIAGRAMS

CIRCUIT DIAGRAM

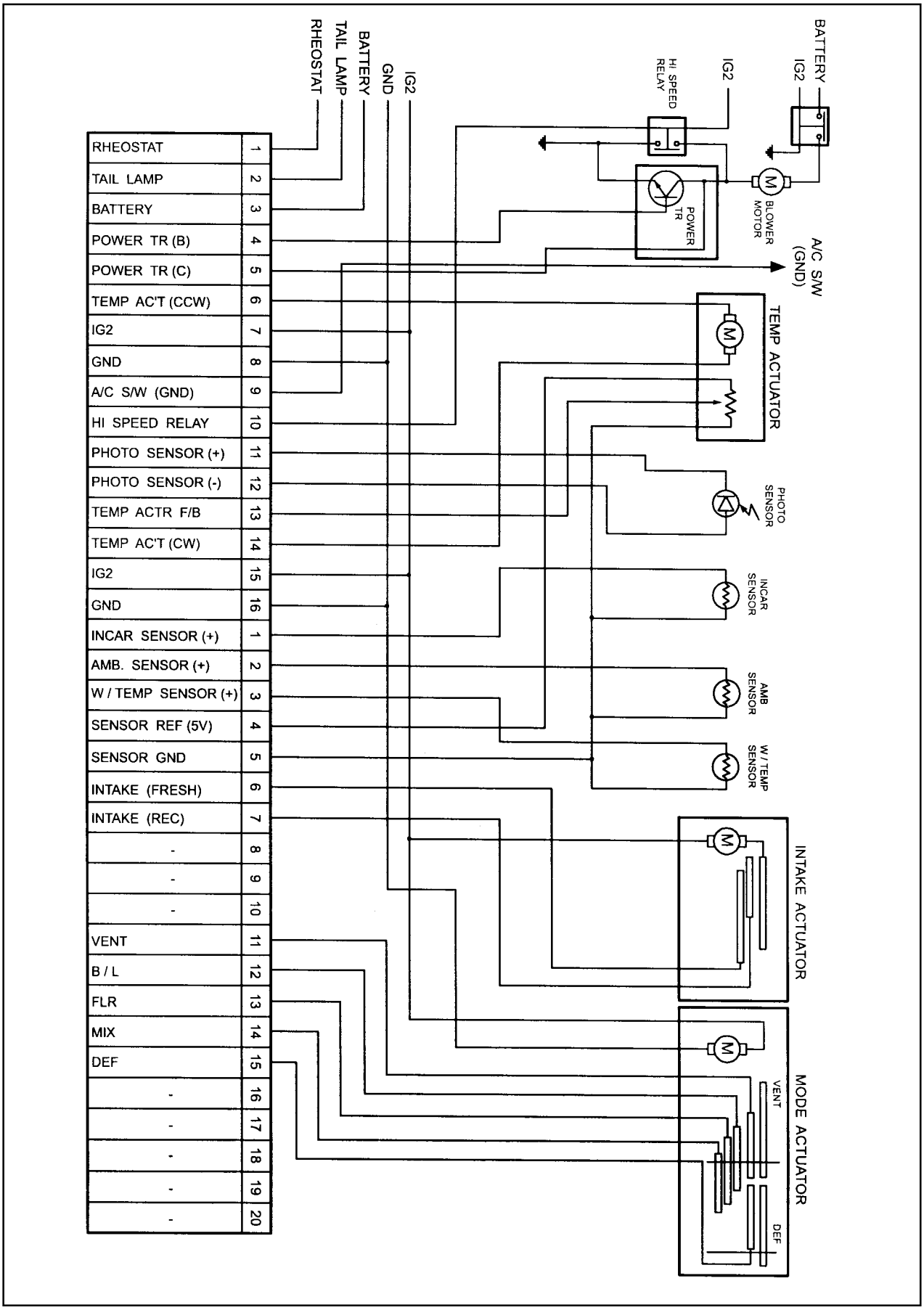

Downloaded from www.Manualslib.com manuals search engine

FATC BLOCK DIAGRAM

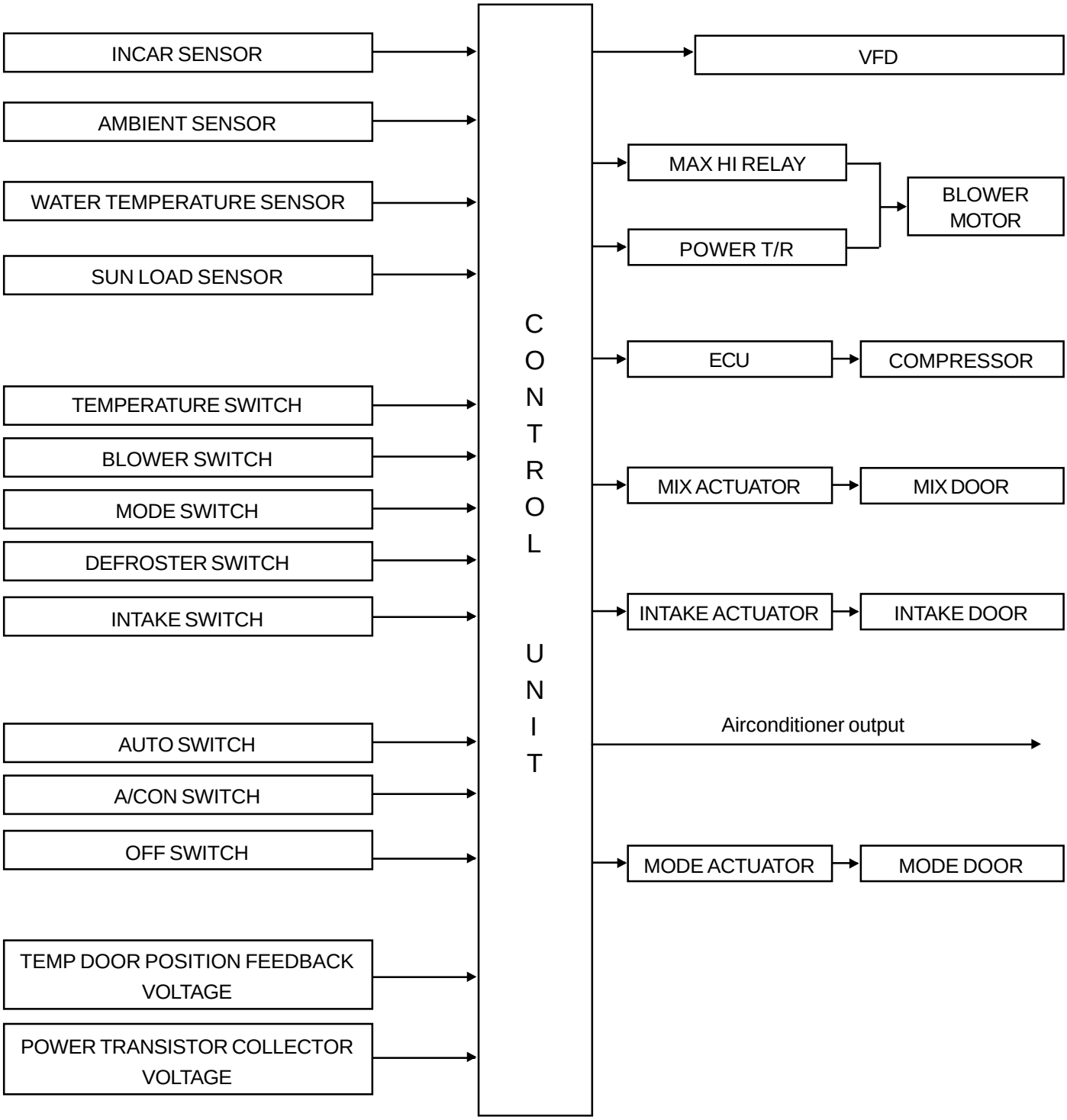

Downloaded from www.Manualslib.com manuals search engine

COMPONENT LOCATOR

VENTILATION SYSTEM

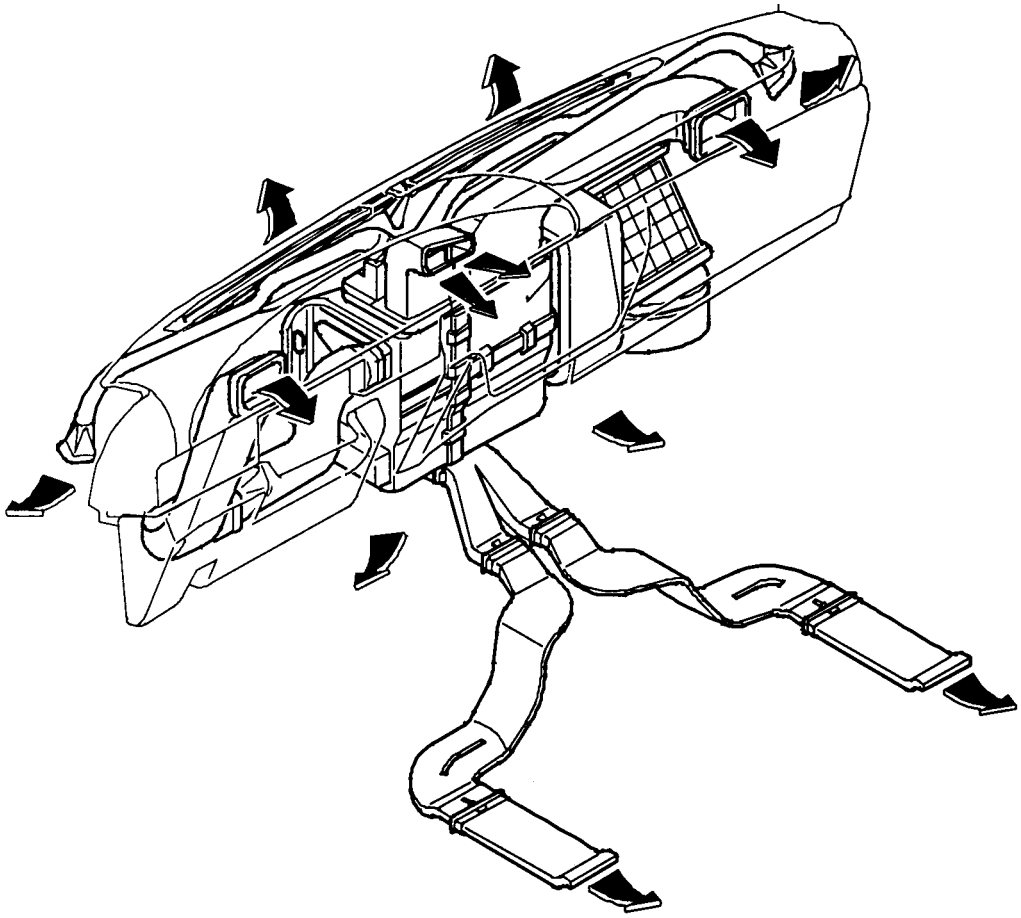

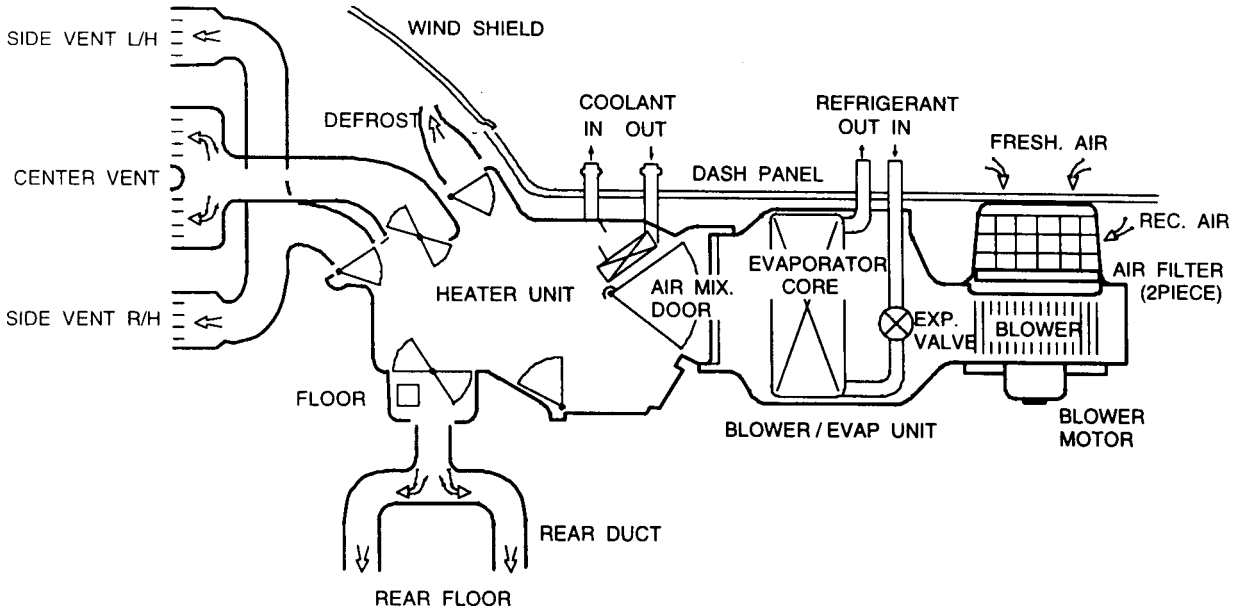

Downloaded from www.Manualslib.com manuals search engine

FUNCTION DESCRIPTION

1. AUTO switch

- By pressing the AUTO switch, set temperature, AUTO, fan speed, air source, air flow mode will be appeared on the VFD display.
- Following items will be controlled automatically according to set temperature.
  - Mode and intake door
  - Temperature door
  - Blower fan speed
  - Compressor ON/OFF control
- When AUTO switch is released, other functions will be controlled automatically except for manually selected switches.

2. MODE switch

- By pressing the MODE switch while the AUTO switch is turned ON, AUTO indicator light will go off and air flow mode will be controlled manually in the order of VENT® B/L® FLR® MIX® VENT.

3. OFF switch

- Press this switch and the airconditioner system will be turned OFF.

4. Temperature UP/DOWN switch

- This switch is a switch increasing or decreasing set temperature and position of the temperature door will be automatically controlled according to set temperature and outlet temperature will be controlled by adjusting blending ratio of cold and hot air.
- By operating the switch, set temperature will be increased/decreased by 0.5°C.
- Set temperature range is 17 - 32°C.
- Max. cold function will be performed at set temperature of 17°C and max. hot function will be performed at set temperature of 32°C.
- When pressed more than 1 second, it will be automatically UP/DOWN by interval of 0.28 sec. after 1 second.
- When it changed 17.5°C® 17°C, 31.5°C® 32°C and DOWN switch is pressed after 17°C or UP switch is pressed after 32°C, there will be operating sounds 3 times during 0.1 sec.

5. DEFROST switch

- By pressing this switch, DEF will turn on and mode door will be fixed at DEF.
- Recirculation/fresh air switch will be fixed as FRESH.
- When airconditioner is turned ON and ambient temperature is less than 1.5°C, the airconditioner will be turned off.
- Selection of airconditioner OFF is possible by manual.

6. A/C switch

- The airconditioner system will be turned ON or OFF by pressing this switch.

7. Recirculation•fresh air switch

- Air intake will be automatically switched to recirculation or fresh air (REC® FRE) by pressing this switch.

8. Blower switch (UP/DOWN)

- Blower speed can be controlled by manual and if fan UP/DOWN switch is pressed when AUTO mode is selected, fan speed will UP/DOWN based on current fan level.
- When 6 segments are turned on, it is max. HI operation.
- When pressed more than 1 second, it will be automatically UP/DOWN by interval of 0.28 sec. after 1 second.
- When segment is changed stage 2® stage 1 (LO), stage 5® stage 6 (HI) and HI switch is pressed in HI status or DOWN switch is pressed in LO status, there will be operating sounds 3 times during 0.1 sec.
- When switch is operated in OFF status, it will be operated as stage 1 (1 segment display).

Downloaded from www.Manualslib.com manuals search engine

DIAGNOSIS

DIAGNOSIS TEST

FATC airconditioner system has self-diagnosis function. Turn the ignition switch ON and press intake switch more than 4 times within 2 seconds while the AUTO switch is pressed, then it will diagnose incar sensor, ambient sensor, water temperature sensor and temperature actuator for open/short and will display numerical fault code on the set temperature display of VFD.

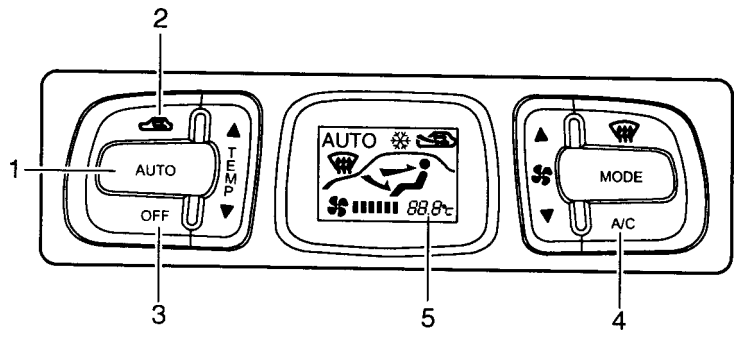

1 AUTO Switch
2 Intake Switch
3 OFF Switch
4 Airconditioner Switch
5 Set temperature Display

Self-diagnosis Method

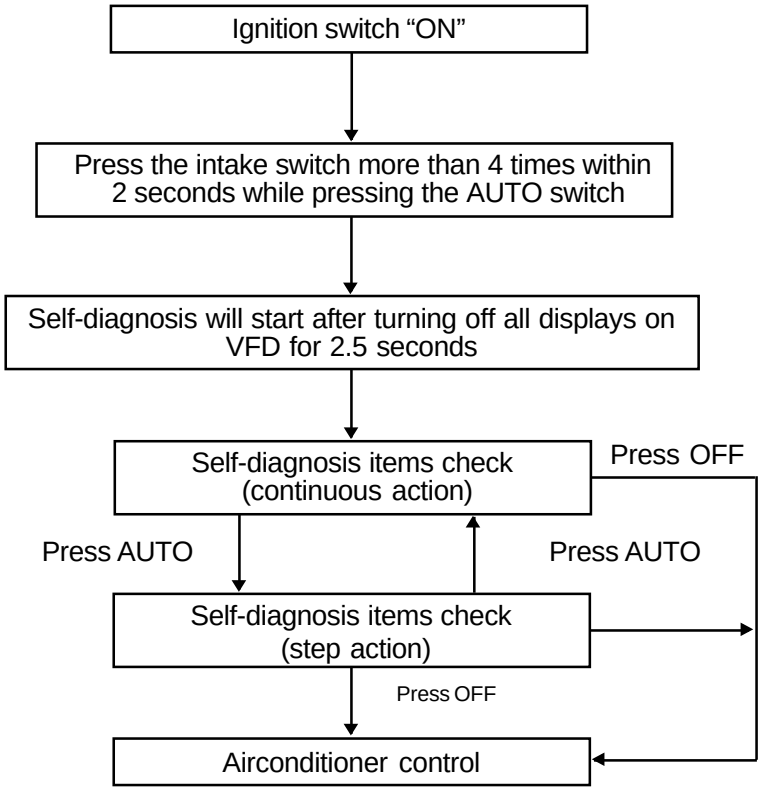

Downloaded from www.Manualslib.com manuals search engine

Diagnosis Item and Fault Code

00: normal
11: incar Sensor Open
12: incar Sensor Short
13: ambient Sensor Open
14: ambient Sensor Short
15: coolant Sensor Open
16: coolant Sensor Short
17: temperature Actuator Open/Short
18: temperature Actuator Drive Fault

Self-diagnosis Display

1. Data will be displayed at the set temperature display as 2-digit number during self-diagnosis function and other set temperature displays will be OFF.
2. Display of self-diagnosis fault code will be blinking fault code number in the intervals of 0.5 sec.
3. Following fault code number will be displayed at the set temperature display during self-diagnosis function.
4. If no defective, normal display number (00) will blink.

Display during continuous action

A. Normal or 1 fault (00 or 11)

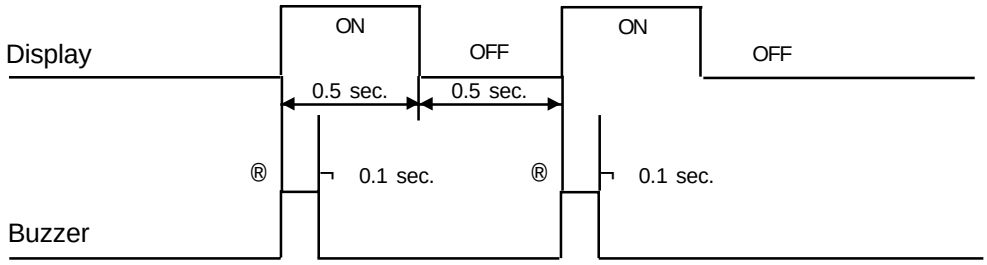

B. Multiple faults (11,13,15.....)

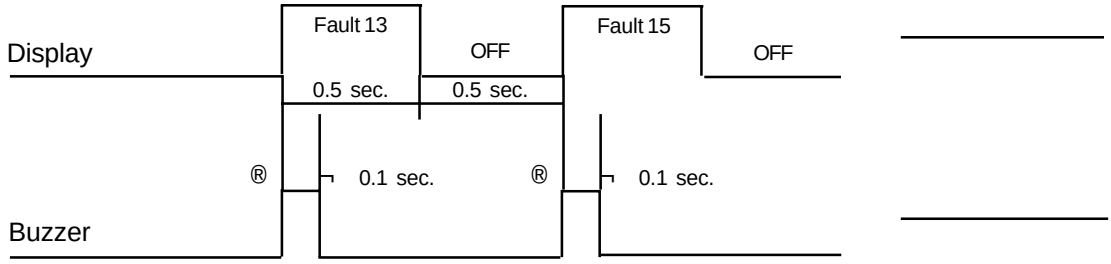

Display during step action

A. Normal or 1 fault : the same as continuous action

B. Multiple faults

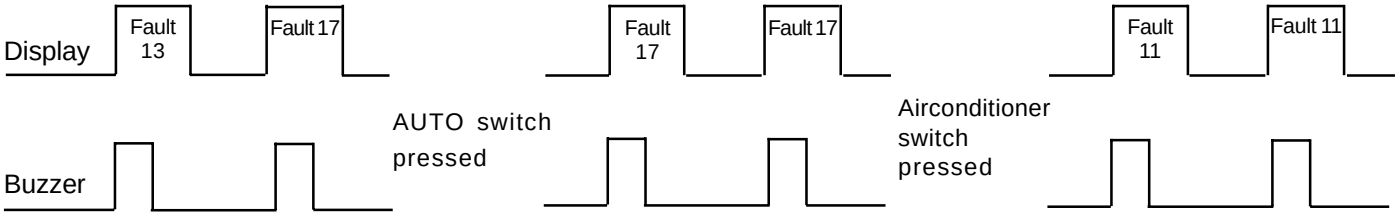

Downloaded from www.Manualslib.com manuals search engine

Fault Safety Function

FATC airconditioner system not only performs self-diagnosis but also has safety function against faults if there is open or short in the incar sensor, ambient sensor, water temperature sensor and temperature door potentiometer.

NO.	Item	Defects	Fault safety function
1	Incar sensor	Open or short	Control When substituted 25°C
2	Ambient sensor	Open or short	Control When substituted 20°C
3	Water temperature sensor	Open or short	Perform heating maneuver control function under refrigeration maneuver control entering conditions and release after 10 minutes.
4	Temperature door potentiometer	Open or short	Set temperature 17 - 24.5°C:max. COLD position Set temperature 25 - 32°C:max. HOT position

Downloaded from www.Manualslib.com manuals search engine

MAINTENANCE AND REPAIR

FATC CONTROL PANEL

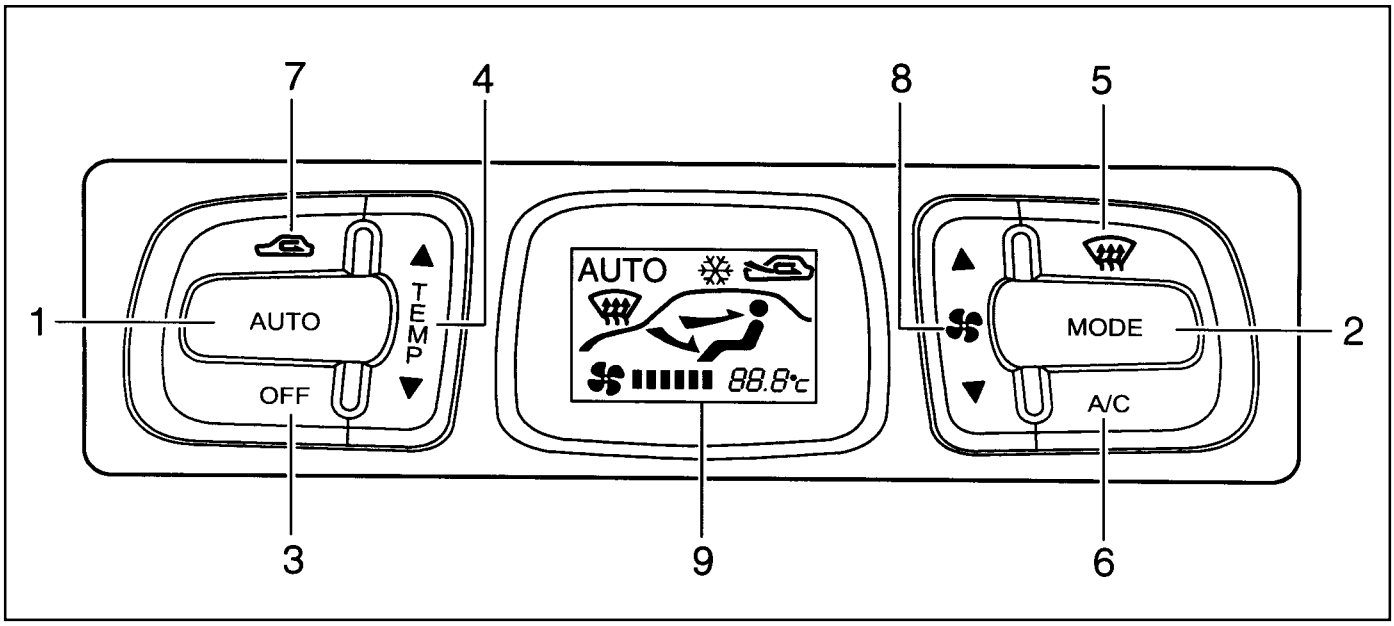

1 AUTO Switch
2 MODE Switch
3 OFF Switch
4 Temperature UP/DOWN Switch
5 Defrost Switch
6 Airconditioner Switch
7 Recirculation•fresh Air Switch
8 Blower Switch (UP/DOWN)
9 VFD (Vacuum Fluorescent Display)

Downloaded from www.Manualslib.com manuals search engine

Pin Number and Connection Circuit

16-pin (A)

1	2	3	4	5	6	7	8
9	10	11	12	13	14	15	16

20-pin (B)

1	2	3	4	5	6	7	8	9	10
11	12	13	14	15	16	17	18	19	20

Connector A

Pin No.	Connection circuit
1	Rheostat
2	Tail lamp
3	Battery (+)
4	Power TR (B)
5	Power TR (C)
6	Temperature actuator (CCW)
7	IG2
8	Ground
9	Airconditioner switch ground
10	HI speed relay
11	Photo sensor (+)
12	Photo sensor (-)
13	Temperature actuator F/B
14	Temperature actuator (CW)
15	IG2
16	Ground

Connector B

Pin No.	Connection circuit
1	Incar sensor (+)
2	Ambient sensor (+)
3	Coolant sensor (+)
4	Sensor voltage 5V
5	Sensor ground
6	Intake (ambient)
7	Intake (incar)
8	-
9	-
10	-
11	VENT
12	B/L
13	FLR
14	MIX
15	DEF
16	-
17	-
18	-
19	-
20	-

Downloaded from www.Manualslib.com manuals search engine

Removal & Installation Procedure

1. Turn the ignition switch to OFF position.
2. Remove the digital clock.

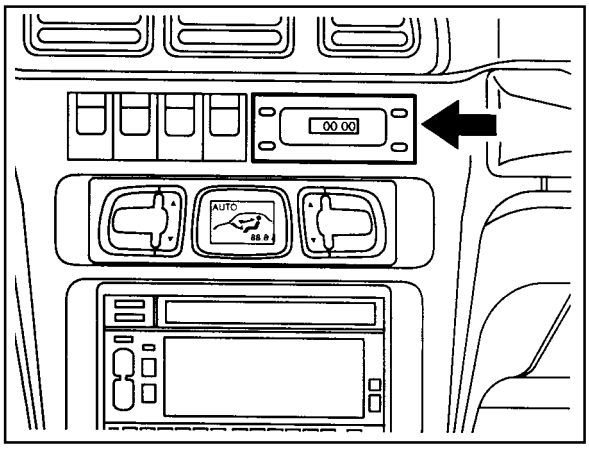

3. Unscrew the screw from the center panel, pull out each switches and remove the center panel.

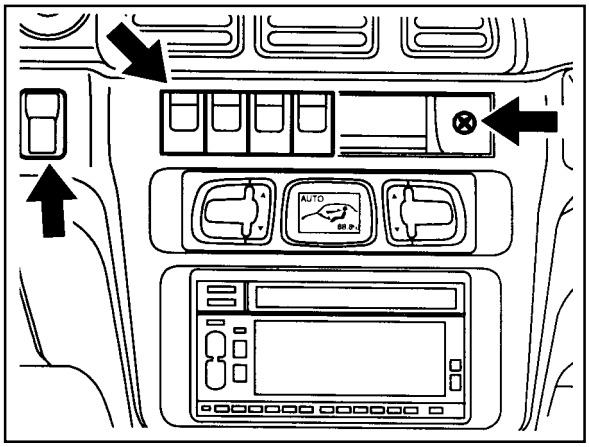

4. Unscrew the 6 screws and remove the audio control panel assembly.

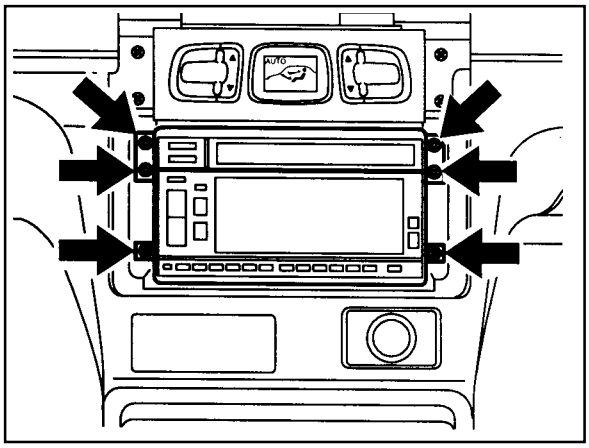

5. Unscrew the 4 screws and remove the airconditioner control panel assembly.
6. Installation should follow the removal procedure in the reverse order.

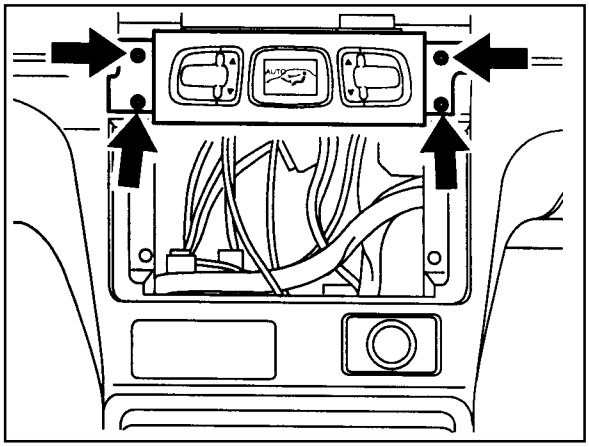

Downloaded from www.Manualslib.com manuals search engine

Air Filter; replace

Replacement Interval	Every 10,000km

Notice

Replace earlier if air pollution is heavy.

Replacement1.

1. Open the glove box and pull it inward to release the upper left and right locking portion.

   Notice

   Remove the glove box by unscrewing lower 2 screws, if necessary.

2. Press the 2 filter cover holds and remove the air filter cover.
3. Remove the 2 air filters.

   Notice

   For installation, remember the installed direction of the air filter before removal.

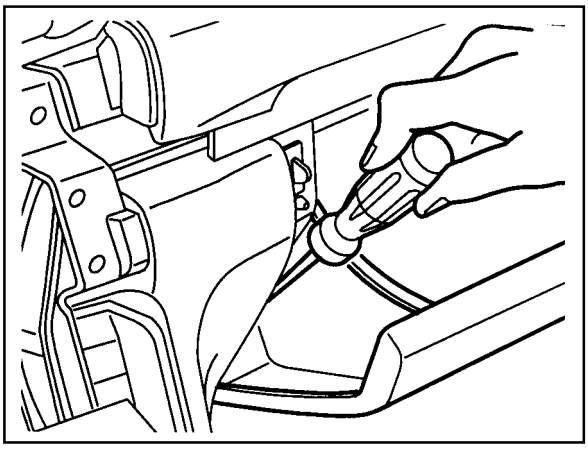

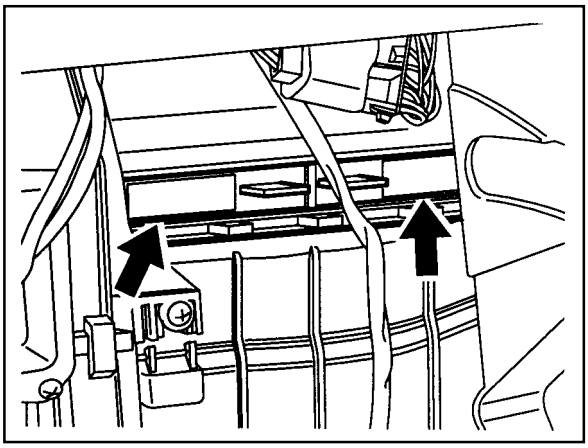

Downloaded from www.Manualslib.com manuals search engine

TROUBLESHOOTING

Check and Service

Incar sensor is a sensor that detects interior air temperature and a thermistor that decreases its resistance when temperature up and increases when temperature down.

1. Check that there are incar sensor fault code (11,12) by using self-diagnosis function.

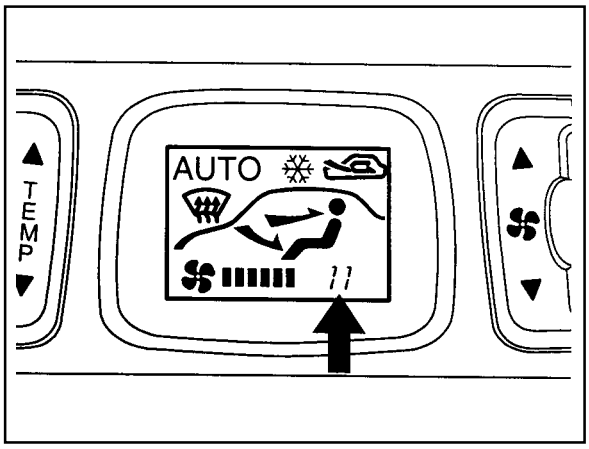

2. Disconnect incar sensor 2-pin connector that installed on inner lower instrument panel cover of driver's side and remove the sensor.

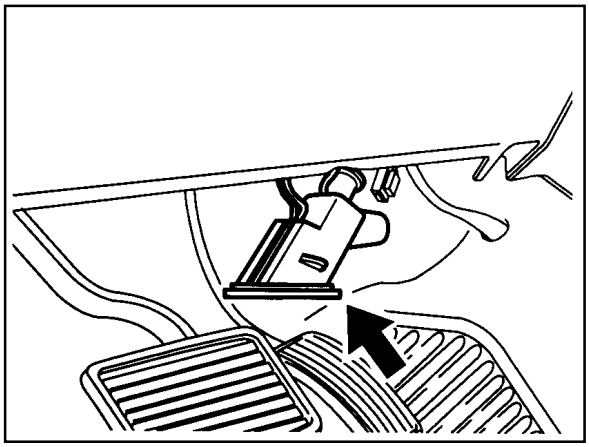

3. Check that measured resistance value among incar sensor terminals is as shown in the right side graph.

   Notice

   Measure resistance value by soaking the sensor in the ice water and check changes in resistance values after soaking it in the very hot water.

4. If resistance value is out of specification, replace the incar sensor.

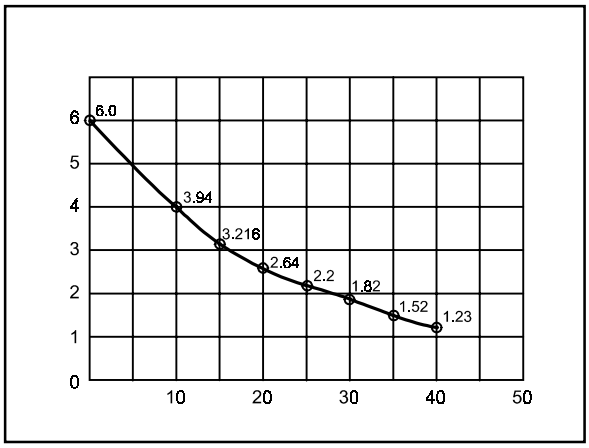

5. Install the sensor and turn the ignition switch to ON position and check that voltage between No. 12A terminal of incar sensor and body (-) is 5V.
6. Check current between the No. 12B and 12A connector terminals of the incar sensor and the No. 1 and 5 connector terminals of the airconditioner control unit and repair the wire if defective.

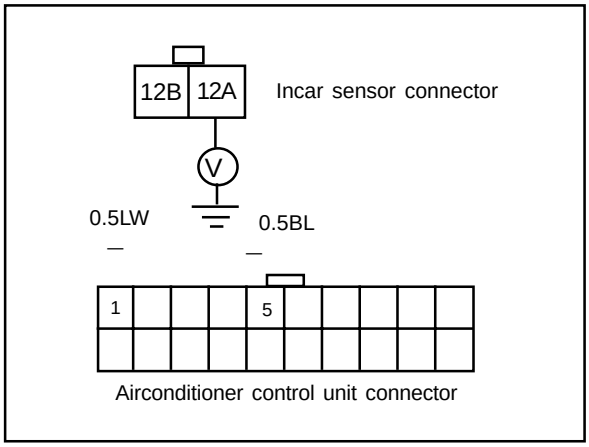

Downloaded from www.Manualslib.com manuals search engine

Ambient Sensor

Ambient sensor is a sensor that detects ambient temperature and a thermistor that decreases its resistance when temperature up and increases when temperature down.

1. Check that there are ambient sensor fault code (13,14) by using self-diagnosis function.

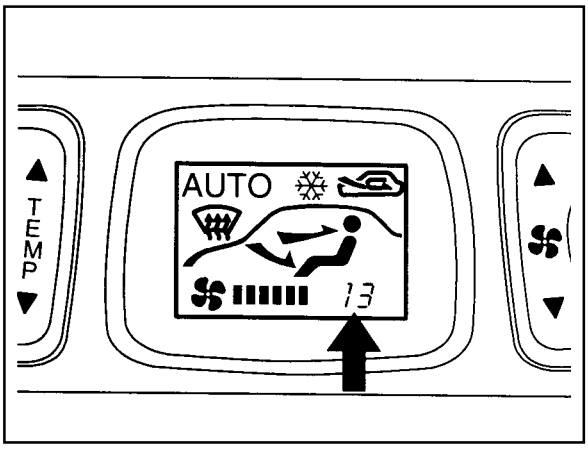

2. Disconnect ambient sensor 2-pin connector that installed on front right side of the frame and remove the sensor.

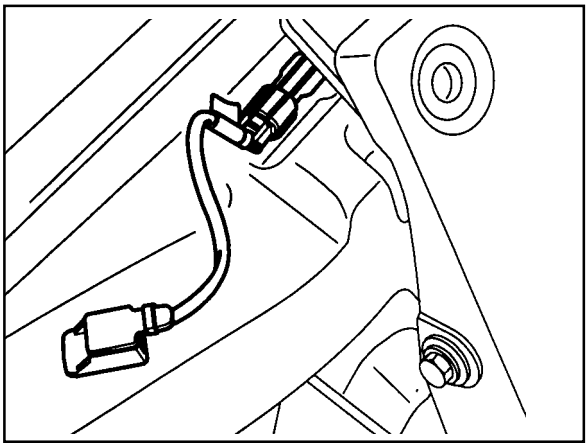

3. Check that measured resistance value among ambient sensor terminals is as shown in the right side graph.

   Notice

   Measure resistance value by soaking the sensor in the ice water and check changes in resistance values after soaking it in the very hot water.

4. If resistance value is out of specification, replace the ambient sensor.

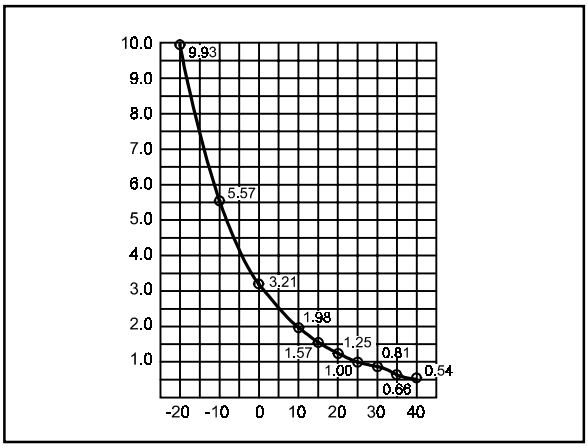

5. Install the sensor and turn the ignition switch to ON position and check that voltage between No. 10 terminal of the ambient sensor and body (-) is 5V.
6. Check current between the No. 10 and 9 connector terminals of the ambient sensor and the No. 2 and 5 connector terminals of the airconditioner control unit and repair the wire if defective.

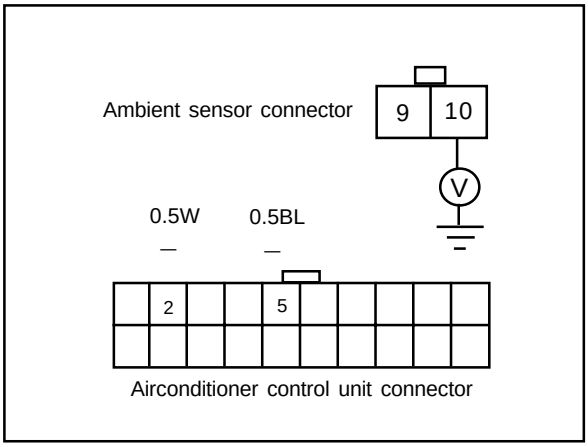

Downloaded from www.Manualslib.com manuals search engine

Water Sensor

Water sensor is a thermistor that detects engine coolant temperature to operate the blower speed to LO when water temperature is less than 50.

1. Check that there are water sensor fault code (15,16) by using self-diagnosis function.

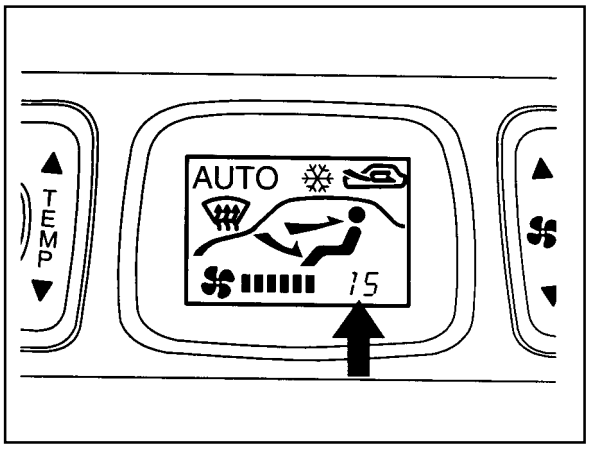

2. Disconnect water sensor 2-pin connector that installed on the heater unit of inner instrument panel and remove the water sensor.

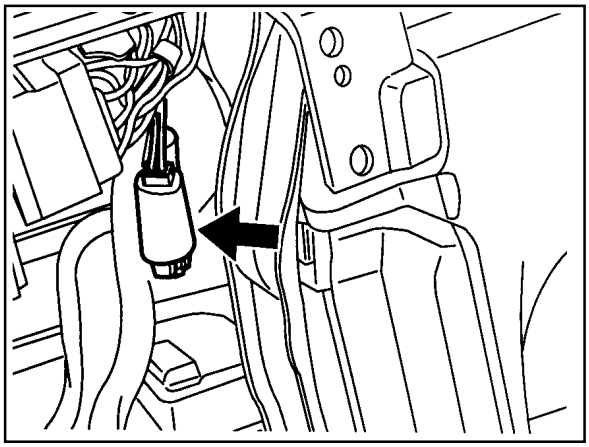

3. Check that measured resistance value among water sensor terminals is as shown in the right side graph.

   Notice

   Measure resistance value by soaking the sensor in the ice water and check changes in resistance values after soaking it in the very hot water.

4. If resistance value is out of specification, replace the water sensor.

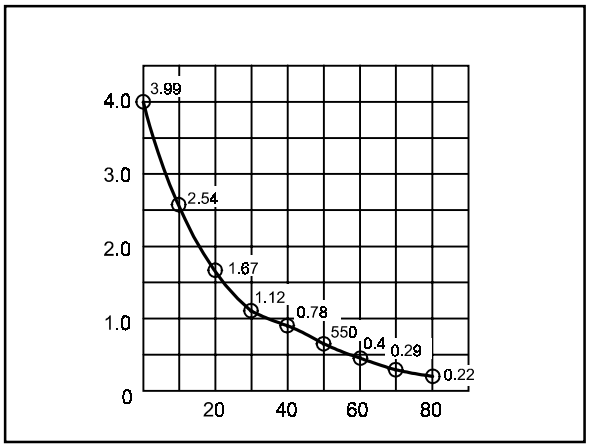

5. Install the sensor and turn the ignition switch to ON position and check that voltage between No. 7a terminal of the water sensor and body (-) is 5V.
6. Check current between the No. 7a and 7b connector terminals of the water sensor and the No. 3 and 5 connector terminals of the airconditioner control unit and repair the wire if defective.

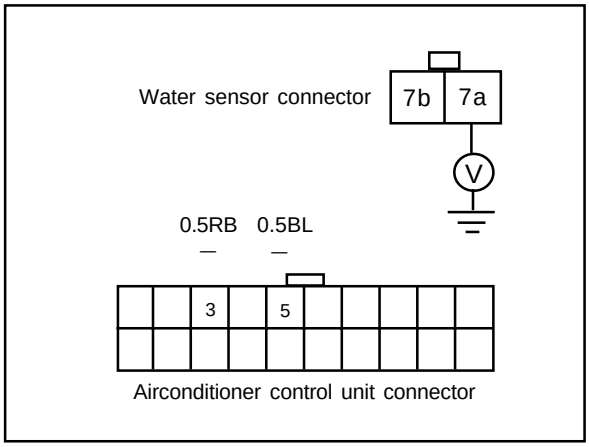

Downloaded from www.Manualslib.com manuals search engine

Sun load Sensor

Sun load sensor is a photo diode that detects lights. Resistance of diode can be measured as current by using multimeter according to increasing sun loads.

1. Check current on the circuits between the sun load sensor and the airconditioner control unit.

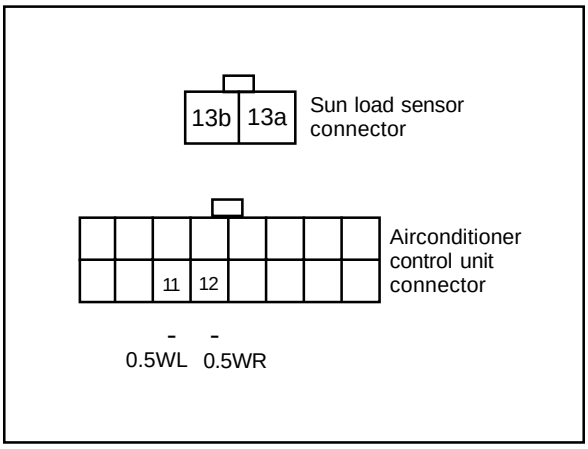

2. Turn the ignition switch to ON position and check that voltage between No. 13a terminal of the sun load sensor and vehicle ground is 5V.

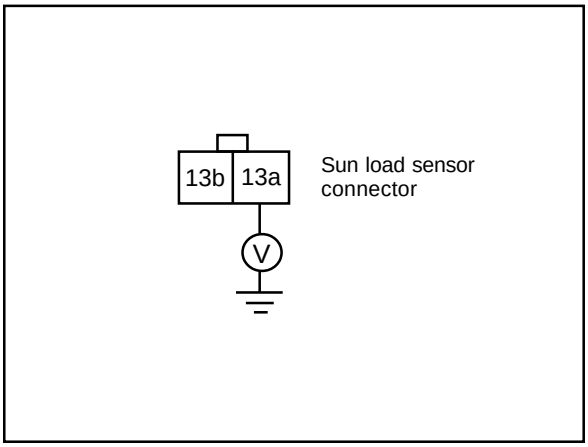

3. Measure current between No. 13a terminal of the sun load sensor and No. 11 terminal of the control unit and check it is as shown in the below graph.
4. If current value is out of specification, replace the sun load sensor.

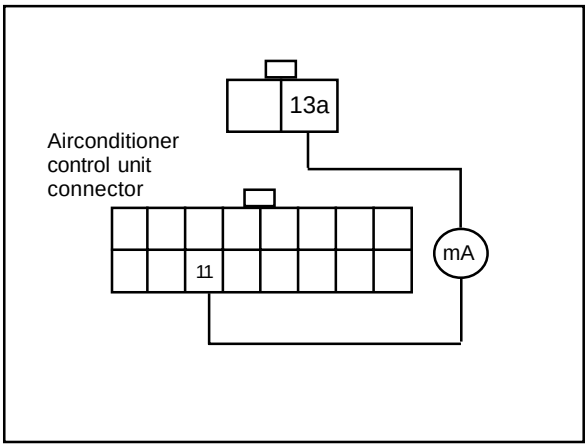

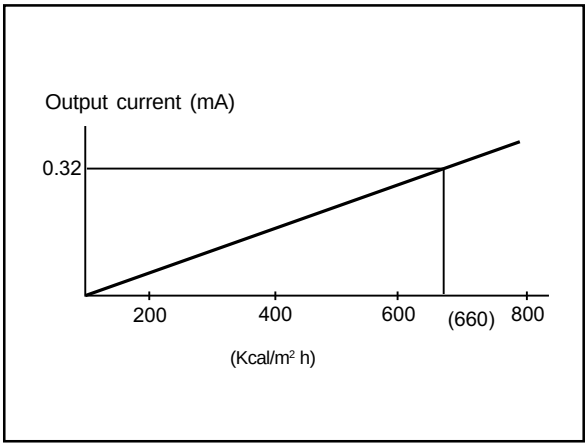

Downloaded from www.Manualslib.com manuals search engine

Fault : intake (recirculation/fresh air) door inoperative

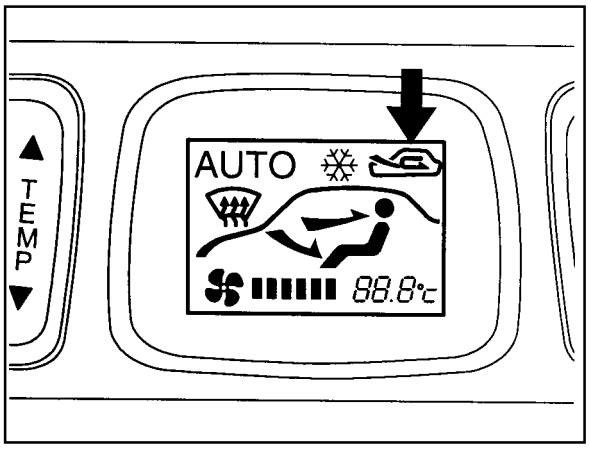

Remove the glove box.

Disconnect 3-pin connector of the intake mode actuator and turn the ignition switch to ON position.

Measure voltage between 6c terminal positive pole (+) and body (-).

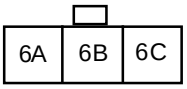

Wiring side connector

Measured voltage is 12V. — No → Check No. 24 fuse (15A) in the box.

Yes

Turn the ignitin switch OFF and disconnect harness of the intake actuator.

Check that it operates toward each direction after connecting the battery to the 6C terminal of intake actuator and ground 6A & 6B to the body.

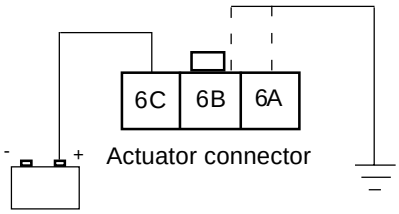

Intake actuator is normal. — No → Repair and replace the intake actuator.

Check intake actuator linkage and door for proper operation and repair if necessary.

Yes

Disconnect 20-pin connector from the airconditioner control unit.

Check current between the intake actuator (6A, 6B) and the airconditioner control unit (6,7).

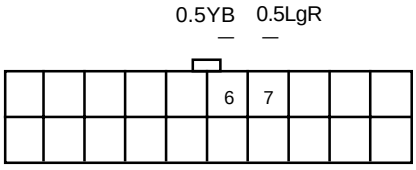

Is there current? — No → Repair open wire between the intake actuator and the control unit.

Yes

Replace the good control unit and re-check. If no fault, replace the control panel.

Downloaded from www.Manualslib.com manuals search engine

Fault : air flow does not change toward panel side.

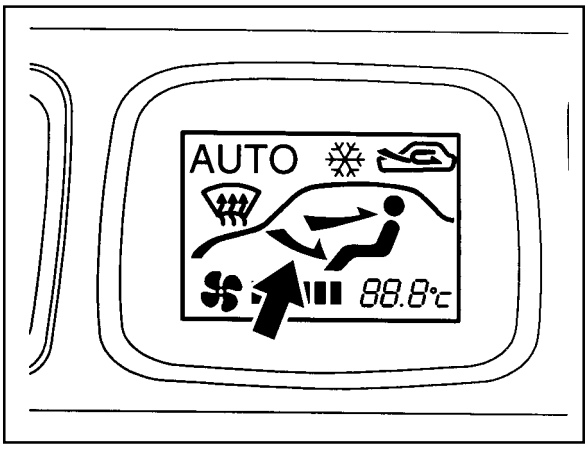

Remove the center panel of the instrument panel.

Disconnect 8-pin connector of the mode actuator and turn the ignition switch to ON position.

Measure voltage between 8I terminal positive pole (+) and body (-).

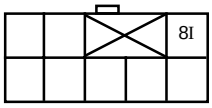

Wiring side connector

Measured voltage is 12V.

No → Check No. 24 fuse (15A) in the fuse box.

Yes

Turn the ignition switch OFF and disconnect harness of the mode actuator.

Check that it operates toward each directions when ground is connected to terminal (8J, 8H, 8F, 8D, 8B) of the mode actuator alternatively.

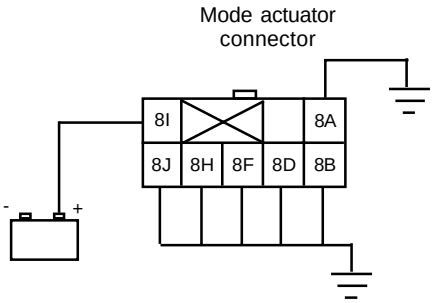

Mode actuator is normal.

No → Repair and replace the mode actuator.

Check the intake actuator linkage and door for proper operation and repair if necessary.

Yes

Disconnect 20-pin connector from the airconditioner control unit.

Check current between the mode actuator (8J, 8H, 8F, 8D, 8B) and the airconditioner control unit (11, 12, 13, 14, 15).

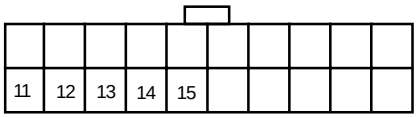

Control unit connector

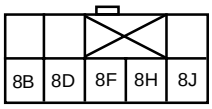

Mode actuator connector

Is there current?

No → Repair open wire between the mode actuator and the control unit.

Yes

Replace the good control unit and re-check. If no fault, replace the control panel.

Downloaded from www.Manualslib.com manuals search engine

SECTION 8A

SEAT BELTS

Caution: Disconnect the negative battery cable before removing or installing any electrical unit or when a tool or equipment could easily come in contact with exposed electrical terminals. Disconnecting this cable will help prevent personal injury and damage to the vehicle. The ignition must also be in LOCK unless otherwise noted.

TABLE OF CONTENTS

Specifications 8A-1
Fastener Tightening Specifications 8A-1
Component Locator 8A-2
Front Seat Belt 8A-2
Rear Seat Belt 8A-3
General Description and System Operation 8A-4
Driver Seat Belt Warning 8A-4
Operation and Functional Checks 8A-4

SPECIFICATIONS

FASTENER TIGHTENING SPECIFICATIONS

Application	N●m
Anchor Bolt	35 - 55

Downloaded from www.Manualslib.com manuals search engine

COMPONENT LOCATOR

FRONT SEAT BELT

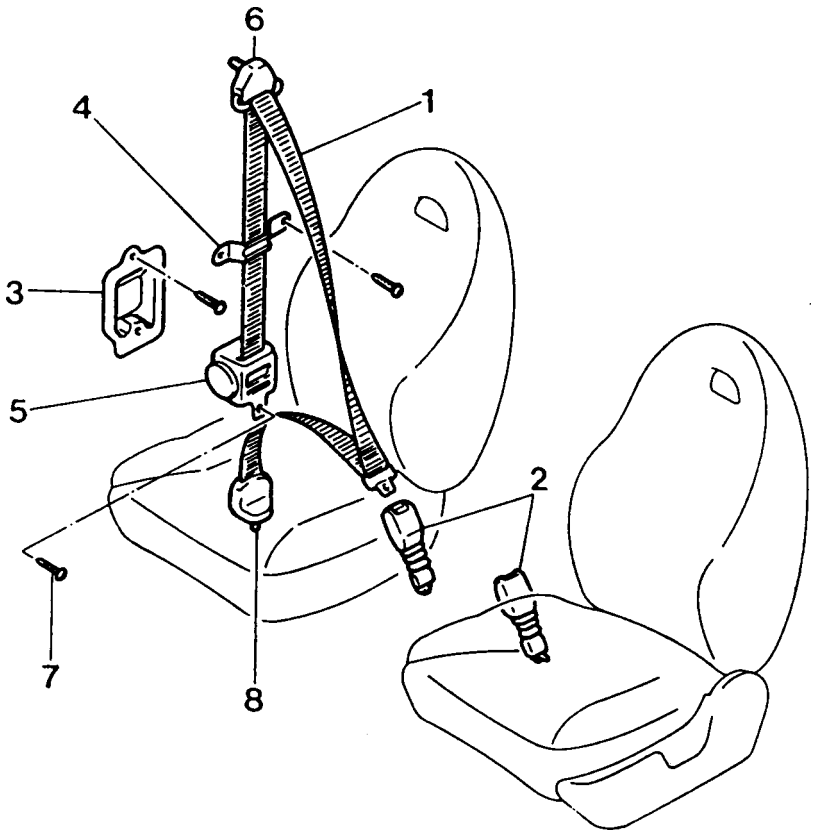

1 Seat Belt Assembly (3-Point)
2 Buckle Assembly
3 Seat Belt Dust Cover
4 Seat Belt Webbing Guide
5 Seat Belt Reel Assembly
6 Anchor Bolt ..... 35-55 Nm
7 Anchor Bolt ..... 35-55 Nm
8 Anchor Bolt ..... 35-55 Nm

Downloaded from www.Manualslib.com manuals search engine

REAR SEAT BELT

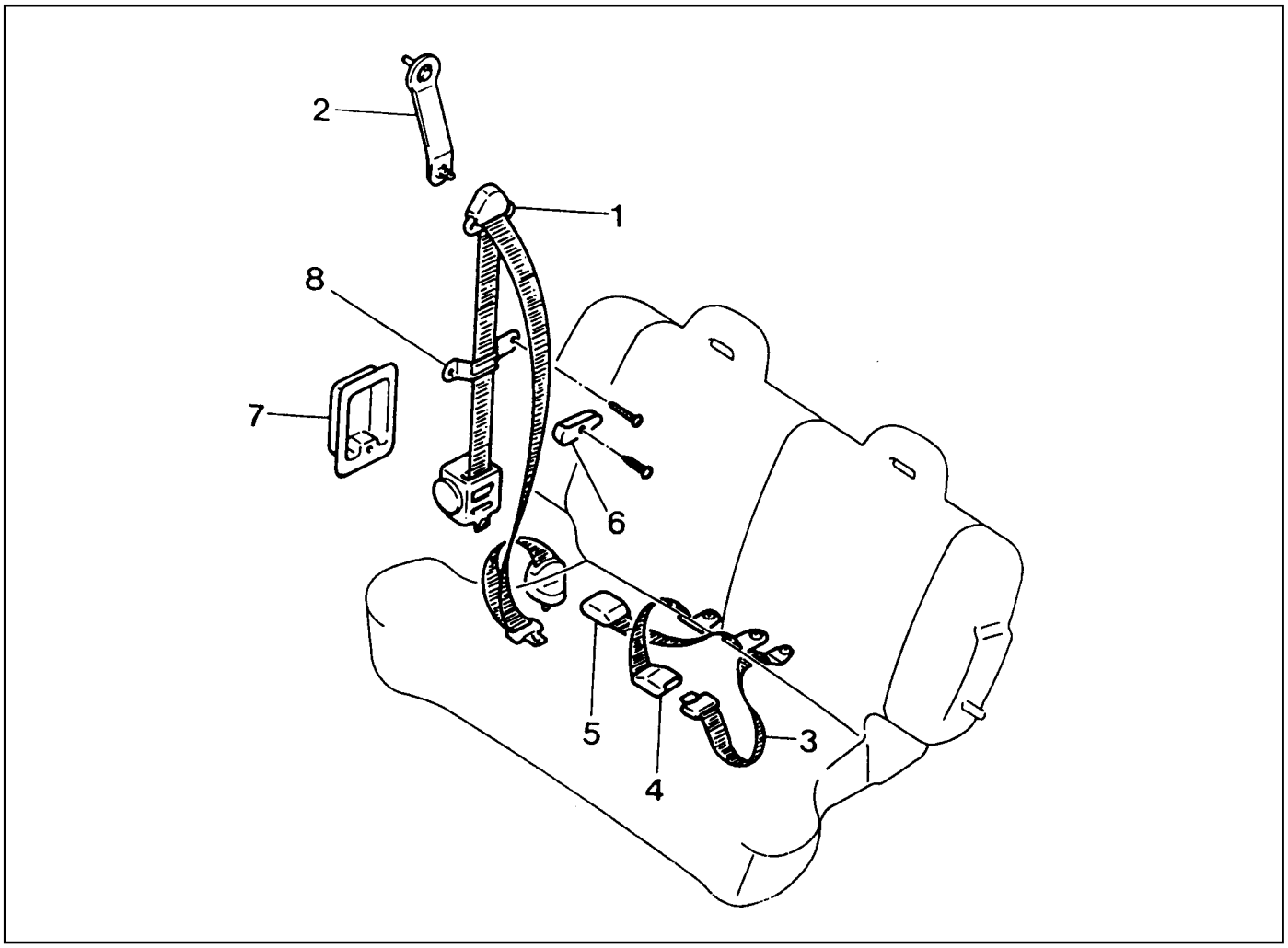

1 Seat Belt Assembly (3-point)
2 Seat Belt Stalk Plate Assembly
3 Seat Belt Assembly (2-Point)
4 Webbing Buckle Assembly (Center)
5 Webbing Buckle Assembly (Rear)
6 Webbing Hanger
7 Seat Belt Dust Cover
8 Webbing Guide

Downloaded from www.Manualslib.com manuals search engine

GENERAL DESCRIPTION AND SYSTEM OPERATION

DRIVER SEAT BELT WARNING

The driver's safety belt incorporates a safety belt reminder light in the instment cluster remind the driver if the safety belt is not fastened when the ignition is turnd ON.

OPERATION AND FUNCTIONAL CHECKS

Caution:

- **Keep sharp objects and potentially damaging objects away from the seat belts.**
- **Avoid bending or damaging any portion of the buckle or the latch plate.**
- **Do not bleach or dye the belt webbing. Use only mild soap and water in order to clean the belts.**
- **When installing the seat belt anchor bolts and the screws, start the bolts and screws by hand in order to prevent crossthreading.**
- **Do not attempt any repairs on the retractor mechsemblies with new assemblies.**
- **Replace any belts that are cut r damaged in any way.**

1. Inspect all saet belt anchor bolts and the screw in order to verify that they are secure.
2. Inspect the seat belt buckle. The buckle must lock and unlock easily.
3. After inserting the latch into the buckle, tug sharply on the belt. The buckle must remain locked.
4. Fully extend the shoulder belt portion to make sure that there is no twisting or tears in the belt.
5. Let the shoulder belt retract fully. The belt should retract easily.

Downloaded from www.Manualslib.com manuals search engine

SECTION 8B

SUPPLEMENTAL RESTRAINT SYSTEM (SRS)

Caution: Disconnect the negative battery cable before removing or installing any electrical unit or when a tool or equipment could easily come in contact with exposed electrical terminals. Disconnecting this cable will help prevent personal injury and damage to the vehicle. The ignition must also be in LOCK unless otherwise noted.

TABLE OF CONTENTS

Specifications 8B-1
General Specifications 8B-1
Cautions 8B-2
Function Description 8B-3
Diagnosis 8B-6
Description 8B-6
Self Diagnosis 8B-9
Circuit Diagram 8B-15
Air Bag Diagram 8B-16
Maintenance and Repair 8B-17
On-Vehicle Service 8B-17
Air Bag Module 8B-17
Clock Spring 8B-18
Air Bag Control Unit (AC4) 8B-20
General Description and System Operation 8B-21
Introduction 8B-21
Caution 8B-21

SPECIFICATIONS

GENERAL SPECIFICATIONS

Application	Description
Air bag System Deployment Time	< 20ms
Detection Time	< 5ms
Operating Temperature	-40°C - +85°C
Storage Temperature	-40°C - +90°C
Air Bag Replacement Interval	Every 10-year after installation
Voltage Range	9-16V
Current Consumption	5ms after ignition switch ON < 1A, 5ms - 5sec. <300mA, after 5sec. < 100mA
Acceleration Range	+/-50g
Max. Acceleration	+/-600g pulse
Voltage Ramp	0.5 - 2.0 V/s
Energy Reservation	150ms after battery disconnection
Inflator Ignition Energy	4.3mJ
Squib Resistance	2.15 ± 0.35 W
Air Bag Warning Lamp ON Time (When Ignition ON)	6 sec.

Downloaded from www.Manualslib.com manuals search engine

CAUTIONS

Failure to follow the correct service procedure can cause air bag damage or personal injury due to unexpected air bag deployment. Before service (removal and installation of part, check for replacement), please be weal noticed of following items for your correct service.

1. For service, turn the ignition switch to 'LOCK' position and wait for 30 seconds after disconnecting the negative battery cable.
2. If the vehicle collapsed, remove the air bag ECU first to reserve the crash records.
3, Never use other vehicles' air bag components and replace with specified new part.
4. Never disassemble or repair the air bag module, air bag unit and wiring harness to re-use.
5. Replace the air bag module and air bag unit with new if it dropped, cracked or damaged.
6. Only qualified technicians in service shop should check or repair the air bag,
7. Before service, should be well noticed of warning labels on the vehicle.

A. Sun Visor Side

[Warning]

Pull down the sun visor and see SRS air bag warning lamp on the head lining.

B. Head Lining

[Warning]

1 . This vehicle is equipped with air bag. Air bag is supplemental device for the seatbelt. Fasten your seatbelt.
2. This air bag should be replaced by authorized supplier within replacement intervals.
3. When the ignition key is turned to ON position, SRS warning lamp will turn on for 6 sec. and go off. In this case, the system is normal.
   For the following cases, see service manual.
   - SRS warning lamp does not turn on.
   - SRS warning lamp does not go off.
   - SRS warning lamp continues to blink.

C. Steering Wheel Body Inner

[Warning]

Before removing the steering wheel, read service manual first. Set the front wheels straight forward and align the center position marks of SRS clock spring. Improper removal or installation of the steering wheel can damage the SRS components.

D. Engine Compartment

[Warning]

This vehicle Ss equipped with air bag. Before checking the engine compartment, read service manual first. Faultuy check and service can cause SRS air bag deployment and system defects that can be led to severe damage.

E. Battery Cable

[Warning]

Before disconnecting the battery power, read service manual first.

Downloaded from www.Manualslib.com manuals search engine

FUNCTION DESCRIPTION

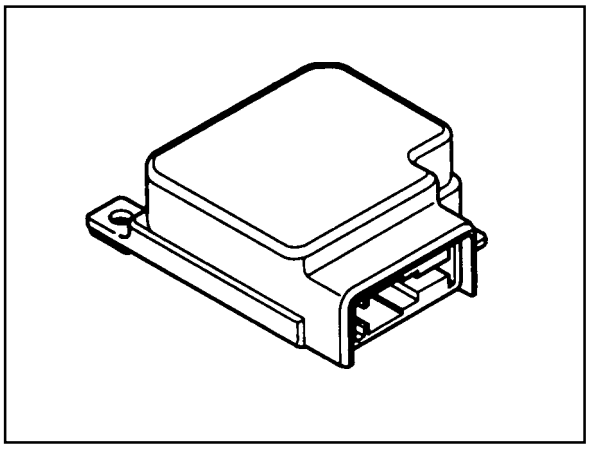

Air Bag Control Unit (AC4)

Air bag control unit (AC4) is installed on the center portion of the front floor tunnel.

It is a central control unit that control all functions and determines whether deploy the air bag or not with the collision signal from the built-in accelerometer sensor and has function of diagnosing system defects.

Internal air bag control unit is consisted as follows;

- Microprocessor
- ASICs (Upper side ASIC & lower side ASIC)
- Accelerometer sensor
- Arming sensor
- System energy backup condenser
- Squib energy backup condenser

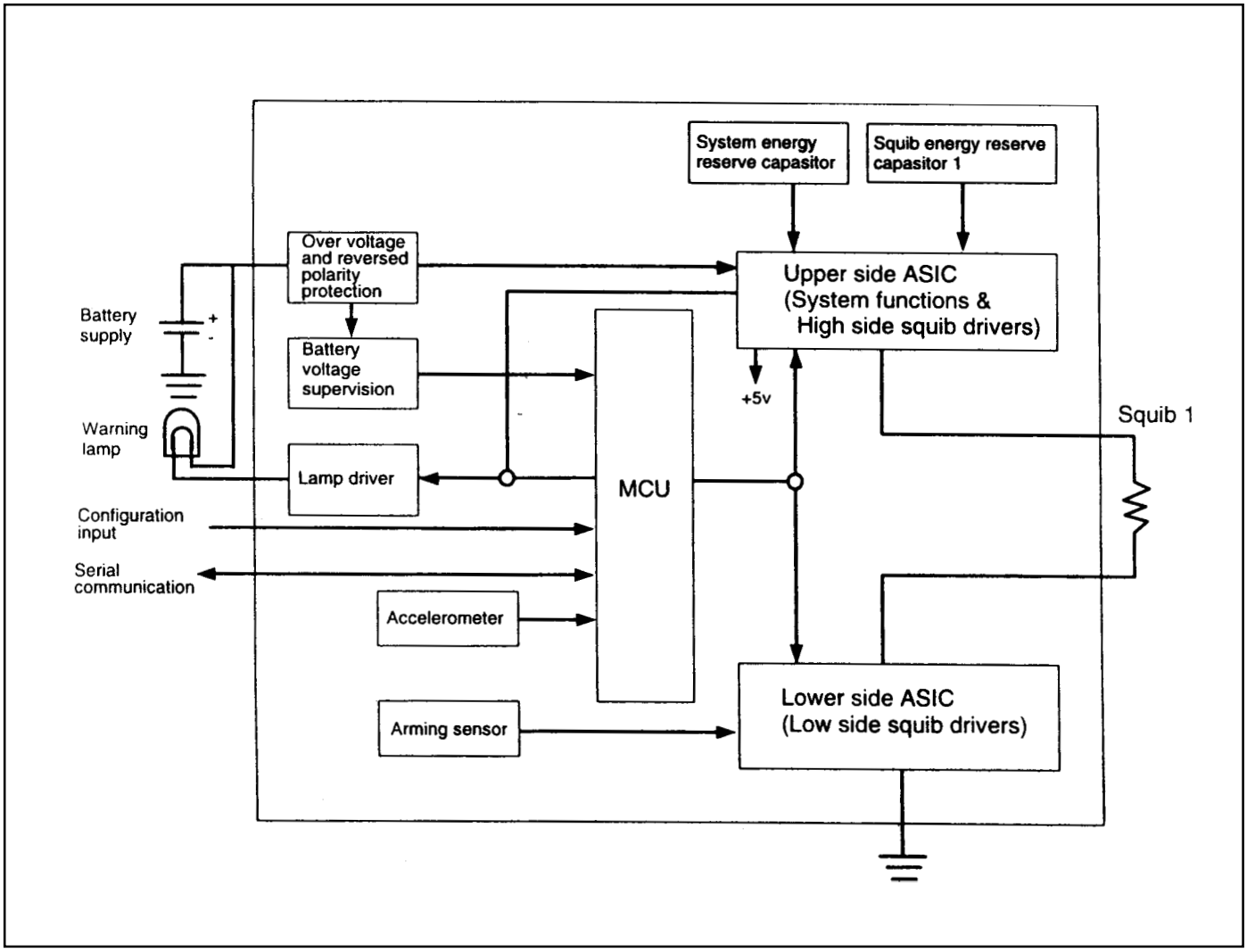

Downloaded from www.Manualslib.com manuals search engine

Input & Output Function

Electronic air bag control and diagnosis module is connected by full 30-pin connectors.

Input : ground

Output : 1 squib line, warning lamp

Input/output : communication, diagnosis

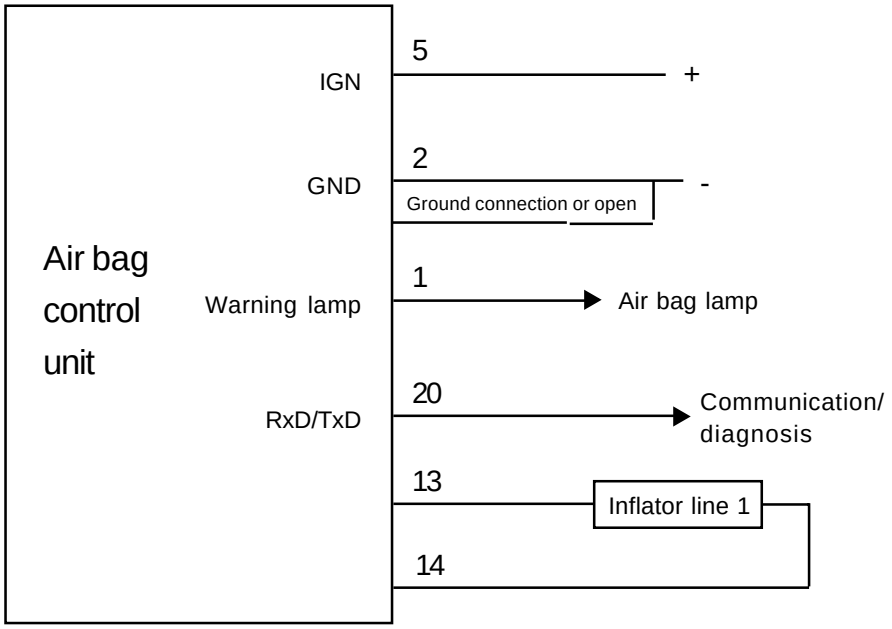

Connector Pins

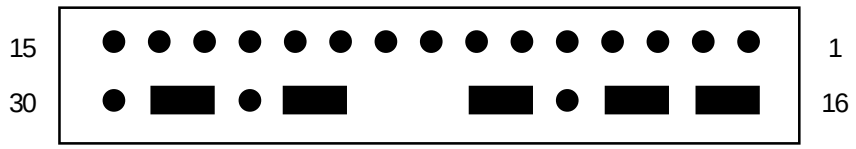

1	Lamp	16	Shorting Bar
2	Ground	17	Shorting Bar
3	N/A	18	Shorting Bar
4	N/A	19	Shorting Bar
5	Ignition	20	Diagnosis
6	N/A	21	Shorting Bar
7	N/A	22	Shorting Bar
8	CONF	23	No Pin
9	N/A	24	No Pin
10	N/A	25	Shorting Bar
11	N/A	26	Shorting Bar
12	N/A	27	N/A
13	Squib Line 1(upper)	28	Shorting Bar
14	Squib Line 1(lower)	29	Shorting Bar
15	N/A	30	N/A

Downloaded from www.Manualslib.com manuals search engine

Air Bag Module

Air bag module is installed in the pad of steering wheel center and inflator is consisted of igniter, explosives, gas generating material and bag. When crashed, the air bag control unit sends current to the air bag module through squib line and this current ignites as ignition energy (6mJ) momentarily igniting explosives and bag will be inflated by nitrogen gas protecting driver at the same and then deflates.

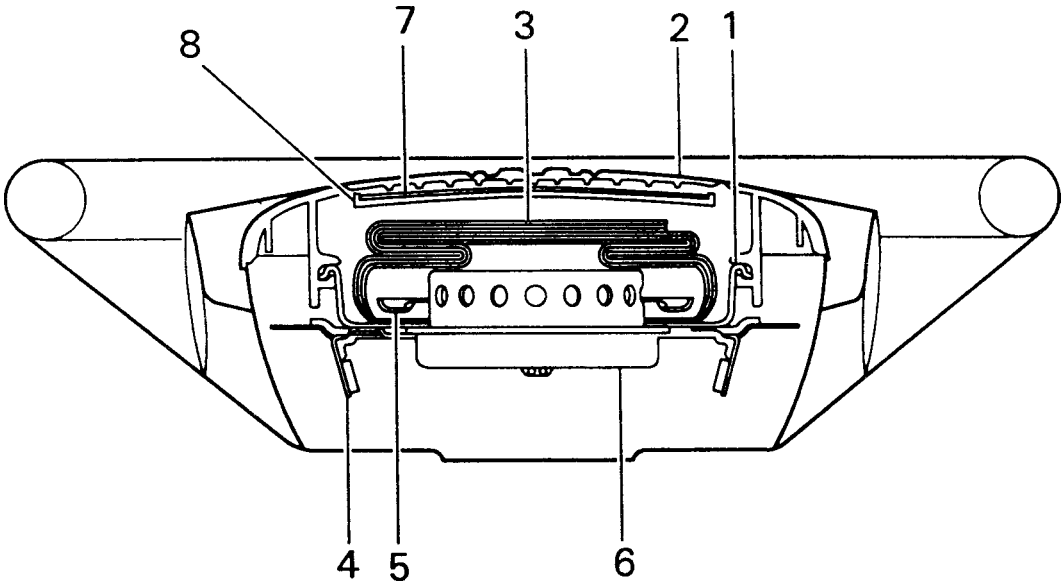

1 Air bag Module
2 Module Housing
3 Bag
4 Module Bracket
5 Retainer Ring
6 Inflator
7 Horn Switch
8 Backing Plate

Downloaded from www.Manualslib.com manuals search engine

DIAGNOSIS

DESCRIPTION

Air bag control unit continuously controls system function as follows during ignition ON or driving.

- Recognition of collision
- Internal diagnosis
- External diagnosis

If recognize or detect defects, warning lamp will turn on. If there is danger of improper deployment, the system will enter overall shutdown status and the air bag will not inflate.

Air bag control unit will store detected internal and external defects in the EEPROM.

System Control

Battery Voltage Check

Battery voltage will be monitored continuously. If voltage is out of normal operating range, all system diagnosis will stop and warning lamp turn on.

Battery Voltage (V)	Function
< 8.7	System diagnosis stops and warning lamp turns on
9-16	Normal operation range
> 16.3	System diagnosis stops and warning lamp turns on

Squib Diagnosis

It checks not only high (4.50.5) or low (1.40.5) resistance but also short resistance (1- 10k) status between the battery and ground to indicate defects in squib line by blinking warning lamp. Air bag control unit (AC4) can measure squib resistance.

Warning Lamp Turning On

Air bag control unit detects system defects during ignition ON or driving and displays following 2 warning lamps.

- Warning lamp ON: internal defects of the air bag control unit
- Warning lamp blinking: higher resistance than standard in the squib line or short at the battery or ground,

Safety Function Check

It checks defects during operation of the arming sensor If the sensor is shorted for more than 2 seconds, the module will enter overall shutdown mode.

Temperature Sensor

Function of the temperature sensor will be monitored continuously. If there is fault due to defective sensor or short, the lamp will turn on and program will take calibration temperature (25) of collision conditions.

Power Supply

Airbag control unit operates in 9-16V and the characteristic of the system has backup condenser to supply the power for max.150ms if there is power defect during collision.

Downloaded from www.Manualslib.com manuals search engine

Energy Reserve System

Energy reserve system is consisted of condensor and energy switch and will check following items continuously during system operation.

- High voltage
- Low voltage
- Low rating capacity
- Function of the energy reserve switch

If there is fault in the energy reserve system, warning lamp will turn on. And defects are found by continuous checking of the condenser voltage, the system will enter overall shutdown status for safety reason.

Shutdown Switch

There is 1 energy shutdown switch in the system and it will be checked during start-up. And it also checks that condenser is discharging properly. If shutdown switch is short, it will be detected during condensor voltage test.

If squib line fault is obvious, the warning lamp will turn on and the module will enter overall shutdown status.

Accelerometer Check

Accelerometer function will be checked during start-up. During operation, accelerometer off-set signal will be checked, If there is fault, module will enter overall shutdown status.

ASIC Overheat

Module monitors upper side ASIC overheats continuously. If overheated, the module will enter overall shutdown status.

Microprocessor Fault

Module checks EEPROM, ROM checksum and RAM during start-up. EEPROM tests checksum operation.

If RAM or ROM checksum is defective, module will not allow start-up continuously but will be re-set,

If EEPROM is defective, warning lamp will turn on and the module will enter overall shutdown status.

During operation, RAM will continuously verify the proper operation of temporary memory program data usage. If there is fault, the module will enter overall shutdown status and the warning lamp will turn on.

Watchdog Test

Watchdog function will be tested in start-up. If there is fault during the test, warning lamp will turn on and the module will enter overall shutdown status.

Downloaded from www.Manualslib.com manuals search engine

Diagnosis

Air bag control unit diagnoses each function in the intervals of 250ms - 20 sec. during start-up or driving to prevent unwanted air bag deployment. If there is defect, it turns on or blinks warning lamp to indicate defects in the air bag system to the driver. And fatal defect is found, air bag control unit enters overall or partial shutdown status and fault code will be stored.

Air bag control unit diagnoses following items.

Diagnosis Condition	Diagnosis Items
Start-up (ignition ON)	- Ignition TR - Acceleration - Microprocessor, RAM and ROM - Watchdog - Shutdown Switch
During Driving	- Squib resistance - Squib line short to battery and ground - Energy reserve system - Lamp output - Battery voltage - ASIC communication - Arming sensor - ASIC overheating - RAM and W/D - EEPROM

Lamp Blinking Mode

There are 2 kinds of blinking mode

1. When system internal fault is found, the lamp will stay on.
2. The lamp will blink according to external fault and there are 2 blinking codes.

Blinking code 1 (Squib resistance fault in the driver's air bag squib line)

Blinking code 2 (Squib short on plus and minus in the air bag squib line)

Lamp blinking code is as follows. The last blinking will be within 0.5 sec. and 1 cycle of blinking will be repeated every 5 seconds.

Blinking Code 1

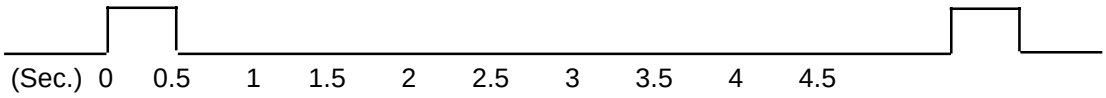

Blinking Code 3

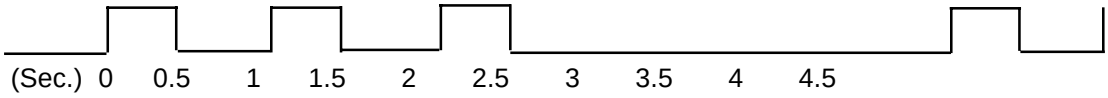

Downloaded from www.Manualslib.com manuals search engine

SELF DIAGNOSIS

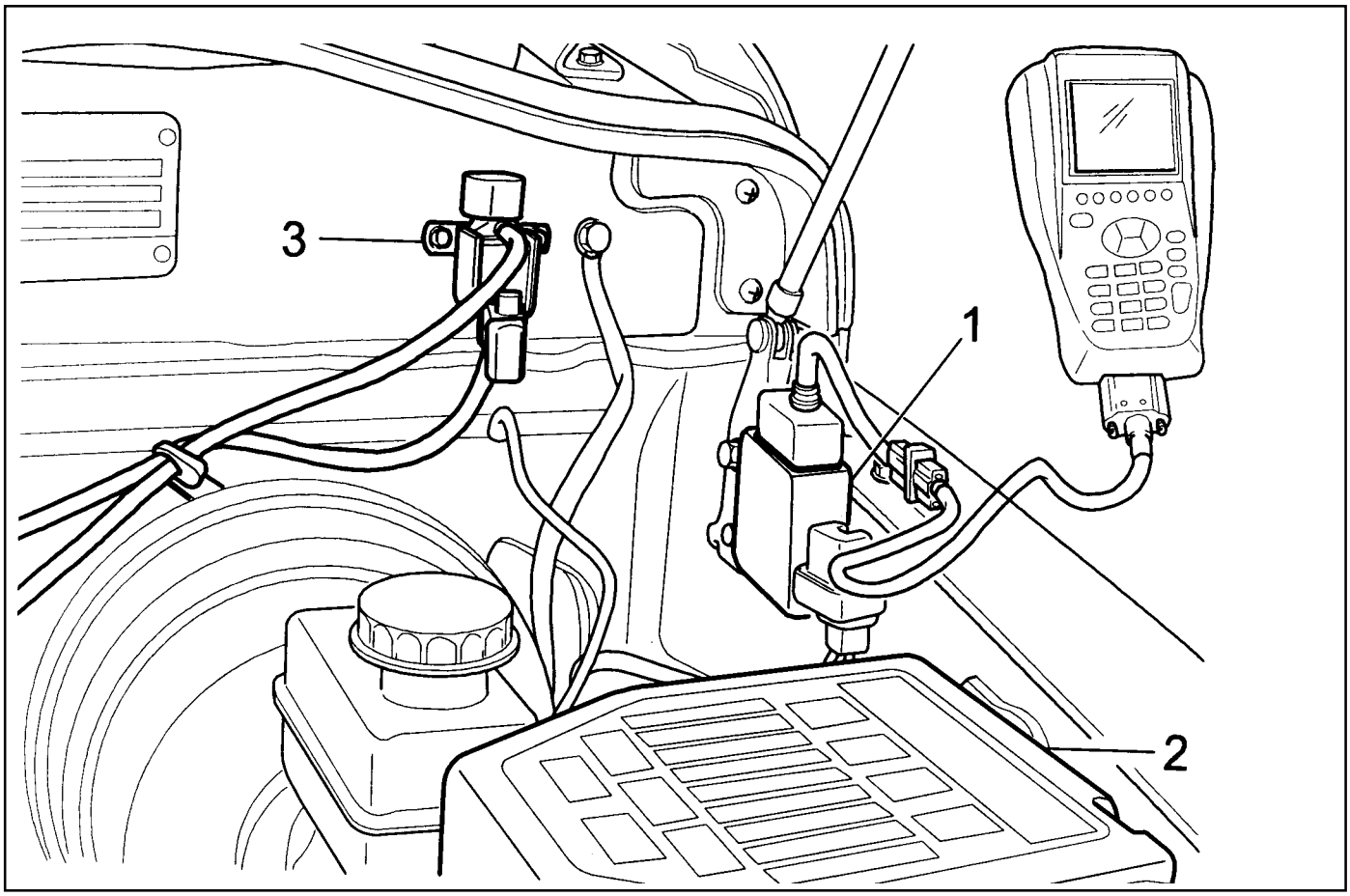

1 Diagnosis Connector
2 Fuse Box
3 Solenoid Valve

1. Position the ignition switch to 'OFF'.
2. Connect the harness connector of scanner to the diagnosis socket in engine compartment.
3. Turn the ignition switch to 'ON' position.
4. Select "Electronic control vehicle diagnosis" from function selection display and press 'Enter'.
5. Select "Korando ('98 model year)" from vehicle model selection display and press 'Enter'.
6. Select "Electronic air bag" from control system selection display and press 'Enter'.
7. Select "Self-diagnosis" from diagnosis item selection display.

   Notice

   Check sensor value of output display, if necessary.
8. Determine the fault code and trace defective component.

   Notice

   Refer to self-diagnosis list.

Downloaded from www.Manualslib.com manuals search engine

Self-Diagnosis List

Fault Code	Defects	Service Hint	Application
01	Driver's squib (+) side No. 1	● Short of (+) side No. 1 in the driver's squib circuit. ● Check connection of connector. ● Check the ECU.	○
02	Driver's squib (+) side No. 2	● Short of (+) side No. 2 in the driver's squib circuit. ● Check connection of connector. ● Check the ECU.	X
03	Driver's squib (+) side No. 3	● Short of (+) side No. 3 in the driver's squib circuit. ● Check connection of connector. ● Check the ECU.	X
04	Driver's squib (+) side No. 4		X
05	Driver's squib ground (-) side No. 1	● Short of ground side No. 1 in the driver's squib circuit. ● Check and replace the ECU.	○
06	Driver's squib ground (-) side No. 2	● Short of ground side No. 2 in the driver's squib circuit. ● Check and replace the ECU.	X
07	Driver's squib ground (-) side No. 3	● Short of ground side No. 3 in the driver's squib circuit. ● Check and replace the ECU.	X
08	Driver's squib ground (-) side No. 4	● Short of ground side No. 4 in the driver's squib circuit. ● Check and replace the ECU.	X
09	Energy shutdown switch No. 1	● Air bag control unit internal defects. ● Check and replace the ECU.	○
10	Energy shutdown switch No. 2	● Air bag control unit internal defects. ● Check and replace the ECU.	X
11	Energy shutdown switch No. 3	● Air bag control unit internal defects. ● Check and replace the ECU.	X
12	Energy shutdown switch No. 4	● Air bag control unit internal defects. ● Check and replace the ECU.	X
13	Ignition switch wire No. 1	● Air bag control unit internal defects. ● Check and replace the ECU.	○
14	Ignition switch wire No. 2	● Air bag control unit internal defects. ● Check and replace the ECU.	X
15	Ignition switch wire No. 3	● Air bag control unit internal defects. ● Check and replace the ECU.	X
16	Ignition switch wire No. 4	● Air bag control unit internal defects. ● Check and replace the ECU.	X

Downloaded from www.Manualslib.com manuals search engine

Fault Code	Defects	Service Hint	Application
17	Squib No. 1 resistance	● Driver's squib resistance is higher than standard (4.5±0.5W). ● Check related circuits for open/short. ● Check connection of connector. ● Check the ECU. ● Replace the squib wire. ● Plus side short : 7k, ground side short : 6kW.	○
18	Squib No. 2 resistance	● Driver's squib resistance is higher than standard (4.5±0.5W). ● Check related circuits for open/short. ● Check connection of connector. ● Check the ECU. ● Replace the squib wire. ● Plus side short : 7k, ground side short : 6kW.	X
19	Squib No. 3 resistance	● Driver's squib resistance is higher than standard (4.5±0.5W). ● Check related circuits for open/short. ● Check connection of connector. ● Check the ECU. ● Replace the squib wire. ● Plus side short : 7k, ground side short : 6kW.	X
20	Squib No. 4 resistance	● Driver's squib resistance is higher than standard (4.5±0.5W). ● Check related circuits for open/short. ● Check connection of connector. ● Check the ECU. ● Replace the squib wire. ● Plus side short : 7k, ground side short : 6kW.	X
21	Squib No. 1 resistance	● Driver's squib resistance is lower than standard (1.4±0.3W). ● Check related circuits for open/short. ● Check connection of connector. ● Check the ECU. ● Replace the squib wire. ● Plus side short : 7k, ground side short : 6kW.	○
22	Squib No. 2 resistance	● Driver's squib resistance is lower than standard (1.4±0.3W). ● Check related circuits for open/short. ● Check connection of connector. ● Check the ECU. ● Replace the squib wire. ● Plus side short : 7k, ground side short : 6kW.	X
23	Squib No. 3 resistance	● Driver's squib resistance is lower than standard (1.4±0.3W). ● Check related circuits for open/short. ● Check connection of connector. ● Check the ECU. ● Replace the squib wire. ● Plus side short : 7k, ground side short : 6kW.	X

Downloaded from www.Manualslib.com manuals search engine

Fault Code	Defects	Service Hint	Application
24	Squib No. 4 resistance	● Driver's squib resistance is lower than standard (1.4±0.3W). ● Check related circuits for open/short. ● Check connection of connector. ● Check the ECU. ● Replace the squib wire. ● Plus side short : 7k, ground side short : 6kW.	X
25	Energy reserve No. 1 voltage	● Air bag control unit internal defects. ● Check and replace the ECU.	○
26	Energy reserve No. 2 voltage	● Air bag control unit internal defects. ● Check and replace the ECU.	X
27	Energy reserve No. 3 voltage	● Air bag control unit internal defects. ● Check and replace the ECU.	X
28	Energy reserve No. 4 voltage	● Air bag control unit internal defects. ● Check and replace the ECU.	X
29	Energy reserve No. 5 voltage	● Air bag control unit internal defects. ● Check and replace the ECU.	○
30	Energy reserve No. 6 voltage	● Air bag control unit internal defects. ● Check and replace the ECU.	○
31	Energy reserve No. 1 current off capacity	● Air bag control unit internal defects. ● Check and replace the ECU.	○
32	Energy reserve No. 2 current off capacity	● Air bag control unit internal defects. ● Check and replace the ECU.	X
33	Energy reserve No. 3 current off capacity	● Air bag control unit internal defects. ● Check and replace the ECU.	X
34	Energy reserve No. 4 current off capacity	● Air bag control unit internal defects. ● Check and replace the ECU.	X
35	Energy reserve No. 5 current off capacity	● Air bag control unit internal defects. ● Check and replace the ECU.	○
36	Condensor voltage	● Air bag control unit internal defects. ● Check and replace the ECU.	○
37	Collision times checksum	● Air bag control unit internal defects. ● Check and replace the ECU.	○
38	Driver's acceleration sensor	● Air bag control unit internal defects. ● Check and replace the ECU.	○
39	Driver's acceleration sensor off-set	● Air bag control unit internal defects. ● Check and replace the ECU.	○
40	Arming sensor	● Air bag control unit internal defects. ● Check and replace the ECU.	○
41	Major USA	● Air bag control unit internal defects. ● Check and replace the ECU.	○

Downloaded from www.Manualslib.com manuals search engine

Fault Code	Defects	Service Hint	Appli-cation
42	Over heat	● Air bag control unit internal defects. ● Check and replace the ECU.	○
43	SENS	● Air bag control unit internal defects. ● Check and replace the ECU.	○
44	Standard band gap	● Air bag control unit internal defects. ● Check and replace the ECU.	○
45	Temperature sensor	● Air bag control unit internal defects. ● Check and replace the ECU.	○
46	Warning lamp	● Open/short in the warning lamp circuit. ● Check related circuits for open/short. ● Check connection of connector. ● Check the ECU.	○
47	Battery voltage	● Power wire voltage is out of standard voltage (9 - 16V). ● Check the battery for voltage and charging. ● Check related circuits for open/short. ● Check connection of connector. ● Check the ECU.	○
49	Fault code list	● Air bag control unit internal defects. ● Check the ECU.	○
50	USA communication	● Air bag control unit internal defects. ● Check and replace the ECU.	○
51	LSA communication	● Air bag control unit internal defects. ● Check and replace the ECU.	○
52	No EEPROM program	● Air bag control unit internal defects. ● Check and replace the ECU.	○
53	EEPROM checksum	● Air bag control unit internal defects. ● Check and replace the ECU.	○
54	EEPROM map	● Air bag control unit internal defects. ● Check and replace the ECU.	○
55	External watchdog 1	● Air bag control unit internal defects. ● Check and replace the ECU.	○
56	Arming sensor-no close	● Air bag control unit internal defects. ● Check and replace the ECU.	○
57	RAM check	● Air bag control unit internal defects. ● Check and replace the ECU.	○
58	System	● Air bag control unit internal defects. ● Check and replace the ECU.	○
59	External watchdog 2	● Air bag control unit internal defects. ● Check and replace the ECU.	○
60	Pulse	● Air bag control unit internal defects. ● Check and replace the ECU.	○

Downloaded from www.Manualslib.com manuals search engine

Fault Code	Defects	Service Hint	Application
127	Collision signal	● Air bag control unit internal defects. ● Check and replace the ECU.	○
128	Collision number	● Air bag control unit internal defects. ● Check and replace the ECU.	○

Downloaded from www.Manualslib.com manuals search engine

CIRCUIT DIAGRAM

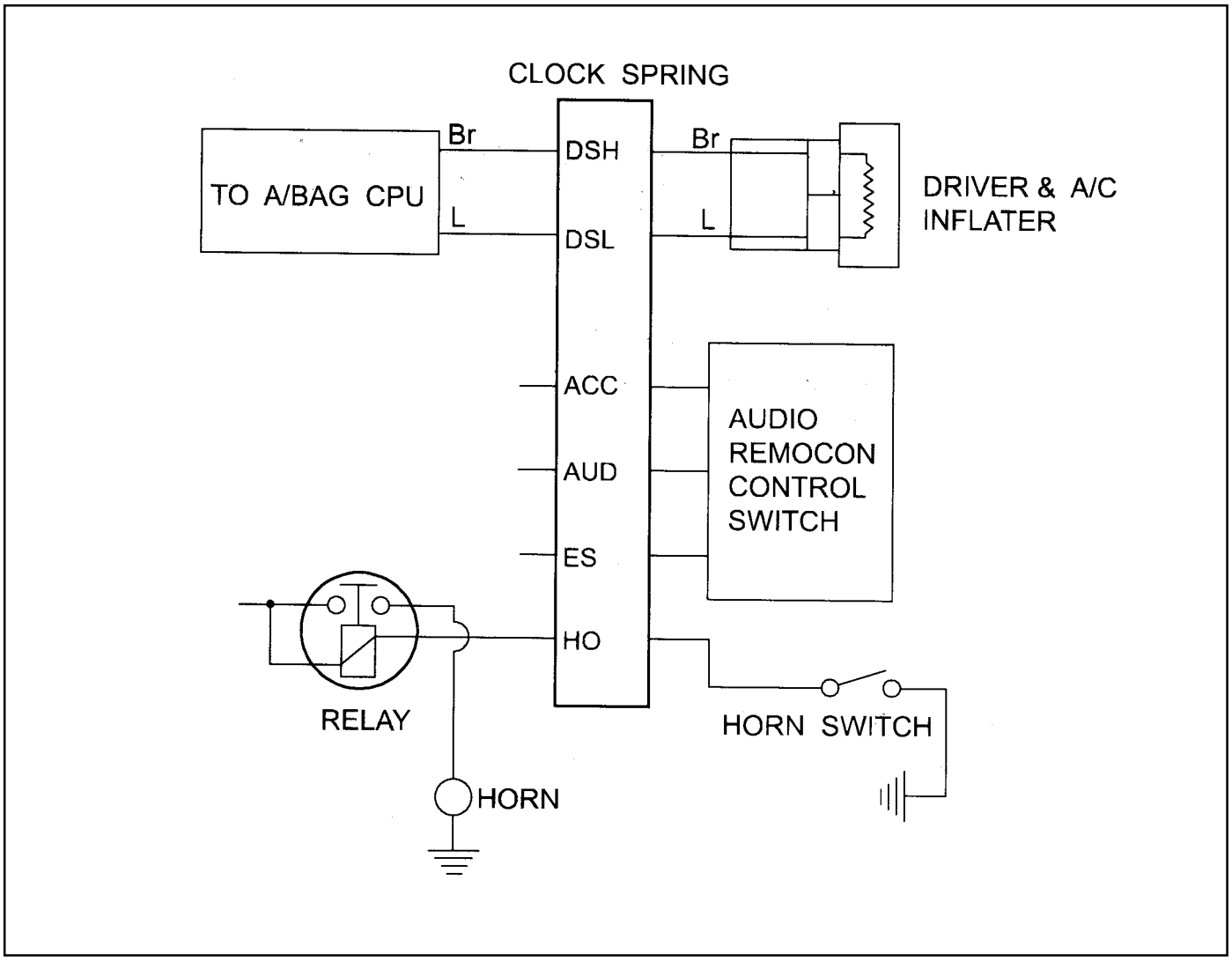

Downloaded from www.Manualslib.com manuals search engine

AIR BAG DIAGRAM

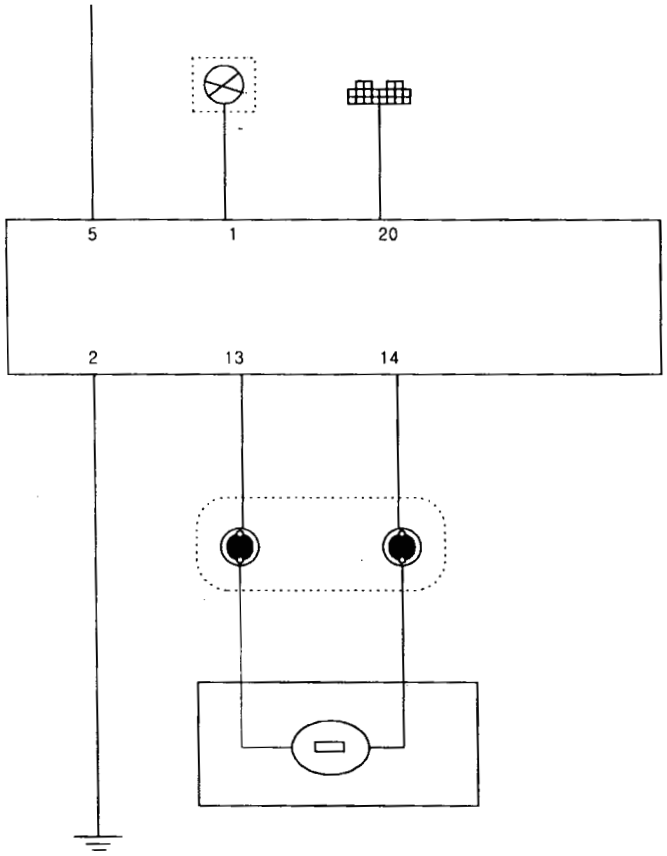

Downloaded from www.Manualslib.com manuals search engine

MAINTENANCE AND REPAIR

ON-VEHICLE SERVICE

AIR BAG MODULE

Removal & Installation Procedure

1. Remove the steering wheel rid (LH,RH) with a screwdriver.

   Installation Notice

   Each position mark (LH,RH) is stamped on the inner surface of the rids.

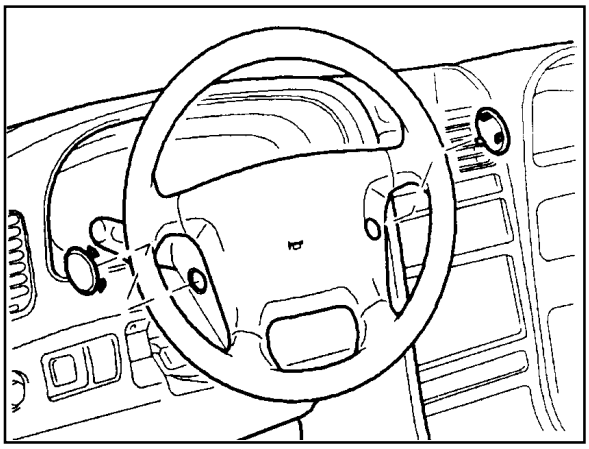

2. Unscrew the bolts from both sides.

   Installation Notice

Tightening Torque	7 - 11 Nm

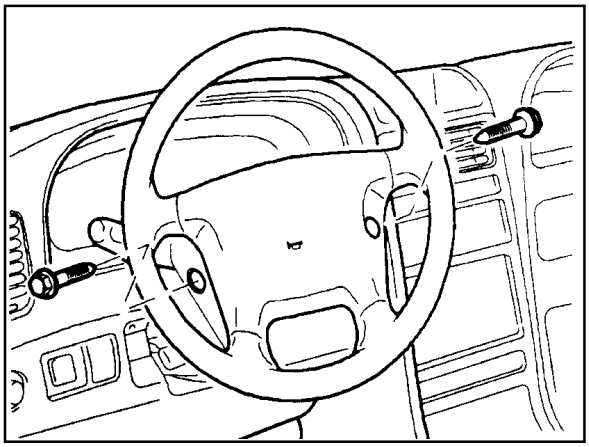

3. Disconnect the connectors and remove the air bag module.
4. Installation should follow the removal procedure in the reverse order.

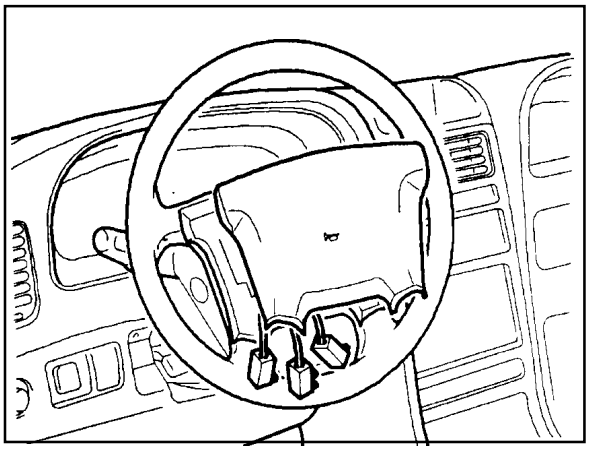

Downloaded from www.Manualslib.com manuals search engine

CLOCK SPRING

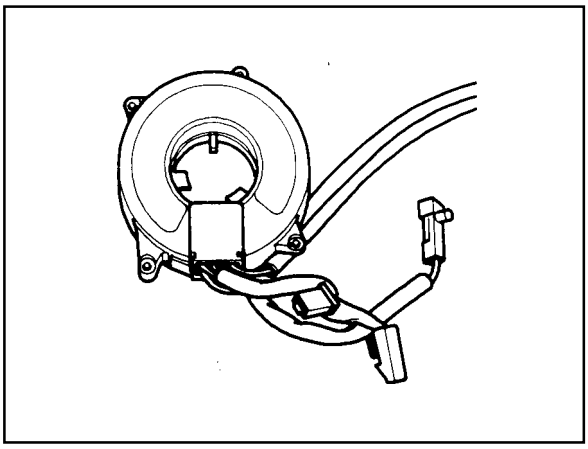

General Specification

Voltage		DC 12V
Rating Operating Voltage		DC 6-18V
Current Rating	Air Bag	10-30mA(6A,0.1second)
	Horn (Relay)	200-220mA
	Remote Control (Electronic Circuit)	15mA
Air Bag Circuit Resistance		0.16-0.38W(-40°C - 85°C)
Isolating Resistance		5MW
Rotating Range		2.7-3.1 Rotation from neutral Position to Both Sides

Notice

- Clock spring can not be repaired.
- Do not disassemble or modify.
- To adjust to the center position, rotate clockwise until it stops and then rotate it counterclockwise 2.3 ± 0.2 revolutions and align marks. If not, airbag system can not work normally and driver can be injured seriously.

Downloaded from www.Manualslib.com manuals search engine

Removal & Installation Procedure

preceding work : removal of steering wheel

1. Turn the ignition switch to “OFF” position and disconnect the battery negative cable. Start the procedure after waiting over 3oseconds.
2. Unscrew 3 screws from lower cover on steering column shaft and remove the lower cover.

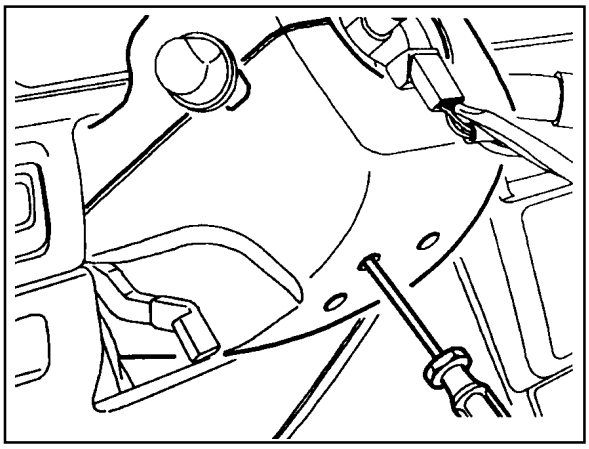

3. Unscrew 4 screws from clock spring and remove the clock spring

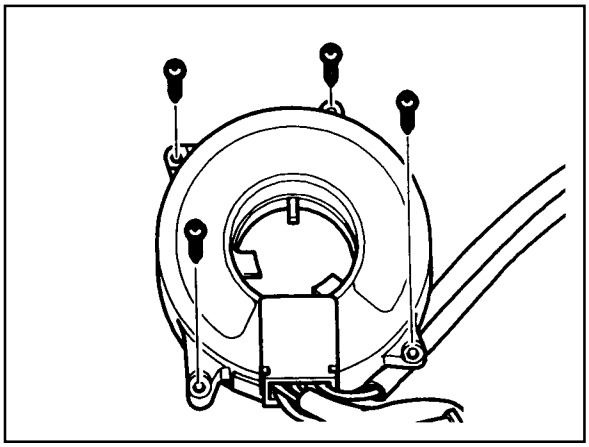

Installation Notice

- Don’t try to repair and modify the clock spring.
- When aligning the neutral position, turn to clockwise until it stops, and turn to counter clockwise until the marks are aligned

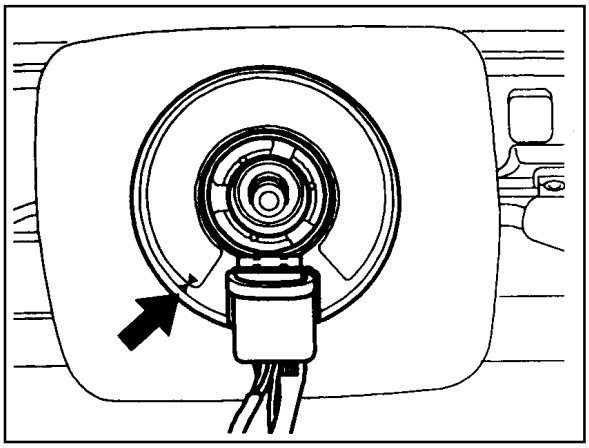

Downloaded from www.Manualslib.com manuals search engine

AIR BAG CONTROL UNIT(AC4)

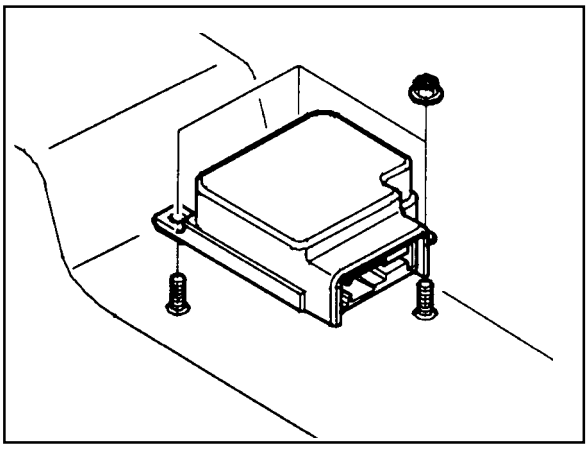

Removal & Installation Procedure

AC4 is installed on the center portion of the front floor tunnel. Built-in accelerometer sensor detects collision and determines action or non-action and ignition time.

Notice

Do not disassemble the AC4 to repair. If defective, replace it. AC4 should not be shocked or vibrated by dropping on the ground or bumping.

Replace the AC4 with new after air bag inflation.

1. Disconnect the negative battery cable and wait for 30 seconds before starting service.

   Notice

   Though battery cable is disconnected, air bag control unit will maintain backup power for 150ms and air bag can be inflated, so wait for min.30 seconds.
2. Remove the console box and center fascia panel assembly.
3. Remove the heater control switch and audio assembly.
4. Remove the lower side panel of the driver's portion and glove box.
5. Remove the lower main panel.
6. Release the lock lever of the AC4 connector and disconnect the connector.
7. Unscrew 3 nuts and remove the AC4.

   Notice

   For installation, horizontal position should be secured for the better changes of collision pulse between the vehicle body and air bag control unit.
8. Installation should follow the removal procedure in the reverse order.

Inspection Procedure

1. Check AC4 case and welt bolts for crack or deformation.
2. Check connector, lock lever and terminal for deformation.

   Notice

   Replace the AC4 with new if dust, deformation or corrosion found.

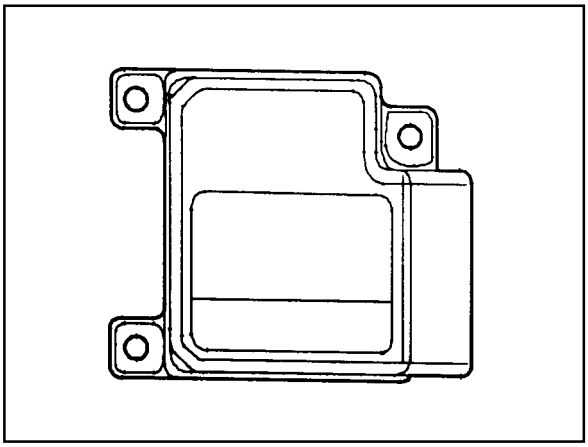

Downloaded from www.Manualslib.com manuals search engine

GENERAL DESCRIPTION AND SYSTEM OPERATION

INTRODUCTION

SRS (Supplemental Restraint System) air bag protects driver and passenger by inflating air bag under collision and seat belt pre - tensioner is a supplemental equipment for seat belt reducing shocks from the collision by pulling passenger's body against seat back at the same time of air bag inflation.

Air bag unit has diagnosis functions and indicates system malfunctions to the driver by turning on the air bag warning lamp.

CAUTION

Perform the service procedures for the air bag system as ordered, if not, the air bag can be operated suddenly and it could result in damage of air bag or injury. Before service (removal, installation, checking and replacement of parts), observe the following instructions and service correctly.

1. To service, turn the ignition switch to 'LOCK' position and disconnect the negative battery cable and continue the procedures after approx. 30 seconds.
2. If the vehicle is damaged due to accident, remove the air bag ECU first to get the accident records.
3. Never use the other vehicle's air bag parts and replace with genuine part, if required.
4. Do not disassemble or repair the air bag module, air bag unit and wiring harness to reuse.
5. Replace the air bag unit or air bag module if dropped, cracked or damaged.

Downloaded from www.Manualslib.com manuals search engine

SECTION 9A

BODY WIRING SYSTEM

Caution: Disconnect the negative battery cable before removing or installing any electrical unit or when a tool or equipment could easily come in contact with exposed electrical terminals. Disconnecting this cable will help prevent personal injury and damage to the vehicle. The ignition must also be in LOCK unless otherwise noted.

TABLE OF CONTENTS

Schematic and Routing Diagrams 9A-2
- Power Distribution 9A-2
- Starting and Charging (Gasoline) 9A-3
- Starting and Charging (Diesel) 9A-4

Fuse Box and Relay 9A-5

Location of Connectors by Wiring Harness 9A-10
- Engine Room 9A-10
- Main 9A-11
- Floor and Rear 9A-13
- Air Conditioner 9A-14
- Roof 9A-16
- Door 9A-17
- Tail Gate 9A-19

Downloaded from www.Manualslib.com manuals search engine

SCHEMATIC AND ROUTING DIAGRAMS

POWER DISTRIBUTION

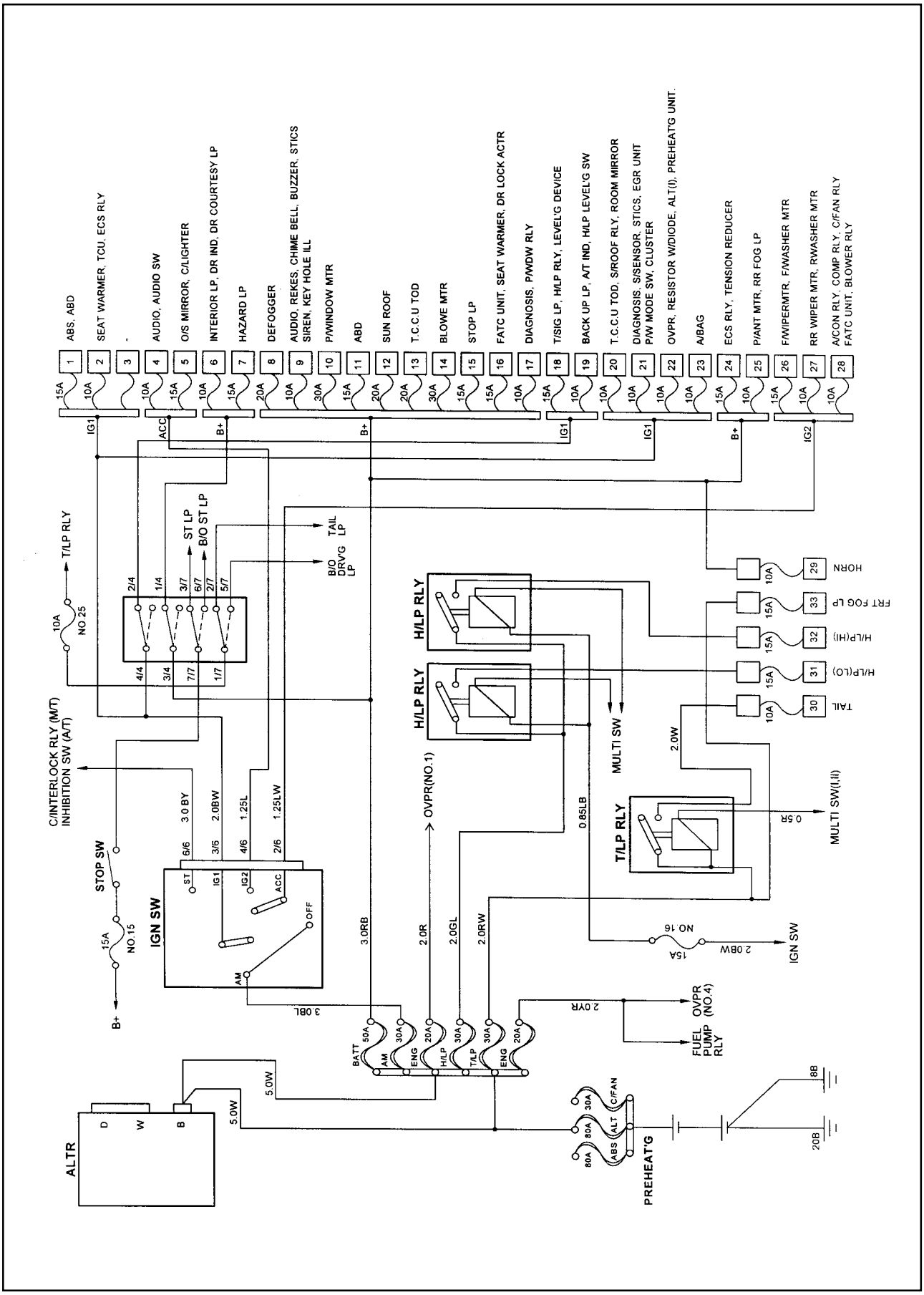

Downloaded from www.Manualslib.com manuals search engine

STARTING AND CHARGING (GASOLINE)

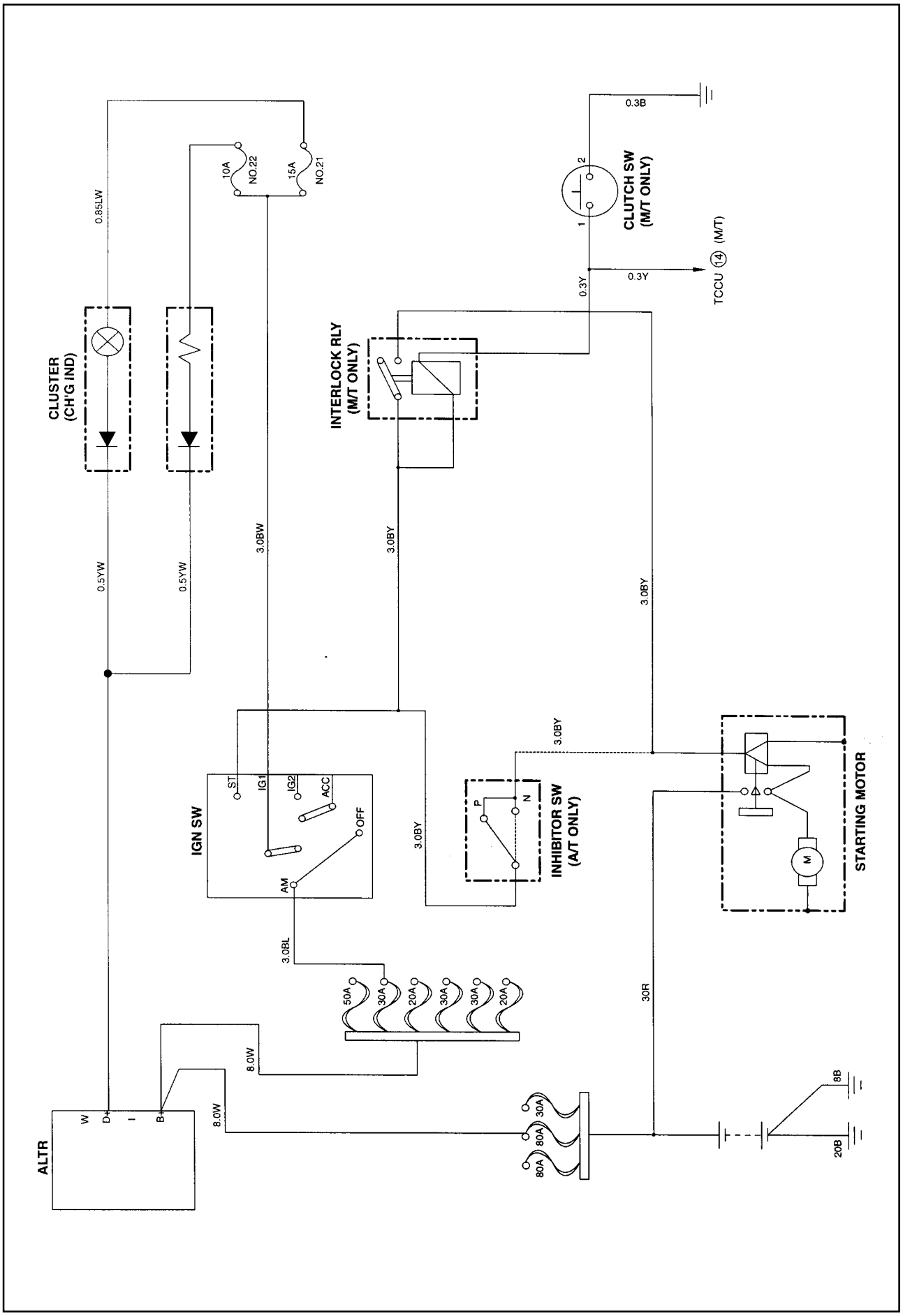

Downloaded from www.Manualslib.com manuals search engine

STARTING AND CHARGING (DIESEL)

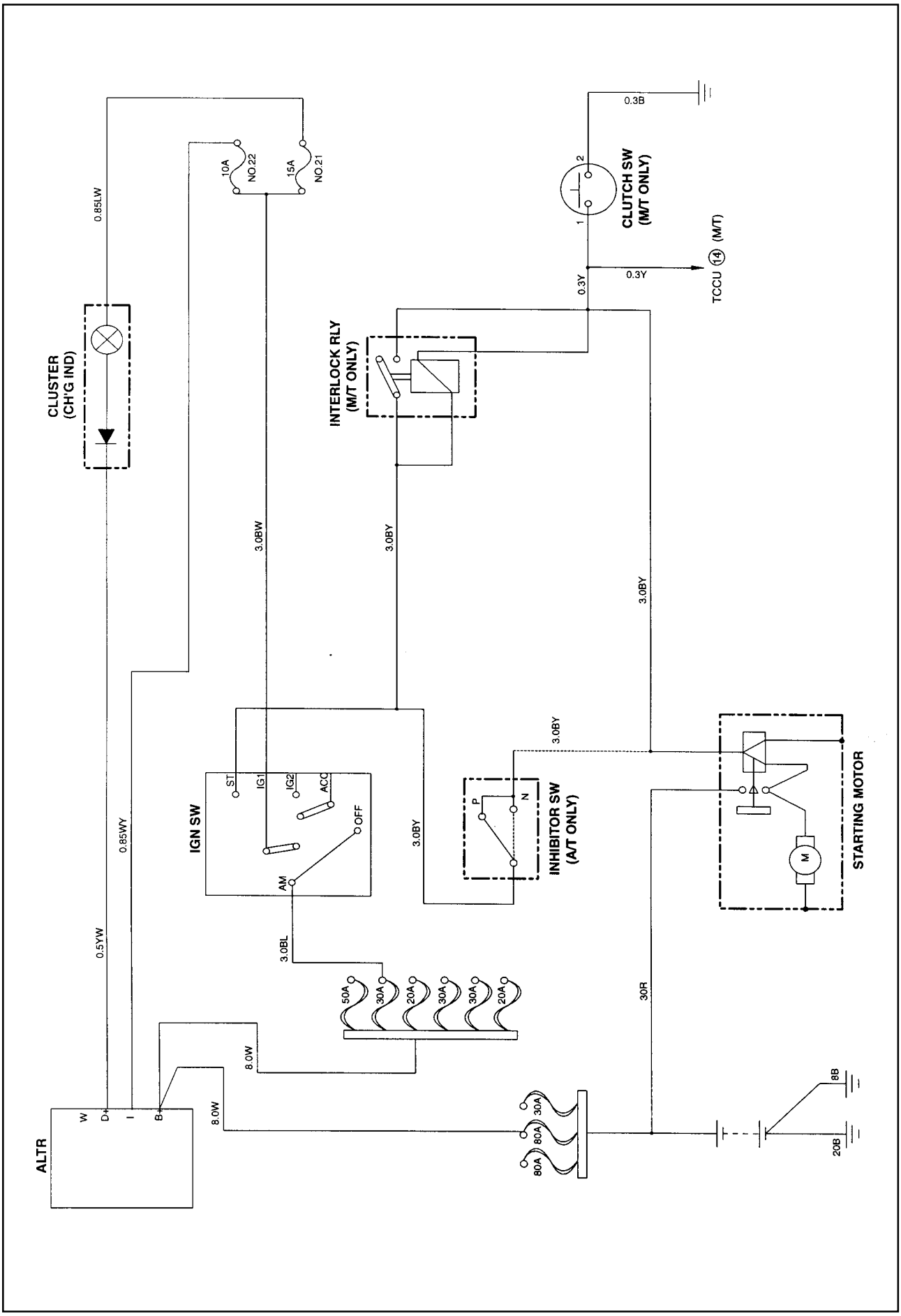

Downloaded from www.Manualslib.com manuals search engine

FUSE BOX AND RELAY

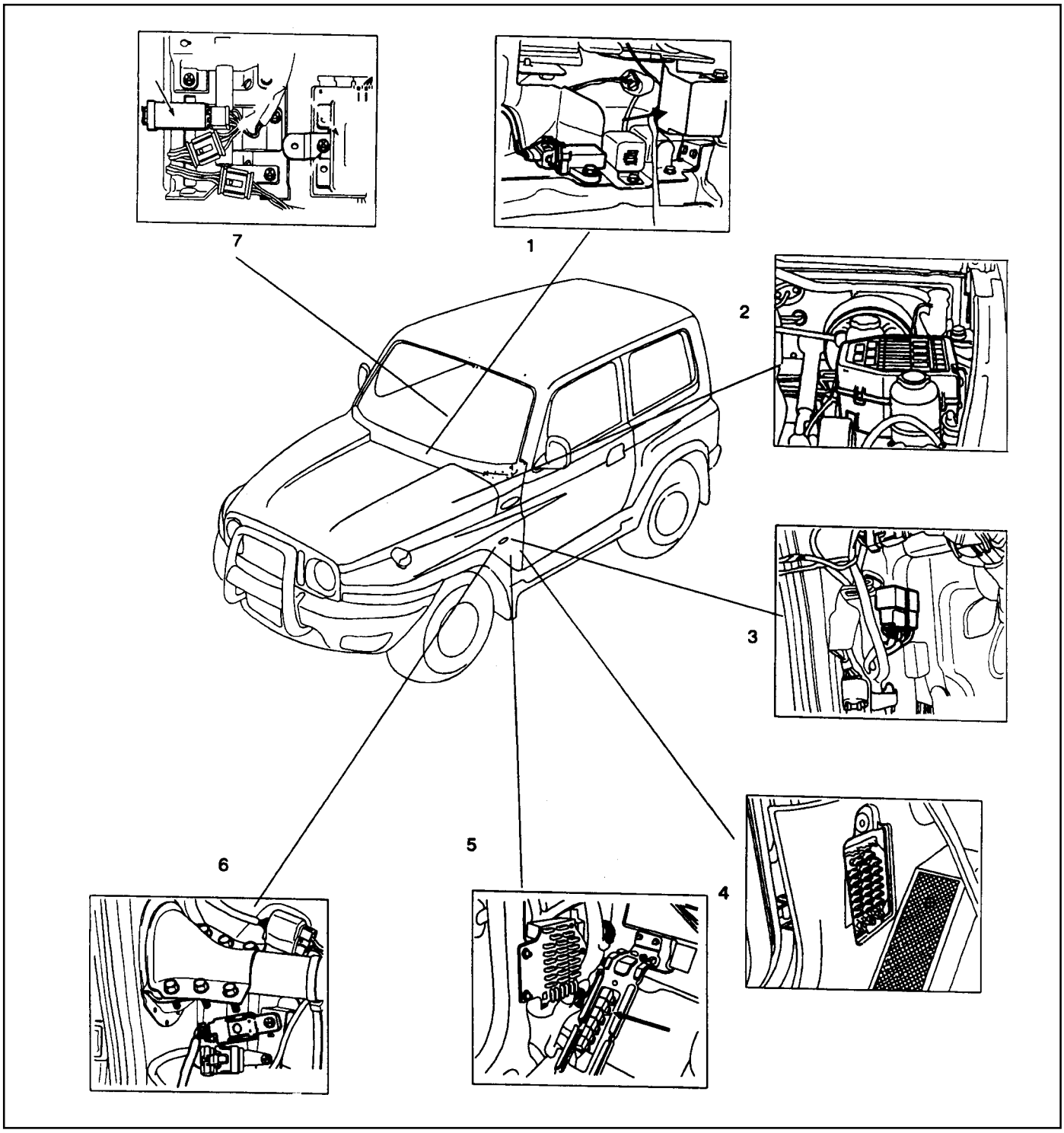

1 Automatic Door Lock Relay
2 Engine Room Fuse Box
3 ABD Motor and Valve Relay
4 Interior Fuse Box
5 Interior Relay
6 Window Auto Down Relay
7 Over Voltage Protection Relay : OVPR

Downloaded from www.Manualslib.com manuals search engine

Engine Room Fuse (EF) and Relay Box

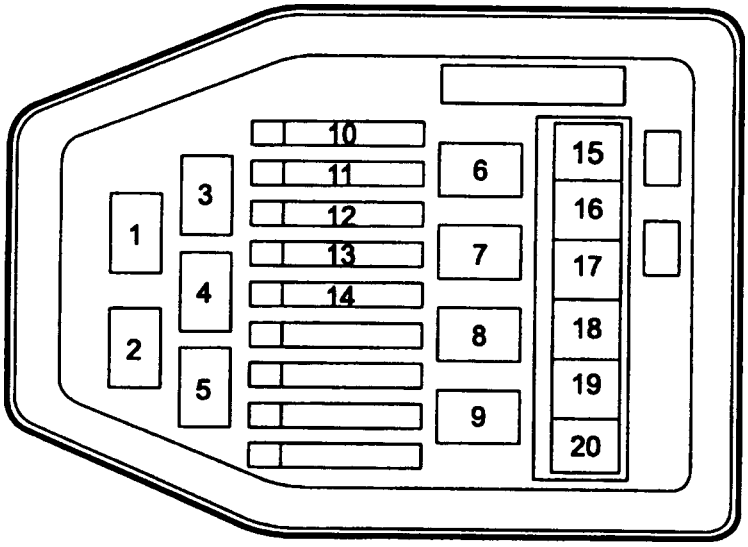

Relay
1. Tail Lamp
2. Horn
3. Register(Gasoline)
4. Front Fog Lamp
5. Condenser Fan
6. Compressor (Diesel) & Condenser Fan (Gasoline)
7. Condenser Fan
8. Head Lamp (HI)
9. Head Lamp (LOW)

Fuse
10. Horn - (10A)
11. Tail/Rear Fog Lamp - (15A)
12. Head Lamp (HI) - (15A)
13. Head Lamp (LO) - (15A)
14. Front Fog Lamp (15A)

Fusible link
15. OVPR (Gasoline) - (20A)
16. Tail Lamp - (30A)
17. Head Lamp - (30A)
18. Engine - (30A)
19. Ignition Switch - (30A)
20. Battery - (50A)

Downloaded from www.Manualslib.com manuals search engine

Fuse Box in the Interior

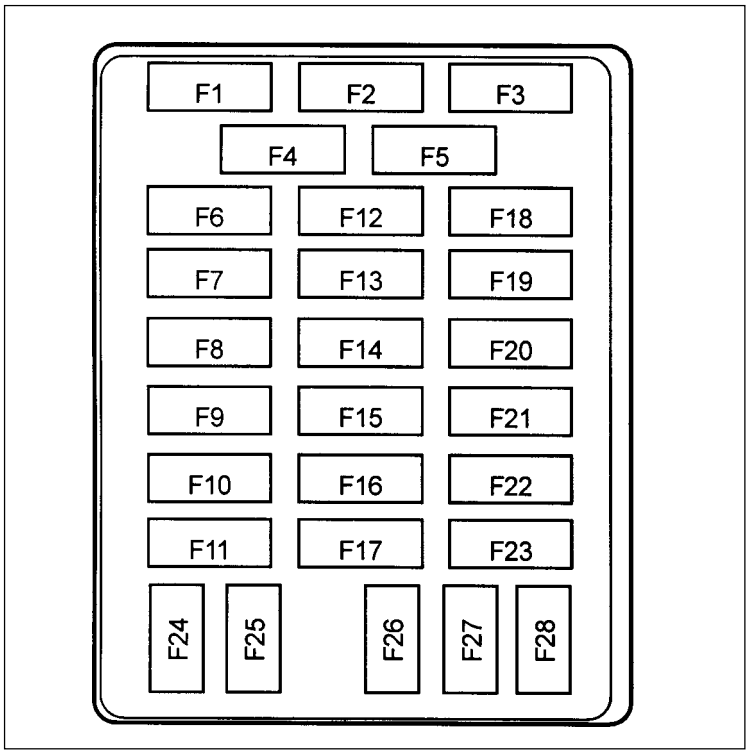

F1	ABS, ABD ECU	15A	F15	Stop Lamp Switch	15A
F2	TCU, ECS Relay, Seat Warmer Unit	10A	F16	Air Conditioner, Door Lock, Seat Warmer Unit	15A
F3	Immobilizer(Diesel), Stop Switch	10A	F17	Power Window Relay, Diagnosis Connector	10A
F4	AUDIO Switch, AUDIO	10A	F18	Engine Room Relay, Hazard Switch	15A
F5	O/S MIRR, C/LIGHTER	15A	F19	Back up Lamp	10A
F6	Room Lamp, Door Lamp, Luggage Room Lamp	10A	F20	T.O.D, T.C.C.U, Sun Roof, Auto Dimming Room Mirror	10A
F7	Hazard Switch	15A	F21	Speed Sensor, Diagnosis Connector, Joint Conn. #5	10A
F8	Defogger Relay	20A	F22	Diode, OVPR, Preheat Control Unit, Shift Lock Relay	10A
F9	STICS Joint Conn. #1, Audio	10A	F23	Air Bag Unit	10A
F10	Power Relay	30A	F24	ECS Relay	15A
F11	ABD ECU	15A	F25	Antenna Motor	10A
F12	Sun Roof Relay	20A	F26	FRT Wiper Relay, Motor	15A
F13	T.C.C.U, T.O.D unit	20A	F27	RR Washer / Wiper Motor	10A
F14	Blower Motor Relay	30A	F28	A/C Relay, Joint Conn. #3	10A

Downloaded from www.Manualslib.com manuals search engine

Relay Box in Vehicle

1. Front Wiper Relay 5P
2. ABD 5.0 Ground Relay 5P
3. Hazard Warning Flasher Relay 3P
4. Fuel Pump Relay 5P
5. Shift Lock Relay 4P
6. Defogger Relay 4P
7. ECS Relay 4P
8. Rear Fog Lamp Relay 4P
9. Power Window Relay 4P
10. Air Conditioner Relay 4P
11. Sun Roof Relay 4P(N/C Type)
12. Clutch Interlock Relay 4P(Manual Transmission)
    Neutral Relay 4P(Automatic Transmission)

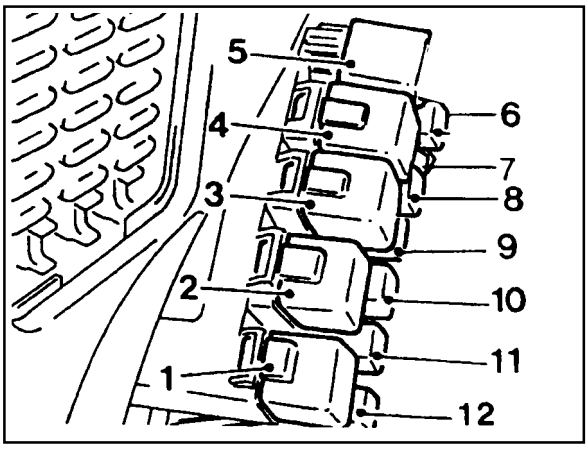

Checking The Fuses

It is possible to check the condition of blade type fuses without pulling out them from fuse block.

Lighting on the test lamp is normal when the one lead wire of test lamp is contacted with fuse end and the other one is grounded.

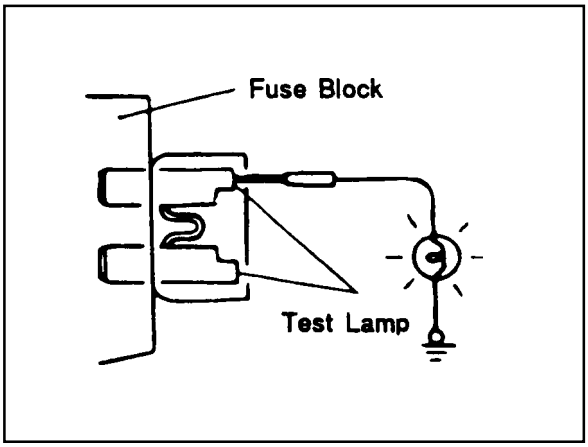

1. In case of melting out the fuse owing to the over-voltage replace the damaged fuse to the rated one after removing the causes of the failure or abnormal parts.

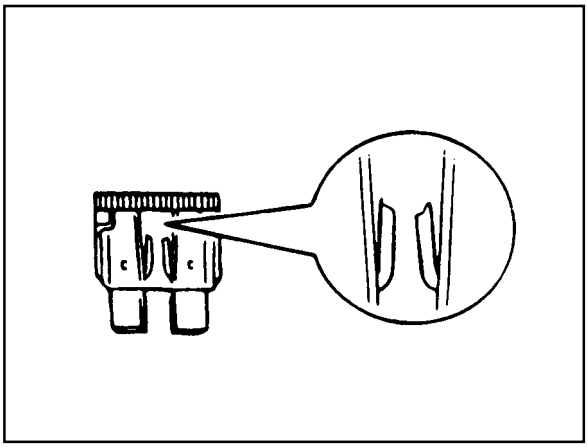

2. In case of melting out the fuse owing to the frequent 'ON','Off' replace the damaged fuse to the rated one.

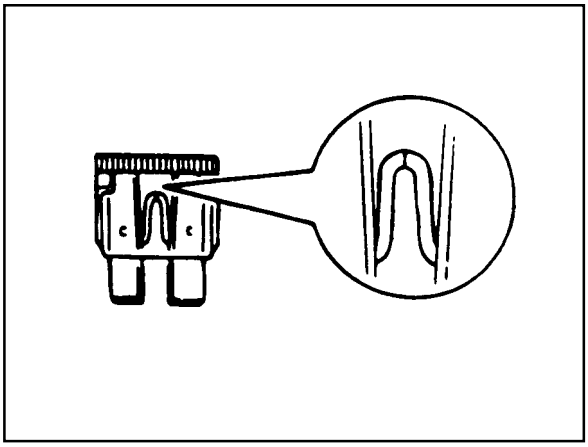

Downloaded from www.Manualslib.com manuals search engine

Relay

1) 3P

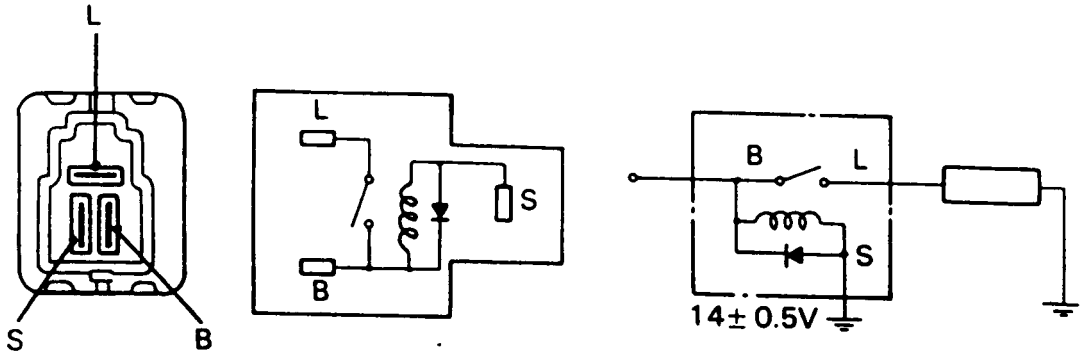

2) 4P

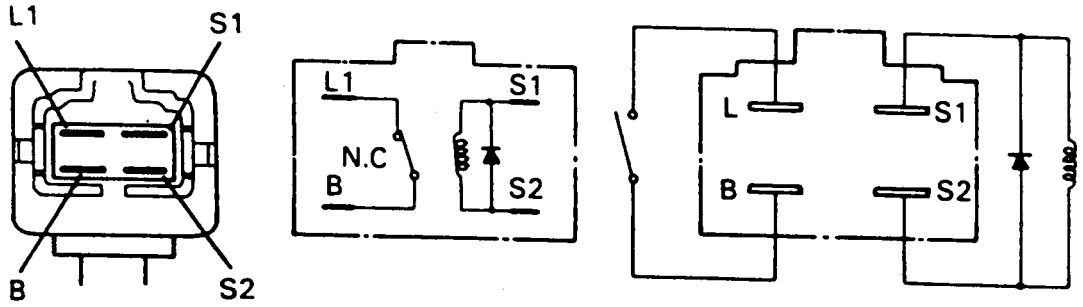

3) 5P

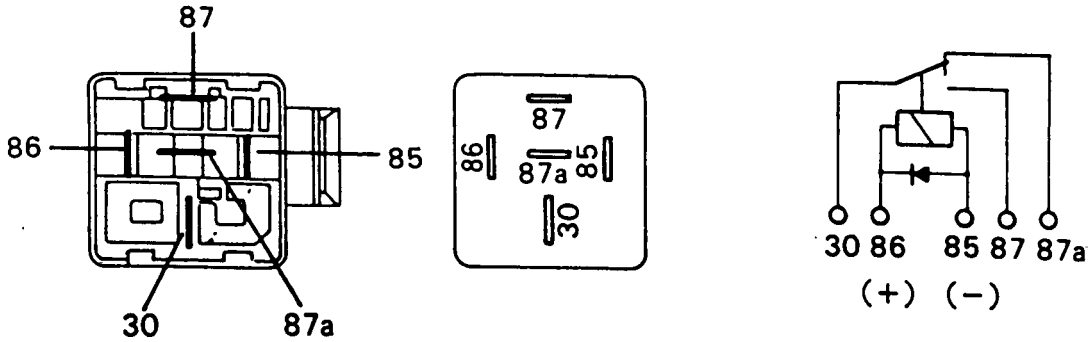

Downloaded from www.Manualslib.com manuals search engine

LOCATION OF CONNECTORS BY WIRING HARNESS

ENGINE ROOM

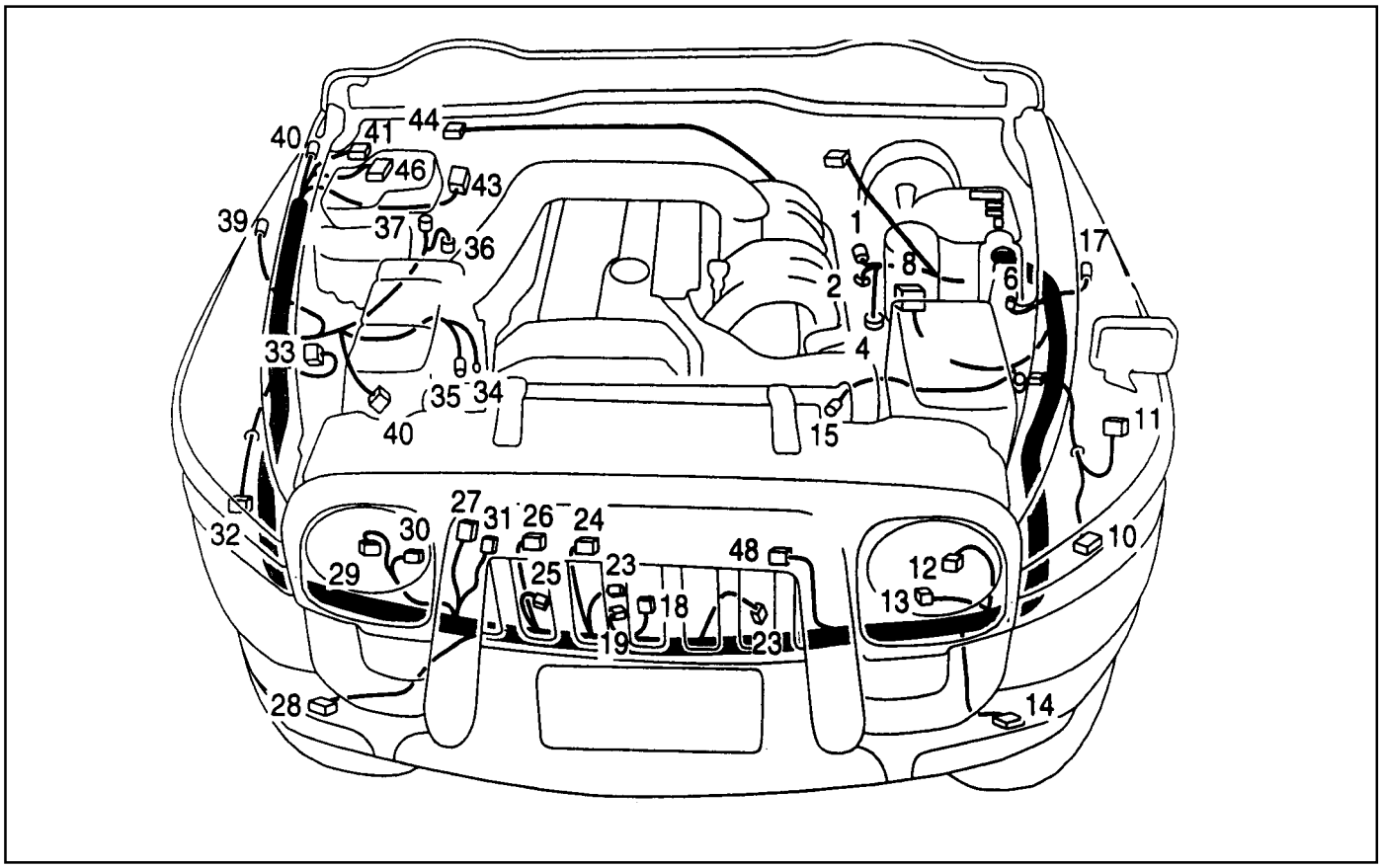

1 Brake Fluid Leveling Sensor
2 Constar Plug Solenoid Valve
4 Locking Hub
6 Octane Selector (Gasoline, E20 Only)
8 Fusiblink Box
9 Ground
10 Turn Signal Lamp (LH) & Tail Lamp
11 Black Out Lamp (DOM)
12 LH Head Lamp
13 LH Head Lamp Leveling Device
14 LH Front Fog Lamp
15 Compressor
17 Front Wheel Speed Sensor
18 LH Condenser Fan Motor
19 Resistor
22 Ambient Sensor
23 LH Horn
24 Cooling Fan Motor Relay
25 RH Horn
26 Thermos Switch 2 (E20 Only)
27 RH Condenser Fan Motor
28 RH Front Fog Lamp
29 RH Head Lamp
30 RH Head Lamp Leveling Deivce
31 Hood Switch
32 Turn Signal Lamp (RH) & Tail Lamp
33 Ground 2
34 Alternator
35 Alternator Extension Wiring Connector
36 Receiver Drier
37 Washer Motor
39 Front Wheel Speed Sensor
40 Side Repeater
41 Main Wiring Connector2 (ABS 5.3)
43 Main Wiring Connector1
44 Main Wiring Connector2 (ABS 5.3)
46 ABS 5 ECU (ABS 5.3)
47 Engine Room Relay Box
48 Thermo Sensor 2 (E20, E23 only)

Downloaded from www.Manualslib.com manuals search engine

MAIN

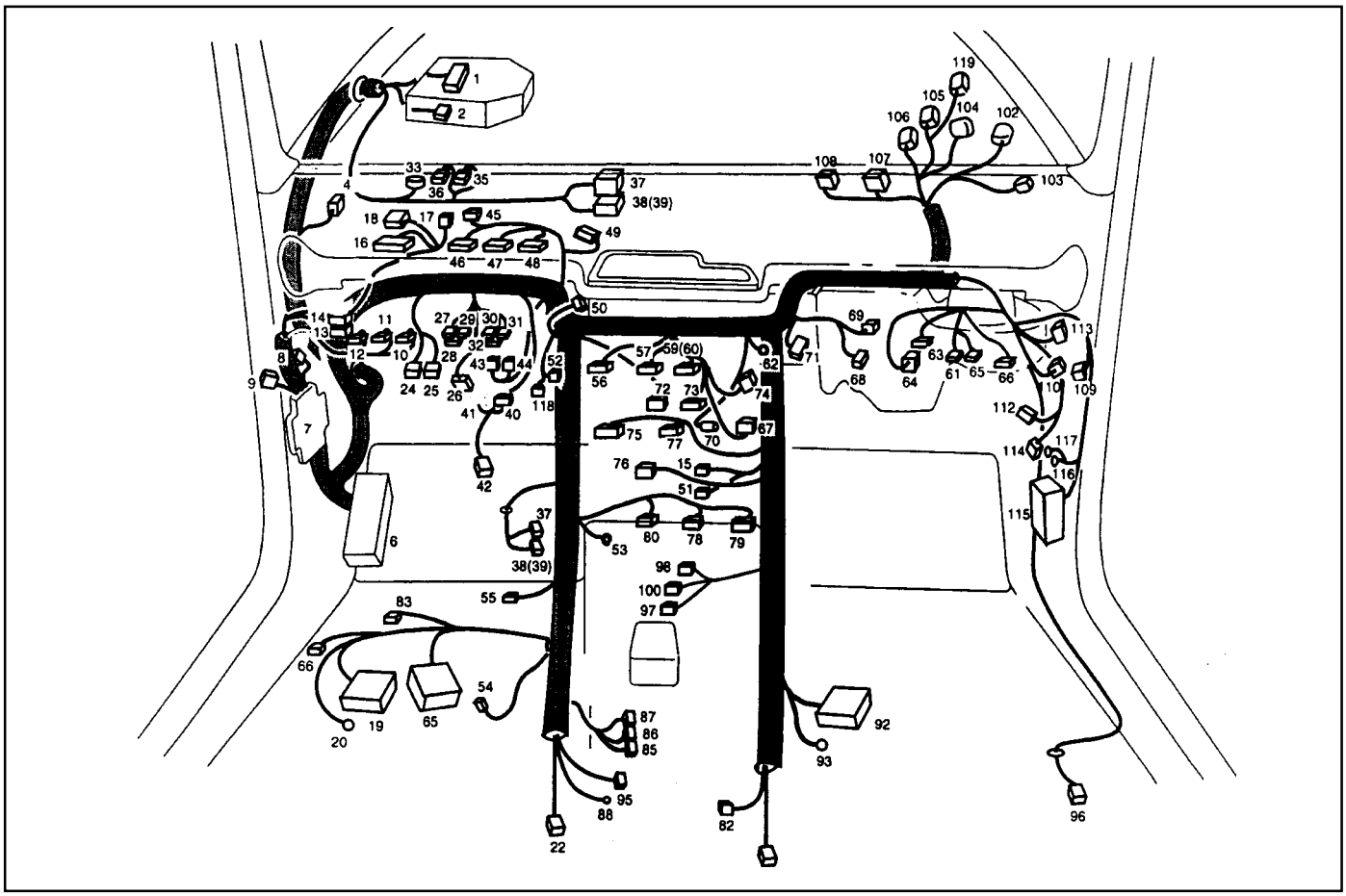

1 Engine Wiring Connector (LH)
2 Engine Wiring Connector (LH)
4 LH Side Repeater
6 Relay Box
7 Fuse Box
8 Joint Connector
9 Door Wiring Connector (Driver's)
10 Head Lamp Leveling Device Switch
11 Outside Mirror Switch
12 Rear Washer & Wiper Switch
13 Ground
14 Power Window Control Unit
15 Door Lock Relay
16 Cluster1
17 Sun Roof
18 Roof Wiring connector
19 T.C.C.U
20 Ground
22 Floor Wiring Connector
23 Floor Wiring Connector
24 Clutch Switch1 (M/T)
25 Clutch Switch2 (M/T)
26 Stop Lamp Switch
27 Multifunction Switch1
28 Multifunction Switch2
29 Ignition Switch
30 Auto Cruise Switch
31 Multifunction Switch3
32 Immobilizer Antenna Connector (4pin)
33 Diagnosis Connector
37 Transmission Wiring Connector
38 Transmission Wiring Connector (A/T)
39 Transmission Wiring Connector (M/T)
41 REKES Unit
42 Kick Down Switch (A/T)
43 Black Out Switch
44 Black Out Switch
45 Sun Sensor
46 Cluster
47 Cluster
48 Cluster

Downloaded from www.Manualslib.com manuals search engine

49 Joint Connector
50 Ground
51 Joint Connector
52 Mode Actuator
53 Audio Ground
54 Seat Belt Switch
55 Joint Connector
56 Hazard Switch
57 Defogger Switch
59 Rear Fog Lamp Relay
60 Unlock Switch
61 -
62 Ground
63 Joint Connector
64 Resistor
65 Seat Warmmer Connector
66 T.O.D (E32 Only)
67 Blower Relay
68 Water Sensor
69 Thermo Amp
70 Antenna Feeder Cable
71 A/C Wiring Connector
72 A/C Switch
73 Control Amp
74 Blower Fan Switch
75 Audio
76 Cigarette Lighter
77 Audio
78 Buzzer
79 Chime
80 Accelerator Sensor (ABD 5.3 only)
82 ECS Unit Connector
83 T.C.U (A/T BTRA Only)
85 STICS
86 STICS
87 STICS
88 Ground
92 ABD 5 ECU
93 ABD 5 ECU Ground
95 Parking Brake Switch
96 O_2 Sensor
97 Shift Lock Solenoid
98 P/W Mode Switch
100 "P" Position Switch
102 RH Engine Wiring Connector
103 Combination Connector
104 O_2 Sensor (E20, E23)
105 Engine Wiring Connector (ABD 5.3)
106 ABD 5 Modulator (ABD 5.3)
107 Front Wiper Motor
108 Siren
109 Engine Main Wiring connector
110 Intake Actuator
112 Antenna
113 Door Wiring Connector (Passenger's)
114 Blower
115 MSE ECU Connector
116 Ground
117 Ground
118 4WD Switch
119 EGR Solenoid Connector (Diesel Only)

Downloaded from www.Manualslib.com manuals search engine

FLOOR AND REAR

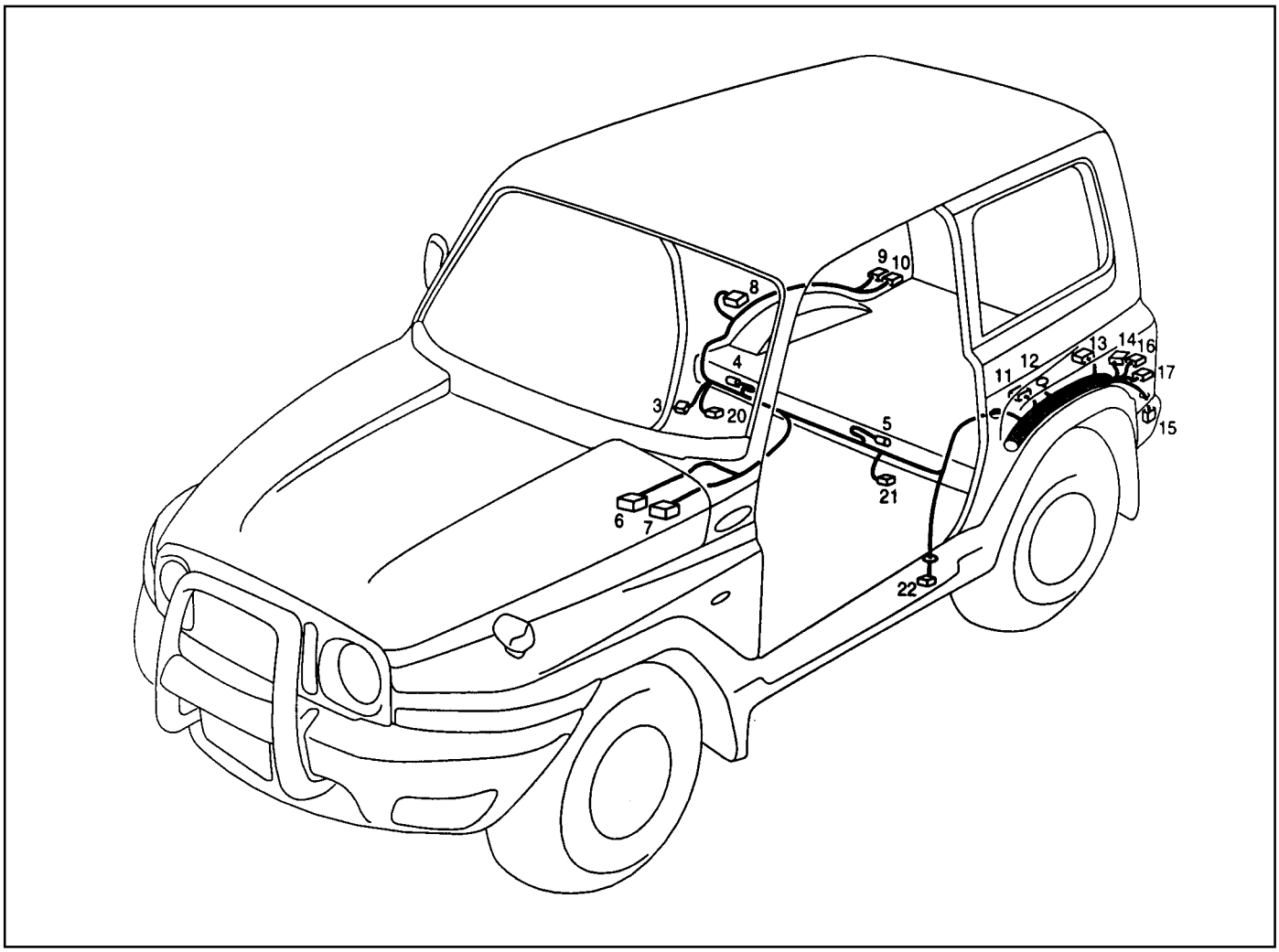

3 Door Switch
4 Wheel Speed Sensor (Rear Right)
5 Wheel Speed Sensor (Rear Left)
6 Main Wiring Connector
7 Main Wiring Connector
8 RH Rear Speaker
9 Tail Gate Switch
10 RH Rear Combination Lamp
11 LH Rear Speaker
12 Ground
13 Luggage Room Lamp
14 LH Rear Combination Lamp
15 Rear Bumper Wiring Connector
16 Tail Gate Wiring Connector
17 Tail Gate Wiring Connector
20 RH Rear Damper
21 LH Rear Damper
22 Door Switch

Downloaded from www.Manualslib.com manuals search engine

AIR CONDITIONER

Semi A/C

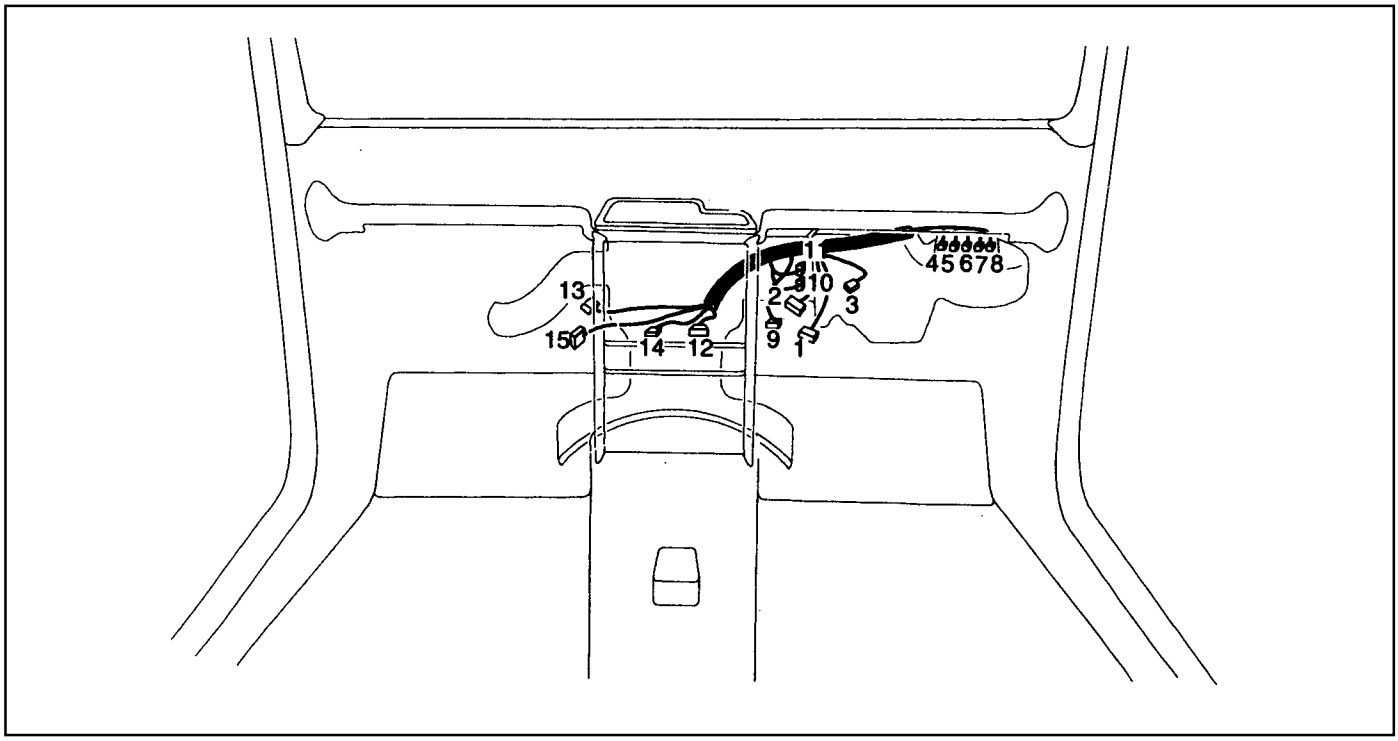

1 Main Wiring Connector
2 Floor Fan Switch
3 A/C Diode
4 HI Relay
5 MH Relay
6 ML Relay
7 LO Relay
8 A/C Relay
9 Mix Actuator
10 Auto Amp
11 Auto Amp
12 Floor Switch
13 Mode Switch
14 PTC
15 In-Car Sensor Connector

Downloaded from www.Manualslib.com manuals search engine

Full A/C

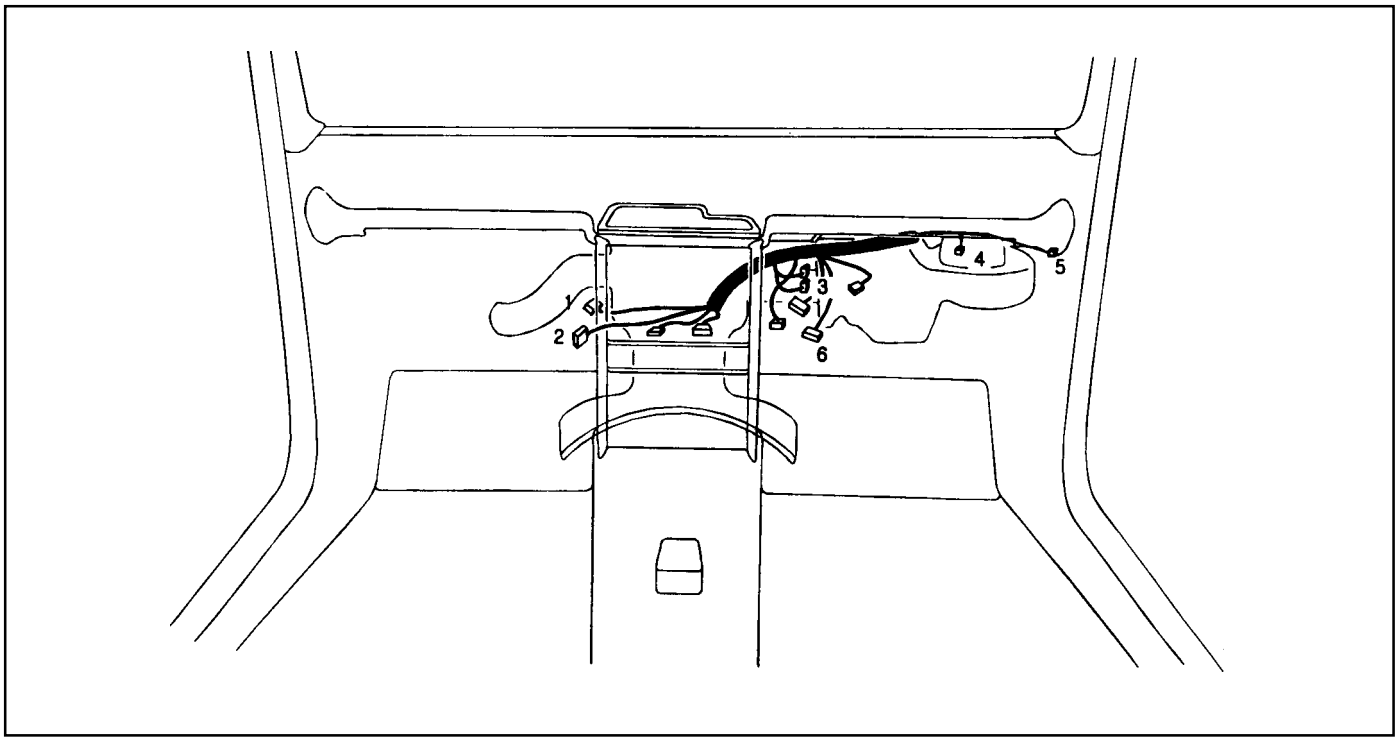

1 Mode Actuator
2 In-Car Sensor
3 Blower Relay
4 High Speed Relay
5 Intake Actuator
6 Temperature Actuator

Downloaded from www.Manualslib.com manuals search engine

ROOF

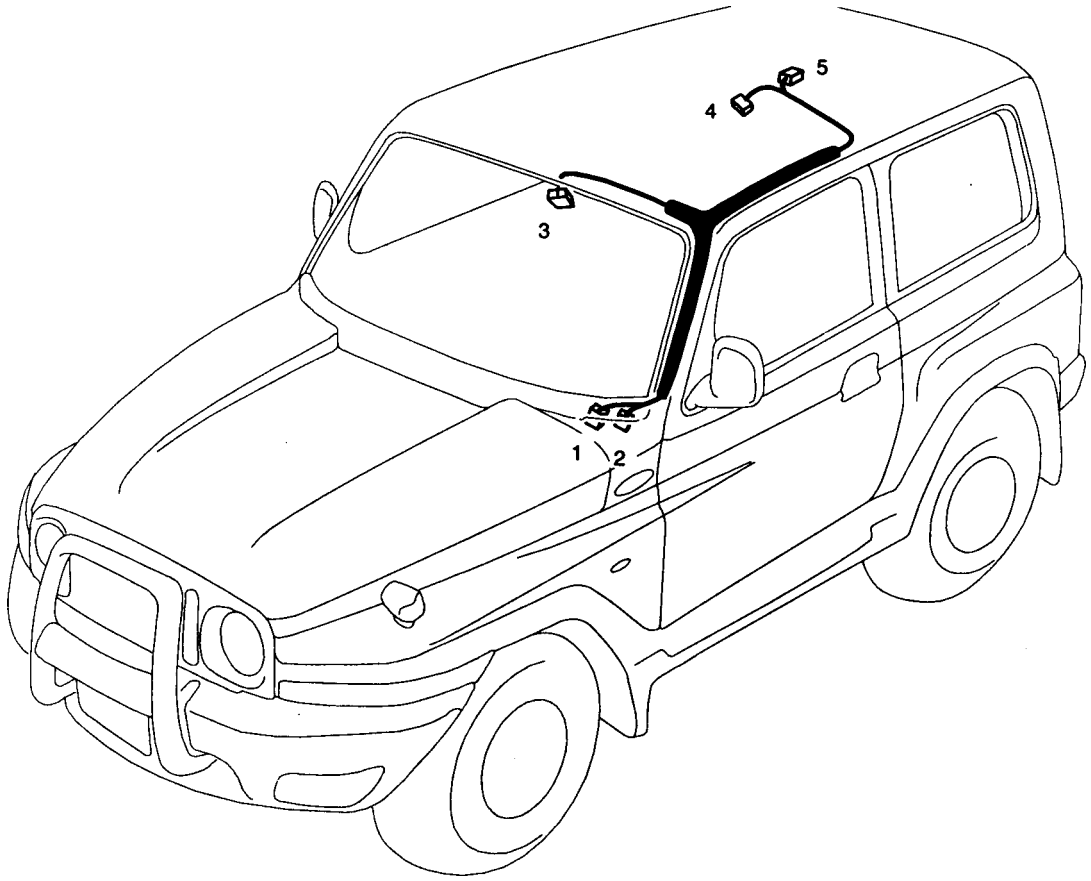

1 Main Wiring Connector
2 Sun Roof Wiring Connector
3 Front Room Lamp
4 Sun Roof
5 Center Room Lamp

Downloaded from www.Manualslib.com manuals search engine

DOOR

Dirver's Door

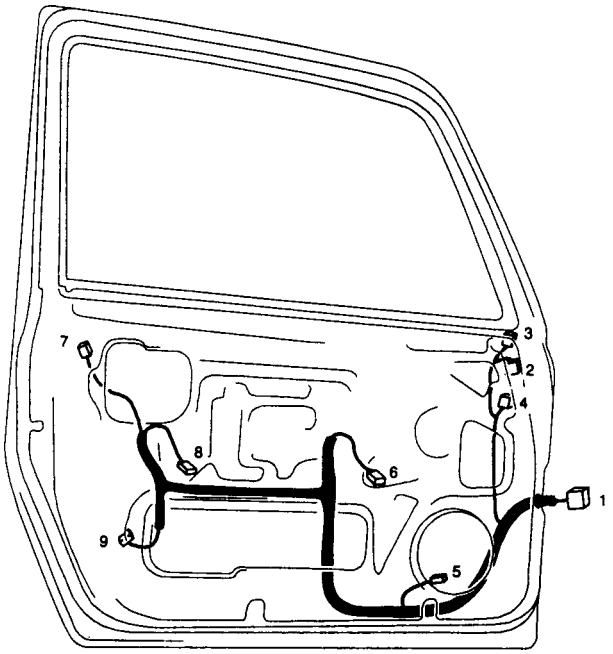

1 Main Wiring
2 Tweeter Speaker
3 Outside Mirror Motor
4 Power Window Motor(Main)
5 LH Front Speaker
6 Power Window Switch(Main)
7 Door Cylinder Switch
8 Door Lamp
9 Door Lock Actuator

Downloaded from www.Manualslib.com manuals search engine

Passenger's Door

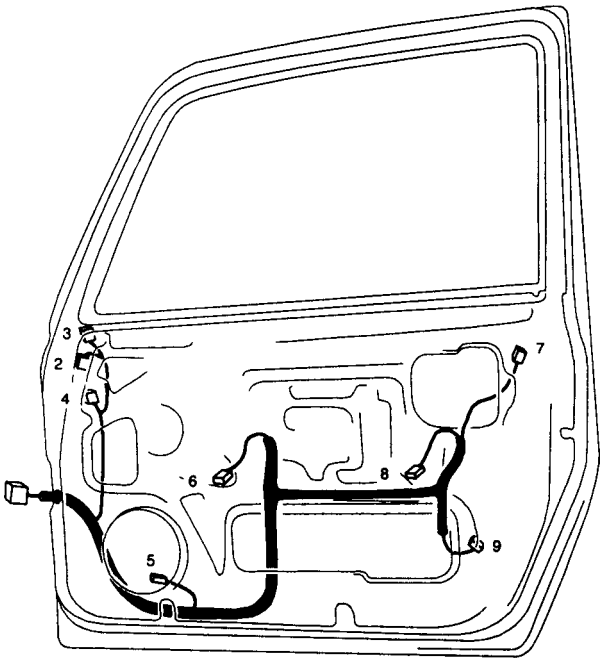

1 Main Wiring Connector
2 Tweeter Speaker
3 Outside Mirror Motor
4 Power Window Motor (Sub)
5 RH Front Speaker
6 Power Window Switch(Sub)
7 Door Cylinder Switch
8 Door Lamp
9 Door Lock Actuator

Downloaded from www.Manualslib.com manuals search engine

TAIL GATE

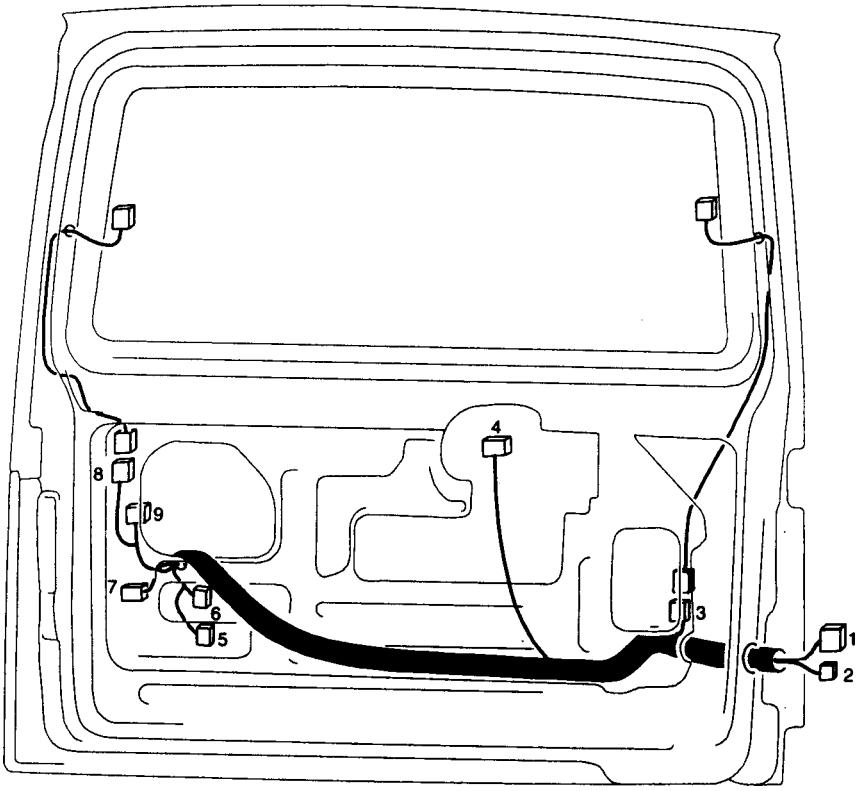

1 Floor Wiring Connector
2 Floor Wiring Connector
3 Rear Heated Glass (+)
4 Rear Wiper Motor
5 Rear Washer Motor
6 Linkage Lamp
7 Tail Gate Lock Actuator
8 Rear Heated Glass (+)
9 Tail Gate Cylinder Switch

Downloaded from www.Manualslib.com manuals search engine

SECTION 9B

LIGHTING SYSTEM

Caution: Disconnect the negative battery cable before removing or installing any electrical unit or when a tool or equipment could easily come in contact with exposed electrical terminals. Disconnecting this cable will help prevent personal injury and damage to the vehicle. The ignition must also be in LOCK unless otherwise noted.

TABLE OF CONTENTS

Specifications 9B-1
Bulb Usage Chart 9B-1
Schematic and Routing Diagrams 9B-2
Tail Lamp 9B-2
Head Lamp 9B-3
Turn Signal Lamp and Hazard Lamp 9B-4
Back-Up Lamp and Stop Lamp 9B-5
Front and Rear Fog Lamp 9B-6
Room Lamp 9B-7
Maintenance and Repair 9B-8
On-Vehicle Service 9B-8
Lamps 9B-8

SPECIFICATIONS

BULB USAGE CHART

Application		Watt/Quantity
Position Lamp	Front	5W / 2
	Rear	5W / 2
	License Plate	5W / 2
Head Lamp	Low Beam	55W / 2
	High Beam	60W / 2
Turn Signal Lamp	Front	27W / 2
	Rear	21W / 2
	Side	5W / 2
Room Lamp	Front Room	8W / 2
	Center Room	10W / 1
	Luggage Room	8W / 1
Door Courtesy Lamp		5W / 2
Front Fog Lamp		55W / 2
Stop Lamp		21W / 2
Back up Lamp		21W / 2

Downloaded from www.Manualslib.com manuals search engine

SCHEMATIC AND ROUTING DIAGRAMS

TAIL LAMP

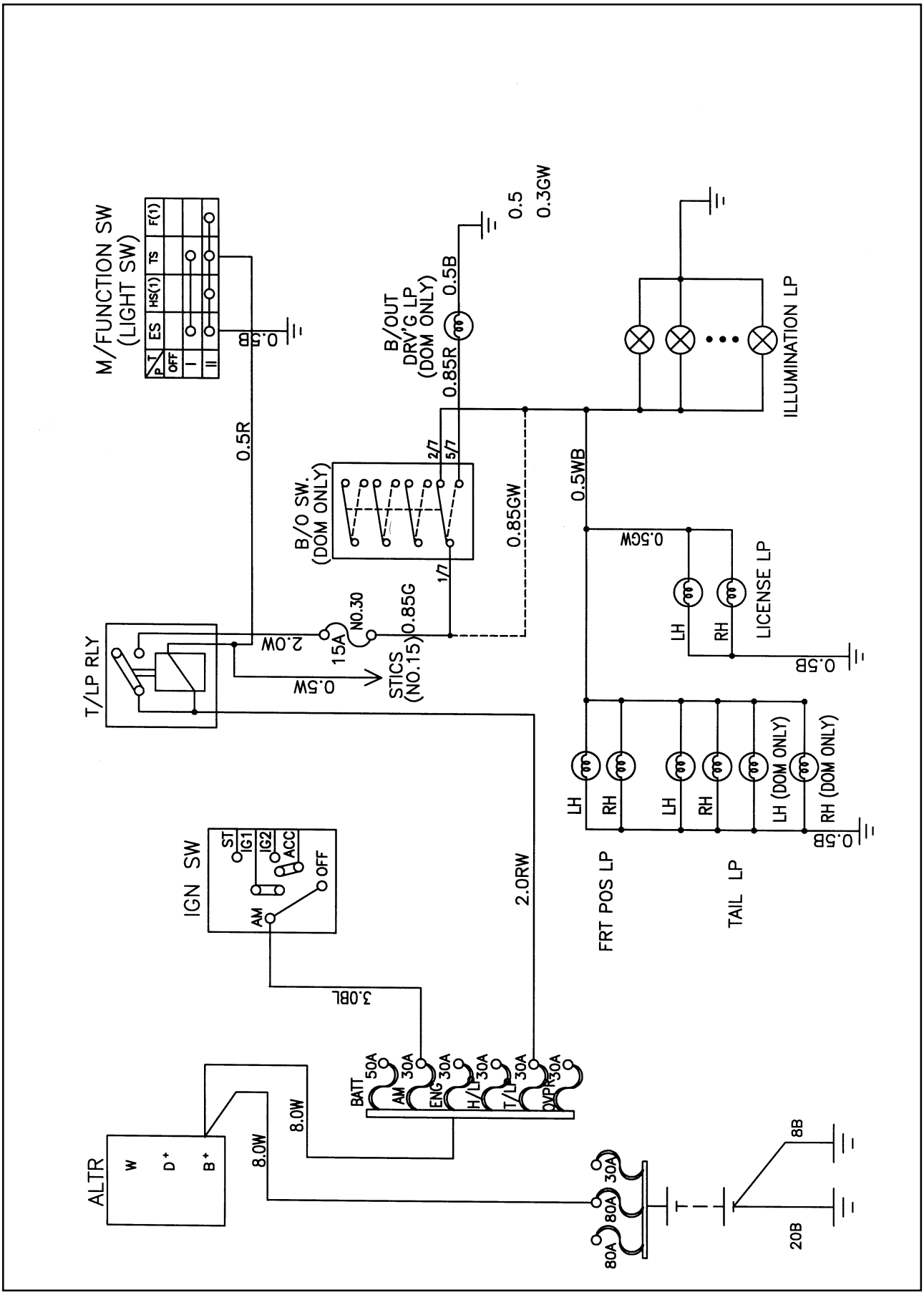

Downloaded from www.Manualslib.com manuals search engine

HEAD LAMP

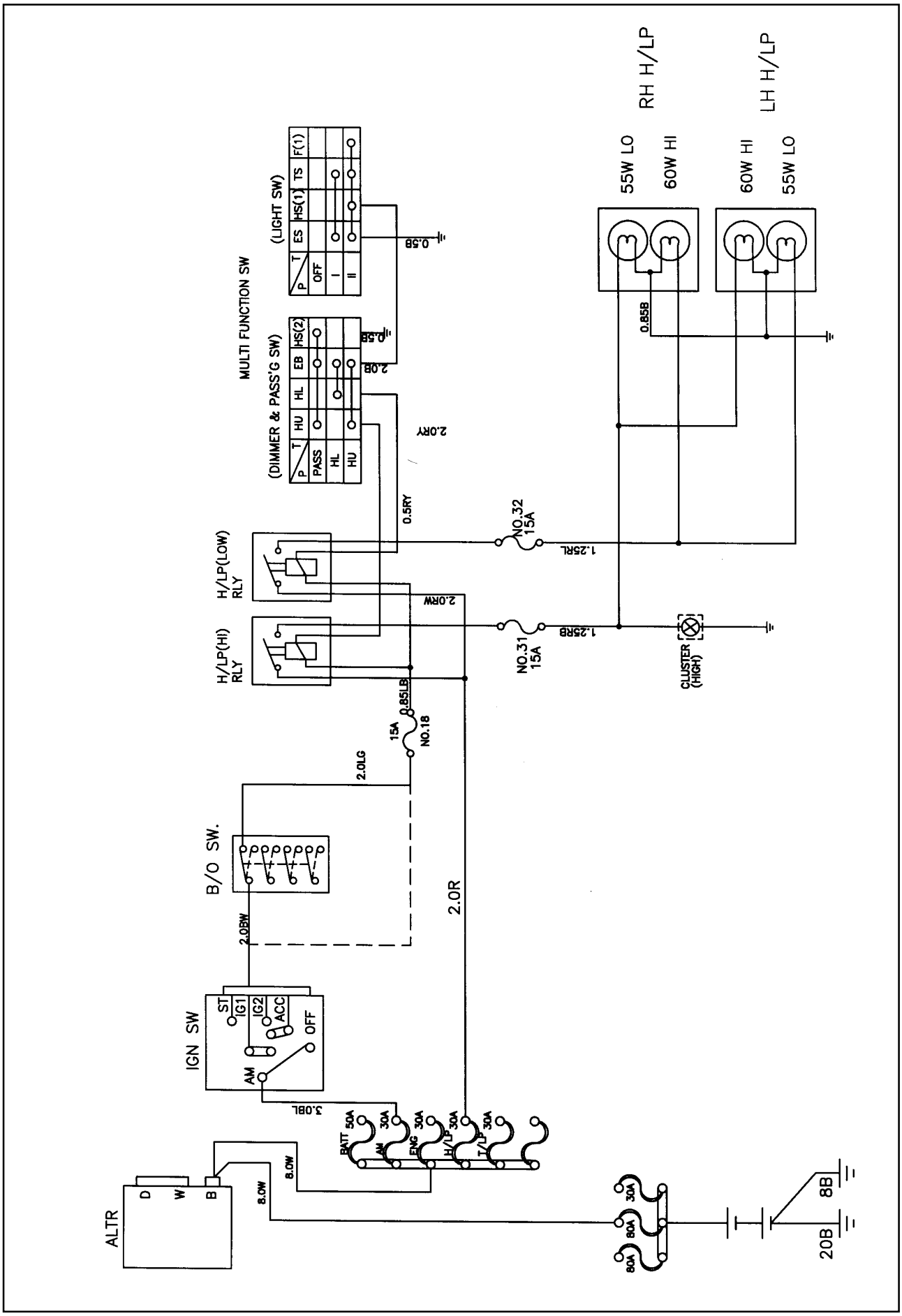

Downloaded from www.Manualslib.com manuals search engine

TURN SIGNAL LAMP AND HAZARD LAMP

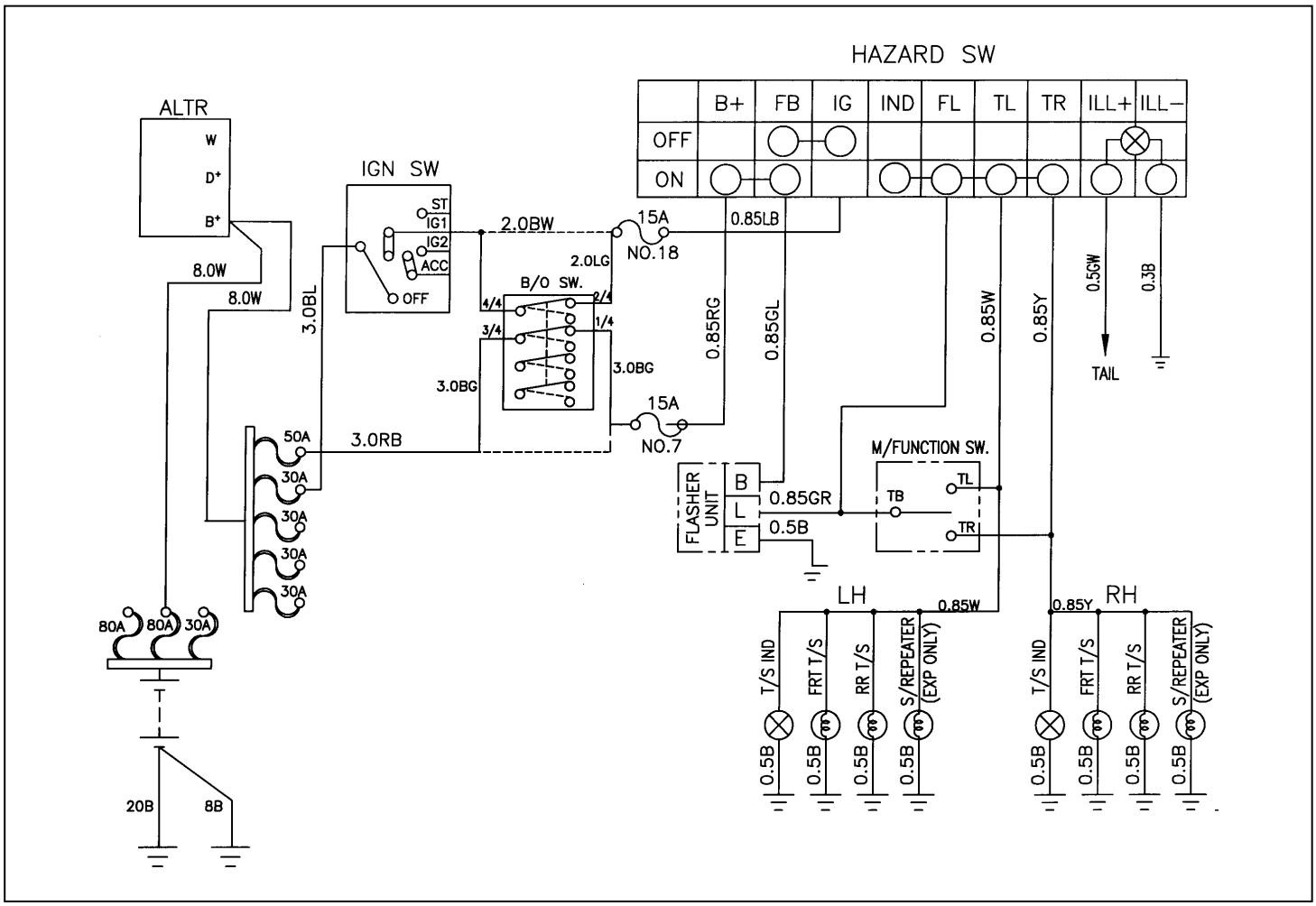

Downloaded from www.Manualslib.com manuals search engine

BACK-UP LAMP AND STOP LAMP

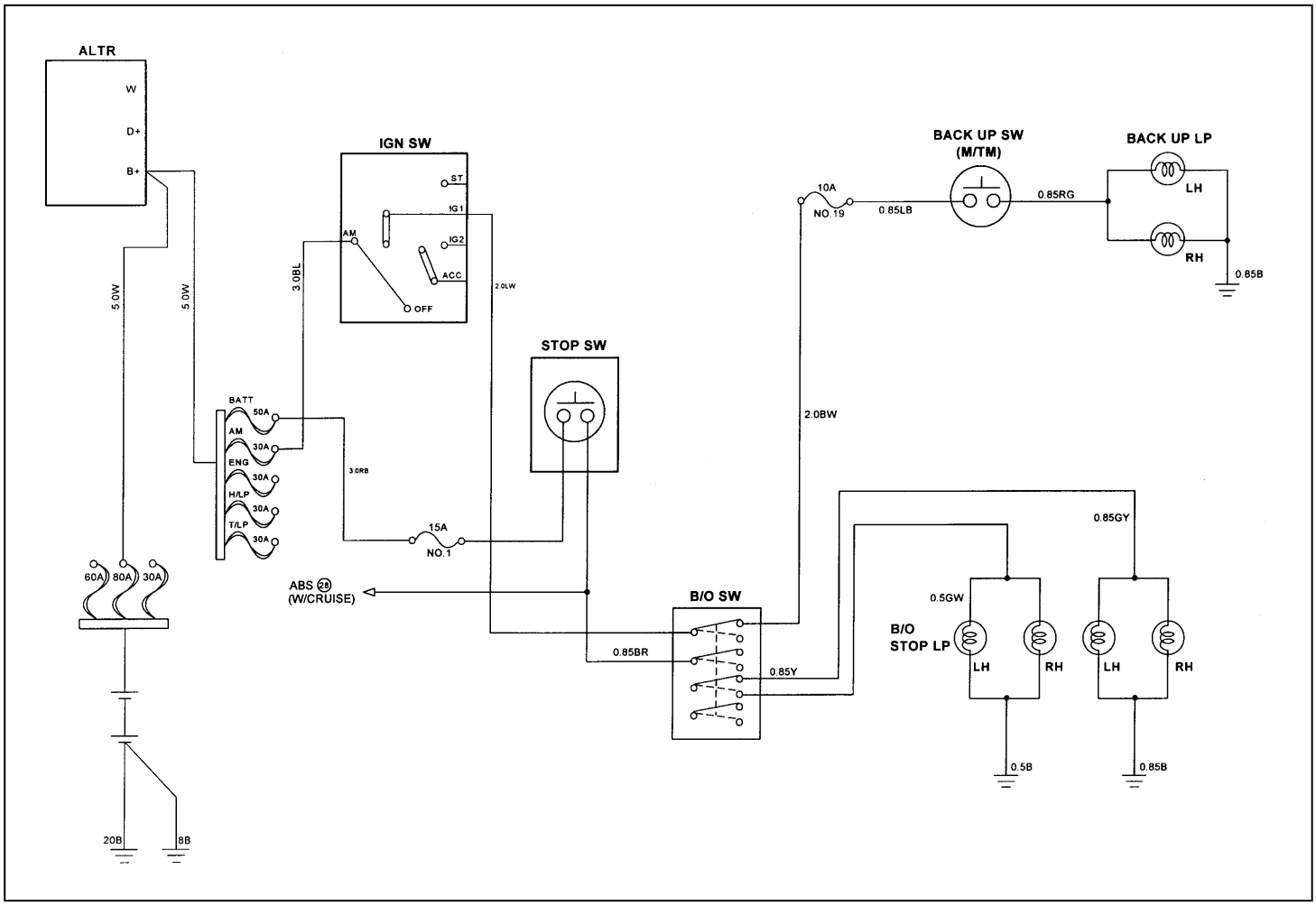

Downloaded from www.Manualslib.com manuals search engine

FRONT AND REAR FOG LAMP

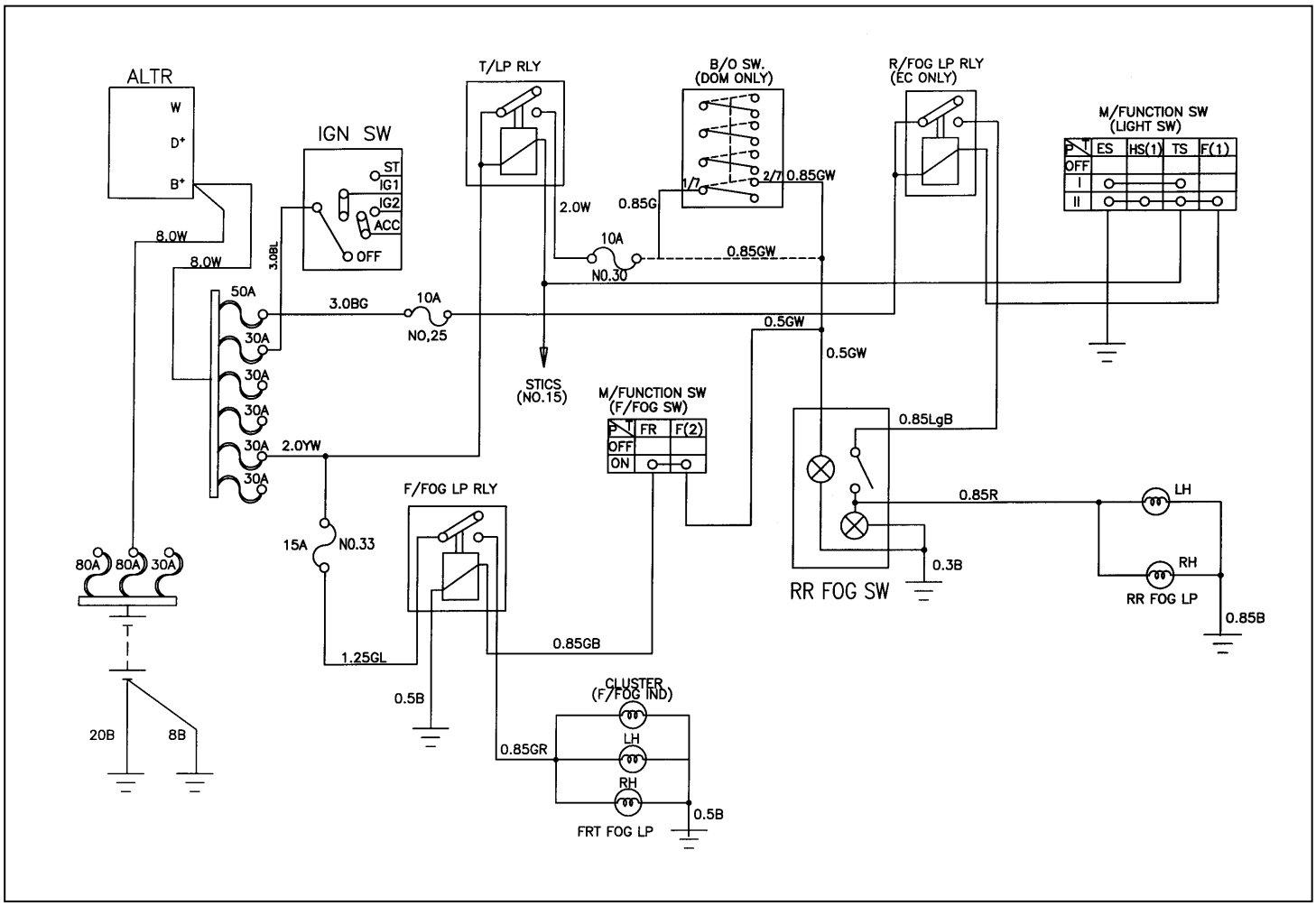

Downloaded from www.Manualslib.com manuals search engine

ROOM LAMP

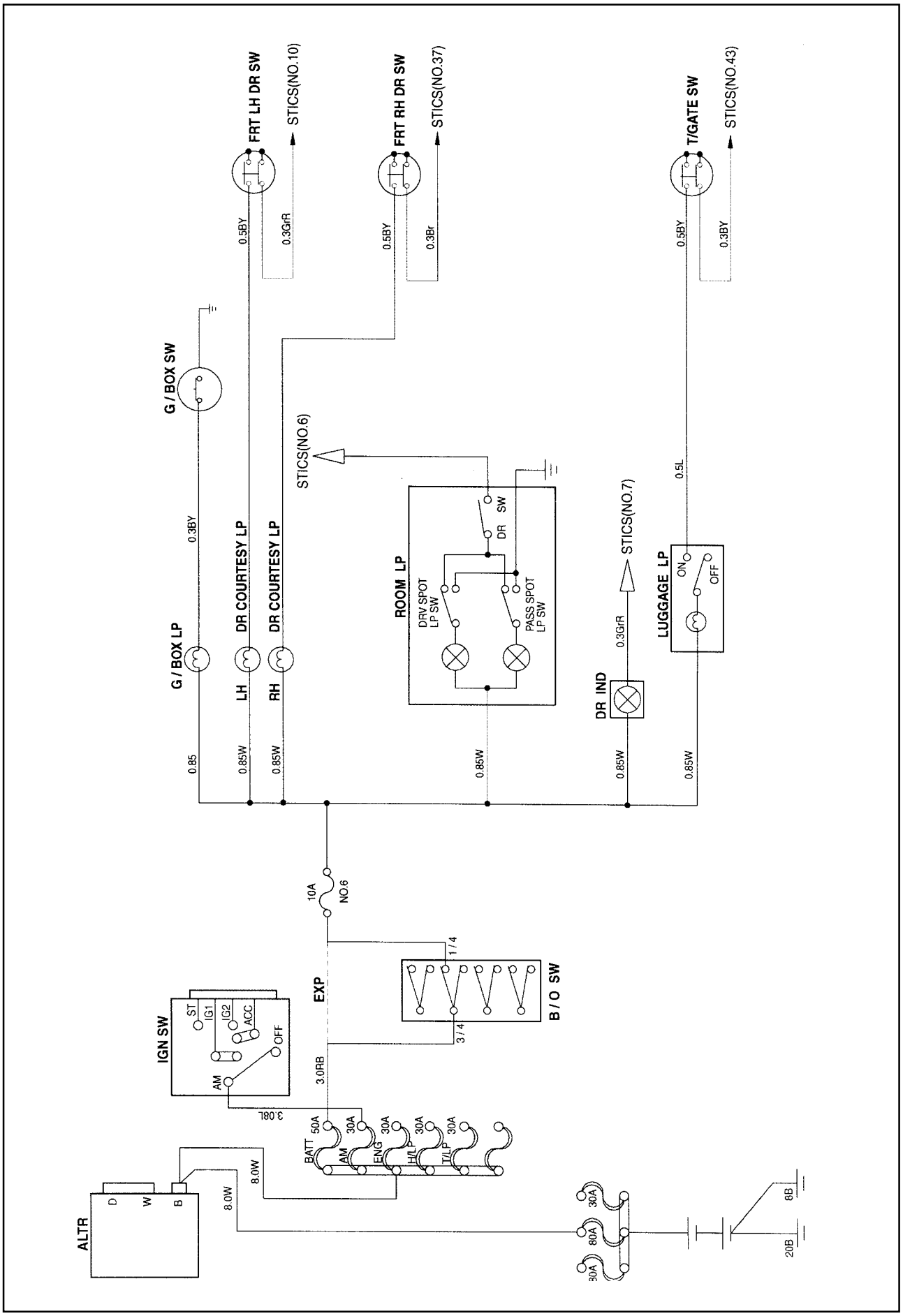

Downloaded from www.Manualslib.com manuals search engine

MAINTENANCE AND REPAIR

ON-VEHICLE SERVICE

LAMPS

Front and Room Lamps

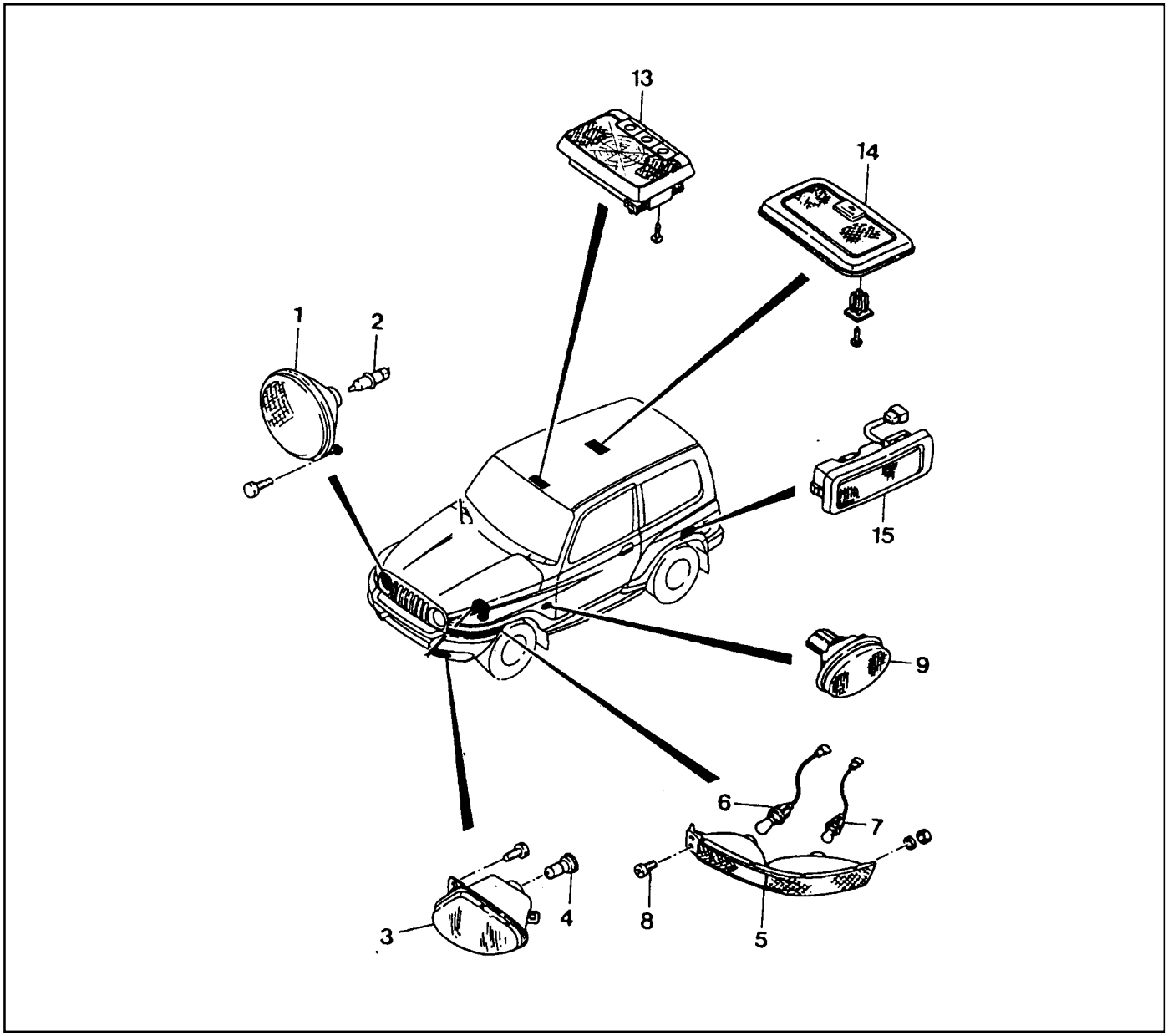

1 Head Lamp
2 Bulb
3 Front Fog Lamp
4 Bulb
5 Front Turn Signal & Position Lamp
6 Bulb
7 Bulb
8 Screw
9 Side Repeater Lamp
13 Front Room Lamp
14 Center Room Lamp
15 Luggage Room Lamp

Downloaded from www.Manualslib.com manuals search engine

Rear Lamps

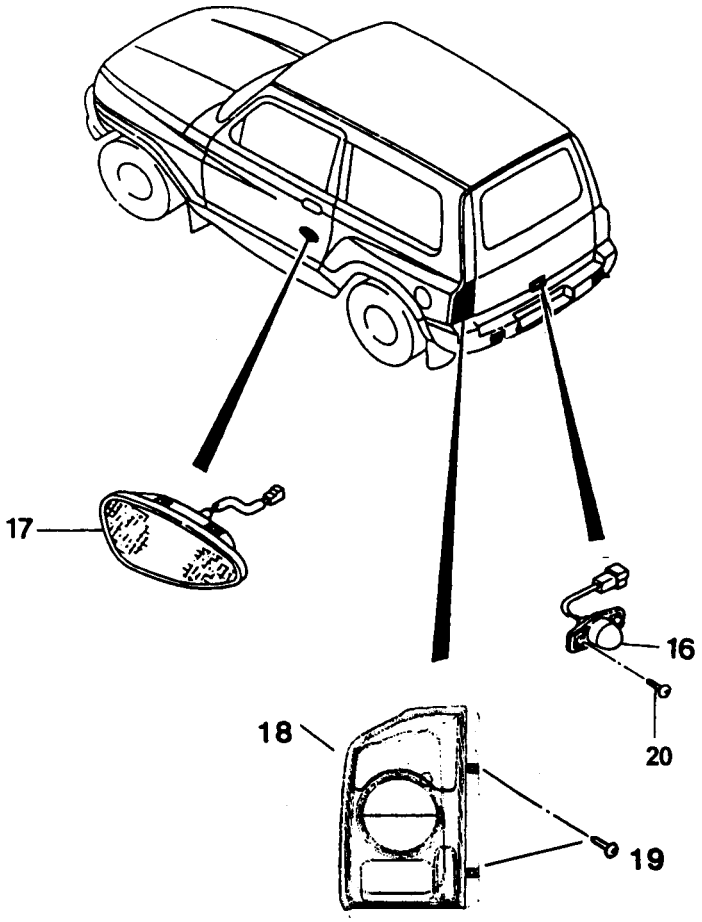

16 License Plate Lamp
17 Door Courtesy Lamp
18 Rear Combination Lamp
19 Screw
20 Screw

Notice

Removing and installing order is followed by the nos on the above picture.

Downloaded from www.Manualslib.com manuals search engine

Alignment for Head Light Angle

1. Adjust the tire pressure as specified and unload the all luggages from the vehicle except driver and spare tire.
2. Set the vehicle onto the flat ground and adjust the distance(A) from tester to vehicle.

   Distance A: 10m

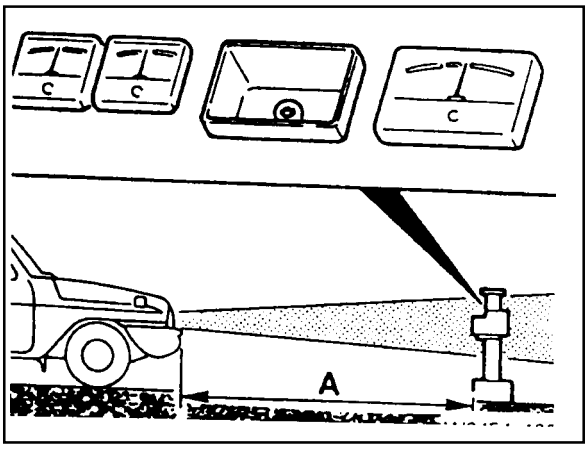

3. Turn on the head light switch during engine is idling.
4. Align the head light angle by turning the adjusting screw.
   - Horizontal adjustment screw 1
   - Vertical adjustment screw 2
5. Adjust the head light angle to 150mm - 25mm at the tester by turning the adjusting screw.

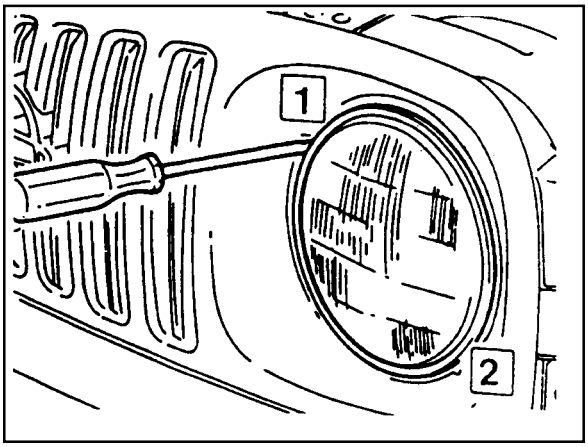

Alignment for Fog Lamp

1. Set the vehicle onto the flat ground and adjust the distance(25m) from fog lamp tester to vehicle.
2. Adjust the vertical angle of fog lamp to maximum 50mm by using adjusting knob.
   - Adjusting knob
   - Clockwise : Downward
   - Counter clockwise : Upward

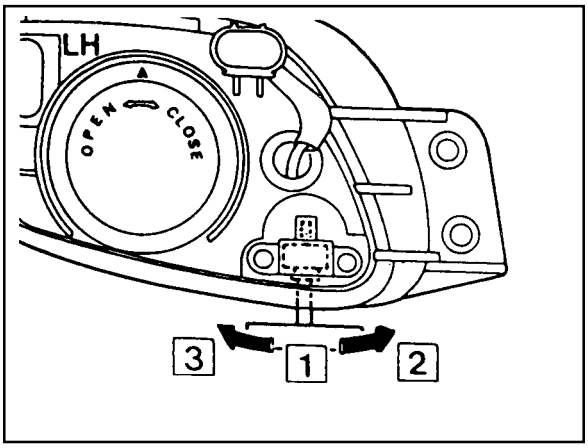

Downloaded from www.Manualslib.com manuals search engine

SECTION 9C

HORNS

Caution: Disconnect the negative battery cable before removing or installing any electrical unit or when a tool or equipment could easily come in contact with exposed electrical terminals. Disconnecting this cable will help prevent personal injury and damage to the vehicle. The ignition must also be in LOCK unless otherwise noted.

TABLE OF CONTENTS

Schematic and Routing Diagrams 9C-2

Horn 9C-2

Downloaded from www.Manualslib.com manuals search engine

SCHEMATIC AND ROUTING DIAGRAMS

HORN

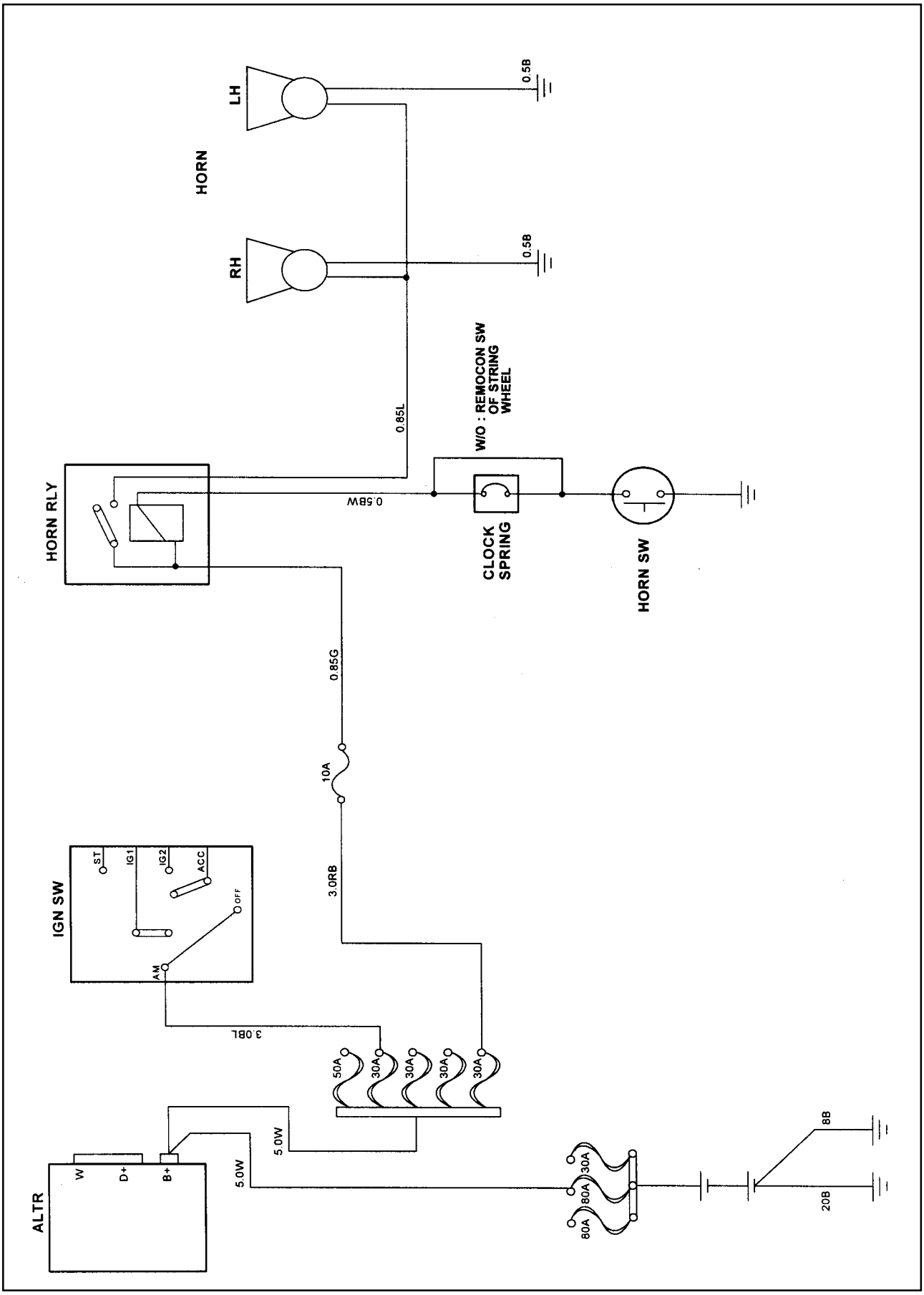

Downloaded from www.Manualslib.com manuals search engine

SECTION 9D

WIPERS/WASHER SYSTEM

Caution: Disconnect the negative battery cable before removing or installing any electrical unit or when a tool or equipment could easily come in contact with exposed electrical terminals. Disconnecting this cable will help prevent personal injury and damage to the vehicle. The ignition must also be in LOCK unless otherwise noted.

TABLE OF CONTENTS

Schematic and Routing Diagrams 9D-2

Rear Wiper and Washer 9D-2

Maintenance and Repair 9D-3

On-Vehicle Service 9D-3

Front Wiper and Washer 9D-3

Rear Wiper and Washer 9D-6

Downloaded from www.Manualslib.com manuals search engine

SCHEMATIC AND ROUTING DIAGRAMS

REAR WIPER AND WASHER

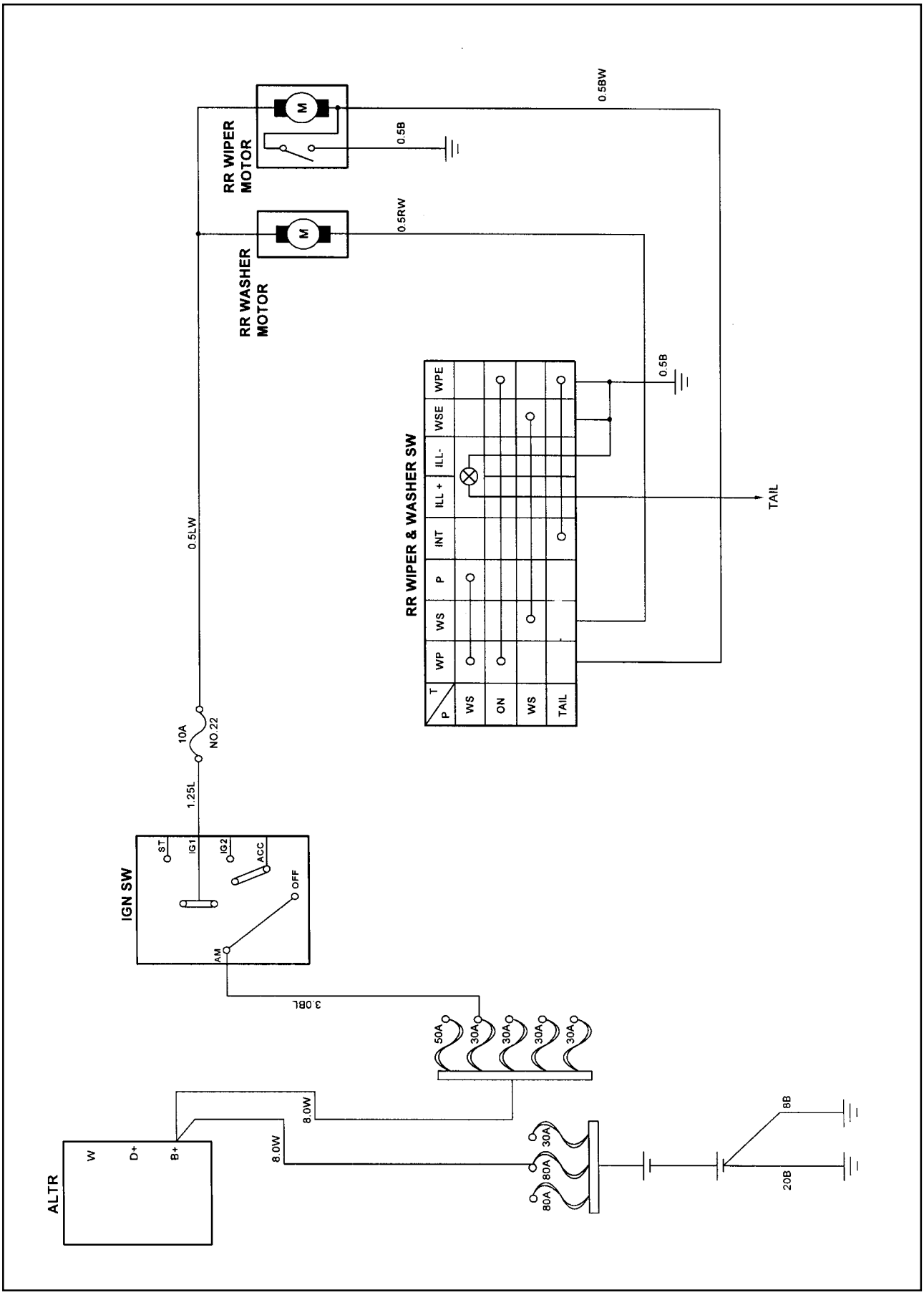

Downloaded from www.Manualslib.com manuals search engine

MAINTENANCE AND REPAIR

ON-VEHICLE SERVICE

FRONT WIPER AND WASHER

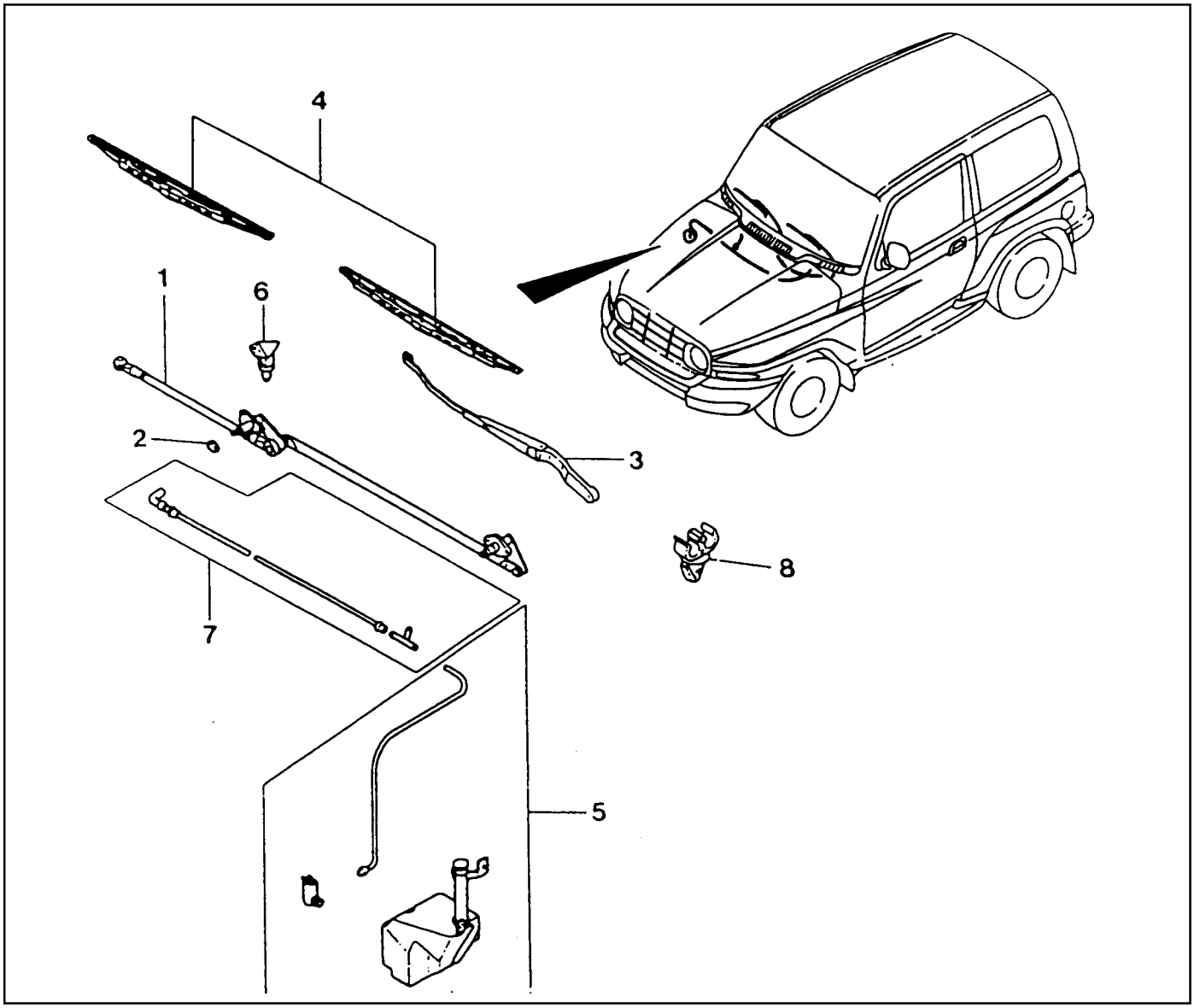

1 Windshield Wiper Linkage
2 Nut
3 Wiper Arm
4 Blade
5 Windshield Washer Reservir Assembly
6 Washer Nozzle
7 Washer Hose
8 Mounting Holder

Downloaded from www.Manualslib.com manuals search engine

Removal & Installation Procedure

1. Remove the wiper arm and blade.
2. Remove the linkage connected to the wiper motor.
3. Disconnect the connector from the wiper motor.
4. Unscrew the locking bolts from wiper motor.
5. Installation should follow the removal procedure in the reverse order.

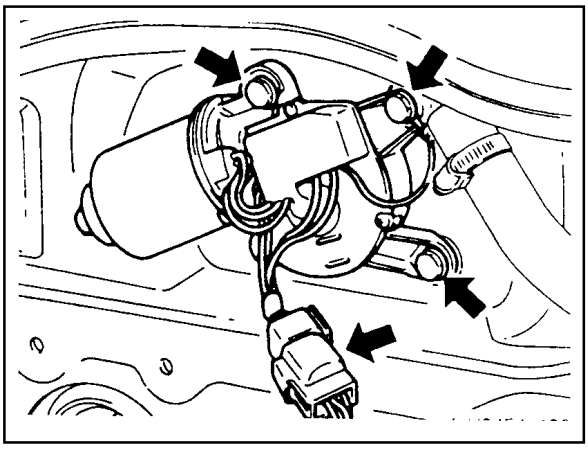

Downloaded from www.Manualslib.com manuals search engine

Connector Appearance and Connecting Circuit

Connector Terminal

H	HI(high speed)
P	Intermittent
B	Ground
L	Low(low speed)

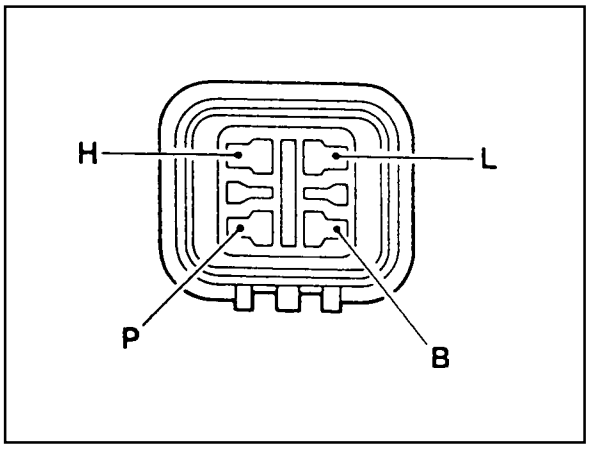

Diagram for Connecting Circuit

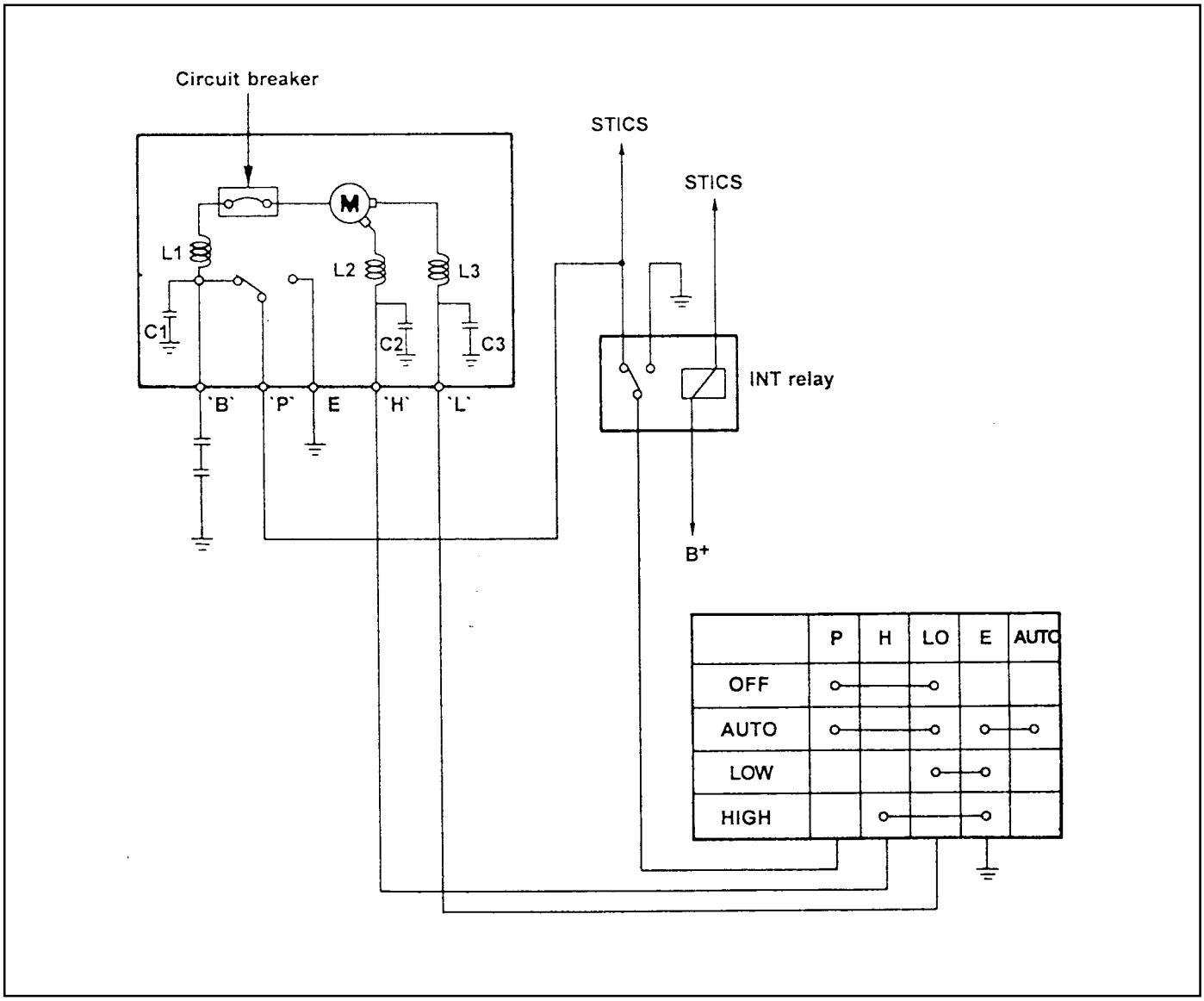

Downloaded from www.Manualslib.com manuals search engine

REAR WIPER AND WASHER

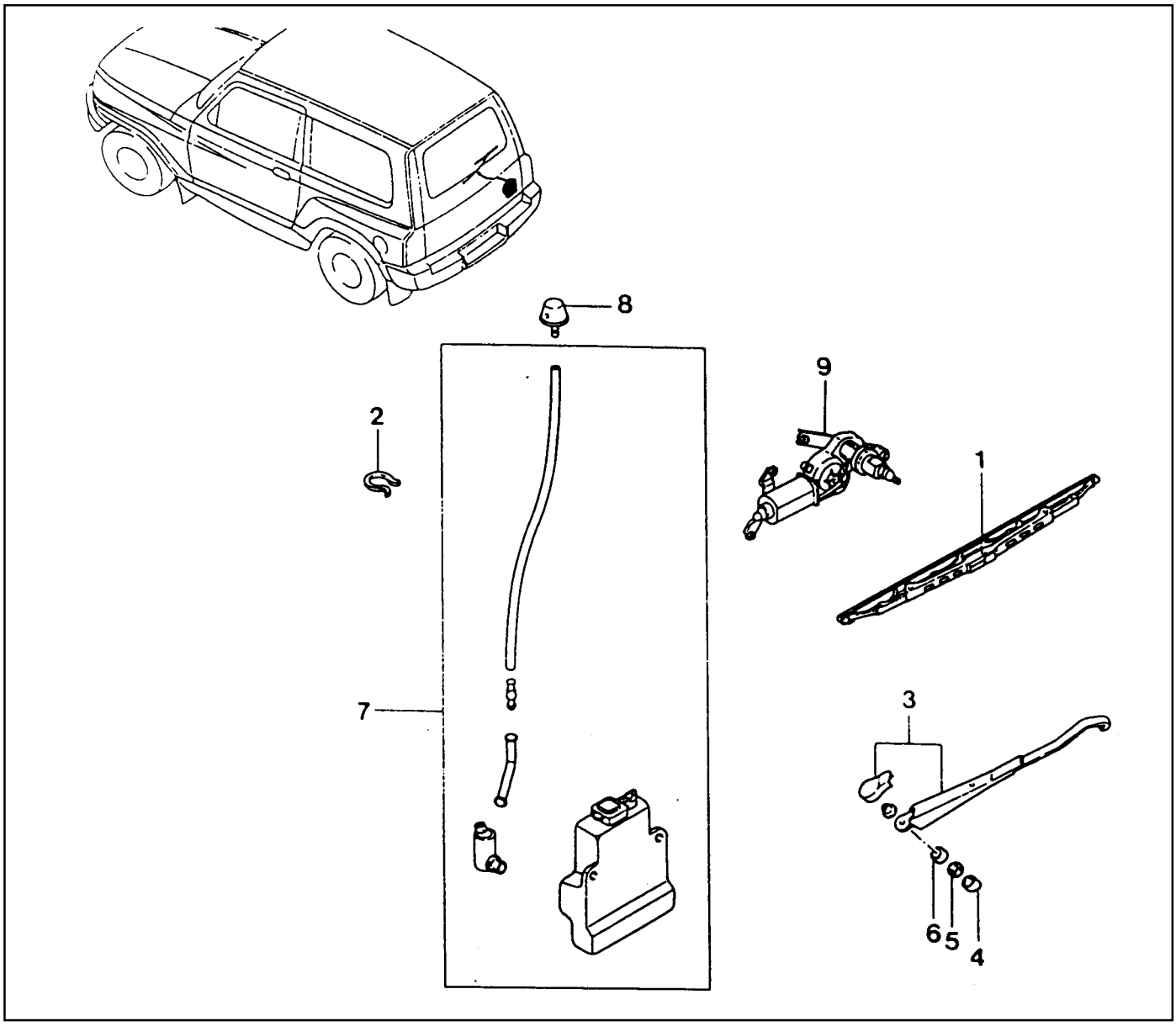

1 Blade
2 Clip
3 Wiper Arm Assembly
4 Wiper Cap
5 Wiper Cap Mounting Nut
6 Wiper Cap
7 Washer Reservoir Assembly
8 Washer Nozzle
9 Wiper Motor

Downloaded from www.Manualslib.com manuals search engine

Removal & Installation Procedure

1. Remove the spare tire.
2. Unscrew the locking nut and remove the wiper.

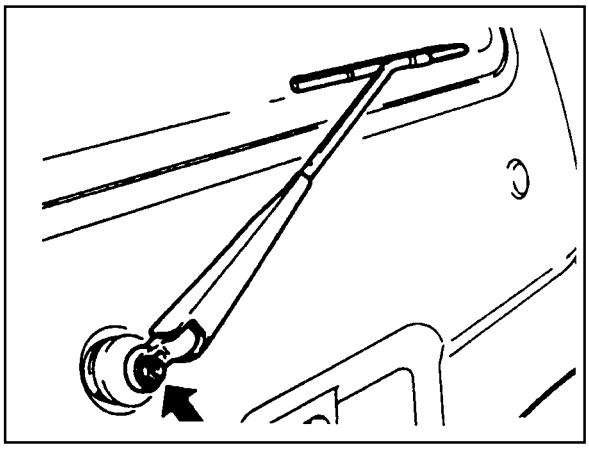

3. Unscrew the locking nut of wiper motor.

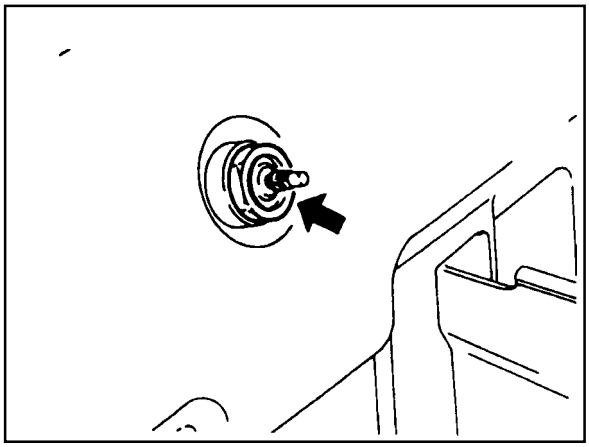

4. Remove the tailgate trim panel.
5. Disconnect the connector from the wiper motor.

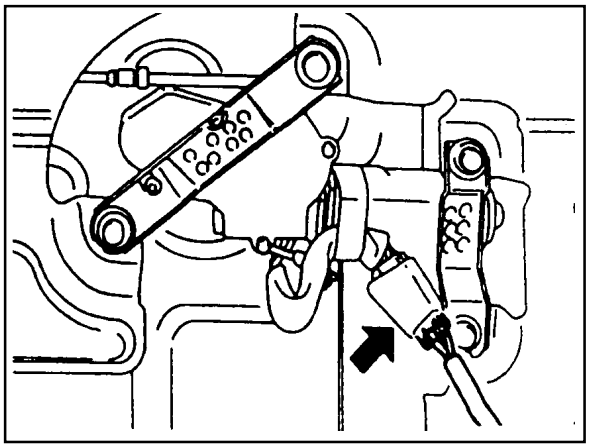

6. Unscrew four screws(arrows) and remove the wiper motor.
7. Installation should follow the removal procedure in the reverse order.

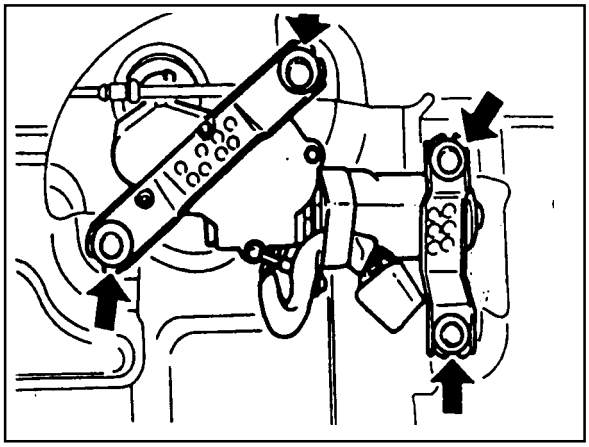

Downloaded from www.Manualslib.com manuals search engine

Connector Appearance and Connecting Circuit

Connector Terminal

B+	Battery Power Source
E	Ground
WP	From Switch

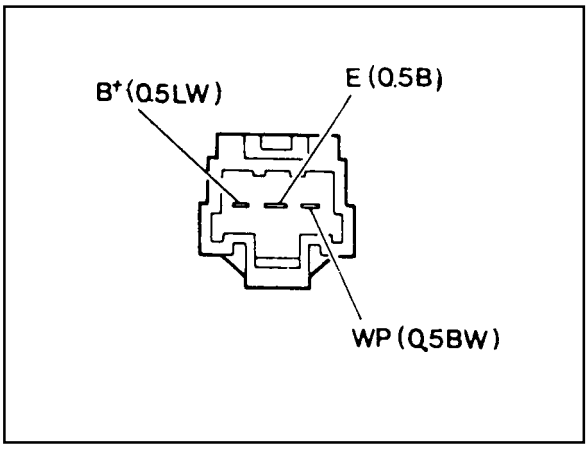

Diagram for Connecting Circuit

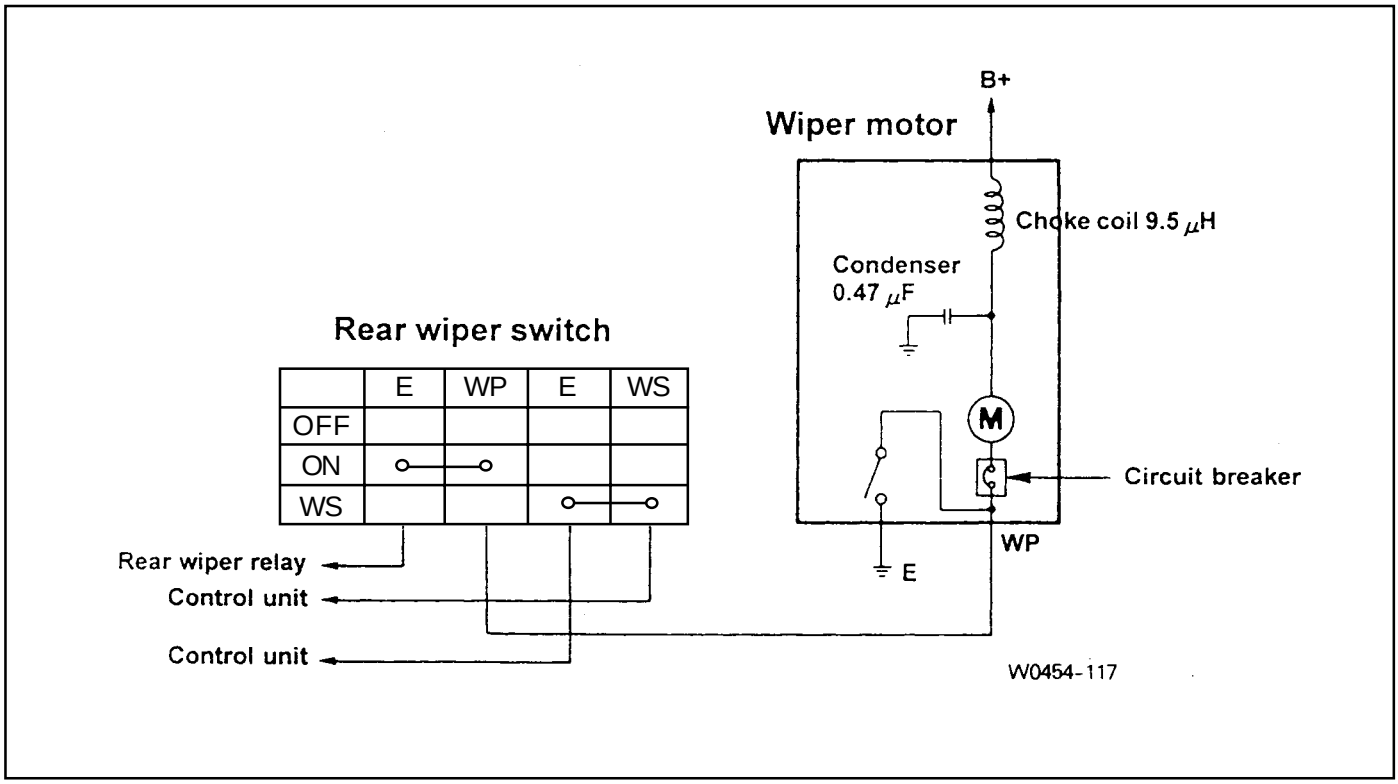

Downloaded from www.Manualslib.com manuals search engine

SECTION 9E

INSTRUMENTATION/DRIVER INFORMATION

Caution: Disconnect the negative battery cable before removing or installing any electrical unit or when a tool or equipment could easily come in contact with exposed electrical terminals. Disconnecting this cable will help prevent personal injury and damage to the vehicle. The ignition must also be in LOCK unless otherwise noted.

TABLE OF CONTENTS

Schematic and Routing Diagrams 9E-2
Cluster 9E-2
Component Locator 9E-3
Combination Meter 9E-3
Maintenance and Repair 9E-4
On-Vehicle Service 9E-4
Cluster 9E-4

Downloaded from www.Manualslib.com manuals search engine

SCHEMATIC AND ROUTING DIAGRAMS

CLUSTER

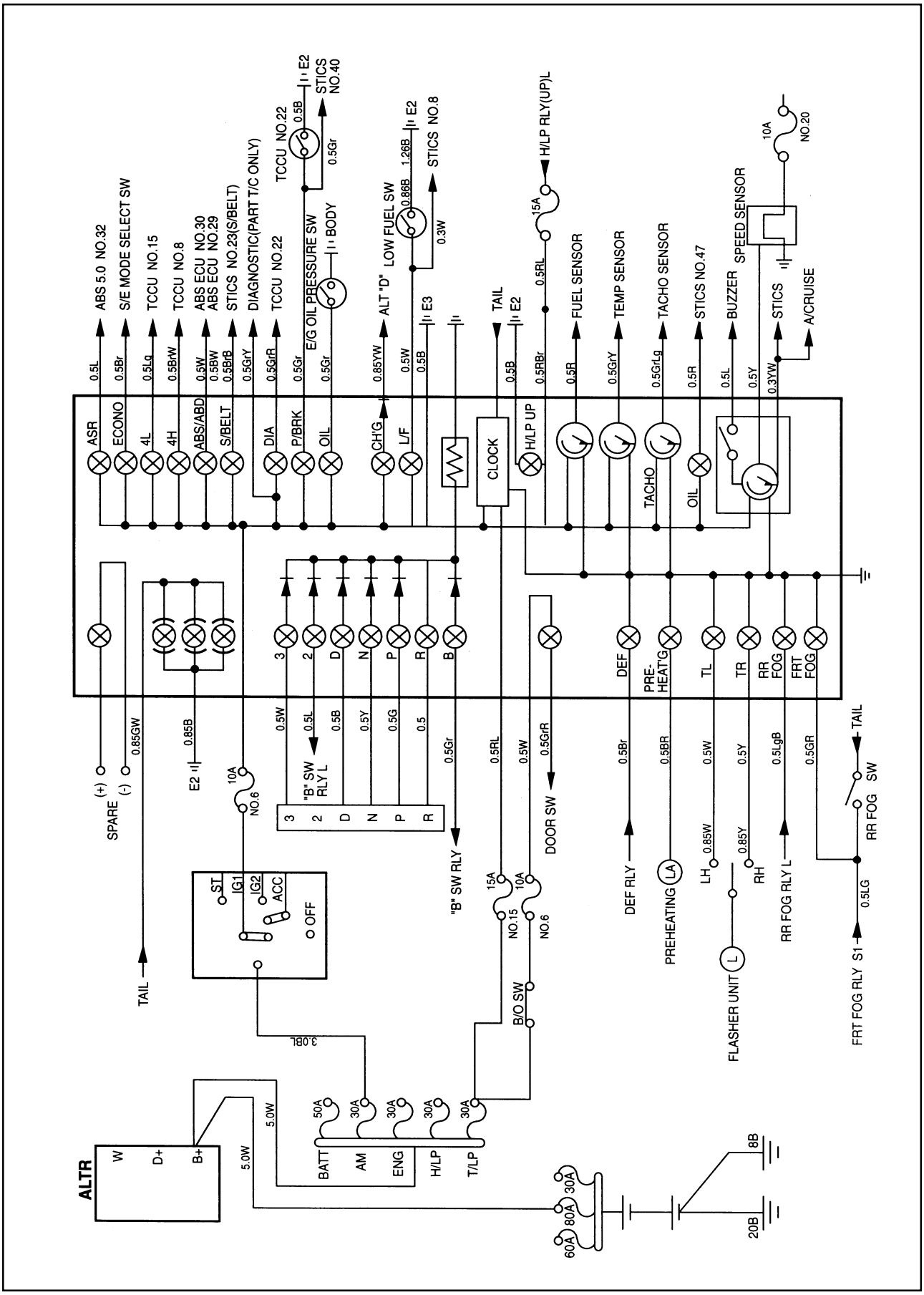

Downloaded from www.Manualslib.com manuals search engine

COMPONENT LOCATOR

COMBINATION METER

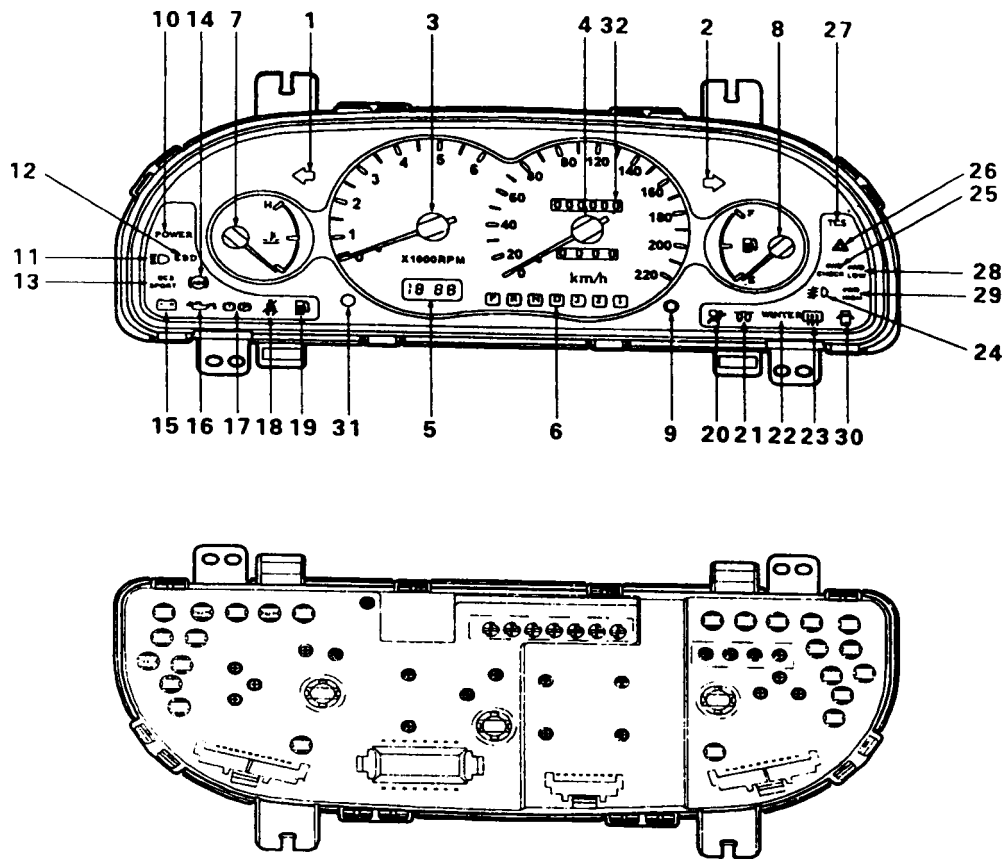

1 LH Turn Signal Lamp
2 RH Turn Signal Lamp
3 Tachometer
4 Speedometer
5 Digital Clock
6 Selector Lever Position Indicator (A/T)
7 Temperature Gauge
8 Fuel Gauge
9 Trip Meter Reset Button
10 Power Mode Indicator (A/T)
11 HI Beam Indicator
12 EBD Indicator
13 ECS SPORT Mode Indicator
14 ABS Warning Lamp
15 Alternator Warning Lamp
16 Oil Pressure Warning Lamp
17 Brake & Parking Brake Warning Lamp
18 Seat Belt Warning Lamp
19 Fuel Level Warning Lamp
20 Air Bag Warning Lamp
21 Pre-Glow
22 WINTER Mode Indicator
23 Rear Heated Glass Indicator
24 Front Fog Lamp Indicator
25 4WD Multfunction Indicator
26 Hazard Warning Lamp
27 TCS Indicator
28 4WD LO Indicator
29 4WD HI Indicator
30 Door Ajar Warning Lamp
31 Digital Clock Setting Knob

Downloaded from www.Manualslib.com manuals search engine

MAINTENANCE AND REPAIR

ON-VEHICLE SERVICE

CLUSTER

Removal & Installation Procedure

1. Loosen the screw and remove the fascia assembly (1).

   Notice

   When assembling, there should be no clerance between crash pad assembly (4) and cluster fascia assembly, and the clearance between combination meter (3) and cluster fascia have to be maintained 2mm.

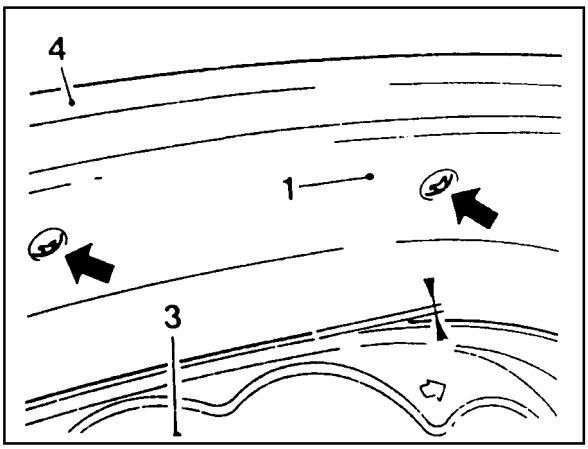

2. Remove 4 screws.

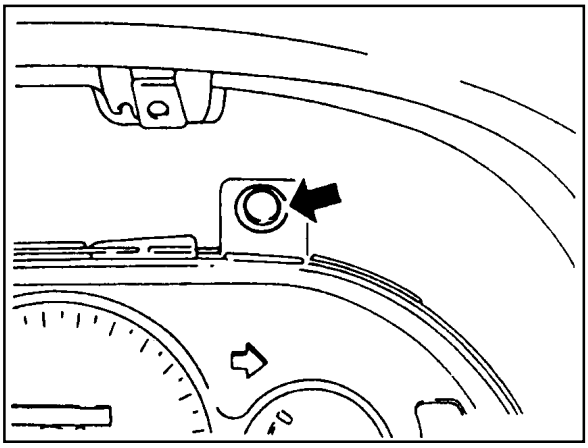

3. Disconnect connectors and remove the combination meter.
4. Installation should follow the removal procedure in the leverse order.

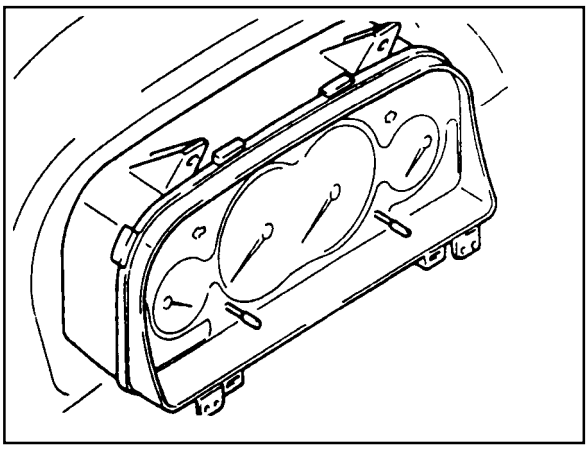

Downloaded from www.Manualslib.com manuals search engine

Inspection Procedure

1. Speedometer

(DIESEL) (km/h)

Speed	20	40	60	80	100	120	140	160
Tolerance	+4 +0	+3 +0	+4 +0	+5 +0	+5 +0	+5.5 +0	+5.5 +0.5	+5.5 +0.5

(GASOLINE) (km/h)

Speed	20	40	60	80	100	120	140	160	180	200
Tolerance	+4 +0	+3 +0	+4 +0	+5 +0	+5 +0	+5.5 +0.5	+5.5 +0.5	+5.5 +0.5	+6 +1	+6 +1

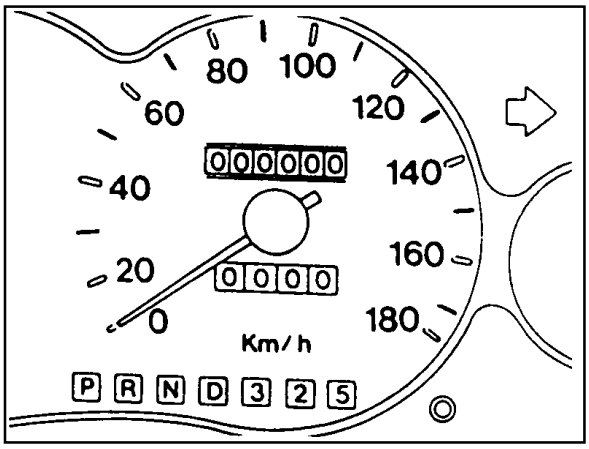

2. Tachometer

(DIESEL)

Revolution	1000	2000	3000	4000	5000
Tolerance	+137 -63	+199 -51	+261 -39	+298 -2	-

(GASOLINE)

Revolution	1000	2000	3000	4000	5000	6000
Tolerance	±100	±125	±150	±150	±150	±180

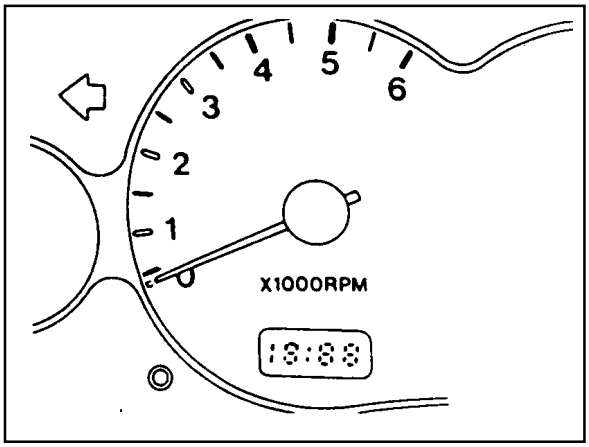

3. Fuel Gauge

Classification	E	1/2	F
Resistance(W)	97	32.5	6
Tolerance(°)	±2.5°	±5°	±2.5°

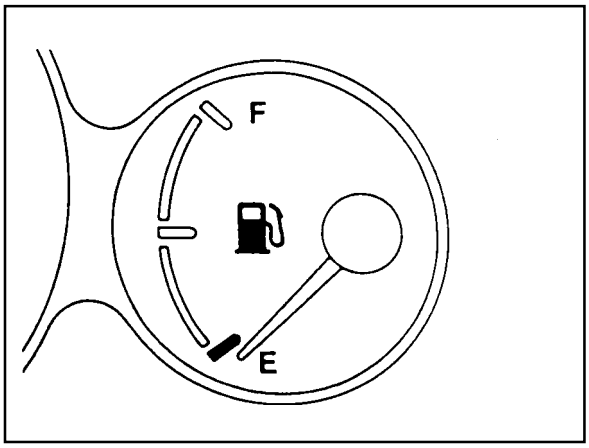

4. Temperature Gauge (Temperature Sensor)

Temperature (°)	Resistance (W)
50	156.9
86	44.5
105.5	27.3
120	19.4

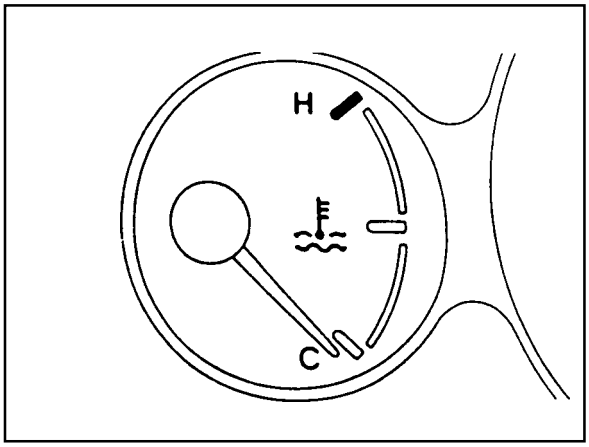

Downloaded from www.Manualslib.com manuals search engine

SECTION 9F

AUDIO SYSTEM

Caution: Disconnect the negative battery cable before removing or installing any electrical unit or when a tool or equipment could easily come in contact with exposed electrical terminals. Disconnecting this cable will help prevent personal injury and damage to the vehicle. The ignition must also be in LOCK unless otherwise noted.

TABLE OF CONTENTS

Schematic and Routing Diagrams 9F-2
Audio 9F-2
Diagnosis 9F-3
General Diagnosis 9F-3

Downloaded from www.Manualslib.com manuals search engine

SCHEMATIC AND ROUTING DIAGRAMS

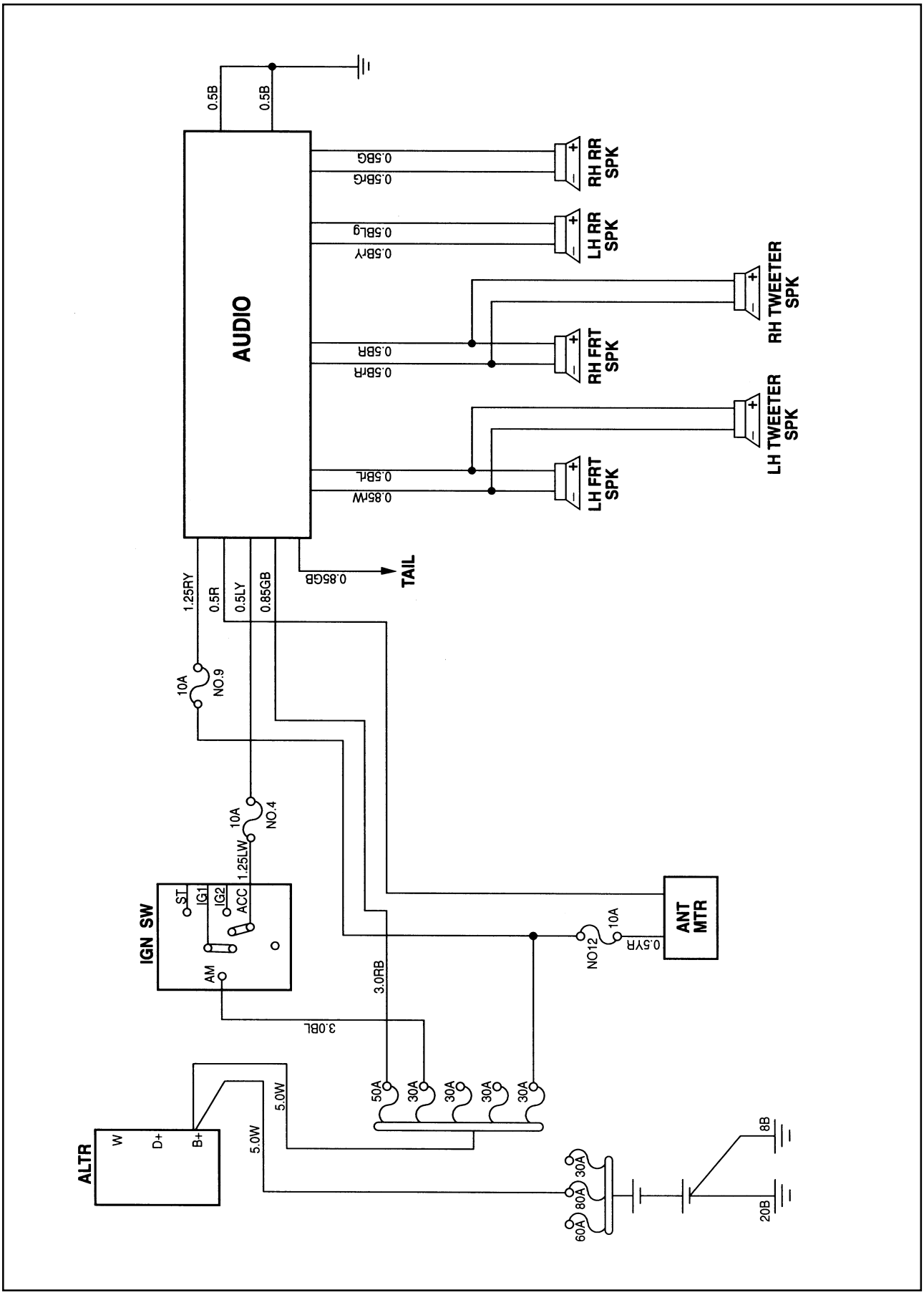

Downloaded from www.Manualslib.com manuals search engine

DIAGNOSIS

GENERAL DIAGNOSIS

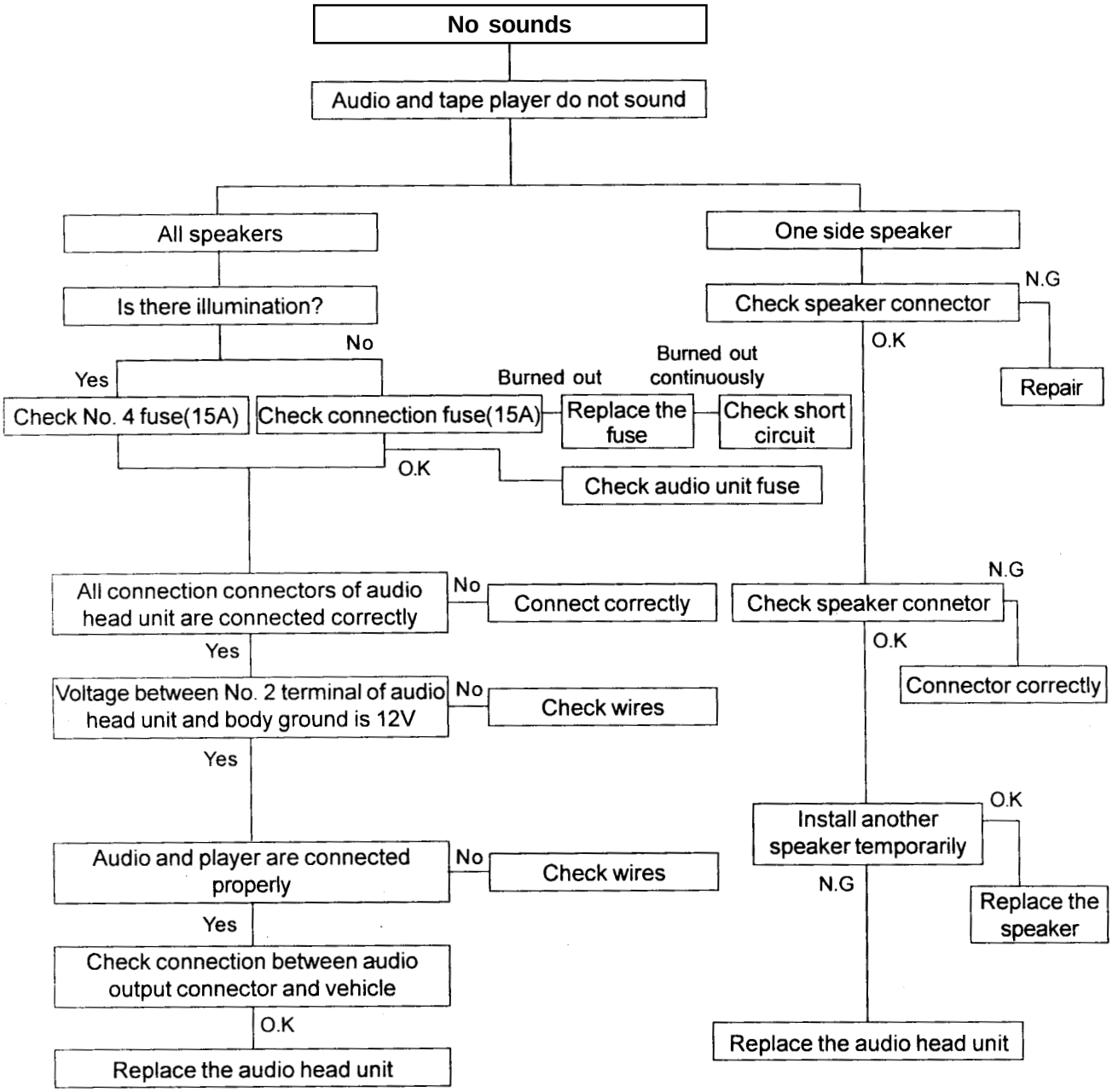

Downloaded from www.Manualslib.com manuals search engine

SECTION 9G

INTERIOR TRIM

Caution: Disconnect the negative battery cable before removing or installing any electrical unit or when a tool or equipment could easily come in contact with exposed electrical terminals. Disconnecting this cable will help prevent personal injury and damage to the vehicle. The ignition must also be in LOCK unless otherwise noted.

TABLE OF CONTENTS

Component Locator 9G-2

Console Box 9G-2

Downloaded from www.Manualslib.com manuals search engine

COMPONENT LOCATOR

CONSOLE BOX

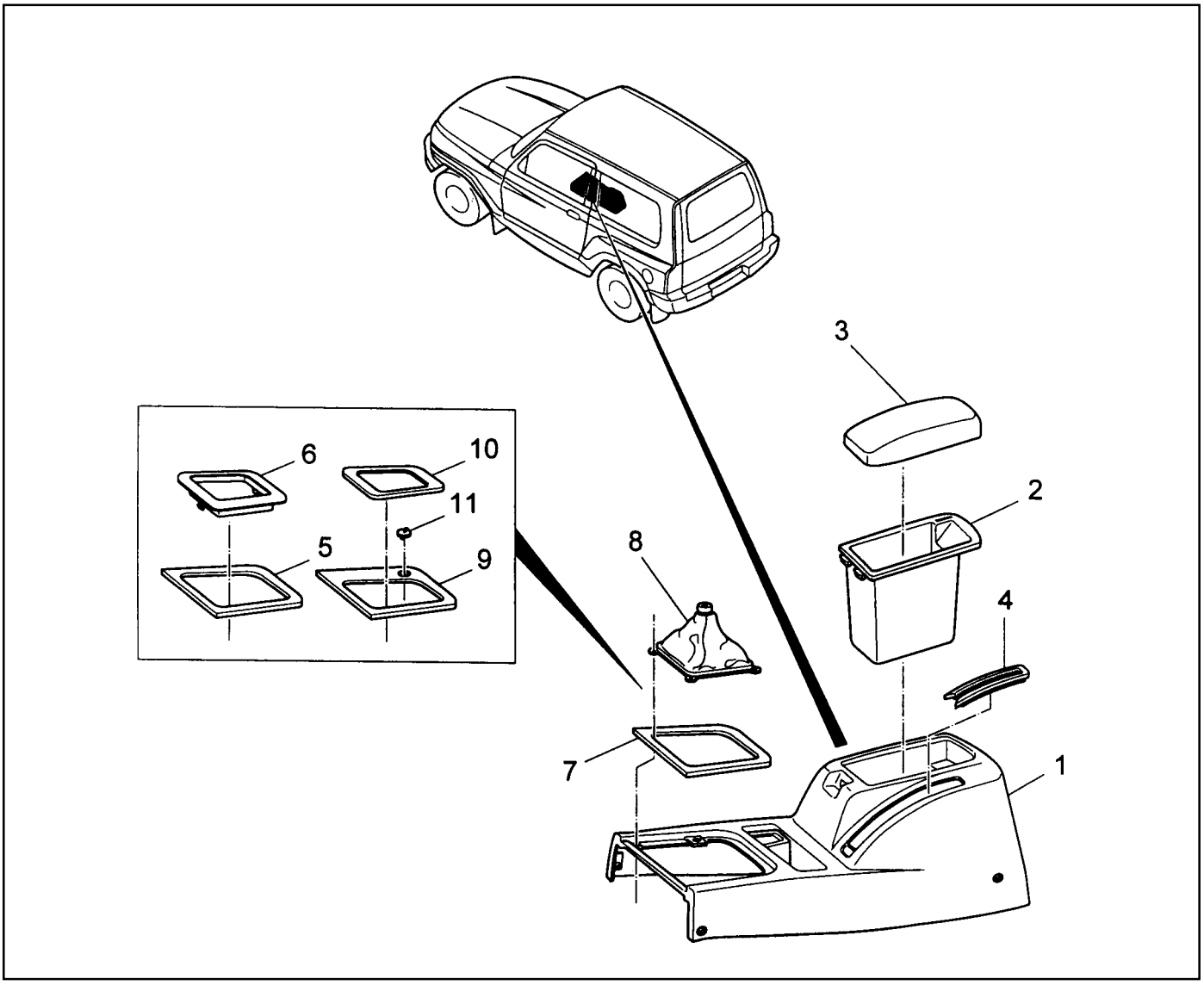

1 Console Box
2 Tray
3 Arm Rest
4 Parking Lever Strip
5 Facia (BTRE A/T)
6 Indicator Cover
7 Facia (M/T)
8 Boot Assembly (M/T)
9 Facia (MB A/T)
10 Rear Facia Strip
11 Rear Facia Cap

Downloaded from www.Manualslib.com manuals search engine

SECTION 9H

SEATS

Caution: Disconnect the negative battery cable before removing or installing any electrical unit or when a tool or equipment could easily come in contact with exposed electrical terminals. Disconnecting this cable will help prevent personal injury and damage to the vehicle. The ignition must also be in LOCK unless otherwise noted.

TABLE OF CONTENTS

Component Locator 9H-2

Front Seat & Rear Seat 9H-2

Downloaded from www.Manualslib.com manuals search engine

COMPONENT LOCATOR

FRONT SEAT & REAR SEAT

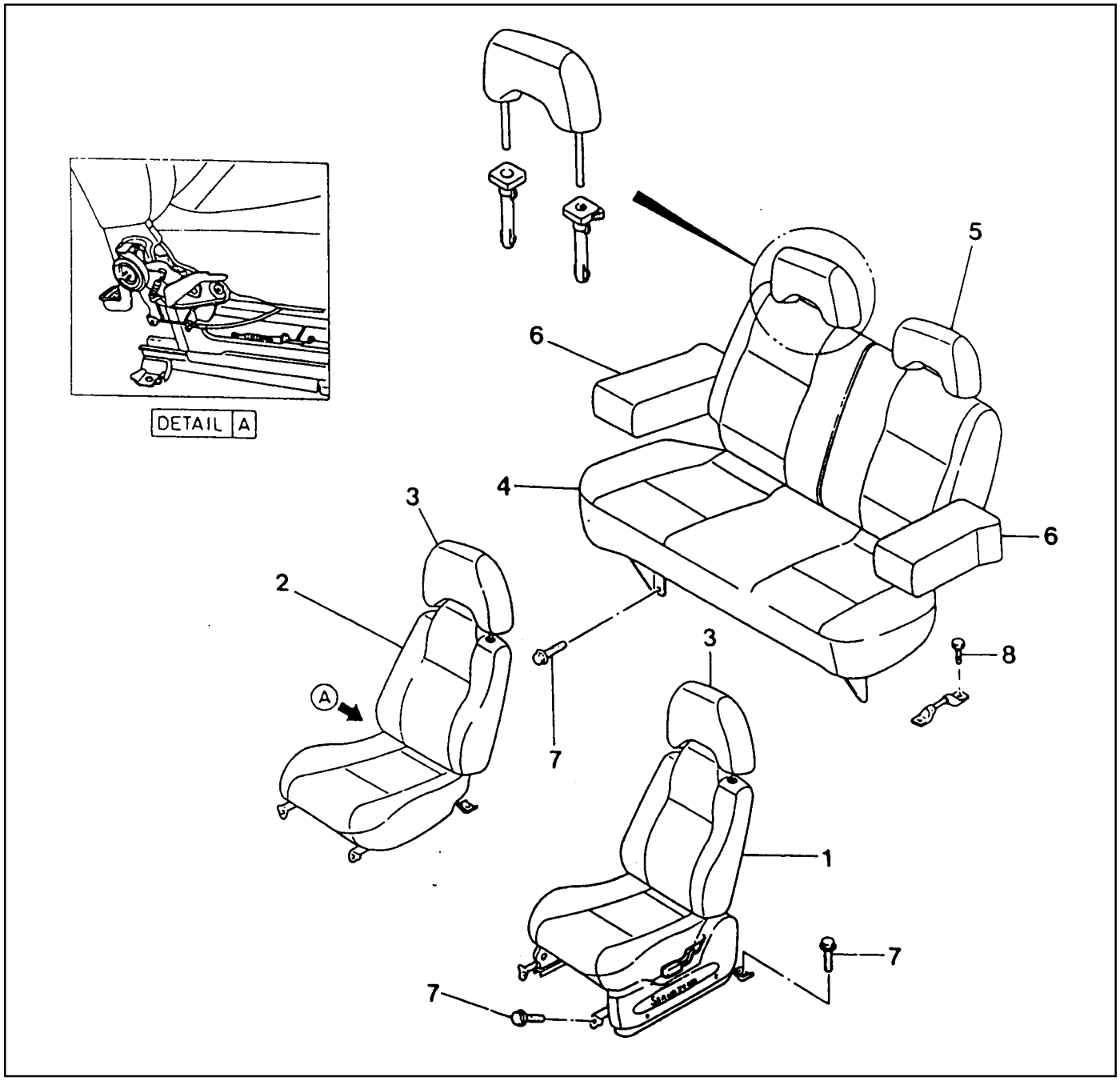

1 Front Seat Assembly (Driver's)
2 Front Seat Assembly (Passenger's)
3 Head Restraint
4 Rear Seat Assembly
5 Rear Seat Head Restraint
6 Arm Rest
7 Bolt ..... 17-27 Nm
8 Bolt ..... 35-55 Nm

Downloaded from www.Manualslib.com manuals search engine

SECTION 9L

GLASS AND MIRRORS

Caution: Disconnect the negative battery cable before removing or installing any electrical unit or when a tool or equipment could easily come in contact with exposed electrical terminals. Disconnecting this cable will help prevent personal injury and damage to the vehicle. The ignition must also be in LOCK unless otherwise noted.

TABLE OF CONTENTS

Schematic and Routing Diagrams 9L-2
Outside Mirror 9L-2
Component Locator 9L-3
Glass 9L-3
Auto Dimming Room Mirror 9L-4
Maintenance and Repair 9L-5
On-Vehicle Service 9L-5
Auto Dimming Room Mirror 9L-5

Downloaded from www.Manualslib.com manuals search engine

SCHEMATIC AND ROUTING DIAGRAMS

OUTSIDE MIRROR

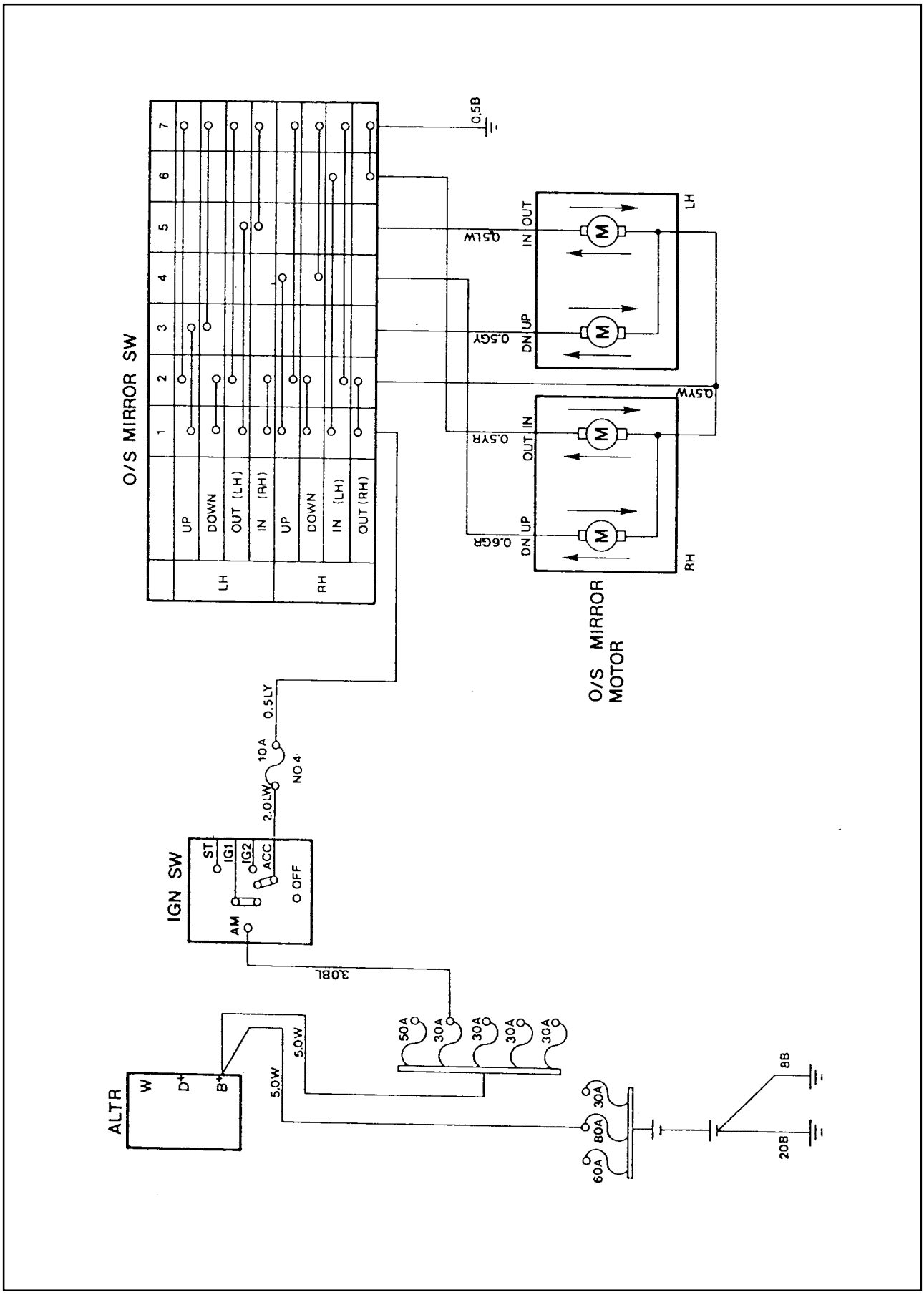

Downloaded from www.Manualslib.com manuals search engine

COMPONENT LOCATOR

GLASS

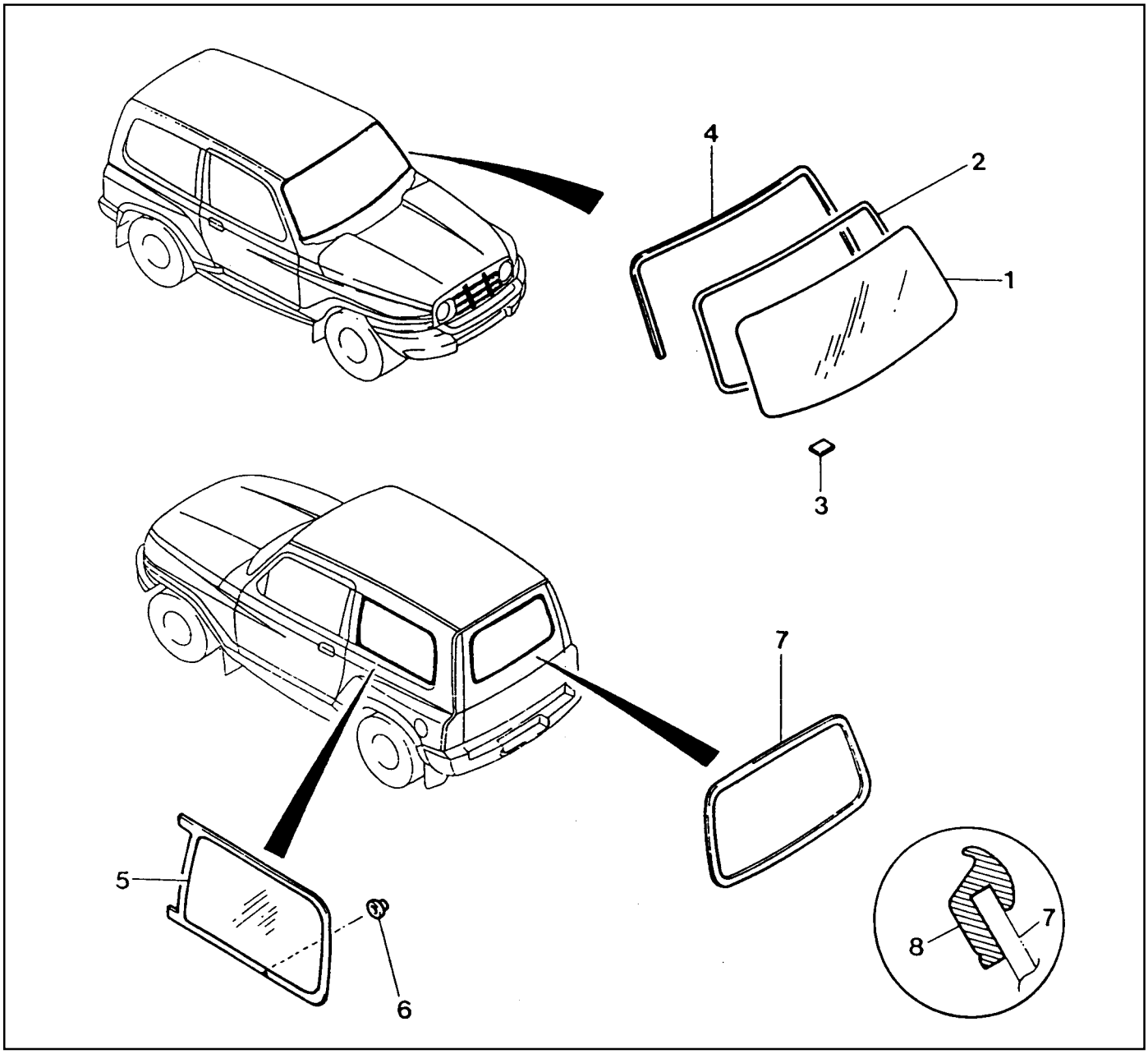

1 Wind Shield Tinted Glass
2 Wind Shield Dam
3 Spacer Pad
4 Wind Shield Upper Mounlding
5 Side Fixed Glass
6 Side Glass Nut
7 Tailgate Tinted Glass Assembly
8 Tailgate Glass Moulding

Downloaded from www.Manualslib.com manuals search engine

AUTO DIMMING ROOM MIRROR

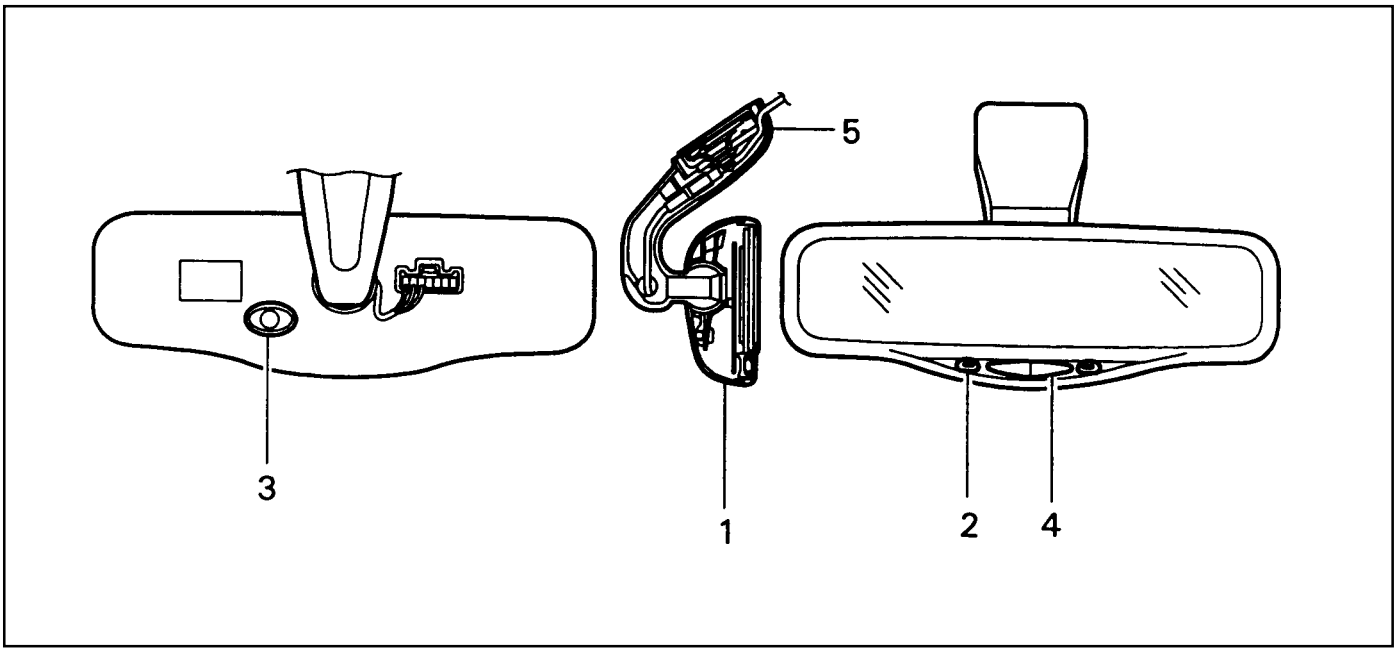

1 Auto Dimming Room Mirror Assembly
2 Sensor (Front)
3 Sensor (Rear)
4 Switch
5 Cover
6 Lamp

Downloaded from www.Manualslib.com manuals search engine

MAINTENANCE AND REPAIR

ON-VEHICLE SERVICE

AUTO DIMMING ROOM MIRROR

Function

When ignition switch is turned ON, green lamp on auto dimming mirror will turn in and glare reflection ratio will be automatically adjusted. By positioning AUTO switch to ON, 2Sensors will automatically adjust refection ratio after sensing rear and surrounding brightness to reduce driver's eye fatigue during driving though tunnel or in night.

When OFF switch is pressed, the lamp goes out and it will be operated as a normal rear view mirror and shift lever is positioned in reverse, the auto dimming function will be automatically OFF.

Specifications

Voltage Rating	DV 12V
Operating Current	1 A
Over Current	3 A

Check & Service

If reflection ratio is not adjusted automatically during night driving when AUTO switch is pressed, check each connectors for proper connection and power flow to the auto dimming room mirror using multi tester.

1. Yellow (Connected to back-up lamp)
2. Blue (Ground)
3. White (Power)

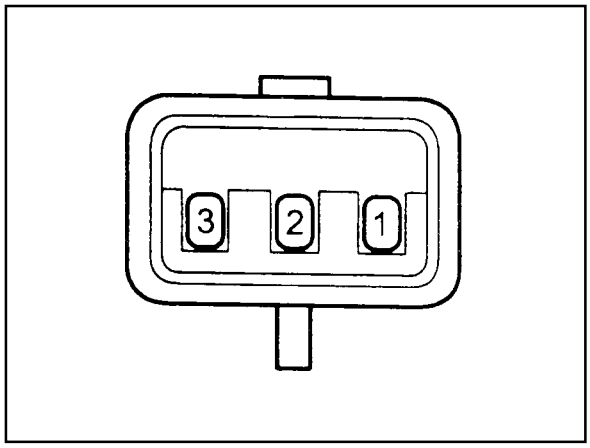

Downloaded from www.Manualslib.com manuals search engine

Removal & Installation Procedure

1. Removal the room mirror cover (arrow).

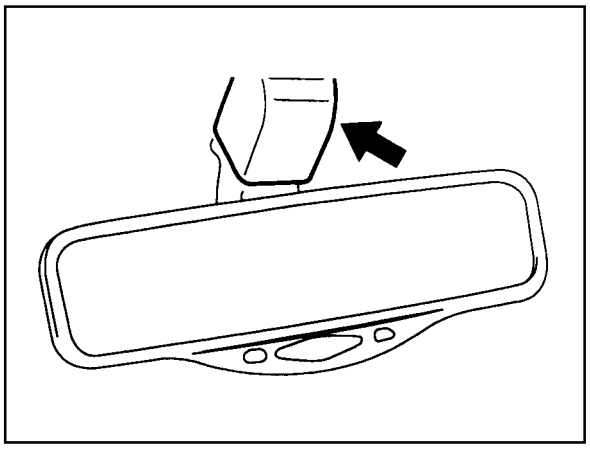

2. Disconnect 3-pin connector.
3. Removal the mirror assembly.
4. Installation should follow the removal procedure in the reverse order.

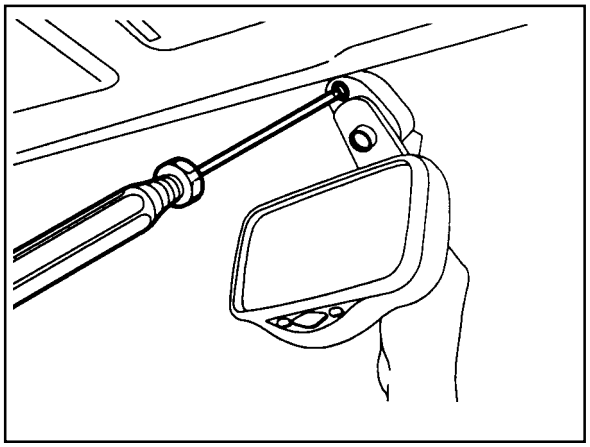

Downloaded from www.Manualslib.com manuals search engine

SECTION 9M

EXTERIOR TRIM

TABLE OF CONTENTS

Component Locator 9M-2
Side Trim 9M-2
Rear End Trim 9M-3
Under Trim 9M-4

Downloaded from www.Manualslib.com manuals search engine

COMPONENT LOCATOR

SIDE TRIM

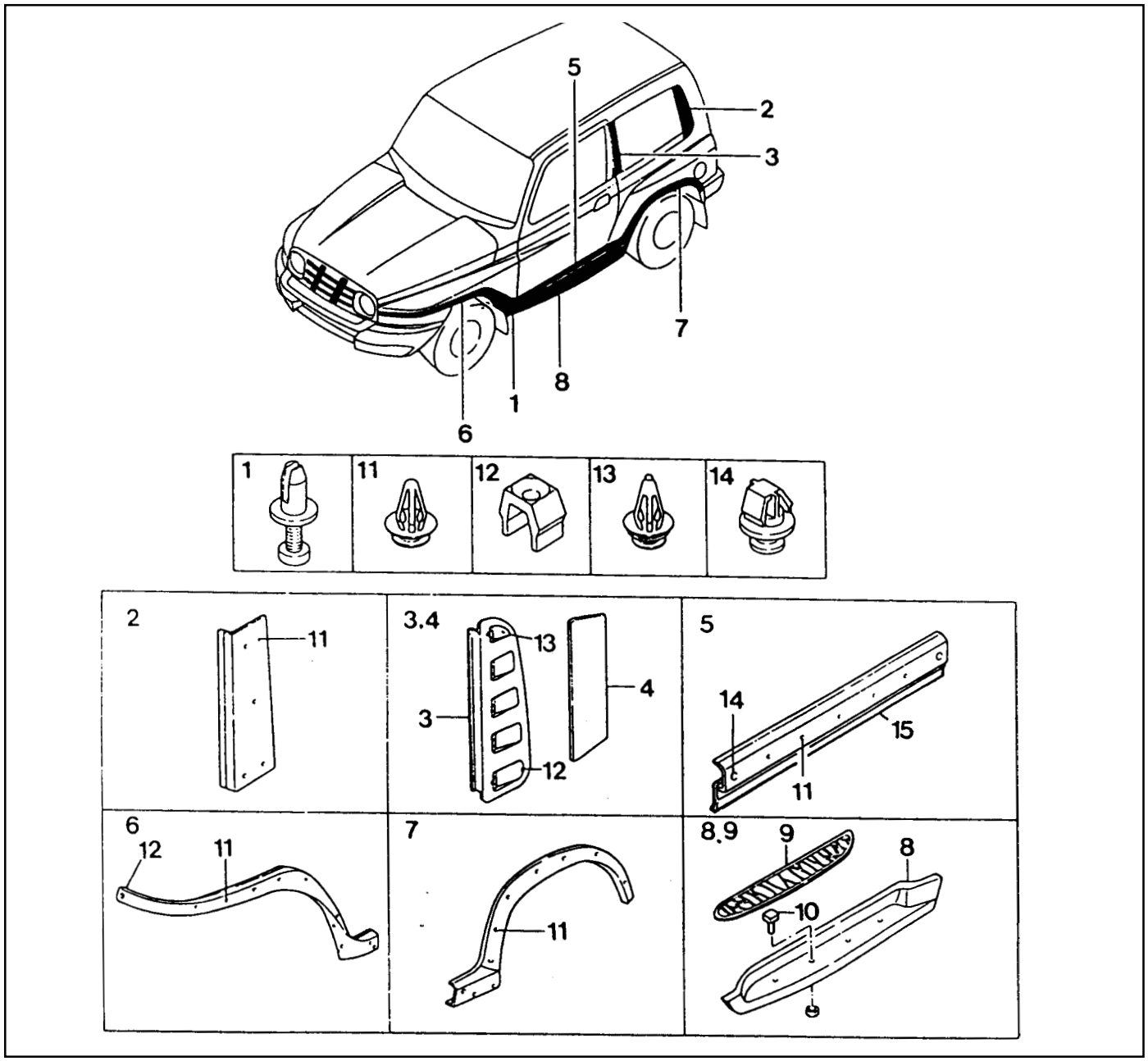

1 Rivet
2 B Piller Cover
3 Air Extractor Grill
4 Air Extractor Grill Tape
5 Door Moulding
6 Front Wheel Arch Moulding
7 Rear Eheel Arch Moulding
8 Side Step
9 Side Step Upper Cover
10 Bolt
11 Wheel Arch Clip
12 Garnish Clip
13 Garnish Clip
14 Door Moulding Clip
15 Door Moulding Strip

Downloaded from www.Manualslib.com manuals search engine

REAR END TRIM

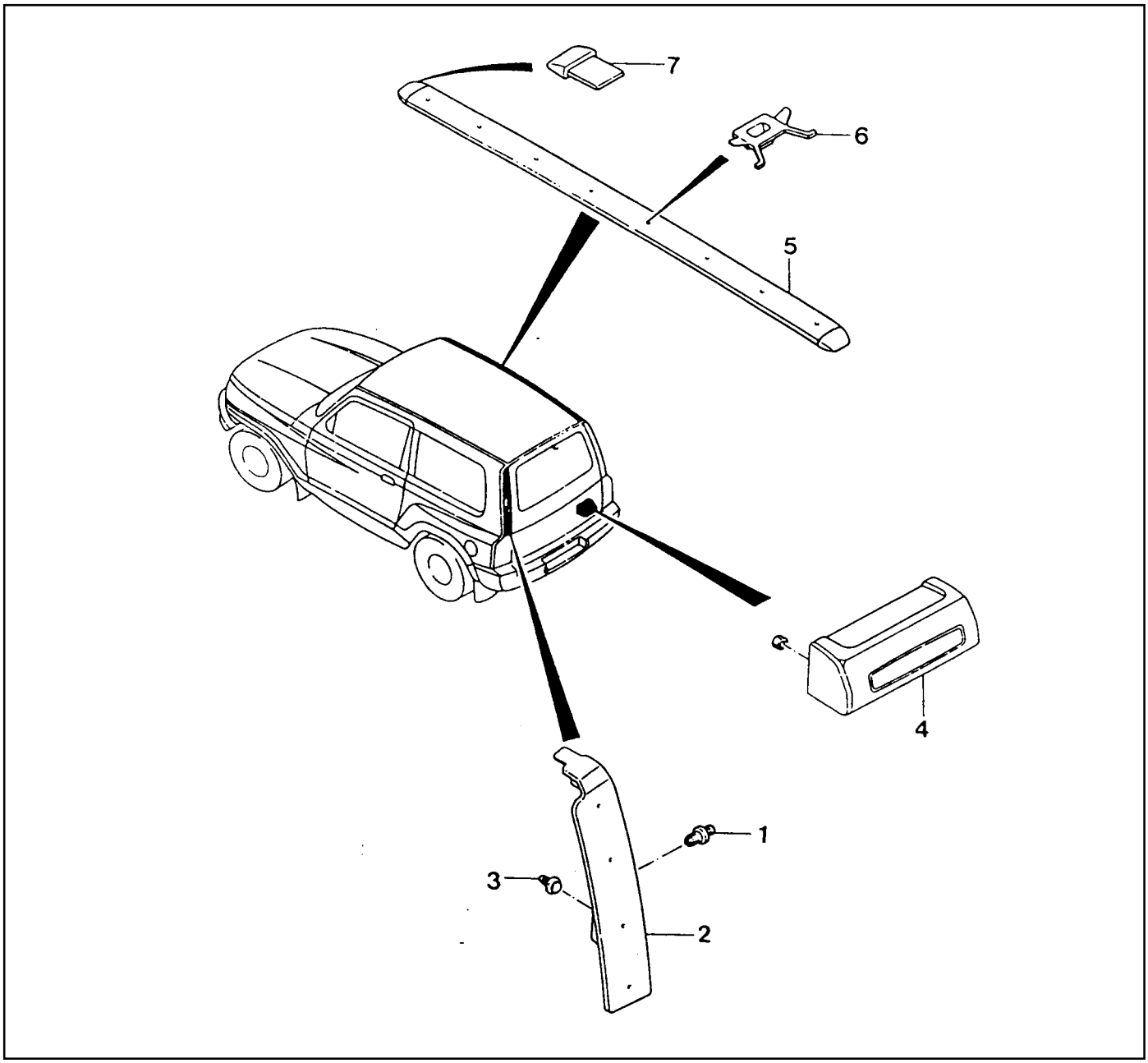

1 Clip
2 “C” Piller Cover
3 Clip
4 Tailgate Garnish
5 Roof Moulding
6 Roof Moulding Endcap
7 Clip

Downloaded from www.Manualslib.com manuals search engine

UNDER TRIM

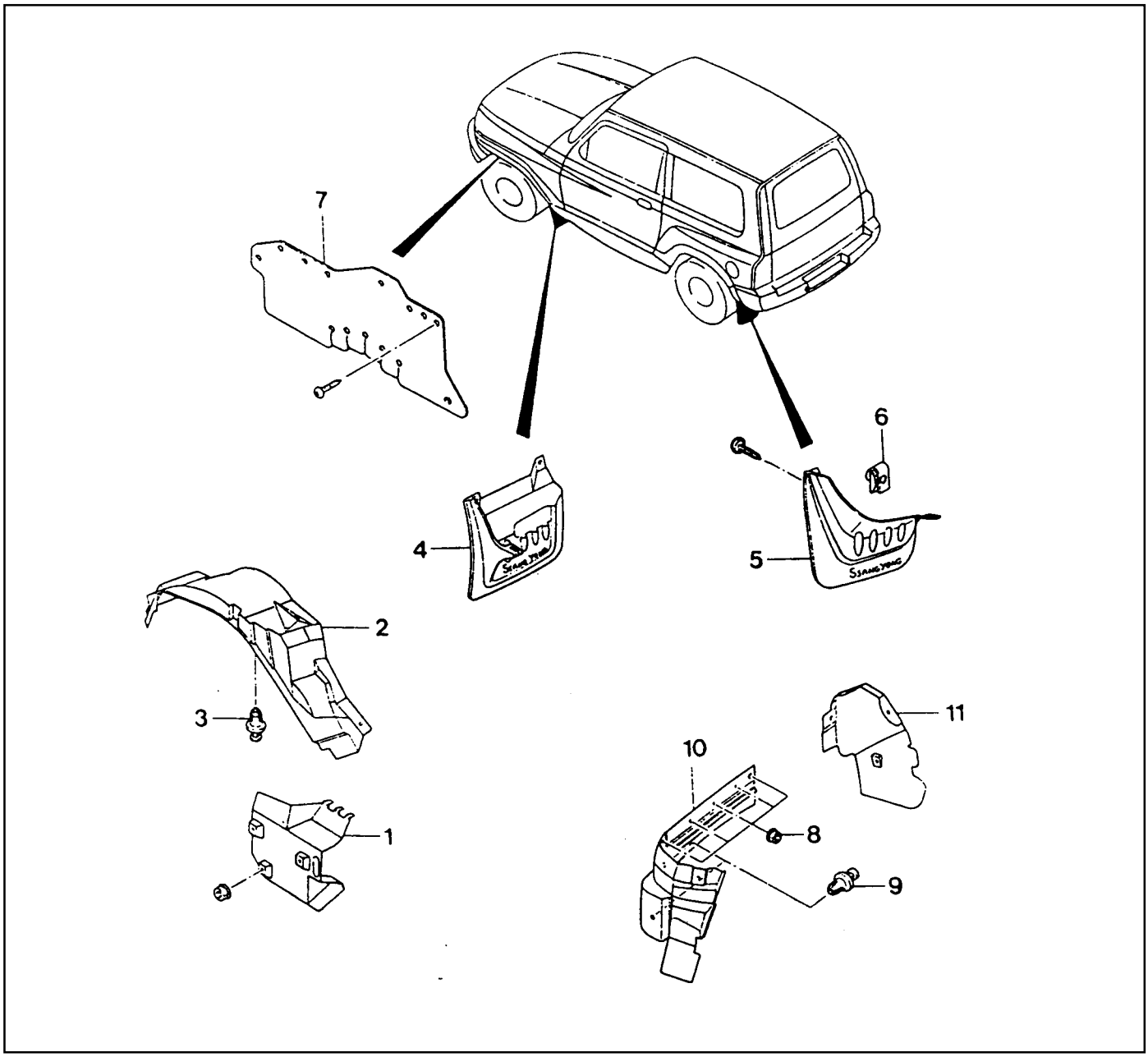

1 Wheel House Cover ‘A’
2 Wheel House Cover ‘B’
3 Rivet
4 Front Mud Guard
5 Rear Mud Guard
6 Spring Nut
7 Splash Guide
8 Flange Cap Nut
9 Rivet
10 Rear Wheel House Cover
11 Rear Wheel House Geaner

Downloaded from www.Manualslib.com manuals search engine

SECTION 9N

FRAME AND UNDERBODY

TABLE OF CONTENTS

Dimension 9N-2
Frame 9N-2
Component Locator 9N-4
Body Mountings 9N-4
Body Mounting-Sectional View 9N-5
Maintenance and Repair 9N-6
On-Vehicle Service 9N-6
Skid Plate 9N-6

Downloaded from www.Manualslib.com manuals search engine

DIMENSION

FRAME

NO.	1	2	3	4	5	6	7	S8	9	10	11	12	13	14	15	X16	17	18	19	21	22	23	24	Y25	A26
Length	910	674	570	113	644	7. 5	350. 5	315	71. 2	460	722.8	681	1250	47	218	1035	722	290	355	1250	1300	1040	320	575	265
NO.	27	28	29	X30	31	32	33	34	35	36	37	38	39	40	41	42	43	X44	45	46	S47	48	49	S50	S51
Length	291. 5	420.5	800	2725	170	510	90	1200	875	1010	700	710	1305	1314	2367	102	204	625	50	99	396	200	24	231	178.5
NO.	H52	X53	54	55	56	57	H58	S59	K60	K61	62	63	X64	A65	A66	A67	68	X69	70	71					
Length	251	290	137	47	232	166	65. 8	1085	7. 5	18. 2	130	163	2335	425	485	675	215	3110	79. 8	85					

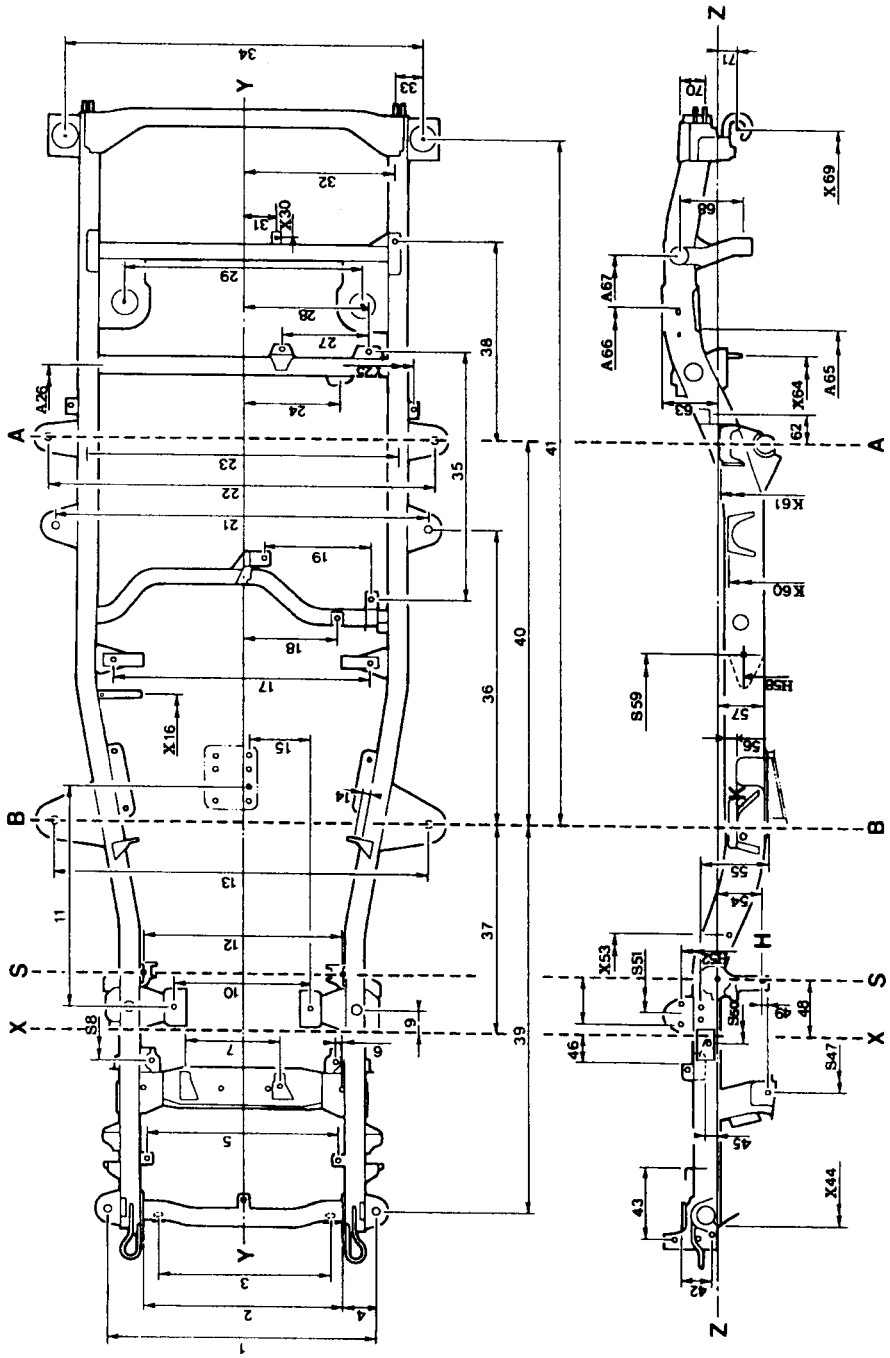

Downloaded from www.Manualslib.com manuals search engine

Point	AE	AG	AD	AF	AB	AC	AH	AO	AI	AN	AJ	AL	AK	AM
Length	1495. 3	1502. 5	796. 1	803. 0	672. 6	648. 8	1124. 8	1111. 4	1393. 6	1382. 4	1785. 9	1780. 6	2372. 8	2366. 7

※ Point A : Transmission Mounting Point

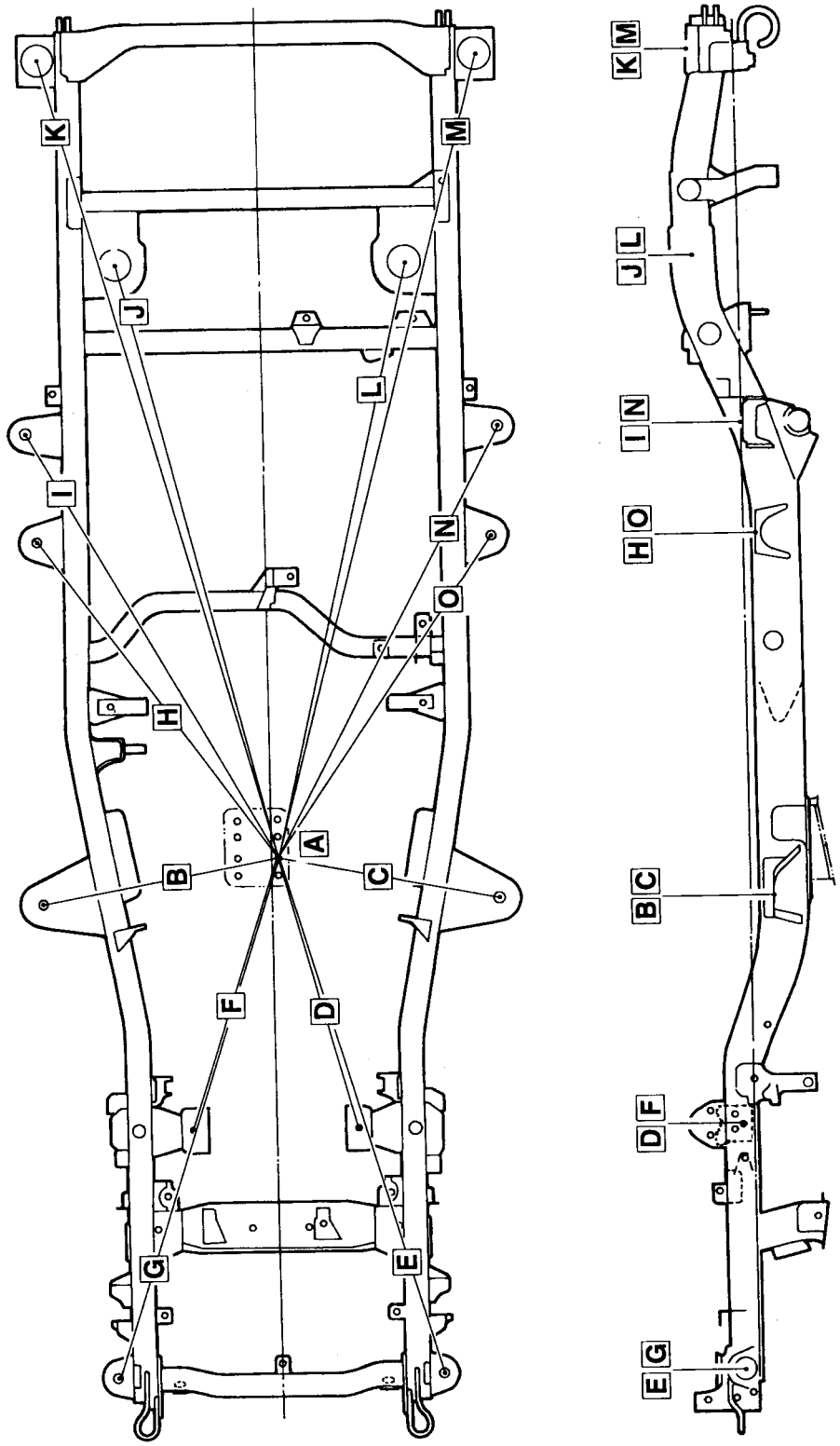

Downloaded from www.Manualslib.com manuals search engine

COMPONENT LOCATOR

BODY MOUNTINGS

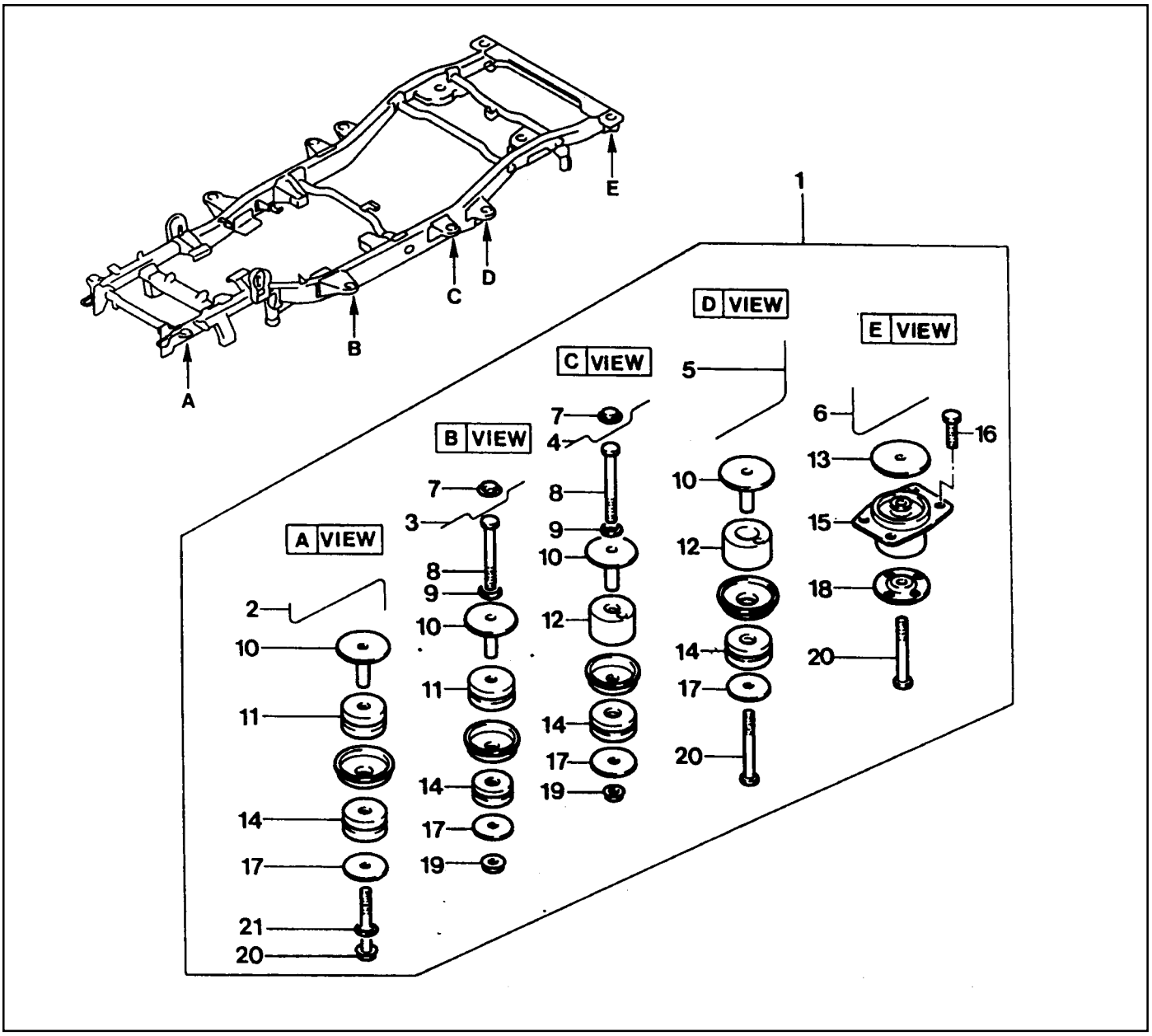

1 Assembly
2 No. 1 Insulator Assembly
3 No. 2 Insulator Assembly
4 No. 3 Insulator Assembly
5 No. 4 Insulator Assembly
6 No. 5 Insulator Assembly
7 Blind Plug
8 Bolt (M10 × 1.25)
9 Washer (M14)
10 Washer and Tube
11 Upper Insulator
12 Upper Insulator
13 Upper Plate
14 Lower Insulator
15 Upper Insulator
16 Bolt
17 Plain Washer
18 Lower Insulator
19 Nut
20 Bolt
21 Plain Washer

Downloaded from www.Manualslib.com manuals search engine

BODY MOUNTING-SECTIONAL VIEW

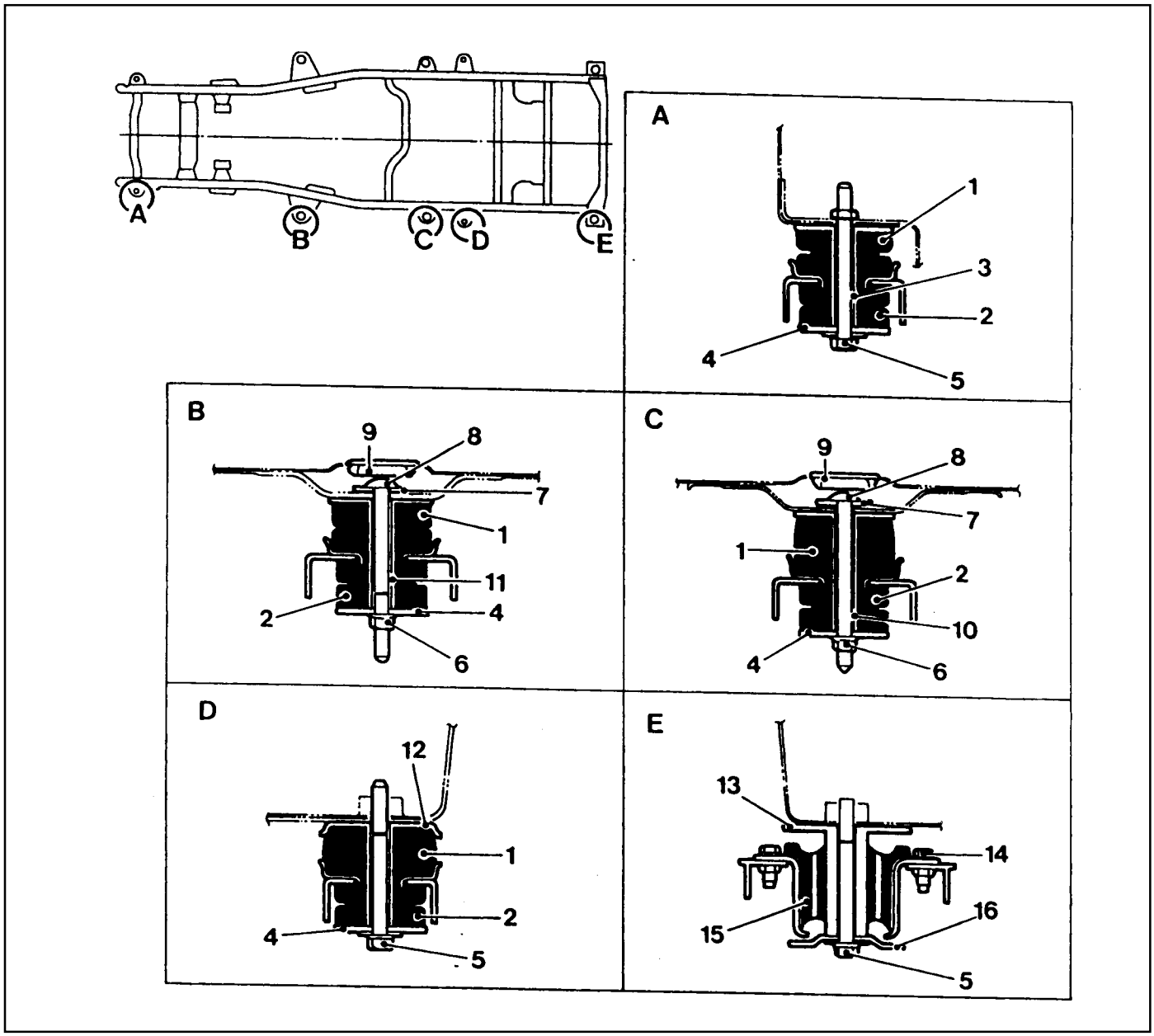

1 Upper Insulator
2 Lower Insulator
3 Washer and Tube
4 Washer
5 Bolt ..... 25-30 Nm
6 Nut-M10 ..... 25-30 Nm
7 Washer-M14
8 Nut-M10 ..... 25-30 Nm
9 Plug-M40
10 Washer and Tube
11 Washer and Tube
12 Washer and Tube
13 Plate
14 Bolt ..... 25-30 Nm
15 Upper Insulator
16 Lower Insulator

Downloaded from www.Manualslib.com manuals search engine

MAINTENANCE AND REPAIR

ON-VEHICLE SERVICE

SKID PLATE

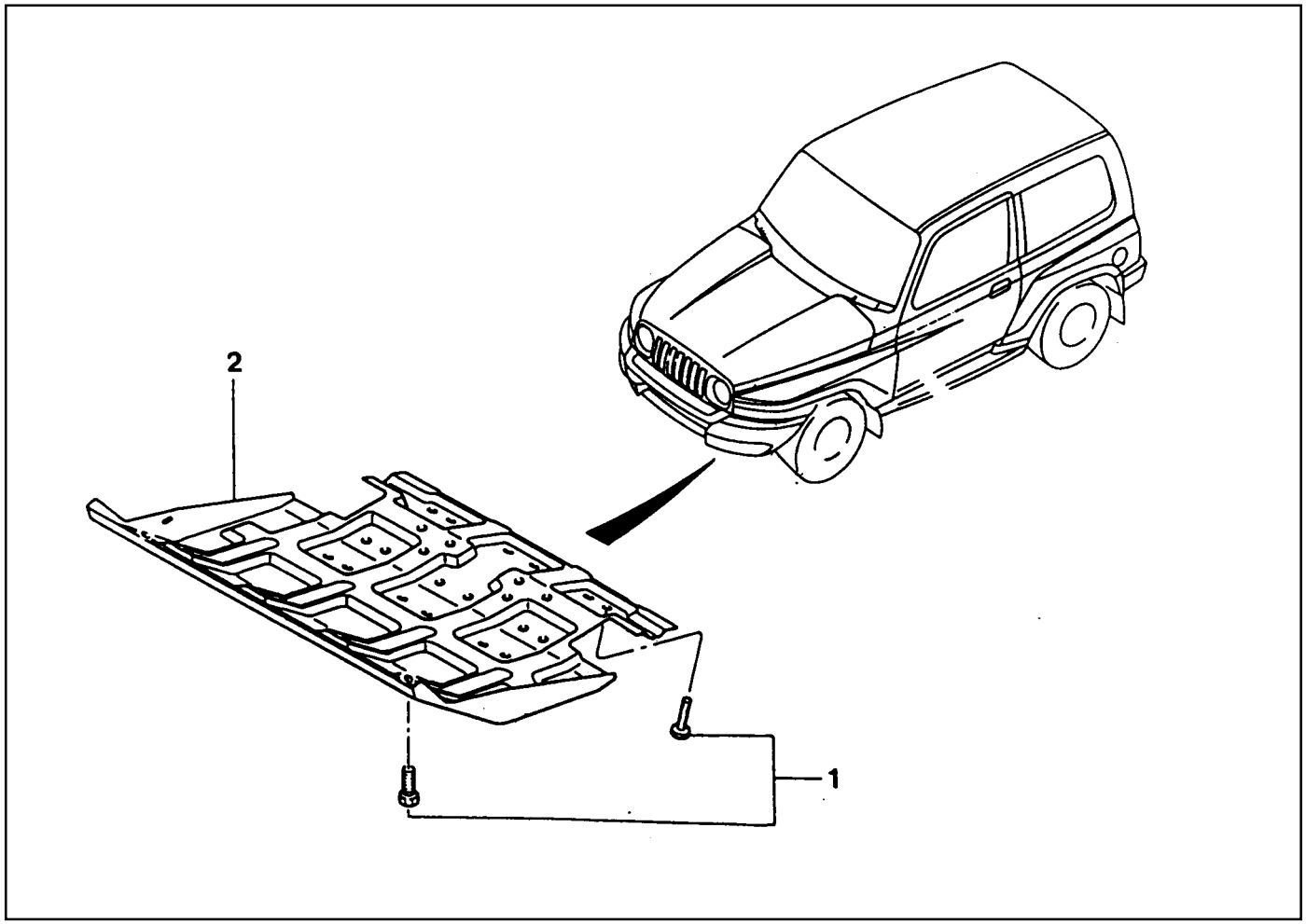

1 Mounting Bolt ..... 28-47 Nm 2 Skid Plate

Removal & Installation Procedure

1. Loosen the mounting bolts(4EA) of skid plate and remove the skid plate.

   Installation Notice

Tightening Torque	28 - 47 Nm

2. Installation should follow the removal procedure in the reverse order.

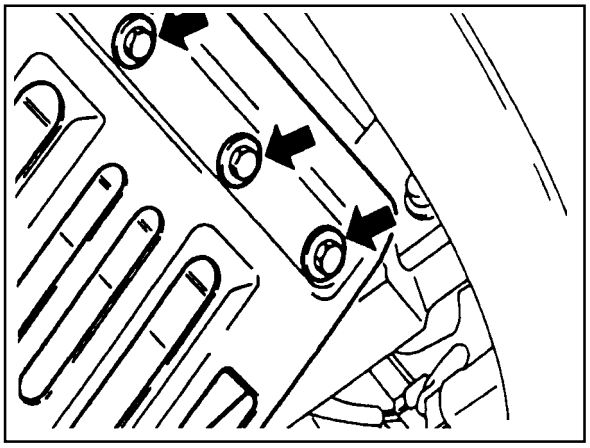

Downloaded from www.Manualslib.com manuals search engine

SECTION 9O

BUMPERS AND FASCIAS

TABLE OF CONTENTS

Maintenance and Repair 9O-2
On-Vehicle Service 9O-2
Front Bumper 9O-2
Rear Bumper 9O-4

Downloaded from www.Manualslib.com manuals search engine

MAINTENANCE AND REPAIR

ON-VEHICLE SERVICE

FRONT BUMPER

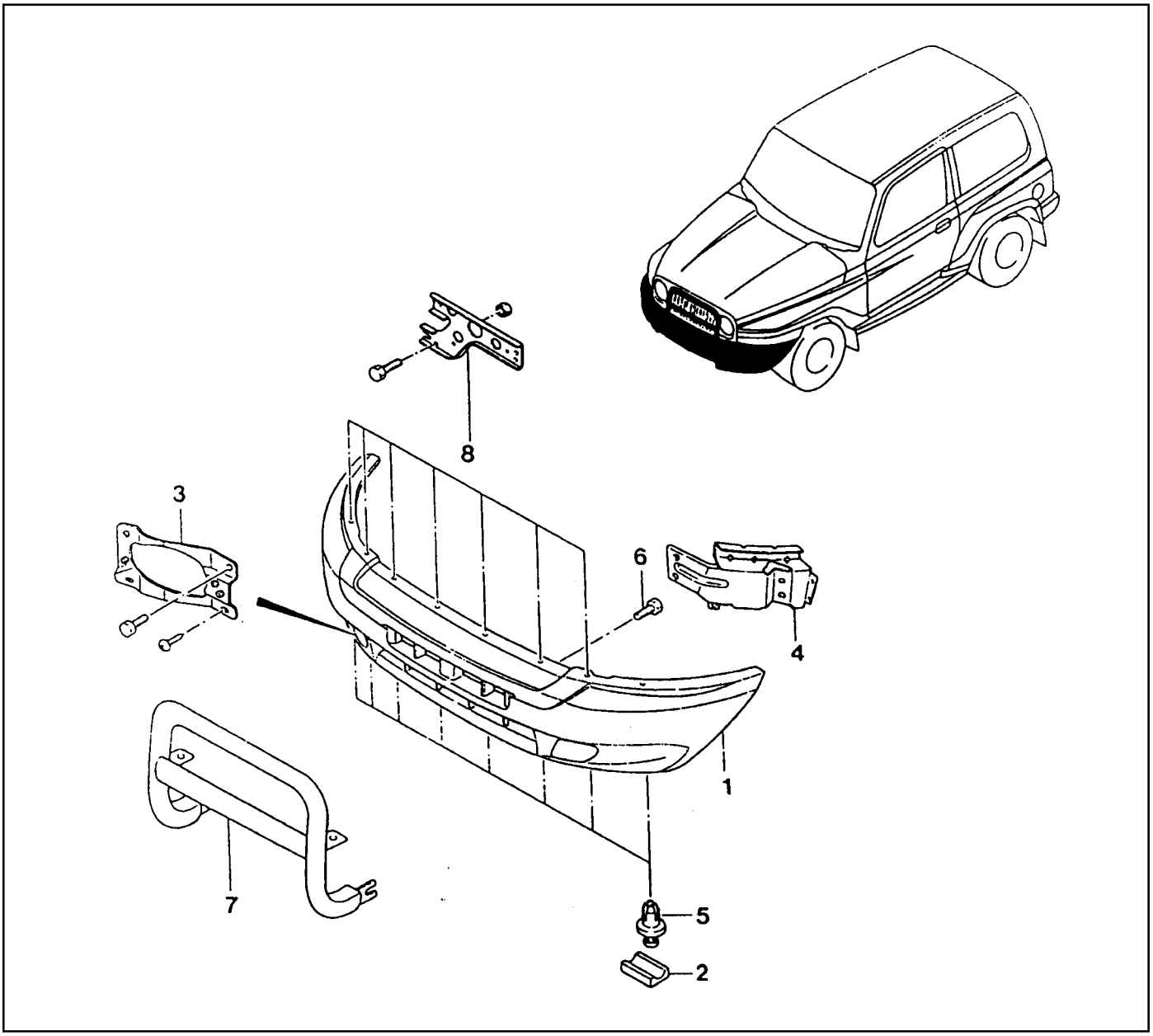

1 Front Bumper Assembly
2 Pad
3 Fog Lamp Mounting Bracket
4 Side Mounting Bracket
5 Rivet
6 Bolt
7 Front Nudge Bar Assembly
8 Side Support Bracket

Notice

Removal and installation is as shown in upper drawings.

Downloaded from www.Manualslib.com manuals search engine

Mounting Inspection

1. Clearance between the upper bumper and radiator grille.

Clearance	10 - 13 mm

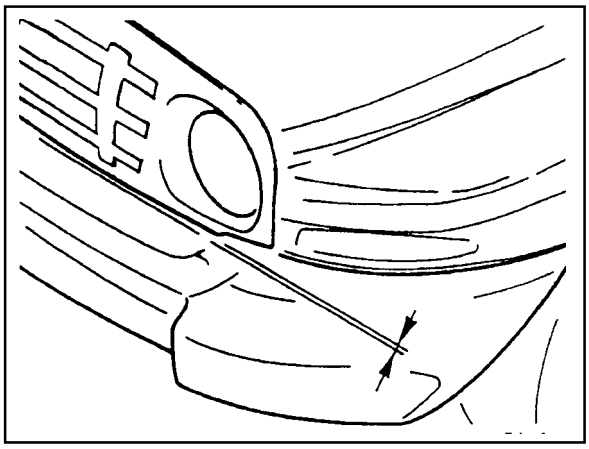

2. Clearance between the upper bumper and headlamp moding.

Clearance	11 - 14 mm

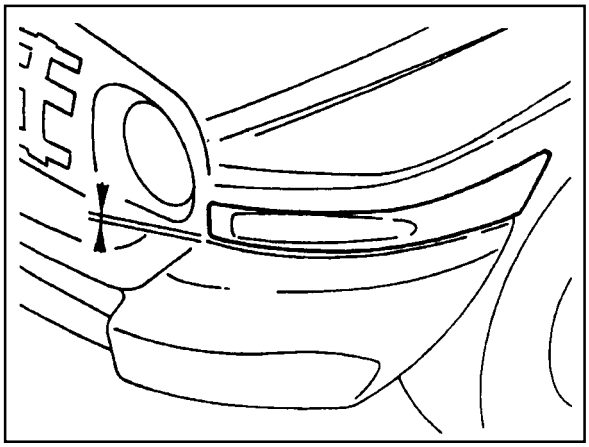

Downloaded from www.Manualslib.com manuals search engine

REAR BUMPER

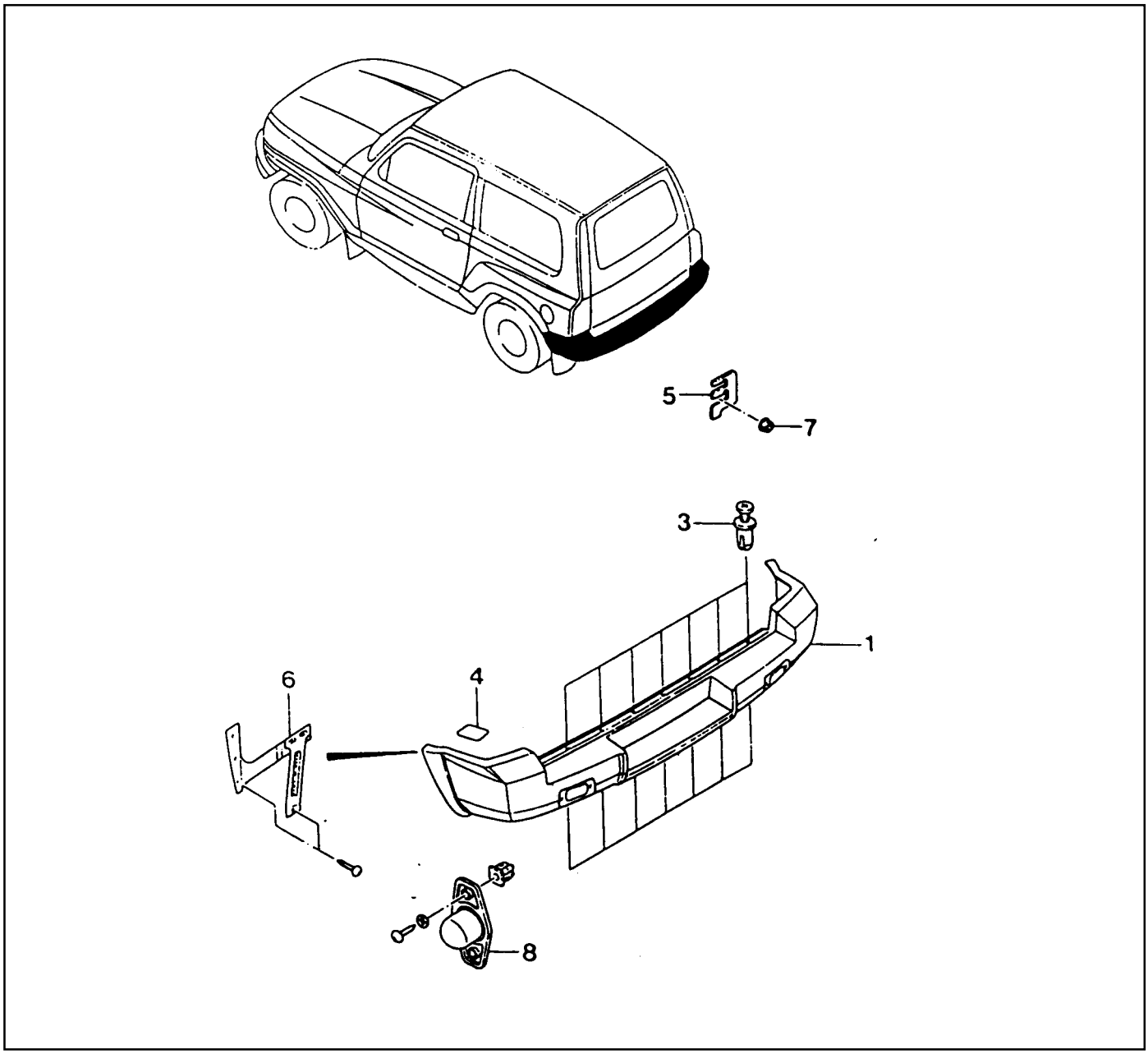

1 Front Bumper Assembly
3 Rivet
4 Protection Tape
5 Rear Bumper Spacer
6 Side Bracket
7 Nut
8 License Lamp Assembly

Notice

Removal and installation is as shown in upper drawings.

Downloaded from www.Manualslib.com manuals search engine

Mounting Inspection

1. Clearance between the upper bumper facia and tailgate.

Clearance	12 - 15 mm

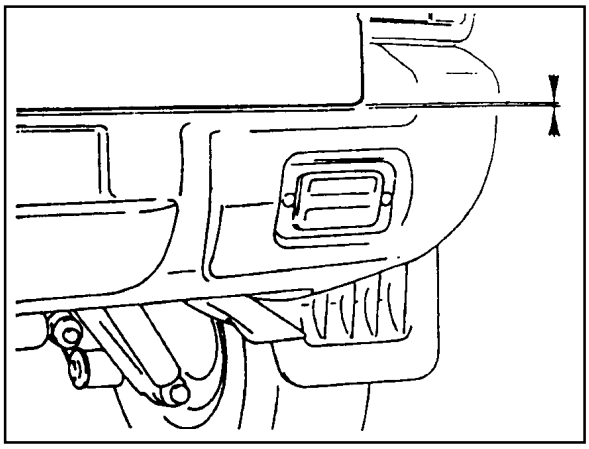

2. Clerance between the facia of rear bumper and quarter outer panel.

Clearance	10 - 13 mm

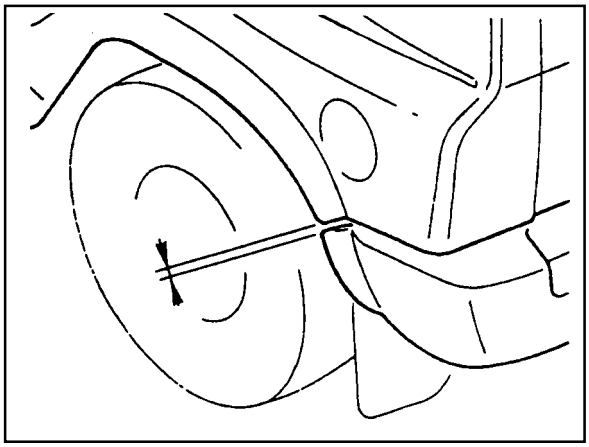

Downloaded from www.Manualslib.com manuals search engine

SECTION 9P

DOORS

Caution: Disconnect the negative battery cable before removing or installing any electrical unit or when a tool or equipment could easily come in contact with exposed electrical terminals. Disconnecting this cable will help prevent personal injury and damage to the vehicle. The ignition must also be in LOCK unless otherwise noted.

TABLE OF CONTENTS

Schematic and Routing Diagrams 9P-2

Power Window 9P-2

Maintenance and Repair 9P-3

On-Vehicle Service 9P-3

Front Door 9P-3

Tail Gate 9P-5

Power Window Motor 9P-7

Downloaded from www.Manualslib.com manuals search engine

SCHEMATIC AND ROUTING DIAGRAMS

POWER WINDOW

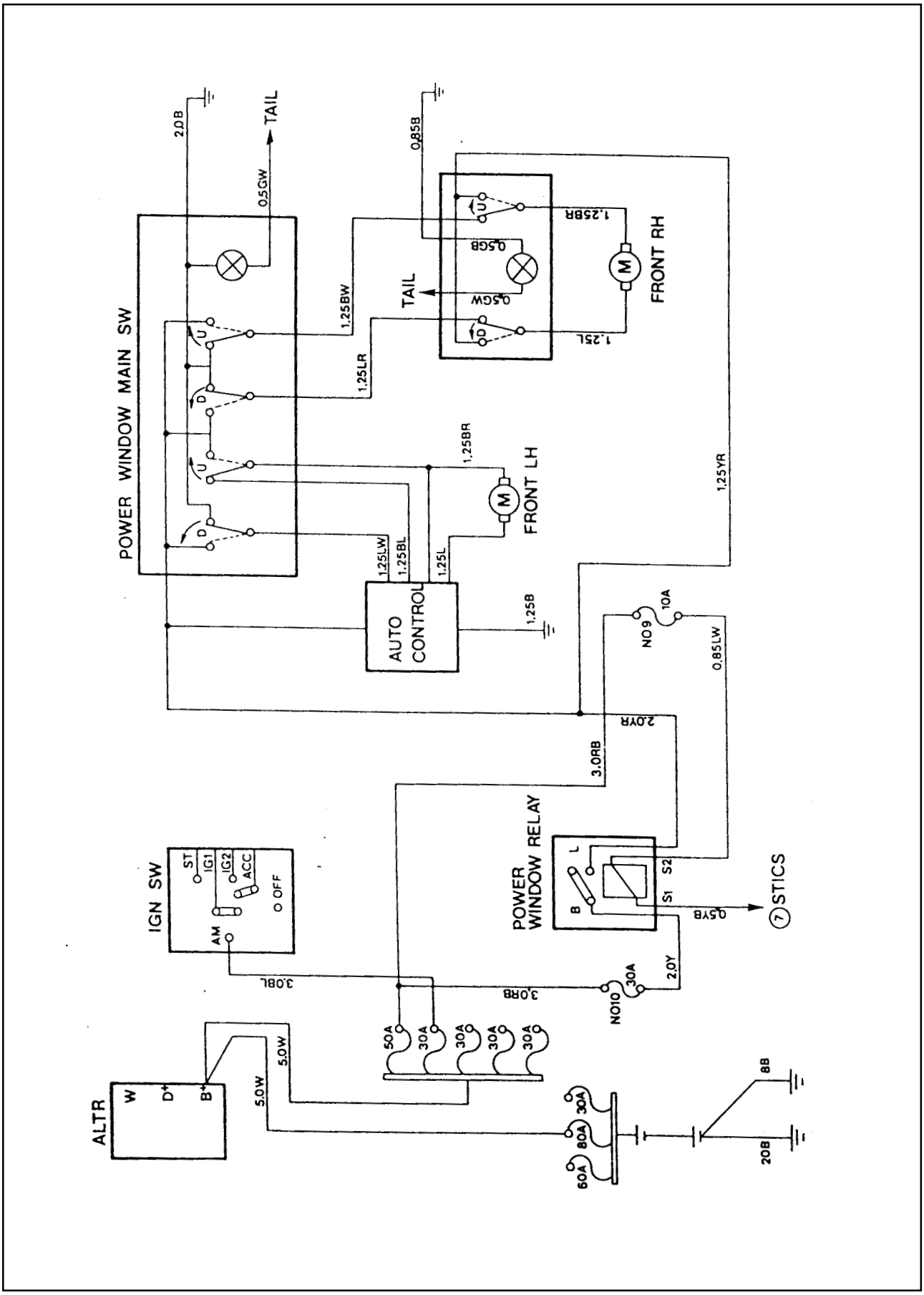

Downloaded from www.Manualslib.com manuals search engine

MAINTENANCE AND REPAIR

ON-VEHICLE SERVICE

FRONT DOOR

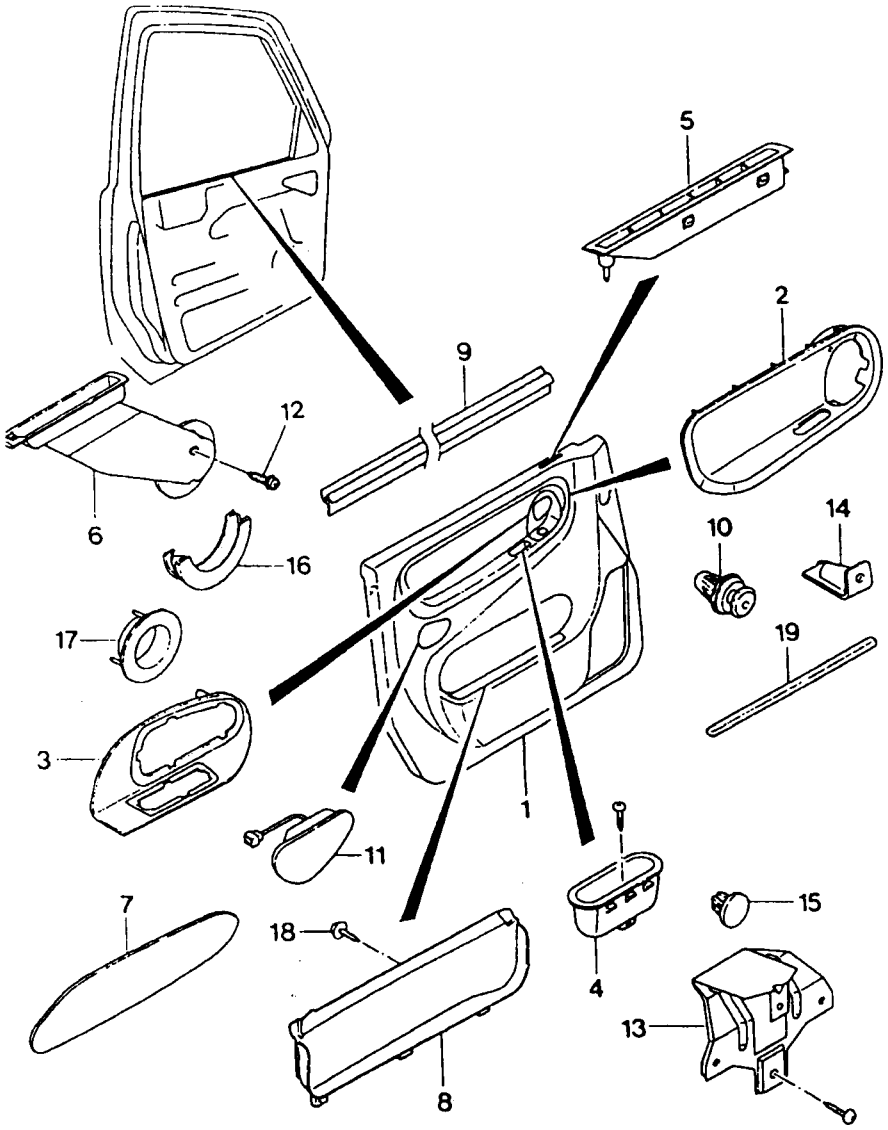

1 Door Trim Panel Assembly
2 Center Upper Panel
3 Inside Handle Mounting Plate
4 Door Pull Handle
5 Door Defroster Nozzle
6 Door Defroster Duct
7 Door Trim Panel
8 Door Pocket
9 Belt Inside Strap
10 Door Trim Mounting Fastener
11 Door Courtesy Lamp
12 Screw
13 Door Pull Handle Mounting Support Bracket
14 Door Trim Complete Mounting Clip
15 Door Inside handle Mounting Gromet
16 Door Defroster Gromet
17 Door Defroster Gromet Vessel
18 Door Pocket Mounting Screw
19 Door Trim Pad

Downloaded from www.Manualslib.com manuals search engine

Adjustment Procedure

1. Install door striker to side outer panel and tighten the screw slightly.
2. Unlock the door and check the clearance between door and side outer panel.

Clearance	3.5 - 5.5 Nm

3. If necessary, insert the seam.
4. Adjust latch lever to the center of striker and tighten the screw.

Tightening Torque	10 - 19 Nm

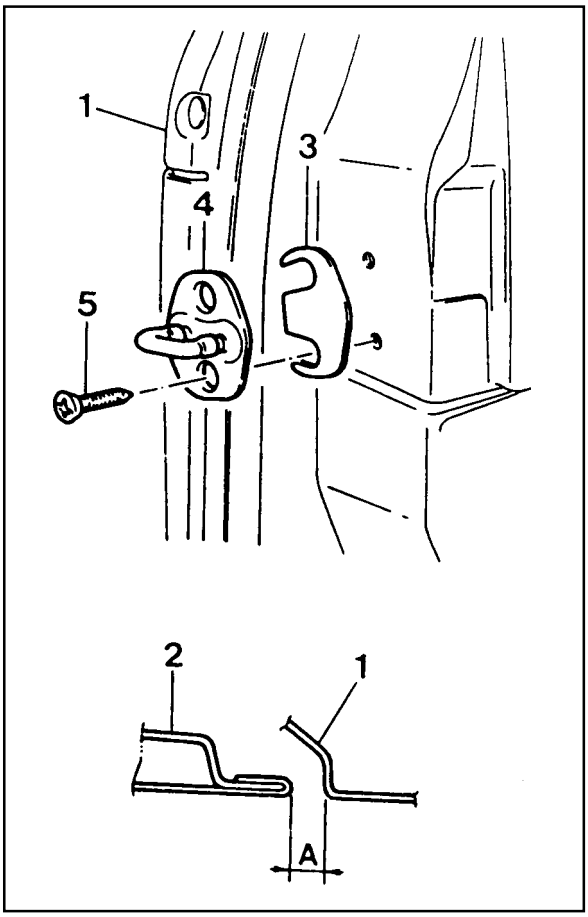

Downloaded from www.Manualslib.com manuals search engine

TAIL GATE

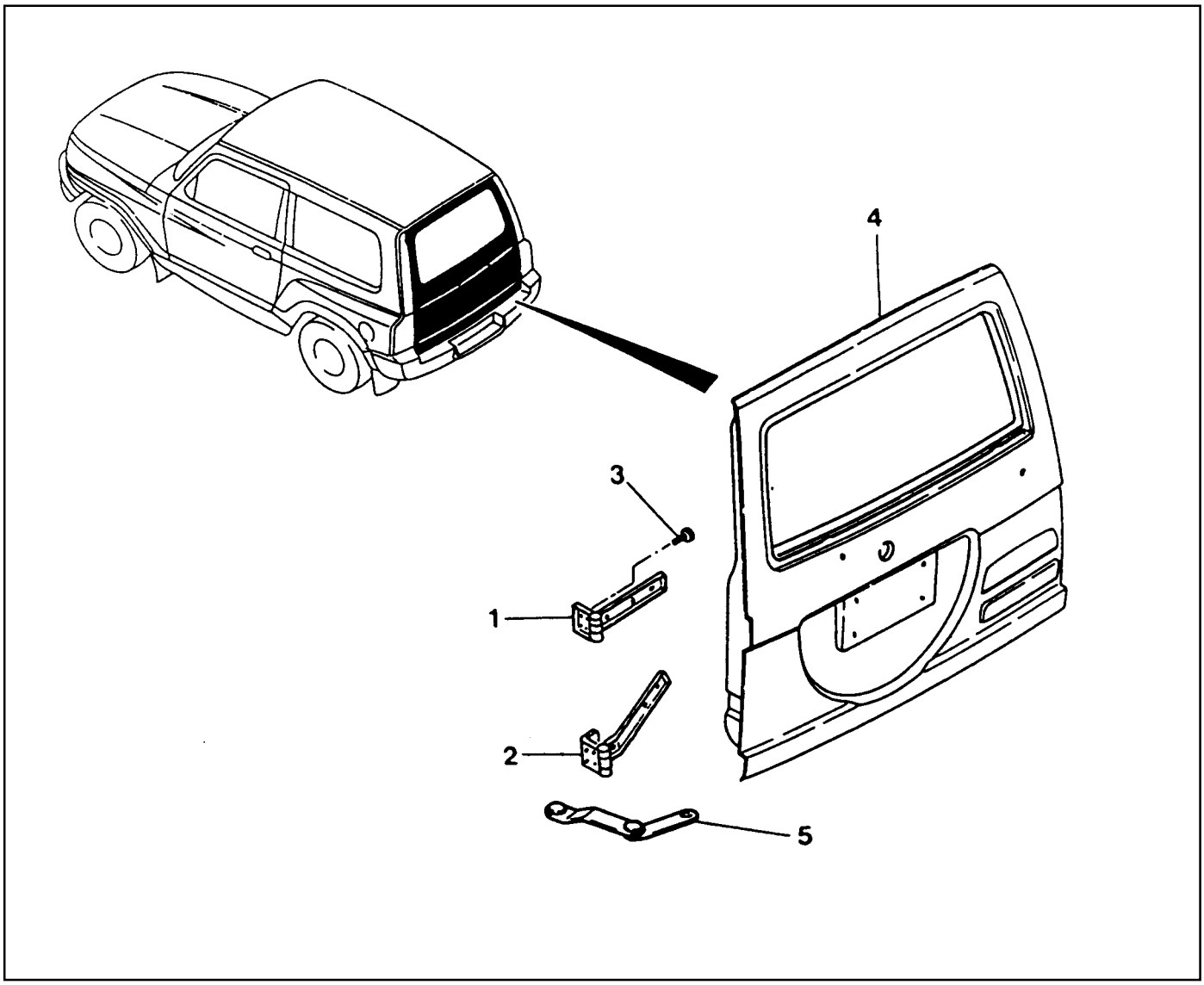

1 Upper Bracket
2 Lower Bracket
3 Bolt
4 Tail Gate
5 Stopper

Downloaded from www.Manualslib.com manuals search engine

Removal & Installation Procedure

1. Remove the lower hinge bolt of tail gate and stopper mounting bolt.

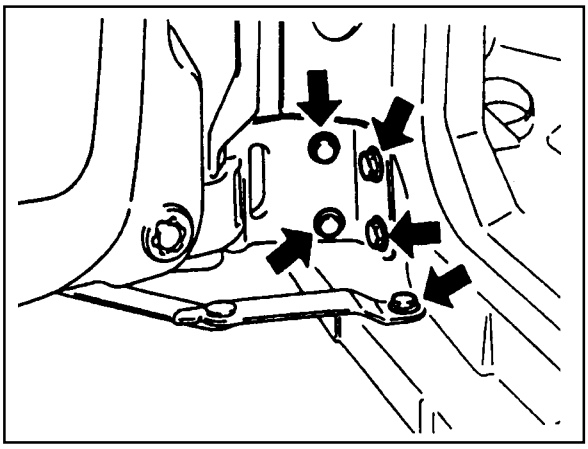

2. Disconnect the wiring connector.

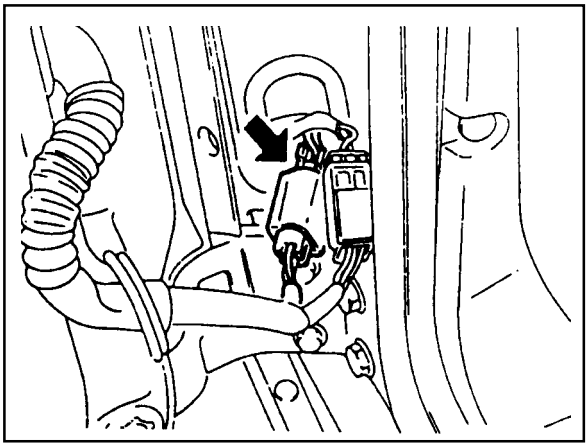

3. Remove the mounting bolt and remove the tail gate.

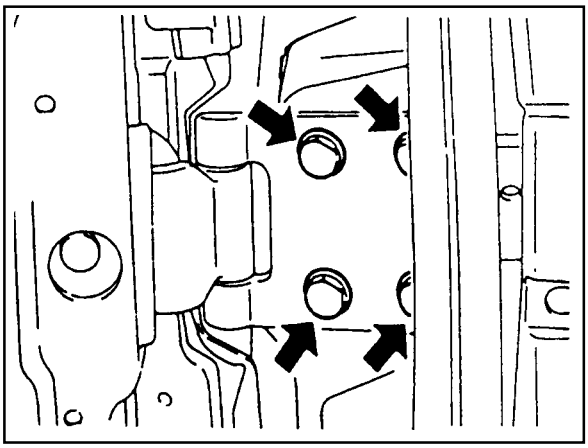

Adjustment

<Door Striker>

Adjust the striker in horizontal/vertical directions and then adjust the height of striker.

- Clearance between tailgate and quarter outer rear panel.

Clearance	4.3 - 6.3 Nm

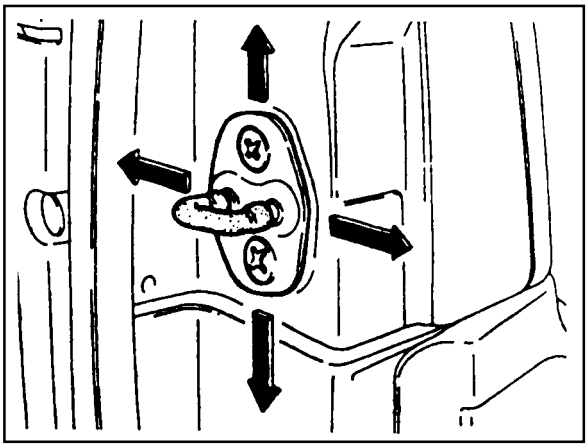

Downloaded from www.Manualslib.com manuals search engine

POWER WINDOW MOTOR

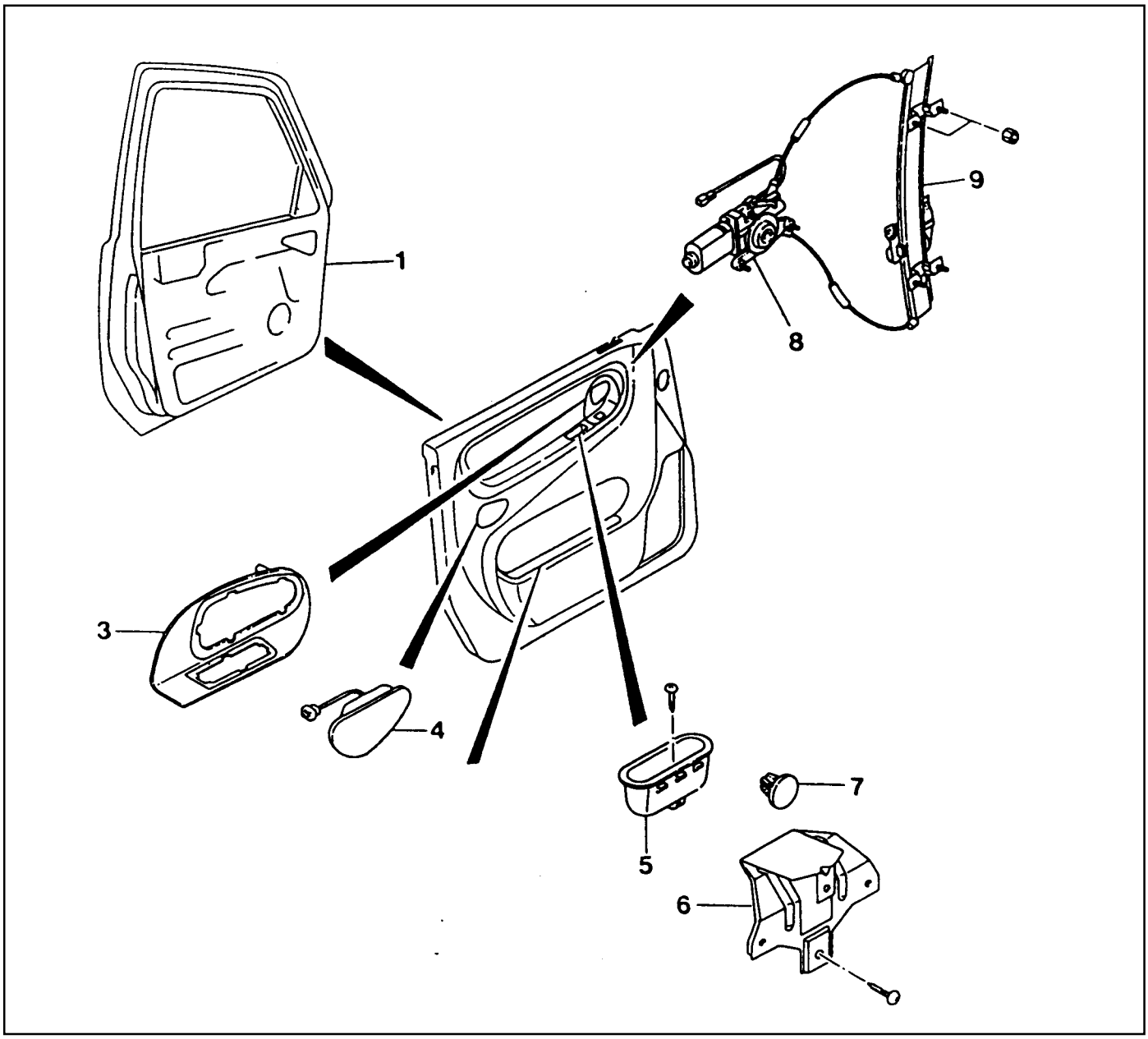

1 Door
2 Door Trim Panel
3 Inside Handle Mounting Plate
4 Door Opening Lamp
5 Door Pulling Handle
6 Door Trim Mounting Bracket
7 Door Defroster Grommet
8 Power Window Motor
9 Regulator

Downloaded from www.Manualslib.com manuals search engine

Removal & Installation Procedure

1. Unscrew the screw (arrow) and remove the door pulling handle.

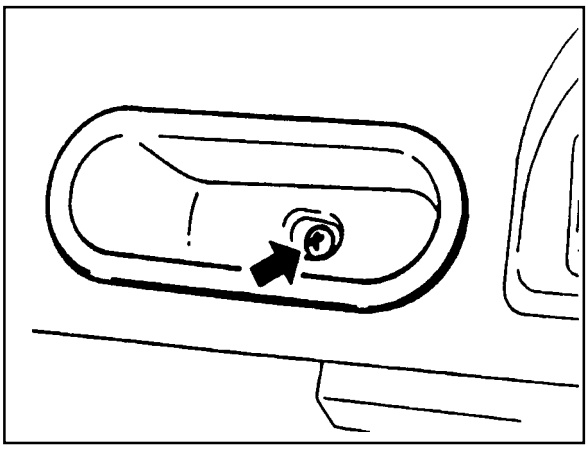

2. Disconnect the connector and remove the power window switch assembly.
3. Remove the inside handle mounting plate.
4. Remove the door trim panel assembly.

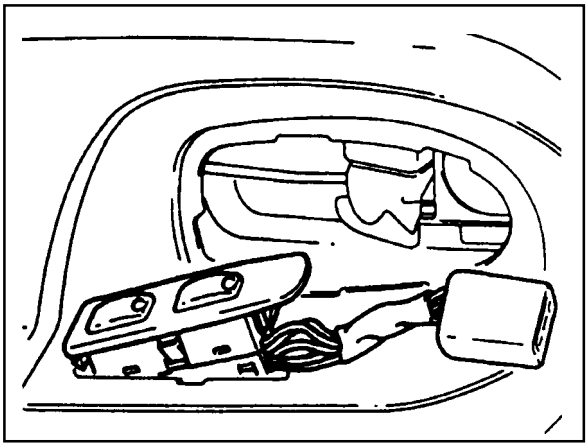

5. Unscrew two screws (arrows) and remove the door lock opening handle assembly and disconnect opening handle ratch dar.

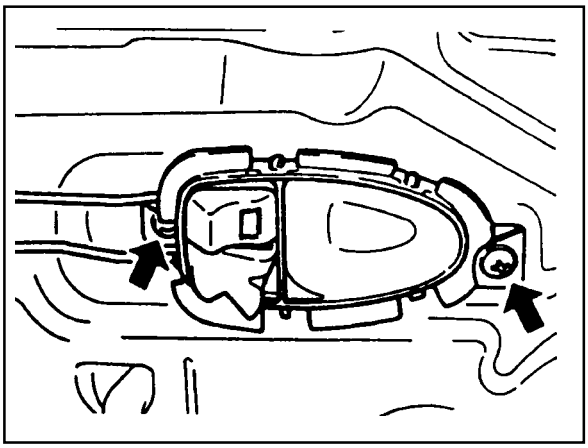

6. Unscrew three screw (arrow) and remove the door trim mounting bracket.
7. Disconnect the opening lamp connector.

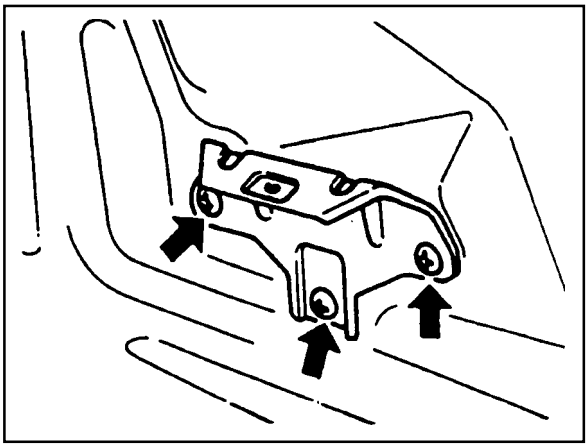

Downloaded from www.Manualslib.com manuals search engine

8. Remove the door vinyl.
9. Unscrew the upper and lower nuts(4 piecess) and remove the door regulator.

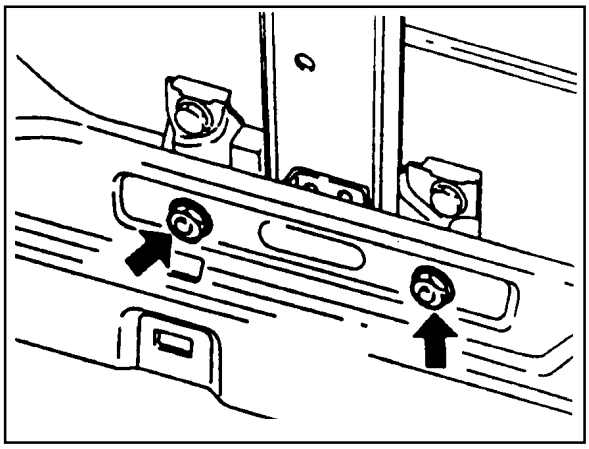

10. Unscrew three nuts(arrow) and remove the power window motor.

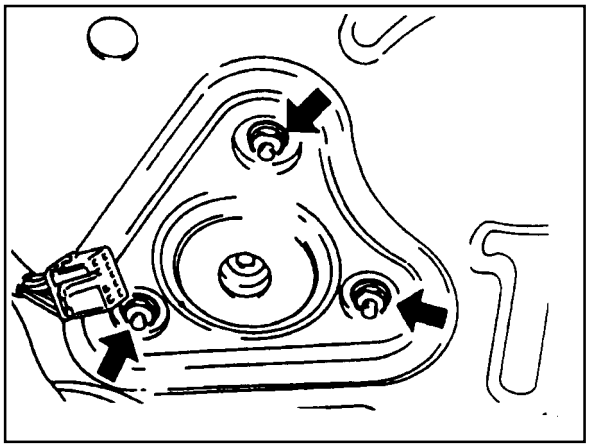

Downloaded from www.Manualslib.com manuals search engine

Connector Appearance and Connecting Circuit

1. Power Window Main Switch (Driver's Door)

Terminal No.	Connecting Circuit	Size and Color
1	B+	2.0 YR
2	E-	2.0 B
3	ILL (+)	1.25 GW
4	D 1	1.25 LW
5	U+	1.25 BR
6	D 2	1.25 LR
7	U 2	1.25 BW
8	U-	1.25 BL

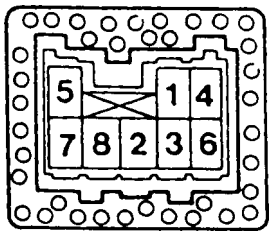

2. Power Window Sub-Switch (Passenger's Door).

Terminal No.	Connecting Circuit	Size and Color
1	D 2	2.0 LR
2	U 2	1.25 BW
3	B+	1.25 YR
4	MU	1.25 BR
5	MD	1.25 L
6	ILL(+)	1.25 GW
7	ILL(-)	1.25 GB

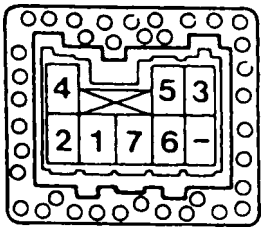

Diagram for Connecting Circuit

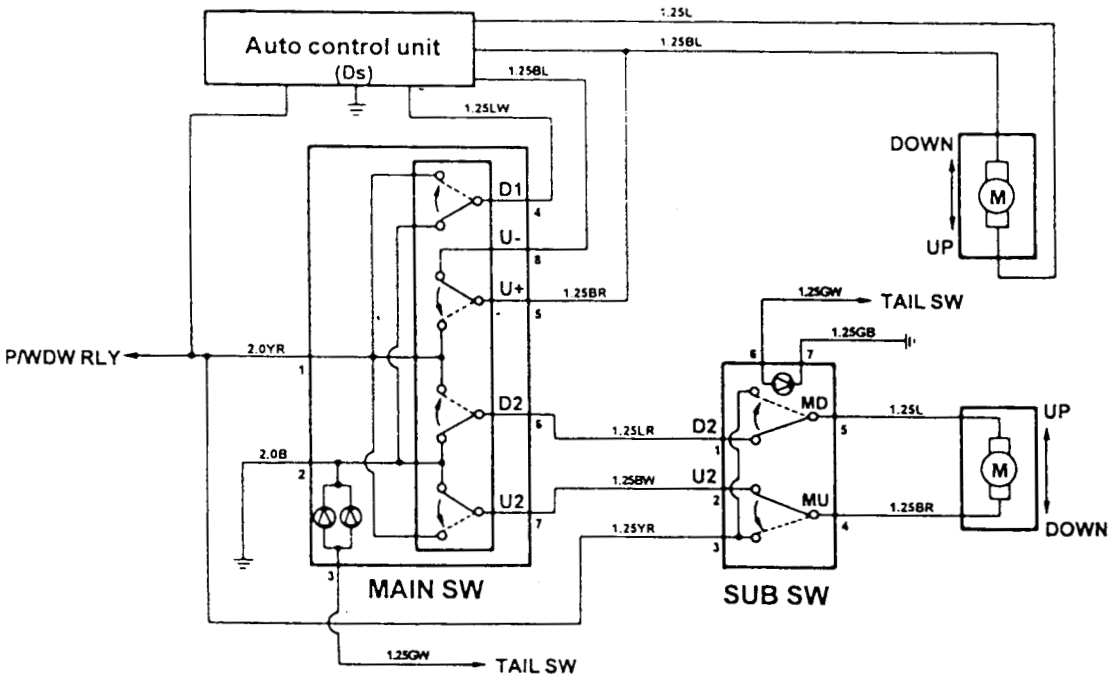

Downloaded from www.Manualslib.com manuals search engine

SECTION 9Q

ROOF

TABLE OF CONTENTS

Maintenance and Repair 9Q-2
On-Vehicle Service 9Q-2
Sun Roof System 9Q-2

Downloaded from www.Manualslib.com manuals search engine

MAINTENANCE AND REPAIR

ON-VEHICLE SERVICE

SUN ROOF SYSTEM

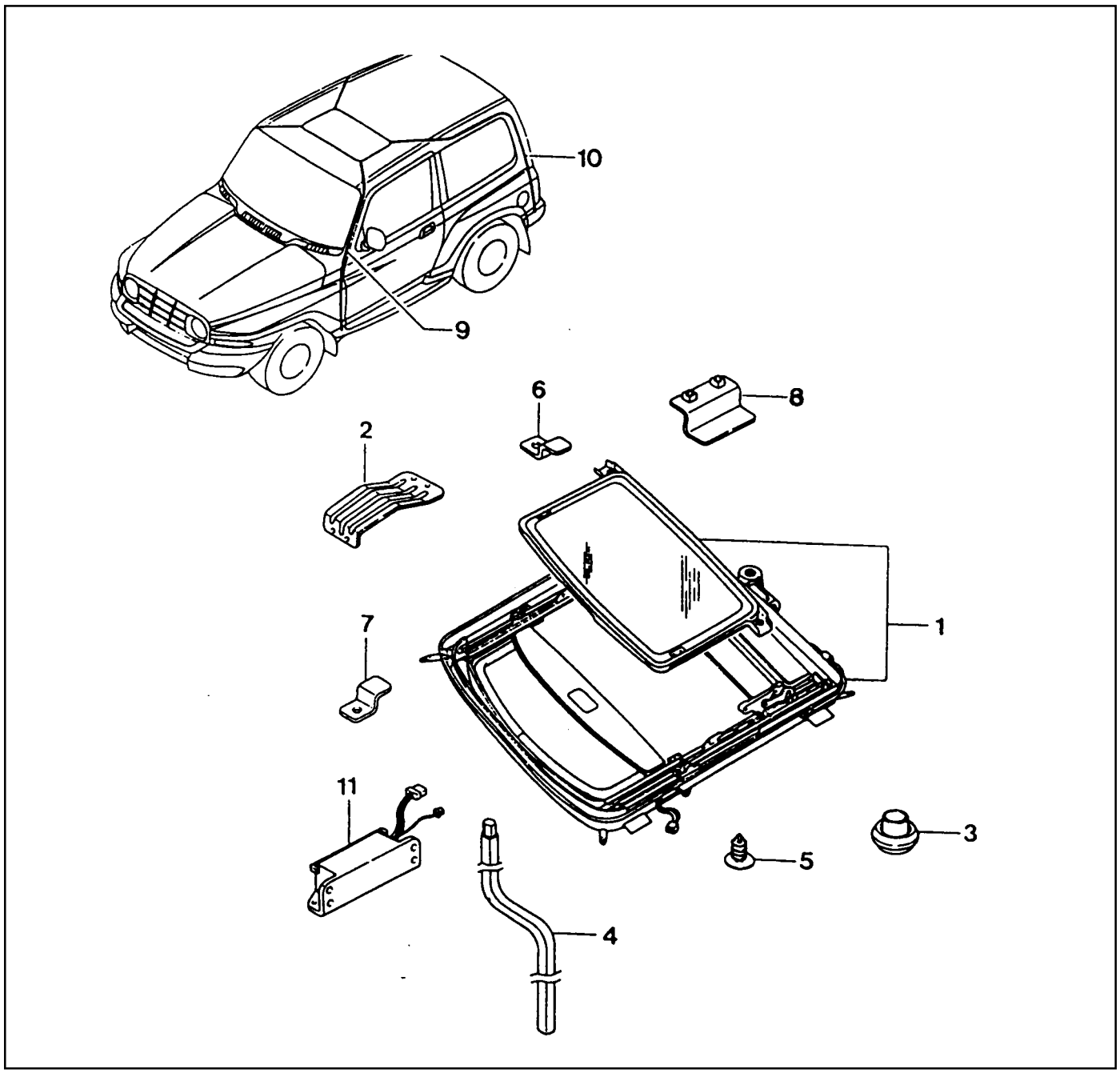

1 Inner Sliding Sun Roof Assembly
2 Sun Roof Body Mounting Bracket
3 Drain Hose Rear Grommet
4 Sun Roof Motor Spanner
5 Mounting Clip
6 Mounting Bracket
7 Mounting Bracket Assembly
8 Sun Roof Mounting Bracket
9 Drain Front Hose
10 Drain Rear Hose
11 Sun Roof Module Assembly

Downloaded from www.Manualslib.com manuals search engine

Removal & Installation Procedure

1. Disconnect the connector and remove the sun roof module assembly.

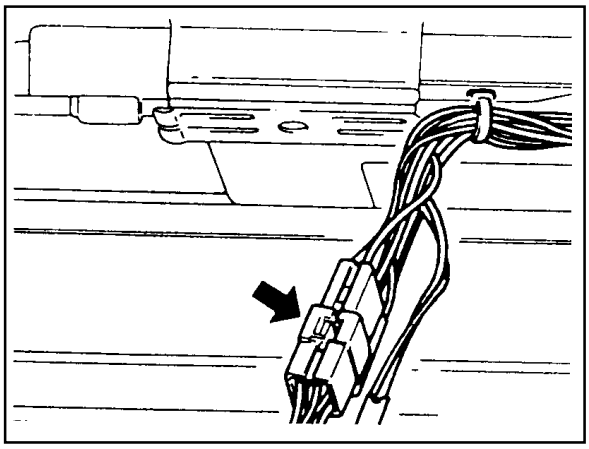

2. Disconnect the front and rear drain hose.

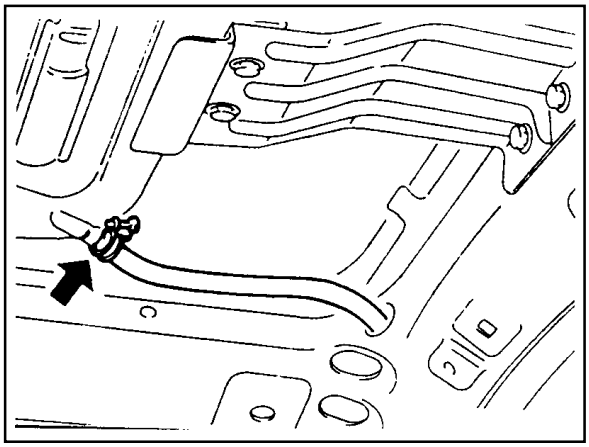

3. Unscrew the sun roof mounting bracket bolts (arrows) and remove the inner sliding and sun roof assembly

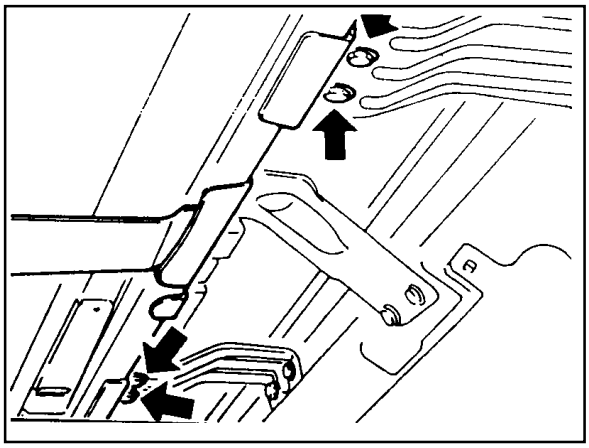

Downloaded from www.Manualslib.com manuals search engine

SECTION 9R

BODY FRONT END

TABLE OF CONTENTS

Maintenance and Repair 9R-2
On-Vehicle Service 9R-2
HOOD 9R-2

Downloaded from www.Manualslib.com manuals search engine

MAINTENANCE AND REPAIR

ON-VEHICLE SERVICE

HOOD

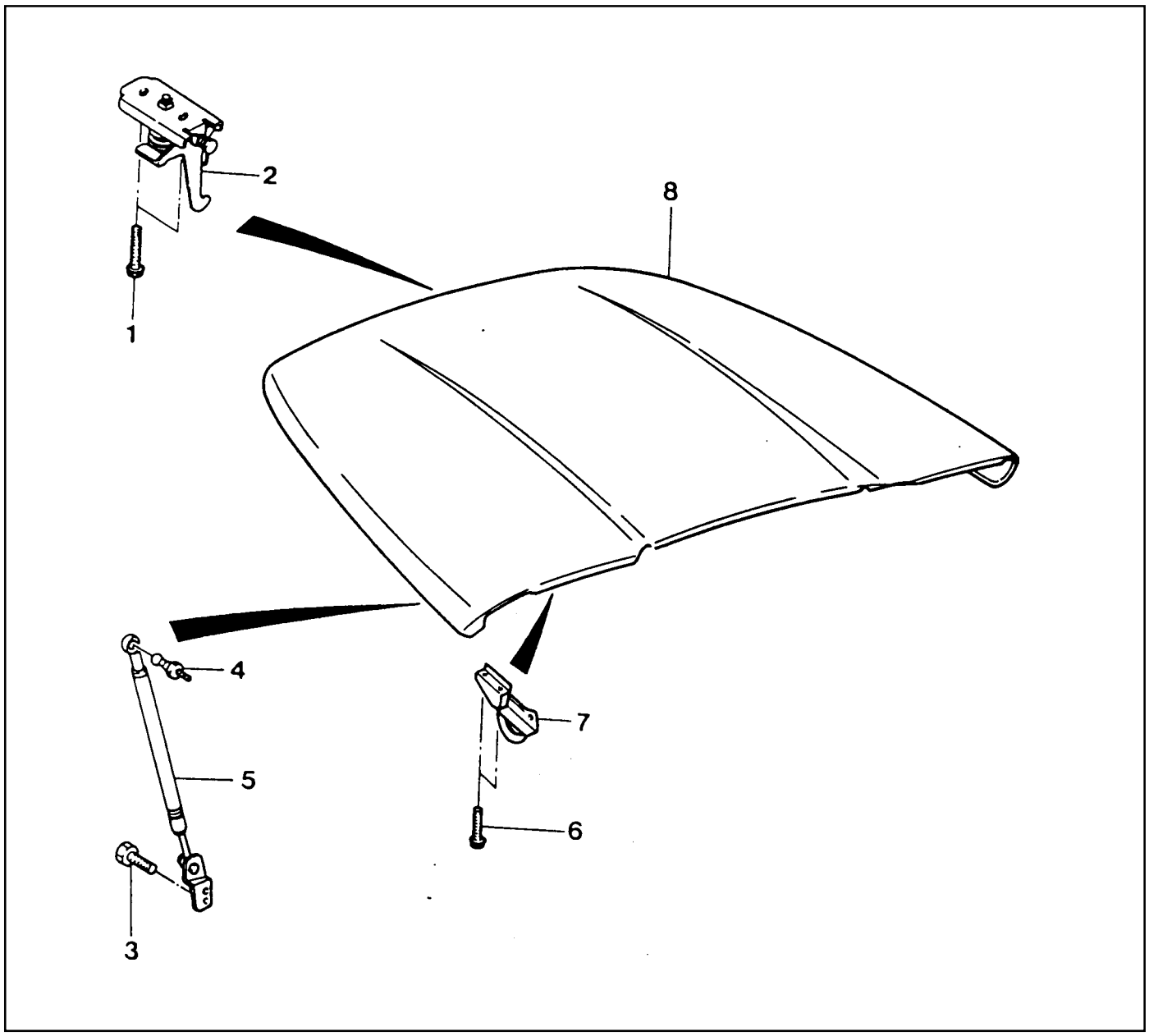

1 Bolt
2 Hood Striker Safety Assembly
3 Bolt
4 Mounting Ball Stud
5 Hood Lifter Assembly
6 Bolt
7 Hood Hinge Assembly
8 Hood

Downloaded from www.Manualslib.com manuals search engine

Removal & Installation Procedure

1. Remove the hood striker assembly.

   Notice

   When installing, tighten the bolt after setting the hole between wratch and hood striker assembly.

   Installation Notice

Tightening Toque	8 - 11 Nm

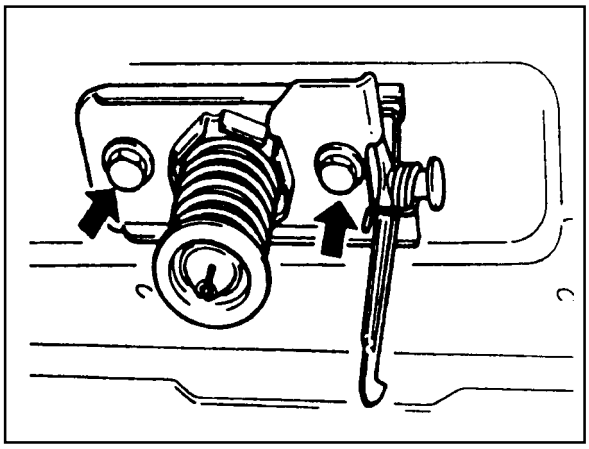

2. Remove the hood bolt(2EA) of hood lifter assembly.

   Installation Notice

Tightening Toque	14 - 26 Nm

3. Remove the hood lifter assembly from the upper ball stud.

   Notice

   Insert the hood lifter assembly into ball stud fully until it sounds "click".

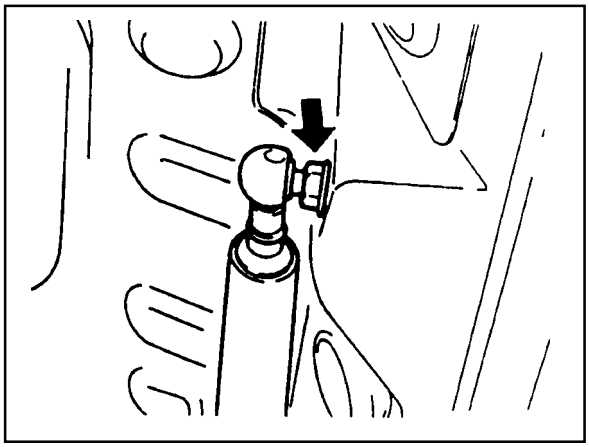

4. Loosen the hood hinge assembly bolt and remove the hood.

   Installation Notice

Tightening Toque	13 - 26 Nm

5. Installation should follow the removal procedure in the reverse order.

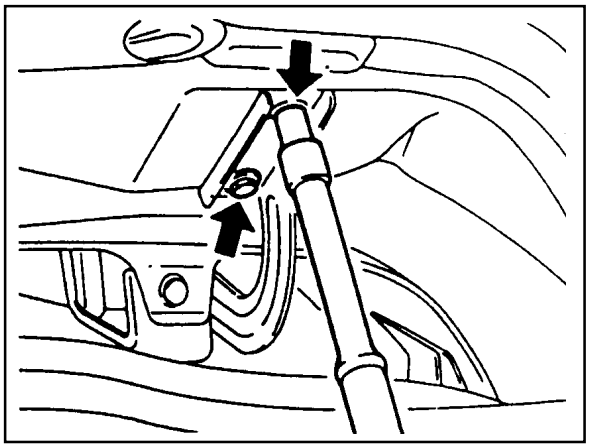

Downloaded from www.Manualslib.com manuals search engine

Adjustment Procedure

1. Alignment between hood striker and latch hole.
   - Loosen the mounting bolt of hood latch slightly and adjust hood in forward/rearward and left/right directions. Then align the center between hood striker and latch hole.

   Notice

   Tighten the bolt fully after alignment.

   Installation Notice

Tightening Toque	13 - 26 Nm

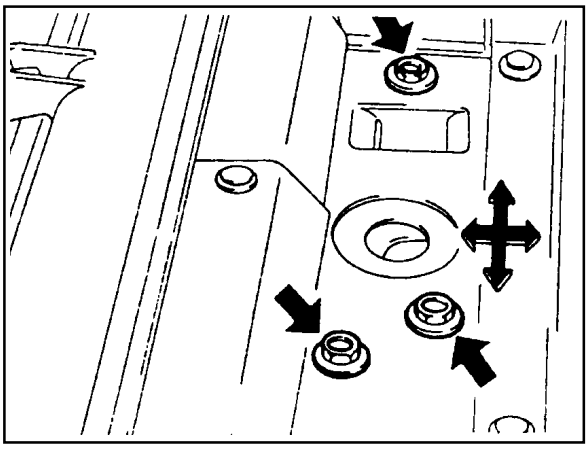

2. Adjusting the height of hood overslam bumper.

   Unlock the hood and check the clearance between hood and fender by adjusting the hood overslam bumper in left/right directions.

Normal	20 - 22 Nm

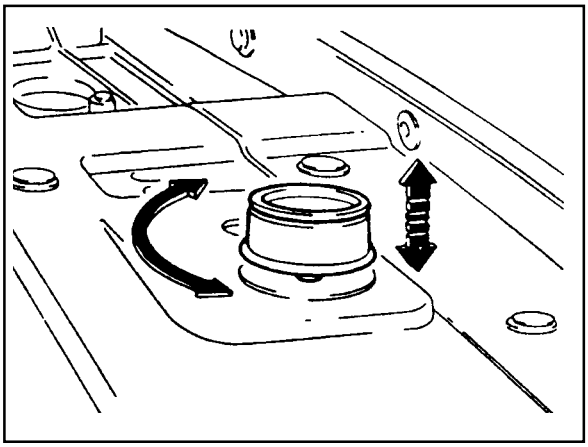

Downloaded from www.Manualslib.com manuals search engine

SECTION 9T

REMOTE KEYLESS ENTRY AND ANTI-THEFT SYSTEM

Caution: Disconnect the negative battery cable before removing or installing any electrical unit or when a tool or equipment could easily come in contact with exposed electrical terminals. Disconnecting this cable will help prevent personal injury and damage to the vehicle. The ignition must also be in LOCK unless otherwise noted.

TABLE OF CONTENTS

Specifications 9T-1
REKES Specifications 9T-1
Schematic and Routing Diagrams 9T-2
REKES 9T-2
Diagnosis 9T-3
Diagnosis Test 9T-3
Maintenance and Repair 9T-5
On-Vehicle Service 9T-5
REKES 9T-5
Function Description 9T-8
Burglar Alarm 9T-8

SPECIFICATIONS

REKES SPECIFICATIONS

Receiver

Application	Description
Rated Voltage	DC 12V
Rated Range of Operating Voltage	DC 8V - 16V
Rated Range of Operating Temperature	-30℃ - +80℃
Insulating Resistance	Above 5M W
Arm Current	Maximum 3mA

Transmitter

Application	Description
Rated Voltage	DC 3V
Rated Range of Operating Temperature	-10℃ - 60℃
Model	Changeable Coin Type LITHIUM Battery (CR2032)
Durability	Above 2 years (10 times/day)

Downloaded from www.Manualslib.com manuals search engine

SCHEMATIC AND ROUTING DIAGRAMS

REKES

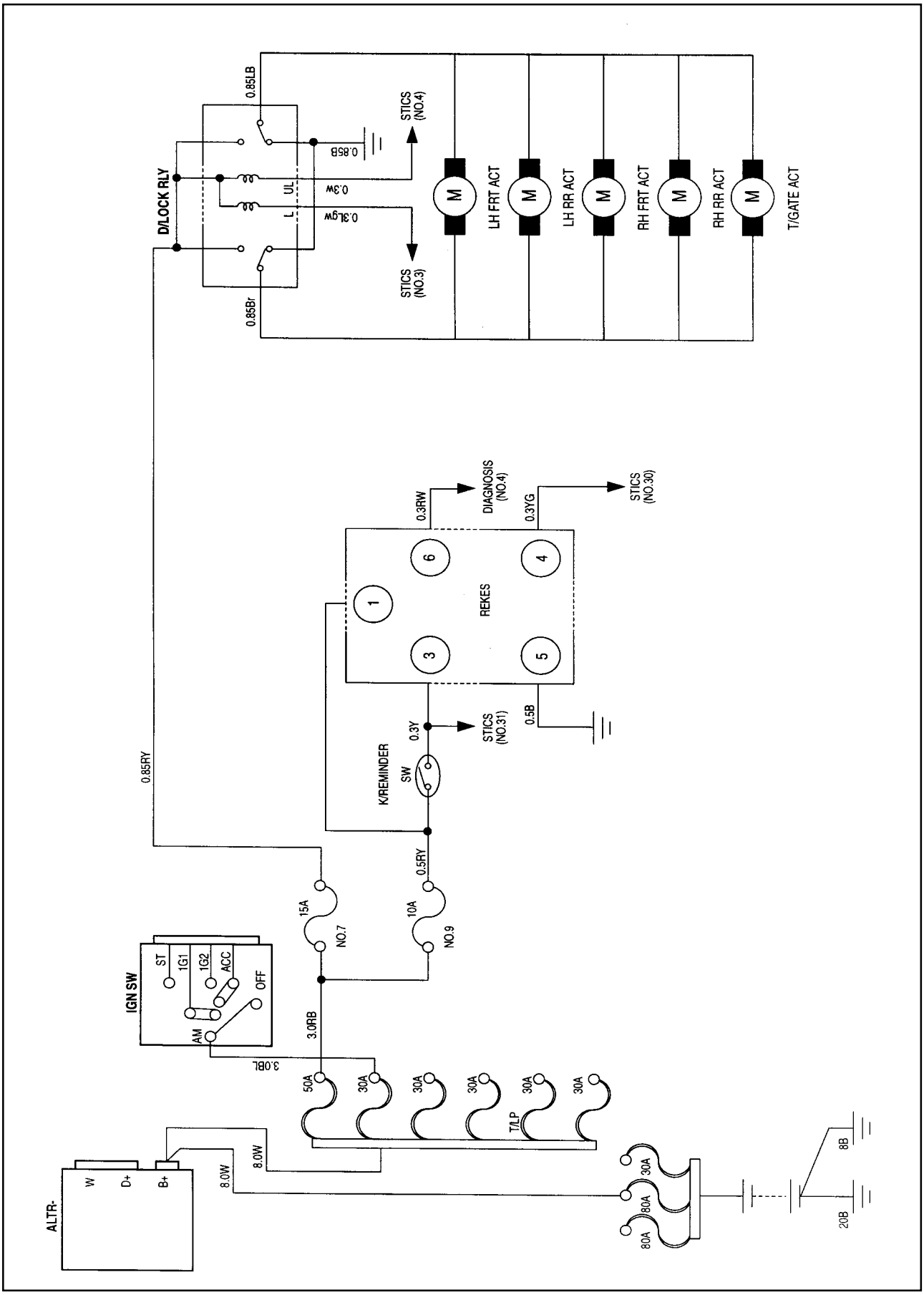

Downloaded from www.Manualslib.com manuals search engine

DIAGNOSIS

DIAGNOSIS TEST

Introduction

Using the service connector, possible defects in power section, input·output section of internal STICS unit can be detected and each normal status and defect mode can be checked.

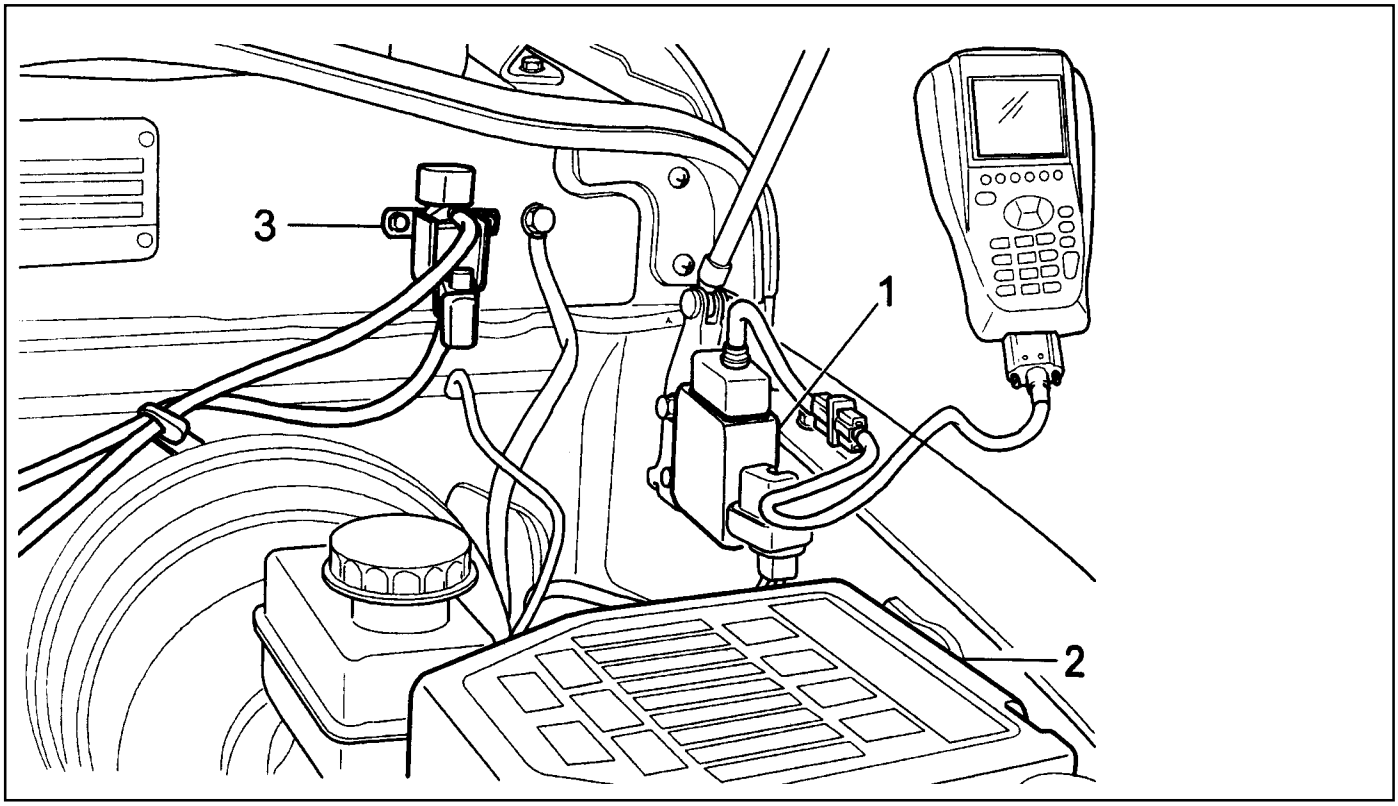

Diagnosis Method

1. Use buzzer for diagnosis check status output.
2. Following function outputs should not act when diagnosis switch is ON (STICS in the diagnosis socket box:connection of No. 7 and ground No.1).
   - Tail lamp ON warning (buzzer output stop, door lock/ unlock output stop)
   - Seat belt warning (chime bell output stop)
   - Key reminder warning (chime bell output stop, door lock/ unlock output stop)
   - Central door lock (door lock/unlock output stop)
3. Functions in No. 2 should be restored when diagnosis switch is OFF.
4. Checked output should be made once while the diagnosis switch is ON.
5. When inputs are made by operating each different switches more than 2 continuously, make output according to input order (buzzer ON) and turn off the buzzer for 1 second and than make other remaining outputs for input switch.

Downloaded from www.Manualslib.com manuals search engine

6. Buzzer output is as follows.

T1 : 0.3±0.1 sec.

T2 : 0.3±0.1 sec.

T : 0.6±0.2 sec.

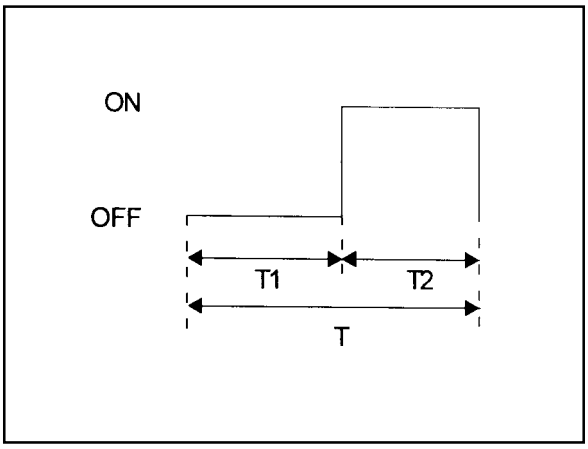

Notice

- In case of checking related devices, diagnosis switch should always be ON.
- When operating the diagnosing related devices, there will be buzzer sound if it is normal and no buzzer sound if it is defective.

Self - Diagnosis List

NO.	Required Condition	Related device check (operation)	Normal output	Remark
1	Diagnosis switch ON	Confirm the diagnosis function start	Buzzer once	Diagnosis Switch ON
2	Battery voltage supply	Check the battery	Buzzer twice	
3	Operation of battery and related devices	Tailgate, rear door lock switch	Buzzer once	
4		Driver's door lock switch	Buzzer once	
5		Passenger's door lock switch	Buzzer once	
6		Driver's door switch	Buzzer once	
7		Passenger and rear door switch	Buzzer once	
8		REKES input	Buzzer once	
9	IGN key insertion	Key reminder switch	Buzzer once	
10	Operation of IGN and related devices	IGN and power window relay	GN2 buzzer twice, IGN1 buzzer once, power window buzzer 3 times	
11		Parking brake switch	Buzzer once	
12		Seat belt switch	Buzzer once	
13		Washer switch	Wiper motor parking 3 times, washer switch once, wiper relay twice	
14		Wiper auto switch	Wiper motor parking 3 times, wiper auto switch once, wiper relay twice	
15		ALT 'L'	Buzzer once	
16	Operation of IGN and starting and related devices	Volume variable switch	Buzzer once	
17		Defogger switch	Buzzer once	
18		Speed sensor signal	Buzzer once	

Downloaded from www.Manualslib.com manuals search engine

MAINTENANCE AND REPAIR

ON-VEHICLE SERVICE

REKES

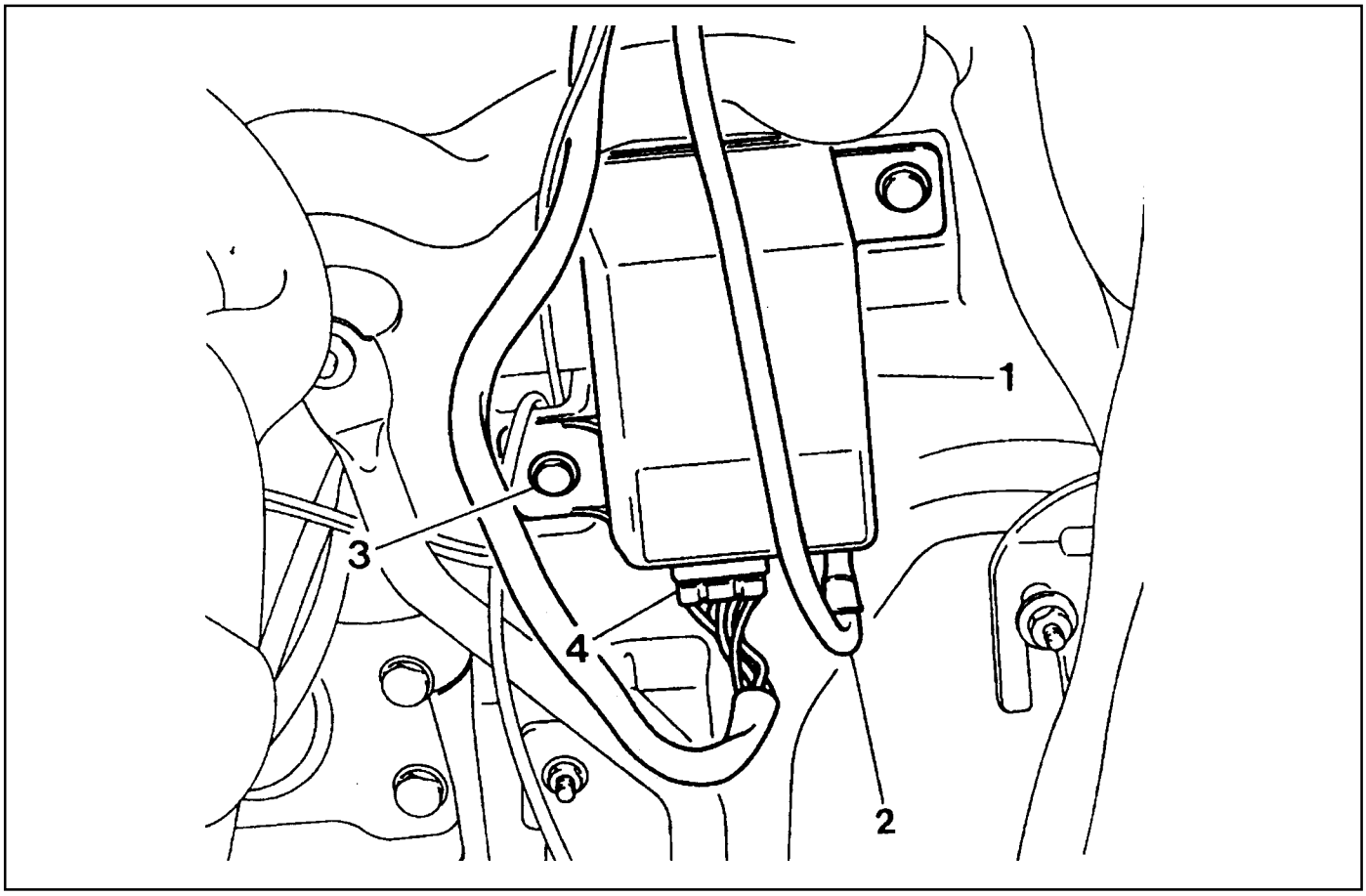

1 REKES Receiver
2 Antenna
3 Bolt
4 Wiring Connector (6P)

Downloaded from www.Manualslib.com manuals search engine

Input Memory

- When the REKES transmitter is lost

1. Connect the battery terminal No.3 and REKES terminal No.4 which are on the diagnosis socket in engine room with service lead wire.

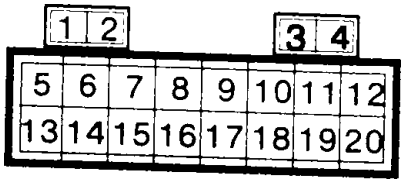

2. Push the lock or unlock button on the REKES transmitter.
3. Input Memory and close all doors.
4. Check the operation of door locking system by pushing the lock or unlock button on the REKES transmitter.

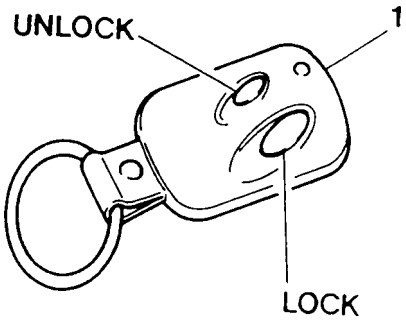

1 REKES Transmitter

- When the transmitter is faulty

1. Replace the REKES transmitter with a new one and connect the wiring connector.
2. Set the input switch of the REKES receiver onto the No.1 or No.2 position and push the lock or unlock button on the REKES transmitter.
3. Set the input switch of the REKES receiver onto the central position and close all doors.
4. Check the operation of door locking system by pushing the lock or unlock button on the REKES transmitter.

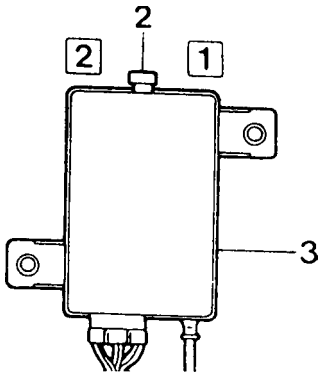

2 Input Switch of the REKES Receive
3 REKES Switch

Downloaded from www.Manualslib.com manuals search engine

Characteristic Signal

1. Lock or unlock all doors according to the REKES signal when the key is removed from the key hole.
2. Characteristic Signal : Right Picture
3. Time Interval

   T1 : 0.05 ± 0.02sec.(lock signal)

   T2 : 0.1 ± 0.02sec.(unlock signal)

   T3 : within 0.25sec.

   T4 : 0.5 ± 0.1sec.

   T5 : within 0.35sec.

   T6,T7 : 0.5 ± 0.1sec.

   T8 : 1 ± 0.25sec.

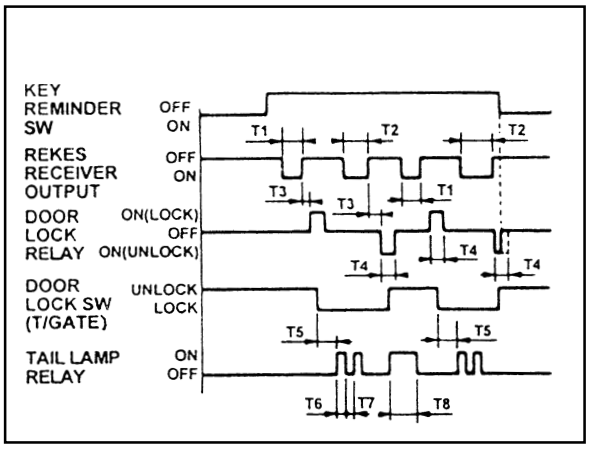

Connector Appearance and Connecting Circuit

Pin No.	Connecting Circuit
1	B+
2	Memory Terminal
3	Key Reminder Switch
4	STICS
5	Ground
6	Memory Terminal

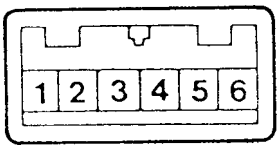

Downloaded from www.Manualslib.com manuals search engine

FUNCTION DESCRIPTION

BURGLAR ALARM

Diagram for Burglar Alarm

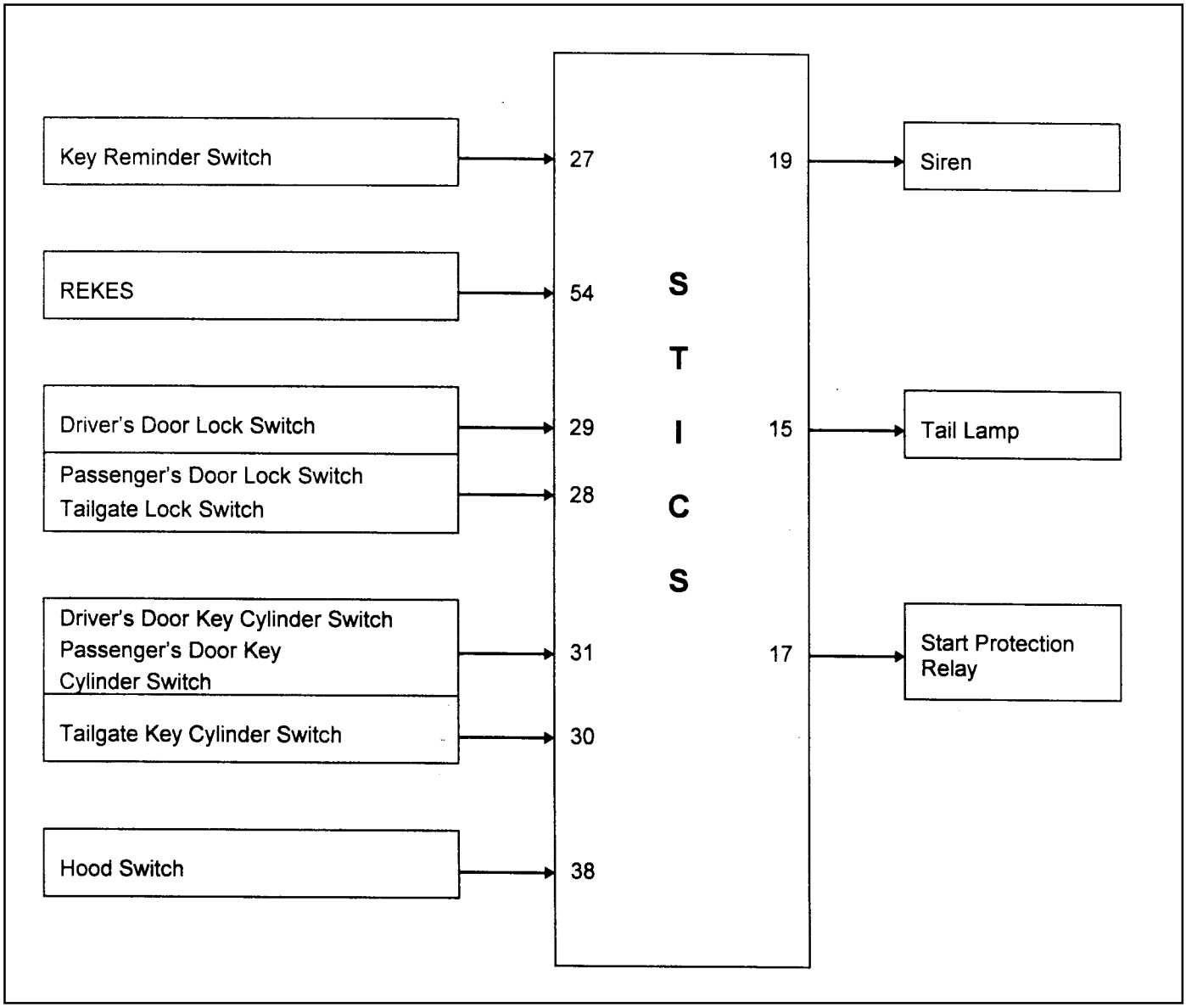

Downloaded from www.Manualslib.com manuals search engine

Characteristic Signal

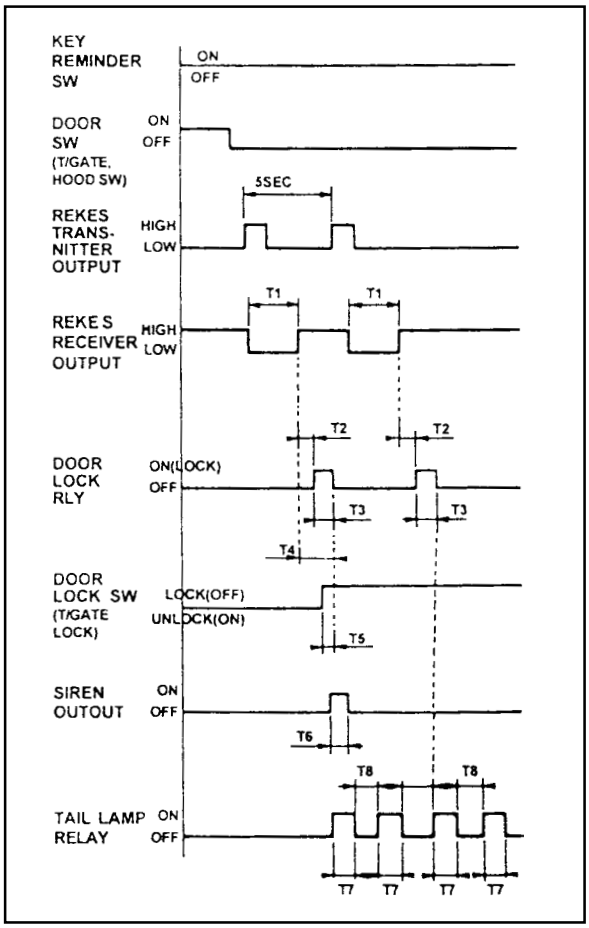

- **Prepare The Burglar Alarm**

1. It is possible to prepare the burglar alarm only when the door is locked by REKES transmitter.

   If the door is lock by key, the burglar alarm can't operate.
2. When the ignition key is removed and all doors and hood are closed, all lock switches on doors must be changed from "ON" to "OFF" within 0.5 second after the locking signal turns back from "LOW" to "HIGH".
3. The system must prepare the burglar alarm within 0.35 second after all lock switches were changed from "ON" to "OFF".
4. If the system prepare the burglar alarm, siren will operate for 0.05second and the tail lamp will light up twice for 0.5 second.
5. Character Signal : Right Picture
6. Time Interval

   T1 : 0.05 ± 0.02sec.

   T2 : within 0.25sec.

   T3 : 0.5 ± 0.1sec.

   T4 : within 0.5sec.

   T5 : within 0.35sec.

   T6 : 0.05 ± 0.01sec.

   T7,T8 : 0.5 ± 0.1sec.

- **Operate The Burglar Alarm**

1. Burglar alarm must operate immediately when the door, tailgate or hood is opened with improper ways after all doors and hood were closed and continued this status for 2 seconds.
2. Siren will operate three series of warning for 30 second's "ON" and 10 second's "OFF".
3. If this warning condition is completed, the system block up the current for starting motor by running the start protection relay.
4. If the tailgate is opened by key when the system is on the burglar alarm condition, the system must be changed to the second burglar alarm condition from normal condition.

Downloaded from www.Manualslib.com manuals search engine

5. Characteristic Signal : Right Picture
6. Time Interval
   T1 : 2 ± 0.2sec.
   T2 : three series of 30sec. “ON”, 10sec. “OFF”
   T3 : 10min. ± 1min.
   T4 : 0.25 ± 0.05sec.
   T5 : 0.25 ± 0.05sec.

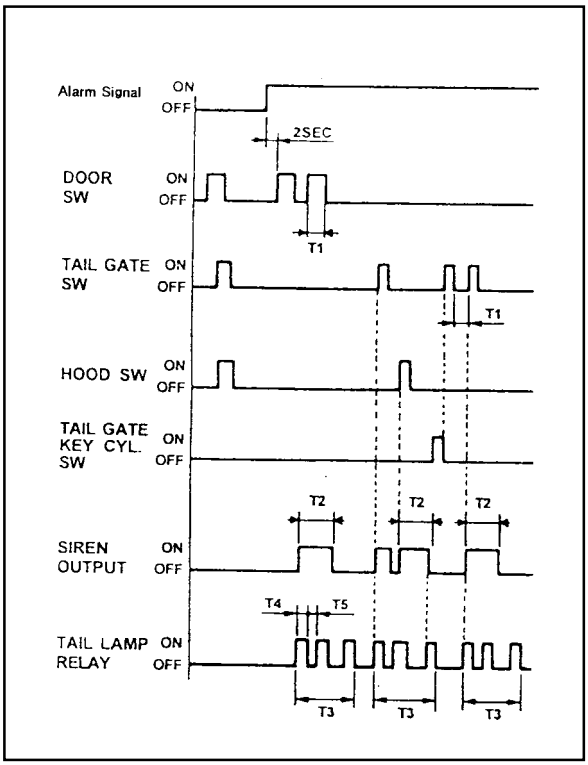

- Cancellation of The Burglar Alarm

1. It is only possible to release the burglar alarm when unlocking the driver’s door key cylinder switch, unlocking by REKES transmitter or turning on the IGN 1,2.
2. Cancellation by an ignition key
3. Characteristic Signal : Right Picture
4. Time Interval
   T1 : 1 ± 0.25sec.

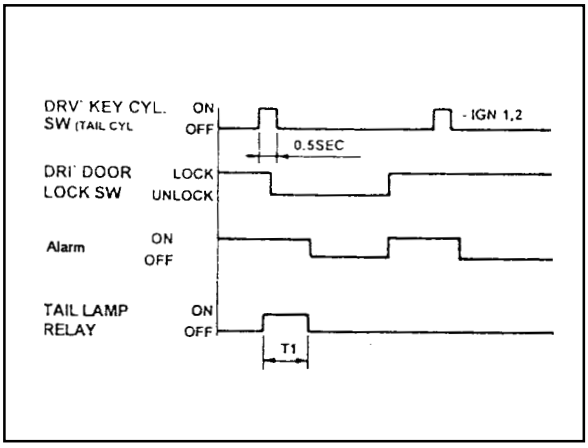

5. Cancellation by REKES transmitter
6. Characteristic Signal : Light Picture
7. Time Interval
   T1 : 1 ± 0.2sec.

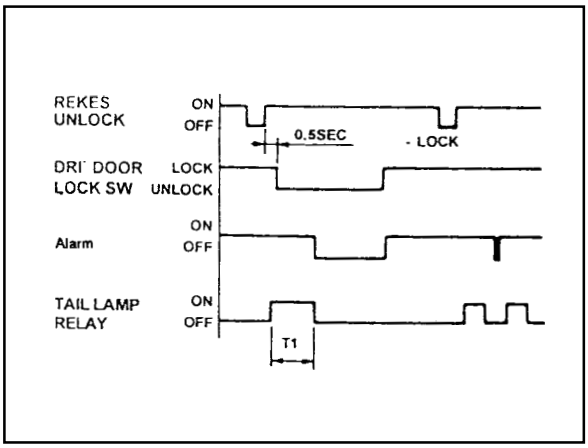

Downloaded from www.Manualslib.com manuals search engine

SECTION 9U

CONTROL UNITS AND SYSTEM

Caution: Disconnect the negative battery cable before removing or installing any electrical unit or when a tool or equipment could easily come in contact with exposed electrical terminals. Disconnecting this cable will help prevent personal injury and damage to the vehicle. The ignition must also be in LOCK unless otherwise noted.

TABLE OF CONTENTS

Specifications 9U-1
STICS Specifications 9U-1
Schematic and Routing Diagrams 9U-2
STICS 9U-2
Function Description 9U-3
STICS 9U-3
Maintenance and Repair 9U-10
On-Vehicle Service 9U-10
STICS 9U-10

SPECIFICATIONS

STICS SPECIFICATIONS

Application		Description
Voltage Rating		DC 12V
Voltage Rating		Dc 9V - 16V
Current Consumption		Less than 1mA(key is removed and all doors locked)
Operating Temperature		-30℃ - +80℃
Voltage Drop (at DC 12V)	Max. 1.2V	Between terminal No.5 and 3,4,8,12,18,25
	Max. 1.8V	Between terminal No. 5 and 2,6,7,16,17
	Max. 2.0V	Between terminal No.5 and 11, 27

Downloaded from www.Manualslib.com manuals search engine

SCHEMATIC AND ROUTING DIAGRAMS

STICS

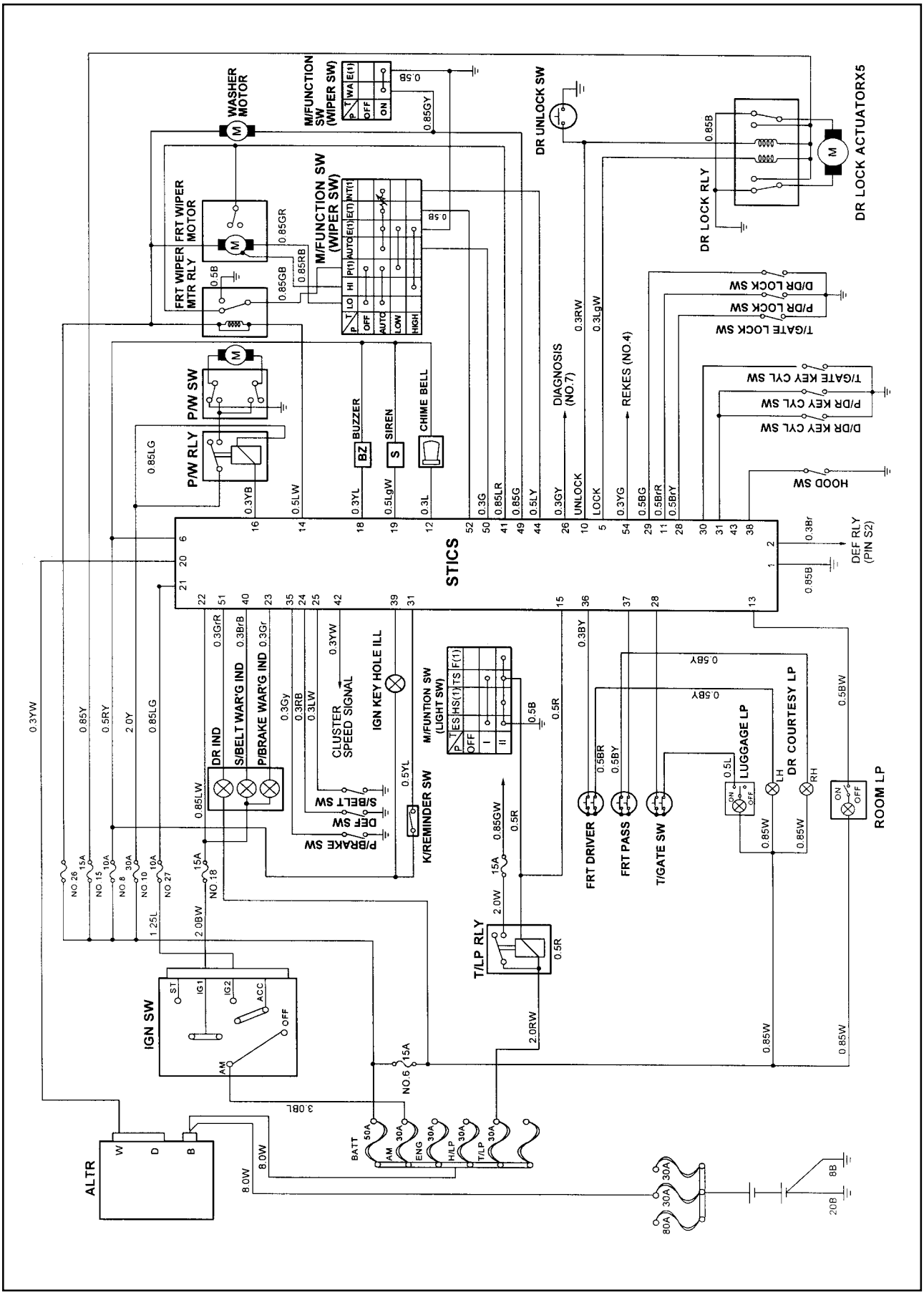

Downloaded from www.Manualslib.com manuals search engine

FUNCTION DESCRIPTION

STICS

Operating Functions

NO.	Application	Deseription
1	Wiper INT sensing vehicle speed	● By operating INT time control volume, variable time will be changed within 1.5 - 20 seconds.
2	Washer relating wiper	● Wiper begins to operate within 0.6 - 1 sec when the washer switch is ON and it operates 3 times after the washer switch is OFF while the IGN2 switch in ON.
3	Dimming room lamp	● When room lamp is coupled with door, it turns on if door is opened. After closing the door it maintains 2 seconds of lighting and dims off whithin 3 seconds.
4	Time delayed power window control	● Power window can be operated within 30 seconds after turning the IGN1 switch from ON to OFF. If driver's/passenger's door is opened within the 30 seconds, time will be prolonged for more 30 seconds from that moment.
5	Rear defogger timer	● The rear defogger will be operated for 12 min. by turning ON the defogger switch while engine is running. ● Defogger will be stopped by pushing the switch again. ● The defogger will be operated 6 min, if push ON the switch within 10 min. after 12 min. of operation.
6	Seat belt warning	● The warning lamp will be turned on for about 6 sec. with an intermittent chime bell when the IGN. switch is ON unless fastening the seat belt.
7	Parking brake warning	● The indicator lamp will flash if drive while the parking brake is applied.
8	Tail lamp lighting warning	● When the driver's door is opened while the tail lamp is still ON, the buzzer operates intermittently. In this condition, the door will be automatically unlocked when it locked.
9	Door ajar warning	● The indicator lamp will be blinking when the door is not closed completely and driving.
10	IGN key reminder	● The chime will be operated intermittently if the driver's door is opened while the IGN key is still remaining in the ignition switch. In this condition, the door will be automatically unlocked when it locked.
11	Central door lock	● All doors will be locked/unlocked by locking/unlocking the driver's or passenger's door.

Downloaded from www.Manualslib.com manuals search engine

NO.	Application	Deseription
12	Coupled with REKES	● Being coupled with REKES (remote keyless entry system), all doors will be locked/unlocked according to signals of transmitter when the ignition key is not inserted.
13	Ignition key hole illumination	● Coupled with door switch, ignition key hole illumination lamp will turn on when the driver's door is opened and will dim off after 10 sec. after closing the door.
14	Auto door lock	● All doors will be locked automatically if the vehicle speed reaches 50km/h though the doors are in unlock.
15	Auto door unlock	● All doors will be automatically unlocked if the vehicle crashes while driving (over 15km/h).
16	Input checking function	● Self diagnostic function for each sensor switches and loads for the system.

Downloaded from www.Manualslib.com manuals search engine

Operating Characteristics

1. Wiper INT sensing vehicle speed
   T1 : within 0.5 sec.
   T2 : Wiper motor 1 revolution time
   T3 : 1.5±0.2 sec. - 20±2 sec.

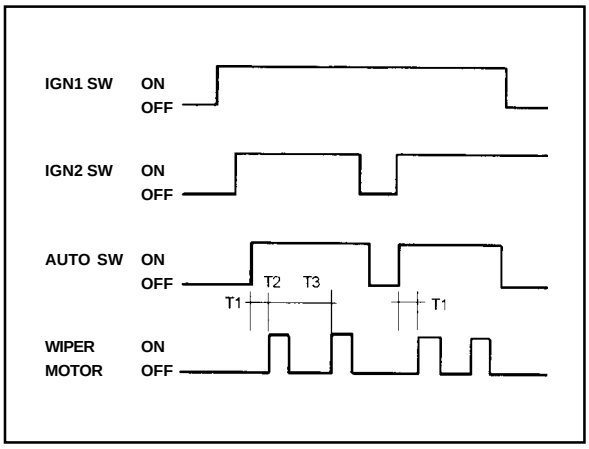

2. Washer relating wiper
   T1 : 0.6 - 1.0 sec.
   T2 : motor 3 revolution (including motor revolution time)

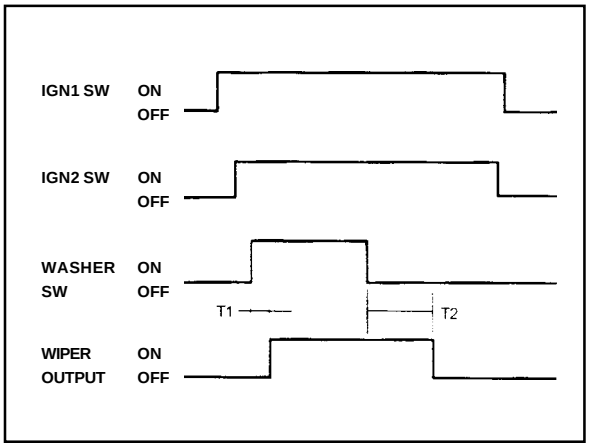

3. Dimming room lamp
   T1 : 2±0.3 sec.
   T2 : 3±0.5 sec

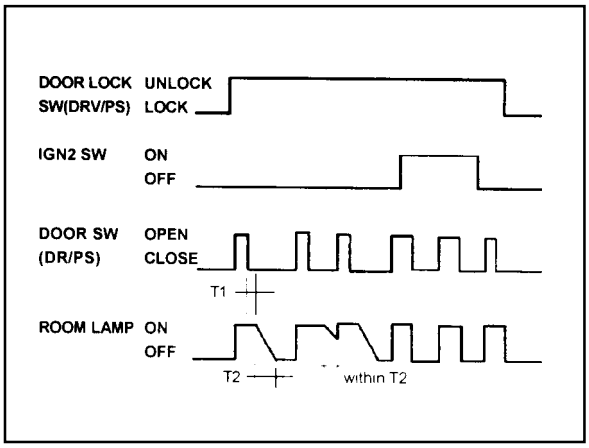

4. Time delayed power window control
   T : 30±2 sec

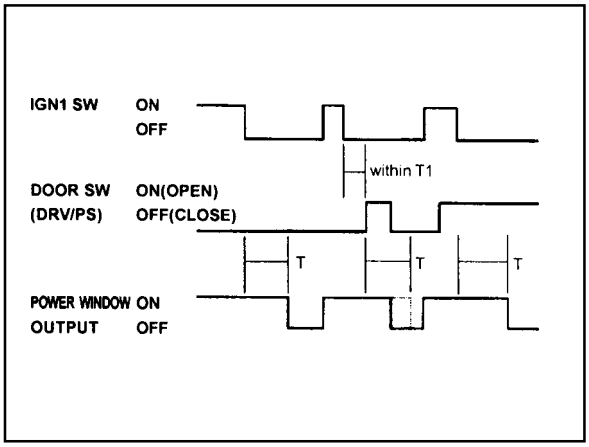

Downloaded from www.Manualslib.com manuals search engine

5. Rear defogger timer
   T1 : 12±2 min.
   T2 : within 10±1 min.
   T3 : 6±1 min.

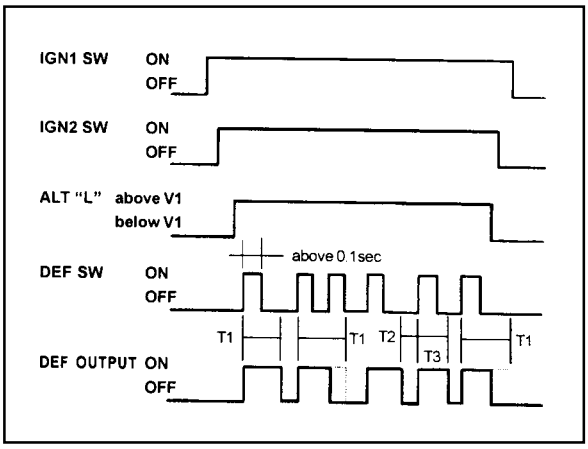

6. Seat belt warning timer
   T1 : 6±1 sec.
   T2 : 0.3±0.1 sec.
   T3 : 0.6±0.1 sec.

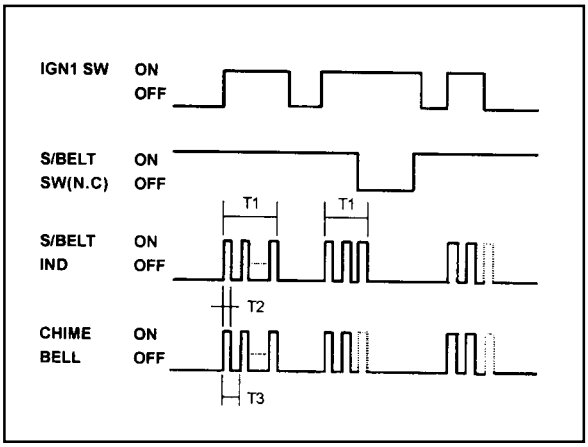

7. Parking brake warning
   T1 : 0.3±0.1 sec.
   T2 : 0.3±0.1 sec.
   V1 : 3km/h - 5km/h

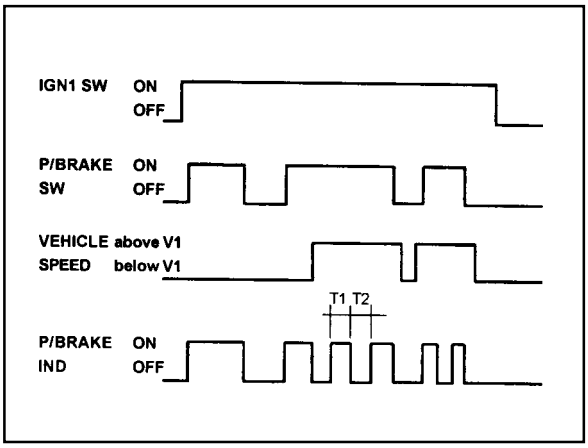

8. Tail lamp lighting warning
- When the driver's door is opened after removing the IGN key while the tail lamp switch is still ON, the buzzer should be operated.
  T1 : 0.3±0.1 sec.
  T2 : 0.3±0.1 sec.

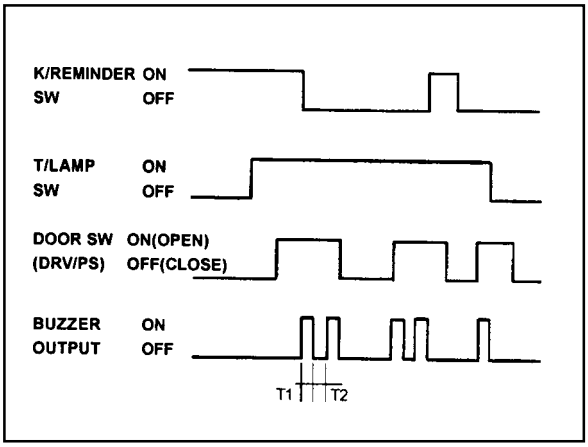

Downloaded from www.Manualslib.com manuals search engine

- After 1), the driver's or passenger's door should be unlocked when it locked.

  T1 : within 0.2±5 sec.

  T2 : 5±0.5 sec.

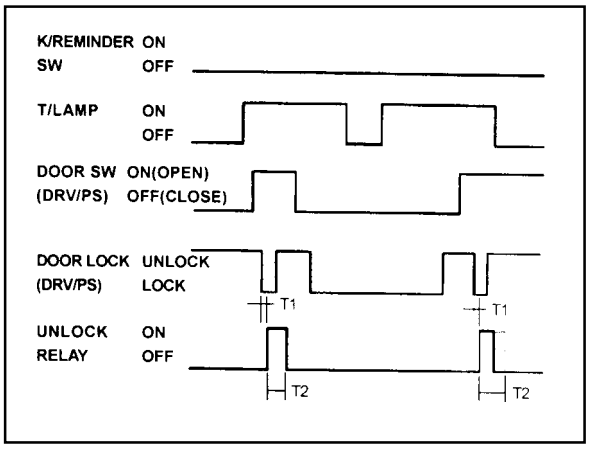

9. Door ajar warning

   T1 : 0.3±0.1 sec.

   T2 : 0.3±0.1 sec.

   V1 : 3 - 5km/h

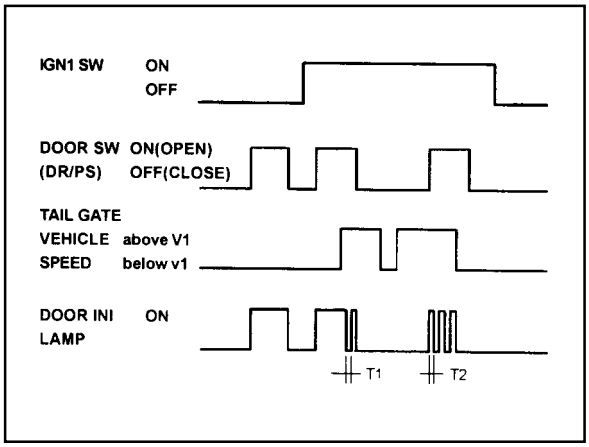

10. IGN key reminder warning

    T1 : within 0.2 sec.

    T2 : 5±0.5 sec.

    T3 : 0.3±0.1 sec.

    T4 : 0.3±0.1 sec.

    T5 : 0.5±0.1 sec.

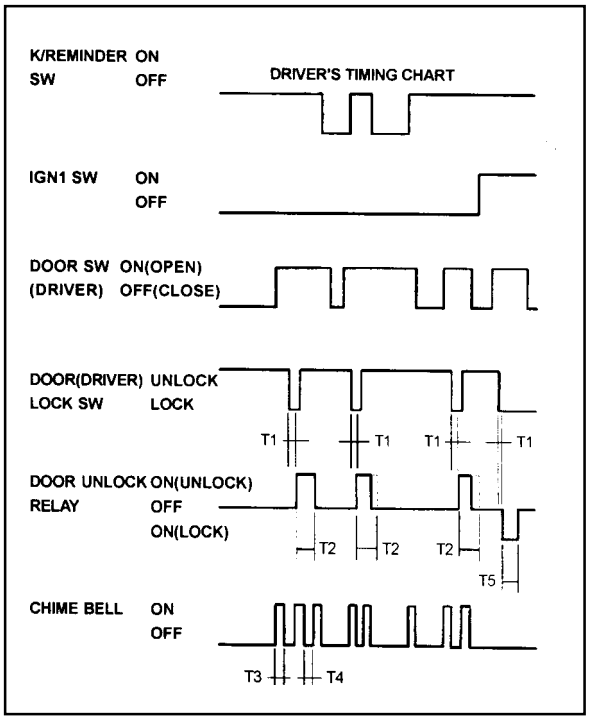

Downloaded from www.Manualslib.com manuals search engine

11. Central door lock
    T1 : within 0.2 sec.
    T2 : 0.5±0.1

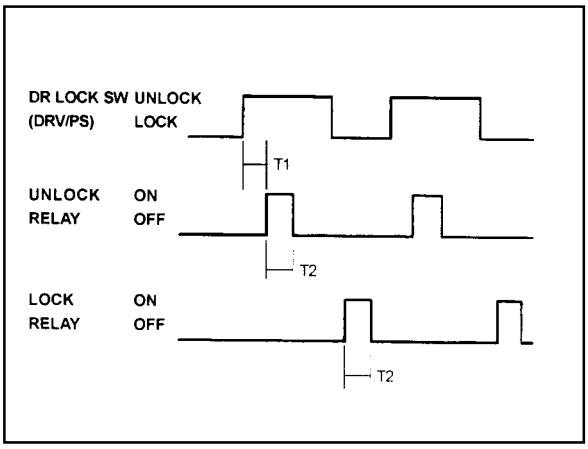

12. Coupled with REKES mode
    T1 : 0.05±0.02 sec. (lock signal)
    T2 : 0.1±0.02 sec. (unlock signal)
    T3 : within 0.2±5 sec.
    T4 : 0.5±0.1 sec.
    T5 : within 0.3 sec.
    T6, T7 : 0.5±0.1 sec.
    T8 : 1±0.25 sec.

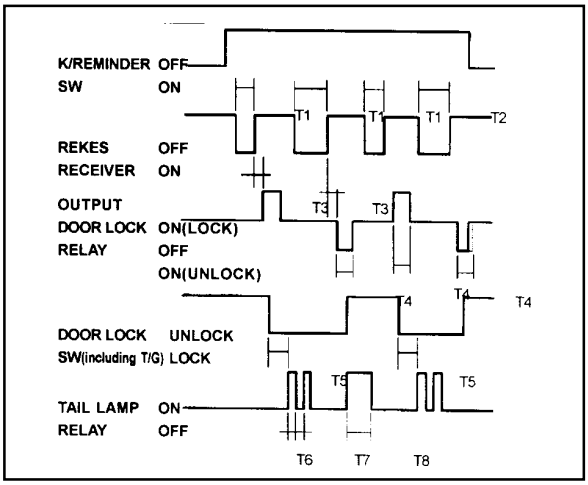

13. Ignition key hole illumination

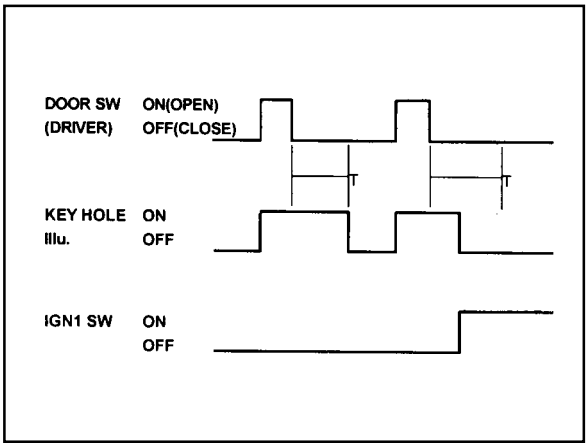

Downloaded from www.Manualslib.com manuals search engine

14. Auto door lock
    V1 : 50±5km/h
    T1 : 0.5±0.1 sec.

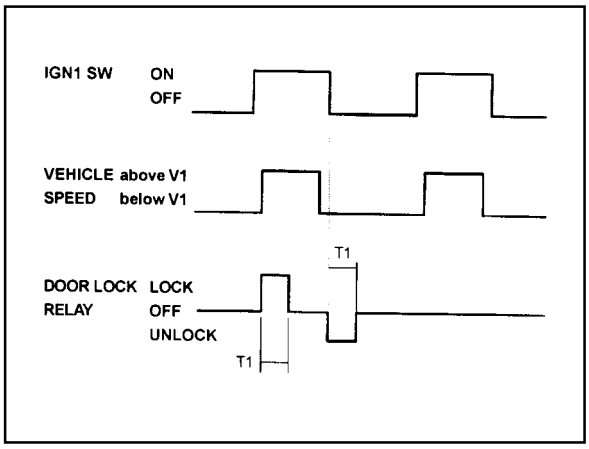

15. Auto door unlock
    T1 : 0.5±0.1 sec.
    V1 : 15km/h

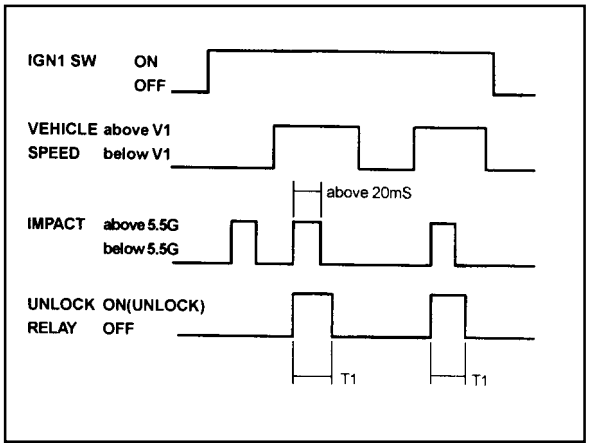

Downloaded from www.Manualslib.com manuals search engine

MAINTENANCE AND REPAIR

ON-VEHICLE SERVICE

STICS

STICS, electonic control warning device, controls 16 functions and contains the self diagnostic function detecting any malfunctions in the sensors and load.

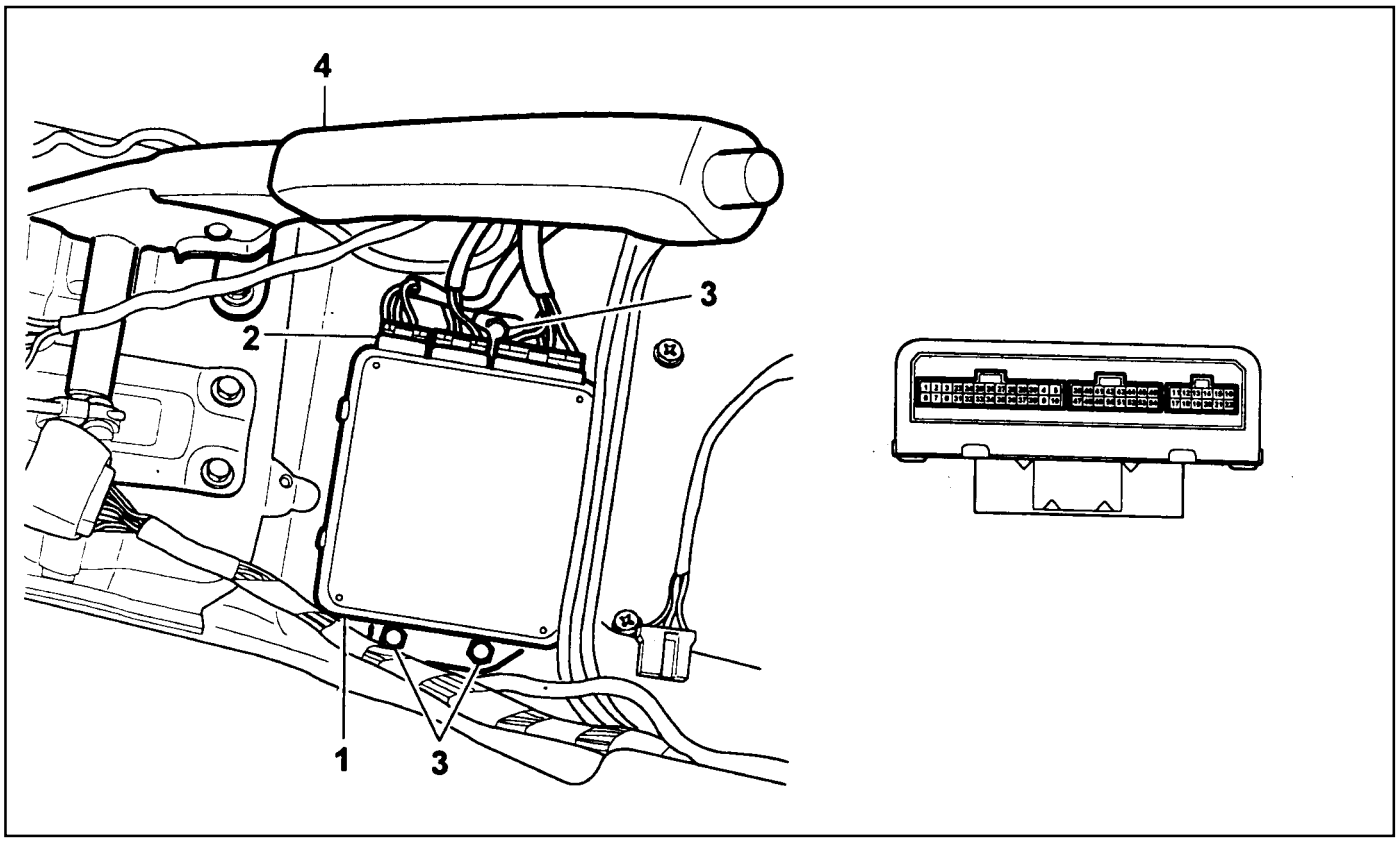

1 STICS Unit
2 STICS Connector
3 STICS Unit Fastening Bolt
4 Parking Brake Lever

Removal & Installation Procedure

1. Disconnector the battery negative cable.
2. Unscrew 4screw from center console box.
3. Remove the center console box and disconnect 3 STICS connectors.
4. Unscrew 3 fastening bolts and remove the STICS unit.
5. Installation should follow the removal procedure in the reverse order.

Downloaded from www.Manualslib.com manuals search engine

SECTION 9V

SWITCHES

Caution: Disconnect the negative battery cable before removing or installing any electrical unit or when a tool or equipment could easily come in contact with exposed electrical terminals. Disconnecting this cable will help prevent personal injury and damage to the vehicle. The ignition must also be in LOCK unless otherwise noted.

TABLE OF CONTENTS

Specifications 9V-1
General Specifications 9V-1
Component Locator 9V-2
Switches 9V-2
Maintenance and Repair 9V-4
On-Vehicle Service 9V-4
Combination Switch 9V-4
Other Switches 9V-8

SPECIFICATIONS

GENERAL SPECIFICATIONS

Application		Description
Light Switch	Load Rating (relay load)	each 0.2 - 0.3A
	Operating Force (knob rotation)	0.8 - 1.7Kgf·Cm
	Free Play	Axial:less than 1.0mm, Radial:less than 1.5mm
Turn Signal lamp Switch	Load Rating (Lamp Load)	each 6.1 - 6.7A
	Free Play	Less than 2.5mm in width from the lever end
Dimmer and Passing Switch	Load Rating(Each Lamps Load)	HU:15A, HL:10A, P:20A
Wiper Switch	Load Rating(Relay Load)	INT:0.25±0.05A
	Load Rating(Motor Load)	LO:6A, HI:8A, LOCK:max. 23A
	Free Play	Less than 2.5mm in width from the lever end
Washer Switch (Motor Load Rating)		4A
Horn Contact Load Rating		Max. : 7A
Front Fog Lamp Switch Load Rating		0.2 - 0.3A
Variable INT Volume Switch		Max. : 25mA

Downloaded from www.Manualslib.com manuals search engine

COMPONENT LOCATOR

SWITCHES

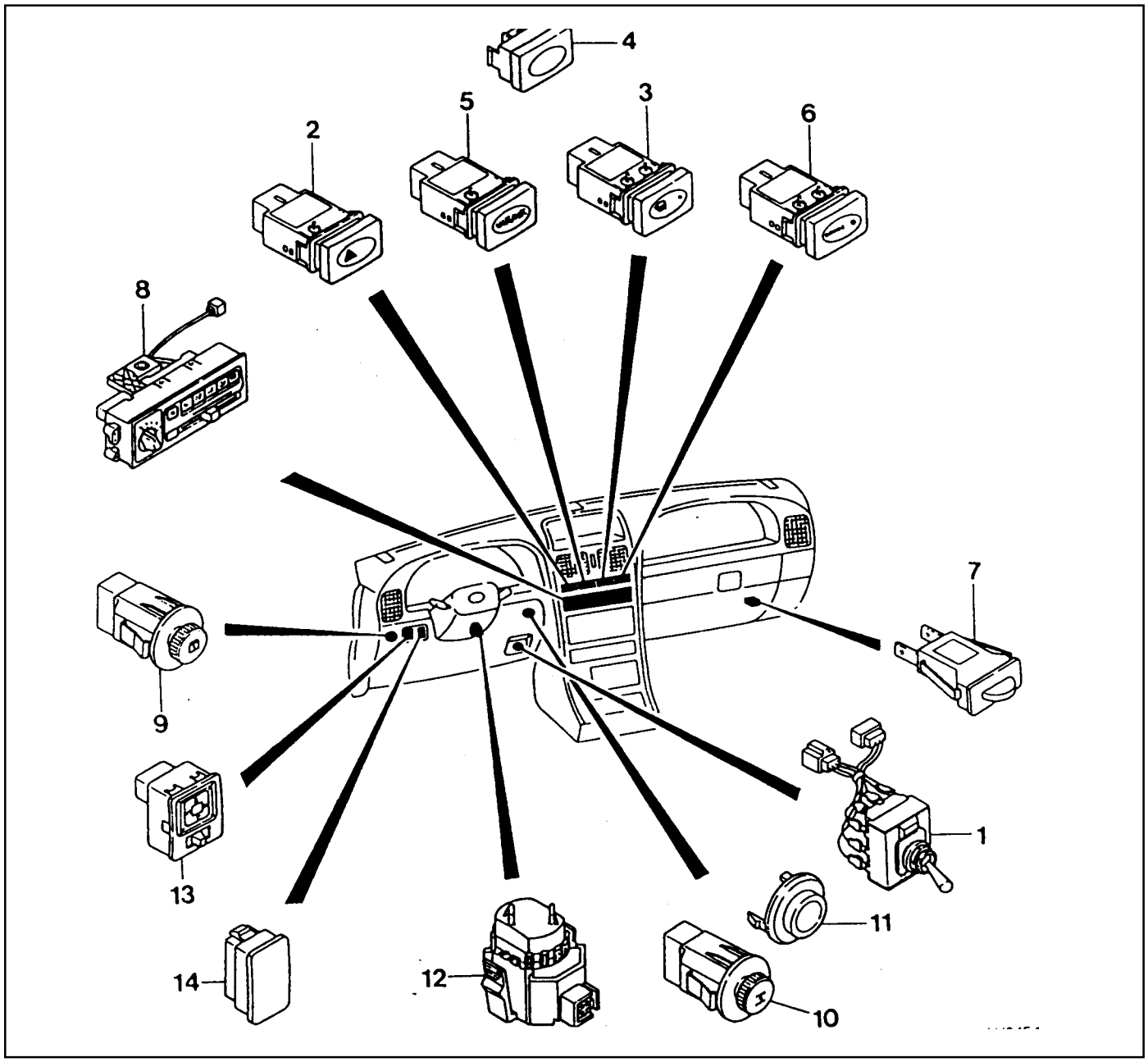

1 -
2 Hazard Switch
3 Rear Heated Window Switch
4 Center Fascia Switch Cover
5 -
6 ECS Switch
7 Glove Box Switch
8 Air-Conditioner Panel Assembly
9 Rear Wiper And Washer Switch
10 4WD Switch
11 4WD Switch Cover
12 Kick Down Switch(4P)
13 Outside Mirror Switch
14 Head Lamp Leveling Switch Assembly (Optional Item)

Downloaded from www.Manualslib.com manuals search engine

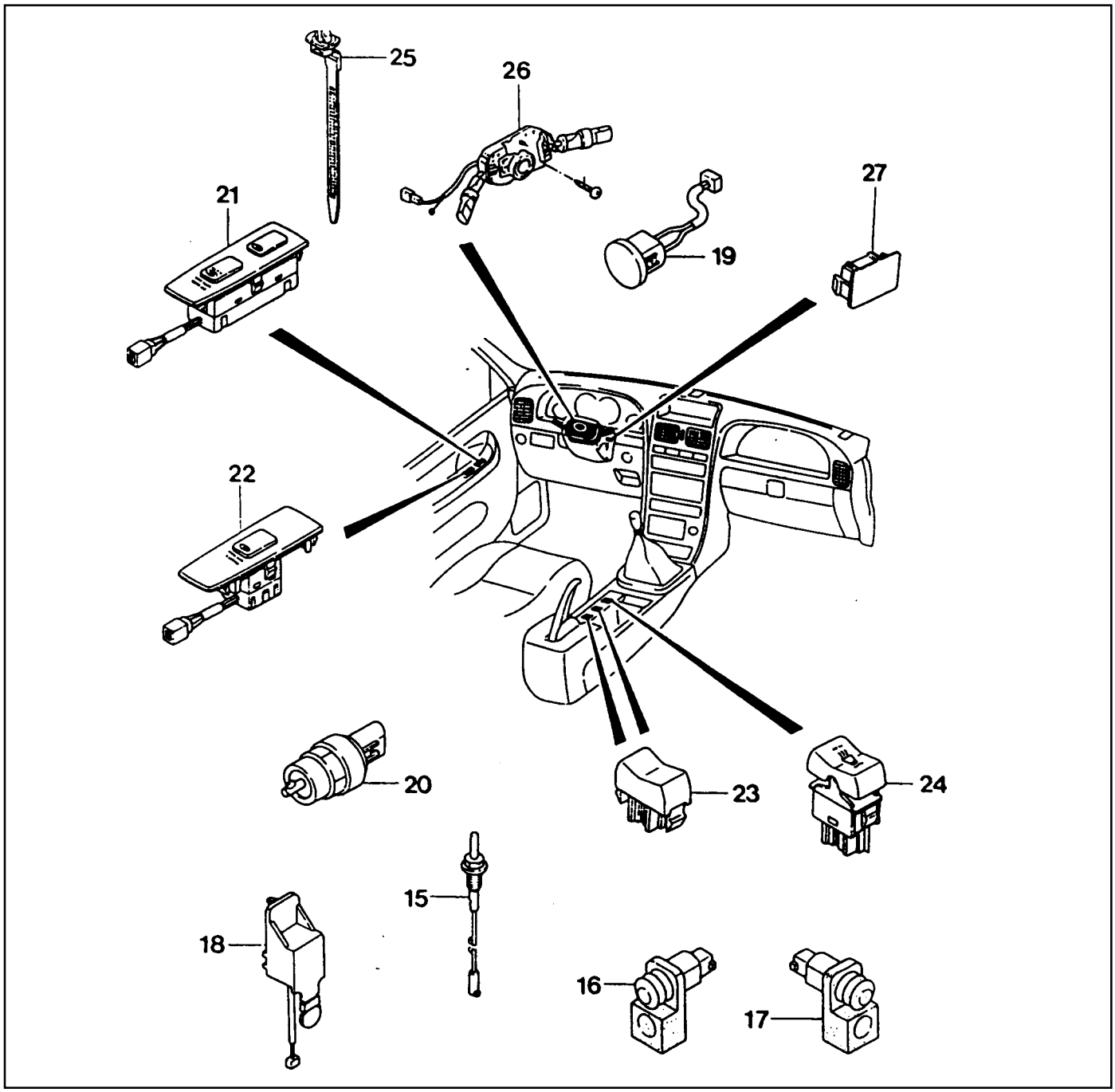

15 Hood Switch
16 Door Switch
17 Tail Gate Switch
18 Atmospheric Sensor
19 Sun Light Sensor Assembly
20 Speed Sensor Assembly
21 Power Window Main Switch
22 Power Window Sub Switch
23 Band
24 Multi-Function Switch Assembly
25 Blanking Cover

Downloaded from www.Manualslib.com manuals search engine

MAINTENANCE AND REPAIR

ON-VEHICLE SERVICE

COMBINATION SWITCH

Removal & Installation Procedure

1. Turn the ignition switch to 'OFF' position, disconnect the negative battery cable and go next step after waiting at least 30 seconds.
2. Separate both left and right covers from the steering wheel and unscrew 2 bolts(10mm)

Installation Notice

Tightening Torque	7 - 11 Nm

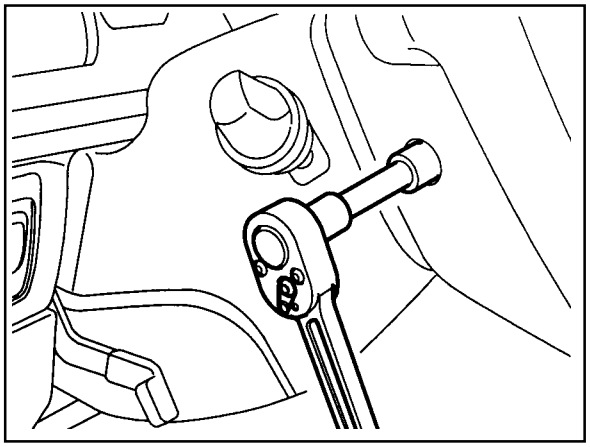

3. Disconnect steering wheel audio remote control connector, horn connector and airbag module connector and remove the airbag module.

Notice

Refer to airbag module removal.

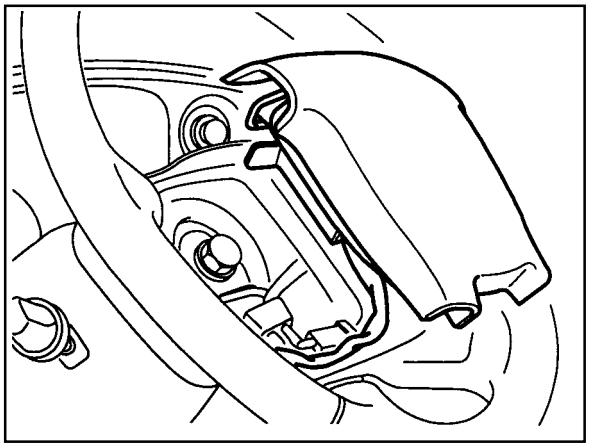

4. Mark the alignment marks on the steering nut and upper column shaft and unscrew nut (22mm).

Installation Notice

Tightening Torque	50 - 80 Nm

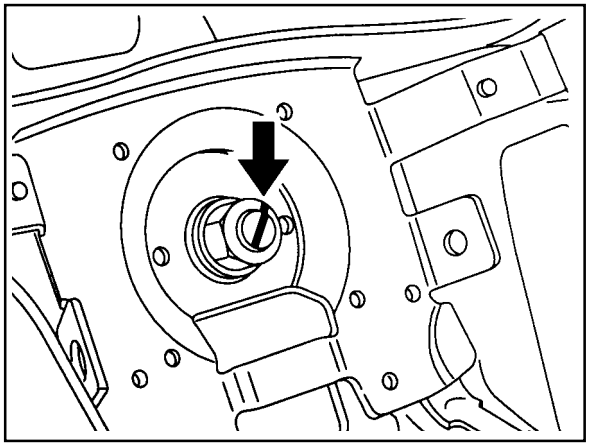

Downloaded from www.Manualslib.com manuals search engine

5. Unscrew the 3 screws from the steering column shaft lower cover and remove both upper and lower covers.

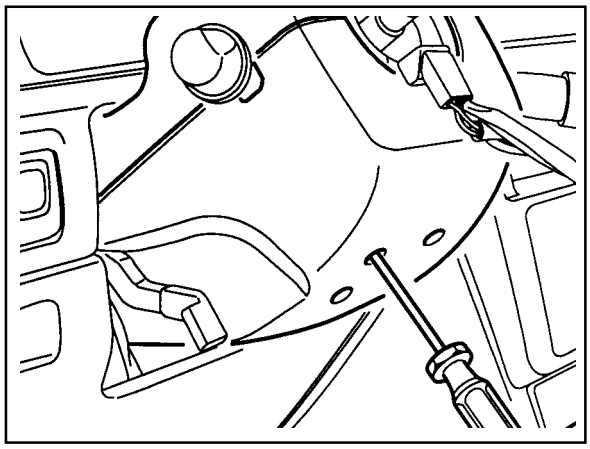

6. Unscrew the 4 screws of clock spring and remove the clock spring.

   Notice

   Refer to clock spring removal for its installation notes.

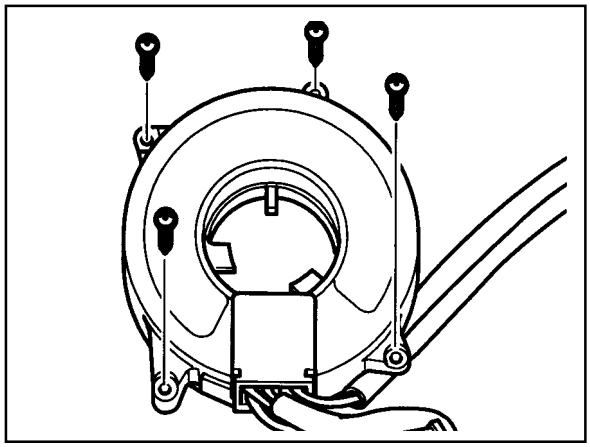

7. Unscrew the 3 screws and remove the multifunction switch.
8. Installation should follow the removal procedure in the reverse order.

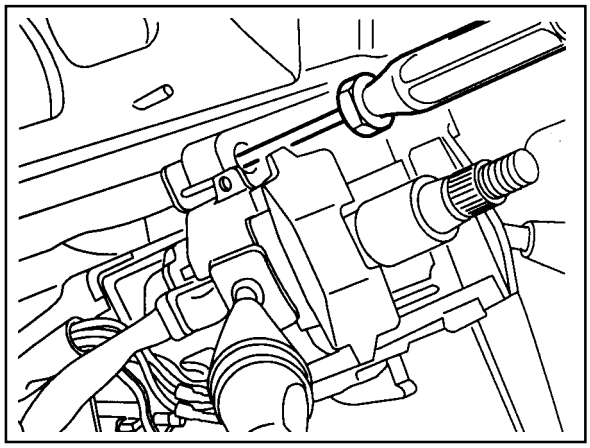

Downloaded from www.Manualslib.com manuals search engine

Connector Terminal Number & Circuit

NO.	Circuit	Wiring	Item
1	EB	2.0B	Head lamp beam ground
2	HU	2.0RL	Head Lamp Upper Beam Power
3	HL	2.0R	Head Lamp Lower Beam Power
4	TS	0.3R	Tail Lamp Switch
5	HS(1)	0.3LW	Head Lamp Switch
6	HS(2)	1.25LW	Head Lamp Switch Passing
7	TB	0.85GR	Flasher Unit Power
8	TL	0.5W	Turn Signal Lamp (LH)
9	TR	0.5Y	Turn Signal Lamp (RH)
10	ES	0.3B	Head lamp Switch Ground
11	HO	0.5BW	Horn
12	WA	0.5LY	Washer
13	P	0.85GB	Wiper Parking
14	HI	0.85RB	Wiper High Speed
15	INT	0.5G	Intermittent Wiper
16	LO	0.85GR	Wiper Speed (LO)
17	ES	0.85B	Wiper and Washer Ground
18	-	-	-
19	F(2)	0.3Br	Front Fog Lamp
20	FR	0.3G	Front fog Lamp Ground
21	-	-	-
22	-	-	-
23	-	-	-
24	-	-	-
25	HO	0.5GR	Horn
26	ES	0.5BW	Remote Control Ground
27	AUD	0.5Y	Remote Control Signal
28	ACC	0.5L	Remote Control Switch
29	DSL	0.5f L	Driver's Inflator (LOW)
30	DSH	0.5f Br	Driver's Inflator (HIGH)
37	E(T)	0.3BY	Intermittent Wiper Ground
38	INT(T)	0.3R	Intermittent Wiper

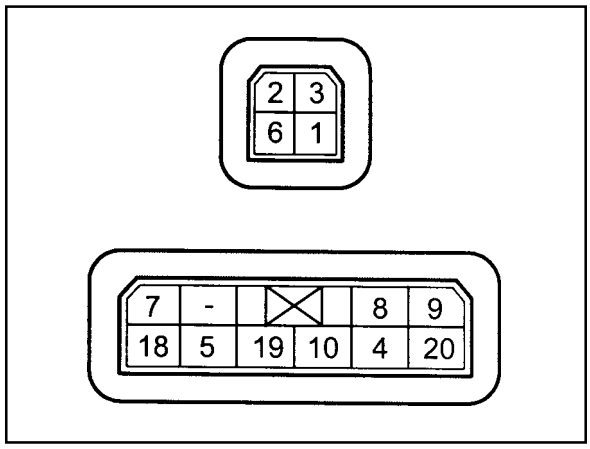

(Light switch connector)

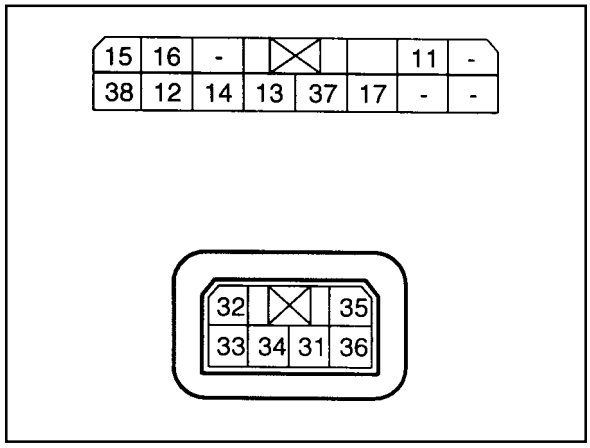

(Wiper and washer switch connector)

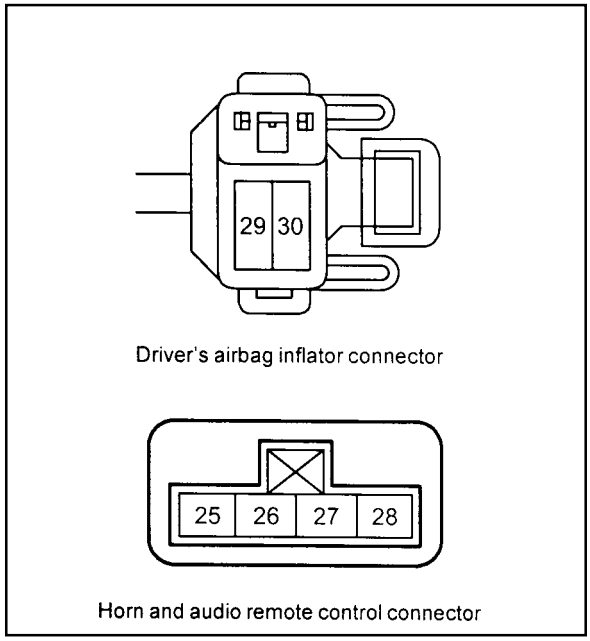

Downloaded from www.Manualslib.com manuals search engine

Check and Service

After disconnecting the connectors, operate the multifunction switch and check each terminals for current flow.

Light Switch

Switch \ Terminal No.		1	2	3	4	5	6	7	8	9	10	19	20
Head Lamp	OFF												
	Tail				○	—	—	—	—	—	○		
	Head				○	○	—	—	—	—	○		
Turn Signal	OFF												
	LH							○	○				
	RH							○	—	○			
Dimmer and Passing	Passing	○	○	—	—	—	○						
	LOWER	○	—	○									
	UPPER	○	○										
Front Fog Lamp	OFF												
	ON											○	○

Wiper and Washer Switch

Switch \ Terminal No.		12	13	14	15	16	17	21	22	23	24	37	38
Front Wiper and Washer Switch	OFF		○	—	—	○							
	AUTO		○	—	—	○							
					○	—	○					○	○
	LO					○	○						
	HI			○	—	—	○						
	Washer	○	—	—	—	—	○						

Downloaded from www.Manualslib.com manuals search engine

OTHER SWITCHES

Maintenance and repair

(Tailgate Glass Defogger)

1. Check the defogger

   Before checking the electric equipment's, usually disconnect the battery negative(-) terminal.

   1) Check the tailgate defogger after battery is fully charged by running the engine at idle speed.
   2) Check the heated wire voltage at tailgate glass center position "A" by using circuit tester when the tailgate glass defogger switch is "ON". If the voltage is approx. 6V, the system is normal.
   3) If the voltage indicates 12V at point "A" , it is considered that there is a short between "A" and (-) terminal.
   4) Find out where the voltage abruptly changes to the 0V by moving tester bar to the (-) terminal side slightly.
   5) If the voltage indicates 0V at point "A", it is considered that there is a short between "A" and (+) terminal.
   6) Find out where the voltage abruptly changes to the 12V by moving tester bar to the (-) terminal side slightly.

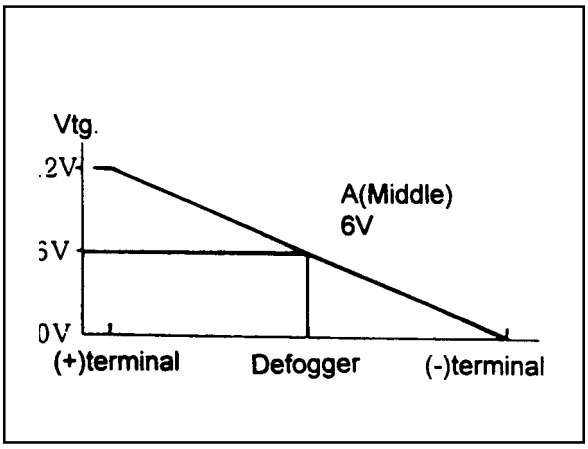

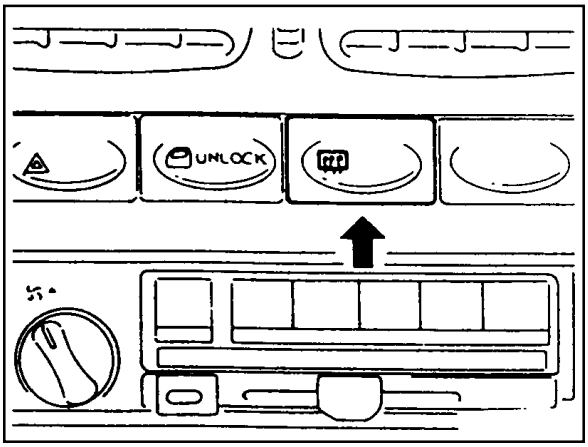

2. Checking the switch

   1) Remove the tailgate glass defogger switch wire from instrument panel.
   2) Turn on the switch and carry out the continuity test between terminals.

Switch position \ Terminal NO.	1	4	2	5	6
OFF					
ON					

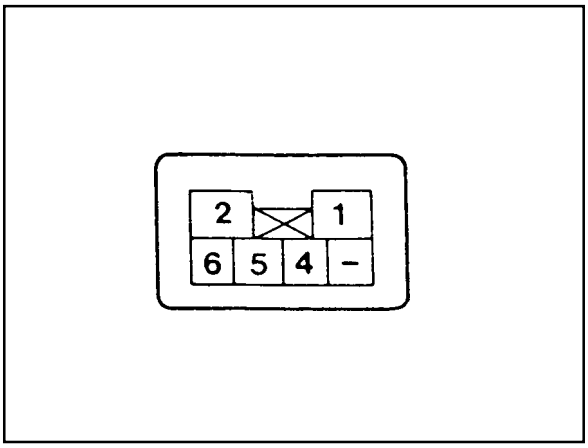

Notice

○–○ : It means the electrical continuity between terminals.

3. Checking the relay

   Remove the tailgate glass defogger relay from the relay box.

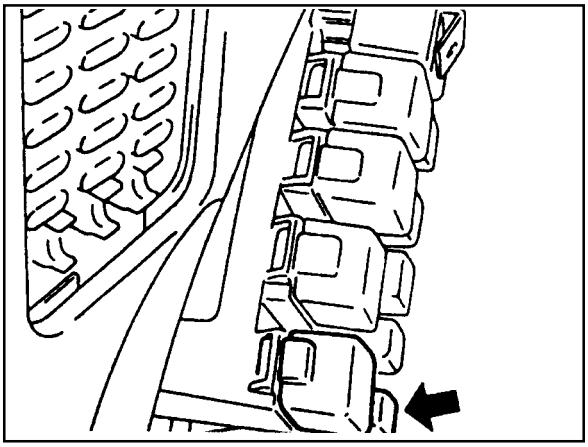

Downloaded from www.Manualslib.com manuals search engine

Circuit Diagram

1. Hazard Switch

P \ T	ON	OFF
1(IG)		○
2(B)	○	
3(FB)	○	○
4(FL)	○	
5(TL)	○	
6(TR)	○	
7(IND)	○	
8(ILL-)	○	Ω
9(ILL+)	○	

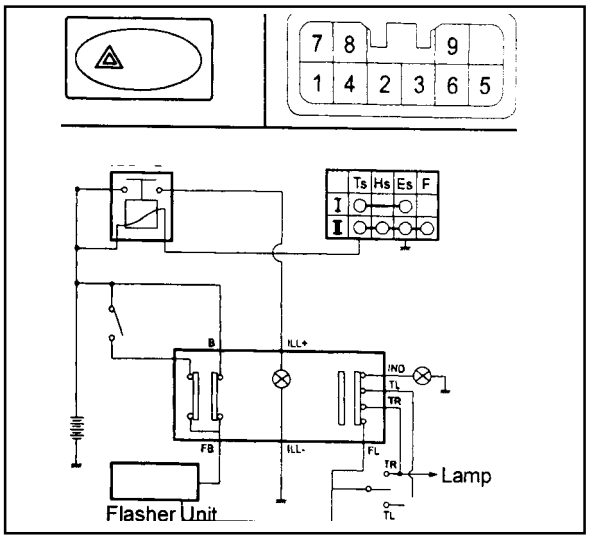

2. Rear defogger & Door unlock switch

P \ T	ON	OFF
1(U)	○	
2(E)	○	
3(ILL+)	○	Ω
4(ILL-)	○	

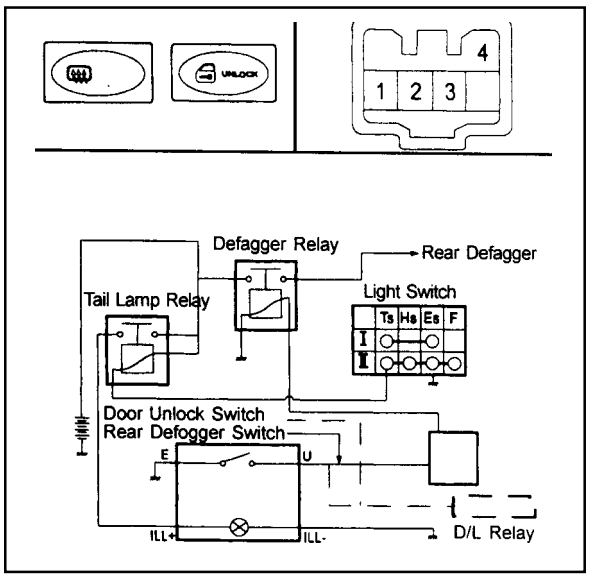

3. ECS switch

P \ T	ON	OFF
1(U)	○	
2(E)	○	
3(ILL+)	○	Ω
4(ILL-)	○	

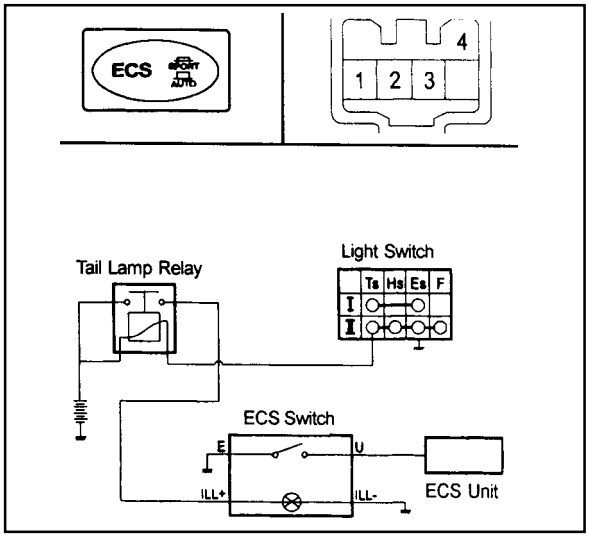

Downloaded from www.Manualslib.com manuals search engine

SECTION 9W

IMMOBILIZER SYSTEM

Caution: Disconnect the negative battery cable before removing or installing any electrical unit or when a tool or equipment could easily come in contact with exposed electrical terminals. Disconnecting this cable will help prevent personal injury and damage to the vehicle. The ignition must also be in LOCK unless otherwise noted.

TABLE OF CONTENTS

Function Description 9W-2
System Description 9W-3
Diagnosis 9W-8
Gasoline Engine 9W-8
Diesel Engine 9W-10
Schematic and Routing Diagrams 9W-12
Diesel Engine Immobilizer 9W-12
Gasoline Engine Immobilizer 9W-13
Maintenance and Repair 9W-14
On-Vehicle Service 9W-14
Immobilizer Antenna 9W-14

Downloaded from www.Manualslib.com manuals search engine

FUNCTION DESCRIPTION

Immobilizer is a device disabling vehicle ignition unless a speific key is used and designed to help prevent vehicle theft.

Immobilizer is comprised of two devices, a key with encoded transponder and engine control unit(ECU) with the same encoding of the transponder. When a key is inserted into the key hole to start vehicle and turned to 'ON', the ECU reads and decodes the transponder code and, if the same, starts the engine, it is called immobilizer. It means immobilizer system disables starting by stopping fuel supply if the code in the transponder does not match the code stored in ECU each other.

Notice

- If vehicle is equipped with immobilizer system and the engine cranks normally but not start, check immobilizer system first rather than ignition and other electrical systems because it can be disabled fuel supply of injectors by ECU due to defective immobilizer system.
- Programming of the immobilizer system will be performed by authorized personnel only. If following defective codes for immobilizer system appear during diagnosis of vehicle with SCANNER, ask immobilizer programming to authorized personnel and actual programming should be performed by authorized personnel only.
  - ▶ Display of defectives relevant to immobilizer system : SCANNER
    1. No communication with transponder
    2. No immobilizer programming
- The transponder in the key can be damaged by shocks of dropping or hitting other objectives, so handle it with care.
- Each supplied key has programming of code on its own. Accordingly if ECU needs to be replaced, replace the transponder in the key.
- The vehicle equipped with immobilizer system will never be started with remote ignition device, so do not attempt to install it.
- The immobilizer system will never be removed from the vehicle. So never attempt to remove it to install a remote ignition device or others.
- If engine does not start during service, use every key to start the engine and then check immobilizer system finally.

<u>Cases that requires immobilizer programming</u>

1. Replacement ECU

   In this case, replace the every transponder of the key at once.
2. Replacement of the transponder
3. Additional key for lost 1 or 2 keys
   1) Clear all codes for current keys from the ECU
   2) When using current key : clear code of the transponder and re-program it
   3) Additional (purchased) key : perform programming
4. When lost all keys
   1) Clear all memorized key codes from the ECU
   2) Replace the key and key set
   3) Immobilizer programming

Downloaded from www.Manualslib.com manuals search engine

SYSTEM DESCRIPTION

Gasoline Version

The Immobilizer System consists of an electronic device with integrated coil, called ‘Active Antenna’, the crypto transponder, which is integrated in the ignition key, and the engine management system (EMS).

The Active Antenna is mounted at the ignition lock and handles the following tasks :

- To supply the transponder with power
- To receive the data from the EMS and transmit it to the transponder
- To receive and demodulate the data from the transponder and transmit it to the EMS

The whole Immobilizer software, the authentication and the management of valid keys is completely managed by the EMS.

Immobilizer system for gasoline vehicle

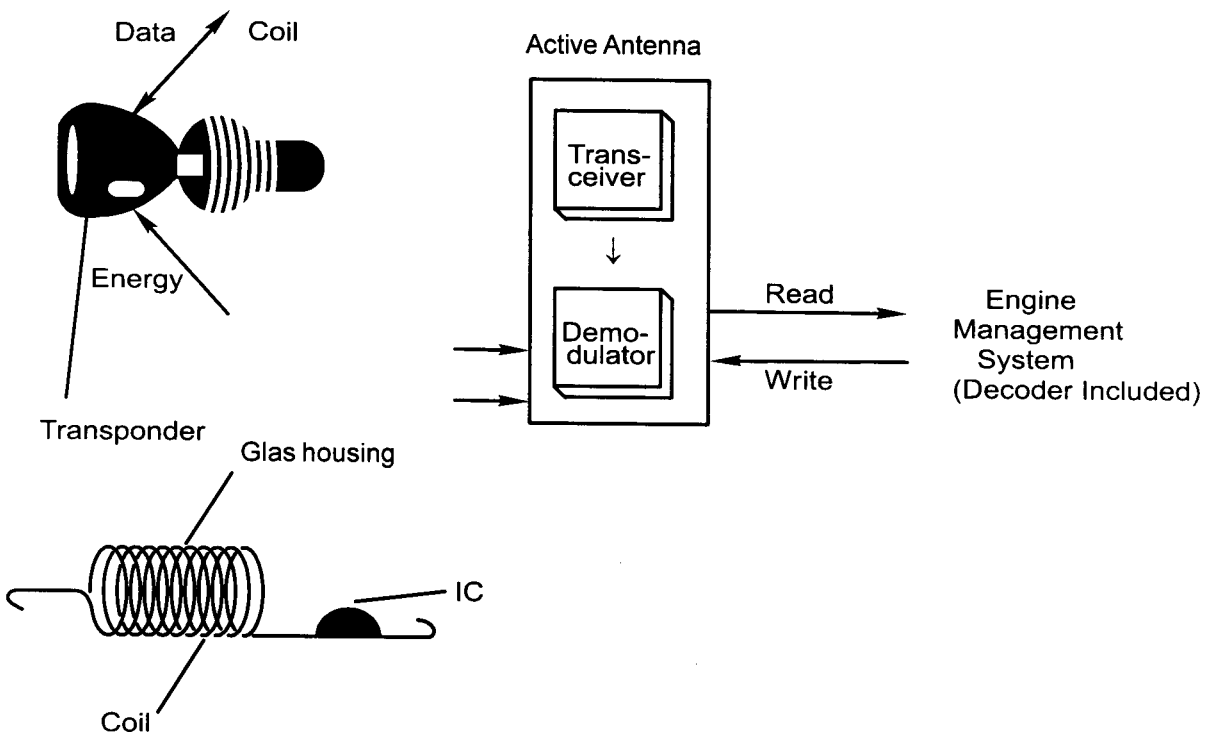

Downloaded from www.Manualslib.com manuals search engine

Active Antenna

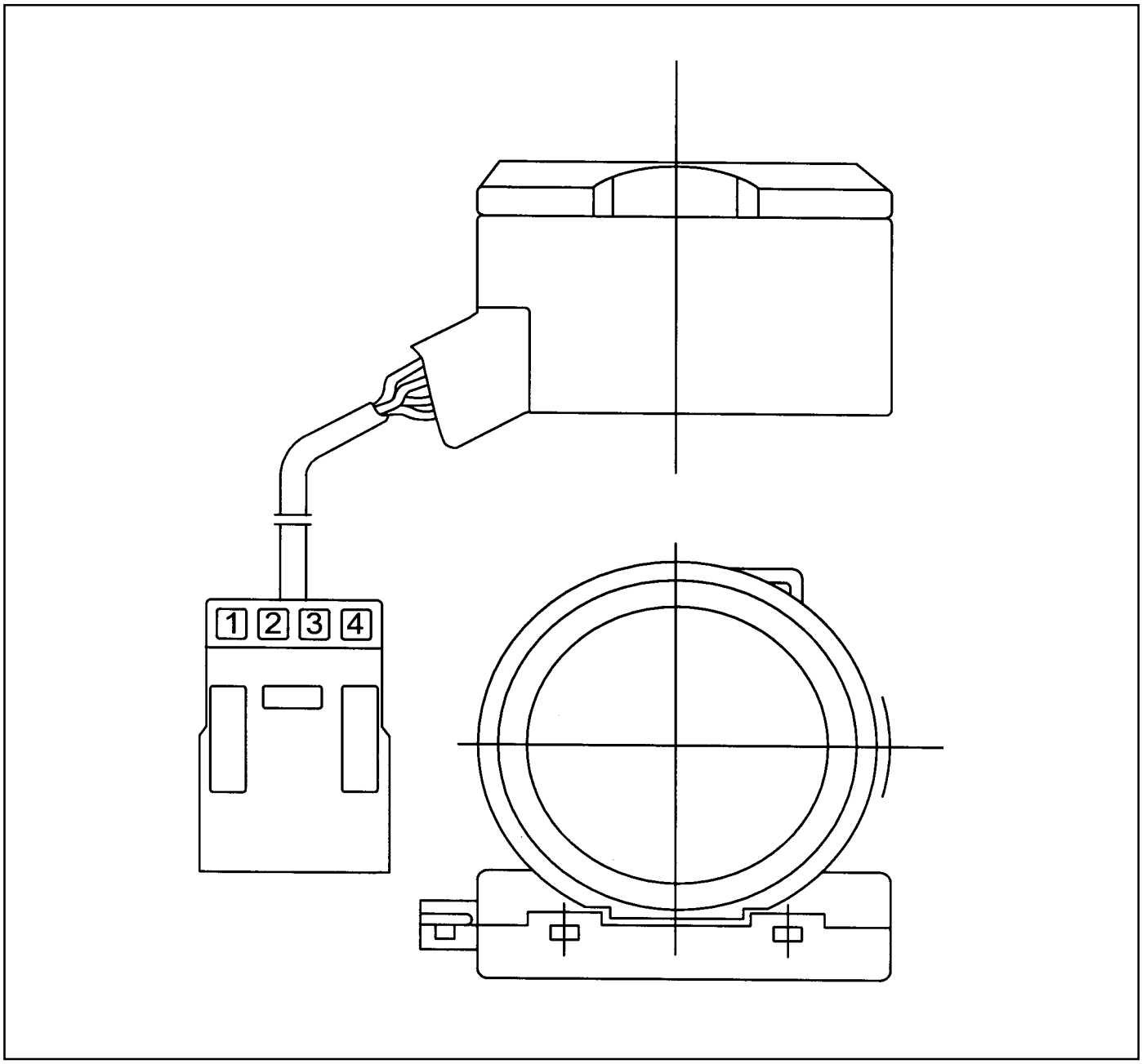

- Connector

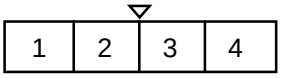

1 : IGN (red)
2 : Ground (brown)
3 : Data in (yellow)
4 : Data Out (green)

Notice

Pin arrangement and spec. of connector is same for gasoline and diesel vehicles.

- Wire circuit diagram

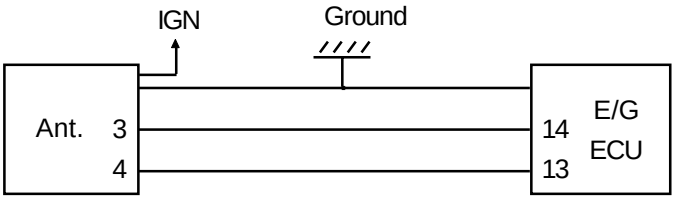

13 : Crypto read
14 : Crypto write

Downloaded from www.Manualslib.com manuals search engine

Diesel Version

The Immobilizer System consists of an electronic device with integrated coil, called 'Active Antenna', the crypto transponder, which is integrated in the ignition key, and the Immobilizer-Control-Unit (ICU).

The Active Antenna is mounted at the ignition lock and handles the following tasks :

- to supply the transponder with power
- to receive the data from the ICU and transmit it to the transponder
- to receive and demodulate the data from the transponder and transmit it to the ICU

The whole Immobilizer software, the authentication and the management of valid keys and controlling the fuel valve is managed completely by the ICU.

Immobilizer System for Diesel Vehicles

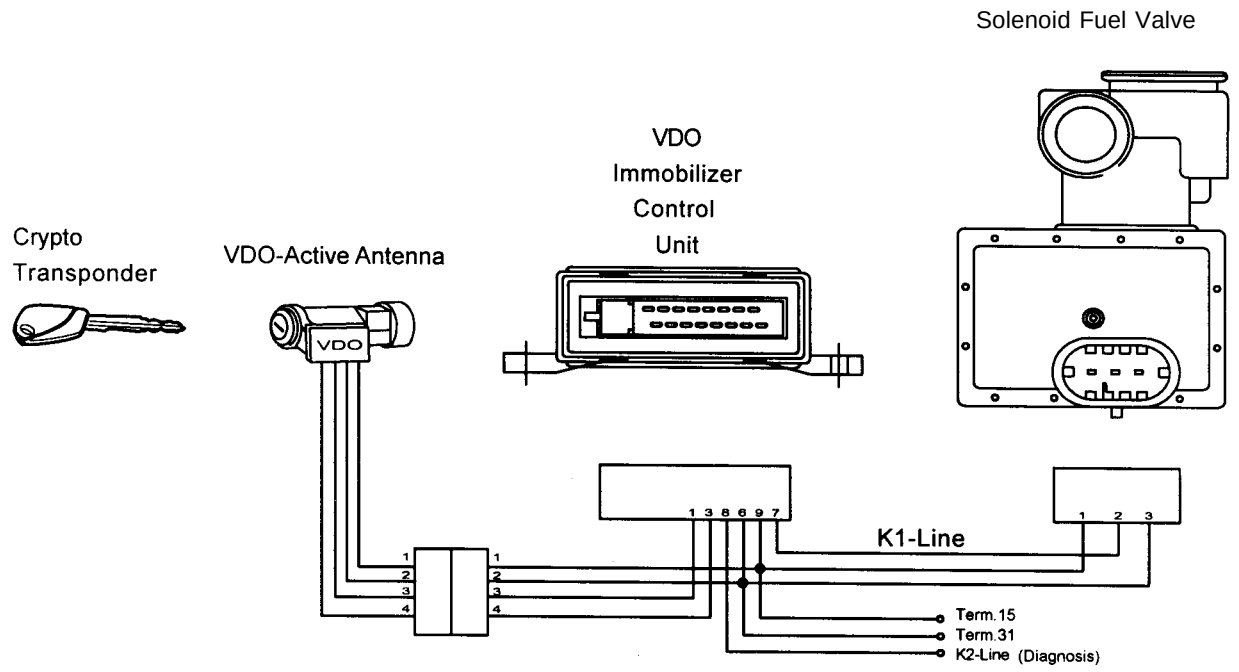

- Connector

  - Immobilizer unit

16	15	14	13	12	11	10	9
8	7	6	5	4	3	2	1

1 : Data out 3 : Data in 6 : Ground
7 : Data line 8 : K-Line 9 : IGN

  - Solenoid valve

1	2	3

1 : IGN (Brown)
2 : Code (Green)
3 : Ground (Black)

- Wire circuit diagram

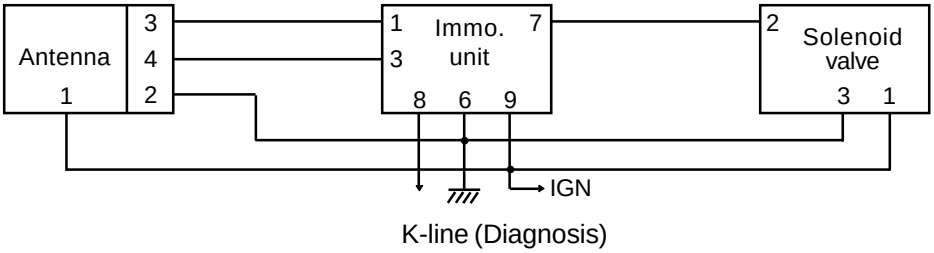

Downloaded from www.Manualslib.com manuals search engine

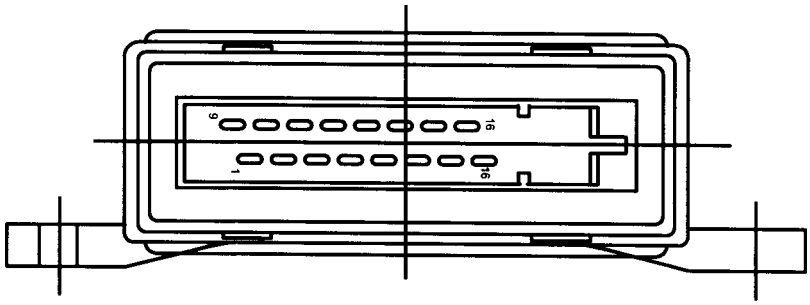

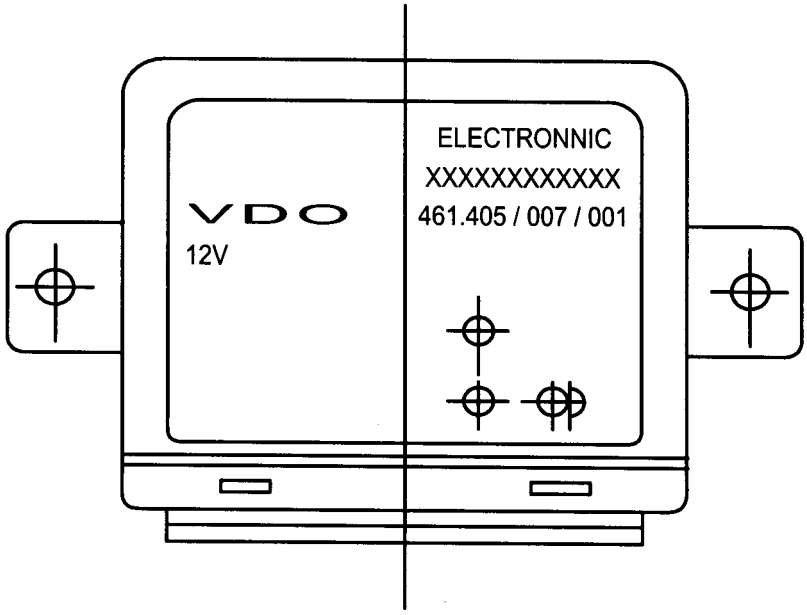

Downloaded from www.Manualslib.com manuals search engine

System Integration

The med 98.2 immobilizer is an anti-theft protection device allowing the start of the engine only if a specific authorization is obtained during the start up phase. The med 98.2 will allow (prohibit) the start of the engine by driving ON (OFF) an internal solenoid valve.

The med 98.2 is a single unit integrating the following subsystem :

- a valve that allows (valve open) or blocks (valve closed) the fuel flow through the engine fuel system
- a microprocessor control system to control and activate the valve during the start up of the engine, in order to allow the start up only when a specific permission is given

the med 98.2 task is, therefore, to prevent the non authorized start up of the engine.

The functional unit includes also a basic set of electronic components whose function is to reduce its dependence on the microprocessor control system: a part from a short temporarily period, during the start up phase, the electronics allows the control system to excite and open the valve, but it doesn't allow to close it.

The valve can be shut off only after the KL 15 has been deactivated.

The structure allows to obtain the highest degree of safe-operation (functionality fail-start): a failure in the microprocessor unit cannot cause the shut-off of the valve. The main consequence of this type of failure is to prevent the next engine start up.

As a result of the above considerations, the med 98.2 immobilizer can realize its anti-theft functionality only in conjunction with a control device: the ICU.

The ICU, when requested, sends a coded message to med 98.2 according to a settled communication protocol. The med 98.2 will allow the start of the engine based upon this message.

In addition to the basic anti-theft functionality, the 98.2 immobilizer provides a number of diagnostic services when it is connected to an external test instrument (SCAN-100). Those connections are depicted in the following integration diagram (Fig. 1), where the dashed line indicates a temporary link for diagnostic purposes, and the shaded area the med 98.2 system's physical boundaries:

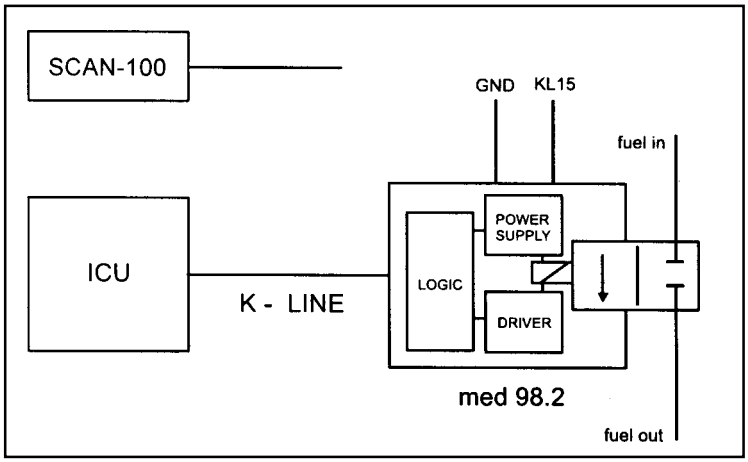

Fig. 1 - System Integration

Explanation of symbols:

med 98.2	Immobilizer
ICU	Immobilizer Control Unit
TESTER	Device that can be connected for diagnostic purposes
K-LINE	Serial line for communication with ICU
KL15	Ignition key (Power supply for med 98.2)
GND	Ground

Downloaded from www.Manualslib.com manuals search engine

DIAGNOSIS

GASOLINE ENGINE

Cause and Remedy for Defective When Diagnosed by Scanner

Defects	Possible cause	Remedy
No communication with transponder	1. Defective wiring harness - Power supply/Open/short of ground - Open/short of signal terminal or mis-conneting(between ECU terminal No. 13 and 14)	1. Connect/replace the wire correctly.
	2. Damaged transponder	2.1 Replace the transponder 2.2 Immobilizer programming
	3. Defective antenna	3. Replace the antenna
	4. Defective ECU	4.1 Replace the ECU 4.2 Replace all transponder of the keys 4.3 Immobilizer programming
No immobilizer programming (Components and wiring harnesses are normal but codes in ECU and transponders are not registered normally)	1. Replace the transponders and ECU with new ; Immobilizer programming is not performed	1. Perform immobilizer programming
	2. Replace transponders only(new) ; Immobilizer programming is not performed	2. Perform immobilizer programming
	3. Replace ECU only(new)	3.1 Replace the transponders with new 3.2 Perform immobilizer programming
	4. Replace the transponder only ; Programmed for other ECU	4.1 Replace the transponders with new 4.2 Perform immobilizer programming
	5. Re-programming is not performed after clearing transponder code stored in ECU that normally used system	5. Immobilizer programming

Notice

1. Application of ex-programmed transponder into other ECUs.
   ; In this case, it can not be removed for the settled “lock bit” in transponder even though you perform immobilizer problem normally. Moreover it is impossible to start engine, so replace the transponder with new and perform immobilizer programming.

Downloaded from www.Manualslib.com manuals search engine

Check and Remedy when Engine Does not Start

Starter operates normally?

Yes

- Check fuses (No. 8 and 27)
- Check ECU and antenna power

ECU terminal
- No. 12 (Power)
- No. 11 (Ignition)
- No.5/10 (Ground)

- Check signal wires between ECU and antenna
  - Immobilizer No.3 wire (0.5BY) = ECU No. 14 pin (0.75BW)
    : Writing immobilizer code number
  - Immobilizer No.4 wire (0.5Y) = ECU No.13 pin (0.75Y)
    : Reading immobilizer cod number

- ECU No.2 pin : check normal signal of the starter [1)]
  - Engine cranking voltage : 8-15V

- Check engine speed sensor wires and replace

- Replace immobilizer antenna

- Replace transponder and ECU

If transponder and ECU are replaced, perform programming.

No

- Check battery voltage
- Check battery wiring

- Check starter wires
- Check TCU wires (only for 5-speed automatic transmission)
- Check starter and TCU

Notice[1)]

MSE ECU equipped vehicle is designed to make fuel injection when the engine speed for initial cranking is over 450rpm if there are no start switch inputs in ECU No. 2 pin.

Downloaded from www.Manualslib.com manuals search engine

DIESEL ENGINE

Cause and Remedy for Defective When Diagnosed by Scanner

Defects	Possible cause	Remedy
No communication with transponder	1. Defective wiring harness - Power supply/Open/short of ground - Open/short of signal terminal or mis-conneting(between ICU terminal No. 13 and 14)	1. Connect/replace the wire correctly.
	2. Damaged transponder	2.1 Replace the transponder 2.2 Immobilizer programming
	3. Defective antenna	3. Replace the antenna
	4. Defective ICU	4.1 Replace the ICU 4.2 Replace all transponder of the keys 4.3 Immobilizer programming
No immobilizer programming (Components and wiring harnesses are normal but codes in ICU and transponders are not registered normally)	1. Replace the transponders and ICU with new ; Immobilizer programming is not performed	1. Perform immobilizer programming
	2. Replace transponders only(new) ; Immobilizer programming is not performed	2. Perform immobilizer programming
	3. Replace ICU only(new)	3.1 Replace the transponders with new 3.2 Perform immobilizer programming
	4. Replace the transponder only ; Programmed for other ICU	4.1 Replace the transponders with new 4.2 Perform immobilizer programming
	5. Re-programming is not performed after clearing transponder code stored in ICU that normally used system	5. Immobilizer programming
No communication with valve	1. Defective wiring harness - Power supply/Open/short of ground - Open/short of signal terminal or mis-conneting(between ICU terminal No. 13 and 14)	1. Connect/replace the wire correctly
	2. Defective ICU	2. Replace the transponder
	3. Defective valve	3.1 Replace the valve 3.2 Turn Ign sw on 3.3 Turn Ign sw OFF & ON

Notice

1. Application of ex-programmed transponder into other ICUs.
   ; In this case, it can not be removed for the settled “lock bit” in transponder even though you perform immobilizer problem normally. Moreover it is impossible to start engine, so replace the transponder with new and perform immobilizer programming.

Downloaded from www.Manualslib.com manuals search engine

Check and Remedy when Engine Does not Start

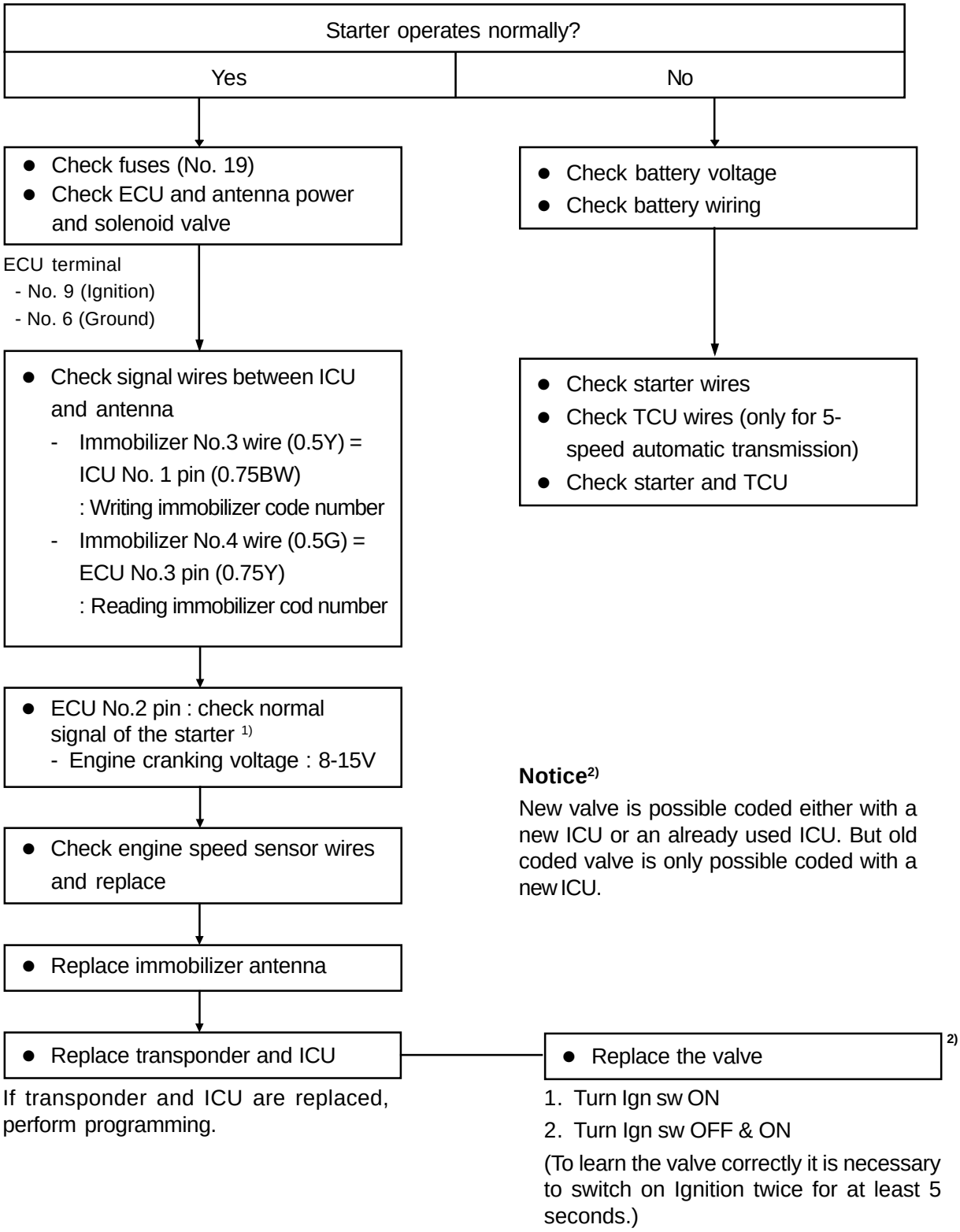

Notice[2)]

New valve is possible coded either with a new ICU or an already used ICU. But old coded valve is only possible coded with a new ICU.

Downloaded from www.Manualslib.com manuals search engine

SCHEMATIC AND ROUTING DIAGRAMS

DIESEL ENGINE IMMOBILIZER

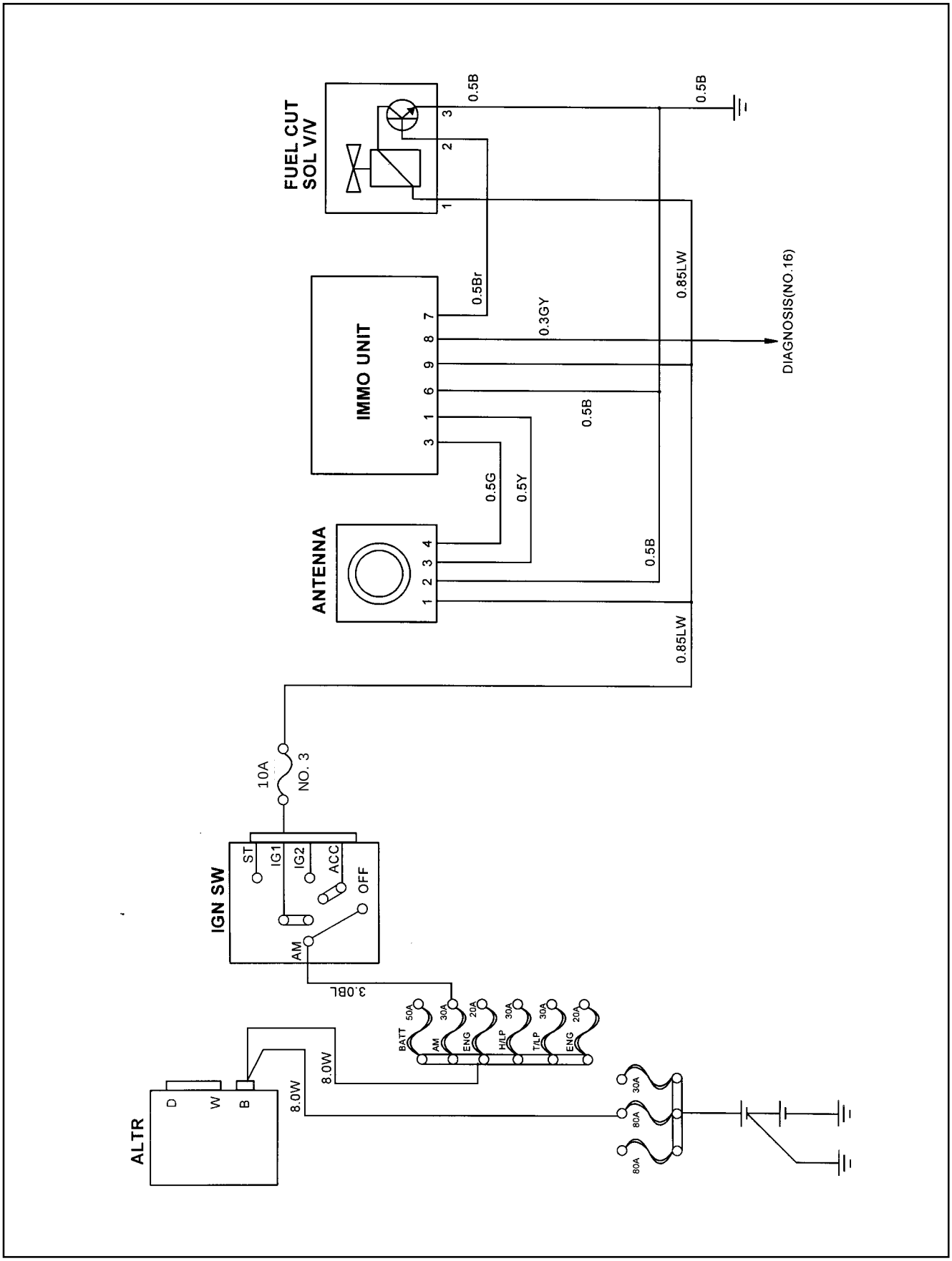

Downloaded from www.Manualslib.com manuals search engine

GASOLINE ENGINE IMMOBILIZER

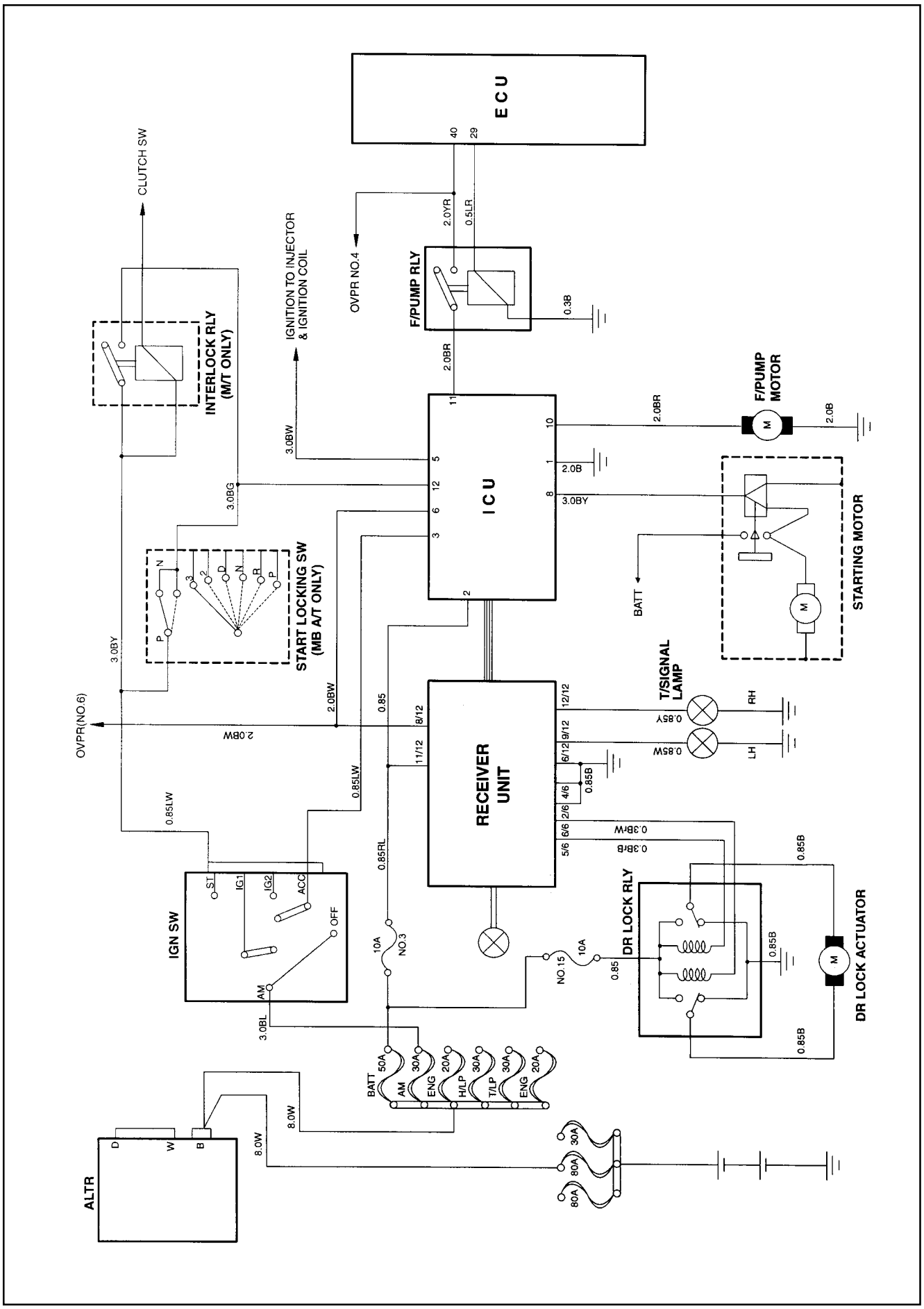

Downloaded from www.Manualslib.com manuals search engine

MAINTENANCE AND REPAIR

ON-VEHICLE SERVICE

Notice

For circuit diagram of gasoline vehicle, refer to the ECU diagram.

IMMOBILIZER ANTENNA

Immobilizer antenna is installed in key set outer surface (it is installed in the location of key hall illuminat-
ion).(see the figure)

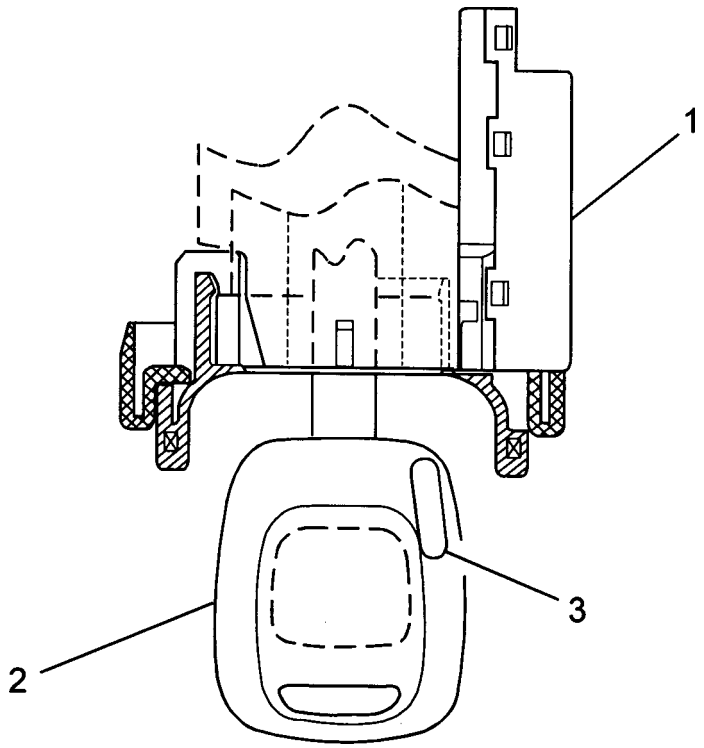

1 Immobilizer Antenna
2 Key
3 Transponder

Downloaded from www.Manualslib.com manuals search engine

Replacement Procedure

1. Open the cover on key handle.
2. Remove the small screw in symmetrical position of key illumination.
3. Remove the cover.

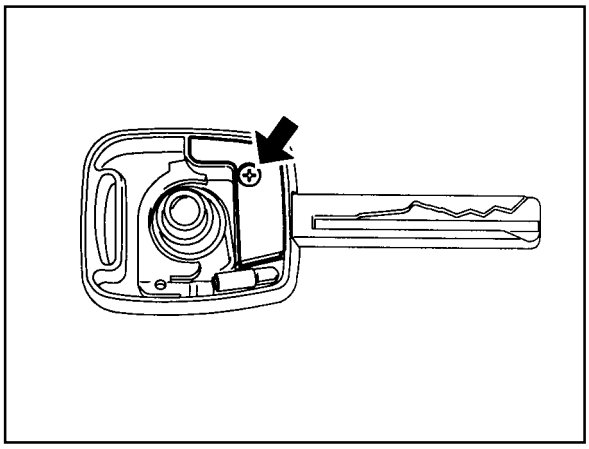

4. Remove the transponder. Carefully remove the old shock absorbing sealant with a razor blade if applied.
5. Replace the transponder with new one, and apply the small amount of shock absorbing sealant.
6. Installation should follow the removal procedure in the reverse order.

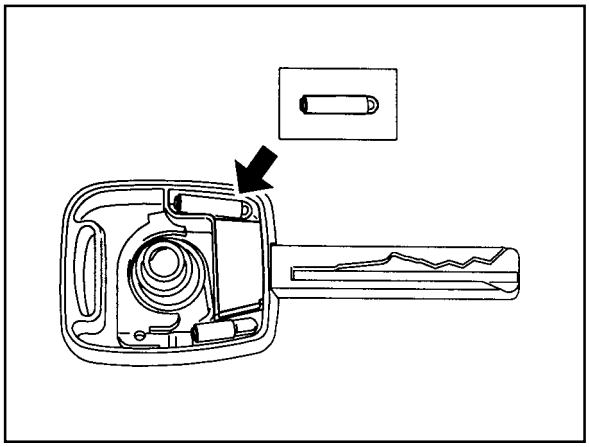

1 Transponder

Downloaded from www.Manualslib.com manuals search engine