General InformationBody Repairs, General Body Repairs

Edition 10.2007

Protected by copyright. Copying for private or commercial purposes, in part or in whole, is not permitted unless authorised by AUDI AG. AUDI AG does not guarantee or accept any liability with respect to the correctness of information in this document. Copyright by AUDI AG.

Repair Group

Protected by copyright. Copying for private or commercial purposes, in part or in whole, is not permitted unless authorised by AUDI AG. AUDI AG does not guarantee or accept any liability with respect to the correctness of information in this document. Copyright by AUDI AG.

Technical information should always be available to the foremen and mechanics, because their careful and constant adherence to the instructions is essential to ensure vehicle road-worthiness and safety. In addition, the normal basic safety precautions for working on motor vehicles must, as a matter of course, be observed.

All rights reserved.
No reproduction without prior agreement from publisher.

Copyright © 2015 Audi AG, Ingolstadt

001KAH00020

Contents

1	**General notes**	**1**
1.1	Diagnosis of accident vehicles	1
1.2	General notes on body repairs	1
1.3	Condition in which body and/or individual parts must be delivered to paintshop	1
1.4	Straightening	1
1.5	Separating cuts	2
1.6	Body sub-parts and part sections	2
1.7	Original joint	2
1.8	Galvanised body parts	2
1.9	Removing remaining material	2
1.10	New parts	2
1.11	Replacement parts	3
2	**Safety notes**	**4**
2.1	Removing components	4
2.2	Battery, welding operations	4
2.3	Electronic control units	4
2.4	Procedure for electronic control units following accident repairs	4
2.5	Paintwork, glass, upholstery, trim panels	4
2.6	Fuel tank and fuel pipes	4
2.7	Air conditioner	5
2.8	Airbag system	5
2.9	Checking seat belts	6
2.10	Working on vehicles with belt tensioners	6
2.11	Cutting, straightening and/or dent removal work on vehicles with airbag	7
2.12	Removing seats with side airbag	7
3	**Anti-corrosion measures**	**8**
3.1	Anti-corrosion protection	8
3.2	Long-term body protection	8
3.3	Notes on warranty	8
3.4	Electrolytic galvanisation	8
3.5	Hot-dip galvanisation	9
4	**Notes on disposal**	**10**
4.1	Active environmental protection at the factory	10
4.2	Recycling means:	10
4.3	The basic rules for environmental protection are:	10
4.4	Recycling	10
4.5	Plastics	11
4.6	Disposal	12
4.7	Airbag	13
4.8	Protection against contact corrosion	14
5	**Expanded foam inserts**	**15**
6	**Explanation of symbols**	**16**
6.1	Symbols for welding operations	16
6.2	Symbols for work procedures	16
6.3	Cavity sealing	17
7	**Body - Bonded joints**	**18**
8	**Sheet steel repairs**	**21**
8.1	Extra-high-strength body panels	21
8.2	Galvanised body parts	22
8.3	Joining techniques	23
8.4	Joining techniques	24
9	**Plastic repair techniques**	**26**

Protected by copyright. Copying for private or commercial purposes, in part or in whole, is not permitted unless authorised by AUDI AG. AUDI AG does not guarantee or accept any liability with respect to the correctness of information in this document. Copyright by AUDI AG.

9.1 Plastic repair set . . . 26
9.2 Repairing dents . . . 27
9.3 Repairing scratches . . . 29
9.4 Repairing cracks and tears (up to a length of 100 mm) . . . 30
9.5 Repairing holes (up to 30 mm diameter) . . . 31
9.6 Plastic repairs (glass fibre materials) . . . 32

10 Glass repairs . . . 35
10.1 Repairing windscreens . . . 35
10.2 Requirements . . . 35
10.3 Special tools . . . 36
10.4 Description of repair work . . . 37

11 Aluminium . . . 40
11.1 Aluminium repairs . . . 40
11.2 Surface treatment . . . 40
11.3 Removing dents . . . 40

12 The Audi Space Frame concept . . . 42
13 Contact corrosion . . . 43
14 Threads . . . 44
15 Studs . . . 45
16 Paintwork . . . 46
17 Replacement parts . . . 47
18 Safety notes . . . 48
19 Surface treatment . . . 49
20 Cutting . . . 50
21 Removing dents . . . 51
22 Re-forming . . . 52
23 Temperature monitoring during heating . . . 53
24 Flanging . . . 54
25 Welding repairs . . . 55
26 Extruded section . . . 56
27 Sheet metal panel . . . 57
28 Plug welding . . . 58
29 Welding aluminium . . . 59
30 Checking weld seams and aluminium node castings . . . 60
31 Laser weld seam . . . 61
32 Overview of rivets and tools . . . 62
33 Riveting repairs . . . 63
34 Clinching . . . 64
35 Solid rivet . . . 65
36 Pop rivet . . . 66
37 Fitting solid rivets . . . 67
38 Fitting punch rivets . . . 68
39 Fitting pop rivets . . . 69
40 Incorrect riveting . . . 70
41 Joddling . . . 72
42 Placing additional thickness of same material behind joint . . . 73
43 Filling separating cuts . . . 74
44 Bonded joint . . . 75
45 Inaccessible rivets . . . 77

Protected by copyright. Copying for private or commercial purposes, in part or in whole, is not permitted unless authorised by AUDI AG. AUDI AG does not guarantee or accept any liability with respect to the correctness of information in this document. Copyright by AUDI AG.

46 Explanation of symbols 78
47 Explanation of symbols for riveting operations 79
48 Explanation of symbols 80
49 Cavity sealing 81

Protected by copyright. Copying for private or commercial purposes, in part or in whole, is not permitted unless authorised by AUDI AG. AUDI AG does not guarantee or accept any liability with respect to the correctness of information in this document. Copyright by AUDI AG.

Protected by copyright. Copying for private or commercial purposes, in part or in whole, is not permitted unless authorised by AUDI AG. AUDI AG does not guarantee or accept any liability with respect to the correctness of information in this document. Copyright by AUDI AG.

1 General notes

1.1 Diagnosis of accident vehicles

When repairing accident vehicles, damage to the running gear or engine/gearbox mountings, etc. is not always identified. This sometimes leads to serious subsequent damage. If the accident damage indicates a high impact load on the vehicle, special attention must be paid to the following components, completely independent of the wheel alignment check which must always be performed:

- Check to ensure that the steering assemblies and steering linkage operate correctly over the complete lock-to-lock range. Carry out a visual check for bent or cracked parts.
- Check for distortion or cracking of running gear and all running gear components such as links, suspension strut, wheel bearing housing, anti-roll bar, subframe and axle beam, as well as associated fastening elements.
- Examine rims and tyres for damage, eccentricity and imbalance. Examine tyres for cuts/slits etc. in tread and sidewalls and check inflation pressure.
- Examine the engine/gearbox/axle/exhaust system mountings for damage.
- Finally, a thorough road test after completing repairs will give the assurance that the vehicle is completely roadworthy and ready for handing back to the customer.

1.2 General notes on body repairs

The aim of the repair is always to restore the original joint.

The Workshop Manuals describe the standard repairs. They do not include any descriptions of more complex repair jobs, as these involve detaching the damaged parts at the original joint. If possible the joining techniques as listed in section 8 can be applied.

All repair jobs involving special separating cuts and joining techniques which do not restore the original joint (as produced by factory) have been checked and approved by the Technical Development division in calculations, strength and crash tests.

Protected by copyright. Copying for private or commercial purposes, in part or in whole, is not permitted unless authorised by AUDI AG. AUDI AG does not guarantee or accept any liability with respect to the correctness of information in this document. Copyright by AUDI AG.

1.3 Condition in which body and/or individual parts must be delivered to paintshop

Before a repaired vehicle or part is handed over to the paintshop, the surfaces which have been repaired or beaten-out and possibly filled must be prepared for painting by rubbing them down with abrasive paper (grade P 80 to P 100).

This preparatory work is part of the job of the sheet metal worker and is included in the time he is allowed for the repair.

1.4 Straightening

In series production, body and floor sections are primarily manufactured from cold-formed deep-drawn sheet metal panels. For this reason, the straightening of areas damaged in an accident should be carried out in the same manner.

If the extent of the damage makes it impossible to reform the part as stated above, the damaged part should not be cut out until the adjacent surfaces have been straightened.

1.5 Separating cuts

Separating cuts affecting the fatigue strength of the body and therefore also vehicle reliability and roadworthiness must be made as instructed in the relevant Body Repairs workshop manual.

1.6 Body sub-parts and part sections

A “sub-part” is a section of a complete part (e.g. end section front and rear), which is already cut to size when it is supplied by the Parts Department.

– “Part sections” on the other hand must be cut to size from replacement parts by the workshop itself. The methods to apply in each case are described and illustrated in the workshop manual on Body Repairs.

– As the use of “sub-parts”/“part sections” and special tools and equipment has an influence on the time required, special tools and equipment are listed separately in the description of repair operations.

1.7 Original joint

The term “Original joint” refers to the joint which was made at the time the vehicle was manufactured.

These joints must be restored when carrying out body repairs.

When doing this, ensure that no fewer than the standard number of spot welds are made when carrying out repairs.

Repair methods and procedures which deviate from the original joint are described in the appropriate Body Repairs workshop manual.

1.8 Galvanised body parts

The use of fully galvanised panels ensures a high level of corrosion protection for the body shell. To be able to maintain the warranty guarantee against perforation rusting when performing repairs, it is essential to comply with the procedures from ⇒ page 22 onwards.

WARNING

As the welding of galvanised sheet steel gives off toxic zinc oxide in the welding fumes, the workshop must have efficient ventilation and fume extraction, e.g. in the form of a welding fume extractor -V.A.G 1586 A- .

Protected by copyright. Copying for private or commercial purposes, in part or in whole, is not permitted unless authorised by AUDI AG. AUDI AG does not guarantee or accept any liability with respect to the correctness of information in this document. Copyright by AUDI AG.

1.9 Removing remaining material

If the damaged body part has been roughly cut out by making the separating cuts shown in the relevant workshop manual, e.g. using pneumatic hammer -V.A.G 1577- or pneumatic sabre saw -V.A.G 1523 A- , most spot welds can be drilled out using the spot weld breaker -V.A.G 1731- .

We also recommend using a parallel grinder and an angle grinder to remove the weld joints which cannot be removed with the spot weld breaker.

1.10 New parts

To provide corrosion protection, new parts which are no longer accessible from inside once the repair has been completed (e.g. side members) should be pre-painted from inside in the vehicle's

body colour before they are welded in. It is advisable to mask welding flanges when doing so.

1.11 Replacement parts

In order to keep the number of different parts to a minimum, many replacement parts are only supplied as a “basic version”.

Examples:

- Roof for Audi A6 2005 ‣ without holes for roof rail

We recommend that the workshop makes its own “templates” from damaged parts for such cases.

Example: Roof for Audi A6 2005 ‣ holes for roof rail:

- Use pneumatic sabre saw -V.A.G 1523 A- to cut side section out of "old" roof, paying attention to significant contours, e.g. part of recess (rain channel). Deburr cut edges and protect with fabric-backed adhesive tape.

Place template in position before painting and allow for material thickness of template when marking drill holes.

Check new replacement parts e.g. doors, bonnet and boot lid/ tailgate or wing panel for transportation damage before passing them on to the paintshop. This avoids a second painting operation which would become necessary if transportation or other damage was not noticed until a later stage.

Protected by copyright. Copying for private or commercial purposes, in part or in whole, is not permitted unless authorised by AUDI AG. AUDI AG does not guarantee or accept any liability with respect to the correctness of information in this document. Copyright by AUDI AG.

2 Safety notes

2.1 Removing components

Before the centre of gravity of the vehicle is changed substantially by removing components, the vehicle must be properly secured to the lifting platform.

2.2 Battery, welding operations

Before starting welding work, always detach both battery clamps and cover battery terminals.

Always remove the vehicle battery before performing any work which may generate sparks in the vicinity of the battery.

> ⚠ WARNING
>
> *Switch on ignition before connecting battery.*
>
> *On vehicles with an electronic ignition lock the ignition must be switched on before removing the battery ⇒ Workshop manual: Electrical system, repair group 27 .*
>
> *There must be nobody in the vehicle when connecting the battery!*

2.3 Electronic control units

Connect the earth connection of the electric welding appliance directly to the part which you are welding. When doing this, make sure that there are no electrically insulating parts between the earth connection and the welding point.

Earth connection and welding electrode must NOT make contact with the electronic control units or the electrical wiring.

2.4 Procedure for electronic control units following accident repairs

After an accident, the electronic control units only have to be renewed in the following case:

- The functional test shows: “Control unit defective”.

If electronic components (e.g. ABS control unit) were removed in order to carry out repair work and have now been re-installed, they must be checked according to the documentation available. Use the tester to interrogate the fault memory and eliminate any faults found.

Protected by copyright. Copying for private or commercial purposes, in part or in whole, is not permitted unless authorised by AUDI AG. AUDI AG does not guarantee or accept any liability with respect to the correctness of information in this document. Copyright by AUDI AG.

2.5 Paintwork, glass, upholstery, trim panels

No other vehicles may be parked unprotected in areas used for body repairs. (Risk of fire due to flying sparks and risk of damage to battery, paintwork or glass of other vehicles).

2.6 Fuel tank and fuel pipes

Take extreme care when performing sanding and welding work near the tank or other components carrying fuel. If in doubt, always remove these components.

2.7 Air conditioner

No welding, brazing or soldering may be performed on parts of the charged air conditioner system. This also applies to any other part of the vehicle if there is a risk that parts of the air conditioner system could heat up. When performing paintwork repairs, the vehicle must not be heated to more than 80° C in the drying booth or preliminary heating zone, because heat causes a pressure increase which can burst the air conditioner system.

Note

The refrigerant must also be extracted from the circuit when arc-welding anywhere near the refrigerant hoses. Arc-welding emits invisible ultraviolet rays which can penetrate the refrigerant hoses and decompose the refrigerant.

Remedy:

Extract refrigerant from circuit ⇒ Workshop Manual: Air conditioner with refrigerant R134a .Only extract refrigerant if this is necessary for safety reasons.

If vehicle repairs necessitate extraction of the refrigerant, take care to avoid contact with liquid refrigerant or refrigerant vapours.

Reproduction and copyright. Copying for private or commercial purposes, in part or in whole, is not permitted unless authorised by AUDI AG. AUDI AG does not guarantee or accept any liability with respect to the correctness of information in this document. Copyright by AUDI AG.

Wear rubber gloves to protect the hands and goggles to protect the eyes! If the refrigerant comes into contact with unprotected parts of the body it will cause frostbite.

WARNING

It is recommended that you always have an eye-bath ready for use in case it is needed. If liquid refrigerant comes into contact with the eyes, rinse the eyes thoroughly with water for about 15 minutes.

Then apply eye drops and consult a doctor immediately even if the eyes are not causing any pain. The doctor must be informed that the frostbite was caused by refrigerant R134a.

If the refrigerant comes into contact with other parts of the body despite compliance with safety measures, the part of the body concerned must be rinsed immediately with cold water for at least 15 minutes.⇒ Workshop Manual: Air conditioner with refrigerant R134a

Although the refrigerant does not pose a fire risk, smoking is prohibited in rooms where there are refrigerant vapours. The high temperature of a burning cigarette causes chemical decomposition of the refrigerant gas. Inhaling the toxic products of decomposition can cause a dry cough and nausea.

2.8 Airbag system

Notes on servicing ⇒ Body Repairs; Rep. Gr. 69

When working on the airbag system and when performing straightening work during body repairs the battery earth strap must be disconnected.

WARNING

Switch on ignition before connecting battery.

On vehicles with an electronic ignition lock the ignition must be switched on before removing the battery ⇒ Workshop manual: Electrical system, repair group 27 .

There must be nobody in the vehicle when connecting the battery!

Airbag components must not be subjected to temperatures above 100° C even for a very brief period.

For further information refer to ⇒ Workshop Manual "General body repairs, interior"

Airbag components must not come into contact with grease, cleaning agents, oil or similar.

Airbag components showing signs of mechanical damage must be renewed ⇒ Section with notes on disposal ⇒ page 13 .

Wash hands after touching airbag units which have been triggered.

2.9 Checking seat belts

WARNING

After an accident, the seat belt system must always be checked systematically. If any damage is determined the customer must be informed that the belt has to be renewed.

For further information refer to ⇒ Workshop Manual "General body repairs, interior"

Protected by copyright. Copying for private or commercial purposes, in part or in whole, is not permitted unless authorised by AUDI AG. AUDI AG does not guarantee or accept any liability with respect to the correctness of information in this document. Copyright by AUDI AG.

2.10 Working on vehicles with belt tensioners

WARNING

Belt tensioners which are triggered mechanically and do not have a belt-fastened sensor (triggering lock) must be removed before carrying out any cutting, straightening and/or dent removal work. In the case of belt tensioners which are triggered electrically the battery earth strap must be disconnected.

For further information refer to ⇒ Workshop Manual "General body repairs, interior"

Note

When the belt webbing is fully retracted, the belt-fastened sensor (triggering lock) will prevent the belt tensioner (mechanical triggering) from being activated in an accident.

WARNING

In the case of belt tensioners with belt-fastened sensor, the belt webbing must NOT be pulled out during cutting, straightening and/or dent removal work. Before carrying out any cutting, straightening and/or dent removal work involving severe vibration the belt tensioners with belt-fastened sensor must also be removed.

For further information refer to ⇒ Workshop Manual "General body repairs, interior"

2.11 Cutting, straightening and/or dent removal work on vehicles with airbag

When working on the airbag system and when performing straightening work during body repairs the battery earth strap must be disconnected.

WARNING

Switch on ignition before connecting battery.

There must be nobody in the vehicle when connecting the battery!

Notes on servicing ⇒ Body Repairs; Rep. Gr. 69

2.12 Removing seats with side airbag

WARNING

Always observe the notes on safety when removing seats.

The notes on safety are included in the appropriate Workshop Manual for ⇒ General body repairs, interior, repair group 69.

Protected by copyright. Copying for private or commercial purposes, in part or in whole, is not permitted unless authorised by AUDI AG. AUDI AG does not guarantee or accept any liability with respect to the correctness of information in this document. Copyright by AUDI AG.

3 Anti-corrosion measures

3.1 Anti-corrosion protection

Corrosion protection as provided when vehicle leaves the factory must be restored after repairs, using materials which have been approved by the vehicle manufacturer.

3.2 Long-term body protection

– The inside of new parts must be painted with a topcoat before the parts are welded in.

– Bright metal areas must be primed immediately following repairs (corrosion protection primer ALN 002 003 10 or ALK 007 003 10).

– Holes must always be deburred.

– Always apply welding primer (D 007 500 04) to both sides of welding flanges.

– Prime inside and outside of seam areas prior to sealing.

– Sealing compound must only be applied to primed panel sections.

– Make sure you seal overlaps and edges of metal panels, butt joints, welding seams etc. completely using sealing compound.

– Restore paintwork.

– Restore underseal using long-life underseal material.

– All cavities in the repaired area must be sealed after applying topcoat.

– Separating cuts (e.g. in side panel) must be fully sealed.

– After the cavity protection material has dried clear the water drains.

Protected by copyright. Copying for private or commercial purposes, in part or in whole, is not permitted unless authorised by AUDI AG. AUDI AG does not guarantee or accept any liability with respect to the correctness of information in this document. Copyright by AUDI AG.

3.3 Notes on warranty

- 3 years against paint defects, applies to Audi passenger vehicle bodies built from 25.03.83 onwards
- 6 years against rust perforation, applies to Audi passenger vehicle bodies built from 07.03.79 onwards
- 12 years against perforation rusting for all Audi vehicles built from model year 1998 onwards

3.4 Electrolytic galvanisation

During electrolytic galvanisation the sheet steel runs past zinc anode plates (positive electrodes) as a cathode.

The gap is filled with electrolyte - an acidic, electrically conductive fluid containing zinc ions.

This is therefore an electrochemical process by which zinc is dissolved and applied to the sheet steel with the help of an electric current.

The result is a very even and fine, weakly structured zinc layer which can be processed further, for instance cut, pressed, welded, primed and painted.

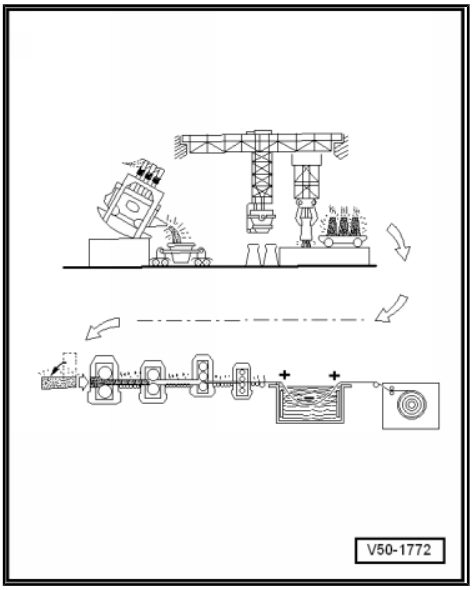

Protected by copyright. Copying for private or commercial purposes, in part or in whole, is not permitted unless authorised by AUDI AG. AUDI AG does not guarantee or accept any liability with respect to the correctness of information in this document. Copyright by AUDI AG.

3.5 Hot-dip galvanisation

During hot-dip galvanisation the sheet steel runs through an approximately 450° C hot molten zinc bath. The sheet steel surface is covered by an extremely thin zinc-iron alloy which acts as an “adhesion promoter” for the pure zinc layer, which ultimately has a thickness of about 10 µ on each side.

Body parts should not exhibit the spangles typically generated by hot-dip galvanisation and various methods such as re-rolling are therefore employed to minimise this effect.

Concealed parts of floor groups, door pillars and stiffening panels are hot-dip galvanised on both sides.

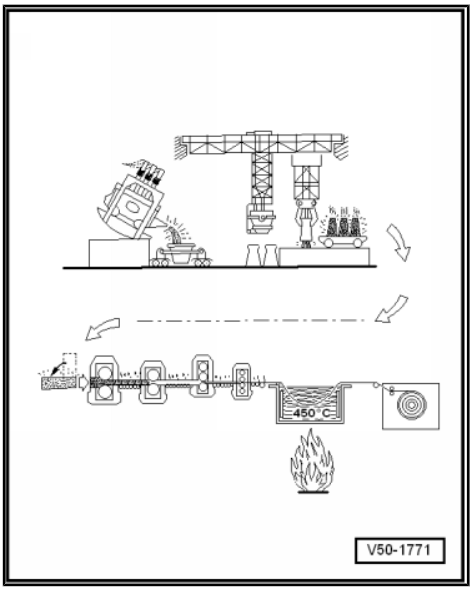

4 Notes on disposal

4.1 Active environmental protection at the factory

The disposal must, of course, already be taken into consideration during production. At Audi the following measures are taken:

- Chlorofluorocarbons (CFCs) are no longer used, or are only used to a limited extent, for instance in soft foam propellants (e.g. for seat upholstery), in separating agents in the manufacture of plastic parts and cleaning agents in the production facilities.
- Use of solvent-free adhesives and production aids, thereby considerably lowering emission levels (pollutant evaporations), as well as reducing odour nuisance and fogging on glass surfaces
- Use of recyclable materials for plastic parts such as:
- Bumper covers
- Dash panel
- Engine cover panel and the like
- Items already being manufactured from recycled plastic:
- Wheel housing liners
- Luggage compartment floor covers
- Soundproofing mats etc.
- Use of materials suitable for recycling and reduction of the number of different types
- Designs suitable for recycling (simple removal)

Protected by copyright. Copying for private or commercial purposes, in part or in whole, is not permitted unless authorised by AUDI AG. AUDI AG does not guarantee or accept any liability with respect to the correctness of information in this document. Copyright by AUDI AG.

4.2 Recycling means:

– Avoiding pollutants
– Reduction of refuse
– Saving raw materials

4.3 The basic rules for environmental protection are:

Avoid rather than reduce

Reduce rather than recycle

Recycle rather than dispose

4.4 Recycling

As an important contribution to reducing the impact on the environment, certain plastic parts are made from reusable (recyclable) or already reprocessed -recycled- raw materials.

The recycling concept employed must be kept as simple as possible, right down to the logistics for aftersales and the recycling companies.

Voluntary measures taken to facilitate recycling

– The removal of the parts has already been simplified in the way they are designed.

– The range of plastic parts has been reduced.

– Plastic parts are already marked by the manufacturer in accordance with VDA-260.

With the help of this material designation (standard coding) the parts can be collected separately by types of material and can then be passed on to be processed further by the manufacturer or a recycling company.

The designation coding comprises:

- Manufacturer abbreviation
- Part number
- Date of manufacture
- Material code

Example: > PP+ EPDM -T20-

This is a recyclable

- polypropylene -PP
- elastomer-modified -EPDM
- talc-reinforced -T20-

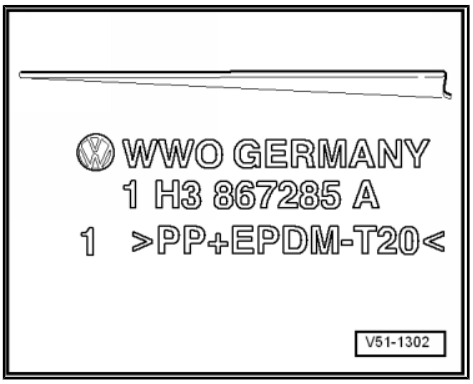

4.5 Plastics

Table 1

Examples of base polymers commonly used in the automotive industry (thermoplastics and thermosetting plastics), abbreviations according to DIN 7728 / ISO 1043

Abbreviation	Designation
ABS	Acrylonitrile-butadiene-styrene copolymer
EP	Epoxy resin
PA 6	Polyamide with 6 C-atoms in monomer unit
PA 11	Polyamide with 11 C-atoms in monomer unit
PA 12	Polyamide with 12 C-atoms in monomer unit
PA 66	Polyamide with 2 monomer units with 6 C-atoms each
PBT	Polybutylene terephthalate (linear polyester)
PES	Polyether sulphone
PET	Polyethylene terephthalate
PC	Polycarbonate
PE	Polyethylene
PF	Phenol-formaldehyde resin
PMMA	Polymethyl methacrylate
POM	Polyoxymethylene, polyacetal

Protected by copyright. Copying for private or commercial purposes, in part or in whole, is not permitted unless authorised by AUDI AG. AUDI AG does not guarantee or accept any liability with respect to the correctness of information in this document. Copyright by AUDI AG.

Table 1 (continued)

Abbreviation	Designation
PP	Polypropylene
PPE	Polyphenylene ether
PPS	Polyphenylene sulphide
PTFE	Polytetrafluoroethylene
PUR	Polyurethane
PVC	Polyvinyl chloride
SAN	Styrene-acrylonitrile copolymer

Table 2

Examples of abbreviations according to DIN 7728 / ISO 1043 commonly used in the automotive industry for fillers and reinforcing materials

Abbreviation	Designation
GF	Glass fibre
GM	Glass mats
GB	Glass spheres
T	Talc
M	Mineral reinforcement
WD	Wood flour

Table 3

- Examples of elastomer base polymers commonly used in the automotive industry, abbreviations according to DIN-ISO 1629:

Reproduction or copy of this document or any part of the document is not permitted. Duplication of this document, in part or in whole, is not permitted without written authorization from AUDI AG. We do not guarantee or accept any liability with respect to the correctness of information in this document. Copyright by AUDI AG.

Abbreviation	Designation
ACM	Copolymers from ethylacrylate or other acrylates with a small percentage of a monomer to facilitate vulcanisation
AU	Polyesterurethane-caoutchouc (Indian rubber)
BR	Butadiene-caoutchouc (Indian rubber)
CSM	Chlorosulphonated polyethylene
CR	Chloroprene-caoutchouc (Indian rubber)
EPDM	Terpolymers of ethylene, propylene and a diene, with unsaturated diene component in the side chain
ECO	Copolymers of ethylene oxide (oxirane) and chloromethyl oxirane (epichlorhydrin)
FPM	Caoutchouc with fluorine, fluoroalkoxy-groups on the polymer chain
MVQ	Silicon caoutchouc with methyl and vinyl groups on the polymer chain
NBR	Acrylnitrile-butadiene-caoutchouc
NR	Isoprene-caoutchouc (natural caoutchouc)
SBR	Styrene-butadiene-caoutchouc

4.6 Disposal

To enable vehicle components to be fed into a recycling circuit following repairs or servicing, it is prerequisite that Audi dealers collect and sort materials according to types.

The components must be sorted by the following material groups:

- Sheet steel or ferrous material (“steel scrap”) → scrap dealer and shredder company
- Aluminium → engine reconditioning, Kassel; scrap dealer or specialised engine scrap dealer
- Tyres → in some cases for retreading
- Plastics → PP bumper presently via VW, Audi collection logistics; further plastic recycling is being prepared
- Batteries → existing recycling circuit via regional disposal companies
- Used oil → disposal system is in place
- Brake fluid → material recycling system is being prepared
- Coolant → material recycling system is being prepared
- Refrigerant → disposal system is in place
- Refrigerant oil for R 12 → as for engine oil, refrigerant oil for R 134a → material recycling system is being prepared
- Oil-filled dampers, e.g. bumper dampers → release oil and dispose of via existing disposal system
- Gas-filled dampers, e.g. gas-filled struts → release gas, collect oil escaping and dispose of via existing disposal system
- Separate different types of material to enable type-sorted recycling. For example remove tyres from rims and ensure separate disposal.

Protected by copyright. Copying for private or commercial purposes, in part or in whole, is not permitted unless authorised by AUDI AG. AUDI AG does not guarantee or accept any liability with respect to the correctness of information in this document. Copyright by AUDI AG.

4.7 Airbag

WARNING

Scrapping airbag units which have not been ignited poses a safety risk.

Disposal of pyrotechnic components

Non-ignited pyrotechnic components

Non-ignited pyrotechnic components (e.g. airbags, seat belts, pyrotechnic battery circuit breakers) must be disposed of in original packaging and in accordance with national regulations.

Please contact your importer or regional office if you require further information.

Pyrotechnic components

Pyrotechnic components ignited in an accident can be disposed of together with commercial refuse.

WARNING

This does not apply to belt tensioners which are Wankel-powered. These must be disposed of in the same way as non-ignited pyrotechnic components (e.g. airbags, seat belts, pyrotechnic battery circuit breakers). Reason: The workshop does not have the means to check whether the Wankel-powered belt tensioners have ignited fully (in all ignition stages).

4.8 Protection against contact corrosion

Aluminium/magnesium and steel joints

Note

- *The following corrosion protection measures must be observed when joining aluminium or magnesium and steel. You must use protective film on the bolted joints between aluminium and steel or magnesium and steel on the*
- *wing panel,*
- *bonnet,*
- *doors*
- *and tailgate/boot lid.*
- *When bolting aluminium or magnesium to steel you must ALWAYS use coated bolts. These bolts must NEVER be used more than once.*
- *Non-metallic fastening or sealing elements (door seals, tailgate/boot lid seal) between two different metals must not be electrically conductive.*
- *For special procedures please refer to the appropriate repair group in the relevant Workshop Manual.*

Protected by copyright. Copying for private or commercial purposes, in part or in whole, is not permitted unless authorised by AUDI AG. AUDI AG does not guarantee or accept any liability with respect to the correctness of information in this document. Copyright by AUDI AG.

5 Expanded foam inserts

Caution

The expanded foam inserts expand only after reaching 180° C. For this reason, an additional filler foam is used when performing repairs.

Filler foam required for repairs: D 506 000 A2.

Installing replacement expanded foam inserts:

The foam D 506 000 A2 must be applied before fitting the replacement part.

The foam hardens within 25 minutes.

Do not weld within 15 mm of the foam insert (on either sides).

After painting the vehicle the repaired area must be cavity-sealed.

Protected by copyright. Copying for private or commercial purposes, in part or in whole, is not permitted unless authorised by AUDI AG. AUDI AG does not guarantee or accept any liability with respect to the correctness of information in this document. Copyright by AUDI AG.

6 Explanation of symbols

6.1 Symbols for welding operations

- 1 - RP spot-weld seam (single row) RP = spot welding
- 2 - RP spot-weld seam (double row)
- 3 - RP spot-weld seam (double row offset)
- 4 - SG plug weld seam SG = shielded arc welding
- 1 - SG stepped seam (stitch seam)
- 2 - SG continuous seam
- 3 - SG continuous seam (staggered - with gaps)

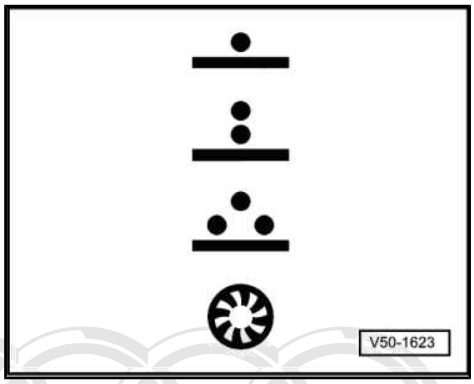

- 4 - Brazing

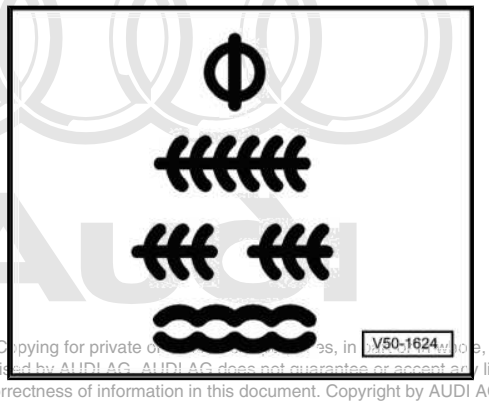

Protected by copyright. Copying for private or commercial purposes, in any form or by any means, is not permitted unless authorised by AUDI AG. AUDI AG does not guarantee or accept any liability with respect to the correctness of information in this document. Copyright by AUDI AG.

6.2 Symbols for work procedures

Grinding

– In order to strip material off a welding seam using a grinder.

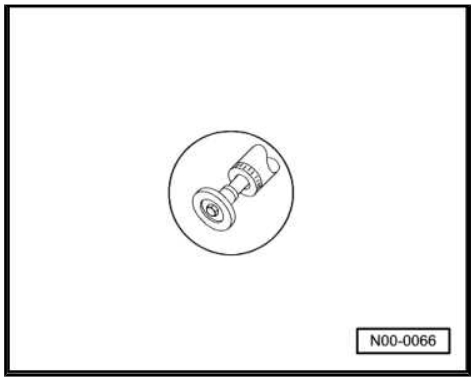

Note

The weld seams must only be ground in such a way that the thickness of the outer panels is not reduced at all or only to a very limited degree.

Joddling

– for overlap welding.

Punching holes

– for subsequent SG plug welding

Drilling

– for subsequent SG plug welding or drilling out spot welds (original joint).

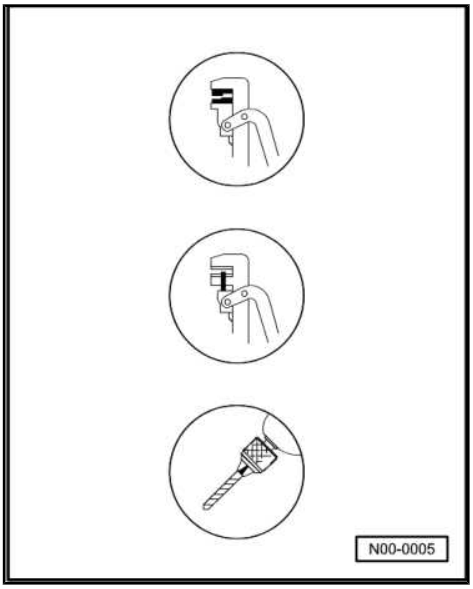

Grinding

♦ Remove paint from places which are difficult to access (e.g. inside of roof frame) using wire brush -VAS 5182- .

Protected by copyright. Copying for private or commercial purposes, in part or in whole, is not permitted unless authorised by AUDI AG. AUDI AG does not guarantee or accept any liability with respect to the correctness of information in this document. Copyright by AUDI AG

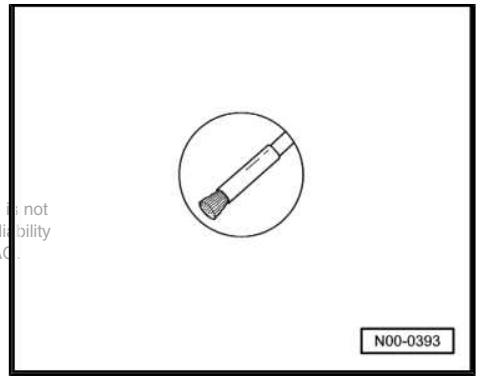

6.3 Cavity sealing

Bonding

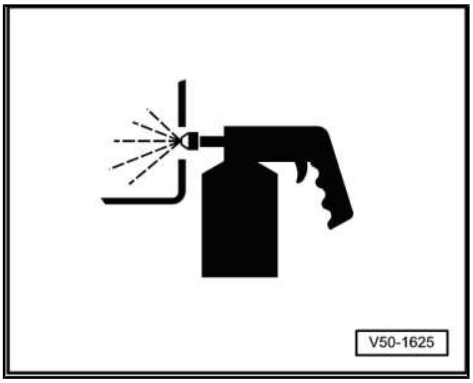

Sealing

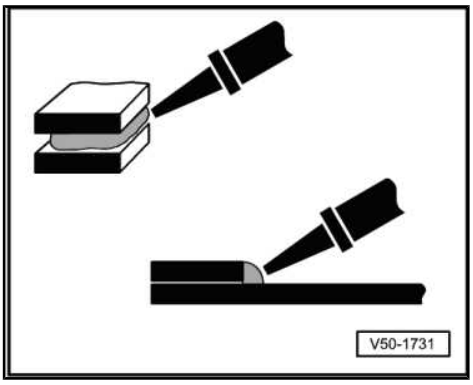

7 Body - Bonded joints

Bonded joints

The following procedure is used for repairs on bonded joints:

Cutting:

– Roughly cut out roof to gain access to bonded joint.

– Use oscillating cutter blade to cut through bonded joint.

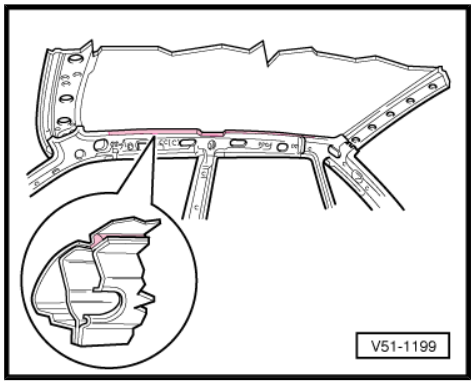

Types of bonded joints

Bonded joints and spot-welded bonded joints are being used increasingly at the factory, as they help to improve body rigidity and strength. The following distinction is made:

Adhesive-bonded joints

In the case of adhesive-bonded joints, the joint between the sheet metal parts is formed only by the adhesive.

The distance between the bonding surfaces should not be less than 2 mm or more than 4 mm. The bonding surfaces may have to be aligned.

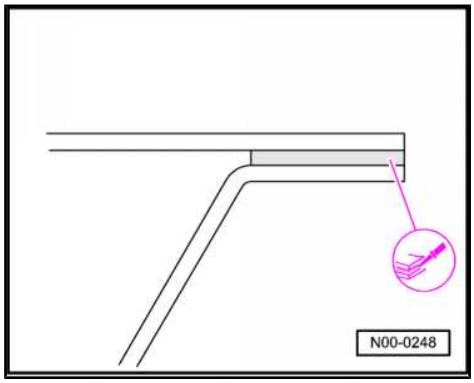

Repair measures

– The bonded joints are restored using the materials indicated in the Workshop Manual or Parts catalogue.

Spot-welded bonded joints

In spot-welded bonded joints an electrically conductive adhesive is used between the panels, which allows good root penetration for spot welding.

The distance between the spot-welding/bonding surfaces should not exceed 1 mm. The bonding surfaces may have to be aligned.

Protected by copyright. Copying for private or commercial purposes, in part or in whole, is not permitted unless authorised by AUDI AG. AUDI AG does not guarantee or accept any liability with respect to the correctness of information in this document. Copyright by AUDI AG.

The welding current must not be increased for spot-weld bonding operations. The pre-press period must be extended to about 30 – 50 cycles because of the displacement of the adhesive. Always use a fume extractor.

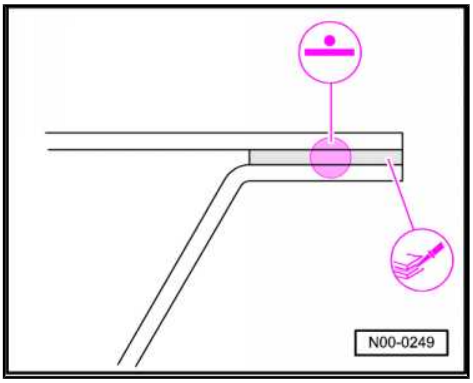

Repair methods when replacing parts

Adhesive DA 001 730 A21 in conjunction with pneumatic glue gun -V.A.G 2005- B is used as a substitute for the spot-weld adhesive.

Instructions for use

For simultaneous bonding and welding the procedures differ as follows depending on type of welding (spot welding, shielded-arc welding):

This document is intended for training purposes only and may not be reproduced or passed on to third parties unless authorised by AUDI AG. AUDI AG does not guarantee or accept any liability with respect to the correctness of information in this document. Copyright by AUDI AG.

RP spot welding and bonding

When spot welding and bonding in repair cases, all spot-welded and bonded joints made by the factory are replaced.

In the event of welding problems, e.g. if only the outer panel is replaced on a three-layer panel joint, the spot welds are positioned on the “old” spot welds.

Shielded-arc welding and bonding (if spot welding not possible)

If a bonding area is not accessible with an RP spot welding appliance, apply a shielded-arc plug weld seam instead.

In such cases no adhesive is used in order to maintain the welding quality. Distance between SG plug welds: 15 mm.

Shielded arc welding

The welding wire SG 2 is suitable for all types of steel.

For exceptions refer to the appropriate workshop manual, repair group 00.

On vehicles with ultra-high-strength steel, spot weld devices with inverter must be used (refer to catalogue for workshop equipment and special tools).

Welding fume extraction

When spot welding in conjunction with spot weld adhesive, use the normal extraction system which is employed for welding galvanised panels.

Preparation

The body panels which are to be welded must be adapted to fit before applying the adhesive.

When spot welding, the adhesive is dispersed over the bare metal weld flanges, thus providing corrosion protection.

The bonding surfaces in the welding area must be free from primer and remaining adhesive as well as dust and grease.

We recommend using vacuum suction blaster -VAS 6216- .

Supplementary work

– Wipe off adhesive emerging from joint.

– Corrosion protection measures ⇒ Surface Treatment / Chemical Materials Manual

– Painting ⇒ Surface Treatment / Chemical Materials Manual

Instructions for using DA 001 730 A1 / A2

♦ If adhesive comes out on both sides over the full length of the joint, this indicates that sufficient adhesive has been applied.

- For large parts, e.g. roof, the assistance of a second person is required as otherwise adhesive will dry before work is completed.
- Ensure the openings of the double cartridge are clean before fitting the mixing nozzle. With mixing nozzle firmly in position, press out an approx. 5 cm long bead and then apply adhesive to bonding surface.
- In the event of interruptions lasting up to 30 minutes, press out and discard an approx. 10 cm long bead to ensure that new material is properly mixed. If work is interrupted for longer than 30 min. you must renew the mixing nozzle.
- Adhesive must cure before performing further surface work. Curing time: 20° C ≈ 8 h; 80° C ≈ 20 min.

Protected by copyright. Copying for private or commercial purposes, in part or in whole, is not permitted unless authorised by AUDI AG. AUDI AG does not guarantee or accept any liability with respect to the correctness of information in this document. Copyright by AUDI AG.

Special tools and workshop equipment required

- Pneumatic glue gun -V.A.G 2005 -
- 1x 37 ml cartridge is sufficient for a flange length of approx. 4 m.
- Pneumatic glue gun -V.A.G 2005 B-
- 1x 50 ml cartridge is sufficient for a flange length of approx. 5.50 m.

8 Sheet steel repairs

8.1 Extra-high-strength body panels

Extra-high-strength steel body panels are increasingly being used for Audi vehicles. For an overview of the areas in which these steel panels are used refer to the illustration in the Body Repairs workshop manual, repair group 00.

What are extra-high-strength steel panels?

They look the same as normal steel panels, but they have a higher yield point than standard steel body panels due to the different alloys which are used. In other words, when there is an equal impact on the panel, the dent in an extra-high-strength steel body panel will not be as deep as that in a standard steel body panel.

What has to be observed when removing dents?

Dents can be removed with the usual tools. Due to the greater buckling strength, there is more bounce, so that more force may be necessary. Material may rupture when kinks are re-formed.

What has to be observed when straightening panels using an alignment jig or hydraulic press?

Due to the greater bounce of extra-high-strength steel, it has be overstretched even more than standard steel to reach the desired position. However, the greater force applied also increases the stress placed on those parts made of standard steel which are welded to the extra-high-strength steel parts. Additional anchoring is required to prevent the standard steel yielding or rupturing.

> ⚠ WARNING
>
> - *If extra-high-strength steel is overstretched, it will suddenly extend to a length greater than that required!*
> - *For reasons of safety, it is not permitted to heat up extra-high-strength body steel to reshape it. In this respect it is no different to standard body steel!*
> - *It is permissible to weld ultra-high-strength steel in accordance with the Workshop Manual using the specified separating cuts and welding methods.*

What has to be observed when painting?

Extra-high-strength steel will expand if it is heated too quickly by a radiant heater/drier. If, however, the panel is permanently connected by means of spot welds or bonding to reinforcing backing elements, dents will form at these points and remain visible even after cooling down. Radiant heaters/driers must therefore always be turned up to full power gradually. Drying in a drying booth does not present any problems.

Protected by copyright. Copying for private or commercial purposes, in part or in whole, is not permitted unless authorised by AUDI AG. AUDI AG does not guarantee or accept any liability with respect to the correctness of information in this document. Copyright by AUDI AG.

What are ultra-high-strength hot-formed steel panels?

As the name suggests, these are steel panels which have been hot-formed (at temperatures between 900 °C and 950 °C). A special cooling process in the forging tool provides the steel panels with a high strength (quenched steel).

Using ultra-high-strength hot-formed steel panels makes it possible to reduce the vehicle body weight without a loss of body strength.

Note

On vehicles with ultra-high-strength hot-formed steel, spot welding equipment with inverter must be used (refer to catalogue for workshop equipment and special tools).

Yield strength of sheet steel used

1 MPa = 1 Newton/mm^2

- Steel panels up to 140 MPa
- high-strength steel panels from 140 to 240 MPa
- extra-high-strength steel panels from 240 to 300 MPa
- extra-high-strength steel panels from 300 to 420 MPa
- extra-high-strength steel panels from 420 to 1000 MPa
- Ultra-high-strength hot-formed steel panels of more than 1,000 MPa

8.2 Galvanised body parts

Preparation

– Only remove underbody protection/sealing materials with a hot air blower (max. 420 °C) or with a rotating wire brush.

– Remove paint and primer with paint remover (LLE 812 000 A2) or rotating plastic brush.

Cutting

– Avoid thermal separation techniques (cutting torch) wherever possible (coarse cuts only).

– To prevent damage to the zinc coating in the cutting area, mechanical cutting procedures are recommended, e.g. using spot weld cutter or body saw.

Joining techniques

Protected by copyright. Copying for private or commercial purposes, in part or in whole, is not permitted unless authorised by AUDI AG. AUDI AG does not guarantee or accept any liability with respect to the correctness of information in this document. Copyright by AUDI AG.

Resistance spot welding (RP) only causes slight burn-off of the zinc layer in the centre of the spot weld. The protective zinc ring which is simultaneously built up around the spot weld provides protection against corrosion.

Always use resistance spot welding (RP) wherever possible.

Note different thicknesses of zinc layers when performing resistance spot welding (RP) - carry out trial weld.

Only use shielded arc welding (SG) instead of resistance spot welding (RP) if it cannot be avoided.

Always apply welding primer (zinc spray D 007 500 04) between joint flanges.

Apply Vario filler (ALN 787 200 10) to joints.

Welding work on galvanised body panels

WARNING

As the welding of galvanised sheet steel gives rise to toxic zinc oxide in the welding fumes, the workshop must have efficient ventilation and fume extraction.

SG shielded arc welding of galvanised panels

The following notes must be observed in order to achieve high-quality shielded-arc welded joints:

- Increase current setting (Ampere) on welding transformer.
- At the same time the wire feed must be regulated, as the voltage increase on its own merely results in a greater arc (less penetration, more porous seam structure).
- Use cylindrical as opposed to conical gas nozzle (spatter occurring if gas nozzle is too narrow causes pore formation).
- Guide the torch about 12 mm above the panels being welded at a neutral angle / at an angle up to 10°.
- Use the softest wire grade possible.
- Both CO_2 and mixed gases may be used as inert gas.

8.3 Joining techniques

For Audi steel vehicle bodies

In production	For repair measures
Spot welding	Spot-welded bonding / MAG plug-welding / MAG welding
MAG welding	MAG welding
MIG brazing	MAG welding
Laser welding	MAG welding
Bonding	Bonding / MAG welding
Spot-welded bonding	Bonding with spot welding / additional weld spots / additional MAG welding
Pop riveting	Pop rivet Only use pop rivet specified in workshop manual. As a rule, commercially available pop rivets do not provide sufficient strength.
	Pop rivet N 909 236 01 ∅ 4.8 mm, grip range 6 - 8.5 Pop rivet N 906 924 01 ∅ 4.8 mm, grip range 2.4 - 5 Pop rivet N 905 344 01 ∅ 4.8 mm, grip range 1.5 - 3.5

Protected by copyright. Copying or distribution of this document, or any part or in whole, is not permitted unless authorised by AUDI AG. AUDI AG does not guarantee or accept any liability with respect to the correctness of information in this document. Copyright by AUDI AG.

	140 MPa	180 MPa - 240 MPa	260 MPa - 300 MPa	300 MPa - 400 MPa	Ultra-high-strength steel	Aluminium
Saw-cutting	x	x	x 3	x	-	x
Plasma cutting	x	x	x	x	x	x
Drilling	x	x	x	x	x 1	x
Spot weld cutter	x	x	x	x	x 1	-
Spot welding	x	x	x	x	x 2	-3
Cutting disc	x	x	x	x	-	x
SG welding	x	x	x	x	-	- 4

	140 MPa	180 MPa - 240 MPa	260 MPa - 300 MPa	300 MPa - 400 MPa	Ultra-high-strength steel	Aluminium
Brazing	x	x	x	x	x	-

x = possible

- = not possible

Explanation of footnotes

1 = Special tool

2 = Inverter welding equipment

3 = Due to welding sparks (on aluminium/steel bodies)

4 = Only for specifically described repairs

8.4 Joining techniques

For Audi aluminium vehicle bodies

In production	For repair measures
MIG welding	MIG welding
Spot welding	not used
MIG brazing	not used
Laser welding	Bonding and riveting
Bonding	Bonding and riveting
Punch riveting	Punch riveting using VAS 5279
Pop riveting	Pop rivet Only use pop rivet specified in workshop manual As a rule, commercially available pop rivets do not provide sufficient strength.

RP welding of galvanised panels

Note the following points when resistance spot welding galvanised panels:

- The flanges to be welded must make contact. If necessary clamp together the flanges.
- This is particularly important on high-strength steel panels, as the electrode force will otherwise not be sufficient.
- Make sure you do not make spot welds with welding tongs directly next to the clamps, as this would allow a large proportion of the welding current to drain off in a shunt circuit.
- If the distance between the spot welds is small, place spot welds in a row or secure by initially welding every third spot and then fill in the remaining spots. This helps to reduce the effect of a shunt current.
- Please observe the operating instructions and the information on correct settings provided by the manufacturer of the welding equipment.

Spot weld peel test

To determine the required weld nugget diameter, establish the setting parameters specified by the manufacturer and carry out test using samples.

Copyright. Copying for private or commercial purposes, in part or in whole, is not permitted unless authorised by AUDI AG. AUDI AG does not guarantee or accept any liability with respect to the correctness of information in this document. Copyright by AUDI AG.

Check all spot welds 100% by performing a chisel test.

Good quality weld spots do not shear in the weld contact area but “peel off” instead.

Calculate the weld nugget diameter according to the following formula ("peel diameter") and carry out test on samples before starting repair work.

Square root T1 x 3.5 x 1.15

Note

T1 is the thinnest panel of the welded joint.

e.g. welded joint connecting panels which are 1.5 mm and 0.8 mm thick

Example: Square root of 0.8 x 3.5 x 1.15 = 3.6 mm weld nugget diameter

The narrow, welded test strip is rolled or torn off the second sheet metal strip with a force applied vertically to the surface of the metal.

If the contact pressure of the welding tongs is not sufficient clamp the flanges to increase contact pressure.

If welding current from welding transformer is not sufficient for the welded joint you must make an SG plug weld.

Protected by copyright. Copying for private or commercial purposes, in part or in whole, is not permitted unless authorised by AUDI AG. AUDI AG does not guarantee or accept any liability with respect to the correctness of information in this document. Copyright by AUDI AG.

9 Plastic repair techniques

9.1 Plastic repair set

WARNING

Please observe all relevant safety regulations. Safety-related components that would no longer meet functional requirements after a repair (e.g. the absorption of impact energy) must not be repaired.

Repairs that can be performed using plastic repair set D 007 700 include repairs to painted plastic panels, such as the bumpers or exterior mirror housings. Before starting a repair it is important to check carefully whether the repair is feasible and economical (i.e. repair or fit new parts?).

Plastic panels with a structured surface can also be repaired in this way. However, it will not be possible to achieve quite the original surface quality of a new part.

Protected by copyright. Copying for commercial purposes, in whole or in part, is not permitted unless authorised by AUDI AG. AUDI AG does not guarantee or accept any liability with respect to the correctness of information in this document. Copyright by AUDI AG.

9.2 Repairing dents

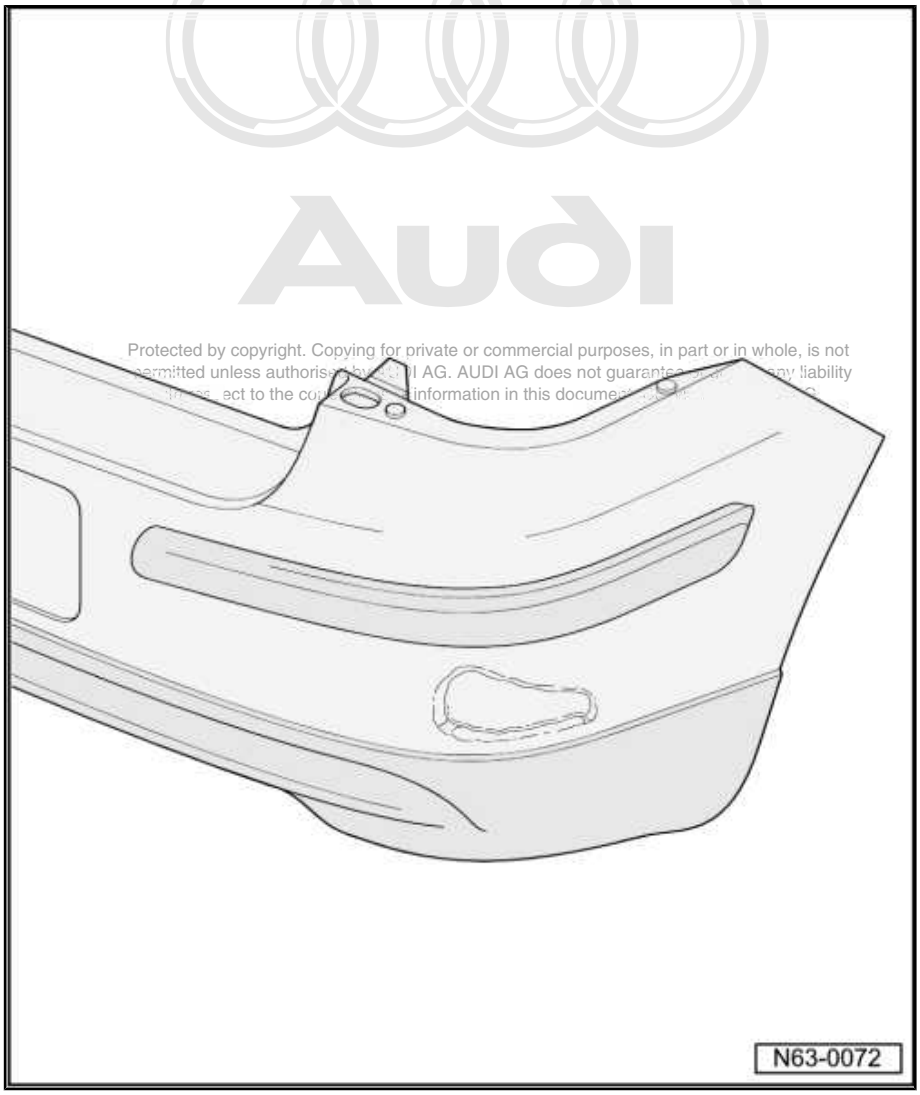

- First clean and dry the damaged panel.
- Now apply heat to the affected area using a hot air blower until the dent can be pressed out with a suitable tool.
- Lightly sand down the dented area with abrasive paper (120 grain).
- Then clean the repaired area with cleaning fluid D 195 850 A1. Allow to dry for 5 minutes.
- Spray on a thin coat of primer D 195 150 A1 and allow to dry for 10 minutes.

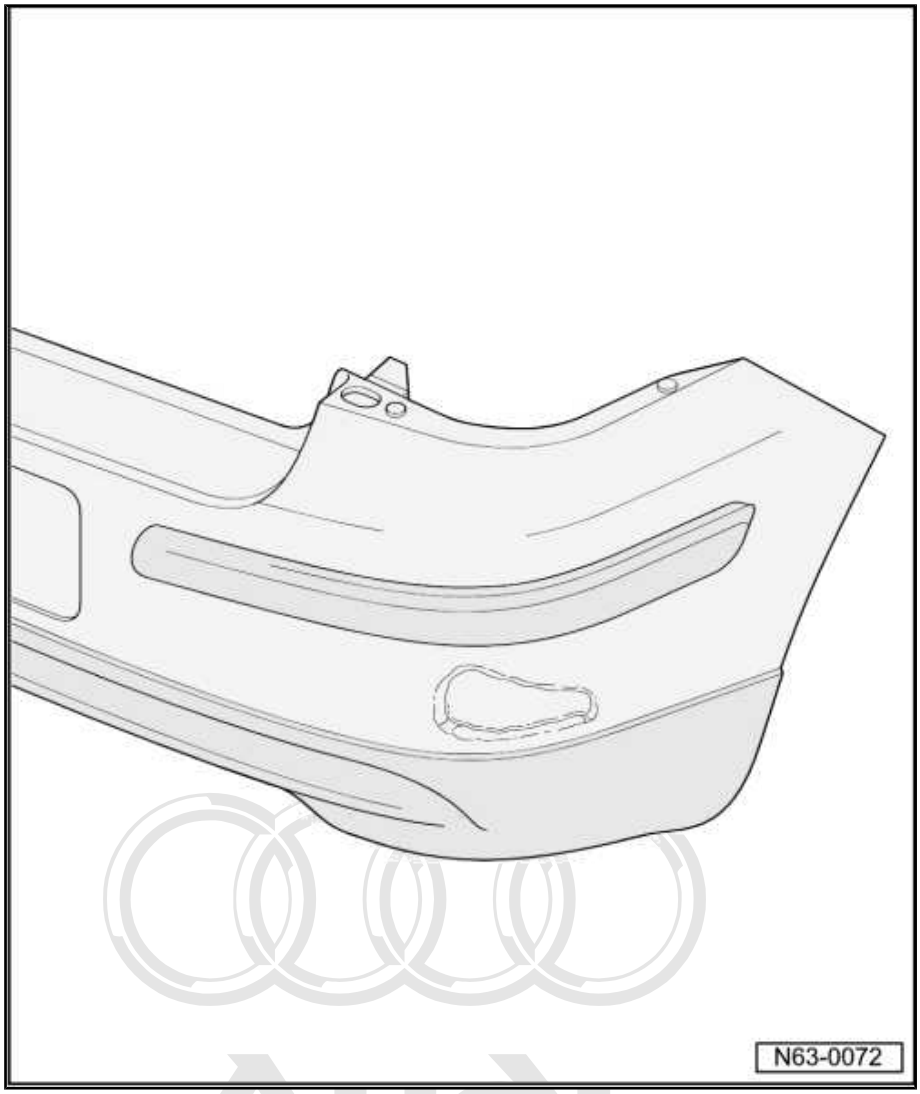

- Now you can fill any remaining surface irregularities with adhesive D 180 KU A1 and smooth down with a spatula.
- The hardening process can be speeded up with the aid of an infra-red lamp. Set to 15 minutes at 60°-70°C.
- Now rub down the repaired surface with sandpaper (120 grade).
- Remove sanding dust.
- Spray on a thin coat of primer D 195 150 A1 and allow to dry for 10 minutes.
- Apply paint finish as specified in the Audi paintwork manual.

Protected by copyright. Copying for private or commercial purposes, in part or in whole, is not permitted unless authorised by AUDI AG. AUDI AG does not guarantee or accept any liability with respect to the correctness of information in this document. Copyright by AUDI AG.

9.3 Repairing scratches

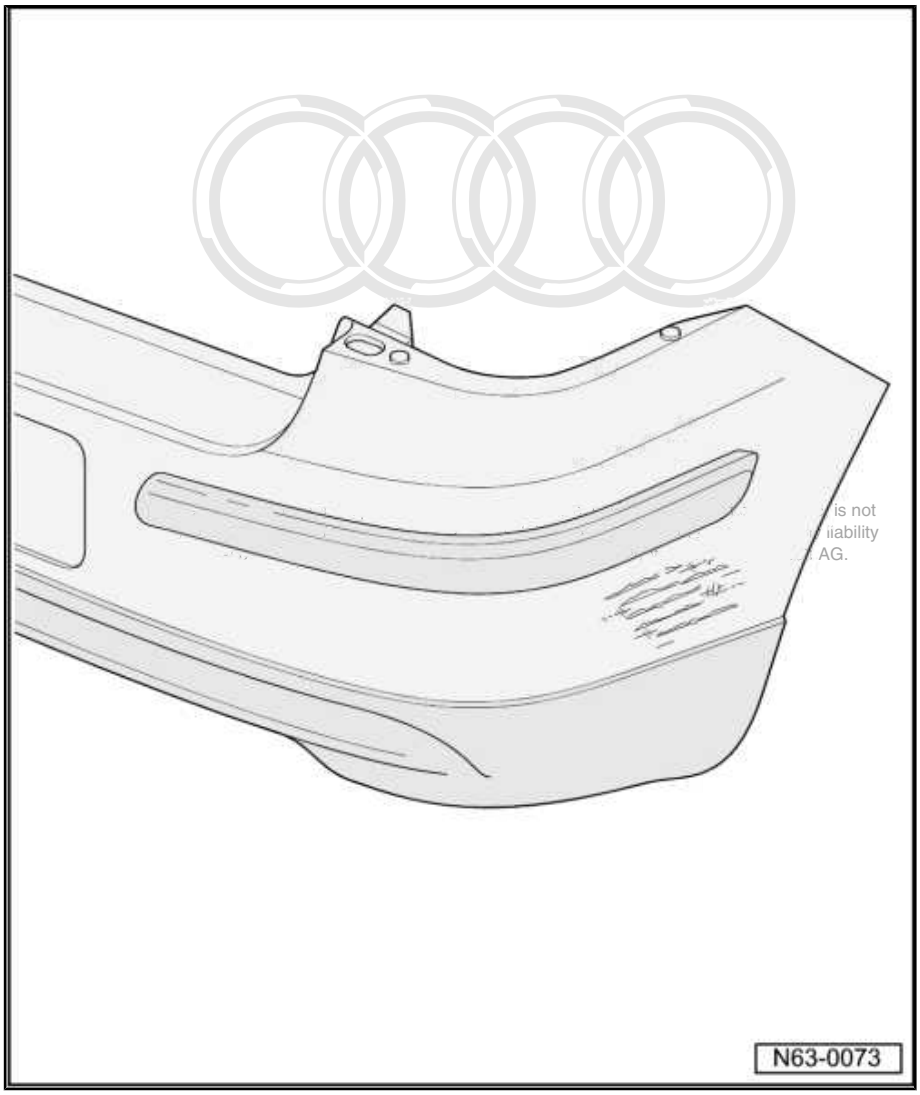

- First clean and dry the damaged panel.
- Remove material projecting above the surface with grade 80 sandpaper.
- Then clean the repaired area with cleaning fluid D 195 850 A1. Allow to dry for 5 minutes.
- Spray on a thin coat of primer D 195 150 A1 and allow to dry for 10 minutes.
- Now you can fill any remaining surface irregularities with adhesive D 180 KU A1 and smooth down with a spatula.
- The hardening process can be speeded up with the aid of an infra-red lamp. Set to 15 minutes at 60°-70°C.
- Now rub down the repaired surface with sandpaper (120 grade).
- Remove sanding dust.
- Spray on a thin coat of primer D 195 150 A1 and allow to dry for 10 minutes.
- Apply paint finish as specified in the Audi paintwork manual.

9.4 Repairing cracks and tears (up to a length of 100 mm)

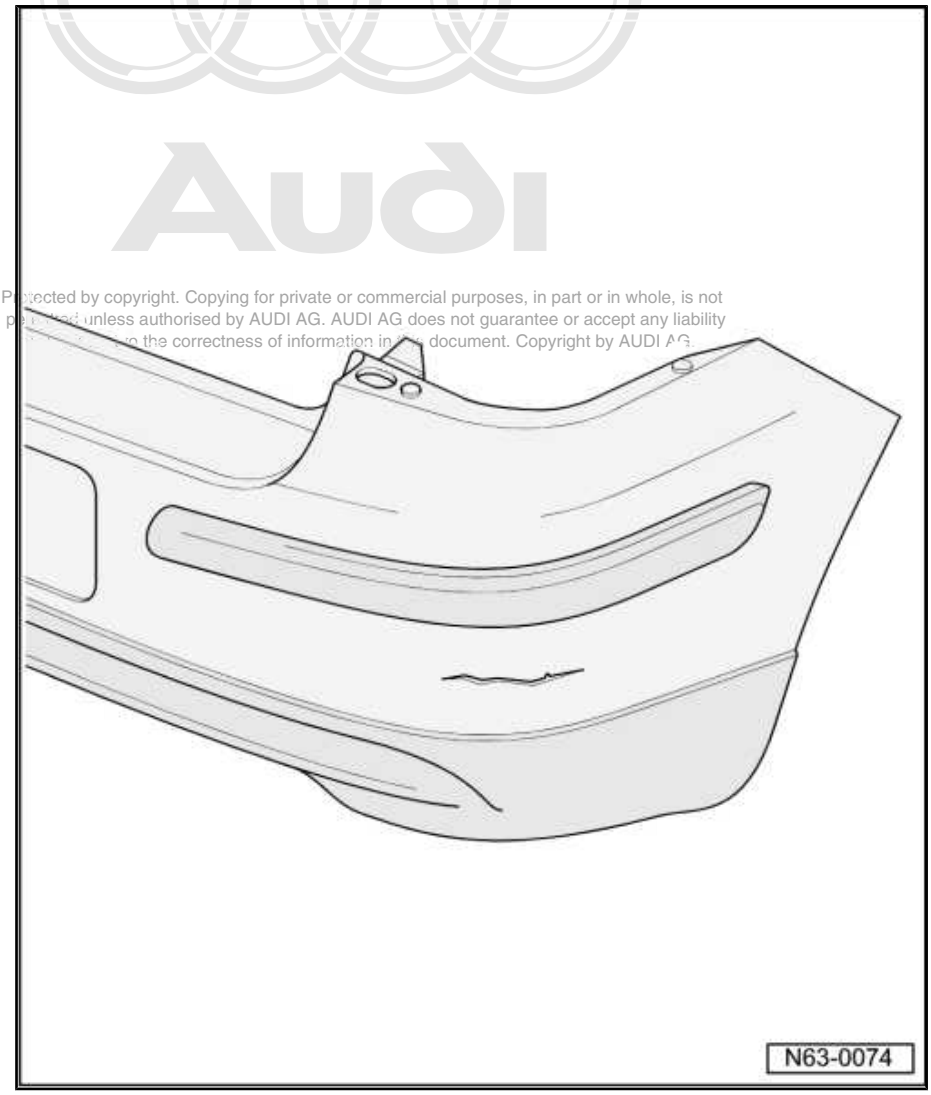

Protected by copyright. Copying for private or commercial purposes, in part or in whole, is not permitted unless authorised by AUDI AG. AUDI AG does not guarantee or accept any liability with respect to the correctness of information in this document. Copyright by AUDI AG.

- First clean and dry the damaged panel.
- By drilling into the crack (5 mm) and grinding out to a V-shaped groove, you can remove irregularities caused by stretching of the plastic.
- Then clean the repaired area with cleaning fluid D 195 850 A1. Allow to dry for 5 minutes.
- Spray on a thin coat of primer D 195 150 A1 and allow to dry for 10 minutes.
- As the next step, bond in a reinforcing mat D 002 KD A1 onto the reverse side of the panel using adhesive D 180 KU A1 so that it overlaps the damaged section by at least 20 mm.
- The hardening process can be speeded up with the aid of an infra-red lamp. Set to 15 minutes at 60°-70°C.
- Now you can fill in the hollowed-out area on the front of the panel using adhesive D 180 KU1 A1 and smooth down with a spatula.
- Again, the hardening process can be speeded up on the front of the panel with the aid of an infra-red lamp.

- Now rub down the repaired surface with sandpaper (120 grade).
- Remove sanding dust.
- Spray on a thin coat of primer D 195 150 A1 and allow to dry for 10 minutes.
- Apply paint finish as specified in the Audi paintwork manual.

9.5 Repairing holes (up to 30 mm diameter)

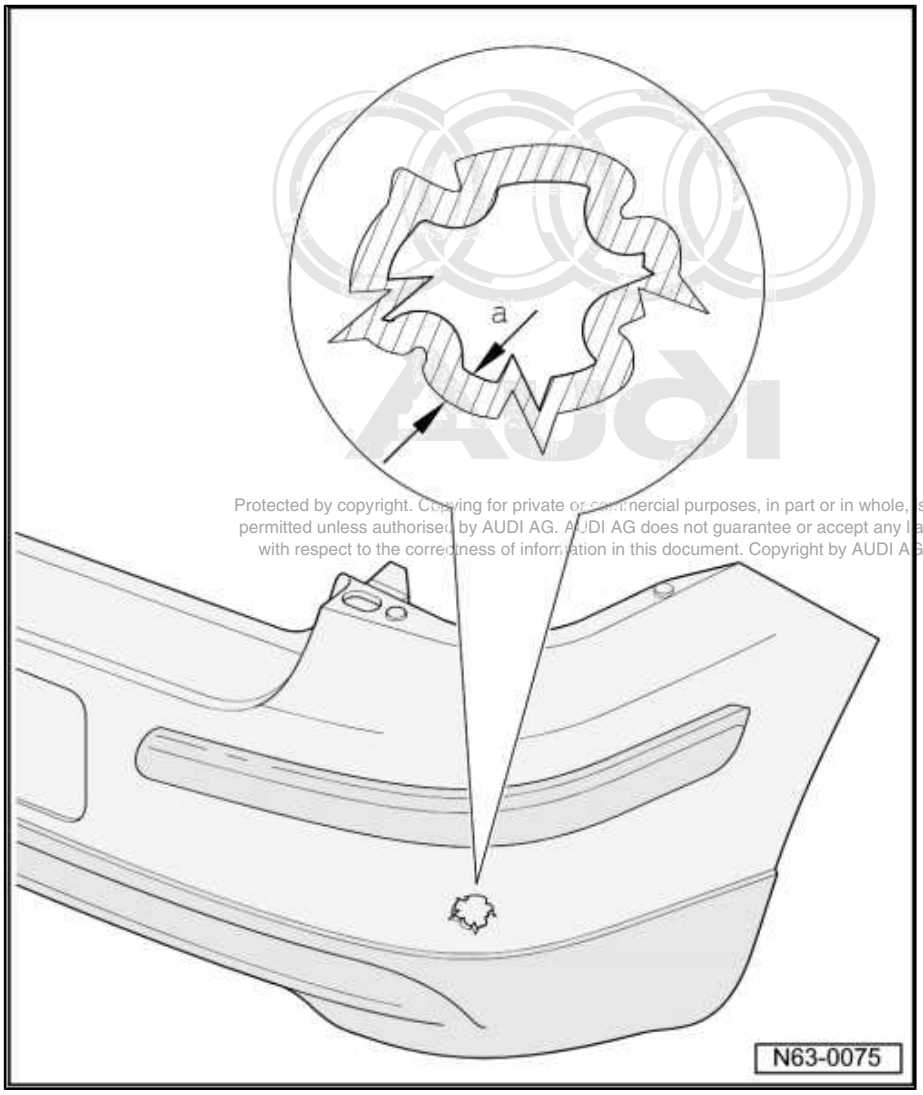

Protected by copyright. Copying for private or commercial purposes, in part or in whole, is not permitted unless authorised by AUDI AG. AUDI AG does not guarantee or accept any liability with respect to the correctness of information in this document. Copyright by AUDI AG.

- First clean and dry the damaged panel.
- Using abrasive paper (120 grade), sand down the edges of the hole to a funnel shape (a = 10 - 20 mm).
- Spray on a thin coat of primer D 195 150 A1 and allow to dry for 10 minutes.
- Roughen the repaired surface with sandpaper (120 grade).
- Then clean the repaired area with cleaning fluid D 195 850 A1. Allow to dry for 5 minutes.
- Spray on a thin coat of primer D 195 150 A1 and allow to dry for 10 minutes.

- As the next step, bond in a reinforcing mat D 002 KD A1 onto the reverse side of the panel using adhesive D 180 KU A1 so that it overlaps the damaged section by at least 20 mm.
- The hardening process can be speeded up with the aid of an infra-red lamp. Set to 15 minutes at 60°-70°C.
- Now you can fill in the hollowed-out area on the front of the panel using adhesive D 180 KU1 A1 and smooth down with a spatula.
- Again, the hardening process can be speeded up on the front of the panel with the aid of an infra-red lamp.
- Now rub down the repaired surface with sandpaper (120 grade).
- Remove sanding dust.
- Spray on a thin coat of primer D 195 150 A1 and allow to dry for 10 minutes.
- Apply paint finish as specified in the Audi paintwork manual.

9.6 Plastic repairs (glass fibre materials)

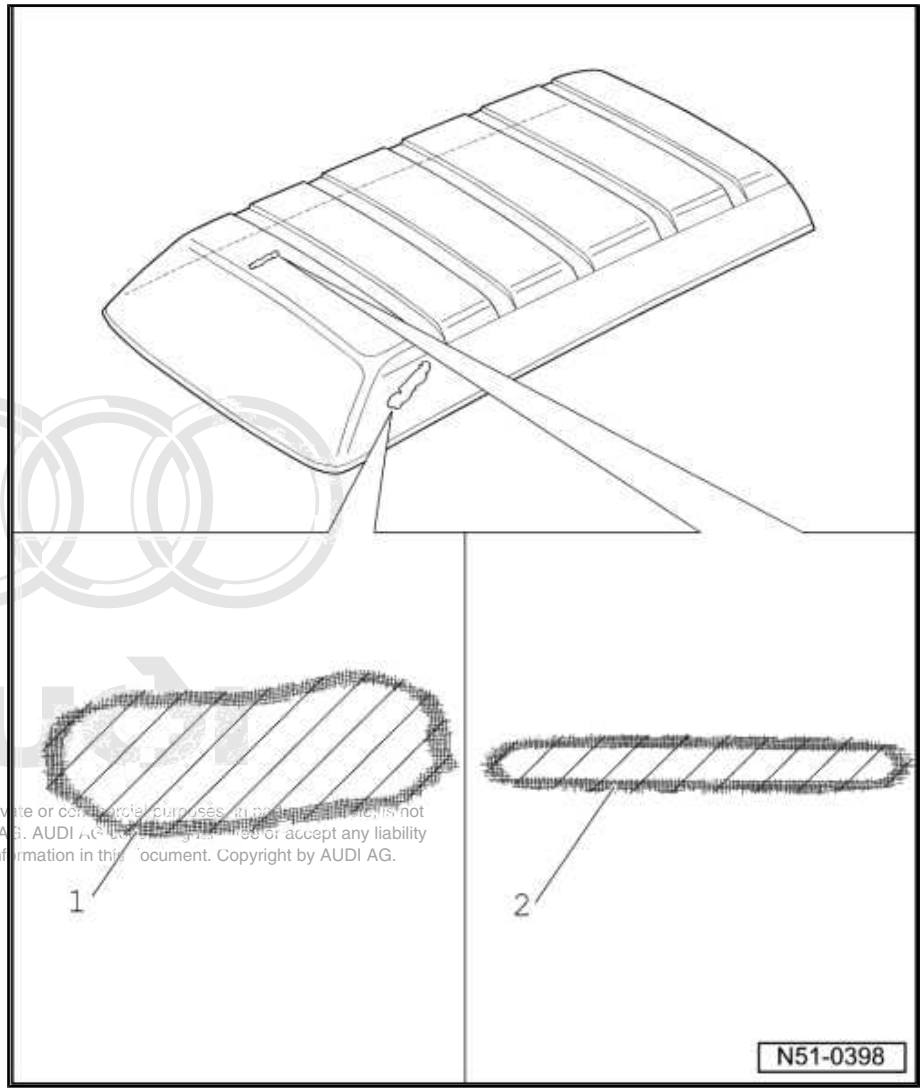

Protected by copyright. Copying for private or commercial purposes, in part or in whole, is not permitted unless authorised by AUDI AG. AUDI AG does not assume any liability or accept any liability with respect to the correctness of information in this document. Copyright by AUDI AG.

1- Rupture/hole

- Glass fibre mat, polyester resin and hardener

2- Surface damage

- Glass fibre reinforced polyester resin, hardener

Note

Observe manufacturer's instructions when using materials.

WARNING

Please observe all relevant safety regulations. Safety-related components that would no longer meet functional requirements after a repair (e.g. the absorption of impact energy) must not be repaired.

Repair procedure

Repairing rupture/hole

– Grind down edge of rupture/hole all round to an angle of 45°.

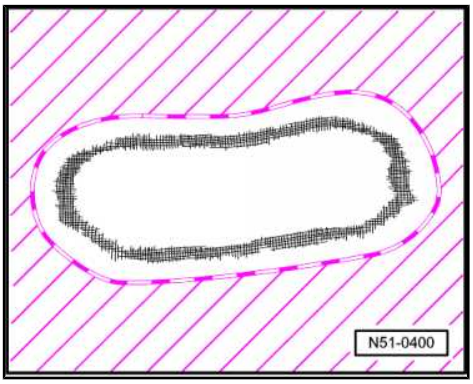

– Lightly sand an area approx. 100 mm wide around the rupture/hole (hatched area) using 150 grade abrasive paper and clean with silicone remover.

– Cut three glass fibre mats to shape: -1- to overlap rupture/hole by approx. 25 mm , -2- overlap approx. 50 mm, -3- overlap approx. 75 mm.

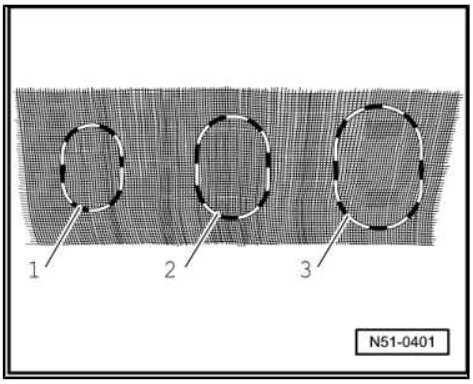

Note

For large ruptures/holes it is recommended to use a styrene block as a support. Cover styrene with commercially available unprinted PE synthetic foil to prevent contact with polyester resin. Then secure the prepared support to the inside of the rupture/hole with adhesive tape.

Protected by copyright. Copying for private or commercial purposes, in part or in whole, is not permitted unless authorised by AUDI AG. AUDI AG does not guarantee or accept any liability with respect to the correctness of information in this document. Copyright by AUDI AG.

Applying glass fibre mats

- Mix polyester resin (observe manufacturer's instructions).
- Apply thin coat of polyester resin to rupture/hole.
- Soak smallest glass fibre mat -1- completely in polyester resin and apply to rupture/hole -4-.
- After applying, remove air bubbles in polyester resin immediately with a pointed tool.
- After applied material has hardened, sand down surface using 120 grade abrasive paper.
- Clean repaired section with silicone remover.

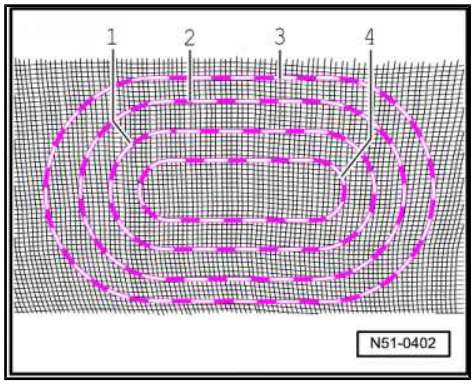

- Repeat work sequence for the second -2- and third -3- glass fibre mats.

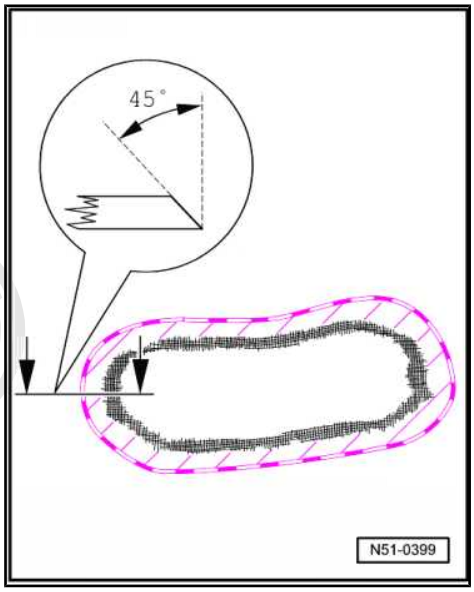

Protected by copyright. Copying for private or commercial purposes, in part or in whole, is not permitted unless authorised by AUDI AG. AUDI AG does not guarantee or accept any liability with respect to the correctness of information in this document. Copyright by AUDI AG.

Repairing damaged surfaces

- Cut damaged surface to a V shape.
- Sand area approx. 50 mm wide around damaged surface (hatched area) using 150 grade abrasive paper.
- Clean repaired section with silicone remover.
- Mix glass fibre reinforced polyester resin (observe manufacturer's instructions) and apply to repaired section (hatched area).

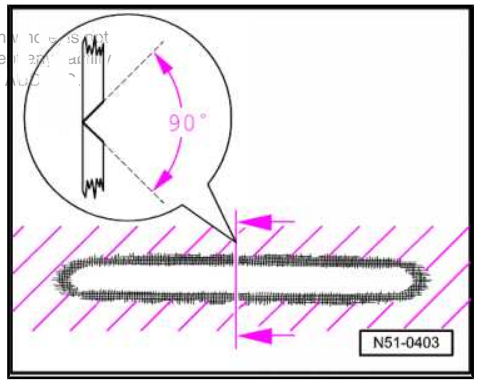

- After applied material has hardened, sand down repaired section and clean with silicone remover.

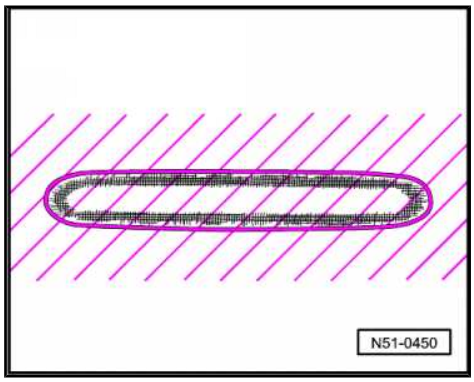

10 Glass repairs

10.1 Repairing windscreens

As a cost-saving alternative to windscreen replacement, it is possible under certain circumstances to repair windscreens damaged by stone chipping.

Tinted windows, windows with a coloured sun strip or insulated glass (Audi A8, A6) can also be repaired, as the tinting is provided by a coloured film layer in the window glass.

Windscreen repair is to be given preference over windscreen replacement if the following requirements are met.

Protected by copyright. Copying for private or commercial purposes, in part or in whole, is not permitted unless authorised by AUDI AG. AUDI AG does not guarantee or accept any liability with respect to the correctness of information in this document. Copyright by AUDI AG.

10.2 Requirements

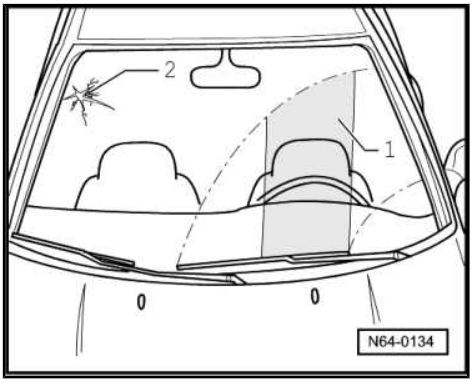

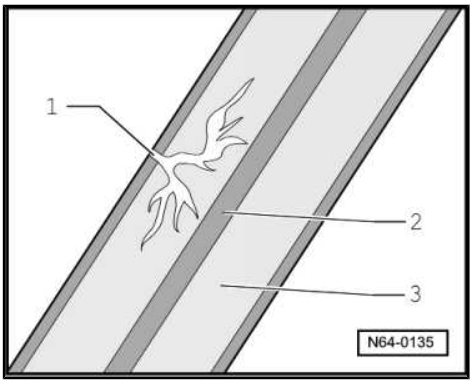

- Damaged area must not be within direct field of long-distance vision -1-. This field corresponds to a roughly 29 cm wide strip (A4 landscape format) centrally positioned in the driver's direct line of vision in the direction of travel and extending to the top and bottom of the wiping area.
- The cracks radiating from the damaged area -2- must not be longer than 50 mm and must not run outwards to the edge.
- Diameter of impact point -1- must not exceed 5 mm.
- Coloured film -2- or inner glass -3- must not be damaged.
- There must be no dirt or moisture in lower area of cracks.
- Therefore the time elapsed since the damage occurred must not be too long.

The following types of damage can be repaired, however the damaged area must NOT be not located in the field of long-range vision or at the edge of the windscreen:

Crater

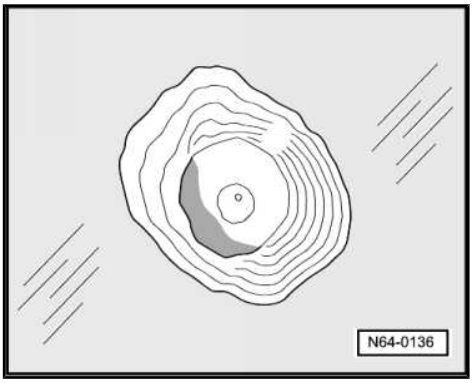

Compound break

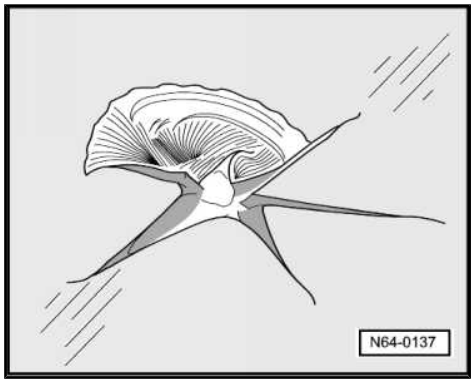

Star and crack

10.3 Special tools

Special tools, workshop equipment, testers, measuring instruments and auxiliary items required

- -VAS 6092- Windscreen repair set

Includes the following tools:

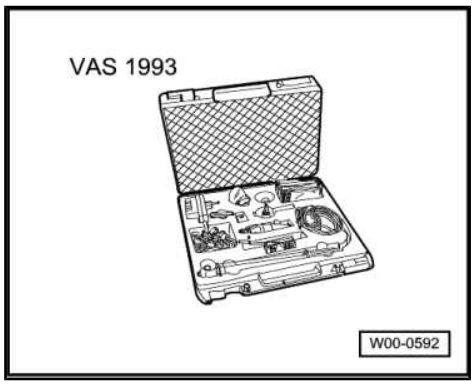

Protected by copyright. Copying for private or commercial purposes, in part or in whole, is not permitted unless authorised by AUDI AG. AUDI AG does not guarantee or accept any liability with respect to the correctness of information in this document. Copyright by AUDI AG.

1 - Transformer

2 - 1 set of resin cutters

3 - Mirror

4 - Suction cup

- ❑ Used as a vacuum pump

5 - Tool holder

6 - Injector

- ❑ Place in opaque packing after first use

7 - Resin for at least 15 applications

8 - 12V drill

9 - Milling and polishing set

10 - Scriber

11 - UV lamp

12 - Film

13 - Battery connection cable

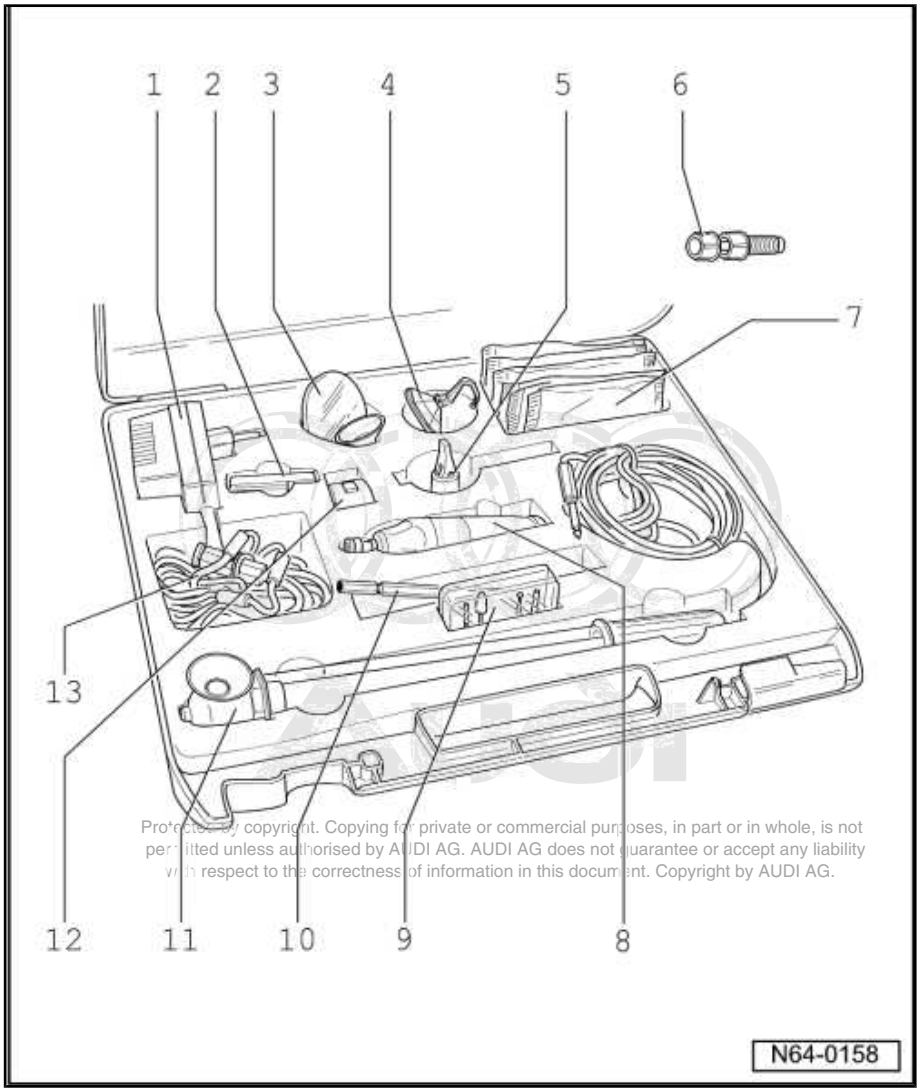

Protected by copyright. Copying for private or commercial purposes, in part or in whole, is not permitted unless authorised by AUDI AG. AUDI AG does not guarantee or accept any liability with respect to the correctness of information in this document. Copyright by AUDI AG.

10.4 Description of repair work

- Repairs must be performed in an area protected from direct sunlight.
- The repair area must be approx. room temperature.
- The work area must be protected from moisture.

– Loosen point of impact with hard metal scriber but do not increase size or remove pieces of broken glass.

– Remove any moisture which may have ingressed using the suction cup, assisted by a hot-air blower from vehicle interior. Terminate repair work if moisture cannot be removed.

– Fit mirror -1- from inside and align in such a way that you have a good view of the damaged area.

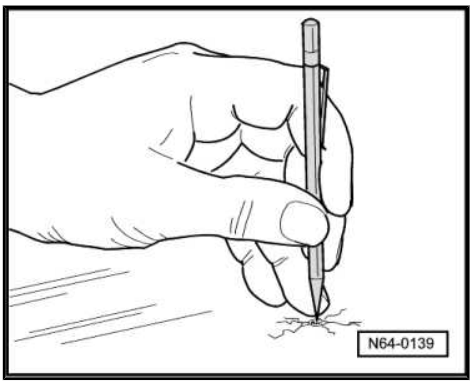

– Fit tool holder -2- with injector -3- so that rubber seal of injector is positioned exactly above impact point. Check correct position using the mirror.

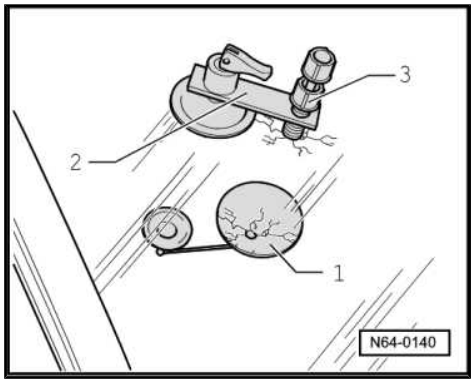

– Screw threaded spindle -2- completely out of injector -1-.
– Place 2...3 drops of resin in injector -1- (this quantity of resin is sufficient for one damaged area).
– Place resin bottle back in its packaging immediately, as resin is UV light sensitive.
– Wait for resin to reach rubber seal.
– Apply pressure to injector -1- by screwing in threaded spindle -2-. Correct pressure has been attained when impact point becomes clear, from centre outwards.

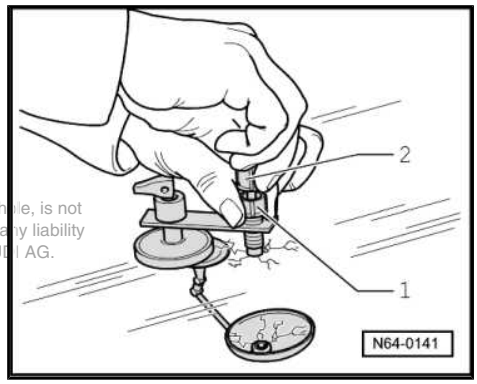

Copyright by AUDI AG. Copying, private or commercial purposes, in part or in whole, is not permitted unless authorised by AUDI AG. AUDI AG does not guarantee or accept any liability with respect to the correctness and completeness of this document issued by AUDI AG.

Note

The resin penetrates the cracks very slowly; the ingression is not always immediately visible.

– Wait 10 minutes and then slacken off injector as far as end of thread.
– Hold injector when unfastening to stop it slipping.
– Repeat procedure (at least 3 times) until all the air has been displaced from the damaged area. This is indicated by the cracks becoming less and less apparent as the air is displaced. A pressure of up to 18 bar is generated when you apply pressure to the injector.
– Check that damaged area has been filled using the mirror. Then terminate injection process.
– Swivel holder and injector aside and check that resin has flowed into all the break points.
– Remove any remaining air pockets with suction cup placed on repair area.

– Cut off protective foil -1- and keep it to hand. Detach injector with tool holder and immediately place protective foil over damaged area (do not press on) to prevent ingress of air. The film contains an activator for hardening the resin.
– Place the injector back in its packaging immediately, as the resin is UV light sensitive. It can then be used for the next repair. Put slackened-off tool holder back into case and detach mirror with holder.

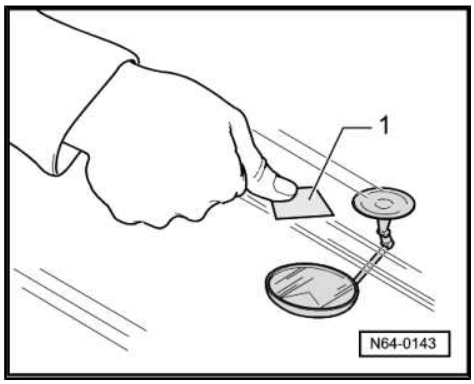

– Attach UV lamp -1- above damaged area. Expose resin to UV light for 10 minutes and then detach UV lamp.
– Smoothen damaged area using resin knife, if necessary polish using 12 volt drill and polishing set.

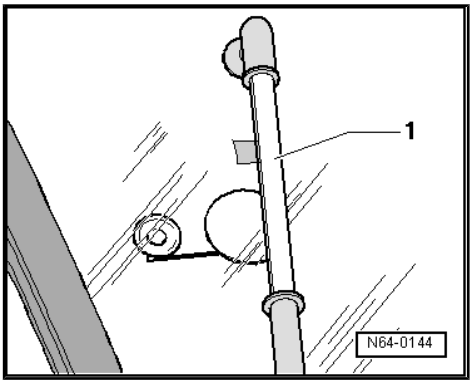

Note

- *The vehicle can be used again immediately as soon as the repair work has been completed.*
- *Depending on the type of damage, there is a possibility that some traces of the damage will remain. However, this does not have any bearing on the success of the repair job.*
- *Once the repair is completed, the windscreen can be subjected to normal loads. The injected and hardened synthetic resin ensures that the crack will not spread any further. The hardened resin is colourless and has the same refractive index as the windscreen glass.*

Protected by copyright. Copying for private or commercial purposes, in part or in whole, is not permitted unless authorised by AUDI AG. AUDI AG does not guarantee or accept any liability with respect to the correctness of information in this document. Copyright by AUDI AG.

11 Aluminium

11.1 Aluminium repairs

Note

- *These instructions only apply to conventional steel body vehicles fitted with aluminium panels.*
- *For an overview of the areas in which these aluminium panels are used refer to the illustration in the appropriate Body Repairs workshop manual, repair group 00.*
- *For repairs on all-aluminium bodied vehicles (e.g. Audi A8) the following workshop manual continues to apply: ⇒ Body Repairs; Rep. Gr. 00,50,51,53 ; Audi passenger cars; Aluminium*

WARNING

Use tools either for steel or aluminium.

Recommended: aluminium tool set with trolley -V.A.G 2010/2-

11.2 Surface treatment

Only use stainless steel wire brushes.

Rough-filing discs must not be used because of the smear effect.

Use grinding discs of grit size P 80 to P 200.

Only use grinding discs, drill bits, millers and cutting disks in conjunction with cleaning block DA 009 802.

Clean surface with paint thinner.

Surface treatment otherwise as for steel.

Note

Aluminium components must be covered when grinding and welding steel parts. If metal swarf/dust makes contact with aluminium, remove immediately to avoid contact corrosion.

WARNING

Use tools either for steel or aluminium.

Recommended: aluminium tool set with trolley -V.A.G 2010/2-

11.3 Removing dents

The danger of material stretching is greater with aluminium than with steel.

Sharp-edged or hard panel beating tools (e.g. steel hammer) should not be used. Use plastic, wood or aluminium hammers instead.

Protected by copyright. Copying for private or commercial purposes, in part or in whole, is not permitted unless authorised by AUDI AG. AUDI AG does not guarantee or accept any liability with respect to the correctness of information in this document. Copyright by AUDI AG.

Direct panel beating procedures, i.e. aluminium panel is positioned directly between counter-hold tool and panel beating hammer, should be kept to a minimum.

Unlike the procedure for steel panels, you should begin in the middle of the dent when removing dents on aluminium panels.

Aluminium panels should be pressed rather than beaten.

When finishing, the counterhold tool should be held loosely. If you apply excessive force when finishing you could stretch the material. For this reason you should use a counterhold tool made of hardwood.

If material stretching should occur, it can be eliminated by heating and shrinking.

WARNING

Heat shrinkage temperature max. 150° C.

Note

If a crack or rupture appears during panel beating, the part must be renewed!

Protected by copyright. Copying for private or commercial purposes, in part or in whole, is not permitted unless authorised by AUDI AG. AUDI AG does not guarantee or accept any liability with respect to the correctness of information in this document. Copyright by AUDI AG.

12 The Audi Space Frame concept

The ASF (Audi Space Frame) is the first vehicle body of its kind at Audi and a worldwide innovation.

ASF stands for a combination of aluminium sections and diecast aluminium joints.

All other aluminium body parts are attached to this new Audi frame structure by shielded arc welding, punch rivets, bonding and clinching (of two panels).

An explanation of the special repair techniques is given in the following sections.

Protected by copyright. Copying for private or commercial purposes, in part or in whole, is not permitted unless authorised by AUDI AG. AUDI AG does not guarantee or accept any liability with respect to the correctness of information in this document. Copyright by AUDI AG.

13 Contact corrosion

Contact corrosion can occur if unsuitable fasteners are used on the vehicle (bolts, nuts, washers etc.).

For this reason, only fasteners with a special surface coating have been fitted on the vehicle.

In addition, all rubber and plastic parts and all adhesives are made of non-conductive materials.

Always renew parts if you are in any doubt as to whether the old part can be used again.

Note

Please note the following:

Always use genuine replacement parts (same as original equipment). These have been tested and are aluminium-compatible.

Accessories must be approved by AUDI AG.

Damage caused by contact corrosion is not covered by the warranty.

Protected by copyright. Copying for private or commercial purposes, in part or in whole, is not permitted unless authorised by AUDI AG. AUDI AG does not guarantee or accept any liability with respect to the correctness of information in this document. Copyright by AUDI AG.

14 Threads

Inserts with a zinc-nickel coating must be used when repairing damaged threads.

Make sure all steel chips have been removed.

Always use genuine parts when replacing studs.

Damaged threads can be repaired using thread inserts with zinc-nickel coating.

Only this coating provides protection against contact corrosion.

Some threads are fitted with thread inserts at the factory.

Protected by copyright. Copying for private or commercial purposes, in part or in whole, is not permitted unless authorised by AUDI AG. AUDI AG does not guarantee or accept any liability with respect to the correctness of information in this document. Copyright by AUDI AG.

15 Studs

Studs cannot be welded using workshop equipment.

When performing repairs, use steel hollow rivets with a zinc-nickel coating.

Only this coating provides protection against contact corrosion.

Required hole diameter: ∅ 5 mm

Note

Rivet must make full contact and rivet pin must break off at rupture point in rivet.

Protected by copyright. Copying for private or commercial purposes, in part or in whole, is not permitted unless authorised by AUDI AG. AUDI AG does not guarantee or accept any liability with respect to the correctness of information in this document. Copyright by AUDI AG.

16 Paintwork

Paintwork structure is identical to that of steel body.

Only use approved materials compatible with aluminium. ⇒ Surface Treatment / Chemical Materials

WARNING

Adhesive masking on earth connections must not be removed until after painting.

Protected by copyright. Copying for private or commercial purposes, in part or in whole, is not permitted unless authorised by AUDI AG. AUDI AG does not guarantee or accept any liability with respect to the correctness of information in this document. Copyright by AUDI AG.

17 Replacement parts

Special aluminium alloys are used for the body.

At the factory the aluminium body is hardened by heat treatment after it has been assembled. A temperature of 205° C is required over a period of 30 minutes.

As the body cannot be hardened using workshop equipment, replacement parts are supplied already hardened.

For this reason, it is important that only genuine parts are used when performing repairs and that the specified working methods are adhered to.

Protected by copyright. Copying for private or commercial purposes, in part or in whole, is not permitted unless authorised by AUDI AG. AUDI AG does not guarantee or accept any liability with respect to the correctness of information in this document. Copyright by AUDI AG.

18 Safety notes

Always use an extractor when performing welding and grinding operations.

Welding and grinding must never be performed simultaneously in the same working area.

Working area must be cleaned at regular intervals as necessary to remove dust.

Compressed air must NOT be used to blow out dust deposits.

The extraction system must be cleaned at regular intervals.

In addition, the relevant accident prevention and trade association regulations must be observed.

Protected by copyright. Copying for private or commercial purposes, in part or in whole, is not permitted unless authorised by AUDI AG. AUDI AG does not guarantee or accept any liability with respect to the correctness of information in this document. Copyright by AUDI AG.

19 Surface treatment

On account of the low specific gravity, aluminium dust and shavings do not immediately fall to the ground but remain in the air for quite a while.

Always use an extractor when performing surface treatment and cutting operations.

Only use stainless steel wire brushes.

Rough-filing discs must not be used because of the smear effect.

Use grinding discs of grit size P 80 to P 200.

Only use grinding discs, drill bits, millers and cutting disks in conjunction with cleaning block DA 009 802.

Commercially available abrasives for aluminium can be used without the cleaning block.

Clean surface with paint thinner.

WARNING

Use tools either for steel or aluminium.

Protected by copyright. Copying for private or commercial purposes, in part or in whole, is not permitted unless authorised by AUDI AG. AUDI AG does not guarantee or accept any liability with respect to the correctness of information in this document. Copyright by AUDI AG.

20 Cutting

Cutting

Only perform cutting operations using a body saw or metal cutters.

The tooth pitch for aluminium saw blades is coarser than for sheet steel.

Only use cutting wheels in conjunction with cleaning block DA 009 802.

Note

Always use an extractor.

Protected by copyright. Copying for private or commercial purposes, in part or in whole, is not permitted unless authorised by AUDI AG. AUDI AG does not guarantee or accept any liability with respect to the correctness of information in this document. Copyright by AUDI AG.

WARNING

Separating cuts must only be made as specified in the "Body repairs" workshop manual.

21 Removing dents

The danger of material stretching is greater with aluminium than with steel.

Sharp-edged or hard panel beating tools (e.g. steel hammer) should not be used. Use plastic, wood or aluminium hammers instead.

Direct panel beating procedures, i.e. aluminium panel is positioned directly between counter-hold tool and panel beating hammer, should be kept to a minimum.

Unlike the procedure for steel panels, you should begin in the middle of the dent when removing dents on aluminium panels.

Aluminium panels should be pressed rather than beaten.

When planishing, the counterhold tool should be held loosely. Forceful planishing can lead to material stretching. Use hardwood counter-hold tool to reduce this effect.

Material stretching can be rectified by means of heat shrinkage.

Protected by copyright. Copying for private or commercial purposes, in part or in whole, is not permitted unless authorised by AUDI AG. AUDI AG does not guarantee or accept any liability with respect to the correctness of information in this document. Copyright by AUDI AG.

22 Re-forming

Re-forming as with a steel body is not possible.

Damaged aluminium node castings or extruded sections must be renewed.

Protected by copyright. Copying for private or commercial purposes, in part or in whole, is not permitted unless authorised by AUDI AG. AUDI AG does not guarantee or accept any liability with respect to the correctness of information in this document. Copyright by AUDI AG.

23 Temperature monitoring during heating

Tempering colours (colour changes) are not evident when heating aluminium.

The temperature must therefore be determined using heat strips.

The following heat strips are used : V/150.4 (temperature range 99° C - 127° C); V/150.5 temperature range (132° C - 160° C).

Supplier: Matra

Heat strips change colour at certain temperatures.

A - Heating zone

B - Clear zone

C - Heat strip

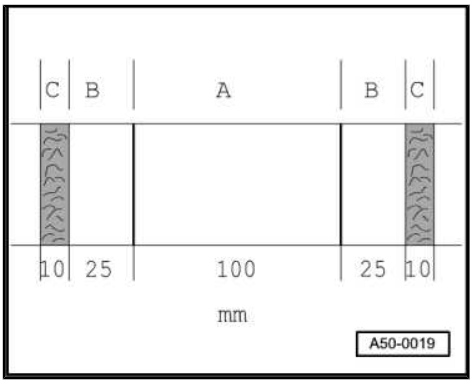

Protected by copyright. Copying for private or commercial purposes, in part or in whole, is not permitted unless authorised by AUDI AG. AUDI AG does not guarantee or accept any liability with respect to the correctness of information in this document. Copyright by AUDI AG.

24 Flanging

The outer side panel is already hardened when it is supplied as a replacement part.

Flanging therefore requires a special procedure, which is carried out in 2 stages.

– 1. Use pliers to bend up flange. Maintain a radius of R = 2.5 mm.

– 2. Fold over upper area using a hammer and counterhold tool. Radius of R = 2.5 mm must be maintained.

The side panel may rupture if radius is not maintained.

Full-surface bonding between inner and outer sections must be ensured throughout the shaded area.

Protected by copyright. Copying for private or commercial purposes, in part or in whole, is not permitted unless authorised by AUDI AG. AUDI AG does not guarantee or accept any liability with respect to the correctness of information in this document. Copyright by AUDI AG.

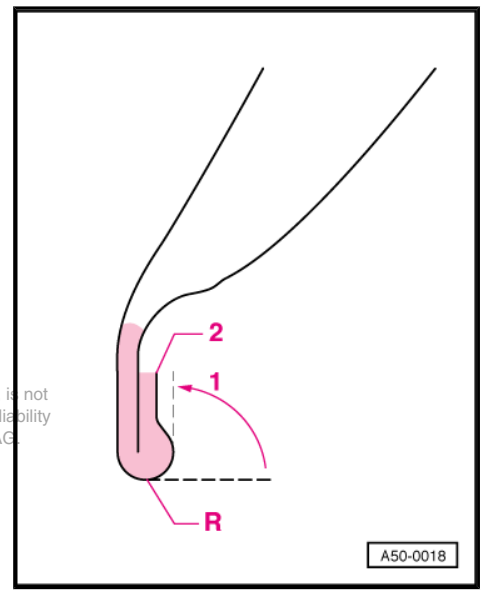

25 Welding repairs

Extruded section/aluminium node casting

- Saw through centre of weld seam between extruded section and aluminium node casting.
- Grind down rest of weld.
- Use chisel to remove remaining part of extruded section from aluminium node casting.

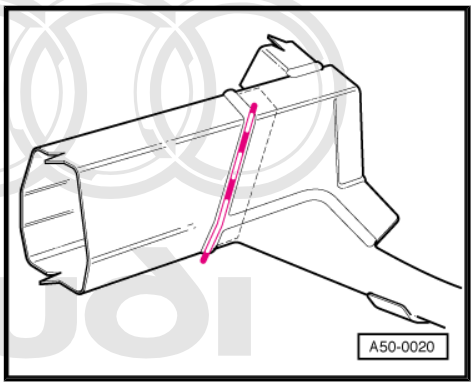

WARNING

Take care not to damage aluminium node castings. Aluminium node casting must be renewed if it is damaged or deformed.

- Match up new parts.
- Clean 40 mm flange area on both sides and remove oxide layer using a stainless steel brush.

Protected by copyright. Copying for private or commercial purposes, in part or in whole, is not permitted unless authorised by AUDI AG. AUDI AG does not guarantee or accept any liability with respect to the correctness of information in this document. Copyright by AUDI AG.

- Weld on extruded section (same as original weld).

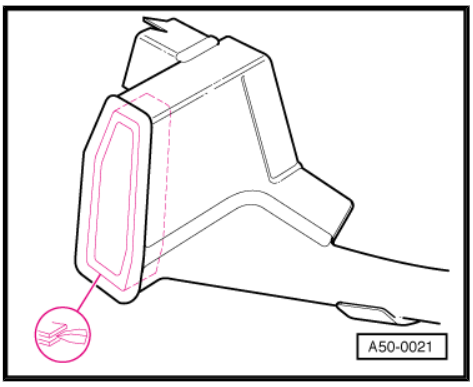

26 Extruded section

– Cut off damaged area.

– Match up new parts. To do so, shorten by an amount equivalent to material thickness -a- (1x) for each welding joint.

– Make sleeve -A- for inserting. (length approx. 40 mm).

– Insert sleeve in old and new part.

– Clean 40 mm area of sleeve and flanges on both sides and remove oxide layer using a stainless steel brush.

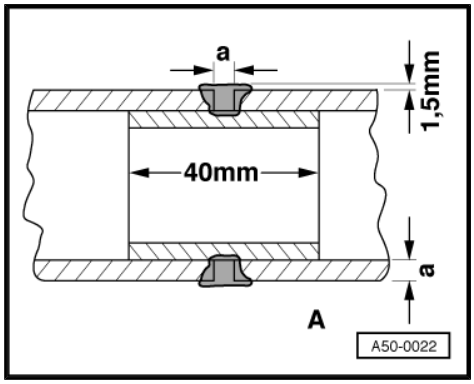

Note

The sleeve may be available as a replacement part, or may have to be made in the workshop; see Body Repair manual. The sleeve serves as a backing for the weld material in the joint. Weld root should partially melt sleeve.

– Weld the joint (SG continuous seam all round).

Maximum weld seam projection: 1.5 mm (grind down if necessary)

Protected by copyright. Copying for private or commercial purposes, in part or in whole, is not permitted unless authorised by AUDI AG. AUDI AG does not guarantee or accept any liability with respect to the correctness of information in this document. Copyright by AUDI AG.

27 Sheet metal panel

– Use body saw to cut through centre of weld seam and detach damaged part.

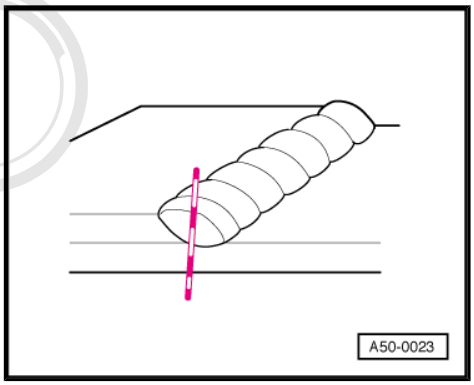

Protected by copyright. Copying for private or commercial purposes, in part or in whole, is not permitted unless authorised by AUDI AG. AUDI AG does not guarantee or accept any liability with respect to the correctness of information in this document. Copyright by AUDI AG.

– Use chisel to remove remains of panel (grind down weld on end face if necessary).

– Match up new parts.

– Clean 40 mm flange area on both sides and remove oxide layer using a stainless steel brush.

– Weld on panel (same as original weld).

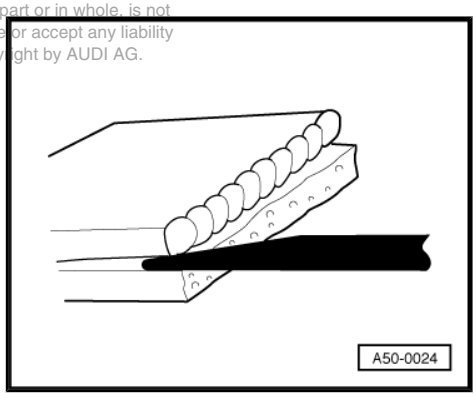

28 Plug welding

– Remove spot welds with a spot weld cutter or grind them down.

WARNING

Use tools either for steel or aluminium.

– Detach damaged part (use a chisel if necessary).
– Grind down projecting material.
– Match up new part.
– Drill upper panel for plug weld -d- ∅ 8 mm for 1.3 mm panel thickness, ∅10 mm for 2 mm panel thickness.
– Clean flanges and remove oxide layer using a stainless steel brush.
– Make plug weld, working outwards from centre.

Note

Riveting is also permissible in some cases. Refer to "Body repairs" workshop manual.

Protected by copyright. Copying for private or commercial purposes, in part or in whole, is not permitted unless authorised by AUDI AG. AUDI AG does not guarantee or accept any liability with respect to the correctness of information in this document. Copyright by AUDI AG.

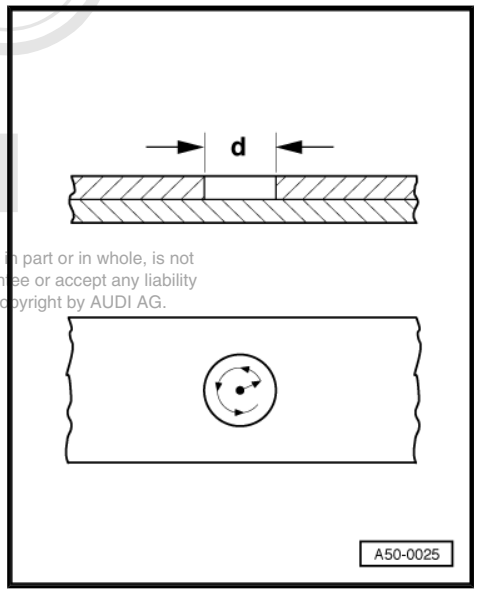

29 Welding aluminium

Inert gas welding (MIG) is a technique used both at the factory and in the workshop.

The inert gas used is argon.

AlSi 12 ∅ 1 mm or 1.2 mm is used as welding wire.

The welder has a current regulator on the handle.

Remove underseal and paint from parts prior to welding and then use stainless steel brush to remove oxide layer (approx. 40 mm on both sides).

Weld seams must always be continued around section corners to prevent crack formation.

Always use extractor -VAG 2011- when performing welding work.

Use 4D0 898 103 sheet metal for practice welding and repairs.

For further details refer to the training documentation on aluminium welding.

For correct welding power supply unit, inert gas and welding wire, refer to ⇒ catalogue for workshop equipment and special tools .

Protected by copyright. Copying for private or commercial purposes, in part or in whole, is not permitted unless authorised by AUDI AG. AUDI AG does not guarantee or accept any liability with respect to the correctness of information in this document. Copyright by AUDI AG.

30 Checking weld seams and aluminium node castings

The dye penetration test is suitable for identifying surface cracks.

> ⚠ WARNING
>
> *Do not brush off prior to testing, as this would fill in the cracks.*

All cracks must be ground out and rewelded.

Protected by copyright. Copying for private or commercial purposes, in part or in whole, is not permitted unless authorised by AUDI AG. AUDI AG does not guarantee or accept any liability with respect to the correctness of information in this document. Copyright by AUDI AG.

31 Laser weld seam

Aluminium laser welding was first introduced at Audi for the A2.

– Use grinder to cut open laser weld seam in upper panel.
– Detach part and use a chisel to remove any remaining material.

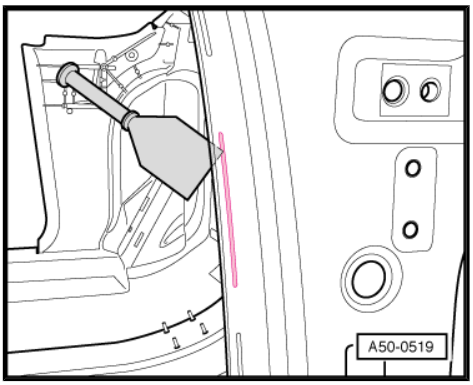

Protected by copyright. Copying for private or commercial purposes, in part or in whole, is not permitted unless authorised by AUDI AG. AUDI AG does not guarantee or accept any liability with respect to the correctness of information in this document. Copyright by AUDI AG.

32 Overview of rivets and tools

Special tools and workshop equipment required

- Pneumatic riveter -V.A.G 2002 B-
- Solid rivet N 103 239.01 4 x 8
- Solid rivet N 103 240.01 4 x 12

Special tools and workshop equipment required

- Pop rivet pliers -VAS 5072-
- Punch rivet 4d0 803 217 N 3.35 x 5
- Punch rivet 4d0 803 217 C 3.35 x 4

Special tools and workshop equipment required

- Pneumatic pop riveter -V.A.G 2003 A-
- Pop rivet N 906 634.01 6 x 9

Protected by copyright. Copying for private or commercial purposes, in part or in whole, is not permitted unless authorised by AUDI AG. AUDI AG does not guarantee or accept any liability with respect to the correctness of information in this document. Copyright by AUDI AG.

33 Riveting repairs

Punch rivets (self-piercing rivets)

– Start by performing separating cuts where necessary.

– Use riveting tool to press out punch rivet. Insert tip of press tool in stamped area of panel.

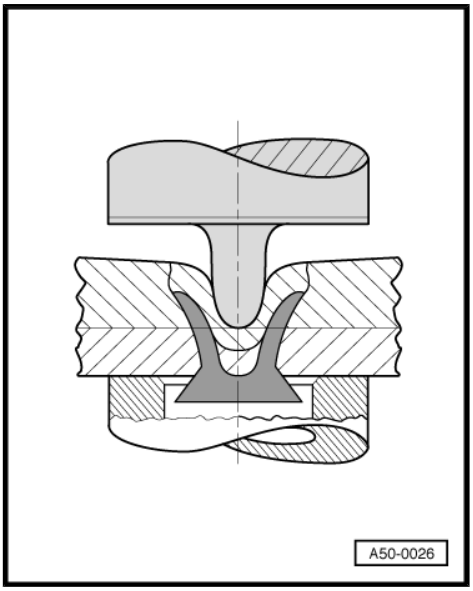

Note

Set riveting tool to material thickness for all operations. Roughly cut out damaged part if flange is not accessible with riveting tool.

WARNING

Punch rivets must not be drilled out or ground down.

Pressing out creates a hole in the inner panel and the punch rivet remains in the outer panel.

Different inserts must be used for the various rivet sizes.

– Use chisel to cut bonded joint and detach part.

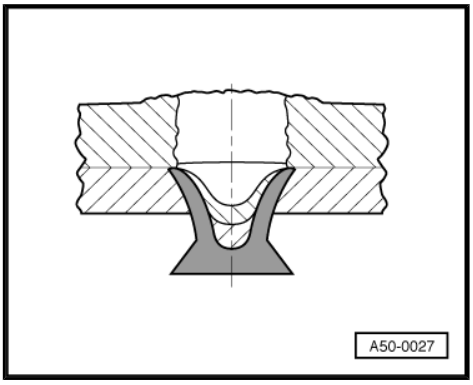

– If panel is undamaged, re-form flange with riveting tool.

– Match up new parts and fit solid or pop rivets as specified in Workshop Manual.

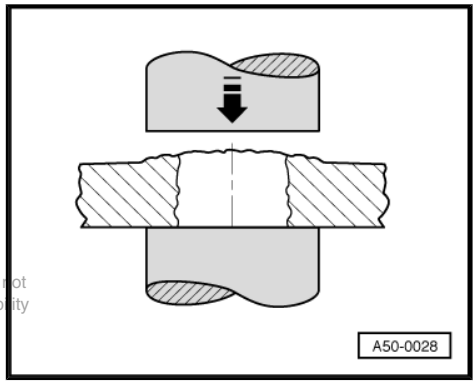

Note

Punch rivets are made of steel and have a special coating. If grinding produces sparks, this is an indication that there are remnants of the old punch rivet. Remove punch rivet remnants and change grinding disc.

Protected by copyright. Copying for private or commercial purposes, in part or in whole, is not permitted unless authorised by AUDI AG. AUDI AG does not guarantee or accept any liability with respect to the correctness of information in this document. Copyright by AUDI AG.

Note

If punch rivet is not accessible using riveting tool, you can use a nickel-plated spot weld cutter with spring-mounted tip (e.g. Hazet 1967) to drill off the aluminium around the rivet.

Should punch rivets drop into the interior of the vehicle they must be removed. A magnet can be used for this purpose.

34 Clinching

– Start by performing separating cuts where necessary.
– Use riveting tool to press back clinching points.

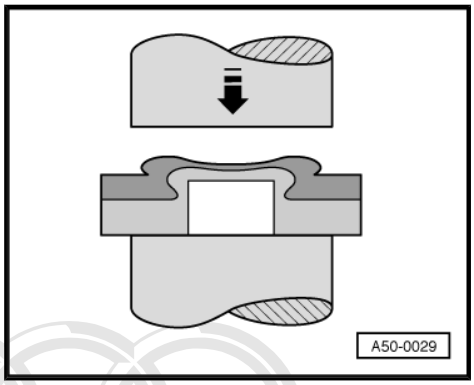

Note

Set riveting tool to material thickness for all operations.

– Detach damaged part (use a chisel if necessary).
– Match up new parts and fit solid rivets or pop rivets as specified in “Body repairs” workshop manual.

Protected by copyright. Copying for private or commercial purposes, in part or in whole, is not permitted unless authorised by AUDI AG. AUDI AG does not guarantee or accept any liability with respect to the correctness of information in this document. Copyright by AUDI AG.

35 Solid rivet

- Start by performing separating cuts where necessary.
- Grind off closing head and use riveting tool to press out solid rivet.
- Detach damaged part (use a chisel if necessary).
- Match up new parts and fit solid rivet.

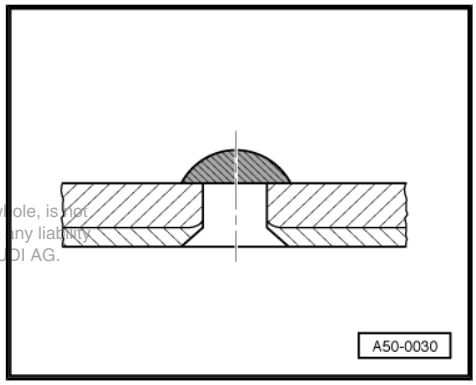

Protected by copyright. Copying for private or commercial purposes, in part or in whole, is not permitted unless authorised by AUDI AG. AUDI AG does not guarantee or accept any liability with respect to the correctness of information in this document. Copyright by AUDI AG.

36 Pop rivet

– Start by performing separating cuts where necessary.

– Drill off pop rivet (drill bit diameter 4.5 mm).

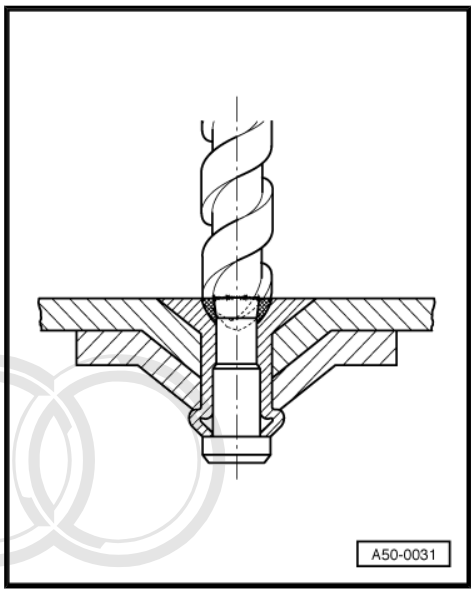

WARNING

Make sure you catch remnants of pop rivets. If remnants drop into cavities they must be bonded in with wax.

– Detach damaged part (use a chisel if necessary).

– Match up new parts and fit pop rivet.

Note

Rivet is made entirely of aluminium.

Protected by copyright. Copying for private or commercial purposes, in part or in whole, is not permitted unless authorised by AUDI AG. AUDI AG does not guarantee or accept any liability with respect to the correctness of information in this document. Copyright by AUDI AG.

37 Fitting solid rivets

– Match up new parts, apply adhesive, position new part on body and secure in place.

– Use riveting tool to punch flanges.

Piercing and stamping are performed in one operation.

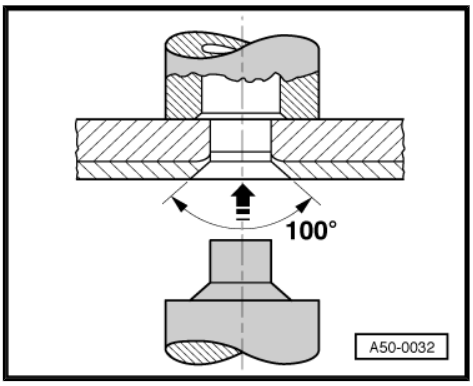

Note

Set riveting tool to material thickness for all operations. Insert suitable clamping pins in punched holes to stop flanges coming apart after punching.

– Insert solid rivet and use riveting tool to set closing head.

Appropriate inserts for the riveting tool are available for the various rivet diameters.

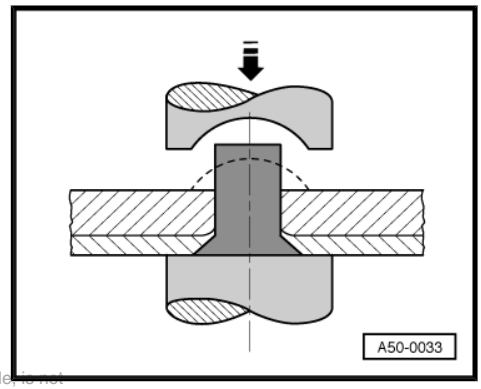

Note

In contrast to series production, all riveted joints also have to be bonded when performing repairs in the workshop. Refer to section on Bonded joint. Solid rivets are made of aluminium.

2 types of solid rivets are available:

Solid rivet ∅ 4 x 8 for joining 2 panels

Solid rivet ∅ 4 x 12 for joining 3 panels

Protected by copyright. Copying for private or commercial purposes, in part or in whole, is not permitted unless authorised by AUDI AG. AUDI AG does not guarantee or accept any liability with respect to the correctness of information in this document. Copyright by AUDI AG.

38 Fitting punch rivets

- Match up new parts, apply adhesive, position new part on body and secure in place.
- When using punch rivets it is not necessary to drill or punch holes.
- Position Rechargeable riveter -VAS 5279 A- and fit rivet.

2 types of punch rivets are available:

4D0 803217 N

4D0 803217 Q

Note

In contrast to series production, all riveted joints also have to be bonded when performing repairs in the workshop. Refer to section on Bonded joint. Punch rivets are made of aluminium.

Protected by copyright. Copying for private or commercial purposes, in part or in whole, is not permitted unless authorised by AUDI AG. AUDI AG does not guarantee or accept any liability with respect to the correctness of information in this document. Copyright by AUDI AG.

39 Fitting pop rivets

– Match up new parts, position on body and secure in place.

– Place new and old part/additional thickness of same material on top of each other and drill a hole (∅ 2.5 mm).

– Detach new parts.

– Use riveting tool to punch drilled holes in all parts.

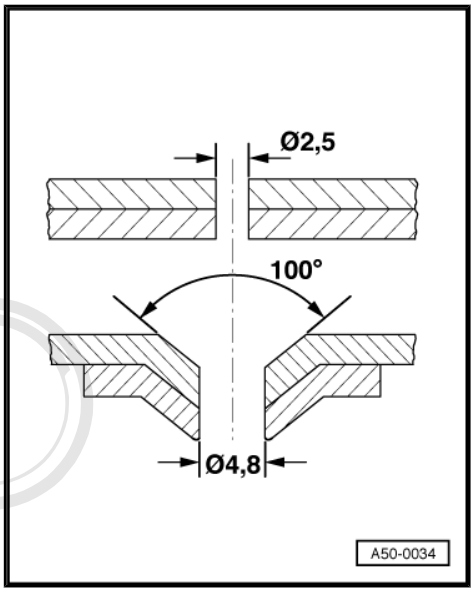

Note

Set riveting tool to material thickness for all operations. Punching enlarges the diameter to 4.8 mm. Punching must face inwards in all parts.

Extruded sections cannot be punched. Drill into new part with extruded section, detach part and enlarge hole in extruded section to ∅ 4.8 mm.

– Apply adhesive.

– Fit pop rivet and use riveter to pull off pin.

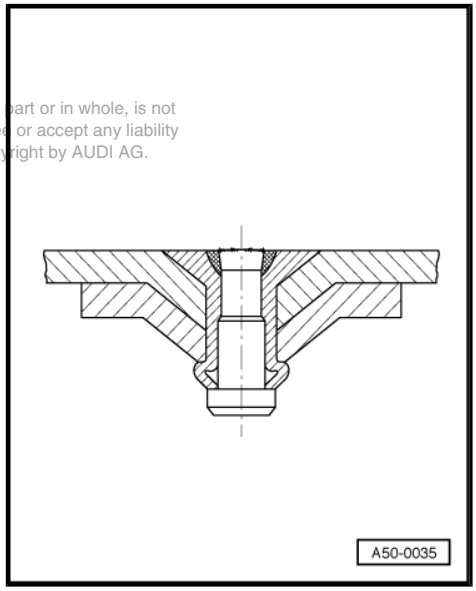

Note

Protected by copyright. Copying for private or commercial purposes, in part or in whole, is not permitted unless authorised by AUDI AG. AUDI AG does not guarantee or accept any liability with respect to the correctness of information in this document. Copyright by AUDI AG.

In contrast to series production, all riveted joints also have to be bonded when performing repairs in the workshop. Refer to section on Bonded joint. Rivets are made entirely of aluminium.

WARNING

Rivets with steel pins must NOT be used.

40 Incorrect riveting

Gaps

Gaps along the entire circumference are not permissible. Gaps along part of the circumference are permissible up to a gap width of 0.04 mm.

You can use e.g. a tool insert from the riveting set to drive rivet in further, but make sure that closing head and rivet head tolerances are observed.

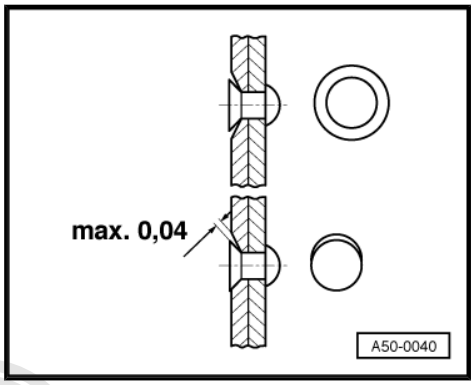

Rivet heads do not make full contact

Loose rivets are not permitted under any circumstances.

Partial gaps of up to 0.05 mm can sometimes be permissible.

Air gap

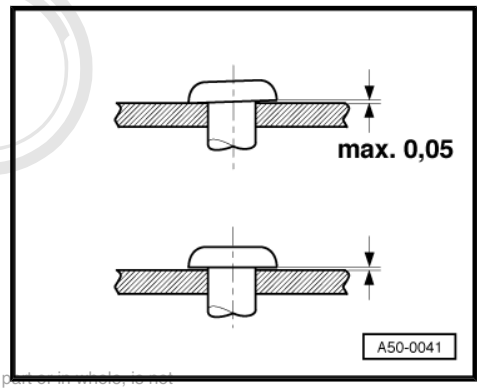

Protected by copyright. Copying for private or commercial purposes, in part or in whole, is not permitted unless authorised by AUDI AG. AUDI AG does not guarantee or accept any liability with respect to the suitability of the information or document. Copyright by AUDI AG.

During the riveting process the rivet material is pressed into the gap, subjecting the rivet to bending stress.

Note

Not permissible

Bulging

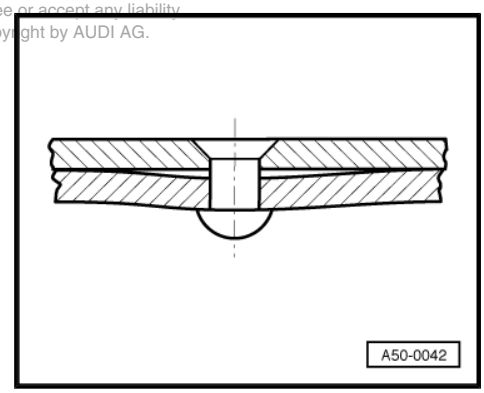

Bulges must not exceed a gap width of 0.3 mm.

Shear cracks

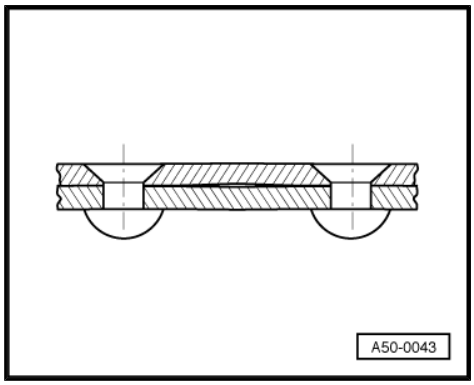

Intersecting cracks are not permitted.

Permissible

Not permissible

Indentation

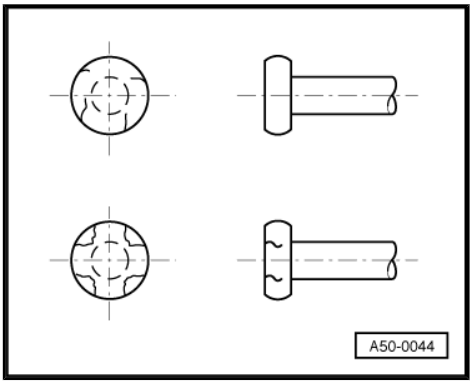

Permissible indentation depth 1/4 x head height

Rings

Rings occur if the tool insert used (from riveting set) was too small.

permitted unless authorised by AUDI AG. AUDI AG does not guarantee or accept any liability with respect to the correctness of information in this document. Copyright by AUDI AG.

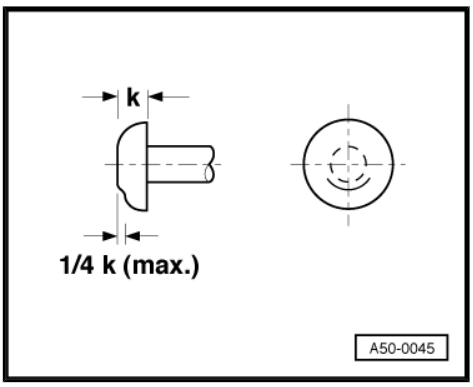

Not permissible

Offset closing head

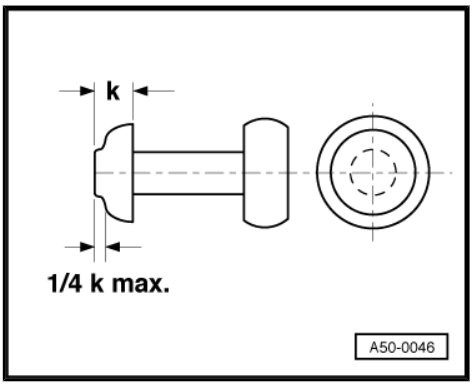

Not permissible if closing head makes contact with shank circle and rivet hole is visible.

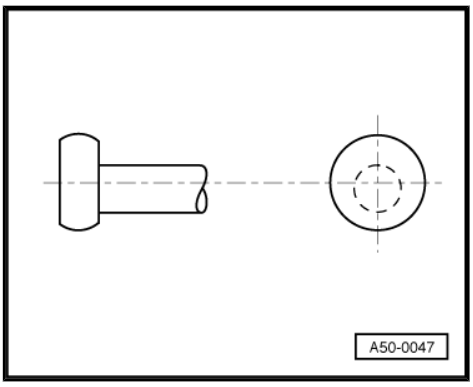

41 Joddling

– Joddle using a suitable joddling tool.

Note

In the case of separating cuts allow 22 mm for overlap. Place additional thickness of same material behind joint if joddling is not possible.

Provide upper panel with 45° bevel and file down edges to permit subsequent filling of separating cut.

A special metal filler is available for this purpose. Refer to ETKA.

Note

The filler is applied to the bright aluminium. The filler hardens at 120° C.

Protected by copyright. Copying for private or commercial purposes, in part or in whole, is not permitted unless authorised by AUDI AG. AUDI AG does not guarantee or accept any liability with respect to the correctness of information in this document. Copyright by AUDI AG.

42 Placing additional thickness of same material behind joint

The additional thickness of same material -C- is made from remnants of new part -B- or old part -A-. Also place additional thickness of same material behind joint at beaded panel edges. The material is cut for small cross-sections or large panel edges.

– Bevel both panels to an angle of 45°. Round off outer edge (radius = R3) and chamfer inner edge.

There must be a gap of 3 to 4 mm between panel tips.

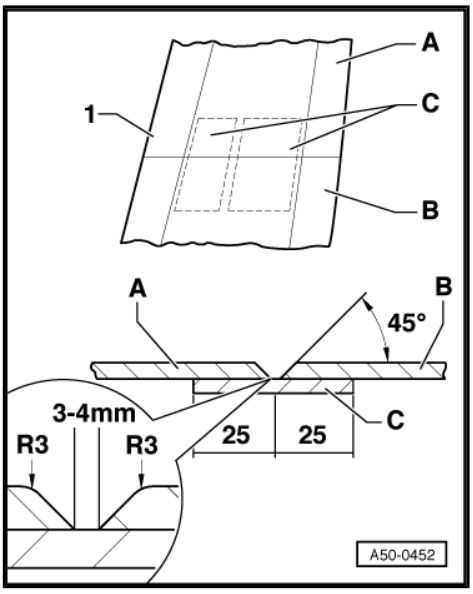

Protected by copyright. Copying for private or commercial purposes, in part or in whole, is not permitted unless authorised by AUDI AG. AUDI AG does not guarantee or accept any liability with respect to the correctness of information in this document. Copyright by AUDI AG.

43 Filling separating cuts

A special aluminium filler is available for this purpose (aluminium powder DA 004 200 A2 and hardener DA 004 201 A1). Hardener DA 004 211 A1 must be used at temperatures above 20° C and/ or if relative humidity is greater than 80 %.

– Observe instructions for use as stated on container.
– Use stainless steel wire brush to remove remnants of adhesive from gap.
– Apply filler to bright aluminium and fill gap to panel height.
– Allow filler to dry for approx. 20 minutes at room temperature until the surface is a matt grey colour.
– Allow filler to harden under hot-air blower or infrared lamp at 120° C for approx. 20 minutes.
– Sand down filler.

Protected by copyright. Copying for private or commercial purposes, in part or in whole, is not permitted unless authorised by AUDI AG. AUDI AG does not guarantee or accept any liability with respect to the correctness of information in this document. Copyright by AUDI AG.

44 Bonded joint

WARNING

Pre-treatment applies to old flange only.

– Remove remnants of adhesive, paint, wax, etc.
– Sand bonding surface down to bare metal using a clean sanding disk (grain size 80 or 100).
– Treat flanges with sanding stone DA 009 800 and holder - VAG 1931- .

A silicate adhesive layer is formed which ensures long-term durability of the bonded joint. The surface becomes matt.

– Use clean brush to remove sanding dust.

Do NOT use solvents.

– Use brush to apply thin coat of aluminium primer DA 009 801 and allow to flash off.

Pre-treatment - applies to replacement part only

– Clean painted flange using D 009 401.04.

WARNING

Mask bonding surfaces when painting inner sides.

Protected by copyright. Copying for private or commercial purposes, in part or in whole, is not permitted unless authorised by AUDI AG. AUDI AG does not guarantee or accept any liability with respect to the correctness of information in this document. Copyright by AUDI AG.

– Apply adhesive DA 001 730 A1 to body side, join parts and secure in position. Diameter of adhesive bead: 3.5 mm

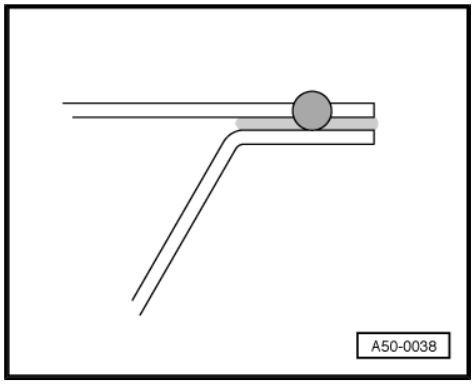

Parts must be joined and secured in position within 30 minutes as otherwise the formation of a surface skin will result in inadequate adhesion at the flanges.

– Fit rivets and wipe off emerging adhesive.

At temperatures up to 20° C, rivets must be fitted within 150 minutes and at temperatures above 20° C within 40 minutes starting from application of adhesive.

Note

- *If adhesive comes out on both sides over the full length of the joint, this indicates that sufficient adhesive has been applied.*
- *1x 37 ml cartridge is sufficient for a flange length of approx. 4 m.*

Adhesive must cure before performing further surface work.

Curing times:

20° C 8 h

80° C 20 min.

Note

Protected by copyright. Copying for private or commercial purposes, in part or in whole, is not permitted unless authorised by AUDI AG. AUDI AG does not guarantee or accept any liability with respect to the correctness of information in this document. Copyright by AUDI AG.

- *For large parts, e.g. roof, the assistance of a second person is required, as otherwise adhesive will dry before work is completed.*
- *Ensure the openings of the double cartridge are clean before fitting the mixing nozzle. With mixing nozzle firmly in position, press out an approx. 10 cm long bead and apply adhesive.*
- *In the event of interruptions lasting up to 30 minutes, press out and discard an approx. 10 cm long bead to ensure that new material is properly mixed. In the event of interruptions lasting longer than 30 minutes, replace mixing nozzle and press out a 10 cm long bead. If several cartridges are required for repair work, the same mixing nozzle can be used.*

45 Inaccessible rivets

- Remove paint and oxide layer at rivet head and attachment point for earth clamps.
- Fit earth clamps as close as possible to rivets.
- Set welding current to display setting 150 on dent remover for aluminium vehicles -VAS 5196- .
- Weld on 4 mm weld studs using -VAS 5196/1- .

Protected by copyright. Copying for private or commercial purposes, in part or in whole, is not permitted unless authorised by AUDI AG. AUDI AG does not guarantee or accept any liability with respect to the correctness of information in this document. Copyright by AUDI AG.

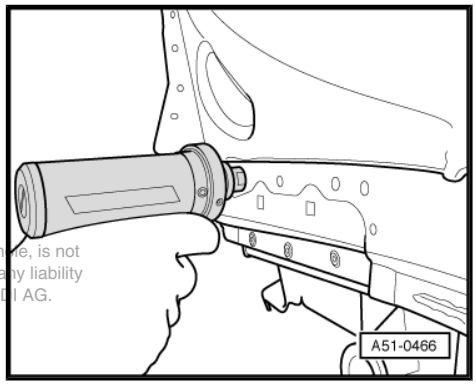

- Pull out weld studs using pneumatic pop riveter -V.A.G 2003- and nozzle from supplementary set pop riveter -V.A.G 2003/1- .

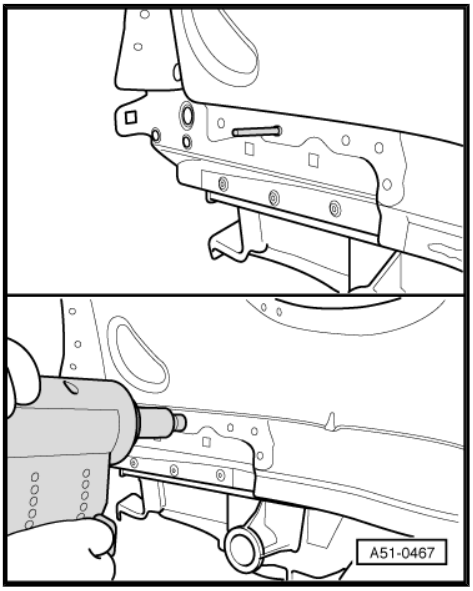

46 Explanation of symbols

Symbols for welding operations

SG continuous seam

SG continuous seam (staggered - with gaps)

SG stepped seam (stitch seam)

SG plug weld seam SG = shielded arc welding

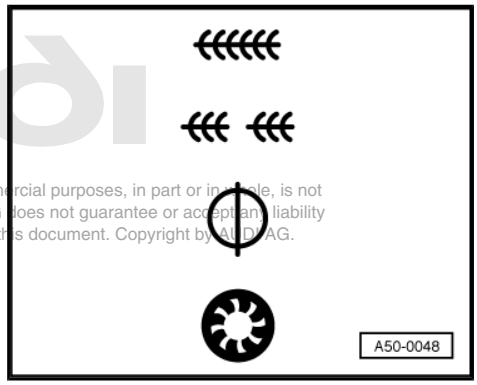

Protected by copyright. Copying for private or commercial purposes, in part or in whole, is not permitted unless authorised by AUDI AG. AUDI AG does not guarantee or accept any liability with respect to the correctness of information in this document. Copyright by AUDI AG.

47 Explanation of symbols for riveting operations

Solid rivet with countersunk head

Pop rivet with countersunk head

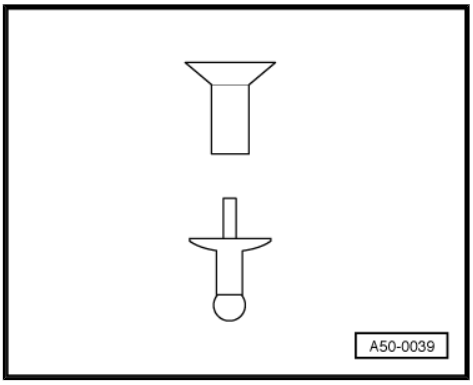

Protected by copyright. Copying for private or commercial purposes, in part or in whole, is not permitted unless authorised by AUDI AG. AUDI AG does not guarantee or accept any liability with respect to the correctness of information in this document. Copyright by AUDI AG.

48 Explanation of symbols

Joddling

– For overlap riveting

Punching holes

– For subsequent SG plug welding

Drilling

– For subsequent SG plug welding or drilling out clinching points (original joint) or drilling locating holes

Protected by copyright. Copying for private or commercial purposes, in part or in whole, is not permitted unless authorised by AUDI AG. AUDI AG does not guarantee or accept any liability with respect to the correctness of information in this document. Copyright by AUDI AG.

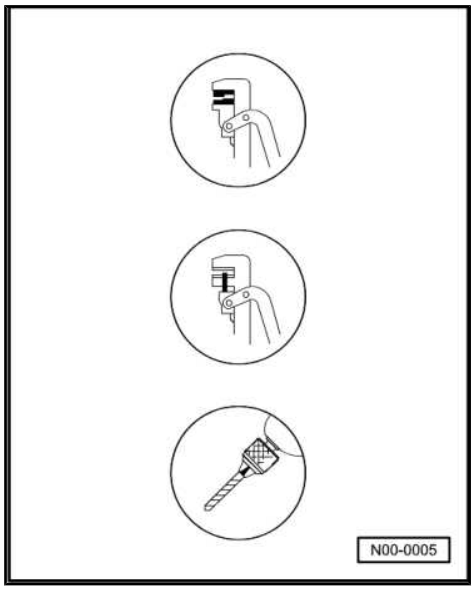

49 Cavity sealing

– Wax spray gun

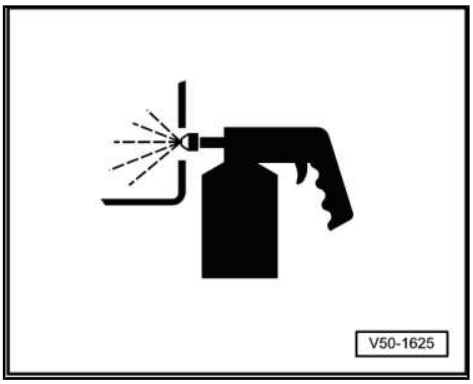

Bonding

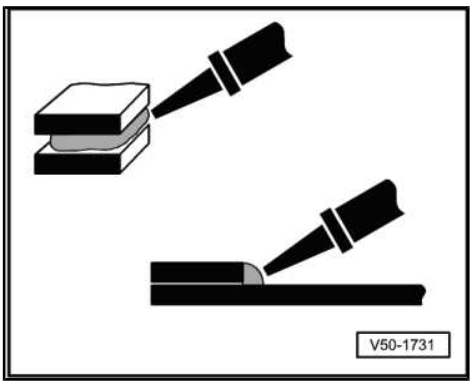

Protected by copyright. Copying for private or commercial purposes, in part or in whole, is not permitted unless authorised by AUDI AG. AUDI AG does not guarantee or accept any liability with respect to the correctness of information in this document. Copyright by AUDI AG.