Fastener Tightening Specifications

Application	Specification	
	Metric	English
Fuel Filler Door Bolts	2.5 N·m	22 lb in
Front Door Check Link Bolts	10 N·m	89 lb in
Front Door Check Link to Body	20 N·m	15 lb ft
Front Door Hinge To Body Bolts	36 N·m	27 lb ft
Front Door Hinge To Door Bolts	25 N·m	18 lb ft
Front Fender Bolts	9 N·m	80 lb in
Front Outer Door Panel Bolts	8 N·m	71 lb in
Hood Hinge Bolts	25 N·m	18 lb ft
Hood Latch Bolts	10 N·m	89 lb in
Liftgate Hinge Bolts	25 N·m	18 lb ft
Liftgate Hinge Nuts	25 N·m	18 lb ft
Liftgate Strut Anchor	25 N·m	18 lb ft
Quarter Panel Bolts	9 N·m	80 lb in
Quarter Panel Nuts	9 N·m	80 lb in
Rear Door Check Link Bolts	10 N·m	89 lb in
Rear Door Check Link to Body Bolt	20 N·m	15 lb ft
Rear Door Hinge To Body Bolts	36 N·m	27 lb ft
Rear Door Hinge To Door Bolts	25 N·m	18 lb ft
Rear Outer Door Panel Bolts	8 N·m	71 lb in
Hood Latch Release Cable Bolt	9 N·m	80 lb in
Fuel Tank Filler Door Bolt	2.5 N·m	22 lb in
Hood Latch Release Handle Screw	10 N·m	89 lb in

cardiagn.com

Hood Primary Latch Release Cable Replacement

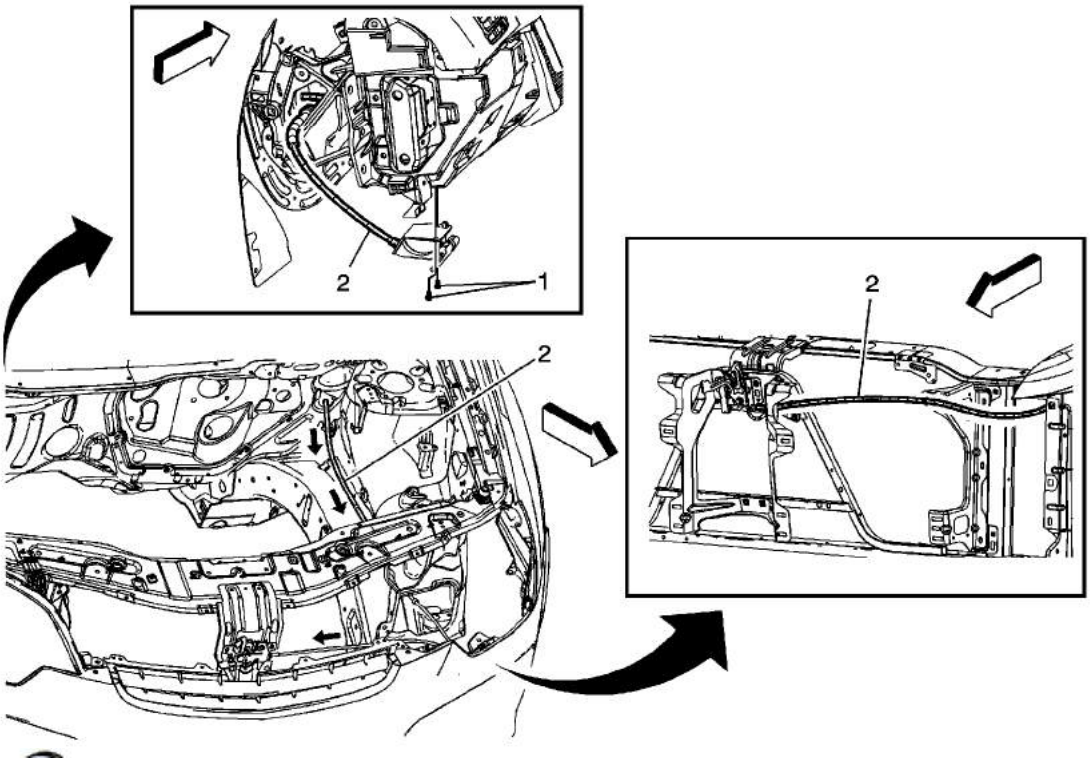

Callout	Component Name
Preliminary Procedures 1. Remove the headlamps. Refer to Headlamp Replacement. 2. Remove the hood release handle. Refer to Hood Primary Latch Release Cable Handle Replacement. 3. Remove the front compartment front sight shield. Refer to Front Compartment Sight Shields Replacement.	
1	Hood Latch Release Cable Bolt (Qty: 2) **Caution:** Refer to Fastener Caution in the Preface section. **Tighten** 9 N·m (80 lb in)
2	Hood Latch Release Cable **Procedure** 1. Disconnect the hood release cable from the hood latch by squeezing the hood release cable retainer.

© 2010 General Motors Corporation. All rights reserved.

cardiagn.com

	3. Release the cable from the latch assembly and pull through the dash panel.

cardiagn.com

Front Side Door Adjustment

Warning: In order to prevent SIR deployment, personal injury, or unnecessary SIR system repairs, do not strike the door or the door pillar in the area of the side impact sensor (SIS). Turn OFF the ignition and remove the key when performing service in the area of the SIS.

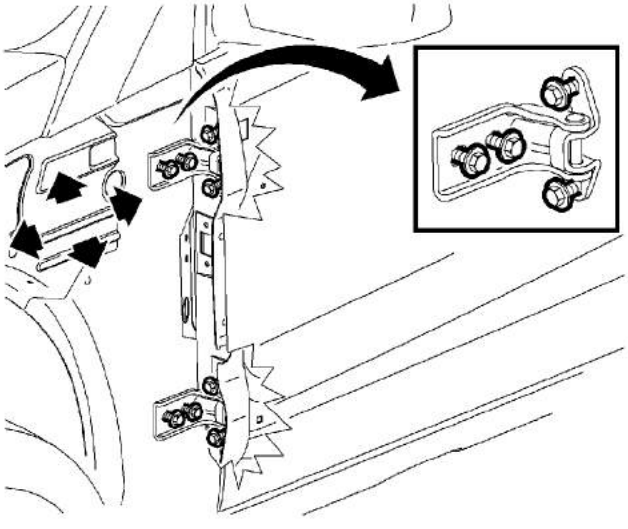

1. Remove the door lock striker. Refer to Front Side Door Lock Striker Replacement.
2. For up, down, forward, or rearward adjustment, loosen the hinge to hinge pillar bolts.
3. Move the door within the door opening to achieve the best alignment and operation.

   Caution: Refer to Fastener Caution in the Preface section.

4. Tighten all of the hinge fasteners that were loosened.

   Tighten
   Tighten the hinge fasteners to 25 N·m (18 lb ft).

5. Install the striker to the approximate proper position.
6. Adjust the door striker. Refer to Front Side Door Lock Striker Adjustment.
7. Inspect the door weatherstrips for proper fit.

cardiagn.com

Front Side Door Replacement

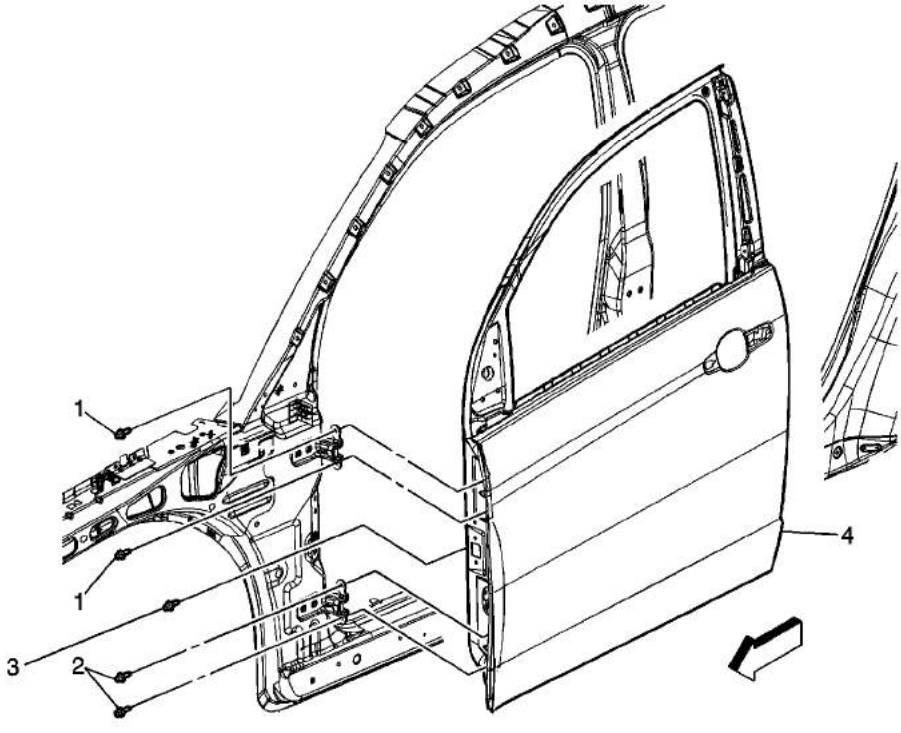

Callout	Component Name
Preliminary Procedures 1. Disable the supplemental inflatable restraint (SIR) system. Refer to SIR Disabling and Enabling. 2. Remove the front door trim panel. Refer to Front Side Door Trim Panel Replacement. 3. Remove front door check link bolt. Refer to Front Side Door Check Link Replacement.	
1	Front Side Door Bolt (Qty: 4) **Caution:** Refer to Fastener Caution in the Preface section. **Tighten** 25 N·m (18 lb ft)
2	Front Side Door **Procedure** 1. Remove the water deflector. 2. Support the door before removing the hinge bolts. 3. Disconnect the electrical connector, if equipped.

© 2010 General Motors Corporation. All rights reserved.

cardiagn.com

	6. Verify door is properly aligned. If door adjustments are needed, refer to Front Side Door Adjustment.

cardiagn.com

Rear Side Door Adjustment

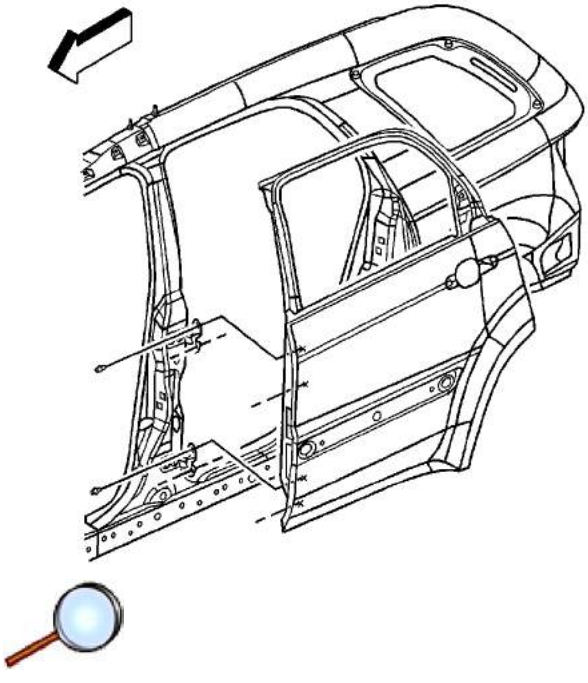

Warning: In order to prevent SIR deployment, personal injury, or unnecessary SIR system repairs, do not strike the door or the door pillar in the area of the side impact sensor (SIS). Turn OFF the ignition and remove the key when performing service in the area of the SIS.

1. Remove the door striker. Refer to Rear Side Door Lock Striker Replacement.
2. For up, down, forward, or rearward adjustment, loosen the hinge to hinge pillar bolts.
3. Move the door within the door opening to achieve the best alignment and operation.

   Caution: Refer to Fastener Caution in the Preface section.

4. Tighten all of the hinge fasteners that were loosened.

   Tighten
   Tighten the hinge fasteners to 25 N·m (18 lb ft).

5. Install the striker to the approximate proper position.
6. Adjust the door striker. Refer to Rear Side Door Lock Striker Adjustment.
7. Inspect the door weatherstrips for proper fit.

cardiagn.com

Rear Side Door Replacement

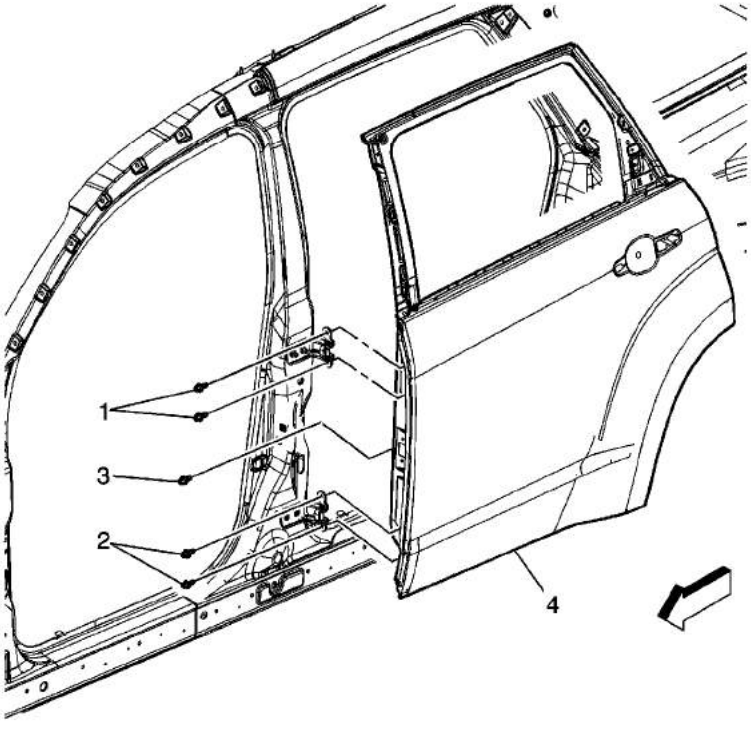

Callout	Component Name
Warning: Refer to SIR Warning in the Preface section. **Preliminary Procedures** 1. Disable the supplemental inflatable restraint (SIR) system. Refer to SIR Disabling and Enabling. 2. Remove the rear door trim panel. Refer to Rear Side Door Trim Panel Replacement. 3. Remove rear side door check link. Refer to Rear Side Door Check Link Replacement.	
1	Rear Side Door Bolt (Qty: 4) **Caution:** Refer to Fastener Caution in the Preface section. **Tighten** 25 N·m (18 lb ft)
	Rear Side Door Assembly **Procedure** 1. Remove the water deflector.

© 2010 General Motors Corporation. All rights reserved.

cardiagn.com

2	4. With the aid of an assistant, remove the door. 5. If installing new door, transfer all necessary components. 6. Verify door is properly aligned. If door adjustments are needed, refer to Rear Door Adjustment.

cardiagn.com

Front Fender Replacement

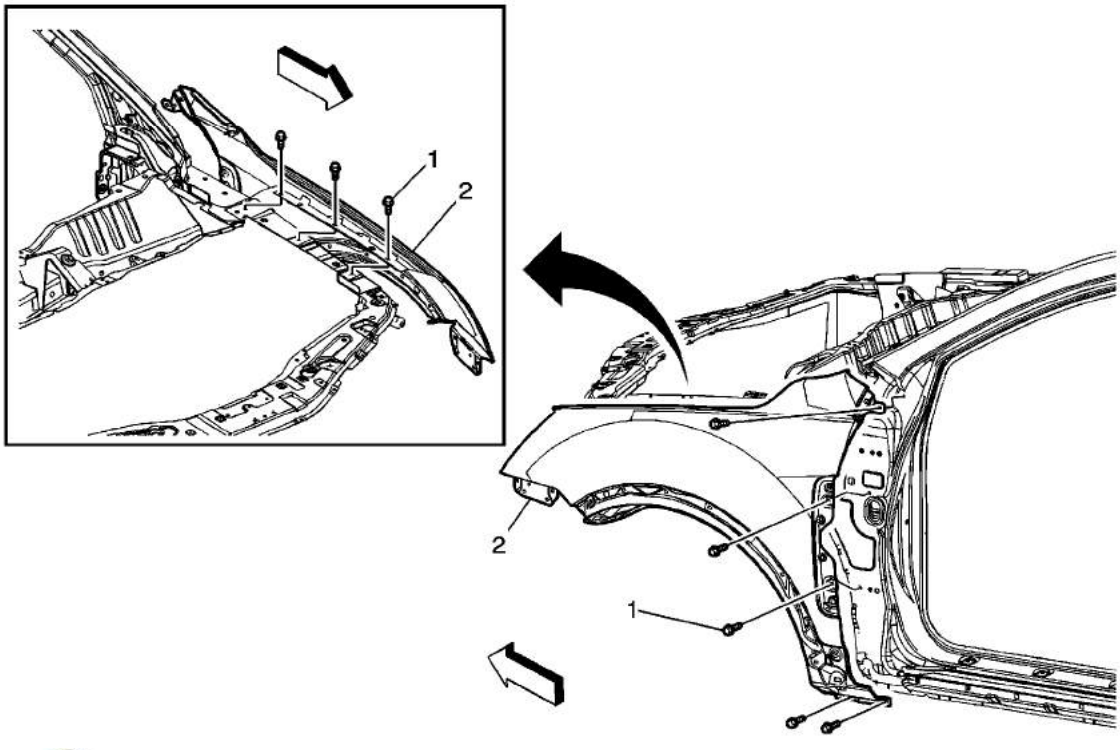

Callout	Component Name
Preliminary Procedures 1. Remove the bumper fascia. Refer to Front Bumper Fascia Replacement. 2. Remove Front Fender Wheel Opening Molding. Refer to Front Fender Wheel Opening Molding Replacement. 3. Remove the wheelhouse liner. Refer to Front Wheelhouse Liner Replacement. 4. Remove the rocker panel molding. Refer to Rocker Panel Molding Replacement. 5. Remove the front fender center molding. Refer to Front Fender Center Molding Replacement.	
1	Front Fender Bolt (Qty: 9) **Caution:** Refer to Fastener Caution in the Preface section. **Tighten** 9 N·m (80 lb in)
2	Front Fender

cardiagn.com

Liftgate Adjustment

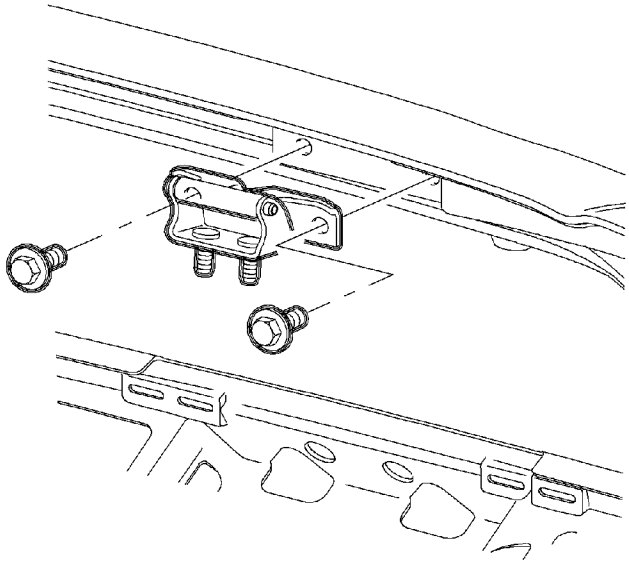

1. Note the original position of the liftgate latch striker.
2. Remove the striker.
3. Loosen the hinge-to-roof panel bolts for forward or rearward adjustments.
4. If Adjusting hinge to roof panel Bolts. Lower Rear And Headliner if as needed.
5. Loosen the liftgate-to-hinge bolts for up and down adjustment.
6. Move the liftgate within the liftgate opening to achieve the best alignment and operation.
7. Install striker to approximately the proper position.
8. Adjust the striker to achieve the best operation and alignment of the liftgate.
9. Inspect the seals for proper engagement.

   Caution: Refer to Fastener Caution in the Preface section.

10. Tighten the bolts when the proper adjustment is achieved.

    Tighten
    Tighten the bolts to 25 N·m (18 lb ft).

cardiagn.com

Liftgate Replacement

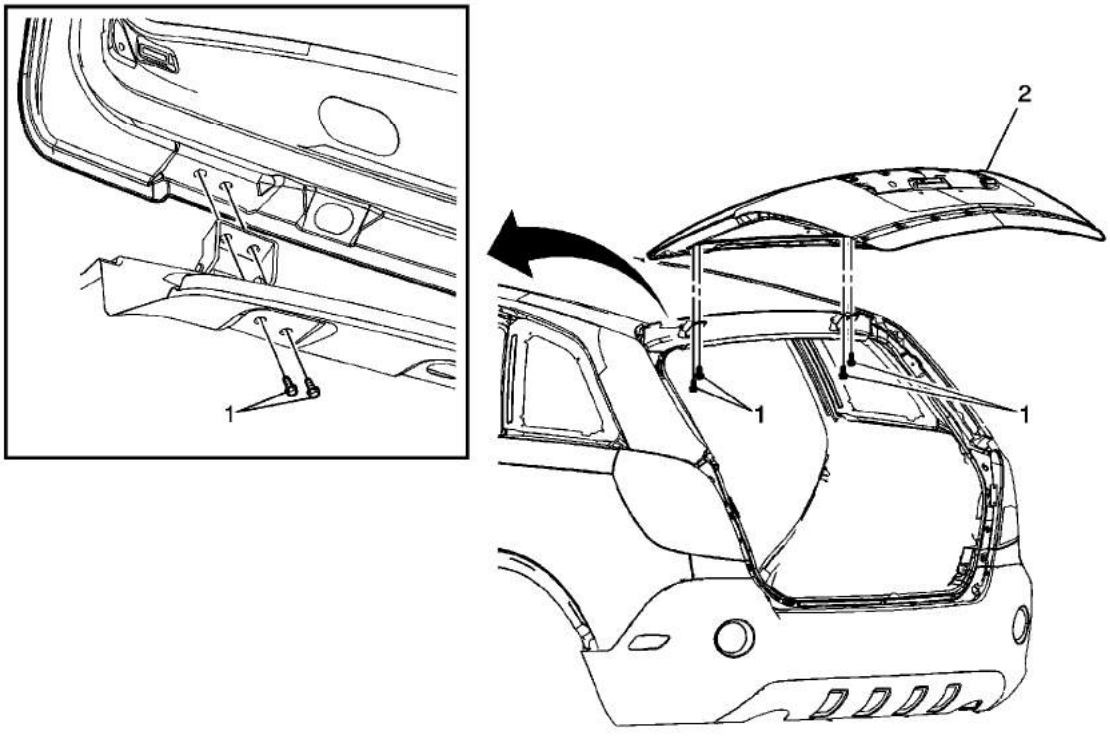

Callout	Component Name
Warning: When a lift gate hold open device is being removed or installed, provide alternate support to avoid the possibility of damage to the vehicle or personal injury. **Preliminary Procedures** 1. Disconnect the strut rods. Refer to Liftgate Strut Replacement. 2. Remove the rear door upper garnish molding. Refer to Liftgate Garnish Molding Replacement.	
1	Liftgate Body Side Hinge Bolt (Qty: 4) **Caution:** Refer to Fastener Caution in the Preface section. **Tighten** 25 N·m (18 lb ft)
2	Liftgate **Procedure** 1. Disconnect the electrical connector.

© 2010 General Motors Corporation. All rights reserved.

cardiagn.com

cardiagn.com

Hood Primary Latch Release Cable Handle Replacement

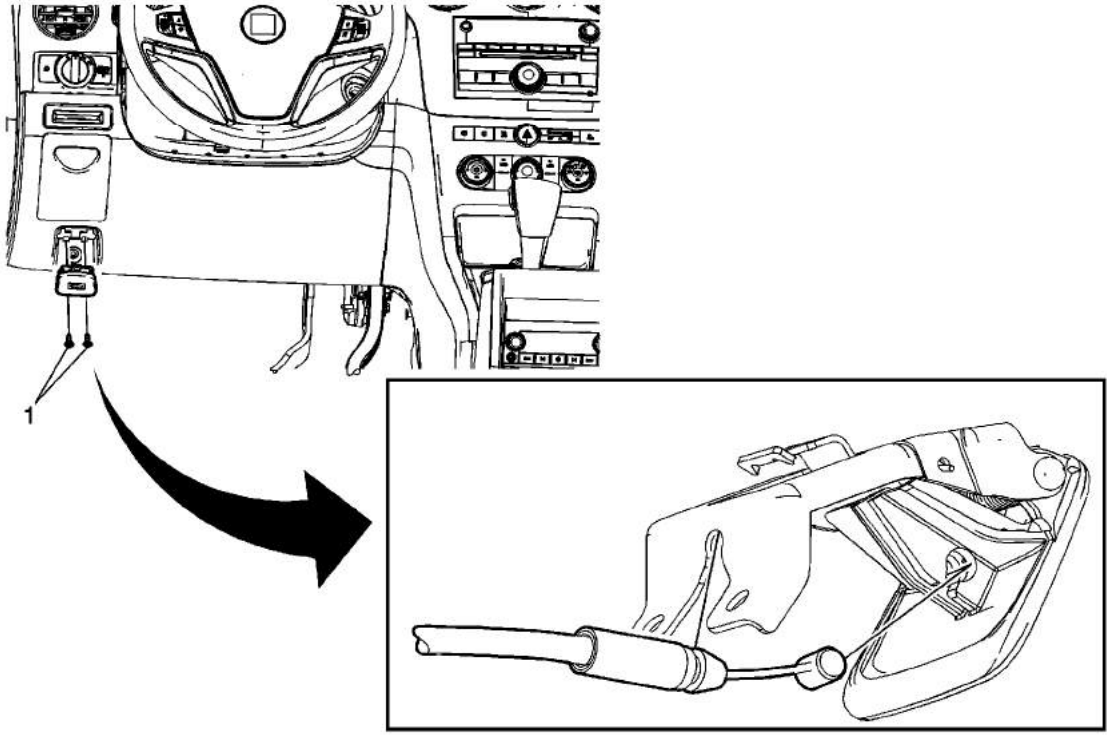

Callout	Component Name
1	Hood Latch Release Handle Screw (Qty: 2) **Caution:** Refer to Fastener Caution in the Preface section. **Tighten** 10 N·m (89 lb in)
2	Hood Latch Release Handle **Tip** To release the handle, pull down the cable and unhook from the handle.

cardiagn.com

Front Side Door Upper Hinge and Lower Hinge Replacement

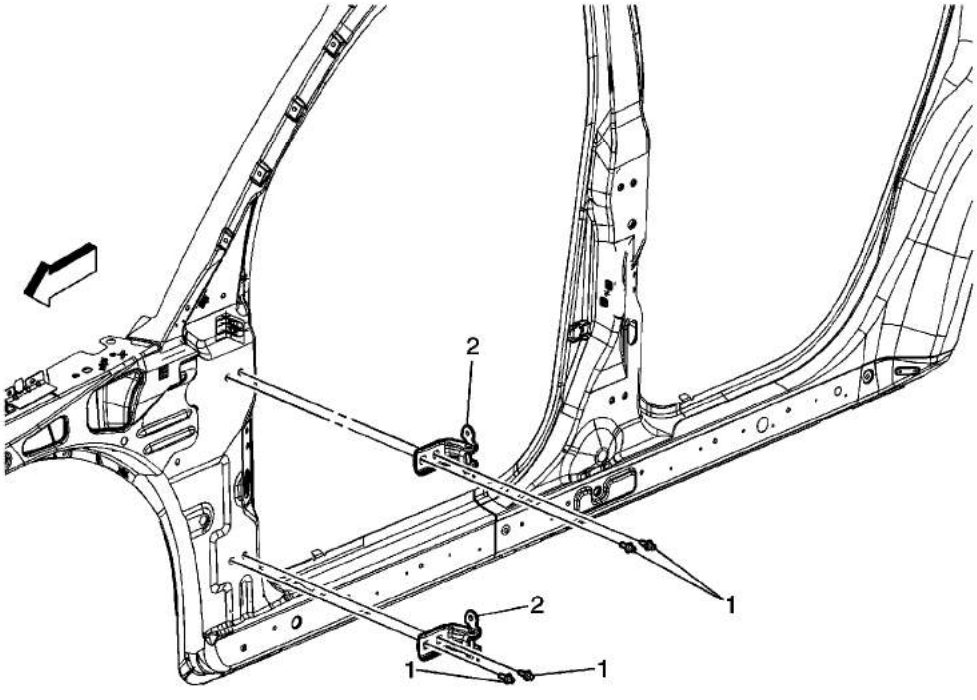

Callout	Component Name
Preliminary Procedures 1. Remove front fender. Refer to Front Fender Replacement. 2. Remove front door. Refer to Front Side Door Replacement. 3. Remove the insulator pad between the fender and the hinge pillar to remove bolts.	
1	Front Side Door Hinge to Body Bolt (Qty: 4) **Caution:** Refer to Fastener Caution in the Preface section. **Tighten** 36 N·m (26 lb ft)
	Front Side Door Hinge Assembly **Procedure** 1. If installing new door, transfer all necessary components. 2. Verify door is properly aligned. If door adjustments are needed, refer to Front

© 2010 General Motors Corporation. All rights reserved.

cardiagn.com

2	**Tip** Support the door during procedure. Use a soft marker to outline around the outside of hinge for install purposes. When re-installing door, align hinge with marks made during removal procedures.

cardiagn.com

Hood Hinge Replacement

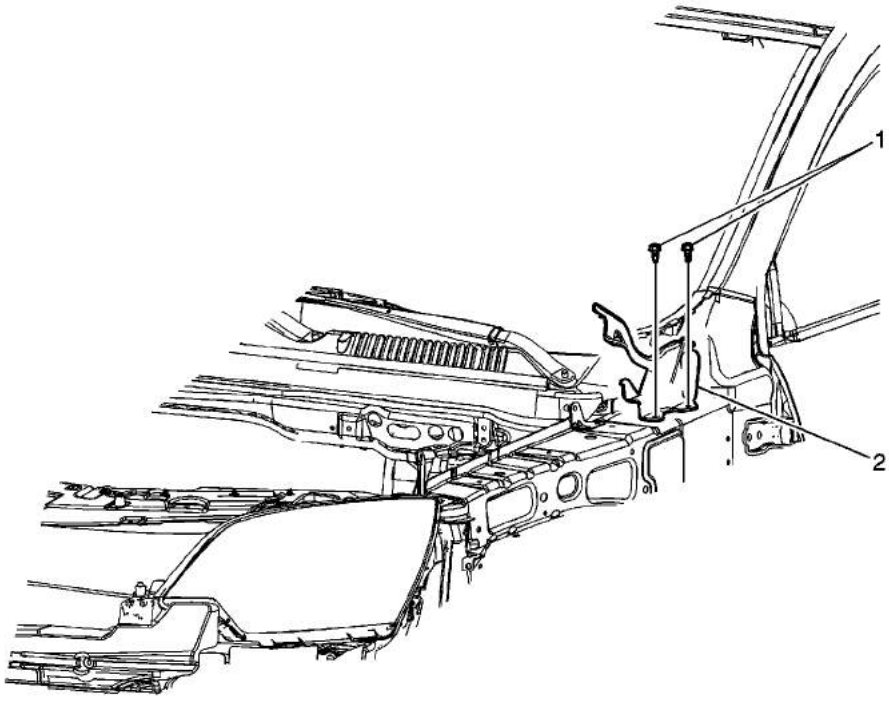

Callout	Component Name
Preliminary Procedures 1. Remove the hood. Refer to Hood Replacement. 2. Remove the front fender. Refer to Front Fender Replacement.	
1	Hood Hinge Bolt (Qty: 4) **Caution:** Refer to Fastener Caution in the Preface section. **Tighten** 25 N·m (18 lb ft)
2	Hood Hinge **Tip** Adjust the hood hinge, if needed. Refer to Hood Adjustment.

cardiagn.com

Liftgate Hinge Replacement

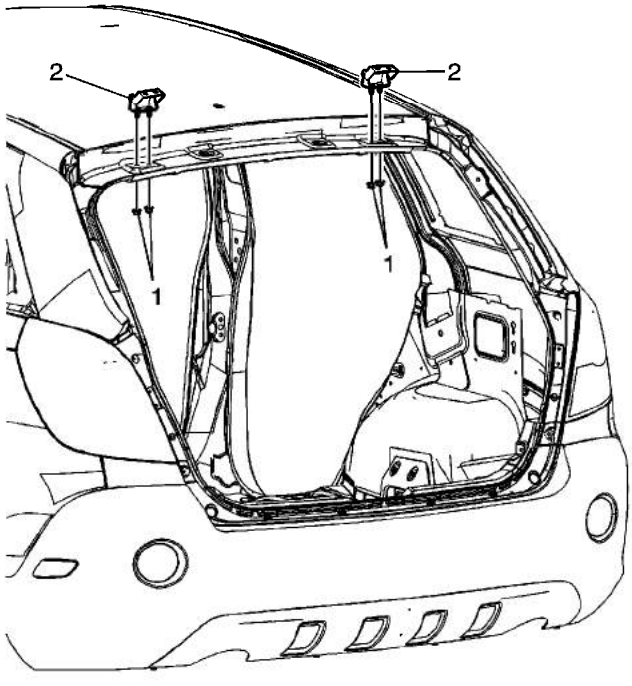

Callout	Component Name
Preliminary Procedures 1. Remove the liftgate. Refer to Liftgate Replacement. 2. Drop the rear of the headliner to access the bolts. Refer to headliner replacement. Headlining Trim Panel Replacement. 3. Use a grease pencil to mark the liftgate hinge position to the body prior to removal.	
1	Liftgate Hinge Nut (Qty: 2) **Caution:** Refer to Fastener Caution in the Preface section. **Tighten** 25 N·m (18 lb ft)
2	Liftgate Hinge **Procedure** • Adjust the liftgate, if needed. Refer to Liftgate Adjustment. • Inspect the hinge gasket and replace if damaged or torn.

cardiagn.com

Rear Side Door Upper Hinge and Lower Hinge Replacement

Removal Procedure

Warning: In order to prevent SIR deployment, personal injury, or unnecessary SIR system repairs, do not strike the door or the door pillar in the area of the side impact sensor (SIS). Turn OFF the ignition and remove the key when performing service in the area of the SIS.

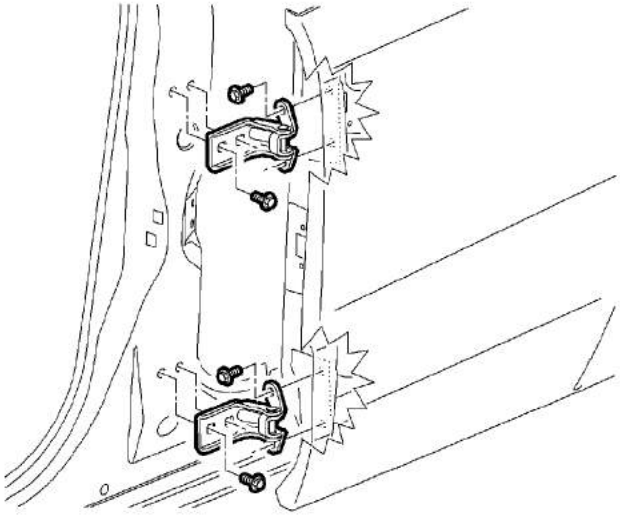

1. Mark around the hinge location with a soft marker for installation alignment purposes.
2. Support the door.
3. With the door fully latched on the striker, remove the hinge to door bolts.
4. Remove the hinge to body bolts and remove the hinges one at a time.

Installation Procedure

cardiagn.com

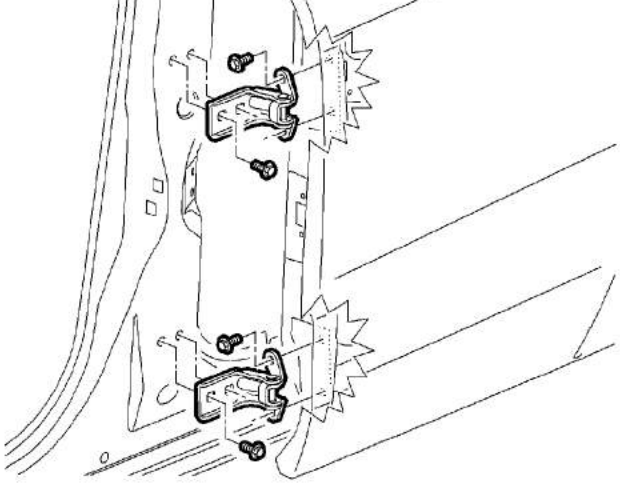

1. Position the hinge to the vehicle with the marks made prior to removal.

   Caution: Refer to Fastener Caution in the Preface section.

2. Install the hinge to door bolts.

   Tighten
   Tighten the bolts to 25 N·m (18 lb ft).

3. Install the hinge to body bolts.

   Tighten
   Tighten the bolts to 36 N·m (27 lb ft).

4. Inspect the door for proper alignment. Refer to Rear Door Adjustment.

cardiagn.com

Hood Adjustment

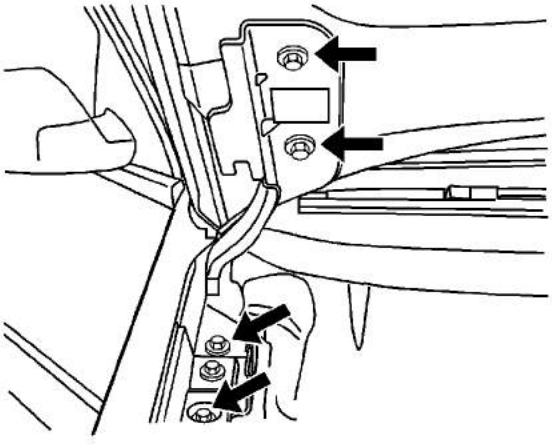

1. Loosen the hinge-to-body bolts to adjust the hood fore and aft, and cross-vehicle. Position the hood as needed.

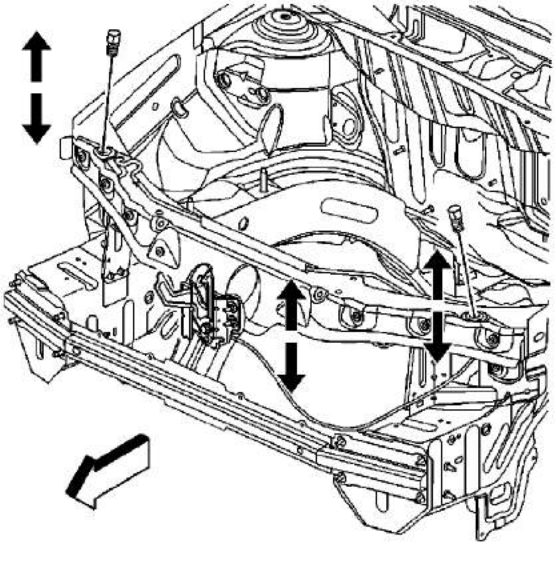

2. Adjust the hood latch and hood bumpers to adjust the hood up and down at the front of the hood.

   Caution: Refer to Fastener Caution in the Preface section.

cardiagn.com

Tighten

- Tighten the hinge-to-hood bolts to 25 N·m (18 lb ft).
- Tighten the hinge-to-body bolts to 25 N·m (18 lb ft).
- Tighten the hood latch fastener to 25 N·m (18 lb ft).

cardiagn.com

Hood Replacement

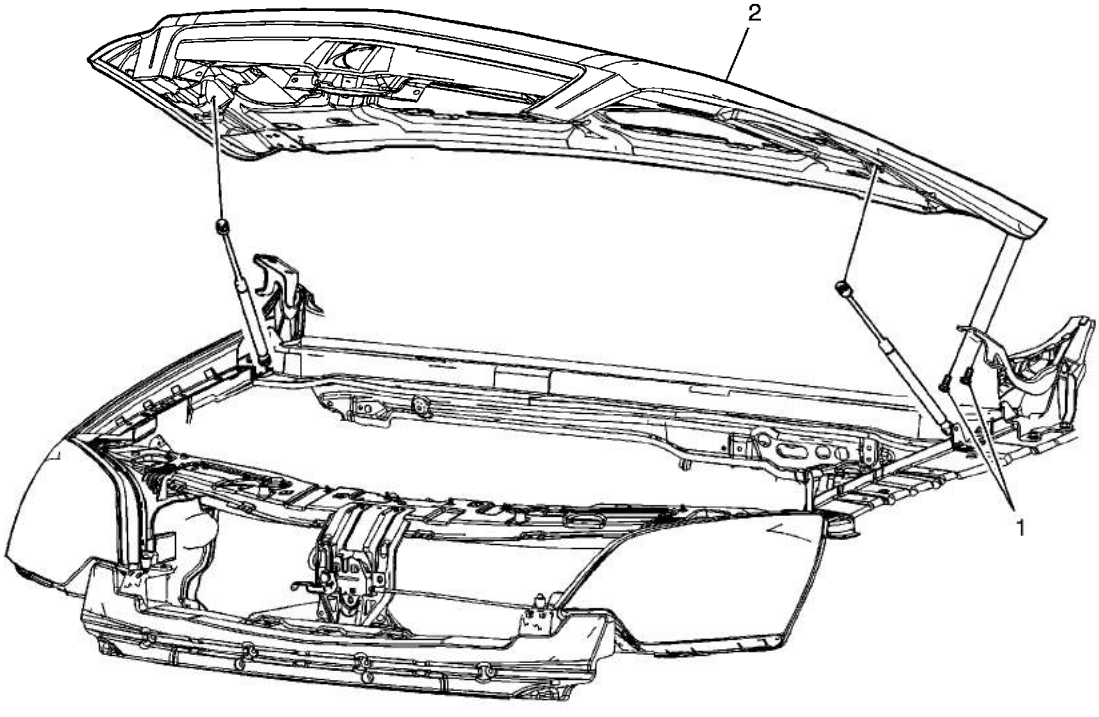

Callout	Component Name
Warning: When a hood hold open device is being removed or installed, provide alternate support to avoid the possibility of damage to the vehicle or personal injury. **Preliminary Procedure** Disconnect the hood strut rod. Refer to Hood Strut Replacement.	
1	Hood Hinge Bolt (Qty: 4) **Caution:** Refer to Fastener Caution in the Preface section. **Tighten** 25 N·m (18 lb ft)
2	Hood **Tip** • Disconnect any electrical connectors before removing. • Transfer any parts as needed.

cardiagn.com

Hood Insulator Replacement

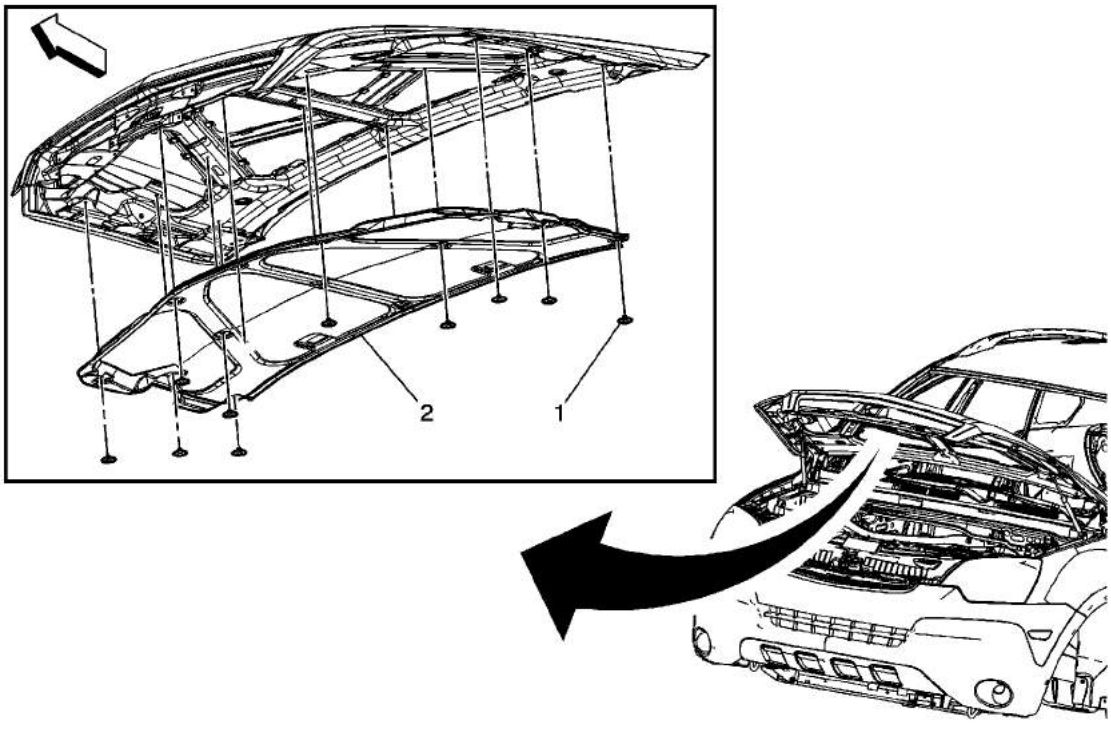

Callout	Component Name
1	Hood Insulator Plastic Retainer (Qty: 11)
2	Hood Insulator

cardiagn.com

Hood Latch Adjustment

Inspection Procedure

1. Release the primary hood latch in order to inspect the operation of the pop-up spring.
2. Attempt to raise the hood while the hood is in the pop-up position.
   - The hood should raise without the hood striker binding against the latch.
   - The secondary latch should engage in order to prevent the hood from being raised.

Adjustment Procedure

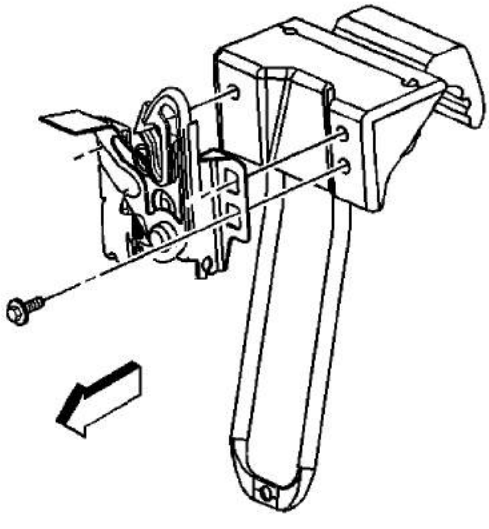

1. Loosen the bolts retaining the hood latch to the support bracket.

   Caution: Refer to Fastener Caution in the Preface section.

2. Move the hood latch from side to side until the striker enters the center of the latch assembly and tighten to **10 N·m (89 lb in)**.

cardiagn.com

Hood Primary and Secondary Latch Replacement

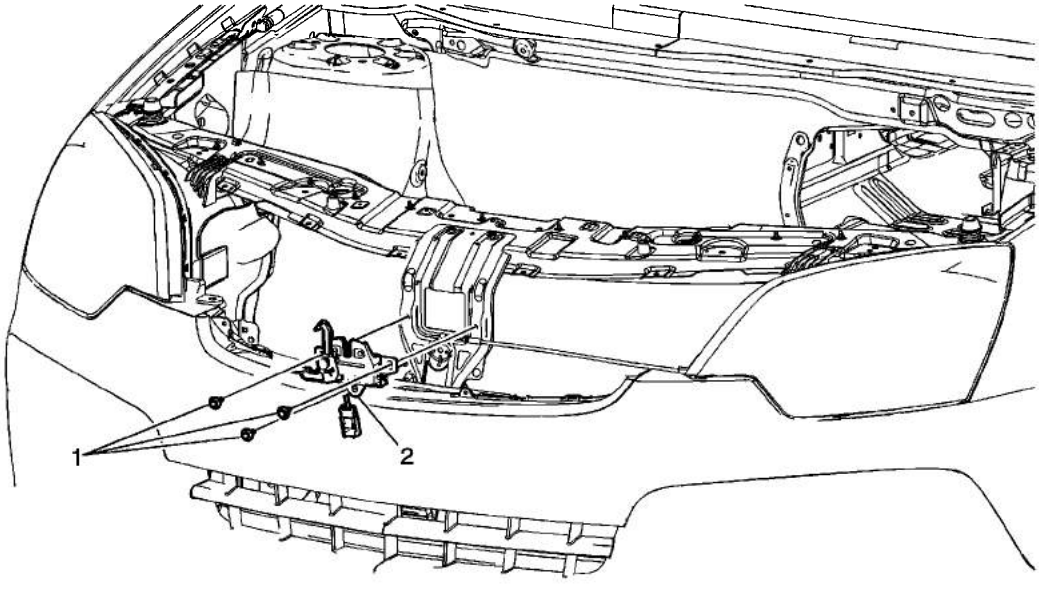

Callout	Component Name
Preliminary Procedure Remove the front compartment sight shields. Refer to Front Compartment Sight Shields Replacement.	
1	Hood Latch Mounting Bolt (Qty: 3) **Caution:** Refer to Fastener Caution in the Preface section. **Tighten** 10 N·m (89 lb in)
2	Hood Latch Assembly **Procedure** 1. Disconnect the remote start electrical connector, if equipped. 2. Disconnect the release cable from the hood latch by squeezing the cable retainer.

cardiagn.com

Front Side Door Check Link Replacement

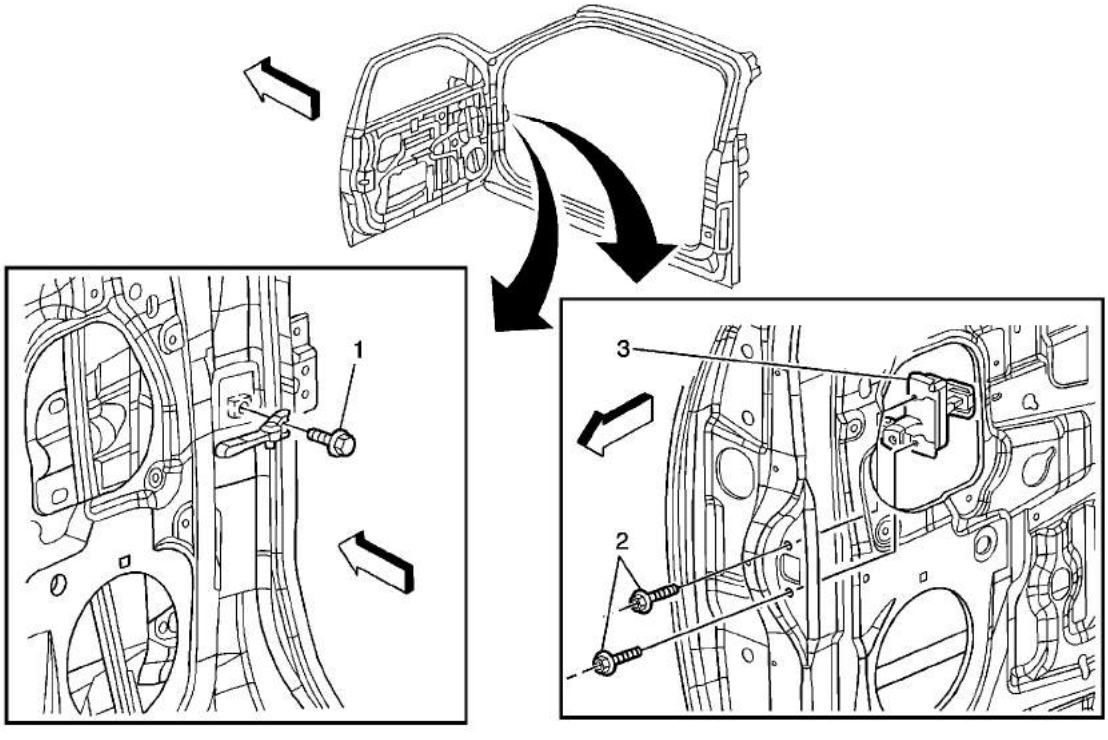

Callout	Component Name
Preliminary Procedures 1. Remove the front door trim panel. Refer to Front Side Door Trim Panel Replacement. 2. Remove the water deflector.	
1	Front Side Door Check Link to Body Bolt **Caution:** Refer to Fastener Caution in the Preface section. **Tighten** 20 N·m (18 lb ft)
2	Front Side Door Check Link Bolt (Qty: 2) **Tighten** 7 N·m (62 lb in)
3	Front Side Door Check Link **Tip** Remove the check link from the door through the center opening.

cardiagn.com

Rear Side Door Check Link Replacement

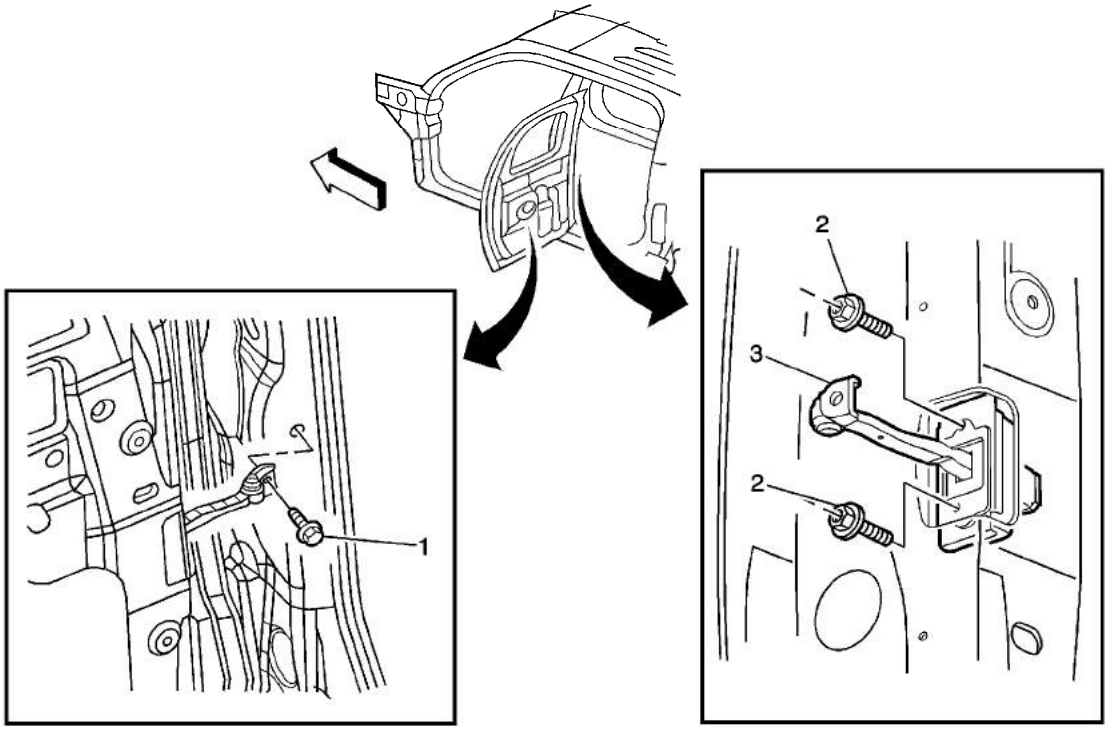

Callout	Component Name
Preliminary Procedures 1. Remove the Rear door trim panel. Refer to Rear Side Door Trim Panel Replacement. 2. Remove the water deflector.	
1	Rear Side Door Check Link Body Bolt **Caution:** Refer to Fastener Caution in the Preface section. **Tighten** 20 N·m (15 lb ft)
2	Rear Side Door Check Link Bolt (Qty: 2) **Tighten** 7 N·m (62 lb in)
3	Rear Side Door Check Link **Tip** Remove the check link from the door through the center opening.

cardiagn.com

Fuel Tank Filler Door Replacement

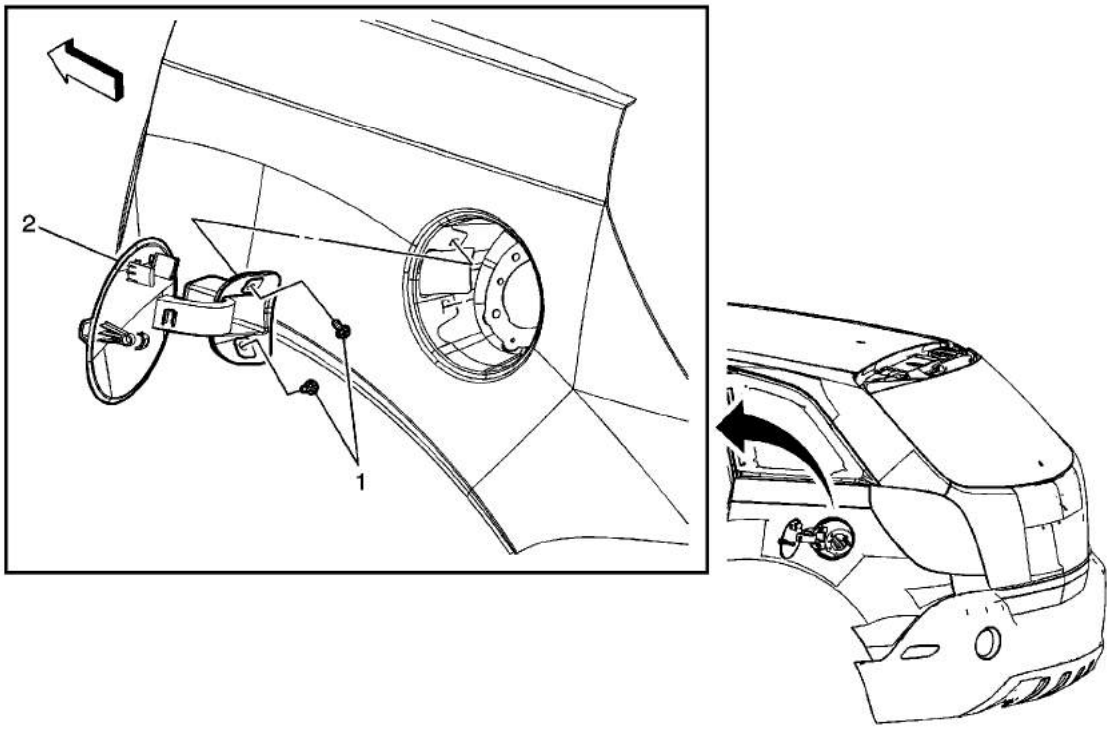

Callout	Component Name
1	Fuel Tank Filler Door Bolt (Qty: 2) **Caution:** Refer to Fastener Caution in the Preface section. **Tighten** 2.5 N·m (22 lb in)
2	Fuel Tank Filler Door

cardiagn.com

Fuel Tank Filler Door Latch Replacement

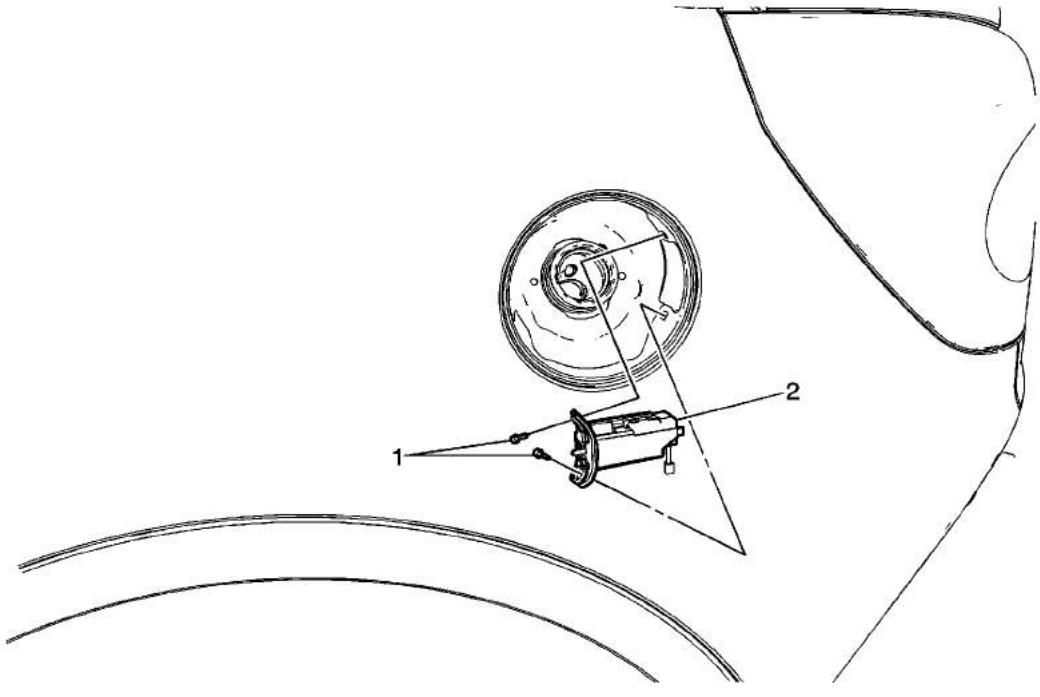

Callout	Component Name
1	Fuel Tank Filler Door Latch Bolt (Qty: 2) **Caution:** Refer to Fastener Caution in the Preface section. **Procedure** Disconnect the electrical connector. **Tighten** 2.5 N·m (22 lb in)
2	Fuel Tank Filler Door Latch

cardiagn.com

Fuel Tank Filler Pipe Housing Replacement

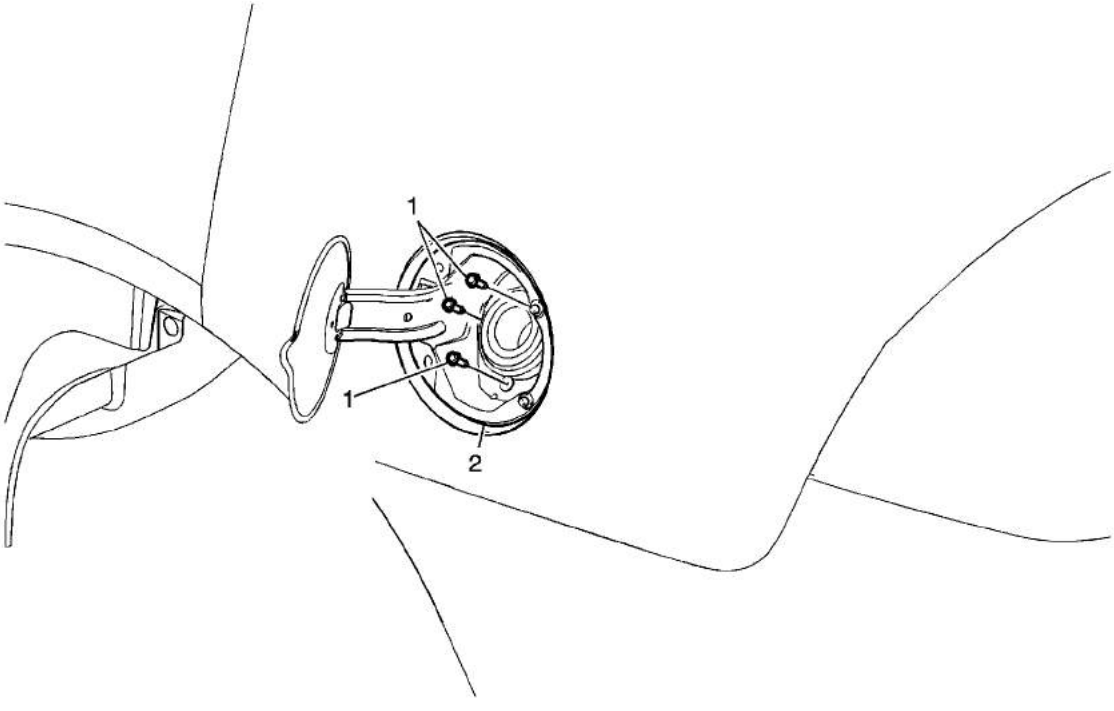

Callout	Component Name
1	Fuel Filler Door Pocket Bolt (Qty: 3) **Caution:** Refer to Fastener Caution in the Preface section. **Tip** Remove fuel filler cap. **Tighten** 10 N·m (89 lb in)
2	Fuel Filler Door Pocket

cardiagn.com

Hood Strut Replacement

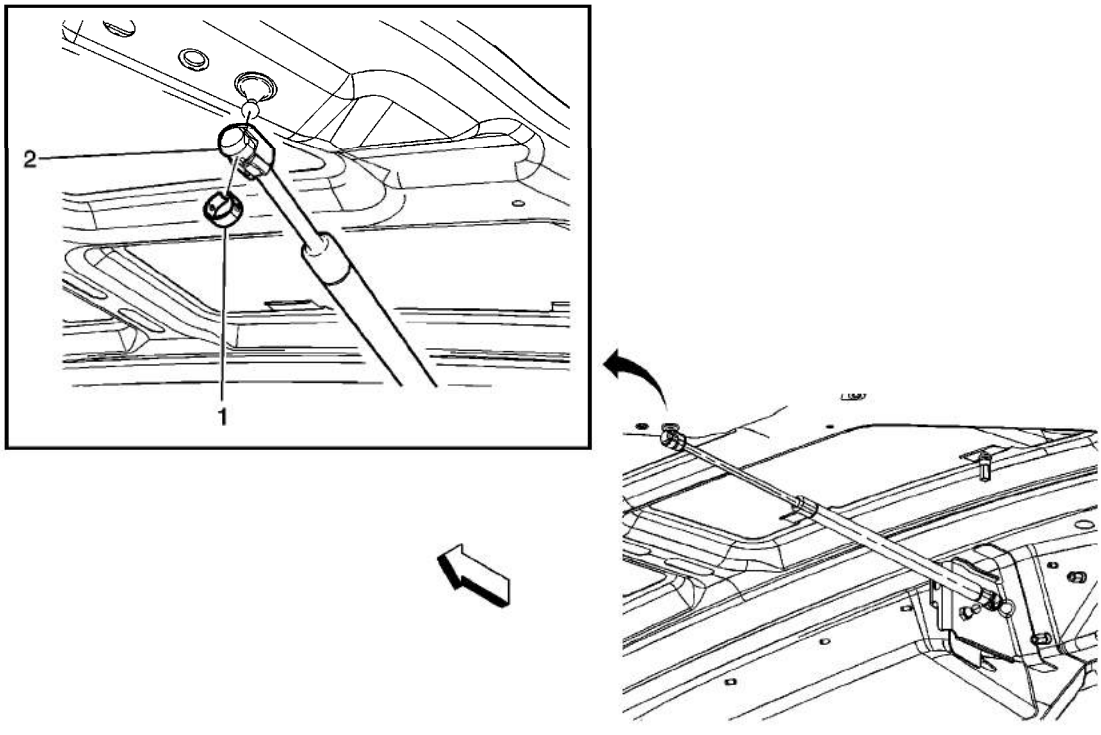

Callout	Component Name
Warning: When a hood hold open device is being removed or installed, provide alternate support to avoid the possibility of damage to the vehicle or personal injury.	
1	Hood Strut Retainer (Qty: 2) **Procedure** 1. Release the locking tabs on the strut. 2. Ensure the clip is fully seared when rod is reinstalled. If the clip cannot be fully seated a new rod should be installed.
2	Hood Strut

cardiagn.com

Hood Front Weatherstrip Replacement

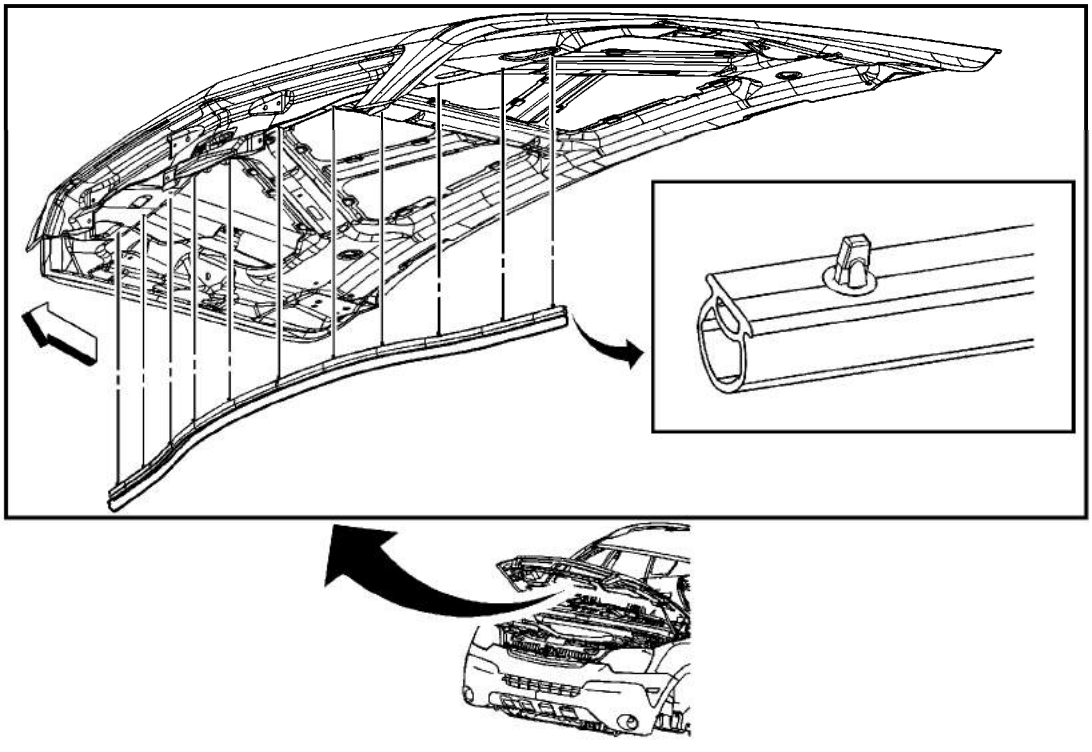

Callout	Component Name
1	Hood Front Weatherstrip **Procedure** The hood front weatherstrip is held in place with plastic retainers that are part of the weatherstrip.

cardiagn.com

Hood Rear Weatherstrip Replacement

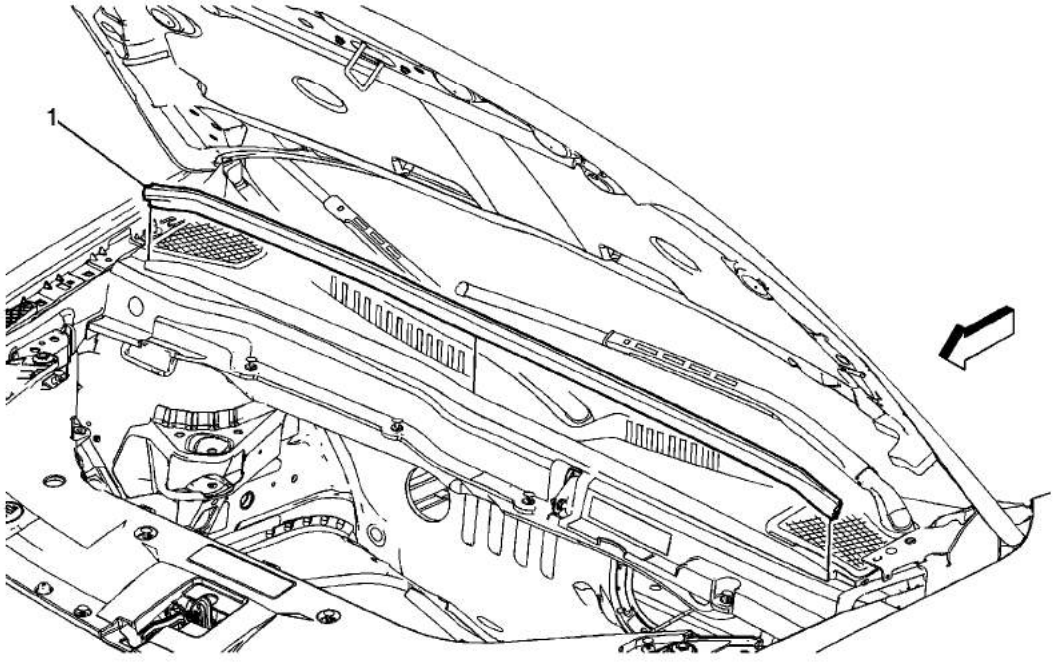

Callout	Component Name
1	Hood Rear Weatherstrip **Tip** The hood front weatherstrip is held in place with plastic retainers that are part of the weatherstrip.

cardiagn.com

Hood Rear Outer Seal Replacement

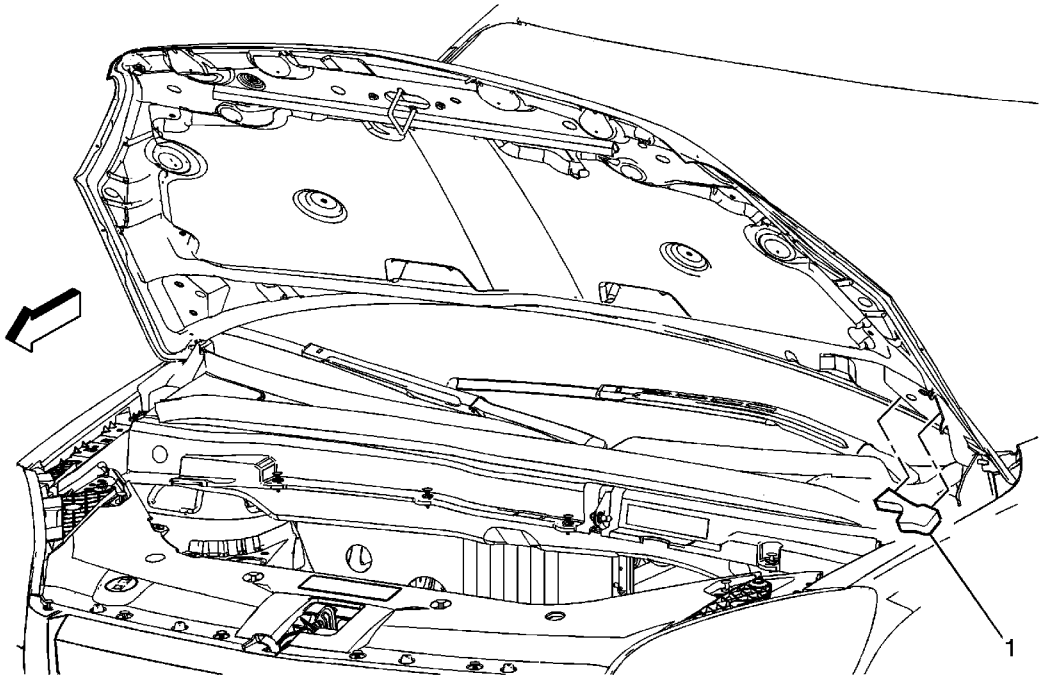

Callout	Component Name
1	Hood Rear Outer Seal **Procedure** 1. Clean the area where the seal will be mounted. Use a suitable solvent with a mixture of 50 percent isopropyl alcohol and 50 percent water by volume, or high-flash naphtha. 2. Warm the hood panel using J 25070 Heat Gun, to a minimum, prior to the hood rear outer seal installation. 3. Do NOT touch the adhesive surface when tape is removed. Peel the tape liner off and install the outer rear hood seal. **Special Tools** J 25070 Heat Gun

cardiagn.com

Front Compartment Sight Shields Replacement

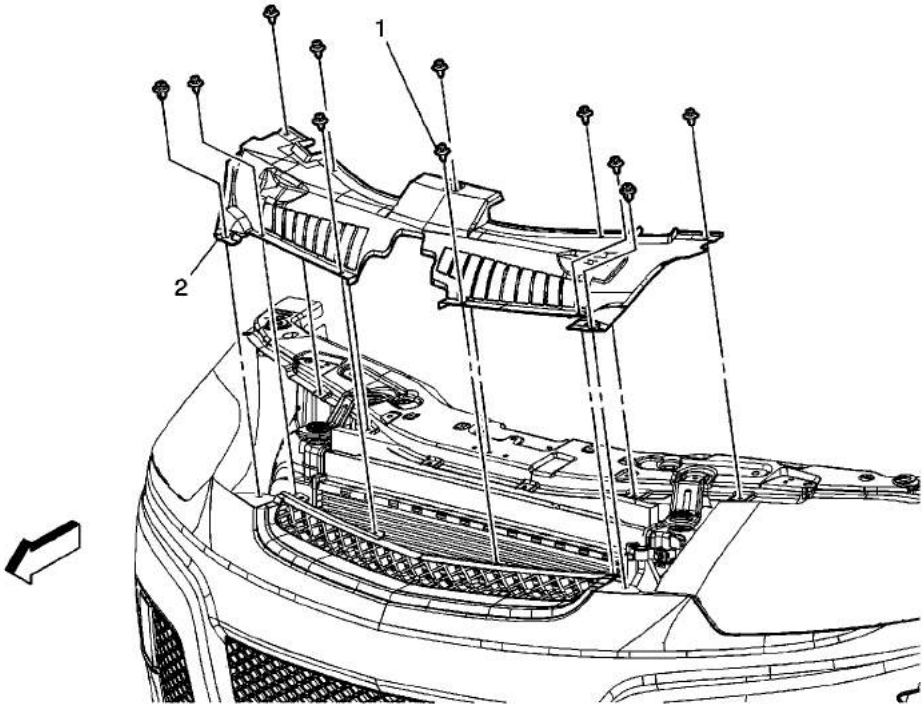

Callout	Component Name
1	Front Compartment Front Sight Shield Plastic Retainer (Qty: 11)
2	Front Compartment Front Sight Shield

cardiagn.com

Front Side Door Auxiliary Sealing Strip Replacement

Removal Procedure

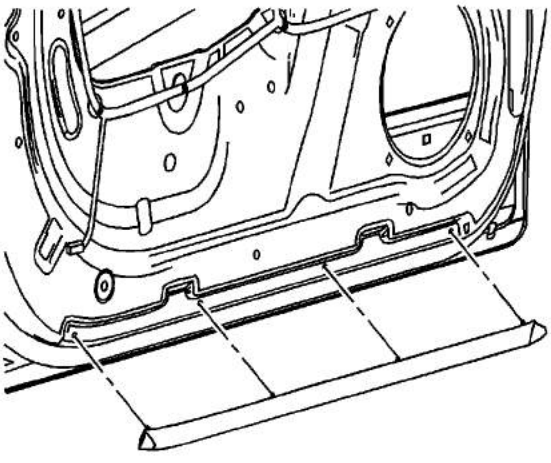

1. Open the door.
2. Remove the door lower weather-strip from the door.

Installation Procedure

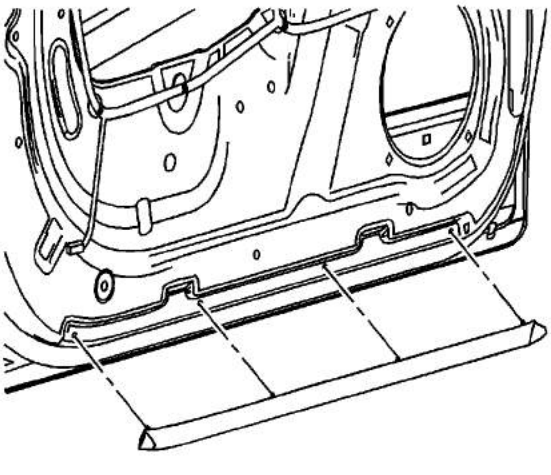

cardiagn.com

1. Install the door lower weather-strip.
2. Close door.

cardiagn.com

Rear Side Door Lower Rear Auxiliary Sealing Strip Replacement

Removal Procedure

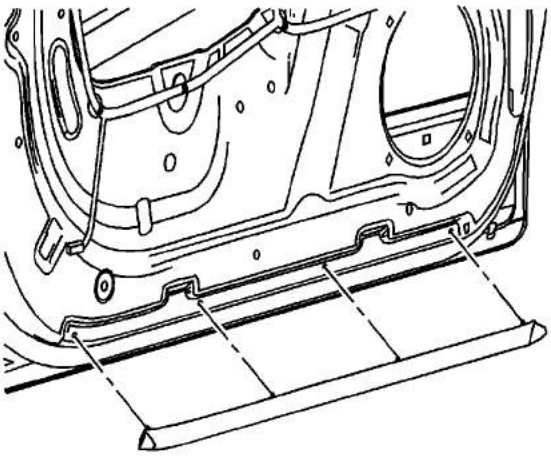

1. Open the door.
2. Remove the door lower weather-strip from the door.

Installation Procedure

cardiagn.com

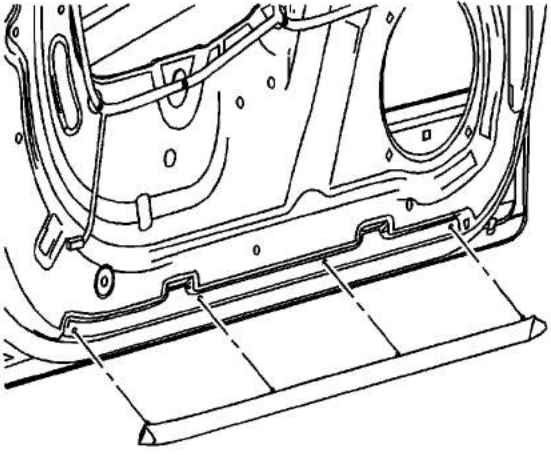

1. Install the door lower weather-strip.
2. Close door.

cardiagn.com

Liftgate Strut Replacement

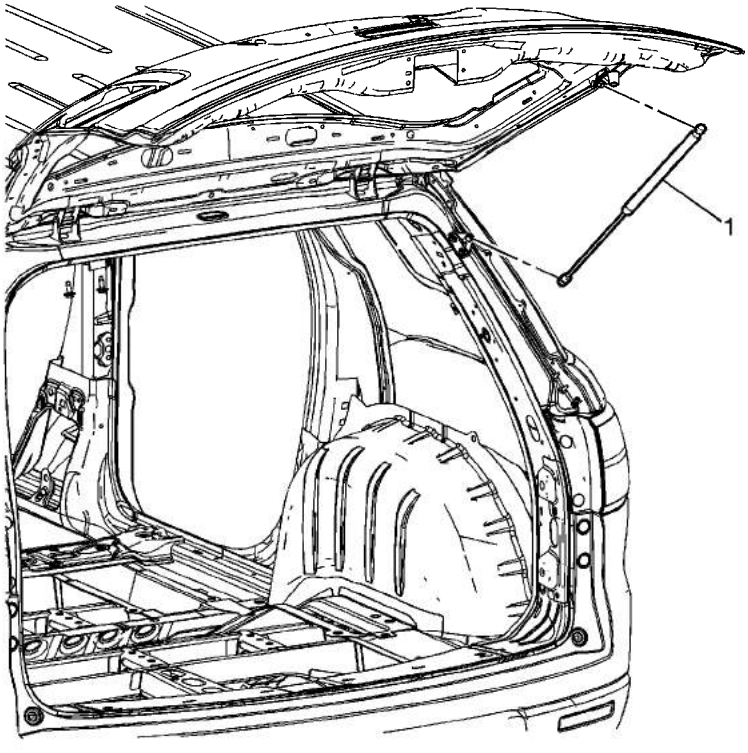

Callout	Component Name
1	Liftgate Strut **Warning:** When a lift gate hold open device is being removed or installed, provide alternate support to avoid the possibility of damage to the vehicle or personal injury. **Caution:** Apply pressure only at the end of the liftgate/hood assist rod that you are removing or attaching. Do NOT apply pressure to the middle of the rod because damage or bending will result. **Procedure** • Release the locking tabs on the strut. • Ensure the clip is fully seated when rod is reinstalled. If the clip cannot be fully seated, a new rod should be installed.

cardiagn.com

Hood Latch Support Replacement

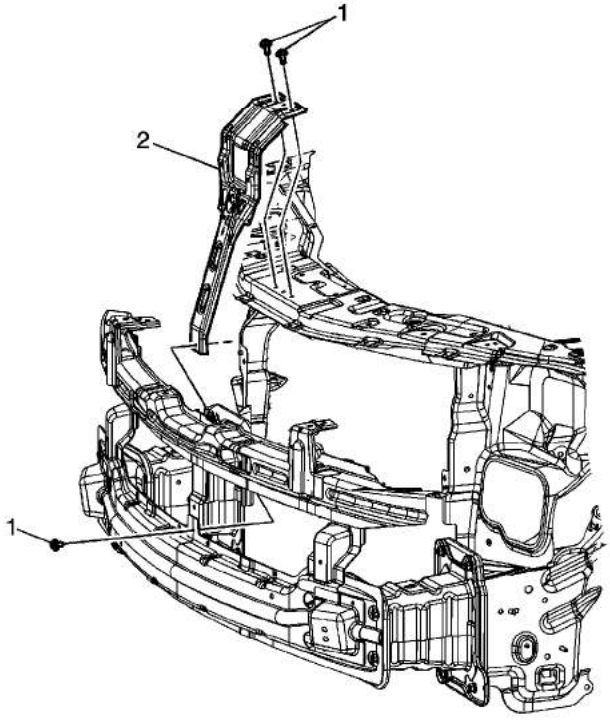

Callout	Component Name
Preliminary Procedure Remove hood latch. Refer to Hood Primary and Secondary Latch Replacement.	
1	Hood Latch Support Bolt (Qty: 3) **Caution:** Refer to Fastener Caution in the Preface section. **Tighten** 10 N·m (89 lb in)
2	Hood Latch Support

cardiagn.com

Front Side Door Weatherstrip Replacement

Removal Procedure

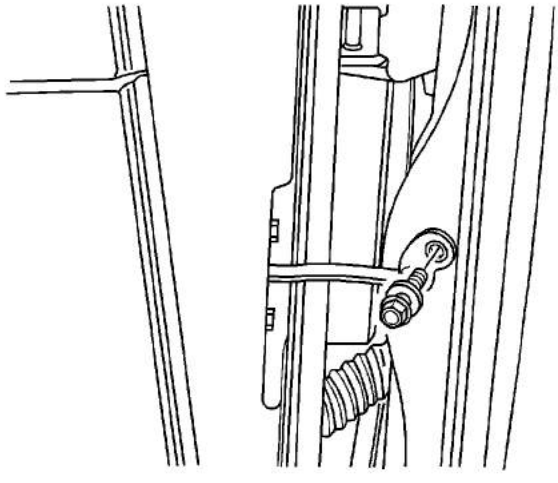

1. Remove the door check link-to-body bolt.

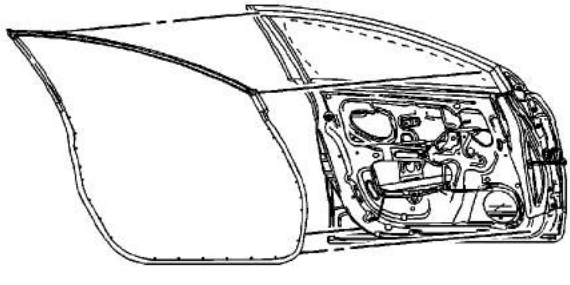

2. Remove the door weatherstrip.

Installation Procedure

cardiagn.com

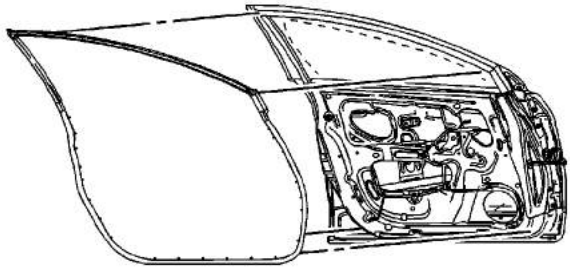

1. Install the door weatherstrip.

   Caution: Refer to Fastener Caution in the Preface section.

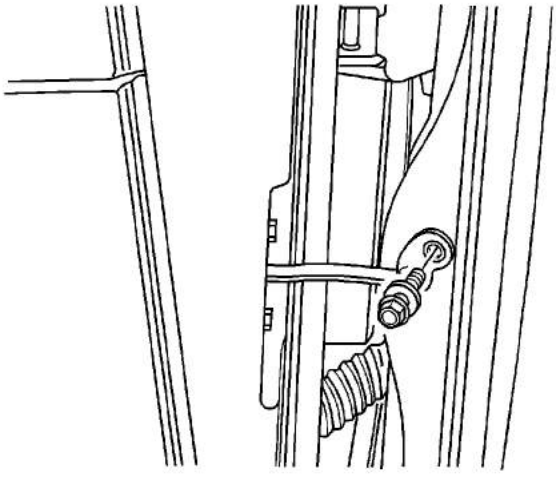

2. Install the door check link-to-body bolt.

   Tighten
   Tighten the door check link-to-body bolt 20 N·m (15 lb ft).

cardiagn.com

Front Door Opening Weatherstrip Replacement

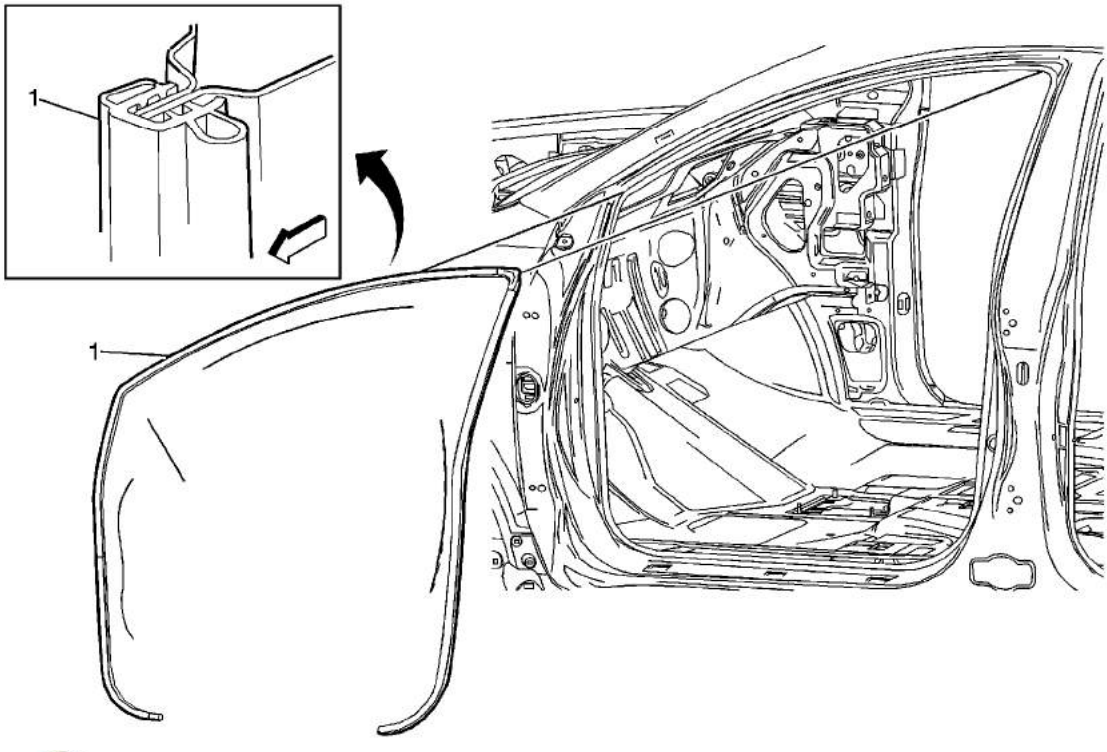

Callout	Component Name
Preliminary Procedures 1. Remove the center pillar lower garnish molding. Refer to Center Pillar Lower Garnish Molding Replacement 2. Remove the windshield pillar garnish molding. Refer to Windshield Pillar Garnish Molding Replacement 3. Remove the front door sill plate. Refer to Front Carpet Retainer Replacement .	
1	Front Side Door Opening Weatherstrip **Procedure** 1. Install the weatherstrip to the pinch-weld flange. Ensure that the weatherstrip is fully seated. 2. Mark the location of the weatherstrip opening when removing from the pinch weld. 3. Align the weatherstrip to the door opening with the bond joint positioned at the lower center of the door opening.

cardiagn.com

Liftgate Weatherstrip Replacement

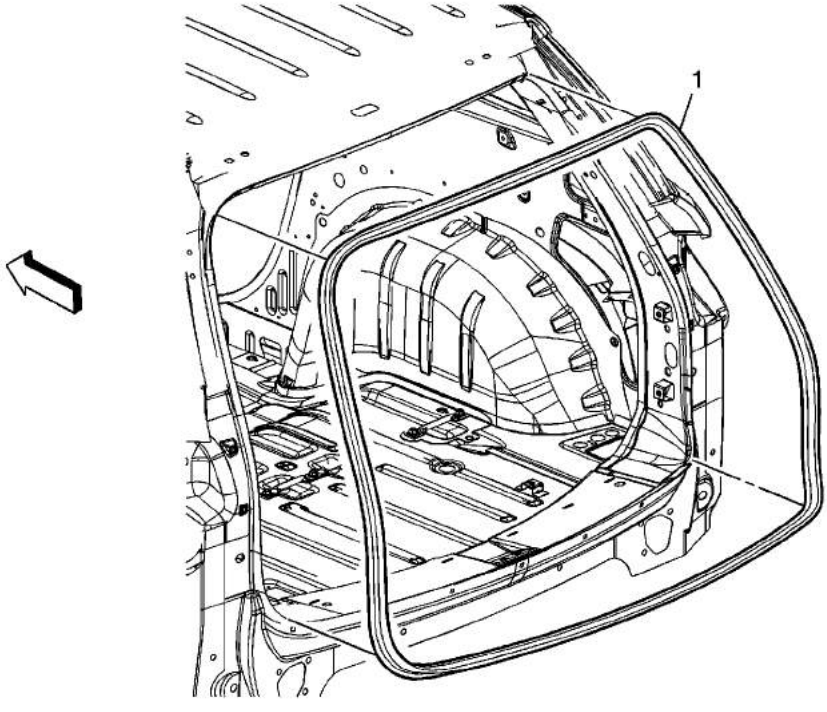

Callout	Component Name
1	Liftgate Weatherstrip **Procedure** Clean the area where the seal will be mounted. Use a suitable solvent with a mixture of 50 percent isopropyl alcohol and 50 percent water by volume, or high-flash naphtha.

cardiagn.com

Rear Door Opening Weatherstrip Replacement

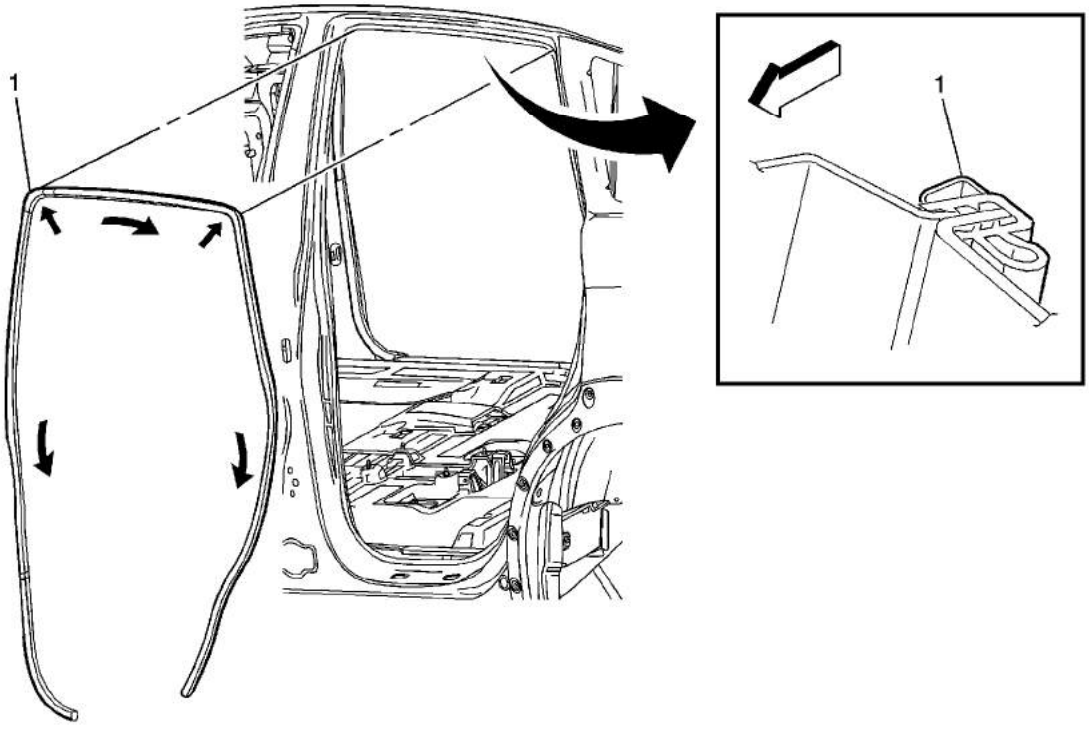

Callout	Component Name
Preliminary Procedure 1. Remove the center pillar lower garnish molding. Refer to Center Pillar Lower Garnish Molding Replacement 2. Remove the rear door sill plate. Refer to Rear Carpet Retainer Replacement .	
1	Rear Side Door Opening Weatherstrip **Procedure** 1. Install the weatherstrip to the pinch-weld flange. Ensure that the weatherstrip is fully seated. 2. Mark the location of the weatherstrip opening when removing from the pinch weld. 3. Align the weatherstrip to the door opening with the bond joint positioned at the lower center of the door opening.

cardiagn.com