2008
OWNER'S MANUAL
N-SERIES MEDIUM DUTY TRUCK
(LOW CAB FORWARD)

THIS MANUAL SHOULD BE CONSIDERED A PERMANENT PART OF THIS TRUCK. IT SHOULD STAY WITH THE TRUCK WHEN SOLD TO PROVIDE THE NEXT OWNER WITH IMPORTANT OPERATING, SAFETY, AND MAINTENANCE INFORMATION.

Table of Contents

Section		page
0	Introduction	0- 1
1	Before Driving Your Vehicle	1- 1
2	Starting and Operating	2- 1
	Driving Techniques	2-14
	Steering Column Controls	2-16
	Brake System	2-22
	Instrument Panel and Controls	2-29
3	In Case of Emergency	3- 1
	Reporting Safety Defects	3-14
4	Appearance Care	4- 1
5	Service and Maintenance	5- 1
	Maintenance Schedule	5- 3
6	Specifications	6- 1

All information, illustrations and specifications in this manual are based on the latest product information available at the time of printing. We reserve the right to make changes at any time without notice.

Copyright Isuzu Motors Limited Feb., 2008
Printed in Japan
All Rights Reserved

Downloaded from www.Manualslib.com manuals search engine

INTRODUCTION

This manual has been prepared to acquaint you with the operation and maintenance of your 2008 Isuzu vehicle, and to provide important safety information. It includes a Maintenance Schedule and is supplemented with a Warranty and Owner Assistance Information booklet. We urge you to read all these publications carefully. The following recommendations will help ensure the most enjoyable, safe, and trouble-free operation of your vehicle.

When it comes to service, keep in mind that your Isuzu commercial truck dealer knows your vehicle best and is interested in your complete satisfaction. Your dealer invites you to return for all of your service needs both during and after the warranty period.

Remember, if you have a concern that has not been handled to your satisfaction, follow the steps in the separate “Warranty and Owner Assistance Information” booklet.

We thank you for choosing an Isuzu product, and want to assure you of our continuing interest in your motoring pleasure and satisfaction.

CAUTION AND NOTICE

SAFETY WARNINGS

CAUTION: These cautions indicate something that could hurt you or other people.

In the caution area, we tell you what the hazard is. Then we tell you what to do to help avoid or reduce the hazard. Please read these cautions. If you do not, you or others could be hurt.

VEHICLE DAMAGE WARNINGS

NOTICE: These warnings indicate something that could damage your vehicle.

In the notice area, we tell you about something that can damage your vehicle. Many times, this damage would not be covered by your warranty, and it could be costly. But the notice will tell you what to do to help avoid the damage.

Downloaded from www.Manualslib.com manuals search engine

GRAPHIC SYMBOLS

Some of the following symbols are used to identify controls and displays on your vehicle.

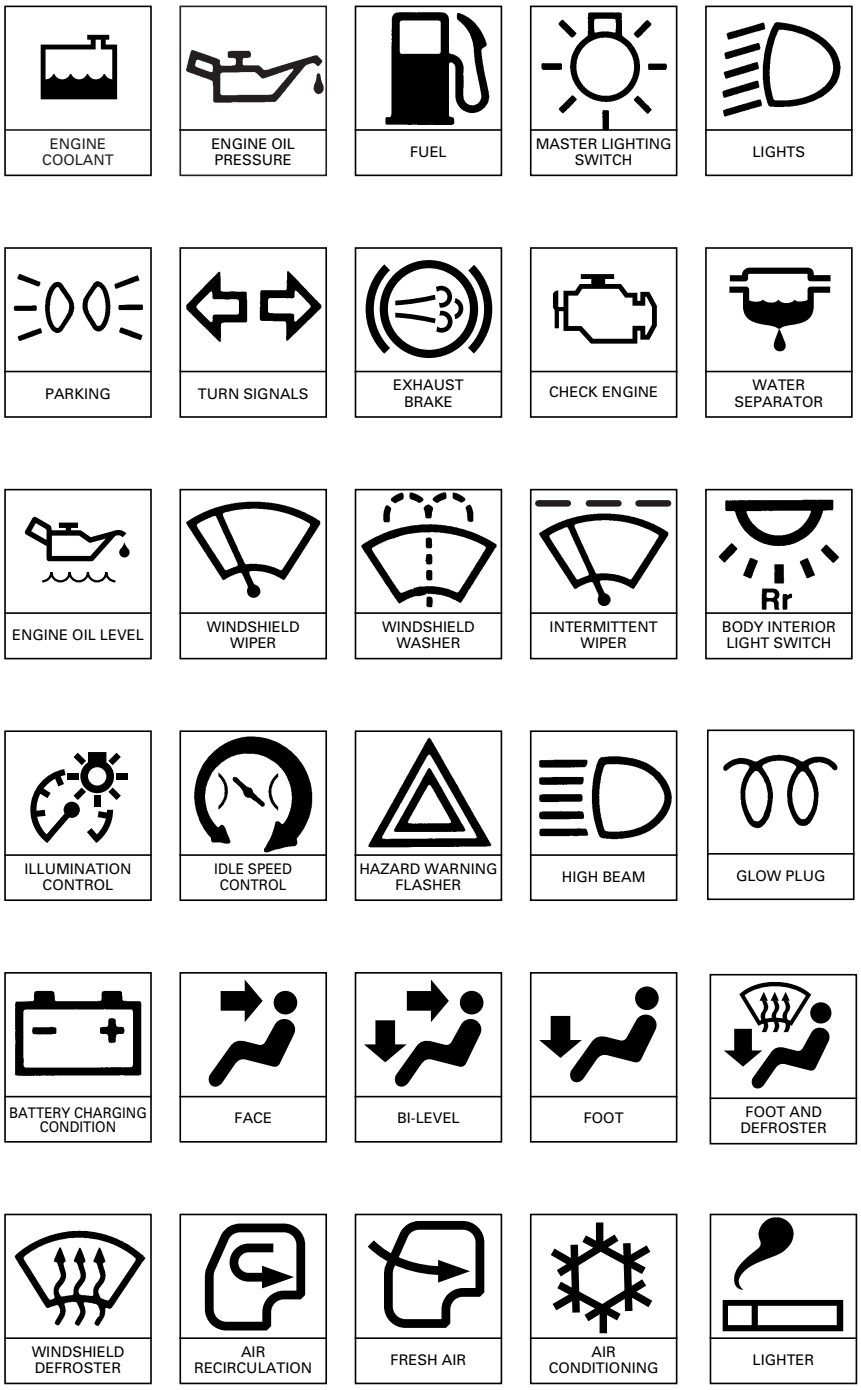

Downloaded from www.Manualslib.com manuals search engine

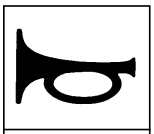
HORN

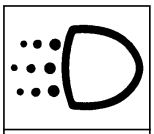
DAYTIME RUNNING LIGHT

INDICATOR/BRAKE SYSTEM WARNING LIGHT

BRAKE LOW VACUUM

PARKING BRAKE INDICATOR/BRAKE SYSTEM WARNING LIGHT

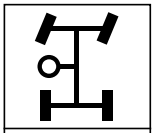
PTO (IF EQUIPPED)

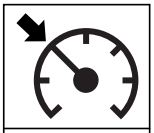
CRUISE MAIN

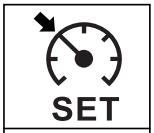

CRUISE SET

CRUISE CONTROL RESUME/ ACCEL

CRUISE CONTROL SET/ COAST

SERVICE VEHICLE SOON LIGHT

MILES CHECK

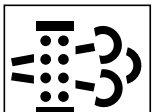
DPF

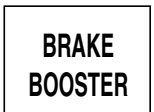

BRAKE LOW VACUUM

ANTI-LOCK BRAKE SYSTEM

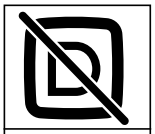
OVERDRIVE

CHECK TRANS

AUTOMATIC TRANSMISSION FLUID TEMPERATURE

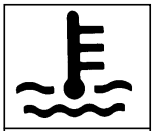
ENGINE OVERHEAT

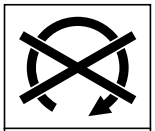
ENGINE SHUT DOWN

Downloaded from www.Manualslib.com manuals search engine

IMPORTANT INFORMATION ON VEHICLE LOADING

OVERLOADING

CAUTION: The components of your truck are designed to provide satisfactory service if the vehicle is not loaded in excess of either the gross vehicle weight rating (GVWR) or the maximum front and rear gross axle weight ratings (GAWRs). These ratings are listed on the Vehicle Identification Number (VIN) plate, which is located on the left side rear pillar panel below the striker.

Overloading can result in loss of vehicle control and personal injury, either by causing component failures or by affecting vehicle handling. It can also shorten the service life of your vehicle.

Your dealer can advise you of the proper loading conditions for your vehicle. Using selected heavier suspension components for added durability may not increase any of the weight ratings shown on the Vehicle Identification Number (VIN) and Weight Rating Plate.

	Maximum GVWR lbs (kg)	Front GAWR Capacity lbs (kg)	Rear GAWR Capacity lbs (kg)
NPR	12,000 (5,443)	5,360 (2,431)	8,840 (4,010)

Maximum GVWR 12,000 lbs (5443 kg)

Front GAWR Capacity	5,360 lbs	(2431 kg)	Rear GAWR Capacity	8,840 lbs	(4010 kg)
Front Curb	3,451 lbs	(1565 kg)	Rear Curb	1,918 lbs	(870 kg)
Front Body and Cargo Load	622 lbs	(282 kg)	Rear Body and Cargo Load	6,009 lbs	(2726 kg)
	4,073 lbs	(1847 kg)		7,927 lbs	(3596 kg)

Total Weight © Ground 11,000 lbs (4990 kg)

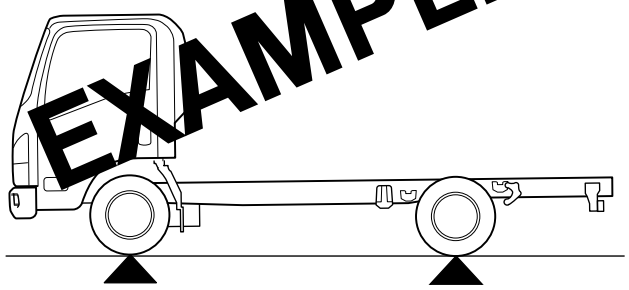

Downloaded from www.Manualslib.com manuals search engine

MAXIMUM FRONT AND REAR AXLE WEIGHTS

The weight of the cargo load must be properly distributed over both the front and rear axles. The VIN and Weight Rating Plate show the maximum weight that the front axle can carry (front GAWR). It also shows the maximum weight that the rear axle can carry (rear GAWR). The GVWR is the maximum permissible loaded weight of the vehicle and takes into account the capabilities of the engine, transmission, frame, springs, brakes, axles and tires. Actual loads at the front and the rear axles can only be determined by weighing the vehicle. This can be done at highway weigh stations or other such places. See your dealer for help. The cargo load should be distributed on both sides of the center line as equally as possible.

EFFECT ON WARRANTY

Your new vehicle limited warranty does not cover any part or component of your vehicle which has been subject to misuse or abuse. Any part or component which malfunctions because of overloading will be deemed to have been subject to misuse and/or abuse.

Downloaded from www.Manualslib.com manuals search engine

VEHICLE IDENTIFICATION NUMBER (VIN) AND WEIGHT RATING PLATE

Your VIN and Weight Rating Plate shows the GVWR (Gross Vehicle Weight Rating) and the front and rear GAWRs for your vehicle.

Gross Vehicle Weight (GVW) is the weight of the originally equipped vehicle and all items added to it after it has left the factory. This would include bodies, liftgates, refrigeration systems, etc., winches, booms, etc., the driver and all occupants, and the load the vehicle is carrying. The GVW must not exceed the GVWR. Also, gross weight on each of the front and rear axles must not exceed the front and rear GAWRs respectively.

Your VIN and Weight Rating Plate will specify the following:

TIRES

The tires on your truck must be of the proper size and properly inflated for the load that you are carrying. The VIN and Weight Rating Plate shows the originally equipped tire size and recommended inflation pressures.

The tire inflation tables in Section 6 show the load limits for various size tires at various inflation pressures.

Downloaded from www.Manualslib.com manuals search engine

MODEL REFERENCE

The model covered in this manual is NPR.

Single cab model

MODEL	
NPR	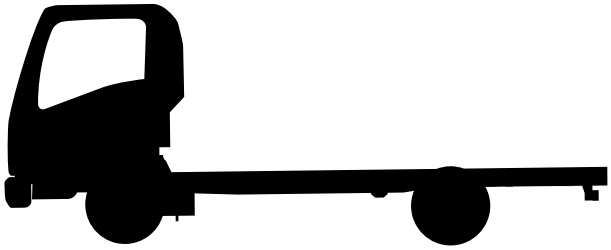 4×2

Downloaded from www.Manualslib.com manuals search engine

55702_Sec00_'08 08.2.12 9:41 AM Page 8

VIN INTERPRETATION

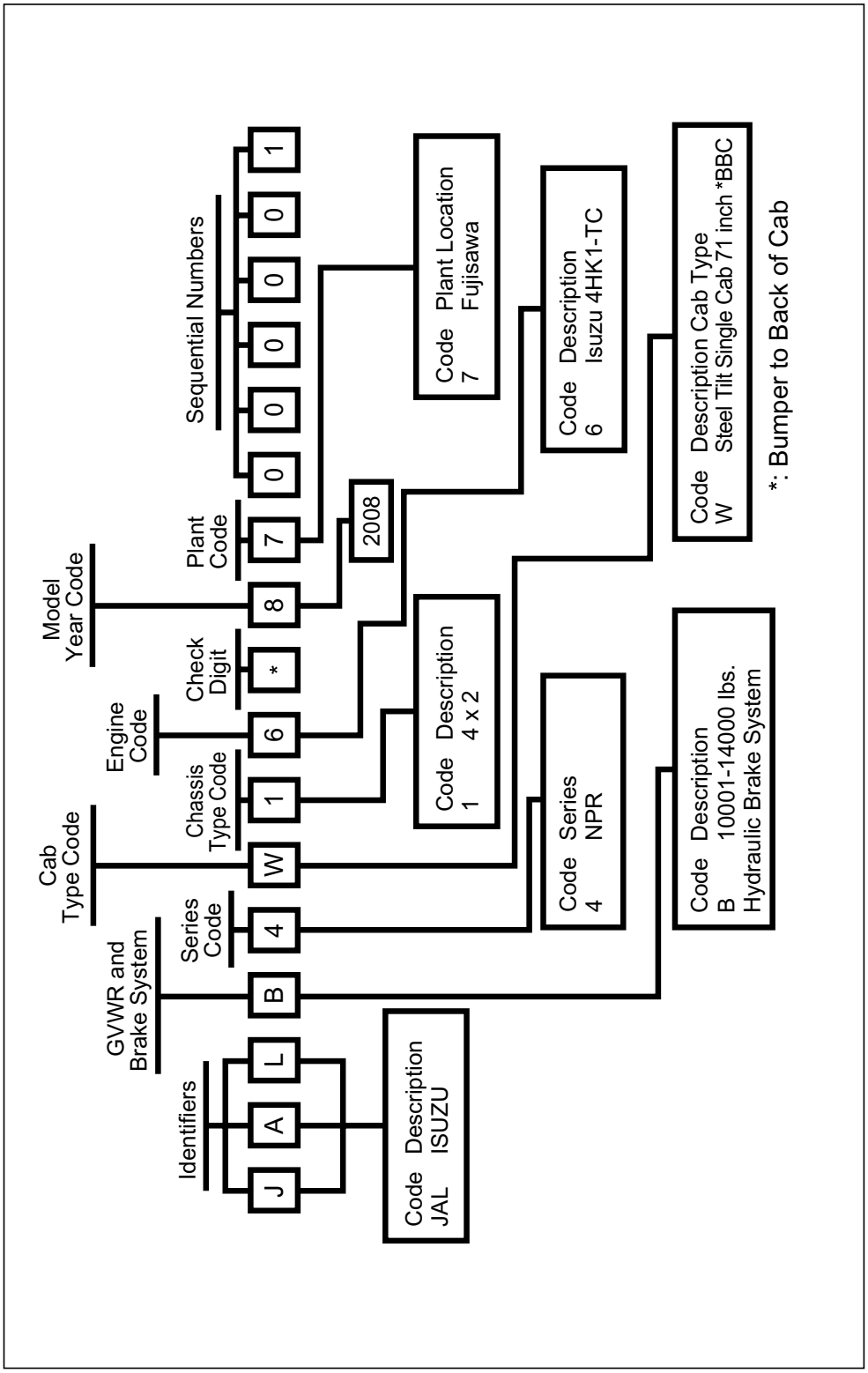

Downloaded from www.Manualslib.com manuals search engine

SECTION 1
BEFORE DRIVING YOUR VEHICLE
DRIVER DAILY CHECKLIST

Be sure you know how to use your truck and its equipment before operating it.

BEFORE ENTERING THE TRUCK

1. See that windows, mirrors, lights and reflectors are undamaged, clean and unobstructed.
2. Check tires for damage and proper air pressure. Check that all wheel nuts are in place.
3. Look for fluid leaks.
4. Be sure that the tilt cab is securely locked in the lowered position.
5. Inspect the exhaust system, checking that the tailpipe is clear.

START-UP

1. Check that all warning lights work (and that the brake alarm buzzer works as described under that topic in this manual) when the key is turned to “ON”, and hold until the glow plug indicator light goes off, then “START”. The “BRAKE” system warning light should stay on when the parking brake is applied.
2. Check all gauges (including the fuel gauge) and indicator lights.
3. Adjust the seat.
4. Be sure that the adjustable steering column is in the locked position.
5. Check and adjust mirrors.

FINAL WALK-AROUND CHECK

Set the parking brake.

1. Look for leaks, now that the engine is running.
2. Check that all lights work.
3. Check that doors and covers are in place; and any emergency equipment is complete.
4. Be sure everything is properly stowed.
5. Check the area under the truck, and behind it if you are about to back up.

BEFORE DRIVING OFF

Do not drive the truck until the engine has had sufficient time to circulate the lubricant oil. This usually requires 30 sec. to 2 minutes depending on ambient conditions.

NOTICE: This will help reduce white start-up smoke.

Downloaded from www.Manualslib.com manuals search engine

1. Lock all doors.
2. Always properly fasten your seat belt. Check that the seat belt for any other occupant is fastened properly. Never let anyone ride any place in or on this vehicle where there is no lap belt or lap-shoulder belt.
3. Push down on the brake pedal, release the parking brake, and check that the “BRAKE” system warning light goes out. If the light stays on, the vehicle should not be driven until the condition is corrected.

These checks are in addition to, not instead of, the Bureau of Motor Carrier Safety requirements. See related topics under “Maintenance Schedule” in Section 5, especially if problems are found.

KEY

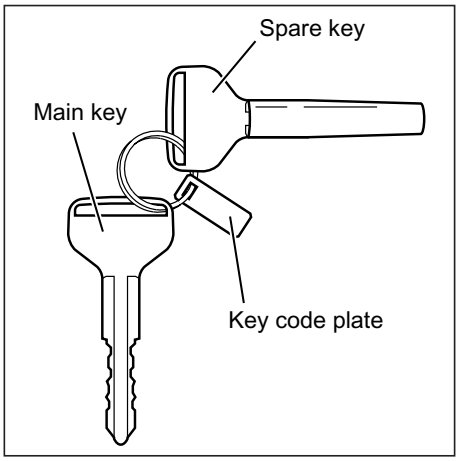

One key can operate all the locks on the vehicle. Keep one of the two keys provided as a spare. The key code is stamped on the tag.

For vehicle security:

- Record the key code numbers.
- Keep the key code plate in a safe place (such as your wallet), NOT IN THE VEHICLE.
- Be sure to include the key code plate when the vehicle is transferred.

If the original keys are lost, duplicates can be made using the key codes stamped on key code plate. Contact any authorized Isuzu dealer or a locksmith.

Downloaded from www.Manualslib.com manuals search engine

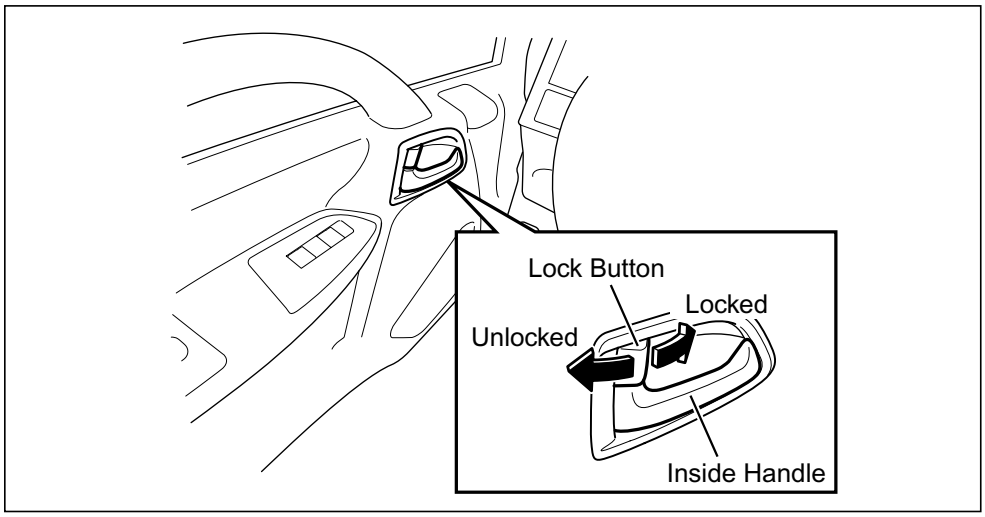

CAB DOOR LOCKS

ALWAYS LOCK THE DOORS

CAUTION: To help reduce the risk of personal injury in an accident, always lock the doors when driving. Along with using the seat belts properly, locking the doors helps prevent people from being thrown from the vehicle. It also helps prevent unintended opening of the doors and helps keep out intruders.

To lock the cab, lock one door from the inside by turning the button forward on the door interior lock button.

Lock the other door from the outside following the instructions under “DOOR LOCKS” below. Or if desired, turn the interior lock button forward, then close the door while lifting up on the outside handle.

Overriding door locks are a standard safety feature. When the doors are locked, the inside handles will not open them. This is to prevent accidental opening of the doors.

OUTSIDE DOOR HANDLES

A handle for opening each cab door from outside the cab is located at the rear edge of the door’s outer panel. To open the door from outside the vehicle, pull up on the handle.

INSIDE DOOR HANDLES

An inside handle for opening each cab door is located in the recessed area at the front of the door. To open the door, pull on the handle. If the door is locked, the lock mechanism overrides operation of the door handle. The door must first be unlocked before the handle can be used to open the door.

Downloaded from www.Manualslib.com manuals search engine

POWER DOOR LOCKS (IF EQUIPPED)

DOOR LOCK SWITCH

Both doors can be locked and unlocked by pressing the rocker lock switch. Refer to Page 2-56 for switch location.

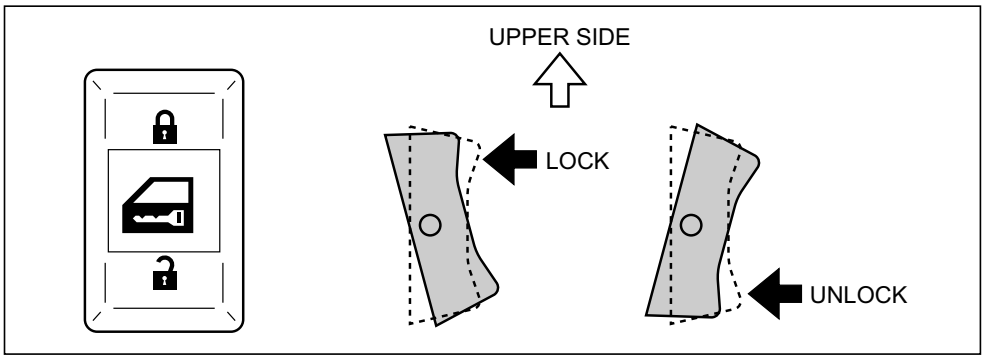

DOOR LOCKS

- A door may be locked from outside of the vehicle, by inserting the key into the door lock and turning it counterclockwise for the driver's door and clockwise for the passenger's door.
- Locking the driver's door will lock both driver's and passenger's doors.
- To unlock the door, turn the key in the opposite direction.

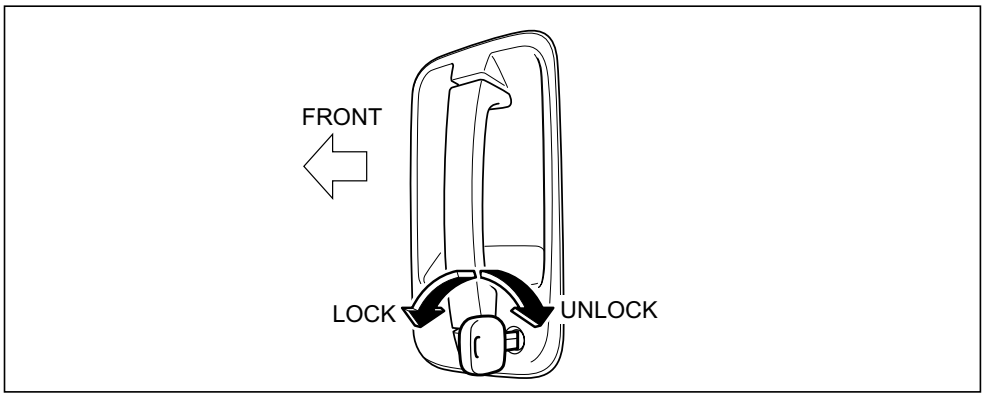

Downloaded from www.Manualslib.com manuals search engine

LOCK BUTTON

- There is a lock button on each door. When the lock button on the driver's door is turned to "Locked", it works for both the driver's and passenger's doors. Otherwise it works only for its own door.
- Turn the button forward to lock the door, and turn it rearward to unlock the door.

To lock the door automatically when it closes -

1. Turn the button forward (the door must be opened).
2. Pull up on the outside door handle.
3. While holding the outside door handle up, close the door.

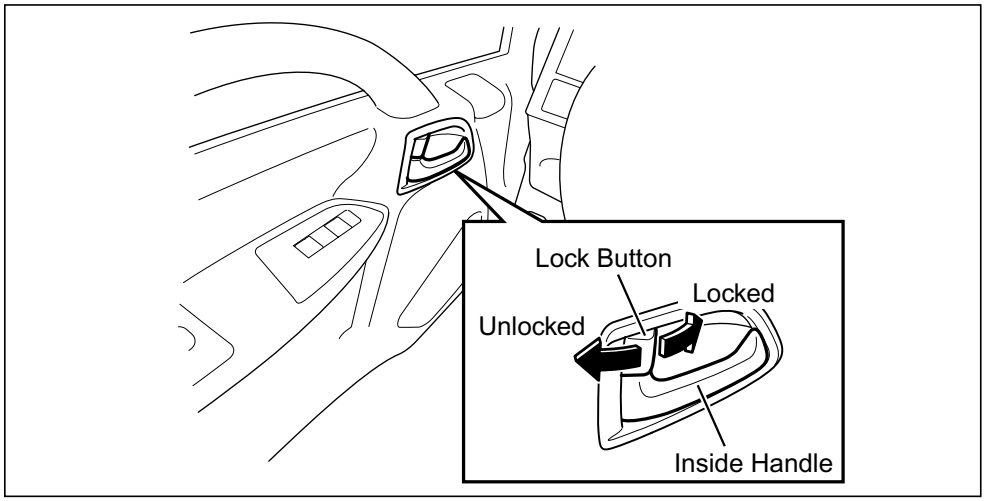

WINDOW CONTROLS

WINDOW REGULATOR HANDLE (Manual window model)

Turn the window regulator handle to raise and lower the window.

POWER WINDOWS (IF EQUIPPED)

POWER WINDOW SWITCH (DRIVER'S DOOR)

The power window switch on the driver's door can operate both driver's and passenger's power windows.

NOTICE: The engine control switch must be in the "ON" position.

For driver's power window

Press lightly on the switch to lower the window. The window continues its downward motion until the switch is released (or the window is fully opened).

Press firmly on the switch (until a click is heard) to lower the window automatically. (To stop window movement, pull up on the switch.)

Pull up on the switch to close the window. The window continues its upward motion until the switch is released (or the window is fully closed).

Downloaded from www.Manualslib.com manuals search engine

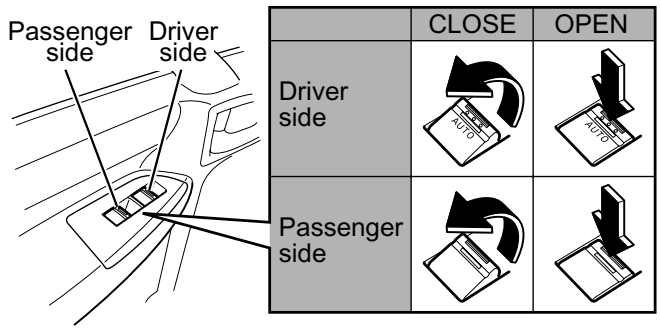

POWER WINDOW SWITCH (PASSENGER'S DOOR)

The power window switch on the passenger's door can raise and lower the passenger's side window only.

NOTICE: The engine control switch must be in the "ON" position.

Press lightly on the switch to lower the window. The window continues its downward motion until the switch is released (or the window is fully opened).

Pull up on the switch to close the window. The window continues its upward motion until the switch is released (or the window is fully closed).

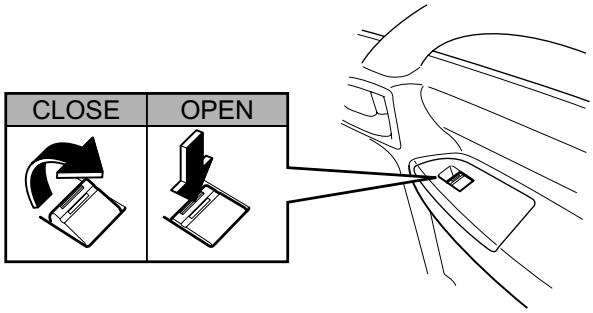

Downloaded from www.Manualslib.com manuals search engine

MIRRORS

OUTSIDE REARVIEW MIRRORS

Adjust the outside rearview mirrors by hand before vehicle operation. This helps you determine the location of objects seen in the mirror.

CAUTION: Do not adjust the outside mirrors while operating the vehicle.

SUN VISORS

The sun visors may be swung down to prevent glare from the front. They may also be swung to the side.

Downloaded from www.Manualslib.com manuals search engine

DRIVER'S SEAT CONTROLS

ADJUST DRIVER'S SEAT WHILE PARKED

CAUTION: Do not adjust the driver's seat while the vehicle is moving. The seat could move or jerk and cause a loss of control.

After adjustment, push the seat back and forth to be sure it is locked. Take the vehicle to your dealer for servicing if the seat does not lock.

FORE-AND-AFT

The driver's seat has a fore-and-aft adjustment and a seatback tilt adjustment.

The fore-and-aft adjustment lever is located in front of the seat at the base of the cushion. Move the lever to the upside, adjust the seat position, and release the lever. The seat is designed to lock in position when the lever is released. After adjustment, push the seat back and forth to be sure it is locked. Take the vehicle to your dealer for servicing if your seat does not lock.

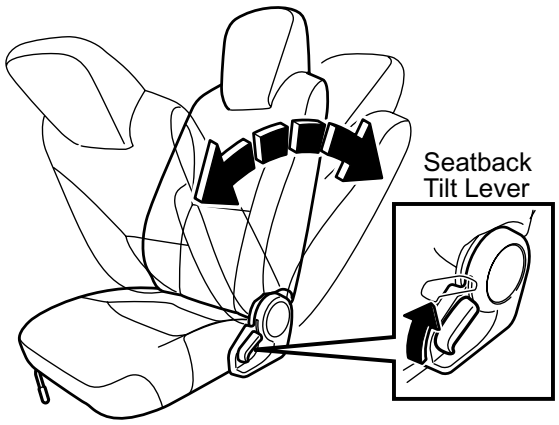

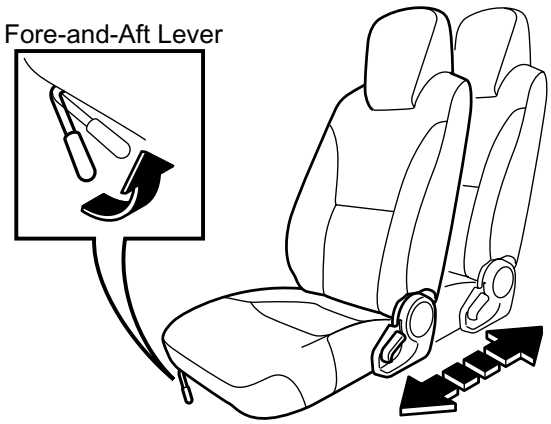

Downloaded from www.Manualslib.com manuals search engine

SEATBACK LATCH (DRIVER)

The seatback latch of the driver seat is designed to limit forward movement of the seatback during a sudden slowing of the vehicle. Tilt the seatback to gain access to the area behind it.

The seatback latch release lever is located at the outboard side of the seat at the base of the cushion. Raise the lever, adjust the seatback, and release the lever.

After adjusting the seatback, push it back and forth to be sure it is locked. Take the vehicle to your dealer for servicing if your seatback does not lock.

Seatback Position When Moving

CAUTION: To reduce the risk of sliding under the lap belt during a collision, an occupied reclining seat should not be reclined any more than needed for comfort. The seatback and seat belts provide best restraint only when the rider is sitting well back and straight up in the seat. (The lap belt is designed to spread the force of a collision over the hipbone. If you are reclined, the lap belt may slide past your hips and apply restraint forces directly to the abdomen. Therefore, in the event of a collision, the risk of personal injury will increase with increasing recline of the seatback.)

Do not adjust the reclining seatback on the driver's seat while the vehicle is moving. The seatback could jerk and cause a loss of control.

Downloaded from www.Manualslib.com manuals search engine

SEAT BELT SYSTEMS

CAUTION: To help reduce the risk of personal injury in collisions or sudden maneuvers, use the seat belts following these instructions on their proper use, maintenance, and use with child restraint systems. This applies to pregnant women. Pregnant women should use a lap-shoulder belt whenever possible; the lap portion should continue to be worn low and snug throughout the pregnancy.

Children small enough for child restraints (as indicated on the label of such restraints), including booster seats, should always be transported in them.

Children who have outgrown child restraint systems should use the vehicle's seat belts.

NEVER:

- Put the lap portion of a seat belt over any armrest.
- Wear a shoulder belt under your arm nearest the door.
- Use a belt for more than one person at a time.
- Wear the belts twisted or with a buckle release button facing downward or inward.
- Let the belt system become damaged by the door or seat.
- Put anything into the opening where the seat belt passes through the trim panel. (This may jam the retractor or damage the belt.)

Twisted Belt

Do not let the belt twist while it is rewinding: it may cause the retractor to jam so it will not rewind further. If it is not fully rewound, the belt cannot be pulled out. Should the belt jam, you may be able to release it by working the belt in and out until the belt rewinds far enough to unlock. However, if the belt remains jammed or other parts of the restraint system do not work properly, have your dealer service it.

Downloaded from www.Manualslib.com manuals search engine

LAP-SHOULDER BELT

1. Adjust the driver's seat as needed and sit well back and straight up. (The passenger seat does not adjust.) Grasp the latch plate and:
   - Pull the belt as far as it will reach across your lap.
   - Hold the latch plate at an angle to the webbing and slide it further (toward the front of the truck).
   - Then pull it slowly across your lap and push it into the buckle until it clicks. If the retractor locks before the latch plate reaches the buckle, let the belt retract slightly, then withdraw it slower than before.
2. To reduce the risk of sliding under the belt during a collision, position the belt across your lap as low on your hips as possible and adjust it to a snug fit by pulling the "shoulder" portion upward through the latch plate.
   The lap-shoulder belt is designed to lock during a sudden stop or impact. At other times it should move freely.

CAUTION: To help reduce the risk of personal injury or death in an accident, if a child is using the vehicle's seat belts because the child has outgrown child restraints, including booster seats, and if the shoulder belt is on or very close to the child's face or neck, move the child toward the center of the seat, away from the shoulder belts.

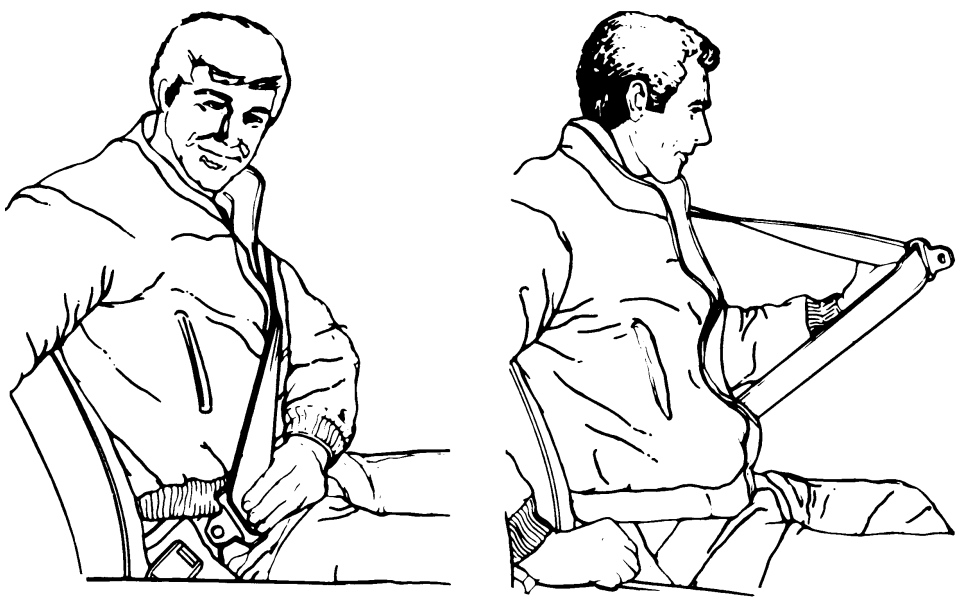

Downloaded from www.Manualslib.com manuals search engine

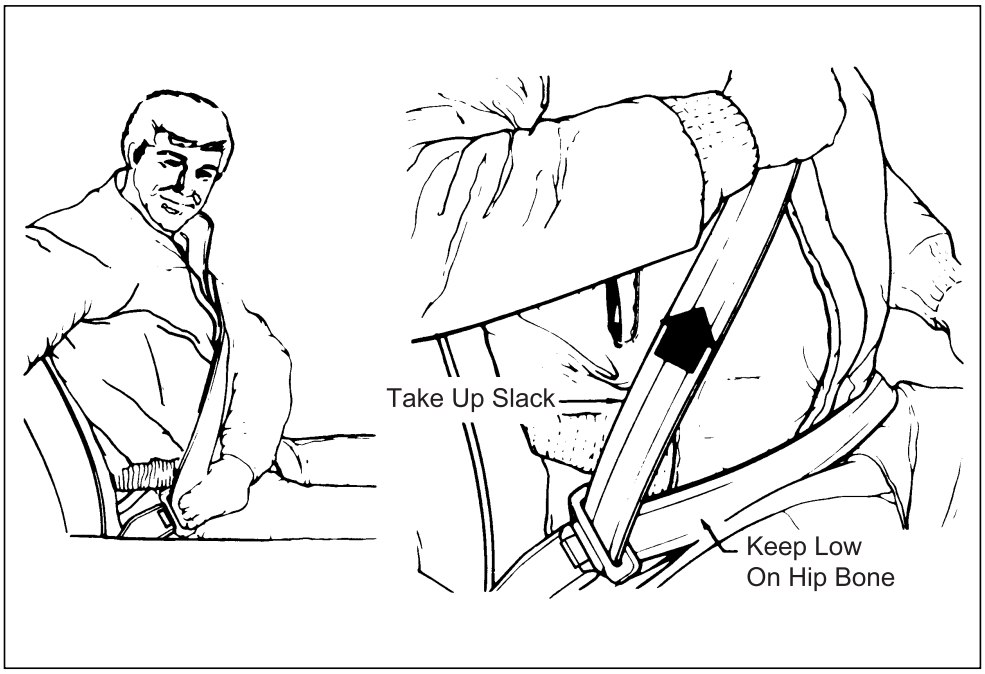

3. To unfasten the belt, push the button on the buckle. The belt should retract when the buckle is unlatched, but hold the latch plate while the belt is retracting, to keep it from hitting people or nearby objects. To help prevent damage to the seat belt and interior trim before closing the door, be sure the belt is fully retracted and the latch plate is out of the way.

Downloaded from www.Manualslib.com manuals search engine

CENTER LAP BELT

1 . The center seat lap belt has no retractor, but should be positioned, worn and released as described above. The belt is adjusted to snug fit by pulling on the free end of the webbing coming from the latch plate.
2. To lengthen the center seat lap belt, place the latch plate at an angle to the belt webbing and pull on the latch plate; the belt should then slide easily through the latch plate adjustment feature.

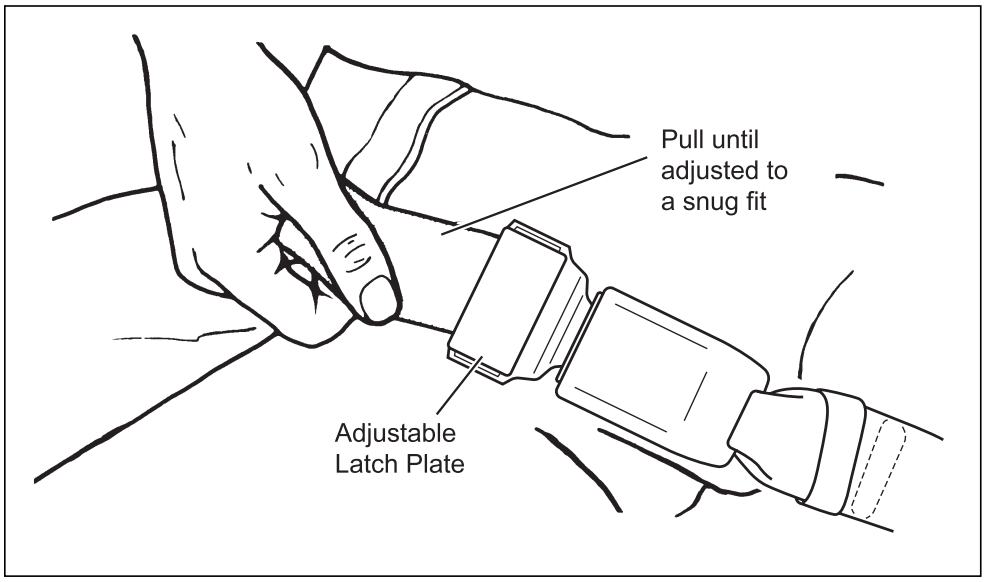

SEAT BELT INSPECTION

Now and then check that the belts, buckles, latch plates, retractors, anchorages and guide loops work properly; look for loose parts or damage (without disassembly) that could keep the restraint system from doing its job. Have a belt assembly replaced if the webbing has been cut or otherwise damaged. Replace belts, retractors, and hardware used in all but a minor collision. Also, restraint systems should be replaced and anchorages properly repaired if they were in areas damaged by a collision, whether the belt was in use or not. If there is any question, replace the belt system. Damage, whether visible or not, could result in a serious personal injury in the event of an accident.

Downloaded from www.Manualslib.com manuals search engine

CHILD RESTRAINT

CAUTION: Children small enough for child restraints (as indicated on the label of such restraints), including booster seats, should always be transported in them. Children who have outgrown child restraint systems should wear seat belts. The lap belt should be snug and positioned low on the abdomen so that it is below the top of the hipbone. Otherwise, the belt could intrude into the child's abdomen during an accident and cause personal injury. When a child has grown enough so that the shoulder belt can be worn, a seating position with a shoulder belt should be chosen whenever possible. If the shoulder belt is on or very close to the child's face or neck, move the child toward the center of the seat, away from the shoulder belt.

Any unrestrained child could be injured by striking the vehicle's interior or by ejection from the vehicle during an accident or driving maneuver. Never allow a child to be held by another occupant instead of being properly restrained. If not properly restrained, the child could strike the vehicle interior or be crushed by the person holding the child, or by other occupants.

Be sure to follow all installation and use instructions that come with any child restraint system.

Child restraint systems are designed to be secured in vehicle seats either by the lap belt, or the lap portion of the lap-shoulder belt at that seating position. The child must also be secured within the restraint by the means provided by the child restraint manufacturer. If the child or the child restraint is not properly secured, the child risks personal injury in the event of a collision.

Using a Lap Belt That Has No Retractor

When securing a child restraint with the center seat lap belt, pull the excess webbing through the belt's adjustment feature, then take these steps:

- Once installed, push and pull the child restraint in all directions to be sure it is secure. If it comes loose, flip the end of the belt with the adjustment feature over before rebuckling.
- If the child restraint is still not secure, use the outboard seating position in the vehicle and contact your dealer and the child restraint manufacturer for help.
- Secure the child in the restraint in accordance with the child restraint manufacturer's instructions.

Downloaded from www.Manualslib.com manuals search engine

Installation on Outboard Seat

A seat belt locking clip is required for installation of a child restraint system on the outboard seat of this vehicle. A locking clip may usually be obtained where child restraints are sold, or by contacting your dealer for assistance. Make sure the locking clip is identical to the one shown on page 1-16. Until you have the clip, use the child restraint system only in the center seat.

CAUTION: To help avoid personal injury or death during a collision or sudden maneuver, always thread both the lap and shoulder belt through the locking clip when securing a child restraint on the outboard seat. If the clip is not used or installed properly, the child restraint may move or tip over when your vehicle turns or stops abruptly.

Secure the child restraint with the lap belt portion of the seat belt in accordance with the restraint manufacturer's instructions. Then thread both the lap and shoulder belt portions through the locking clip. Push and pull the child restraint in all directions to be sure it is secure.

When your child restraint is not installed, remove the locking clip to permit normal use of the lap-shoulder belt. Keep the locking clip in the glove box to help prevent its loss.

Child Restraint With Top Strap

CAUTION: We do not recommend using a child restraint that requires the use of a top strap. There is no appropriate place to attach a top strap anchor behind the seat in this vehicle.

Downloaded from www.Manualslib.com manuals search engine

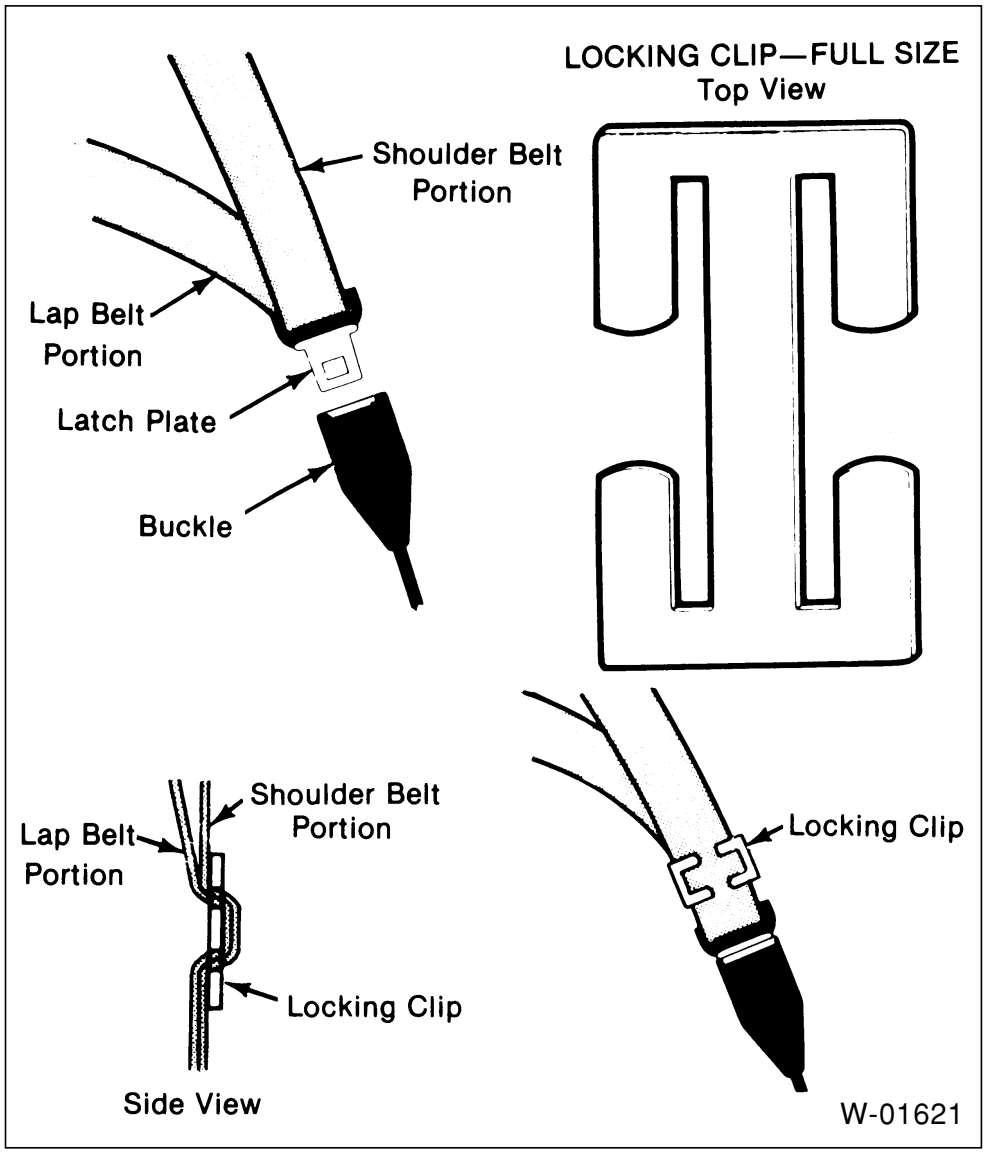

SEAT BELT EXTENDER

If the vehicle's seat belt will fasten around you, you should use it. But if a seat belt isn't long enough to fasten, your dealer will order you an extender. When you go in to order it, take the heaviest coat you will wear, so the extender will be long enough for you. The extender will be just for you, and just for the seat in your vehicle that you choose. Do not let someone else use it, and use it only for the seat it is made to fit. To wear it, just attach it to the regular seat belt.

Downloaded from www.Manualslib.com manuals search engine

DIESEL PARTICULATE FILTER (DPF)

The DPF is the system which traps Particulate Matter (PM) in exhaust gas. This collects PM into the DPF and regenerates the filter (burns PM) automatically. To prevent DPF failure, take the following precautions.

CAUTION:

- **Exhaust gas from the DPF, muffler, exhaust pipe and tailpipe is extremely hot when the engine is running, during regeneration (burning), or immediately after driving.**
  Nearby flammable materials such as dried grass and wastepaper may catch fire.
  Be very careful not to touch them by accident. You may get burned.
  When you service the vehicle, stop the engine to prevent burns.
- **Always use diesel fuel. Use of low quality fuel may adversely affect the engine parts, and cause failure.**
- **Use of other than specified fuel may adversely affect the engine or emission control system and cause failure. Especially for common rail type engines, always use ultra low sulfur diesel fuel (15 ppm or less of sulfur content).**
- **If other than specified diesel fuel is used on a vehicle with DPF, the vehicle may not conform to specifications.**
- **Do not modify the DPF or exhaust pipe.**
  Modification of the direction, length or diameter of the exhaust pipe will adversely affect the exhaust gas purification system. If modification is needed according to equipment type, contact your Isuzu dealer.

Downloaded from www.Manualslib.com manuals search engine

NOTICE:

- **For engine oil, use low ash engine oil. Use of others than those designated by Isuzu that support the DPF may shorten the cleaning intervals of the DPF and may lower fuel efficiency.**
- **The DPF automatically regenerates when a certain amount of PM (Particulate Matter) accumulates in the filter. However, this may not complete depending on driving conditions. In this situation, the DPF indicator (amber) will come on. Perform manual regeneration according to the procedure. This is not a system failure, but is to restore the DPF function.**
- **The exhaust brake valve is activated while the vehicle is idling in the DPF regeneration (burning) mode. Sound occurs when the exhaust brake valve is activated and deactivated. This is not a failure.**
- **A small amount of white smoke may be emitted from the exhaust pipe with Particulate Matter (PM) burned during DPF regeneration. This is not a failure. Also, do not perform the emergency regeneration indoors with poor ventilation.**
- **White smoke may be emitted during the DPF regeneration after the new vehicle runs for a certain distance.**
  This is not a failure. White smoke may not necessarily be emitted when the vehicle is new.
- **Because of the exhaust gas purification system, the gas from the exhaust pipe smells differently from that of conventional diesel vehicles.**
- **With long continuous idling, the exhaust brake valve may be activated to prevent white smoke after a certain period of time.**
- **Use of low ash oil lengthens the maintenance interval of the DPF.**

Downloaded from www.Manualslib.com manuals search engine

BEFORE DRIVING

Use the specified fuel (ultra low sulfur diesel fuel only)

CAUTION: Always use diesel fuel.

Use of low quality fuel may adversely affect the engine parts, and cause failure.

Use of other than specified fuel may adversely affect the engine or emission control system and cause failure. Especially for the common rail type engine, always use ultra low sulfur diesel fuel (15 ppm or less of sulfur content).

If other than specified diesel fuel is used on the vehicle with the DPF, the vehicle may not conform to specifications.

Do not keep the engine running indoors

CAUTION: In a place with poor ventilation, carbon monoxide poisoning may occur. Starting or warming-up the engine should be performed in a well-ventilated place. White smoke may be temporarily emitted due to PM combustion during the DPF manual regeneration. Do not perform DPF manual regeneration indoors with poor ventilation.

Be careful with flammable materials

CAUTION:

- **Before starting the engine, make sure that there are no flammable materials around the vehicle and dried grass does not wind around the exhaust pipe. Be careful that the hot exhaust pipe and hot exhaust gas does not catch fire after engine racing, or engine running at high speed for long periods of time.**
- **Pay close attention to the heat of the exhaust gas during idling especially when using the PTO (POWER TAKE-OFF) or afterburning on the vehicle equipped with the DPF.**

Downloaded from www.Manualslib.com manuals search engine

SECTION 2
STARTING AND OPERATING

Engine Exhaust Gas Caution (Carbon Monoxide)

CAUTION: Do not breathe exhaust gas because it contains carbon monoxide, which by itself has no color or odor. Carbon monoxide is a dangerous gas. It can cause unconsciousness and can be lethal.

If at any time you think exhaust fumes are entering the cab, have the cause determined and corrected as soon as possible. If you must drive under these conditions, drive only with all windows fully open.

Prevent carbon monoxide from entering the cab. The best way is to keep the engine exhaust system, cab and cab ventilation system properly maintained.

We recommend that the exhaust system and cab be inspected by a competent technician:

- **Each time the vehicle has an oil change.**
- **Whenever a change is noticed in the sound of the exhaust system.**
- **Whenever the exhaust system, underbody or cab is damaged or becomes corroded.**

See "Maintenance Schedule" in Section 5 of this manual for parts requiring inspection.

To allow proper operation of your vehicle's ventilation system, keep the air inlet grille clear of snow, leaves or other obstructions at all times.

Do not park with the engine running or idle this vehicle for more than 10 minutes with the ventilation system control switch in the "OFF" position. Even with the ventilation system on, running the engine while parked or stopped for longer periods of time is not recommended. Entry of carbon monoxide into the cab is possible with a poorly repaired, damaged, or corroded exhaust system or cab.

Do not run the engine in confined areas (such as garages or next to a building) any more than needed to move the vehicle. When the vehicle has to be stopped in an unconfined area with the engine running for any more than a few minutes, take the following steps:

A. Adjust the heating or cooling system to force outside air into the cab. With temperature and select levers in any position:
   - **Set the air source lever to the fresh air position.**
   - **Set the fan blower to the "3" or "4" position.**
   - **See "Heating and Ventilation System Controls" later in this section of the manual.**

B. Keep the exhaust tailpipe area clear of snow and other material to help reduce the buildup of exhaust gases under the vehicle. This is particularly important when parked in blizzard conditions.

Downloaded from www.Manualslib.com manuals search engine

NEW VEHICLE BREAK-IN

Good vehicle care begins with proper break-in. While every new vehicle goes through rigid factory and dealer inspection and tests before delivery, the care you give your vehicle during the initial break-in period can pay off in longer life, better performance and more economical operation. Follow the recommendations listed below:

- Warm up the engine by driving easily for the first few minutes before placing it under load.
- Keep speeds below 50 MPH (80 km/h) for the first 500 miles (800 kilometers).
- Do not drive for extended periods at any one constant speed, either fast or slow, during the first 500 miles (800 kilometers).
- Use the lowest gear ratio available when starting a loaded vehicle and when climbing slopes to avoid lugging the engine.
- Use the correct gear to maintain the desired road speed without lugging the engine.
- Avoid racing the engine, full-throttle starts and aggressive application of brakes when stopping.
- Keep tires properly inflated for the load carried.
- Check lubricant levels in the engine and transmission frequently (at least weekly).

MECHANICAL DRIVESHAFT BRAKE BURNISH PROCEDURE

It is recommended that the driveshaft mounted parking brake be burnished as part of the new vehicle break-in procedure. Increased parking brake performance will result when the parking brake is burnished according as specified below:

- Make 10 moderate stops, using the hand brake, from 10 MPH (16 km/h) while spacing the stops a minimum of 2.5 miles (4 km) apart.
- Operate the vehicle at 20 MPH (32 km/h) between stops.

Downloaded from www.Manualslib.com manuals search engine

DIESEL FUEL REQUIREMENT AND FUEL SYSTEM

Fuel Requirements

CAUTION: Use of other types of fuel than ultra low-sulfur fuel may not conform to emission regulations.

NOTICE: The fuel supply pump, injector or other parts of the fuel system and engine can be damaged if you use any fuel or fuel additive other than those specifically recommended by Isuzu.

Such damage is not Isuzu's responsibility, and is not covered by the New Vehicle Limited Warranty. To help avoid fuel system or engine damage, pay attention to the following:

- **Some service stations mix used engine oil with diesel fuel. Some manufacturers of large diesel engines allow this; however, for your diesel engine, do not use diesel fuel which has been contaminated with engine oil. Besides causing engine damage, such fuel can also affect emission control. Before using any diesel fuel, check with the service station operator to see if the fuel has been mixed with engine oil.**
- **Do not use any fuel additive (other than as recommended under "Biocides" in this section). At the time this manual was printed, no other fuel additive was recommended. (See your authorized dealer to find out if this has changed.)**
- **Take care not to run out of diesel fuel. If you do run out of fuel, you may need to bleed air out of the supply pump to re-start the engine after fuel has been filled.**

Your vehicle is designed to use either Number 1-D or Number 2-D diesel fuel. However, for better fuel economy, use Number 2-D diesel fuel whenever possible. At temperatures below 20°F (–7°C), Number 2-D fuel may pose operating problems (see "Cold Weather Operation" which follows). At colder temperatures, use Number 1-D fuel (if available) or use a "winterized" Number 2-D (a blend of Number 1-D and Number 2-D). This blended fuel is usually called Number 2-D also, but can be used in colder temperatures than Number 2-D fuel which has not been "winterized". Check with the service station operator to be sure you get the properly blended fuel.

NOTICE: Do not use fuels other than those listed below. Doing so may adversely affect the engine.

Downloaded from www.Manualslib.com manuals search engine

DIESEL FUEL/APPLICABLE STANDARD (Sulfur content below 15ppm)	
JIS (JAPANESE INDUSTRIAL STANDARD)	Based on K2204 Diesel Fuel
DIN (DEUTSCHE INDUSTRIE NORMEN)	Based on EN590
ASTM (AMERICAN SOCIETY FOR TESTING and MATERIALS)	Based on D975 NO.1-D S15 or NO.2-D S15 (below 15 ppm)
BS (BRITISH STANDARD)	Based on EN590

It is acceptable to use diesel fuel containing up to 5% biodiesel (B5), but the final blended fuel must meet the same specification, ASTM D 975 (Grade Ultra Low Sulfur Diesel), as other fuels used in your vehicle, and the biodiesel used for making this fuel must meet the latest version of ASTM specification D 6751. Biodiesel is produced from vegetable oils or animal fat that have been esterified to reduce the possibility of damage to your fuel system and engine. Higher concentration (i.e., greater than B5) biodiesel-containing fuels or the use of unesterified bio-oils blended into diesel fuel at any concentration is not recommended and could damage your fuel system and engine. Such damage would not be covered by your warranty. If there are questions about the biodiesel-containing fuels you are using, contact your fuel supplier.

Cold Weather Operation

Diesel fuel is sensitive to temperature. All diesel fuel has a certain amount of paraffin components, which are high in energy value and help improve fuel economy. But, when temperatures are below about 20°F (–7°C), the paraffin components begin turning into wax flakes. If temperatures are low enough, these flakes can obstruct the fuel filters and stop fuel from reaching the engine.

At low temperatures, wax flakes are more likely to form in Number 2-D fuel than in Number 1-D (or “winterized” Number 2-D) fuel. For best operation at temperatures below 20°F (–7°C), use Number 1-D, or Number 2-D which has been blended with Number 1-D for winter use. When temperatures are consistently below (or near) 0°F (–18°C), use Number 1-D if at all possible. Bear in mind, however, that even Number 1-D fuel will form wax flakes when temperatures are extremely low.

If you are driving in temperatures below 0°F (–18°C) and do not have Number 1-D or “winterized” Number 2-D fuel in the fuel tank, kerosene may be added to reduce waxing. Kerosene should be added at a ratio of one gallon of kerosene to two gallons of diesel fuel. Because of the lower energy value of kerosene (and reduced fuel economy) it should be added only when anticipated temperatures are below 0°F (–18°C). Once kerosene has been added, the engine should be run for several minutes to mix the fuel.

Downloaded from www.Manualslib.com manuals search engine

NOTICE: Do not use home heating oil or gasoline in your diesel engine; either may cause engine damage.

The addition of kerosene will not unplug a filter plugged with wax. Warming a "waxed" filter to a temperature of 32°F to 50°F (0°C to 10°C) will return the wax to solution. Filter replacement is not normally required.

Water in Fuel

During refueling, it is possible for water (and other contaminants) to be pumped into your fuel tank along with the diesel fuel. This can occur if a service station does not regularly inspect and clean its fuel tanks, or if a service station receives contaminated fuel from its supplier(s).

To protect your engine from contaminated fuel, there is a water separator system on the engine which allows you to drain excess water from the fuel.

CAUTION: The drained water/diesel fuel mixture is flammable, and could be hot. To help avoid personal injury or death and/or property damage, do not touch the fuel coming from the water separator drain valve, and do not expose the fuel to open flames or sparks.

Be sure you do not overfill the drain pan. Heat (such as from the engine) can cause the fuel to expand. If the container is too full, fuel could be forced out of the pan. This could lead to a fire and the risk of personal injury and/or vehicle damage.

Biocides

In warm or humid weather, fungus, and/or bacteria may form in diesel fuel if there is water in the fuel.

NOTICE: Fungus or bacteria can cause fuel system damage by plugging the fuel lines, fuel filters or injector. They can also cause fuel system corrosion.

If fungus or bacteria has caused fuel system problems, you should have your authorized dealer correct these problems. Then, use a diesel fuel biocide to sterilize the fuel system (follow the biocide manufacturer's instructions). Biocides are available from your dealer, service stations, parts stores and other automotive places. See your authorized dealer for advice on using biocides in your area and for recommendations on which biocides you should use.

Downloaded from www.Manualslib.com manuals search engine

SMOKE SUPPRESSANTS

Because of extensive testing of treated fuel versus untreated fuel, the use of a smoke suppressant additive is not recommended because of the greater possibility of stuck rings and guttered valves, resulting from excessive ash deposits.

IMPORTANT FACTS YOU SHOULD KNOW ABOUT FUEL ECONOMY AND HOW TO IMPROVE IT

How you drive, where you drive and when you drive all affect how much distance you can achieve from the fuel. You can save fuel if you avoid “Jackrabbit” starts, maintain as constant a throttle position as traffic conditions allow once you have reached cruising speed, and avoid sudden stops that waste energy in the form of heat generated in braking. Frequent short trips, excessive idling and use of the air conditioner in cool weather when “Vent” would provide adequate comfort, can all lead to decreased fuel economy.

The careful attention you give your vehicle, as far as maintenance is concerned, will also help fuel economy. Proper engine and air cleaner maintenance, lubrication intervals, wheel alignment, and tire inflation pressures will pay dividends in improved fuel economy as well as longer vehicle life.

FUEL SELECTION

Use Number 2-D diesel fuel whenever possible; it will give better fuel economy than Number 1-D. Use Number 1-D in weather below 20°F (–7°C). See “Diesel Fuel Requirement and Fuel System” in this section for guidelines on selecting the proper fuel.

Downloaded from www.Manualslib.com manuals search engine

STARTING THE ENGINE

ENGINE CONTROL SWITCH

The starting circuit, engine alarm circuits and accessory circuits are all controlled by the engine control switch. The switch is located on the right-hand side of the steering column.

A:LOCK—Lock is in the position fully counterclockwise. The key can be inserted and removed in this position. To remove, keep pushing the key while turning from “ACC” to “LOCK”.

B:ACC—Accessory is in the first position clockwise. Electrical accessories can be operated without the engine control circuit being energized.

C:ON—The engine “ON” position is in the second position clockwise. Engine control, warning circuits, gauge circuits, and accessory circuits are energized. The engine cylinder heaters or “glow plugs” are also turned on when the switch is in the “ON” position. The glow plug indicator light will come on and stay on until the glow plugs are heated enough. When this light goes off, turn the switch to the “START” position.

D:START—Start is in the position furthest clockwise. Turn the key against spring pressure to energize the starter. When key is released, spring pressure returns it to the “ON” position.

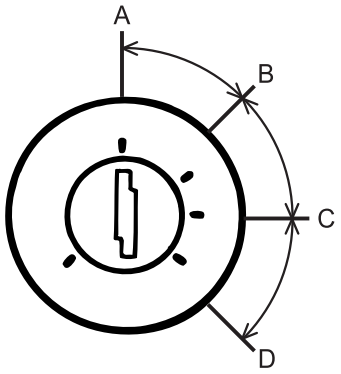

STARTING PROCEDURE

The following procedure is recommended for starting the truck’s diesel engine.

1. Apply the parking brake, place the transmission selector in the “P” or “N” position (“P” is preferred).
   <u>Do not depress the accelerator pedal with the key switch in the “LOCK” or “ACC” position.</u>

Downloaded from www.Manualslib.com manuals search engine

2. Turn the key to the “ON” position and hold until the glow plug indicator light goes off.
3. Turn the key switch to the “START” position (do not step on the accelerator pedal). Release the key switch as soon as the engine starts.

CAUTION: Do not keep the starter motor engaged for more than 10 seconds at a time, or the starter motor and the battery will be adversely affected. Also, fire may occur due to overheating. Repeat the steps 1 and above after 20 to 30 seconds break.

4. Do not crank the engine for more than 10 seconds at a time. If the engine does not start, wait 20 to 30 seconds with the key switch in the “LOCK” or “ACC” position before trying to start again.

NOTICE: Do not use starting “aids” such as ether in the air intake system. Such aids can cause immediate engine damage.

It is normal for the vacuum warning buzzer to sound for a few seconds after the engine has started.

After the engine has started, check to be sure the transmission is still in the “P” or “N” position.

Turn the idle speed control knob clockwise, if needed, to obtain a smooth idle. This engine has an automatic warm-up system that increases engine idle speed and applies the exhaust brake. Allow sufficient time to let the engine circulate lubricant oil before driving. This usually requires 30 sec. to 2 min. depending on ambient conditions.

DO NOT RACE THE ENGINE TO SPEED WARM-UP

Turn the idle speed control knob fully counterclockwise after the engine has warmed up.

CAUTION: Do not use the idle speed control knob while the vehicle is in motion. This could reduce your ability to stop in an emergency, possibly resulting in increased brake wear, personal injury and/or property damage.

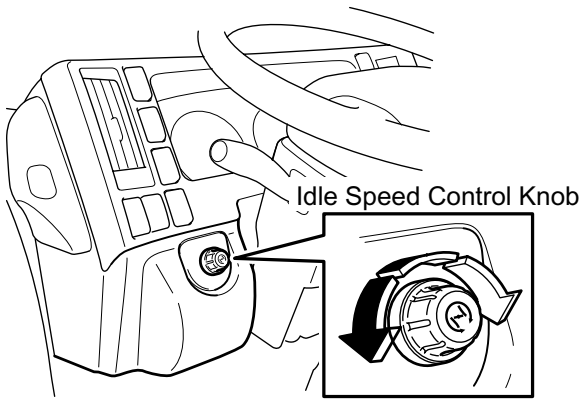

Downloaded from www.Manualslib.com manuals search engine

CHECKS BEFORE OPERATING

Allow the engine to warm up before placing the engine under heavy load driving. While the engine is warming up under light load, the following checks should be made:

1. Observe the red oil pressure warning light. The light should go out when the engine is running. If it stays on, shut the engine off and find the cause.
2. Look at the engine coolant temperature gauge. If the gauge reaches the “H” (hot) area, stop the engine and find the cause of the overheating.
3. Check that the generator warning light has gone out. The light should go off and stay off at normal idle speeds. If the light does not go out or comes on during normal operation, have the charging system checked.
4. Check that the low vacuum warning light is out and that the vacuum buzzer is not sounding. It is normal for the warning buzzer to sound for a few seconds after the engine starts. If the light and buzzer remain on, do not drive the vehicle until the cause has been found and corrected.
5. Look at the “BRAKE” system warning light. It should be out when the parking brake is released and the engine is running. If it stays on, it could mean that the brake fluid level is low. Check the brake fluid level indicator. This condition must be corrected before moving the vehicle.

CAUTION: To reduce the chance of personal injury and/or vehicle damage due to engine overheating, never leave the engine idling without an alert driver present. If the engine should overheat, as indicated by the engine coolant temperature gauge, immediate action is required to correct the condition. Continued operation of the engine, even for a short time, may result in a fire. Do not engage the exhaust brake while the engine is idling as this may cause engine overheating.

AVOID UNNECESSARY IDLING OF THE DIESEL ENGINE

If the engine idles too long, the engine coolant temperature will fall below the operating range. Low engine operating temperature causes several conditions that are harmful to engine operation and life. Incomplete combustion of fuel in an engine that is not fully warmed-up causes crankcase dilution and forms lacquer and gummy deposits on valves, pistons, and rings. It also causes rapid accumulation of sludge within the engine.

Downloaded from www.Manualslib.com manuals search engine

SHUTTING DOWN THE TURBOCHARGED DIESEL ENGINE

NOTICE: Let the engine run at idle for at least three (3) minutes before stopping the engine to help prevent damage to the turbocharger bearings.

1. Apply the parking brake and place the automatic transmission selector in the “P” position.
2. Turn the engine control switch to the “ACC” or “LOCK” position.

CAUTION: DO NOT leave the vehicle in gear. If the vehicle rolls, the engine may start. Always leave the automatic transmission selector in the “P” position and apply the parking brake. When leaving the vehicle parked on an incline, block the wheels or turn the front wheel into the curb to prevent the vehicle from rolling.

KEY REMOVAL

To remove the key, turn the Engine Control Switch to the “LOCK” position.

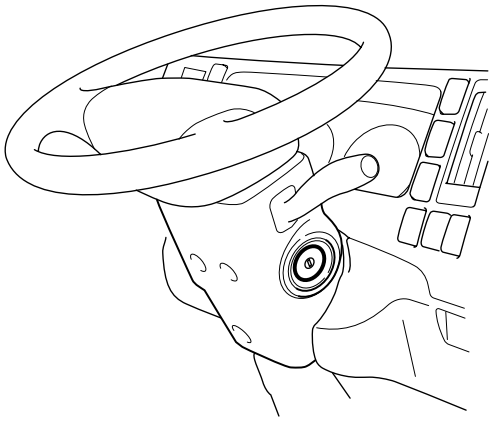

COLD WEATHER STARTING

If you plan ahead for cold weather, starting and driving your vehicle should be no problem. The following tips will help ensure good starting in cold weather.

Oil gets thicker as it gets colder, which slows down the engine cranking speed. Your diesel engine functions by the heat of compression (and glow plugs when cold), rather than through the use of spark plugs as in a gasoline engine. So, your engine must crank faster than a gasoline engine before it will start.

Downloaded from www.Manualslib.com manuals search engine

To be sure the engine can turn fast enough to start, use SAE 10W-40 viscosity engine oil when prevailing temperatures drop below 32°F (0°C). (See the oil quality and oil viscosity recommendations in Section 5) Using your proper viscosity oil will make starting easier down to –10°F (–23°C). When prevailing temperatures drop below –10° F (–23°C), the optional engine block heater may be needed for starting.

ENGINE WARM-UP SYSTEM

During cold ambient conditions, the automatic engine warm-up system operates to reduce engine warm-up time during idling.

AUTOMATIC ENGINE WARM-UP

When the engine is idling with the engine coolant temperature below 144°F (62°C), the engine warm-up system automatically closes the exhaust brake and increases engine idle speed so that the engine is warmed more quickly. Warm-up is cancelled when the accelerator pedal is depressed, and resumed when the pedal is released. Warm-up is automatically cancelled entirely after the engine coolant temperature rises above 149°F (65°C).

ENGINE BLOCK AND OIL PAN HEATER (IF EQUIPPED)

If the vehicle is parked in a garage, the block and pan heaters should not be needed until the garage temperature drops below –10°F (–23°C) regardless of outside temperature.

The engine block and oil pan heaters are designed to warm the block and oil pan areas that will let the engine run faster. To use the heaters:

1. Tilt the cab (See Section 5).
2. Unwrap the electrical cord and remove the protective cap.
3. Plug the cord into any three-prong 110 volt outlet (normal household current). It may require several hours to sufficiently heat the engine.
   Outside temperature, oil viscosity, etc., will affect how long the block and oil pan heater should remain plugged in. Contact your dealer for the conditions in your area.
4. After using the heater(s), be sure to restore the cord properly, to help keep it away from moving engine parts.

NOTICE: If the cord is too short, use a heavy duty, three-prong extension cord. Do not use an extension cord such as you would use for a lamp, because the cord may overheat.

The engine should go through a warm-up period to warm up the engine oil before placing engine under load. This will ensure proper lubrication of the engine.

NOTICE: Do not use starting “aids” in the air intake system. Such “aids” can cause immediate engine damage.

Downloaded from www.Manualslib.com manuals search engine

ENGINE ALARM AND AUTOMATIC SHUTDOWN

If the system senses any of the following conditions: high engine temperature, low engine oil pressure or low engine coolant, the corresponding warning light and engine alarm (shutdown) warning light will come on. If the engine alarm (shutdown) warning light comes on, you will also hear a tone alarm.

If your vehicle has the engine shutdown feature, your engine will shut down in 30 seconds.

Pull off the road and shut off the engine. Do not start it until the cause of the problem is known, and the problem is fixed. If the engine shuts down when you are still in traffic, you can restart the engine and get another 30 seconds of operation. Do this only if you have to, since there is a problem that can harm the engine if it isn't fixed.

GUARD AGAINST THEFT

Your new vehicle has many features to help prevent theft of the vehicle, its equipment and contents. But these anti-theft features depend upon you to work.

The time to be most on guard is when leaving the vehicle:

1. Park in a lighted spot when you can.
2. Turn the engine control switch to “LOCK” and remove the key. This locks the switch and the steering controls. The shift control lever is not locked.
3. Keep items that may appear to be of value out of sight and locked up when possible.
4. Fully close all windows and lock all doors.

PARKING, OR LEAVING DRIVER’S SEAT

CAUTION: It can be dangerous to get out of your vehicle if your automatic transmission shift lever is not fully in “P” (Park) or the parking brake is not applied all the way. Your vehicle can roll or move suddenly if the engine is running. You or others could be injured or killed.

To be sure your vehicle won’t move, even when you are parking on level ground, follow the steps below. (If you have to park on a hill, also turn your front wheels so the vehicle would roll away from traffic.)

Downloaded from www.Manualslib.com manuals search engine

1. Hold the regular brake pedal down with your right foot and apply the parking brake all the way before shifting the transmission. Follow the Parking Brake instructions in this manual for your vehicle.
2. To move the automatic transmission shift lever to “P” (Park), hold in the button on the lever and push the lever all the way toward the front of your vehicle.
3. Turn the key to “LOCK”.
4. Remove the key and take it with you.
5. Before you leave the driver’s seat, be sure the vehicle is not moving, or check that your vehicle is in park by trying to pull the automatic transmission shift lever out of “P” (Park) by pulling the shift lever toward you without pushing the button. If you can do this, it means that the shift lever wasn’t fully locked into “P” (Park).

CAUTION: To reduce the chance of personal injury and vehicle damage due to engine overheating, never leave the engine idling for any extended time. If the engine should overheat, as indicated by the Engine Coolant Temperature gauge, action is required to correct the condition. Continued operation of the engine with an overheat condition, even for a short time, may result in a fire.

NOTICE: After high speed or heavy load operation, let the engine run at idle for at least three (3) minutes before stopping engine to prevent damage to the turbocharger.

Vehicle Operation

CAUTION: It is not recommended that this vehicle be parked, idled or operated over combustible materials such as grass or leaves. They could touch the hot exhaust system and start a fire. This is particularly important if the exhaust system has not been properly maintained. Combustible materials could catch fire from hot exhaust gases, soot, or sparks that could escape through corrosion holes or cracks.
If operating, parking or idling your vehicle off-road is unavoidable, such as in farming, lumbering, commercial or recreational use:

- **The driver should be aware that combustible materials could catch fire from the vehicle’s hot exhaust system.**
- **Carry a fire extinguisher with the vehicle at these times.**
- **Avoid driving your vehicle through or over combustible materials such as leaves, grass vegetation or stubble high enough to touch, catch or collect on its hot exhaust system.**
- **Parking or idling should be done only in an area where there are no combustible materials under the vehicle.**
  Failure to follow these instructions could damage your vehicle or nearby property.

Downloaded from www.Manualslib.com manuals search engine

DRIVING TECHNIQUES

BRAKING AND STEERING TECHNIQUES

Always turn-off the manual engine idle control knob to the full counter-clockwise position while driving to maintain proper braking performance and reduce brake wear.

To get maximum braking while maintaining vehicle control, use a "squeeze" braking technique. Do this by pushing on the brake pedal with steadily increasing pressure. If possible, steer around obstacles when there is not enough room to stop. If the vehicle does not respond to steering or changes direction when you are not steering, ease up on the brake pedal. If the front wheels are not rolling to some extent, you cannot control the direction of the vehicle by turning the steering wheel. To correct for a skid, ease off the accelerator pedal or the brake and steer to keep the vehicle pointing where you want it to go. Do not touch the brake.

WET BRAKES

CAUTION: After driving through water deep enough to wet brake components or having the vehicle washed, the brakes may require higher pedal effort. As a result, the vehicle will not slow down at the usual rate, and it may pull to the right or left. After checking to the rear for other vehicles, apply the brakes lightly to check whether this has happened. To dry them quickly, lightly apply the brakes. At the same time, keep a safe forward speed with plenty of clear space ahead, to the rear, and to the sides. Do this until the brakes return to normal. Always do this after driving through water or washing the vehicle to help reduce the risk of personal injury.

RIDING THE BRAKE

CAUTION: "Riding the brake" by resting your foot on the pedal, when you do not intend to brake, can overheat the brakes and wear out the brake linings faster. This may also damage the brakes and will waste fuel. It can also result in reduced braking performance.

DESCENDING A GRADE

CAUTION: To reduce the risk of personal injury, before going down a steep or long grade, reduce speed, turn on the exhaust brake and shift the transmission to the next lower gear. This will help control your speed. Do not hold the brake pedal down too long or too often while going down a steep or long grade. This could cause the brakes to get hot and not to work as well. As a result, the truck will not slow down at the usual rate. Failure to take these steps could result in loss of vehicle control.

Downloaded from www.Manualslib.com manuals search engine

NOTICE: The engine should never be allowed to exceed the governed speed. Supplement the exhaust brake with vehicle service brakes intermittently and/or shift to higher transmission gear to prevent engine overspeed. A "rule-of thumb" for gear selection is that the vehicle should be driven down a grade in the same gear that would be used to climb that grade.

If the system fails to operate or shut off, check the electrical wiring, wiring connections, and switch adjustment at pedals. Your dealer is best qualified to adjust and service the exhaust brake system.

DRIVING ON SLIPPERY SURFACES

NOTICE: When inevitably driving on flooded road, it is advisable to run slowly at a constant speed while confirming the depth of water. Otherwise, water may intrude in the engine cylinder and cause damage on the engine (due to water hammer phenomenon). It is also advisable to slow down your vehicle and drive with care. After driving on the flooded road, it is recommended to immediately bring the vehicle to the Isuzu dealership and let them check engine, electric parts, transmission, propeller shaft, differential and transfer for water intrusion, and apply grease and oil to each area.

Drive, steering and braking traction is reduced when water, snow, ice, gravel or other material is on the road. Slow down and adjust your driving to such conditions. It is important to slow down when it is slippery because stopping distance will be longer and vehicle control more limited. While driving on a surface with reduced traction, avoid maneuvers involving sudden steering, acceleration or braking (including engine braking by shifting to a lower gear), which could cause the tires to skid. You may not realize the surface is slippery until the vehicle is skidding. Learn to recognize warning clues—such as enough water or ice on the road to make a "mirrored surface"—and slow down when there is any doubt. Also, see "Tire Traction" under "Wheels and Tires" in Section 5 of this manual.

USE OF THE EXHAUST BRAKE (ON SLIPPERY SURFACES)

The exhaust brake can be used effectively by selecting a higher than normal transmission gear for the given road speed. The engine will operate at a reduced rpm; therefore, reducing the retarding effect when the system is operating.

Downloaded from www.Manualslib.com manuals search engine

STOPPING THE VEHICLE IN THE EVENT OF SERVICE BRAKE MALFUNCTION

The exhaust brake should be turned on as soon as service brake malfunction is detected. This will slow the engine speed. With the engine speed under control and providing the grade conditions permit, the transmission can be progressively down-shifted using the exhaust brake in each gear. Eventually the exhaust brake should slow the vehicle to a controllable “crawl”. Stop the vehicle. The vehicle should not be driven further until corrective measures are taken.

DRIVING AT LOW SPEEDS FOR SUSTAINED PERIODS

Some vehicle applications such as Road Sweepers or Road Markers may require operation at low speeds (less than 15 MPH (24 km/h)) for sustained periods of time. In order to receive the best performance in this condition, be sure the transmission selector is in the “1” position. See Instrument Panel Control Section (Automatic Transmission Fluid Temperature Warning Light) page 2-35 for additional information.

STEERING COLUMN CONTROLS

ANTI-THEFT STEERING COLUMN LOCK

CAUTION: If you need to turn the engine off while the vehicle is moving, turn the key to “ACC” only.
Do not turn the key to “LOCK”. Do not remove the key when the vehicle is moving. This will result in locking the steering wheel and loss of steering control.
*** Turning the engine off with the vehicle moving is dangerous as braking efficiency will be reduced.**

Downloaded from www.Manualslib.com manuals search engine

LEFT-HAND CONTROL LEVER

The turn signal lever on the left side of the steering column also controls headlight low beam and high beam.

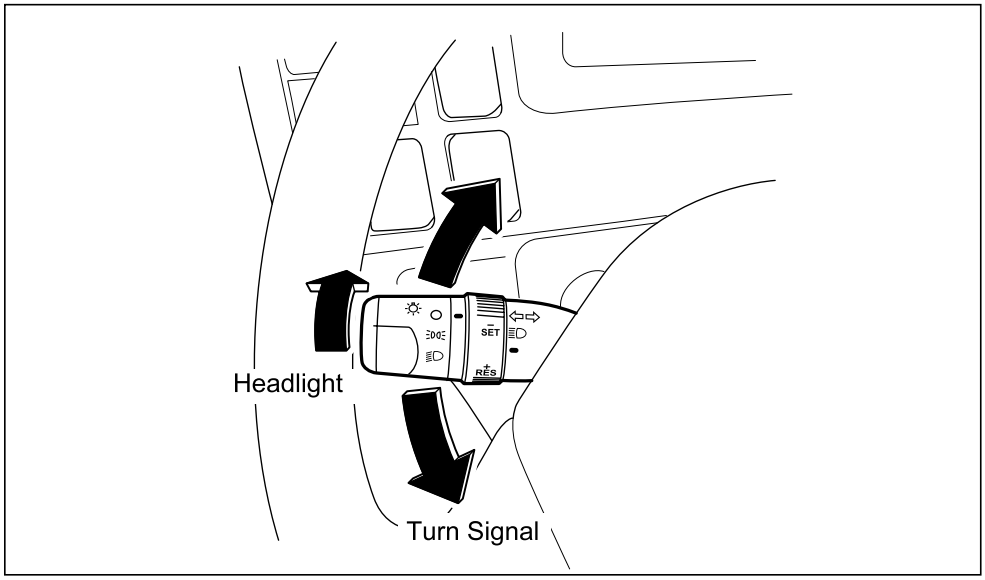

TURN SIGNAL

Move the lever up to signal a right turn. Move it down to signal a left turn. When the turn is completed, the signal will cancel and the lever will return to horizontal. If the steering wheel was not turned enough to cancel the signal automatically (such as when changing lanes on an expressway), cancel the signal manually.

A green light on the instrument panel is designed to flash to tell you that the front and rear turn signal lights are working. If the light stays on, but does not flash, check for a burned-out turn signal bulb. If the green light does not come on when you move the lever, check the fuse and indicator bulb.

HEADLIGHTS/CORNERING LIGHTS

The headlight switch has three positions. Rotate the switch to operate it.

- " ○ "—All lights are off.
- " ⁝00⁝ "—Taillights, license plate lights, instrument cluster lights, identification lights and clearance lights (if equipped). Use for parking only.
  When taillights and a turn signal light are both turned on, the cornering light will automatically come on.
- " ≣D "—Headlights are on, plus all lights from" ⁝00⁝ ".

Downloaded from www.Manualslib.com manuals search engine

HEADLIGHT DIMMER SWITCH

- With the headlight switch set at " ≡D " and the left-hand lever in the center position, the headlights are at low beam. Always use low beam when approaching or following other vehicles.
- Push the multi-function lever toward you to engage high beam. An indicator, located in the instrument panel lights when the high beam is being used.

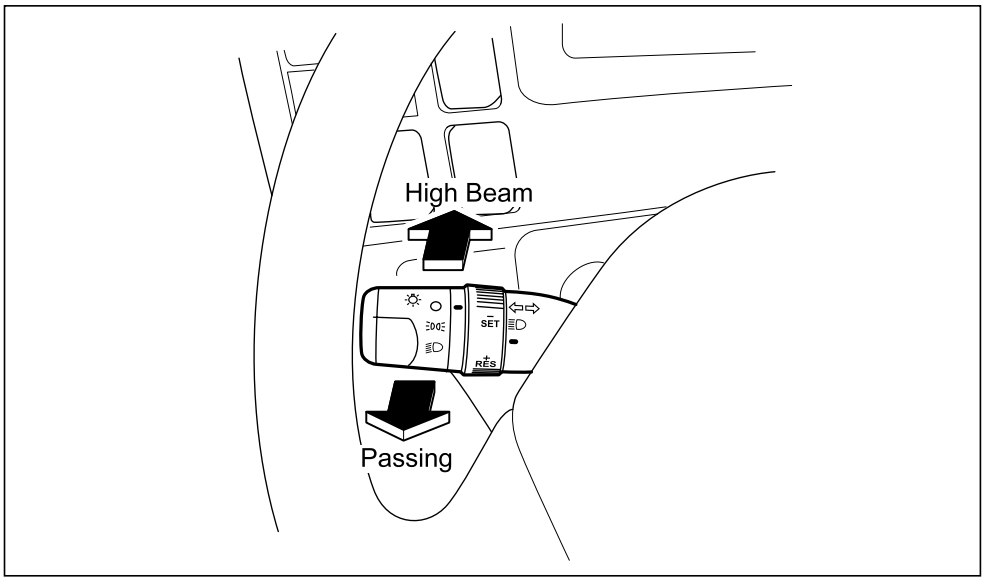

PASSING LIGHT SWITCH

With the headlights on, you can repeatedly turn on and off the high beams to signal your intention to pass. Even if the headlights are off, pulling the switch up will momentarily turn on the high beams to signal your intention to pass.

RIGHT-HAND CONTROL LEVER

The right-hand control lever controls the exhaust brake, windshield wipers, and windshield washers.

WINDSHIELD WIPERS

NOTICE: Do not attempt to operate wipers if blades are frozen to the windshield, since this could result in damage to the wiper motor or wiper arm.

Turn the wiper switch to operate the windshield wipers. The switch has four positions:

- " ○ "—Windshield wipers are off.
- " ⎓ "—Intermittent wiper operation, for use during periods of light rain, mist, or fog where continuous wiping is not needed.
- " — "—Low-speed wiper operation.
- " = "—High-speed wiper operation.

Downloaded from www.Manualslib.com manuals search engine

WINDSHIELD WASHER

To spray washer fluid on the windshield, push the button on the end of the combination switch lever. The spray will continue as long as you hold in the button. After using the windshield washer, turn the wipers off by setting the switch to " O ".

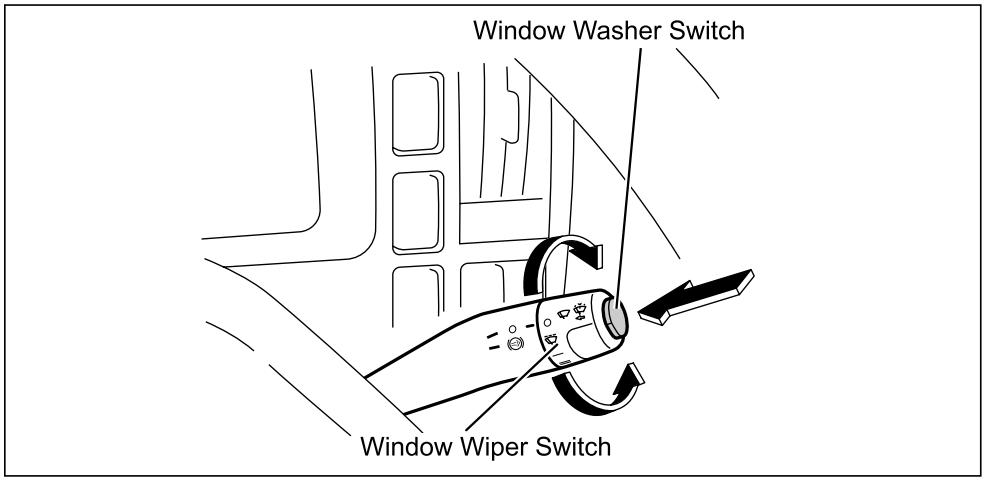

Operating Tips

- Clear ice or packed snow from the wiper blades before using the wipers. Carefully loosen or thaw wipers that are frozen to the windshield.
- Check the washer fluid level regularly. Do it often when the weather is bad.
- Use a good quality windshield antifreeze to help prevent freezing damage, and for better cleaning. Be sure to add the fluid to the proper reservoir.
- Fill the washer fluid reservoir only 3/4 full during the winter to allow for expansion if the temperature should fall low enough to freeze the solution.

NOTICE: Do not use radiator antifreeze in the windshield washer, it could cause paint damage and cloud the glass.

- In cold weather, warm the windshield with the defrosters before using the washer, to help prevent icing that may block the driver's vision.
- The washer fluid reservoir is located to the right of the glove box.

EXHAUST BRAKE OPERATION

The system, when turned on, increases the amount of power absorbed by the engine while coasting in gear. Whenever slowing down the vehicle, such as on down grades, in city traffic or approaching stop signals, this brake system may be used.

Lift the right hand control lever up to turn the exhaust brake on. An indicator in the instrument panel lights when the exhaust brake switch is on. Pull the lever up again to turn the exhaust brake off during idling.

Downloaded from www.Manualslib.com manuals search engine

After the vehicle is in motion, the exhaust brake system operates when the driver's foot is removed from the accelerator pedal.

The selection of transmission gears and engine speed when operating the brake system is important. The exhaust brake is more effective in the lower gears and at the higher engine speeds.

CAUTION: To reduce the risk of personal injury, do not operate the exhaust brake on slippery roads (snow covered, frozen or wet roads), because the tires may lock.

Descending a Grade

CAUTION: To reduce the risk of personal injury, before going down a steep or long grade, reduce speed, turn on the exhaust brake, and shift the transmission to the next lower gear. This will help control your speed. Do not hold the brake pedal down too long or too often while going downhill. This could cause the brakes to get hot and not work as well. As a result, the truck will not slow down at the usual rate. Failure to take these steps could result in loss of vehicle control.

ADJUSTABLE STEERING COLUMN

The steering column can be adjusted to different angles and the steering wheel can be adjusted up or down. Before adjusting, position the seat as desired.

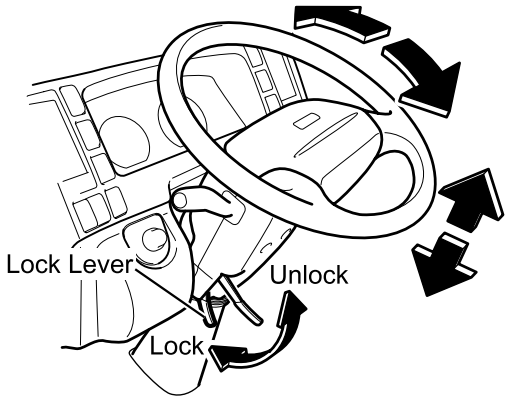

STEERING COLUMN ADJUSTMENT

1. Release the steering column by pulling the lock lever all the way up.
2. Sit upright in your seat and move the steering wheel up or down and the steering column back or forward as desired.
3. At the desired position, lock the column by pushing the lock lever all the way down.

Downloaded from www.Manualslib.com manuals search engine

CAUTION: To reduce the risk of personal injury, apply force to the steering wheel to make certain the steering column is firmly locked before driving. Also, do not try to tilt or adjust the steering wheel while the vehicle is moving. If these steps are not followed, the steering column could move suddenly while the vehicle is in motion which could cause a temporary loss of steering control which may result in personal injury or death.

HAZARD WARNING FLASHER

Refer to “Hazard Warning Flasher” in Section 3.

ENGINE CONTROL SWITCH (KEY SWITCH)

Refer to “Starting the Engine” in Section 2.

HORN

The horn works by firmly pressing the pad in the steering wheel.

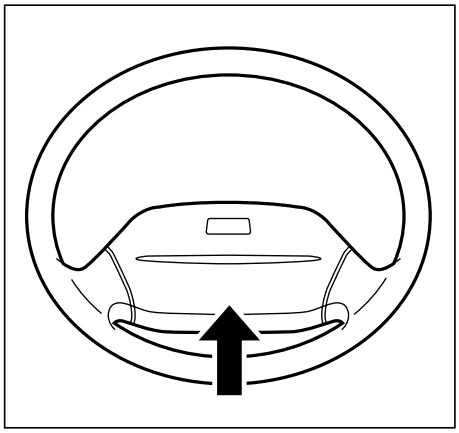

POWER STEERING

If the power assist steering system goes out because the engine has stopped or the assist system has malfunctioned, the vehicle can still be steered. However, much greater effort is needed, especially in sharp turns or at low speeds.

CAUTION: Do not keep the steering wheel in a fully turned position for a long period of time. This can heat the oil in the power steering oil pump, causing poor lubrication, damage to the oil tank and hose, and deterioration of the seals. This can result in damage to the power steering oil pump, power steering unit, power steering hose and other components, and the steering wheel could suddenly become heavy, and an accident or fire could occur.

Downloaded from www.Manualslib.com manuals search engine

BRAKE SYSTEM

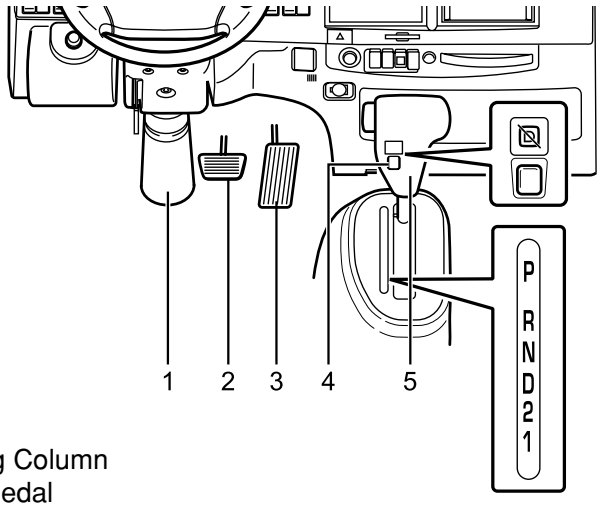

1. Steering Column
2. Brake Pedal
3. Accelerator Pedal
4. Overdrive Switch
5. Automatic Transmission Selector

BRAKE PEDAL

For the most effective braking and for maximum life from brake system components, follow these suggestions:

- Apply the brakes gradually as hard as road and load conditions permit. Reduce pedal pressure as speed drops so that a very light pressure is used at the end of the stop.
- If brake low vacuum warning light or brake warning light comes on during operation, have brake system checked immediately.
- Do not pump the brake pedal as this will only deplete the vacuum reserve.
- Always turn off the manual engine idle control knob to the full counterclockwise position while driving to maintain proper braking performance and reduce brake wear.
- Keep any obstructions from interfering with brake pedal travel.
- Keep tires properly inflated. Improperly inflated tires can reduce the efficiency of the brakes.

Downloaded from www.Manualslib.com manuals search engine

NOTICE: A small amount of white smoke may be emitted from the exhaust pipe with PM (Particulate Matter) burned during DPF regeneration. This is not a failure. Also, do not perform regeneration indoors with poor ventilation.

White smoke may be emitted during DPF regeneration after the new vehicle has run a certain distance. This is not a failure. White smoke may not necessarily be emitted when the vehicle is new.

Because of the exhaust gas purification system, the gas from the exhaust pipe smells differently from that of conventional diesel vehicles.

With long continuous idling, the exhaust brake may be activated to prevent white smoke after a certain period of time.

VACUUM POWER ASSISTED BRAKES

If the engine stops, do not pump the brakes. The system is designed to stop the vehicle with reserve power assist if the brake pedal is held down. This reserve is greatly reduced each time you apply and release the brakes. If, when you turn the steering wheel during braking, the vehicle does not turn, do not push as hard on the brake pedal.

Without power assist the vehicle can still be stopped by pushing much harder on the brake pedal, however, the stopping distance may be longer.

Downloaded from www.Manualslib.com manuals search engine

PARKING BRAKE

The parking brake lever is located to the right of the driver's seat.

- To set the parking brake, completely stop the vehicle. Then hold the brake pedal down while pulling the parking brake lever all the way up. Before you leave the driver's seat, follow the steps under "Parking" in this Section.

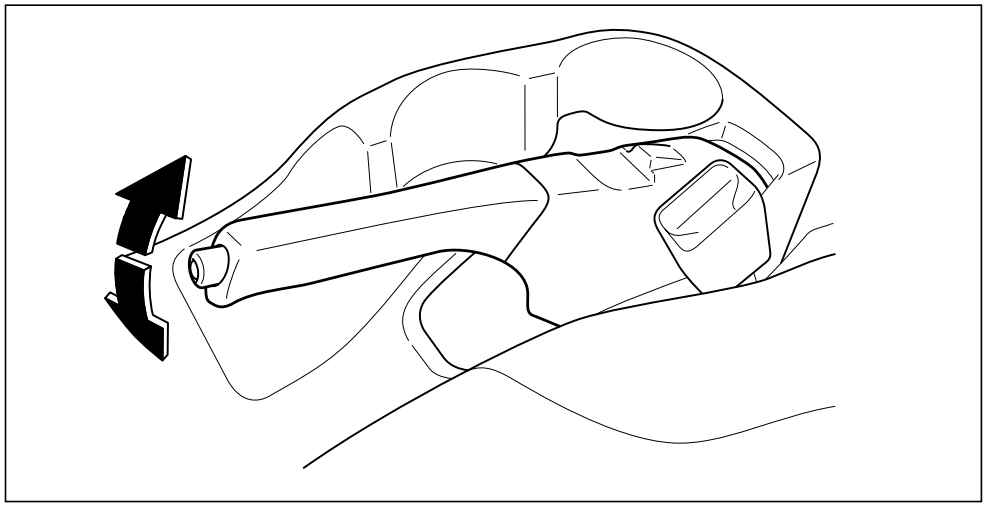

- To release the parking brake, hold the brake pedal down while pushing the button in the tip of the brake lever and lower the lever. The "BRAKE" system warning light is designed to remind you if the parking brake is not released when the engine control switch is on. Never drive the vehicle with the parking brake set as this will cause excessive wear, reduce parking brake effectiveness and increase fuel consumption.
- If you notice the parking lever travel has increased over time, this means the cable adjustment must be checked by a qualified technician. Adjustment may be required due to parking brake shoe wear.

"BRAKE" SYSTEM WARNING LIGHT (Refer to page 2-31)

BRAKE LOW VACUUM WARNING LIGHT (Refer to page 2-32)

EXHAUST BRAKE INDICATOR LIGHT (Refer to page 2-29)

PARKING "BRAKE" INDICATOR LIGHT (Refer to page 2-33)

BRAKE SYSTEM (Refer to page 5-36)

BRAKE MAINTENANCE (Refer to page 5-37)

DRIVING TECHNIQUES (Refer to page 2-14)

Downloaded from www.Manualslib.com manuals search engine

AUTOMATIC TRANSMISSION CONTROLS

AUTOMATIC TRANSMISSION SELECTOR

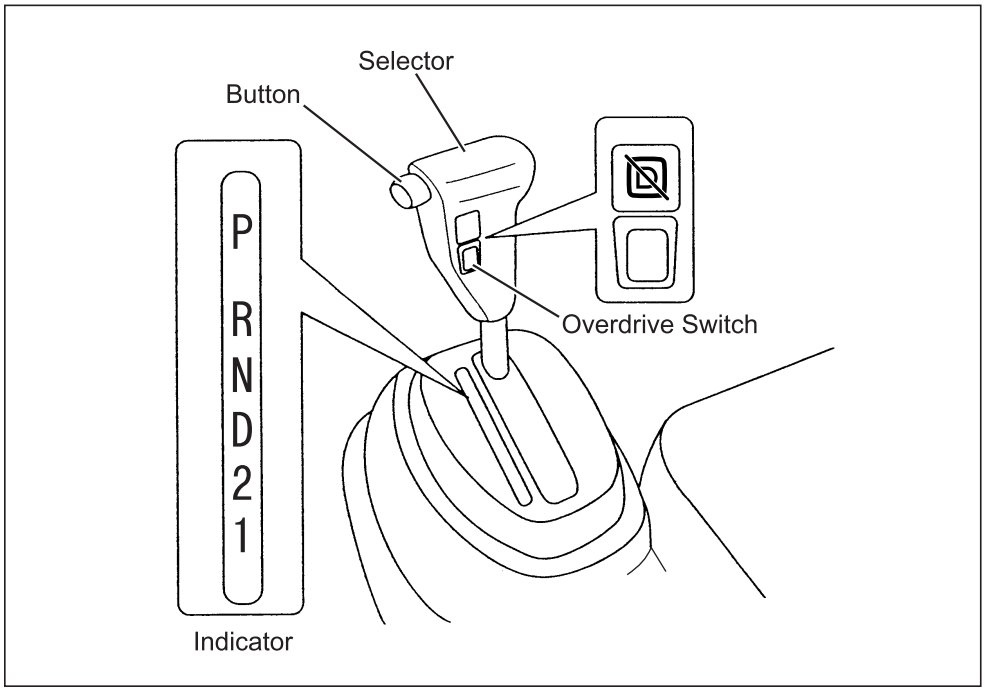

SELECTING GEARS

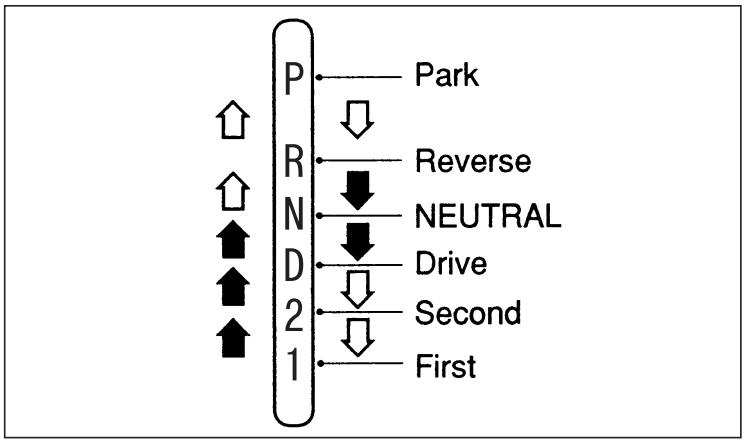

Push the button located on the end of the selector when engaging the “R” and “P” positions and when shifting from “2” to “1” as indicated by the arrow “ ⇨ ”.

The selector can be shifted freely into any position without pushing the button as indicated by the arrow “ ➡ ”.

Downloaded from www.Manualslib.com manuals search engine

AUTOMATIC TRANS. CONTROLS, CONTINUED

STARTING

Start the engine in either the “P” or the “N” position. The engine should not start in any other selector position. If it does, something is wrong. Have your truck checked by your dealer as soon as possible.

Always apply either the foot brake or the parking brake before shifting into any driving position. This will prevent creeping.

The engine should be running at idle speed when shifting from “P” or “N” to one of the driving positions. Always rotate the manual idle speed control knob fully counterclockwise before driving.

P: PARK

The “P” position is to be used with the parking brake.

The “P” position is one of the two positions (the other is “N”) in which the engine can be started.

NEVER MOVE THE SELECTOR TO THE “P” POSITION WHEN THE TRUCK IS IN MOTION.

R: REVERSE

Bring the truck to a complete stop before moving the selector to the “R” position.

N: NEUTRAL

Automatic transmission — Driveshaft must be removed when towing your truck.

The “N” position is used should it become necessary to tow your truck.

The engine may be started when the selector is in the “N” position.

D: DRIVE

The “D” position is for all normal forward driving.

If additional speed is required for passing, press the accelerator pedal hard to the floor. The transmission will downshift at speeds below about 55 MPH (88km/h) to provide greater acceleration.

Push the overdrive switch to the “ON” position for greater fuel economy. The automatic transmission will continue to select the best speed range for the vehicle (1st, 2nd, 3rd, 4th, 5th and 6th).

Downloaded from www.Manualslib.com manuals search engine

Push the overdrive switch to the OFF position at speeds below 65 MPH (105km/h) to increase engine braking action when traveling downgrade.

If the automatic transmission fluid temperature is too low, the transmission may not initially make automatic shift to the 4th, 5th and 6th gear. This condition is normal and will be resolved as the fluid temperature rises.

2: SECOND

Select the “2” position at speeds below 25 MPH (40km/h) when traveling down a moderate grade. The braking action of the engine will hold your speed down. Continued use of the wheel brakes will not be required. Use of the exhaust brake will also aid downhill braking.

Return the selector to the “D” position for normal driving.

1: FIRST

Use the “1” position for maximum engine braking on steep downhill grades.

Return the selector to the “D” position for normal driving.

DRIVING TIPS

Before descending a long, steep grade, reduce speed and turn off the overdrive switch. This is the safe way to control your truck’s speed.

Avoid continuous or frequent use of the wheel brakes over a long period of time. Doing so will lead to brake overheating and dangerously reduced braking efficiency.

NOTICE:

* **Never move the selector from the “P” or “N” position to one of the drive positions with the engine running at a high speed. Damage to the automatic transmission will result.**

* **Never move the selector into the “P” position when the vehicle is in motion. Damage to the automatic transmission will result.**

* **Do not operate the automatic transmission at or near stall condition for more than five seconds.**

Stall condition is when the transmission is in one of the driving ranges, the engine is running at high speed, but the drive wheels are unable to move. This condition might occur if the vehicle is stuck in deep sand or is pushing against a fixed barrier.

NOTICE (Continued)

Downloaded from www.Manualslib.com manuals search engine

NOTICE (Continued)
Operating the transmission at stall condition will result in overheating and damage.

*** Do not hold your vehicle on an upgrade by increasing engine speed with the accelerator pedal. Doing so will result in automatic transmission overheating and damage.**

Use your wheel brakes to hold the vehicle on an upgrade.

Treatment for low speed applications.
Any low speed applications such as sweeper, highway striping or moving, etc. require the following treatment to prevent the ATF from overheating.
(1) Select "1"position during low speed operation under 11MPH (18km/h).
(2) Select "2"position during low speed operation under 22MPH (36km/h).

OVERDRIVE SWITCH

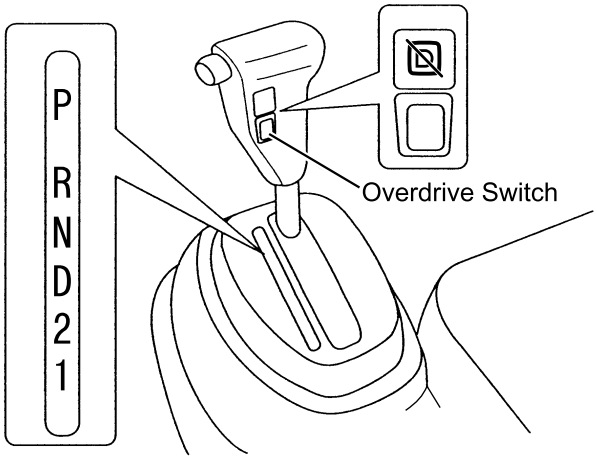

The overdrive will not operate when the overdrive switch is in the "OFF" position.

The indicator light on the instrument panel will be on when the overdrive switch is in the "OFF" position.

When the overdrive switch is in the "ON" position, all six forward speeds of the automatic transmission will operate.

If the automatic transmission fluid temperature is too low, the transmission may not initially make automatic shift to the 4th, 5th and 6th gear.

If your vehicle is traveling at a speed exceeding 65 MPH (105km/h) it is not possible to downshift from 6th gear to 5th gear.

When operating your vehicle on a slippery road, a winding road, or a long downhill slope, you will want to take advantage of the engine's braking power. Push the overdrive switch to the "OFF" position at this time.

Downloaded from www.Manualslib.com manuals search engine

Under normal operating conditions, the use of overdrive is recommended. Road speed is increased, operating noise is reduced and fuel economy is improved. Take advantage of overdrive whenever possible.

INSTRUMENT PANEL AND CONTROLS

The instrument panels in this vehicle contain the gauges, warning lights and controls necessary to run the vehicle and its systems. The switches are designed to allow convenient driver access, and the gauges and warning lights are designed to be read at a glance.

For safety reasons, do not place packages, tools or other items in the driver's area that may restrict access to the controls or sight of the gauges.

The following is a general guide to the instrument panel and controls on these vehicles.

INDICATOR AND WARNING LIGHTS

The indicator and warning lights tell the driver about the status of certain vehicle operations or systems. These indicator and warning lights are located on the instrument panel.

By activating certain controls and switches, an indicator will light to confirm the selection and operation of equipment or system. However, a warning light should automatically turn on to visually alert the driver when a vehicle system has or is about to have a malfunction, unless it is during a bulb check or as otherwise described in the following explanations.

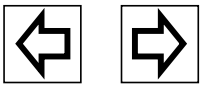

Turn Signal Indicator Light

The indicator light flashes when the turn signal switch has been activated, or when the hazard light circuit has been activated.

Headlights High Beam Indicator Light

The indicator lights up when the headlight high beam circuit is turned on.

Exhaust Brake Indicator Light

The indicator light comes on when the exhaust brake switch is raised, and the engine is running.

NOTICE: During ABS operation, the exhaust brake may be inactive even though the exhaust brake switch is in the "ON" position and the indicator light is lit.

When traveling over an uneven road surface, the exhaust brake may disengage for short intervals even though the brake pedal is not depressed.

Downloaded from www.Manualslib.com manuals search engine

Battery Discharge Warning Light

The warning light comes on when the battery is discharging.
This may mean that the generator has malfunctioned, the electrical system is overloaded, or the generator drive belt is loose or broken. Have the system repaired promptly.

Low Fuel Level Indicator Light

The fuel level warning light turns on when the amount of fuel remaining in the fuel tank is approximately 4.0 U.S. gallons(15.0 liters). When the light comes on, fill the fuel tank as soon as possible. Ultra low sulfur diesel fuel should be used.

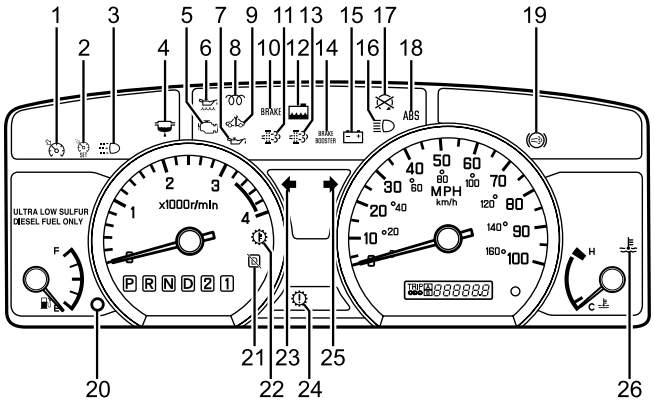

1. Cruise Main Indicator Light
2. Cruise Set Indicator Light
3. Daytime Running Light (DRL) Indicator Light
4. Water Separator Indicator Light
5. Check Engine Malfunction Indicator Light
6. Oil Level Indicator Light
7. Engine Oil Pressure Warning Light
8. Glow Plug Indicator Light
9. Service Vehicle Soon (SVS) Light
10. Parking Brake Indicator Light/ Brake System Warning Light
11. DPF Indicator Light (Green)
12. Engine Coolant Level Warning Light
13. DPF Indicator Light (Amber, Red)
14. Brake Low Vacuum Warning Light
15. Battery Discharge Warning Light
16. Headlights High Beam Indicator Light
17. Engine Shut Down Warning Light
18. Anti-Lock Brake System Malfunction Warning Light
19. Exhaust Brake Indicator Light
20. Low Fuel Level Indicator Light
21. Overdrive Indicator Light
22. A/T Oil Temperature Warning Light
23. Turn Signal Indicator Light
24. “CHECK TRANS” Warning Light
25. Turn Signal Indicator Light
26. Engine Overheating Warning Light

Downloaded from www.Manualslib.com manuals search engine

Glow Plug Indicator Light

Your diesel engine has a special starting system. Small heating elements, called “glow plugs,” preheat the engine combustion chambers to improve cold starting.

This light is designed to come on when the engine control switch is turned to the “ON” position, and go off when the glow plugs are heated enough. You should start the engine when this light goes out.

Check Engine Malfunction Indicator Light

Monitors operation of your electronic emission control system.

If the light flashes on while driving, it indicates that the engine electronic emission control system may be malfunctioning. You should take your vehicle in for servicing soon. When this light is on, avoid driving in a manner that would apply load to the engine, such as accelerating hard.

Engine Alarm (Shutdown) Warning Light

This light will come on when the engine alarm and automatic shutdown is active.

Refer to "ENGINE ALARM AND AUTOMATIC SHUTDOWN" on page 2-12.

“BRAKE” System Warning Light

The regular braking system is a split system designed so that one part will provide some braking if there is a loss of hydraulic pressure in the other part of the system. The system has a “BRAKE” system warning light located on the instrument panel.

For a bulb check, the “BRAKE” light should come on when the engine control switch is turned “ON” and the engine is not running. To serve as a reminder, the light should stay on when the parking brake is not fully released, and the engine control switch is on. Have the system repaired if the light does not come on when it should. If this warning light does not go away, brake inspection and maintenance should be performed. The brake fluid level must be checked regularly. Detach the inspection cover from the left side of the meter panel by hand. Check that the fluid level in the reserve tank is between the MAX line and the ADD line. Rock the vehicle if it is difficult to determine the brake fluid's level. If the brake fluid has fallen below the ADD line, open the cap and top up with DOT3. At this time, do not top up if the brake fluid exceeds the MAX line. In addition, after topping up, close the cap securely. See the “Maintenance Schedule” in Section 5 for other brake checks.

If the Anti-lock brake system malfunctions, the ABS malfunction warning light and the “BRAKE” system warning light come on simultaneously. Refer to “ANTI-LOCK BRAKE SYSTEM (ABS) Malfunction Warning Light” on page 2-37.

Downloaded from www.Manualslib.com manuals search engine

If the light remains on after engine start up or comes on during operation of the vehicle, it may mean that there is something wrong with part of the brake system.

What to do:

1. Check to see that the parking brake has been released. If it has been:
2. Turn on the exhaust brake to help slow the vehicle.
3. Pull off the road and stop carefully. Remember that:
   - Stopping distances may be longer.
   - You may have to push harder on the pedal.
   - The pedal may go down farther than normal.
4. Check the brake fluid level indicator on the left side of the instrument panel. If low, add fluid as needed.
   If brake fluid level is not low:
5. Try out the brakes by starting and stopping on the road shoulder then:
   - If you judge it to be safe, drive cautiously at a safe speed to the nearest dealer for repair.
   - Have the vehicle towed to the nearest dealer for repair.
     Continued driving without necessary repairs could be dangerous.

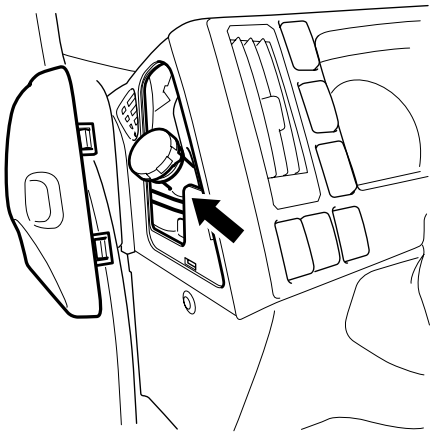

Brake Low Vacuum Warning Light

This light should come on to provide a bulb check when the engine control switch is turned to the “ON” position. It should go out when the engine has started. If the light does not come on when the engine control switch is turned to “ON”, it could indicate a burned out bulb or a blown fuse. Have the system repaired if the light does not come on during this check.

The brake low vacuum warning light and warning buzzer alarm should come on to indicate low vacuum reserve for brake power assist.

Downloaded from www.Manualslib.com manuals search engine

If this happens while driving :

- Do not pump the brakes. The system is designed to stop the truck with reserve power assist if the pedal is held down. This reserve is greatly reduced each time you apply and release the brakes.
- Stopping distance may be longer.
- You may have to push much harder on the brake pedal.
  Have the vehicle repaired before continue driving.
  The buzzer stops when the automatic transmission selector is shifted to the “N” or “P” positions.

Parking “BRAKE” Indicator Light

The “BRAKE” indicator light comes on when the parking brake lever is pulled with the engine control switch “ON”. To serve as a reminder, the light should stay on when the parking brake is not fully released and the engine control switch is on.

Have the system repaired if the light does not come on when it should. See the “Maintenance Schedule” in Section 5 for other brake checks.

Engine Overheating Warning Light

The warning light comes on and the alarm buzzer rings when the engine coolant temperature gauge goes into the red zone, indicating overheat.

CAUTION: If this light comes on and stays on while you are driving, your engine coolant might have overheated and your engine may be too hot. You should pull off the road, stop your vehicle and turn off the engine as soon as possible. When this light comes on, you will also hear a warning tone.

CAUTION: Do not remove the radiator cap when the cooling water inside the radiator has heated up. If it is removed without due thought and caution, steam will spurt out, possibly scalding you. Before removing the radiator cap, make sure that the temperature of the cooling water has dropped.

CAUTION:

- **Driving the vehicle while this lamp remains lit invites overheating and may cause the engine to seize up.**
- **Stopping the engine immediately may cause it to seize up.**
- **This light will also activate the engine alarm and automatic shutdown system. Refer to "ENGINE ALARM AND AUTOMATIC SHUTDOWN" on page 2-12.**

Downloaded from www.Manualslib.com manuals search engine

Low Coolant Warning Light

You have a low coolant warning light. If this light comes on, your system is low on coolant and the engine may overheat. When it comes on, you will also hear a warning tone.

Refer to “ENGINE COOLING SYSTEM” on page 5-31 and have your vehicle serviced as soon as you can.

This light will also activate the engine alarm and automatic shutdown system. Refer to “ENGINE ALARM AND AUTOMATIC SHUTDOWN” on page 2-12.

CAUTION: If the warning light comes on while driving, stop the vehicle immediately, check the cooling system for leaks, then locate and correct the cause of the trouble.

Engine Oil Pressure Warning Light

The light comes on when the engine oil pressure has fallen below the normal level. The light will also come on when the oil pressure across the oil filter rises above the normal level.

If the indicator light comes on while driving, immediately stop the engine and check the oil level in the engine crankcase. If the oil level is normal, restrictions are in the oil filter or within the lubricating system. Do not run the engine with this light on.

When this light comes on while driving, you will also hear a warning tone.

NOTICE: The oil level varies while the engine is running, right after it has stopped or if the vehicle is on uneven ground. As a result, the "red Engine Oil Pressure Warning Light" may light up. When checking the oil level, press the "Oil check switch" on level ground while the engine is cool.

While driving, this light will also activate the engine alarm and automatic shutdown system. Refer to "ENGINE ALARM AND AUTOMATIC SHUTDOWN" on page 2-12.

The red Engine Oil Pressure Warning Light in combination with the green Oil Level Indicator Light can indicate if the engine oil level is OK or low. With the engine control switch in the “OFF” position, push the OIL CHECK switch on the left-hand side of the instrument panel. The red Engine Oil Pressure Warning Light will illuminate if the engine oil level is low. The green Oil Level Indicator Light will illuminate if the engine oil level is OK.

Overdrive Indicator Light

The indicator light comes on when the overdrive switch on the transmission selector is in the “OFF” position. Overdrive will not operate even when the automatic transmission is in the “D” position, unless engine RPM is excessive.

Downloaded from www.Manualslib.com manuals search engine

"CHECK TRANS" Warning Light

When the engine control switch is turned on, the indicator light comes on for approximately 2 seconds and then goes off automatically.

If the indicator light starts to blink while driving, it indicates that there is a malfunction in the automatic transmission's electronic control system. If the indicator light is found blinking, contact your authorized Isuzu medium duty vehicle dealer promptly for repairs.

Automatic Transmission Fluid Temperature Warning Light

The "A/T OIL TEMP" warning light warns that the automatic transmission fluid temperature is high. This usually occurs when the transmission is overfilled and may be accompanied by leakage of fluid from the transmission breather hose.

The indicator light should turn on when the engine control switch is turned to the "ON" position, but should go out after a few seconds.

If this light comes on while you are driving, slow down and pull off the road.

Stop the vehicle at a safe place and put the shift lever into the "P" position. With the engine idling, wait until the light goes off. If the light goes off, you can drive the vehicle again. If the light does not go off, have the automatic transmission lubricating system checked as soon as possible by your Isuzu dealer.

NOTICE: To avoid automatic transmission fluid overheating in sustained low speed driving applications, be sure to use the "1" position only. Examples of sustained low speed driving applications are Road Sweepers, Road Marking Machinery, Trash Collectors, etc.

CAUTION: Driving with the "A/T OIL TEMP" light constantly on can cause serious mechanical damage to the automatic transmission.

Daytime Running Lights (DRL) Indicator Light

When you start the engine in daytime, with the lighting switch off, and release the parking brake, the low beam headlights will come on at a reduced brightness. This type of lighting is called "Daytime Running Lights" or "DRL".

When the DRL are on, a green indicator light with the DRL symbol will be lit on the instrument panel. This is to indicate that the DRL are on.

It will go out when the lighting switch is turned on.

The low beam lights will switch to full brightness and the exterior lights will come on when the lighting switch is on. When the lighting switch is off, the parking, side marker and tail lights will turn off and the low beam lights will switch to the reduced brightness of DRL again.

Downloaded from www.Manualslib.com manuals search engine

Water separator indicator light

The indicator light comes on when the water level in the water separator on the fuel line is beyond the specified level.

NOTICE: If the indicator light comes on while driving, stop the vehicle and drain the water immediately. Refer to the "DRIVING" section.

Service Vehicle Soon (SVS) Light

Monitors the operation of your vehicle control system. If the light comes on while driving, it indicates that the vehicle control system may be malfunctioning. You should take your vehicle in for servicing soon.

Oil Level Indicator Light

When the engine oil check switch is pushed with the engine control switch "OFF", the green oil level indicator light will come on if the engine oil level is "OK". The red engine oil pressure warning light will come on if the engine oil level is low.

DPF Indicator Light (Green)

This light comes on during regeneration of the Diesel Particulate Filter (DPF). It will go off when the regeneration is finished. The DPF is operating normally if the indicator light comes on green when the engine control switch is turned to the "ON" position and goes off after the engine starts.

DPF Indicator Light (Amber/Red)

If the indicator light comes on amber or red, you must regenerate the DPF. If the indicator changes from amber to red, the DPF requires immediate regeneration.

If the DPF is not regenerated, the check engine malfunction indicator will come on and engine power will be reduced.

CAUTION: While you operate the PTO (POWER TAKE-OFF) on a vehicle fitted with a PTO, confirm that the DPF indicator light (amber/red) does not come on.

If you continue the engine running without performing the regeneration operation even after the red light comes on, the check engine malfunction indicator light illuminates to indicate that you must contact an Isuzu dealer to have the DPF repaired.

BRAKE ALARM SYSTEM

See "Brake Low Vacuum Warning Light" above.

Downloaded from www.Manualslib.com manuals search engine

ANTI-LOCK BRAKE SYSTEM (ABS) Malfunction Warning Light

When the engine control switch is turned on, the indicator light comes on for approximately 2 seconds and then goes off automatically.

The ABS malfunction warning light comes on when there is a problem with the ABS. Also, at this time, the “BRAKE” system warning light comes on.

Until the ABS is fixed, you will have normal brakes, but you won't have ABS.

The light should come on after the engine control switch is turned to the "ON" position and, after the engine is started, blink twice and go out.

NOTICE: If the light comes on during vehicle operation, move the vehicle to a safe spot which does not cause an obstruction to traffic. Then take the following action:
(1) Stop the engine.
(2) Restart the engine. If the light comes on, and then goes out, there is no problem with the ABS.
(3) Move the vehicle slowly forward. Gradually increase speed to 8MPH (13km/h). If the indicator light turns off, the ABS is normal.
If the light does not go out or comes on frequently, contact your Isuzu dealer immediately and have the system repaired.

Explanation of the ABS

The ABS is designed to prevent lock-up of the wheels during braking by automatically changing the brake pressure. This occurs only during braking which would have caused one or more wheels to lock.

CAUTION:

- **Even with the ABS, do not get too close to vehicles in front of you. Keep safe following distances, whether or not your vehicle has the ABS.**

  The anti-lock feature is designed to help you maintain steering control during braking, but there could still be some loss of steering control under certain conditions.

  Driving too fast around curves or turns (especially on slippery pavement) might result in loss of control. Drive only as fast as conditions permit; remember, loss of control can cause an accident.

  Even with the ABS, driving, steering and braking traction is reduced on slippery surfaces. The operation of the ABS on gravel, deep snow or bumpy roads, or if you are using tire chains, may result in a longer stopping distance than for vehicles without ABS. Slow down and adjust your driving to such conditions.

  Do not use tires other than the manufacturer’s designated tires, and do not mix tires or wheels of different sizes. By doing so, you may prevent the ABS from operating at full effectiveness.

Downloaded from www.Manualslib.com manuals search engine

NOTICE: These symptoms are not abnormalities.

- **When vehicle speed has reached 4MPH (6km/h) after engine startup, an electric motor sound may be heard from the cab's underside. This is the automatic self check of the ABS. If you happen to step on the pedal during self check, you may feel a pedal vibration as well.**
- **When ABS is functioning, you may feel a vibration of the brake pedal or steering wheel and hear the operation of the ABS pump. These operating characteristics indicate normal ABS operation.**
- **If braking during turning or when hitting a bump, ABS may be actuated. The reason is that the inside wheels or the wheels hitting a bump may intermittently lock.**
- **ABS is not actuated until vehicle speed increases to 6MPH (10km/h), and it stops working when vehicle speed has dropped to 3MPH (5km/h).**

NOTICE: When you drive on sandy soil or in the mud, it may adversely affect the brakes or the ABS sensor. If so, get the vehicle washed and remove the mud or extraneous matter from it.

Explanation of Electronic Braking force Distribution (EBD)

The ABS has an EBD function.

The EBD uses the ABS system, and is a function that prevents early stage rear wheel lock-up by adequately controlling the braking force distribution of the front and rear wheels in accordance with load shift, which is caused by changes to the load's circumstance and deceleration.

CAUTION:

- **If the EBD system malfunctions, the ABS malfunction warning light and "BRAKE" system warning light will come on simultaneously.**
- **If the EBD system malfunctions, the rear wheels can easily lock-up. Contact your Isuzu dealer immediately and have the system repaired.**

NOTICE: When the EBD is operated, it is not abnormal to feel a clicking movement through the brake pedal or a noise resembling ABS operation.

Downloaded from www.Manualslib.com manuals search engine

Vehicle Data Collection

Your vehicle, like other modern motor vehicles, has a number of sophisticated computer systems that monitor and control several aspects of the vehicle's performance. Your vehicle uses onboard vehicle computers to monitor emission control components to optimize fuel economy and, if so equipped, to provide anti-lock braking and to help the driver control the vehicle in difficult driving situations.

Some information may be stored during regular operations to facilitate repair of detected malfunctions.

Isuzu may download and retrieve stored information for the purpose of diagnosing, servicing or repairing your motor vehicle or for improvement to future Isuzu motor vehicles.

Cruise Main Indicator Light

The “CRUISE MAIN” indicator light will come on when the cruise control switch is turned to the “ON” position.

Cruise Set Indicator Light

The “CRUISE SET” indicator light will come on when the cruise control system is set to maintain a speed.

Downloaded from www.Manualslib.com manuals search engine

CRUISE CONTROL

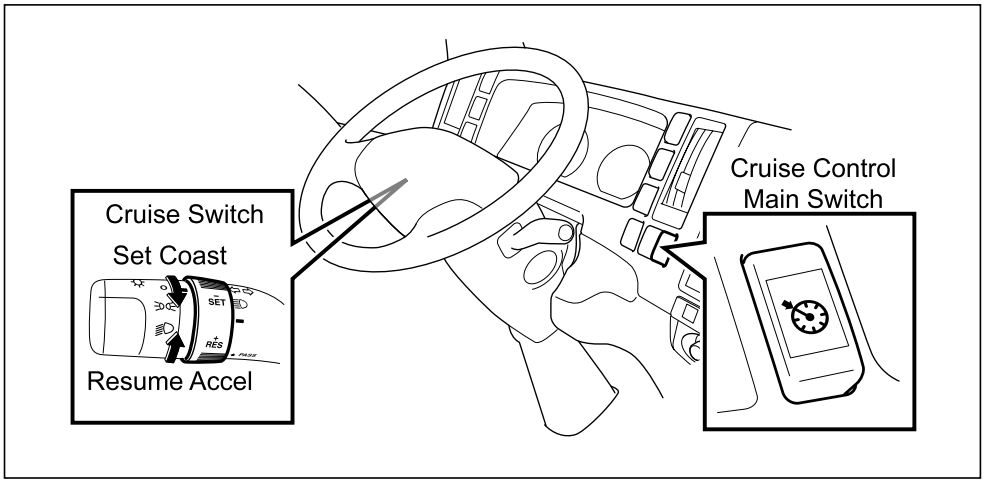

With cruise control, you can maintain a speed of between 30 and 75MPH (48 to 121 km/h) without keeping your foot on the accelerator pedal. At speeds below 30 MPH (48 km/h), the cruise control does not operate.

If you have an automatic transmission and you apply your brakes, the cruise control will shut off.

CAUTION:

- **Cruise control can be dangerous where you can't drive safely at a steady speed. Do not use cruise control on winding roads or in heavy traffic.**
- **Cruise control can be dangerous on slippery roads. On such roads, fast changes in tire traction can cause needless wheel spinning, and you could lose control. Do not use cruise control on slippery roads.**

Downloaded from www.Manualslib.com manuals search engine

1. OPERATION

SETTING CRUISE CONTROL

1. Push the cruise control main switch “CRUISE MAIN” so that the Cruise Main indicator light turns on.
2. Accelerate to your desired speed using the accelerator pedal.
3. Quickly turn the cruise switch to adjust to the “-SET” position and release the cruise switch when the desired speed is reached. The system is now set to maintain this cruise speed. The “CRUISE SET” indicator light within the instrument panel turns on and remains on while the cruise control system is in use.

RESUMING A SET SPEED

Should you set cruise control at a desired and then apply the brake, this will shut off the cruise control but it does not need to be reset.
Once you are going about 30 MPH (48 km/h) or more, you can quickly turn the cruise switch to adjust to the “+RES” position.
The vehicle will return to your chosen speed and stay there.
If you hold the switch at the “+RES” position, the vehicle will keep going faster until you release the switch or apply the brake. So unless you want to go faster, do not hold the switch at the “+RES” position.

INCREASING SPEED WHILE USING CRUISE CONTROL

There are two ways to go to a higher speed:

- Use the accelerator pedal to get to the higher speed. Turn the switch to the “-SET” position, then release the switch and the accelerator pedal. You will now cruise at the higher speed.
- Turn the cruise switch forward and adjust to the “+RES” position. Hold it there until you get up to the speed you want, and then release the switch. To increase your speed in very small amounts, turn to adjust the switch to the “+RES” position quickly and release the switch. Each time you do this, your vehicle will go about 1 MPH (1.6km/h) faster. This operation can be performed ten times consecutively.

REDUCING SPEED WHILE USING CRUISE CONTROL

Turn the switch to the “-SET” position until you reach the lower speed you want, then release it.

To slow down in very small amounts, turn the switch to the “-SET” position quickly. Each time you do this, your vehicle will go 1 MPH (1.6 km/h) slower. This operation can be performed ten times consecutively.

Downloaded from www.Manualslib.com manuals search engine

PASSING ANOTHER VEHICLE WHILE USING CRUISE CONTROL

Use the accelerator pedal to increase your speed. When you take your foot off the pedal, your vehicle will slow down to the cruise control speed you set earlier.

USING CRUISE CONTROL ON HILLS

How well your cruise control will work on hills depends upon your speed, load and the steepness of the hills. When going up steep hills, you may want to step on the accelerator pedal to maintain your speed. When going downhill, you may have to brake or shift to a lower gear to keep your speed down. Of course, applying the brake takes you out of cruise control. Many drivers find this to be too much trouble and do not use cruise control on steep hills.

2. CLEARING

The cruise control system will be cancelled when any of the following conditions apply:

1. When the brake pedal is depressed.
2. When the automatic transmission is shifted to the "N" or "1st" position.
3.* When cruising speed is approximately 25 MPH (40 km/h) or lower.
4.* When the cruise control main switch is turned off again.
5.* When the key switch is turned to the "OFF" position.
6.* When trouble develops in the system.

*: Memory speed is eliminated.

Downloaded from www.Manualslib.com manuals search engine

SWITCHES AND CONTROLS

ENGINE CONTROL (KEY) SWITCH

The starting circuit, engine alarm circuits (if used) and accessory circuits are all controlled by the engine control (key) switch. This switch is located on the right-hand side of the steering column.

Refer to “Starting the Engine” previously in this section for information about the Engine Control Switch.

LIGHTING CONTROL SWITCH

Check operation of all vehicle lights daily. Refer to “Steering Column Controls” in this section.

IDLE SPEED CONTROL

The idle speed control knob is located to the left of the steering column, mounted on a panel in the instrument panel. Engine RPM can be increased by turning the idle speed control knob clockwise. To return the engine to its normal idle speed, turn the idle speed control knob counterclockwise.

CAUTION: Do not use the idle speed control knob while the vehicle is in motion. This could reduce your ability to stop in an emergency, possibly resulting in personal injury or death and/or property damage.

Before the DPF regeneration, be sure to return the idling control knob all the way to the left. Refer to "Manual regeneration procedure" and "Selectable regeneration procedure".

Refer to “STARTING PROCEDURE” on page 2-7 in this section for further information on the idle speed control.

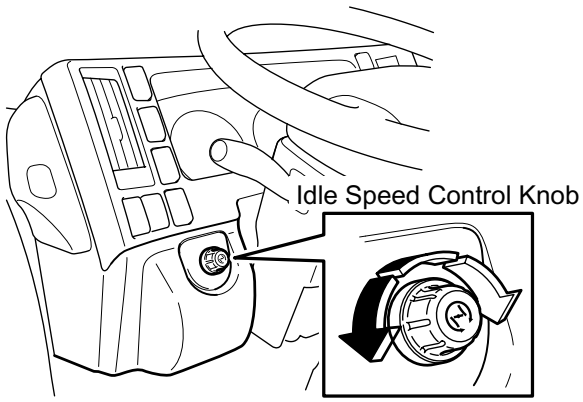

Downloaded from www.Manualslib.com manuals search engine

INSTRUMENT PANEL LIGHT LEVEL CONTROL

The control will change the light level of the instrument panel.

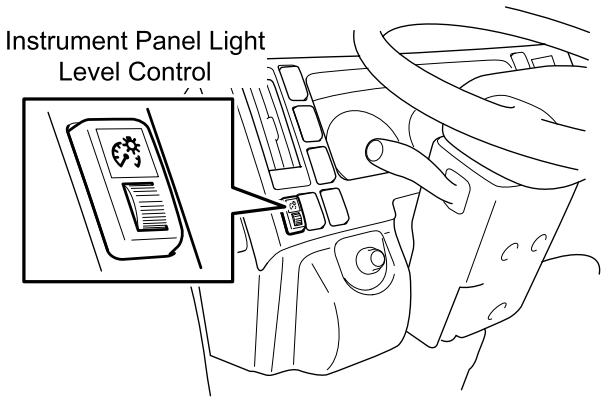

WINDSHIELD WIPER AND WASHER CONTROLS

Refer to “Steering Column Controls” earlier in this section.

OUTSIDE REARVIEW MIRROR HEATER SWITCH (IF EQUIPPED)

If the outside mirror fogs up, warm up the outside rearview mirror’s face to defog. With the engine control switch in the “ON” position, press the outside rearview mirror heater switch to operate, and the operation indicating light will turn to orange. If the switch is pressed once again, it will switch to “OFF”, and the operation indicating light will go out.

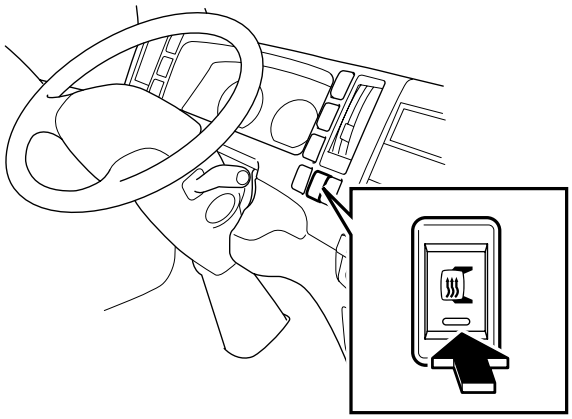

NOTICE:

- **Do not use this switch while the engine is stopped. Due to high power consumption, the battery can be discharged.**
- **Turn off the switch as soon as defogging is complete.**

Downloaded from www.Manualslib.com manuals search engine

MILES CHECK SWITCH

The “Miles Check Switch” will display the odometer and trip meter mileages when depressed within five minutes after the key is turned off.

Also, while depressing this switch, the fuel gauge will operate to show the fuel level in the fuel tank.

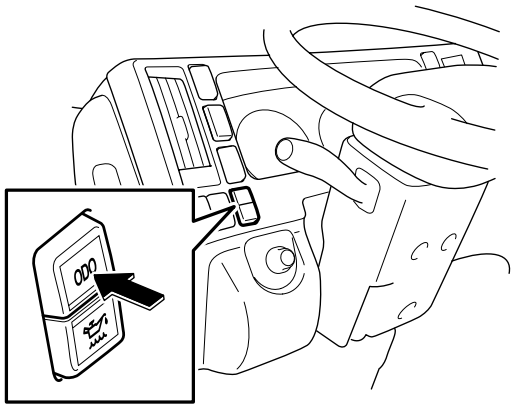

OIL CHECK SWITCH

Press the oil check switch. If the engine oil level is low, the red engine oil pressure warning light will be turned on. If the engine oil level is OK, the green oil level indicator light will turn on.

NOTICE: The oil level varies while the engine is running, right after it is stopped, and on sloping ground. As a result, the "red Engine Oil Pressure Warning Light" may light up. When checking the oil level, press the "Oil check switch" on level ground while the engine is cool.

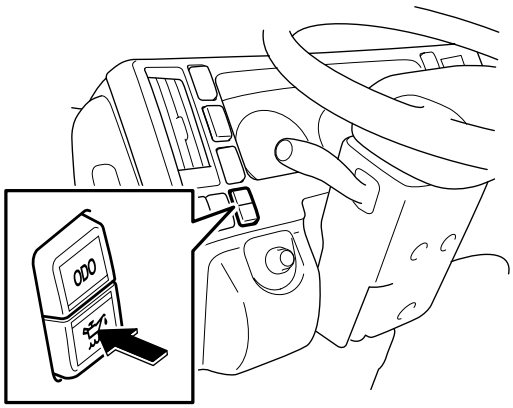

Downloaded from www.Manualslib.com manuals search engine

PTO (POWER TAKE-OFF) SWITCH (IF EQUIPPED)

For details about the PTO operation, refer to the separate instruction manual provided by its maker.

CAUTION: If you activate the PTO on the vehicle with PTO for a long time, make sure that the DPF indicator light does not come on.

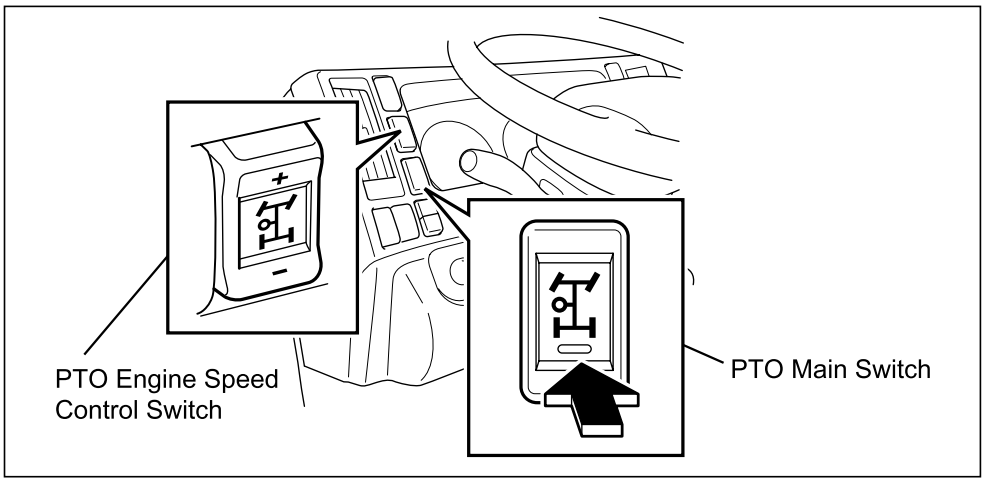

CAUTION: In PTO mode, Cruise Set/Resume Switch can be used exactly the same as PTO Engine Speed Control Switch. Improper operation of these switches may cause personal injury or damage.

Downloaded from www.Manualslib.com manuals search engine

DIESEL PARTICULATE FILTER (DPF)

Your vehicle has a Diesel Particulate Filter (DPF) as part of the exhaust system to reduce vehicle emissions.

The exhaust pipe mixes air with the exhaust gas to lower its temperature before it leaves the exhaust pipe.

Do not alter or block the airflow from the exhaust pipe. The DPF will regenerate (self-clean) itself as part of normal operation.

The Engine Control Module (ECM) controls this function based on several factors including amount of fuel consumed, hours of operation and mileage.

Exhaust parts and gases become very hot when the DPF is being regenerated.

Make sure the exhaust area is clear of material that could ignite or burn.

CAUTION:

Parking over flammable items could allow them to touch hot exhaust parts under your vehicle and cause them to ignite.

Do not park over papers, leaves, dry grass or other things that can burn.

Downloaded from www.Manualslib.com manuals search engine

The Diesel Particulate Filter (DPF) is the system which purifies Particulate Matter (PM) in the exhaust gas. This collects PM into the DPF and regenerates the filter (burns PM) automatically.

Always use diesel fuel. Use of low quality fuel may adversely affect the engine parts and cause failure. Use of other than specified fuel may adversely affect the engine or emission control system and cause failure. Especially for the common rail type engine, always use ultra low sulfur diesel fuel (15 ppm or less of sulfur content).

If other than specified diesel fuel is used on a vehicle with a DPF, the vehicle may not conform to emission regulations.

Do not modify the DPF or exhaust pipe.

Modification of the direction, length or diameter of the exhaust pipe will adversely affect the exhaust gas purification system.

If modification to equipment is needed, contact your Isuzu dealer.

Automatic regeneration may not complete in some cases of operating and driving patterns and conditions. In the event of this, the DPF indicator (amber or red) will come on.

Depending on the driving conditions, Automatic Regeneration may not complete, in the event of this, the DPF indicator light comes on in amber or in red.

When the DPF indicator light lights in amber, perform regeneration according to the Regeneration Procedures below as soon as possible.

When the DPF indicator light lights in red, perform regeneration immediately. (This is to restore the DPF function and it is not a malfunction.)

CAUTION:

This content is to restore the function of the DPF and it is not a malfunction.

However, the Check engine malfunction indicator light may come on and the power output may be limited if driving or PTO (POWER TAKE-OFF) operation is continued for a long time with the amber or red DPF indicator on.

This is to prevent the DPF from being damaged.

When operating PTO during parking, check to ensure that the amber or red DPF indicator on the instrument panel is not on.

Downloaded from www.Manualslib.com manuals search engine

Automatic regeneration

The DPF automatically collects PM from exhaust gas into the filter, and automatically regenerates the filter when a certain amount of PM accumulates.

When automatic regeneration starts, the green DPF indicator in the meter comes on.

During the idling mode when the vehicle is at a stop, the engine speed increases and the exhaust gas control valve may be activated.

NOTICE:

During the idling mode when the vehicle is at a stop, switching the shift button to the "N" position increases the engine speed.

Automatic regeneration may not complete in some cases of operating patterns and conditions. The DPF indicator light (amber or red) will then come on.

CAUTION: To prevent fire, ensure that there is no combustible material near the muffler, the DPF or the exhaust pipe. Also, be careful not to burn yourself on the hot exhaust gas.

NOTICE: Operating noise is emitted during automatic regeneration and also when it is deactivated; this does not mean that a breakdown has occurred.

During the DPF automatic regeneration, the engine speed may increase accompanied by the action of the exhaust brake valve, during the DPF automatic regeneration, which may occur when the vehicle is stopped and idling; this is not a malfunction.

CAUTION: For vehicles equipped with DPF, Isuzu recommends engine oil that supports DPF (low ash oil). Use of low ash oil extends the maintenance interval of the DPF filter.

NOTICE: The DPF performs regeneration automatically when a certain quantity of PM accumulates in the filter.

Depending upon running conditions, however, the regeneration may sometimes not be completed. In this case, the DPF indicator light (amber or red) will come on, so promptly operate the emergency regeneration according to the "Emergency regeneration procedure".

This operation recovers the function of the DPF. It does not mean that a breakdown has occurred.

Downloaded from www.Manualslib.com manuals search engine

Emergency regeneration procedure

If the DPF indicator light (Amber/Red) on the instrument panel turns on, perform a regeneration operation in accordance with the following procedures.

CAUTION: If you continue driving the vehicle without performing regeneration, the check engine malfunction indicator light will come on indicating that you must contact an Isuzu dealer to have the DPF repaired.

Emergency running regeneration

During running regeneration, in addition to the DPF indicator light (Amber/Red), the indicator light (Green) will also turns on.

As a guideline, run the vehicle at 30MPH (48km/h) or above, and make the accelerator pedal operation as less frequent as possible.

When the DPF indicator light (Amber/Red) and indicator light (Green) go off, regeneration is complete.

NOTICE:

While the vehicle is at a stop with engine idling, the engine speed increases if the shift lever is moved to the "N" position.

While the vehicle is at a stop with engine idling, regeneration discontinues if the shift lever is moved to the "P" position and/or the parking brake is set.

The amber DPF indicator light remains on when the green DPF indicator light goes off until regeneration will complete.

Emergency switch regeneration

If emergency running regeneration is not possible, or if the vehicle brought to a halt and parked during emergency running regeneration, perform the following emergency switch regeneration.

1. Stop the vehicle in a safe place where there are no dead leaves, scraps of paper or other substances that readily burn.

CAUTION: To prevent fire, ensure that there is no combustible material near the muffler, the DPF or the exhaust pipe. Also, be careful not to burn yourself on the hot exhaust gas.

2. Move to the gearshift lever in the "N" or "P" position, and set the parking brake lever firmly.
3. Idle the engine.
   If you used the idling control knob to increase the engine speed, return it all the way to the left to reduce the engine speed.
4. In the case of a vehicle fitted with a PTO (POWER TAKE-OFF) unit, stop operation of the PTO.
   Return the PTO switch and the external acceleration control to their initial positions.

Downloaded from www.Manualslib.com manuals search engine

5. Press the DPF switch.
   The DPF indicator light (green) comes on, the engine speed automatically increases and the regeneration starts. Stay near the vehicle during the regeneration.
   The regeneration is normally completed in about 20 minutes. When the DPF indicator light goes off, the regeneration is complete, and the vehicle may be operated normally.

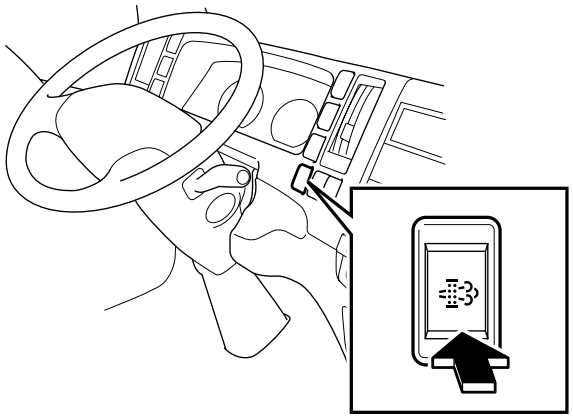

DPF Switch

This switch is to start the emergency regeneration.

CAUTION: During regeneration, white smoke may be emitted.
Do not perform the regeneration in a poorly ventilated room.

CAUTION: When you wish to operate the PTO on a vehicle fitted with a PTO unit for a long period, confirm that the DPF indicator light (amber or red) is not on.
Once the emergency regeneration is started, it cannot be switched to the running regeneration after regeneration is discontinued.
When the emergency regeneration is selected, end regeneration in a single operation if possible.

Downloaded from www.Manualslib.com manuals search engine

NOTICE:
- **The time it takes for the regeneration to complete depends upon the external temperature.**
- **During DPF regeneration, the exhaust brake valve is in operation. Operating noise is emitted while the exhaust brake valve is operating and also when it is deactivated; this does not mean that a breakdown has occurred.**
- **During the regeneration, the engine speed may temporarily return to its initial speed, causing the exhaust brake valve to be deactivated. However, while the DPF indicator light (green) is on, regeneration is still taking place, so continue to perform regeneration until the light goes off.**
- **White smoke may sometimes be emitted from the exhaust pipe for a short period depending on PM combustion during regeneration; this does not mean that a breakdown has occurred.**
- **Manual regeneration is completed more quickly after the vehicle has just stopped driving, compared to when the engine is cold.**
- **During manual regeneration, the coolant temperature may sometimes rise.**
- **When the DPF indicator light (red) is on, perform regeneration in the same operation as manual regeneration procedure.**

Interrupting manual regeneration

If you want to interrupt manual regeneration, press the DPF switch once again.

The DPF indicator light (green) will go off and the indicator (amber or red) will remain on, then the vehicle may be driven. In this case, it is necessary to perform the manual regeneration once again. Repeat the regeneration procedure from step 1 as quickly as possible.

NOTICE: Manual regeneration will be interrupted in the following circumstances.
- **Accelerator is ON.**
- **Gear-in (with Automatic Transmission)**
- **Vehicle speed is ON.**
- **Engine speed increases.**

Operation noise caused by interruption is louder when depressing the accelerator pedal than other operations.
This is not a failure.

Downloaded from www.Manualslib.com manuals search engine

Selectable regeneration procedure

Your vehicle has the following selectable regeneration procedure in case the driver is not able to perform the emergency regeneration for some reasons when the DPF indicator light (amber/red) comes on.

Selectable regeneration may be performed when the engine (coolant temperature) and exhaust pipe are warm after transport.

CAUTION: To prevent fire, ensure that there is no combustible material near the DPF, exhaust pipe or muffler.
Be careful not to burn yourself on the hot exhaust gas.

CAUTION:
- **Perform selectable regeneration without interruption.**
- **Stay near the vehicle during the regeneration.**

1. Stop the vehicle in a safe place where there are no dead leaves, scraps of paper or other substances that readily burn.
2. Idle the engine, then move the shift lever to the "N" or "P" position, and pull the parking brake lever firmly. In the case of a vehicle fitted with PTO (POWER TAKE-OFF) unit, confirm that operation of the PTO has stopped.

NOTICE: If you used the idling control knob to increase the engine speed, turn it all the way to the left to reduce the speed to normal idling condition, and then perform the DPF regeneration.

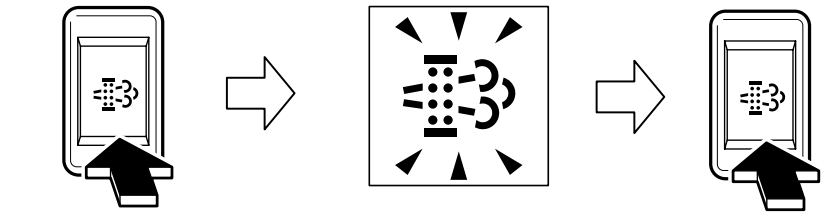

3. Confirm that the DPF indicator light (amber) is on for 3 seconds or longer, then press the DPF switch again while the DPF indicator light (amber) is on.

Downloaded from www.Manualslib.com manuals search engine

NOTICE: Until a certain quantity of PM has accumulated in the DPF filter, the DPF indicator light (amber) will go off after 3 seconds, even if you continue to press the DPF switch. In this case, there is no need to perform DPF regeneration, so regeneration will not start even if you press the DPF switch.

4. The DPF indicator light (green) will come on with the DPF indicator light (amber) remaining on, the engine speed automatically increases, and DPF regeneration starts. Regeneration is normally completed in about 20 minutes.
5. When the DPF indicator lights (amber, green) go off, the regeneration is completed, and the vehicle can be run normally.

CAUTION: During regeneration, white smoke may be emitted. Do not perform the regeneration in a poorly ventilated room.

CAUTION: In the event that selectable regeneration is interrupted due to the vehicle moving, for example, the DPF indicator light (green) will go off, and the DPF indicator light (amber) will come on. In this case, promptly stop the vehicle, press the DPF switch again, and wait until the completion of selectable regeneration. Do not continue to drive the vehicle while the indicator lights (amber, green) remain on.

NOTICE:
- **The time it takes for the regeneration to complete differs depending upon the external temperature.**
- **During DPF regeneration, the exhaust brake valve operates. Operating noise is emitted while the exhaust brake valve is operating and also when it is deactivated; this does not mean that a breakdown has occurred.**
- **White smoke may sometimes be emitted from the exhaust pipe for a short period depending on PM combustion during regeneration; this does not mean that a breakdown has occurred.**
- **Selectable regeneration is completed more quickly after the vehicle has stopped driving than when the engine is cold.**
- **During selectable regeneration, the coolant temperature may sometimes rise.**

Downloaded from www.Manualslib.com manuals search engine

SPEEDOMETER AND GAUGES

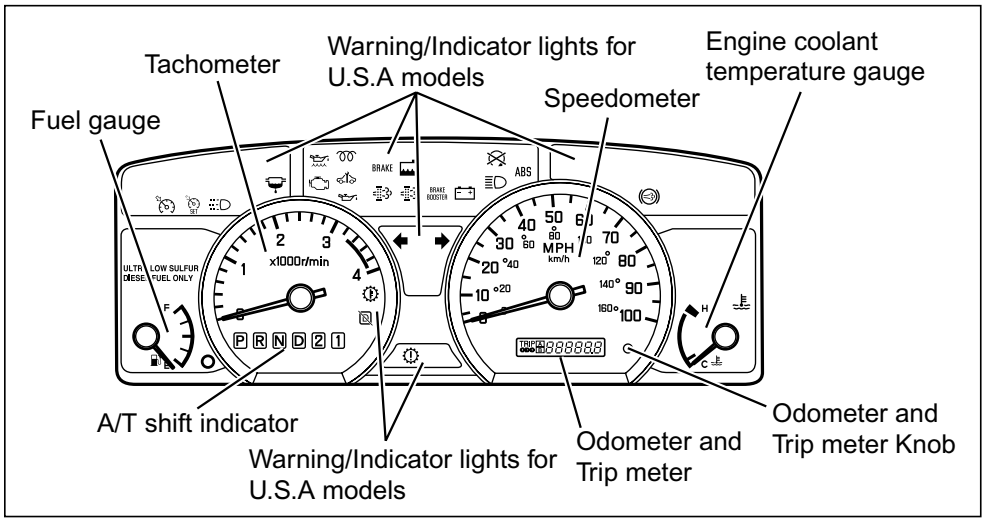

Odometer and Trip Meter

The odometer and the trip meter indicate mileage.

The odometer indicates total vehicle mileage, and the trip meter is used when you want to know point-to-point distance and running mileage reached in a certain period of time. Furthermore, the trip meter can indicate two different point-to-point distances.

Change indicator and reset knob

Push the odometer and the trip meter knob for approximately 0.8 seconds or less, and the indicator will cycle through odometer, trip meter A, trip meter B, and back to odometer. Continue to push the knob for approximately 1 second or more when the meter (trip A, trip B) is indicated, and the indicator will reset to 0 (zero). When the battery is disconnected, trip meter A and B will be reset to 0 (zero).

With the engine control key removed, the odometer and trip meter continue to indicate for around 5 minutes.

Downloaded from www.Manualslib.com manuals search engine

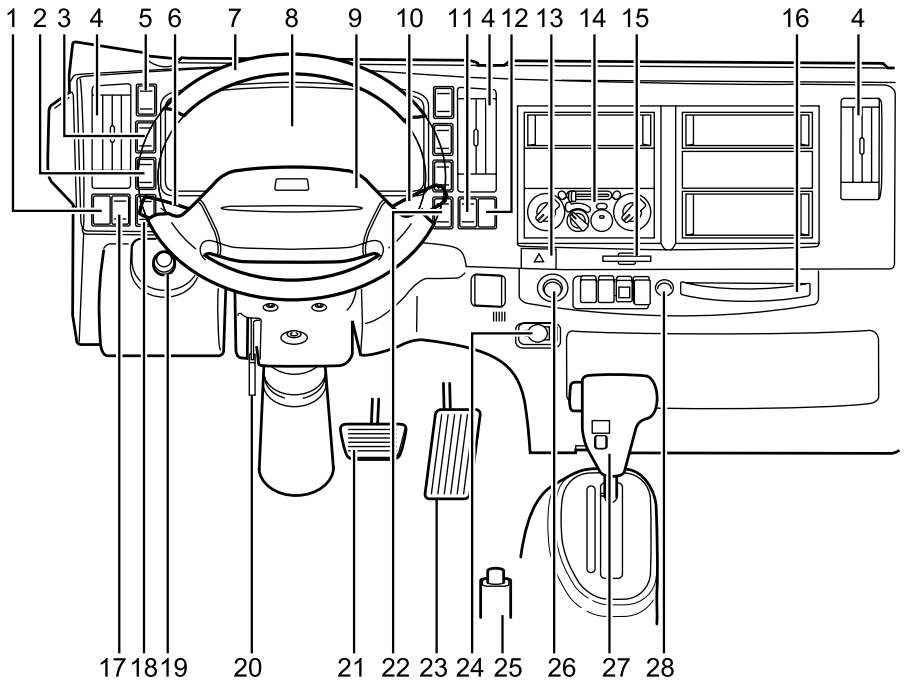

1. Instrument Panel Light Level Control
2. PTO Main Switch (If equipped)
3. PTO Engine Speed Control Switch (If equipped)
4. Instrument Panel Vents
5. Rear body Interior Light Switch
6. Headlight Switch
   Cruise Switch
7. Steering Wheel
8. Instrument Panel and Indicator Light Panel
9. Horn Button
10. Windshield Wiper and Washer Switch Lever
    Exhaust Brake Switch Lever
11. Outside Rearview Mirror Heater Switch (If equipped)
12. Cruise Control Main Switch
13. Hazard Lights Warning Flasher Switch
14. Heater and Defroster Control Panel
15. Card Holder
16. Beverage Holder
17. Door Lock Switch (If equipped)
18. Miles Check Switch
    Oil Check Switch
19. Idle Speed Control Knob
20. Steering Column Adjusting Lock Lever (Telescope/tilt)
21. Brake Pedal
22. DPF Switch
23. Accelerator Pedal
24. Accessory Power Outlets
25. Parking Brake Lever
26. Cigarette Lighter
27. Transmission Selector Lever
28. Hook

Downloaded from www.Manualslib.com manuals search engine

SPEEDOMETER

The speedometer is located directly in front of the steering column. The speedometer hand indicates the vehicle speed in miles per hour (MPH) on the outer scale and in kilometers per hour (km/h) on the inner scale.

The odometer, located within the speedometer, records the miles traveled up to 999,999.9 and stops, without returning to zero.

TACHOMETER

This gauge shows the engine speed in revolutions per minute (rpm).

FUEL GAUGE

The fuel gauge is located to the left of the instrument panel. The gauge shows the approximate fuel level in the fuel tank(s).

To check the fuel level with the engine control switch in the “OFF” position, press the “Miles check” switch.

ENGINE COOLANT TEMPERATURE (ECT) GAUGE

This gauge is located to the right of the instrument panel. If the engine overheating warning light illuminates and the ECT gauge shows that an overheat condition exists – as indicated by the pointer moving beyond the white color line – immediate action by the driver is required. If an overheat condition is shown, refer to “Engine Cooling System Overheating” in Section 3. The ECT indicator will vary with air temperature, vehicle load, grade of the road and other operating conditions. The engine control switch must be on for accurate readings. Prolonged driving or idling in very hot weather may cause the pointer to move beyond the center of the ECT gauge. Make a practice of scanning this and other gauges while driving, especially in hot weather and when the vehicle is under heavy load.

CAUTION: If the ECT gauge shows an overheat condition or you have any other reason to suspect the engine may be overheating, continued operation of the engine (other than as explained in Section 3) even for a short time may result in a fire and the risk of personal injury and severe vehicle damage. Take immediate action as outlined under “Engine Cooling System Overheating” in Section 3.

Downloaded from www.Manualslib.com manuals search engine

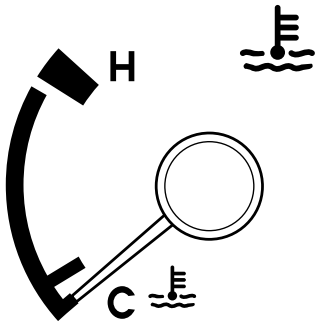

DOME LIGHT

The dome light is located in the center of the ceiling. The switch has three positions:

- "ON"—The light stays on regardless of the door position.
- "OFF"—The light stays off regardless of the door position.
- Between "ON" and "OFF"—The light comes on when the driver's door is opened.

CIGARETTE LIGHTER

The cigarette lighter is located in the right of the steering column in the instrument panel.

To operate, push the knob in. The lighter is designed to "pop out" when the correct temperature is reached.

ACCESSORY POWER OUTLET

Accessory power outlets are located beside the cigarette lighter in the instrument panel. You can plug in auxiliary electrical equipment. Just flip the outlet cover open from the left edge of the cover and follow the proper installation instructions that are included with any electrical equipment you install. These circuits are protected by a fuse and have maximum current loads.

CAUTION: When using accessory power outlets, total maximum electrical load must not exceed 120W. Always turn off any electrical equipment when not in use.
Leaving electrical equipment on for extended periods will drain your battery.

Downloaded from www.Manualslib.com manuals search engine

HEATING AND VENTILATION SYSTEMS CONTROLS

CAUTION: See "Engine Exhaust Gas Caution (Carbon Monoxide)" in Section 2.

OPTIONAL AIR CONDITIONING

This system combines cooling capabilities for comfort in all weather conditions.

During some air conditioning operating conditions, slight increases and decreases of engine speed/power may be experienced. This should be considered normal, as the system is designed to cycle the compressor ON and OFF to maintain desired cooling. The reduced compressor operation should benefit fuel economy.

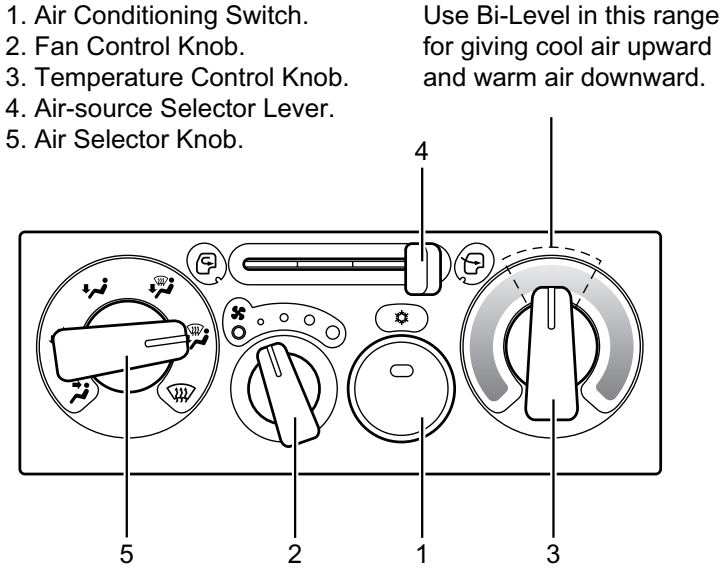

1. AIR CONDITIONING SWITCH (If equipped)

Push this switch to operate the air conditioning system. The light-emitting diode in this switch lights up as the system is operating. To turn off the air conditioning, push this switch in again.

Air conditioning will not operate without the fan control lever in one of the "ON" positions.

2. FAN CONTROL KNOB

The fan control knob (OFF-1-2-3-4) provides speed control of the blower fan in all Air Selector Knob positions.

Downloaded from www.Manualslib.com manuals search engine

3. TEMPERATURE CONTROL KNOB

The Temperature Control Knob regulates the temperature of the air entering the passenger compartment in all Air Selector Knob positions.

4. AIR-SOURCE SELECTOR LEVER

The intake of outside air and the circulation of inside air is controlled by sliding this lever right or left.

Circulating only inside air for an extended period of time when the air conditioning switch is in the “OFF” position may cause windshield fogging. For good ventilation, switch to outside air as soon as possible.

5. AIR SELECTOR KNOB

The Air Selector Knob regulates air flow from the upper, floor and defroster outlets.

...**FACE**- Air is conditioned as it passes through the system and is discharged from the upper outlets.
This position is used for most air conditioning situations.

...**BI-LEVEL**- Air is conditioned and discharged from the upper outlets and the floor outlets.
The air from the floor outlets is warmer than the air from the upper outlets in this position.
However, when the temperature control lever is moved to either the full “HOT” or the full “COLD” position, the air from the floor outlets and the air from the upper outlets will be the same temperature.
This position can give cool upper level air and warm floor level air when the temperature control is adjusted in-between “COLD” and “HOT”. This is useful in cool weather with bright sunlight conditions.

...**FOOT**- Air is delivered from the floor outlets.

...**FOOT/DEFROST 1**- Air is blown out from the floor outlets with a small amount from the windshield defroster outlets and the side window defroster outlets. To obtain maximum defrosting operation, use this position with the air source selector lever in the outside air position.

...**FOOT/DEFROST 2**- Air is blown out from the floor outlets with a larger amount than in the FOOT/DEFROST 1 above from the windshield defroster outlets and the side window defroster outlets.

Downloaded from www.Manualslib.com manuals search engine

...**DEFROST**- Air is conditioned and delivered from the windshield defroster outlets with a small amount delivered from the side window defroster outlets. This position is recommended for conditions of severe fogging and icing only. To maximize defrosting operation, set the air-source selector lever to the “Outside air” position.

Operating tips- The windshield defrosting and defogging system assists in providing good visibility through critical areas of the windshield under most inclement weather conditions. The windshield should be scraped clear, if coated with ice or snow. When the DEFROST mode is selected and the fan control knob is in other positions than “OFF”, the compressor automatically turns on and the light-emitting diode of the air conditioning switch lights up.

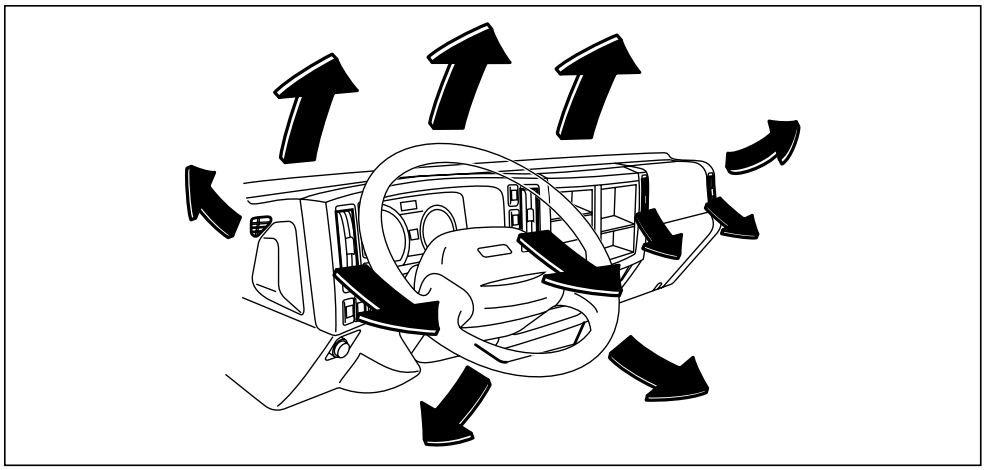

MOBILE TELEPHONES

Mobile two-way radio units and mobile telephone equipment are subject to federal rules and must be installed by trained personnel. Isuzu is not responsible if add-on equipment interferes with engine operation or picks up interference from vehicle components.

Downloaded from www.Manualslib.com manuals search engine

SECTION 3
IN CASE OF EMERGENCY

HAZARD WARNING LIGHT FLASHER

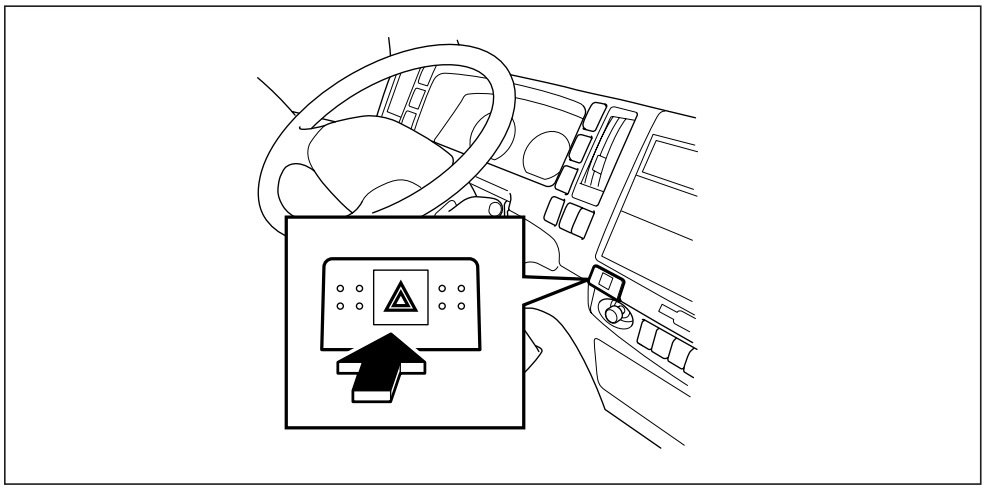

Use the hazard warning light flasher to warn other drivers any time your vehicle becomes a traffic hazard, day or night.

Avoid stopping on the roadway, if possible.

Turn on the hazard warning flashers by pushing in the switch located on the right-hand side of the instrument panel.

The flasher will work with the engine control switch either “ON” or “OFF” and the key removed. Right and left turn signal indicators should flash together when the hazard flasher is turned on.

The individual turn signals do not work when the hazard flasher is turned on.

To turn off the flasher, push the switch again.

EMERGENCY STARTING YOUR VEHICLE DUE TO A DISCHARGED BATTERY

If your vehicle will not start due to discharged batteries, it can often be started by using energy from another battery—a procedure called “jump starting”.

This vehicle has a 12-volt starting system and a negative ground electrical system. Make sure that the other vehicle also has a 12-volt starting system, and that it is the negative (–) terminal which is grounded (attached to the engine block, or frame rail). Its operator’s manual may give you that information. Do not try to jump start if you are unsure of the other vehicle’s voltage or ground (or if the other vehicle’s voltage and ground are different from your vehicle).

Connect the positive cable from the good battery to either of the positive terminals on the discharged batteries.

Downloaded from www.Manualslib.com manuals search engine

Diesel engine vehicles have more than one battery because of the higher torque required to start a diesel engine. This procedure can be used to start a single-battery vehicle from any of the diesel vehicle's batteries. However, at low temperatures, it may not be possible to start a diesel engine from a single battery from another vehicle.

CAUTION: Never tow the vehicle to start because a surge forward when the engine starts could cause a collision with the tow vehicle. Also, this vehicle has 12-volt batteries; be sure the vehicle or equipment used to jump start your engine is also 12-volt. Use of any other system may damage the vehicle's electrical components.

JUMP STARTING INSTRUCTIONS

CAUTION: Batteries produce explosive gases, contain corrosive acid, and supply levels of electrical current high enough to cause burns. Therefore, to reduce the risk of personal injury when working near a battery:

- **Always shield your eyes and avoid leaning over a battery whenever possible.**
- **Do not expose a battery to open flames or sparks.**
- **Be sure any batteries that have filler caps are properly filled with fluid.**
- **Do not allow battery acid to contact eyes or skin. Flush any contacted area with water immediately and thoroughly, and get medical help.**
- **Follow each step in the jump starting instructions.**

1. Position the vehicle with the good (charged) battery so that the booster (jumper) cables will reach. But never let the vehicles touch. Also, be sure the booster cables to be used do not have loose or missing insulation.
2. In both vehicles:
   - Turn off the ignition (engine control) switch and all lights and accessories except the hazard flasher or any lights needed for the work area.
   - Apply the parking brake firmly and shift the automatic transmission to Park.
3. Make sure the cable clamps do not touch any other metal parts. Clamp one end of the first booster cable to the positive (+) terminal on the good battery. Clamp the other end either positive terminal on the discharged battery. Never connect (+) to (–).
4. Clamp one end of the second cable to the negative (–) terminal of the good (charged) battery. Make the final connection to the chassis frame rail or to any solid, stationary metallic object on the engine at least 18 inches from the discharged battery. Make sure the cables are not on or near pulleys, fans or other parts that will move when the engine is started.

Downloaded from www.Manualslib.com manuals search engine

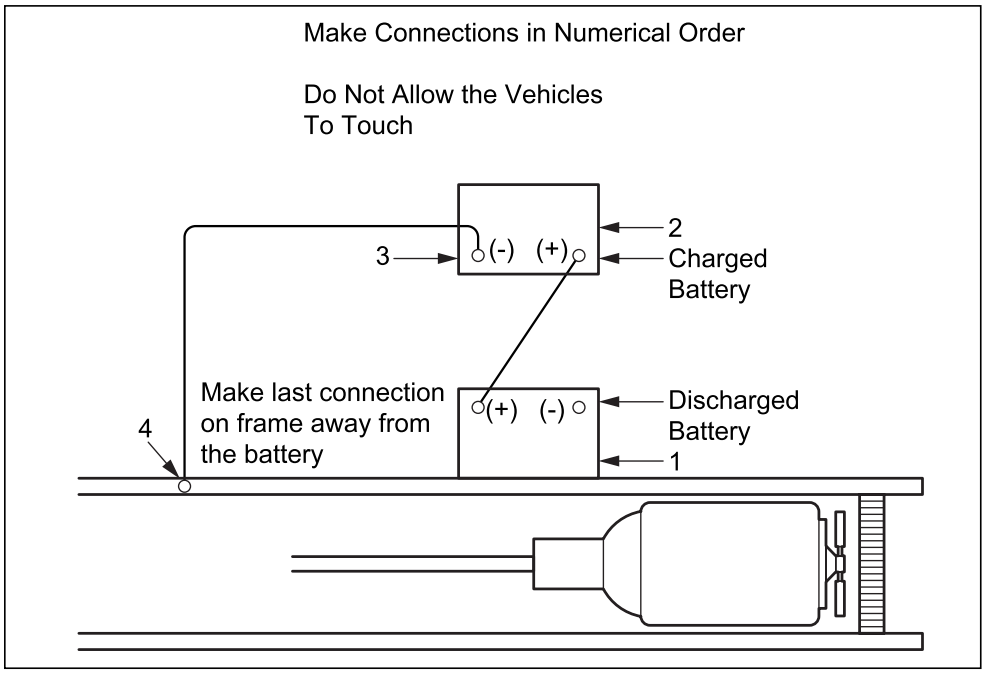

5. Start the engine of the vehicle with the good (charged) battery. Run the engine at a moderate speed for several minutes. Then, start the engine of the vehicle that has the discharged battery.
6. Remove the jumper cables by reversing the above installation sequence exactly. While removing each clamp, take care that it does not touch any other metal while the other end remains attached.

ENGINE COOLING SYSTEM OVERHEATING

CAUTION: If the Engine Coolant Temperature Gauge shows an overheat condition or you have other reasons to suspect the engine may be overheating, continued operation of the engine (other than as described here) even for a short period of time may result in a fire, and the risk of personal injury and severe vehicle damage. Take immediate action as outlined.

If you see or hear escaping steam or have any other reason to suspect there is a serious overheat condition, stop and park the vehicle as soon as it is safe to do so and then turn off the engine immediately and get out of the vehicle.

The engine cooling system may overheat if the engine coolant level is too low, if there is a sudden loss of engine coolant (such as radiator hose failure), or if other problems occur. It may also temporarily

Downloaded from www.Manualslib.com manuals search engine

overheat during severe operating conditions such as:

- Climbing a long hill on a hot day
- Stopping after high-speed driving
- Idling for long periods in traffic

If the Engine Coolant Temperature gauge shows an overheat condition, or you have reason to suspect the engine may be overheating, take the following steps:

- If your air conditioner (if equipped) is on, turn it off. And turn on the heater to help the engine expel heat.
- Pull over, stop, and park the vehicle as soon as it is safe to do so.
- Do not turn off your engine.
- Let the engine run at normal idle speed for two or three minutes.

If the engine coolant temperature does not start to drop, turn off the engine and get out of the vehicle, then proceed as follows:

CAUTION: To help avoid being burned—

- **Do not tilt the cab or open the engine access cover if you see or hear steam or engine coolant escaping from the engine compartment. Wait until no steam or engine coolant can be seen or heard before tilting the cab or opening the engine cover.**
- **Do not remove the radiator cap or engine coolant reserve tank cap if the engine coolant in the tank is boiling. Also do not remove the radiator cap while the engine and radiator are still hot. Scalding fluid and steam can be blown out under pressure if either cap is taken off too soon.**

If no steam or engine coolant can be seen or heard, tilt the cab or open the engine access cover. If the engine coolant is boiling, wait until it stops before proceeding. Look at the see-through reserve tank. The engine coolant level should be between the “MAX” and “MIN” marks on the reserve tank. If necessary, pour engine coolant (Engine coolant is a mixture of ethylene glycol antifreeze and water. See “Engine Cooling System” in Section 5 for the proper antifreeze and water mixture.) into the reserve tank only, never directly into the radiator. Also, do not check engine coolant level at the radiator.

Make sure the fan belts are not broken, or off the pulleys, and that the fan turns when the engine is started.

If the engine coolant level in the reserve tank is low, look for leaks at the radiator hoses and connections, heater hoses and connections, radiator, and water pump. If you find major leaks, or spot other problems that may have caused the engine to overheat, do not run the engine until these problems have been corrected. If you do not find a leak or other problem, carefully add engine coolant to the reserve tank.

Downloaded from www.Manualslib.com manuals search engine

CAUTION: To help avoid being burned, do not spill antifreeze or engine coolant on the exhaust system or hot engine parts. Under some conditions, the ethylene glycol in engine coolant is combustible.

If the engine coolant level in the reserve tank is at the correct level but there is still an indication on the instrument panel of an overheat condition:

- YOU MUST LET THE ENGINE COOL FIRST. You may then add engine coolant directly to the radiator. See “Adding Engine Coolant” under “Engine Cooling System” in Section 5.

Once the Engine Coolant Temperature Gauge no longer signals an overheat condition, you can resume driving at a reduced speed. Return to normal driving after about ten minutes if the gauge pointer does not again show an overheat condition.

If no cause for the overheat condition was found, see a qualified service technician.

DAMAGED TIRES

CAUTION: It is dangerous to mount the wrong size tire on a wheel. If you do so, the tire/wheel can explode as air is being added. This explosion may result in severe personal injury or death. To learn which wheels and tires are correct, look at the “Vehicle Identification Number (VIN) and Weight Rating Plate” on the left side rear pillar panel below the striker. Wheel size is also stamped on the side of each wheel.

Downloaded from www.Manualslib.com manuals search engine

CAUTION: To help avoid personal injury and property damage if a wheel must be changed, seek expert tire services if you can. If you must remove the wheel without any such help, do the following:

1. **If the tire looks as if it may contain air under pressure, stand to the side and check whether the wheel assembly appears normal by comparing it to another wheel assembly on the vehicle.**
2. **Let the air out of the tire by taking out the valve core. If you have a way to put air back in a tire, note that it is good safety practice to let the air out of both tires of a dual assembly before taking off the damaged tire and rim assembly from the vehicle. After letting out the air, take off the tire and rim assembly and install a spare tire and rim assembly.**
   If you are not fully experienced on the procedures to follow, and/or are not equipped with the proper tools and equipment, again, do not attempt to raise the vehicle, or remove or install the tire and wheel assembly—seek experts tire services.
3. **Do not put air back in a tire that has been run flat, or is seriously low on air, without first having the tire taken off the wheel and the tire checked for damage.**
4. **Note that taking off and mounting tires on truck wheels requires proper tools, safety equipment and special training. A person can be severely injured or killed and damage can result from using the wrong service methods. Truck tires and wheels should be serviced only by trained people using the proper equipment.**
5. **Never add air to your tires unless an accurate pressure gauge is also used. When putting air in a tire on the vehicle, stand to the side and use a clip-on chuck and hose extension. In choosing the right tire pressure, be careful not to exceed the maximum pressure capability shown on the tire; see the tire pressure charts at the end of this manual.**
6. **Tire mounting or repair can result in serious personal injury or death, if not performed correctly. This section has detailed instructions for proper wheel and tire replacement, so be sure to read and follow them.**
   Truck fleet owners and operators: You can get written instructions on truck tire demounting, repair and mounting from Rubber Manufacturers Association (RMA), 1400 K Street N.W., Washington, D.C. 20005, and also from many tire stores.

Downloaded from www.Manualslib.com manuals search engine

WHEEL NUT TORQUE

CAUTION: Never use oil or grease on studs or nuts. Use the torque specified for the type of wheels on the vehicle. Snug all wheel nuts and then tighten to the specified torque in the numerical sequence shown. Improperly tightened wheel nuts could eventually allow the wheel to come off while the vehicle is moving, possibly causing loss of control and personal injury and property damage.

When the vehicle, wheel or fasteners are new, have a technician tighten wheel stud nuts and rim clamp nuts with a torque wrench at 650 miles (1,040 kilometers). This is necessary because the clamping system used on the wheels must seat before the fastener will hold a uniform clamp load and remain fully tightened. Also have a technician tighten wheel stud nuts and rim clamp nuts with a torque wrench after installing any wheel.

In addition, nut tightness on all wheels should be set with a torque wrench every 6,500 miles (10,400 kilometers).

WHEEL STUD NUT TORQUE

490 N·m (362 ft·lbs)

WHEEL TIGHTENING SEQUENCE

NOTICE: Some studs and nuts have left-hand threads. Those studs are marked on their ends with the letter “L”.

Install valve stems of dual wheels 180 degrees opposite each other.

1. Finger-tighten the nuts.
2. Tighten all nuts to specified torque in order as shown. Never use oil or grease on the studs or nuts.
3. If a wheel stud and nut has been replaced, stake the stud and nut.

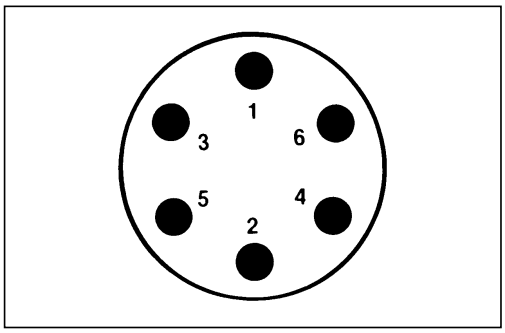

Downloaded from www.Manualslib.com manuals search engine

CAUTION: To help reduce the risk of losing vehicle control and personal injury or death, if any stud has been damaged as a result of a loose running wheel, all studs for that wheel should be replaced. A loose running wheel may cause only one stud to break but damage to other studs may not be noticeable. If stud holes in a wheel have become elongated or distorted, replace the wheel.

TOWING YOUR ISUZU TRUCK PROCEDURE

Proper equipment must be used to prevent damage to vehicles during any towing. State and local laws which apply to vehicles in tow must be followed. Vehicles should not be towed at speeds in excess of 55 MPH (88 km/h).

Connect to the main structural parts of the vehicle. DO NOT attach to bumpers, tow hooks or brackets. Use only equipment designed for this purpose. Follow the instructions of the wrecker manufacturer.

A safety chain system must be used.

The procedures below must be followed when towing to prevent possible damage.

FRONT END TOWING (FRONT WHEELS OFF GROUND)

To prepare a disabled vehicle for front end towing with front wheels raised off the ground, the following steps are necessary:

- Block the rear wheels of the disabled vehicle.
- Disconnect the driveshaft at the rear axle. Secure the driveshaft to the frame or crossmember.

NOTICE: When towing, disconnect the driveshaft at the rear axle to ensure the automatic transmission is not damaged.

If there is damage or suspected damage to the rear axle, remove the axle shafts.

Cover the hub openings to prevent the loss of lubricant or entry of dirt or foreign objects.

Place a 4” x 4” wood beam against the towing guide behind the bumper. (If no 4” x 4” is available, then remove the bumper.) Ensure towing chains do not come into contact with the horns or the bumper.

Downloaded from www.Manualslib.com manuals search engine

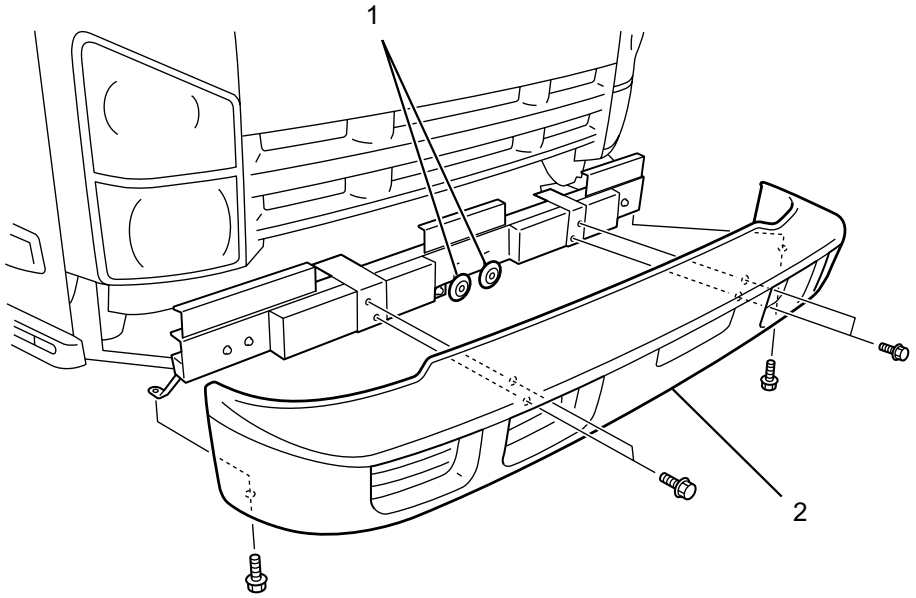

1. Horns
2. Bumper (removed for towing)

After Towing

After towing the vehicle, block the rear wheels and install axle shafts or driveshaft. Apply the parking brake before disconnecting from the towing vehicle.

FRONT END TOWING (ALL WHEELS ON THE GROUND)

Your vehicle may be towed on all wheels provided the steering is operable. Remember that power steering and brakes will not have power assist. There must be a tow bar installed between the tow vehicle and the disabled vehicle.

Downloaded from www.Manualslib.com manuals search engine

Towing With All Wheels on the Ground

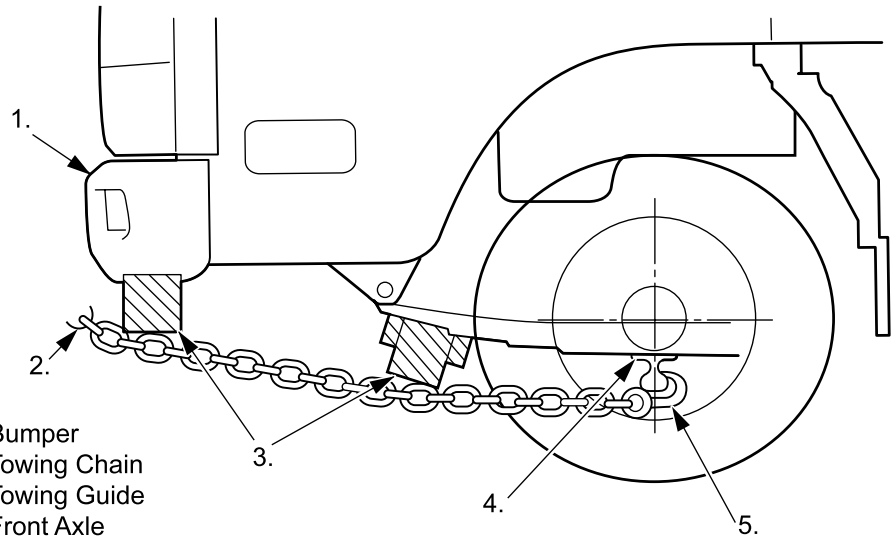

1. Bumper
2. Towing Chain
3. Towing Guide
4. Front Axle
5. Tow Hook

To prepare a disabled vehicle for front end towing with all wheels on the ground, the following steps are necessary:

- Block the wheels of the disabled vehicle.
- Disconnect the driveshaft at the rear axle. Secure the driveshaft to the frame or crossmember.

NOTICE: When towing, disconnect the driveshaft at the rear axle to ensure the automatic transmission is not damaged.

Provide wood blocking to prevent towing chains and bar from coming into contact with the bumper.

If there is damage or suspected damage to the rear axle, remove the axle shafts.

Cover the hub openings to prevent the loss of lubricant or entry of dirt or foreign objects.

After Towing

After towing the vehicle, block the rear wheels and install axle shafts or driveshaft. Apply the parking brake before disconnecting from the towing vehicle. Check and fill rear axle with oil, if required.

Downloaded from www.Manualslib.com manuals search engine

REAR END TOWING

When towing a vehicle with rear wheels raised, secure the steering wheel to maintain straight-ahead position. Make certain that the front axle is not loaded beyond the front axle Gross Axle Weight Rating (GAWR) as indicated on the vehicle's VIN and Weight Rating plate.

SPECIAL TOWING INSTRUCTIONS

1. All state and local laws regarding such items as warning signals, night illumination, speed, etc., must be followed.
2. Safety chains must be used.
3. No vehicle should ever be towed over 55 MPH (88 km/h).
4. Loose or protruding parts of damaged vehicles should be secured prior to moving.
5. A safety chain system completely independent of the primary lifting and towing attachment must be used.
6. Operators should refrain from going under a vehicle which is being lifted by the towing equipment unless the vehicle is adequately supported by safety stands.
7. No towing operation which for any reason jeopardizes the safety of the wrecker operator or any bystanders or other motorists should be attempted.

FREEING THE VEHICLE FROM SAND, MUD, SNOW AND ICE

CAUTION: Do not spin wheels faster than 20 MPH (32 km/h). Personal injury or death and damage may result from excessive wheel spinning, including tire, transmission and/or rear axle malfunction.

If your vehicle gets stuck in sand, mud, snow or ice, move the gearshift lever from "Second" to "Reverse". Apply a light pressure to the accelerator pedal while the transmission is in gear. Remove your foot from the accelerator and depress the brake pedal while shifting. DO NOT RACE THE ENGINE. For best traction, avoid spinning the wheels.

USING THE ENGINE AS A BRAKE

CAUTION: To reduce the possibility of personal injury or death, before going down a steep or long grade, reduce speed, turn on the Exhaust Brake and shift the transmission to the next lower gear. Try not to hold the brake pedal down too long or too often while going down a steep or long grade. This could cause the brakes to get hot and not work as well. As a result, the vehicle will not slow down at the usual rate. Failure to take these steps could result in loss of vehicle control.

Downloaded from www.Manualslib.com manuals search engine

When going down a grade, the engine can be used as a brake to slow vehicle speed, provided the transmission is shifted into a gear which will slow the truck without overspeeding the engine.

THE ENGINE SHOULD NEVER BE ALLOWED TO EXCEED THE GOVERNED SPEED. Supplement engine braking with vehicle service brakes intermittently and/or shift to higher transmission gear to prevent engine overspeed.

The exhaust brake system can also be used. This system, when turned on, increases the amount of power absorbed by the engine while coasting. Refer to “Exhaust Brake System” in Section 2 for operating instructions.

STOPPING THE VEHICLE IN THE EVENT OF SERVICE BRAKE MALFUNCTION

The exhaust brake should be turned on as soon as a service brake malfunction is detected. This should slow the engine speed. With the engine speed under control, and providing the grade conditions permit, the transmission can be progressively downshifted using the exhaust brake in each gear. Eventually the exhaust brake should slow the vehicle to a controllable “crawl”. Stop the vehicle. The vehicle should not be driven further until corrective measures are taken.

CAUTION: See “Engine Exhaust Gas Caution (Carbon Monoxide)” in Section 2-1.

Downloaded from www.Manualslib.com manuals search engine

CUSTOMER SATISFACTION PROCEDURE

Your satisfaction and goodwill are important to your dealer and to Isuzu. Normally, any problems with the sales transaction or the operation of your Isuzu chassis, or upfitted rear body will be resolved by your dealer's Sales or Service Departments. Sometimes, however, despite the best intentions of all concerned, misunderstandings can occur. If your problem has not been resolved to your satisfaction, we suggest you follow these steps:

STEP ONE – Discuss your problem with a member of dealership management. Complaints can often be quickly resolved at that level. If the problem has already been reviewed with the sales or service manager, contact the owner of the dealership or the General Manager.

STEP-TWO – If your problem cannot be quickly resolved by the dealership, please contact Isuzu Commercial Truck of America Customer Relations Department 46401 Commerce Center Drive Plymouth, MI 48170 in writing or call 1-866-441-9638. Our representatives will review all available facts involved. Then, if it is felt that additional action can be taken, our representative will further address your concerns as soon as possible.

- Your name, address, and daytime phone number.
- The Vehicle Identification Number (VIN). This will be found on registration or title, and on the VIN plate in the cab of the vehicle.
- Your dealer's name and location.
- Current mileage on the vehicle.
- Nature of the problem.

When contacting Isuzu Commercial Truck of America, please remember that your vehicle's problem will likely be resolved at the dealership, using the dealer's facilities, equipment, and personnel. Regardless of the review outcome, your contact will be acknowledged and an explanation of our position in the matter will be provided.

Downloaded from www.Manualslib.com manuals search engine

REPORTING SAFETY DEFECTS

If you believe that your vehicle has a defect which could cause a crash or could cause injury or death, you should immediately inform the National Highway Traffic Safety Administration (NHTSA) in addition to notifying Isuzu Commercial Truck of America, Inc.
If NHTSA receives similar complaints, it may open an investigation, and if it finds that a safety defect exists in a group of vehicles, it may order a recall and remedy campaign.
However, NHTSA cannot become involved in individual problems between you, your dealer, or Isuzu Commercial Truck of America, Inc.
To contact NHTSA, you may call the Vehicle Safety Hotline toll-free at 1-888-327-4236 (TTY: 1-800-424-9153); go to *http://www.safercar.gov* ; or write to: Administrator, NHTSA, 1200 New Jersey Avenue, SE., Washington, DC, 20590. You can also obtain other information about motor vehicle safety from *http://www.safercar.gov*.

Downloaded from www.Manualslib.com manuals search engine

SECTION 4
APPEARANCE CARE

CLEANING AGENTS

CAUTION: Follow the manufacturer's advice whenever cleaning agents or other chemicals are used, inside or outside the vehicle. Some cleaners may be poisonous or flammable, and improper use may cause personal injury or damage. When cleaning the inside or outside of the vehicle, do not use volatile cleaning solvents, such as acetone, lacquer thinners, enamel reducers, nail polish removers; or such cleaning materials as laundry soaps, bleaches or reducing agents, except as noted in the following fabric cleaning advice on stain removal. Never use carbon tetrachloride, gasoline, benzene or naphtha for any cleaning purpose.

Open all vehicle doors for ventilation when ANY cleaning agents or other chemicals are used in the interior. Overexposure to some vapors may result in a health problem that is more likely to occur in small, unventilated spaces.

NOTICE: To avoid possible permanent discoloration of light colored seats, DO NOT let materials with non-fast colors come into contact with seat trim materials until these materials are totally dry. This includes certain types of casual clothing, such as colored denims, corduroys, leathers and suedes; also decorative paper, etc.

CARE AND CLEANING OF THE INTERIOR

With the use of modern trim materials, it is VERY IMPORTANT that you use proper cleaning techniques and cleaners. Failing to do this on the first cleaning may result in water spots, spot rings or setting of stains or soilage - all of which are more difficult to remove in a second cleaning.

Dust and loose dirt that collect on interior fabric should be removed often with a vacuum cleaner or soft bristle brush. Wipe vinyl or leather trim regularly with a clean, damp cloth. Normal trim soils, spots or stains can be cleaned with these cleaners.

Downloaded from www.Manualslib.com manuals search engine

REMEMBER THESE BASIC STEPS BEFORE CLEANING:

1. Remove stains as quickly as possible before they become “set”.
2. Use a clean cloth or sponge, and change to a clean area often. A soft brush may be used if stains persist.
3. Use solvent-type cleaners only in a well ventilated area: also, do not saturate the stained area.
4. If a ring forms after spot cleaning, clean the entire area immediately.
5. Follow specific instructions on cleaner labels.

General Cleaning of Soiled or Water Spotted Fabric Type Trim With Foam Type Cleaner

- Vacuum the area thoroughly to remove any loose dirt.
- Always clean a whole trim panel or section. Mask surrounding trim along stitch or welt lines.
- Use suds on a clean sponge. Do not brush wet suede. Do not saturate the material or rub it harshly. Immediately after cleaning, remove suds with a sponge and rinse with a clean wet sponge. Wipe off remaining residue with a slightly damp absorbent towel or cloth.
- Important — Immediately after wiping, force-dry the fabric with an air hose. A heat dryer or heat lamp may be used. Use caution with a heat dryer or lamp to help prevent damage.
- When trim materials with a sheen or luster finish are dry, wipe the fabric lightly with a soft, dry, clean cloth to restore its sheen or luster. For suede, raise nap with dry scrub brush and vacuum to remove any final traces of residue.

Spot Cleaning Fabric Type Trim With Solvent Type Cleaner

Before trying to remove a spot or stain from fabric, try to find out the type and age of the spot or stain. Some spots or stains can be removed with water or a mild soap solution (see “Removal of Specific Stains”). Spots or stains should always be removed as soon as possible.

Some types of stains or soilage, such as lipstick, inks and grease, are very difficult (sometimes impossible) to remove completely. When cleaning this type of stain or soilage, be sure not to enlarge the soiled area.

- Gently scrape excess stain from the trim material with a clean, dull knife or scraper. Use very little cleaner, light pressure, and clean cloths (preferably cheesecloth). Cleaning should start at the outside of the stain “feathering” towards the center. Keep changing to a clean section of cloth.
- When you clean a stain from fabric, immediately dry the area with an air hose, heat dryer, or heat lamp to help prevent a cleaning ring. (Use caution with heat dryer or lamp to help prevent fabric damage.)
- If a ring forms, immediately repeat the cleaning operation over a slightly larger area with emphasis on “feathering” towards its center. If a ring still remains, mask off surrounding trim sections and clean the entire soiled area with foam type cleaner.

Downloaded from www.Manualslib.com manuals search engine

Removal of Specific Stains

Greasy or Oily Stains – Includes grease, oil, butter, margarine, shoe polish, coffee with cream, chewing gum, cosmetic creams, vegetable oils, wax crayon, tar and asphalts.

- Carefully scrape off excess stain; then use solvent type cleaner.
- Shoe polish, wax crayons, tar and asphalts will stain if left on trim; they should be removed as soon as possible. Use care as cleaner will dissolve them and may cause them to “bleed”.

Non-Greasy Stains – Includes catsup, coffee (black), egg, fruit, fruit juice, milk, soft drinks, wine, vomit and blood.

- Carefully scrape off excess stain; then sponge the stain with cool water.
- If a stain remains, use Multi-Purpose Powdered Cleaner (Foam type) as previously described.
- If an odor lingers after cleaning vomit or urine, treat the area with a water-baking soda solution: 5 milliliters (1 teaspoon) of baking soda to 250 milliliters (1 cup) of lukewarm water.
- Finally, if needed, clean lightly with Fabric Cleaner (Solvent type).

Combination Stains – Includes candy, ice cream, mayonnaise, chili sauce and unknown stains.

- Carefully scrape off excess stain; then clean with cool water and allow to dry.
- If stain remains, clean it with Fabric Cleaner (Solvent type).

Cleaning Vinyl Trim

Ordinary soilage can be removed from vinyl or leather with warm water and mild soap, such as saddle soap or oil soap, or an equivalent.

- Apply a small amount of soap solution and let it soak for a few minutes to loosen dirt; then, rub briskly with a clean, damp cloth to remove dirt and traces of soap. This may be done several times, if needed.
- Soilage such as tars, asphalts, shoe polish, etc., will stain if left on trim. They should be wiped off as quickly as possible and the area cleaned with a clean cloth dampened with solvent type vinyl leather cleaner.

SEAT BELT CARE

CAUTION:
- **Keep belts clean and dry.**
- **Clean safety belts only with mild soaps and lukewarm water.**
- **Do not bleach or dye belts since this may severely weaken them.**

GLASS SURFACES

Glass surfaces should be cleaned on a regular basis. Use of glass cleaner or a liquid household glass cleaner will remove normal tobacco smoke and dust films sometimes caused by ingredients used in vinyls and interior plastics.

Downloaded from www.Manualslib.com manuals search engine

CLEANING OUTSIDE OF WINDSHIELD

If your windshield is not clear after using the windshield washer, or if the wiper blade chatters when running, wax or other material may be on the blade or windshield.

The windshield wipers on your truck can be pulled out from the windshield to provide easier access for cleaning.

Clean the outside of the windshield with a non-abrasive cleaner. Your windshield is clean if beads do not form when rinsing with water.

Clean the blade by wiping with a cloth soaked in a solution of one-half water and one-half methanol alcohol. Then rinse the blade with water.

CARE AND CLEANING OF EXTERIOR

EXTERIOR FINISH

The paint finish on your vehicle provides beauty, depth of color, gloss retention and durability.

NOTICE: While cleaning the vehicle, do not grip the roof marker lights to prevent damage or water leakage.

Washing Your Vehicle

The best way to preserve your vehicle's finish is to keep it clean by washing it often. Wash the vehicle in lukewarm or cold water.

Do not use hot water or wash your vehicle in the direct rays of the sun. Do not use strong soap or chemical detergents. All cleaning agents should be flushed promptly from the surface and not allowed to dry on the finish.

Isuzu vehicles are designed to operate under normal environmental conditions to withstand natural elements. However, unusual conditions such as high-pressure car washers may cause water to enter inside the vehicle.

Polishing and Waxing

Periodic polishing and waxing is recommended to remove built-up residue and eliminate any "weathered" appearance.

Your authorized dealer offers several polishes and cleaners which have proven value in maintaining original finish appearance and durability.

Protecting Exterior Bright Metal Parts

Bright metal parts should be cleaned regularly to keep their luster. Washing with water is all that is usually needed.

Use special care with aluminum trim. To avoid damaging protective trim, never use auto or chrome polish, steam or caustic soap to clean aluminum. A coating of wax, rubbed to a high polish, is recommended for all bright metal parts.

Downloaded from www.Manualslib.com manuals search engine

WEATHERSTRIP LUBRICATION

All weatherstrips should be periodically lubricated (minimum of every six months) with a silicone grease lubricant. A thin film of silicone grease lubricant should be applied using a clean cloth. Silicone grease application will lengthen weatherstrip life, help sealing, and assist in eliminating squeaks.

CORROSION PROTECTION

Your vehicle has been designed and built to resist corrosion. Special materials and protective finishes were used on most parts of your vehicle when it was built to help maintain good appearance, strength, and reliable operation. However, some parts which normally are not visible (such as those under the vehicle and under the hood) are such that surface rust will not affect their reliability. So corrosion protection is not needed or used on these parts.

Sheet Metal Damage

If your vehicle is damaged and requires sheet metal repair or replacement, make sure the body repair shop applies anti-corrosion material to the parts repaired or replaced so that corrosion protection is restored. (Also see “Finish Damage” which follows.)

Foreign Material Deposits

Calcium chloride and other salts, ice-melting agents, road oil and tar, tree sap, bird droppings, chemicals from industrial chimneys and other foreign matter may damage vehicle finishes if left on painted surfaces.

Prompt washing may not completely remove all of these deposits. Other cleaners may be needed. When using chemical cleaners, be sure they are safe for use on painted surfaces.

Finish Damage

Any stone chips, fractures or deep scratches in the finish should be repaired promptly. Bare metal will corrode quickly and may develop into major repair expense.

Minor chips and scratches can be repaired with touchup materials available from your authorized dealer or other service outlets. Larger areas of finish damage can be corrected in your dealer’s body and paint shop.

Downloaded from www.Manualslib.com manuals search engine

UNDERBODY MAINTENANCE

Corrosive materials used for ice and snow removal, and dust control can collect on the underbody. If these materials are not removed, accelerated corrosion (rust) can occur on underbody parts such as fuel lines, frames, floor pan and exhaust system even though they have been provided with corrosion protection.

At least every spring, flush these materials from the underbody with plain water. Take care to clean well any areas where mud and other debris can collect. Sediment packed in closed areas of the frame should be loosened before being flushed. If desired, your authorized dealer can do this for you.

Downloaded from www.Manualslib.com manuals search engine

SECTION 5
SERVICE AND MAINTENANCE

Your authorized dealer has factory trained technicians and Genuine Isuzu Parts to service your vehicle properly. For expert advice and quality service, see your authorized dealer.

OWNER MAINTENANCE

CAUTION: To help avoid personal injury, take care when doing any maintenance or making any check or repair. Follow manufacturer's instructions for all materials used during service and maintenance of this vehicle. If used or handled improperly, they may be hazardous. Improper or incomplete service can also affect the vehicle and result in personal injury, or damage to the vehicle or its equipment. If you have any questions about carrying out some service, have the work done by a skilled technician.

MAINTENANCE SCHEDULE

The Maintenance Schedule in this manual and a Warranty Information Booklet are supplied with your vehicle. Read all publications for a full understanding of your vehicle's maintenance needs.

The quality of maintenance your new vehicle receives is as important as the regularity with which it is serviced. Isuzu, in cooperation with authorized dealers, provides nationwide quality in customer service. The program includes the training of dealer technicians at Training Centers throughout the country and is supported with a continuous follow-up of publications, films and other service information. The use of genuine Isuzu parts and accessories, which have the same high quality standards as original equipment parts, and the use of factory approved tools developed and tested for use by the authorized dealer also contribute to the high quality of service.

If you have any questions on how to keep your truck or chassis in good condition, see your authorized dealer, the place many Isuzu truck owners choose to have their maintenance work done. Your authorized dealer can be relied upon to use proper parts and practices.

Some of these services can be complex, so unless you are technically qualified and have the necessary equipment, you should let your authorized dealer's service department or another qualified service center do these jobs.

CAUTION: Performing maintenance work on a truck or chassis can be dangerous. In trying to do some jobs, you can be seriously injured. Do your own maintenance work only if you have the required know-how and the proper tools and equipment for the job. If you have any doubts, have a qualified technician do the work.

The schedule includes general maintenance which you or a qualified technician should perform periodically.

Downloaded from www.Manualslib.com manuals search engine

EXPLANATION OF VEHICLE MAINTENANCE AND LOG

The following is a brief explanation of normal vehicle use.

NORMAL VEHICLE USE—The maintenance instructions contained in this section are based on the assumption that your vehicle will be used as designed:

- To carry passengers and cargo with the limitations indicated on the vehicle VIN and GVW plate.
- On reasonable road surfaces within legal operating limits.
- On a daily basis, as a general rule, for at least several miles/kilometers.

Unusual operating conditions, such as driving in dusty areas (sweeper, agricultural or off-road vehicles), extended idling (refrigeration vehicles), or vehicles operated for frequent short trips, will require more frequent vehicle maintenance.

The log groups items according to mile/kilometer service intervals. Use the item codes (letter and number) to find the description of the maintenance and the time intervals. Follow whichever interval comes first, time or miles/kilometers.

After the maintenance services are performed, insert the month, day and mileage/kilometers in the area provided next to the serviced item.

The services shown up to 110,000 miles (176,000 kilometers) are to be repeated after the initial 110,000 miles (176,000 kilometers) at the same intervals.

PREVENTIVE MAINTENANCE

As any mechanical device operates, a certain amount of wear occurs. The amount of wear depends on certain variables – type and method of operation and the schedule of maintenance. These variables may be emphasized as critical to malfunction but each is dependent upon the other. For example, if a vehicle is repeatedly overloaded, driven at excessive speed or improperly shifted, no schedule of maintenance can prevent malfunction. Also, if a preventive maintenance schedule is not followed, or is improperly carried out, no amount of correct vehicle operation will prevent malfunction. If vehicle application, operation and preventive maintenance schedules and procedures are followed and properly carried out, the life of the vehicle will be greatly extended. For example, regular attention to the engine oil is essential. The oil level must be periodically checked and oil added whenever needed. Also, the oil should be changed at the intervals specified with the proper quality and viscosity of oil. If your engine should run excessively low on oil or if the oil has lost its lubricating qualities because of old age, serious engine damage could occur – damage that would not be covered under the New Vehicle Warranty.

Downloaded from www.Manualslib.com manuals search engine

Maintenance Schedule for the NPR (Cont.)

No.	Item	Interval (kilometers) 16 000	24 000	32 000	48 000	64 000	72 000	80 000	96 000	112 000	120 000	128 000	144 000	160 000	168 000	176 000	Service Intervals Months or Miles (kilometers) whichever occurs first
	Interval (Miles)	10,000	15,000	20,000	30,000	40,000	45,000	50,000	60,000	70,000	75,000	80,000	90,000	100,000	105,000	110,000	
1	Engine Noise Check	I		I	I	I		I	I	I		I	I	I		I	*
2	Valve Lash							A						A			
3	Engine Oil & Oil Filter *1	R		R	R	R		R	R	R		R	R	R		R	or every 12 months
4	Fuel Filter / Water Separator		R		R		R		R		R		R		R		or every 12 months
5	Air Cleaner Filter																indicator
6	Air Intake system				I				I				I				
7	Drive Belts	I		I	I	I		I	I	I		I	I	I		I	or every 12 months
8	Engine Bolt Torques							I						I			
9	Rotate Tires	Every 6,500 miles (10,400 km)															
10	Engine Cooling System	I		I	I	I		I	I	I		I	I	I		I	or every 12 months

(I): Inspect, replace or adjust if necessary (A): Adjust (R): Replace (T): Tighten to specified torque (L): Lubricate (C): Clean

* In case this column is blank, follow miles (kilometers).

*1 When recommended oil is used, it conforms to this maintenance schedule.
Recommended oil: CJ-4 (API DESIGNATIONS) with viscosity ∗W40.
Use of oils other than CJ-4 may require shorter maintenance intervals and may cause inconformity to regulations. Use of oils with other viscosity than ∗W-40 may also require shorter maintenance intervals and may cause a problem in engine durability.

Downloaded from www.Manualslib.com manuals search engine

Maintenance Schedule for the NPR (Cont.)

No.	Item	Interval (kilometers) 16 000	24 000	32 000	48 000	64 000	72 000	80 000	96 000	112 000	120 000	128 000	144 000	160 000	168 000	176 000	Service Intervals Months or Miles (kilometers) whichever occurs first
	Interval (Miles)	10,000	15,000	20,000	30,000	40,000	45,000	50,000	60,000	70,000	75,000	80,000	90,000	100,000	105,000	110,000	
11	Engine Coolant				R				R				R				or every 24 months
12	Exhaust System	I		I	I	I		I	I	I		I	I	I		I	
13	DPF (Clean filter)													C			or every 3,000 hours
14	DPF (Pressure difference sensor 0 point adjustment)													A			or every 3,000 hours
15	DPF (Pressure difference sensor hose)													I			or every 3,000 hours
16	Fuel Line System	I		I	I	I		I	I	I		I	I	I		I	or every 12 months
17	Brake Lining and Pad for Wear	I		I	I	I		I	I	I		I	I	I		I	
18	Brake Drum and Rotor for Wear and Damage			I		I			I			I		I		I	or every 12 months
19	Brake Fluid	I		I	R	I		I	R	I		I	R	I		I	or every 12 months

(I): Inspect, replace or adjust if necessary (A): Adjust (R): Replace (T): Tighten to specified torque (L): Lubricate (C): Clean

Downloaded from www.Manualslib.com manuals search engine

Maintenance Schedule for the NPR (Cont.)

No.	Item / Interval (kilometers)	16 000	24 000	32 000	48 000	64 000	72 000	80 000	96 000	112 000	120 000	128 000	144 000	160 000	168 000	176 000	Service Intervals Months or Miles (kilometers) whichever occurs first
	Interval (Miles)	10,000	15,000	20,000	30,000	40,000	45,000	50,000	60,000	70,000	75,000	80,000	90,000	100,000	105,000	110,000	
20	Brake Line and Hoses			I		I			I			I		I			or every 12 months
21	Automatic Transmission Fluid	I		I	R	I		I	R	I		I	R	I		I	or every 12 months
22	External Automatic Transmission Filter				R				R				R				or every 24 months
23	Differential Gear Oil	I		I	R	I		I	R	I		I	R	I		I	or every 24 months
24	Power Steering Fluid				R				R				R				or every 24 months
25	Power Steering Oil Hose							R						R			or every 24 months
26	Steering Gear Box Torque			T		T			T			T		T			or every 12 months
27	Driveshaft Flange Torque	T		T	T	T		T	T	T		T	T	T		T	or every 12 months
28	Driveshaft Lubricate	L		L	L	L		L	L	L		L	L	L		L	or every 12 months

(I): Inspect, replace or adjust if necessary (A): Adjust (R): Replace (T): Tighten to specified torque (L): Lubricate (C): Clean

Downloaded from www.Manualslib.com manuals search engine

Maintenance Schedule for the NPR

No.	Item	Interval (kilometers) 16 000	24 000	32 000	48 000	64 000	72 000	80 000	96 000	112 000	120 000	128 000	144 000	160 000	168 000	176 000	Service Intervals Months or Miles (kilometers) whichever occurs first
	Interval (Miles)	10,000	15,000	20,000	30,000	40,000	45,000	50,000	60,000	70,000	75,000	80,000	90,000	100,000	105,000	110,000	
29	Leaf Spring U-Bolt Torque*	T		T	T	T		T	T	T		T	T	T		T	
30	Wheel Nut Torque*	Every 6,500 miles (10,400 km)															
31	King Pin	L		L	L	L		L	L	L		L	L	L		L	or every 12 months
32	Wheel Bearing Grease**				R				R				R				or every 12 months
33	Air Conditioner Blower Filter	Cleaned once a month															

(I): Inspect, replace or adjust if necessary (A): Adjust (R): Replace (T): Tighten to specified torque (L): Lubricate (C): Clean
Remarks; *Initial torque check at 650 miles (1,040 km) is required.
**Be sure to discard used grease seal, and always use new grease seal for installation.

Downloaded from www.Manualslib.com manuals search engine

RECOMMENDED FLUIDS AND LUBRICANTS

USAGE	FLUIDS/LUBRICANTS
Engine Oil	Quality recommended CJ4 (API designation). To determine the viscosity required *W-40 for your vehicle's diesel engine, see "CHOOSING OIL VISCOSITY" on page 5-22.
Automatic Transmission Fluid	Genuine ISUZU SCS Transmission Fluid. (Do not use DEXRON®-III)
Power Steering Fluid	ATF DEXRON®-III
Rear Axle	Multi purpose gear oil SAE90 GL-5
Rear Axle (Limited slip differential)	Multi purpose gear oil SAE90 GL-5 for limited slip differential together with limited slip differential lubricant additive (Part No. 8-01052-358-0) or equivalent.
Chassis Lubricant	Multi purpose grease with high temperature, good quality, lithium soap, extreme pressure grease.
Battery Terminals	Petroleum Jelly (outer surfaces)
Brake Fluid	Brake fluid DOT 3 or equivalent
Cab-Door Hinges and Latches Lubricant	A semi-fluid grease having extreme pressure properties and containing zinc oxide (Lubricant or equivalent)
Engine Coolant	Mixture of water and good quality ethylene glycol base type anti-freeze conforming to Isuzu Factory Fill Long Life Coolant Part No.2-90531-809-0
Windshield Washer Solvent	Washer solvent
Driveshaft, Universal Joints and Sliding Sleeve Lubricant	NLGI #1 or #2 multi-purpose type grease
Driveshaft Center Bearing, When Hub Bearing Lubricant	NLGI #2 or #3

EXPLANATION OF COMPLETE VEHICLE MAINTENANCE SCHEDULE

The following is a brief explanation of each of the services listed in the preceding Complete Vehicle Maintenance Schedule.

Downloaded from www.Manualslib.com manuals search engine

NORMAL VEHICLE USE

The owner's maintenance instructions in the Maintenance Schedule are based on the assumption that your vehicle will be used as designed:

- to carry passengers and cargo within the limitations specified on the tire placard.
- to be driven on reasonable road surfaces within legal operating limits.
- to be driven on a daily basis, as a general rule, for at least several miles/kilometers; and
- to be driven with proper fuel (See Section 2 for details).

Unusual operating conditions, such as driving in dusty areas (sweeper, agricultural or off-road vehicles), extended idling (refrigeration vehicles), or vehicles operated for frequent short trips, will require more frequent vehicle maintenance.

1. **ENGINE NOISE** — These components have an effect on the control of noise emissions.

Engine (Every 10,000 miles or 16,000 km)	Inspect sound absorption materials for tears, broken out sections or attachment. Repair or replace as necessary.
Cooling system (Every 10,000 miles or 16,000 km)	Inspect fan, shroud and radiator for attachment, tears or cleanliness. Repair or replace as necessary.
Air intake system (Every 30,000 miles or 48,000 km)	Inspect all ducts, hoses and intake silencers for leaks or chafing. Repair or replace as necessary.
Exhaust system (Every 10,000 miles or 16,000 km)	Inspect silencer, pipes, gaskets, clamps and mounting for exhaust gas leaks or looseness. Repair or replace as necessary.
Cab (Every 10,000 miles or 16,000 km)	Inspect sound absorption materials for tears, broken out sections or attachment. Repair or replace as necessary.

2. **VALVE LASH** — Incorrect valve clearance will result in increased engine noise and lower engine output, thereby adversely affecting engine performance. Retorque rocker shaft bracket nuts before checking and adjusting valve clearance. Check and adjust valve clearance every 50,000 miles (80,000 km).
3. **ENGINE OIL AND OIL FILTER** — Change at interval noted below depending upon driving conditions.
   - NORMAL SERVICE — Change every 10,000 miles (16,000 km) or 12 months whichever occurs first.

Downloaded from www.Manualslib.com manuals search engine

- SEVERE SERVICE — Change every 5,000 miles (8,000 km) or 3 months if you often drive under one or more of these conditions (a) driving in dusty areas, (b) frequent idling or idling for long periods, (c) driving 4 miles (6 km) or less in freezing weather, or other short trips in cold weather, where the engine does not thoroughly warm up. Change oil and filter as soon as you can after driving in a dust storm.

When recommended oil is used, it conforms to this maintenance schedule.
(Recommended oil: CJ-4 (API DESIGNATIONS))

4. **FUEL FILTER/WATER SEPARATOR** — Replace the fuel filter every 15,000 miles (24,000 km) or more frequently if clogged. Drain water from the water separator every 15,000 miles (24,000 km).
5. **AIR CLEANER FILTER** — The level of dirt in the air cleaner element can be checked against the indicator.
   When the air filter is checked up, it cleans.
   When 6 times it cleans, you exchange with new ones.
   Your dealer or service facility can be of assistance in determining the proper replacement frequency for the conditions under which you operate your vehicle.
6. **AIR INTAKE SYSTEM** — Check if air cleaner hoses and ducts are connected and correctly installed every 30,000 miles (48,000 km).
7. **DRIVE BELTS** — Check belt driving the fan, generator or A/C compressor every 10,000 miles (16,000 km). Look for cracks, fraying, wear, and proper tension.
8. **ENGINE BOLT TORQUES** — Loosened bolts result in lower engine output. Check and adjust manifold mounting, and injectors to correct torque every 50,000 miles (80,000 km).
   Specified tightening torque

INTAKE/EXHAUST MANIFOLD BOLTS	19/34 N·m (14/25 ft·lbs)
INJECTOR FLANGE NUT	19 N·m (14 ft·lbs)

9. **ROTATE TIRES** — To equalize wear, rotate tires as shown in the figure and adjust tire pressures every 6,500 miles (10,400 km).

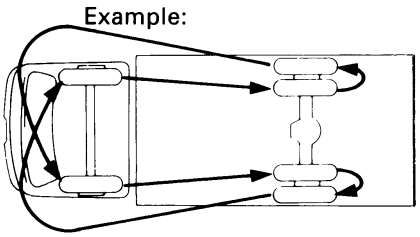

Downloaded from www.Manualslib.com manuals search engine

10. **ENGINE COOLING SYSTEM** — At 12 months or 10,000 miles (16,000 km) intervals, wash radiator cap and filler neck with clean water, pressure test system and radiator cap for proper pressure holding capacity, tighten hose clamps and inspect condition of all cooling and heater hoses. Replace hoses if cracked, swollen or otherwise deteriorated.

    Also each 12 months or 10,000 miles (16,000 km), clean exterior of radiator core.
11. **ENGINE COOLANT** — Every 24 months or 30,000 miles (48,000 km), drain the engine coolant by opening the drain plug at the bottom of the radiator core, flush and refill the engine cooling system with a new 50/50 water / ethylene glycol solution.
12. **EXHAUST SYSTEM** — Check the complete exhaust system every 10,000 miles (16,000 km). Check body areas near the exhaust system. Look for broken, damaged, missing, or out-of-position parts. Also inspect for open seams, holes, loose connections, or other conditions which could cause heat build-up at the rear body floor pan, or could let exhaust fumes seep into the passenger compartment. Dust or water in the cabin may indicate a leak in that area. Required repairs should be made at once.
13. **DPF(Clean Filter)** — Clean the filter every 100,000 miles (160,000 km) or 3,000 hours whichever occurs first.
14. **DPF(Pressure Difference Sensor 0 Point Adjustment)** — Adjust the sensor every 100,000 miles (160,000 km) or 3,000 hours whichever occurs first.
15. **DPF(Pressure Difference Sensor Hose)** — Inspect the sensor hose every 100,000 miles (160,000 km) or 3,000 hours whichever occurs first.
16. **FUEL LINE SYSTEM** — Inspect the fuel tank, cap and lines for damage which could cause leakage every 10,000 miles (16,000 km). Inspect fuel cap for correct sealing ability and indications of physical damage. Replace any damaged or malfunctioning parts.
17. **BRAKE LINING AND PAD FOR WEAR** — Check drum brake lining and disc brake pad for wear or cracks every 10,000 miles (16,000 km). Check brakes (including parking brake) more often if operating conditions or driving habits result in frequent braking.

    Front disc brakes have built-in wear noise indicators which are designed to make a high pitched squeal or cricket-like warning sound when the brake pads are worn to the point where new pads are needed.

    When the truck is in motion, the sound may be constant or it may come and go. Pressing the brake pedal firmly may cause the sound to stop.

    Have the brake linings or the brake pads replaced by your authorized dealer as immediately as possible after the warning first becomes evident.

    Failure to do so can result in expensive damage to the brake system or a serious accident.

Downloaded from www.Manualslib.com manuals search engine

18. **BRAKE DRUM AND ROTOR FOR WEAR AND DAMAGE** — Check brake drums (rear and parking) and rotors (front) for wear or damage every 20,000 miles (32,000 km) or 12 months whichever occurs first.
19. **BRAKE FLUID**— Check the fluid in the brake fluid reservoir every 10,000 miles (16,000 km). Replace the fluid every 30,000 miles (48,000 km).
20. **BRAKE LINE AND HOSES** — Check lines and hoses for proper hook-up, binding, leaks, cracks, chafing, etc. every 20,000 miles (32,000 km). Any questionable parts should be replaced or repaired at once. When rubbing or wear is noted on lines or hoses, the cause must be corrected at once.
21. **AUTOMATIC TRANSMISSION FLUID AND FILTER** — Check the automatic transmission fluid level at each engine oil change and replace fluid and external filter every 30,000 miles (48,000 km). Do not overfill.

    How to Check: This operation could be difficult and you may choose to have this done at your Isuzu Dealership Service Department.
    If you choose to do it yourself, then be sure to follow all the instructions below or you could get a false reading on the dipstick.

CAUTION: Too much or too little transmission oil could damage your transmission. Too much could cause your transmission to overheat and fluid to spill out from the breather hose. Be sure to get an accurate reading if you check your transmission fluid.

Park the vehicle on level ground and set parking brake. With engine idling and the regular brakes applied, move the gear selector through all gear positions and ending at “P”.

NOTICE: Wait at least 30 minutes before checking the transmission fluid if you have been driving at high speed for a long period of time, in city/heavy traffic and or while pulling a trailer.

Remove the dipstick located at the rear left of the engine.

Check fluid in Hot condition. The fluid should be checked while at normal operating temperature (Hot) between 158°F and 176°F (70°C to 80°C). Pull, wipe and clean the dipstick and reinsert all the way, wait at least 3 seconds then pull it back out again for reading. If the level is not in the “H” range, then adjust it accordingly.

Downloaded from www.Manualslib.com manuals search engine

NOTICE: The owner should use "H (Hot)" range. "C (Cold)" range is used for the service technician only. "C (Cold)" range is reference only for replacement of transmission or transmission fluid.

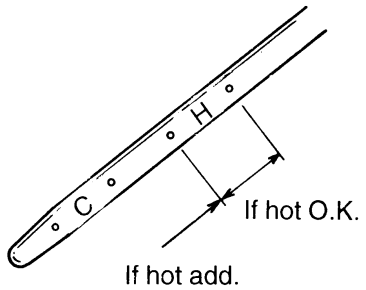

22. **EXTERNAL AUTOMATIC TRANSMISSION FILTER** — Replace external filter every 30,000 miles (48,000 km).
23. **DIFFERENTIAL GEAR OIL** — Replace lubricant every 30,000 miles (48,000 km). Check lubricant level every 10,000 miles (16,000 km) or every 12 months, and add lubricant to within 0 to 10 mm (0 to 0.4 inch) of the bottom edge of the filler hole if necessary.

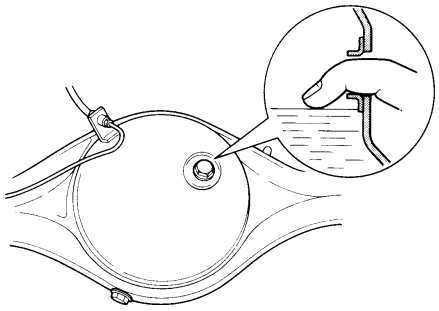

24. **POWER STEERING FLUID** — Replace power steering fluid every 24 months or 30,000 miles (48,000 km), whichever occurs first.
25. **POWER STEERING OIL HOSE** — Replace power steering oil hose every 24 months or 50,000 miles (80,000 km), whichever occurs first.
26. **STEERING GEAR BOX TORQUE** — Retighten the attaching bolts of the steering gear box to the specified torque every 12 months or every 20,000 miles (32,000 km) whichever occurs first.
    Specified tightening torque
    STEERING GEAR BOX 103 N·m (76 ft·lbs)
27. **DRIVESHAFT FLANGE TORQUE** — Check the fixing bolts of driveshaft flange for looseness or damage after the first 10,000 miles (16,000 km).
    Specified tightening torque
    DRIVESHAFT FLANGE 103 N·m (76 ft·lbs)

Downloaded from www.Manualslib.com manuals search engine

28. **DRIVESHAFT** — Lubricate the grease fitting on each universal joint and spline coupling every 12 months or 10,000 miles (16,000 km) whichever occurs first.
29. **LEAF SPRING U-BOLT TORQUE** — Tighten the U-Bolt nuts to the specified torque after the first 650 miles (1,040 km), thereafter every 10,000 miles (16,000 km).
    Specified tightening torque
    LEAF SPRING U-BOLT

Front	127 N·m (94 ft·lbs)
Rear	284 N·m (209 ft·lbs)

30. **WHEEL NUT TORQUE** — Check tires for excessive or abnormal wear, or damage. Also check tire inflation pressures and adjust.
    Be sure wheels are not bent or cracked and that wheel nuts have been tightened to the specified torque after the first 650 miles (1,040 km) and then every 6,500 miles (10,400 km). Note that there are left and right hand threads.
    Specified tightening torque 490 N·m (362 ft·lbs)
31. **KING PIN** — Lubricate the grease fitting on the king pins every 12 months or 10,000 miles (16,000 km) whichever occurs first.
32. **WHEEL BEARING GREASE** — Clean and repack front wheel bearings every brake relining or 30,000 miles (48,000 km) whichever comes first.
33. **AIR CONDITIONER BLOWER FILTER** — The air conditioner blower filter should be removed and cleaned once a month.
    Remove the 2 fasteners and 5 clips securing the panel and remove the filter.
    Use a vacuum cleaner to remove all dust and dirt adhering to the filter surface.
    - Do not use a stiff brush to clean the air conditioner blower filter. Damage to the filter will result.

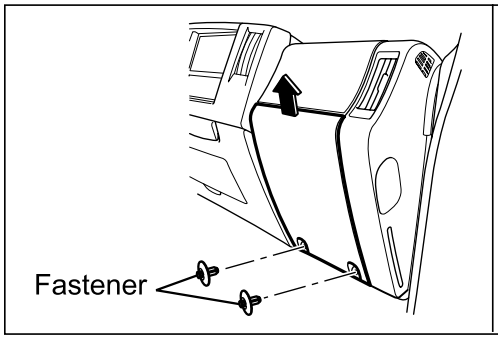

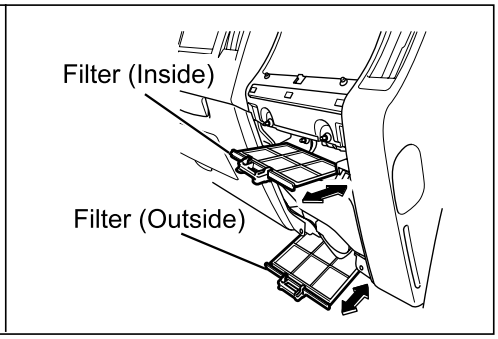

Downloaded from www.Manualslib.com manuals search engine

OWNER SAFETY AND ROUTINE MAINTENANCE

Listed below are vehicle checks which should be made periodically by either the owner or a qualified technician to ensure proper performance and safety of your vehicle. Take any problems promptly to a technician for service advice.

For your safety and that of others, any of the safety-related components that may have been damaged in an accident should be checked and necessary repairs performed before operating your vehicle.

At the minimum, these routine checks should be made every 6 months or 10,000 miles (16,000 km), whichever comes first. Whenever repairs are necessary, have them completed before operating the vehicle.

A **PARKING BRAKE** — Park on a fairly steep hill and hold the vehicle with the parking brake only. This checks holding ability.
Before checking item (B) below, be sure to have enough room around the vehicle. Then firmly apply both the parking brake (see "Parking Brake" Section 2 for procedure) and the regular brakes. Do not use the accelerator pedal. If the engine starts, be ready to turn off the ignition/engine control switch at once. Take these precautions because the vehicle could move without warning and possibly cause injury or property damage.

B **STARTER SAFETY SWITCH** — Check by trying to start the engine in each gear. The starter should crank only at selector position "P" or "N".

C **TRANSMISSION SHIFT INDICATOR** — Check that the indicator points to the gear chosen.

D **STEERING** — Be alert for any changes in steering action. An inspection or service is needed when: the steering wheel is harder to turn or has too much free play, or when there are strange sounds when turning or parking.

E **WHEEL ALIGNMENT, BALANCE, AND TIRES** — Check tires for abnormal wear or damage. Also, check for damaged wheels. A pull right or left on a straight and level road may show the need for a wheel alignment. A vibration of the steering wheel or seat at normal highway speeds may mean a wheel balancing is needed. Check tire pressure when the tires are "cold," at least monthly, and whenever the vehicle is serviced.
Check the pressure more often if daily checks show it's needed. (Refer to Driver daily checklist in Section 1.) Change tire pressure as needed when changing loads.

Downloaded from www.Manualslib.com manuals search engine

F **BRAKES** — Be alert to illumination of the brake warning light or brake low vacuum warning light, or the tone alarm, or changes in braking action, such as repeated pulling to one side, unusual sounds when braking, increased brake pedal travel or harder pedal. The front and rear brakes are attached to an auto adjuster mechanism. If there are no defects, as the pedal travel is properly maintained, adjustments are not necessary. Check regularly that the brake fluid reservoir (left-hand side of the instrument panel) is properly filled and check for fluid leaks. Any of these conditions could indicate the need for brake system inspection and/or service.

G **EXHAUST SYSTEM** — Be alert for any changes in the sound of the exhaust system or any smell of fumes. These are signs the system may be leaking. Have it checked and/or repaired at once. (Refer to "Engine Exhaust Gas Caution (Carbon Monoxide)" in Section 2-1.)

H **WINDSHIELD WIPERS AND WASHERS** — Check operation and condition of the wiper blades. Check the flow of the washer spray.

I **DEFROSTER** — Turn the control lever to "Defrost" and the fan lever to the fully clockwise position. Then check the airflow from the ducts at the inside base of the windshield.

J **REARVIEW MIRRORS AND SUN VISORS** — Check that friction joints hold mirrors and sun visors in place.

K **HORN** — Sound the horn, now and then, to be sure it works.

L **LAP-SHOULDER BELTS** — Check the seat belt system (including webbing, buckles, latch plates and anchors) for proper operation, and for damage.

M **SEAT ADJUSTERS** — When adjusting the driver's manual seat, be sure the seat adjusters latch by pushing the seat forward and backward. Do not attempt to adjust the seat when the vehicle is in motion.

N **LAMPS** — Check panel lighting, warning lamps, indicator lamps and interior lamps. On the outside, check: license plate lamps, side marker lamps, reflectors on outside mirrors, headlamps, parking lamps, identification and clearance lamps, taillights, brake lamps, turn signals, cornering lamps, backup lamps and hazard warning flashers.
Have headlamp aim checked immediately if beams seem improperly aimed.

O **GLASS, MIRRORS, LIGHTS AND/OR REFLECTORS CONDITION** — Look for broken, scratched, dirty or damaged glass, mirrors, lamps or reflectors that could reduce the view or visibility, or cause injury. Replace, clean or repair promptly.

Downloaded from www.Manualslib.com manuals search engine

P **DOOR LATCHES** — Check that doors close, latch and lock tightly. Check for broken, damaged or missing parts that might prevent tight latching.

Q **TILT CAB (DRIVING POSITION)** — Be sure the tilt lever is down and locked.

R **FLUID LEAKS** — Check for fuel, water, oil or other fluid leaks by looking at the surface beneath the vehicle after it has been parked for a while. If you notice diesel fumes or fluid at any time, have the cause found and corrected at once.

S **UNDERBODY** — Corrosive materials used for ice removal, snow removal and dust control can collect on the underbody. If these materials are not removed, accelerated corrosion (rust) can occur on underbody parts such as fuel lines, frame, floor pan and exhaust system. At least every spring, flush these materials from the underbody with plain water. Take care to clean well any areas where mud and other debris can collect. Sediment packed in closed areas of the frame should be loosened before being flushed.

Downloaded from www.Manualslib.com manuals search engine

NOISE EMISSION CONTROL

NOISE CONTROL SYSTEM

The following information relates to compliance with Federal noise emission standards for vehicles with a Gross Vehicle Weight Rating (GVWR) of more than 10,000 pounds (4,536 kilograms). The Maintenance Schedule provides information on maintaining the noise control system to minimize degradation of the noise emission control system during the life of your vehicle. The noise control system warranty is given in your Warranty and Owner Information book.

These standards apply only to vehicles sold in the United States.

TAMPERING WITH NOISE CONTROL SYSTEM PROHIBITED

Federal law prohibits the following acts or the causing thereof:

1 . The removal or rendering inoperative by any person other than for purposes of maintenance, repair or replacement of any device or element of design incorporated into any new vehicle for the purpose of noise control, prior to its sale or delivery to the ultimate purchaser or while it is in use, or;
2. The use of the vehicle after such device or element of design has been removed or rendered inoperative by any person.

Among those acts presumed to constitute tampering are the acts listed below.

Insulation

- Removal of noise shields or undercab insulation.

Engine

- Removal or rendering engine speed governor, if so equipped, inoperative so as to allow engine speed to exceed manufacturer specifications.

Fan and Drive

- Removal of fan clutch or rendering clutch inoperative.
- Removal of fan shroud.

Air Intake

- Removal of air cleaner silencer.
- Reversing air cleaner cover.

Exhaust

- Removal of muffler, catalytic converter and/or resonator.
- Removal of exhaust pipes and exhaust pipe clamps.
- Removal or modification of Diesel Particulate Filter (DPF).

Downloaded from www.Manualslib.com manuals search engine

REPLACEMENT FASTENERS

During vehicle maintenance, any fasteners used to replace older ones must have the same measurements and strength as those removed, whether metric or customary. Fasteners taken from the vehicle should be saved for reuse in the same location when possible. Where a fastener cannot be used again, take care to choose a replacement that matches the old one. For information and help, see your authorized dealer.

CAUTION: This vehicle is primarily dimensioned in the metric system. Most fasteners are metric and many are very close in dimension to well-known customary fasteners in the inch system. Mismatched or incorrect fasteners can result in damage to the vehicle or possibly personal injury.

FUEL CAP

CAUTION: If you need to replace the fuel filler cap, use only a genuine Isuzu fuel filler cap. The use of an improper fuel filler cap could cause fuel spillage in the event of an accident.

The use of an improper fuel filler cap could also affect the fuel system and the emission control system.

Since fueling with the engine running may cause a fire, be sure to stop the engine before fueling.

Keep fire away when fueling. A fire may occur due to fuel or fuel vapors catching fire.

Be sure to wipe off any fuel spilled during fueling.

Make sure that the fuel cap is tightly closed after fueling.

CAUTION: Fuel may be under pressure. Remove the fuel cap slowly to prevent fuel from spraying out and causing injury.

NOTICE: Always use diesel fuel.

Use of low quality fuel may adversely affect the engine parts, and cause failure.

Use of other than specified fuel may adversely affect the engine or emission control system and cause failure. Especially for the common rail type engine, always use ultra low sulfur diesel fuel (15 ppm or less of sulfur content).

If other than specified diesel fuel is used, the vehicle may not conform to specifications.

Downloaded from www.Manualslib.com manuals search engine

ENGINE OIL AND FILTER RECOMMENDATIONS

The following engine oil recommendations are based on operating your engine with the fuels recommended under “Diesel Fuel Requirements and Fuel System” in Section 2 of this manual.

NOTICE: Engine damage due to improper maintenance, or using oil of improper quality and/or viscosity is not covered by the new vehicle warranty.

NOTICE: Engine oil change precaution
1. **When adding oil, remove the dipstick.**
2. **After adding oil, wait for at least 5 minutes before starting the engine. Be sure to reinstall the dipstick.**

CHECK ENGINE OIL LEVEL

The DPF performs regeneration automatically when a certain quantity of PM accumulates within the filter. To perform regeneration, post-injection (fuel injection after the main fuel injection period) is carried out. As a by-product of post-injection, it is possible for fuel to gradually mix with the engine oil over a period of time which will eventually increase the engine oil level up to the "Position A" level mark on the oil level gauge rod (oil dipstick), once the oil level reaches the "Position A" level mark the engine oil must be replaced.

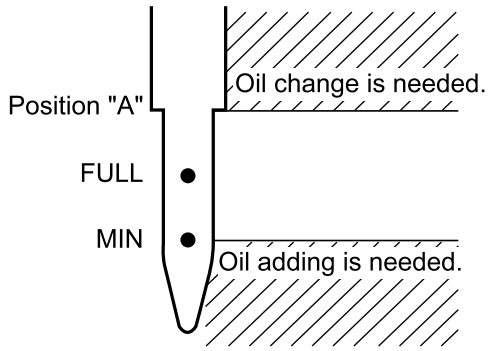

Downloaded from www.Manualslib.com manuals search engine

Check procedure

CAUTION: If the engine has been running, wait at least 20 to 30 minutes before checking.

NOTICE: Engine oil level must be checked with the vehicle parked on level ground.

The engine oil level must be kept at the right level to help assure proper lubrication of your vehicle's engine. It is the owner's responsibility to check the oil level at regular intervals (such as every fuel stop), according to the following instructions. In order to get an accurate reading, the oil must be warm, at operating temperature and the vehicle must be on level ground.

1. Turn the engine off and give the oil 20 to 30 minutes to drain back into the oil pan.

NOTICE: If you check the engine level when the oil is cold, do not run the engine first. (A.M before starting) Cold oil will not drain back to the pan fast enough to give an accurate reading.

2. Pull out the dipstick, wipe the dipstick clean, then push the dipstick back down all the way.
3. Pull out the dipstick again and inspect the oil level on it.
4. If needed, add oil to keep the oil level above the "MIN" mark.

NOTICE: Be sure to add enough oil to put the level somewhere between the "MIN" and "FULL" range. Never add oil above the "FULL" mark.

5. If the oil level has increased above the "FULL" mark see "Dilution" for additional information.
6. Push the dipstick all the way back in after checking the oil.

Dilution

Under normal engine operations the engine oil level may increase above the "FULL" mark as a result of DPF regeneration. A small increase in the oil level between the oil change interval is normal. When checking the engine oil level, if the oil level exceeds the "FULL" mark of the dipstick and reaches enlarged portion of the dipstick (position "A") have your oil changed as soon as possible to avoid engine damage.

Downloaded from www.Manualslib.com manuals search engine

CAUTION:

- **If the engine oil level is higher than the "Position A" level on the oil level gauge, there is a possibility engine damage may occur. If the oil level exceeds the "Position A" level, the engine oil must be drained and refilled with oil of the correct grade and quality.**
- **It is possible for fuel to gradually mix with the engine oil, over a period of time, which will eventually increase the engine oil level up to the "Position A" level mark on the oil level gauge rod (oil dipstick).**
  Ensure the engine oil is replaced at specified intervals with engine oil of the correct grade and quality.
- **After engine running, wait between 20 and 30 minutes after stopping the engine before measuring the engine oil level.**

NOTICE: The engine oil level must be checked with the vehicle parked on level ground.

CHOOSING THE RIGHT QUALITY OIL

CAUTION: If you do not use the oil intended for the DPF in a vehicle fitted with a DPF, both the engine and the DPF may break down and fuel economy may decrease. Be sure, therefore, to use the oil intended for the DPF.

NOTICE: For vehicles equipped with a DPF, ISUZU recommends engine oil that supports DPF (Low ash oil) with grades CJ-4 (API).

Downloaded from www.Manualslib.com manuals search engine

CHOOSING OIL VISCOSITY

Engine oil viscosity (thickness) has an effect on fuel economy and cold-weather starting. Lower viscosity engine oils can provide better fuel economy; however, higher temperature weather conditions require higher viscosity engine oils for satisfactory lubrication.

When choosing an oil, consider the range of temperature your vehicle will be operated in before the next oil change. Then, select the recommended oil viscosity from the chart.

Do not use any viscosity of oil which is not recommended. Such oils could cause engine damage, and such damage is not covered by the new vehicle warranty.

ENGINE OIL VISCOSITY GRADE - AMBIENT TEMPERATURE

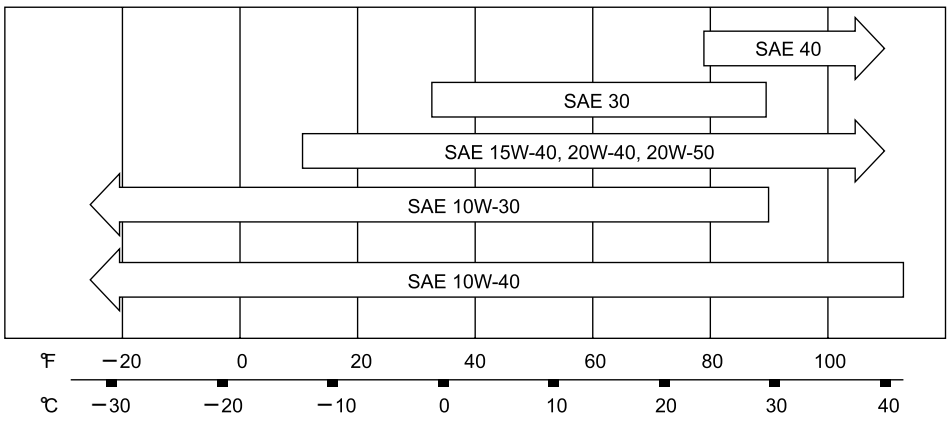

This Engine Oil Viscosity Grade Chart shows general information.
For this vehicle, oil with ✱W-40 viscosity is recommended.

Downloaded from www.Manualslib.com manuals search engine

OIL IDENTIFICATION LOGO

A logo (symbol) is used on most oil containers to help you select the oil you should use. The top portion of the logo shows the oil quality by API designations such as CJ4 or others. The center portion of the logo shows the SAE viscosity grade, such as SAE *W-40 (* indicates viscosity on the low temperature side.).

You should look for this logo on the oil container, and use ONLY oil containing the logo.

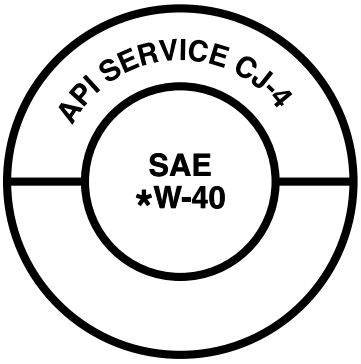

CHANGE INTERVALS

The oil and oil filter change intervals for your engine are based on the use of recommended oil quality and viscosity, as well as high-quality filters such as Isuzu genuine oil filters. Using oil other than recommended, or oil and filter change intervals longer than recommended, could reduce engine life. Damage to engines due to improper maintenance or use of incorrect oil quality and/or viscosity is not covered by the new vehicle warranty.

Your engine was filled with a high-quality engine oil when it was built. You do not have to change this oil before the first recommended change interval. Oil and filter change intervals depend on how you use your vehicle. For information on the proper oil and filter change intervals, refer to the maintenance schedule in this section.

ENGINE OIL ADDITIVES

Engine oils contain a variety of additives. Your engine should not need any extra additives if you use the recommended oil quality and change intervals.

Downloaded from www.Manualslib.com manuals search engine

USED OIL DISPOSAL

Do not dispose of used engine oil (or any other oil) in a careless manner such as pouring it on the ground, into sewers, or into streams or bodies of water. Instead, recycle it by taking it to a used oil collection facility which may be found in your community. If you have a problem disposing of your used oil, it is suggested that you contact your dealer or service station. (This also applies to diesel fuel which is contaminated with water. See “Diesel Fuel Requirements and Fuel System” in Section 2.)

Used Engine Oil

CAUTION: Used engine oil contains harmful contaminants that have caused skin cancer in laboratory animals. Avoid prolonged skin contact. Clean skin and nails thoroughly using soap and water–not mineral oil, fuels or solvents. Launder or discard clothing, shoes or rags containing used engine oil.

Discard used engine oil and other oils properly.

EXTERNAL DIESEL ENGINE CLEANING

NOTICE: Your diesel engine does not need periodic cleaning, nor does Isuzu recommend it be cleaned. However, if you insist on cleaning the engine, clean it only when it is cold, never when it is warm or hot, and never when the engine is running. Spraying or pouring water or other fluids on your engine when it is warm or hot, or when it is running, can cause serious damage to the engine and its components, particularly the fuel supply pump.

Downloaded from www.Manualslib.com manuals search engine

DIESEL FUEL SYSTEM

Fuel system components which require periodic maintenance services are the engine air cleaners and the fuel filters. Care must be taken when filling the fuel tank to prevent entry of dirt and water. Fuel lines and connections should be inspected regularly for evidence of leaks.

If by mistake gasoline is poured in the diesel fuel tank and the engine is operated, the entire system must be drained; otherwise damage to the fuel system may occur.

See your authorized dealer for servicing the fuel system.

Steps In Refueling

CAUTION: Before pulling up to a fuel pump, be sure that all occupants in your vehicle stop smoking and extinguish any smoking materials. Do not permit sparks or flames in the presence of fuel or fumes, to help avoid personal injury or property damage due to fire. Diesel fuel will ignite and burn as readily as gasoline if the fuel is warm enough or additives have lowered its ignition temperature.

1. Follow all the steps under “Parking” in Section 2.
2. Select the correct fuel as referenced on page 2-3. Follow any posted safety rules. Stand to the side, never above or opposite the filler opening.
3. Check that the fuel cap is tight, and see to it that engine oil, engine coolant in the reservoir, and washer fluid, etc. are at proper levels. Then do the Driver Daily Checklist in Section 1.

FUEL SYSTEM PRIMING (Air bleeding)

When The Fuel Has Run Out

The fuel system must be primed if your vehicle has run out of fuel. The priming pump is located on the outboard side of the left frame rail, in front of the batteries.

Before Starting The Engine

If your vehicle has run out of fuel, bleed the air out of the system from the air bleeding plug on the side of the priming pump, because otherwise the air would enter the fuel system and would cause starting trouble.

1. Position a tray to collect the discharged fuel on the ground underneath the air bleeding plug, then loosen the air bleeding plug substantially.
2. Move the priming pump up and down for more than 20 pump cycles until fuel with air bubbles stops coming from the air bleeding plug.
3. Tighten the air bleeding plug securely and wipe the fuel around the plug clean.
4. Operate the priming pump for more than 10 pump cycles to send the air in the fuel system to the fuel supply pump.
5. Turn the engine control switch to start the engine.

Downloaded from www.Manualslib.com manuals search engine

After Starting The Engine

1. Turn the engine control switch without stepping on the accelerator pedal and start the engine.
2. Allow the engine to idle for five seconds.
3. Slowly turn the idle control knob to the right as far as it will go, then keep the knob in this position for three minutes.
4. Fully depress the accelerator pedal to obtain maximum RPM. (Repeat this operation several times.)
5. Turn the idle control knob to the left so that the engine returns to idle.

NOTICE:
Incomplete air bleeding can result in serious engine damage. Be sure to follow the procedures outlined above carefully.

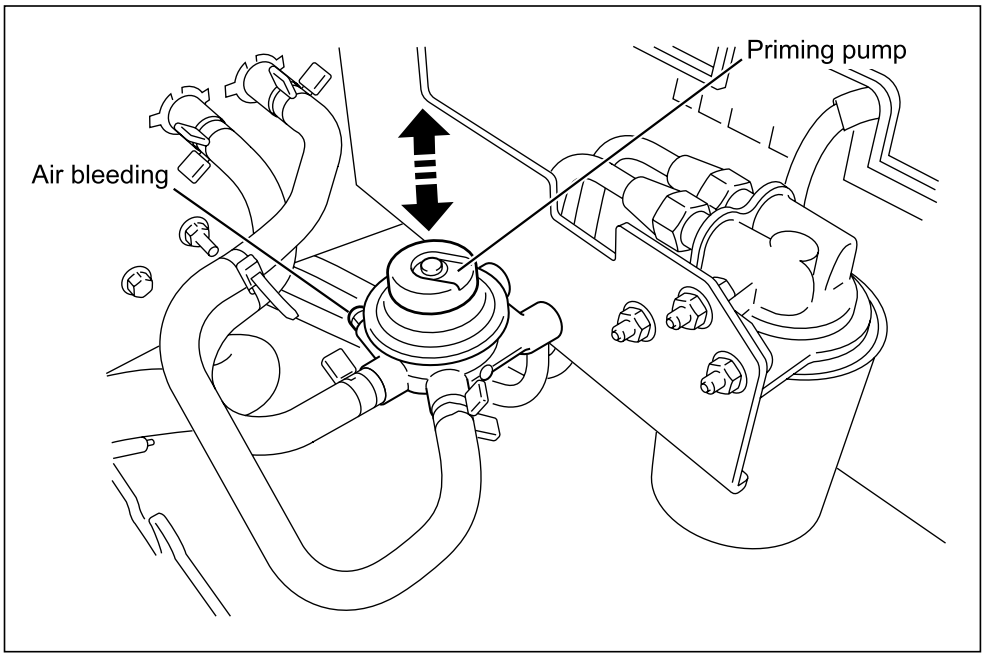

CAUTION: The diesel engine in models covered by this manual will operate on any fuel which enters the cylinders, whether it be from the fuel injectors or the air inlet system. If any of the solvent which may have been used in flushing out the air cleaner filter remains in the filter, the engine could overspeed when started. In order to prevent the engine from breaking apart and causing serious personal injuries or death to anyone standing nearby, be sure that no solvent remains in the air cleaner filter when starting the engine.

Downloaded from www.Manualslib.com manuals search engine

FUEL FILTER

Always replace the fuel filter according to the manufacturer's recommended interval. Failure to replace the fuel filter when needed may lead to fuel system damage. Your authorized Isuzu dealer can inspect your fuel filter and replace your fuel filter, if needed.

WATER SEPARATOR

The purpose of the water separator is to clean the fuel of any dirt particles that can cause wear on the fuel injector's sliding surface; and to separate any water from the fuel that may have formed in the fuel tank due to condensation. The water separator is located on the bottom of the fuel filter.

NOTICE: To help avoid engine damage,

- **When the water separator indicator light comes on, loosen the drain plug under the fuel filter and move the priming pump up and down by hand from 10 to 20 times. When doing this, do not loosen the air bleeding plugs of the fuel filter and the priming pump.**
- **Make sure that there is no leak of fuel from the drain plug and that the indicator light is off after the engine is started.**
- **If fuel is spilt on the vehicle body, etc., wipe it clean.**
- **Right after draining, it takes more time than usual to start the engine. If the engine cannot be started within 10 seconds, wait some time and restart.**

Refer to "Used engine oil" in page 5-24 for proper disposal procedures.

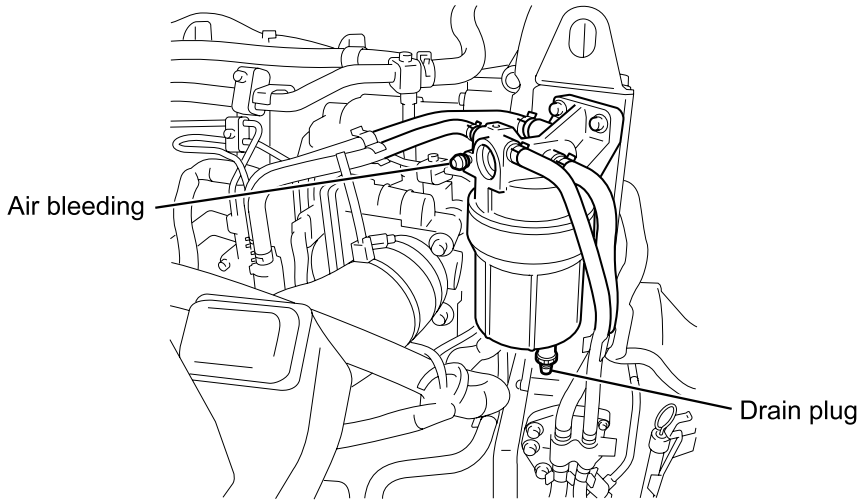

Downloaded from www.Manualslib.com manuals search engine

REPLACEMENT WATER SEPARATOR FILTER ELEMENT

1. Disconnect the water separator switch electrical connector.
2. Loosen the fuel filter cover turning it counterclockwise with a filter wrench.
3. Remove the fuel filter.
4. Wipe the fitting face on the upper cover clean with a rag so that the new fuel filter can be seated properly.
5. Fill the new filter assembly with fuel in order to make air bleeding easy.
6. Lightly oil the O-ring. Install and turn the filter assembly clockwise carefully to prevent fuel spill until the O-ring is fitted against the sealing face of the filter cover. Using the filter wrench, tighten the filter an additional 1/3 to 2/3 turn.
7. Reconnect the water separator switch electrical connector.
8. Follow 'Air bleeding' instructions.

FUEL SYSTEM PRIMING (Air bleeding)

When The Fuel Filter Is Replaced

When the fuel filter is replaced, bleed the air out of the system from the air bleeding plug on the side of the fuel filter, otherwise air will enter the fuel system and cause starting trouble.

Before Starting The Engine

1. Sufficiently loosen the air bleeding plug on the side of the fuel filter. Attach a vinyl hose, etc. to the plug in order to prevent the fuel from splattering.
2. Move the priming pump up and down for more than 90 pump cycles until fuel with air bubbles stops coming from the air bleeding plug on the side of the fuel filter.
3. Tighten the air bleeding plug securely and wipe the fuel around the plug clean.
4. Operate the priming pump for more than 10 pump cycles to send the air in the fuel system to the fuel supply pump.
5. Turn the engine control switch to start the engine.

After Starting The Engine

1. Turn the engine control switch without stepping on the accelerator pedal and start the engine.
2. Allow the engine to idle for five seconds.
3. Slowly turn the idle control knob to the right as far as it will go, then keep the knob in this position for three minutes.
4. Fully depress the accelerator pedal to obtain maximum RPM. (Repeat this operation several times.)
5. Turn the idle control knob to the left so that the engine returns to idle.

Downloaded from www.Manualslib.com manuals search engine

FUEL CAP

1. Follow all the steps under “Parking” in Section 2.
2. Follow any posted safety rules. Stand to the side, never above or opposite the filler opening.
3. Check that the fuel cap is tight, and see to it that engine oil, engine coolant in the reservoir, and washer fluid, etc., are at proper levels. Then do the Driver Daily Checklist in Section 1.

NOTICE: Always use diesel fuel.

Use of low quality fuel may adversely affect the engine parts, and cause failure.

Use of other than specified fuel may adversely affect the engine or emission control system and cause failure. Especially for the common rail type engine, always use ultra low sulfur diesel fuel (15 ppm or less of sulfur content).

If other than specified diesel fuel is used, the vehicle may not conform to specifications.

MAINTENANCE ITEMS TO AID COLD WEATHER STARTING

Since the basic principle of diesel engine ignition is based on compression, the diesel engine is somewhat harder to start than a gasoline engine when the temperature is below freezing. To help prevent hard starting problems, special attention should be given to following normal maintenance items.

Refer to Section 2 for diesel fuel requirement.

1. Neglecting to have the fuel filter and water separator serviced can be one of the major contributors to hard starting. If water is permitted to accumulate in the primary filter, it will freeze and make starting the engine impossible.
2. Make sure the fuel tank vent is open.
3. Always refuel at the end of a day’s operation. Moisture will condense in an empty tank; therefore, the tank should be filled before leaving the vehicle standing for an extended period.

If, by mistake, gasoline is poured into the diesel fuel tank and the engine is operated, for a short period of time the entire system must be drained; otherwise, damage to the fuel injector, fuel supply pump and engine will occur.

Downloaded from www.Manualslib.com manuals search engine

STARTING AIDS

NOTICE: Do not use starting “aids” in the air intake system . Such “aids” can cause immediate engine damage.

WINDSHIELD WASHER

The windshield washer is equipped on the windshield wiper arm.

The windshield washer fluid supply reservoir is located to the right of the glove box.

- Inspect the washer fluid level regularly, especially during bad weather conditions.
- Use a high quality premixed solvent available at most dealers or service stations. Avoid hard water when mixing Optikleen or other windshield washer solvents. Hard water contaminants may plug orifices in the washer system and reduce performance.
- Do not use radiator antifreeze in the windshield washer; it could cause cab paint damage.
- In cold weather, warm the windshield with the defrosters before using the washer – to help prevent icing that may block the driver’s vision.

POWER STEERING SYSTEM

Check the fluid level in the power steering pump reservoir as recommended in the Maintenance Schedule.

The power steering fluid should be changed and the filter should be cleaned at intervals specified in the Maintenance Schedule.

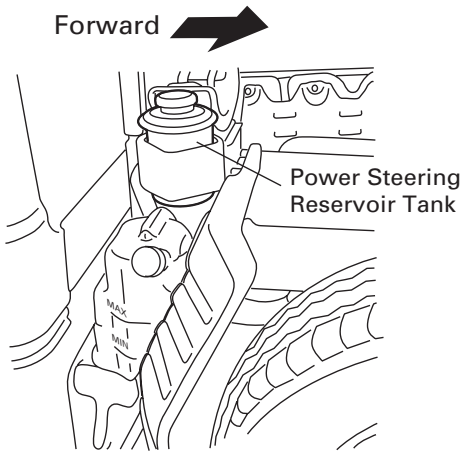

Right rear of cab

Downloaded from www.Manualslib.com manuals search engine

NOTICE: When replenishing power steering fluid or flushing the power steering system, always use ATF Fluid (DEXRON® -III). Failure to use the proper fluid may damage the power steering system seals and hoses, leading to fluid leakage.

ENGINE COOLING SYSTEM

CAUTION: If your engine cooling system overheats, see "Engine Cooling System Overheating" in Section 3. Continued operation of the engine even for a short time may result in a fire and the possibility of personal injury and/or severe vehicle damage.

Your vehicle has an engine coolant recovery system, expansion bottle and/or a surge tank system. Engine coolant in the system expands with heat and overflows into the recovery tank. When the system cools, engine coolant is drawn back into the radiator.

The engine cooling system has been filled at the factory with a quality engine coolant. It is important to use proper engine coolant to prevent damage to engine cooling system components. The engine cooling system is designed to use engine coolant (a mixture of ethylene glycol, corrosion inhibitors and water) rather than plain water. The 50/50 engine coolant solution must be used year round to provide:

- Freezing protection down to –31°F (–35°C).
- Boiling protection up to 262°F (128°C).
- Protection against rust and corrosion in the engine cooling system.
- The proper engine coolant temperature for efficient operation and emission control.
- Proper operation of the engine coolant temperature gauge.

See the Maintenance Schedule in Section 5 to find out when the engine coolant must be replaced. Note that changing the engine coolant is needed to replenish the rust inhibitors to make certain that all parts of the engine cooling system work well.

ENGINE COOLING SYSTEM CARE

Check the engine cooling system at regular intervals, such as during fuel stops. You usually do not need to remove the radiator cap to check the engine coolant level.

Look at the see-through engine coolant reserve tank at the back of the cab without tilting the cab. When the engine is either hot or cold, engine coolant should be between the "MAX" and "MIN" marks on the tank.

If the engine coolant level is low, remove the cap on the engine coolant reserve tank. Add to the reserve tank enough of a 50/50 (48/52 For Canada) mixture of water and Isuzu Long Life Coolant antifreeze to bring the level up to the proper mark. Put the cap back on the reserve tank.

Downloaded from www.Manualslib.com manuals search engine

CAUTION: Under some conditions the ethylene glycol in the engine coolant is combustible. To help avoid being burned when adding engine coolant, do not spill it on the exhaust system or engine parts that may be hot. If there is any question, have this service performed by a qualified technician.

Certain conditions, such as air trapped in the system, may affect the engine coolant level in the radiator. You should check the engine coolant level in the radiator at the time you change the engine oil and when the engine is cold. Follow the steps under "Adding Engine Coolant" for the correct way to remove the radiator cap and add engine coolant.

If you have to add engine coolant more than four times a year either to the reserve tank or to the radiator, see your authorized dealer for a engine cooling system check.

NOTICE: If you use the proper quality antifreeze, there is no need to add extra inhibitors or additives which claim to improve the system. They may be harmful to the proper operation of the system.

ENGINE COOLING SYSTEM SERVICE

The engine cooling system should be serviced at the intervals specified in the Maintenance Schedule as follows:

1. Wash the radiator tank cap and filler neck with clean water as described in "Adding Engine Coolant".
2. Remove the cap and check the engine coolant level and have it tested for freeze protection. Add Isuzu Long Life Coolant antifreeze, if needed, to maintain freeze protection at –33°F (–36°C).
3. Have the engine cooling system and radiator cap tested for a pressure capacity of 108 kPa (16 psi). If a replacement cap is needed, use an Isuzu genuine cap, or an equivalent cap, designed for engine coolant recovery systems and specified for your model.
4. Tighten all radiator hose clamps and heater hose clamps and inspect all hoses. Replace the hoses if they are swollen, "checked," or otherwise worn.

NOTICE: Take care when tightening the hose clamps at the radiator. Overtightening could bend or collapse the radiator fittings.

5. Clean the front of the radiator core to remove dirt and other objects.

Adding Engine Coolant

CAUTION: To help avoid the danger of being burned, do not remove the radiator cap or the reserve tank cap while the engine and radiator are still hot. Scalding fluid and steam can be blown out under pressure if either cap is taken off too soon.

Downloaded from www.Manualslib.com manuals search engine

1. When the engine is cool, remove the radiator cap.
   - Turn the cap slowly to the left until it reaches a “stop”. Do not press down while turning the cap.
   - Wait until any remaining pressure (indicated by a hissing sound) is relieved, then press down on the cap and continue turning it to the left.
2. Fill the radiator to the base of the filler neck and fill the engine coolant reserve tank to the “MAX” mark.
   - Use a solution that is at least 50 percent antifreeze but no more than 60 percent antifreeze.
   - Add enough water and Isuzu Long Life Coolant antifreeze solution to provide the required cooling, freezing and corrosion protection. Install the radiator cap and reserve tank cap.
3. Run the engine until the engine coolant temperature rises to normal level, and idle the engine for 10 minutes.
4. Turn off the engine. Make sure that the engine is cool. Remove the radiator cap and add engine coolant to the radiator until it reaches the bottom of the filler neck. Fill the engine coolant reserve tank to the “MAX” mark.
5. Install the radiator cap and the reserve tank cap.

Engine Coolant Replacement and Cleaning

Draining:

NOTICE: Dispose of and handle the waste engine coolant in accordance with the specified method.

1. Check the engine has sufficiently cooled.
2. Remove the radiator cap.
   - Turn the cap slowly to the left until it comes to a stop. Do not press down while turning the cap.
   - Wait until any remaining pressure (indicated by a hissing sound) is relieved, and then press down on the cap and continue turning it to the left.
3. Open the radiator drain plug and engine drain plug, and drain the engine coolant.
4. Close the drain plugs.

CAUTION: The engine must not be started after the engine coolant has been drained. Doing so may cause engine burnout.

Cleaning the Radiator Core:

As a radiator core blocked with dirt and dust will result in a reduction of cooling effectiveness and the corrosion of the radiator core, it is necessary to periodically wash out the radiator core with water.

NOTICE: When washing out the radiator core, take care not to crush or damage the fin, etc.

Downloaded from www.Manualslib.com manuals search engine

Cleaning the Cooling Channel:

1. Fill the radiator to the mouth with clean tap water.
2. Check and clean the radiator cap. If an abnormality is found, replace with a new radiator cap.
3. Securely fit the radiator cap.
4. Supply clean water to the engine coolant reserve tank up to the "MAX" mark.
5. Close the reserve tank cap.
6. Start the engine and allow it to idle for 20 minutes. After doing so, stop the engine and drain the water once it has cooled down. (Refer to "Draining" in "Engine Coolant Replacement and Cleaning" for the draining method.)

Supplying coolant:

1. Check the engine has sufficiently cooled.
2. Remove the radiator cap.
3. Open the engine outlet's air bleed bolt.
4. Fill the radiator up to the mouth with engine coolant.
   - Use a solution that is at least 50 percent antifreeze and no more than 60 percent antifreeze.
   - Add enough water and Isuzu Long Life Coolant antifreeze solution to provide the required cooling, freezing and corrosion protection. Install the radiator cap and reserve tank cap.
5. Press the radiator upper hose 2 or 3 times. If, due to the hose being pressed, air is released from inside the hose and the water level goes down, replenish the radiator up to the mouth with engine coolant.
6. Open the reserve tank cap, and fill to the "MAX" mark with engine coolant, before closing.
7. Make sure the engine outlet's air bleed bolt is closed.
8. Securely fit the radiator cap.
   After the engine has been started and left at normal idling revolutions for approximately 2-3 minutes, turn the engine off.
9. After confirming that that engine has cooled down, remove the radiator cap. If the level of engine coolant has been reduced, carry out replenishment.
10. After fitting the radiator cap securely, warm up the engine at approximately 2,000 rpm.
11. After the engine coolant temperature gauge's needle exceeds the center line, allow the engine to idle for approximately 5 minutes, before stopping it.

NOTICE: The engine alarm and automatic shutdown system may be activated during the above step, but it is not malfunction.

Downloaded from www.Manualslib.com manuals search engine

12. After confirming that the engine coolant has sufficiently cooled down, remove the radiator cap. Be sure to top up the engine coolant if the level has gone down. If the level of engine coolant is dramatically reduced, check the coolant channel and reserve tank hose for leaks.

CAUTION: If the above step is omitted, the engine alarm and automatic shutdown system may be unexpectedly activated. Make sure to perform this step.

13. Securely fit the radiator cap.
14. Open the reserve tank cap, and fill to the "MAX" mark with engine coolant, before closing.

It is the owner's responsibility to:

- Maintain the engine cooling system freeze protection at –20°F (–29°C) or in Canada at –40°F (–40°C) to ensure protection against corrosion and loss of engine coolant from boiling. A 50/50 (48/52 for Canada) mixture of Isuzu Long Life Coolant antifreeze and water will provide freeze protection to –33°F/–36°C (in Canada –40°F/–40°C) and boil protection to 262°F (128°C). Periodic replacement of engine coolant is needed to replenish the anticorrosion additives that wear out with use.
  Engine coolant that has become dark in color shows that it needs to be changed.
- Use only Isuzu Long Life Coolant antifreeze.

NOTICE: Do not use methanol-base antifreeze, alcohol or plain water alone in your vehicle at any time. They will boil at a lower point than that at which the engine coolant temperature gauge will warn of overheating, and they do not provide proper protection against corrosion.

THERMOSTAT

The engine coolant temperature is controlled by thermostat(s). The thermostats stop engine coolant flow through the radiator until a preset temperature is reached. The thermostats are installed in the engine coolant outlet on the engine block. The same thermostats are used in both winter and summer. When a replacement is needed, genuine Isuzu parts are recommended.

RADIATOR PRESSURE CAP

The radiator cap, a 108 kPa (16 psi) pressure type, must be installed tightly, otherwise engine coolant may be lost and damage to the engine may result from overheating. Radiator pressure cap should be checked periodically for proper operation. If a replacement is required, an Isuzu genuine cap is recommended.

Downloaded from www.Manualslib.com manuals search engine

AIR CLEANER/FLAME ARRESTOR

CAUTION: The air cleaner also functions as a flame arrestor in the event of engine backfire. The air cleaner should be installed at all times unless its removal is necessary for repair or maintenance. To help reduce the risk of personal injury or death and/or property damage, be sure that no one is near the engine compartment before starting the engine with the air cleaner removed. If engine backfire occurs with the air cleaner removed, there could be a burst of flame and possibly other fire in the engine compartment.

RADIATOR GRILLE COVERS

CAUTION: Winter fronts or grille covers are not to be used. Radiator shutters may cause the engine's radiator cooling fan to fatigue from the alternate unloading and loading of the blades as each passes through the area masked by the cover, then the unmasked area. After the fan has been fatigued, it may suddenly break apart while rotating, possibly causing personal injury to anyone standing nearby, and equipment damage.

RADIATOR COOLING FAN AND GOVERNED SPEED

CAUTION: Increasing the governed speed of the engine or the fan speed (by changing the fan drive ratio) may cause the engine's radiator cooling fan to fatigue, and then suddenly break apart while rotating, possibly causing personal injury to anyone standing nearby in addition to equipment damage. If it is felt the governed speed must be changed, contact your dealer for information.

BRAKE SYSTEM

For the most effective braking and for maximum life from brake system components, follow these suggestions:

- Keep any obstructions from interfering with brake pedal travel.
- Keep tires properly inflated. Improperly inflated tires can reduce the efficiency of the brakes.

Follow the recommendations for brake checks in the Maintenance Schedule. Refer to "Brake System" in Section 2 for details on brake system operation. Refer to the explanation of ABS in page 2-37.

Downloaded from www.Manualslib.com manuals search engine

BRAKE MAINTENANCE

Isuzu replacement brake lining material is recommended for this vehicle to maintain the balance between front and rear brake performance. Isuzu replacement brake parts have been carefully selected to provide the proper brake balance for purposes of both stopping distance and controllability over the full range of operating conditions. Installation of front or rear brake lining material with performance different from that of the Isuzu replacement parts recommended for this vehicle can change the intended brake balance of this vehicle.

Brake fluid check

Check the brake fluid reservoir regularly. (DOT 3 brake fluid or equivalent)

- When topping off, take care not to allow dirt or water to enter the tank, as this may cause the brakes to malfunction.
- As the brake fluid needs to be replaced periodically, carry out inspections and replacement in accordance with the Maintenance Schedule.
- Take care not to allow brake fluid to adhere to painted surfaces or to the skin. If adherence does occur or brake fluid is spilled, quickly wipe off.
- As brake fluid is highly susceptible to moisture, be sure to close the cap securely before storing.
- Do not mix the brake fluid with other brand name products.
- If the brake fluid reduces significantly, it could be brake system failure or pad wear. Contact your Isuzu dealer immediately and have the system inspected.

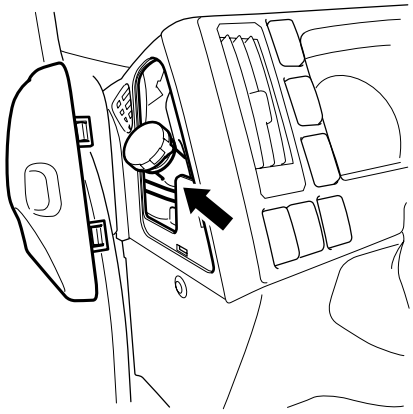

Downloaded from www.Manualslib.com manuals search engine

ACCESS TO THE ENGINE

Access to the engine coolant reserve tank cap and the engine oil dipstick is located on the engine left side after tilting the cab.
Add engine coolant as described previously in this section “Engine Cooling System Care”. Refer to “Engine Cooling System Overheating” in Section 3.

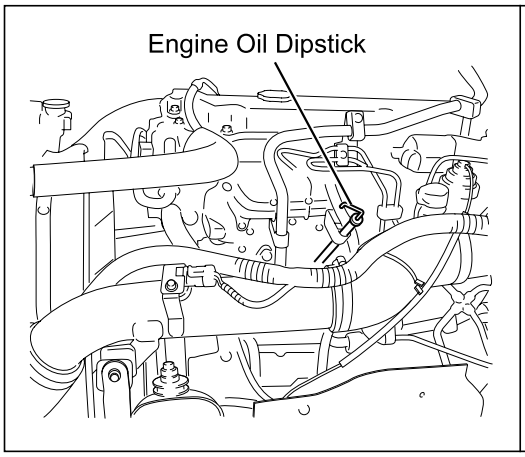

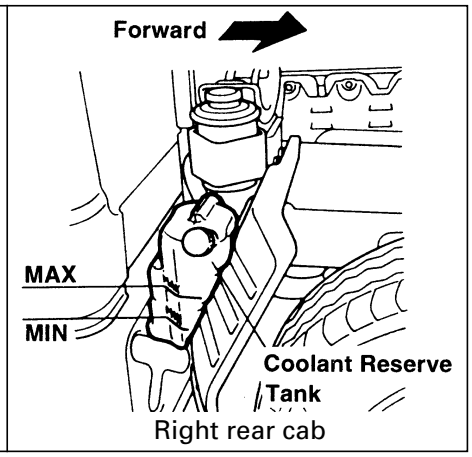

BEFORE TILTING THE CAB

CAUTION: To help avoid personal injury and property damage,
- **Park the vehicle on level ground and check that there is enough space in front of and above the cab.**
- **Set the parking brake firmly and block the front wheels.**
- **Place the transmission selector in the “P” (Park) position.**
- **Secure loose articles in the cab.**
- **Stop the engine.**
- **Close the cab door.**
- **Keep the area surrounding the cab clear.**

TILTING THE CAB

1. Check that all personnel are clear of the cab.
2. Read the label on the rear of the cab.
3. Unlock the cab tilt lever (2) while pulling the lock lever (1).
4. Hold the assist handle (3) and pull the safety lever (4).
5. Raise the cab fully and be sure the cab support (5) is locked by the lock lever (7).
6. Insert the safety lock pin (6).

Downloaded from www.Manualslib.com manuals search engine

Always be sure the safety lock pin is installed when the cab is tilted.

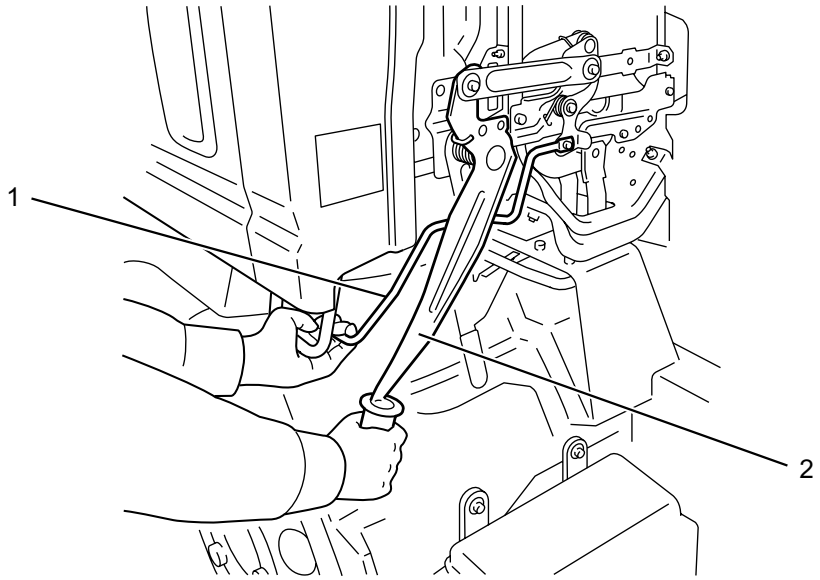

1. Lock Lever
2. Tilt Lever

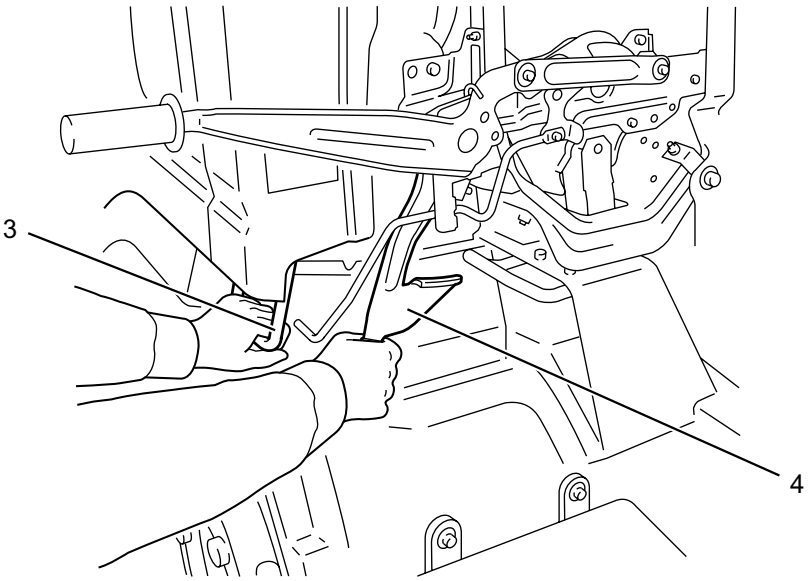

3. Assist Handle
4. Safety Lever

Downloaded from www.Manualslib.com manuals search engine

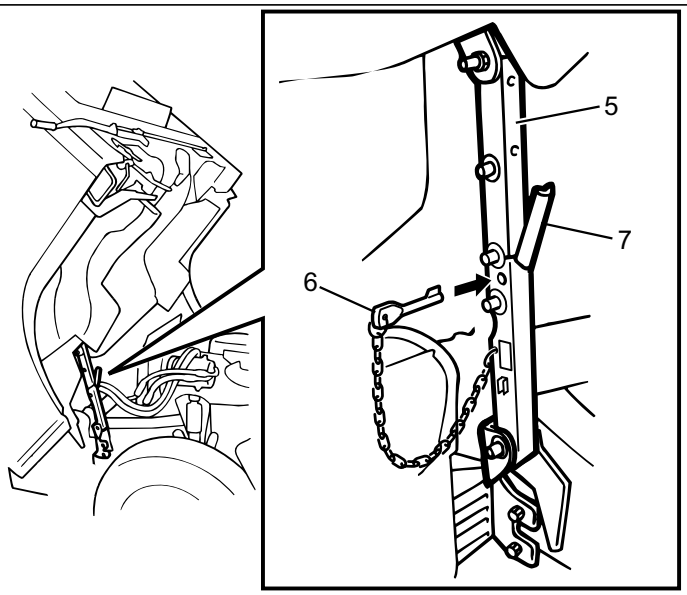

5. Cab Support
6. Lock Pin
7. Lock Lever

CAUTION: To help avoid personal injury or death, keep hands, tools, and clothing clear of the engine cooling fan when the engine is running.

LOWERING THE CAB

1. Have all personnel stand clear of the cab.
2. Be sure the transmission selector lever is in “P” (PARK) position.
3. Remove the safety lock pin (6).
4. Hold the assist handle (3) and unlock the cab support by pulling the support rearward while pressing the support lock lever (7).
5. Lower the cab and push the tilt lever (2) down firmly to lock.

CAUTION: To help avoid personal injury or death, be sure the tilt cab is securely locked in the lowered position before operating the vehicle.

Downloaded from www.Manualslib.com manuals search engine

CHECKING THE ENGINE OIL

The oil dipstick is located on the left-hand side of the engine.

Check the oil level daily. Make the check preferably after a day's run and after the engine has been stopped for at least five minutes.

Remove the dipstick, wipe it clean with a cloth, reinsert it and remove it again.

The upper mark on the dipstick is the "FULL" mark, and the bottom mark is the "MIN" mark. Keep the oil level between the marks.

Do not operate the vehicle with the oil level below the lower mark.

If oil level has increased above the "FULL" mark see "Dilution" for additional information.

Dilution

Under normal engine operations the engine oil level may increase above the "FULL" mark as a result of DPF regeneration. A small increase in the oil level between the oil change interval is normal. When checking the engine oil level, if the oil level exceeds the full mark of the dipstick and reaches the enlarged portion of dipstick (position "A") have your oil changed as soon as possible to avoid engine damage.

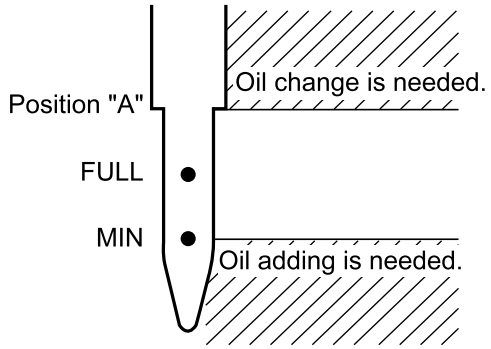

CAUTION: If the engine oil level is above the "FULL" mark of the dipstick, it may cause engine damage. Replace the engine oil if the oil level exceeds the "FULL" mark.

Replace the engine oil always at the specified period as the fuel gradually mixes with the engine oil and dilutes the engine oil.

Downloaded from www.Manualslib.com manuals search engine

DIESEL PARTICULATE FILTER (DPF)

DPF inspection and cleaning

Clean the DPF at every 100,000 miles (160,000 km) or every 3,000 hours at your Isuzu dealer. Refer to "Maintenance Schedule" in this section.

NOTICE: Contact your Isuzu dealer for details of ash removal equipment.

NOTICE: Pressure Difference Sensor 0 point Adjustment.
Every year, make a 0 point adjustment for the pressure difference sensor that detects clogging in the DPF.
In addition, after every DPF inspection or DPF filter cleaning, make a differential pressure sensor adjustment according to the following procedure.

1. Turn the engine control switch to the "ON" position, and leave it for a while. (Do not start the engine.)
2. Make sure that the DPF lamp comes on.
3. Make sure that the DPF lamp goes off in 30 seconds.
4. Turn the engine control switch to the "OFF" position, and leave it for 1 minute or more.

NOTICE: Perform zero point calibration of the pressure difference sensor after the pressure difference sensor has cooled down to the ambient temperature. After DPF regeneration, wait at least 2 hours before performing zero point calibration.

CAUTION:
- **If you fail to clean the filter, the DPF and the engine may break down or fuel economy may deteriorate.**
- **Contact your nearest Isuzu dealer for how to clean the filter.**

Downloaded from www.Manualslib.com manuals search engine

ACCESS TO THE WINDSHIELD

The windshield wiper arms may be swung out, away from the glass, to provide easy access for cleaning.

NOTICE: Do not hang on to the roof marker lights while cleaning the windshield or damage may occur (resulting in possible water leakage).

AIR CONDITIONING (IF EQUIPPED)

A/C DRIVE BELT TENSION ADJUSTMENT

CAUTION: The air conditioning drive belt, if equipped, must be adjusted after fan belt adjustment. If the required procedure is not followed, the A/C belt may experience excessive tension, and possible premature failure.

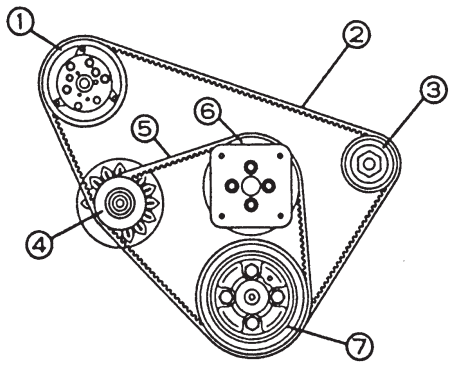

1. A/C compressor
2. A/C belt
3. Tension pulley
4. Generator
5. Fan belt
6. Fan pulley
7. Crank pulley

If your air conditioning system is functioning properly, it is not necessary to remove and replace the refrigerant or compressor oil.

Downloaded from www.Manualslib.com manuals search engine

ELECTRICAL SYSTEM

Following the after-delivery service, it is the owner's responsibility to check all wiring periodically for cracked, chafed or oil-soaked insulation and maintain it in a clean and tight condition to ensure satisfactory operation of the electrical system.

HEADLIGHT VERTICAL AIMING ADJUSTMENT

For vertical aiming, turn the two screws indicated by arrows in the diagram.

1. Remove the rubber beneath the headlight.
2. Two screws should be turned in the same direction at the same time to adjust aiming.
3. When the "Headlight aiming" is out of position, adjust it at an authorized dealer.

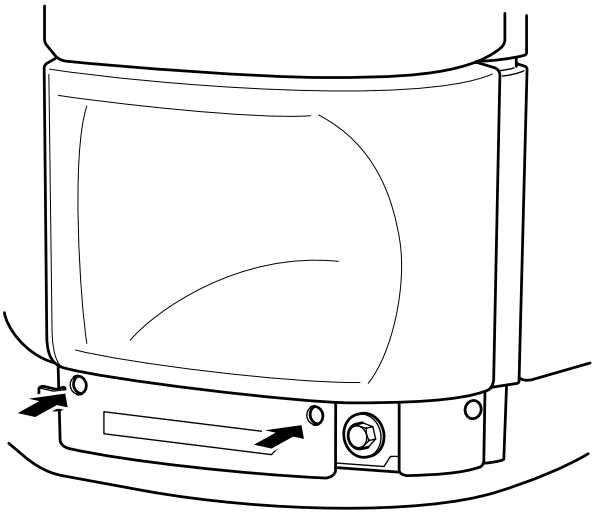

TURN SIGNALS

The flasher unit activates both the turn signal circuits and the hazard circuit. Should a light burn out, the flasher unit will continue to operate. Therefore, check the turn signal lights visually before the vehicle is used.

Downloaded from www.Manualslib.com manuals search engine

HEADLIGHTS / PARKING LIGHTS

NOTICE: When replacing a bulb, make sure the light switch is "OFF".
Use only bulbs with the same wattage rating.

Removal

1. Remove the front grille (1).
   - Remove the screw at the center of the front grille. Pushing up the upper 5 clips, pull the front grille and remove it.

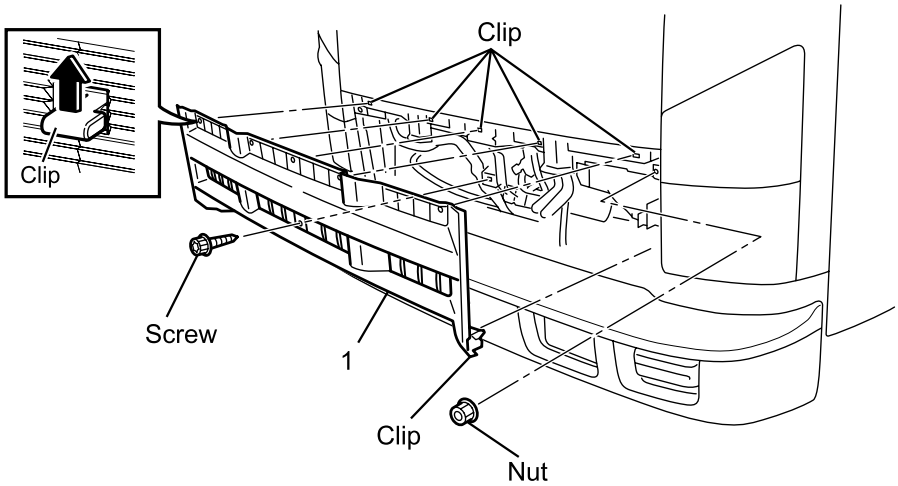

2. Remove the turn signal light.
   - Remove the nut from the frontside turn signal light.
   - Open the front door and unfasten the two screws through the space between the door and the cab using a Phillips screwdriver.

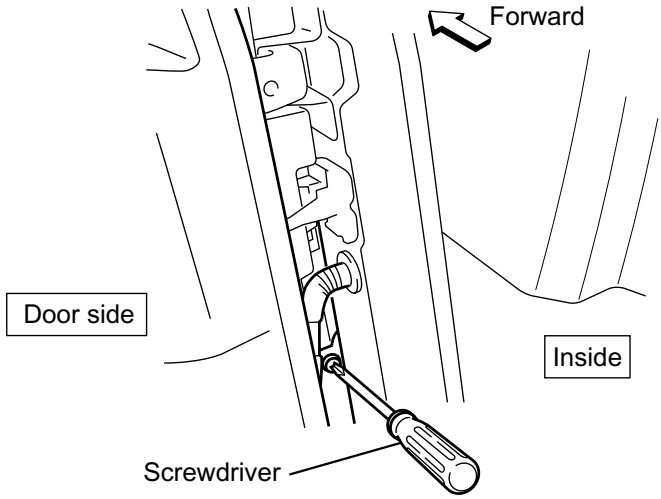

Downloaded from www.Manualslib.com manuals search engine

- Dismantle the entire turn signal light towards the front of the vehicle in an obliquely downward direction.

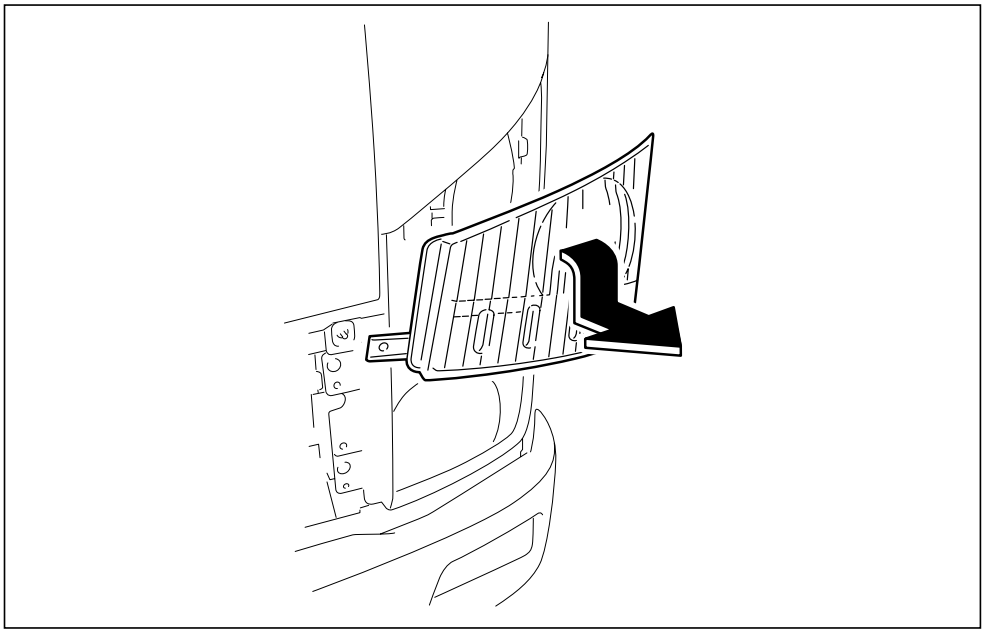

- Remove the connectors of the turn signal light, followed by removing the turn signal light.

3. Remove the headlight.
   - Remove the seal rubber from the two protruding parts below the headlight. Unfasten the four bolts. Remove the headlight connectors and parking light connectors, followed by dismounting the headlight unit.

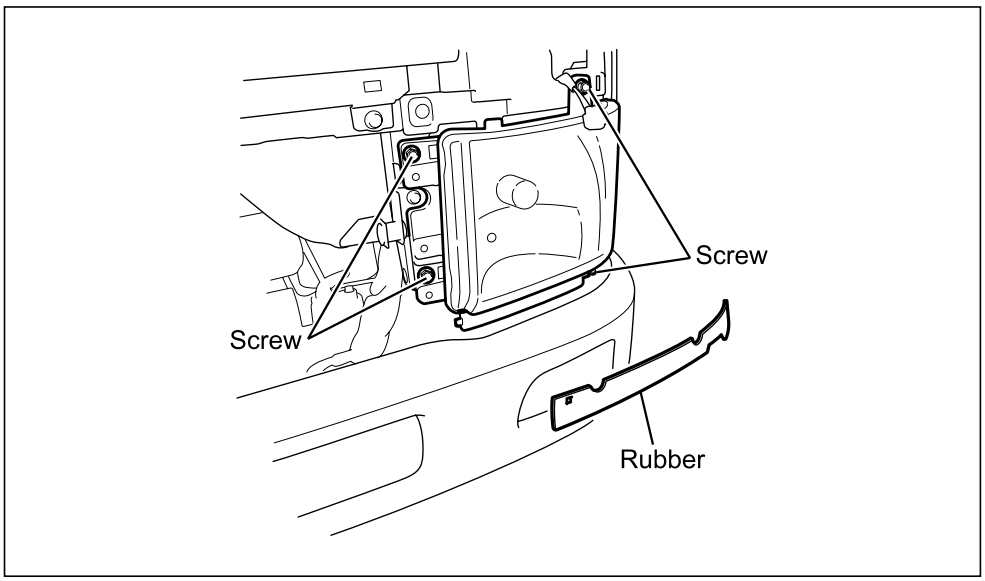

- Remove the headlight connector.

Downloaded from www.Manualslib.com manuals search engine

Installation

1. Fix the headlight with bolts after positioning the guide pins on the headlight and the holes of the cab panel.
2. Install the front corner panel clips and screw.
3. Install the front grille.

Headlight bulb

1. Remove the rubber cover, press the right side of the clip for fastening the bulb and displace upwards to remove the clip.
2. Pull out the bulb and replace it with a new one.

CAUTION:
- **Do not touch the glass portion of the bulb with your fingers.**
- **When installing the cap, firmly push in the cap's inner and outer circumference, installing securely so that there is no float between the cap, and the headlight body and bulb. If the cap is not correctly installed, water may infiltrate the headlight resulting in a breakdown.**

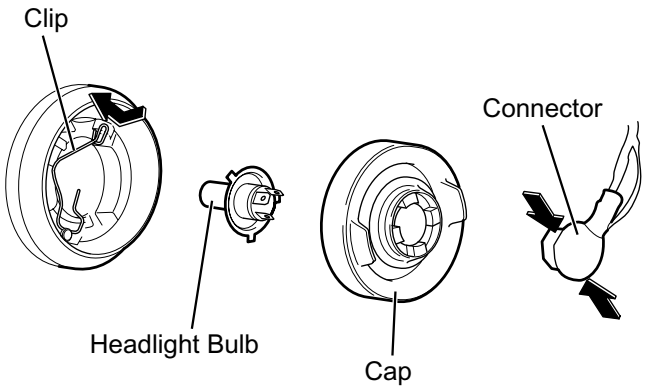

Downloaded from www.Manualslib.com manuals search engine

Parking light bulb

1. Detach the parking light socket.
2. Remove the bulb from the socket, and replace with a new one.

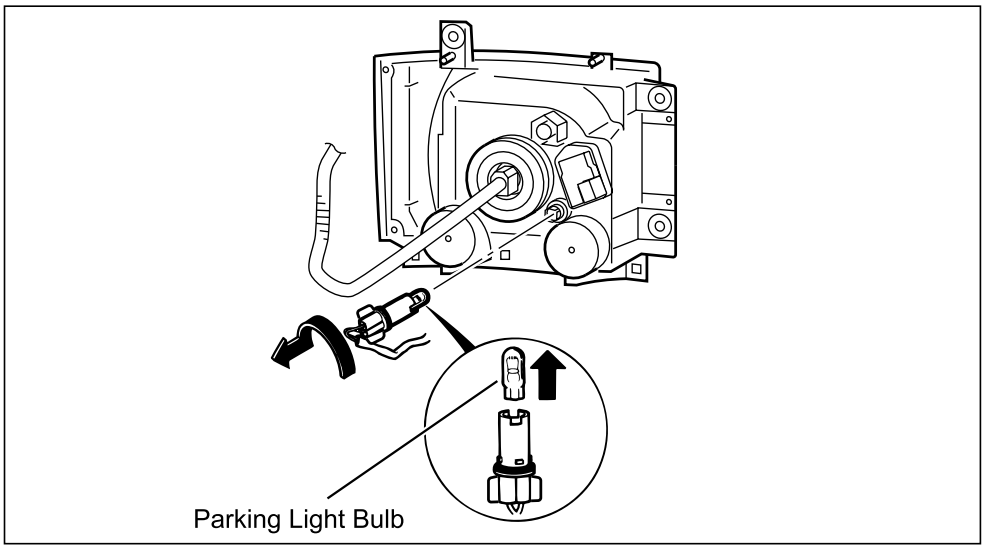

3. When installing, proceed in the reverse order while paying attention to the following points. Turn the connector to the right and lock securely.

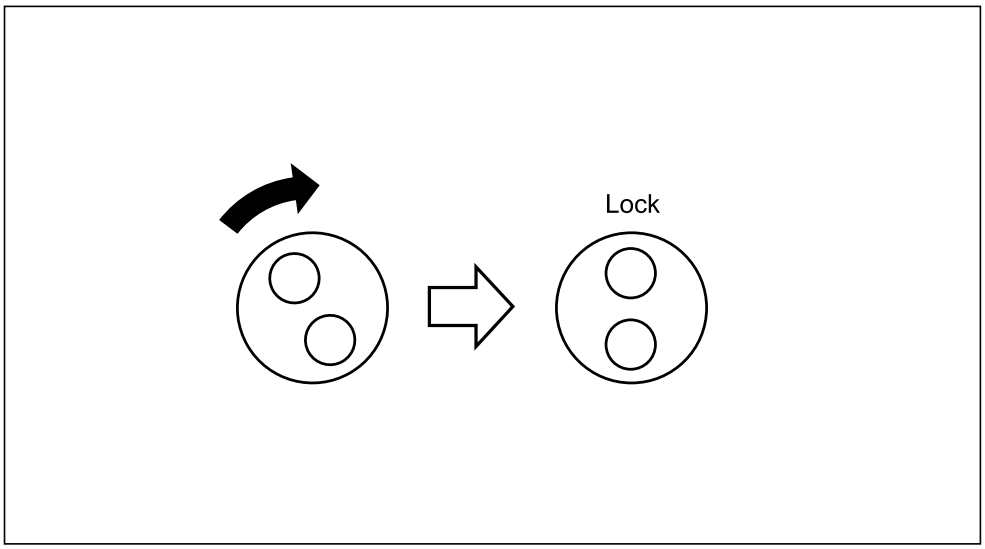

NOTICE: If the locking procedure is inadequate, water may infiltrate the light resulting in a breakdown.

Downloaded from www.Manualslib.com manuals search engine

FRONT TURN SIGNAL LIGHTS

1. Remove the bulb from the socket and replace it with a new one.

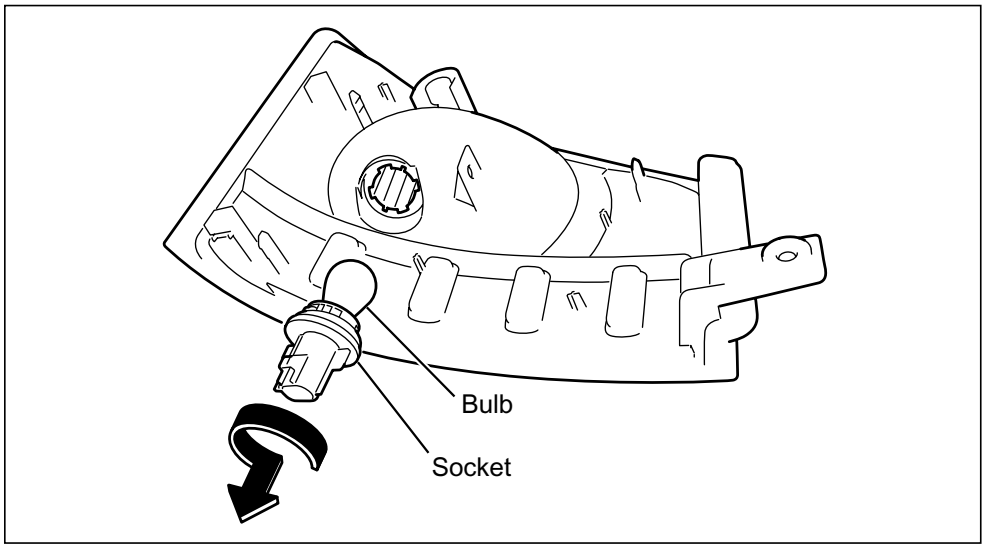

2. During mounting, follow the procedures in the reverse order while paying attention to the following.
   - Turn the socket to the right to lock it firmly.

NOTICE: If the socket is not locked firmly, water may infiltrate the light and cause malfunctioning.

Downloaded from www.Manualslib.com manuals search engine

CORNERING LIGHT / SIDE TURN SIGNAL LIGHT / SIDE MARKER LIGHT

Removal

1. Open the front door and remove the rubber cap at the bottom of the door, followed by unfastening the nut.

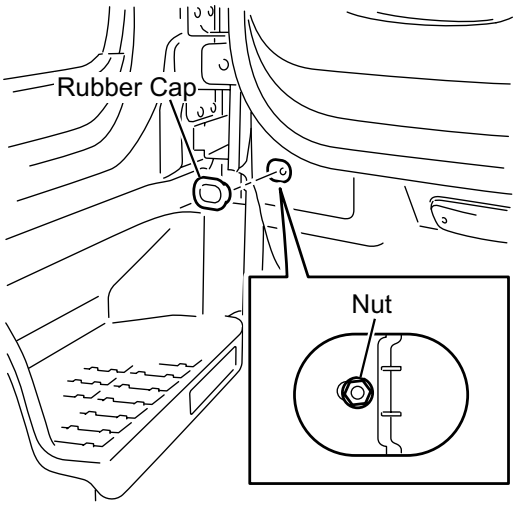

2. Displace the cornering light and side indicator towards the front of the vehicle to pull out the rear of the light, followed by removing the tabs on the reverse side of the rear of the light from the door panel.

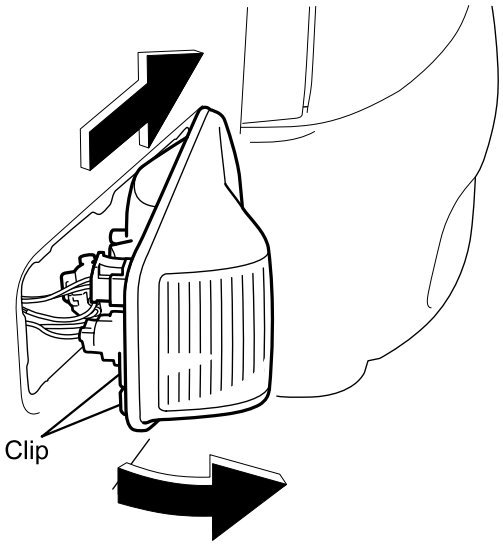

Downloaded from www.Manualslib.com manuals search engine

3. Upon removing the tabs, dismount the light by displacing it towards the back of the vehicle and pulling it out.

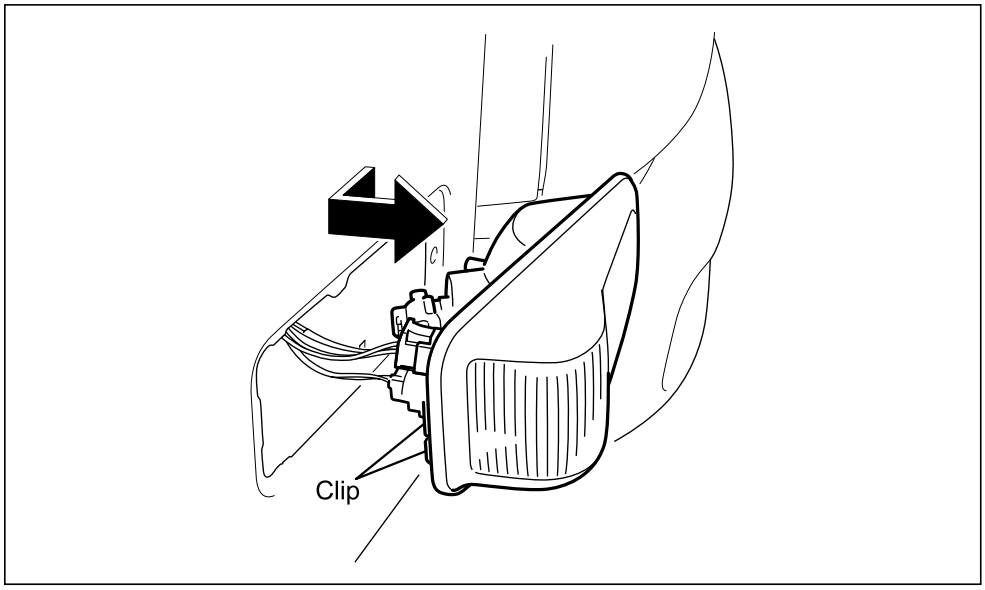

Cornering light bulb / Side turn signal light bulb / Side marker light bulb

1. Remove the bulb socket by turning counterclockwise.
2. Remove the bulb from the socket and replace it with a new one.

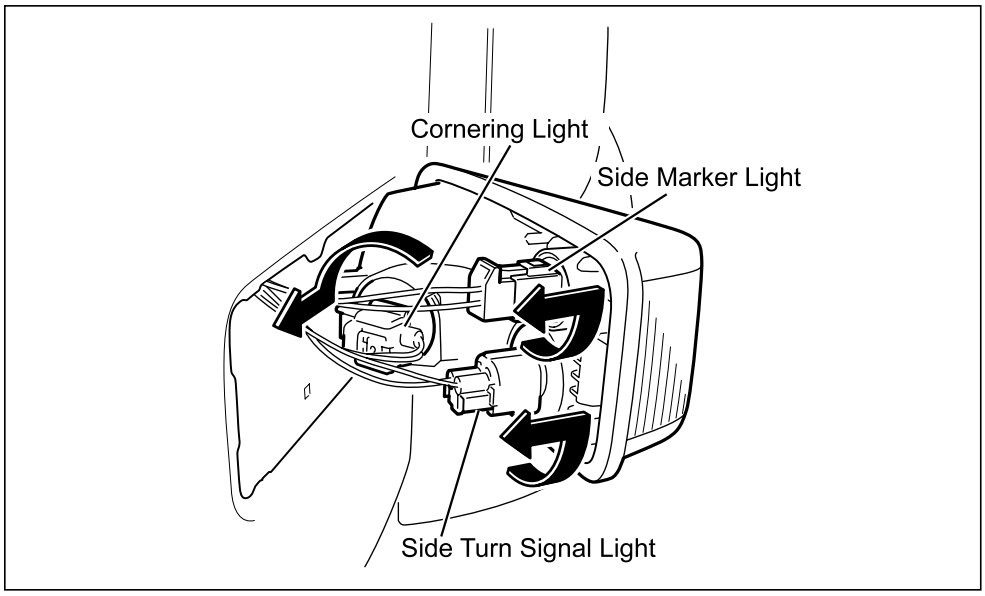

Downloaded from www.Manualslib.com manuals search engine

3. Pay attention to the following when mounting.
   - Turn the socket to the right to lock it firmly.

NOTICE: If the socket is not locked firmly, water may infiltrate the light and cause malfunctioning.

Installation

1. Insert the tabs on the reverse side of the rear of the light into the door panel.

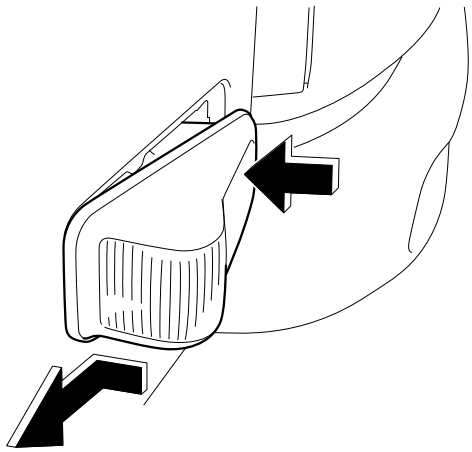

2. Press the front of the light against the door panel to insert the tabs on the reverse side of the front of the light into the door panel.
3. Open the front door, tighten the nut from the inner side, followed by mounting the rubber cap.

Downloaded from www.Manualslib.com manuals search engine

ROOF MARKER LIGHT (IDENTIFICATION LIGHT / CLEARANCE LIGHT)

1. Unfasten the screws of the lens, and remove the lens.
2. Pull out the bulb and replace it with a new one.
3. Install the lens and screw.

NOTICE: If the screwing procedure is inadequate, water may infiltrate into the light unit.

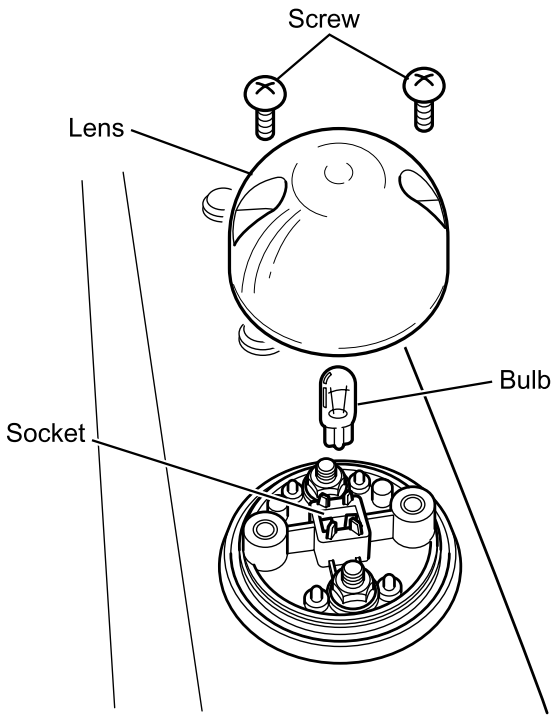

WORKING NEAR BATTERY

CAUTION: Follow the precautions listed in the jump starting caution (see "Emergency starting your vehicle due to a discharged battery" in Section 3) when working on or near the battery. Personal injury (particularly to eyes) or property damage may result from battery explosion, battery fluid or electrical (short circuit) burns.

Downloaded from www.Manualslib.com manuals search engine

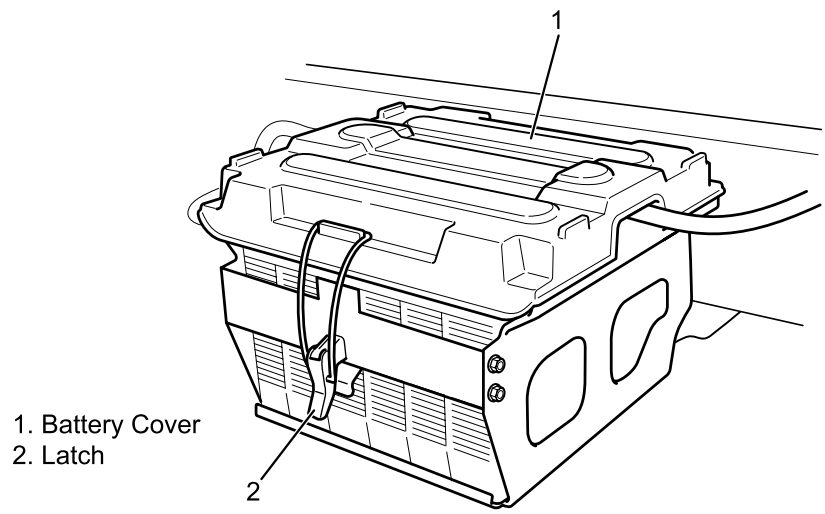

1. Battery Cover
2. Latch

Battery

Your new vehicle is equipped with DELKOR batteries. They need no periodic electrolyte level maintenance. Its top is permanently sealed (except for two small vent holes) and has no filler caps. You will never have to add water.

The hydrometer (green-eye test indicator) in the top of each battery provides information for testing purposes only.

If the vehicle is not going to be driven for 30 days or longer, disconnect the ground cable from the negative (–) terminal of the batteries to prevent discharge.

For full power needs at replacement time, a DELKOR battery with the same catalog number, as shown on the original DELKOR battery's label, is recommended.

CAUTION: Battery posts, terminals and related accessories contain lead and lead compounds, chemicals known to the State of California to cause cancer and reproductive harm. Wash hands after handling.

ACCESS TO THE ELECTRICAL COMPONENTS

Batteries

The batteries are located on the outboard side of the left frame rail, behind the cab. The batteries are in a carrier with the cover retained by spring clips.

Downloaded from www.Manualslib.com manuals search engine

Fuse Panel

The fuse panel is located at the lower side of the center of the instrument. To gain access to the fuses, pull up the bottom of the cover and remove the cover as shown below. The fuse designations are printed on the inside of the panel. Replace a blown fuse with a fuse of the correct rating and close the cover.

In addition, the relay and fuse box is mounted on the left frame at the rear of the cab.

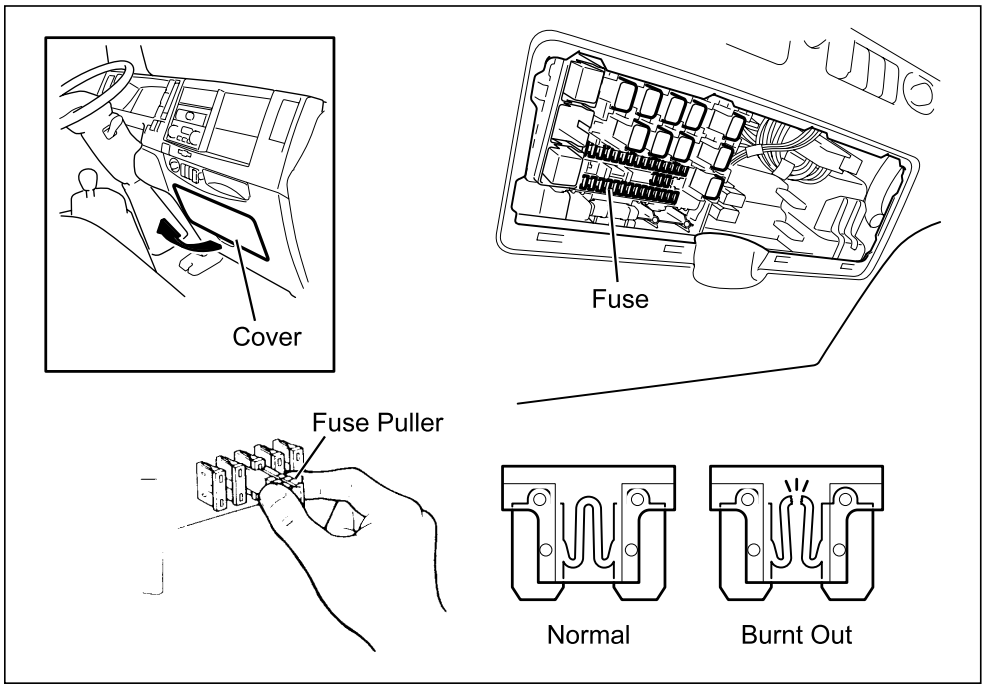

ELECTRICAL CIRCUIT PROTECTION

Your vehicle is equipped with fuses, circuit breakers and fusible links to protect your electrical wiring and equipment in case of electrical overload.

Fuses

In case of an electrical overload, the fuse will blow and stop the flow of current in the circuit before electrical components become damaged.

The cause of the circuit overload must be identified and corrected before the blown fuse is replaced, or else the new fuse will also blow. Since different circuits handle different amounts of current, fuses of various ampere ratings are used. Be sure to replace a blown fuse with a fuse of the correct rating.

To know if a fuse is blown or not, remove the suspected fuse and look at the wire for a break. If the wire is broken, replace the fuse with one of equal amperage rating. The amperage rating of each fuse is molded in its head.

Fuses are installed in the fuse panel and behind the glove box.

Downloaded from www.Manualslib.com manuals search engine

OVERFILLING AUTOMATIC TRANSMISSION

CAUTION: Overfilling of the automatic transmission can cause the fluid to be "PURGED" out of the breather hose onto the hot engine parts and can cause a fire.

WHEELS AND TIRES

The operating load and cold inflation pressure on the rim and wheel must not exceed the rim and wheel manufacturer's recommendations even though the tire may be approved for a higher load or inflation. Rim and wheel may be identified (stamped) with maximum load and maximum cold inflation rating. For rims and wheels not so identified or for service conditions exceeding the rate capacities, consult the rim and wheel manufacturer to determine rim and wheel capacities for the intended service.

The factory-installed tires on this vehicle were selected to provide the best all-around tire performance for normal operation. When inflated, as shown on the vehicle, they have the load carrying capacity to operate satisfactorily at all loads up to and including the full rated load specified for the vehicle. For more information concerning the differences in capacities of tires and rims, refer to the "Tire and Rim Association Inc. Yearbook," or your authorized dealer or tire dealer.

TIRE INFLATION

CAUTION: To reduce the risk of loss of vehicle control and personal injury:

- **Tires must be properly inflated, and your vehicle must not be overloaded (see the information on "Inflation Pressure" in this section and "Important Information on Vehicle Loading" in the Introduction Section of this manual.).**

CAUTION: Be sure to keep tires properly inflated. A tire that is run while seriously underinflated will overheat to the point where the tire may lose air suddenly and/or catch fire, possibly resulting in personal injury and/or property damage.

Downloaded from www.Manualslib.com manuals search engine

In no case should the front or rear tire load exceed the maximum recommended gross axle weight rating (front GAWR or rear GAWR).

The efficiency of the vehicle will be upset if air pressure in the tire is not equal. Balanced inflation results when the tires on the same axle carry the same air pressure. A difference in pressure between the front and rear tires may be permissible within certain limitations, however, there should not be a difference in pressures between the right and left tires on the same axle.

Always use a truck tire pressure gauge (a pocket-type gauge is not advised) when checking inflation pressures. Visual inspection of tires for inflation pressures is not enough, especially in the case of radial tires. Underinflated radial tires may look similar to correctly inflated radial tires. If the inflation pressure on a tire is found to be low frequently, have your dealer correct the cause.

Be sure to install the tire inflation valve caps to prevent dirt and moisture from getting into the valve core, which could cause air leakage. An underinflated tire in a dual wheel assembly is harder to notice than one in a single wheel assembly. The properly inflated dual tire carries its own load plus that of the underinflated tire. Both tires can overheat, which may result in property damage and/or personal injury (see previous caution).

DUAL TIRE OPERATION

The outer tire of a pair on dual wheel installations generally wears faster than the inner tire. If this occurs, reverse the position of the tires to equalize wear and get better tire life.

In addition, when trucks are driven continuously on high-crown roads, an increase in air pressure of 35 kPa (5 psi) in the outer tire of a dual tire operation will prolong outer tire life. Be sure not to exceed the inflation pressure limits shown on the “VIN and Weight Rating Plate”. The tire pressure should be adjusted to the recommended tire pressure when high-crown roads are no longer driven on.

WHEEL AND TIRE BALANCING

Proper tire balancing provides the best riding comfort and helps to reduce tire tread wear. Out-of-balance tires can cause annoying vehicle vibration and uneven tire wear, such as cupping and flat spots. See your authorized dealer for wheel balancing.

Downloaded from www.Manualslib.com manuals search engine

FRONT END ALIGNMENT

Proper front end alignment improves tire tread mileage. Your vehicle's front end suspension parts should be inspected often and aligned when needed. (See the Maintenance Schedule for more information). Improper alignment will not cause the vehicle to vibrate; however, improper toe-in alignment will cause front tires to roll at an angle that will result in faster tire wear. Incorrect caster or camber alignment will cause your front tires to wear unevenly, and may cause the vehicle to "pull" to the left or right.

TIRE TRACTION

A decrease in driving, cornering and braking traction occurs when water, snow, ice, gravel or other material is on the road surface. Driving practices and vehicle speed should be adjusted to the road conditions. When driving on wet or slushy roads, it is possible for a wedge of water to build up between the tire and road surface. This is known as hydroplaning, and may cause partial or complete loss of traction, vehicle control and stopping ability; this condition is also more likely with worn tires.

To reduce the chance of traction loss, follow these tips:

1. Slow down during rainstorms or when roads are slushy.
2. Slow down if the road has standing water or puddles.
3. Replace tires when front tread depth is 3.2 mm (4/32 in.) and rear tread depth is 1.6 mm (2/32 in.).
4. Keep tires properly inflated.

TIRE REPLACEMENT RECOMMENDATIONS

CAUTION: Do not mix different construction types of tires on your vehicle such as radial, bias and bias-belted tires except in emergencies, because vehicle handling could be affected and may result in loss of vehicle control, or personal injury or death.

You should replace your tires when:

1. Your tires are worn to a point where 3.2 mm (4/32 in.) (front) and 1.6 mm (2/32 in.) (rear) or the cord or fabric is exposed.
2. Your tire tread or sidewall is cracked, cut or snagged deeply enough to expose the core, fabric or steel components.
3. Your tire has a hump, bulge or split.
4. Your tire sustains a puncture, cut or other damage that can't be correctly repaired because of the size or location of the damage.

Downloaded from www.Manualslib.com manuals search engine

When replacing tires, you should use the same size, load range and construction type (bias or radial) as the original tires on your vehicle. Use of any other size or type tire may affect load carrying capacity, ride, handling, speedometer/odometer calibration, vehicle ground clearance and tire clearance to the chassis. If replacing only a single tire, it should be put on the same axle with other tires of equal diameter.

When replacing or rotating tires, all tires on an axle should be of the same tread design and should have the same outside diameter within certain limitations, particularly on tandem rear axle models. Consult your authorized dealer or tire dealer.

WHEEL REPLACEMENT RECOMMENDATIONS

Wheels must be replaced if they become damaged (for example: bent, heavily rusted, leak air) or if wheel nuts often become loose. Do not use bent wheels that have been straightened and do not use inner tubes in leaking wheels which are designed for tubeless tires. Such wheels may have structural damage and could fail without warning.

When replacing wheels for any reason, the new wheels should be equal in load capacity, diameter, width, offset and mounting types to those originally installed in your vehicle.

A wheel of the wrong size or type may adversely affect wheel and bearing life, brake cooling, speedometer/odometer calibration, stopping ability, headlight aim, bumper height, vehicle ground clearance and tire or tire chain clearance on the body and chassis. Replacement with “used” wheels is not advised. They may have been subjected to harsh treatment or very high mileage and could fail without warning.

NOTICE: The use of wheels and/or tires with higher load carrying limits than originally equipped on your vehicle does not in itself increase the GAWR or the GVWR of the vehicle.

Replacement wheels can be obtained from the authorized dealer or tire dealer.

TIRE WARRANTY

For the added convenience of owners, many dealers are equipped to handle tire warranty adjustments on certain makes of tires provided on your vehicle.

Downloaded from www.Manualslib.com manuals search engine

LUBRICATION

One of the most important items of good vehicle care is the lubrication of all necessary points with the Right Lubricant, at the Right Time and in the Right Way. It is the owner's responsibility to maintain proper lubrication practices as recommended on the following pages. See the "Fluids/Lubrications Chart" in the Maintenance Schedule for recommended lubricants.
See "GREASE POINTS CHART".

AUTOMATIC TRANSMISSION FLUID RECOMMENDATIONS

See the Maintenance Schedule to find out how often the lubricant level should be checked and what type of lubricant should be used.

VEHICLE STORAGE

If the vehicle is to be placed in storage for a prolonged period of time, certain precautions must be taken to prevent deterioration. It is recommended that you write for detailed instructions on how to prepare your truck for storage.

If the vehicle has been standing for an extended period of time, the turbocharger bearings should be pre-lubricated prior to starting. See your authorized dealer for more detailed information.

Or write to:

Isuzu Commercial Truck of America
Customer Relations Department
46401 Commerce Center Drive
Plymouth, MI 48170
(1-866-441-9638)

Downloaded from www.Manualslib.com manuals search engine

LUBRICATION POINTS

GREASE POINTS

1. King Pins — 4 fittings
2. Driveshaft Universal Joints, Sliding Sleeve and Center Bearing — 5 fittings

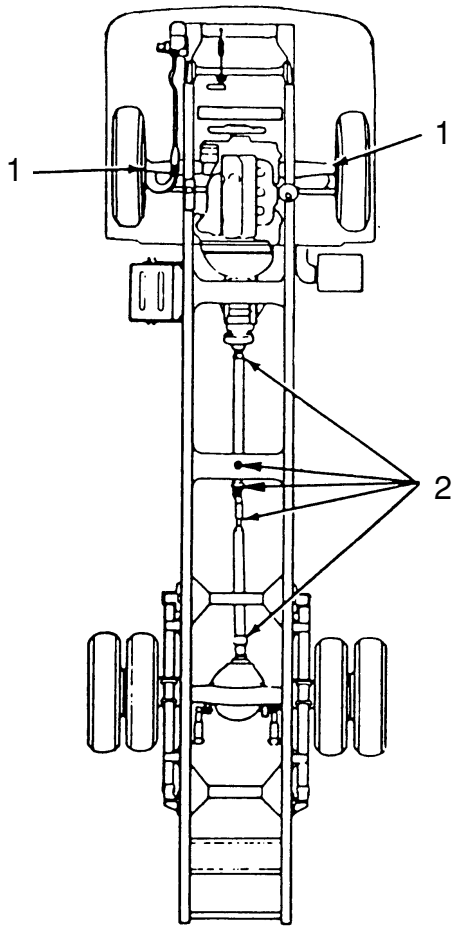

GREASE POINTS CHART

Downloaded from www.Manualslib.com manuals search engine

SECTION 6
SPECIFICATIONS

These specifications are given here for information only. Before using them, see the Cautions and other instructions throughout this manual – the index may help you locate such items. For more information, see the Service Manual covering the chassis or body part in question. Your authorized dealer may also be able to help.

DIESEL ENGINE SERIAL NUMBER LOCATION

On the left-hand side, on a machined pad just above the oil pan.

VIN (VEHICLE IDENTIFICATION NUMBER) AND WEIGHT RATING PLATE

The VIN and Weight Rating plate lists the manufacturer's gross vehicle weight for the vehicle, maximum front end weight at the ground, maximum rear end weight at the ground, and the VIN (vehicle identification number). This plate is located on the left side rear pillar panel below the striker.

The vehicle identification number is a legal identifier of your vehicle. It not only appears on the VIN plate; but also on the Vehicle Certificates of Title and Registration. The vehicle identification number specifically identifies a vehicle by code. Refer to "INTRODUCTION" in Section 0 for more information.

Downloaded from www.Manualslib.com manuals search engine

REPLACEMENT PARTS

Please contact your authorized dealer or parts supplier.

CAUTION: If part replacement is necessary, the part must be replaced with one of the same part number or with an equivalent part. Use of a replacement part of lesser quality may result in personal injury or damage to the vehicle.

FACTORY-APPROVED ACCESSORIES

Your dealer can furnish a wide range of Comfort, Convenience, and Safety Accessories, especially designed for you and your new truck. They can install all of the Safety Accessories you will need to comply with local, state and D.O.T. regulations and advise you how to comply with these regulations.

Be sure to ask your authorized dealer about the accessories.

TIRE LOAD AND INFLATION TABLE

TIRES FOR VEHICLES IN HIGHWAY SERVICE TIRE LOAD LIMITS AT VARIOUS COLD INFLATION PRESSURES											
RADIAL PLY											
Tire Size Designation		(psi) 50	55	60	65	70	75	80	85	90	95
LT215/85R-16-E	Dual					2210		2470			
	Single	(lbs)				2430		2680			
225/70R 19.5-F	Dual									3245	3415
	Single	(lbs)								3450	3640

Downloaded from www.Manualslib.com manuals search engine

ENGINE DATA

Manufacturer	Isuzu
Model	4HK1-TC
Engine Type	Inline 4, Four Cycle
Induction	Turbocharged W/Charge Air Cooler
Bore	115 mm
Stroke	125 mm
Displacement	5.193L (317 CID)
Full Load RPM	2400

CAPACITIES

ENGINE CRANKCASE

Capacities are for normal refill. Capacities given may be approximate – keep level as close as possible to the full mark without overfilling. Do not operate with the level below the low mark.

4HK1-TC .....13L (13.7 qts)

This figure includes the oil filter, which should be changed at each oil change.

AUTOMATIC TRANSMISSION

See "EXPLANATION OF COMPLETE TRUCK MAINTENANCE SCHEDULE" for correct fluid level checking procedure.

Transmission fluid.....14.0L (29.6 pints)

REAR AXLE

Gear Oil .....10.0L (21.1 pints)

Lubricant to within 0 to 10 mm (0 to 0.4 inch) of bottom edge of the filler hole.
If the limited slip differential is equipped, use together with limited slip differential lubricant additive.

Limited Slip Differential Lubricant Additive .....0.6L (1.27 pints)*

* 5 bottles of limited slip differential lubricant additive.
Refer to "RECOMMENDED FLUIDS AND LUBRICANTS".

FUEL TANK

The fuel tank capacity is stated on a metal plate attached to the fuel tank body. Only fill the tank to 95 percent of its capacity; this allows room for the expansion of the fuel.

Downloaded from www.Manualslib.com manuals search engine

ENGINE COOLING SYSTEM

CAPACITY.....18L (19.0 qts)

THERMOSTAT (Starts to Open) .....82, 85°C (180, 185°F)

RADIATOR PRESSURE .....108 kPa (16 psi)

WHEEL

WHEEL STUD NUT TORQUE

Front and Rear .....490 N·m (362 ft·lbs)

Refer to Sections 3 and 5 for complete wheel changing and tire information.

Downloaded from www.Manualslib.com manuals search engine

ELECTRICAL DATA

EXTERIOR LIGHTS

Light	power	Qty.
Headlight	60/55W	2
Parking Light	5W	2
Front Turn Signal Light	27W	2
Cornering Light	27W	2
Side Turn Signal Light	5W	2
Side Marker Light	5W	2
Stoplight / Taillight	27/8W	2
Backup Light	27W	2
Rear Turn Signal Light	27W	2
License Plate Light	7.5W	1
Identification Light / Clearance Light	5W	5

INTERIOR LIGHTS

Dome Light	10W	1
Speedometer and Gauge Lights	3.4W	5
Warning / Indicator Lights	2W	20

Downloaded from www.Manualslib.com manuals search engine

FUSE BLOCK : CAB

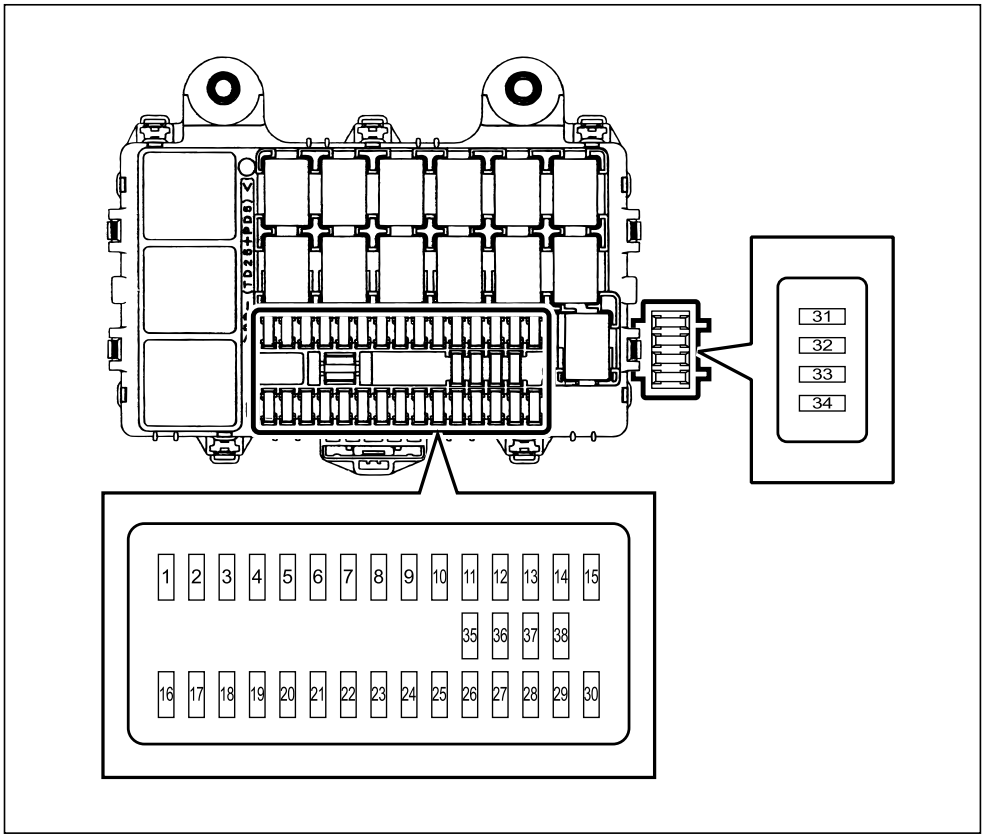

No	Circuit	Fuse
1	RR POWER WINDOW	25A
2	-	-
3	ROOM LIGHT, AUDIO	10A
4	DOOR LOCK	15A
5	-	-
6	POWER WINDOW	25A
7	BACKUP LIGHT	10A
8	WIPER	25A
9	HEADLIGHT (LOW) (LH)	10A
10	LIGHTS (BATT)	10A
11	HEADLIGHT (LOW) (RH)	10A
12	BRAKE LIGHTS	10A
13	STARTER	10A
14	HEADLIGHT HI (LH)	10A

Downloaded from www.Manualslib.com manuals search engine

No	Circuit	Fuse
15	HEADLIGHT HI (RH)	10A
16	MIRROR HEATER	15A
17	IGNITION 2	10A
18	IGNITION 1	10A
19	-	-
20	ECM	10A
21	METER	10A
22	ECU (BATT)	10A
23	MIRROR	10A
24	AUDIO, ACCESSORIES	15A
25	HORN	15A
26	TURN, HAZARD	15A
27	TAILLIGHTS	10A
28	ILLUMINATIONS	10A
29	CORNERING LIGHT	10A
30	AIR CONDITIONER	10A
31	CIGAR	20A
32	ACCESSORIES SOCKET	15A
33	POWER SOURCE	20A
34	-	-
35	SPARE	10A
36	SPARE	15A
37	SPARE	25A
38	SPARE	20A

Downloaded from www.Manualslib.com manuals search engine

FUSE BLOCK : FRAME

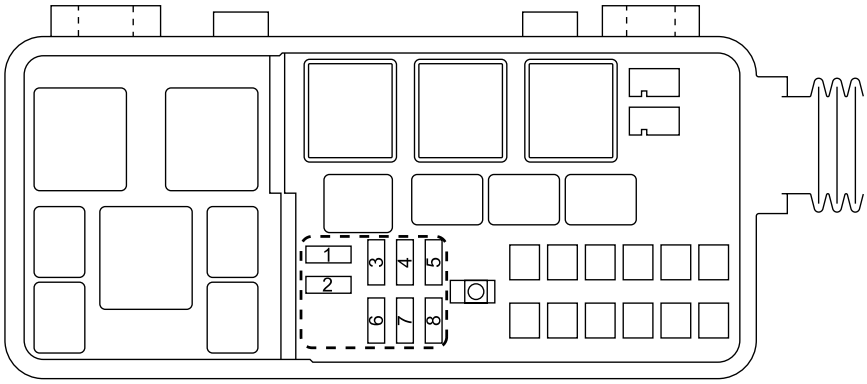

No	Circuit	Fuse
1	MARKER LIGHT	20A
2	TAIL MAIN	20A
3	ECM MAIN	10A
4	-	-
5	-	-
6	RR DOME LIGHT	15A
7	CONDENSER FAN	20A
8	AIR CONDITIONER	10A

FILTER

Air Cleaner .....Isuzu No. 8-97062-294-0
Engine Oil .....Isuzu No. 8-97148-270-1
Fuel.....Isuzu No. 8-98037-011-0

Downloaded from www.Manualslib.com manuals search engine

INDEX

A

ABS 2-37
Accessory Power Outlet 2-58
Access to the Electrical
Components 5-54
Access to the Engine.....5-38
Before Tilting the Cab 5-38
Checking the Engine Oil 5-41
Lowering the Cab 5-40
Tilting the Cab.....5-38
Access to the Windshield 5-43
Acetone 4-1
Adjustable Steering Column 2-20
Adjust Driver's Seat While Parked....1-8
Air Bleeding 5-25, 28
Air Cleaner Filter 5-9, 6-8
Air Cleaner/Flame Arrestor 5-36
Air Conditioning 5-43
Always Lock the Doors 1-3
Anti-lock Brake System 2-37
Appearance Care 4-1
Cleaning Agents 4-1
A/T OIL TEMP Warning Light 2-35
ATF DEXRON-III 5-7
Automatic Engine Warm-up.....2-11
Automatic Trans. Controls,
Continued 2-26
Driving Tips 2-27
Overdrive Switch.....2-28
Starting 2-26
Automatic Transmission Capacity 6-3
Automatic Transmission Controls ..2-25
Automatic Transmission Selector..2-25
Selecting Gears 2-25
Automatic Transmission
Fluid Recommendations.....5-60
Avoid Unnecessary Idling
of the Diesel Engine 2-9

B

Battery Discharge Warning Light....2-30
Before Driving 1-19
Before Driving Off 1-1
Before Driving Your Vehicle 1-1
Before Entering the Truck 1-1
Before Tilting the Cab 5-38
Benzene 4-1
Biocides.....2-3, 5
Brake Alarm System 2-36
Brake Low Vacuum
Warning Light 2-32
Brake Maintenance 5-37
Brake System.....2-22, 5-36
Brake Pedal 2-22
Parking Brake 2-24
Vacuum Power Brakes 2-23
Brake System Warning Light.....2-31

C

Cab Door Locks.....1-3
Always Lock the Doors 1-3
Capacities 6-3
Automatic Transmission Capacity..6-3
Engine Crankcase Capacity 6-3
Fuel Tank Capacity 6-3
Rear Axle Capacity 6-3
Carbon Monoxide 2-1, 3-12, 5-15
Care and Cleaning of Exterior 4-4
Exterior Finish 4-4
Polishing and Waxing 4-4
Weatherstrip Lubrication 4-5
Care and Cleaning of the Interior 4-1
Cleaning Outside of Windshield 4-4
Glass Surfaces 4-3
Seat Belt Care.....4-3
Caution and Notice 0-1
Center Lap Belt 1-13
Change Intervals 5-23
Check Engine Oil Level 5-19
Check Engine Malfunction
Indicator Light.....2-31
Checking the Engine Oil 5-41
Checks Before Operating 2-9
Check Trans Warning Light.....2-35
Child Restraint.....1-14
Choosing Oil Viscosity.....5-22
Choosing the Right Quality Oil 5-21
Cigarette Lighter 2-58
Cleaner 4-2, 3
Cleaning Outside of Windshield 4-4
Cold Weather Starting 2-10
Cornering Light 2-17
Cornering Light / Side Turn Signal
Light / Side Marker Light 5-50
Corrosion Protection 4-5
Cruise Control 2-40
Cruise Main Indicator Light 2-39
Cruise Set Indicator Light 2-39
Customer Satisfaction Procedure ..3-13

Downloaded from www.Manualslib.com manuals search engine

INDEX

D

Damaged Tires 3-5
Wheel Nut Torque.....3-7
Wheel Stud Nut Torque 3-7
Wheel Tightening Sequence.....3-7
Daytime Running Light (DRL) Indicator Light.....2-35
Defrost.....2-61
Descending a Grade 2-14, 20
Diesel Engine Cleaning 5-24
Diesel Engine Serial Number Location 6-1
Diesel Fuel Requirement and Fuel System 2-3
Fuel Economy 2-6
Fuel Selection 2-6
Smoke Suppressants 2-6
Diesel Fuel System 5-25
Fuel Filter 5-27
Fuel System Priming.....5-25, 28
Diesel Particulate Filter (DPF) 1-17, 2-47, 5-42
Before Driving 1-19
Discharged Battery 3-1
Dome Light 2-58
Door Locks 1-4
Door Lock Switch.....1-4
DPF Indicator Light (Green) 2-36
DPF Indicator Light (Amber/Red) ..2-36
Driver Daily Checklist 1-1
Before Driving Off 1-1
Before Entering the Truck.....1-1
Final Walk-Around Check 1-1
Start-up 1-1
Driver's Seat Controls 1-8
Adjust Driver's Seat While Parked 1-8
Fore-and-Aft 1-8
Seatback Latch 1-9
Driving Techniques 2-14
Braking Techniques 2-14
Descending a Grade.....2-14, 20
Driving on Slippery Surfaces.....2-15
Riding the Brake 2-14
Steering Techniques.....2-14
Stopping the Vehicle in the Event of Service Brake Malfunction 2-16
Use of the Exhaust Brake 2-15
Wet Brakes 2-14
Driving Tips 2-27
DRL 2-35
Dual Tire Operation 5-57

E

Effect on Warranty.....0-5
Electrical Data 6-5
Exterior Lights.....6-5
Fuse Block 6-6
Interior Lights 6-5
Electrical System.....5-44
Access to the Electrical Components.....5-54
Cornering Light / Side Turn Signal Light / Side Marker Light 5-50
Electrical Circuit Protection.....5-55
Front Turn Signal Lights 5-49
Headlights / Parking Lights.....5-45
Headlight Vertical Aiming Adjustment 5-44
Roof Marker Light (Identification Light / Clearance Light) 5-53
Turn Signals 5-44
Working Near Battery 5-53
Emergency Starting Your Vehicle due to a Discharged Battery.....3-1
Enamel Reducers 4-1
Engine Alarm and Automatic Shutdown 2-12
Engine Alarm (Shutdown) Warning Light 2-31
Engine Block Heater 2-11
Engine Control Switch 2-7, 21, 43
Engine Coolant Temperature (ECT) Gauge.....2-57
Engine Cooling System 5-31, 6-4
Air Cleaner/Frame Arrestor.....5-36
Engine Cooling System Care 5-31
Engine Cooling System Service ..5-32
Radiator Pressure Cap 5-35
Thermostat 5-35
Engine Cooling System Capacity 6-4
Engine Cooling System Overheating 3-3
Engine Crankcase Capacity 6-3
Engine Data.....6-3
Engine Exhaust Gas Caution 2-1
Engine Noise 5-8
Engine Oil and Filter Recommendations 5-19
Change Intervals.....5-23

Downloaded from www.Manualslib.com manuals search engine

INDEX

Check Engine Oil Level.....5-19
Choosing Oil Viscosity 5-22
Choosing the Right Quality Oil 5-21
Engine Oil Additives 5-23
Oil Identification Logo 5-23
Used Oil Disposal 5-24
Engine Oil Pressure Warning Light 2-34
Engine Overheating Warning Light 2-33
Engine Warm-up System.....2-11
Automatic Engine Warm-up 2-11
Engine Block and Oil Pan Heater.....2-11
Exhaust Brake 2-19
Exhaust Brake Indicator Light 2-29
Explanation of Complete Vehicle Maintenance Schedule.....5-7
Normal Vehicle Use 5-8
Explanation of Vehicle Maintenance and Log 5-2
Exterior Finish 4-4
External Diesel Engine Cleaning....5-24

F

Factory-Approved Accessories 6-2
Filter.....6-8
Final Walk-Around Check 1-1
Fore-and-Aft 1-8
Freeing the Vehicle 3-11
Front Axle Weight 0-4
Front End Alignment 5-58
Front End Towing 3-8, 9
Front Turn Signal Lights 5-49
Fuel Additive 2-3
Fuel Cap 5-18, 29
Fuel Economy 2-6
Fuel Filter.....5-27
Fuel Gauge 2-57
Fuel Selection 2-6
Fuel System Priming 5-25, 28
Fuel Tank Capacity 6-3
Fuse Block.....6-6
Fuses.....5-55

G

Gasoline 2-5, 4-1
GAWR 0-4
Glass Surfaces 4-3
Glow Plug Indicator Light.....2-31
Graphic Symbols 0-2
Guard Against Theft 2-12
GVWR 0-4

H

Hazard Warning Flasher 2-21, 3-1
Headlight Dimmer Switch 2-18
Headlights High Beam Indicator Light 2-29
Headlights / Cornering Lights 2-17
Headlights / Parking Lights 5-45
Headlight Vertical Aiming Adjustment 5-44
Heating and Ventilation Systems Controls 2-59
Optional Air Conditioning 2-59
Windshield Defrosting and Defogging Operating Tips 2-61
Horn.....2-21

I

Idle Speed Control.....2-43
Important Information on Vehicle Loading 0-4
Effect on Warranty 0-5
Maximum Front and Rear Axle Weights 0-5
Overloading.....0-4
In Case of Emergency.....3-1
Discharged Battery 3-1
Jump Starting Instructions 3-2
Hazard Warning Flasher.....3-1
Inside Door Handles 1-3
Instrument Panel and Controls 2-29
Anti-Lock Brake System (ABS) Malfunction Warning Light 2-37
Automatic Transmission Fluid Temperature Warning Light 2-35
Battery Discharge Warning Light 2-30
Brake Alarm System 2-36
Brake Low Vacuum Warning Light 2-32
Brake System Warning Light 2-31
Check Engine Malfunction Indicator Light.....2-31
Check Trans Warning Light 2-35

Downloaded from www.Manualslib.com manuals search engine

INDEX

Cruise Main Indicator Light 2-39
Cruise Set Indicator Light 2-39
Daytime Running Lights (DRL) Indicator Light.....2-35
DPF Indicator Light (Green) 2-36
DPF Indicator Light (Amber/Red).....2-36
Engine Alarm (Shutdown) Warning Light 2-31
Engine Oil Pressure Warning Light 2-34
Engine Overheating Warning Light 2-33
Exhaust Brake Indicator Light.....2-29
Glow Plug Indicator Light 2-31
Headlights High Beam Indicator Light 2-29
Indicator and Warning Lights 2-29
Low Coolant Warning Light.....2-34
Low Fuel Level Indicator Light 2-30
Oil Level Indicator Light 2-36
Overdrive Indicator Light.....2-34
Parking Brake Indicator Light 2-33
Service Vehicle Soon (SVS) Light 2-36
Turn Signal Indicator Light 2-29
Water Separator Indicator Light ..2-36
Instrument Panel Light Level Control 2-44
Interior Lights.....6-5
Introduction 0-1

J

Jump Starting Instructions.....3-2

K

Kerosene 2-4
Key 1-2
Key Removal 2-10

L

Lacquer Thinner 4-1
Lap-Shoulder Belt 1-11
Left-hand Control Lever.....2-17
Cornering Lights 2-17
Headlight Dimmer Switch 2-18
Headlights.....2-17
Passing Light Switch.....2-18
Turn Signal 2-17
Light Control Switch.....2-43
Lock Button 1-5
Locking Clip-Full Size 1-16
Low Coolant Warning Light 2-34
Low Fuel Level Indicator Light.....2-30
Lowering the Cab 5-40
Lubrication.....5-60
Automatic Transmission Fluid Recommendations.....5-60
Lubrication Points 5-61

M

Maintenance Items to Aid Cold Weather Starting 5-29
Starting Aids 5-30
Maintenance Schedule 5-1
Maximum Front and Rear Axle Weights 0-5
Mechanical Driveshaft Brake Burnish Procedure.....2-2
Miles Check Switch 2-45
Mirrors 1-7
Outside Rearview Mirrors 1-7
Mobile Telephones 2-61
Model Reference 0-7

N

Naphtha.....4-1
New Vehicle Break-in 2-2
NHTSA 3-14
Noise Emission Control 5-17
Noise Control System 5-17
Tampering with Noise Control System Prohibited 5-17
Normal Vehicle Use.....5-8

O

Odometer and Trip meter 2-55
Oil Check Switch 2-45
Oil Identification Logo 5-23
Oil Level Indicator Light.....2-36
Oil Pan Heater.....2-11
Oil Viscosity.....5-22
Optional Air Conditioning.....2-59
Outside Door Handles 1-3
Outside Rearview Mirrors 1-7

Downloaded from www.Manualslib.com manuals search engine

INDEX

Outside Rearview Mirror Heater Switch (If Equipped) 2-44
Overdrive Switch 2-28
Overloading 0-4
Overdrive Indicator Light 2-34
Overfilling Automatic Transmission 5-56
Owner Maintenance 5-1
Owner Safety and Routine Maintenance.....5-14

P

Parking 2-12
Parking Brake 2-24
Parking Brake Indicator Light.....2-33
Passing Light Switch 2-18
Power Door Locks (If Equipped).....1-4
Door Locks 1-4
Door Lock Switch 1-4
Lock Button.....1-5
Power Steering 2-21
Power Steering System.....5-30
Power Windows (If Equipped).....1-5
Power Window Switch (Driver's Door) 1-5
Power Window Switch (Passenger's Door) 1-6
Preventive Maintenance 5-2
Maintenance Schedule 5-3
PTO (Power Take-Off) Switch.....2-46

R

Radiator Cooling Fan and Governed Speed 5-36
Radiator Grille Covers 5-36
Radiator Pressure 6-4
Radiator Pressure Cap 5-35
Rear Axle Capacity 6-3
Rear Axle Weight.....0-4
Rear End Towing.....3-11
Recommended Fluids and Lubricants.....5-7
Replacement Fasteners 5-18
Fuel Cap 5-18
Replacement Parts 6-2
Reporting Safety Defects.....3-14
Riding the Brake 2-14
Right-Hand Control Lever 2-18
Adjustable Steering Column 2-20
Engine Control Switch.....2-21
Exhaust Brake.....2-19
Hazard Warning Flasher.....2-21
Horn 2-21
Steering Column Adjustment 2-20
Windshield Washer.....2-19
Windshield Wipers 2-18
Roof Marker Light (Identification Light / Clearance Light) 5-53

S

Seat Belt Care 4-3
Seat Belt Systems 1-10
Center Lap Belt.....1-13
Child Restraint 1-14
Lap-Shoulder Belt 1-11
Locking Clip-Full Size 1-16
Seat Belt Extender 1-16
Seat Belt Inspection 1-13
Seatback Latch 1-9
Selecting Gears.....2-25
Service and Maintenance 5-1
Maintenance Schedule 5-1
Owner Maintenance 5-1
Service Vehicle Soon (SVS) Light..2-38
Shutting Down the Turbocharged Diesel Engine 2-10
Smoke Suppressants 2-6
Special Towing Instructions.....3-11
Specifications 6-1
Speedometer and Gauges 2-55
Accessory Power Outlet 2-58
Cigarette Lighter 2-58
Dome Light 2-58
Engine Coolant Temperature Gauge.....2-57
Fuel Gauge 2-57
Speedometer 2-57
Tachometer.....2-57
Start-up 1-1
Starting 2-26
Starting Aids 5-30
Starting and Operating 2-1
Engine Exhaust Gas Caution 2-1
Starting Procedure.....2-7
Avoid Unnecessary Idling 2-9
Checks Before Operating 2-9
Starting the Engine 2-7
Engine Control Switch.....2-7
Steering Column Adjustment.....2-20

Downloaded from www.Manualslib.com manuals search engine

INDEX

Steering Column Controls 2-16
Anti-Theft Steering Column Lock 2-16
Steering Techniques 2-14
Stopping the Vehicle in the Event of Service Brake Malfunction 2-16, 3-12
Sun Visors 1-7
Switches and Controls.....2-43
Engine Control Switch.....2-43
Idle Speed Control 2-43
Instrument Panel Light Level Control 2-44
Lighting Control Switch 2-43
Miles Check Switch.....2-45
Oil Check Switch.....2-45
Outside Rearview Mirror Heater Switch.....2-44
PTO (Power Take-Off) Switch 2-46
Windshield Wiper and Washer Controls 2-44

T

Tachometer 2-57
Tampering with Noise Control System Prohibited 5-17
Thermostat 5-35, 6-4
Thermostat (Starts to Open) 6-4
Tilting the Cab 5-38
Tires.....0-6
Tire Inflation.....5-56
Tire Load and Inflation Table.....6-2
Tire Replacement Recommendations 5-58
Tire Traction 5-58
Tire Warranty.....5-59
Towing Your Isuzu Truck Procedure.....3-8
Front End Towing 3-8, 9
Rear End Towing 3-11
Special Towing Instructions 3-11
Turn Signal.....2-17, 5-44
Turn Signal Indicator Light.....2-29

U

Underbody Maintenance 4-6
Use of the Exhaust Brake (on slippery surfaces) 2-15
Used Oil Disposal 5-24
Using the Engine as a Brake.....3-11
Stopping the Vehicle in the Event of Service Brake Malfunction 3-12

V

Vacuum Power Assisted Brakes 2-23
Vehicle Identification Number 0-6
Vehicle Storage 5-60
VIN and GVW Plate.....5-2
VIN and Weight Rating Plate 0-4, 6, 6-1
VIN Interpretation 0-8

W

Water Separator 5-27
Fuel Cap 5-29
Fuel System Priming.....5-28
Replacement Water Separator Filter Element 5-28
Water Separator Indicator Light.....2-36
Weatherstrip Lubrication 4-5
Wet Brakes 2-14
Wheel 6-4
Wheel Nut Torque 3-7, 5-13
Wheels and Tires.....5-56
Dual Tire Operation.....5-57
Front End Alignment 5-58
Tire Inflation 5-56
Tire Replacement Recommendations 5-58
Tire Traction 5-58
Tire Warranty 5-59
Wheel and Tire Balancing.....5-57
Wheel Replacement Recommendations 5-58
Wheel Stud Nut Torque 3-7, 6-4
Wheel Tightening Sequence 3-7
Window Controls 1-5
Window Regulator Handle (Manual Window Model).....1-5
Windshield Washer 2-19, 5-30
Windshield Wiper and Washer Controls 2-44
Windshield Wipers.....2-18
Working Near Battery 5-53

Downloaded from www.Manualslib.com manuals search engine

55702_Sec07_'08 08.2.12 9:57 AM Page 1

OPERATING RECORD

DATE	MILEAGE	FUEL		OIL		REPAIRS	
		$		$		$	

DATE	MILEAGE	FUEL		OIL		REPAIRS	
		$		$		$	

Downloaded from www.Manualslib.com manuals search engine

55702_Sec07_'08 08.2.12 9:57 AM Page 2

OPERATING RECORD

DATE	MILEAGE	FUEL		OIL		REPAIRS	
		$		$		$	

DATE	MILEAGE	FUEL		OIL		REPAIRS	
		$		$		$	

Downloaded from www.Manualslib.com manuals search engine

SERVICE MANUALS

All Service Manuals are available from your local authorized Isuzu dealer, and you are encouraged to order from them directly. In the event that you are unable to contact your local dealer, use the below website.

As a do-it-yourselfer, you'll be glad to know that these Service Manuals are the same manuals utilized by the professional technicians at your Isuzu dealership.

WWW.ISUZUTRUCKSERVICE.COM

Downloaded from www.Manualslib.com manuals search engine

SERVICE PUBLICATIONS ORDER FORM

The publications listed covering the operation and servicing of your **Isuzu** Truck can be obtained from Helm, Incorporated either by filling out the reverse side of this form; or for credit card holders calling toll free 1-800-782-4356, or FAXing to 313-865-5927.

Commercial Accounts should enclose a company check made payable to Helm, Incorporated for the total amount of the order. Or, furnish us with a Purchase Order and we will bill on Helm Open Account. (The minimum P.O. amount is $100.00 and is subject to credit Approval.)

For purchases outside of the U.S.A. and for publications prior to the year(s) shown, contact Helm, Incorporated at P.O. Box 07280, Detroit, Michigan 48207 or call (313)865-5000 for availability.

The Service Manuals contain repair and overhaul information on engine, transmission, axle, suspension, brakes, electrical, steering, body, etc.

PUBLICATION NUMBER	DESCRIPTION	PRICE EACH
Please contact Helm at 1-800-782-4356 for publication number and pricing information.		
NPD08-GBX-C03	2008 NPR GLOVE BOX PACKET	$24.95
* Prices are subject to change without notice and without incurring obligation.		

PLEASE SEE REVERSE SIDE FOR ORDERING INSTRUCTIONS.

Downloaded from www.Manualslib.com manuals search engine

ORDER TOLL FREE: 1-800-782-4356

(NOTE: For Credit Card Holders Only)

Monday-Friday 8:30 A.M. -6:00 P.M. EST

(MINIMUM CREDIT CARD PURCHASE $10.00)

—OR—

By completing this form you can order the materials desired. You can pay by check or money order, or charge to your credit card. Mail to Helm, incorporated at the address shown below.

2008

PUBLICATION FORM NUMBER	VEHICLE MODEL NAME	VEHICLE MODEL YEAR	QTY.	PRICE EACH	TOTAL PRICE

Orders are mailed within 10 days.
Please allow adequate time for delivery.

TOTAL MATERIAL	
MICH. PURCHASERS ADD 6% SALES TAX	
HANDLING CHARGE	$6.95
GRAND TOTAL	

SHIP TO

NOTE: Dealers and Companies please provide dealer or company name, and also the name of the person to whose attention the shipment should be sent. For purchases outside U.S.A. please write to the above address for quotation.

(CUSTOMER NAME) (ATTENTION)

(STREET ADDRESS-NO P.O. BOX NUMBERS) (APT. NO.)

(CITY) (STATE) (ZIP CODE)

☐ Check or money order enclosed payable to Helm, Inc. (U.S. funds only — do not send cash.)

AREA CODE ( ) (DAYTIME TELEPHONE NO.)

PAYMENT

☐ Master Card ☐ VISA ☐ Check here if your billing address is different from the shipping address shown.

Account Number ☐☐☐☐ ☐☐☐☐ ☐☐☐☐ ☐☐☐☐ Expiration Mo-Yr ☐☐ ☐☐

(CUSTOMER SIGNATURE) (DATE)

Material cannot be returned for credit without receiving advance authorization within 14 days of delivery. On returns, a restocking fee may be applied against the original order.

HELM P.O. BOX 07280 • DETROIT, MICHIGAN 48207

Downloaded from www.Manualslib.com manuals search engine

Downloaded from www.Manualslib.com manuals search engine

Downloaded from www.Manualslib.com manuals search engine

Downloaded from www.Manualslib.com manuals search engine