Workshop Manual

Audi A3 1997 ➤

Simos injection and ignition system (4-cylinder)									
Engine ID	APF	AVU	BFQ						

Edition 08.2003

Protected by copyright. Copying for private or commercial purposes, in part or in whole, is not permitted unless authorised by AUDI AG. AUDI AG does not guarantee or accept any liability with respect to the correctness of information in this document. Copyright by AUDI AG.

List of Workshop Manual Repair Groups

Repair Group

24 - Mixture preparation - injection

28 - Ignition system

Protected by copyright. Copying for private or commercial purposes, in part or in whole, is not permitted unless authorised by AUDI AG. AUDI AG does not guarantee or accept any liability with respect to the correctness of information in this document. Copyright by AUDI AG.

Technical information should always be available to the foremen and mechanics, because their careful and constant adherence to the instructions is essential to ensure vehicle road-worthiness and safety. In addition, the normal basic safety precautions for working on motor vehicles must, as a matter of course, be observed.

All rights reserved.
No reproduction without prior agreement from publisher.

Copyright © 2015 Audi AG, Ingolstadt

A0050007920

Contents

24 - Mixture preparation - injection 1
1 Servicing Simos injection system 1
1.1 Safety precautions 1
1.2 Rules for cleanliness 1
1.3 Technical data 2
1.4 Overview - fitting locations 2
1.5 Servicing injection system 8
1.6 Dismantling and assembling upper section of intake manifold 12
1.7 Dismantling and assembling air cleaner 13
1.8 Removing and installing lower section of intake manifold 13
1.9 Wiring and component check with test box V.A.G 1598/31 16
1.10 Procedure following interruption of voltage supply 19
1.11 Renewing engine control unit 20
1.12 Performing adaption of exhaust gas recirculation valve 25
1.13 Checking idling speed 27
1.14 Checking system pressure, fuel pressure regulator and residual pressure 29
1.15 Checking injectors 31
1.16 Dismantling and assembling fuel rail with injectors 34
1.17 Removing and installing injectors 35
1.18 Checking injection quantity and spray pattern of injectors; checking for leaks 37
1.19 Checking fuel pump relay J17 and actuation 39
1.20 Checking air mass meter G70 43
1.21 Checking intake air system for leaks (unmetered air) 48
2 Checking intake manifold changeover function 50
2.1 Function test 50
2.2 Checking vacuum system for leaks 50
2.3 Checking intake manifold changeover valve N156 52
3 Checking lambda control 56
3.1 Checking lambda probe and lambda control upstream of catalytic converter 56
3.2 Checking lambda probe ageing upstream of catalytic converter 62
3.3 Checking lambda probe heating Z19 for lambda probe upstream of catalytic converter . . 64
3.4 Checking lambda probe and lambda control downstream of catalytic converter 67
3.5 Check lambda probe heating Z29 for lambda probe downstream of catalytic converter . . 71
3.6 Removing and installing lambda probe 75
4 Checking secondary air pump relay J299 and actuation 76
4.1 Function test 76
4.2 Checking voltage supply of secondary air pump relay 77
4.3 Checking actuation of secondary air pump relay 78
4.4 Checking voltage supply for secondary air pump motor 79
5 Checking fuel tank breather 80
5.1 Checking solenoid valve 1 for activated charcoal filter N80 80
6 Checking electronic engine power control (electronic throttle) 83
6.1 Function of the electronic throttle system 83
6.2 Significance of the EPC warning lamp (fault warning lamp for electronic throttle) in dash panel insert 83
6.3 Checking electronic throttle warning lamp K132 84
6.4 Checking throttle valve control unit J338 85
6.5 Adaption of throttle valve control unit 86
6.6 Checking angle sender for throttle valve actuator 88
6.7 Checking accelerator position sender 91
6.8 Adapting kick down function 94
7 Checking auxiliary signals 97

Protected by copyright. Copying for private or commercial purposes, in part or in whole, is not permitted unless authorised by AUDI AG. AUDI AG does not guarantee or assume any liability with respect to the correctness of information in this document. Copyright by AUDI AG.

7.1 Checking engine speed signal 97
7.2 Checking consumption signal for on-board computer 97
7.3 Checking vehicle speed signal 97
7.4 Checking air conditioner compressor shut-off 99
7.5 Checking fuel level signal wiring 102
7.6 Checking brake light switch and brake pedal switch 103
7.7 Checking clutch pedal switch F36 (up to model year 2001) 105
7.8 Checking clutch pedal switch F36 (from model year 2002) 108
7.9 Checking power steering pressure switch F88 111
7.10 Checking wiring for crash signal 114
7.11 Checking data exchange between engine, gearbox, ABS/EDL and dash panel insert (CAN bus) 114

28 - Ignition system 118

1 Checking ignition system 118
1.1 General notes on ignition system 118
1.2 Safety precautions 118
1.3 Technical data for ignition system 118
1.4 Ignition system component overview 119
1.5 Identification of ignition connections on ignition coil 120
1.6 Checking ignition coils 121
1.7 Checking intake air temperature sender G42 123
1.8 Checking engine speed sender G28 127
1.9 Checking coolant temperature sender G62 129
1.10 Checking power supply to control unit 132
1.11 Checking knock control stop 134
1.12 Checking knock sensor 136
1.13 Checking Hall sender 139
1.14 Checking misfiring recognition function 141

Protected by copyright. Copying for private or commercial purposes, in part or in whole, is not permitted unless authorised by AUDI AG. AUDI AG does not guarantee or accept any liability with respect to the correctness of information in this document. Copyright by AUDI AG.

24 – Mixture preparation - injection

1 Servicing Simos injection system

1.1 Safety precautions

To prevent injuries to persons and/or damage to the fuel injection and ignition system, the following must be noted:

- Always switch off the ignition before connecting or disconnecting injection or ignition system wiring or tester cables.
- If you want to crank engine at starting speed without actually starting it (for example, in order to test compression), first unplug connectors from ignition coils and also from injectors.
- Certain tests may lead to a fault being detected by the control unit and stored. The fault memory should therefore be interrogated and (if necessary) erased after completing the tests and any repair work that may be required.
- Always switch off the ignition before cleaning the engine.
- Always switch off the ignition before connecting or disconnecting the battery, otherwise the engine control unit may be damaged.

> ⚠ Caution
>
> *The fuel system is pressurised. Before opening the system place a cloth around the connection. Then dissipate pressure by carefully unfastening the connection.*

Protected by copyright. Copying for private or commercial purposes, in part or in whole, is not permitted unless authorised by AUDI AG. AUDI AG does not guarantee or accept any liability with respect to the correctness of information in this document. Copyright by AUDI AG.

Note the following if testers and measuring instruments have to be used during a road test:

> ⚠ Caution
>
> - *Test equipment must always be secured on the rear seat and operated from that position by a second person.*
> - *If test and measuring instruments are operated from front passenger's seat and the vehicle is involved in an accident, the person sitting in this seat could be seriously injured when the airbag is triggered.*

1.2 Rules for cleanliness

When working on the fuel supply/injection system, pay careful attention to the following “6 rules”:

- Thoroughly clean all unions and the adjacent areas before disconnecting.
- Place parts that have been removed on a clean surface and cover them over. Do not use fluffy cloths.
- Carefully cover or seal open components if repairs cannot be carried out immediately.
- Only install clean components; replacement parts should only be unpacked immediately prior to installation. Do not use parts that have been previously unpacked and stored away loose (e.g. in toolboxes, etc.).

- When the system is open: Do not work with compressed air if this can be avoided. Do not move vehicle unless absolutely necessary.
- Unplugged electrical connectors; keep them clean and dry. Ensure that connections are dry when attaching.

1.3 Technical data

Engine code letters		APF (1.6 l / 74 kW engine) AVU (1.6 l / 75 kW engine) BFQ (1.6 l / 75 kW engine)
Idling speed	Manual gearbox	670 ... 760 rpm
Engine speed not adjustable - controlled by idling speed stabilisation	Automatic gearbox	800 ... 860 rpm
Speed governing by deactivation of fuel injectors		6500 rpm
Fuel pressure at idling speed	Vacuum hose connected	approx. 2.5 bar
	Vacuum hose disconnected	approx. 3.0 bar
Residual pressure after 10 minutes		at least 2.0 bar
Fuel injectors	Spray pattern	Same for all injectors
	Injection quantity (30 s)	85...105 ml
	Resistance (room temperature)	12 ... 17 Ω

Protected by copyright. Copying for private or commercial purposes, in part or in whole, is not permitted unless authorised by AUDI AG. AUDI AG does not guarantee or accept any liability with respect to the correctness of information in this document. Copyright by AUDI AG.

1.4 Overview - fitting locations

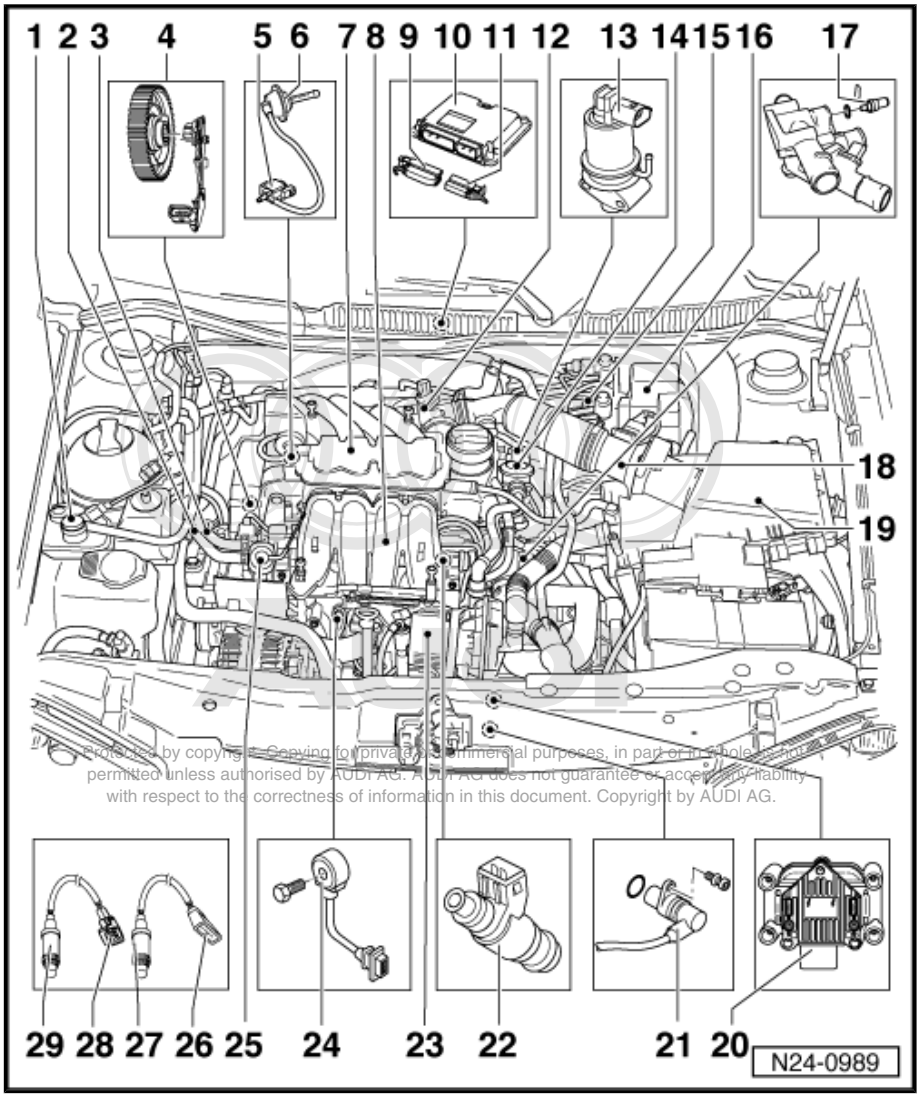

Protected by copyright. Copying for private or commercial purposes, in part or in whole, is not permitted unless authorised by AUDI AG. AUDI AG does not guarantee or accept any liability with respect to the correctness of information in this document. Copyright by AUDI AG.

Accelerator position sender (00777-3131) -G79- and accelerator position sender -2- -G185-

- Fitting location,. check . Adapt kick down function

Brake pedal switch for CCS/diesel direct injection system (00629) -F47-

- Fitting location ,

Clutch pedal switch (00650) -F36-

- Fitting location

Electronic throttle control warning lamp -K132-

- “EPC” warning lamp
- . Fitting location ,

1 - Solenoid valve 1 for activated charcoal filter (01247-4343) (pulsed) -N80-

- ❑ Clipped in activated charcoal filter
- ❑ Check

2 - Fuel return pipe

- ❑ Secure with spring clips
- ❑ To the fuel delivery unit in the fuel tank: ⇒ Fuel Supply, Petrol Engines; Repair group 20; Fuel supply - front-wheel drive; Component overview - fuel tank with attachments

3 - Fuel supply pipe

- ❑ Secure with spring clips
- ❑ From fuel filter: ⇒ Fuel Supply, Petrol Engines; Repair group 20; Fuel supply - front-wheel drive; Component overview - fuel tank with attachments

4 - Hall sender (00515-2113) -G40-

- ❑ Under upper toothed

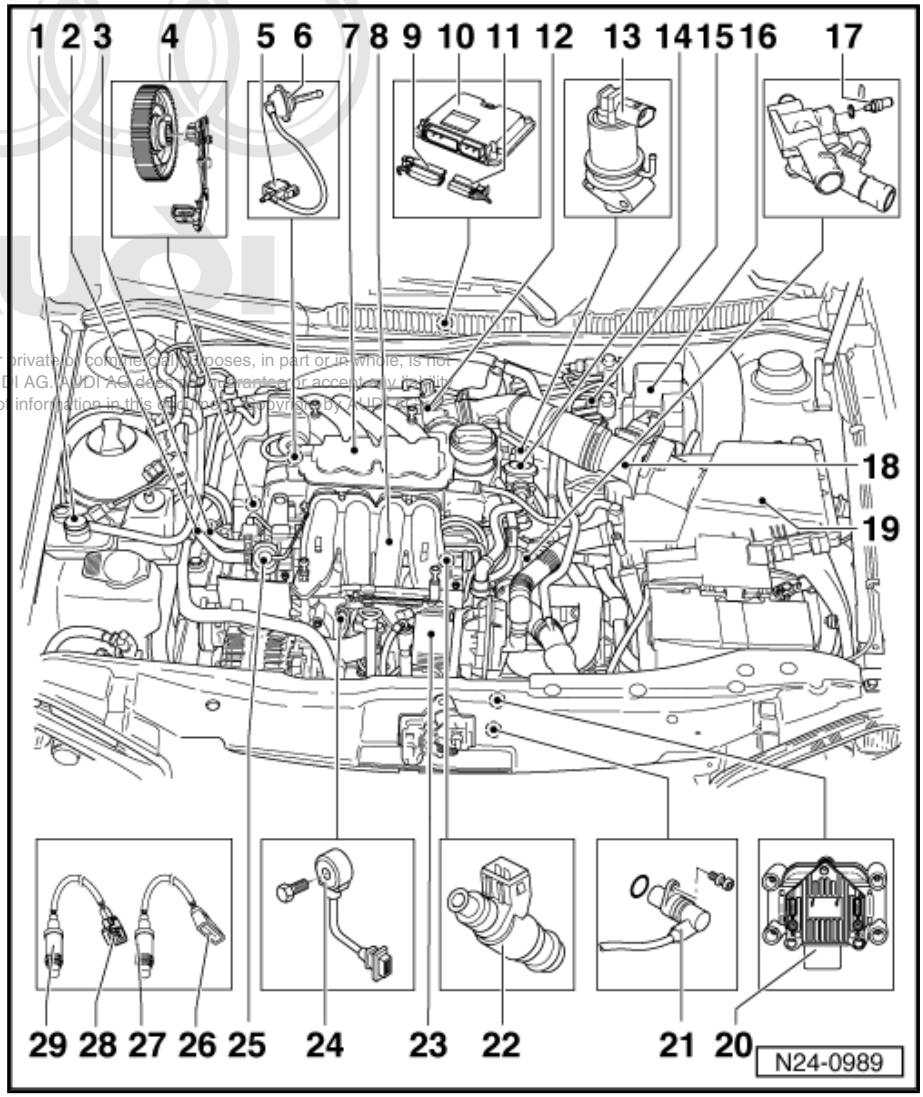

Protected by copyright. Copying for private or commercial purposes, in part or in whole, is not permitted unless authorised by AUDI AG. AUDI AG does not guarantee or accept any liability with respect to the correctness of information in this document. Copyright by AUDI AG.

belt guard
- ❑ Check

5 - Intake manifold changeover valve (01243-4333) -N156-

6 - Vacuum unit
- ❑ Check intake manifold changeover function

7 - Upper section of intake manifold
- ❑ Dismantling and assembling

8 - Lower section of intake manifold

9 - Connector, 81-pin
- ❑ Switch off ignition before detaching or attaching connector
- ❑ Release to detach

10 - Control unit for Simos -J361-

11 - Connector, 40-pin
- ❑ Switch off ignition before detaching or attaching connector
- ❑ Release to detach

12 - Throttle valve control unit (01165) -J338-
- ❑ Throttle valve drive (electronic throttle) -G186- , angle sender -1- for throttle valve drive (electronic throttle) -G187- and angle sender -2- for throttle valve drive (electronic throttle) -G188- -G188-
- ❑ Check
- ❑ Carry out adaption on replacing

13 - Exhaust gas recirculation valve (01265-4312) -N18-
- ❑ with potentiometer
- ❑ Carry out adaption on replacing

14 - Combi valve for secondary air inlet

15 - Secondary air inlet valve (01235-4313) -N112-

16 - Protective case for relays
- ❑ Fitting location of:
- ❑ Secondary air pump relay (01264-4311) -J299-
- ❑ Power supply relay for Simos control unit -J363-

17 - Coolant temperature sender (00522-2312) -G62-
- ❑ Green
- ❑ Check
- ❑ If necessary, release cooling system pressure before removal

18 - Air mass meter (00553-2324) -G70-
- ❑ With intake air temperature sender (00523-2322) -G42-
- ❑ Check air mass meter
- ❑ Check the intake air temperature sender

19 - Air cleaner
- ❑ Dismantling and assembling

20 - Ignition coil -N- and ignition coil 2 -N128- with output stage -N122-
- ❑ Check

21 - Engine speed sender (00513-2111) -G28-
- ❑ Check

Protected by copyright. Copying for private or commercial purposes, in part or in whole, is not permitted unless authorised by AUDI AG. AUDI AG does not guarantee or accept any liability with respect to the correctness of information in this document. Copyright by AUDI AG.

22 - Injectors 1 to 4
- ❑ Check
- ❑ Removing and installing

23 - Secondary air pump motor -V101-

24 - Knock sensor I (00524-2142) -G61-

25 - Fuel pressure regulator

- ❑ Check

26 - 4-way connector

- ❑ For lambda probe downstream of catalytic converter (00699) -G130- and lambda probe heater 1, downstream of catalytic converter -Z29- (brown)
- ❑ Fitting location ,

27 - Lambda probe downstream of catalytic converter (00699) -G130- - 55 Nm

- ❑ Fitting location: in exhaust manifold
- ❑ Check lambda probe heating for lambda probe downstream of catalytic converter
- ❑ Checking lambda probe and lambda control downstream of catalytic converter
- ❑ Removing and installing
- ❑ Delete learned values on replacement

28 - 6 pin connector

- ❑ For lambda probe -G39- upstream of catalytic converter and lambda probe heater -Z19- (black)
- ❑ Fitting location ,

29 - Lambda probe upstream of catalytic converter lambda probe (00525-2342) -G39- - 55 Nm

- ❑ Continuous-action lambda probe
- ❑ Checking lambda probe heating for lambda probe upstream of catalytic converter
- ❑ Checking lambda probe and lambda control upstream of catalytic converter
- ❑ Checking lambda probe ageing upstream of catalytic converter
- ❑ Removing and installing
- ❑ Delete learned values on replacement

Fitting location of connectors

The following connectors are accessible after unscrewing protective cover -arrows- on underside of vehicle.

- ♦ Connector for lambda probe 1 upstream of catalytic converter and heater (black)
- ♦ Connector for lambda probe 2 downstream of catalytic converter and heater (brown)

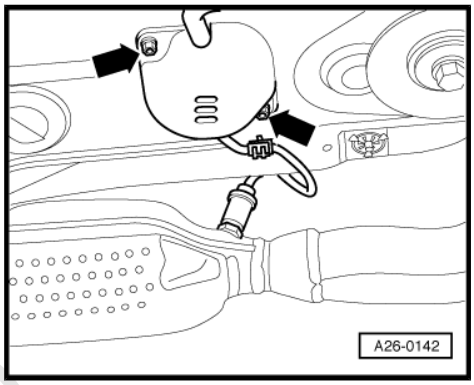

Protected by copyright. Copying for private or commercial purposes, in part or in whole, is not permitted unless authorised by AUDI AG. AUDI AG does not guarantee or accept any liability with respect to the correctness of information in this document. Copyright by AUDI AG.

Fitting location for accelerator position sender -G79 and accelerator position sender 2 -G185

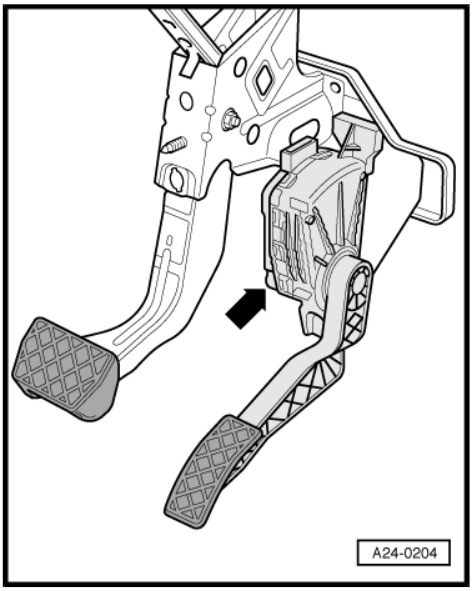

Note!

Diagram shows set-up on left-hand drive vehicles.

Fitting location of electronic throttle warning lamp -K132-

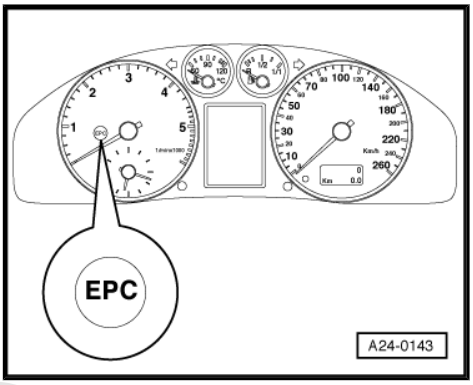

Fitting location of brake light switch -F and brake pedal switch -F47-

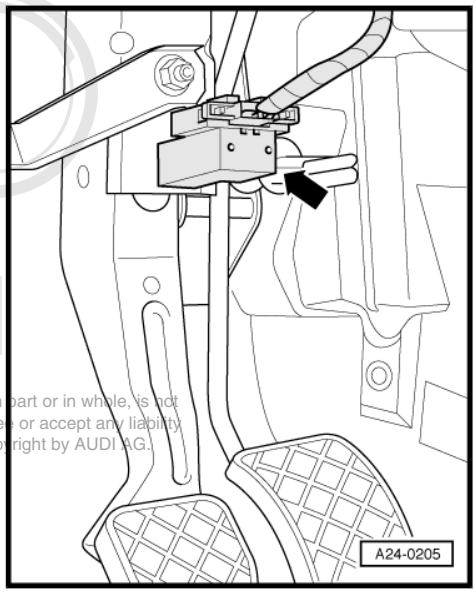

Note!

Switch must only be installed once in order to ensure sufficiently tight seating.

Adjusting switch: ⇒ Running Gear, FWD and 4WD; Repair group 46

Protected by copyright. Copying for private or commercial purposes, in part or in whole, is not permitted unless authorised by AUDI AG. AUDI AG does not guarantee or accept any liability with respect to the correctness of information in this document. Copyright by AUDI AG.

Fitting location of clutch pedal switch -F36-

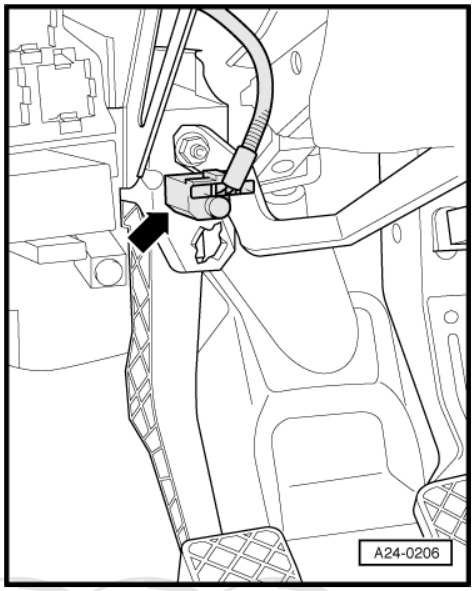

Note!

Switch must only be installed once in order to ensure sufficiently tight seating.

Adjusting switch: ⇒ Running Gear, FWD and 4WD; Repair group 46

Fitting location of power steering pressure switch -F88-

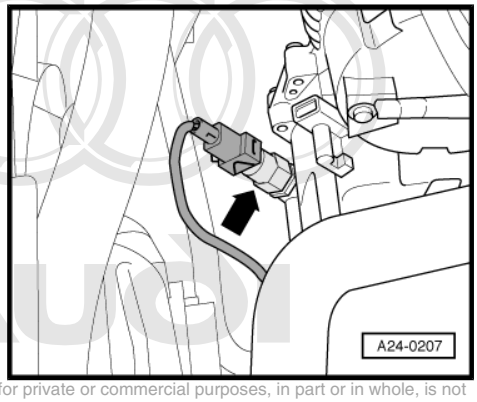

Protected by copyright. Copying for private or commercial purposes, in part or in whole, is not permitted unless authorised by AUDI AG. AUDI AG does not guarantee or accept any liability with respect to the correctness of information in this document. Copyright by AUDI AG.

1.5 Servicing injection system

1 - Air cleaner

- ❑ Dismantling and assembling ⇒ page 13

2 - 6 Nm

3 - 10 Nm

4 - 3 Nm

5 - Lower section of intake manifold

6 - Fuel supply pipe

- ❑ Secure with spring clips
- ❑ From fuel filter: ⇒ Fuel Supply, Petrol Engines; Repair group 20; Fuel supply - front-wheel drive; Component overview - fuel tank with attachments

7 - Fuel return pipe

- ❑ Secure with spring clips
- ❑ To the fuel delivery unit in the fuel tank: ⇒ Fuel Supply, Petrol Engines; Repair group 20; Fuel supply - front-wheel drive; Component overview - fuel tank with attachments

8 - Fuel rail with injectors

- ❑ Dismantling and assem-

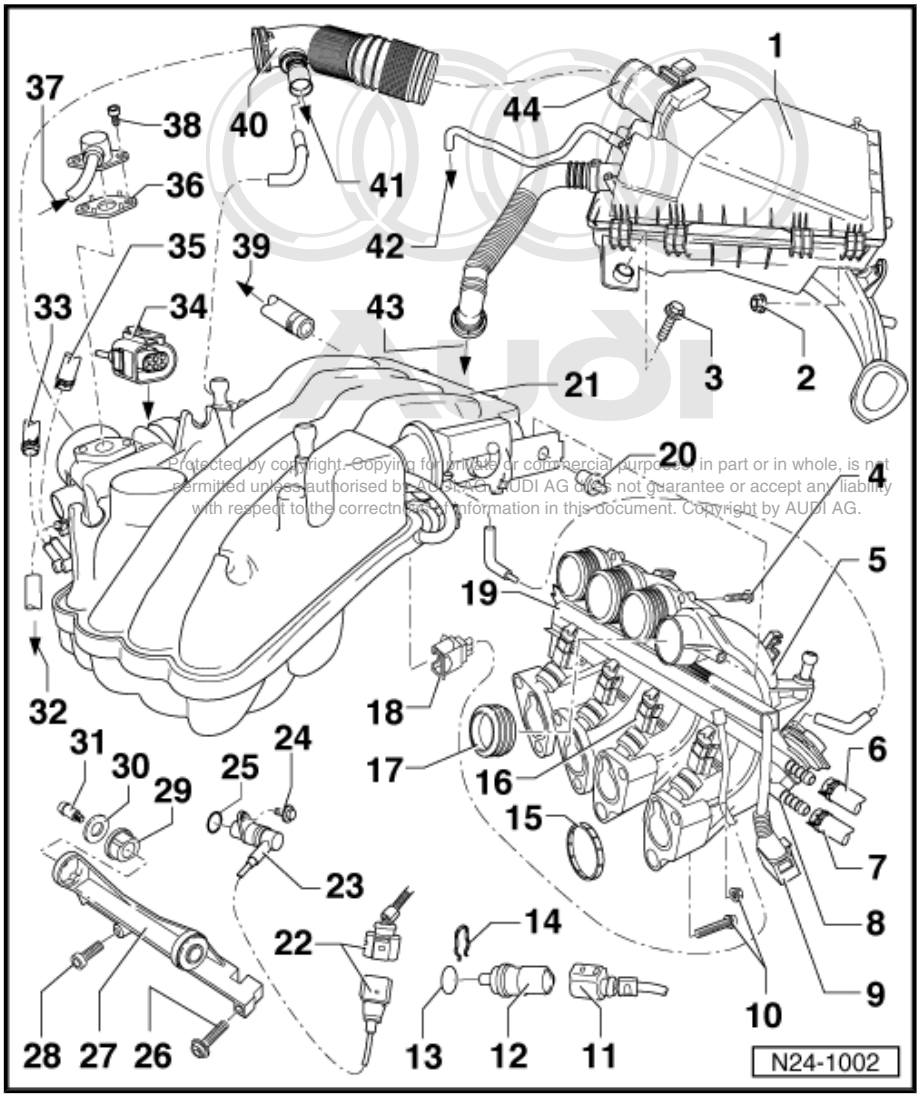

Protected by copyright. Copying for private or commercial purposes, in part or in whole, is not permitted unless authorised by AUDI AG. AUDI AG does not guarantee or accept any liability with respect to the correctness of information in this document. Copyright by AUDI AG.

bling ⇒ page 34

9 - 3-pin connector
- ❑ Black
- ❑ For Hall sender -G163-

10 - 15 Nm

11 - 4-way connector
- ❑ Black
- ❑ For coolant temperature sender -G62-

12 - Coolant temperature sender -G62-
- ❑ Green
- ❑ Check
- ❑ If necessary, release cooling system pressure before removal

13 - O-ring
- ❑ Renew if damaged

14 - Retaining clip
- ❑ Check for firm seating

15 - Seal
- ❑ Renew

16 - 2-pin connector
- ❑ For injectors
- ❑ Black

17 - Seal
- ❑ Renew if damaged

18 - 2-pin connector
- ❑ For intake manifold changeover valve -N156-
- ❑ Black

19 - Cable cover strip

20 - Spreader rivet

21 - Upper section of intake manifold
- ❑ With intake manifold changeover function
- ❑ Dismantling and assembling ⇒ page 12

22 - 3-pin connector
- ❑ Grey
- ❑ For engine speed sender
- ❑ Fitting location: near dip stick

23 - Engine speed sender -G28-
- ❑ Check

24 - 10 Nm

25 - O-ring
- ❑ Renew if damaged

26 - 15 Nm

Protected by copyright. Copying for private or commercial purposes, in part or in whole, is not permitted unless authorised by AUDI AG. AUDI AG does not guarantee or accept any liability with respect to the correctness of information in this document. Copyright by AUDI AG.

27 - Support
- ❑ Between intake manifold and cylinder head

28 - 8 Nm
- ❑ For securing breather connection

29 - Rubber bush

30 - Washer

31 - 8 Nm

32 - To activated charcoal filter solenoid valve 1 -N80-

- ❑ Activated charcoal filter: ⇒ Fuel Supply System - Petrol Engines; Repair group 20; Servicing activated charcoal filter components - front and four-wheel drive

33 - From heater feed

34 - 6 pin connector

- ❑ For throttle valve control unit -J338-

35 - To T-piece and on to coolant expansion tank

36 - Gasket

- ❑ Renew

37 - From exhaust gas recirculation valve

38 - 10 Nm

39 - To brake servo

40 - Intake hose

- ❑ With crankcase breather valve
- ❑ For cold countries: crankcase breather with heating resistor

41 - To breather housing

42 - To exhaust gas recirculation valve

- ❑ Clean-air connection (vent)

43 - Intake hose

- ❑ For secondary air pump

44 - Air mass meter -G70-

- ❑ With intake air temperature sender sender -G42-
- ❑ Check air mass meter ⇒ page 43
- ❑ Check the intake air temperature sender

Protected by copyright. Copying for private or commercial purposes, in part or in whole, is not permitted unless authorised by AUDI AG. AUDI AG does not guarantee or accept any liability with respect to the correctness of information in this document. Copyright by AUDI AG.

1.6 Dismantling and assembling upper section of intake manifold

1 - 8 Nm

2 - Throttle valve control unit -J338-

- ❑ With throttle valve drive -G186, angle sender for throttle valve drive -G187- and angle sender 2 for throttle valve drive -G188-
- ❑ Checking ⇒ page 85
- ❑ Carry out adaption on replacing ⇒ page 86

3 - Seal

- ❑ Renew if damaged

4 - Pressure relief valve

- ❑ protects the intake manifold from damage in the event of excess pressure

5 - Threaded insert, 8 Nm

6 - Upper section of intake manifold

7 - Spreader rivet

8 - Vacuum unit

- ❑ Check intake manifold changeover function ⇒ page 50

9 - Intake manifold changeover solenoid valve -N156-

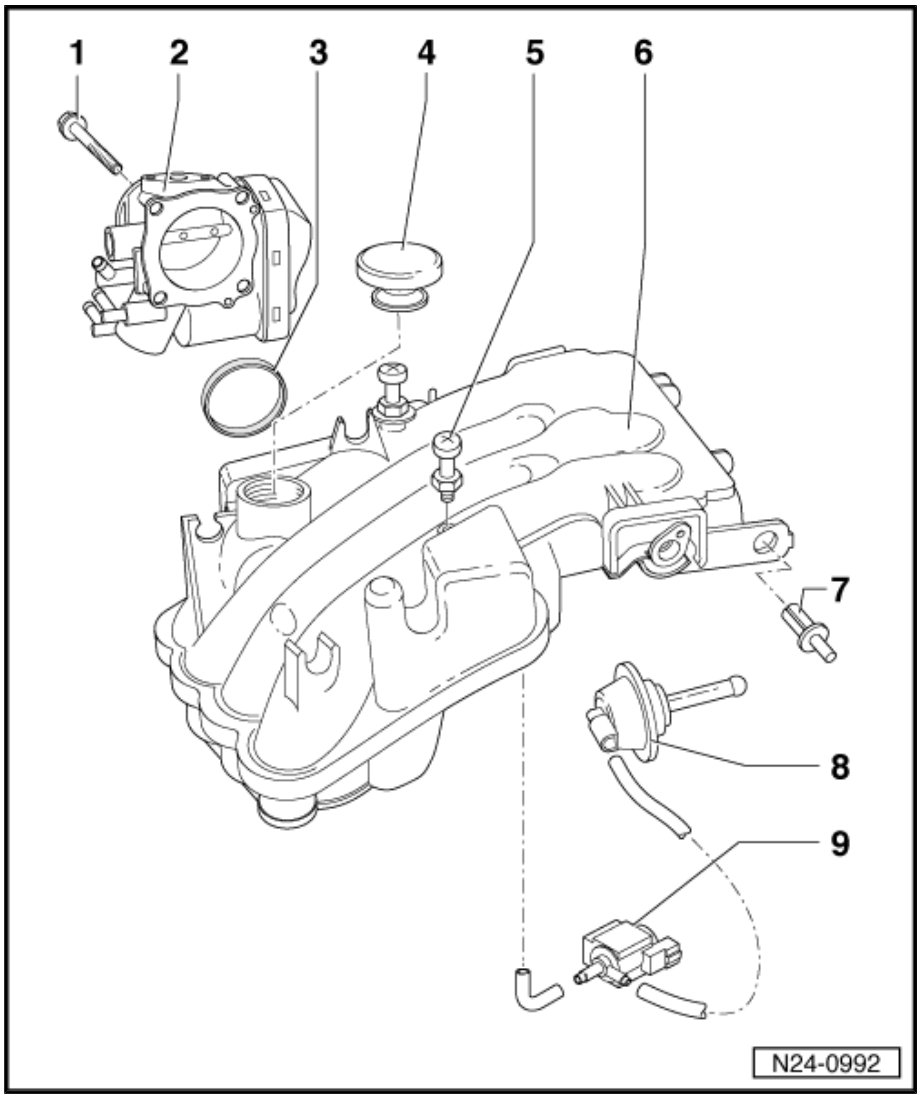

Protected by copyright. Copying for private or commercial purposes, in part or in whole, is not permitted unless authorised by AUDI AG. AUDI AG does not guarantee or accept any liability with respect to the correctness of information in this document. Copyright by AUDI AG.

1.7 Dismantling and assembling air cleaner

1 - Air mass meter -G70-
- ❑ With intake air temperature sender -G42-
- ❑ Check air mass meter ⇒ page 43
- ❑ Checking the intake air temperature sender

2 - Seal
- ❑ Renew if damaged

3 - 6 Nm

4 - Top part of air cleaner

5 - Filter element
- ❑ Renew ⇒ Maintenance ; Booklet

6 - 10 Nm

7 - Bottom part of air cleaner

8 - Air duct

9 - Intake hose
- ❑ For secondary air pump

10 - Breather hose
- ❑ Exhaust gas recirculation valve

11 - 6 Nm

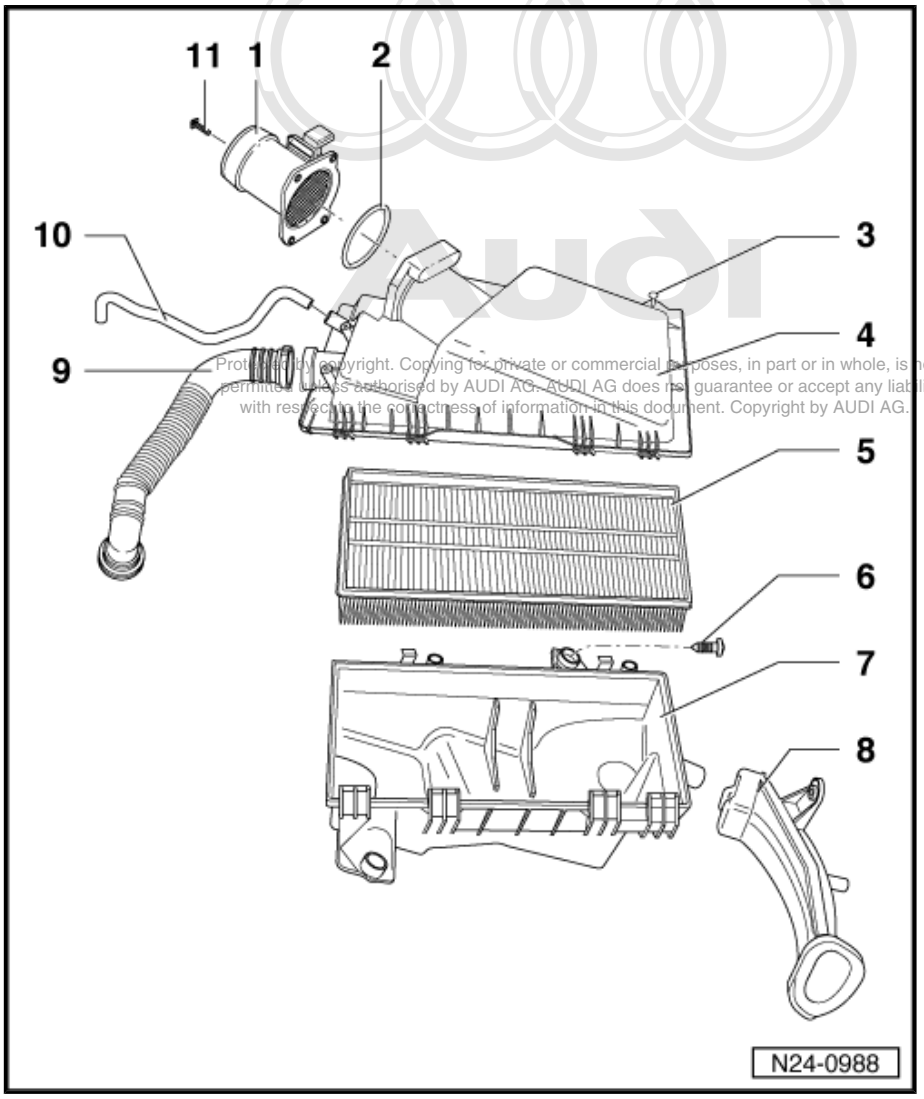

Protected by copyright. Copying for private or commercial purposes, in part or in whole, is not permitted unless authorised by AUDI AG. AUDI AG does not guarantee or accept any liability with respect to the correctness of information in this document. Copyright by AUDI AG.

1.8 Removing and installing lower section of intake manifold

1.8.1 Removing:

Note!

- ♦ *Obtain radio anti-theft code before disconnecting battery.*
- ♦ *On re-connecting battery, remember to check and activate vehicle equipment (radio, clock, convenience electrics etc.) in line with workshop manual and/or owner's manual.*

– First disconnect battery earth strap at negative battery terminal.

– Lever out plug and unscrew nuts -arrows-.
– Remove the engine cover.

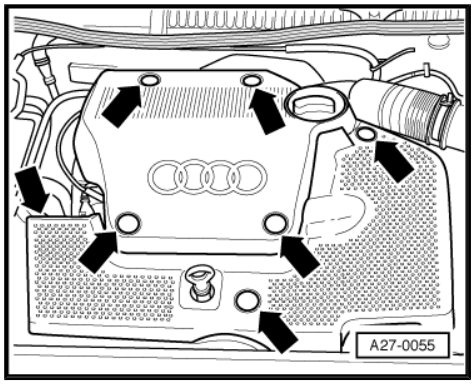

Note!

Before removing the poly V-belt, mark the running direction for reinstallation purposes.

– Swivel tensioning roller in direction of arrow to slacken poly V-belt.
– Remove poly V-belt.
– Remove tensioning element for poly V-belt.

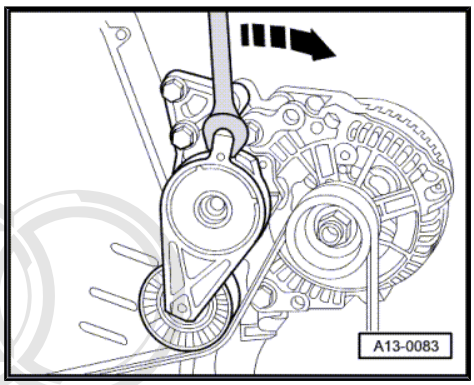

– Unscrew wiring-1- (terminal 30/B+) and detach connector -2-.
– Detach cable clip -3-.
– Unscrew alternator and remove upwards.
– Remove bracket from alternator:

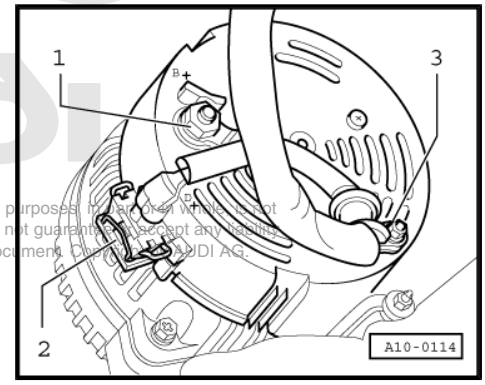

Protected by copyright. Copying for private or commercial purposes, in part or in whole, is not permitted unless authorised by AUDI AG. AUDI AG does not guarantee or accept any liability with respect to the correctness of information in this document. Copyright by AUDI AG.

– Unplug connector -1- from intake manifold changeover solenoid valve -N156- .
– Unplug connector -2- from Hall sender.

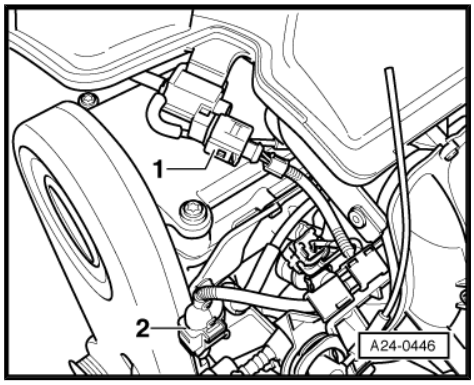

– Unplug connector -1- from secondary air pump motor.
– Detach pressure hoses -2- and -3- from secondary air pump motor.
– Unscrew secondary air pump motor.
– Unscrew secondary air pump bracket.

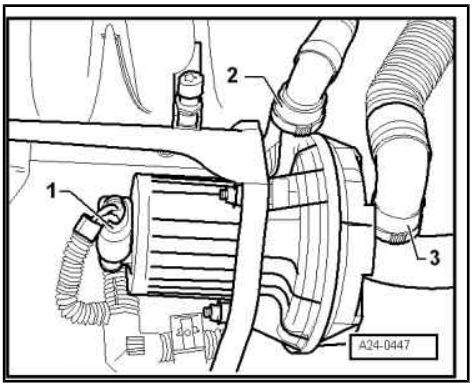

– Open cable tie -1- and remove bracket.

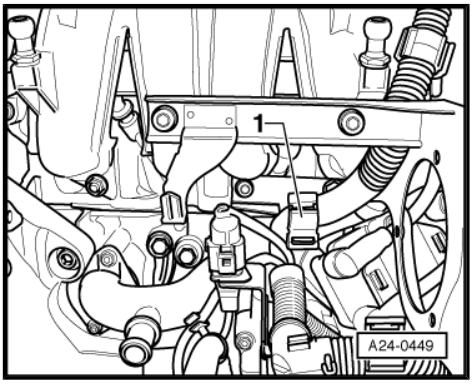

– Remove both spreader rivets -1-.
– Unscrew the two bolts -2-.
– Release all other bolts from lower section of intake manifold to cylinder head.
– Carefully press the two lugs apart and pull off lower section of intake manifold from front.

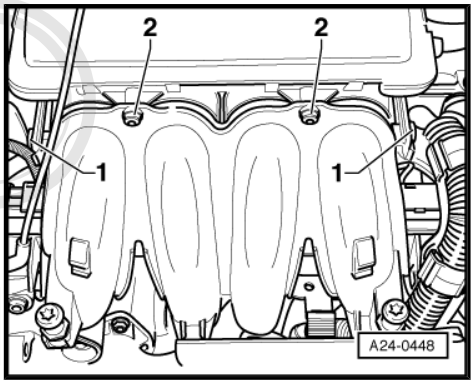

Protected by copyright. Copying for private or commercial purposes, in part or in whole, is not permitted unless authorised by AUDI AG. AUDI AG does not guarantee or accept any liability with respect to the correctness of information in this document. Copyright by AUDI AG.

1.8.2 Installing:

– Installation is performed in reverse sequence to removal.
– Install the bracket and the secondary air pump motor.
– Secure the wiring harness on the bracket with a cable tie.
– Install bracket for alternator:

Note!

Tap back the thread bushes for the securing bolts approx. 1 mm at the alternator before installing.

– Install alternator.
– Reinstall poly V-belt ensuring that it is correctly routed and properly seated.

– Screw on wiring-1- (terminal 30/B+) and attach connector -2-.

– Screw on cable clip -3-.

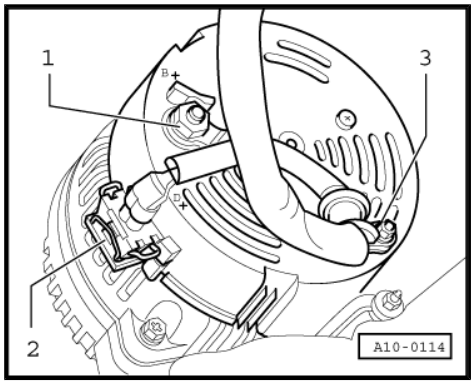

Tightening torques:

Component	Nm
Bolts to cylinder head	20
Connecting bolts for upper and lower sections of intake manifold	3
Alternator to bracket	25
Poly V-belt tensioner to bracket	25
Wiring (terminal 30/B+) to alternator	16
Cable clamp to alternator	16
Battery terminals	6

– Reconnect the unplugged connectors (intake manifold changeover solenoid valve, Hall sender, secondary air pump motor).

– Install engine cover.

– Connect battery earth strap at negative battery terminal.

– After installation, carry out anti-theft coding according to radio user instructions. The clock as well as the convenience electronics etc are to be checked and activated according to Workshop Manual and/or user instructions.

1.9 Wiring and component check with test box -V.A.G 1598/31-

1.9.1 The following procedure applies to engine control units which are fitted with sheet-metal housing.

Reproduction of this document or parts thereof for private or commercial purposes, in part or in whole, is not permitted unless authorised by AUDI AG. AUDI AG does not guarantee or accept any liability with respect to the correctness of information in this document. Copyright by AUDI AG.

Note!

- *Test box -V.A.G 1598/31- is designed so that it can be connected to the wiring harness for the engine control unit and to the engine control unit itself at the same time.*
- *The advantage of this is that the electronic engine control system remains fully functional when the test box is connected (for example, for measuring signals when the engine is running).*
- *The relevant test procedure will state whether it is necessary to also connect the engine control unit to the test box.*
- *Always use adapter set -V.A.G 1594 A- to connect test equipment (e.g. voltage tester -V.A.G 1527 B- , hand-held multimeter -V.A.G 1526 A- etc.).*

1.9.2 Procedure

– Switch off ignition.

– Unscrew the windscreen wiper arms.

– Remove the plenum chamber cover and lay aside towards the windscreen.

Note!

Item -1- in the illustration shows the engine control unit with sheet-metal housing.

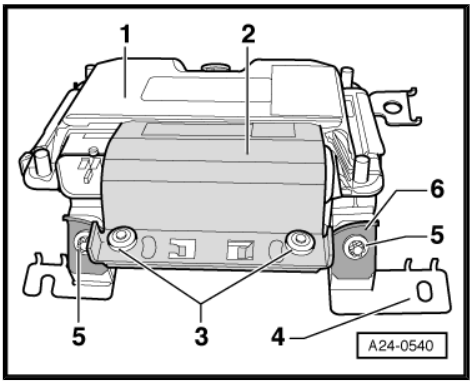

To render access to the connectors on the engine control unit more difficult, the engine control unit -1- is bolted by way of a locking device -2- and shear bolts -3- to a sheet-metal housing -4-.

To make it more difficult to unscrew the shear bolts, their threads have been coated with locking fluid.

If the connectors are to be unplugged from the engine control unit (e.g. to connect a test box), the locking device -2- must be detached from the sheet-metal housing. This procedure is described in the following.

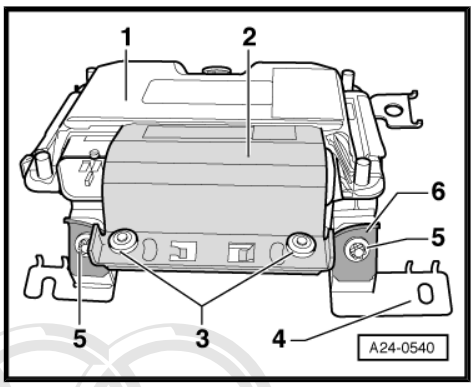

1.9.3 Tools required:

- Hot air blower -1- (from the wiring harness repair set - VAS 1978-)
- Commercially available vice-grip pliers

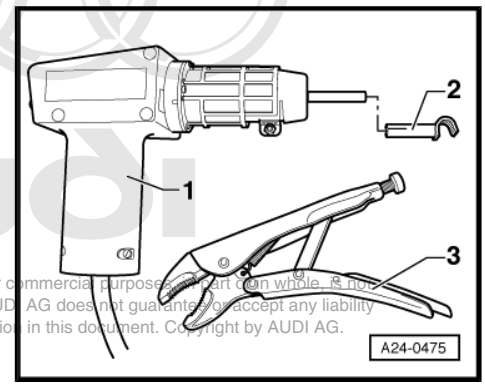

Protected by copyright. Copying for private or commercial purposes, in part or in whole, is not permitted unless authorised by AUDI AG. AUDI AG does not guarantee or accept any liability with respect to the correctness of information in this document. Copyright by AUDI AG.

1.9.4 Procedure:

Caution

The following procedure must be followed exactly to prevent any damage (burning) to wiring, connectors, insulation and control units. Observe operating instructions for hot air blower.

In order to prevent damage to wiring and connectors, steel plates must be used as a shield (items -1- and -2-). This is to prevent excessive heating of the connector housing and the wiring harness.

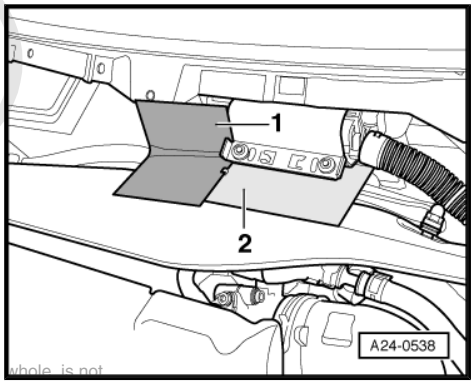

Protected by copyright. Copying for private or commercial purposes, in part or in whole, is not permitted unless authorised by AUDI AG. AUDI AG does not guarantee or accept any liability with respect to the correctness of information. Copyright by AUDI AG.

– Select settings on hot air blower as shown in illustration, i.e. set temperature potentiometer -2- to max. heat output and two-stage air flow switch -3- to position 3.

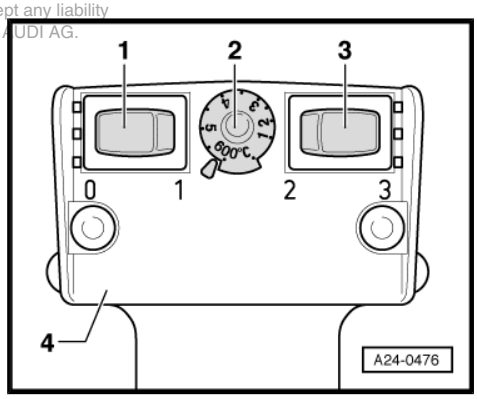

Note!

Bolt of locking device must then be heated using hot-air blower. This step reduces inhibiting action of locking fluid on shear bolt threads and makes it easier to unscrew these bolts.

Caution

Heating the thread of the locking device also greatly increases the temperature of the shear bolts and sheet-metal housing components. Take care to avoid burns. It is also important to ensure that only the thread is heated and none of the surrounding components if at all possible. These should be covered if necessary.

– Direct nozzle -1- of hot air blower at bolt -2- of locking device.

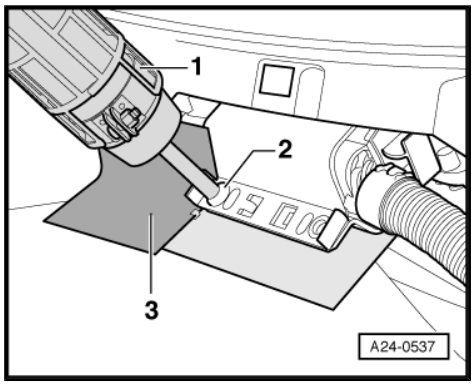

Note!

Take particular care to avoid the control unit connectors in the immediate vicinity.

– Switch on hot-air blower and heat thread for roughly 20 to 25 seconds.

– Then grip the bolt head -2- with the vice-grip wrench -1- and unscrew the shear bolt in the direction of the arrow.

– To increase anti-theft protection, the locking device has been attached in such a way that a complete revolution is not possible with the gripping pliers.

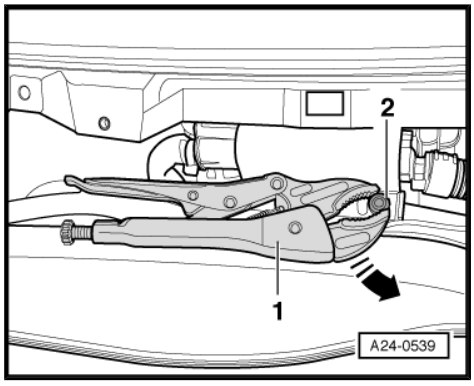

The procedure for the second shear bolt is exactly the same. Take particular care to avoid the control unit connectors in the immediate vicinity.

– The connector locking device can be removed once the second bolt has been removed.

– Release the connector latches and detach the control unit connectors.

– Connect test box -V.A.G 1598/31- to wiring harness connectors. Connect earth clip on test box (cannot be seen in Fig.) to earth. The instructions for performing the individual tests indicate whether or not the engine control unit itself also needs to be connected to the test box.

– Carry out test as described in appropriate repair procedures.

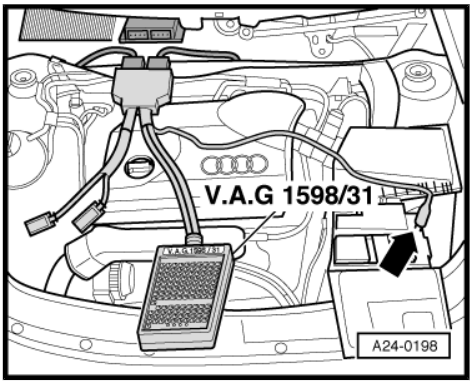

Perform the following operations after re-connecting engine control unit:

Installation is carried out in reverse order to removal, and the sheet-metal housing (locking device) is refitted on the engine control unit. New shear bolts must be used.

– Interrogate and, if necessary, erase fault memory.

1.10 Procedure following interruption of voltage supply

Note!

In the first adaption phase, during the basic setting operation for the engine, slightly irregular idling and slight jolting during driving are possible.

1.10.1 Special tools and workshop equipment required

♦ -VAS 5051- with -VAS 5051/1-

or

♦ -V.A.G 1551- with -V.A.G 1551/3 A-

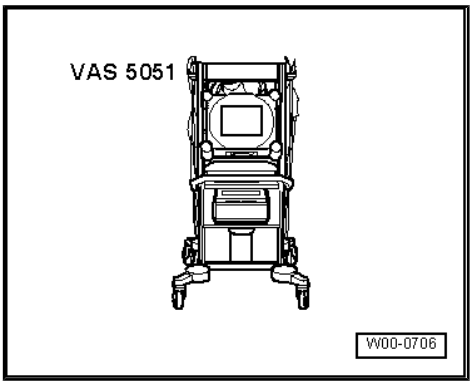

1.10.2 Procedure

Perform the following operations after a voltage interruption:

– Generate readiness code.

– Perform adaption of the exhaust gas recirculation valve.
⇒ page 25

Protected by copyright. Copying for private or commercial purposes, in part or in whole, is not permitted unless authorised by AUDI AG. AUDI AG does not guarantee or accept any liability with respect to the correctness of information in this document. Copyright by AUDI AG.

1.11 Renewing engine control unit

1.11.1 The following procedure applies to engine control units which are not fitted with a locking device.

Note!

For the procedure for engine control units with a locking device, refer to *⇒ page 21*

1.11.2 Removing

– Connect vehicle diagnostic, testing and information system - VAS 5051- and select vehicle system “01 - Engine electronics”. For this purpose, the ignition must be switched on.

The control unit identification and code -2- appears on the display of the vehicle diagnostic, testing and information system - VAS 5051- .

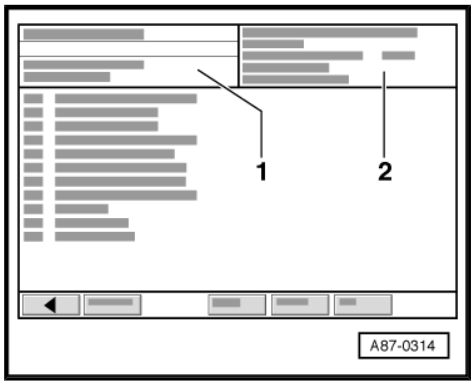

– Always start by displaying control unit identification and printing it out.

– Switch off ignition.

– Unscrew the windscreen wiper arms.

– Remove the plenum chamber cover and lay aside towards the windscreen.

Note!

Always switch off ignition before detaching or attaching connectors of control unit.

– Release the connector latches and detach the control unit connectors.

– Press the retainer tab on the bracket to the side using a screwdriver, then pull out the engine control unit towards the front.

Reproduction or duplication of this document or any part thereof is not permitted unless authorised by AUDI AG. AUDI AG does not guarantee or accept any liability with respect to the correctness of information in this document. Copyright by AUDI AG.

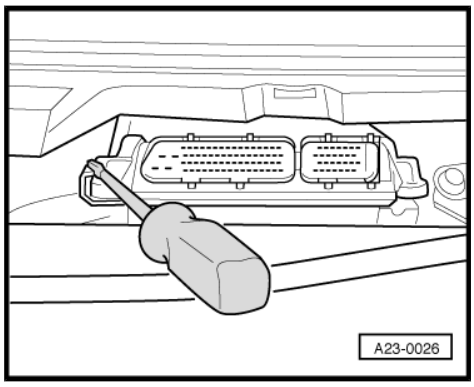

1.11.3 Installing

Installation is carried out in the reverse order; note the following:

– Bend back the bracket retainer tab.

The following steps must be performed after connecting new engine control unit:

– Activate engine control unit in “Guided Fault Finding” under diagnosis option “Replace engine control unit”.

For this step use vehicle diagnostic, testing and information system -VAS 5051- .

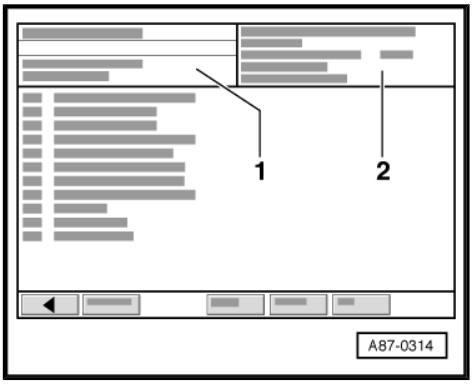

1.11.4 The following procedure applies to engine control units which are fitted with a sheet-metal housing.

1.11.5 Removing

– Connect vehicle diagnostic, testing and information system -VAS 5051- and select vehicle system “01 - Engine electronics”. For this purpose, the ignition must be switched on.

The control unit identification and code -2- appears on the display of the vehicle diagnostic, testing and information system -VAS 5051- .

– Always start by displaying control unit identification and printing it out.

– Switch off ignition.

– Unscrew the windscreen wiper arms.

– Remove the plenum chamber cover and lay aside towards the windscreen.

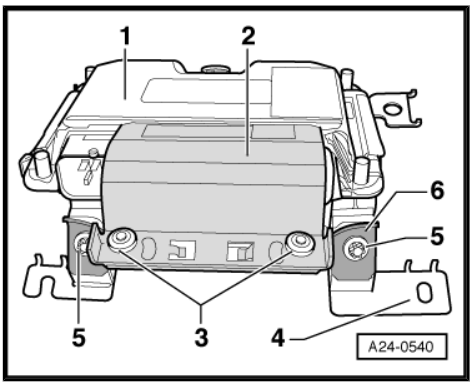

Note!

Item -1- in the illustration shows the engine control unit with sheet-metal housing.

To render access to the connectors on the engine control unit more difficult, the engine control unit -1- is bolted by way of a locking device -2- and shear bolts -3- to a sheet-metal housing -4-.

To make it more difficult to unscrew the shear bolts, their threads have been coated with locking fluid.

Locking device -2- must be separated from sheet-metal housing to unplug connectors from engine control unit (e.g. when connecting up test box or replacing engine control unit). This procedure is described in the following.

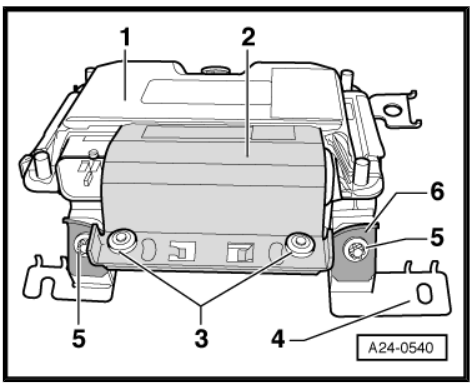

Protected by copyright. Copying for private or commercial purposes, in part or in whole, is not permitted unless authorised by AUDI AG. AUDI AG does not guarantee or accept any liability with respect to the correctness of information in this document. Copyright by AUDI AG.

1.11.6 Tools required:

- Hot air blower -1- (from the wiring harness repair set - VAS 1978-)
- Commercially available vice-grip pliers

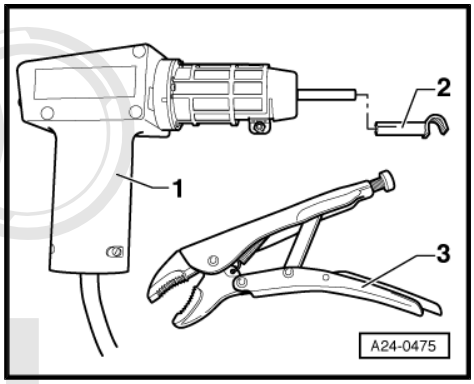

1.11.7 Procedure:

Protected by copyright. Copying for private or commercial purposes, in part or in whole, is not permitted unless authorised by AUDI AG. AUDI AG does not guarantee or accept any liability with respect to the correctness of information in this document. Copyright by AUDI AG.

Caution

The following procedure must be followed exactly to prevent any damage (burning) to wiring, connectors, insulation and control units. Observe operating instructions for hot air blower.

In order to prevent damage to wiring and connectors, steel plates must be used as a shield (items -1- and -2-). This is to prevent excessive heating of the connector housing and the wiring harness.

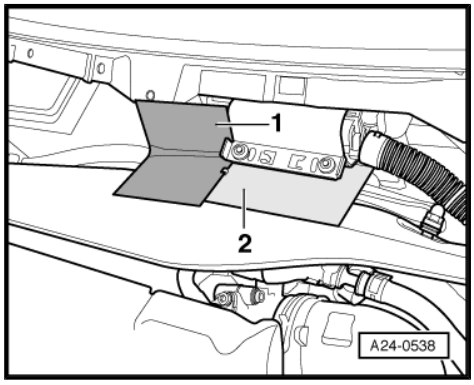

– Select settings on hot air blower as shown in illustration, i.e. set temperature potentiometer -2- to max. heat output and two-stage air flow switch -3- to position 3.

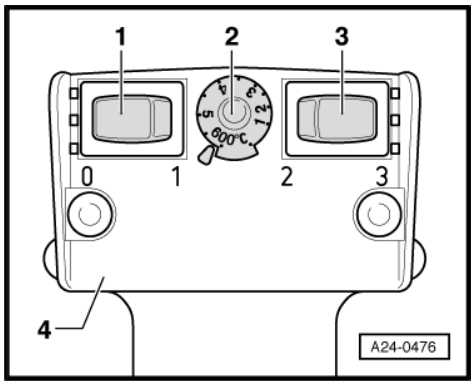

Note!

Bolt of locking device must then be heated using hot-air blower. This step reduces inhibiting action of locking fluid on shear bolt threads and makes it easier to unscrew these bolts.

Caution

Heating the thread of the locking device also greatly increases the temperature of the shear bolts and sheet-metal housing components. Take care to avoid burns. It is also important to ensure that only the thread is heated and none of the surrounding components if at all possible. These should be covered if necessary.

– Direct nozzle -1- of hot air blower at bolt -2- of locking device.

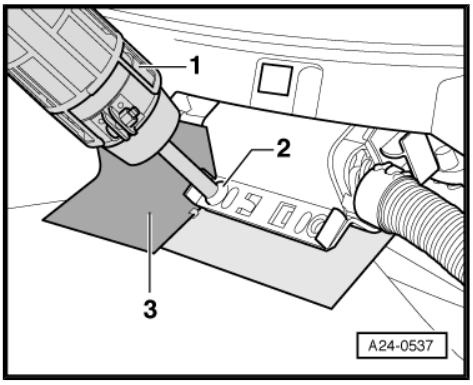

Note!

Take particular care to avoid the control unit connectors in the immediate vicinity.

– Switch on hot-air blower and heat thread for roughly 20 to 25 seconds.

– Then grip the bolt head -2- with the vice-grip wrench -1- and unscrew the shear bolt in the direction of the arrow.

– To increase anti-theft protection, the locking device has been attached in such a way that a complete revolution is not possible with the gripping pliers.

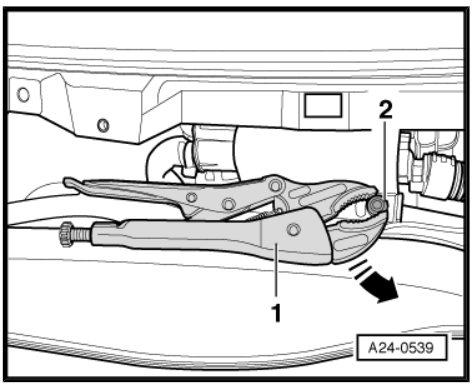

The procedure for the second shear bolt is exactly the same. Take particular care to avoid the control unit connectors in the immediate vicinity.

– After removing the second bolt, you must remove the windscreen wiper system. ⇒ Electrical System; Repair group 92; Windscreen wiper system; Removing and installing windscreen wiper system

Caution

Do not pull the control unit by the locking device -6-, otherwise the control unit will be placed under mechanical stress and may be damaged as a result.

– Now pull out engine control unit using handle.

After removing, unbolt locking device from handle. Do not pull out control unit until locking device has been removed.

In order to make removal of the the engine control unit -1- more difficult (anti-theft protection), the locking device -2- is bolted to the sheet-metal housing with shear bolts -3-.

To make it more difficult to unscrew the shear bolts, their threads have been coated with locking fluid.

– Clamp control unit in a vice.

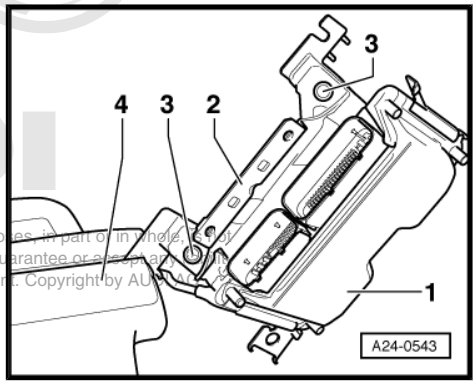

Protected by copyright. Copying for private or commercial purposes, in part or in whole, is not permitted unless authorised by AUDI AG. AUDI AG does not guarantee or assume any liability with respect to the correctness of information in this document. Copyright by AUDI AG.

1.11.8 Tools required:

- Hot air blower -1- (from the wiring harness repair set - VAS 1978-)
- Commercially available vice-grip pliers

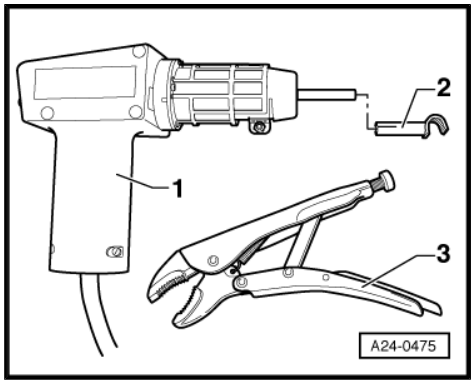

1.11.9 Procedure:

Caution

The following procedure must be followed exactly to prevent any damage (burning) to wiring, connectors, insulation and control units. Observe operating instructions for hot air blower.

– Select settings on hot air blower as shown in illustration, i.e. set temperature potentiometer -2- to max. heat output and two-stage air flow switch -3- to position 3.

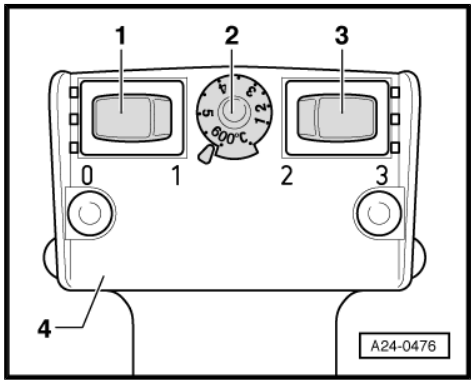

Note!

Bolt of locking device must then be heated using hot-air blower. This step reduces inhibiting action of locking fluid on shear bolt threads and makes it easier to unscrew these bolts.

Caution

Heating the thread of the locking device also greatly increases the temperature of the shear bolts and sheet-metal housing components. Take care to avoid burns. It is also important to ensure that only the thread is heated and none of the surrounding components if at all possible. These should be covered if necessary.

– Direct nozzle -1- of hot air blower at bolt -2- of locking device.
– Switch on hot-air blower and heat thread for roughly 20 to 25 seconds.

Protected by copyright. Copying for private or commercial purposes, in part or in whole, is not permitted unless authorised by AUDI AG. AUDI AG does not guarantee or accept any liability with respect to the correctness of information in this document. Copyright by AUDI AG.

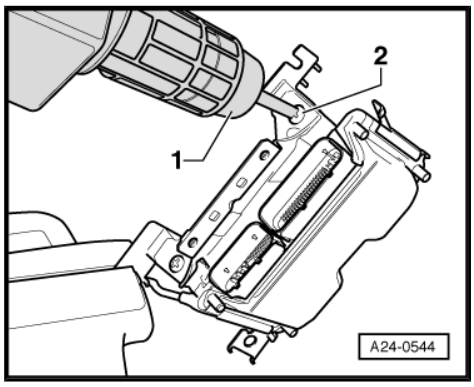

– Then grip the bolt head -2- with the vice-grip wrench -1- and unscrew the shear bolt in the direction of the arrow.

– To increase anti-theft protection, the locking device has been attached in such a way that a complete revolution is not possible with the gripping pliers.

The procedure for the second shear bolt is exactly the same.

Engine control unit can now be separated from sheet-metal housing.

– Take out old engine control unit and install new engine control unit.

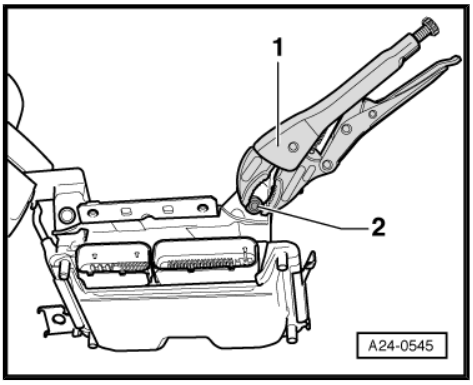

1.11.10 Installing

Installation is carried out in reverse order to removal, and the sheet-metal housing (locking device) is refitted on the engine control unit. New shear bolts must be used.

The following steps must be performed after connecting new engine control unit:

– Activate engine control unit in “Guided Fault Finding” under diagnosis option “Replace engine control unit”.

For this step use vehicle diagnostic, testing and information system -VAS 5051- .

1.12 Performing adaption of exhaust gas recirculation valve

1.12.1 Special tools and workshop equipment required

♦ -VAS 5051- with -VAS 5051/1-

or

♦ -V.A.G 1551- with -V.A.G 1551/3 A-

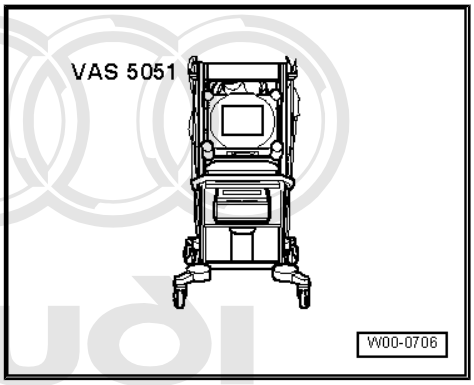

1.12.2 Test sequence

Protected by copyright. Copying for private or commercial purposes, in part or in whole, is not permitted unless authorised by AUDI AG. AUDI AG does not guarantee or accept any liability with respect to the correctness of information in this document. Copyright by AUDI AG.

– Connect vehicle diagnostic, testing and information system -VAS 5051- or fault reader -V.A.G 1551- and select engine electronics control unit by entering “address word ” 01. For this purpose, the ignition must be switched on.

Indicated on display:

```
Rapid data transfer HELP
Select function XX
```

– Enter “04” for the function “Start basic setting” and confirm entry with the Q key.

Indicated on display:

```
Basic setting Q
Enter display group number XXX
```

– Enter “074” for “Display group number 074” and confirm entry with the Q key.

– Check specification for exhaust gas recirculation valve in display zone 4.

	Display zones			
	1	2	3	4
Display group 074: Adaption of exhaust gas recirculation valve				
Display	x.x V	x.x V	xxx %	---
Readout	Zero position	Max. stop	Duty cycle	Adaption status
Range			0...100 %	ADP running ADP OK ADP ERROR
Specification	0.3...1.2 V	3.0...4.8 V	0...100 %	ADP OK
Note:	If the specification is not attained, check the exhaust gas recirculation valve for dirt and foreign bodies.			If the specified value is not attained: Check exhaust recirculation valve⇒ Rep. Gr. 26 ; 4-cylinder Engine (2-valve), Mechanical Components ⇒

Note!

The abbreviation “ADP” in display zone 4 stands for “Adaption”.

Protected by copyright. Copying for private or commercial purposes, in part or in whole, is not permitted unless authorised by AUDI AG. AUDI AG does not guarantee or accept any liability with respect to the correctness of information in this document. Copyright by AUDI AG.

1.13 Checking idling speed

1.13.1 Special tools and workshop equipment required

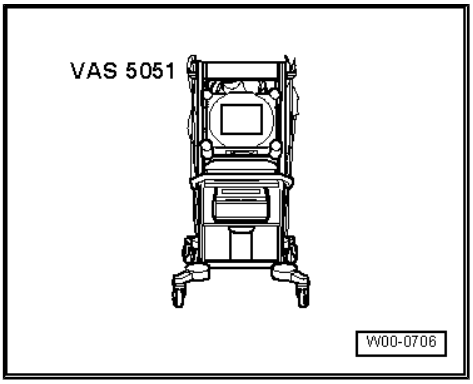

- -VAS 5051- with -VAS 5051/1-

or

- -V.A.G 1551- with -V.A.G 1551/3 A-

Note!

- *No leaks in exhaust system*
- *Coolant temperature at least 80 °C.*
- *Electrical consumers switched off (radiator fan must not run during the test).*
- *Air conditioner switched off.*
- *Pressure gauge not connected.*
- *Vehicles with automatic gearbox: selector lever in position P or N.*

Protected by copyright. Copying for private or commercial purposes, in part or in whole, is not permitted unless authorised by AUDI AG. AUDI AG does not warrant or accept any liability with respect to the correctness of information in this document. Copyright by AUDI AG.

Note!

- *The idling speed cannot be adjusted.*
- *The idling speed is tested during the basic setting of the engine.*
- *During basic setting, the solenoid valve for the activated charcoal filter (valve -N80) is closed and the air conditioner compressor is switched off.*

1.13.2 Test sequence

– Interrogate fault memory. The fault memory must be clear. If necessary, rectify any faults and erase the fault memory. Switch off the engine, then start up again. Perform road test and interrogate the fault memory again to ensure it is clear.

– Leave engine idling.

Caution

The electric radiator fan should not be running.

Indicated on display:

```
Rapid data transfer HELP
Select function XX
```

– Enter “04” for the function “Start basic setting” and confirm entry with the Q key.

Indicated on display:

```
Initiate basic setting  Q
Enter display group number XXX
```

– Enter “056” for “Display group number 056” and confirm entry with the Q key.

Indicated on display:

```
System in basic setting 56        ->
        1       2       3       4
```

– Check whether the engine speed in display zone 1 (actual speed) is within the permitted tolerance range.

	Display zones			
	1	2	3	4
Display group 056: Idling speed stabilisation with engine idling at normal operating temperature				
Display	xxx rpm	xxx rpm	x.x %	X X X X X
Readout	Engine speed (actual)	Engine speed (specified)	Idling speed control Torque change	Operating states
Specification	Manual gearbox: 670..760 rpm Autom. gearbox: 800...860 rpm	A theoretical speed calculated by the engine control unit is displayed.	x.x %	0 0 0 0 0
Note:	If specified value not attained ⇒ page 28			Relevance of figures ⇒ page 29

Protected by copyright. Copying for private or commercial purposes, in part or in whole, is not permitted unless authorised by AUDI AG. AUDI AG does not guarantee or accept any liability with respect to the correctness of information in this document. Copyright by AUDI AG.

Note!

- *The engine speed in display zone 1 (actual speed) is the actual engine speed.*
- *The engine speed in display zone 2 (specified speed) is a theoretical value calculated by the engine control unit.*
- *During idling, the engine control unit always tries to adapt the actual engine speed to the specified engine speed.*
- *This means that during idling the actual engine speed must always approximate to the specified engine speed.*
- *Display zones 3 and 4 are there for information but are irrelevant to the control of the engine idling speed.*

If specification is attained:

– Press the ⇥ key.

Indicated on display (function selection):

```
Rapid data transfer HELP
Select function XX
```

If specification is not attained:

– Interrogate fault memory again .

– If fault memory has been erased, generate readiness code again.

1.13.3 If the idling speed is too high or too low and there are no faults recorded in the fault memory, carry out the following tests marked with a dot:

- Check for unmetered air in the intake system ⇒ Page ⇒ page 48 .
- Check throttle valve control unit ⇒ page 85 .
- Check for solenoid valve for activated charcoal filter constantly open ⇒ page 80 .
- Perform adaption of throttle valve control unit ⇒ page 86 .
- Perform adaption of exhaust gas recirculation valve ⇒ page 25 .

1.13.4 Significance of 5-digit readout of display group 056, display zone 4:

x	x	x	x	x	Display zone 4
				0	Air conditioner compressor 0 = air conditioner compressor off 1 = air conditioner compressor on
			0		Gear engaged 0 = Selector lever set to P or N 1 = Selector lever set to 2/3/4/D/R
		0			Air conditioner 0 = Air conditioner off 1 = Air conditioner on
	0				Display always 0
0					Power steering pressure 0 = No signal from power steering pressure switch 1 = Signal from power steering pressure switch (full steering lock, fast steering movement)

Protected by copyright. Copying for private or commercial purposes, in part or in whole, is not permitted unless authorised by AUDI AG. AUDI AG does not guarantee or accept any liability with respect to the correctness of information in this document. Copyright by AUDI AG.

1.14 Checking system pressure, fuel pressure regulator and residual pressure

1.14.1 Special tools and workshop equipment required

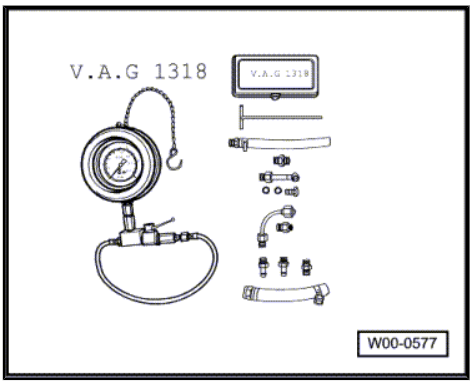

- K-Jetronic pressure gauge -V.A.G 1318-
- Adapter -V.A.G 1318/9-
- Adapter set -V.A.G 1318/17- (2x)

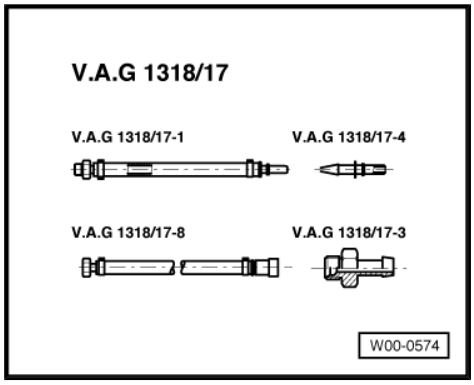

Note!

Fuel pressure is controlled by the fuel pressure regulator in accordance with intake pressure. As a result, the pressure drop at the injectors remains constant for each engine speed and load range.

Note!

- *Fuel pump relay OK; checking* *⇒ page 39* *.*
- *Fuel pump OK, checking: ⇒ Fuel Supply, Petrol Engines; Repair group 20; Fuel supply, front-wheel drive*
- *Fuel filter OK*
- *Battery voltage at least 11 V*

Caution

The fuel system is pressurised. Before opening the system place a cloth around the connection. Then dissipate pressure by carefully unfastening the connection.

1.14.2 Checking system pressure

– Briefly open the fuel tank filler cap (to release pressure).

– Remove engine cover -arrows-.

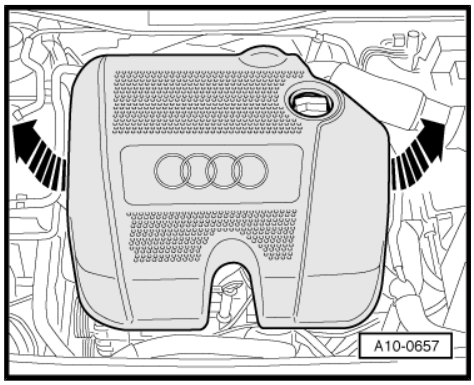

Protected by copyright. Copying for private or commercial purposes, in part or in whole, is not permitted unless authorised by AUDI AG. AUDI AG does not guarantee or accept any liability with respect to the correctness of information in this document. Copyright by AUDI AG.

– Press release catch and disconnect fuel supply hose -1- (with white marking) from fuel supply pipe.

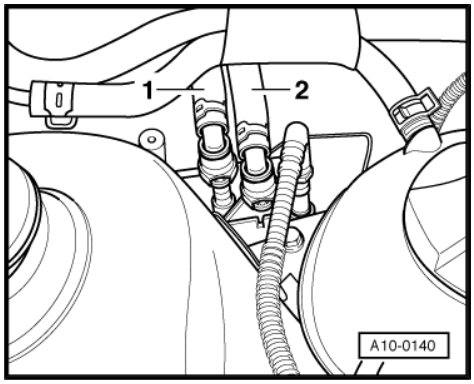

– Connect the K-Jetronic pressure gauge -V.A.G 1318- to fuel supply pipe and fuel rail hose using adapters 1318/9 and 1318/17.
– Open cut-off valve on pressure gauge. The lever points in the direction of flow.
– Start the engine and run at idling speed.
– Measure the fuel pressure.
♦ Specification: approx. 2.5 bar

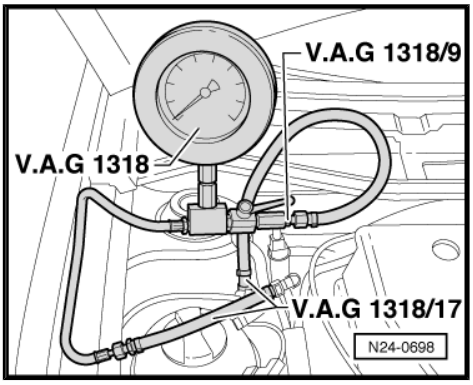

– Disconnect vacuum hose at fuel pressure regulator.
♦ The fuel pressure should rise to approx. 3.0 bar.
– Switch off ignition.
– Check leak-tightness and residual pressure by watching the drop in pressure on the pressure gauge.
♦ After 10 minutes pressure must still be at least 2 bar

If the residual pressure drops below 2 bar:

– Start the engine and run at idling speed.

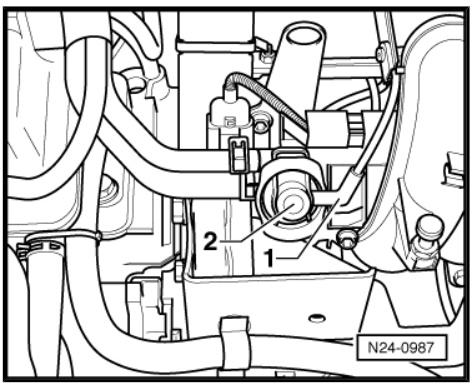

– Allow pressure to build up, then switch off ignition. Simultaneously close the cut-off valve of the K-Jetronic pressure gauge -V.A.G 1318- (lever perpendicular to direction of flow -arrow-).
– Observe pressure drop on pressure gauge.

If the pressure now does not drop:

– Check fuel pump non-return valve

If the pressure drops again:

– Open cut-off valve on pressure gauge. The lever points in the direction of flow.
– Start the engine and run at idling speed.
– Allow pressure to build up, then switch off ignition. At the same time tightly clamp-off the return hose (with blue marking).

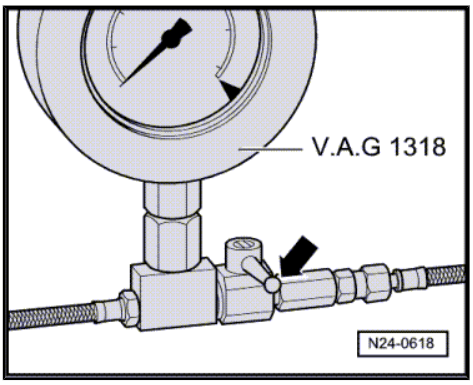

Protected by copyright. Copying for private or commercial purposes, in part or in whole, is not permitted unless authorised by AUDI AG. AUDI AG does not guarantee or accept any liability with respect to the correctness of information in this document. Copyright by AUDI AG.

If the pressure now does not drop:

– Renew the fuel pressure regulator.

If the pressure drops again:

– Check pipe connections, O-rings on fuel rail and injectors for leaks.
– Check pressure gauge for leaks.

Note!

Before removing the pressure gauge, release the fuel pressure by opening the cut-off valve. Hold a container under the connection.

1.15 Checking injectors

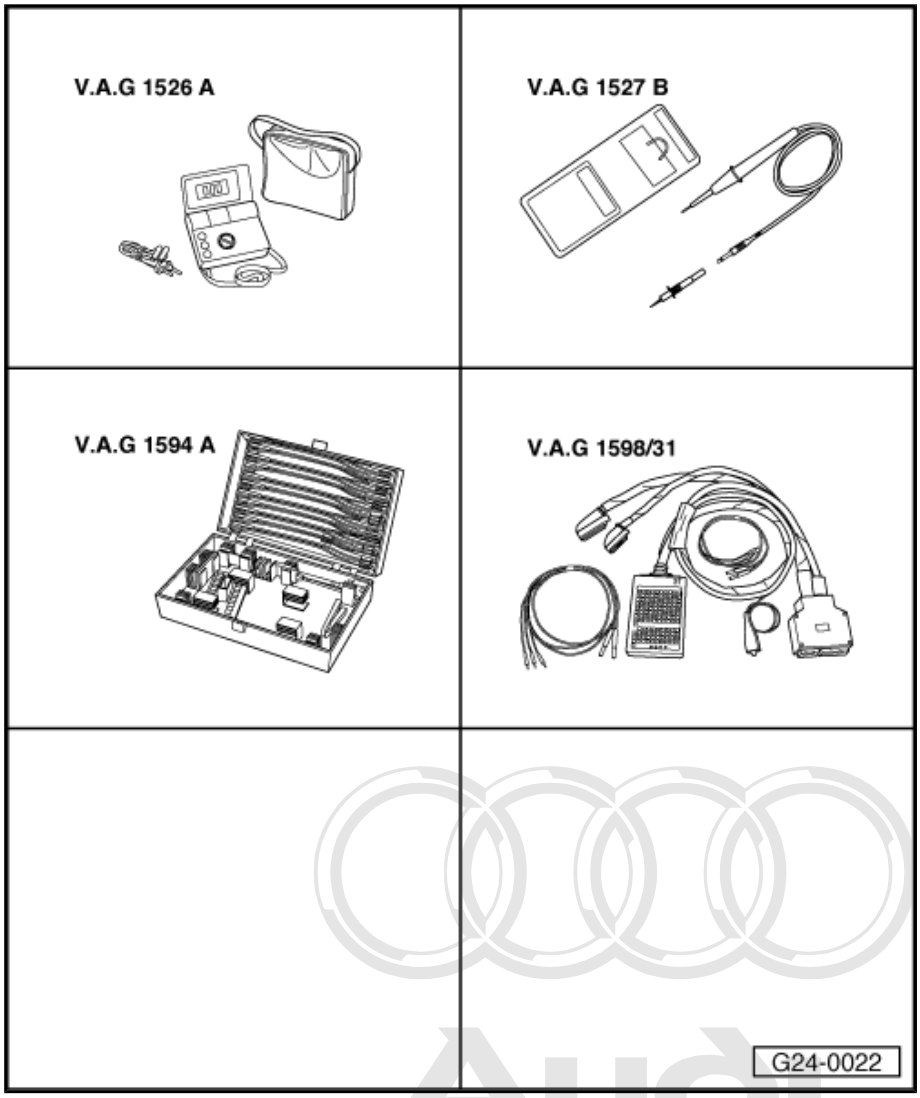

1.15.1 Special tools and workshop equipment required

Protected by copyright. Copying for private or commercial purposes, in part or in whole, is not permitted unless authorised by AUDI AG. AUDI AG does not guarantee or accept any liability with respect to the correctness of information in this document. Copyright by AUDI AG.

- -V.A.G 1526 A-
- -V.A.G 1527 B-
- -V.A.G 1594 A-
- -V.A.G 1598/31-

1.15.2 Checking internal resistance

– Remove engine cover -arrows-.
– Unplug connector on injector to be checked.

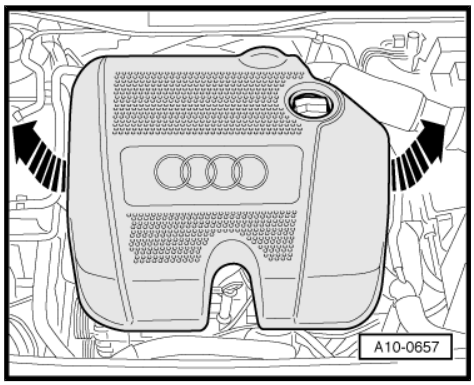

– Connect multimeter to valve to measure resistance.

♦ Specification: 12 ... 17 Ω

If specification is not attained:

– Replace injector ⇒ page 35 .

If specification is attained:

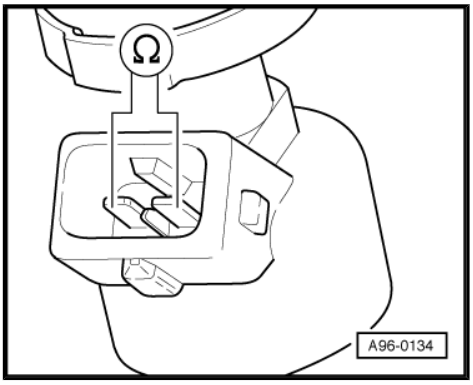

1.15.3 Checking voltage supply

Note!

♦ *Fuel pump relay OK; checking* *⇒ page 39* *.*

♦ *Fuse for injectors OK ⇒ Current flow diagrams, Electrical fault finding and Fitting locations*

♦ *Gear lever in neutral*

– Unplug connector on injector to be checked.

– Connect voltage tester -V.A.G 1527 B- as follows:

Connector Contact	Measure against
1	Engine earth

– Operate the starter briefly (the engine may start).

♦ LED must light

If the LED does not light up:

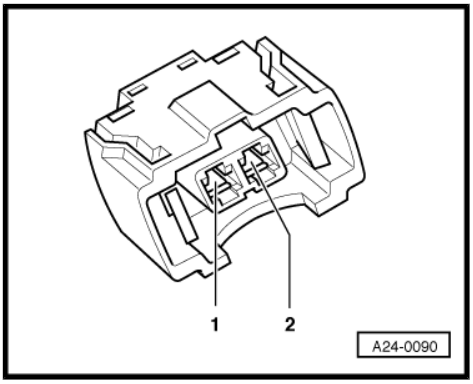

– Check wiring between contact 1 and injector fuse for open circuit: ⇒ Current flow diagrams, Electrical fault finding and Fitting locations

– Rectify open circuit, if necessary.

If the LED lights up:

– Checking injector activation.

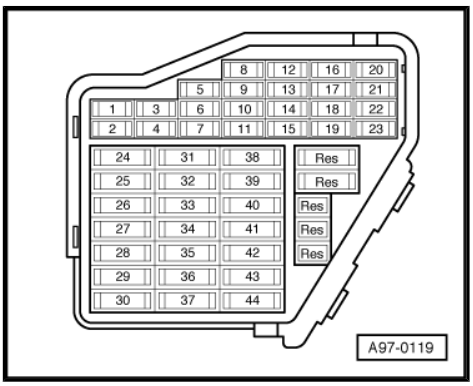

1.15.4 Checking actuation

Protected by copyright. Copying for private or commercial purposes, in part or in whole, is not permitted unless authorised by AUDI AG. AUDI AG does not guarantee or accept any liability with respect to the correctness of information in this document. Copyright by AUDI AG.

Note!

Internal resistance of the valve OK

– Connect voltage tester -V.A.G 1527 B- between contact 2 (signal) and contact 1 (positive).

– Operate the starter briefly (the engine may start).

♦ The LED should flash.

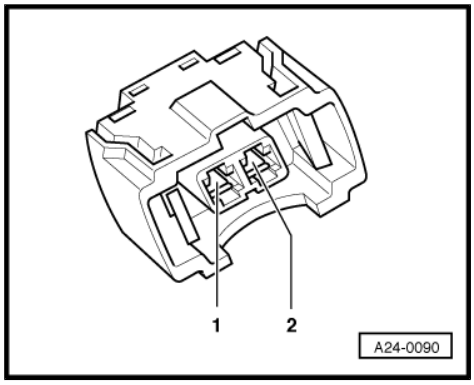

Note!

Voltage testers with a low current draw continue to glow faintly between actuation from the engine control unit (rather than extinguishing completely) and become slightly brighter when actuated.

If the LED does not flash:

– Connect test box -V.A.G 1598/31- to wiring harness for engine control unit. Do not connect engine control unit ⇒ page 16 .

– Check for open circuit and short to positive or earth in the following wiring connections:

Cylinder	Injector connector Contact	Test box - V.A.G 1598/31-
1	2	88
2	2	87
3	2	85
4	2	86

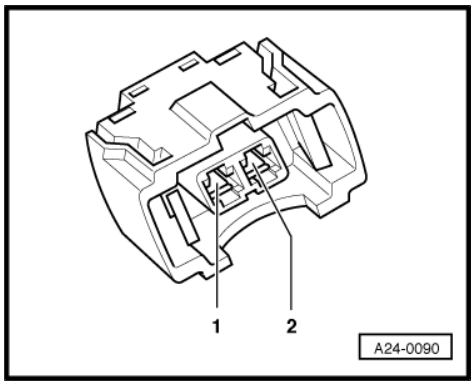

– Rectify any open/short circuit as necessary.

If the wiring is OK:

– Replace engine control unit ⇒ page 20 .

1.16 Dismantling and assembling fuel rail with injectors

Protected by copyright. Copying for private or commercial purposes, in part or in whole, is not permitted unless authorised by AUDI AG. AUDI AG does not guarantee or accept any liability with respect to the correctness of information in this document. Copyright by AUDI AG.

1 - Retaining clip
- ❑ Check for firm attachment

2 - Fuel rail

3 - Injector -N30- ... -N33-
- ❑ Removing and installing ⇒ page 35

4 - O-ring
- ❑ Renew if damaged

5 - Fuel pressure regulator

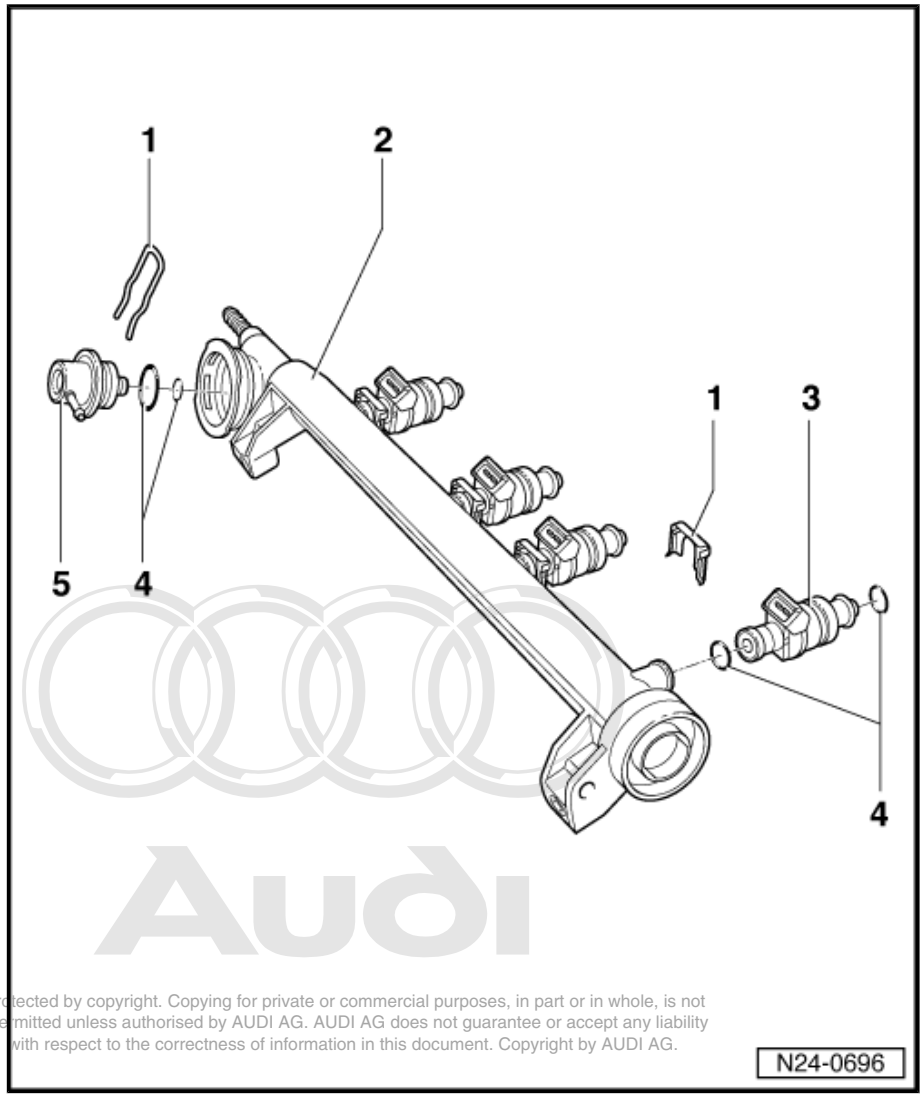

Protected by copyright. Copying for private or commercial purposes, in part or in whole, is not permitted unless authorised by AUDI AG. AUDI AG does not guarantee or accept any liability with respect to the correctness of information in this document. Copyright by AUDI AG.

1.17 Removing and installing injectors

1.17.1 Removing

– Remove engine cover panel -arrows-.

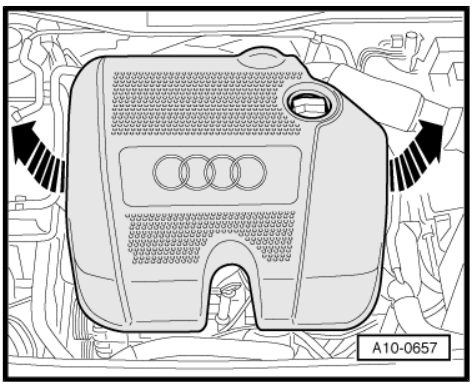

– Disconnect hoses -3- and -4- from secondary air pump.
– Unplug connector -5- for engine speed sender.
– Detach secondary air pump bracket by unscrewing 2 bolts at top -1- and -2- and a nut and bolt at bottom (not shown in illustration).
– Disengage secondary air pump bracket from dipstick guide -arrow- and lay secondary air pump aside.

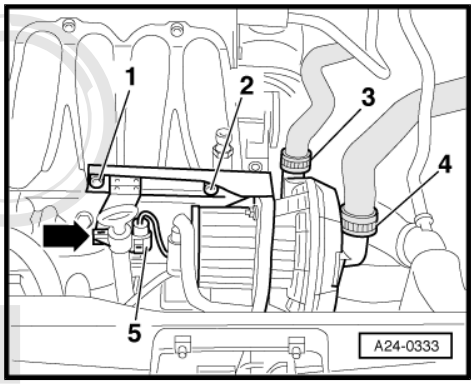

– Disconnect vacuum hose at fuel pressure regulator-1-.
– Disconnect wires/unplug connectors:

Protected by copyright. Copying for private or commercial purposes, in part or in whole, is not permitted unless authorised by AUDI AG. AUDI AG does not guarantee or accept any liability with respect to the correctness of information in this document. Copyright by AUDI AG

2 - Hall sender -G40-
4 - Intake manifold changeover valve -N156-

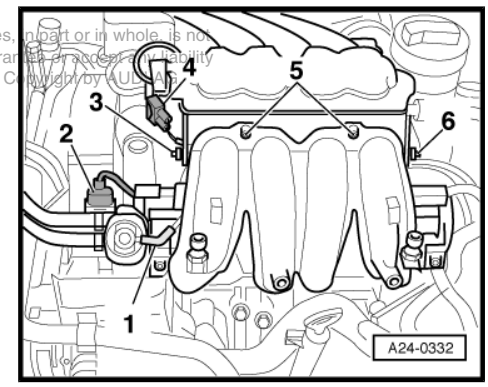

– Unscrew securing bolts -5- connecting upper and lower section of intake manifold.
– Use screwdriver to lever out expanding clips -3- and -6-.
– Unscrew lower section of intake manifold/cylinder head bolts.
– Press side of retaining lugs on lower section of intake manifold carefully and remove it.
– Unplug connectors at all injectors.
– Detach the cable duct.
– Unscrew fuel rail from lower section of intake manifold.

– Pull fuel rail including injectors evenly off the lower section of intake manifold -arrows- and place it on a clean cloth in the engine compartment.

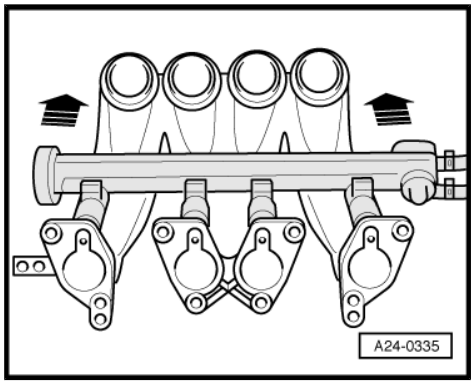

> ⚠ **Caution**
>
> *The fuel system is pressurised. Before opening the system place a cloth around the connection. Then dissipate pressure by carefully unfastening the connection.*

– Detach retaining clip -arrow- and remove injector.

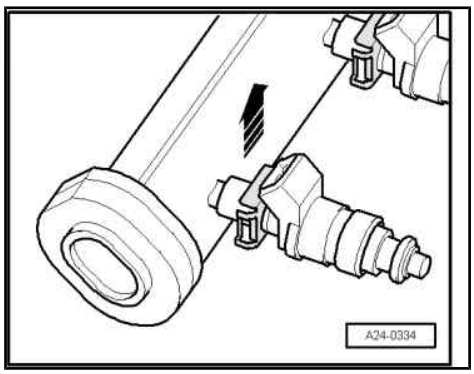

> ℹ **Note!**
>
> *The fuel hoses must be detached before replacing fuel rail.*

1.17.2 Installing

Installation is carried out in the reverse order; note the following:

- Renew the O-rings at all opened connections. (When renewing the front O-ring, ensure that the plastic cap is never removed from the injector head. The O-ring must be pulled off over the plastic cap).
- Lubricate the O-rings with clean engine oil.
- Ensure injectors are installed in correct position.
- Ensure retaining clips are properly connected.
- Position fuel rail with secured injectors on intake manifold and press evenly into place.

1.17.3 Tightening torque

Component	Nm
Fuel rail to intake manifold	10
Lower section of intake manifold to upper section	3
Lower section of intake manifold to cylinder head	15
Secondary air pump to lower section of intake manifold	15

1.18 Checking injection quantity and spray pattern of injectors; checking for leaks

Protected by copyright. Copying for private or commercial purposes, in part or in whole, is not permitted unless authorised by AUDI AG. AUDI AG does not guarantee or accept any liability with respect to the correctness of information in this document. Copyright by AUDI AG.

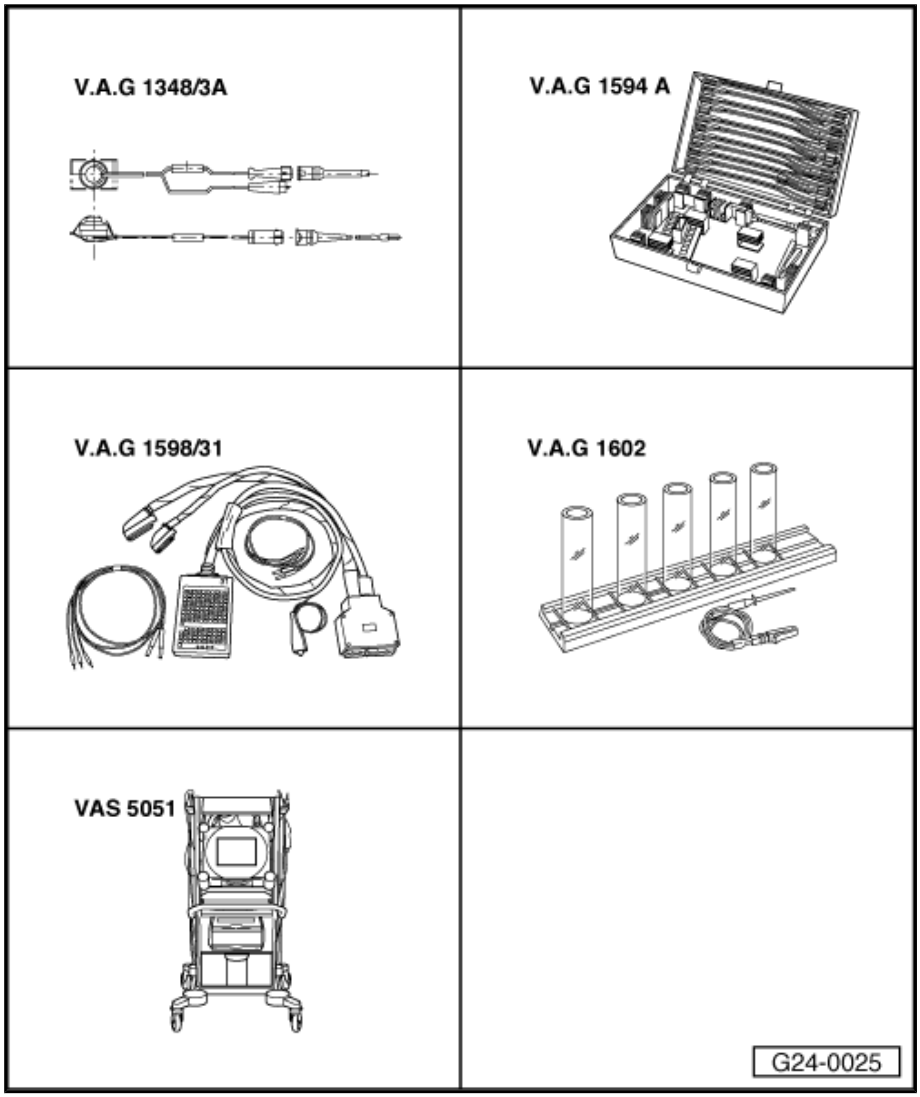

1.18.1 Special tools and workshop equipment required

- -V.A.G 1348/3A-
- -V.A.G 1594 A-
- -V.A.G 1598/31-
- -V.A.G 1602-
- -VAS 5051- with -VAS 5051/1-

or

- -V.A.G 1551- with -V.A.G 1551/3 A-

Note!

Fuel pressure OK; checking ⇒ page 29 .

1.18.2 Test sequence

Protected by copyright. Copying for private or commercial purposes, in part or in whole, is not permitted unless authorised by AUDI AG. AUDI AG does not guarantee or accept any liability with respect to the correctness of information in this document. Copyright by AUDI AG.

– Remove fuel rail with injectors installed from intake manifold.
  Fuel hoses remain connected.

– Connect test box -V.A.G 1598/31- to wiring harness for engine control unit. Do not connect engine control unit ⇒ page 16 .

– Bridge contacts 1 and 80 on the test box using test leads from adapter set -V.A.G 1594 A- . (This creates an earth connection to one side of the fuel pump relay coil.)

1.18.3 Checking for leaks

– Switch on ignition.

Note!

Once the ignition has been switched on the fuel pump runs continuously, even if the engine is not running. The reason for this lies in the fact that the fuel pump relay receives a positive voltage supply via the central electrics when the ignition is switched on. Negative voltage supply for the fuel pump relay is received via the cable bridge in the test box.

Protected by copyright. Copying for private or commercial purposes, in part or in whole, is not permitted unless authorised by AUDI AG. AUDI AG does not guarantee or accept any liability with respect to the correctness of information in this document. Copyright by AUDI AG.

– Check injectors for leaks (visual check). When the fuel pump is running, no more than 1 to 2 drops a minute should escape from any one of the injectors.

– If the fuel loss is greater, switch off the fuel pump (i.e. switch off the ignition) and renew the faulty injector ⇒ page 35 .

1.18.4 Checking injection quantity

– Place the injector which is to be tested into measuring glass of injection quantity tester -V.A.G 1602- .

– Connect one of the injector contacts to engine earth using test lead and crocodile clamp from -V.A.G 1594 A- .

– Connect second injector contact to positive using remote control -V.A.G 1348/3A- , adapter lead -V.A.G 1348/3-2- and auxiliary lead.

– Switch on ignition.

♦ The fuel pump should run.

– Activate remote control -V.A.G 1348/3A- for 30 seconds.

– Perform measurements on all injectors.

– Once all four injectors have been actuated, place measuring glasses on a level surface.

♦ Specification: 85...105 ml for each injector

– If the measured value for one or more of the injectors is outside the tolerance range, switch off the fuel pump (switch off ignition) and replace the defective injector.

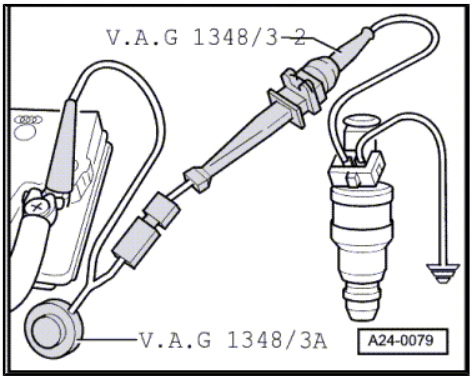

Note!

When checking the injection quantity, also check the spray pattern. The spray pattern should be the same for all injectors.

– Install injectors together with fuel rail ⇒ page 36 .

1.19 Checking fuel pump relay -J17- and actuation

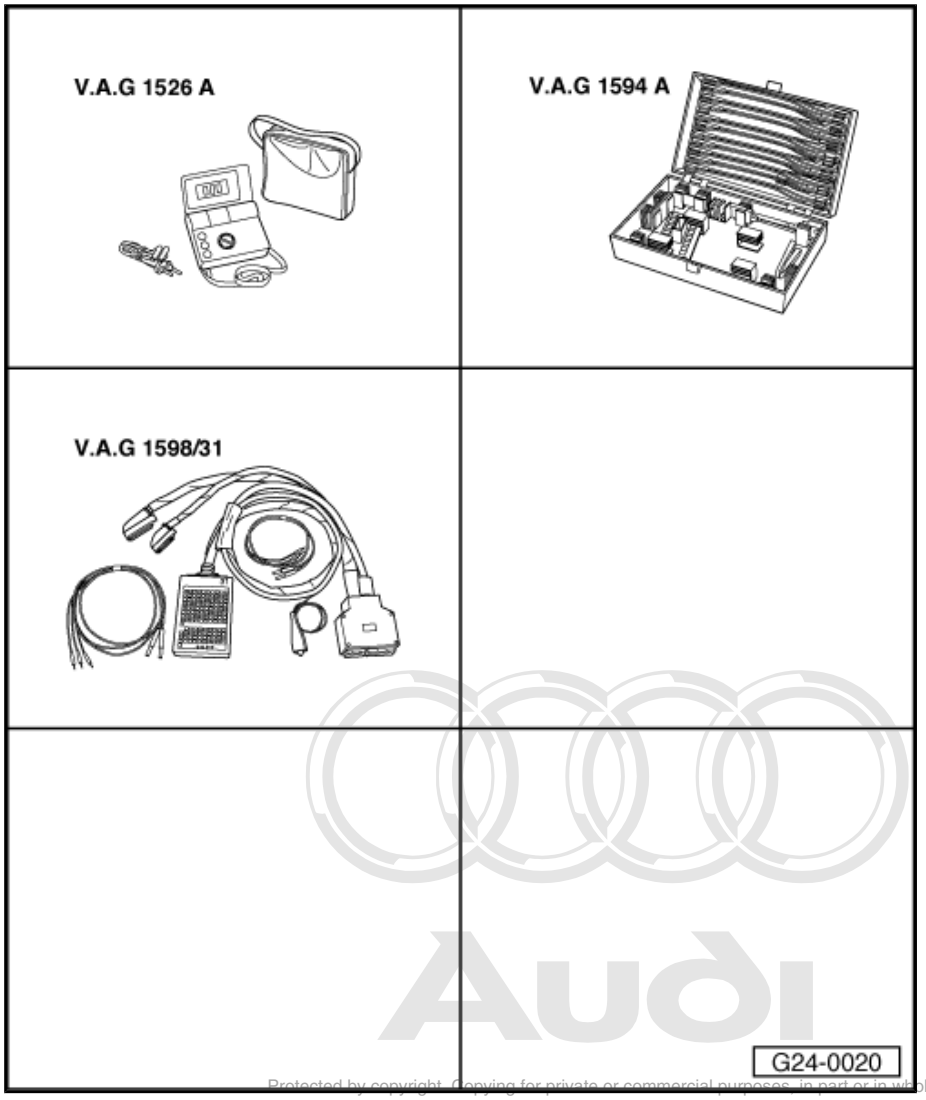

Protected by copyright. Copying for private or commercial purposes, in part or in whole, is not permitted unless authorised by AUDI AG. AUDI AG does not guarantee or accept any liability with respect to the correctness of information in this document. Copyright by AUDI AG.

1.19.1 Special tools and workshop equipment required

- -V.A.G 1526 A-
- -V.A.G 1594 A-
- -V.A.G 1598/31-

The fuel pump and some of the injection system components are powered via the fuel pump relay -J17- .

The fuel pump relay -J17- will only close if the engine is turning over. i.e. the relay is only connected to earth (via the engine control unit) when engine speed pulses are detected in the engine control unit.

Note!

The fuel pump relay is located in the micro central electrics, on the left in the driver's footwell, position 4.

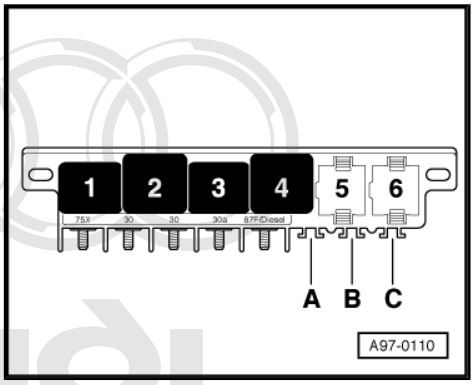

Note!

Battery voltage at least 11 V

1.19.2 Functional check of fuel pump relay

Protected by copyright. Copying for private or commercial purposes, in part or in whole, is not permitted unless authorised by AUDI AG. AUDI AG does not guarantee or accept any liability with respect to the correctness of information in this document. Copyright by AUDI AG.

– Remove the driver's storage compartment; ⇒ Body Repairs; Rep. Gr. ; Interior; Repair group 68; Storage compartments; covers; Removing driver's storage compartment

– Connect vehicle diagnostic, testing and information system -VAS 5051- or fault reader -V.A.G 1551- and select engine electronics control unit by entering “address word ” 01. For this purpose, the ignition must be switched on.

– Initiate the final control diagnosis and actuate the fuel pump relay.

♦ Fuel pump relay (in the central electrics, passenger's footwell on left, position 4) should click and fuel pump should start up periodically.

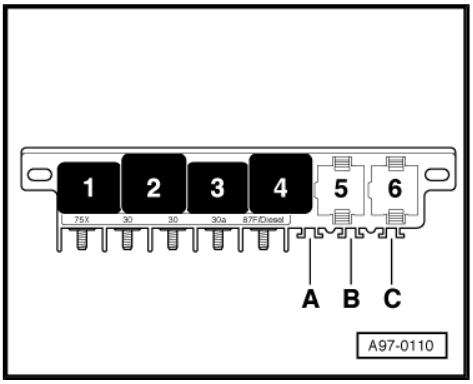

A - If the relay does not respond:

– Check voltage supply to fuel pump relay ⇒ page 41 .

– Check actuation of fuel pump relay ⇒ page 41 .

B - If relay responds but fuel pump does not run:

– Check the voltage supply to fuel pump and other components (via fuel pump relay) ⇒ page 43 .

1.19.3 Checking voltage supply of fuel pump relay

– Connect the multimeter to contact 17 of relay socket and earth to measure voltage.

– Switch on ignition.

♦ Specification: approx. battery voltage

If specification is not attained:

– Replace central electrics.

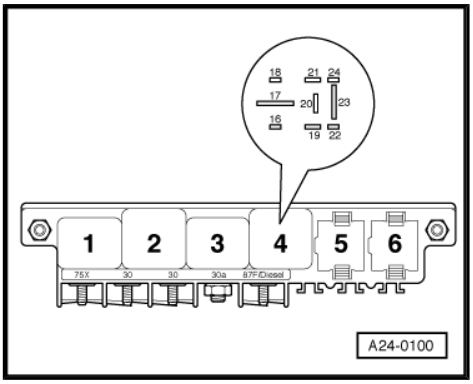

1.19.4 Checking actuation of fuel pump relay

– Switch off ignition.

– Connect test box -V.A.G 1598/31- to wiring harness for engine control unit. Do not connect engine control unit ⇒ page 16 .

– Use leads from adapter set -V.A.G 1594 A- to bridge contacts 1 and 80 at test box.

– Switch on ignition.

♦ Fuel pump relay (on micro central electrics in driver's footwell on the left, position 4) must respond.

If the relay responds now, but not during final control diagnosis:

– Replace engine control unit ⇒ page 20 .

If the relay does not respond:

– Disconnect cable jumper.

– Switch off ignition.

– Detach fuel pump relay.

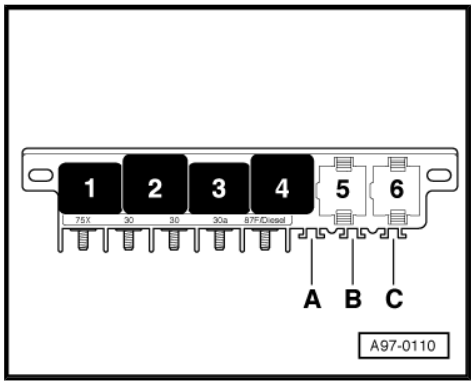

– Connect the multimeter to contact 19 of relay socket and earth to measure voltage.

– Switch on ignition.

♦ Specification: approx. battery voltage

If specification is not attained:

– Check the wiring connections. ⇒ "Current Flow Diagrams, Electrical Fault Finding and Fitting Locations"

If specification is attained:

– Switch off ignition.

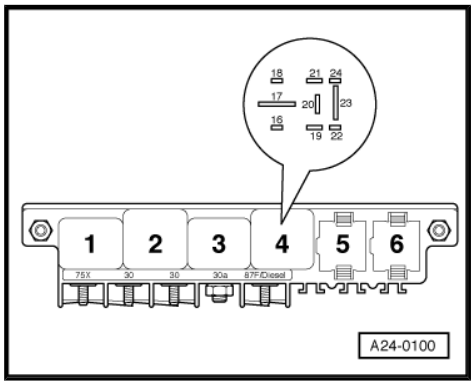

– Check for open circuit and short to positive or earth in the following wiring connections:

Micro central electrics in driver's footwell on left, position contact	Test box -V.A.G 1598/31- Socket
16	80

– Rectify any open/short circuit as necessary. ⇒ Current flow diagrams, Electrical fault finding and Fitting locations

If no fault is found:

– Replace the fuel pump relay -J17- .

– Reconnect engine control unit.

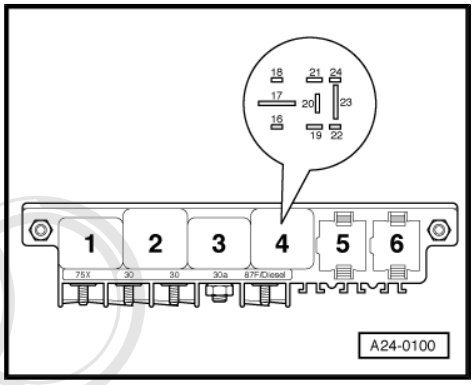

Protected by copyright. Copying for private or commercial purposes, in part or in whole, is not permitted unless authorised by AUDI AG. AUDI AG does not guarantee or accept any liability with respect to the correctness of information in this document. Copyright by AUDI AG.

1.19.5 Checking voltage supply of fuel pump and components

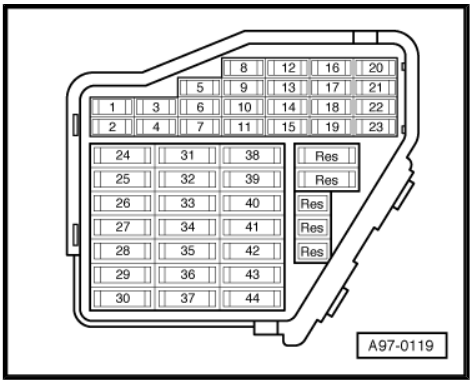

- Disconnect fuses S228, S232, S234 and S243 (positions 28, 32, 34 and 43) in fuse holder.
- Initiate final control diagnosis and actuate the solenoid valve 1 for active charcoal filter -N80- .
- To measure the voltage, connect multimeter to earth and to one of the contacts of the following fuses in the fuse holder.

Fuse	Specified value at one of the contacts
S228	approx. battery voltage
S232	approx. battery voltage
S234	approx. battery voltage
S243	approx. battery voltage

If the specifications are not attained:

- Repeat the test at the other contact of the fuse base.

If the specifications are still not attained:

- Check the wiring connections. ⇒ "Current Flow Diagrams, Electrical Fault Finding and Fitting Locations"

If no fault is found:

- Replace the fuel pump relay -J17- .
- Reinsert the fuses.

1.20 Checking air mass meter -G70-

Protected by copyright. Copying for private or commercial purposes, in part or in whole, is not permitted unless authorised by AUDI AG. AUDI AG does not guarantee or accept any liability with respect to the correctness of information in this document. Copyright by AUDI AG.

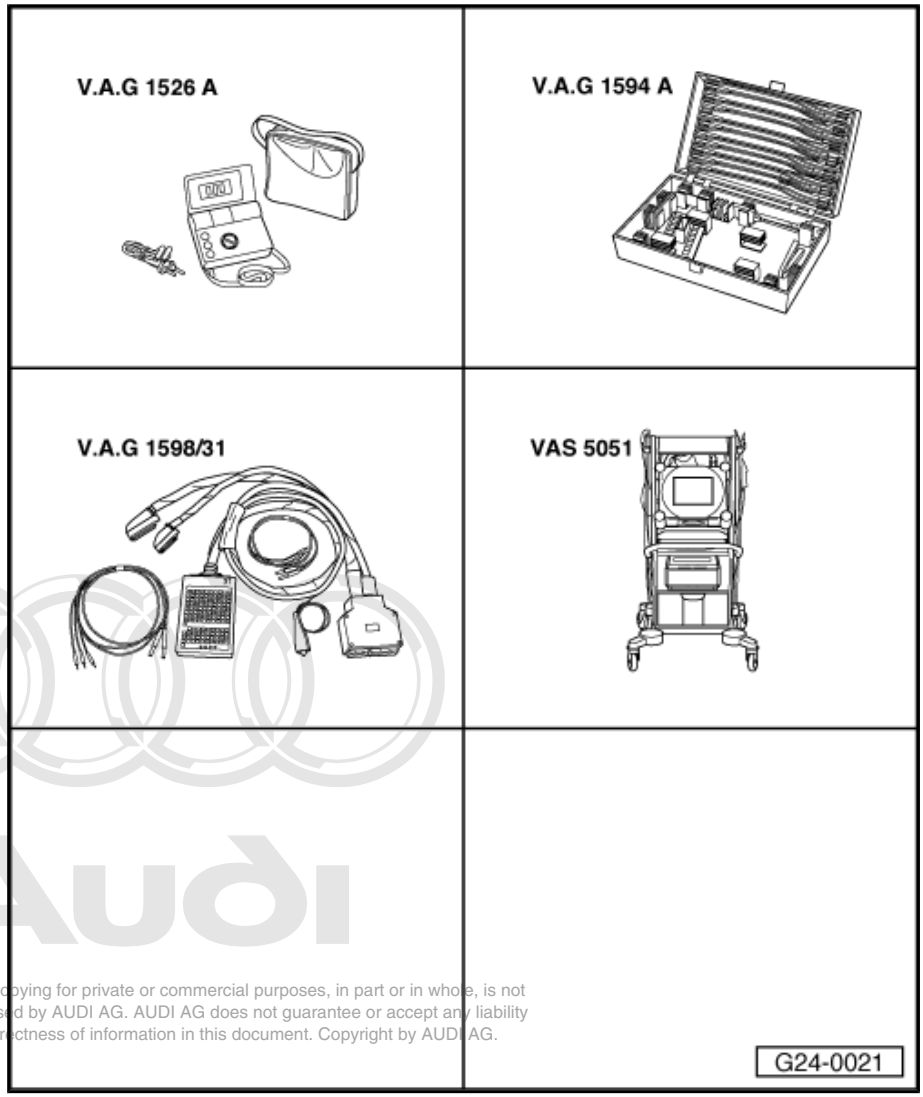

Protected by copyright. Copying for private or commercial purposes, in part or in whole, is not permitted unless authorised by AUDI AG. AUDI AG does not guarantee or accept any liability with respect to the correctness of information in this document. Copyright by AUDI AG.

Note!

Also installed in the air mass meter is the intake air temperature sender -G42- . Sender -G42- is therefore no longer fitted as a separate component on the engine.

1.20.1 Special tools and workshop equipment required

- -V.A.G 1526 A-
- -V.A.G 1594 A-
- -V.A.G 1598/31-
- -VAS 5051- with -VAS 5051/1-

or

- -V.A.G 1551- with -V.A.G 1551/3 A-

Note!

- *Coolant temperature at least 80 °C.*
- *Electrical consumers switched off (radiator fan must not run during the test).*
- *Air conditioner switched off.*
- *Vehicles with automatic gearbox: selector lever in position P or N.*
- *Fuse for air mass meter OK ⇒ Current flow diagrams, Electrical fault finding and Fitting locations*

Protected by copyright. Copying for private or commercial purposes, in part or in whole, is not permitted unless authorised by AUDI AG. AUDI AG does not guarantee or accept any liability with respect to the correctness of information in this document. Copyright by AUDI AG.

1.20.2 Function test

– Connect vehicle diagnostic, testing and information system - VAS 5051- or fault reader -V.A.G 1551- and select engine electronics control unit by entering “address word ” 01. For this purpose, the engine must be running at idling speed.

Indicated on display:

```
Rapid data transfer HELP
Select function XX
```

– Enter “04” for the function “Start basic setting” and confirm entry with the Q key.

Indicated on display:

```
Initiate basic setting  Q
Enter display group number XXX
```

– Enter “002” for “Display group number 002” and confirm entry with Q key.

Indicated on display:

```
System in basic setting 2        ->
        1         2         3         4
```

– Check specified values for recorded load.

	Display zones			
	1	2	3	4
Display Group 002: Intake air mass at idling speed with engine at normal operating temperature				
Display	xxx rpm	xxx %	xx.x ms	xxx.x g/s
Readout	Engine speed	Load	Average injection period	Air mass
Specification	Manual gearbox: 670...760 rpm Autom. gearbox: 800...860 rpm	15...35 %	2.0...4.0 ms	2.0...4.5 g/s
Note:	---	---	If the specification is not attained: Evaluation of display zone 3 ⇒ page 46	If the specification is not attained: Evaluation of display zone 4 ⇒ page 46

If specification is attained:

– Press the → key.

Indicated on display (function selection):

```
Rapid data transfer HELP
Select function XX
```

1.20.3 Evaluation of display group 002

Display zone: 3	Possible causes of fault	Fault remedy
Less than 2.0 ms	♦ Lower values can only occur when vehicle is on overrun	
Greater than 4.0 ms	♦ Engine load from ancillaries	– Eliminate load (air conditioner/ power steering/alternator)
	♦ Poor idling (not running on all cylinders)	– Check spark plugs – Check injectors ⇒ page 31
	♦ Throttle valve control unit -J338- defective	– Check throttle valve control unit ⇒ page 85

1.20.4 Evaluation of display group 002

Display zone: 4	Possible causes of fault	Fault remedy
Less than 2.0 g/s	♦ Large quantity of unmetered air between intake manifold and air mass meter ♦ Power supply of air mass meter/wiring to engine control unit	– Check intake system for leaks (unmetered air) ⇒ page 48 . – Check voltage supply and/or wiring ⇒ page 46
Greater than 4.5 g/s	♦ Engine load from ancillaries	– Eliminate load (air conditioner/ power steering/alternator)
	♦ Power supply of air mass meter/wiring to engine control unit	– Check voltage supply and/or wiring ⇒ page 46

Protected by copyright. Copying for private or commercial purposes, in part or in whole, is not permitted unless authorised by AUDI AG. AUDI AG does not guarantee or accept any liability with respect to the correctness of information in this document. Copyright by AUDI AG.

1.20.5 Checking voltage supply to air mass meter

– Unplug 4-pin connector -1- from air mass meter -2-.

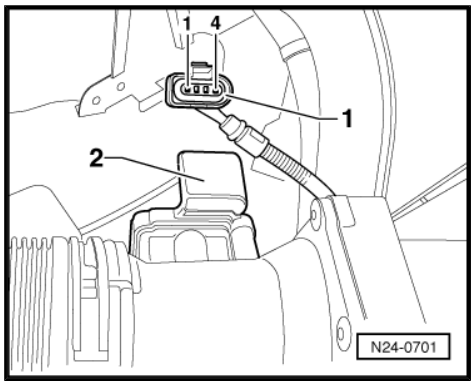

– Connect up multimeter as follows to measure voltage.

Connector, contact	Measure against
3	Engine earth

– Start engine and run at idling speed.

♦ Specification: approx. battery voltage

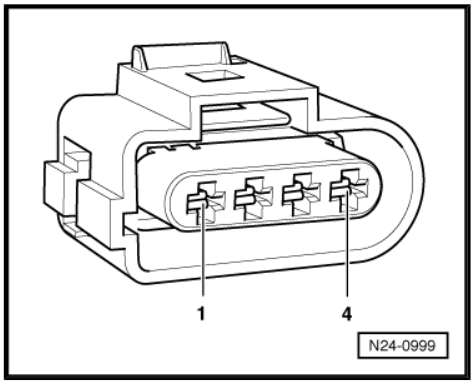

Note!

Voltage supply to air mass meter is from fuel pump relay.

– Switch off ignition.

If specification is not attained:

– Check the wiring from contact 3 on the connector via the fuse to the fuel pump relay for open circuit or short to earth:⇒ Current flow diagrams, Electrical fault finding and Fitting locations

– Rectify any open/short circuit as necessary.

If fuse and wiring are OK, but no voltage is present:

– Check the fuel pump relay ⇒ page 39 .

If voltage supply is OK:

– Check the wiring ⇒ page 47 .

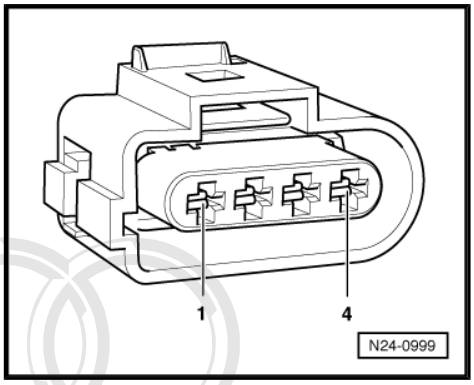

1.20.6 Checking wiring to air mass meter.

Note!

The signal wire is also checked during the wiring check.

– Connect test box -V.A.G 1598/31- to wiring harness for engine control unit. Do not connect engine control unit ⇒ page 16 .

Protected by Copyright. Copying for private or commercial purposes, in part or in whole, is not permitted unless authorised by AUDI AG. AUDI AG does not guarantee or accept any liability with respect to the correctness of information in this document. Copyright by AUDI AG.

– Check for open circuit and short to positive or earth in the following wiring connections:

Connector Contact	Test box -V.A.G 1598/31- Socket
1	10
2	11

– Rectify any open/short circuit as necessary. ⇒ Current flow diagrams, Electrical fault finding and Fitting locations

– Also check all wires for mutual short circuit.

If the wiring is OK:

– Replace the air mass meter -G70- .

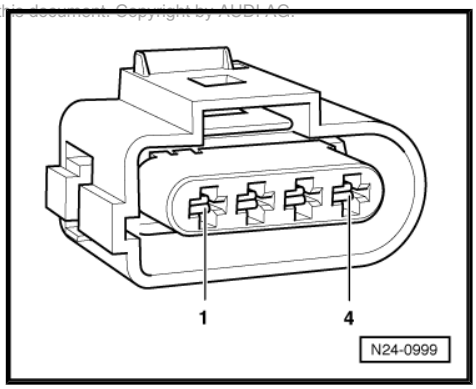

1.21 Checking intake air system for leaks (unmetered air)

1.21.1 Special tools, workshop equipment and other items required

- -VAS 5051- with -VAS 5051/1-

or

- -V.A.G 1551- with -V.A.G 1551/3 A-
- Engine leak detector spray G 001 800 A1

Protected by copyright. Copying for private or commercial purposes, in part or in whole, is not permitted unless authorised by AUDI AG. AUDI AG does not guarantee or accept any liability with respect to the correctness of information in this document. Copyright by AUDI AG.

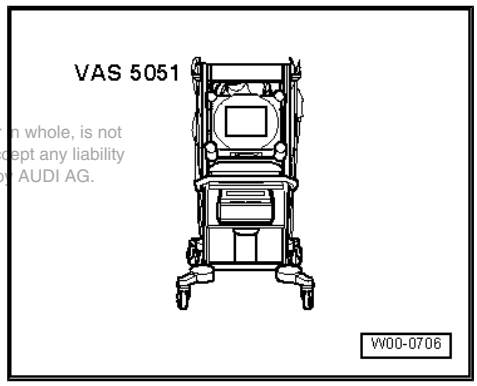

Note!

- *The vacuum in the intake system will cause the leak detector spray to be drawn in with the unmetered air. The leak detector spray reduces the ignitability of the mixture. This leads to a drop in engine speed and to a significant increase of the CO content.*
- *Always observe the safety instructions on the can.*

1.21.2 Test sequence

– Connect vehicle diagnostic, testing and information system -VAS 5051- or fault reader -V.A.G 1551- and select engine electronics control unit by entering “address word ” 01. For this purpose, the engine must be running at idling speed.

Indicated on display:

```
Rapid data transfer HELP
Select function XX
```

– Enter “08” for the function “Read measured value block” and confirm entry with the Q key.

Indicated on display:

```
Reading measured value block Q
Enter display group number XXX
```

– Enter “001” for “Display group number 001” and confirm entry with the Q key.

Indicated on display: (1...4 = display zones)

```
Read measured value block 1
    ->
        1         2         3         4
```

– Note engine speed in display zone 1.

– Systematically spray parts of the intake system with engine leak detector spray.

If engine speed does not change:

– Press the → key.

Indicated on display (function selection):

```
Rapid data transfer HELP
Select function XX
```

If engine speed drops:

– Press the → key.

– Enter “06” to select the function “End output” and confirm entry with the Q key.

– Switch off ignition.

– Check sprayed areas of intake system for leaks and rectify if necessary.

1.21.3 Checking vacuum reservoir in intake manifold for leaks (is used for intake manifold changeover, for example)

– Start the engine and let it run at idling speed for a few minutes. Ensure that the wiring and connection pieces to the -N156- (intake manifold changeover valve) are in order (no leaks, complete).

– Perform intake manifold changeover test, as this enables checking of vacuum reserve in intake manifold for leakage ⇒ page 50 .

Protected by copyright. Copying for private or commercial purposes, in part or in whole, is not permitted unless authorised by AUDI AG. AUDI AG does not guarantee or accept any liability with respect to the correctness of information in this document. Copyright by AUDI AG.

2 Checking intake manifold change-over function

This test should only be carried out if the engine is losing power.

The operation of the intake manifold with changeover function depends on the engine load and engine speed.

2.1 Function test

2.1.1 Special tools and workshop equipment required

- -VAS 5051- with -VAS 5051/1-

or

- -V.A.G 1551- with -V.A.G 1551/3 A-

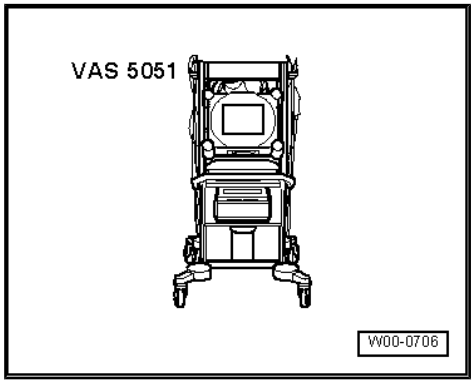

2.1.2 Test sequence

– Run engine at idling speed for 2 or 3 minutes. (During this time a vacuum is built up. It is required to switch the intake manifold).

– Start final control diagnosis and actuate the intake manifold changeover valve.

The vacuum unit for intake manifold changeover must pull and release alternately (until the vacuum in the vacuum reservoir has been used up). This vacuum is sufficient for roughly 4 switching operations with the engine stopped.

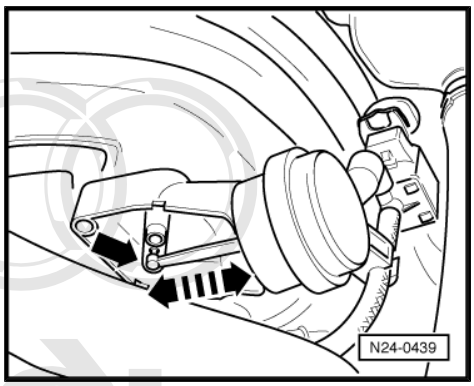

If no switch is made, the following checks should be carried out:

– Check intake manifold changeover valve -N156- (perform final control diagnosis, check valve and actuation if necessary ⇒ page 52 or page ⇒ page 55)

– Check that vacuum hoses are properly connected and free of leaks and obstructions.

– Check vacuum system for leaks ⇒ page 50 .

– Check that changeover mechanism operates freely (move push rod by hand).

2.2 Checking vacuum system for leaks

Protected by copyright. Copying for private or commercial purposes, in part or in whole, is not permitted unless authorised by AUDI AG. AUDI AG does not guarantee or accept any liability with respect to the correctness of information in this document. Copyright by AUDI AG.

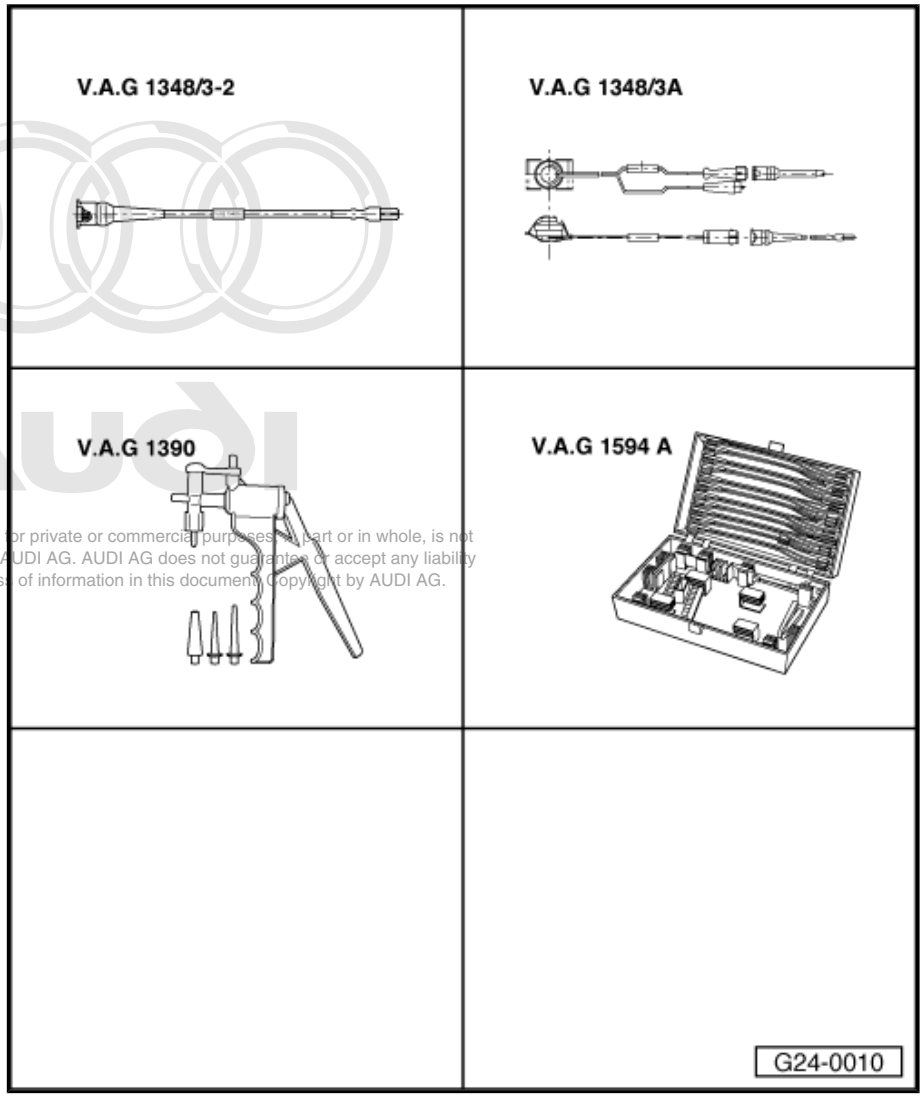

Protected by copyright. Copying for private or commercial purposes, in part or in whole, is not permitted unless authorised by AUDI AG. AUDI AG does not guarantee or accept any liability with respect to the correctness of information in this document. Copyright by AUDI AG.

2.2.1 Special tools and workshop equipment required

- -V.A.G 1348/3-2-
- -V.A.G 1348/3A-
- -V.A.G 1390-
- -V.A.G 1594 A-

2.2.2 Test sequence

– Run engine at idling speed for 2 or 3 minutes. (During this time a vacuum is built up. It is required to switch the intake manifold).

Note!

The vacuum reservoir is integrated in the intake manifold and cannot be replaced separately.

– Switch off ignition.

– Unplug connector from intake manifold changeover valve -N156- .
– Connect one of the contacts on the solenoid valve to engine earth using test leads and crocodile clamp from -V.A.G 1594 A- .
– Connect the other contact on the solenoid valve -N156- to positive using remote control -V.A.G 1348/3A- , adapter lead -V.A.G 1348/3-2- and auxiliary cable.
– Operate remote control -V.A.G 1348/3A- for approx. 2 to 3 minutes; throughout this period the vacuum unit should remain energised.

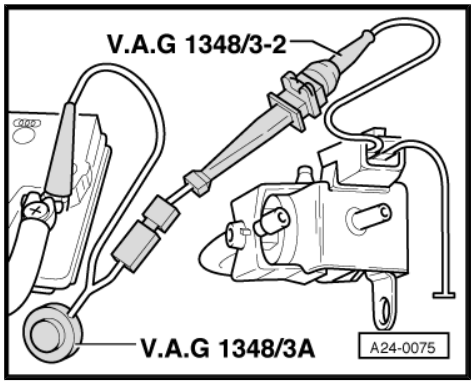

If vacuum unit does not remain energised, check unit as follows:

– Detach vacuum pipes from vacuum unit for intake-manifold changeover.
– Connect hand-held vacuum pump -V.A.G 1390- to vacuum unit.
– Operate hand pump and observe changeover.
– Check vacuum unit for leaks. (The vacuum unit should not return to rest position until the hand pump is vented to atmosphere.)
– If necessary, replace vacuum unit.

Protected by copyright. Copying or distribution of this document is not permitted unless authorised by AUDI AG. AUDI AG does not guarantee or accept any liability with respect to the correctness of information in this document. Copyright by AUDI AG.

– If vacuum unit is not energised, check -N156- for blockage as follows:

– Connect one of the contacts on the solenoid valve -N156- to engine earth using test leads and crocodile clamp from -V.A.G 1594 A- .
– Connect the other contact on the solenoid valve -N156- to positive using remote control -V.A.G 1348/3A- , adapter lead -V.A.G 1348/3-2- and auxiliary cable.
– Operate remote control -V.A.G 1348/3A- .
– Check valve for obstructions (remove vacuum hoses and blow through).
– If necessary, replace intake manifold changeover valve.
– If none of the preceding tests has revealed any faults, check vacuum system for leaks.

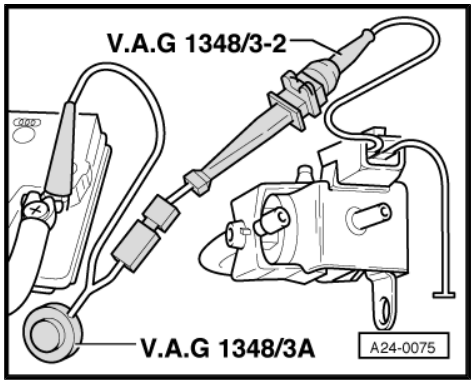

2.3 Checking intake manifold changeover valve -N156-

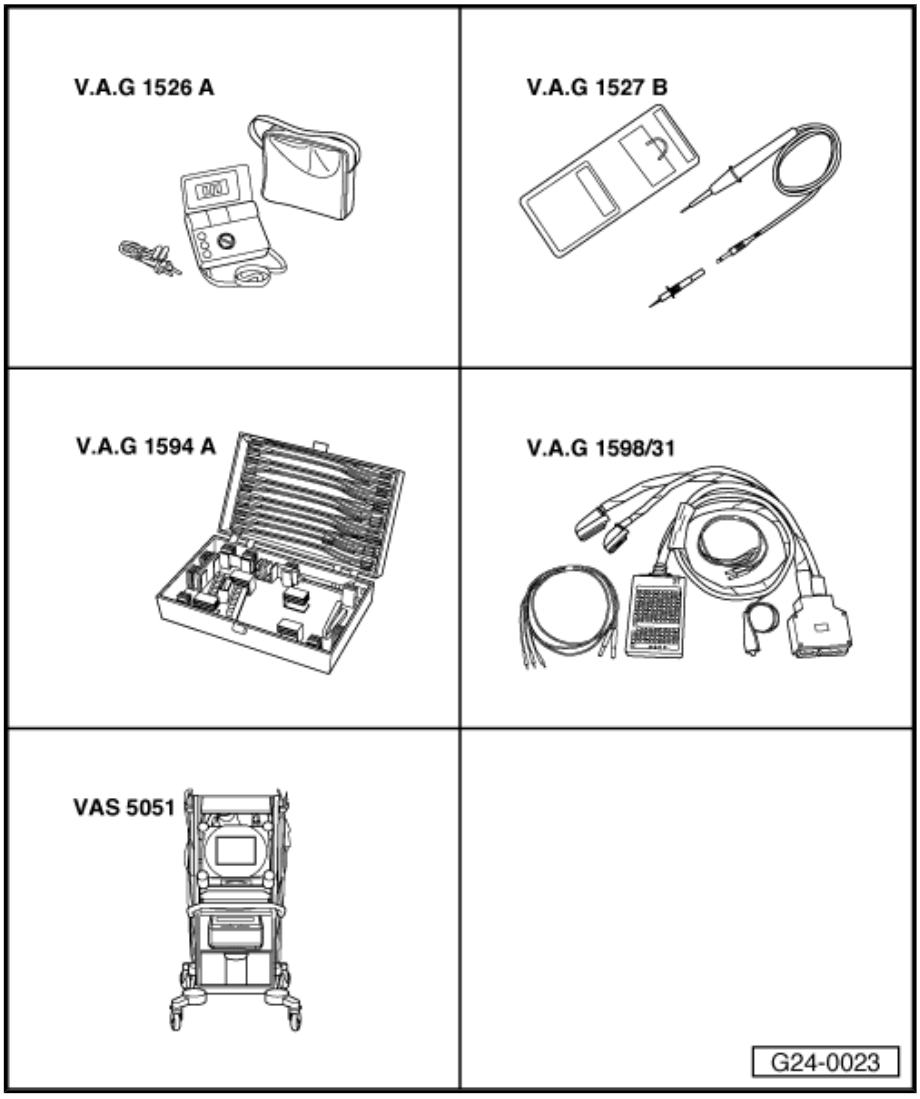

2.3.1 Special tools and workshop equipment required

- -V.A.G 1526 A-
- -V.A.G 1527 B-
- -V.A.G 1594 A-
- -V.A.G 1598/31-
- -VAS 5051- with -VAS 5051/1- and -VAS 5051/2-

or

- -V.A.G 1551- with -V.A.G 1551/1-

Fitting location ⇒ Fitting locations overview, Page ⇒ page 2

Protected by copyright. Copying for private or commercial purposes, in part or in whole, is not permitted unless authorised by AUDI AG. AUDI AG does not guarantee or accept any liability with respect to the correctness of information in this document. Copyright by AUDI AG.

2.3.2 Checking internal resistance

– Unplug connector from intake manifold changeover valve -N156- .

– Connect multimeter to valve to measure resistance.

♦ Specification: 25 ... 35 Ω

– If the specified value is not attained, replace intake manifold changeover valve -N156- .

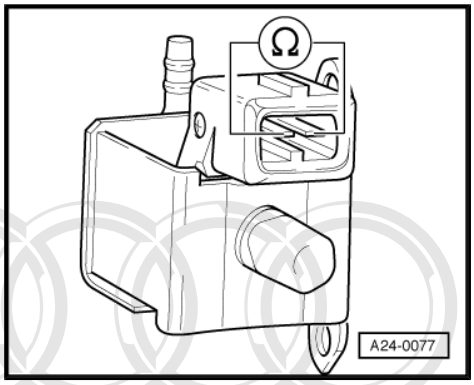

2.3.3 Checking voltage supply

– Unplug connector from intake manifold changeover valve -N156- .

– Connect voltage tester -V.A.G 1527 B- as follows:

Connector Contact	Measure against
1	Engine earth

Protected by copyright. Copying for private or commercial purposes, in part or in whole, is not permitted unless authorised by AUDI AG. AUDI AG does not guarantee or accept any liability with respect to the correctness of information in this document. Copyright by AUDI AG.

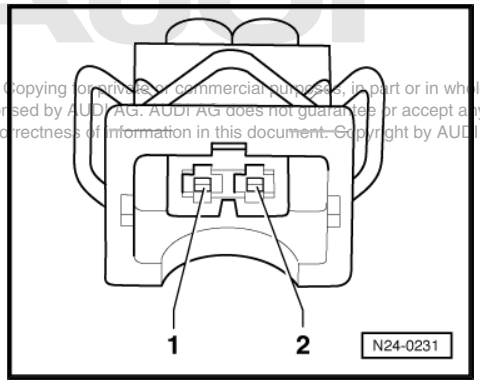

– Operate the starter briefly (the engine may start).

♦ LED must light

If the LED does not light up:

– Perform the following checks marked with a dot.

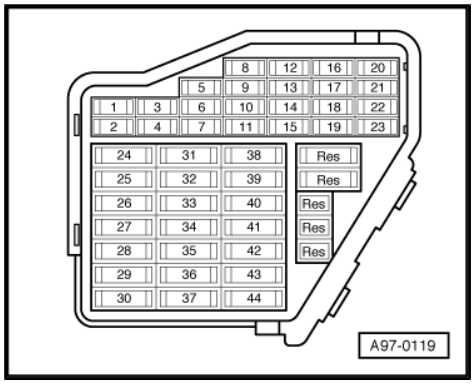

- Check the fuse for the intake manifold switchover valve (in fuse carrier). ⇒ "Current Flow Diagrams, Electrical Fault Finding and Fitting Locations"
- Check the wiring from contact 1 on the connector via the fuse to the fuel pump relay for an open circuit: ⇒ Current flow diagrams, Electrical fault finding and Fitting locations
- Check the fuel pump relay ⇒ page 39 .

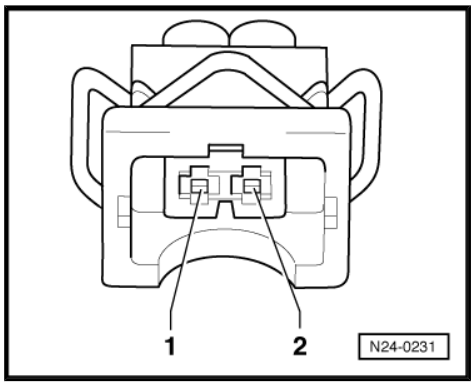

2.3.4 Checking actuation of intake manifold changeover valve

– Connect voltage tester -V.A.G 1527 B- between contacts 1 and 2.

– Start final control diagnosis and actuate the intake manifold changeover valve.

♦ The LED should flash.

If the LED lamp does not flash or lights up continuously:

– Connect test box -V.A.G 1598/31- to wiring harness for engine control unit. Do not connect engine control unit ⇒ page 16 .

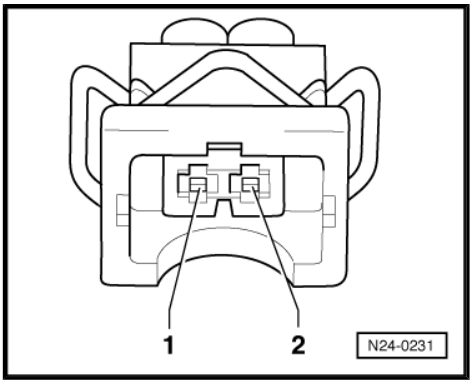

– Check for open circuit and short to positive or earth in the following wiring connections:

Protected by copyright. Copying for private or commercial purposes, in part or in whole, is not permitted unless authorised by AUDI AG. AUDI AG does not guarantee or accept any liability with respect to the correctness of information in this document. Copyright by AUDI AG.

Connector Contact	Test box -V.A.G 1598/31- Socket
2	117

– Rectify any open/short circuit as necessary. ⇒ Current flow diagrams, Electrical fault finding and Fitting locations

If the wiring is OK:

– Replace engine control unit ⇒ page 20 .

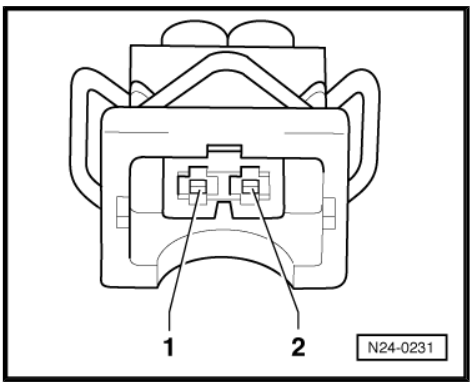

3 Checking lambda control

3.1 Checking lambda probe and lambda control upstream of catalytic converter

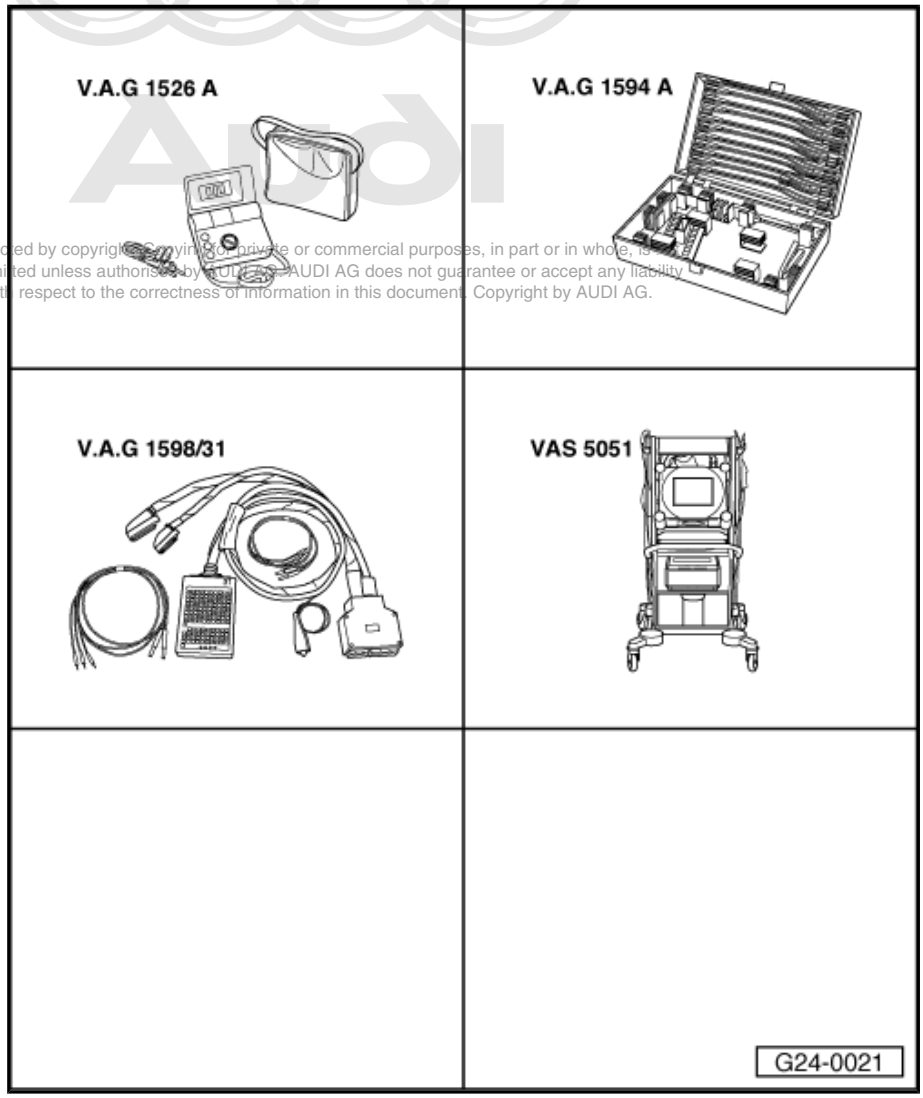

Protected by copyright. Copying for private or commercial purposes, in part or in whole, is not permitted unless authorised by AUDI AG. AUDI AG does not guarantee or accept any liability with respect to the correctness of information in this document. Copyright by AUDI AG.

3.1.1 Special tools and workshop equipment required

- -V.A.G 1526 A-
- -V.A.G 1594 A-
- -V.A.G 1598/31-
- -VAS 5051- with -VAS 5051/1-

or

- -V.A.G 1551- with -V.A.G 1551/3 A-

Note!

- *No faults stored in fault memory.*
- *No leaks in exhaust system*
- *Coolant temperature at least 80 °C ⇒ display group 004, display zone 3.*

3.1.2 Function test

– Connect vehicle diagnostic, testing and information system - VAS 5051- or fault reader -V.A.G 1551- and select engine electronics control unit by entering “address word ” 01. For this purpose, the engine must be running at idling speed.

Indicated on display:

```
Rapid data transfer HELP
Select function XX
```

– Enter “04” for the function “Start basic setting” and confirm entry with the Q key.

3.1.3 Checking lambda probe status

Indicated on display:

```
Basic setting Q
Enter display group number XXX
```

– Enter “030” for “Display group number 030” and confirm entry with the Q key.

– Check lambda probe status in display zone 1.

Note!

The “lambda probe status” display indicates the status of the lambda control and lambda probe.

	Display zones			
	1	2	3	4
Display Group 030: Lambda probe status				
Display	X X X	X X X		
Readout	Lambda probe status, bank 1, probe 1	Lambda probe status, bank 1, probe 2		
Range	0 = off 1 = on	0 = off 1 = on		
Specification	1 1 1	1 1 1/0		
Note:	If the specified value is not attained ⇒ page 61 If the specified value is attained but a fault is stored in the fault memory ⇒ Check lambda probe learned values and control, Page ⇒ page 58			

Protected by copyright. Copying for private or commercial purposes, in part or in whole, is not permitted unless authorised by AUDI AG. AUDI AG does not guarantee or accept any liability with respect to the correctness of information in this document. Copyright by AUDI AG.

3.1.4 Significance of 3-digit readout of display group 030

X	X	X	Display zone 1
		1	Lambda control active
	1		Lambda probe readiness
1			Condition of lambda probe heating

Note!

- *The first digit of the 3-digit display (heating) fluctuates between 0 and 1.*
- *For the lambda control bank 1 probe 2 when idling (without load) "0" may also be displayed.*

3.1.5 Checking lambda probe learned values and lambda control

– Press the C key.

Indicated on display:

```
Initiate basic setting  Q
Enter display group number XXX
```

– Enter "032" for "Display group number 032" and confirm entry with the Q key.

– Check lambda probe learned values and control in display zones 1 and 2:

	Display zones			
	1	2	3	4
Display group 032: Lambda learned values				
Display	xx.x %	xx.x %		
Readout	Lambda learned value Bank 1 at idling speed (additive)	Lambda learned value Bank 1 at part throttle (multiplicative)		
Specifi-cation	-33.0...33.0 % Can fluctuate slightly	-10.0...10.0 % Can fluctuate slightly		
Note:	If the specification is not attained ⇒ Evaluation of display group 032, Page ⇒ page 58			

Protected by copyright. Copying for private or commercial purposes, in part or in whole, is not permitted unless authorised by AUDI AG. AUDI AG does not guarantee or accept any liability with respect to the correctness of information in this document. Copyright by AUDI AG.

3.1.6 Evaluating display group 032

Display zone 1 / 2	Possible causes of fault	Fault remedy
Lambda learned values (mul.) below -10.0 %	♦ Leakage in intake area	– Check intake system for leaks and rectify unmetered air ⇒ page 48
Lambda learned values (add.) below -33.0 %	♦ Oil dilution	– Carry out oil change or drive vehicle fairly fast on out-of-town roads
	♦ High oil consumption	
	♦ Air mass meter defective	– Check air mass meter ⇒ page 43
	♦ Solenoid valve for activated charcoal filter stuck open	– Check solenoid valve for activated charcoal filter ⇒ page 80
	♦ Fuel pressure too high	– Check fuel pressure regulator ⇒ page 29

Display zone 1 / 2	Possible causes of fault	Fault remedy
	♦ Injector leaking	– Check injectors ⇒ page 31
	♦ Lambda probe heating defective ♦ Lambda probe dirty	– Check lambda probe heating ⇒ page 64

3.1.7 Evaluating display group 032

Display zone 1 / 2	Possible causes of fault	Fault remedy
Lambda learned values (mul.) above 10.0 % Lambda learned values (add.) above 33.0 %	♦ Unmetered air in intake area	– Check intake system for leaks and rectify unmetered air ⇒ page 48
	♦ Fuel pressure too low	– Check fuel pressure regulator ⇒ page 29
	♦ Lambda probe heating defective	– Check lambda probe heating ⇒ page 64
	♦ Injector only opens partially or not at all	– Check injectors ⇒ page 31
	♦ Activated charcoal filter system solenoid valve sticking	– Check solenoid valve for activated charcoal filter ⇒ page 80

– Press the C key.

Indicated on display:

```
Initiate basic setting  Q
Enter display group number XXX
```

– Enter “033” for “Display group number 033” and confirm entry with the Q key.

– Check lambda control in display zones 1 and 2:

	Display zones			
	1	2	3	4
Display Group 033: Lambda control				
Display	xx.x %	x.xxx V		
Read-out	Lambda control bank 1, probe 1	Lambda probe voltage, bank 1, probe 1		
Specification	The value should fluctuate slightly in the range -10.0...10.0 %	The voltage should fluctuate in the range 1.4...1.6V		
Note:	If the specification is not attainted ⇒ Continued on Page ⇒ page 60	If the specification is not attained ⇒ Evaluation of display group 033, Page ⇒ page 60		

Protected by copyright. Copies for private or commercial purposes, in part or in whole, is not permitted unless authorised by AUDI AG. AUDI AG does not guarantee or accept any liability with respect to the correctness of information in this document. Copyright by AUDI AG.

Note!

The display must fluctuate around zero. If 0 is constantly displayed, the lambda control has switched from regulation to control because a fault has occurred in the lambda control. Interrogate fault memory.

Note!

- *The voltage signal for "Rich mixture (low level of residual oxygen)" is below 1.5V.*
- *The voltage signal for "Lean mixture (high level of residual oxygen)" is above 1.5V.*

3.1.8 Evaluating display group 033

Display zone: 2	Possible causes of fault	Fault remedy
Constant 1.5 V	♦ Open circuit in line 1 between lambda probe and control unit	– Check basic voltage ⇒ page 61
	♦ Open circuit in line 5 between lambda probe and control unit	
Constant 4.9 V	♦ Short to positive in line 1 between lambda probe and control unit	– Check wiring of lambda probe upstream of catalytic converter ⇒ page 61
Constant 0.0 V	♦ Short to earth in line 1 between lambda probe and control unit	

3.1.9 (Cont.)

If the specification in display zone 1 is not attained, or if the value does not fluctuate slightly:

– Perform test drive to free Lambda from any possible residues and repeat the test.

If the specified value in display zone 1 is not attained or if the value does not fluctuate even after the test drive:

– Check the basic voltage ⇒ page 61 .

– Check the lambda probe heating ⇒ page 64 .

– Check for lambda probe ageing upstream of catalytic converter ⇒ page 62

Protected by copyright. Copying for private or commercial purposes, in part or in whole, is not permitted unless authorised by AUDI AG. AUDI AG does not guarantee or accept any liability with respect to the correctness of information in this document. Copyright by AUDI AG.

3.1.10 Checking basic voltage

– Unscrew protective cover -arrows- on vehicle floor.

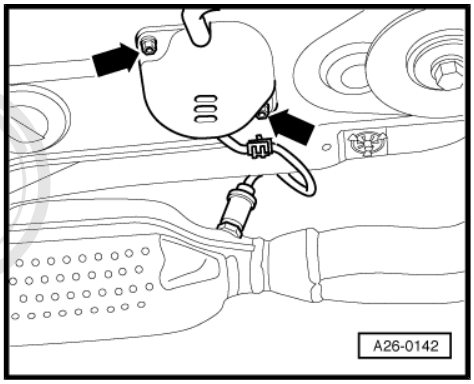

– Unplug 6-pin connector (black) -1- for lambda probe upstream of catalytic converter -G39- .

– Connect the multimeter for voltage measurement range (direct voltage) between contact 1 and contact 5.

Reproduction, copy, use, publication or distribution to third parties in part or in whole, is not permitted without prior consent of AUDI AG. AUDI AG does not guarantee or accept any liability with respect to the correctness of information in this document. Copyright by AUDI AG.

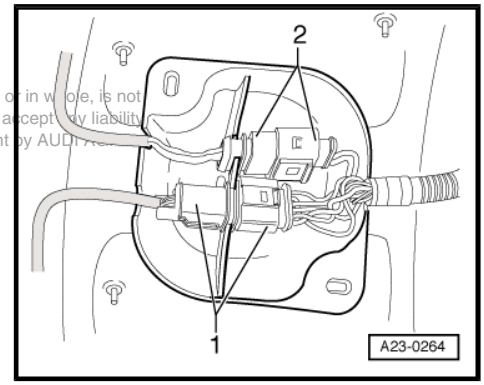

– Switch on ignition.

♦ Specification: 0.400 ... 0.500 V

– Switch off ignition.

If specification is not attained:

– Check lambda probe wiring ⇒ page 61

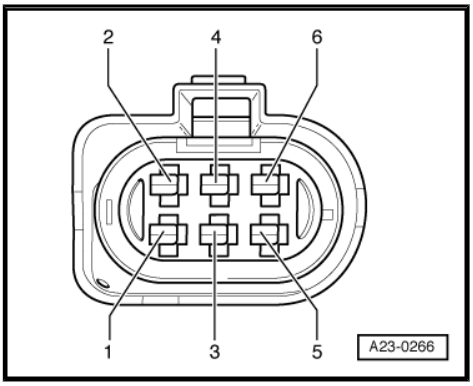

3.1.11 Checking lambda probe wiring

– Unscrew protective cover -arrows- on vehicle floor.

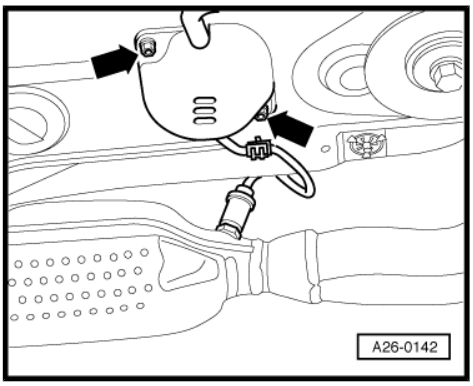

– Unplug 6-pin connector (black) -1- for lambda probe upstream of catalytic converter -G39- .

– Connect test box -V.A.G 1598/31- to wiring harness for engine control unit. Do not connect engine control unit ⇒ page 16 .

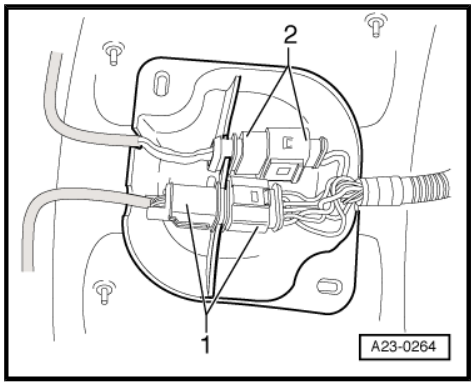

– Check for open circuit in the following wiring connections:

Connector Contact	Test box -V.A.G 1598/31- Socket
1	14
2	15
5	34
6	33

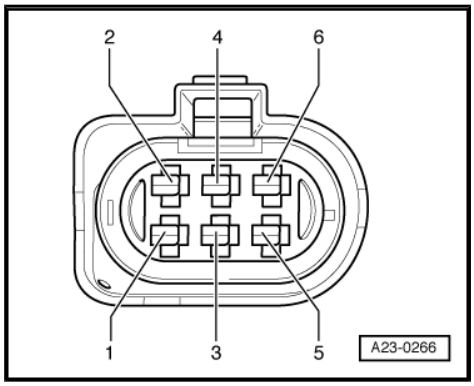

– Rectify open circuit, if necessary. ⇒ Current flow diagrams, Electrical fault finding and Fitting locations

– Check for shorts between the two wires.

If no wiring fault is detected:

– Replace the lambda probe 1 upstream of catalytic converter -G39- .

3.2 Checking lambda probe ageing upstream of catalytic converter

3.2.1 Special tools and workshop equipment required

♦ -VAS 5051- with -VAS 5051/1-

or

♦ -V.A.G 1551- with -V.A.G 1551/3 A-

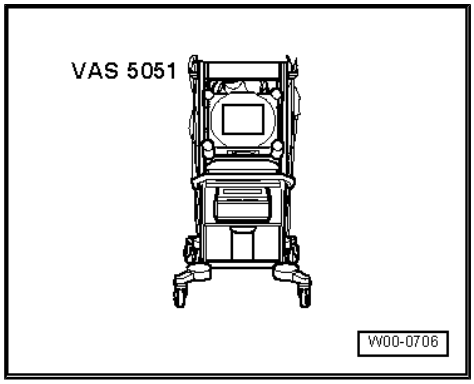

Note!

Coolant temperature at least 80 °C ⇒ display group 004, display zone 3.

3.2.2 Test sequence

Protected by copyright. Copying for private or commercial purposes, in part or in whole, is not permitted unless authorised by AUDI AG. AUDI AG does not guarantee or accept any liability with respect to the correctness of information in this document. Copyright by AUDI AG.

– Connect vehicle diagnostic, testing and information system -VAS 5051- or fault reader -V.A.G 1551- and select engine electronics control unit by entering “address word ” 01. For this purpose, the engine must be running at idling speed.

Indicated on display:

```
Rapid data transfer HELP
Select function XX
```

– Enter “04” for the function “Start basic setting” and confirm entry with the Q key.

Indicated on display:

```
Initiate basic setting  Q
Enter display group number XXX
```

– Enter “034” for “Display group number 034” and confirm entry with the Q key.

– Actuate the brake pedal and hold down until the display in display zone 4 jumps from “Test OFF” to “Test ON”.

Note!

In the basic setting function, the engine control unit increases the speed to 1400 rpm when the brake pedal is actuated.

– Keep pressing brake pedal until result of diagnosis is displayed in zone 4.

	Display zones			
	1	2	3	4
Display group 034: Diagnosis of lambda probe ageing, lambda probe upstream of catalytic converter				
Display	xxxx rpm	xxx °C	x.x s	---
Readout	Engine speed	Exhaust gas temperature	Dynamics factor	Diagnosis status
Range				Test OFF Test ON B1–S1 OK B1–S1 NOK
Specification	1400 rpm	Above 100 °C	0.000	B1-S1 OK
Note:			If the specification is not attainted ⇒ Continued on Page ⇒ page 63	

Note!

Calculated value from engine speed and load.

Note!

The dynamics factor is a measurement of the ageing status of the lambda probe. The control unit compares the control frequency of the lambda probe evaluation circuit with a value specified in the control unit. If this value is not attained, the following appears in display zone 4: ” B1–S1 NOK”

Protected by copyright. Copying for private or commercial purposes, in part or in whole, is not permitted unless authorised by AUDI AG. AUDI AG does not guarantee or accept any liability with respect to the correctness of information in this document. Copyright by AUDI AG.

3.2.3 (Cont.)

If reading does not match specification in display zone 4:

– Perform test drive to free Lambda from any possible residues and repeat the test.

If reading in display zone 4 does not match specification even after a test drive:

– Replace the lambda probe 1 upstream of catalytic converter -G39- .

3.3 Checking lambda probe heating -Z19- for lambda probe upstream of catalytic converter

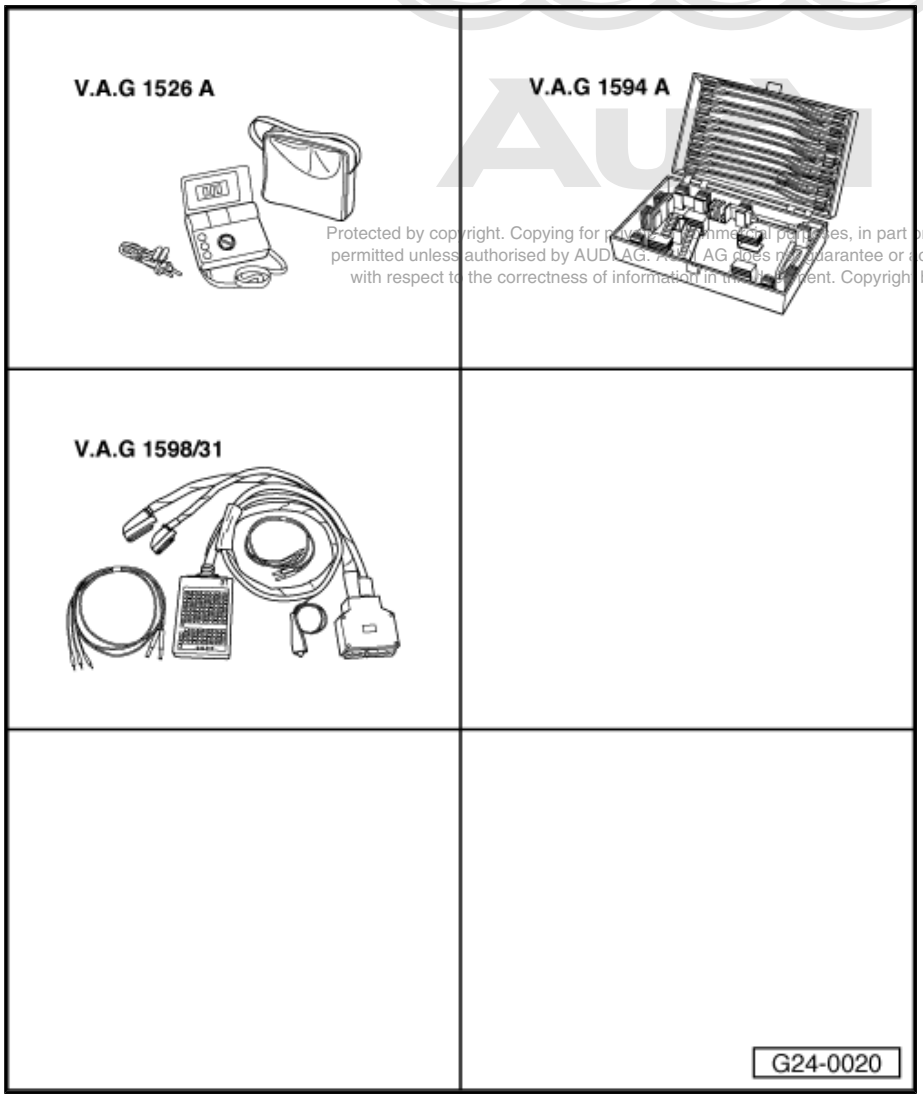

Protected by copyright. Copying for private or commercial purposes, in part or in whole, is not permitted unless authorised by AUDI AG. AUDI AG does not guarantee or accept any liability with respect to the correctness of information in this document. Copyright by AUDI AG.

3.3.1 Special tools and workshop equipment required

- -V.A.G 1526 A-
- -V.A.G 1594 A-
- -V.A.G 1598/31-

Note!

- *Coolant temperature at least 80 °C ⇒ display group 004, display zone 3.*
- *Fuse for lambda probe heating OK.⇒ Current flow diagrams, Electrical fault finding and Fitting locations*

3.3.2 Test sequence

– Unscrew protective cover -arrows- on vehicle floor.

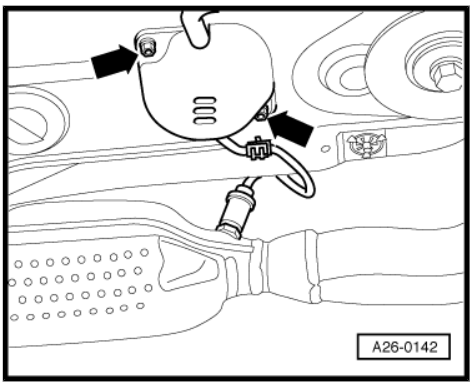

– Unplug 6-pin connector (black) -1- for lambda probe upstream of catalytic converter -G39- .

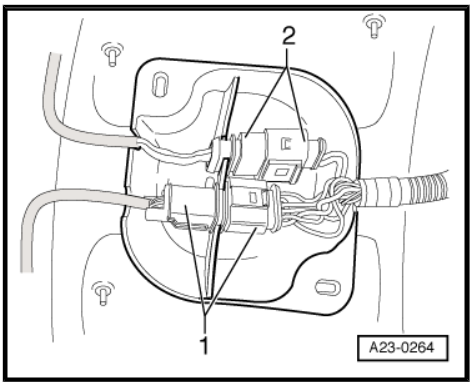

– Connect multimeter between contacts 3 and 4 to measure resistance.

- Specification at room temperature 2.5 ... 10 Ω

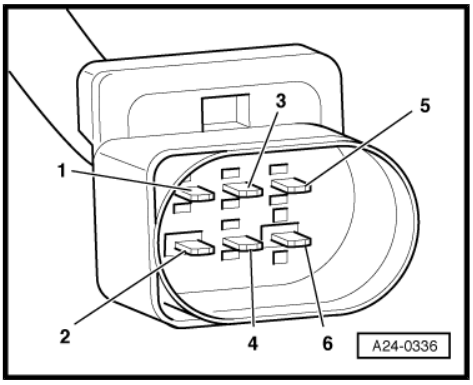

Protected by copyright. Copying or distribution to other persons or for other purposes, in part or in whole, is not permitted unless authorised by AUDI AG. AUDI AG does not guarantee or accept any liability with respect to the correctness of information in this document. Copyright by AUDI AG.

If specification is not attained:

– Replace the lambda probe 1 upstream of catalytic converter -G39- .

If specification is attained:

– Check the voltage supply to the Lambda probe heating.

3.3.3 Checking voltage supply for lambda probe heating

– Connect the multimeter for voltage measurement range (direct voltage) between contact 3 and contact 4.

– Start the engine.

♦ Specification: approx. battery voltage

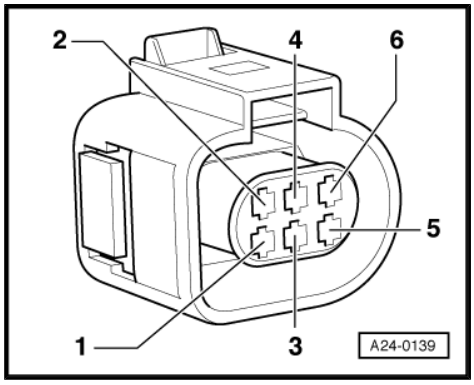

Note!

Points at which Lambda probe heating is switched on and off by engine control unit can be observed in "Reading measured value block" function, display group number 041, display zone 2.

If no voltage is present:

– Connect up multimeter as follows to measure voltage.

Connector Contact	Measure against
3 (positive)	Vehicle earth

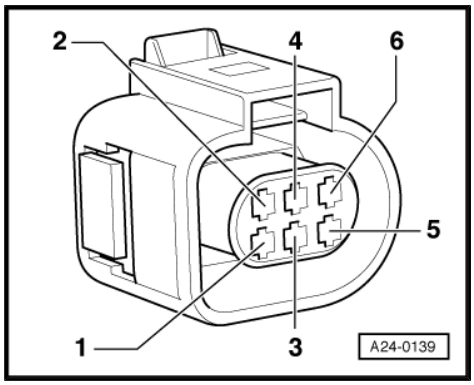

– Operate the starter briefly.

♦ Specification: approx. battery voltage

If no voltage is present:

– Check for open circuit from contact 3 of connector via fuse to fuel pump relay: ⇒ Current flow diagrams, Electrical fault finding and Fitting locations

If voltage supply is OK:

– Connect multimeter as follows to measure voltage:

Connector Contact	Measure against
4 (earth actuation by engine control unit)	Battery positive

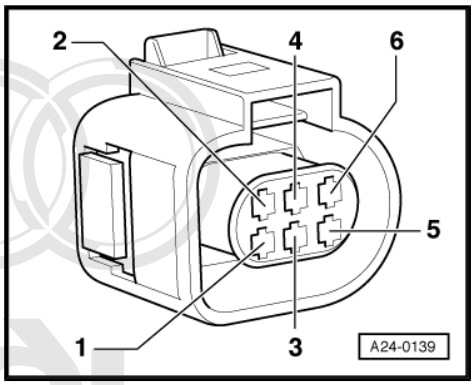

– Start the engine.

♦ Specification: approx. battery voltage

Note!

Points at which Lambda probe heating is switched on and off by engine control unit can be observed in "Reading measured value block" function, display group number 041, display zone 2.

Protected by copyright. Copying for private or commercial purposes, in part or in whole, is not permitted unless authorised by AUDI AG. AUDI AG does not guarantee or accept any liability with respect to the correctness of information in this document. Copyright by AUDI AG.

– Switch off ignition.

If no voltage is present:

– Connect test box -V.A.G 1598/31- to wiring harness for engine control unit. Do not connect engine control unit ⇒ page 16 .

– Check for open circuit in the following wiring connections:

Connector Contact	Test box -V.A.G 1598/31- Socket
4	4

– Rectify open circuit, if necessary.

If wiring is OK but there is no earth connection for the lambda probe heating:

– Replace engine control unit ⇒ page 20 .

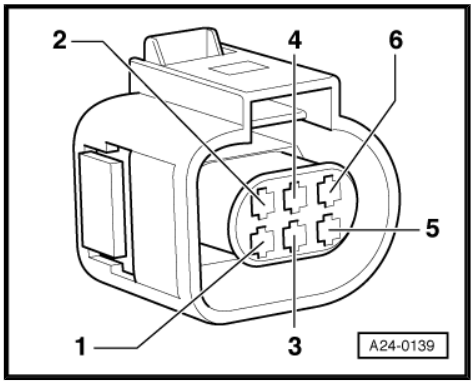

3.4 Checking lambda probe and lambda control downstream of catalytic converter

Note!

- *The lambda control downstream of the catalytic converter is superior to the lambda control upstream of the catalytic converter and is used as correction control.*
- *The lambda probe downstream of catalytic converter corrects slight mixture changes (e.g. enriches), by maintaining the lambda control upstream of the catalytic converter for a certain period (dwell time) at the upper / lower point.*

3.4.1 Special tools and workshop equipment required

Protected by copyright. Copying for private or commercial purposes, in part or in whole, is not permitted unless authorised by AUDI AG. AUDI AG does not guarantee or accept any liability with respect to the correctness of information in this document. Copyright by AUDI AG.

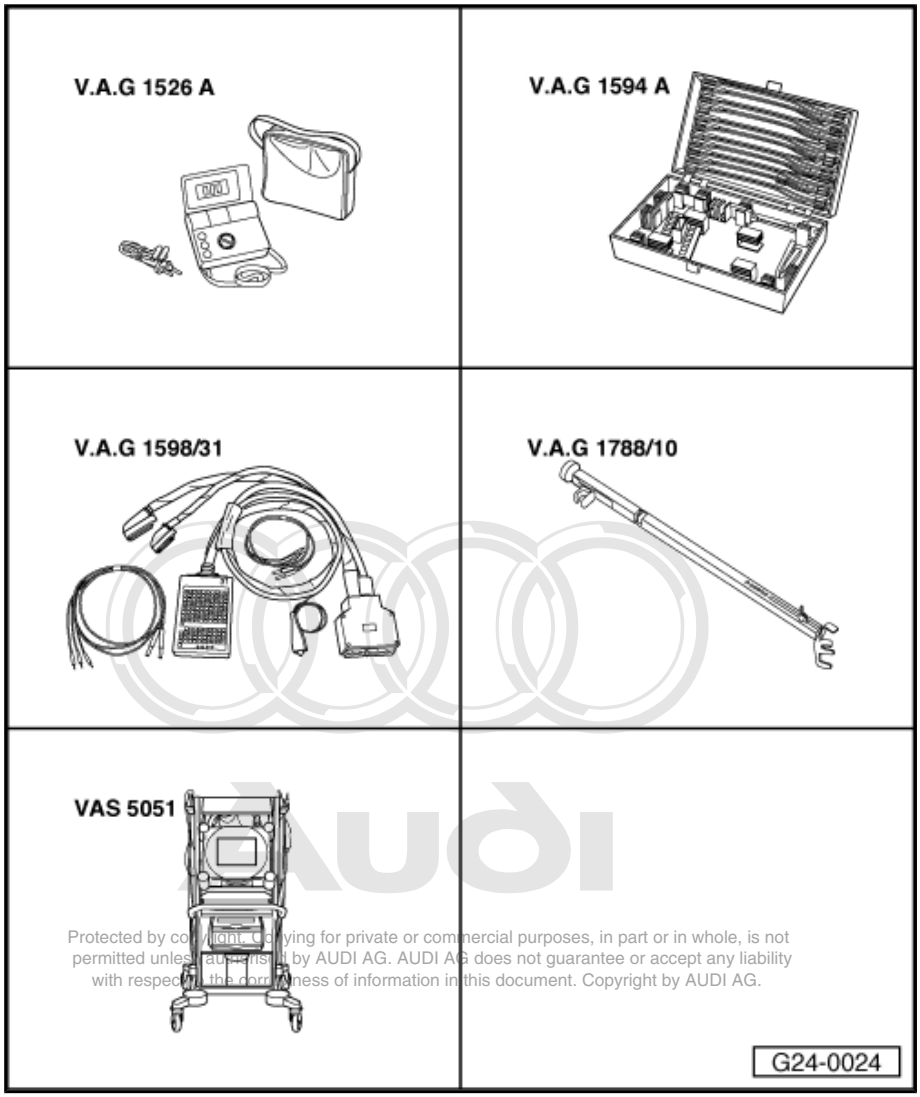

Protected by copyright. Copying for private or commercial purposes, in part or in whole, is not permitted unless authorised by AUDI AG. AUDI AG does not guarantee or accept any liability with respect to the correctness of information in this document. Copyright by AUDI AG.

- -V.A.G 1526 A-
- -V.A.G 1594 A-
- -V.A.G 1598/31-
- -V.A.G 1788/10-
- -VAS 5051- with -VAS 5051/1-

or

- -V.A.G 1551- with -V.A.G 1551/3 A-

Note!

- *Test drive performed and fault memory not erased.*
- *Coolant temperature at least 80 °C ⇒ display group 004, display zone 3.*

3.4.2 Test sequence

– Connect vehicle diagnostic, testing and information system -VAS 5051- or fault reader -V.A.G 1551- and select engine electronics control unit by entering “address word ” 01. For this purpose, the engine must be running at idling speed.

Indicated on display:

```
Rapid data transfer HELP
Select function XX
```

– Enter “04” for the function “Start basic setting” and confirm entry with the Q key.

Note!

During basic setting, the activated charcoal filter solenoid valve (ACF valve -N80-) is closed and the air conditioner compressor is switched off.

Indicated on display:

```
Initiate basic setting  Q
Enter display group number XXX
```

– Enter “043” for “Display group number 043” and confirm entry with the Q key.

Indicated on display:

```
System in basic setting 43        ->
        1         2         3         4
```

– Increase engine speed by accelerating to approx. 3000 rpm until a temperature is displayed in display zone 2 that is clearly above 250 °C. Then remove foot from accelerator, so that engine is running at idling speed.

– Set engine speed to 2800...3200 rpm using engine speed controller -V.A.G 1788/10- .

– Actuate the brake pedal and hold down until the display in display zone 4 jumps from “Test OFF” to “Test ON”.

– Continue to maintain engine speed at 2800...3200 rpm and keep brake pedal pressed until result of diagnosis appears in display zone 4.

	Display zones			
	1	2	3	4
Display group 043: Diagnosis of lambda probe ageing, lambda probe downstream of catalytic converter				
Display	xxxx rpm	xxx °C	x.x V	---
Readout	Engine speed	Exhaust gas temperature	Lambda probe voltage Bank 1, probe 2	Diagnosis status
Range	0...6500	70...850 °C	0...1.0 V	Test OFF Test ON B1–S2 OK B1–S2 NOK
Specification	2800...3200 rpm	Above 250 °C	0.0...0.95 V	B1-S2 OK
Note:			If the specification is not attainted ⇒ Continued on Page ⇒ page 70	

Protected by copyright. Copying for private or commercial purposes, in part or in whole, is not permitted unless authorised by AUDI AG. AUDI AG does not guarantee or accept any liability with respect to the correctness of information in this document. Copyright by AUDI AG.

Note!

Calculated value from engine speed and load.

3.4.3 Evaluating display group 043

Display zone: 3	Possible causes of fault	Fault remedy
constant approx. 0.450 V	♦ Open circuit in line 4 between lambda probe and control unit	– Check basic voltage ⇒ page 70
	♦ Open circuit in line 3 between lambda probe and control unit	
Greater than 1.100 V	♦ Short to positive in line 4 between lambda probe and control unit	– Check lambda probe wiring downstream from catalytic converter ⇒ page 71
Less than 0.150 V	♦ Short to earth in line 4 between lambda probe and control unit	

3.4.4 Checking basic voltage

– Unscrew protective cover -arrows- on vehicle floor.

Protected by copyright. Copying for private or commercial purposes, in part or in whole, is not permitted unless authorised by AUDI AG. AUDI AG does not guarantee or accept any liability with respect to the correctness of information in this document. Copyright by AUDI AG.

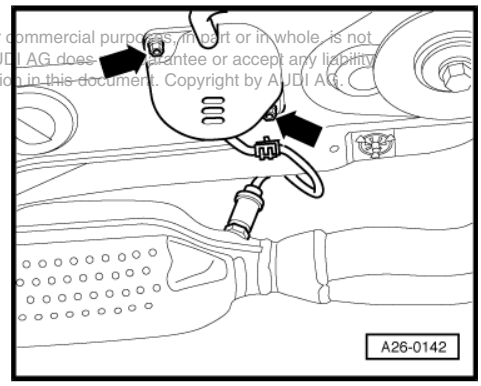

– Unplug 4-pin connector -1- (brown) for lambda probe downstream of catalytic converter -G130- .

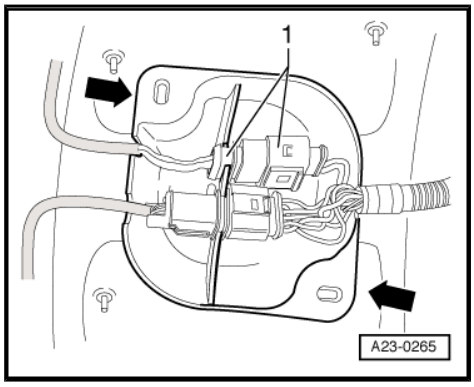

– Connect the multimeter for voltage measurement range (direct voltage) between contact 3 and contact 4.

– Switch on ignition.

♦ Specification: 0.400 ... 0.500 V

– Switch off ignition.

If specification is not attained:

– Check lambda probe wiring ⇒ page 71

If specification is attained:

– Replace lambda probe downstream of catalytic converter -G130.

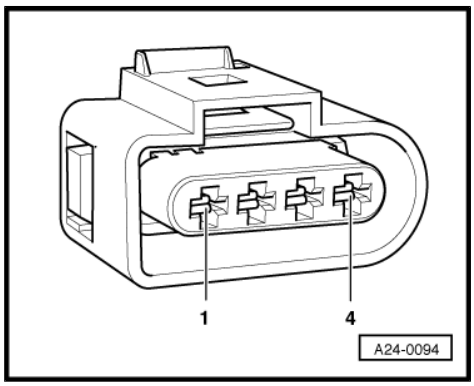

3.4.5 Checking lambda probe wiring

– Unscrew protective cover -arrows- on vehicle floor.

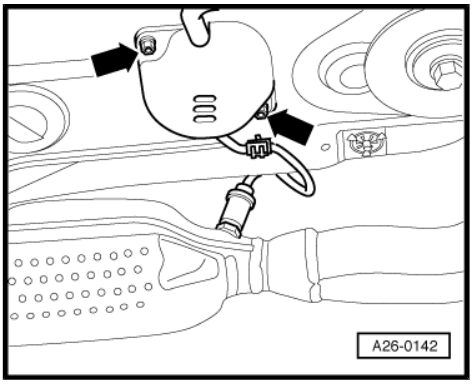

– Unplug 4-pin connector -1- (brown) for lambda probe downstream of catalytic converter -G130- .

– Connect test box -V.A.G 1598/31- to wiring harness for engine control unit. Do not connect engine control unit ⇒ page 16 .

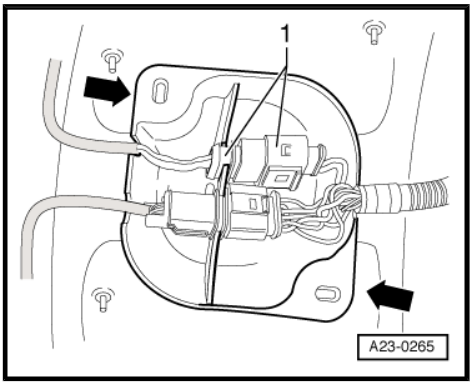

– Check for open circuit in the following wiring connections:

Connector Contact	Test box -V.A.G 1598/31- Socket
3	35
4	16

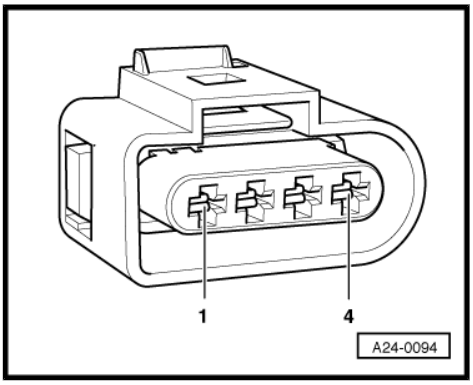

– Rectify open circuit, if necessary. ⇒ Current flow diagrams, Electrical fault finding and Fitting locations

– Check for shorts between the two wires.

If the wiring is OK:

– Replace engine control unit ⇒ page 20 .

3.5 Check lambda probe heating -Z29- for lambda probe downstream of catalytic converter

Protected by copyright. Copying for private or commercial purposes, in part or in whole, is not permitted unless authorised by AUDI AG. AUDI AG does not guarantee or accept any liability with respect to the correctness of information in this document. Copyright by AUDI AG.

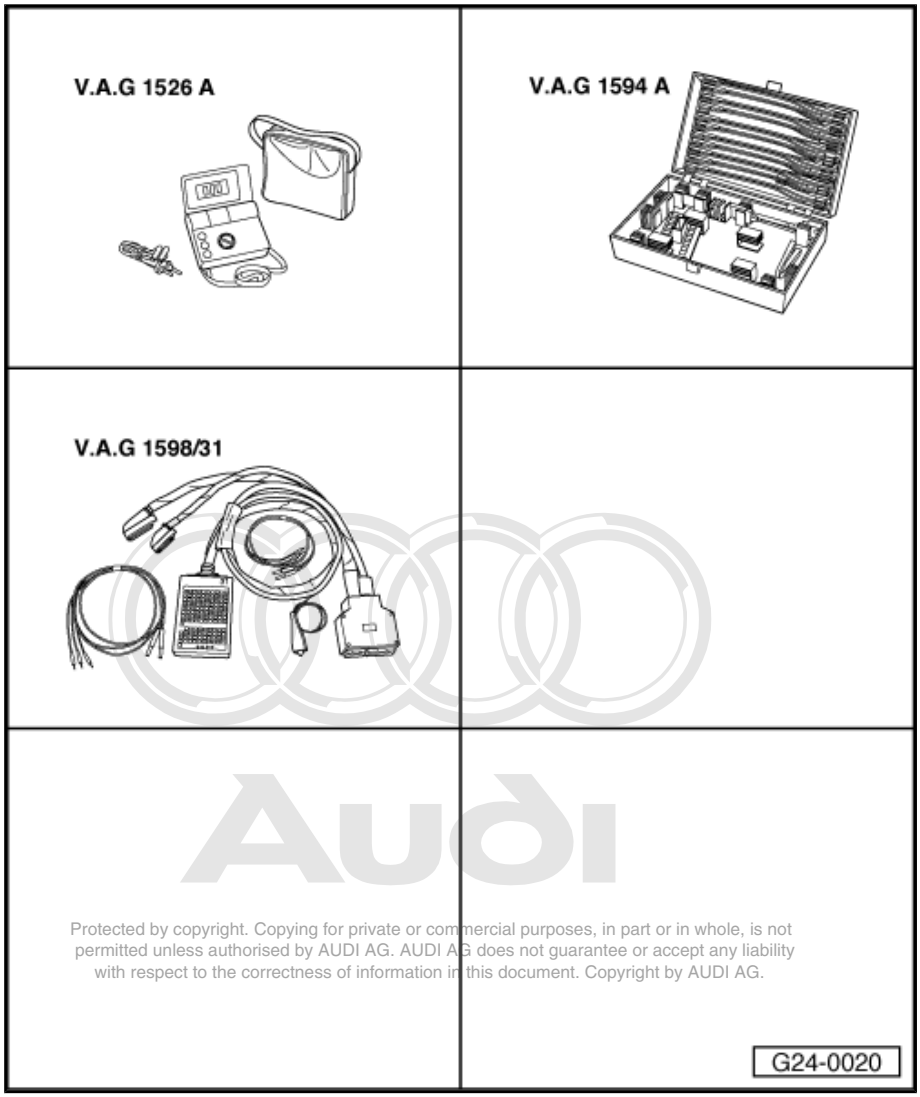

Protected by copyright. Copying for private or commercial purposes, in part or in whole, is not permitted unless authorised by AUDI AG. AUDI AG does not guarantee or accept any liability with respect to the correctness of information in this document. Copyright by AUDI AG.

3.5.1 Special tools and workshop equipment required

- -V.A.G 1526 A-
- -V.A.G 1594 A-
- -V.A.G 1598/31-

Note!

- *Coolant temperature at least 80 °C ⇒ display group 004, display zone 3.*
- *Fuse for lambda probe heating OK.⇒ Current flow diagrams, Electrical fault finding and Fitting locations*

3.5.2 Test sequence

– Unscrew protective cover -arrows- on vehicle floor.

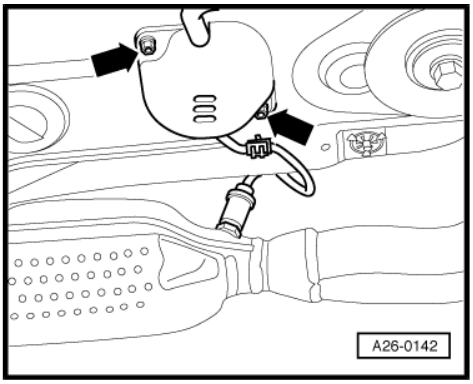

– Unplug 4-pin connector -1- (brown) for lambda probe downstream of catalytic converter -G130- .

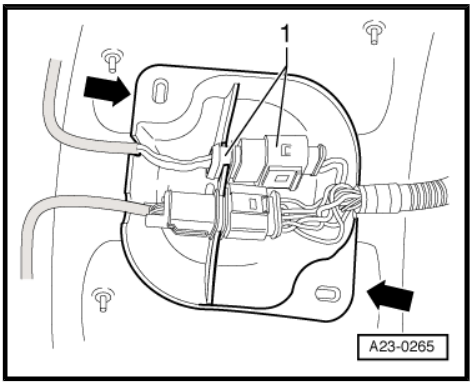

– Connect multimeter between contacts 1 and 2 to measure resistance.

♦ Specification at room temperature 6.4 ... 47.5 Ω

If specification is not attained:

– Replace lambda probe downstream of catalytic converter -G130.

Protected by copyright. Copying for private or commercial purposes, in part or in whole, is not permitted unless authorised by AUDI AG. AUDI AG does not guarantee or accept any liability with respect to the correctness of information in this document. Copyright by AUDI AG.

If specification is attained:

– Check the voltage supply to the Lambda probe heating.

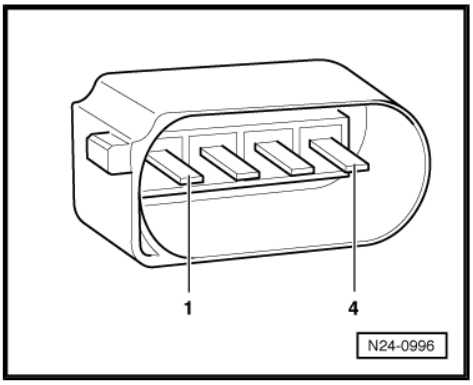

3.5.3 Checking voltage supply for lambda probe heating

– Connect multimeter between contacts 1 (positive) and 2 (earth) to measure voltage.

– Start the engine.

♦ Specification: approx. battery voltage

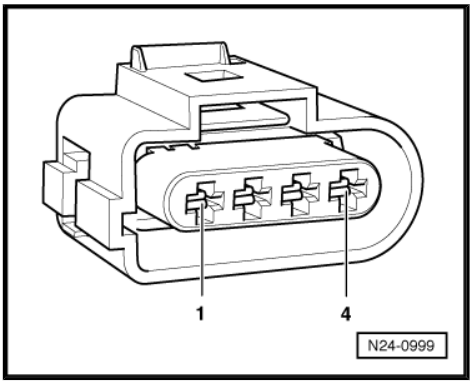

Note!

Points at which lambda probe heating is switched on and off by engine control unit can be observed in "Reading measured value block" function, display group number 041, display zone 4.

If no voltage is present:

– Connect multimeter as follows to measure voltage:

Connector Contact	Measure against
1 (positive)	Vehicle earth

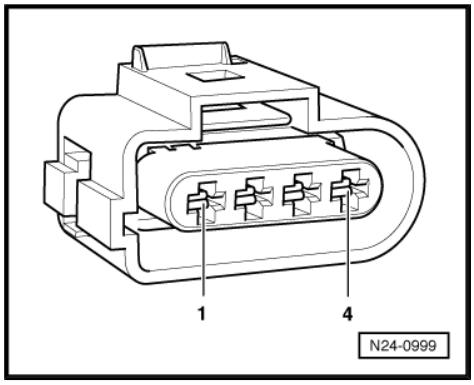

– Operate the starter briefly.

♦ Specification: approx. battery voltage

If no voltage is present:

– Check for open circuit in wiring from contact 1 of connector via fuse to fuel pump relay: ⇒ Current flow diagrams, Electrical fault finding and Fitting locations

If voltage supply is OK:

– Connect multimeter as follows to measure voltage:

Connector Contact	Measure against
2 (earth actuation by engine control unit)	Battery positive

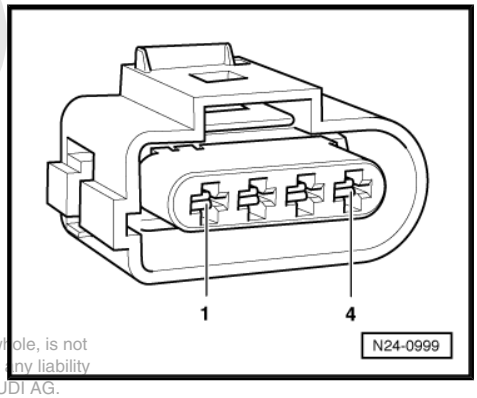

– Start the engine.

♦ Specification: approx. battery voltage (may fluctuate)

– Switch off ignition.

Protected by copyright. Copying for private or commercial purposes, in part or in whole, is not permitted unless authorised by AUDI AG. AUDI AG does not guarantee or accept any liability with respect to the correctness of information in this document. Copyright by AUDI AG.

If no voltage is present:

– Connect test box -V.A.G 1598/31- to wiring harness for engine control unit. Do not connect engine control unit ⇒ page 16 .

– Check for open circuit in the following wiring connections:

Connector Contact	Test box -V.A.G 1598/31- Socket
2	5

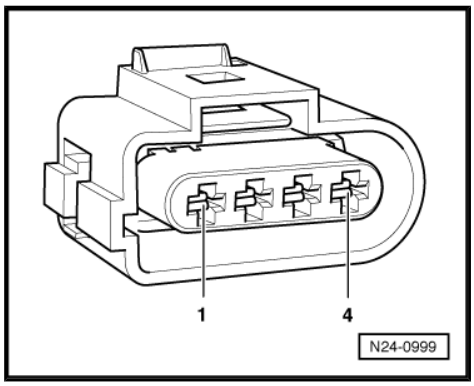

– Rectify open circuit, if necessary. ⇒ Current flow diagrams, Electrical fault finding and Fitting locations

If wiring is OK but there is no earth connection for the lambda probe heating:

– Replace engine control unit ⇒ page 20 .

3.6 Removing and installing lambda probe

3.6.1 Special tools, workshop equipment and other items required

- Ring spanner set 3337
- High-temperature lubricant G 052 112 A3

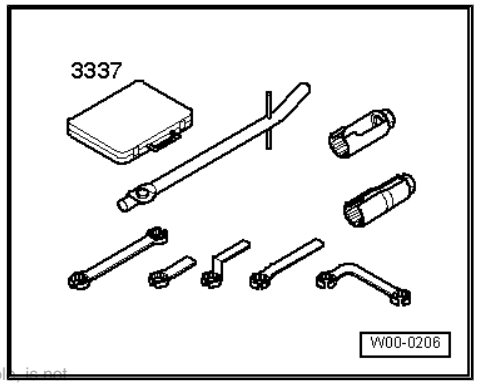

Protected by copyright. Copying for private or commercial purposes, in part or in whole, is not permitted unless authorised by AUDI AG. AUDI AG does not guarantee or accept any liability with respect to the correctness of information in this document. Copyright by AUDI AG.

3.6.2 Removing

– Unscrew protective cover -arrows- on vehicle floor.

– Unplug connector for lthe relevant lambda probe and lay wiring aside.

- (black) for lambda probe (upstream of catalytic converter) -G39-

- (brown) for lambda probe (downstream of catalytic converter) -G130-

– Use special tool 3337 to screw out lambda probe.

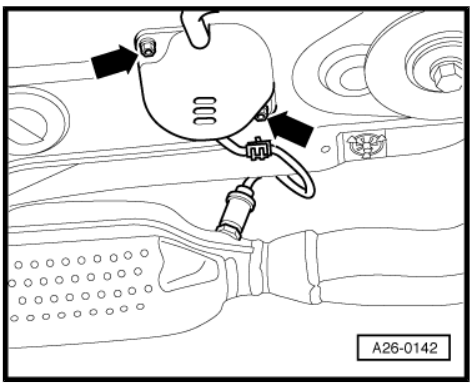

3.6.3 Installing

When installing, note the following:

Note!

- *The screw thread on the lambda probe is coated with assembly paste. This paste must not be allowed to penetrate the openings on the probe.*
- *Tightening torque: 55 Nm.*
- *When installing, the lambda probe cable must always be reattached at the same locations to prevent probe wire from coming into contact with exhaust pipe.*

4 Checking secondary air pump relay - J299- and actuation

4.1 Function test

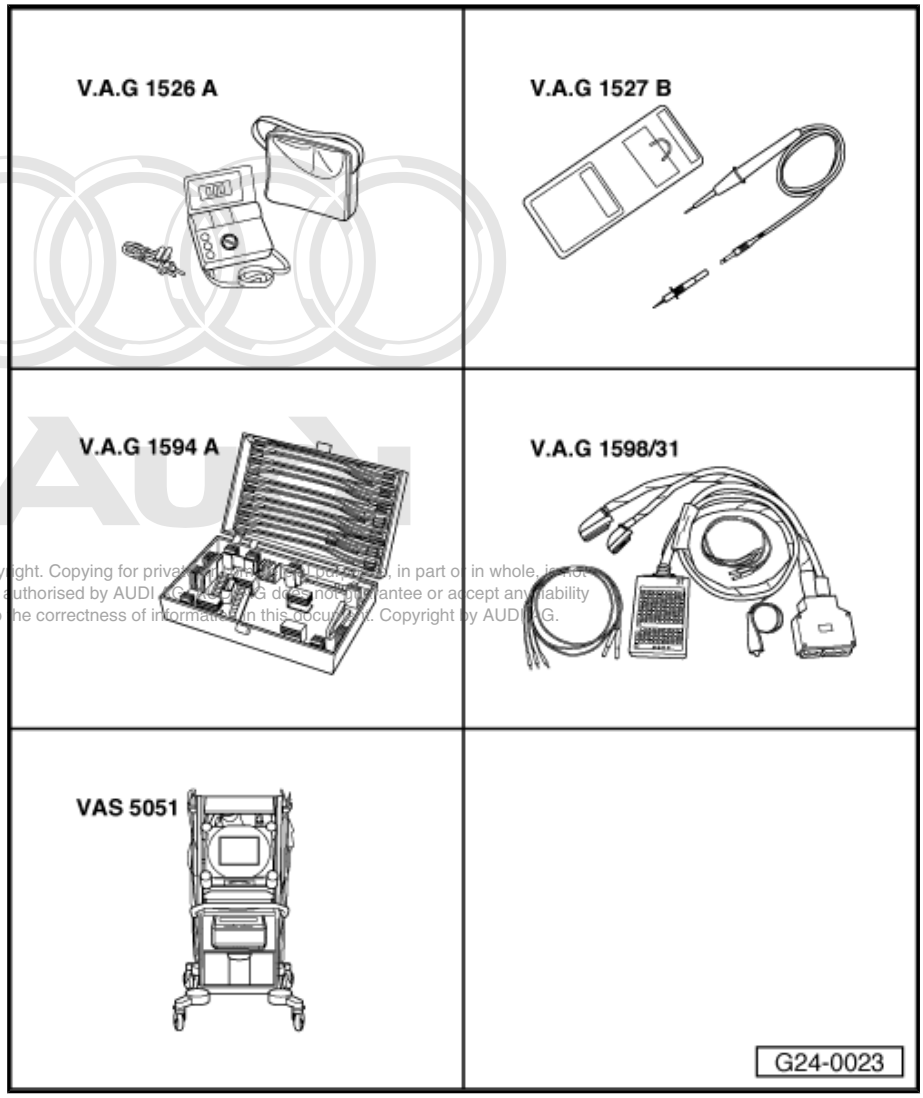

Protected by copyright. Copying for private or commercial purposes, in part or in whole, is not permitted unless authorised by AUDI AG. AUDI AG does not guarantee or accept any liability with respect to the correctness of information in this document. Copyright by AUDI AG.

Special tools and workshop equipment required

- -V.A.G 1526 A-
- -V.A.G 1527 B-
- -V.A.G 1594 A-
- -V.A.G 1598/31-
- -VAS 5051-

or

- -V.A.G 1551- with -V.A.G 1551/3 A-

– Initiate final control diagnosis and actuate the secondary air pump relay -J299- .

♦ The relay for secondary air pump -1- (under cover on left on the bulkhead) must respond and the motor for the secondary air pump -V101- must start in intervals.

A - If the relay does not respond:

– Check the power supply of the secondary air pump relay .

– Check actuation of secondary air pump relay.

B - If relay responds but secondary air pump motor does not run:

– Check the power supply for the secondary air pump motor.

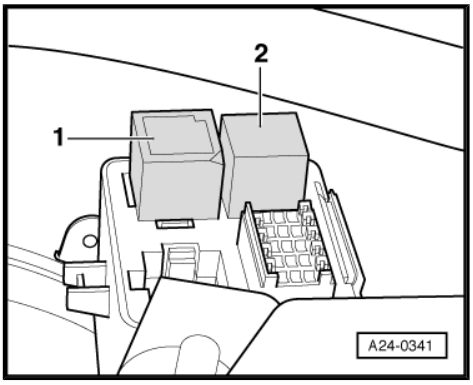

4.2 Checking voltage supply of secondary air pump relay

– Disconnect the secondary air pump relay -1- under cover on left of bulkhead.

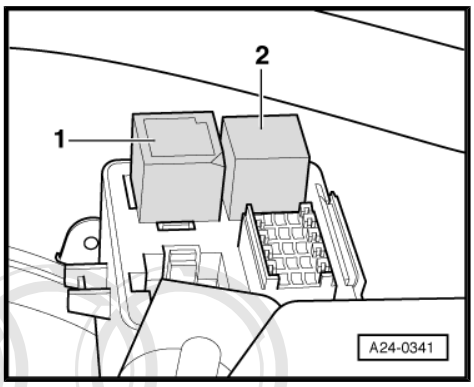

– Connect up multimeter as follows to measure voltage.

Relay carrier under left cover at the bulkhead Contact	Measure against
1	Engine earth

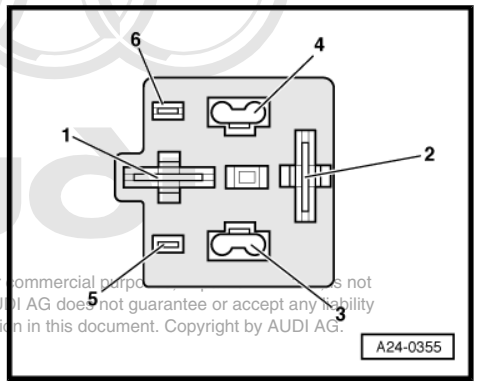

♦ Specification: approx. battery voltage

If specification is not attained:

– Perform the following checks marked with a dot.

Protected by copyright. Copying for private or commercial purposes, in part or in whole, is not permitted unless authorised by AUDI AG. AUDI AG does not guarantee or accept any liability with respect to the correctness of information in this document. Copyright by AUDI AG.

- Check fuse S131 (50 A) in main fuse box/battery.
- Check wiring from battery + (terminal 30) to fuse S131 for secondary air pump relay -J299- (under the left cover at the bulkhead) for open circuit. ⇒ Current flow diagrams, Electrical fault finding and Fitting locations

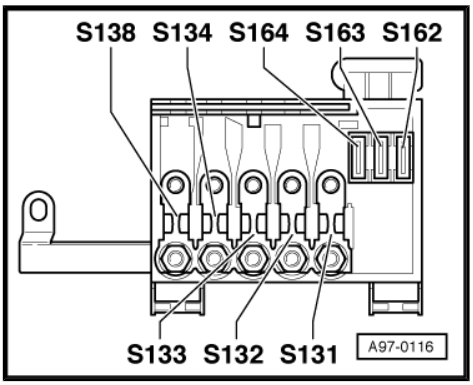

– Connect up multimeter as follows to measure voltage.

Relay carrier under left cover at the bulkhead Contact	Measure against
3	Engine earth

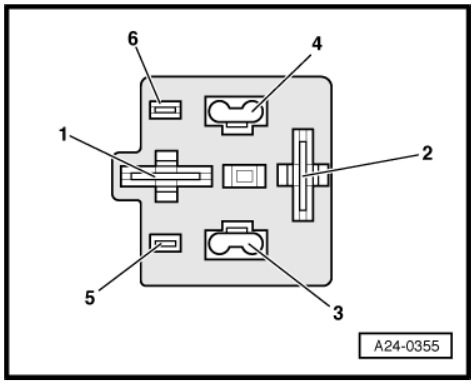

– Operate the starter briefly (the engine may start).

♦ Specification: approx. battery voltage

If specification is not attained:

– Perform the following checks marked with a dot.

• Check fuse S243 (in fuse box, terminal 43).

• Check for open circuit in wiring from secondary air pump relay -J299- (under left cover at bulkhead) via fuse S243 (in fuse box, position 43) to fuel pump relay:⇒ Current flow diagrams, Electrical fault finding and Fitting locations

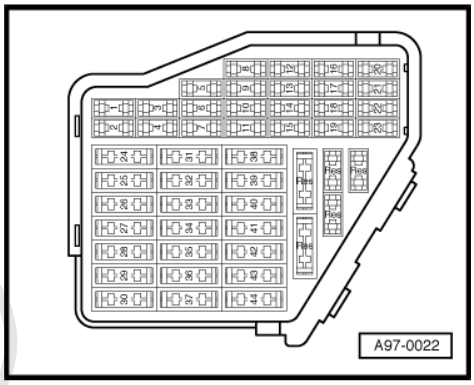

4.3 Checking actuation of secondary air pump relay

– Switch off ignition.

– Detach secondary air pump relay.

– Connect voltage tester -V.A.G 1527 B- as follows:

Relay carrier under left cover at the bulkhead Contact	Measure against
4	Battery positive

Rates-Auto copyright. Copying for private or commercial purposes, in part or in whole, is not permitted unless authorised by AUDI AG. AUDI AG does not guarantee or accept any liability with respect to the correctness of information in this document. Copyright by AUDI AG.

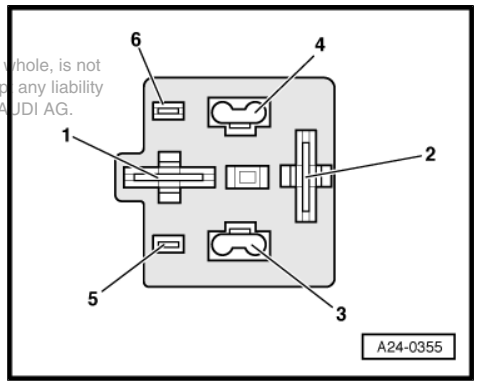

– Initiate final control diagnosis and actuate the secondary air pump relay -J299- .

♦ The LED should flash.

If the LED does not flash:

– Switch off ignition.

– Connect test box -V.A.G 1598/31- to wiring harness for engine control unit. Do not connect to the engine control unit itself.

– Check for open circuit and short to positive or earth in the following wiring connections:

Relay carrier under left cover at the bulkhead Contact	Test box -V.A.G 1598/31- Socket
4	72

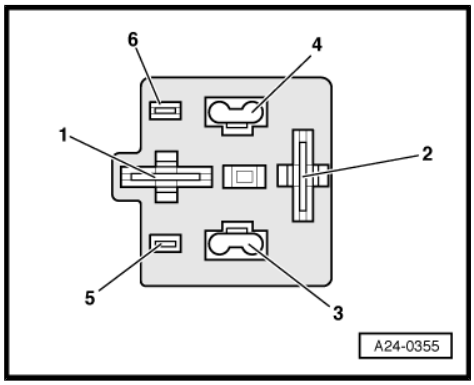

– Rectify any open/short circuit as necessary.

If no fault is found:

– Replace the secondary air pump relay -J299- .

4.4 Checking voltage supply for secondary air pump motor

– Remove centre noise insulation -arrows-.

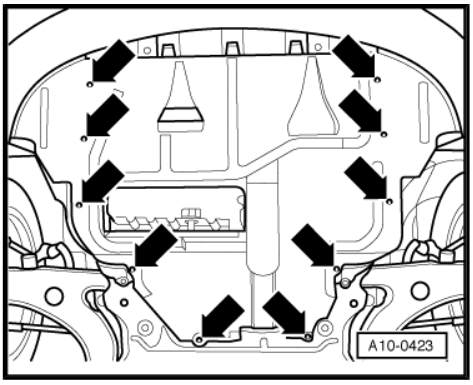

– Unplug connector from secondary air pump motor -V101- .

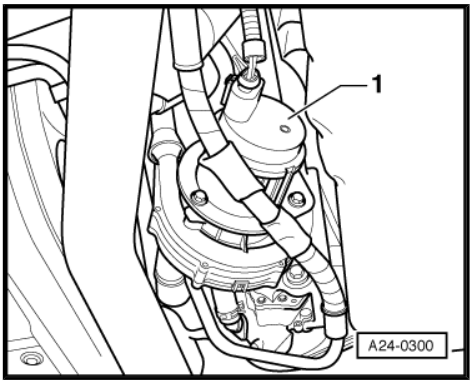

– Connect voltage tester -V.A.G 1527 B- between contacts 1 and 2.

– Initiate final control diagnosis and actuate the secondary air pump relay -J299- .

♦ The LED should flash.

If the LED does not flash:

– Perform the following checks marked with a dot.

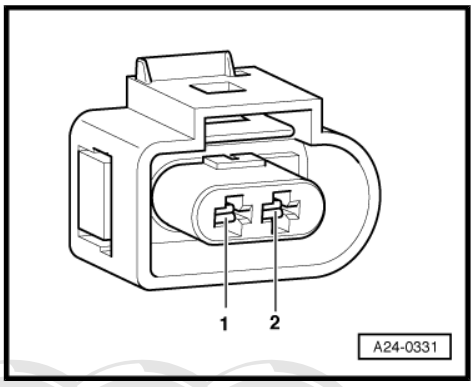

- Check for open circuit in wiring of contact 1 of connector and earthing point on the left in the engine compartment:⇒ Current flow diagrams, Electrical fault finding and Fitting locations
- Check for open circuit in wiring from contact 2 of connector for secondary air pump relay -J299- (in relay carrier under left cover at bulkhead):⇒ Current flow diagrams, Electrical fault finding and Fitting locations

If no fault is found:

– Replace the secondary air pump motor -V101- .

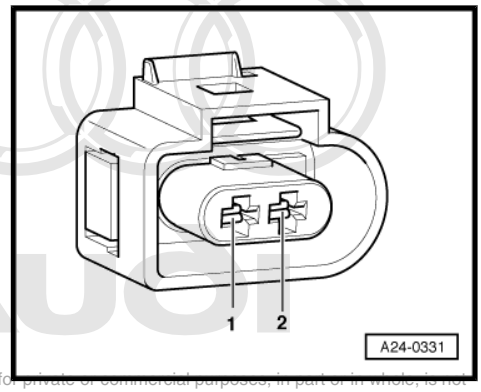

Protected by copyright. Copying for private or commercial purposes, in part or in whole, is not permitted unless authorised by AUDI AG. AUDI AG does not guarantee or accept any liability with respect to the correctness of information in this document. Copyright by AUDI AG.

5 Checking fuel tank breather

5.1 Checking solenoid valve 1 for activated charcoal filter -N80-

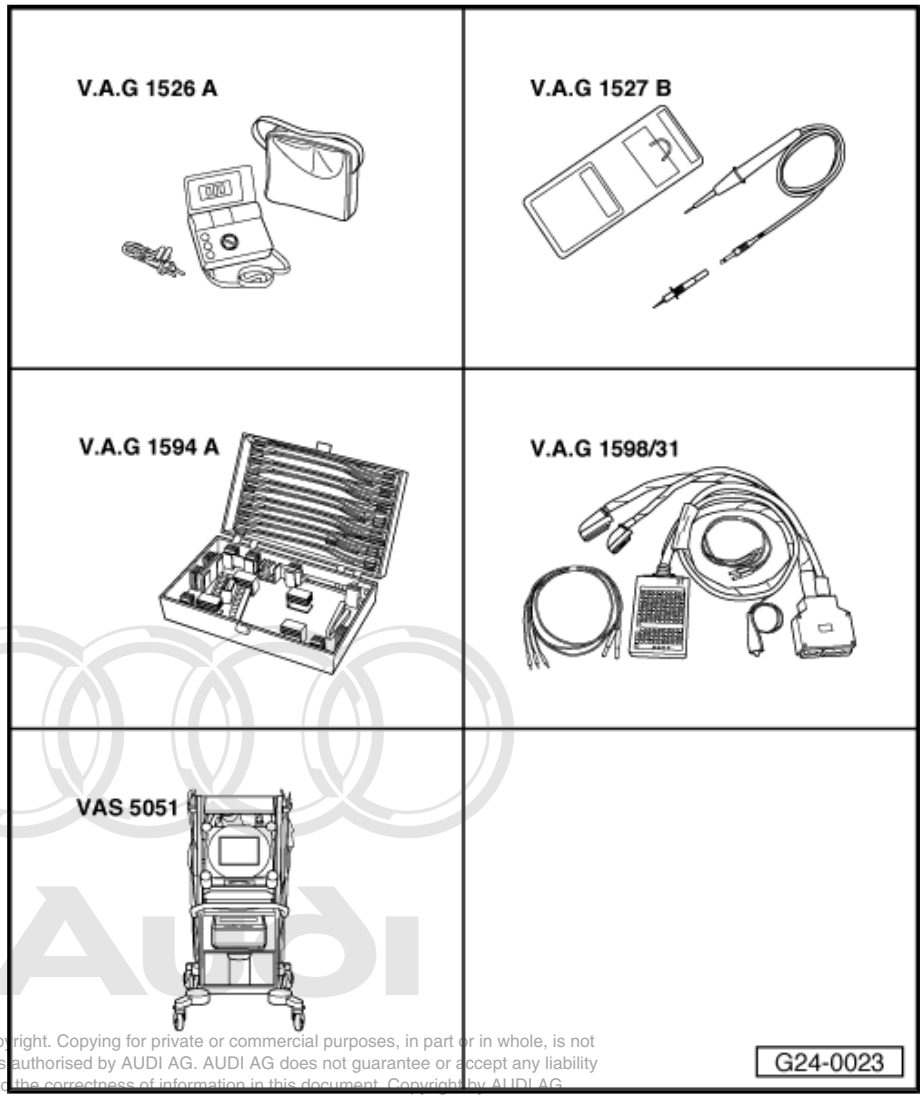

Protected by copyright. Copying for private or commercial purposes, in part or in whole, is not permitted unless authorised by AUDI AG. AUDI AG does not guarantee or accept any liability with respect to the correctness of information in this document. Copyright by AUDI AG.

5.1.1 Special tools and workshop equipment required

- -V.A.G 1526 A-
- -V.A.G 1527 B-
- -V.A.G 1594 A-
- -V.A.G 1598/31-
- -VAS 5051- with -VAS 5051/1-

or

- -V.A.G 1551- with -V.A.G 1551/3 A-

5.1.2 Checking for leaks

Solenoid valve for activated charcoal filter -N80- remains closed when it is deenergised.

– Disconnect hoses from ACF valve but leave the electrical connector plugged in.

– Connect auxiliary hose to one connection of ACF valve.

– Connect vehicle diagnostic, testing and information system -VAS 5051- or fault reader -V.A.G 1551- and select engine electronics control unit by entering “address word ” 01. For this purpose, the ignition must be switched on.

– Initiate final control diagnosis and actuate the solenoid valve for activated charcoal filter -N80- .

The valve should click...

...and should open and close (check by blowing into the auxiliary hose).

If the injector does not click:

– Checking internal resistance to ACF valve.

If valve does not open and close properly:

– Replace the solenoid valve for activated charcoal filter -N80- .

5.1.3 Checking internal resistance

– Unplug connector on ACF valve.

– Connect multimeter to valve to measure resistance.

♦ Specification: 22 ... 30 Ω

If the specification is not attained:

– Replace the solenoid valve for activated charcoal filter -N80- .

If specification is attained:

– Check the voltage supply ⇒ page 81 .

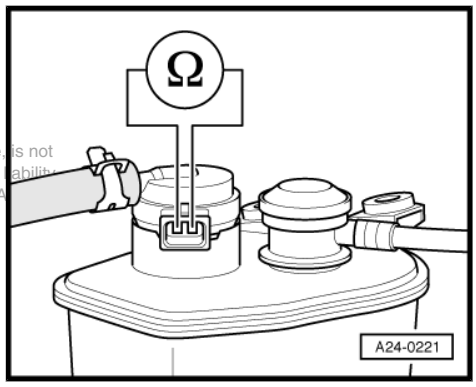

Protected by copyright. Copying for private or commercial purposes, in part or in whole, is not permitted unless authorised by AUDI AG. AUDI AG does not guarantee or accept any liability with respect to the correctness of information in this document. Copyright by AUDI A

5.1.4 Checking voltage supply

– Unplug connector on ACF valve.

– Connect voltage tester -V.A.G 1527 B- as follows:

Connector Contact	Measure against
1	Engine earth

– Operate the starter briefly (the engine may start).

♦ LED must illuminate

If the LED does not illuminate:

– Perform the following checks marked with a dot.

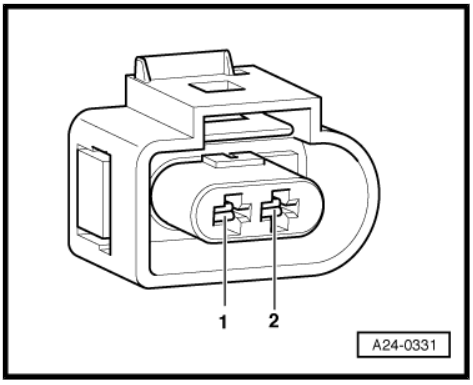

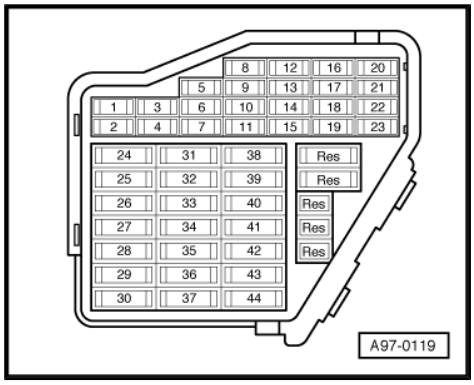

- Check the fuse for the ACF solenoid valve (in fuse carrier). ⇒ Current flow diagrams, Electrical fault finding and Fitting locations
- Check the wiring from contact 1 on the connector via the fuse to the fuel pump relay for an open circuit: ⇒ Current flow diagrams, Electrical fault finding and Fitting locations

– Rectify open circuit, if necessary.

If no fault is found:

– Check the fuel pump relay ⇒ page 39 .

If the LED illuminates:

– Check actuation.

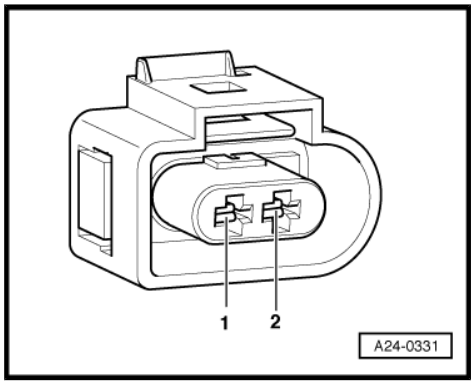

5.1.5 Checking actuation

– Connect voltage tester -V.A.G 1527 B- to contacts 1 (positive) and 2 of the connector.

– Initiate final control diagnosis and actuate the solenoid valve for activated charcoal filter -N80- .

♦ The LED should flash.

If the LED lamp does not flash or illuminates continuously:

– Connect test box -V.A.G 1598/31- to wiring harness for engine control unit. Do not connect engine control unit ⇒ page 16 .

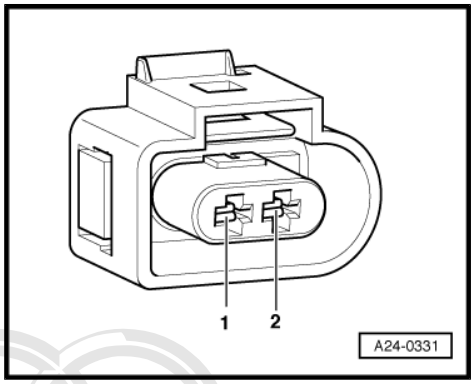

– Check for open circuit and short to positive or earth in the following wiring connections:

Connector Contact	Test box -V.A.G 1598/31- Socket
2	61

– Rectify any open/short circuit as necessary. ⇒ Current flow diagrams, Electrical fault finding and Fitting locations

If the wiring is OK:

– Replace the engine control unit ⇒ page 20 .

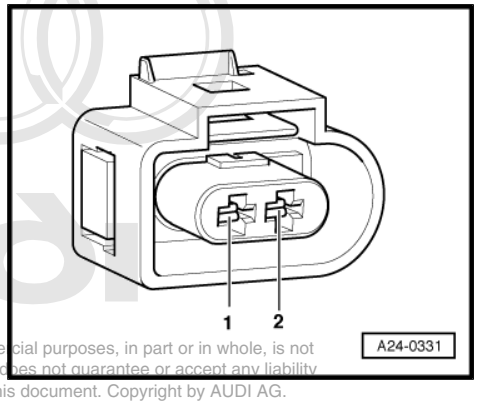

Protected by copyright. Copying for private or commercial purposes, in part or in whole, is not permitted unless authorised by AUDI AG. AUDI AG does not guarantee or accept any liability with respect to the correctness of information in this document. Copyright by AUDI AG.

6 Checking electronic engine power control (electronic throttle)

6.1 Function of the electronic throttle system

In the electronic throttle system, the throttle valve is not operated by a cable connected to the accelerator pedal. There is no mechanical connection between the accelerator pedal and the throttle valve.

The position of the accelerator pedal is communicated to the engine control unit by two accelerator position senders (variable resistances located in a single housing) connected to the accelerator pedal.

The position of the accelerator pedal (decided by the driver) is one of the main input parameters to the engine control unit.

The throttle valve is actuated, over the full range of engine speed and power, by an electric motor (throttle valve actuator) in the throttle valve control unit.

The throttle valve actuator moves the throttle valve as instructed by the engine control unit.

After selecting display group 062, whether in mode 04 basic setting or 08 reading measured value block, the engine control unit controls the throttle valve positioner accurately using the information received from the accelerator position sender. This also applies for display group 060 in reading measured value block mode and in basic setting after adaption of the throttle valve control unit.

When the engine is running (and under load), the engine control unit can open and close the throttle valve independently of the accelerator position senders.

As an example, the throttle valve can be fully open even though the accelerator pedal is only pressed half way down. This has the advantage of preventing throttle losses at the throttle valve.

Under certain engine load conditions, markedly improved emission and consumption figures are also attained.

It is incorrect to believe that the “electronic throttle” is only comprised of one or two components. The electronic throttle is much rather a system which includes all the components which contribute to determining, controlling and monitoring the throttle valve position, e.g. the accelerator position sender, the throttle valve control unit, the EPC warning lamp, the engine control unit...)

6.2 Significance of the EPC warning lamp (fault warning lamp for electronic throttle) in dash panel insert

This document is protected by copyright. Distribution to third parties and other uses, in part or in whole, is not permitted unless authorised by AUDI AG. AUDI AG does not guarantee or accept any liability with respect to the correctness of information in this document. Copyright by AUDI AG.

“EPC” stands for Electronic Power Control and refers to the electronic throttle control system.

Fitting location of the EPC warning lamp

When the ignition is switched on, the engine control unit checks all the components of importance to the electronic throttle system.

The EPC warning lamp goes out after the engine has been started, if no fault has been identified on the electronic throttle system.

If a fault is detected in the electronic throttle system while the engine is running, the engine control unit switches on the EPC warning lamp. (These faults are listed in the fault table). At the same time, an entry is made in the engine control unit fault memory.

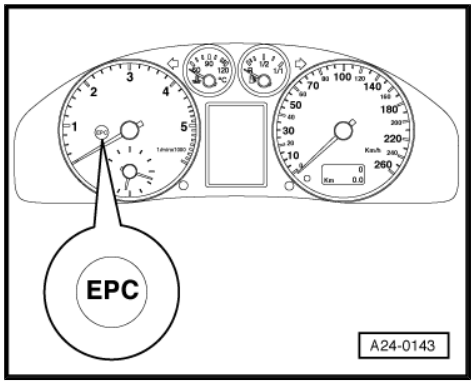

6.3 Checking electronic throttle warning lamp -K132-

Note!

The electronic throttle warning lamp -K132- is also known as the EPC warning lamp.

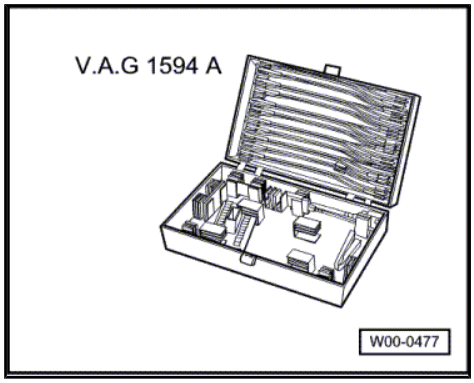

6.3.1 Special tools and workshop equipment required

- -V.A.G 1594 A-
- -V.A.G 1598/31-

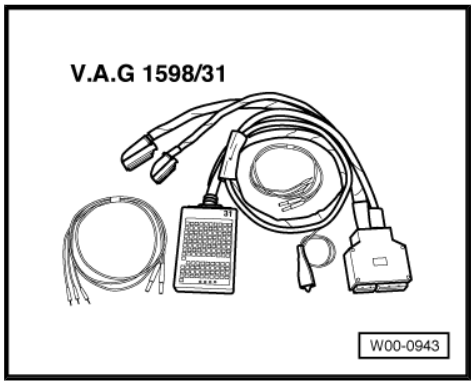

6.3.2 Functional check of warning lamp

– Switch on ignition.

- EPC warning lamp should illuminate.

6.3.3 A - Electronic throttle warning lamp - K132- does not illuminate

– Connect test box -V.A.G 1598/31- to wiring harness for engine control unit. Do not connect engine control unit ⇒ page 16.

Reproduction, copying or other use of this document, or any part thereof, outside the scope of the contract, or its publication to third parties in whole, is not permitted unless authorised by AUDI AG. AUDI AG does not guarantee or accept any liability with respect to the correctness and completeness of this document. Copyright by AUDI AG.

– Use leads from adapter set -V.A.G 1594 A- to bridge contacts 1 and 73 at test box.

– Switch on ignition.

- The fault lamp must illuminate

If the warning lamp does not illuminate:

– Switch off ignition.

– Remove dash panel insert, then test bulb or LED and its voltage supply.⇒ Electrical System; Repair group 90; Dash panel insert; Removing and installing dash panel insert

If no fault is found:

– Check for open circuit and short to positive in the following wiring connection:

Test box -V.A.G 1598/31- Socket	Dash panel insert Contact
73	. ⇒ Current flow diagrams, Electrical fault finding and Fitting locations

– Rectify any open/short circuit as necessary.

If the wiring is OK:

– Replace the engine control unit ⇒ page 20 .

6.3.4 B - Electronic throttle warning lamp - K132- illuminates continuously

– Interrogate the fault memory of the engine control unit.

If no fault is stored:

– Connect test box -V.A.G 1598/31- to wiring harness for engine control unit. Do not connect engine control unit ⇒ page 16 .

– Check the following wiring for short to earth:

Test box -V.A.G 1598/31- Socket	Dash panel insert Contact
73	. ⇒ Current flow diagrams, Electrical fault finding and Fitting locations

– Rectify short circuit, if necessary

If the wiring is OK:

– Replace the engine control unit ⇒ page 20 .

6.4 Checking throttle valve control unit - J338-

The following components are located in the housing of the throttle valve control unit.

- Throttle valve drive -G186- . (This is an electric motor which is actuated by the engine control unit, which opens the throttle valve by overcoming a spring force).
- Angle sender 1 for throttle valve drive -G187-
- Angle sender 2 for throttle valve drive -G188-

Protected by copyright. Copying for private or commercial purposes, in part or in whole, is not permitted unless authorised by AUDI AG. AUDI AG does not guarantee or accept any liability with respect to the correctness of information in this document. Copyright by AUDI AG.

Note!

- *Housing of throttle valve control unit must not be opened.*
- *The angle senders are in the form of potentiometers (variable resistances). They supply the position of the throttle valve to the engine control unit completely independently of one another (redundant system).*
- *The potentiometers cannot be adjusted mechanically. Adjustments can be made using vehicle diagnostic, testing and information system -VAS 5051- or fault reader -V.A.G 1551- (in basic setting mode, function 04).*

6.5 Adaption of throttle valve control unit

The adaption process enables the engine control unit to learn the various positions of the throttle valve with the ignition switched on and the engine not running. These positions are stored in the control unit. The feedback signal indicating the position of the throttle valve comes from the two throttle valve actuator angle senders.

Protected by copyright. Copying for private or commercial purposes, in part or in whole, is not permitted unless authorised by AUDI AG. AUDI AG does not guarantee or accept any liability with respect to the correctness of information in this document. Copyright by AUDI AG.

If throttle valve control unit -J338- or the engine control unit are replaced, adaption must always be performed.

The learning process (adaption process) is performed:

- Automatically if the ignition is switched on for at least 4 seconds without operating the starter or depressing the accelerator, and if the engine control unit registers a “learning requirement”. (In this case, however, it is not obvious whether the adaption process was successful or not). Adaption requirement is recognised if stored voltage values from the angle senders do not coincide with current measured voltage values in a certain tolerance band.
- By initiating basic setting (function 04), display group 060 with ignition on.

Note!

Engine will not start during automatic adaption.

6.5.1 Special tools and workshop equipment required

- -VAS 5051- with -VAS 5051/1-

or

- -V.A.G 1551- with -V.A.G 1551/3 A-

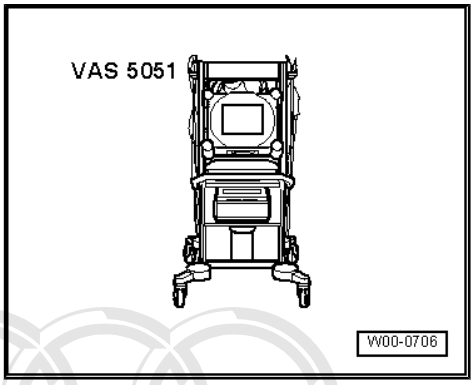

Note!

- *No faults stored in fault memory. Interrogating fault memory and .*
- *Engine stopped, ignition switched on*
- *Coolant temperature 5... 120 °C (display group 4, display zone 3).*
- *Intake air temperature 5... 80 °C (display group 4, display zone 4).*
- *Voltage supply to engine control unit more than 8 V; Checking.*

6.5.2 Procedure

– Connect vehicle diagnostic, testing and information system -VAS 5051- or fault reader -V.A.G 1551- and select engine electronics control unit by entering “address word ” 01. For this purpose, the ignition must be switched on.

Protected by copyright. Copying for private or commercial purposes, in part or in whole, is not permitted unless authorised by AUDI AG. AUDI AG does not guarantee or accept any liability with respect to the correctness of information in this document. Copyright by AUDI AG.

Indicated on display:

```
Rapid data transfer            HELP
Select function XX
```

– Enter “04” for the function “Start basic setting” and confirm entry with the Q key.

Indicated on display:

```
Initiate basic setting             Q
Enter display group number XXX
```

– Enter “060” for “Display group number 060” and confirm entry with the Q key.

When the Q key is pressed, the throttle valve positioner is de-energised.

In this condition, the throttle valve is pulled into an emergency running position by a mechanical spring which is located in the throttle valve control unit. The values supplied by the two angle senders in this emergency running position are stored in the engine control unit.

The throttle valve is then opened by a predetermined amount. Once this value is attained, the throttle valve actuator is de-energised again. The mechanical spring should then close the throttle valve to the previously learnt emergency running position within a specified period of time (spring test).

The throttle valve actuator then closes the throttle valve; the values supplied by the angle senders in the throttle valve control unit are stored in the engine control unit.

If the engine control unit disconnects the throttle valve actuator from the electricity supply while the vehicle is being driven, the result will be an increased and fluctuating idling speed and a very poor throttle response.

Indicated on display:

```
System in basic setting 60        ->
         1         2         3         4
```

– Check specification for throttle valve control unit (display zone 4).

	Display zones			
	1	2	3	4
Display group 60: Adaption of throttle valve control unit				
Display	xx %	xx %	---	---
Readout	Throttle valve angle (angle sender 1)	Throttle valve angle (angle sender 2)	Adaption stage counter	Adaption status
Range	0...100%	100...0 %	x...x	ADP running ADP OK ADP ERROR
Specifi-cation	5.9...92.2 %	95.1...8.7 %	0	ADP OK
Note:				If the specification is not attained: ⇒ Note, Page ⇒ page 88 .

Note!

During adaption, various digits are displayed in display zone 3 which represent the relevant adaption status. The most crucial factor is not the way in which the adaption stage counter (display zone 3) behaves during the adaption process, but that the specification "ADP OK" is displayed after adaption in display zone 4.

Note!

The abbreviation "ADP" in display zone 4 stands for "Adaption".

Note!

- *If the adaption is interrupted by the control unit, the reason could be one of the following:*
- *The throttle valve cannot close completely (e.g. dirt).*
- *Connectors (e.g. on throttle valve control unit) have become loose, are not properly engaged or contacts in plugs are corroded/bent.*
- *Battery voltage is too low (below 8 Volt).*
- *Throttle valve control unit or wiring is defective.*
- *Engine started during adaption.*
- *Distortion of throttle valve housing (check screw connection).*

– End the engine basic setting by pressing the → key.

Indicated on display (function selection):

```
Rapid data transfer          HELP
Select function XX
```

Protected by copyright. Copying for private or commercial purposes, in part or in whole, is not permitted unless authorised by AUDI AG. AUDI AG does not guarantee or accept any liability with respect to the correctness of information in this document. Copyright by AUDI AG.

6.6 Checking angle sender for throttle valve actuator

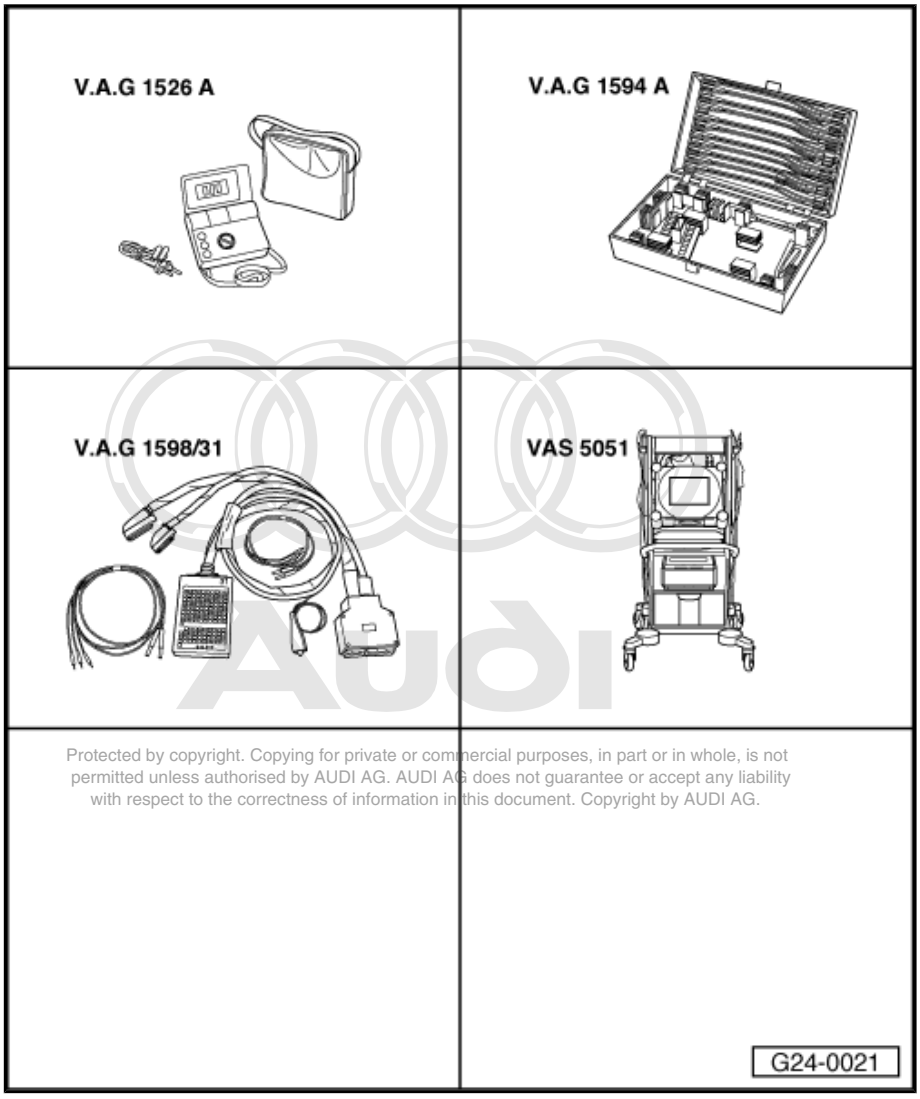

Protected by copyright. Copying for private or commercial purposes, in part or in whole, is not permitted unless authorised by AUDI AG. AUDI AG does not guarantee or accept any liability with respect to the correctness of information in this document. Copyright by AUDI AG.

6.6.1 Special tools and workshop equipment required

- -V.A.G 1526 A-
- -V.A.G 1594 A-
- -V.A.G 1598/31-
- -VAS 5051- with -VAS 5051/1-

or

- -V.A.G 1551- with -V.A.G 1551/3 A-

The angle senders for throttle valve drive (-G187- and -G188-) inform the engine control unit of the position of the throttle valve. Both angle senders are located in the throttle valve control unit.

6.6.2 Test sequence

– Connect vehicle diagnostic, testing and information system -VAS 5051- or fault reader -V.A.G 1551- and select engine electronics control unit by entering “address word ” 01. For this purpose, the ignition must be switched on.

Indicated on display:

```
Rapid data transfer          HELP
Select function XX
```

– Enter “08” for the function “Read measured value block” and confirm entry with the Q key.

Indicated on display:

```
Reading measured value block
        Q
Enter display group number XXX
```

– Enter “062” for “Display group number 062” and confirm entry with the Q key.

– Check specifications for electronic throttle potentiometer voltages.

	Display zones			
	1	2	3	4
Display Group 062: Electronic throttle potentiometer voltages				
Display	xx %	xx %	xx %	xx %
Readout	Throttle valve angle (angle sender 1)	Throttle valve angle (angle sender 2)	Accelerator position sender	Accelerator position sender 2
Range	0...100 %	100...0 %	0...100 %	0...100 %
Specification	5.9...92.2 % (Idling speed value: 5.9...15.2%; Full load value: 84.0...92.2 %)	95.1...8.7 % (Idling speed value: 84.2...95.1 %; Full load value: 8.7...15.4 %)	12...97 %	4...49 %

Protected by copyright. Copying for private or commercial purposes, in part or in whole, is not permitted unless authorised by AUDI AG. AUDI AG does not guarantee or accept any liability with respect to the correctness of information in this document. Copyright by AUDI AG.

Note!

The engine control unit converts and displays the voltage readings from the angle senders as percentages of 5 V. (5 Volt supply corresponds to 100%).

– Observe readouts in display zones 1 and 2.

– Slowly depress accelerator pedal.

Percentage displayed in zone 1 should rise evenly. The tolerance range of 5.9...92.2 % is not fully utilised.

Percentage displayed in zone 2 should fall evenly. The tolerance range of 95.1...8.7 % is not fully utilised.

Note!

- *The reason why the value in display zone 1 rises and that in zone 2 falls is that the potentiometers (angle senders) in the throttle valve control unit operate in opposite directions.*
- *This means that the voltage picked off by one of the angle senders runs towards 5 V. (As the throttle is opened, the voltage becomes greater and the percentage increases).*
- *The voltage picked off by the angle sender 2 runs from 5 V towards 0 V. (As the throttle is opened, the voltage becomes smaller and the percentage decreases).*

If the displays are not as described:

– Check the voltage supply and wiring to throttle valve control unit ⇒ page 91 . Pay particular attention to connectors, which may be loose, not properly engaged or corroded.

– Check the accelerator position senders ⇒ page 91 .

6.6.3 Checking the voltage supply to the throttle valve control unit.

– Unplug the connector from the throttle valve control unit.

– Switch on ignition.

– Connect multimeter as follows to measure voltage:

Connector Contact	Specification
2 + earth	approx. 5 V
2 + 6	approx. 5 V

Protected by copyright. Copying for private or commercial purposes, in part or in whole, is not permitted unless authorised by AUDI AG. AUDI AG does not guarantee or accept any liability with respect to the correctness of information in this document. Copyright by AUDI AG.

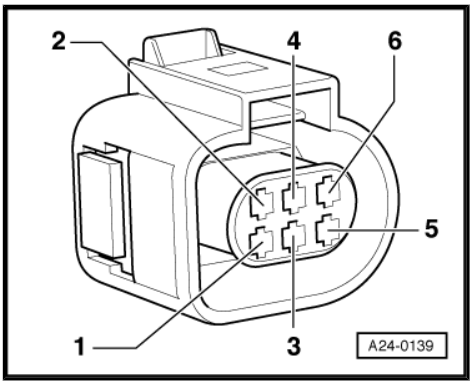

If the specifications are not attained:

– Check the wiring between the engine control unit and throttle valve control unit ⇒ page 91 . The signal wiring and the throttle valve positioner wiring should also be tested during this check.

6.6.4 Checking wiring

– Unplug the connector from the throttle valve control unit.

– Connect test box -V.A.G 1598/31- to wiring harness for engine control unit. Do not connect engine control unit ⇒ page 16 .

– Check for open circuit and short to positive or earth in the following wiring connections:

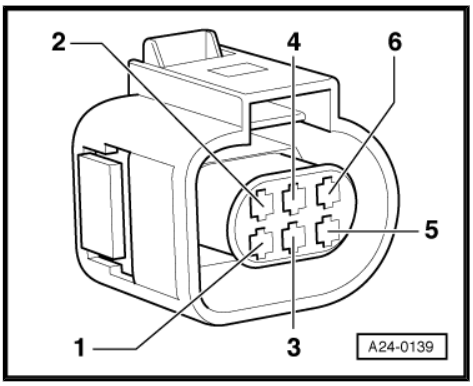

Connector Contact	Test box -V.A.G 1598/31- Socket
1	90
2	97
3	119
4	92
5	121
6	91

– Rectify any open/short circuit as necessary.

If no wiring fault is detected:

– Replace throttle valve control unit.

6.7 Checking accelerator position sender

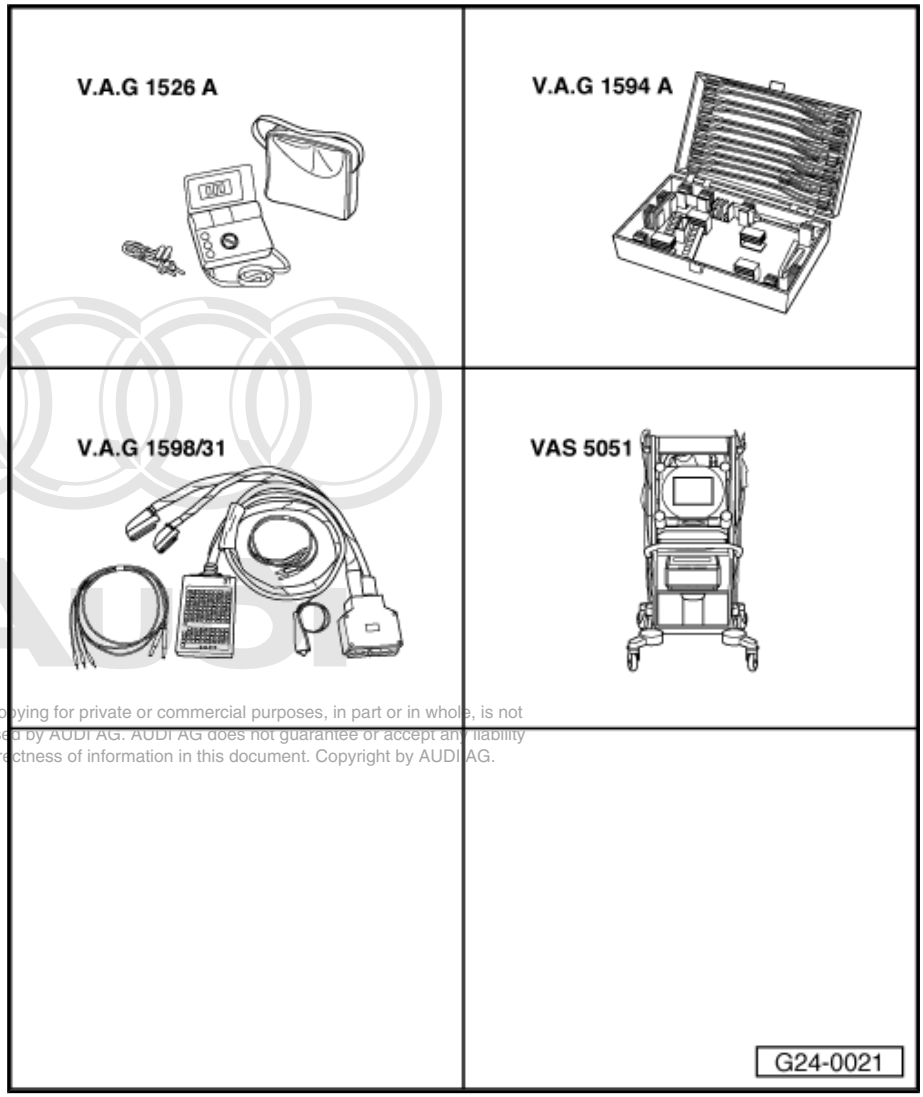

Protected by copyright. Copying for private or commercial purposes, in part or in whole, is not permitted unless authorised by AUDI AG. AUDI AG does not guarantee or accept any liability with respect to the correctness of information in this document. Copyright by AUDI AG.

6.7.1 Special tools and workshop equipment required

- -V.A.G 1526 A-
- -V.A.G 1594 A-
- -V.A.G 1598/31-
- -VAS 5051- with -VAS 5051/1-

or

- -V.A.G 1551- with -V.A.G 1551/3 A-

Accelerator position senders -G79- and -G185 are located on the accelerator pedal. Both senders inform the engine control unit of the driver's throttle requirement (pedal position), but each functions completely independently of the other (redundancy principle). Both senders are located in one housing.

6.7.2 Test sequence

– Connect vehicle diagnostic, testing and information system -VAS 5051- or fault reader -V.A.G 1551- and select engine electronics control unit by entering “address word ” 01. For this purpose, the ignition must be switched on.

Indicated on display:

```
Rapid data transfer            HELP
Select function XX
```

– Enter “08” for the function “Read measured value block” and confirm entry with the Q key.

Indicated on display:

```
Reading measured value block
        Q
Enter display group number XXX
```

– Enter “062” for “Display group number 062” and confirm entry with the Q key.

– Check specifications for electronic throttle potentiometer voltages.

	Display zones			
	1	2	3	4
Display Group 062: Electronic throttle potentiometer voltages				
Display	xx %	xx %	xx %	xx %
Readout	Throttle valve angle (angle sender 1)	Throttle valve angle (angle sender 2)	Accelerator position sender	Accelerator position sender 2
Range	0...100 %	100...0 %	0...100 %	0...100 %
Specification	5.9...92.2 %	95.1...8.7 %	12...97 % (idling value 8...18 %)	4...49 % (idling value 3...13 %)

Protected by copyright. Copying for private or commercial purposes, in part or in whole, is not permitted unless authorised by AUDI AG. AUDI AG does not guarantee or accept any liability with respect to the correctness of information in this document. Copyright by AUDI AG.

Note!

The engine control unit converts and displays the voltage readings from the angle senders as percentages of 5 V. (5 Volt supply corresponds to 100%).

– Observe readouts in display zones 3 and 4.

– Slowly depress accelerator pedal.

Percentage displayed in zone 3 should rise evenly. The tolerance range from 12...97 % is not fully utilised.

Percentage displayed in zone 4 should also rise evenly. The tolerance range from 4...49 % is not fully utilised.

Note!

The value displayed in zone 3 must always be about twice as large as that in zone 4.

If the displays are not as described:

– Check that the connector to the accelerator position sender is fitted securely and properly engaged and check the contacts in the connector for corrosion.

– Check the voltage supply and wiring to the accelerator position senders ⇒ page 93 .

6.7.3 Checking voltage supply

– Remove the driver's storage compartment: ⇒ Body Repairs; Rep. Gr. ; Interior; Repair group 68; Storage compartments, covers; Removing driver's storage compartment

– Detach connector for accelerator position sensors.

– Switch on ignition.

– Connect multimeter as follows to measure voltage:

Connector Contact	Specification
1 + earth	approx. 5 V
1 + 5	approx. 5 V
2 + earth	approx. 5 V
2 + 3	approx. 5 V

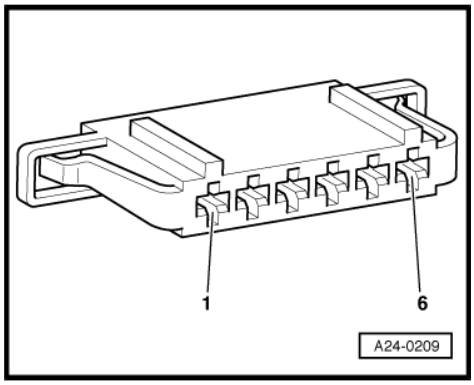

If specifications are attained:

– Additionally check signal wires.

If the specifications are not attained:

– Check wiring between engine control unit and accelerator position senders.

6.7.4 Checking wiring

– Connect test box -V.A.G 1598/31- to wiring harness for engine control unit. Do not connect engine control unit ⇒ page 16 .

– Check for open circuit and short to positive or earth in the following wiring connections:

Connector Contact	Test box -V.A.G 1598/31- Socket
1	19
2	18
3	50
4	51
5	45
6	64

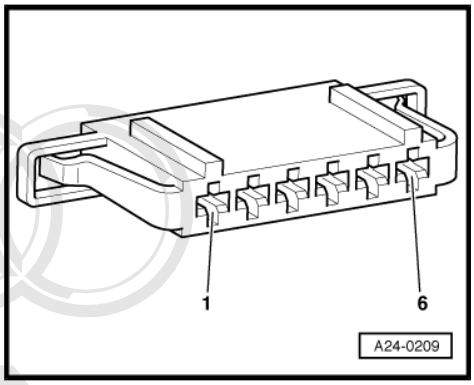

– Rectify any open/short circuit as necessary.

If no wiring fault is detected:

– Replace accelerator position senders. ⇒ Fuel Supply - Petrol Engines; Repair group 20; Servicing throttle mechanism; Vehicles with electronic throttle mechanism

Protected by copyright. Copying for private or commercial purposes, in part or in whole, is not permitted unless authorised by AUDI AG. AUDI AG does not guarantee or accept any liability with respect to the correctness of information in this document. Copyright by AUDI AG.

6.8 Adapting kick down function

If accelerator position sender or engine control unit is replaced, kick down function must be adapted on vehicles with automatic gearbox.

6.8.1 Special tools and workshop equipment required

- -VAS 5051- with -VAS 5051/1-

or

- -V.A.G 1551- with -V.A.G 1551/3 A-

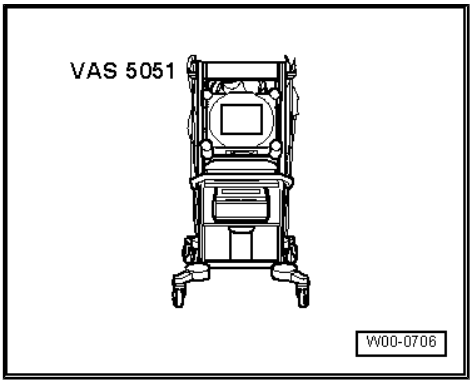

Note!

- *No faults stored in fault memory. Interrogating fault memory and .*
- *Engine stopped, ignition switched on*

6.8.2 Procedure

– Connect vehicle diagnostic, testing and information system -VAS 5051- or fault reader -V.A.G 1551- and select engine electronics control unit by entering “address word ” 01. For this purpose, the ignition must be switched on.

Indicated on display:

```
Rapid data transfer            HELP
Select function XX
```

– Enter “04” for the function “Start basic setting” and confirm entry with the Q key.

Indicated on display:

```
Basic setting                        Q
Enter display group number XXX
```

– Enter “063” for “Display group number 063” and confirm entry with the Q key.

Indicated on display:

```
System in basic setting 63        ->
        1         2         3         4
```

Note!

Tester now displays prompt e.g. “Press and hold pedal”.

Protected by copyright. Copying for private or commercial purposes, in part or in whole, is not permitted unless authorised by AUDI AG. AUDI AG does not guarantee or accept any liability with respect to the correctness of information in this document. Copyright by AUDI AG.

– Fully depress accelerator pedal beyond kickdown point and keep it pressed.

“ADP. running” is displayed on the tester during the adaption phase.

Note!

The abbreviation “ADP.” stands for adaption.

When the kick down point has been adapted successfully, “ADP. OK” is displayed on the tester and the accelerator can be released.

If specified value “ADP. OK” is attained:

– Press the → key.

Indicated on display (function selection):

```
Rapid data transfer HELP
Select function XX
```

If “ERROR” is displayed:

– Interrogate fault memory ⇒ Page and .

“ERROR” may be displayed, for example, if - following tester prompt - accelerator pedal is not fully depressed immediately or if accelerator pedal is released with adaption already in progress but not yet completed. In both cases it is necessary to exit the “Basic setting” mode and restart the adaption process ⇒ page 94 .

Protected by copyright. Copying for private or commercial purposes, in part or in whole, is not permitted unless authorised by AUDI AG. AUDI AG does not guarantee or accept any liability with respect to the correctness of information in this document. Copyright by AUDI AG.

7 Checking auxiliary signals

7.1 Checking engine speed signal

Note!

- *The signal generated by engine speed sender -G28- is processed by the engine control unit and transmitted via contact 22 of the engine control unit to various electronic systems (e.g. the air conditioner control unit and ABS/EDL control unit). The engine speed signal and wiring are monitored by these systems.*
- *Checking engine speed signal:⇒ Current flow diagrams, Electrical fault finding and Fitting locations*

Protected by copyright. Copying for private or commercial purposes, in part or in whole, is not permitted unless authorised by AUDI AG. AUDI AG does not guarantee or accept any liability with respect to the correctness of information in this document. Copyright by AUDI AG.

7.2 Checking consumption signal for on-board computer

Note!

- *The consumption signal is calculated by the engine control unit from the injection period and relayed to the on-board computer by contact 75 of the engine control unit.*
- *Checking consumption signal: ⇒ Electrical System; Repair group 90; Dash panel insert, Checking consumption signal*

7.3 Checking vehicle speed signal

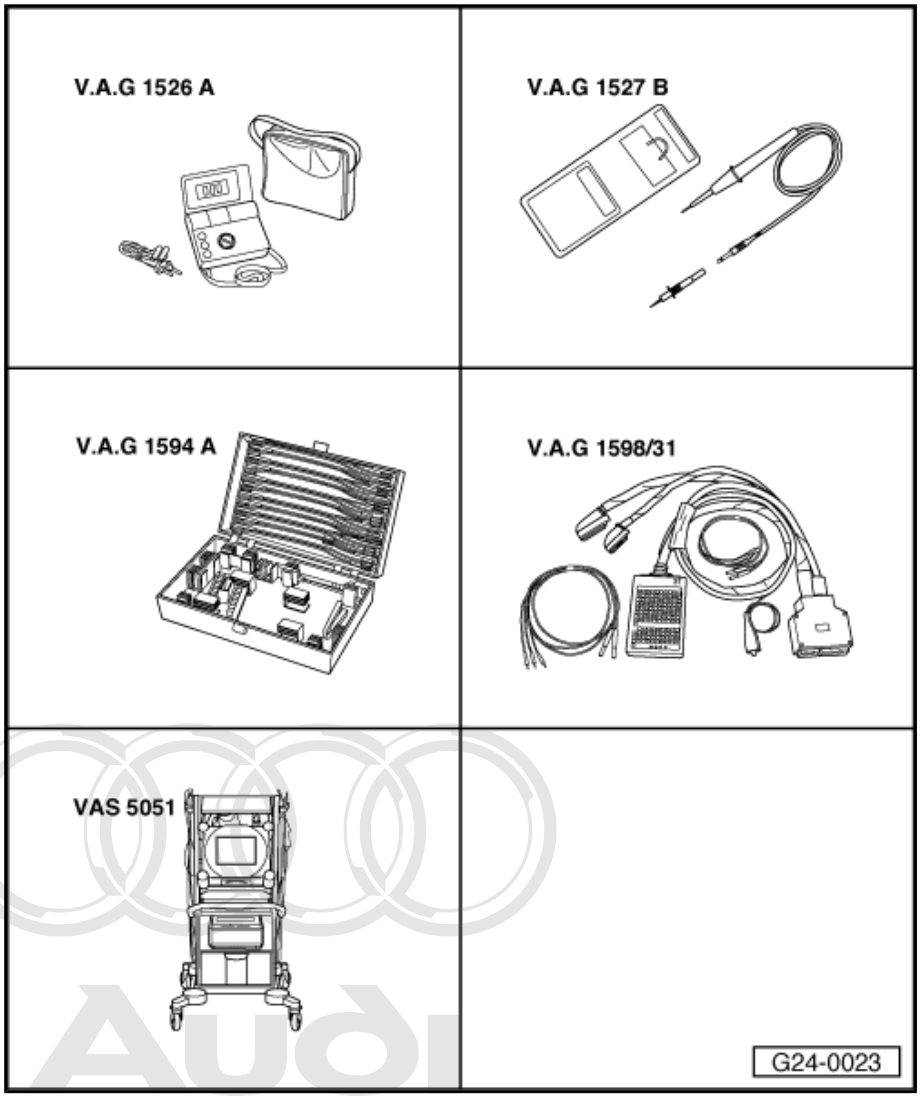

Protected by copyright. Copying for private or commercial purposes, in part or in whole, is not permitted unless authorised by AUDI AG. AUDI AG does not guarantee or accept any liability with respect to the correctness of information in this document. Copyright by AUDI AG.

7.3.1 Special tools and workshop equipment required

- -V.A.G 1526 A-
- -V.A.G 1527 B-
- -V.A.G 1594 A-
- -V.A.G 1598/31-
- -VAS 5051- with -VAS 5051/1-

or

- -V.A.G 1551- with -V.A.G 1551/3 A-

Note!

- *The vehicle speed signal is generated by the vehicle speed sender -G68- (on the gearbox) and is processed in the dash panel insert.*
- *The processed signal goes to contact 9 on the engine control unit and is used for idling speed stabilisation and for the damping of load change jolts when changing gear.*

Note!

Speedometer (including display) must be functioning properly. Fault-finding: ⇒ Electrical System, Repair group 90; Dash panel insert; Checking vehicle speed signal

7.3.2 Test sequence

– Connect vehicle diagnostic, testing and information system -VAS 5051- or fault reader -V.A.G 1551- and select engine electronics control unit by entering "address word " 01. For this purpose, the engine must be running at idling speed.

> **Caution**
>
> ***To avoid accident risks when road testing the vehicle with test equipment, always observe the relevant safety precautions ⇒ page 1 .***

Indicated on display:

```
Rapid data transfer            HELP
Select function XX
```

– Enter "08" for the function "Read measured value block" and confirm entry with the Q key.

Indicated on display:

```
Reading measured value block
        Q
Enter display group number XXX
```

– Enter "005" for "Display group number 005" and confirm entry with the Q key.

Indicated on display:

```
Read measured value block 5
    ->
        1         2         3         4
```

– Take vehicle for a test drive and check whether the vehicle speed appears in display zone 3.

– If the vehicle speed does not appear, raise the vehicle (preferably using a lifting platform) until the front left wheel is clear of the ground.

– Connect test box -V.A.G 1598/31- to wiring harness for engine control unit. Do not connect engine control unit ⇒ page 16 .

– Connect voltage tester -V.A.G 1527 B- to sockets 3 (positive) and 9 (vehicle speed signal) on test box -V.A.G 1598/31- .

– Switch on ignition and turn front left wheel by hand.

♦ The LED lamp should flash (very brief flashes).

If the LED does not flash:

– Check for open circuit and short to positive or earth in the following wiring connections:

Test box -V.A.G 1598/31- Socket	Dash panel insert Contact
9	. ⇒ Current flow diagrams, Electrical fault finding and Fitting locations

– Rectify any open/short circuit as necessary.

7.4 Checking air conditioner compressor shut-off

Protected by copyright. Copying for private or commercial purposes, in part or in whole, is not permitted unless authorised by AUDI AG. AUDI AG does not guarantee or accept any liability with respect to the correctness of information in this document. Copyright by AUDI AG.

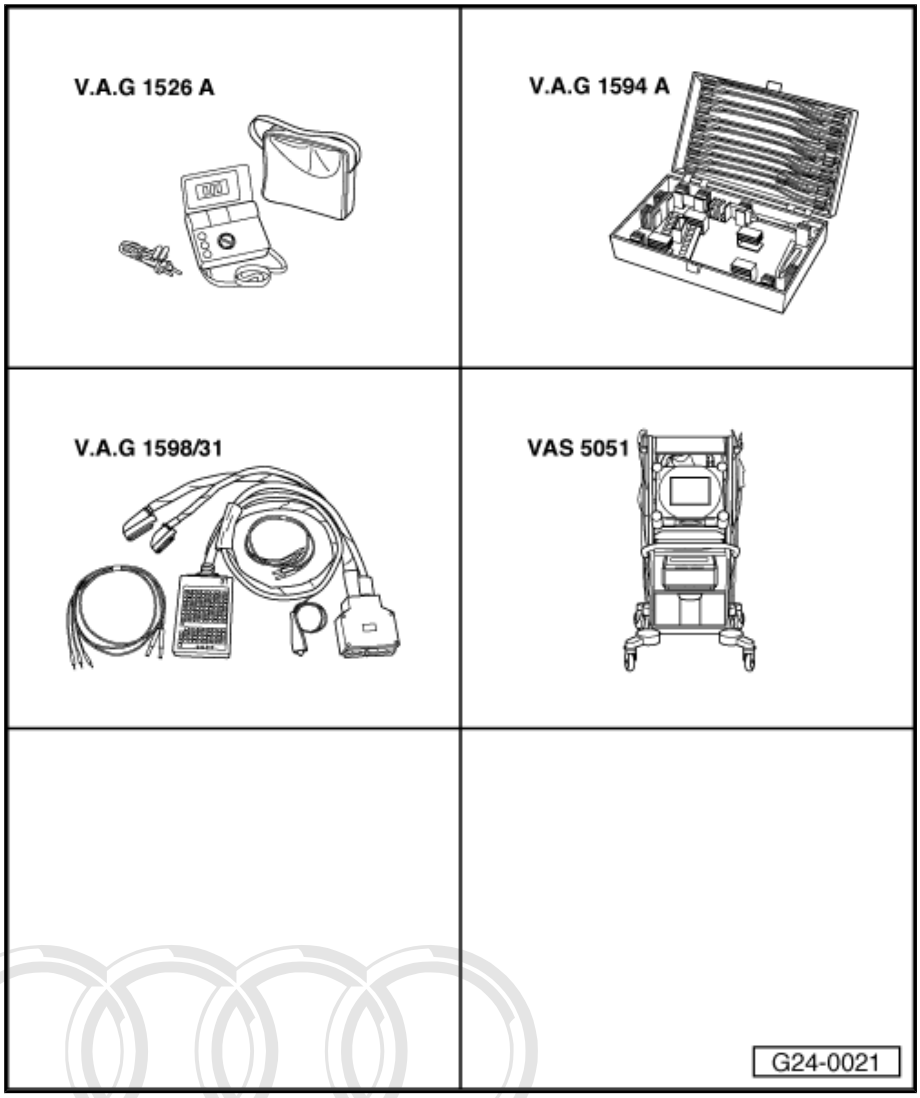

7.4.1 Special tools and workshop equipment required

- -V.A.G 1526 A-
- -V.A.G 1594 A-
- -V.A.G 1598/31-
- -VAS 5051- with -VAS 5051/1-

or

- -V.A.G 1551- with -V.A.G 1551/3 A-

Protected by copyright. Copying for private or commercial purposes, in part or in whole, is not permitted unless authorised by AUDI AG. AUDI AG does not guarantee or accept any liability with respect to the correctness of information in this document. Copyright by AUDI AG.

Note!

- *The air conditioner compressor signal provides the engine control unit with the information that the compressor is to be switched on in 140 ms.*
- *The engine control unit can use the same wire to shut off the air conditioner compressor.*
- *The engine control unit will shut off the air conditioner compressor in the following cases:*
- *During powerful acceleration (full throttle in first gear)*
- *In emergency running mode (limp-home)*
- *After initiating of basic setting (Function 04)*

Note!

- *Air conditioner system OK*
- *No faults recorded in fault memory of engine control unit*
- *Vehicle at room temperature (above +15 °C)*

7.4.2 Test sequence

– Connect vehicle diagnostic, testing and information system - VAS 5051- or fault reader -V.A.G 1551- and select engine electronics control unit by entering “address word ” 01. For this purpose, the engine must be running at idling speed.

Indicated on display:

```
Rapid data transfer                HELP
Select function XX
```

– Enter “08” for the function “Read measured value block” and confirm entry with the Q key.

Indicated on display:

```
Reading measured value block
        Q
Enter display group number XXX
```

Protected by copyright. Copying for private or commercial purposes, in part or in whole, is not permitted unless authorised by AUDI AG. AUDI AG does not guarantee or accept any liability with respect to the correctness of information in this document. Copyright by AUDI AG.

– Enter “050” for “Display group number 050” and confirm entry with the Q key.

Indicated on display: (1...4 = display zones)

```
Read measured value block 50
     ->
        1         2         3         4
```

– Switch off air conditioner.

- Specified value in display zone 4: Compr. OFF

– Switch on air conditioner with “auto” button and set air conditioner to maximum cooling/heating. The compressor must run.

- Specified value in display zone 4: Compr. ON

Vehicles with automatic gearbox:

– Fully depress the accelerator pedal and release again (brief actuation).

- Specification in display zone 4: Display switches for a few seconds from “Compr. ON” to “Compr. OFF” (compressor shutoff on vehicle acceleration)

Vehicles with manual gearbox:

Note!

A test drive must be performed to check the shut-off function on vehicle with manual gearbox.

Caution

To avoid accident risks when road testing the vehicle with test equipment, always observe the relevant safety precautions ⇒ page 1 .

– Engage 1st gear and accelerate briskly. Release the accelerator pedal.

♦ Specification in display zone 4: Display switches for a few seconds from “Compr. ON” to “Compr. OFF” (compressor shutoff on vehicle acceleration)

All models:

If the readout in display zone 4 is not as described:

– Connect test box -V.A.G 1598/31- to wiring harness for engine control unit. Do not connect engine control unit ⇒ page 16 .

– Check for open circuit and short to positive or earth in the following wiring connections:

Protected by copyright. Copying for private or commercial purposes, in part or in whole, is not permitted unless authorised by AUDI AG. AUDI AG does not guarantee or accept any liability with respect to the correctness of information in this document. Copyright by AUDI AG.

Test box -V.A.G 1598/31- Socket	Operating and display unit -E87- Contact
76	. ⇒ Current flow diagrams, Electrical fault finding and Fitting locations

– Rectify any open/short circuit as necessary.

– If there are no faults in the wiring, check the operation of air conditioner. ⇒ Heating, Air Conditioner; Repair group 01; Self-diagnosis for air conditioner

7.5 Checking fuel level signal wiring

Note!

♦ *Engine control unit receives fuel level signal from instrument cluster.*

♦ *The processed signal is received at contact 12 of the engine control unit and used to establish the cause of certain faults detected (e.g. misfiring).*

– Connect test box -V.A.G 1598/31- to wiring harness for engine control unit. Do not connect engine control unit ⇒ page 16 .

– Check for open circuit and short to positive or earth in the following wiring connections:

Test box -V.A.G 1598/31- Socket	Dash panel insert Contact
12	. ⇒ Current flow diagrams, Electrical fault finding and Fitting locations

– Rectify any open/short circuit as necessary.

7.6 Checking brake light switch and brake pedal switch

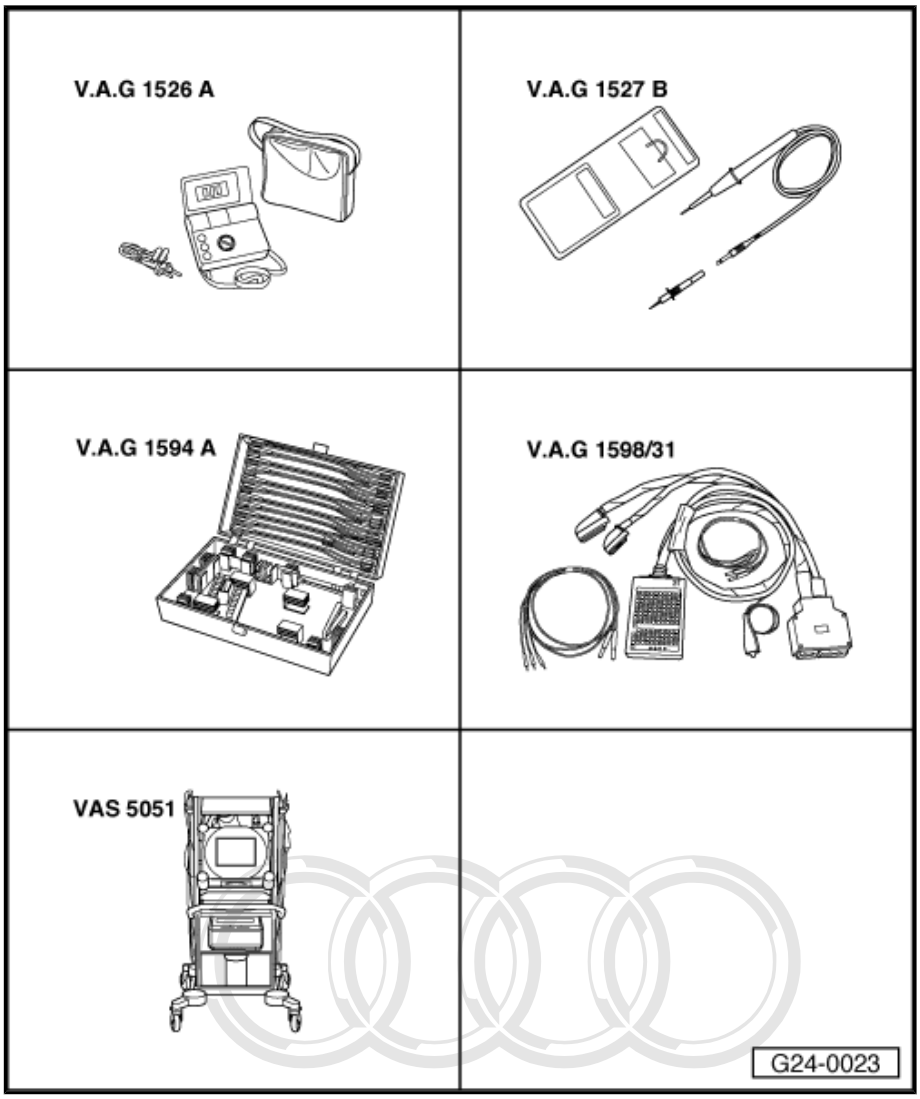

7.6.1 Special tools and workshop equipment required

Protected by copyright. Copying for private or commercial purposes, in part or in whole, is not permitted unless authorised by AUDI AG. AUDI AG does not guarantee or accept any liability with respect to the correctness of information in this document. Copyright by AUDI AG.

- -V.A.G 1526 A-
- -V.A.G 1527 B-
- -V.A.G 1594 A-
- -V.A.G 1598/31-
- -VAS 5051- with -VAS 5051/1-

or

- -V.A.G 1551- with -V.A.G 1551/3 A-

7.6.2 Test sequence

– Connect vehicle diagnostic, testing and information system -VAS 5051- or fault reader -V.A.G 1551- and select engine electronics control unit by entering “address word ” 01. For this purpose, the ignition must be switched on.

Indicated on display:

```
Rapid data transfer            HELP
Select function XX
```

– Enter “08” for the function “Read measured value block” and confirm entry with the Q key.

Indicated on display:

```
Reading measured value block
        Q
Enter display group number XXX
```

– Enter “066” for “Display group number 066” and confirm entry with the Q key.

– Check brake light/brake pedal switch in display zone 2.

	Display zones			
	1	2	3	4
Display Group 066: Signals to engine control unit				
Display	xxx km/h	XXXX	xxx km/h	XXXX
Readout	ACTUAL speed	Switch settings	SPECIFIED speed	Switch settings
Range		XX00 XX11		
Specification		XX00 (if brake pedal not pressed)		
		XX11 (if brake pedal pressed)		
Note:		Value: X = no meaning. Switching points are slightly offset. If the display is not as described ⇒ page 104		

Protected by copyright. Copying for private or commercial purposes, in part or in whole, is not permitted unless authorised by AUDI AG. AUDI AG does not guarantee or accept any liability with respect to the correctness of information in this document. Copyright by AUDI AG.

7.6.3 Checking switch

– Remove the driver's storage compartment: ⇒ Body Repairs; Rep. Gr. 24 ; Interior; Repair group 68; Storage compartments, covers; Removing driver's storage compartment

– Unplug connector from brake light/brake pedal switch.

– Connect multimeter between contacts 1 and 4 to measure resistance.

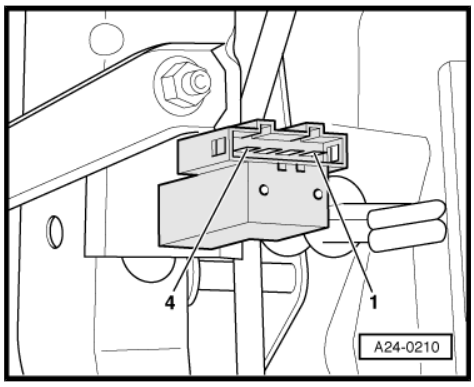

♦ Specification: ∞ Ω (no continuity)

– Press brake pedal.

♦ Specification: approx. 0 Ω

– Connect multimeter between contacts 2 and 3 to measure resistance.

♦ Specification: approx. 0 Ω

– Press brake pedal.

♦ Specification: ∞ Ω (no continuity)

If the specifications are not attained:

– Check adjustment or replace brake light/brake pedal switch.

If specifications are attained:

7.6.4 Checking voltage supply

– Connect voltage tester -V.A.G 1527 B- as follows:

Connector Contact	Measure against
1	body earth

♦ LED must illuminate

Connector Contact	Measure against
2	body earth

– Switch on ignition.

♦ LED must illuminate

If the LED does not illuminate:

– Check wiring of contacts 1 and 2 of connector for open circuit and short to earth:⇒ Current flow diagrams, Electrical fault finding and Fitting locations

– Rectify any open/short circuit as necessary.

If the LED illuminates:

7.6.5 Checking actuation

– Connect test box -V.A.G 1598/31- to wiring harness for engine control unit. Do not connect engine control unit ⇒ page 16 .

– Check for open circuit and short to positive or earth in the following wiring connections:

Connector Contact	Test box -V.A.G 1598/31- Socket
3	63
4	53

– Rectify any open/short circuit as necessary. ⇒ Current flow diagrams, Electrical fault finding and Fitting locations

7.7 Checking clutch pedal switch -F36- (up to model year 2001)

Protected by copyright. Copying for private or commercial purposes, in part or in whole, is not permitted unless authorised by AUDI AG. AUDI AG does not guarantee or accept any liability with respect to the correctness of information in this document. Copyright by AUDI AG.

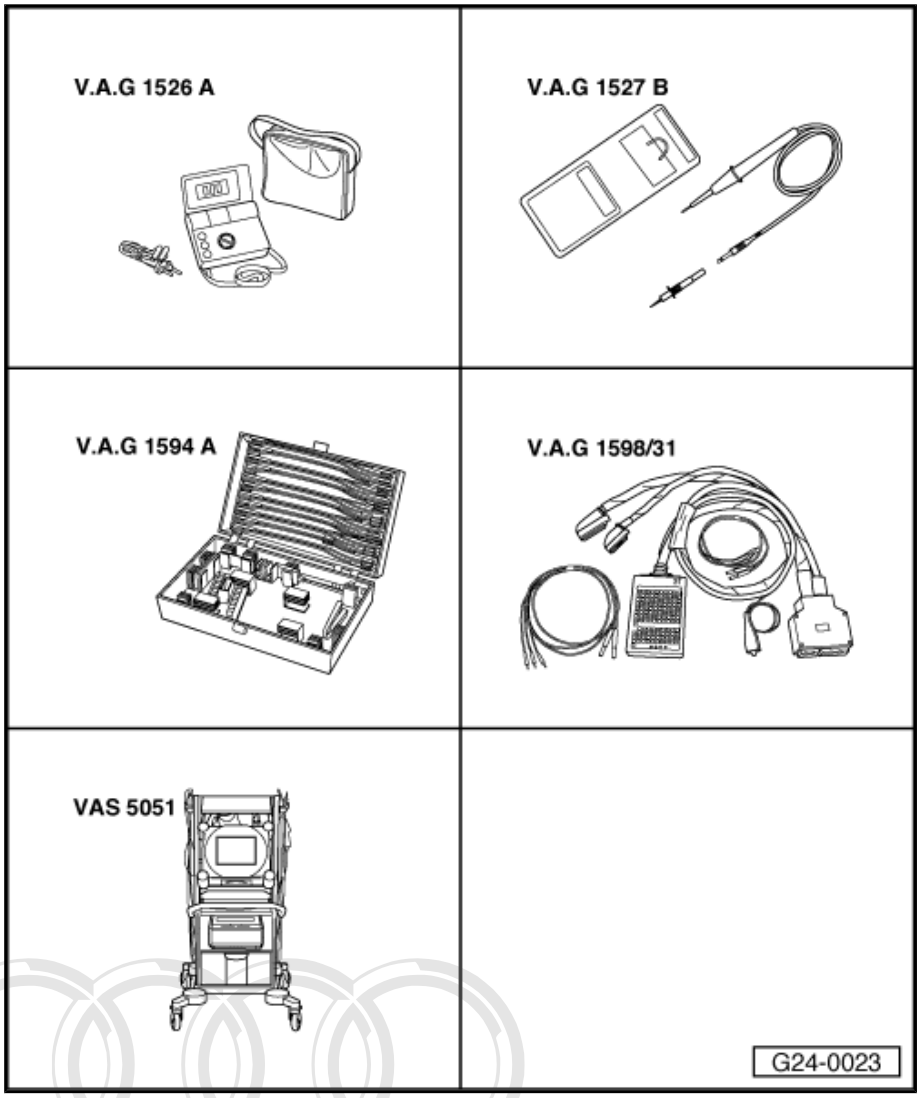

7.7.1 Special tools and workshop equipment required

- -V.A.G 1526 A-
- -V.A.G 1527 B-
- -V.A.G 1594 A-
- -V.A.G 1598/31-
- -VAS 5051- with -VAS 5051/1-

or

- -V.A.G 1551- with -V.A.G 1551/3 A-

Protected by copyright. Copying for private or commercial purposes, in part or in whole, is not permitted unless authorised by AUDI AG. AUDI AG does not guarantee or accept any liability with respect to the correctness of information in this document. Copyright by AUDI AG.

Note!

This signal is designed to prevent speed overshoots and jerkiness on switching from throttle open to throttle closed and vice versa when disengaging clutch. It is needed for the cruise control system.

7.7.2 Test sequence

– Connect vehicle diagnostic, testing and information system - VAS 5051- or fault reader -V.A.G 1551- and select engine electronics control unit by entering “address word ” 01. For this purpose, the ignition must be switched on.

Indicated on display:

```
Rapid data transfer            HELP
Select function XX
```

– Enter “08” for the function “Read measured value block” and confirm entry with the Q key.

Indicated on display:

```
Reading measured value block
        Q
Enter display group number XXX
```

– Enter “066” for “Display group number 066” and confirm entry with the Q key.

– Check clutch pedal switch in display zone 2.

	Display zones			
	1	2	3	4
Display Group 066: Signals to engine control unit				
Display	xxx km/h	XXXX	xxx km/h	XXXX
Readout	ACTUAL speed	Switch settings	SPECIFIED speed	Switch settings
Range		X0XX X1XX		
Specifi-cation		X0XX (if brake pedal not pressed)		
		(X1XX if brake pedal pressed)		
Note:		Value X = no meaning. If the display is not as described ⇒ page 107		

7.7.3 Checking switch

– Remove the driver's storage compartment: ⇒ Body Repairs; Rep. Gr. 68 ; Storage compartments, covers; Removing driver's storage compartment

– Unplug the connector from clutch pedal switch.

– Connect multimeter between contacts 1 and 2 to measure resistance.

♦ Specification: approx. 0 Ω

– Operate clutch pedal.

♦ Specification: ∞ Ω (no continuity)

If specification is not attained:

– Replace clutch pedal switch.

If specification is attained:

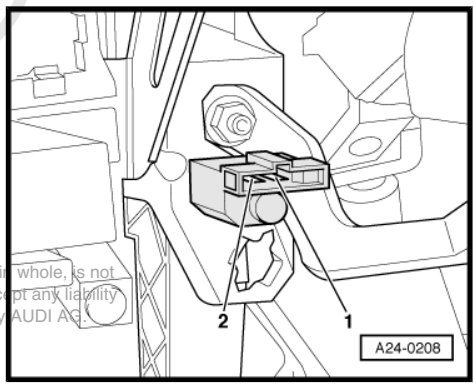

Protected by copyright. Copying for private or commercial purposes, in part or in whole, is not permitted unless authorised by AUDI AG. AUDI AG does not guarantee or accept any liability with respect to the correctness of information in this document. Copyright by AUDI AG.

7.7.4 Checking voltage supply

– Connect voltage tester -V.A.G 1527 B- as follows:

Connector Contact	Measure against
1	body earth

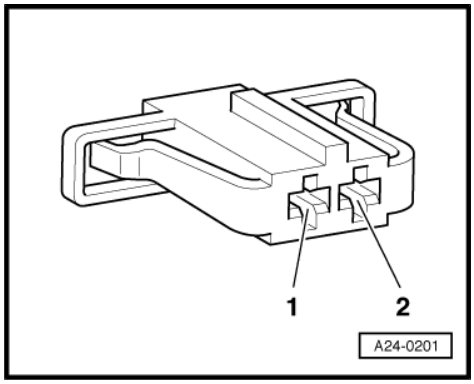

– Switch on ignition.

♦ LED must illuminate

If the LED does not illuminate:

– Check the wiring of contact 1 between connector and fuse for open circuit/short to earth.⇒ Current flow diagrams, Electrical fault finding and Fitting locations

If the LED illuminate:

7.7.5 Checking actuation

– Connect test box -V.A.G 1598/31- to wiring harness for engine control unit. Do not connect engine control unit ⇒ page 16 .

– Check for open circuit and short to positive or earth in the following wiring connections:

Connector Contact	Test box -V.A.G 1598/31- Socket
2	65

– Rectify any open/short circuit as necessary. ⇒ Current flow diagrams, Electrical fault finding and Fitting locations

7.8 Checking clutch pedal switch -F36- (from model year 2002)

Protected by copyright. Copying for private or commercial purposes, in part or in whole, is not permitted unless authorised by AUDI AG. AUDI AG does not guarantee or accept any liability with respect to the correctness of information in this document. Copyright by AUDI AG.

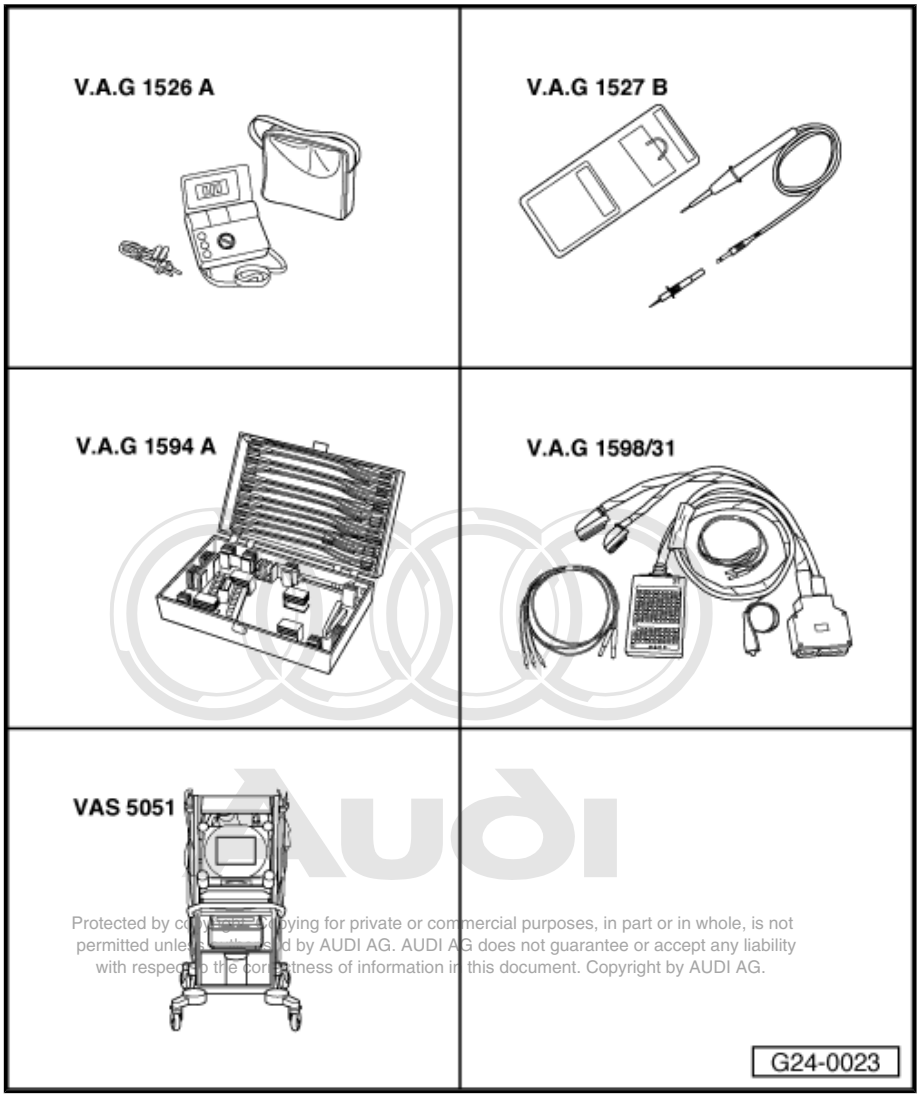

Protected by copyright. Copying for private or commercial purposes, in part or in whole, is not permitted unless authorised by AUDI AG. AUDI AG does not guarantee or accept any liability with respect to the correctness of information in this document. Copyright by AUDI AG.

7.8.1 Special tools and workshop equipment required

- -V.A.G 1526 A-
- -V.A.G 1527 B-
- -V.A.G 1594 A-
- -V.A.G 1598/31-
- -VAS 5051- with -VAS 5051/1-

or

- -V.A.G 1551- with -V.A.G 1551/3 A-

Note!

This signal is designed to prevent speed overshoots and jerkiness on switching from throttle open to throttle closed and vice versa when disengaging clutch. It is needed for the cruise control system.

7.8.2 Test sequence

– Connect vehicle diagnostic, testing and information system - VAS 5051- or fault reader -V.A.G 1551- and select engine electronics control unit by entering “address word ” 01. For this purpose, the ignition must be switched on.

Indicated on display:

```
Rapid data transfer            HELP
Select function XX
```

– Enter “08” for the function “Read measured value block” and confirm entry with the Q key.

Indicated on display:

```
Reading measured value block
        Q
Enter display group number XXX
```

– Enter “066” for “Display group number 066” and confirm entry with the Q key.

– Check clutch pedal switch in display zone 2.

	Display zones			
	1	2	3	4
Display Group 066: Signals to engine control unit				
Display	xxx km/h	XXXX	xxx km/h	XXXX
Readout	ACTUAL speed	Switch settings	SPECIFIED speed	Switch settings
Range		X0XX X1XX		
Specifi-cation		X0XX (if brake pedal not pressed)		
		(X1XX if brake pedal pressed)		
Note:		Value: X = no meaning. If the display is not as described ⇒ page 107		

7.8.3 Checking switch

– Remove the driver's storage compartment: ⇒ Body Repairs; Rep. Gr. 68 ; Storage compartments, covers; Removing driver's storage compartment

– Unplug the connector from the clutch pedal switch.

– Connect multimeter between contacts 2 and 3 to measure resistance.

♦ Specification: approx. 0 Ω

– Operate clutch pedal.

♦ Specification: ∞ Ω (no continuity)

If specification is not attained:

– Replace clutch pedal switch.

If specification is attained:

Protected by copyright. Copying for private or commercial purposes, in part or in whole, is not permitted unless authorised by AUDI AG. AUDI AG does not guarantee or accept any liability with respect to the correctness of information in this document. Copyright by AUDI AG.

7.8.4 Checking voltage supply

– Connect voltage tester -V.A.G 1527 B- as follows:

Connector Contact	Measure against
2	body earth

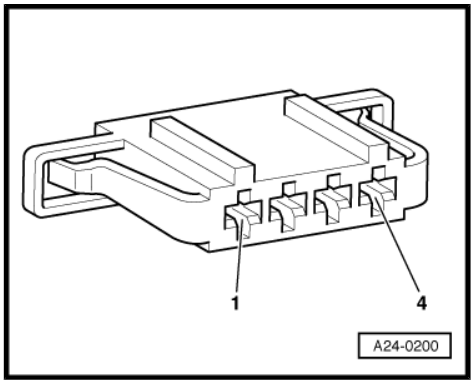

– Switch on ignition.

♦ LED must illuminate

If the LED does not illuminate:

– Check the wiring of contact 2 between connector and fuse for open circuit/short to earth.⇒ Current flow diagrams, Electrical fault finding and Fitting locations

If the LED illuminates:

7.8.5 Checking actuation

– Connect test box -V.A.G 1598/31- to wiring harness for engine control unit. Do not connect engine control unit ⇒ Page 24-28.

– Check for open circuit and short to positive or earth in the following wiring connections:

Connector Contact	Test box -V.A.G 1598/31- Socket
3	65

– Rectify any open/short circuit as necessary. ⇒ Current flow diagrams, Electrical fault finding and Fitting locations

7.9 Checking power steering pressure switch -F88-

Protected by copyright. Copying for private or commercial purposes, in part or in whole, is not permitted unless authorised by AUDI AG. AUDI AG does not guarantee or accept any liability with respect to the correctness of information in this document. Copyright by AUDI AG.

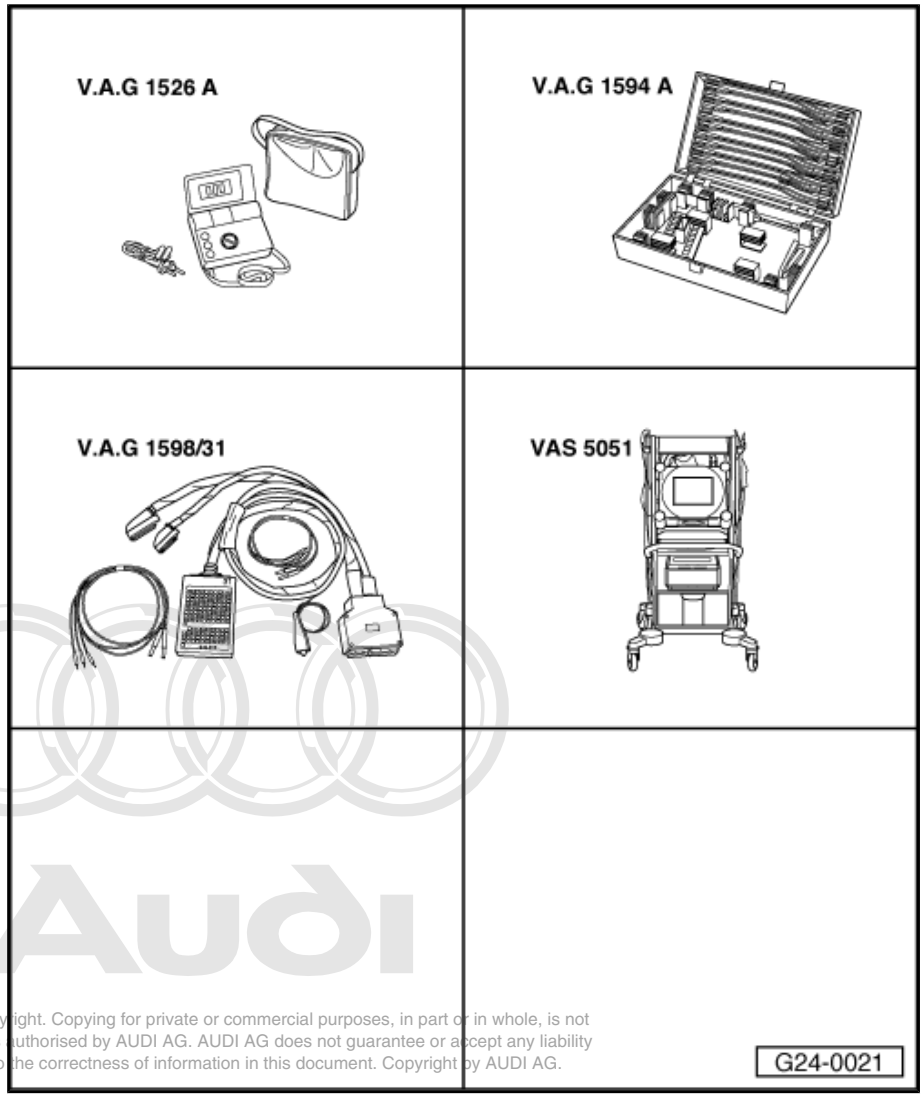

Protected by copyright. Copying for private or commercial purposes, in part or in whole, is not permitted unless authorised by AUDI AG. AUDI AG does not guarantee or accept any liability with respect to the correctness of information in this document. Copyright by AUDI AG.

7.9.1 Special tools and workshop equipment required

- -V.A.G 1526 A-
- -V.A.G 1594 A-
- -V.A.G 1598/31-
- -VAS 5051- with -VAS 5051/1-

or

- -V.A.G 1551- with -V.A.G 1551/3 A-

The function of the power steering pressure switch is to stabilise the idling speed when the steering wheel is on full lock (left or right).

7.9.2 Test sequence

– Connect vehicle diagnostic, testing and information system -VAS 5051- or fault reader -V.A.G 1551- and select engine electronics control unit by entering “address word ” 01. For this purpose, the engine must be running at idling speed.

Indicated on display:

```
Rapid data transfer          HELP
Select function XX
```

– Enter “08” for the function “Read measured value block” and confirm entry with the Q key.

Indicated on display:

```
Reading measured value block
        Q
Enter display group number XXX
```

– Enter “056” for “Display group number 056” and confirm entry with the Q key.

– Check the power steering pressure switch in display zone 4.

	Display zones			
	1	2	3	4
Display group 056: Idling speed stabilisation with engine idling at normal operating temperature				
Display	xxx rpm	xxx rpm	x.x %	X X X X X
Readout	Engine speed (actual)	Engine speed (specified)	Idling speed control Torque change	Operating states
Range				0XXX 1XXXX
Specification				0XXXX (steering wheel in straightahead position or slightly turned)
				1XXXX (at full lock, or turned rapidly)
Note:				Value: X = no meaning If the display is not as described ⇒ page 113

Protected by copyright. Copying for private or commercial purposes, in part or in whole, is not permitted unless authorised by AUDI AG. AUDI AG does not guarantee or accept any liability with respect to the correctness of information in this document. Copyright by AUDI AG.

7.9.3 Checking switch

– Unplug connector from power steering pressure switch -F88- on power steering pump.

– Connect multimeter to switch to measure resistance.

– Start the engine.

♦ Specification: ∞ Ω (no continuity)

– Turn the steering wheel to full lock position to right/left.

♦ Specification: approx. 0 Ω

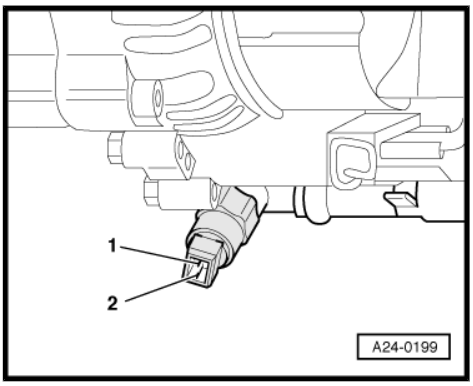

If the display does not change:

– Renew power steering pressure switch -F88- .

If the display changes:

– Check the wiring ⇒ page 113 .

7.9.4 Checking wiring

– Connect test box -V.A.G 1598/31- to wiring harness for engine control unit. Do not connect engine control unit ⇒ page 16 .

– Check for open circuit and short to positive or earth in the following wiring connections:

Connector Contact	Test box -V.A.G 1598/31- Socket
1	30
2	49

– Rectify any open/short circuit as necessary. ⇒ Current flow diagrams, Electrical fault finding and Fitting locations

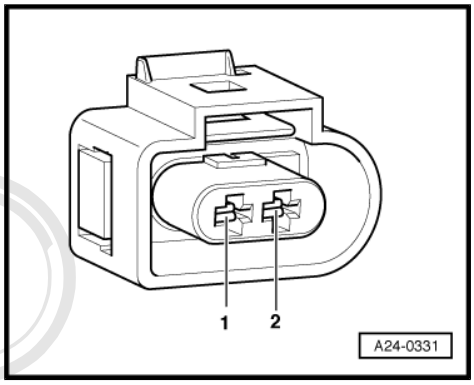

7.10 Checking wiring for crash signal

Engine control unit receives crash signal ("crash deactivation triggered") from airbag control unit.

The airbag control unit sends the crash signal to the engine control unit (during an accident or if a final control diagnosis is carried out relating to the airbag system), the engine control unit switches off the fuel pump, which stops the engine. It can however be restarted (e.g. to move vehicle out of danger area)

Protected by copyright. Copying for private or commercial purposes, in part or in whole, is not permitted unless authorised by AUDI AG. AUDI AG does not guarantee or accept any liability with respect to the correctness of information in this document. Copyright by AUDI AG.

– Connect test box -V.A.G 1598/31- to wiring harness for engine control unit. Do not connect engine control unit ⇒ page 16 .

– Check for open circuit and short to positive or earth in the following wiring connections:

Test box -V.A.G 1598/31- Socket	Airbag control unit -J234- Contact
52	. ⇒ Current flow diagrams, Electrical fault finding and Fitting locations

– Rectify any open/short circuit as necessary. ⇒ Current flow diagrams, Electrical fault finding and Fitting locations

If no wiring fault is detected:

– Interrogate fault memory of airbag control unit: ⇒ Body, Self-diagnosis; Repair group 01; Self-diagnosis of airbag system BTU (basic trigger unit) with and without side airbag; Interrogating fault memory

7.11 Checking data exchange between engine, gearbox, ABS/EDL and dash panel insert (CAN bus)

Note!

- *Data is exchanged between individual control units by means of a bus system.*
- *The term "CAN bus" refers to a system for transmitting and distributing data.*
- *The wires between the control units that are used to transfer the data are known as signal wires.*
- *Data is transmitted via data wires in sequence, i.e. in a specific order to the connected control units (e.g. engine rpm, accelerator pedal position).*

7.11.1 Checking the bus system

Proceed as follows to check the data exchange between connected control units as indicated in the fault table.

– Connect vehicle diagnostic, testing and information system -VAS 5051- or fault reader -V.A.G 1551- and select engine electronics control unit by entering “address word ” 01. For this purpose, the ignition must be switched on.

Indicated on display:

```
Rapid data transfer            HELP
Select function XX
```

– Enter “08” for the function “Read measured value block” and confirm entry with the Q key.

Indicated on display:

```
Reading measured value block
       Q
Enter display group number XXX
```

– Enter “125” for “Display group number 125” and confirm entry with the Q key.

– Checking readout in display zone 1. 3.

Protected by copyright. Copying for private or commercial purposes, in part or in whole, is not permitted unless authorized by AUDI AG. AUDI AG does not guarantee or accept any liability with respect to the correctness of information in this document. Copyright by AUDI AG.

	Display zones			
	1	2	3	4
Display group 125: CAN bus messages				
Display	Gearbox 1	ABS 1	Dash 1	
Readout	Automatic gearbox	Anti-lock brake system	Instrument cluster	
Range				
Specifi-cation	Gearbox 1	ABS 1	Dash 1	
Note:	Display on vehicles with automatic gearbox only			

– Press the → key.

If the specification is not attained for one or more control units, perform automatic test sequence.

Indicated on display:

```
Rapid data transfer            HELP
Enter address word XX
```

– Press the 0 key twice for the “automatic test sequence” address word and confirm entry with the Q key.

♦ Fault memories of all vehicle systems with self-diagnosis capability are interrogated

When a control unit answers with its identification the number of stored faults appears on the display or “No fault recognised”.

Any system faults stored will be displayed in sequence and printed out. The -V.A.G 1551- then transmits the next address word.

The automatic test sequence has ended when the following appears on the display:

```
V.A.G - SELF-DIAGNOSIS HELP
1 - Rapid data transfer*
```

```
V.A.G - SELF-DIAGNOSIS HELP
2 - Flash code output*
```

If a fault relating to “Drive data bus...” or “...CAN bus” is displayed:

– Check that the correct engine, gearbox and ABS/EDL dash panel inserts for this vehicle have been installed (part no. and code).

If the correct control units are installed:

– Check that multiple connectors for control units are properly seated.

If multi-pin connectors are properly attached:

– Check the CAN bus system.

7.11.2 Checking a “two-wire bus system”

7.11.3 The communication between three or more control units is carried out via a “two-line bus system”.—

– Evaluate the faults stored in the control units.

Note!

This helps to locate wiring faults.

Example 1:

The faults stored in the fault memories indicate that the control unit 1 does not communicate with control units 2 and 3.

Control unit	Faults stored in fault memory
1	♦ No message from control unit 2 ♦ No message from control unit 3
2	♦ No message from control unit 1
3	♦ No message from control unit 1

– Switch off ignition.

– Disconnect the control units linked to one another via the bus wires and investigate whether there is an open circuit between the bus wires. ⇒ Current flow diagrams, Electrical fault finding and Fitting locations

– If no fault can be detected in the bus wires, exchange control unit 1.

Example 2:

The faults stored in the fault memories indicate that the control unit 2 does not communicate with control units 1 and 3.

Control unit	Faults stored in fault memory
1	♦ No message from control unit 2
2	♦ No message from control unit 1 ♦ No message from control unit 3
3	♦ No message from control unit 2

– Switch off ignition.

– Disconnect the control units linked to one another via the bus wires and investigate whether there is an open circuit between the bus wires. ⇒ Current flow diagrams, Electrical fault finding and Fitting locations

Protected by copyright. Copying for private or commercial purposes, in part or in whole, is not permitted unless authorised by AUDI AG. AUDI AG does not guarantee or accept any liability with respect to the correctness of information in this document. Copyright by AUDI AG.

– If no fault can be detected in the bus wires, exchange control unit 2.

Example 3:

With the faults stored in the fault memories it can be seen that there is no sending or receiving operation possible in any of the control units.

Control unit	Faults stored in fault memory
1	♦ Drive data bus defective
2	♦ Drive data bus defective
3	♦ Drive data bus defective

– Switch off ignition.

– Disconnect the control units that are linked to one another by the bus wires and check the bus wires for short circuits to positive and earth. ⇒ Current flow diagrams, Electrical fault finding and Fitting locations

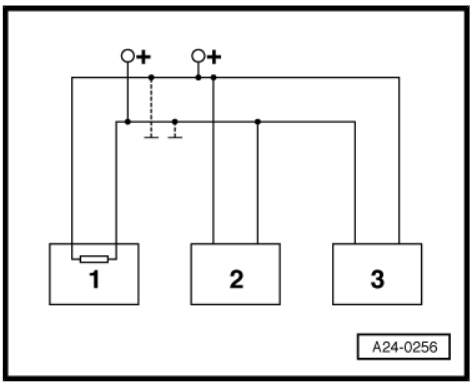

If the cause of the fault "Drive data bus defective" cannot be found in the data bus wires, check whether one of the control units is causing the fault.

All the control units that communicate via the CAN bus are still disconnected. Ignition is switched off.

– Connect one of the control units.

– Connect fault reader -V.A.G 1551- . Switch the ignition on and erase the fault memory of the control unit that has just been connected Terminate fault readout by selecting function 06 "End output".

– Switch the ignition off and then on again.

– Leave the ignition switched on for 10 seconds. Then interrogate the fault memory of the control unit that has just been connected, using the fault reader.

– If the fault "Drive data bus defective" is now indicated, replace the control unit which has just been connected.

– If the fault "Drive data bus defective" is not indicated, connect the next control unit, and repeat the procedure.

Protected by copyright. Copying for private or commercial purposes, in part or in whole, is not permitted unless authorised by AUDI AG. AUDI AG does not guarantee or accept any liability with respect to the correctness of information in this document. Copyright by AUDI AG.

28 – Ignition system

1 Checking ignition system

1.1 General notes on ignition system

- The engine control unit is equipped with self-diagnosis.
- A voltage of at least 11.5 V is required for proper operation of electrical components.
- Certain tests may lead to a fault being detected by the control unit and stored. The fault memory should therefore be interrogated and (if necessary) erased after completing the tests and any repair work that may be required.
- If the engine starts, runs for a short period and then cuts off after completing fault finding, repairs or component tests, this may be due to the immobiliser blocking the engine control unit. The fault memory must then be interrogated and, if necessary, the control unit must be adapted.

Protected by copyright. Copying for private or commercial purposes, in part or in whole, is not permitted unless authorised by AUDI AG. AUDI AG does not guarantee or accept any liability with respect to the correctness of information in this document. Copyright by AUDI AG.

1.2 Safety precautions

To prevent injuries to persons and/or damage to the fuel injection and ignition system, the following must be noted:

- Do not touch or disconnect ignition wiring when the engine is running or being turned at starter speed.
- The ignition must be switched off before disconnecting or connecting ignition system wiring, high-voltage wires and test leads.
- If you want to crank engine at starting speed without actually starting it (for example, in order to test compression), first unplug connectors from ignition coils and also from injectors. After completing the work, interrogate and erase the fault memory.
- Always switch off the ignition before cleaning the engine.
- Always switch off the ignition before connecting or disconnecting the battery, otherwise the engine control unit may be damaged.

1.3 Technical data for ignition system

Engine code letters		APF (1.6 l / 74 kW engine) AVU (1.6 l / 75 kW engine) BFQ (1.6 l / 75 kW engine)
Idling speed	Manual gearbox	670 ... 760 rpm
Engine speed not adjustable - controlled by idling speed stabilisation	Automatic gearbox	800 ... 860 rpm
Speed governing by deactivation of fuel injectors		approx. 6,500 rpm
Ignition timing is determined by the control unit. Ignition timing cannot be adjusted.		
Ignition system		Dual-spark system with two ignition coils

Engine code letters	APF (1.6 l / 74 kW engine) AVU (1.6 l / 75 kW engine) BFQ (1.6 l / 75 kW engine)
Spark plug connectors	Resistance approx. 5 kΩ
Firing order	1-3-4-2

Protected by copyright. Copying for private or commercial purposes, in part or in whole, is not permitted unless authorised by AUDI AG. AUDI AG does not guarantee or accept any liability with respect to the correctness of information. Copyright © 2004 AUDI AG.

Note!

For idling speed values, refer to the chapter entitled Exhaust emission test.

1.4 Ignition system component overview

1 - Ignition cable
- ❑ With suppresser and spark plug connector
- ❑ Test for continuity

2 - Ignition coils -N and -N128- with output stage -N122-

3 - 10 Nm

4 - 4-way connector

5 - Knock sensor 1 -G61-

6 - 3-pin connector
- ❑ On front of engine under intake manifold

7 - 20 Nm
- ❑ Tightening torque affects the knock sensor function

8 - Spark plug - 30 Nm

9 - 3-pin connector
- ❑ For Hall sender -G163-

10 - Bracket
- ❑ For Hall sender -G163-

11 - Hall sender -G163-
- ❑ Checking ⇒ page 139

12 - Camshaft sprocket
- ❑ Hall sender rotor
- ❑ Removing and installing:⇒ 4-cylinder Engine (2-valve), Mechanical Components; Repair

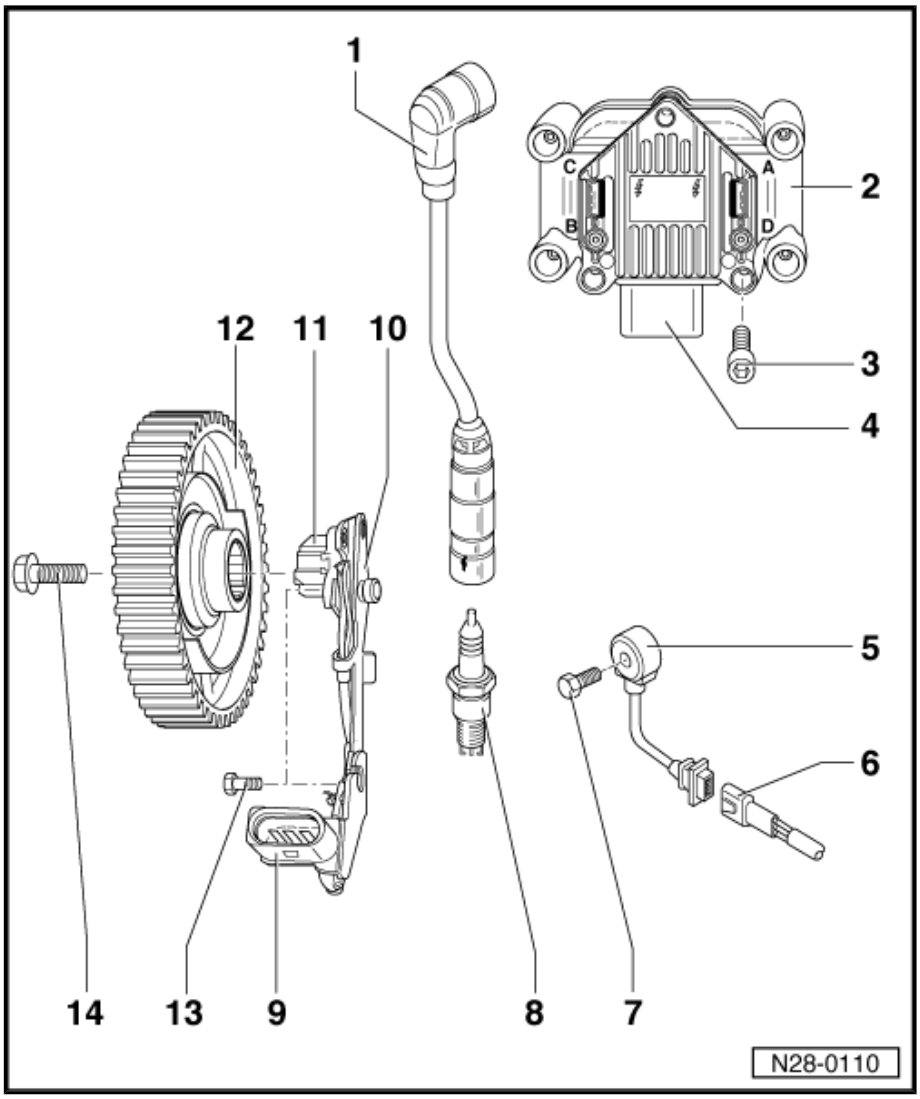

group 15: Servicing
valve gear

13 - 10 Nm

14 - 100 Nm

❑ Use counterhold 3036 when slackening off and tightening

1.5 Identification of ignition connections on ignition coil

– The illustration shows the ignition coil with the HT connections. It can be used to check whether the ignition cables are connected to the ignition coil in the correct sequence. It is also designed to prevent new ignition cables being incorrectly connected on replacement.

Protected by copyright. Copying for private or commercial purposes, in part or in whole, is not permitted unless authorised by AUDI AG. AUDI AG does not guarantee or assume any liability for the accuracy of information in this document. Copyright by AUDI AG.

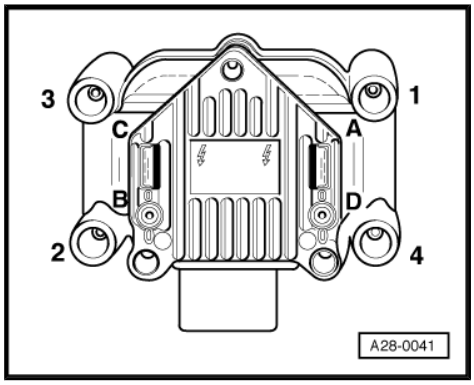

Ignition output “A” on ignition coil ⇒ cylinder 1

Ignition output “B” on ignition coil ⇒ cylinder 2

Ignition output “C” on ignition coil ⇒ cylinder 3

Ignition output “D” on ignition coil ⇒ cylinder 4

1.6 Checking ignition coils

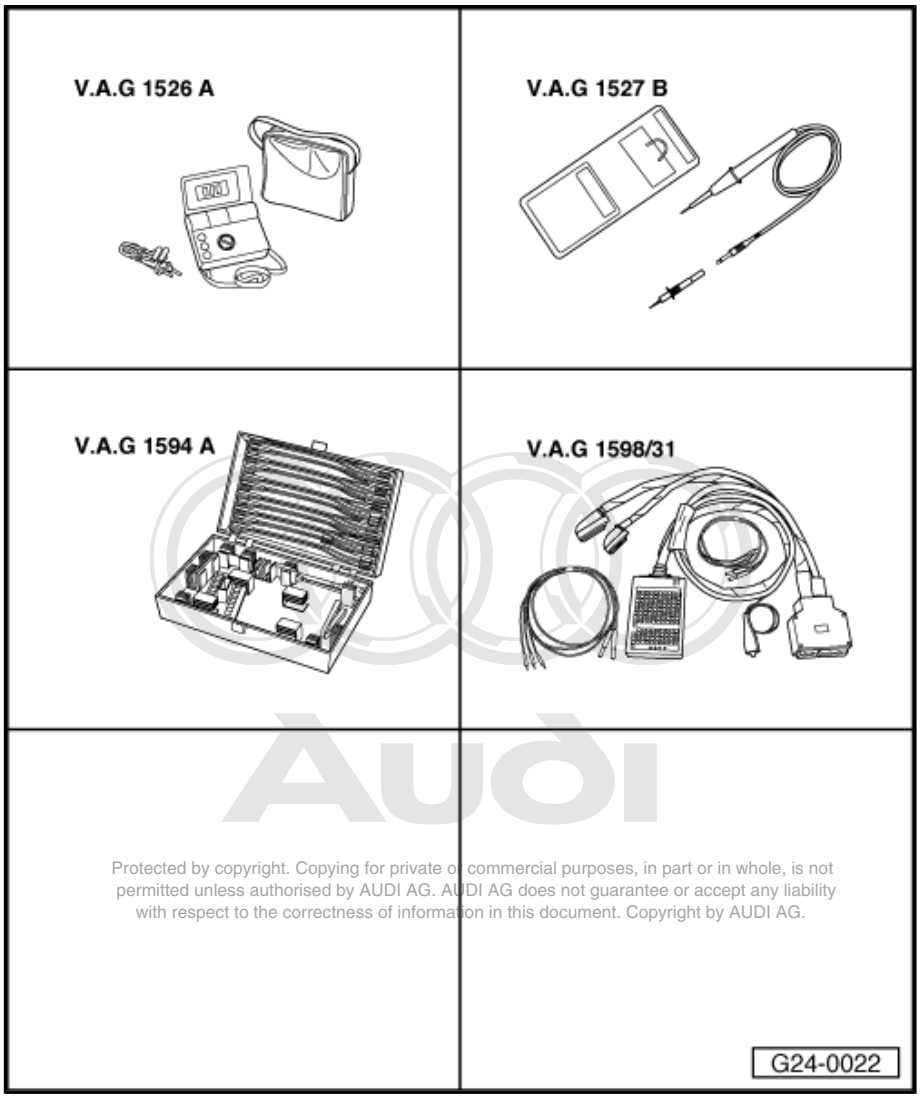

Protected by copyright. Copying for private or commercial purposes, in part or in whole, is not permitted unless authorised by AUDI AG. AUDI AG does not guarantee or accept any liability with respect to the correctness of information in this document. Copyright by AUDI AG.

1.6.1 Special tools and workshop equipment required

- -V.A.G 1526 A-
- -V.A.G 1527 B-
- -V.A.G 1594 A-
- -V.A.G 1598/31-

1.6.2 Checking voltage supply of ignition coils

Note!

Fuse for ignition coils OK ⇒ Current flow diagrams, Electrical fault finding and Fitting locations

– Detach 4-pin connector -1- from output stage for ignition coils -2-.

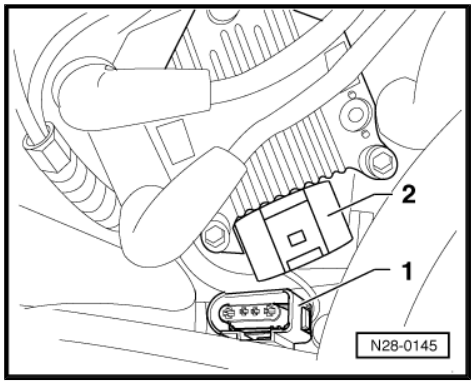

– Connect voltage tester -V.A.G 1527 B- as follows:

Connector Contact	Measure against
2	Engine earth

– Switch on ignition.

♦ LED must illuminate

If the LED does not illuminate:

– Check the wiring. ⇒ Current flow diagrams, Electrical fault finding and Fitting locations

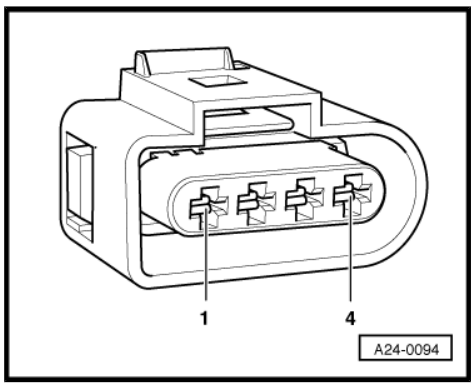

1.6.3 Checking earth connection of output stage

– Connect voltage tester -V.A.G 1527 B- as follows:

Connector Contact	Measure against
4	Battery positive

♦ LED must illuminate

Protected by copyright. Copying for private or commercial purposes, in part or in whole, is not permitted unless authorised by AUDI AG. AUDI AG does not guarantee or accept any liability with respect to the correctness of information in this document. Copyright by AUDI AG.

If the LED does not illuminate:

– Check for open circuit in wiring from contact 4 to earth. ⇒ Current flow diagrams, Electrical fault finding and Fitting locations

– Rectify open circuit, if necessary.

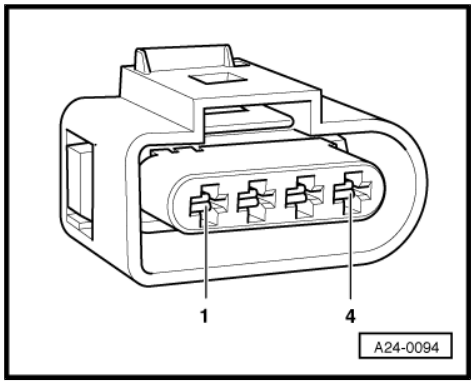

1.6.4 Checking actuation

Note!

♦ *Gear lever in neutral*

♦ *Connectors unplugged on all injectors.*

Note!

It is important to ensure that no fuel is injected during the test, as this would damage the catalytic converter. Therefore, the connectors on the injectors must be unplugged.

– Connect voltage tester -V.A.G 1527 B- as follows:

Connector Contact	Measure against
1	Engine earth
3	Engine earth

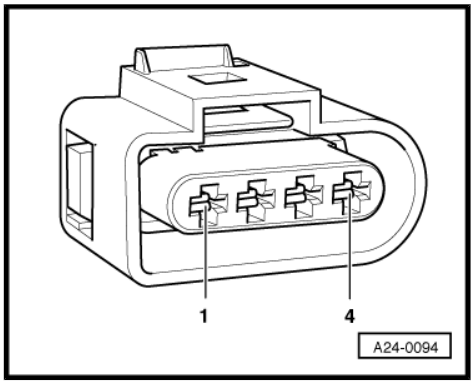

– Operate the starter briefly.

♦ LED must flash in each case (brief flashing signal)

If reading does not match specification for one of the contacts:

– Switch off ignition.

– Connect test box -V.A.G 1598/31- to wiring harness for engine control unit. Do not connect to the engine control unit itself.

– Check for open circuit and short to positive or earth in the following wiring connections:

Connector Contact	Test box -V.A.G 1598/31- Socket
1	112
3	113

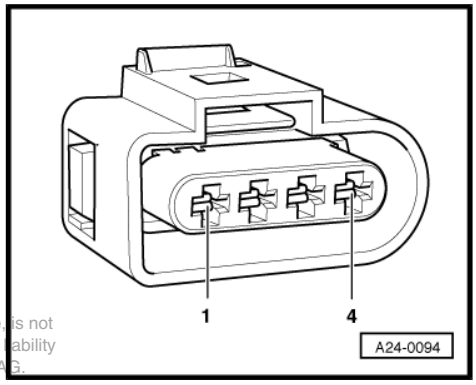

– Rectify any open/short circuit as necessary. ⇒ Current flow diagrams, Electrical fault finding and Fitting locations

If no fault is found:

Protected by copyright. Copying for private or commercial purposes, in part or in whole, is not permitted unless authorised by AUDI AG. AUDI AG does not guarantee or accept any liability with respect to the correctness of information in this document. Copyright by AUDI AG.

– Replace the ignition coils with output stage.

Note!

The ignition coils and output stage are a combined component and cannot be replaced separately.

1.7 Checking intake air temperature sender -G42-

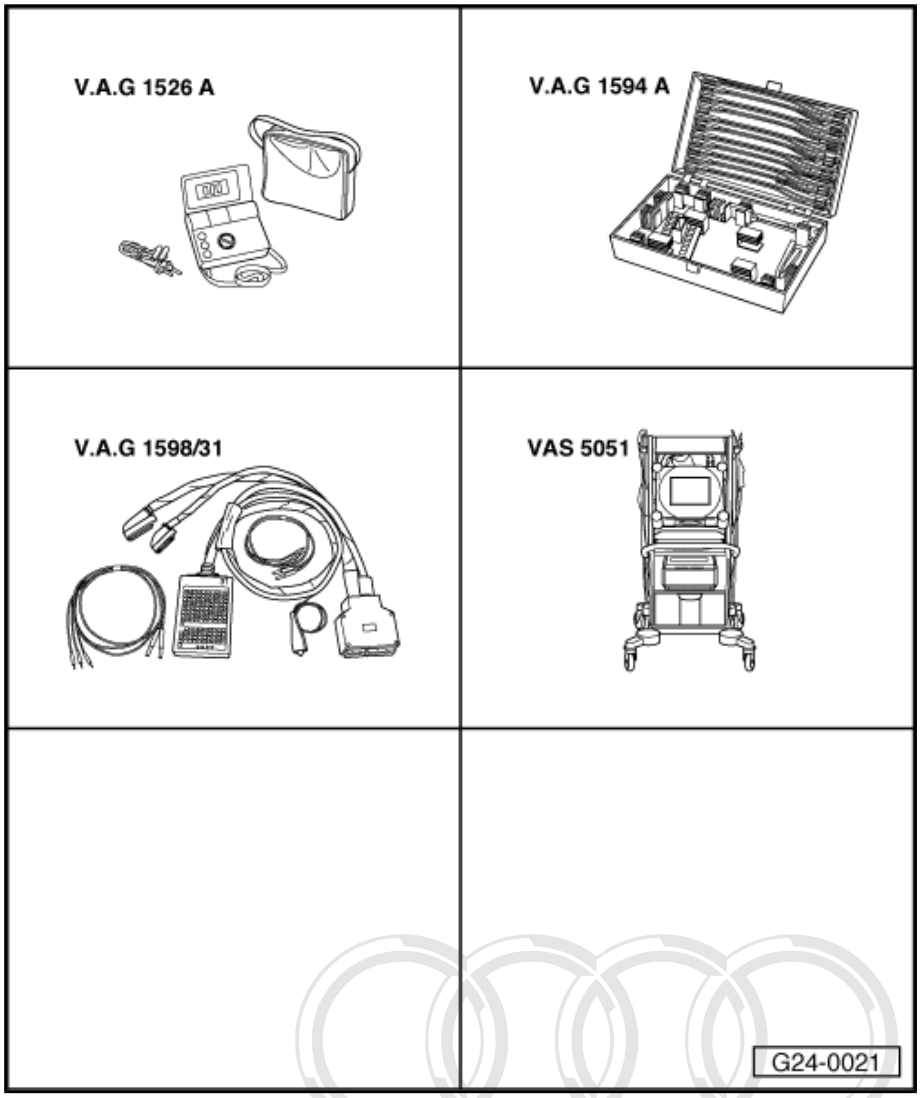

1.7.1 Special tools and workshop equipment required

- -V.A.G 1526 A-
- -V.A.G 1594 A-
- -V.A.G 1598/31-
- -VAS 5051- with -VAS 5051/1-

or

- -V.A.G 1551- with -V.A.G 1551/3 A-

Protected by copyright. Copying for private or commercial purposes, in part or in whole, is not permitted unless authorised by AUDI AG. AUDI AG does not guarantee or accept any liability with respect to the correctness of information in this document. Copyright by AUDI AG.

Note!

The intake-air temperature sender -G42- is integrated in air-mass meter. The sender is therefore no longer fitted as a separate component on the engine.

1.7.2 Test sequence

– Connect vehicle diagnostic, testing and information system -VAS 5051- or fault reader -V.A.G 1551- and select engine

electronics control unit by entering “address word ” 01. For this purpose, the ignition must be switched on.

Indicated on display:

```
Rapid data transfer            HELP
Select function XX
```

– Enter “08” for the function “Read measured value block” and confirm entry with the Q key.

Indicated on display:

```
Reading measured value block
        Q
Enter display group number XXX
```

– Enter “004” for “Display group number 004” and confirm entry with the Q key.

– Check specified value for intake air temperature sender in display zone 4:

	Display zones			
	1	2	3	4
Display Group 004: Intake air temperature with engine idling				
Display	xxxx rpm	xx.x Volt	xxx.x °C	xxx.x °C
Read-out	Engine speed	Battery voltage	Coolant temperature	Intake air temperature
Specification	xxxx rpm	12.0...15.0 V	80.0...110.0 °C	from ambient temperature to 80°C. If a temperature is displayed which deviates greatly from the ambient temperature of the sender, check sender and sender wiring for contact resistances and open circuit.
Note:				If 9 °C or 30 °C are indicated continuously, check the wiring connections ⇒ page 125 If approx. ambient temperature is indicated and a fault is stored in the fault memory with regard to -G42- , check the sender ⇒ page 126

Protected by copyright. Copying for private or commercial purposes, in part or in whole, is not permitted unless authorised by AUDI AG. AUDI AG does not guarantee or accept any liability with respect to the correctness of information in this document. Copyright by AUDI AG.

1.7.3 Checking wiring

– Unplug 4-pin connector -1- from air mass meter -2-.

– Connect test box -V.A.G 1598/31- to wiring harness for engine control unit. Do not connect to the engine control unit itself.

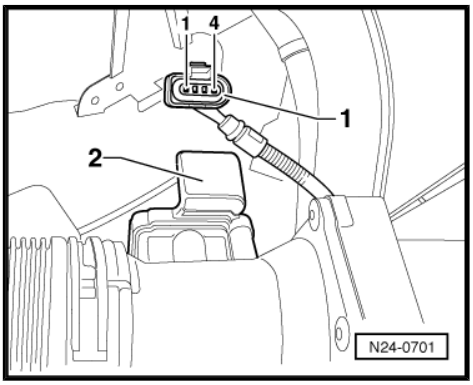

– Check for open circuit and short to positive or earth in the following wiring connections:

Connector Contact	Test box -V.A.G 1598/31- Socket
2	11
4	44

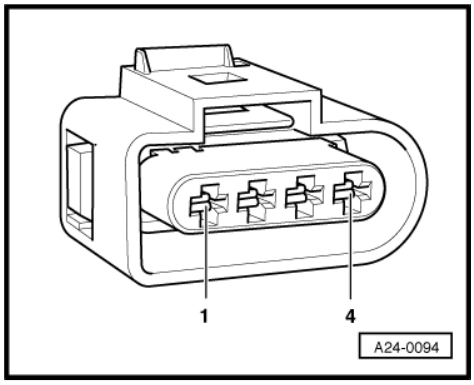

– Check for short circuits between the two wires.

– Rectify any open/short circuit as necessary.

If no wiring fault is detected:

1.7.4 Checking sender:

– Switch off ignition.

– Unplug 4-pin connector -1- from air mass meter -2-.

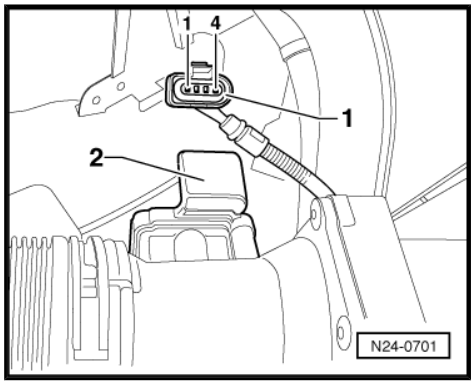

– Connect multimeter between contacts 2 and 4 to measure resistance.

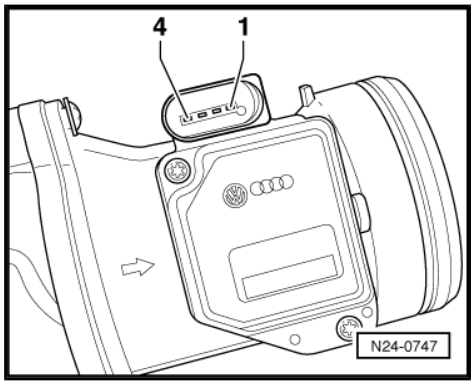

Range A shows resistance values for temperature range 0...50 °C and range B the values for temperature range 50...100 °C.

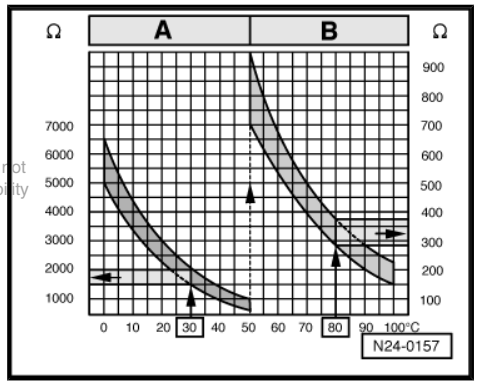

Sample readings:

- ♦ 30 °C corresponds to a resistance from 1500...2000 Ω
- ♦ 80 °C corresponds to a resistance from 275...375 Ω

Protected by copyright. Copying for private or commercial purposes, in part or in whole, is not permitted unless authorised by AUDI AG. AUDI AG does not guarantee or accept any liability with respect to the correctness of information in this document. Copyright by AUDI AG.

If specifications are attained:

– Remove the intake hose between air mass meter and throttle valve control unit.

– Read measured value block, display group 004.

– Check display in display zone 4.

– Spray the air intake temperature sender -G42- -arrow- with cooling spray.

♦ Specification: The temperature value should drop

If specification is not attained:

– Replace the air mass meter -G70- with intake air temperature sender -G42- .

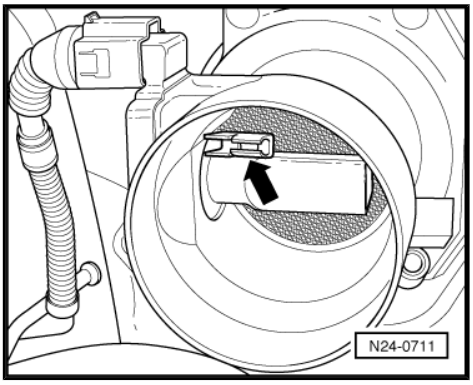

1.8 Checking engine speed sender -G28-

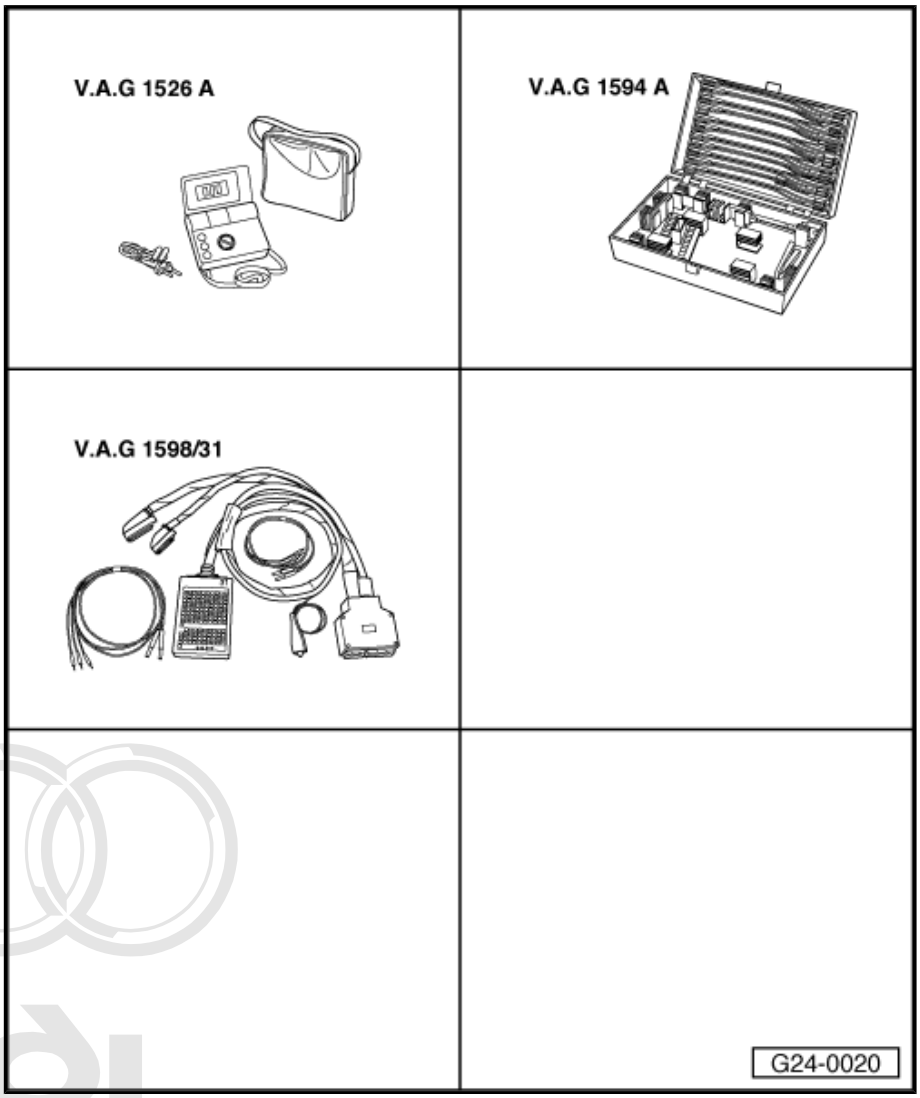

Protected by copyright. Copying for private or commercial purposes, in part or in whole, is not permitted unless authorised by AUDI AG. AUDI AG does not guarantee or accept any liability with respect to the correctness of information in this document. Copyright by AUDI AG.

1.8.1 Special tools and workshop equipment required

♦ -V.A.G 1526 A-

♦ -V.A.G 1594 A-

♦ -V.A.G 1598/31-

Fitting location ⇒ Fitting locations overview, Page

Note!

- *The engine speed sender is a combined speed sender and reference mark sender.*
- *The engine can run without a signal from the -G28- . It is also possible (with considerable difficulty) to start the engine without a signal from the -G28- (emergency running function).*

Protected by copyright. Copying for private or commercial purposes, in part or in whole, is not permitted unless authorised by AUDI AG. AUDI AG does not guarantee or accept any liability with respect to the correctness of information in this document. Copyright by AUDI AG.

1.8.2 Test sequence

– Before carrying out the test, ensure that the sender is correctly installed and firmly seated.

– Unplug connector for engine speed sender -arrow- (grey connector).

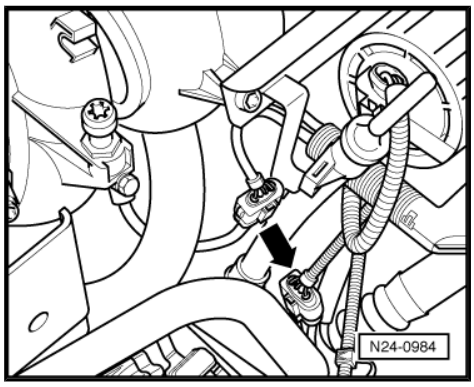

– Connect multimeter between contacts 2 and 3 to measure resistance.

- Specification: 730...1000 Ω

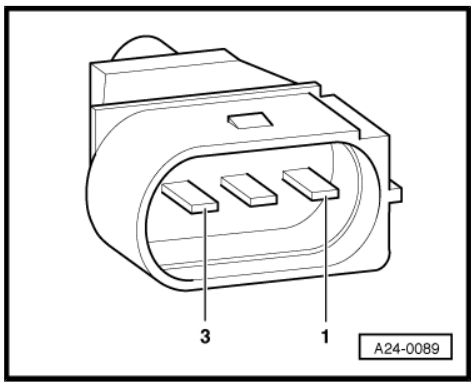

Note!

The resistance value of the engine speed sender relates to a temperature of 20 °C. The resistance increases if the temperature increases.

If specification is not attained:

– Fit a new engine speed sender.

If specification is attained:

– Connect multimeter between contacts 2 and 1 (screening) and 3 and 1 (screening) to measure resistance.

♦ Specification: ∞ Ω~(no continuity)

If specification is not attained:

– Fit a new engine speed sender.

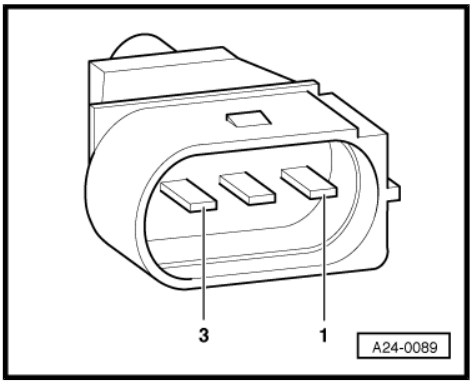

Note!

The noise insulation must be removed in order to remove the engine speed sender.

If specification is attained:

– Connect test box -V.A.G 1598/31- to wiring harness for engine control unit. Do not connect to the engine control unit itself.

– Check for open circuit and short to positive or earth in the following wiring connections:

Connector Contact	Test box -V.A.G 1598/31- Socket
1	99
2	98
3	106

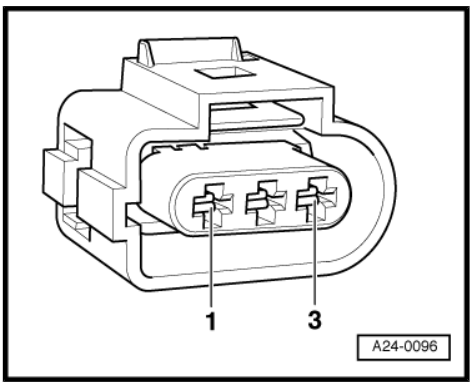

– Rectify any open/short circuit as necessary. ⇒ Current flow diagrams, Electrical fault finding and Fitting locations

If no wiring fault is detected:

– Renew engine control unit.

1.9 Checking coolant temperature sender -G62-

Protected by copyright. Copying for private or commercial purposes, in part or in whole, is not permitted unless authorised by AUDI AG. AUDI AG does not guarantee or accept any liability with respect to the correctness of information in this document. Copyright by AUDI AG.

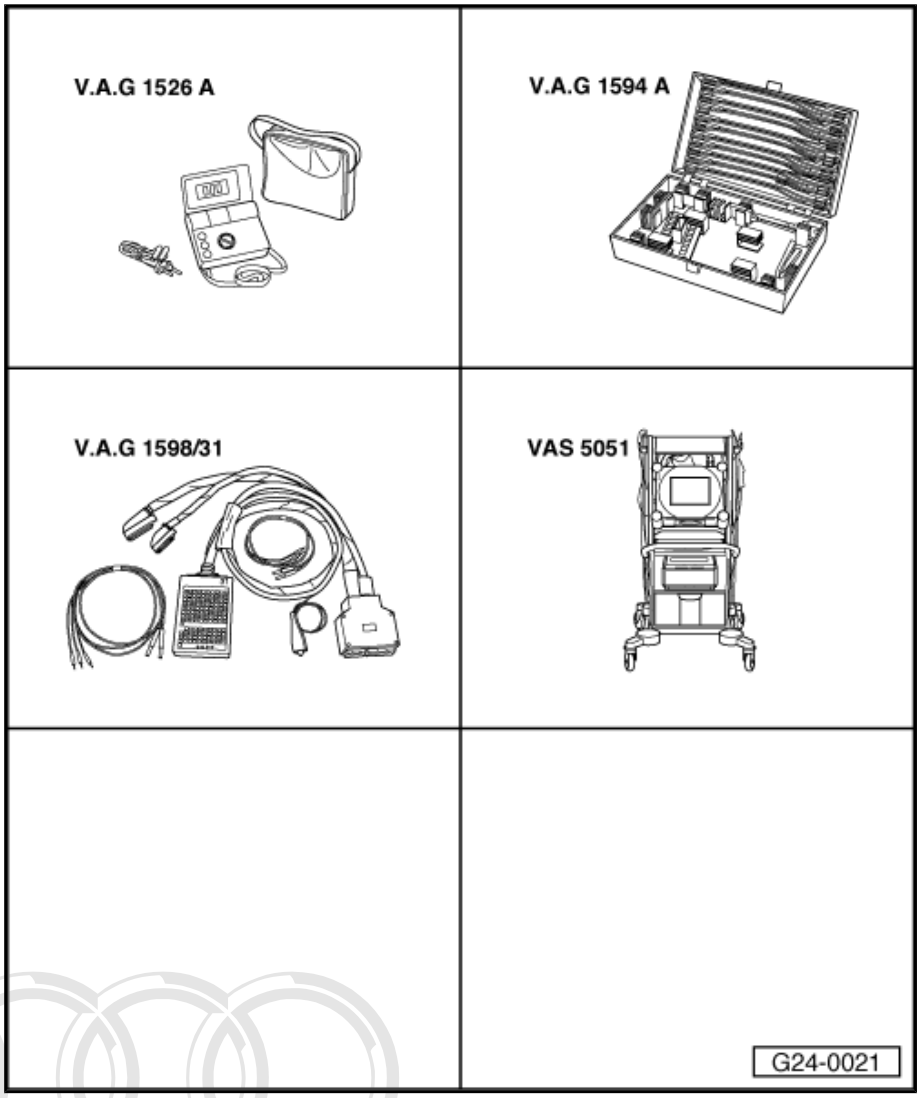

1.9.1 Special tools and workshop equipment required

- -V.A.G 1526 A-
- -V.A.G 1594 A-
- -V.A.G 1598/31-
- -VAS 5051- with -VAS 5051/1-

Protected by copyright. Copying for private or commercial purposes, in part or in whole, is not permitted unless authorised by AUDI AG. AUDI AG does not guarantee or accept any liability with respect to the correctness of information in this document. Copyright by AUDI AG.

or

- -V.A.G 1551- with -V.A.G 1551/3 A-

Fitting location ⇒ Fitting locations overview, Page

Note!

Engine cold

1.9.2 Test sequence

– Connect vehicle diagnostic, testing and information system -VAS 5051- or fault reader -V.A.G 1551- and select engine

electronics control unit by entering “address word ” 01. For this purpose, the engine must be running at idling speed.

Indicated on display:

```
Rapid data transfer HELP
Select function XX
```

– Enter “08” for the function “Read measured value block” and confirm entry with the Q key.

Indicated on display:

```
Reading measured value block Q
Enter display group number XXX
```

– Enter “004” for “Display group number 004” and confirm entry with the Q key.

– Check display in display zone 3.

	Display zones			
	1	2	3	4
Display Group 004: Coolant temperature with engine idling				
Display	xxxx rpm	xx.x V	xxx.x °C	xxx.x °C
Readout	Engine speed	Battery voltage	Coolant temperature	Intake air temperature
Specification	xxxx rpm	12.0...15.0 V	The temperature reading should increase evenly	From ambient temperature to 120 °C

Protected by copyright. Copying for private or commercial purposes, in part or in whole, is not permitted unless authorised by AUDI AG. AUDI AG does not guarantee or accept any liability with respect to the correctness of information in this document. Copyright by AUDI AG.

If display zone 3 shows an implausible value:

– Disconnect connector on coolant temperature sender.

– Connect multimeter to contacts 3 and 4 of sender to measure resistance.

Range A shows resistance values for temperature range 0...50 ° C and range B the values for temperature range 50...100 °C.

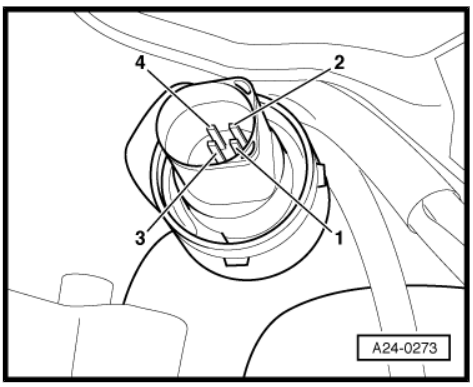

Sample readings:

- 30 °C corresponds to a resistance from 1500...2000 Ω
- 80 °C corresponds to a resistance from 275...375 Ω

If specification is not attained:

– Replace coolant temperature sender.

If specification is attained:

– Connect test box -V.A.G 1598/31- to wiring harness for engine control unit. Do not connect to the engine control unit itself.

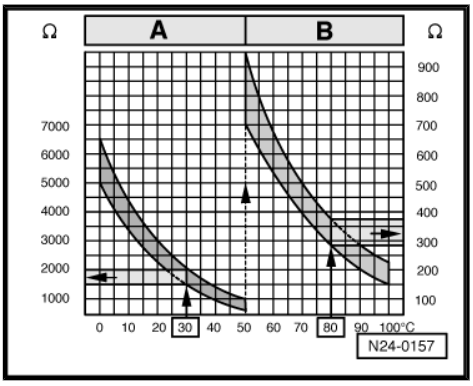

– Check for open circuit and short to positive or earth in the following wiring connections:

Connector Contact	Test box -V.A.G 1598/31- Socket
3 (signal)	104
4	83

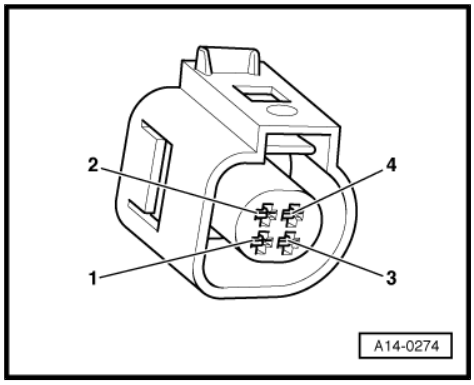

– Check for short circuits between the two wires.

– Rectify any open/short circuit as necessary. ⇒ Current flow diagrams, Electrical fault finding and Fitting locations

If no wiring fault is detected:

– Renew engine control unit.

1.10 Checking power supply to control unit

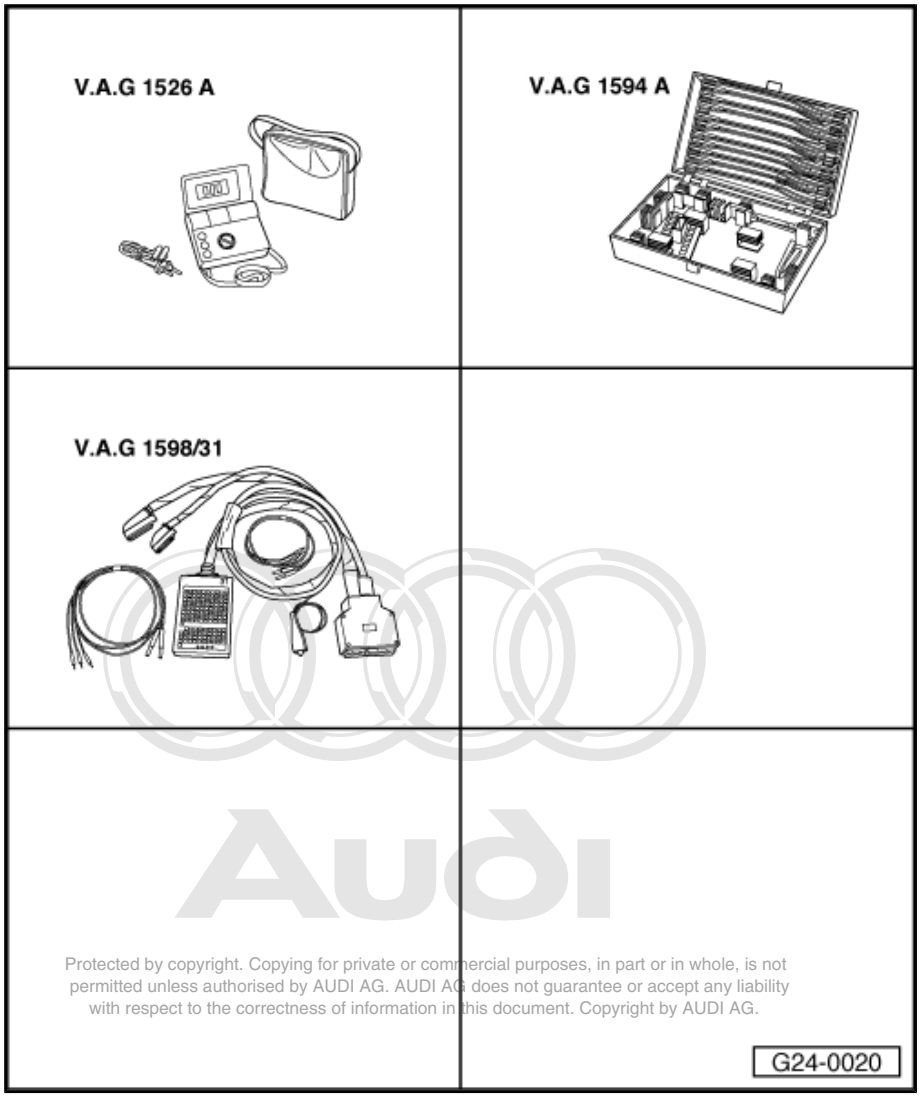

Protected by copyright. Copying for private or commercial purposes, in part or in whole, is not permitted unless authorised by AUDI AG. AUDI AG does not guarantee or accept any liability with respect to the correctness of information in this document. Copyright by AUDI AG.

1.10.1 Special tools and workshop equipment required

♦ -V.A.G 1526 A-

- -V.A.G 1594 A-
- -V.A.G 1598/31-

Note!

- *The voltage supply (+) to the engine control unit is via contact 3 with ignition on (voltage supply via a relay). The engine control unit maintains the voltage supply to contact 3 via this relay for approx. 25 seconds after the ignition has been switched off.*
- *Terminal 15 of the central electrics is also present at contact 62.*

Protected by copyright. Copying or distribution of this document is not permitted unless authorised by AUDI AG. AUDI AG does not guarantee or accept any liability with respect to the correctness of information in this document. Copyright by AUDI AG.

- *The earth connection of the engine control unit is provided via contacts 1 and 2.*

Note!

- *Battery voltage at least 11.5 V*
- *Fuse for engine control unit OK.*
- *Alternator OK, check: ⇒ Electrical System; Repair group 27*

1.10.2 Test sequence

– Connect vehicle diagnostic, testing and information system -VAS 5051- or fault reader -V.A.G 1551- and select engine electronics control unit by entering “address word ” 01. For this purpose, the engine must be running at idling speed.

– If the engine does not start, please continue the test with the ignition switched on.

Indicated on display:

```
Rapid data transfer            HELP
Select function XX
```

– Enter “08” for the function “Read measured value block” and confirm entry with the Q key.

Indicated on display:

```
Reading measured value block
      Q
Enter display group number XXX
```

– Enter “004” for “Display group number 004” and confirm entry with the Q key.

– Check display in display zone 2.

	Display zones			
	1	2	3	4
Display group 004: Voltage supply with engine idling				
Display	xxxx rpm	xx.x V	xxx.x °C	xxx.x °C
Readout	Engine speed	Battery voltage	Coolant temperature	Intake air temperature
Specification	xxxx rpm	12.0...15.0 V	The temperature reading should increase evenly	From ambient temperature to 120 °C

If specification is not attained:

– Connect test box -V.A.G 1598/31- to wiring harness for engine control unit. Do not connect to the engine control unit itself.

1.10.3 Checking voltage supply from power supply relay for Simos control unit - J363-

Fitting location ⇒ Fitting locations overview, Page

– Switch on ignition.

– Connect multimeter between sockets 1 and 3 of test box to measure voltage.

♦ Specification: approx. battery voltage

If specification is not attained:

– Check wiring and earth connection to power supply relay - J363- :⇒ Current flow diagrams, Electrical fault finding and Fitting locations

If no wiring fault is detected:

– Replace the power supply relay.

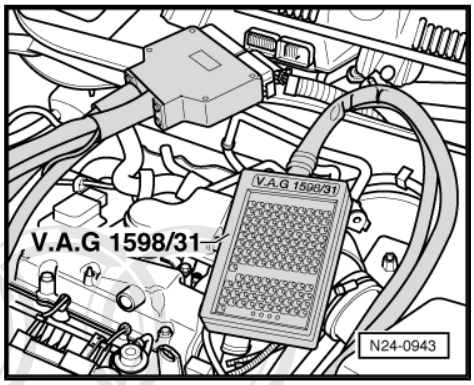

1.10.4 Checking voltage supply at terminal 15

– Connect multimeter between sockets 2 and 62 of test box to measure voltage.

– Switch on ignition.

♦ Specification: approx. battery voltage

If specification is not attained:

– Check the wiring to the fuse holder and the earth connection of the engine control unit:⇒ Current flow diagrams, Electrical fault finding and Fitting locations

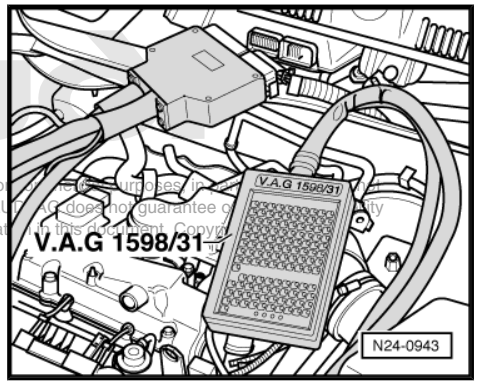

Protected by copyright. Copying for private or commercial purposes, in part or in whole, is not permitted unless authorised by AUDI AG. AUDI AG does not guarantee or assume any liability with respect to the correctness of information in this document. Copyright by AUDI AG.

1.11 Checking knock control stop

If a “knock control limit attained” fault entry has been stored, the following tests must be performed (⇒ also measured value block 020, 022 and 203, Page ⇒ page 135))

	Possible causes of fault	Fault remedy
Fault entry for all cylinders	♦ Poor fuel quality	– Change to higher quality fuel. ⇒ Operating Instructions
	♦ Knock sensor tightened with incorrect torque	– Loosen sensor and tighten to 20 Nm.
	♦ Knock sensor defective	– Check the knock sensor ⇒ page 136 .
	♦ Corrosion on connector	– Check connector
	♦ Loose components on engine	– Secure components
Fault entry for one cylinder	♦ Engine fault	– Checking compression
	♦ Loose components on engine	– Secure components

1.11.1 Measured value blocks for ignition timing retardation

Display group 020 -Ignition- knock control						
• Normal driving						
Read measured value block 20 →				▾Display:		
xx.x° BTDC	xx.x° BTDC	xx.x° BTDC	xx.x° BTDC			
				Ignition timing retardation by knock control, cylinder 4	0 ...12 °crankshaft	⇒ page 136
				Ignition timing retardation by knock control, cylinder 3	0 ...12 °crankshaft	⇒ page 136
				Ignition timing retardation by knock control, cylinder 2	0 ...12 °crankshaft	⇒ page 136
				Ignition timing retardation by knock control, cylinder 1	0 ...12 °crankshaft	⇒ page 136

Protected by copyright. Copying for private or commercial purposes, in part or in whole, is not permitted unless authorised by AUDI AG. AUDI AG does not guarantee or accept any liability with respect to the correctness of information in this document. Copyright by AUDI AG.

Note!

The numerical values displayed in zones 1 to 4 represent the actual ignition timing retardation by the knock control for the individual cylinders. The ignition timing is retarded in ° crankshaft (degrees). The displayed "BTDC" units can be disregarded.

Display group 022 -Ignition- Knock control						
• Normal driving						
Read measured value block 22 →				▾Display:		
xxxx rpm	x.x %	xx.x° crank-shaft	xx.x° crank-shaft			
				Ignition timing retardation by knock control, cylinder 2	0 ...12 °crankshaft	⇒ page 136
				Ignition timing retardation by knock control, cylinder 1	0 ...12 °crankshaft	⇒ page 136
		Engine load			0...100 %	---
	Engine speed				760...6500 rpm	---

Note!

The numbers displayed in display zones 1 and 2 represent the actual ignition timing retardation due to the knock control of cylinders one and two. The ignition timing is retarded in ° crankshaft (degrees). The displayed "BTDC" units can be disregarded.

Display group 023 -Ignition- Knock control				
• Normal driving				
Read measured value block 23 →				▾Display:
xxxx rpm	x.x %	xx.x° crank-shaft	xx.x° crank-shaft	

			Ignition timing retardation by knock control, cylinder 4	0 ...12 °crankshaft	⇒ page 136
			Ignition timing retardation by knock control, cylinder 3	0 ...12 °crankshaft	⇒ page 136
		Engine load		0...100 %	---
	Engine speed			760...6500 rpm	---

Note!

The numbers displayed in display zones 3 and 4 represent the actual ignition timing retardation due to the knock control of cylinders three and four. The ignition timing is retarded in ° crankshaft (degrees). The displayed "BTDC" units can be disregarded.

1.11.2 Evaluation of display group 020//022/023 - Ignition timing retardation

Indicated on display	Possible causes of fault	Fault remedy
All cylinders greater than 12°crankshaft	♦ Knock sensor defective	– Test knock sensor ⇒ page 136
	♦ Connector corroded	
	♦ Knock sensor incorrectly tightened	– Loosen sensor and tighten to 20 Nm.
	♦ Loose components on engine	– Secure components
	♦ Poor fuel quality	– Change fuel type
One cylinder deviates significantly from the others	♦ Connector corroded	– Test knock sensor ⇒ page 136
	♦ Engine fault	– Checking compression: ⇒ 4-cylinder Engine (2-valve), Mechanical Components, Repair group 15
	♦ Loose components on engine	– Secure components

Protected by copyright. Copying for private or commercial purposes, in part or in whole, is not permitted unless authorised by AUDI AG. AUDI AG does not guarantee or accept any liability with respect to the correctness of information in this document. Copyright by AUDI AG.

1.12 Checking knock sensor

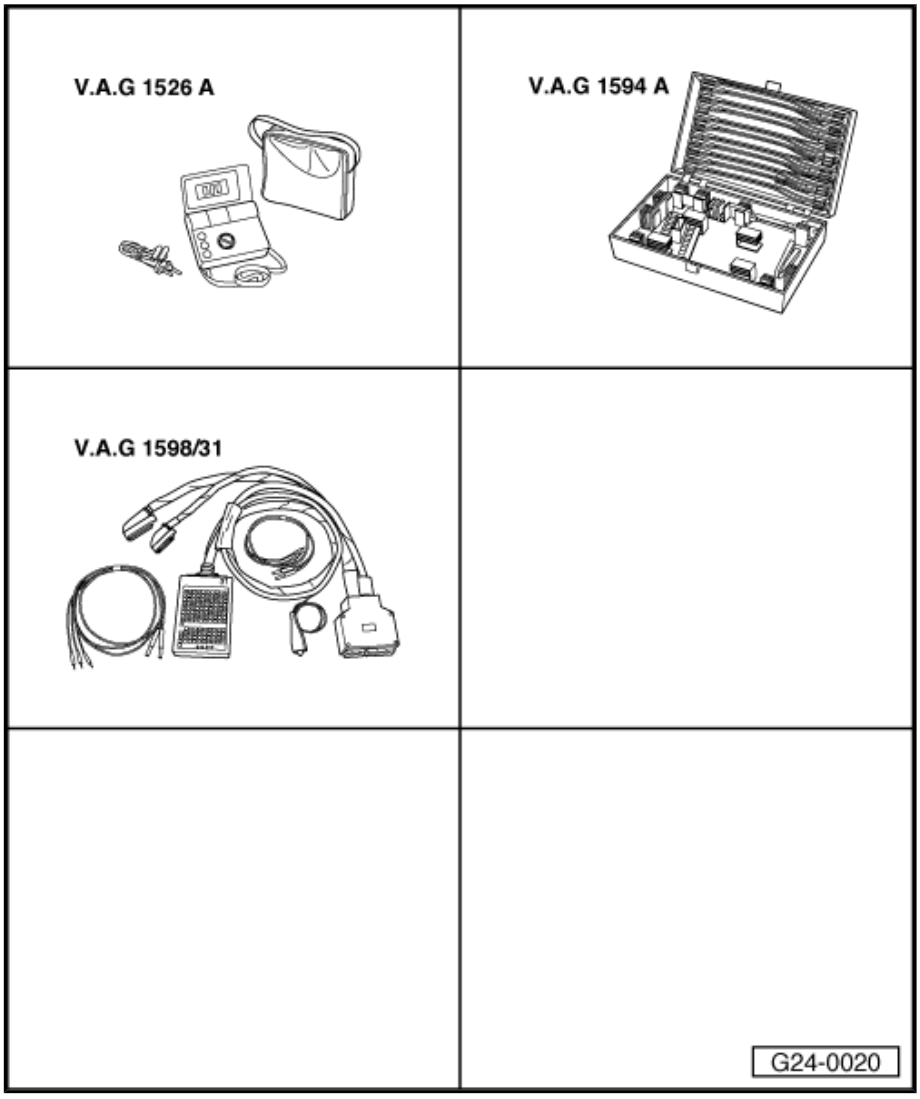

1.12.1 Special tools and workshop equipment required

- -V.A.G 1526 A-
- -V.A.G 1594 A-
- -V.A.G 1598/31-

Fitting location ⇒ Fitting locations overview, Page

Note!

- *To ensure that the knock sensor functions properly it is important to keep exactly to the specified tightening torque of 20 Nm.*
- *The vibrations from loose components may be identified by the knock sensor as knocking. Therefore check also that the ancillaries have been securely installed.*
- *Use only gold plated contacts when repairing the contacts in the connectors for the knock sensors.*

Protected by copyright. Copying for private or commercial purposes, in part or in whole, is not permitted unless authorised by AUDI AG. AUDI AG does not guarantee or accept any liability with respect to the correctness of information. Copyright by AUDI AG.

Note!

A knock sensor fault was identified by self-diagnosis.

1.12.2 Checking knock sensor wiring

– Unplug knock sensor connector in engine compartment.

– Check for short between all three contacts in the knock sensor connector (contacts 1+2, 1+3, 2+3).

♦ Specification: ∞ Ω (no continuity) - there must be no connection between any of the contacts.

– If there is a connection between the contacts, fit a new knock sensor.

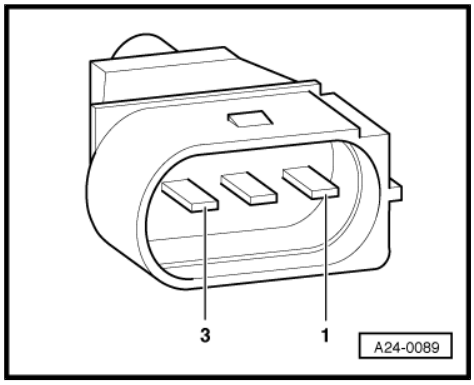

1.12.3 Checking wiring from knock sensor to engine control unit

– Connect test box -V.A.G 1598/31- to wiring harness for engine control unit. Do not connect to the engine control unit itself.

Protected by copyright. Copying for private or commercial purposes, in part or in whole, is not permitted unless authorised by AUDI AG. AUDI AG does not guarantee or accept any liability with respect to the correctness of information in this document. Copyright by AUDI AG.

– Check for open circuit and short to positive or earth in the following wiring connections:

Connector Contact	Test box -V.A.G 1598/18- Socket
1 (signal)	109
2 (earth)	101
3 (screen)	100

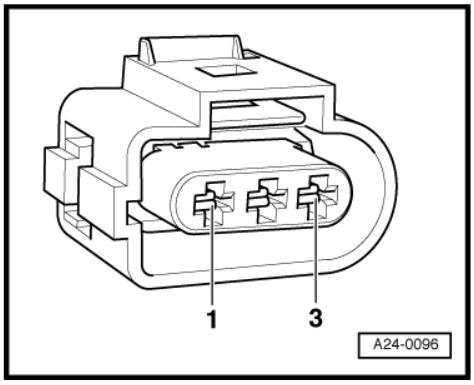

– Rectify any open/short circuit as necessary. ⇒ Current flow diagrams, Electrical fault finding and Fitting locations

If no wiring fault is detected:

– Loosen the knock sensor then tighten it to 20 Nm.

– Perform test drive.

Caution

To avoid accident risks when road testing the vehicle with test equipment, always observe the relevant safety precautions .

The following operating conditions must be complied with during this test drive:

- If the coolant temperature is greater than 80 °C, the following operating statuses must be attained several times: idling, part load, enrichment, full load, overrun
- For full throttle the speed must be increased to over 3500 rpm.

– Interrogate the fault memory of the engine control unit again.

Protected by copyright. Copying for private or commercial purposes, in part or in whole, is not permitted unless authorised by AUDI AG. AUDI AG does not guarantee or accept any liability with respect to the correctness of information in this document. Copyright by AUDI AG.

If the problem is still present:

– Replace the knock sensor -G61- .

1.13 Checking Hall sender

Fitting location ⇒ Fitting locations overview, Page

Note!

- *The Hall sender is located beneath the camshaft sprocket.*
- *If no Hall sender signal is received, the knock sensor signals can no longer be assigned to the cylinders. If this happens, the knock control system is deactivated and the ignition timing is slightly retarded in order to prevent knocking.*
- *Even if no Hall sender signal is received, the engine will continue to run and can also be re–started. The reason for this is as follows:*

- The fact that the control unit is out of phase by one crankshaft revolution does not have any noticeable effect on the injection system.
- The fuel is injected “upstream” of the closed inlet valve instead of while the inlet valve is open. This has only a minor influence on the quality of the air/fuel mixture.
- With the twin spark ignition system an ignition spark is produced for each cylinder at each crankshaft revolution, and not at alternate revolutions as is normally the case.

1.13.1 Special tools and workshop equipment required

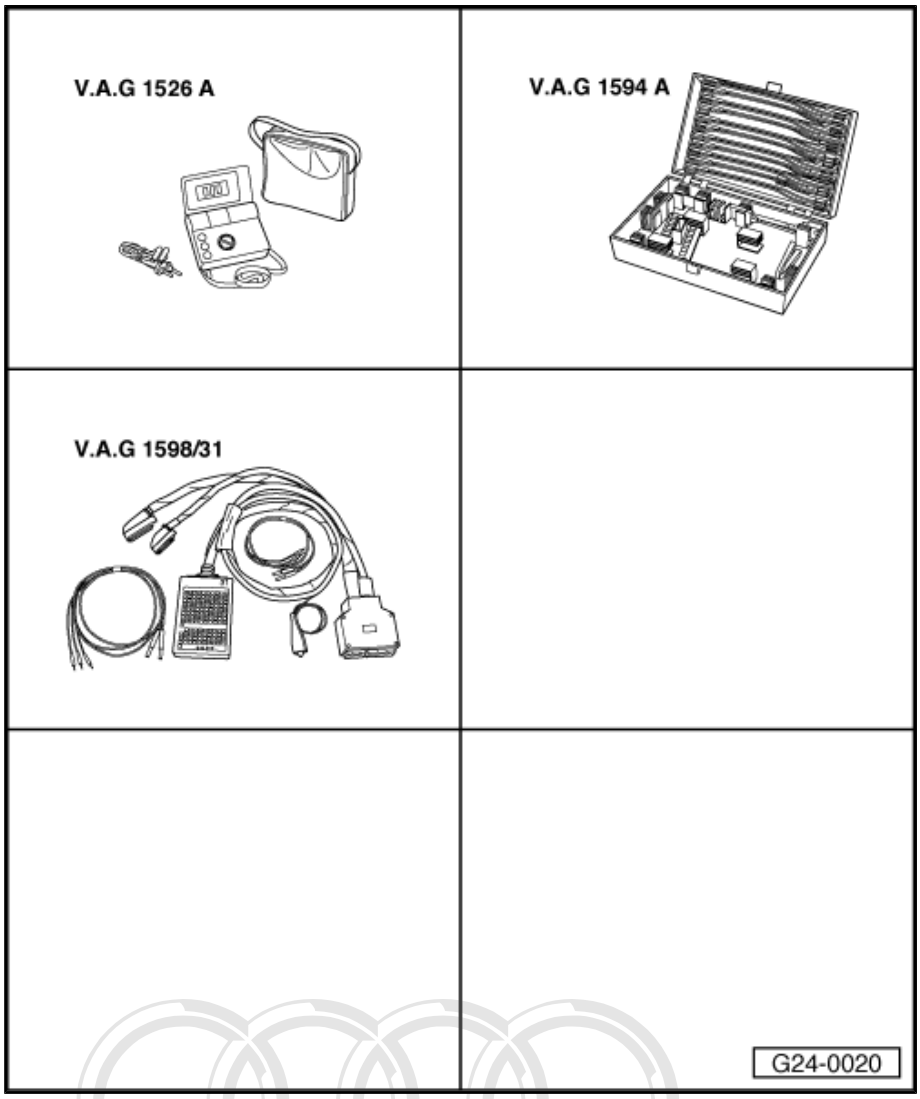

- -V.A.G 1526 A-
- -V.A.G 1594 A-
- -V.A.G 1598/31-

Note!

A fault on the Hall sender was identified by self-diagnosis.

Protected by copyright. Copying for private or commercial purposes, in part or in whole, is not permitted unless authorised by AUDI AG. AUDI AG does not guarantee or accept any liability with respect to the correctness of information in this document. Copyright by AUDI AG.

1.13.2 Test sequence

– Unplug connector from Hall sender.

– Connect multimeter between contacts 1 (positive) and 3 (earth) and between contacts 2 and 3 (earth) to measure voltage.
– Switch on ignition.
♦ Specification: 4.5... 5.5 V

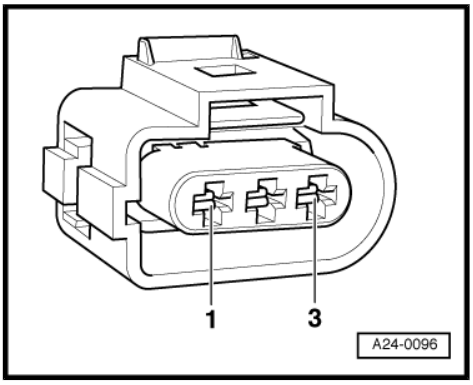

Note!

The Hall sender receives its power supply from the engine control unit.

If specifications are attained:

– Fit a new Hall sender.

If the specifications are not attained:

– Switch off ignition.
– Connect test box -V.A.G 1598/31- to wiring harness for engine control unit. Do not connect to the engine control unit itself.
– Check for open circuit and short to positive or earth in the following wiring connections:

Connector Contact	Test box -V.A.G 1598/31- Socket
1 (positive)	89
2 (signal)	105
3 (earth)	111

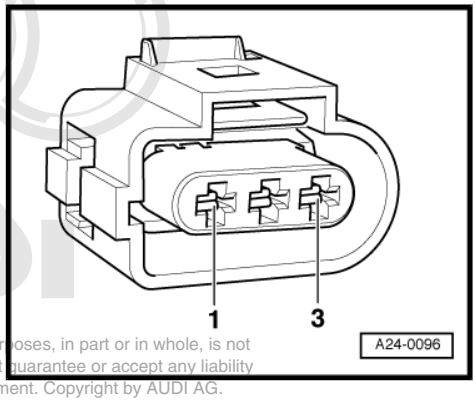

– Rectify any open/short circuit as necessary. ⇒ Current flow diagrams, Electrical fault finding and Fitting locations

Protected by copyright. Copying for private or commercial purposes, in part or in whole, is not permitted unless authorised by AUDI AG. AUDI AG does not guarantee or accept any liability with respect to the correctness of information in this document. Copyright by AUDI AG.

If no wiring fault was detected, but no voltage was present:

– Renew engine control unit.

1.14 Checking misfiring recognition function

1.14.1 Special tools and workshop equipment required

♦ -VAS 5051- with -VAS 5051/1-

or

♦ -V.A.G 1551- with -V.A.G 1551/3 A-

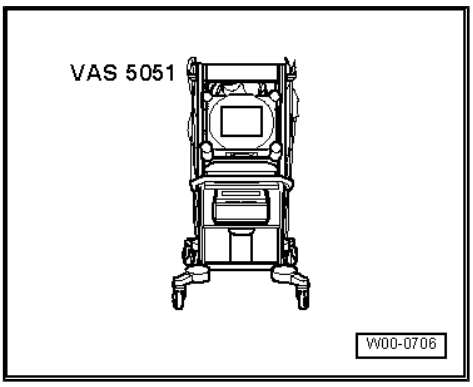

1.14.2 Test sequence

– Connect vehicle diagnostic, testing and information system -VAS 5051- or fault reader -V.A.G 1551- and select engine

electronics control unit by entering “address word ” 01. For this purpose, the engine must be running at idling speed.

Indicated on display:

```
Rapid data transfer            HELP
Select function XX
```

– Enter “08” for the function “Read measured value block” and confirm entry with the Q key.

Indicated on display:

```
Reading measured value block
        Q
Enter display group number XXX
```

– Enter “014” for “Display group number 014” and confirm entry with the Q key.

– Check misfire detection in display zones 3 and 4:

	Display zones			
	1	2	3	4
Display group 014: Misfire detection				
Dis-play	xxx rpm	xxx %	xxx	---
Rea dou t	Engine speed	Load	Total misfires	Misfiring recognition
Ran ge	0...6500 rpm	15...100 %		activated not activated
Spe cifi-cati-on	760...960 rpm	15...40 %	0...5	activated
Not e:	---	---	If the specified value is not attained (number of ignition misfires greater than 5): Evaluation of display zone 3 ⇒ page 142	---

If specification is attained:

– Press the → key.

Indicated on display (function selection):

```
Rapid data transfer HELP
Select function XX
```

1.14.3 Evaluation of display group 014

Display zone: 3	Possible causes of fault	Fault remedy
Higher than 5	♦ Defective spark plug ♦ Defective spark plug connector ♦ Ignition coil defective ♦ Output stages for ignition coil defective	– Check spark plugs and ignition wiring – Checking ignition coils ⇒ page 121
	♦ Injector defective	– Check injectors
	♦ EGR valve leaking	– Check exhaust gas recirculation valve. ⇒ 4-cylinder Engine (2-valve), Mechanical Components, Repair group 13 – Performing adaption

Protected by copyright. Copying for private or commercial purposes, in part or in whole, is not permitted unless authorised by AUDI AG. AUDI AG does not guarantee or accept any liability with respect to the correctness of information in this document. Copyright by AUDI AG.