2007 TRANSMISSION

Transfer Case - BW 4485-NR3 - Avalanche, Escalade, Suburban, Tahoe & Yukon

SPECIFICATIONS

CAPACITIES - APPROXIMATE FLUID

Capacities - Approximate Fluid

Application	Specification	
	Metric	English
Manual Transmission Fluid GM P/N 88861800 (Canadian P/N 88861801)	1.4 liters	1.5 quarts

FASTENER TIGHTENING SPECIFICATIONS

Fastener Tightening Specifications

Application	Specification	
	Metric	English
Adapter Studs	10 N.m	89 lb in
Case Bolts	21 N.m	15 lb ft
Drain Plug	25 N.m	18 lb ft
Fill Plug	25 N.m	18 lb ft
Vent	6 N.m	53 lb in

SEALERS, ADHESIVES, AND LUBRICANTS

Sealers, Adhesives, and Lubricants

Application	Type of Material	GM Part Number	
		United States	Canada
Drain Plug	Pipe Sealant	12346004	10953480
Fill Plug	Pipe Sealant	12346004	10953480
Front Output Shaft Cup Plug	Threadlocker	12345382	10953489
Rear Case Half to Front Case Half	RTV Sealant	12345739	10953541
Transfer Case Fluid	Manual Transmission Fluid	88861800	88861801
Vent	Pipe Sealant	12346004	10953480

COMPONENT LOCATOR

TRANSFER CASE DISASSEMBLED VIEW

cardiagn.com

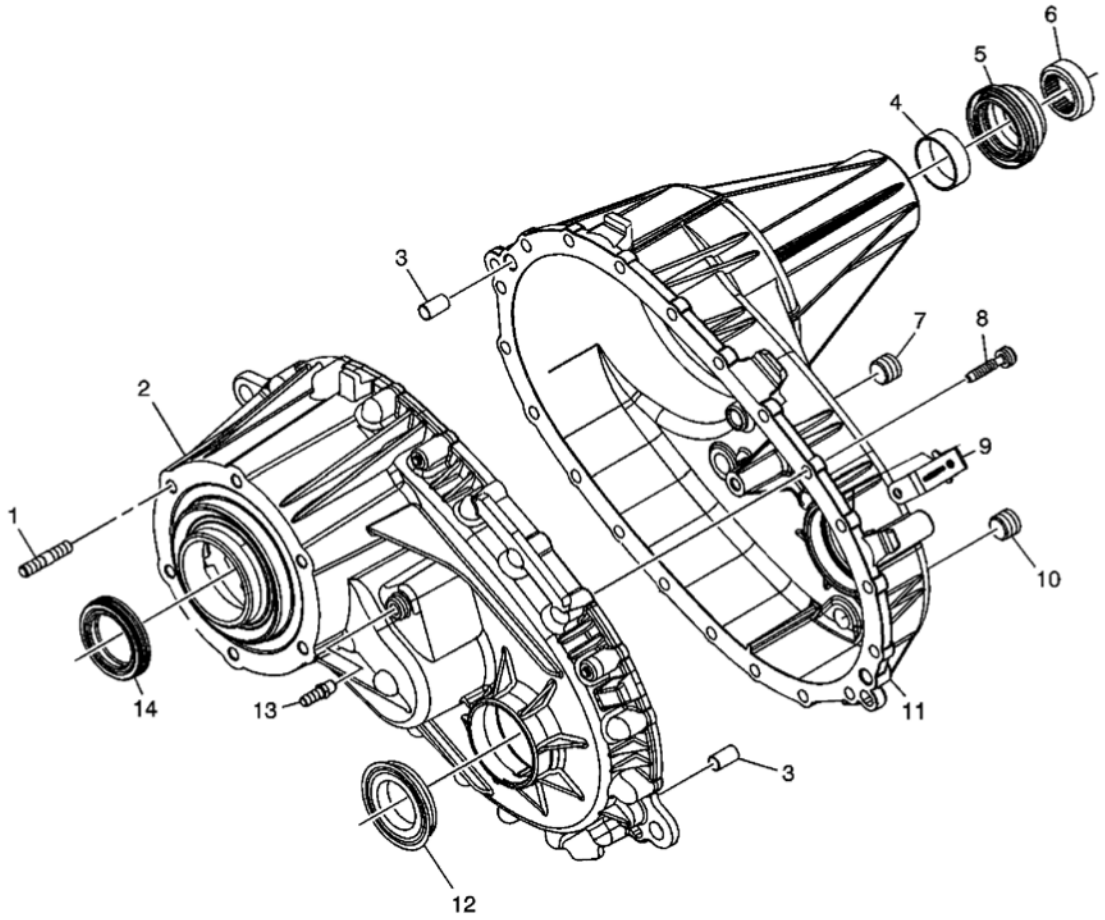

Fig. 1: Case Components
Courtesy of GENERAL MOTORS CORP.

Callouts For Fig. 1

Callout	Component Name
1	Adapter Stud
2	Front Case Half
3	Location Pin
3	Location Pin
4	Rear Output Shaft Seal
5	Shipping Seal
6	Fill Plug
7	Case Half Bolt
8	Wiring Harness Bracket
9	Drain Plug
10	Rear Case Half
11	Front Output Shaft Seal

cardiagn.com

12	Vent
13	Input Shaft Seal

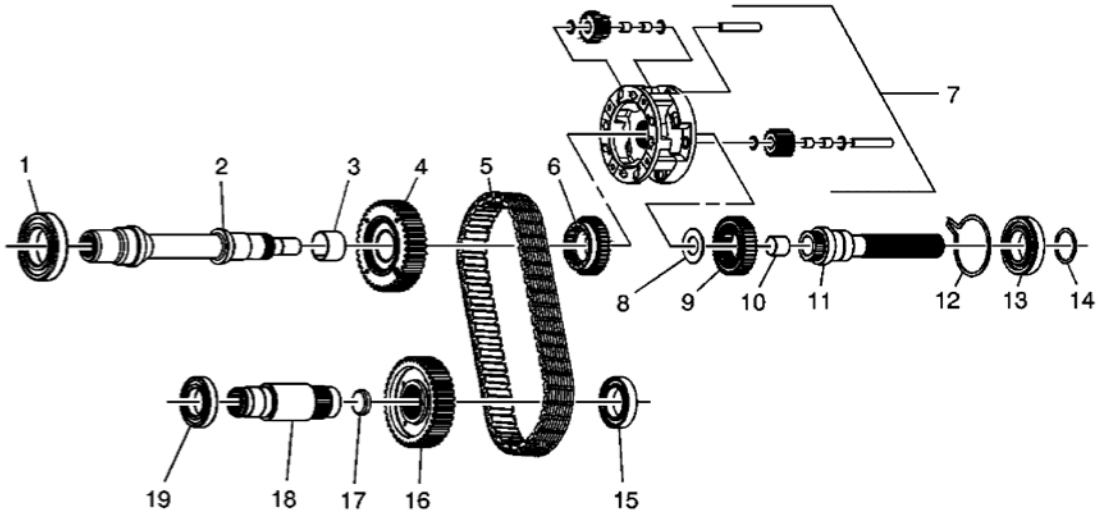

Fig. 2: Internal Components
Courtesy of GENERAL MOTORS CORP.

Callouts For Fig. 2

Callout	Component Name
1	Input Gear Bearing
2	Input Shaft
3	Drive Sprocket Bushing
4	Drive Sprocket
5	Drive Chain
6	Front Sun Gear
7	Planetary Differential Assembly
8	Rear Sun Gear Thrust Washer
9	Rear Sun Gear
10	Input Shaft Rear Support Bushing
11	Rear Output Shaft
12	Rear Output Shaft Bearing Outer Retaining Ring
13	Rear Output Shaft Bearing
14	Rear Output Shaft Bearing Retaining Ring
15	Front Output Shaft Rear Bearing
16	Driven Sprocket
17	Front Output Shaft Cup Plug
18	Front Output Shaft
19	Front Output Shaft Front Bearing

cardiagn.com

DIAGNOSTIC INFORMATION AND PROCEDURES

DIAGNOSTIC STARTING POINT - TRANSFER CASE

Begin the system diagnosis by reviewing the **Symptoms - Transfer Case**. The **Symptoms - Transfer Case** will provide the following information:

- The required visual/physical inspections
- The list of symptoms

Use the **Strategy Based Diagnosis** in order to identify the correct procedure for diagnosing the system.

SYMPTOMS - TRANSFER CASE

Strategy Based Diagnostics

Review the system operation in order to familiarize yourself with the system functions. Refer to **Transfer Case Description and Operation**.

Visual/Physical Inspection

- Inspect the easily accessible or visible system components for obvious damage, or for conditions which could cause the symptom.
- Inspect the transfer case for the proper fluid. Refer to **Transfer Case Fluid Replacement**.

Symptom List

Refer to a symptom diagnostic procedure from the following list in order to diagnose the symptom:

- **Transfer Case Popping Noise**
- **Transfer Case Whine or Rumble Noise**
- **Transfer Case Growl or Grinding Noise**
- **Transfer Case Shudder or Binding**
- **Transfer Case Clunk during Acceleration and Deceleration**
- **Transfer Case Leak Diagnosis**

TRANSFER CASE POPPING NOISE

Transfer Case Popping Noise

Cause	Correction
DEFINITION: A faulty internal transfer case component that causes a popping noise in the transfer case. Review the **Symptoms - Transfer Case** and perform the necessary inspections.	
Chain jump	• Replace the chain and sprockets. Refer to **Transfer Case Disassemble** and **Transfer Case Assemble**.

cardiagn.com

	• Replace the shaft bearings. Refer to **Transfer Case Disassemble** and **Transfer Case Assemble**. • Inspect for damaged components caused by metal debris. Refer to **Transfer Case Disassemble** and **Transfer Case Assemble**.

TRANSFER CASE WHINE OR RUMBLE NOISE

Transfer Case Whine or Rumble Noise

Cause	Correction
DEFINITION: A faulty internal transfer case component that causes a whine noise in the transfer case. Review the **Symptoms - Transfer Case** and perform the necessary inspections.	
Faulty bearings	1. Inspect all of the bearings and journals. Refer to **Cleaning and Inspection**. 2. Replace any faulty bearings, and any components with faulty bearing journals. Refer to **Transfer Case Disassemble** and **Transfer Case Assemble**.

TRANSFER CASE GROWL OR GRINDING NOISE

Transfer Case Growl or Grinding Noise

Cause	Correction
DEFINITION: A faulty internal transfer case component that causes a growl or grinding noise in the transfer case while the vehicle is turning. Review the **Symptoms - Transfer Case** and perform the necessary inspections.	
Planetary differential	1. Inspect the planetary differential pinion gears for the following conditions: • Chipped, bent or deformed teeth • Pinion gear bushings worn • Pinion gear thrust washers missing • Seized or binding pinion gears Refer to **Cleaning and Inspection** . 2. Inspect the planetary differential for deformation. Refer to **Cleaning and Inspection**. 3. Replace the planetary differential assembly if faulty. Refer to **Transfer Case Disassemble** and **Transfer Case Assemble**.
Sun gears	1. Inspect the sun gears for the following conditions: • Gear tooth failure • Worn or galled thrust surfaces Refer to **Cleaning and Inspection** . 2. Replace the sun gears if faulty. Refer to **Transfer Case Disassemble** and **Transfer Case Assemble**.

cardiagn.com

Thrust washer	1. Inspect the thrust washer for seizure to the planetary differential. 2. Inspect the thrust washer for galling. 3. Replace the thrust washer if faulty and the mating component if damaged. Refer to **Transfer Case Disassemble** and **Transfer Case Assemble**.
Planetary differential not timed properly	1. Inspect the planetary differential for being timed properly. Refer to **Transfer Case Assemble**. 2. Properly time the planetary differential gears. Refer to **Transfer Case Assemble**.

TRANSFER CASE SHUDDER OR BINDING

Transfer Case Shudder or Binding

Cause	Correction
DEFINITION: A shudder, binding, or a crow-hop while turning, which may cause tire scuffing. Review the **Symptoms - Transfer Case** and perform the necessary inspections.	
Planetary differential	1. Inspect the planetary differential pinion gears for the following conditions: • Chipped, bent or deformed teeth • Pinion gear bushings worn • Pinion gear thrust washers missing • Seized or binding pinion gears Refer to **Cleaning and Inspection** . 2. Inspect the planetary differential for deformation. Refer to **Cleaning and Inspection**. 3. Replace the planetary differential assembly if faulty. Refer to **Transfer Case Disassemble** and **Transfer Case Assemble**.
Thrust washer	1. Inspect the thrust washer for seizure to the planetary differential. 2. Replace the thrust washer if faulty and the mating component if damaged. Refer to **Transfer Case Disassemble** and **Transfer Case Assemble**.
Planetary differential not timed properly	1. Inspect the planetary differential for being timed properly. Refer to **Transfer Case Assemble**. 2. Properly time the planetary differential gears. Refer to **Transfer Case Assemble**.

TRANSFER CASE CLUNK DURING ACCELERATION AND DECELERATION

Transfer Case Clunk during Acceleration and Deceleration

Cause	Correction
DEFINITION: During acceleration or deceleration, a clunk is heard or felt in the transfer case. Review the **Symptoms - Transfer Case** and perform the necessary inspections.	

cardiagn.com

Incorrect fluid level or incorrect fluid	1. Inspect the transfer case for the correct fluid level. Refer to **Transfer Case Fluid Replacement**. 2. Inspect the transfer case for the correct type of fluid. 3. Flush the transfer case, and fill with the correct fluid, if required. Refer to **Capacities - Approximate Fluid**.
Excessive clearance between the slip yoke and the rear output shaft	1. Inspect for the following conditions: • Worn slip yoke splines • Worn rear output shaft splines 2. Repair or replace the following components if faulty. • Replace the slip yoke, if required. Refer to **Rear Propeller Shaft Replacement** . • Replace the rear output shaft, if required. Refer to **Transfer Case Disassemble** and **Transfer Case Assemble** .
Excessive clearance between the slip yoke and the rear bushing	1. Inspect for the following conditions: • Worn rear bushing • Worn slip yoke bushing journal 2. Repair or replace the following components if faulty. • Replace the slip yoke, if required. Refer to **Rear Propeller Shaft Replacement** . • Replace the rear case half if the rear bushing is worn. Refer to **Transfer Case Disassemble** and **Transfer Case Assemble** .
Worn or faulty planetary differential	1. Inspect the planetary differential for the following conditions: • Loose planetary differential splines to the input shaft splines • Loose or faulty pinion gears Refer to **Cleaning and Inspection** . 2. Replace the planetary differential assembly if faulty. Refer to **Transfer Case Disassemble** and **Transfer Case Assemble**.
Worn or missing sun gear thrust washer	1. Inspect to ensure the thrust washer is installed. 2. Inspect the thrust washer and mating surface for excessive wear. 3. Replace the worn or missing thrust washer. Refer to **Transfer Case Disassemble** and **Transfer Case Assemble**.
Worn or damaged rear sun gear	1. Inspect the sun gear external gear teeth for excessive wear. 2. Inspect the sun gear to rear output shaft for excessive looseness. 3. Replace the sun gear or rear output shaft if worn. Refer to **Transfer Case Disassemble** and **Transfer Case Assemble**.

cardiagn.com

Rear output shaft bearing outer retaining ring	1. Inspect for the following conditions: • Proper installation of the rear output shaft bearing retaining ring • Excessive wear or damaged retaining ring groove in the rear case half 2. Repair or replace the following components if found faulty: • Properly install a new rear output shaft bearing outer retaining ring. • Replace the rear case half if the retaining ring groove is excessively worn. Refer to **Transfer Case Disassemble** and **Transfer Case Assemble** .

TRANSFER CASE LEAK DIAGNOSIS

Transfer Case Leak Diagnosis

Cause	Correction
DEFINITION: A visible indication of an external fluid leak from the transfer case. Review the **Symptoms - Transfer Case** and perform the necessary inspections.	
Drain plug or fill plug leak	1. Inspect for the correct sealer and the correct amount of sealer on the plugs. 2. Install the plugs correctly. Refer to **Transfer Case Fluid Replacement**.
Rear output shaft seal leaking	1. Inspect for the following conditions: • Overfilled or improper transfer case fluid • Blocked vent • Seal improperly installed, worn, or damaged • Seal bore damaged or cracked • Rear output shaft bushing for excessive wear • Slip yoke seal surface for wear or pitting 2. Repair or replace the following components if found faulty: • Adjust or replace the transfer case fluid. Refer to **Transfer Case Fluid Replacement** . • Clean, or properly route the vent hose. • Replace the slip yoke if the surface could cause leakage. Refer to **Rear Propeller Shaft Replacement** . • Replace the rear case half if the bushing is worn. Refer to **Transfer Case Disassemble** and **Transfer Case Assemble** .

cardiagn.com

	• Replace the rear case half if the seal bore is damaged. Refer to **Transfer Case Disassemble** and **Transfer Case Assemble** . • Replace the rear output shaft seal. Refer to **Transfer Case Output Shaft Seal Replacement - Rear** .
Front output shaft seal leaking	1. Inspect for the following conditions: • Overfilled or improper transfer case fluid • Blocked vent • Seal improperly installed, worn, or damaged • Seal bore damaged or cracked 2. Repair or replace the following components if found faulty: • Adjust or replace the transfer case fluid. Refer to **Transfer Case Fluid Replacement** . • Clean or properly route the vent hose. • Replace the front case half if the seal bore is damaged. Refer to **Transfer Case Disassemble** and **Transfer Case Assemble** . • Replace the front output shaft seal. Refer to **Transfer Case Output Shaft Seal Replacement - Front** .
Leaking at the vent	• Transfer case overfilled 1. Inspect for the correct transfer case fluid level. Refer to **Transfer Case Fluid Replacement** . 2. Inspect the transmission fluid level. Refer to **Transmission Fluid Checking** . 3. If the transmission fluid level is low, and the transfer case fluid level is too high, replace the transfer case input shaft seal. Refer to **Transfer Case Input Shaft Seal Replacement** . 4. Inspect for the following conditions: • Seal improperly installed, worn, or damaged • Seal bore damaged or cracked • Input shaft seal surface worn, grooved, or damaged • Seal the vent with the correct sealer if leaking at the case. Refer to **Transfer Case Assemble**.
Transfer case to adapter leak	1. Inspect for the following conditions: • Loose mounting fasteners • Gasket or sealant faulty • The transfer case input shaft seal leaking 2. Repair or replace the following components if found faulty:

cardiagn.com

	• Replace the transfer case input shaft seal. Refer to **Transfer Case Input Shaft Seal Replacement** .
	• Inspect for the following:
	  ○ Seal improperly installed, worn, or damaged
	  ○ Seal bore damaged or cracked
	  ○ Input shaft seal surface worn, grooved, or damaged
	• Repair or replace the loose fasteners. Refer to **Transfer Case Adapter Replacement** .
	• Replace the transfer case gasket or sealer. Refer to **Transfer Case Adapter Replacement** .

Front case half to rear case half seam leak	Disassemble and seal the case halves. Refer to **Transfer Case Disassemble** and **Transfer Case Assemble**.
Case leaking	1. Inspect for a cracked case or case porosity. 2. Replace the faulty case half. Refer to **Transfer Case Disassemble** and **Transfer Case Assemble**.

REPAIR INSTRUCTIONS

TRANSFER CASE SHIELD REPLACEMENT

Removal Procedure

cardiagn.com

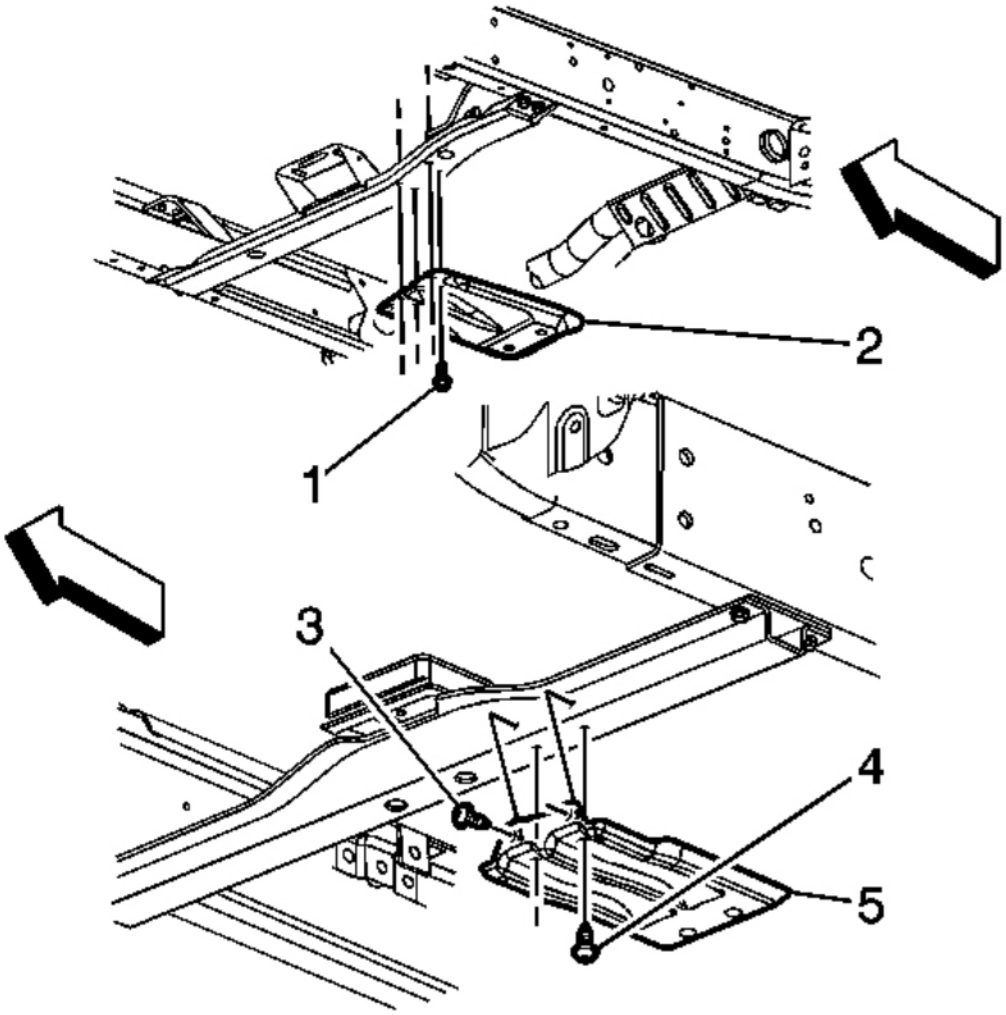

Fig. 3: View Of Transfer Case Shield & Bolts
Courtesy of GENERAL MOTORS CORP.

1. Raise and suitably support the vehicle. Refer to **Lifting and Jacking the Vehicle** .
2. Remove the transfer case shield bolts (1, 3, and 4).
3. Remove the transfer case shield (2 or 5).

Installation Procedure

cardiagn.com

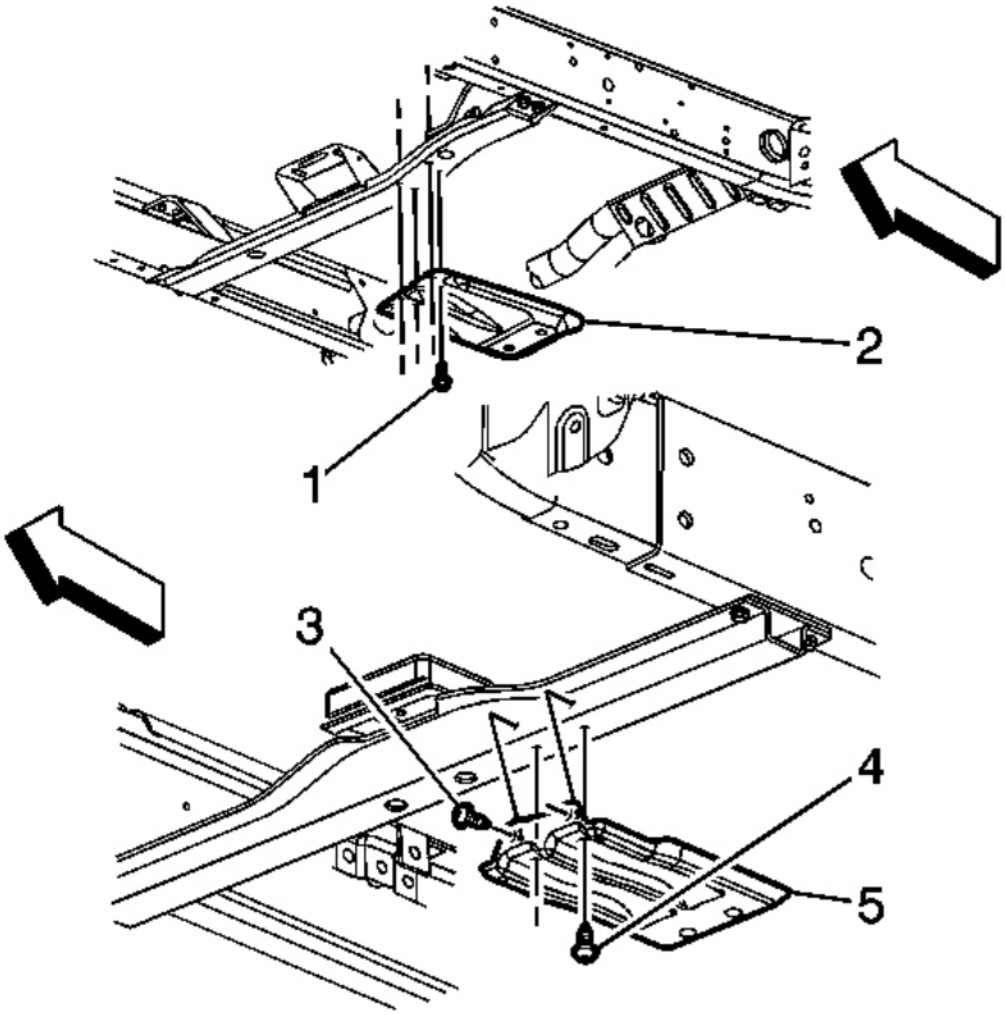

Fig. 4: View Of Transfer Case Shield & Bolts
Courtesy of GENERAL MOTORS CORP.

1. Position the transfer case shield (1, 3, and 4).

   NOTE: **Refer to Fastener Notice .**

2. Install the transfer case shield bolts (2 or 5).

   Tighten: Tighten the bolts to 20 N.m (15 lb ft).

cardiagn.com

3. Lower the vehicle.

TRANSFER CASE FLUID REPLACEMENT

Removal Procedure

IMPORTANT: When performing the following procedure, use only hand tools to remove and install the drain and fill plugs.

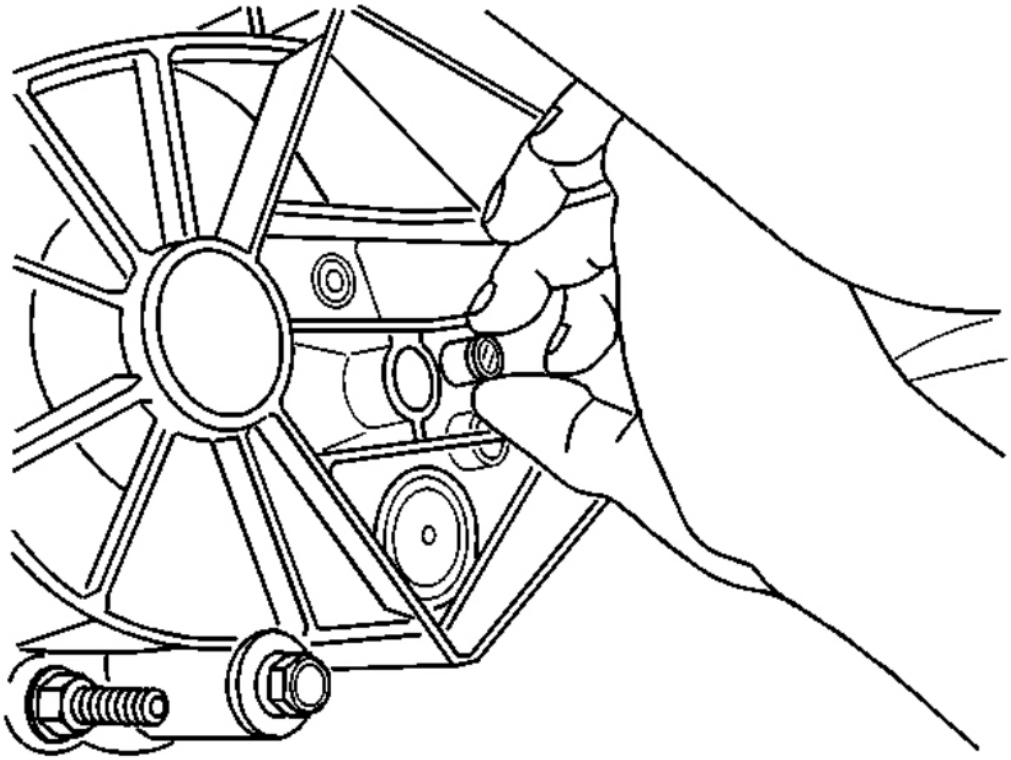

Fig. 5: View Of Transfer Case Fill Plug
Courtesy of GENERAL MOTORS CORP.

1. Raise and suitably support the vehicle. Refer to **Lifting and Jacking the Vehicle** .
2. Remove the transfer case shield, if equipped. Refer to **Transfer Case Shield Replacement**.
3. Remove the fill plug.

cardiagn.com

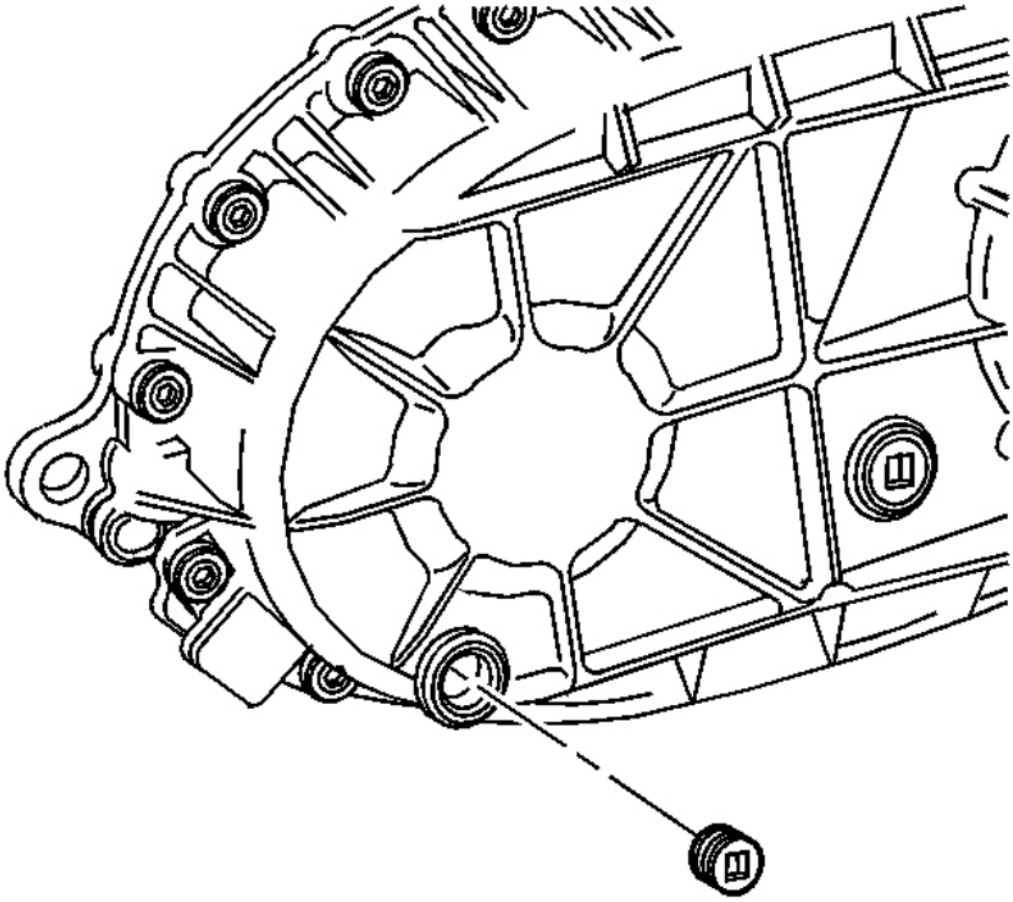

Fig. 6: View Of Transfer Case Drain Plug
Courtesy of GENERAL MOTORS CORP.

IMPORTANT: Ensure that an approved drain pan is used when draining the transfer case.

4. Remove the drain plug.
5. Allow the transfer case to drain completely.

Installation Procedure

IMPORTANT: Use only drain and fill plugs that are made from aluminum. Steel or brass plugs are not compatible with the magnesium case.

cardiagn.com

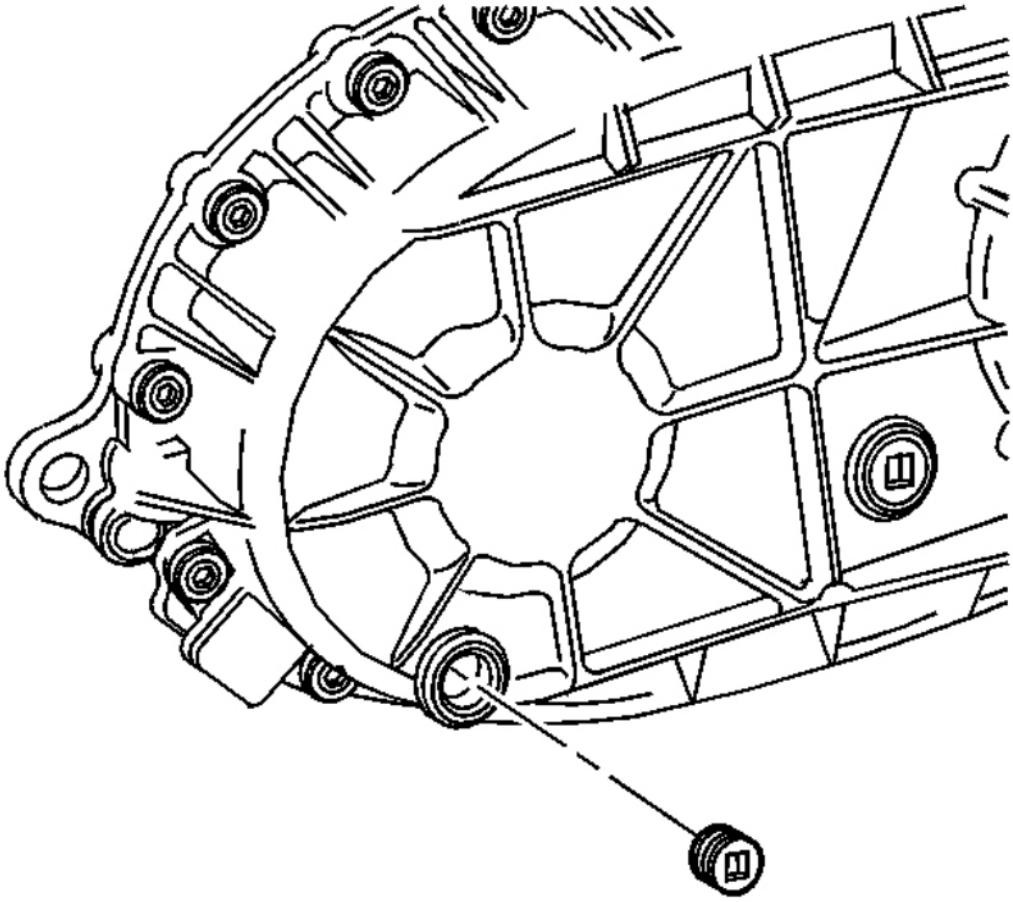

Fig. 7: View Of Transfer Case Drain Plug
Courtesy of GENERAL MOTORS CORP.

1. Apply sealant GM P/N 12346004, (Canadian P/N 10953480), or equivalent, to the threads of the drain and fill plugs.

   NOTE: **Refer to Fastener Notice .**

2. Install the drain plug.

   Tighten: Tighten the plug to 25 N.m (18 lb ft).

3. Fill the transfer case to the bottom of the fill plug hole with DEXRON®-III, GM P/N 12346143, (Canadian P/N 10952622).

cardiagn.com

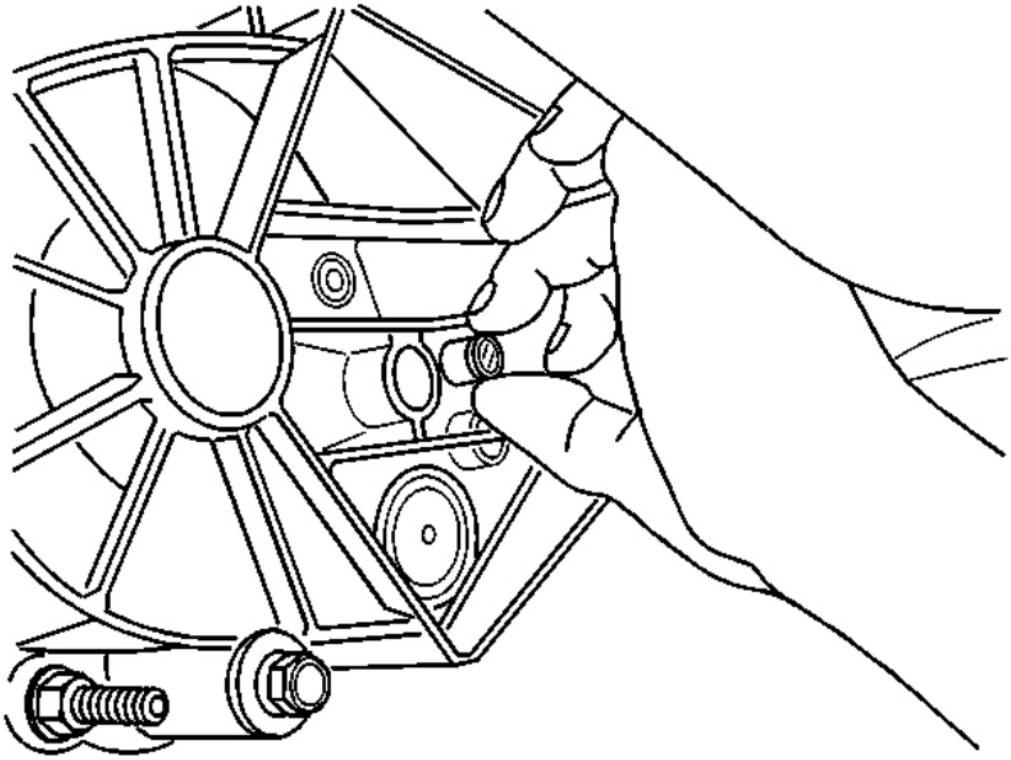

Fig. 8: View Of Transfer Case Fill Plug
Courtesy of GENERAL MOTORS CORP.

4. Install the fill plug.

   Tighten: Tighten the plug to 25 N.m (18 lb ft).

5. Install the transfer case shield, if equipped. Refer to **Transfer Case Shield Replacement**.
6. Lower the vehicle.

TRANSFER CASE OUTPUT SHAFT SEAL REPLACEMENT - FRONT

Tools Required

- **J 8092** Driver Handle
- **J 43484** Output Shaft Seal Installer. See **Special Tools**.

Removal Procedure

cardiagn.com

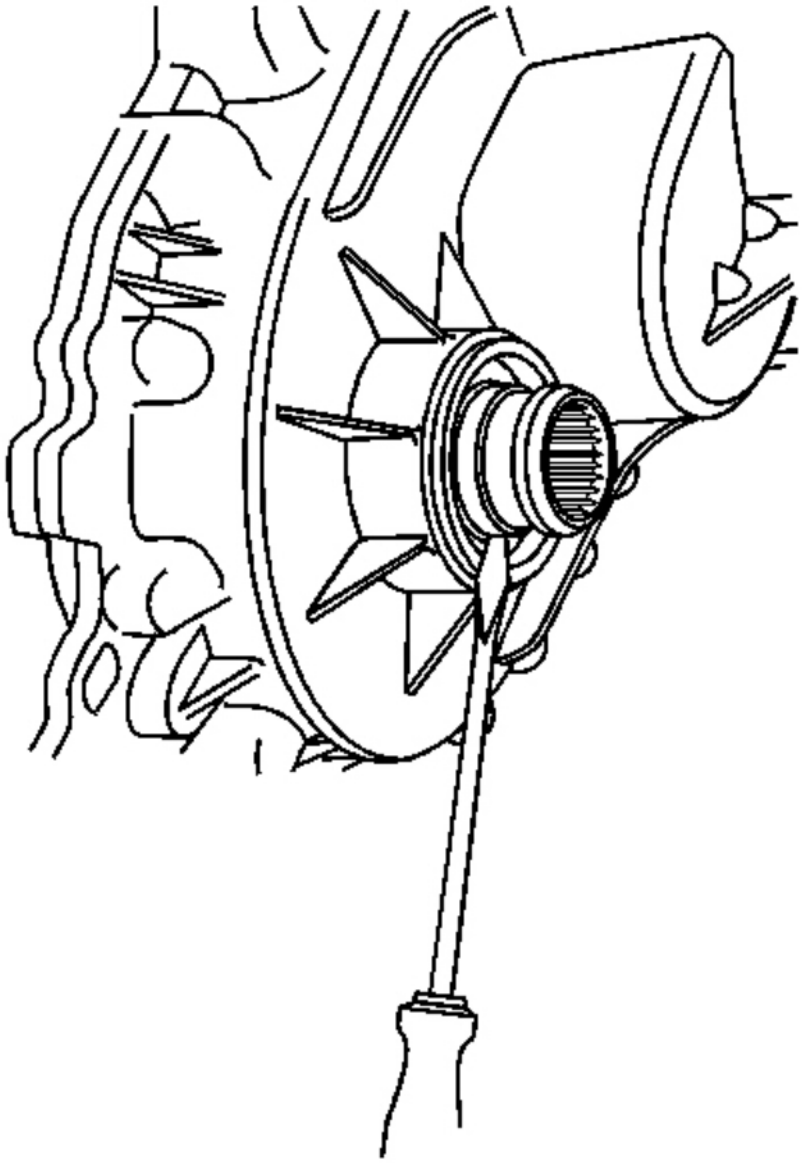

Fig. 9: Removing Front Output Shaft Seal With Flathead Screwdriver
Courtesy of GENERAL MOTORS CORP.

1. Raise and suitably support the vehicle. Refer to **Lifting and Jacking the Vehicle** .
2. Remove the transfer case shield, if equipped. Refer to **Transfer Case Shield Replacement**.
3. Remove the front propeller shaft. Refer to **Front Propeller Shaft Replacement** .

cardiagn.com

IMPORTANT: The front output shaft seal is a two piece internal seal. The inner seal race is a force fit on the front output shaft.

4. Remove the front output shaft seal by inserting a flat-tipped screwdriver behind the inner race of the seal.
5. Pry the inner seal race forward.

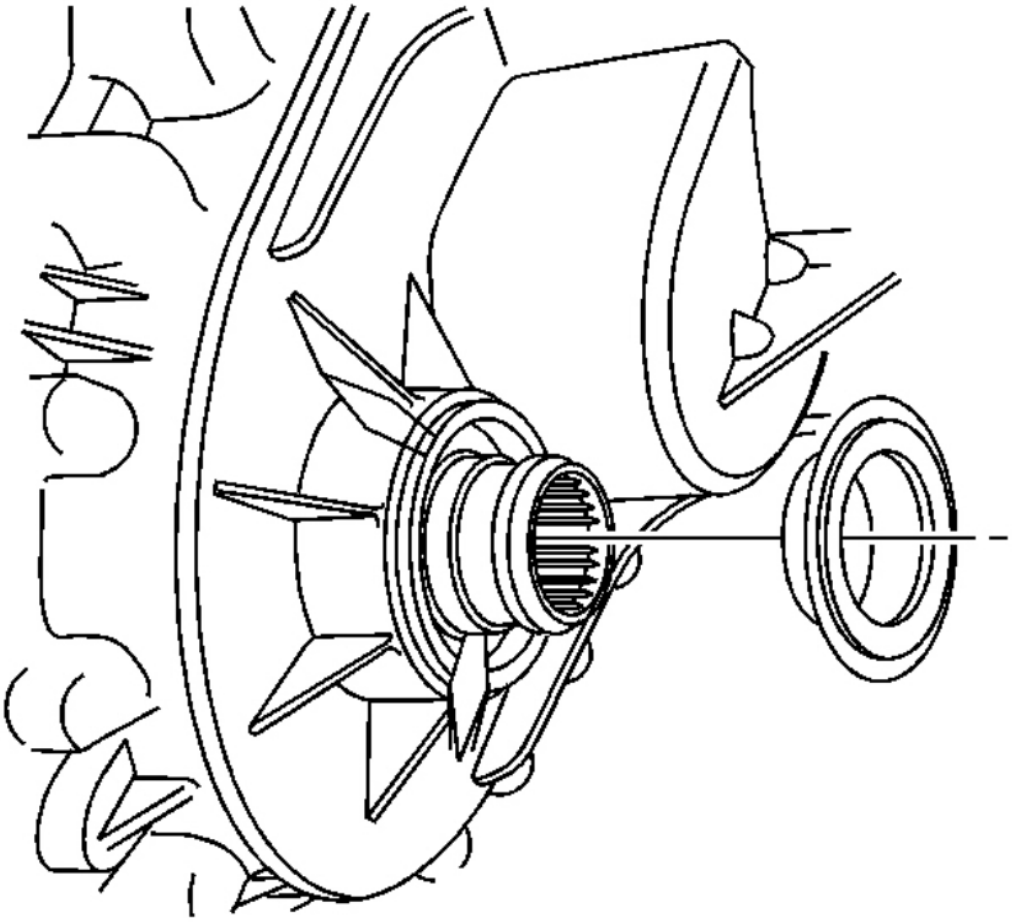

Fig. 10: View Of Inner Seal Race & Front Output Shaft
Courtesy of GENERAL MOTORS CORP.

6. Using a small pry bar, move the inner seal race forward on the front output shaft.
7. Remove the inner seal race from the front output shaft.

cardiagn.com

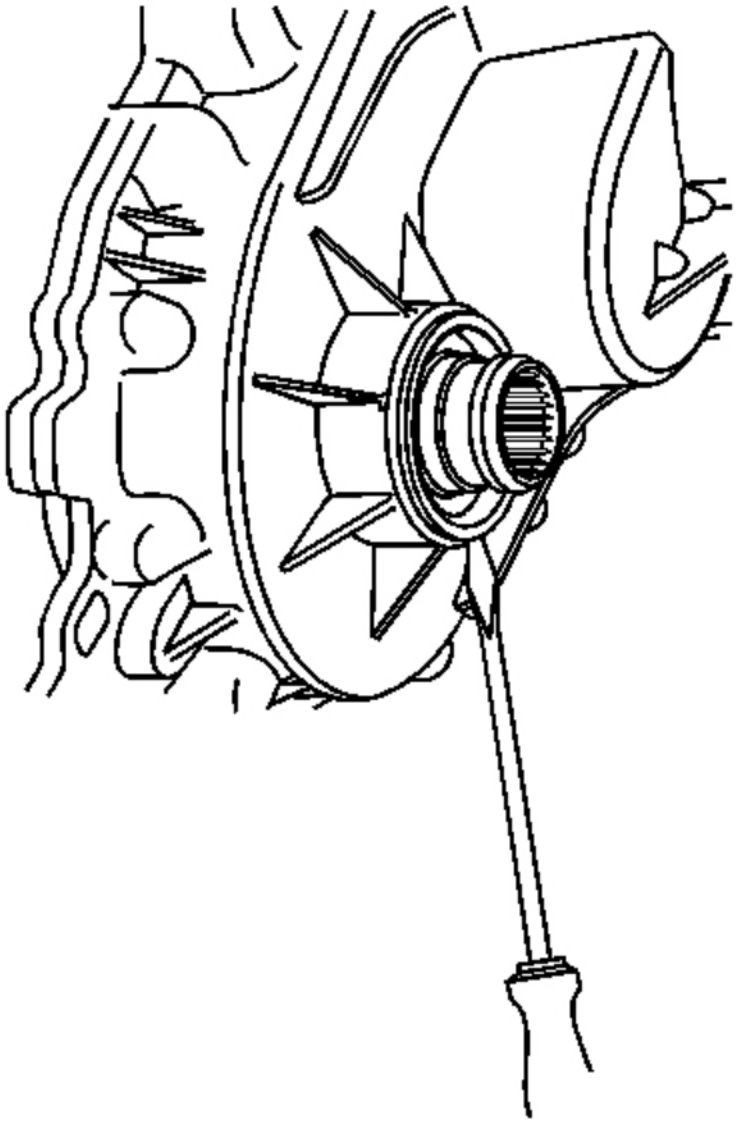

Fig. 11: Removing Output Shaft Seal From Transfer Case With Flathead Screwdriver
Courtesy of GENERAL MOTORS CORP.

8. Insert a flat-tipped screwdriver or small pry bar into the space between the lip of the outer race of the seal and the transfer case.
9. Remove the remaining part of the output shaft seal from the transfer case.

cardiagn.com

Installation Procedure

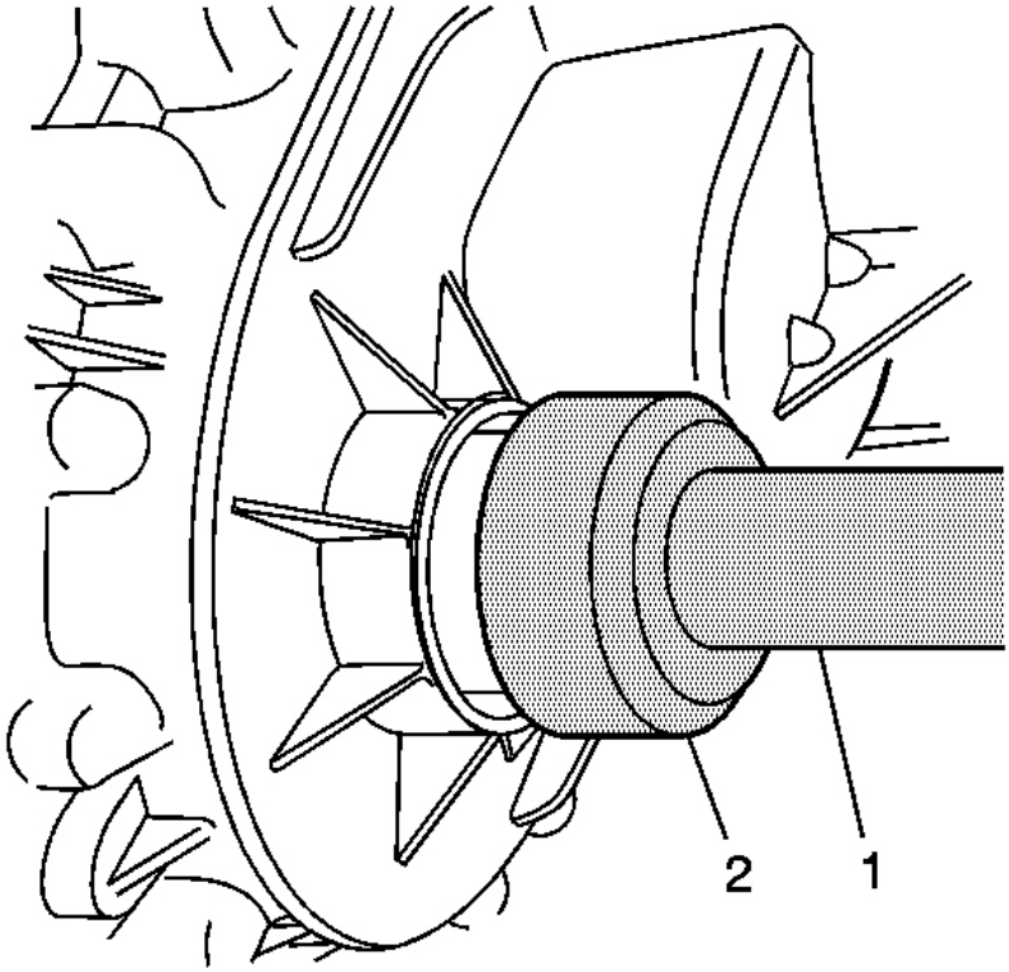

Fig. 12: View Of Seal Installation Special Tools
Courtesy of GENERAL MOTORS CORP.

1. Install the **J 43484** (2) to the **J 8092** (1). See **Special Tools**.
2. Install a NEW seal onto **J 43484** . See **Special Tools**.
3. Using **J 43484** (2), and **J 8092** (1), install the seal. See **Special Tools**.
4. Install the front propeller shaft. Refer to **Front Propeller Shaft Replacement** .
5. Check the fluid level. Add fluid, if necessary.
6. Install the transfer case shield, if equipped. Refer to **Transfer Case Shield Replacement**.

cardiagn.com

7. Lower the vehicle.

TRANSFER CASE OUTPUT SHAFT SEAL REPLACEMENT - REAR

Tools Required

J 45756 Output Shaft Seal Installer. See **Special Tools**.

Removal Procedure

cardiagn.com

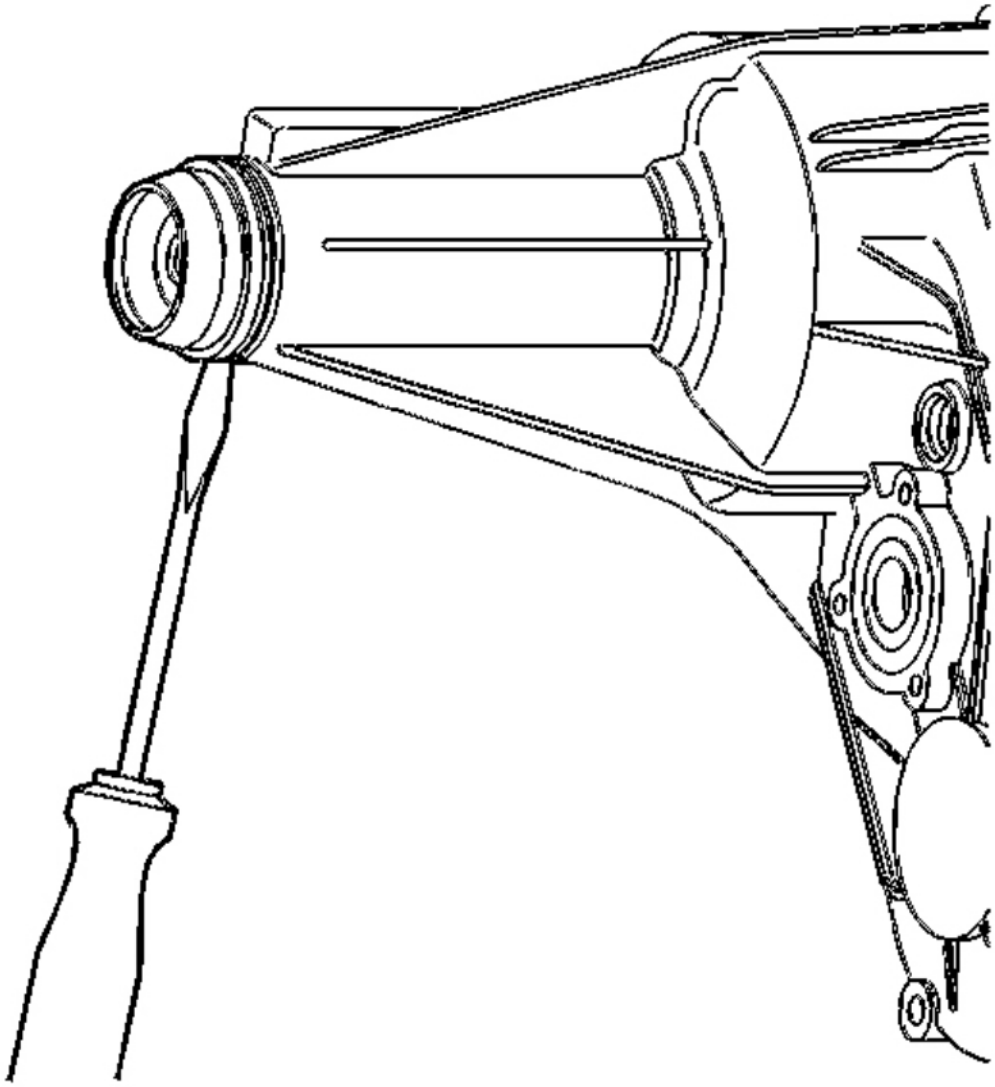

Fig. 13: Removing Rear Output Shaft Seal With Flathead Screwdriver
Courtesy of GENERAL MOTORS CORP.

1. Raise and suitably support the vehicle. Refer to **Lifting and Jacking the Vehicle** .
2. Remove the transfer case shield, if equipped. Refer to **Transfer Case Shield Replacement**.
3. Remove the rear propeller shaft. Refer to **Rear Propeller Shaft Replacement** .
4. Remove the rear output shaft seal by prying it out with a flat tipped screwdriver.

cardiagn.com

Installation Procedure

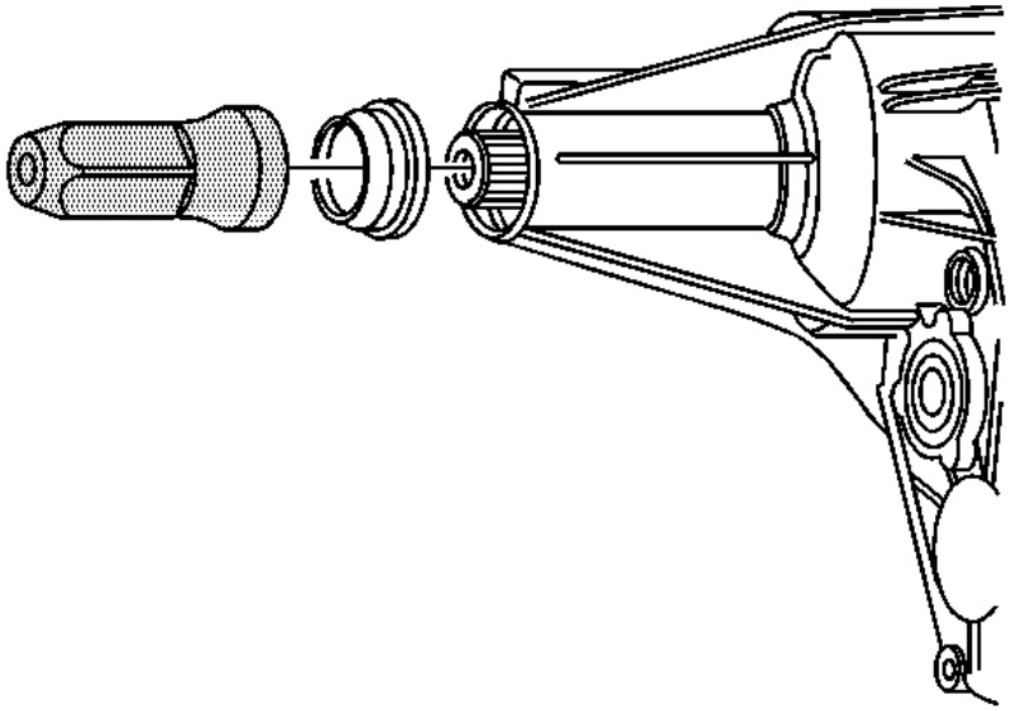

Fig. 14: View Of Front Output Shaft Seal Installation Special Tool
Courtesy of GENERAL MOTORS CORP.

1. Using the **J 45756** , install a NEW front output shaft seal. See **Special Tools**.
2. Install the rear propeller shaft. Refer to **Rear Propeller Shaft Replacement** .
3. Check the fluid level. Add fluid, if necessary.
4. Install the transfer case shield, if equipped. Refer to **Transfer Case Shield Replacement**.
5. Lower the vehicle.

TRANSFER CASE ASSEMBLY REPLACEMENT

Removal Procedure

cardiagn.com

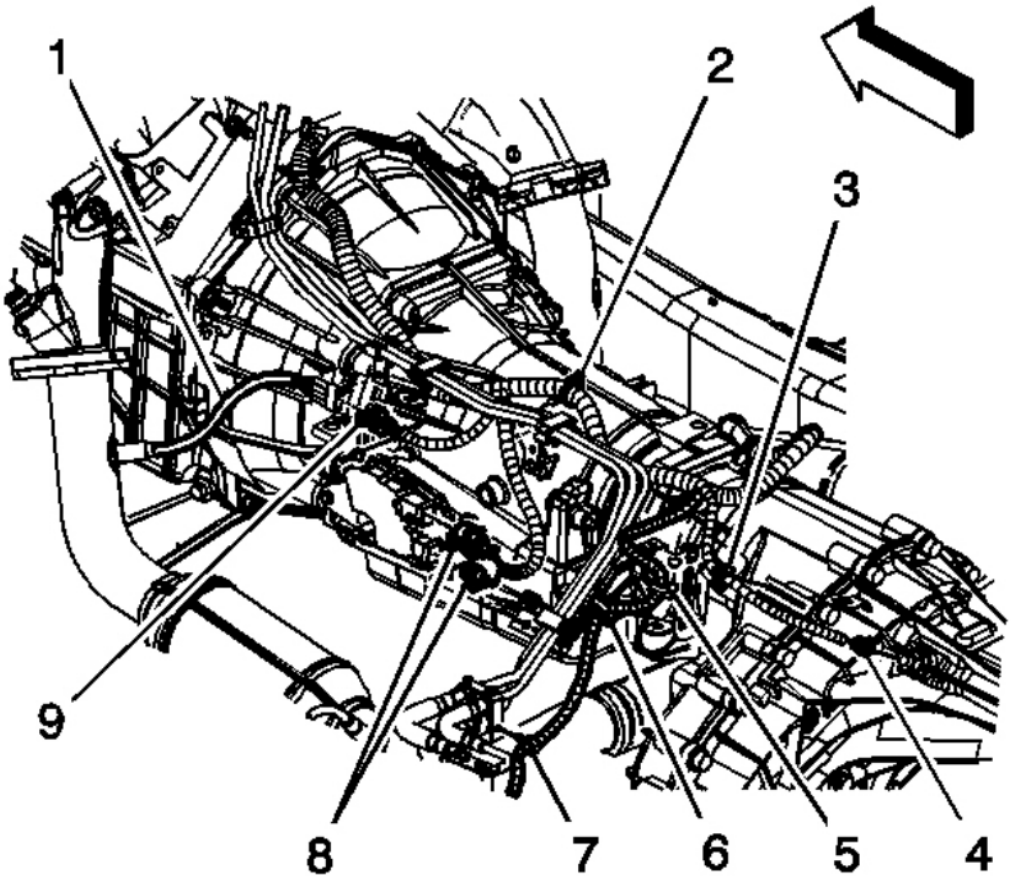

Fig. 15: Transfer Case Components
Courtesy of GENERAL MOTORS CORP.

1. Raise and suitably support the vehicle. Refer to **Lifting and Jacking the Vehicle** .
2. Remove the transfer case shield, if equipped. Refer to **Transfer Case Shield Replacement**.
3. Remove the rear propeller shaft. Refer to **Rear Propeller Shaft Replacement** .
4. Remove the front propeller shaft. Refer to **Front Propeller Shaft Replacement** .
5. Drain the fluid from the transfer case.
6. Disconnect the speed sensor electrical connector (4).
7. Remove the clip (3) from the transfer case bracket.
8. Reposition the speed sensor wire.
9. Remove the clips (5, 6) from the fuel pipe bracket.
10. Remove the fuel pipe clip from the fuel pipe bracket.

cardiagn.com

11. Support the transmission with a suitable jack stand.

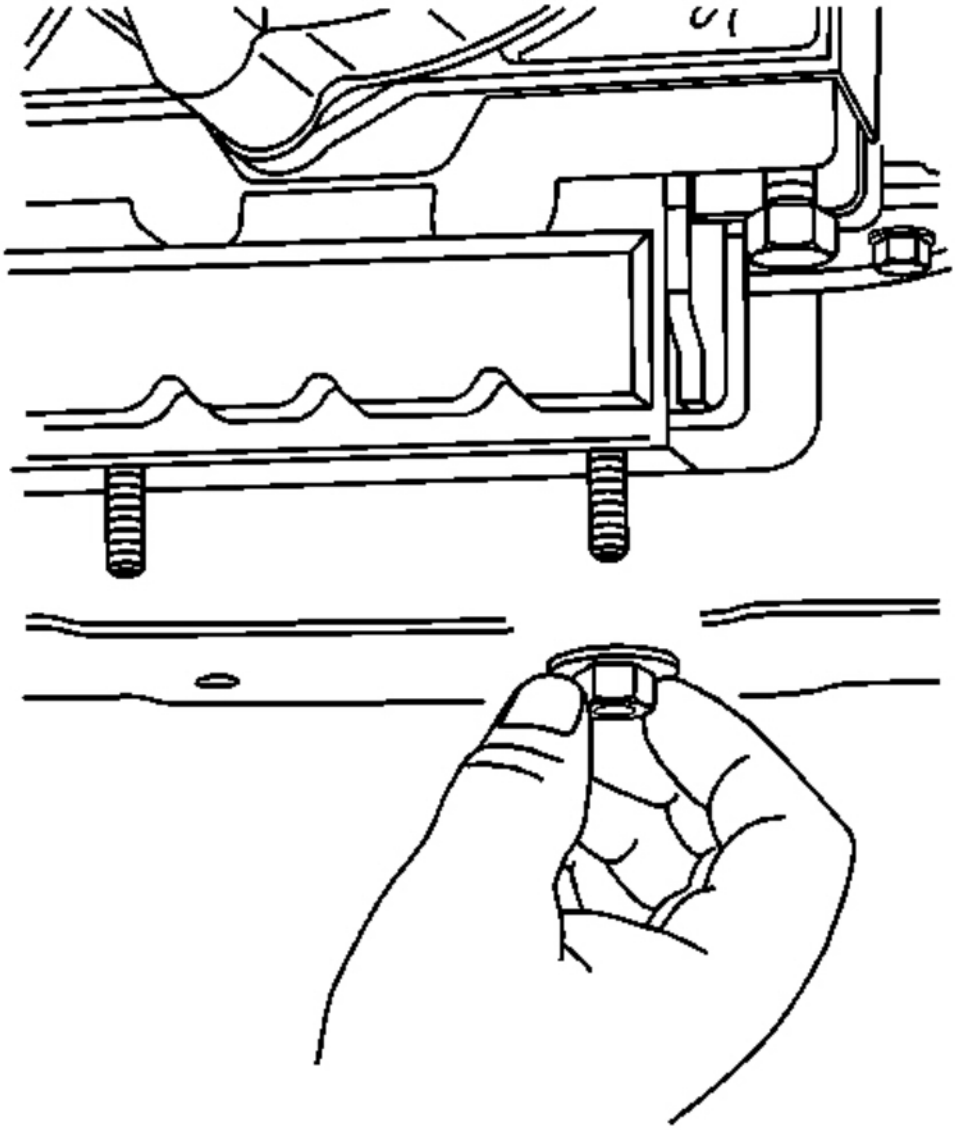

Fig. 16: Identifying Transmission Mount Nuts
Courtesy of GENERAL MOTORS CORP.

12. Remove the transmission mount nuts.

cardiagn.com

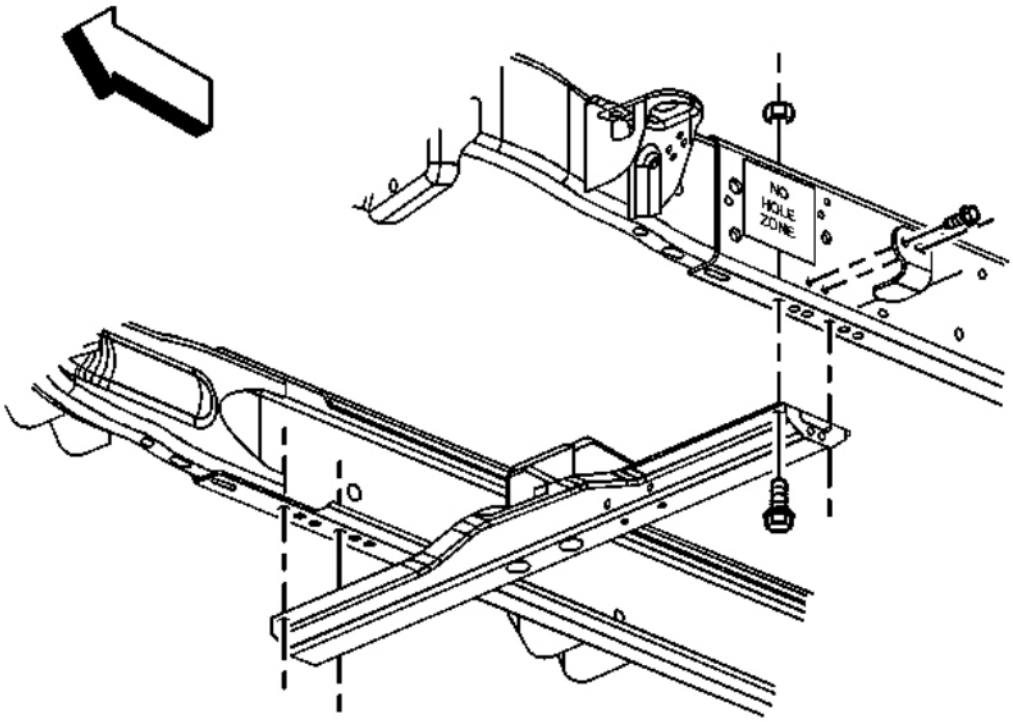

Fig. 17: Identifying Crossmember & Bolts
Courtesy of GENERAL MOTORS CORP.

13. Remove the crossmember bolts.
14. Remove the crossmember.
15. Install a suitable transmission jack to the transfer case.

cardiagn.com

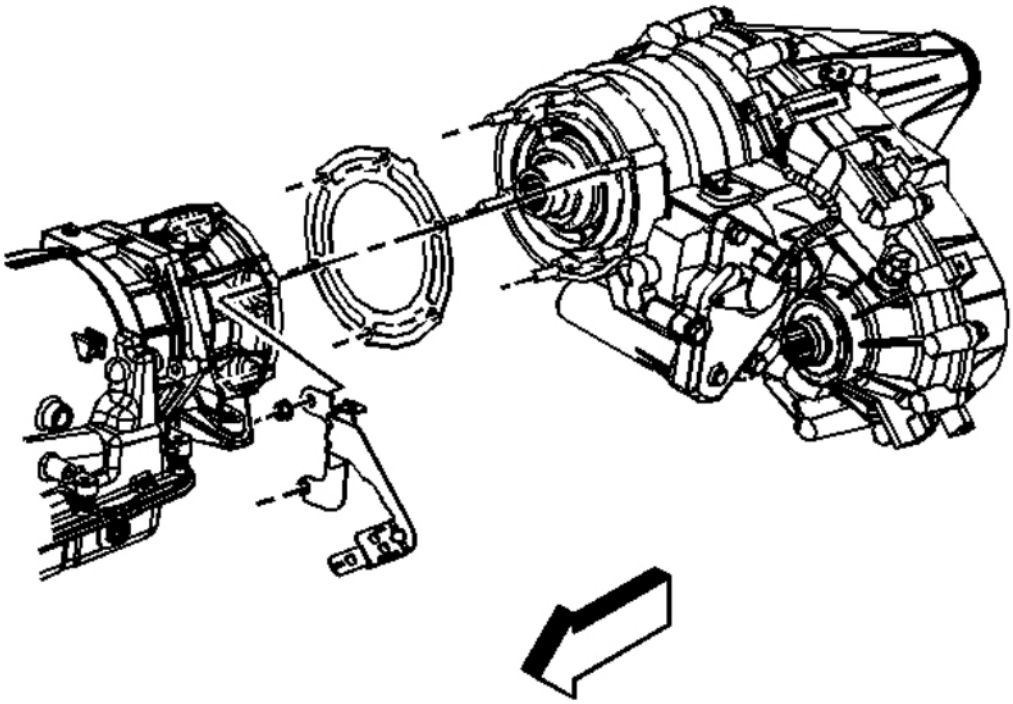

Fig. 18: View Of Transfer Case & Transmission
Courtesy of GENERAL MOTORS CORP.

16. Remove the transfer case adapter nuts.
17. Remove the fuel pipe bracket from the studs.

IMPORTANT: Pull straight back on the transfer case in order to position the transfer case so that it can be rotated parallel to the transmission.

18. Remove the transfer case from the adapter.
19. Rotate the transfer case so that it is perpendicular to the torsion bar mounting bracket.
20. Lower the transfer case.
21. Remove the gasket from the transfer case.
22. Remove the transfer case from the transmission jack.

Installation Procedure

cardiagn.com

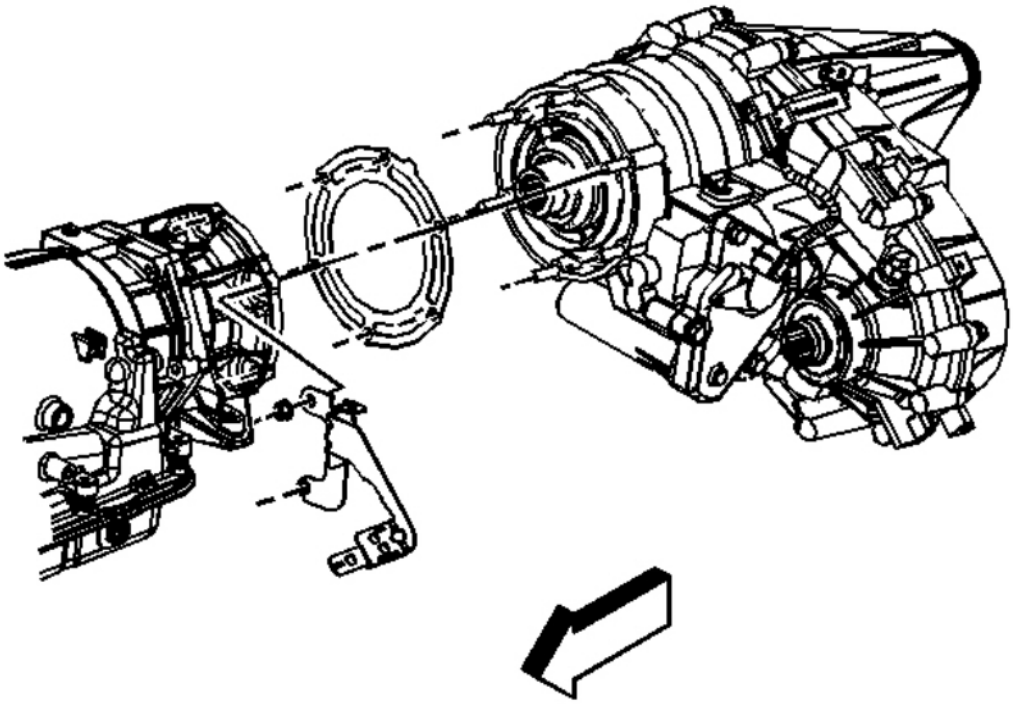

Fig. 19: View Of Transfer Case & Transmission
Courtesy of GENERAL MOTORS CORP.

1. Install the transfer case onto a suitable transmission jack.

IMPORTANT: When installing a new transfer case gasket, the gasket must be installed with the tab oriented up, and the yellow printing towards to front of the vehicle. Install the gasket without the use of any type of sealant or of lubricant.

2. Install a NEW transfer case gasket.
3. Rotate the transfer case so that it is parallel to the torsion bar mounting bracket.
4. Raise the transfer case into position.
5. Rotate the transfer case so that it is aligned with the adapter.
6. Install the transfer case to the adapter.
7. Install the fuel pipe bracket onto the studs.

NOTE: Refer to Fastener Notice .

cardiagn.com

IMPORTANT: Ensure that the gasket is flush to the transmission prior to installing the nuts.

8. Install the transfer case adapter nuts.

   Tighten: Tighten the nuts to 50 N.m (37 lb ft).

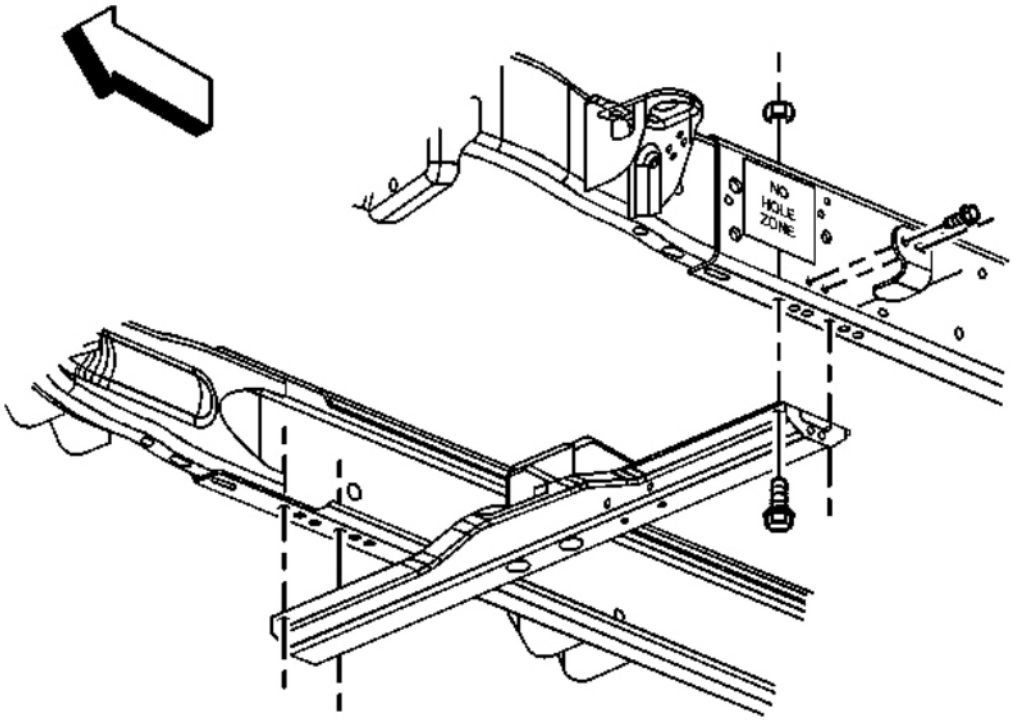

Fig. 20: Identifying Crossmember & Bolts
Courtesy of GENERAL MOTORS CORP.

9. Position the crossmember.
10. Install the crossmember bolts.

    Tighten: Tighten the bolts to 70 N.m (52 lb ft).

cardiagn.com

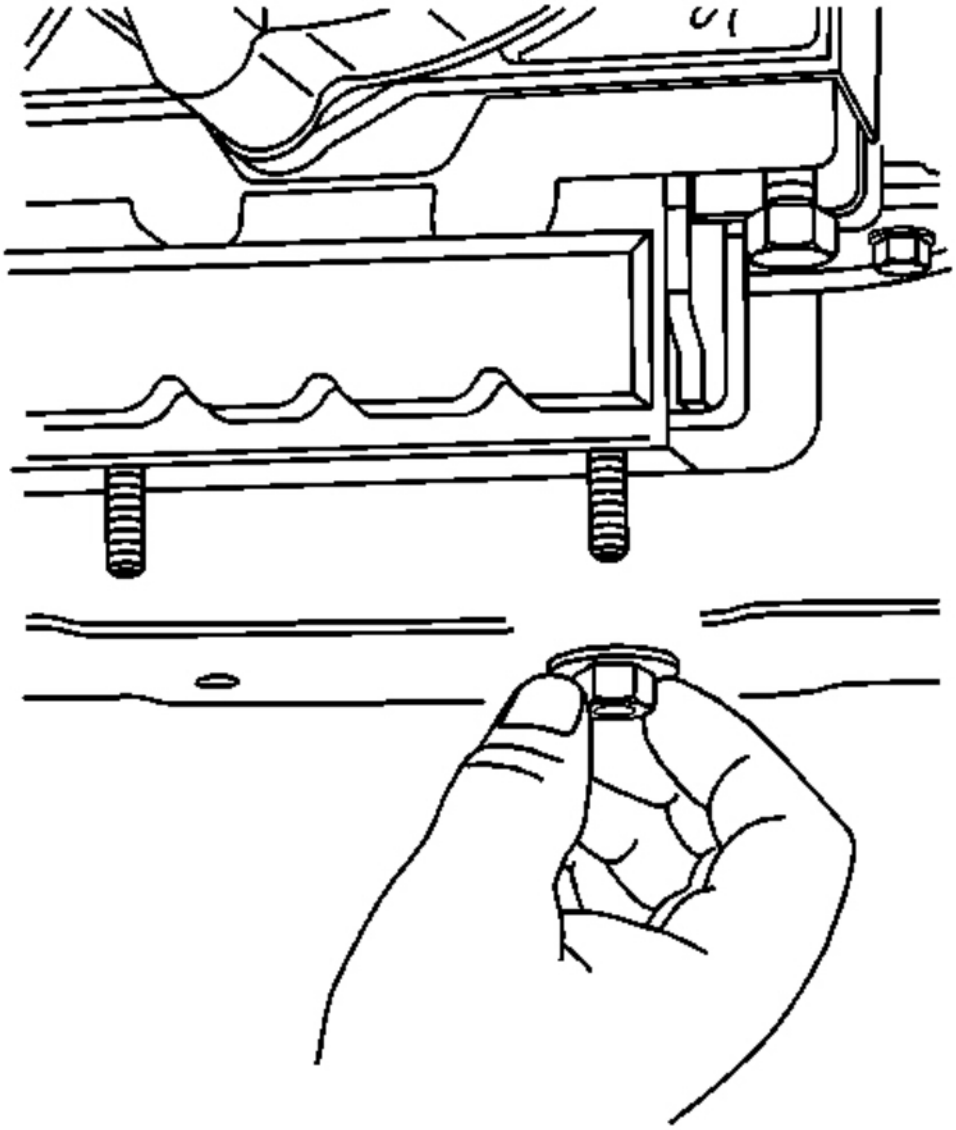

Fig. 21: Identifying Transmission Mount Nuts
Courtesy of GENERAL MOTORS CORP.

11. Install the transmission mount nuts.

    Tighten: Tighten the nuts to 40 N.m (30 lb ft).

cardiagn.com

12. Remove the jack stand from the transmission.

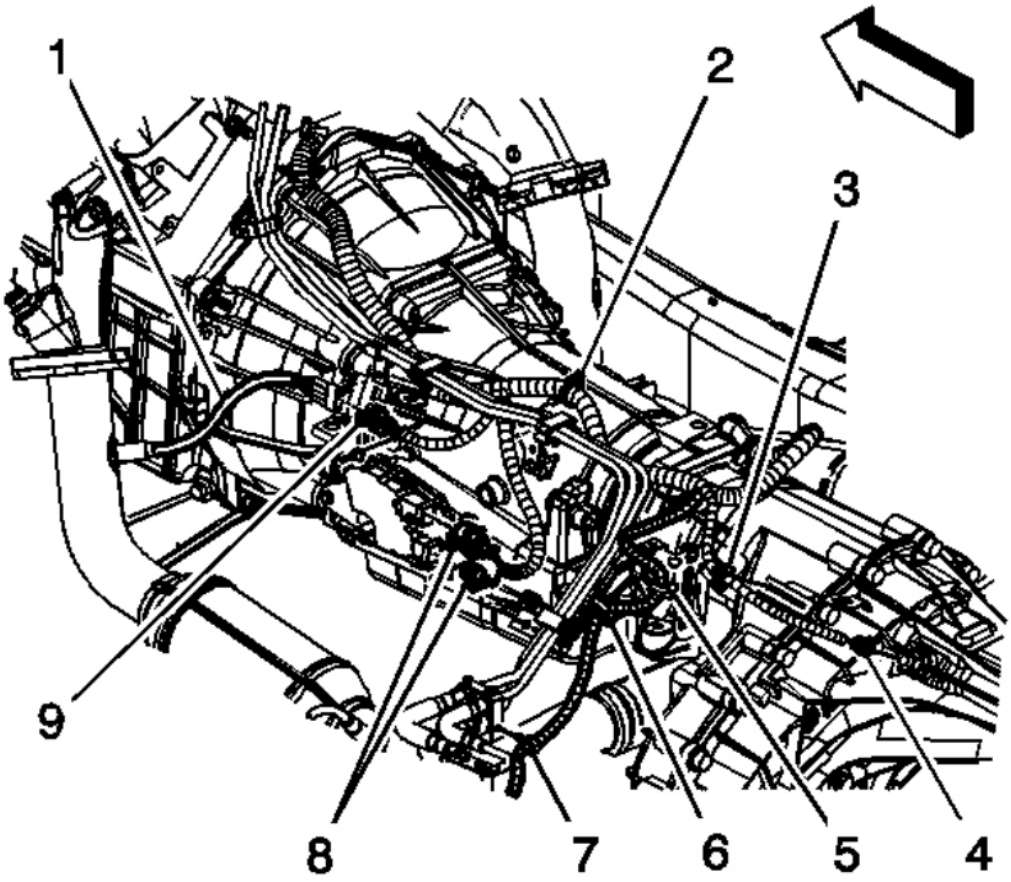

Fig. 22: Transfer Case Components
Courtesy of GENERAL MOTORS CORP.

13. Install the fuel pipe clip to the fuel pipe bracket.
14. Install the clips (5, 6) to the fuel pipe bracket.
15. Position the speed sensor wire.
16. Install the clip (3) to the transfer case bracket.
17. Connect the speed sensor electrical connector (4).
18. Install the front propeller shaft. Refer to **Front Propeller Shaft Replacement** .
19. Install the rear propeller shaft. Refer to **Rear Propeller Shaft Replacement** .
20. Fill the transfer case with fluid.

cardiagn.com

21. Install the transfer case shield, if equipped. Refer to **Transfer Case Shield Replacement**.
22. Lower the vehicle.

TRANSFER CASE ADAPTER REPLACEMENT

Removal Procedure

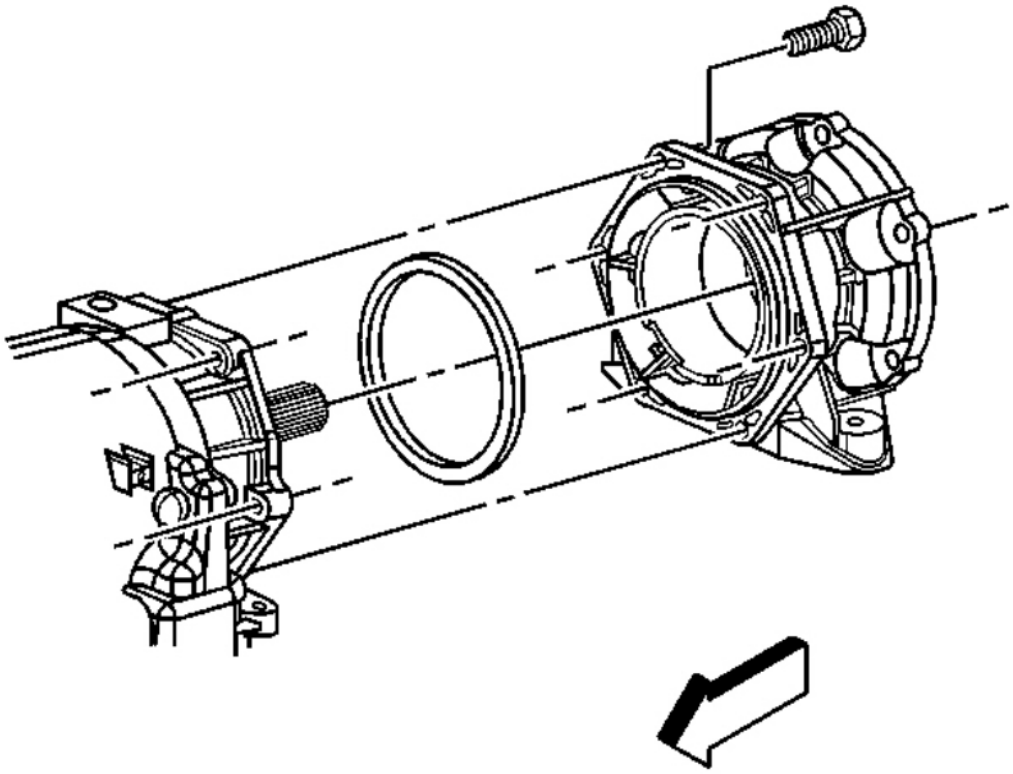

Fig. 23: View Of Transfer Case Adapter, Bolts & Seal
Courtesy of GENERAL MOTORS CORP.

1. Remove the transfer case. Refer to **Transfer Case Assembly Replacement**.
2. Remove the transfer case adapter bolts.
3. Remove the adapter.
4. Remove the adapter seal.

Installation Procedure

cardiagn.com

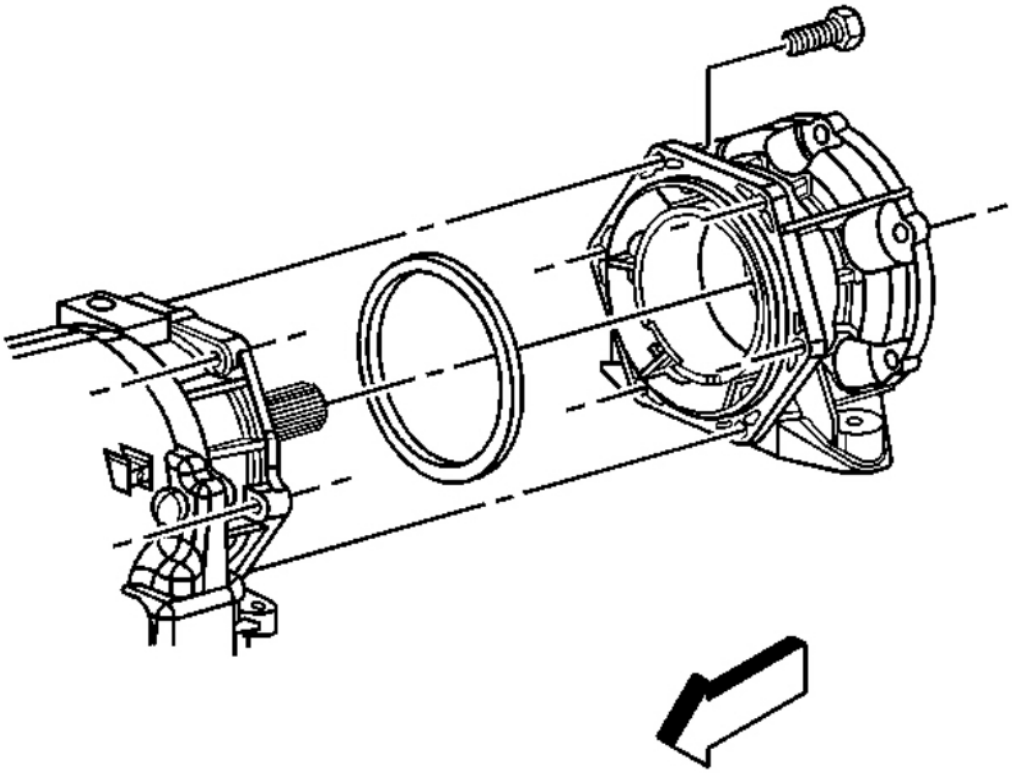

Fig. 24: View Of Transfer Case Adapter, Bolts & Seal
Courtesy of GENERAL MOTORS CORP.

IMPORTANT: Always use a new seal for the adapter. Do not use any type of sealant or adhesive in place of or with the seal.

1. Install a NEW seal onto the adapter.

IMPORTANT: The transfer case adapter must be installed so that the adapter is evenly seated to the transmission before installing the retaining nuts.

2. Install the adapter.

NOTE: Refer to Fastener Notice .

3. Install the adapter bolts.

cardiagn.com

Tighten: Tighten the bolts to 50 N.m (37 lb ft).

4. Install the transfer case. Refer to **Transfer Case Assembly Replacement**.

TRANSFER CASE INPUT SHAFT SEAL REPLACEMENT

Tools Required

- **J 36825** Output Shaft Oil Seal Remover. See **Special Tools**.
- **J 23907** Slide Hammer with Bearing Adapter
- **J 42738** Front Output Shaft Seal Installer. See **Special Tools**.

Removal Procedure

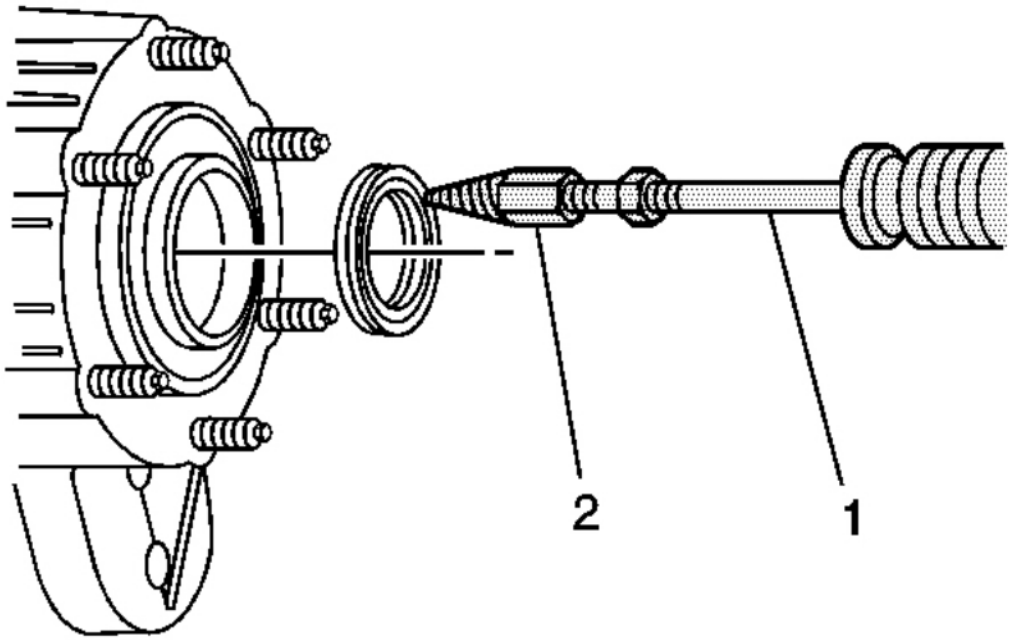

Fig. 25: View Of Input Seal Removal Special Tools
Courtesy of GENERAL MOTORS CORP.

IMPORTANT: It may be necessary to use a sharp punch in order to poke a hole into the seal prior to inserting J 36825 . See Special Tools.

1. Remove the transfer case. Refer to **Transfer Case Assembly Replacement**.

cardiagn.com

2. Using the **J 23907** (1), and **J 36825** (2), remove the input seal. See **Special Tools**.

Installation Procedure

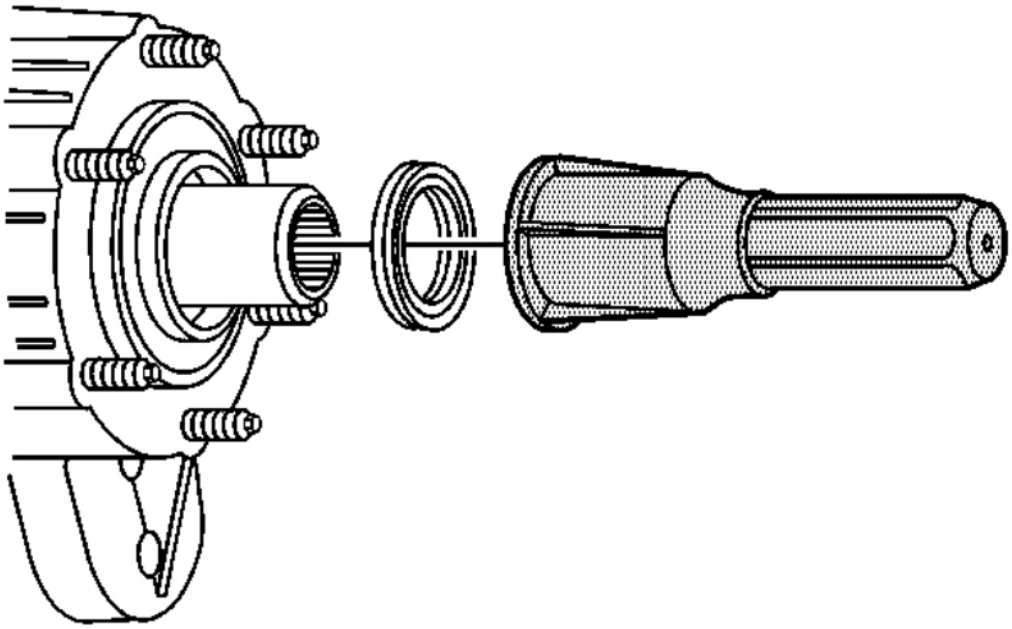

Fig. 26: View Of Input Shaft Seal & Special Tool
Courtesy of GENERAL MOTORS CORP.

1. Using the **J 42738** , install the input shaft seal. See **Special Tools**.
2. Install the transfer case. Refer to **Transfer Case Assembly Replacement**.

TRANSFER CASE DISASSEMBLE

Tools Required

- **J 2619-01** Slide Hammer
- **J 3289-20** Holding Fixture
- **J 26941** Bushing and Bearing Remover - 3-4 inch. See **Special Tools**.
- **J 45124** Puller Bridge
- **J-45124-9** Puller Legs. See **Special Tools**.
- **J 45358** Case Spreader. See **Special Tools**.

cardiagn.com

- **J 45548** Mainshaft Support Bushing/Bearing Remover. See **Special Tools**.
- **J 45759** Assembly Fixture. See **Special Tools**.

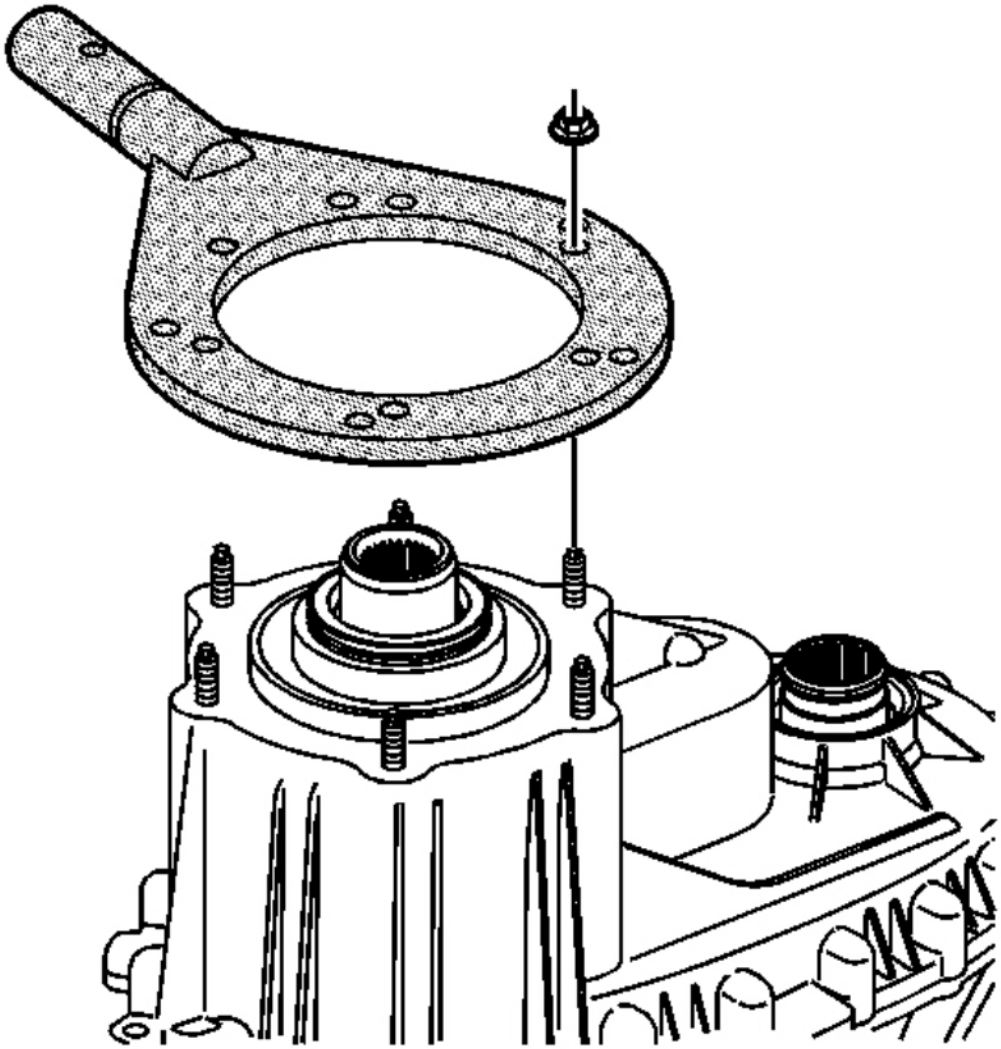

Fig. 27: Identifying J 45759
Courtesy of GENERAL MOTORS CORP.

1. Attach the **J 45759** to the transfer case using the adapter studs. See **Special Tools**. All of the transfer case disassembly procedures can be performed with the case mounted to the **J 45759** . See **Special Tools**.

cardiagn.com

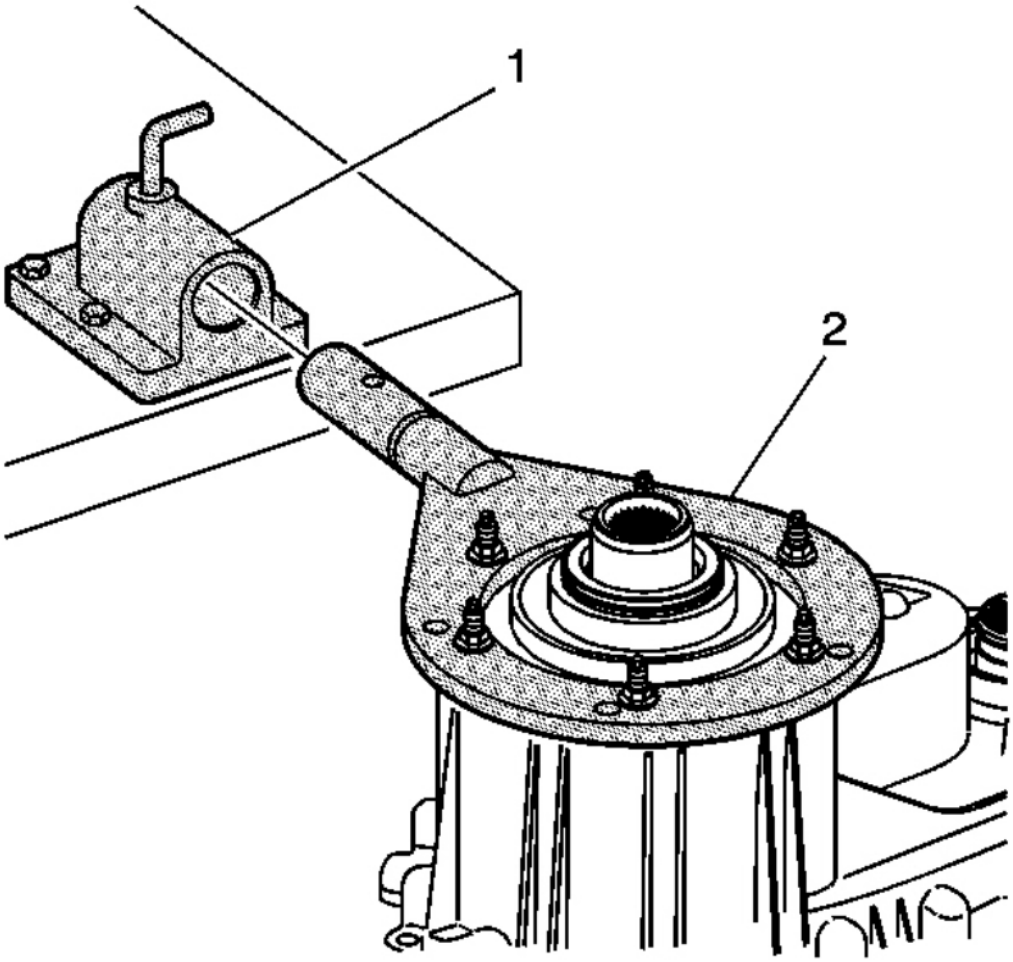

Fig. 28: View Of Front Transfer Case Bench Mount
Courtesy of GENERAL MOTORS CORP.

2. Mount the **J 3289-20** (1) to a sturdy workbench.
3. Install the **J 45759** (2) into **J 3289-20** (1) and secure with pivot pin. See **Special Tools**.

cardiagn.com

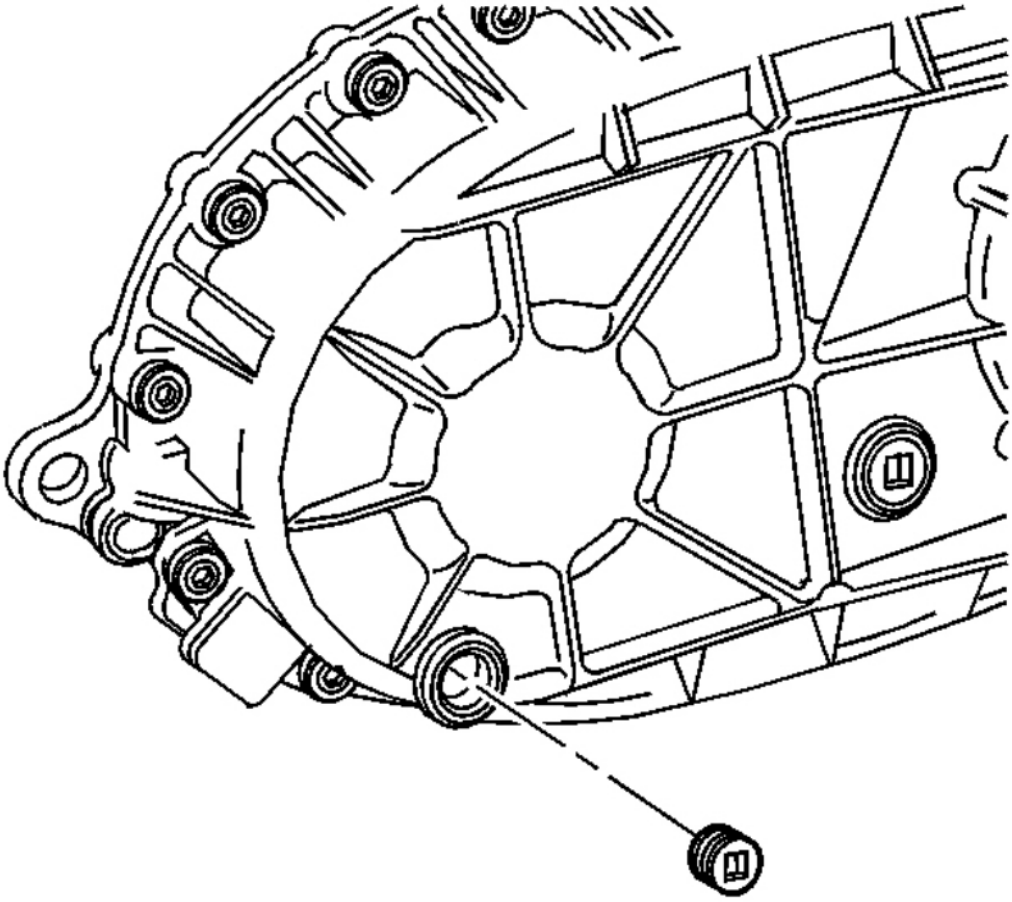

Fig. 29: View Of Transfer Case Drain Plug
Courtesy of GENERAL MOTORS CORP.

4. Remove the drain plug and the fill plug. Ensure all of the transfer case fluid is drained out of the transfer case.

cardiagn.com

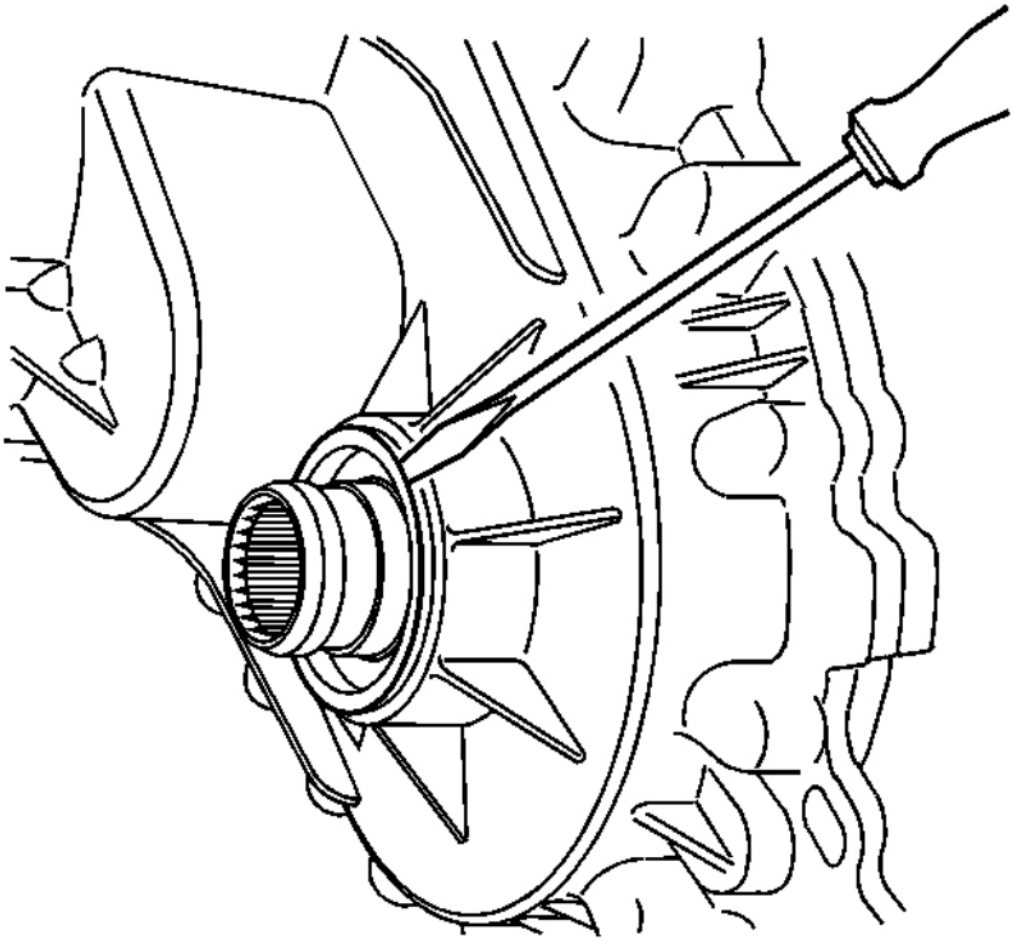

Fig. 30: Inserting Screwdriver Behind Inner Race of Front Output Shaft Seal
Courtesy of GENERAL MOTORS CORP.

NOTE: **Refer to Transfer Case Seal Removal Notice .**

IMPORTANT: The front output shaft seal is a two piece internal seal. The inner seal race is a force fit on the front output shaft.

5. Remove the front output shaft seal by inserting a flat-tip screwdriver behind the inner race of the seal.
6. Pry the inner seal race forward.

cardiagn.com

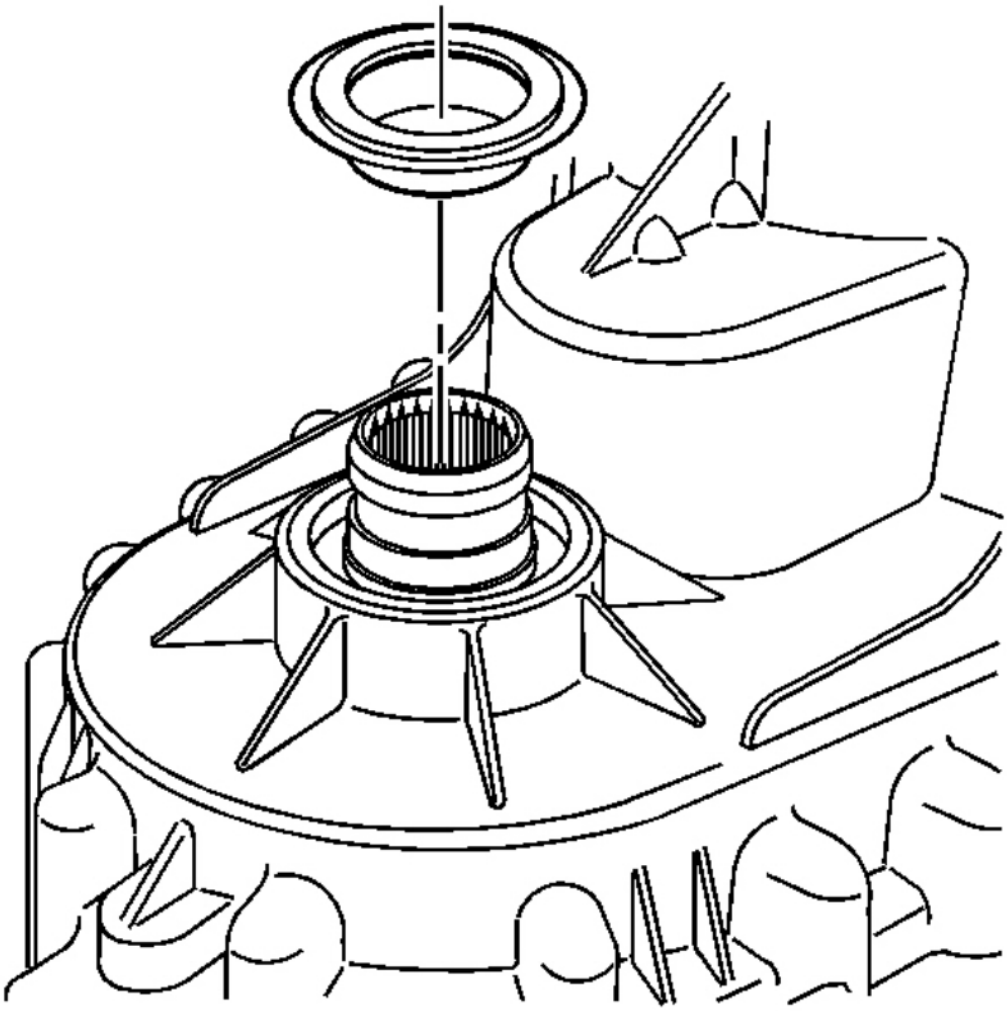

Fig. 31: View Of Inner Seal Race On Front Output Shaft
Courtesy of GENERAL MOTORS CORP.

7. Using a small pry bar, move the inner seal race forward on the front output shaft.
8. Remove the inner seal race from the front output shaft.

cardiagn.com

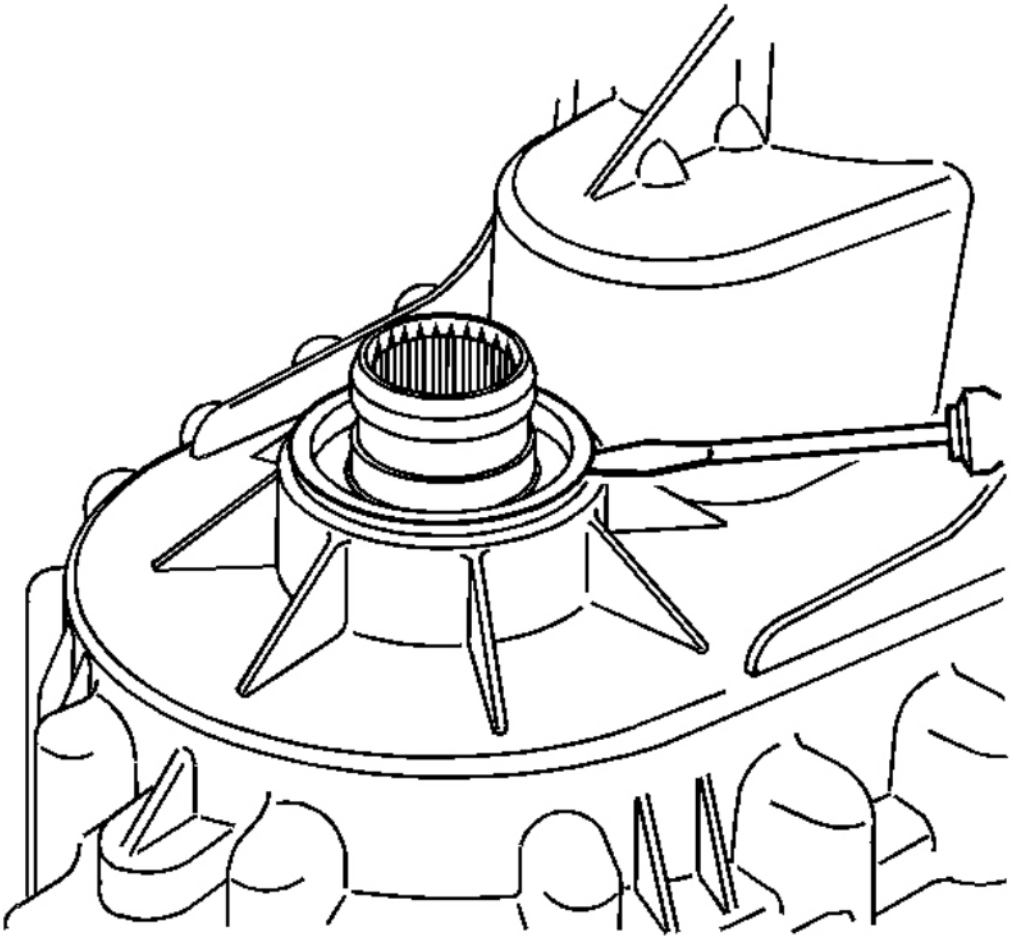

Fig. 32: Inserting Screwdriver Into Space Between Outer Race Seal Lip & Transfer Case
Courtesy of GENERAL MOTORS CORP.

9. Insert a flat-tip screwdriver or a small pry bar between the outer lip of the front output shaft seal and the transfer case.
10. Remove the remaining part of the front output shaft seal from the transfer case.

cardiagn.com

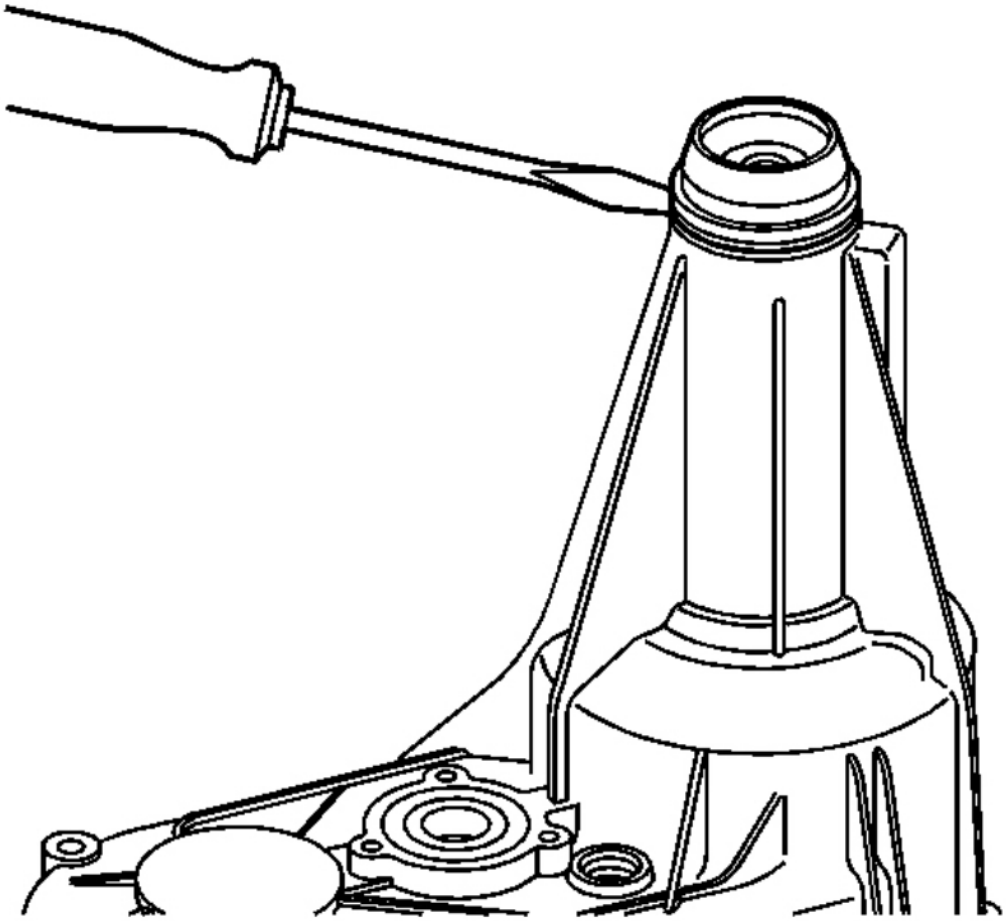

Fig. 33: Removing Rear Output Shaft Seal Using Screwdriver
Courtesy of GENERAL MOTORS CORP.

NOTE: **Refer to Transfer Case Seal Removal Notice .**

11. Remove the rear output shaft seal by prying it out with a flat-blade screwdriver.

cardiagn.com

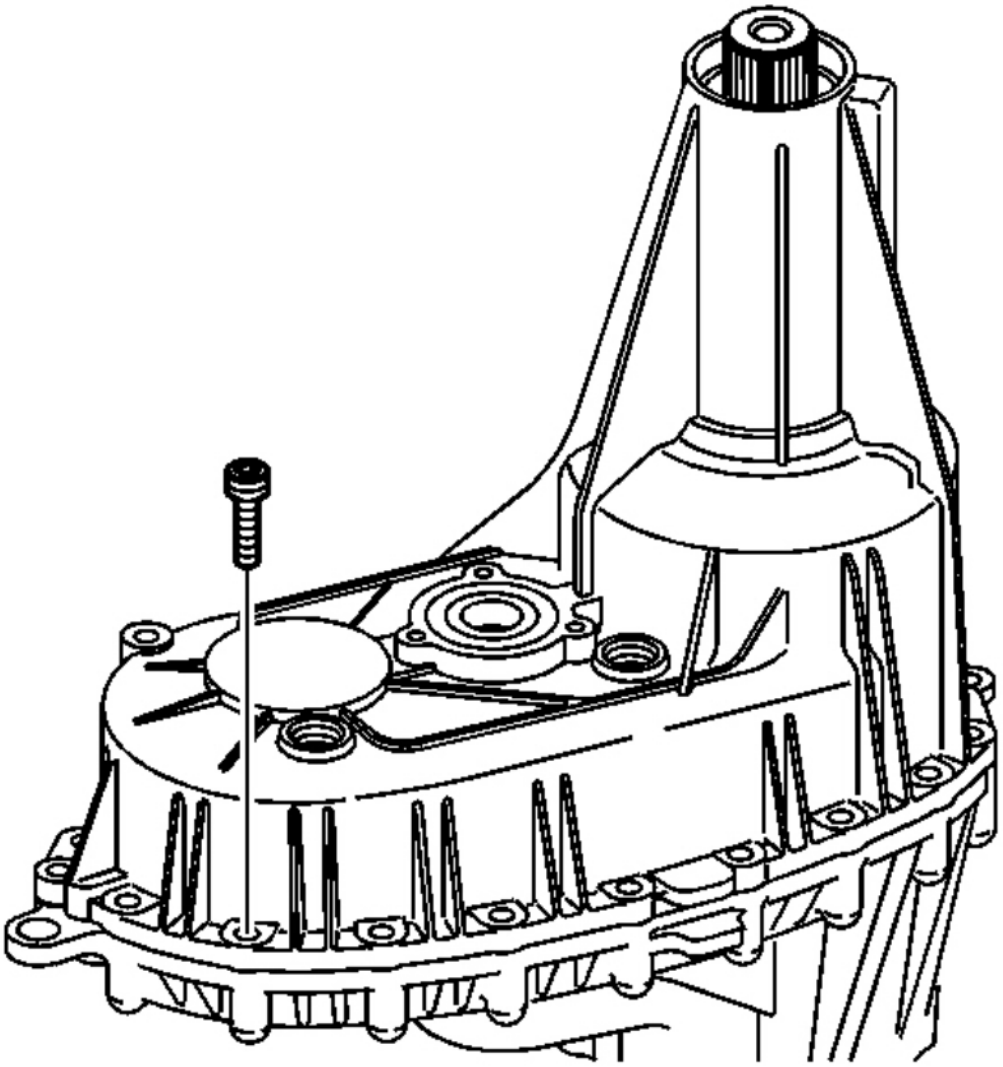

Fig. 34: View Of Transfer Case Bolts
Courtesy of GENERAL MOTORS CORP.

12. Remove the transfer case retaining bolts and washers.

    Mark the location of the brackets.

cardiagn.com

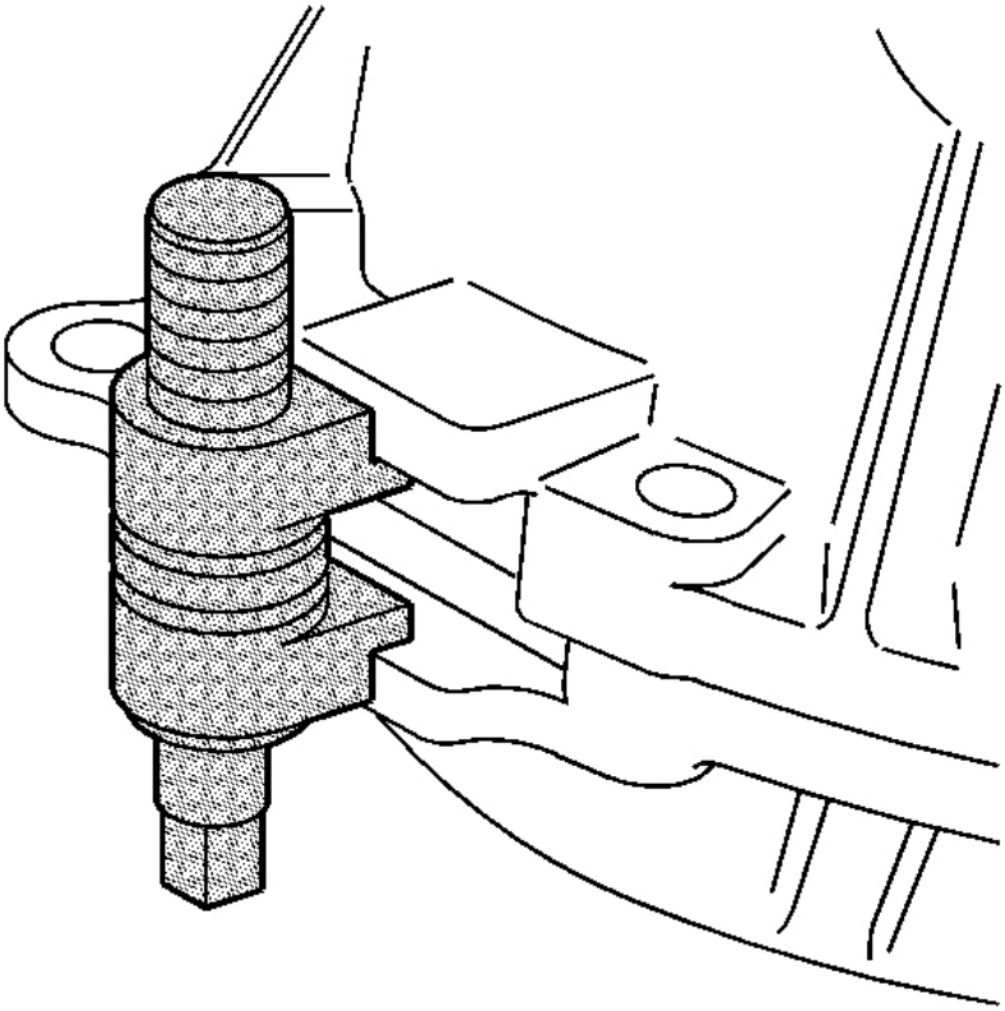

Fig. 35: Separating Case Halves Using J 45358
Courtesy of GENERAL MOTORS CORP.

NOTE: **Refer to Machined Surface Damage Notice .**

13. Using the **J 45358** between the tabs on the case halves, shear the sealer that is holding the case halves together. See **Special Tools**.
14. Using pry bars at each side of the case, remove the case from the locating pins.

cardiagn.com

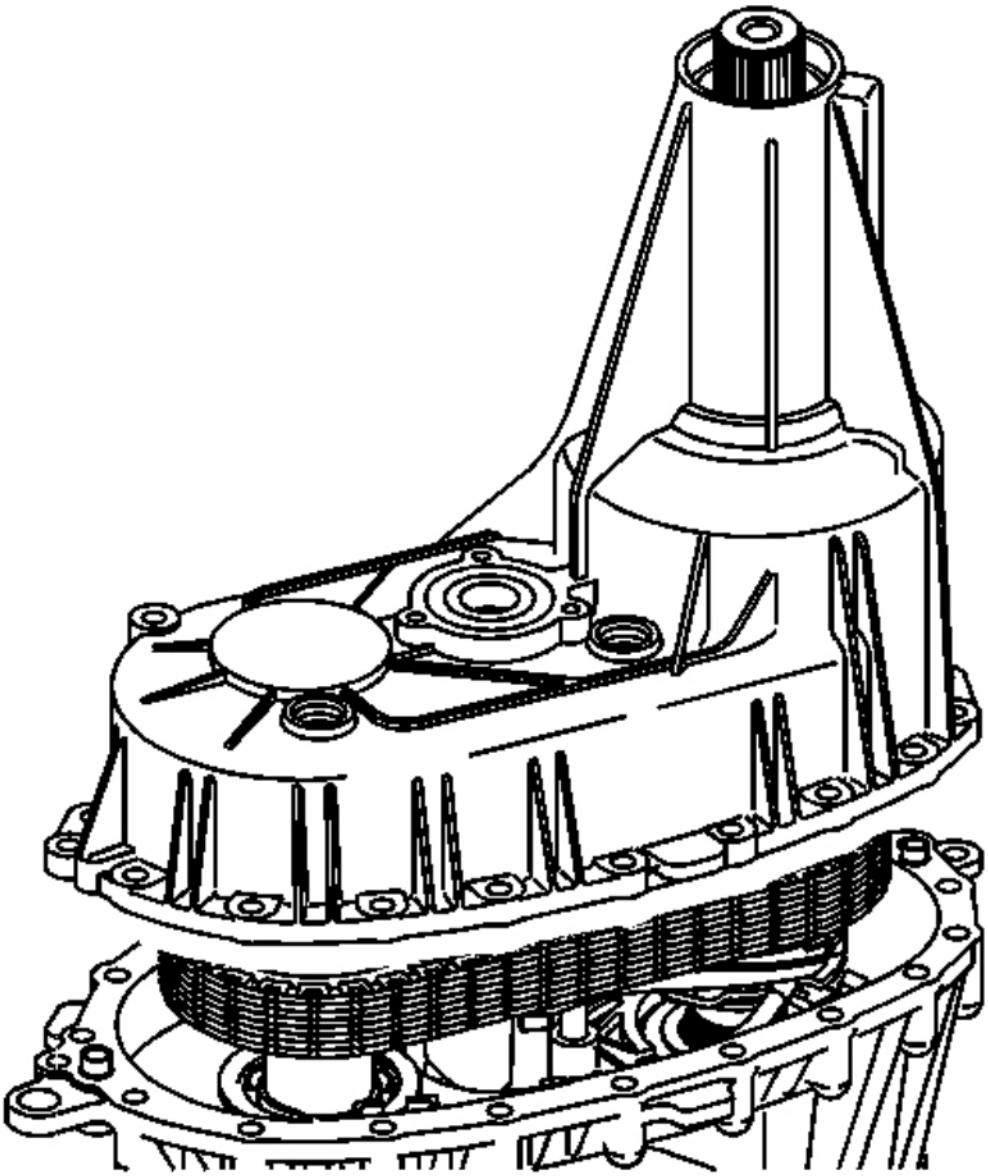

Fig. 36: View Of Rear Case Half & Front Case Half
Courtesy of GENERAL MOTORS CORP.

15. Remove the rear case half from the front case half. The rear output shaft will come with the rear case half.

cardiagn.com

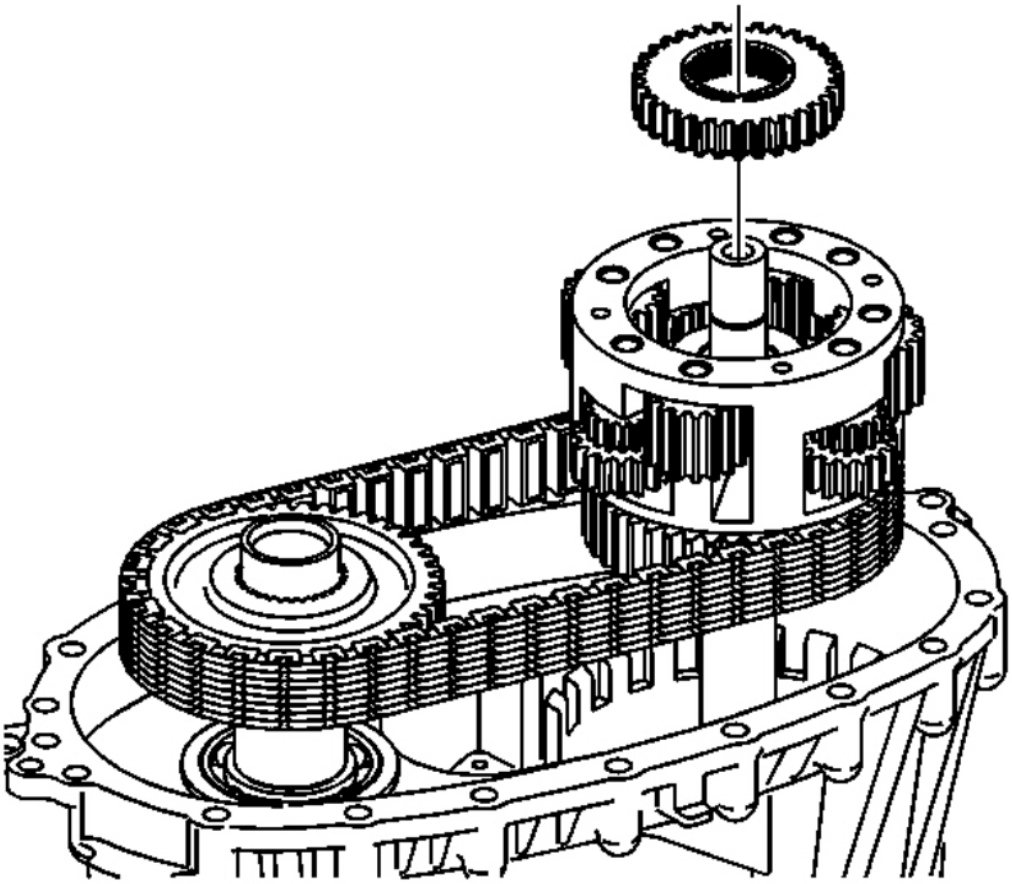

Fig. 37: Aligning Sun Gear
Courtesy of GENERAL MOTORS CORP.

16. Remove the rear sun gear.

cardiagn.com

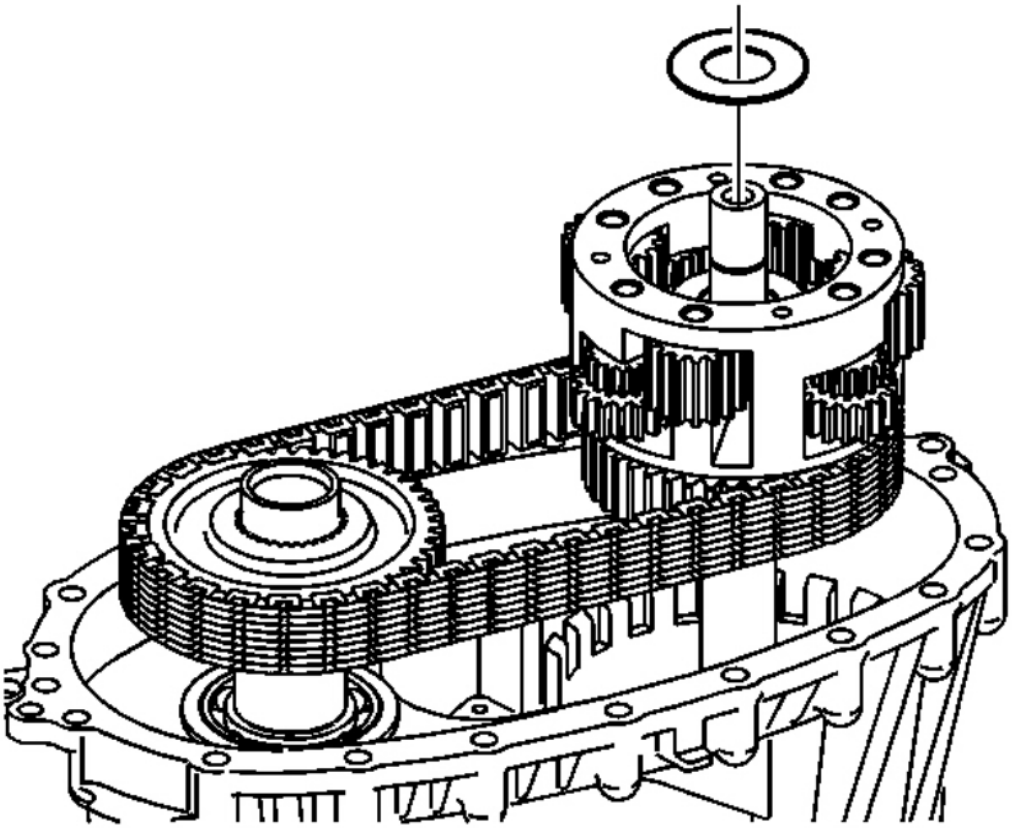

Fig. 38: View Of Sun Gear Thrust Washer
Courtesy of GENERAL MOTORS CORP.

17. Remove the sun gear thrust washer.

cardiagn.com

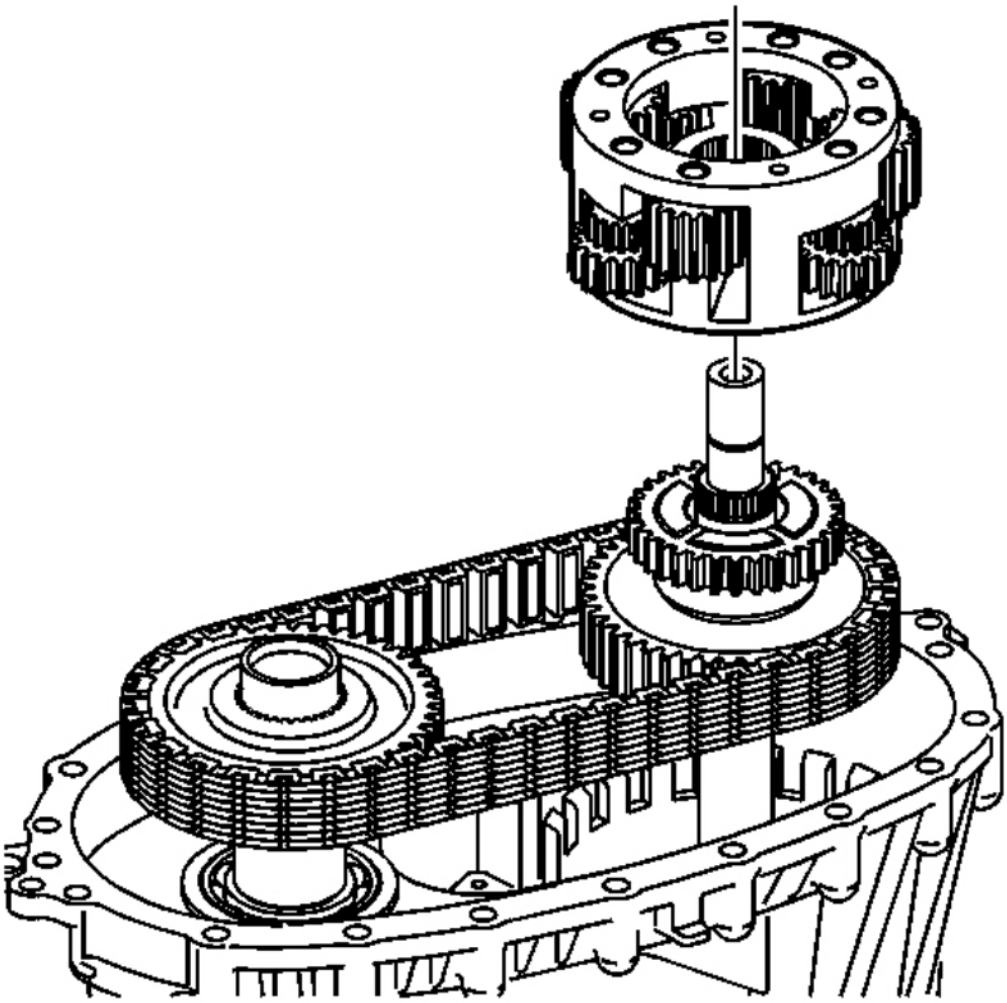

Fig. 39: Identifying Planetary Differential Assembly
Courtesy of GENERAL MOTORS CORP.

18. Remove the planetary differential assembly.

cardiagn.com

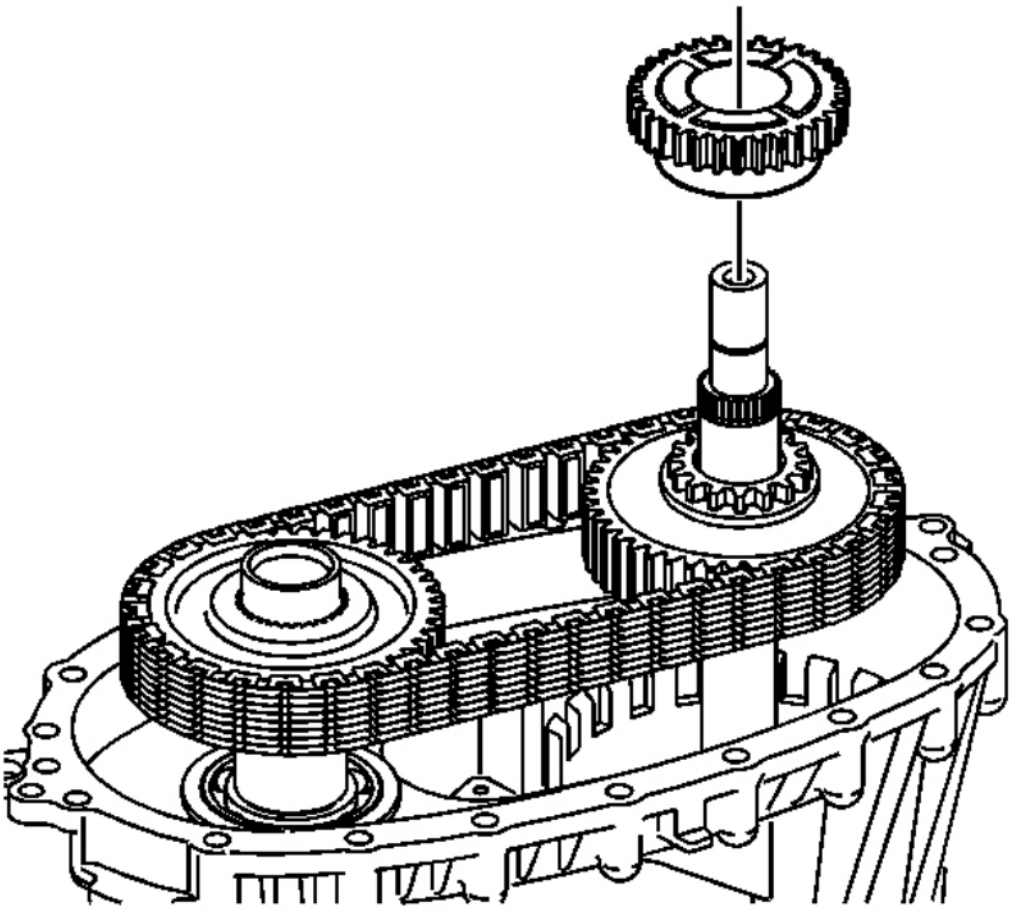

Fig. 40: View Of Front Sun Gear
Courtesy of GENERAL MOTORS CORP.

19. Remove the front sun gear.

cardiagn.com

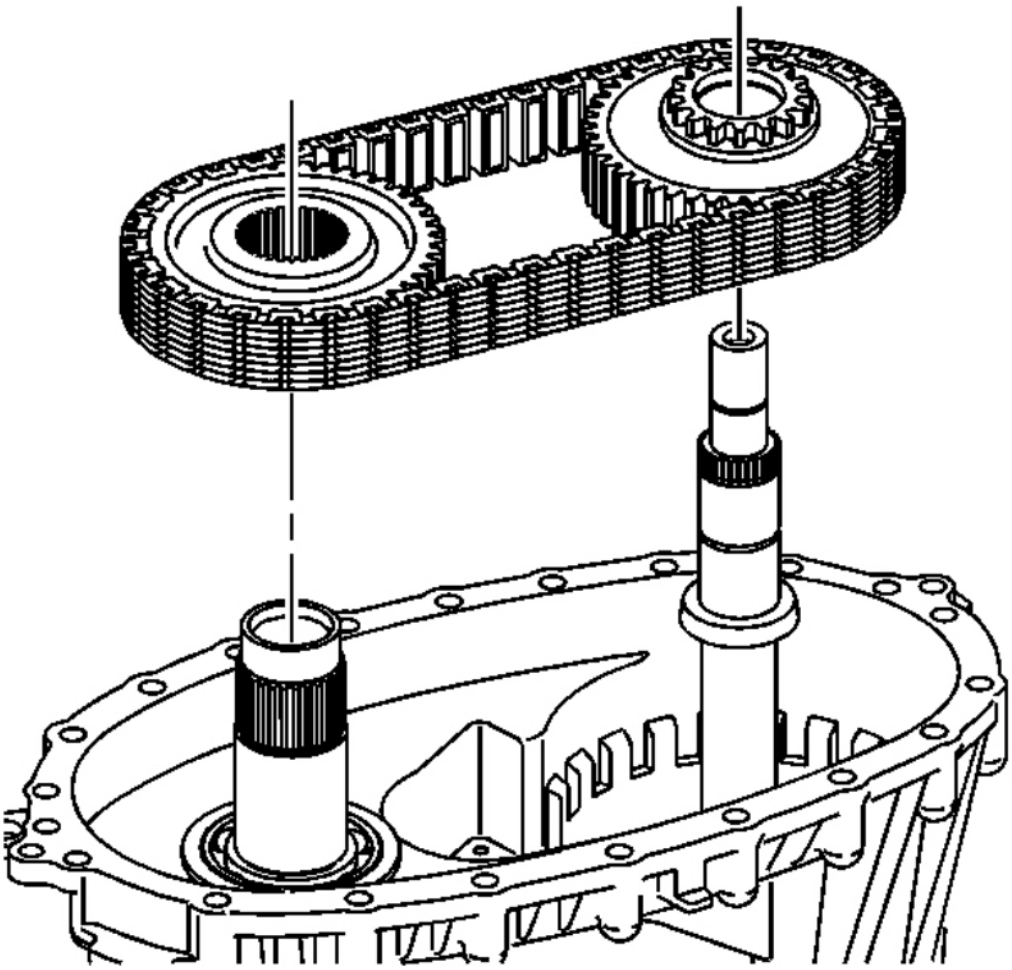

Fig. 41: Locating Drive Chain & Sprockets
Courtesy of GENERAL MOTORS CORP.

IMPORTANT: If the chain and sprockets are to be used again, mark the relationship of the chain to the sprockets in order to mark the wear patterns.

20. Remove the chain with the drive sprocket and driven sprocket.

cardiagn.com

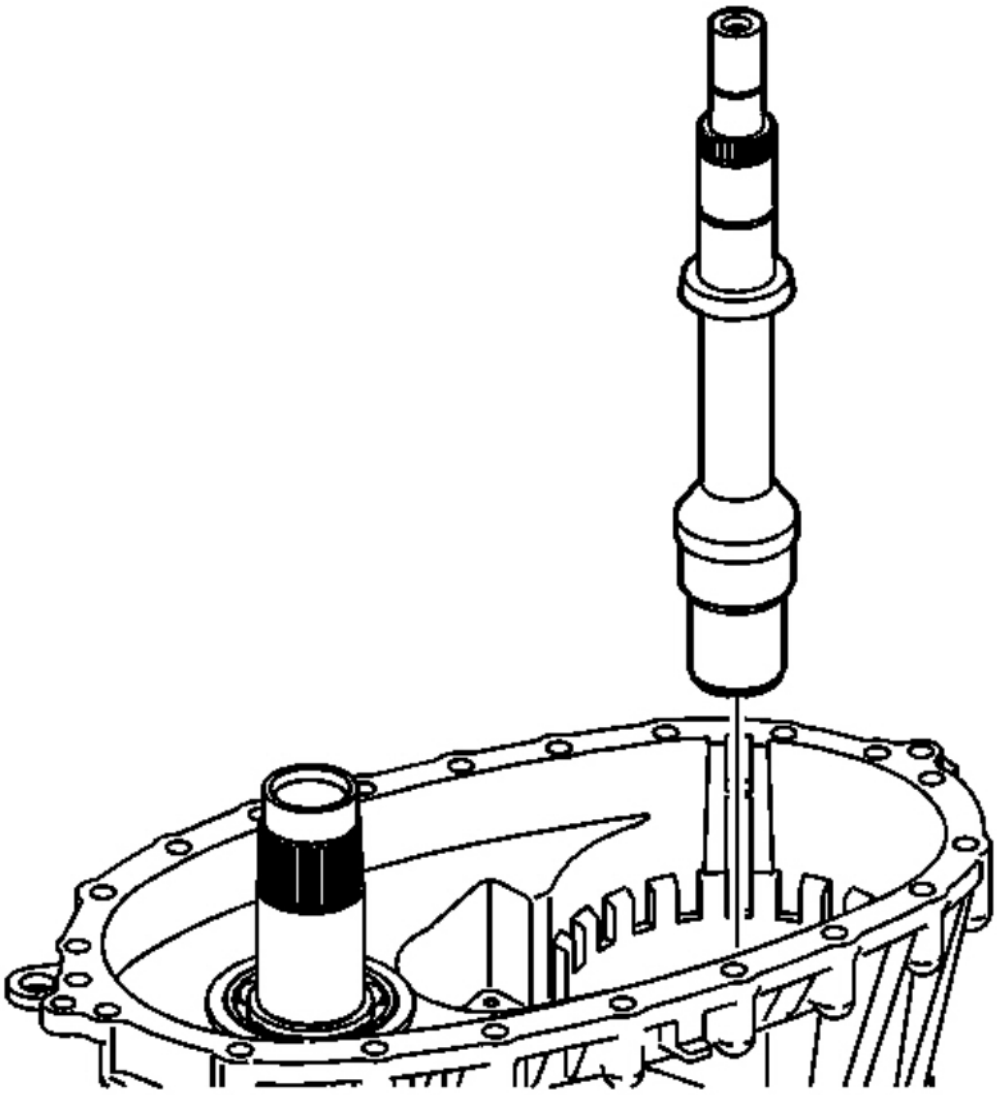

Fig. 42: Identifying Input Shaft
Courtesy of GENERAL MOTORS CORP.

21. Remove the input shaft.

cardiagn.com

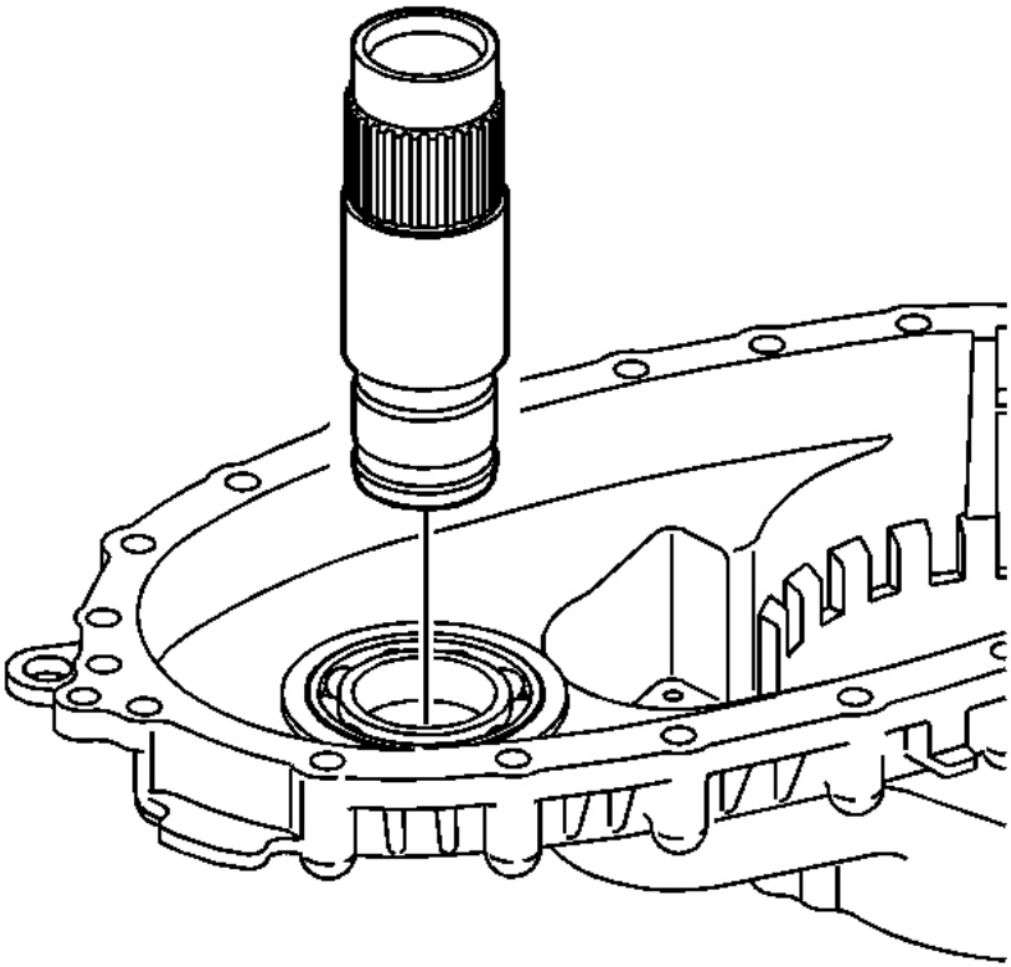

Fig. 43: View Of Front Output Shaft Assembly
Courtesy of GENERAL MOTORS CORP.

22. Remove the front output shaft assembly.

cardiagn.com

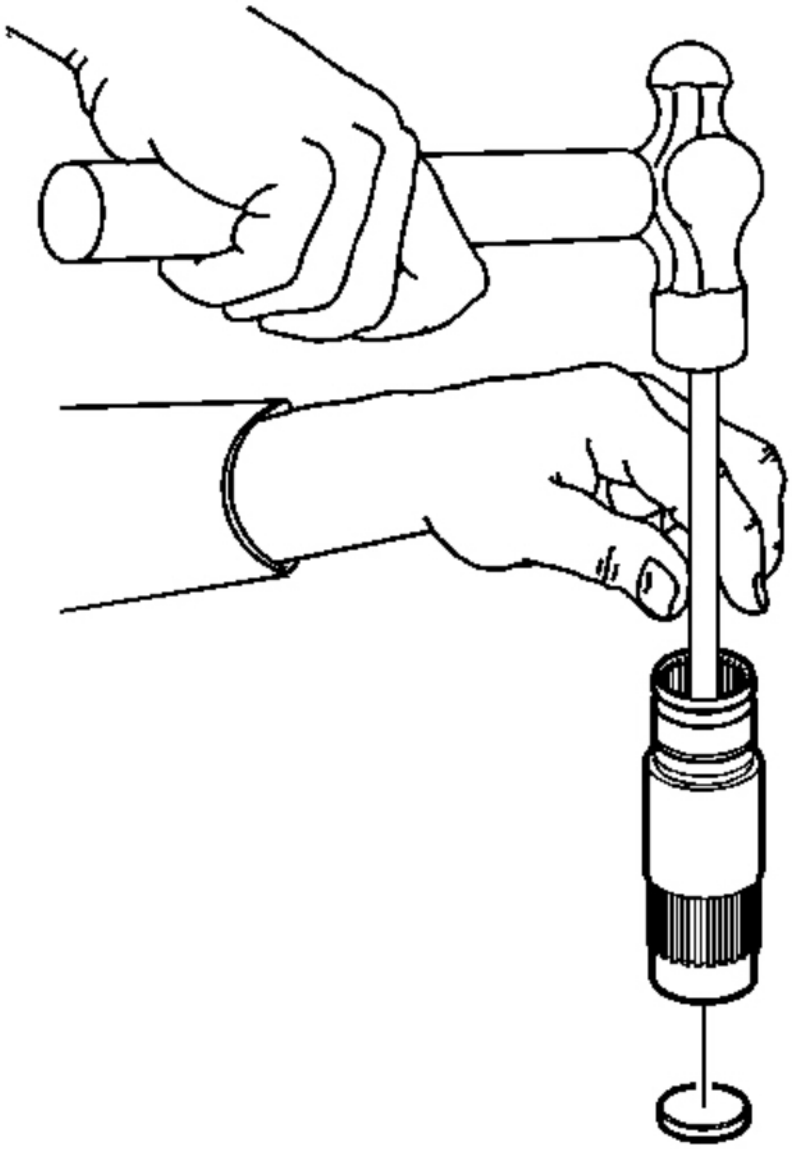

Fig. 44: Removing Front Output Shaft Cup Plug
Courtesy of GENERAL MOTORS CORP.

23. If the cup plug in the front output shaft is leaking, remove the plug using a brass drift.

cardiagn.com

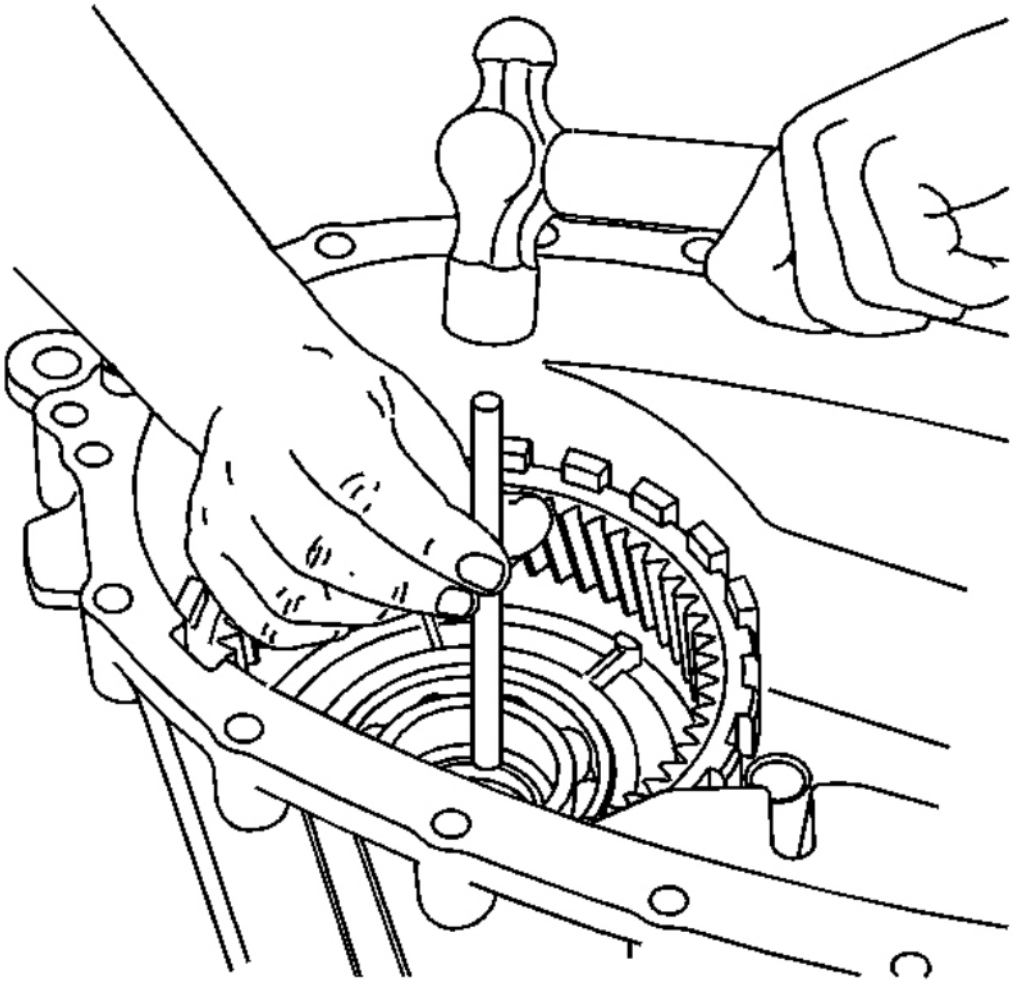

Fig. 45: Removing Input Seal By Using Hammer & Punch
Courtesy of GENERAL MOTORS CORP.

24. Using a hammer and a suitable punch, remove the input seal.

cardiagn.com

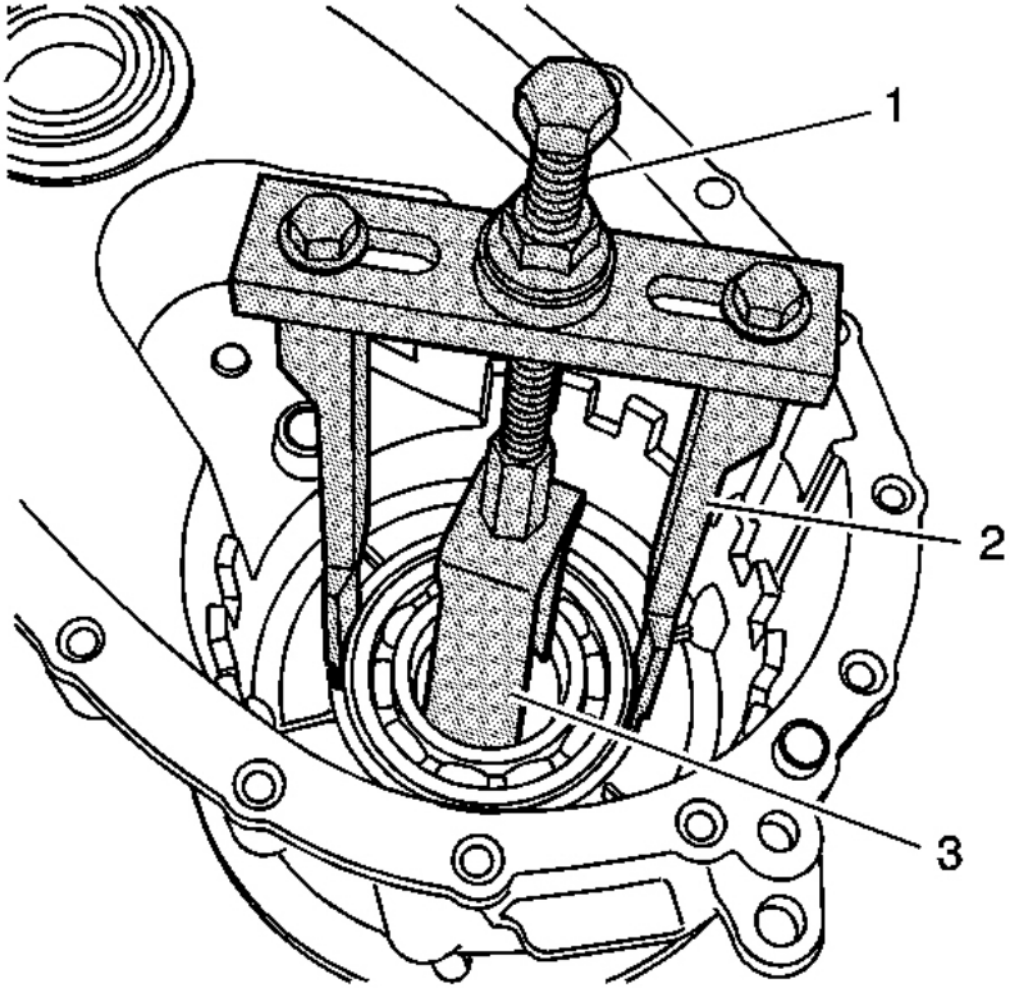

Fig. 46: Removing Input Shaft With Special Tools
Courtesy of GENERAL MOTORS CORP.

25. Using the **J 26941** (3), the **J 45124** (1), and the **J-45124-9** (2), remove the input shaft bearing for the front input shaft from the front case. See **Special Tools**.

cardiagn.com

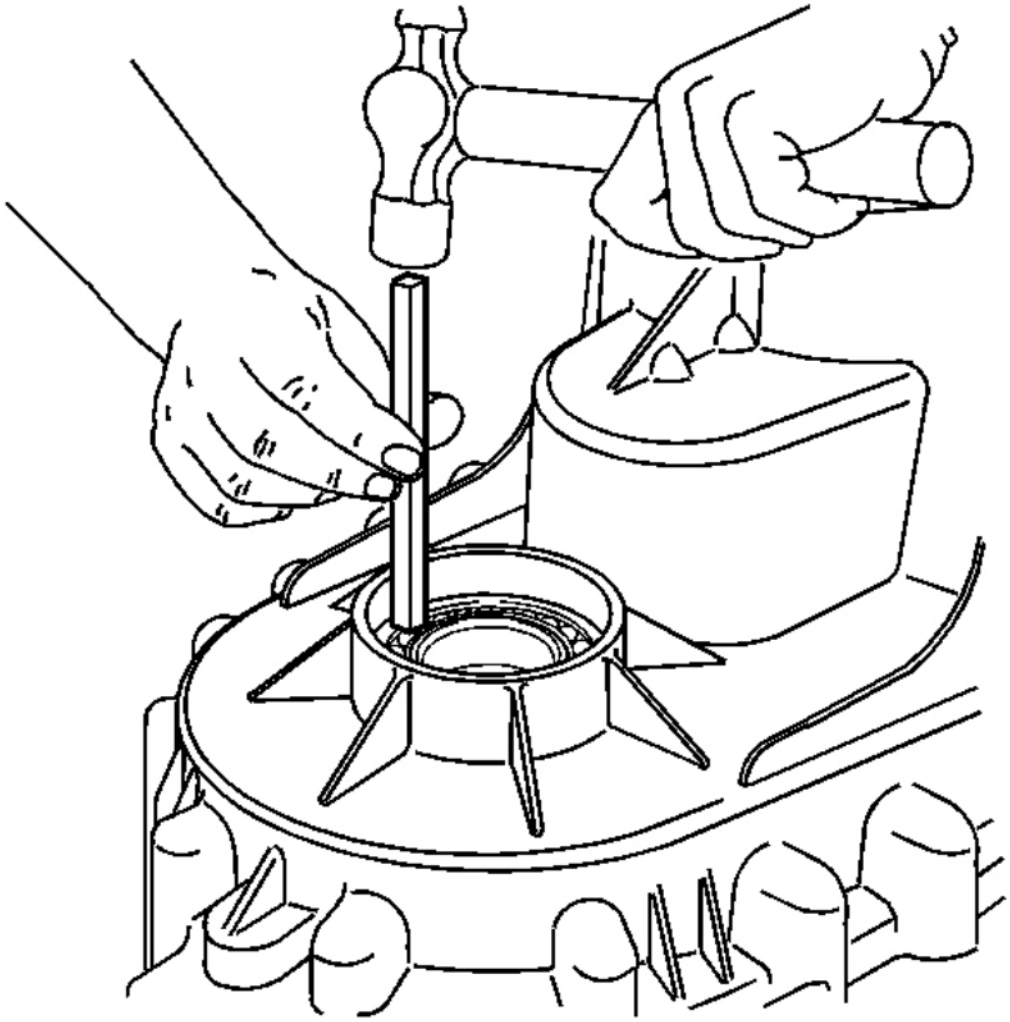

Fig. 47: Tapping Out Front Output Shaft Bearing With Brass Drift
Courtesy of GENERAL MOTORS CORP.

26. Using a brass drift, remove the front output shaft bearing from the front case half.

cardiagn.com

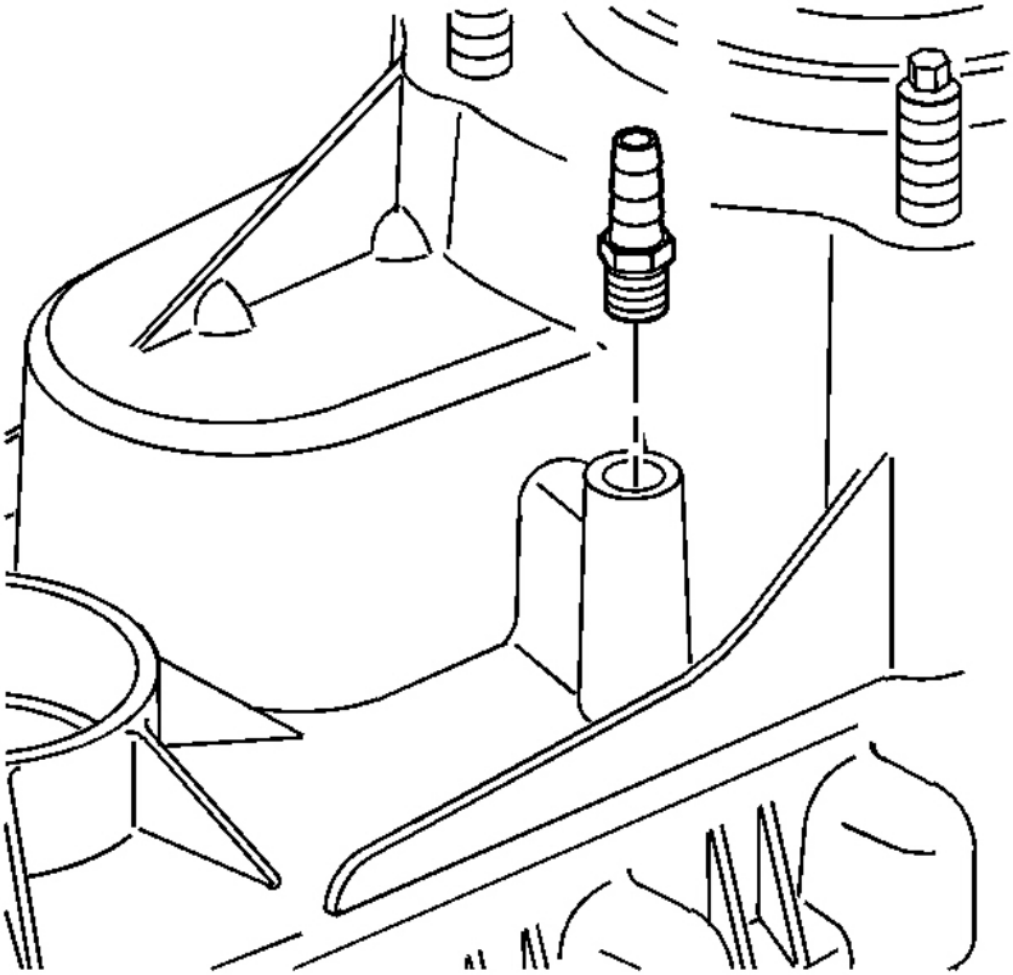

Fig. 48: View Of Front Case Vent
Courtesy of GENERAL MOTORS CORP.

27. If necessary, remove the vent from the front case half.

cardiagn.com

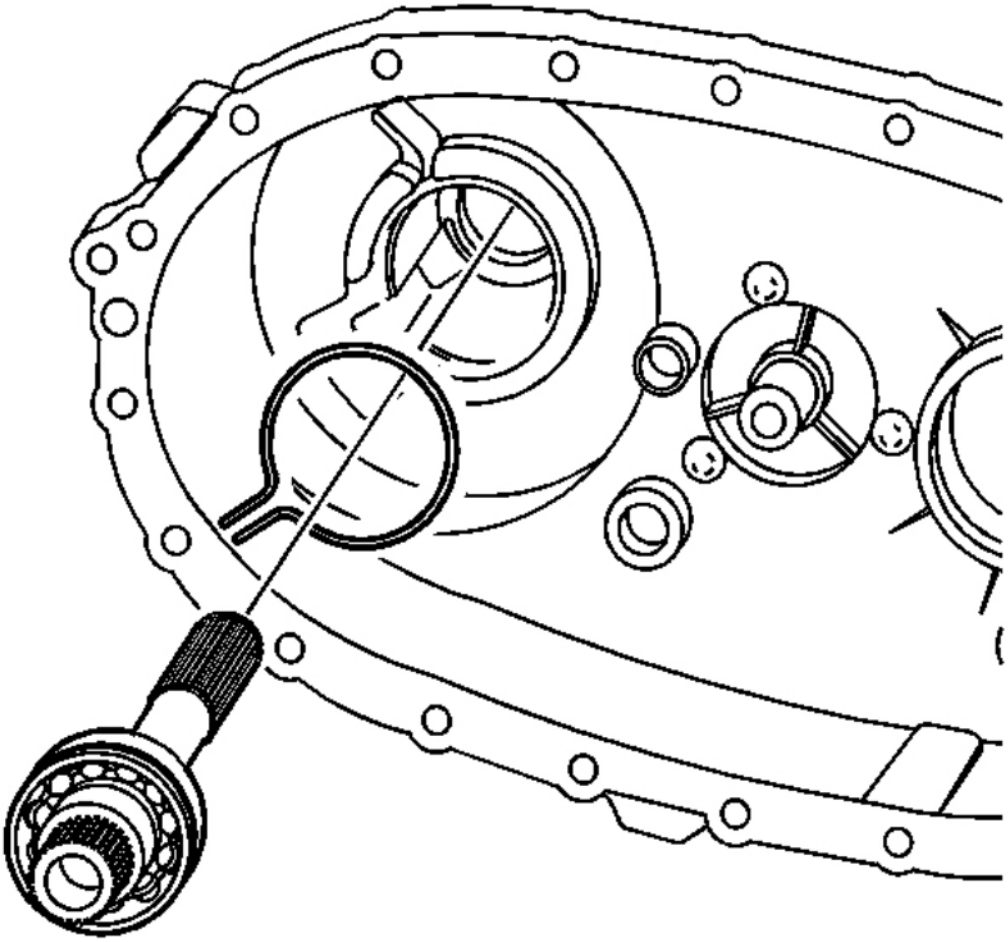

Fig. 49: View Of Rear Output Shaft In The Rear Case Half
Courtesy of GENERAL MOTORS CORP.

28. Remove the rear output shaft from the rear case half.
    1. Spread the rear output shaft rear bearing outer retaining ring.
    2. Using a soft-face hammer, tap on the end of the rear output shaft.

cardiagn.com

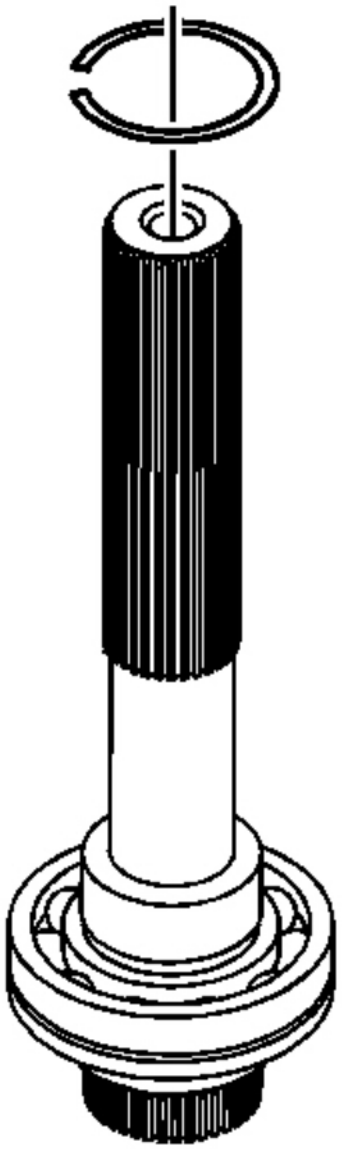

Fig. 50: Identifying Rear Output Shaft Bearing Retaining Ring
Courtesy of GENERAL MOTORS CORP.

29. Remove the retaining ring for the rear output shaft bearing.

cardiagn.com

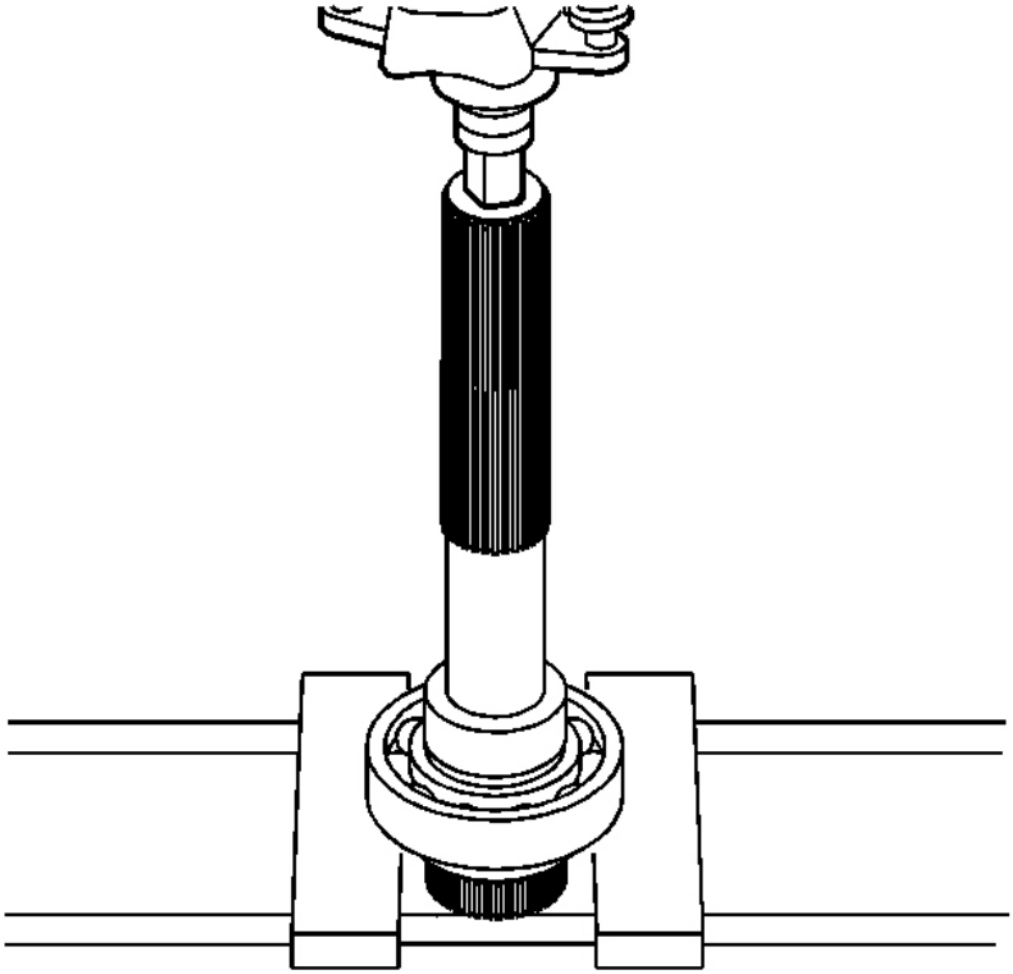

Fig. 51: Pressing Out Rear Output Shaft Bearing
Courtesy of GENERAL MOTORS CORP.

30. Using a hydraulic press, remove the rear output shaft bearing.

cardiagn.com

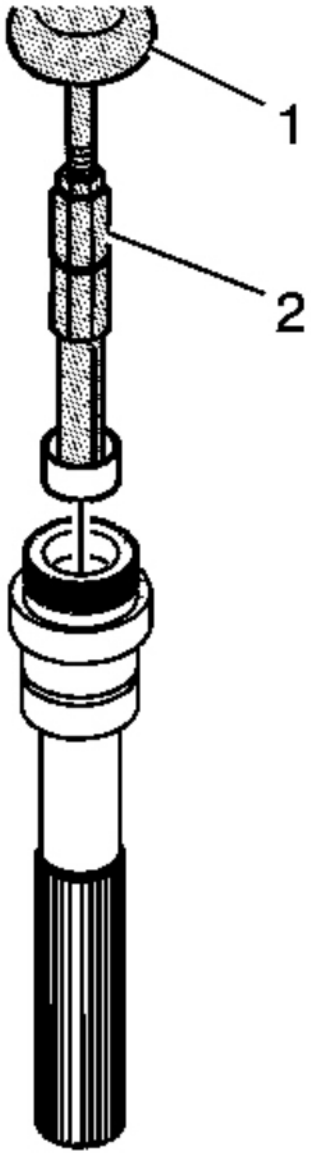

Fig. 52: View Of Mainshaft Rear Support Bushing
Courtesy of GENERAL MOTORS CORP.

31. Inspect the mainshaft rear support bushing in the rear output shaft for being faulty. Refer to **Cleaning and Inspection**.
32. Using the **J 2619-01** (1) and the **J 45548** (2), remove the mainshaft rear support bushing from the rear

cardiagn.com

output shaft. See **Special Tools**.

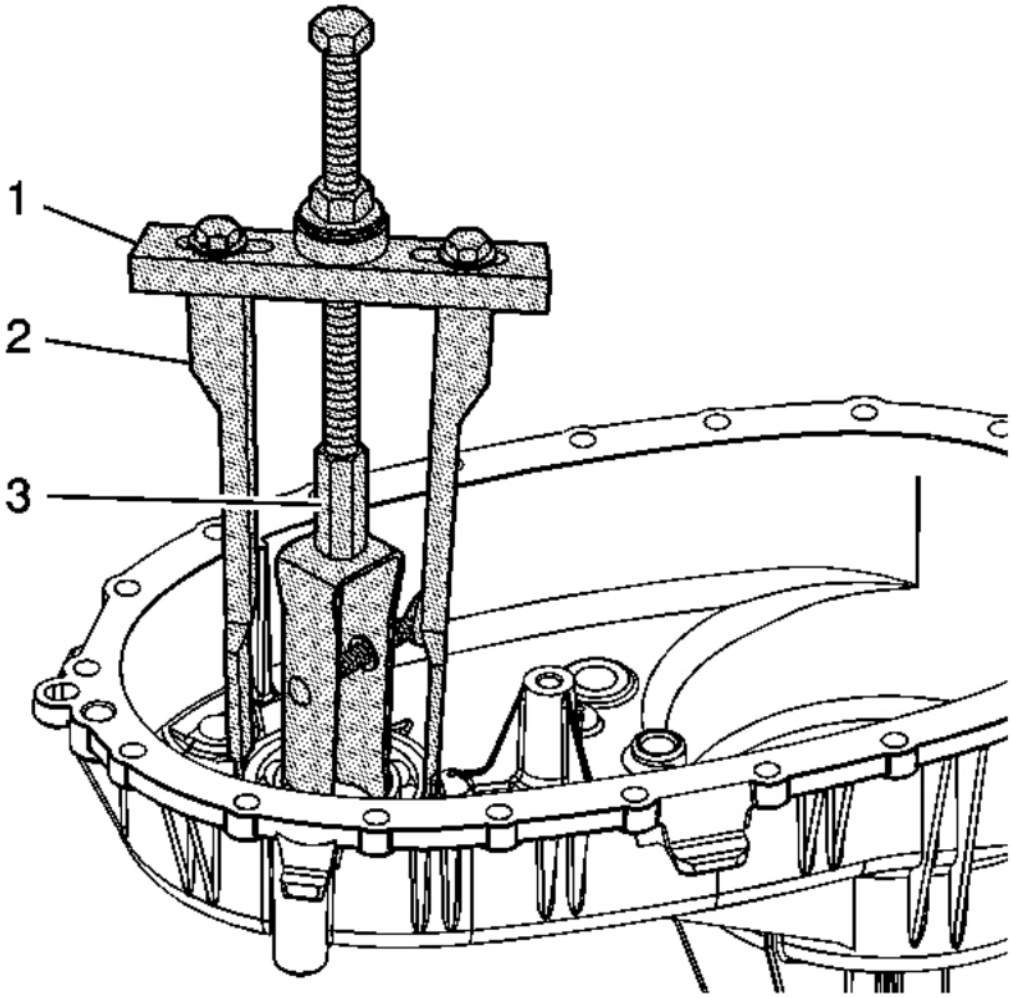

Fig. 53: Using Special Tools To Remove Rear Bearing
Courtesy of GENERAL MOTORS CORP.

33. Using the **J 26941** (3), the **J 45124** (1), and the **J-45124-9** (2), remove the rear bearing for the front output shaft from the rear case. See **Special Tools**.

CLEANING AND INSPECTION

Front Case Half

cardiagn.com

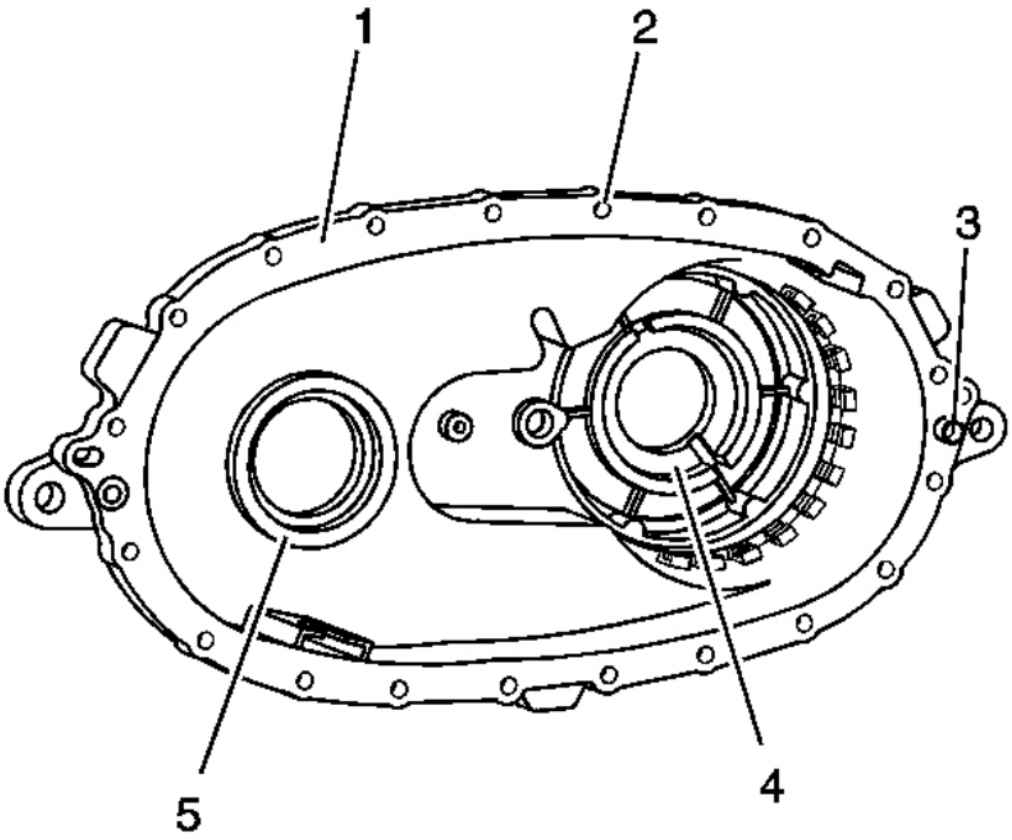

Fig. 54: Identifying Front Case Inspection Points
Courtesy of GENERAL MOTORS CORP.

1. Clean the front case half in cleaning solvent and air dry.
2. Remove the metal shavings from the case half bolt holes.

NOTE: **Refer to Machined Surface Damage Notice .**

3. Remove the sealer from the case sealing surfaces.
4. Inspect the case for being broken or cracked.
5. Inspect the front output shaft front bearing bore (5) for the following conditions:
   - A spun bearing
   - Cracks
6. Inspect the input shaft bearing bore (4) for the following conditions:
   - A spun bearing

cardiagn.com

- Cracks

7. Replace the front case half if any of the above conditions are found.
8. Inspect the sealing surfaces (1) for damage.
9. Repair small scratches or nicks with a soft stone.
10. Inspect the front case to transmission case mounting surface for damage.
11. Inspect the case threaded bolt holes (2) for damage.
12. Repair any damaged threads.
13. Inspect the transmission to transfer case studs for damage.
14. Replace any damaged studs. Refer to **Transfer Case Disassemble** and **Transfer Case Assemble**.
15. Inspect the location pins (3) for being loose or missing.
16. Repair or replace any damaged location pins.
17. Inspect the front output shaft front bearing and the input shaft bearing for the following conditions:
    - Roughness
    - Brinelling
    - Pitting
18. Replace the bearings if any of the above conditions are found. Refer to **Transfer Case Disassemble** and **Transfer Case Assemble**.

Rear Case Half

cardiagn.com

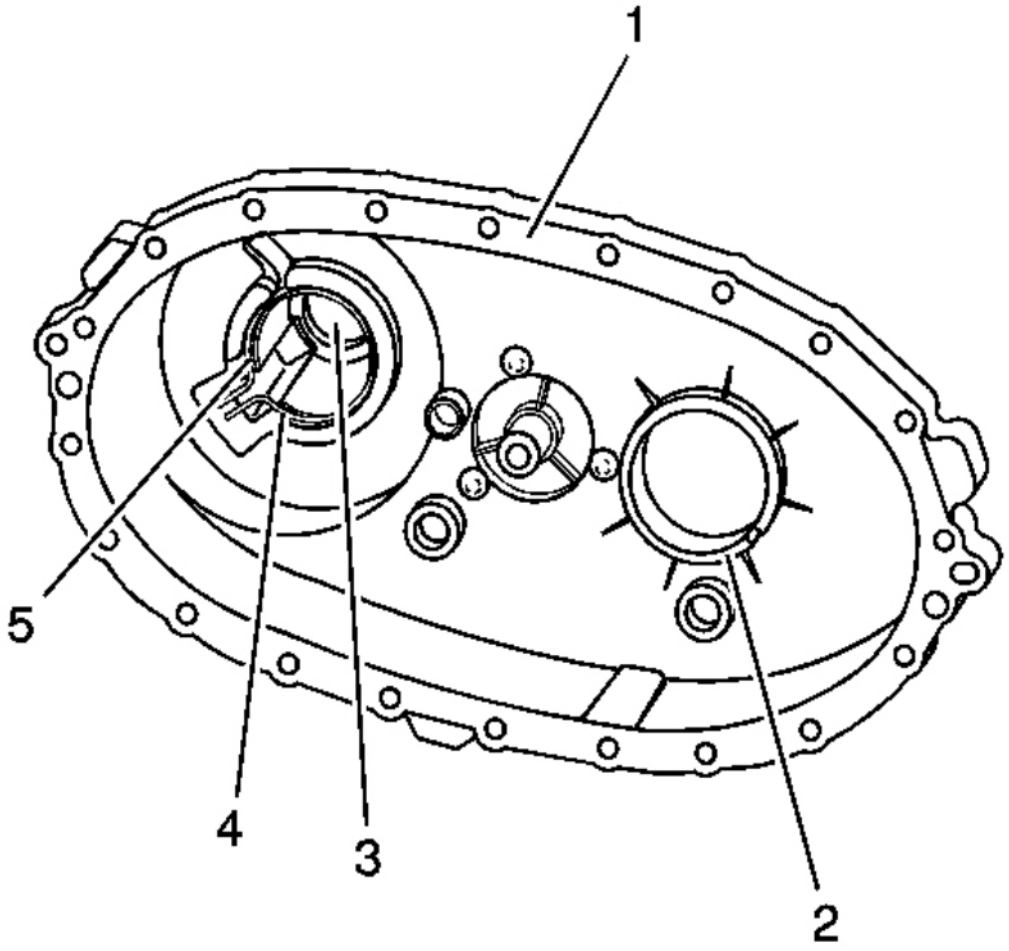

Fig. 55: Locating Rear Case Inspection Areas
Courtesy of GENERAL MOTORS CORP.

1. Clean the rear case half in cleaning solvent and air dry.

NOTE: **Refer to Machined Surface Damage Notice .**

2. Remove the sealer from the case sealing surfaces.
3. Inspect the case for being broken or cracked.
4. Replace the case if it is broken or cracked.
5. Inspect the sealing surfaces (1) for damage.
6. Repair small scratches or nicks with a soft stone.

cardiagn.com

7. Inspect the case threaded bolt holes for damage.
8. Repair any damaged threads.
9. Inspect the front output shaft rear bearing bore (2) for the following conditions:
   - Spun bearing
   - Cracks
10. Inspect the rear output shaft rear bearing bore (4) for the following conditions:
   - Spun bearing
   - Cracks
11. Replace the case if the bearing has spun. Refer to **Transfer Case Disassemble** and **Transfer Case Assemble**.
12. Inspect the retaining ring (5) for the rear output shaft rear bearing for being bent or twisted.
13. Replace a faulty retaining ring.
14. Inspect the rear output shaft bushing (3) for scoring or wear.
15. Replace the case if the rear output shaft bushing is faulty. Refer to **Transfer Case Disassemble** and **Transfer Case Assemble**.
16. Replace the case if the control actuator lever shaft bore is faulty. Refer to **Transfer Case Disassemble** and **Transfer Case Assemble**.

Differential Components

cardiagn.com

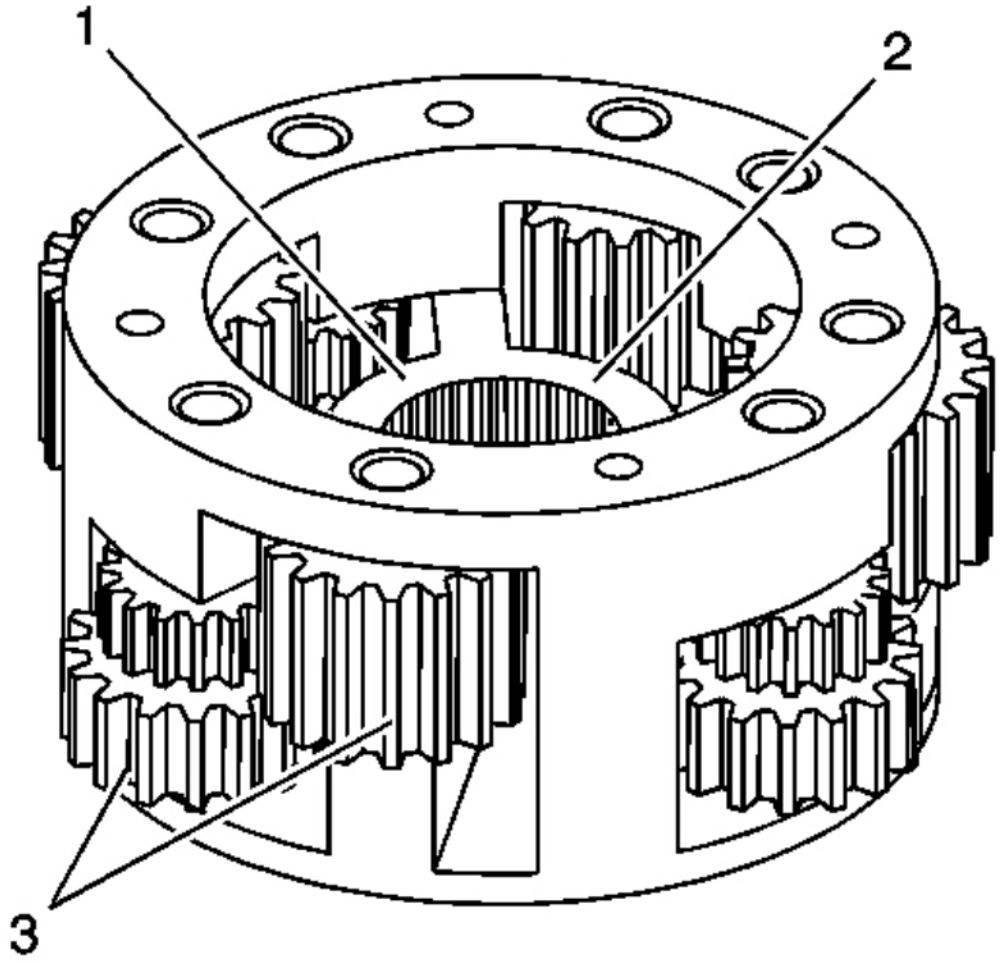

Fig. 56: Inspecting Planetary Differential Components
Courtesy of GENERAL MOTORS CORP.

1. Clean the planetary differential in cleaning solvent. Do not disassemble the planetary differential.
2. Air dry and ensure all cleaning solvent is removed from the bearings in the pinion gears (3). Do not spin the pinion gears with compressed air.
3. Inspect the pinion gears for chipped teeth.
4. Inspect the pinion gears for debris embedded in the root of the teeth.
5. Inspect the pinion gears for excessive side movement from worn bushings or shafts.
6. Inspect the planetary housing for cracks at the web (1) of the housing.
7. Inspect the thrust washer surface (2) for scoring or excessive wear.

cardiagn.com

8. Inspect the planetary housing for distortion.
9. Inspect the planetary housing to mainshaft splines for excessive wear.
10. Replace the planetary differential if any of the above conditions are found.
11. Inspect the planetary thrust washers for excessive wear or scoring.
12. Replace the thrust washers if they are faulty.

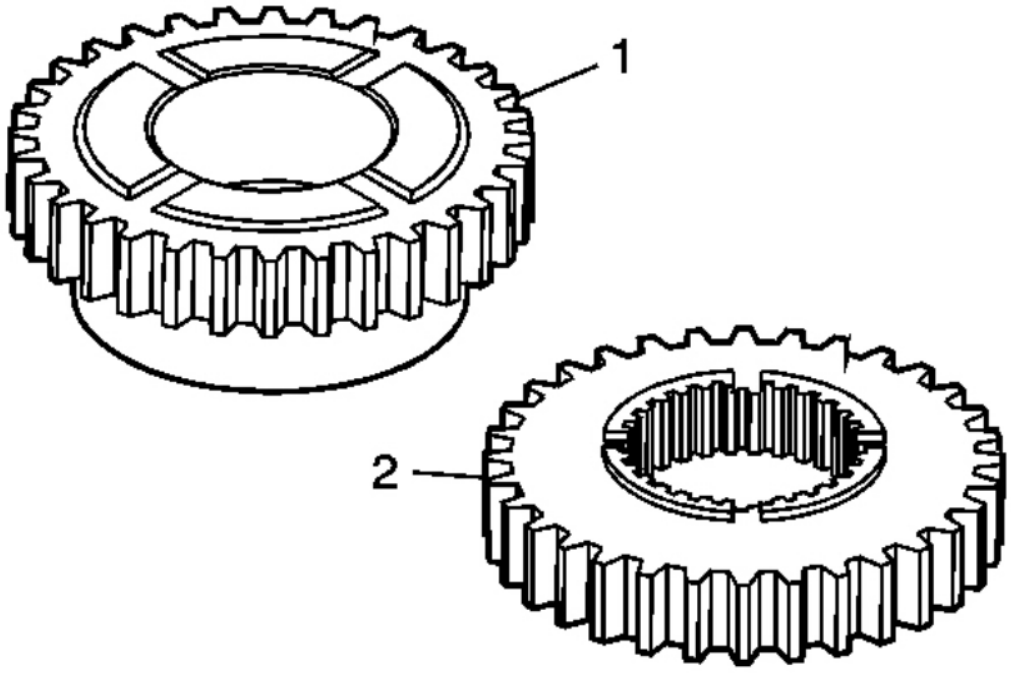

Fig. 57: View Of Front & Rear Sun Gears
Courtesy of GENERAL MOTORS CORP.

1. Clean the front sun gear (1) and the rear sun gear (2) in cleaning solvent and air dry.
2. Inspect the teeth on the front sun gear (1) and the rear sun gear (2) for the following conditions:
   - Chipped teeth
   - Excessively worn gear surfaces

     Slight wear marks are normal.

   - Debris embedded in the root of the teeth
3. Inspect the thrust washer surfaces for excessive wear or scoring.
4. Replace the front sun gear (1) and the rear sun gear (2) if they are faulty.

cardiagn.com

Drive Chain and Sprockets

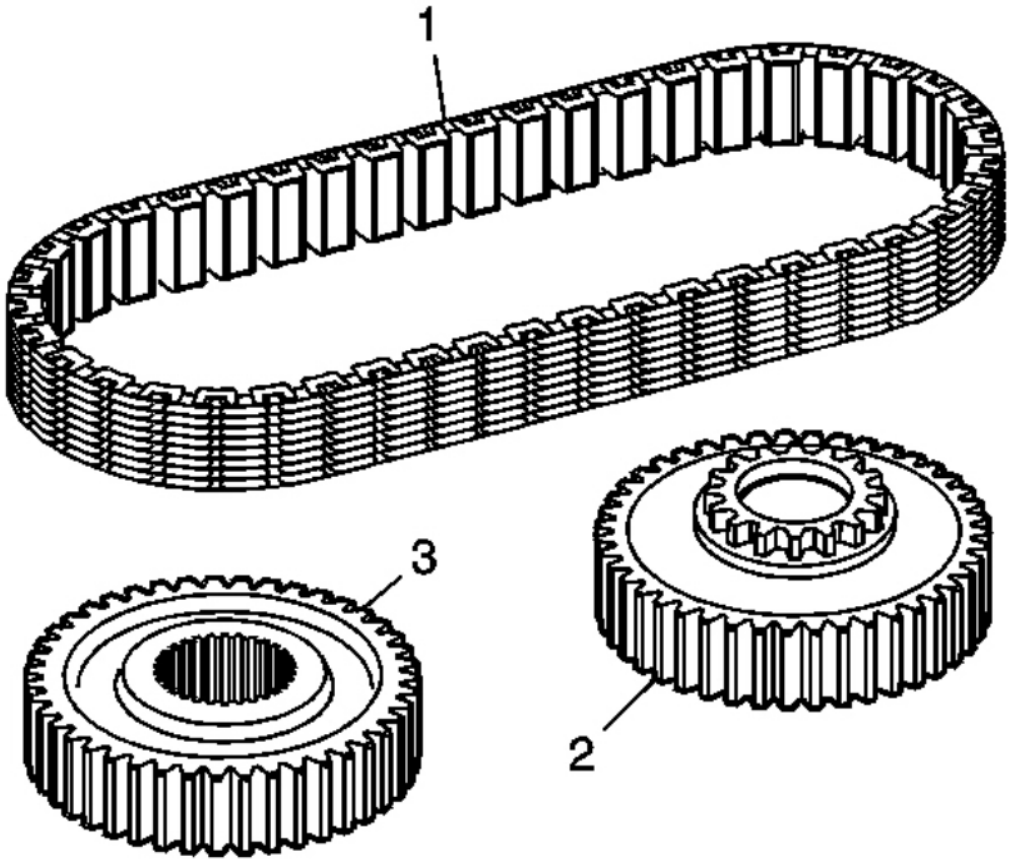

Fig. 58: Identifying Drive Chain, Drive Sprocket & Driven Sprocket
Courtesy of GENERAL MOTORS CORP.

1. Clean the drive chain (1), drive sprocket (2), and driven sprocket (3) in cleaning solvent and air dry.
2. Inspect the drive chain (1) for the following conditions:
   - Loose link pins
   - Binding or stiff links
   - Debris embedded in the links
   - Worn teeth surfaces
3. Replace the chain if any of the above conditions are found.
4. Inspect the driven sprocket (3) and the drive sprocket (2) for the following conditions:
   - Chipped teeth

cardiagn.com

- Excessively worn gear surfaces

  Slight wear marks are normal.

- Debris embedded in the root of the teeth

5. Inspect the drive sprocket bushing for the following conditions:
   - Excessive wear
   - Scoring
6. Replace the sprockets if any of the above conditions are found. The chain and sprockets may be replaced separately.

Input Shaft

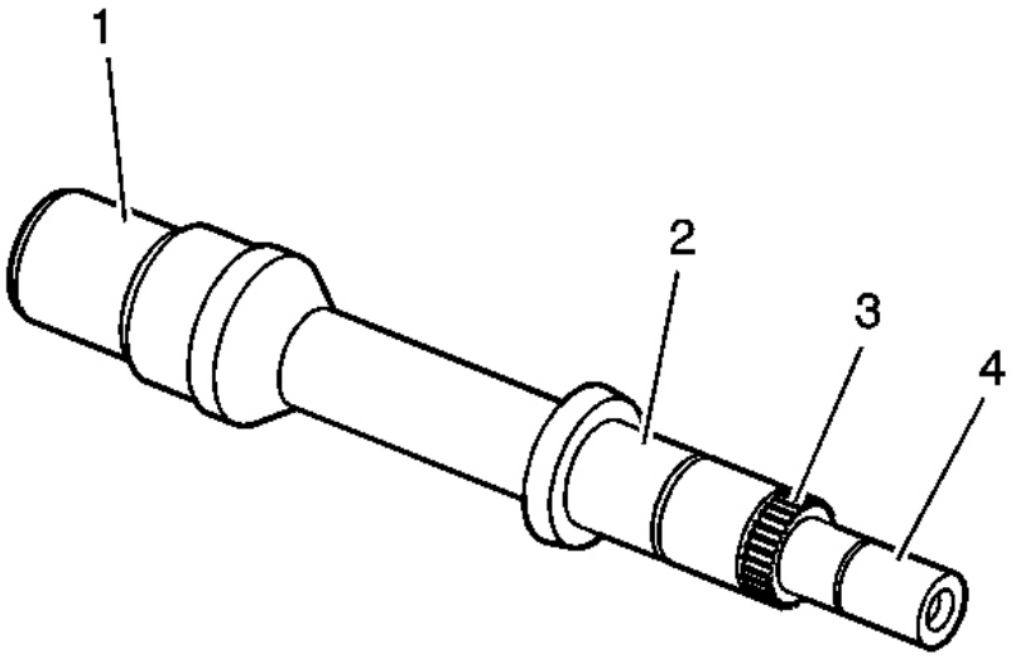

Fig. 59: View Of Input Shaft
Courtesy of GENERAL MOTORS CORP.

1. Clean the input shaft in cleaning solvent.
2. Inspect the input seal surface (1) for excessive grooves or damage.

IMPORTANT: Do not attempt to smooth any roughness in the bearing journals.

cardiagn.com

3. Inspect the bearing journals on the input shaft for the following conditions:
    - The drive gear bushing (2)
    - The rear support bushing (4)
        - Scoring
        - Pitting
        - Brinelling
        - Excessive wear
4. Inspect the input shaft planetary carrier assembly splines (3) for damage or excessive wear. Witness marks at the location of the gear is normal.
5. Replace the input shaft if any of the above conditions are found.

Front Output Shaft

cardiagn.com

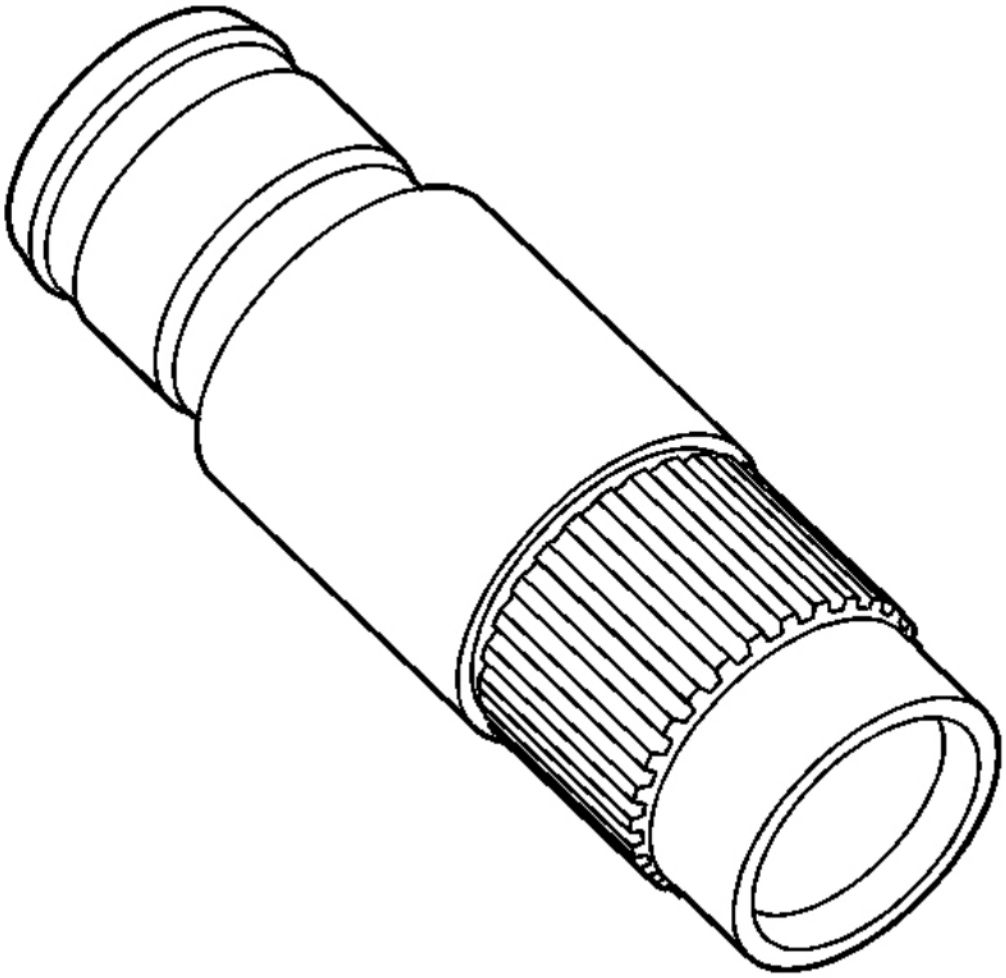

Fig. 60: View Of Front Output Shaft
Courtesy of GENERAL MOTORS CORP.

1. Clean the front output shaft in cleaning solvent and air dry.
2. Inspect for spun bearings at the front output shaft bearing areas.
3. Inspect the front output internal splines and driven gear splines for damage or excessive wear.
4. Replace the front output shaft if it is damaged.
5. Inspect the cup plug in the front output shaft for leaking.
6. Replace the cup plug if it is leaking. Refer to **Transfer Case Disassemble** and **Transfer Case Assemble**.

Rear Output Shaft

cardiagn.com

Fig. 61: View Of Rear Output Shaft, Bearing & Mainshaft Rear Support Bushing
Courtesy of GENERAL MOTORS CORP.

1. Clean the rear output shaft with rear output shaft bearing in cleaning solvent.
2. Air dry and ensure all solvent is removed from the bearing.
3. Inspect the rear output shaft bearing for the following conditions:
   - Scoring
   - Pitting
   - Brinelling
   - Excessive wear
4. Replace the rear output shaft bearing if it is faulty. Refer to **Transfer Case Disassemble** and **Transfer Case Assemble**.
5. Inspect the mainshaft rear support bushing for the following conditions:
   - Pitted
   - Wear
   - Corrosion
6. Replace the mainshaft rear support bushing if any of the above conditions are found. Refer to **Transfer Case Disassemble** and **Transfer Case Assemble**.
7. Inspect the rear output shaft splines for wear or damage.
8. Inspect the rear output shaft bearing area for a spun bearing.
9. Replace the rear output shaft if any of the above conditions are found.

TRANSFER CASE ASSEMBLE

Tools Required

- **J 3289-20** Holding Fixture
- **J 8092** Universal Driver
- **J 22912-01** Rear Pinion and Axle Bearing Remover

cardiagn.com

- **J 36850** Transjel Lubricant. See **Special Tools**.
- **J 42176** Universal Driver Handle - Non-Threaded. See **Special Tools**.
- **J 42738** Seal Installer. See **Special Tools**.
- **J 43484** Front Output Shaft Seal Installer. See **Special Tools**.
- **J 45756** Rear Output Shaft Seal Installer. See **Special Tools**.
- **J 45757** Mainshaft Support Bushing and Bearing Installer. See **Special Tools**.
- **J 45759** Assembly Fixture. See **Special Tools**.

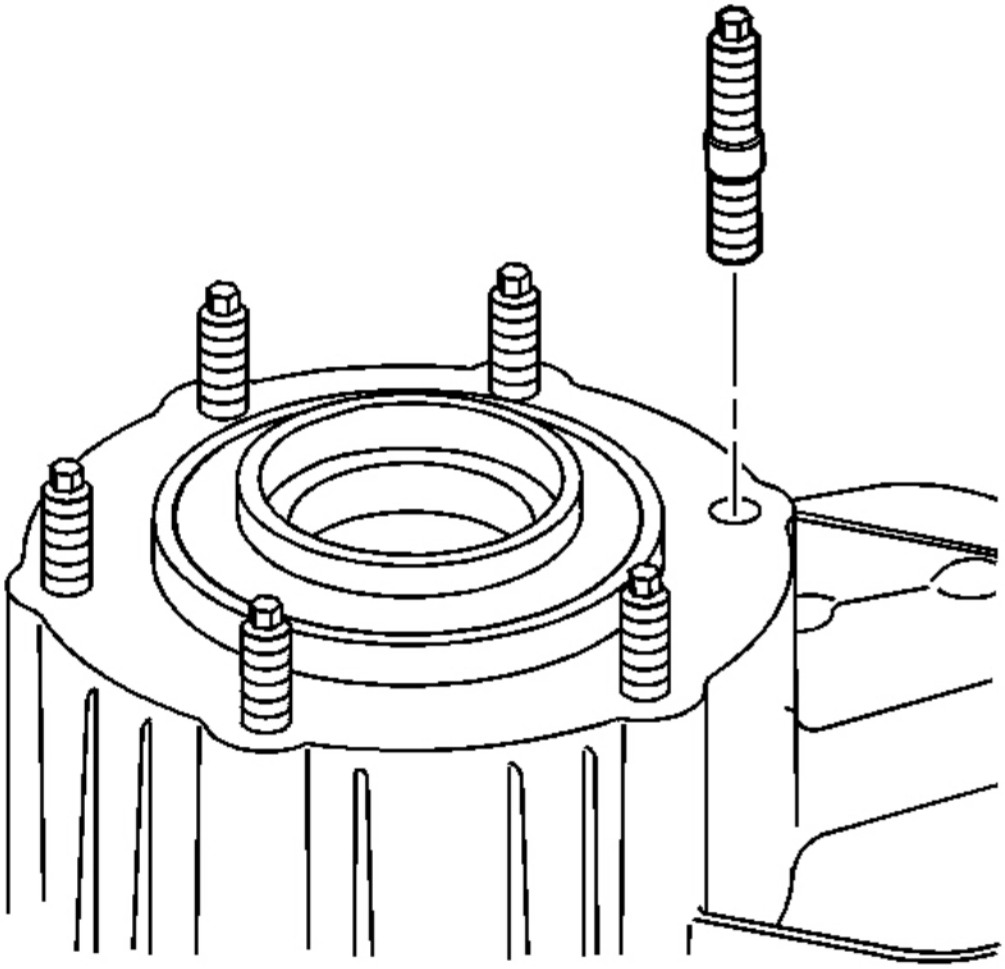

Fig. 62: View Of Transfer Case Mounting Stud
Courtesy of GENERAL MOTORS CORP.

cardiagn.com

NOTE: **Refer to Fastener Notice .**

1. If removed, install the transfer case mounting studs.

   Tighten: Tighten the mounting studs to 10 N.m (89 lb in).

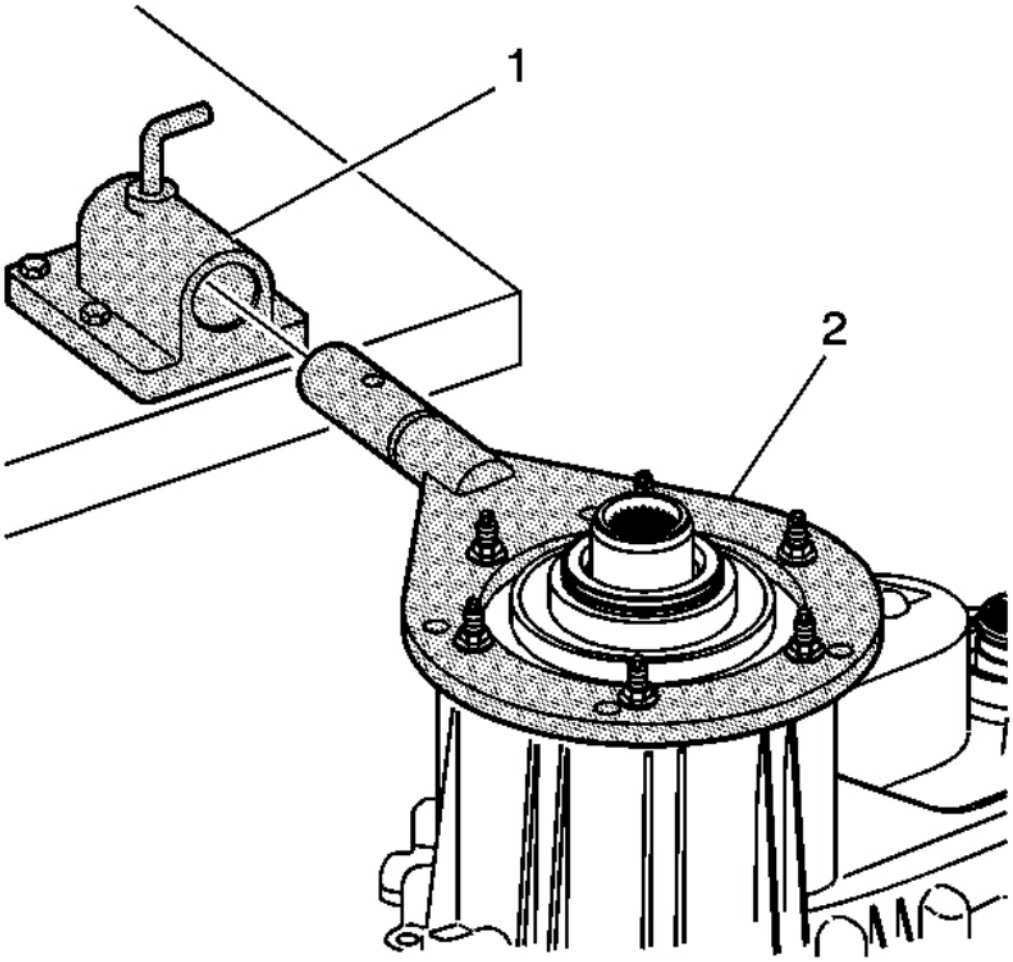

Fig. 63: View Of Front Transfer Case Bench Mount
Courtesy of GENERAL MOTORS CORP.

2. Attach the **J 45759** to the front transfer case using the adapter studs. See **Special Tools**. All of the assembly procedures can be performed with the case mounted to the **J 45759** . See **Special Tools**.
3. Install the **J 45759** (2) into the **J 3289-20** (1) and secure with the pivot pin. See **Special Tools**.

cardiagn.com

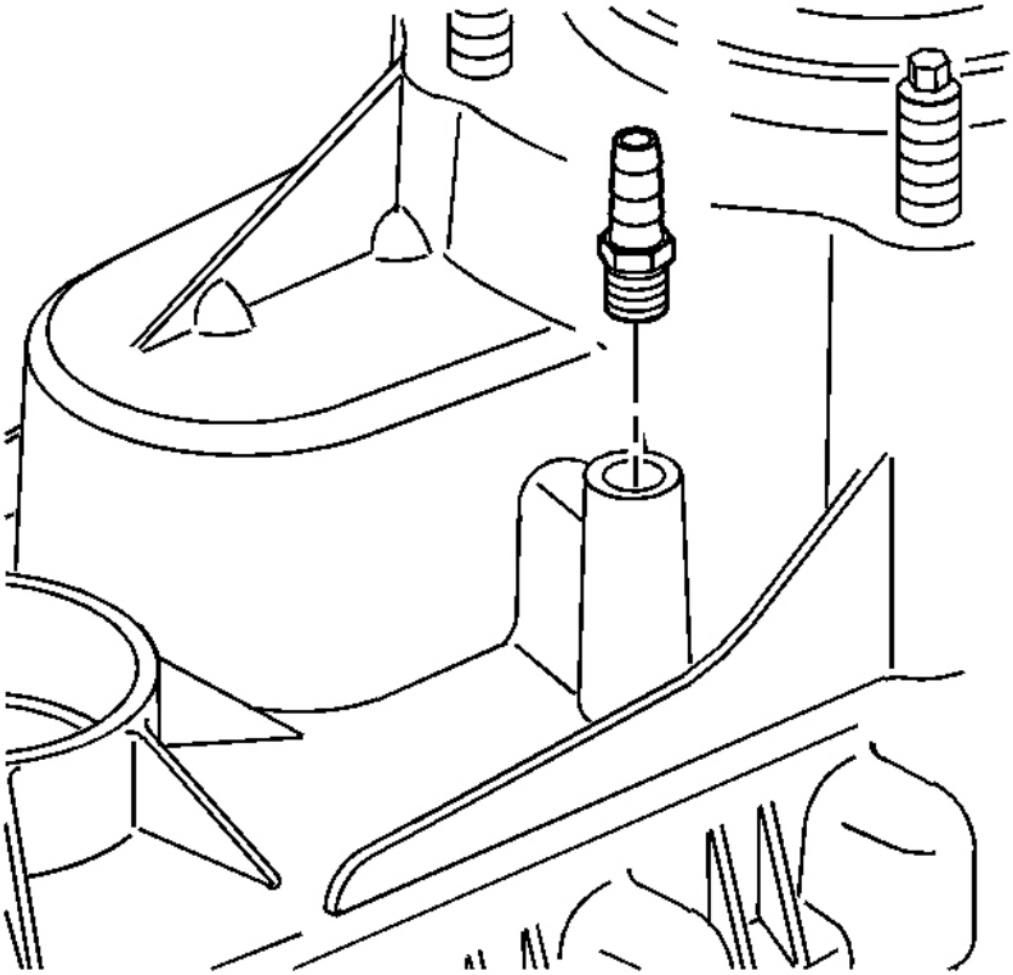

Fig. 64: View Of Front Case Vent
Courtesy of GENERAL MOTORS CORP.

4. If the vent is removed, apply pipe sealant GM P/N 12346004 (Canadian P/N 10953480) to the threads on the vent.
5. Install the vent.

   Tighten: Tighten the vent to 6 N.m (53 lb in).

cardiagn.com

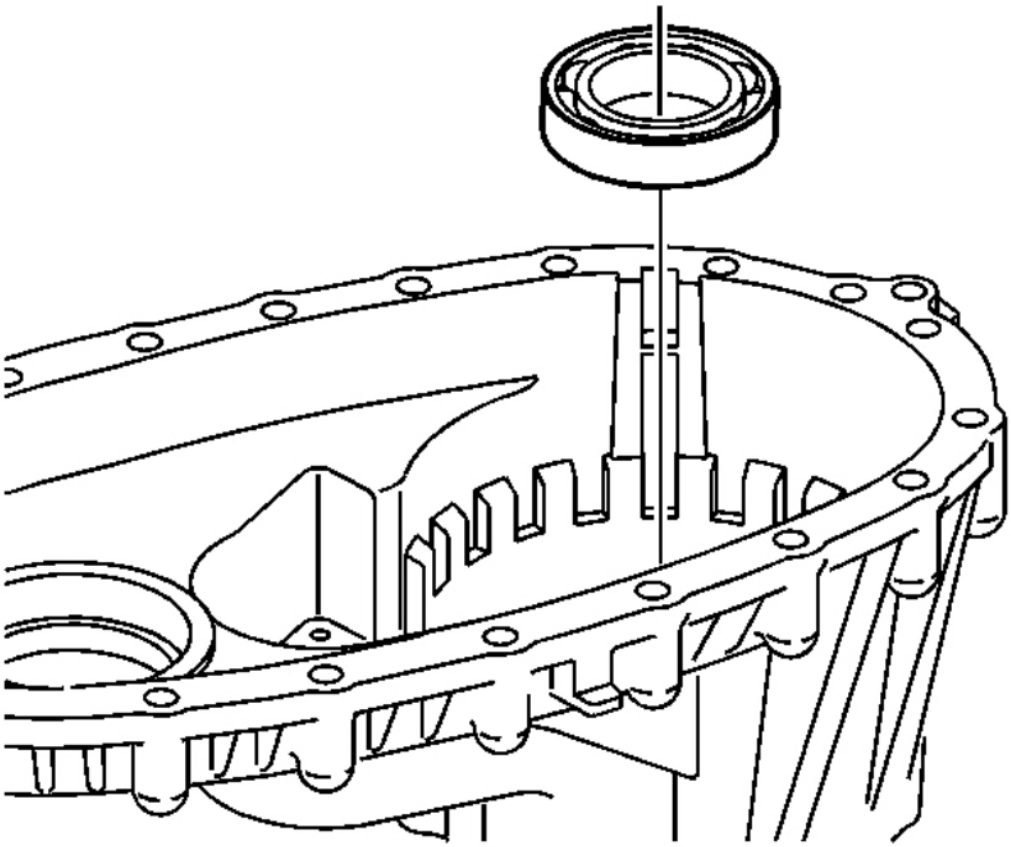

Fig. 65: View Of Input Shaft Bearing
Courtesy of GENERAL MOTORS CORP.

IMPORTANT: Lubricate all of the bearings and bearing journals with transfer case fluid during installation.

6. Install the input shaft bearing in the front case half.
   - Use a hammer and a brass drift only on the outer bearing race.
   - Ensure the bearing is kept square to the bore while installing.

cardiagn.com

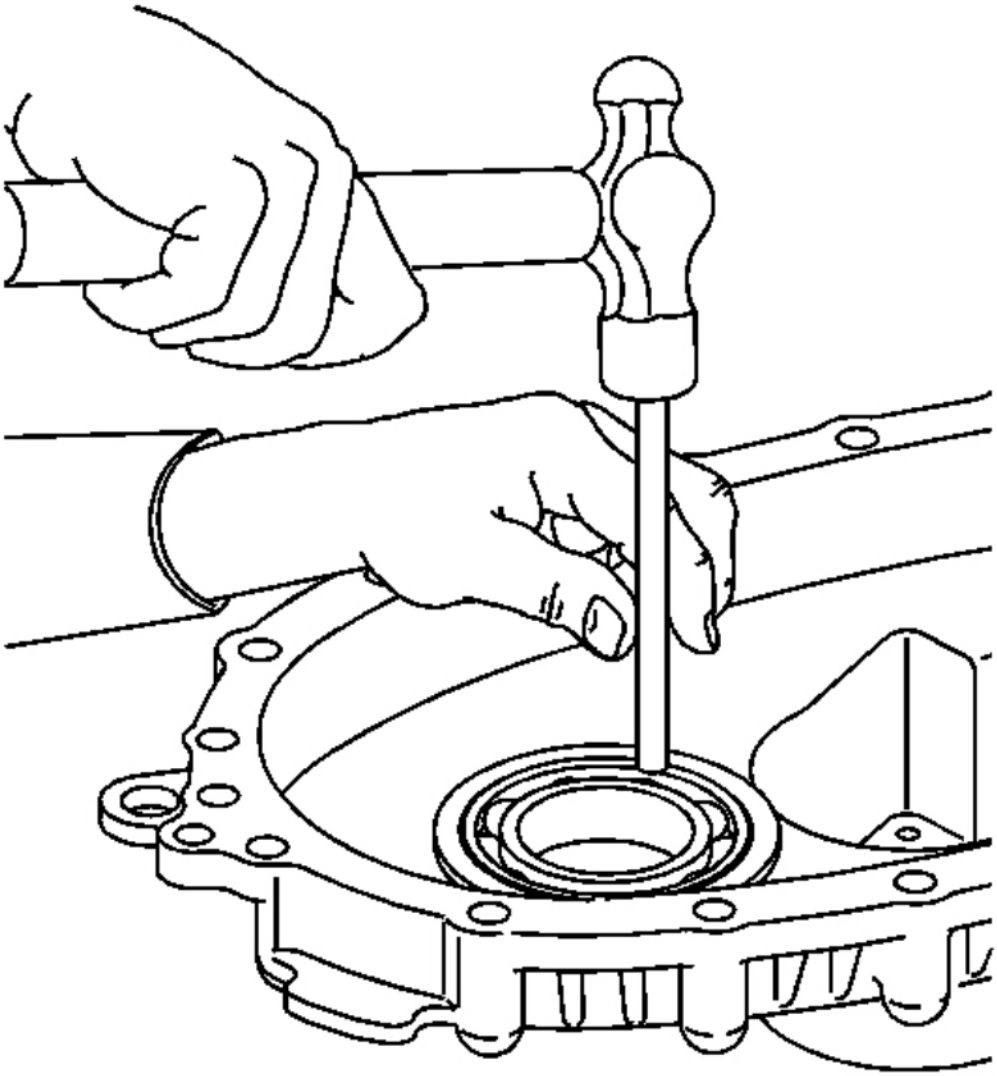

Fig. 66: Aligning Brass Drift On Outer Bearing Race
Courtesy of GENERAL MOTORS CORP.

7. Install the front bearing, for the front output shaft, in the front case half.
    - Use a hammer and a brass drift only on the outer bearing race.
    - Ensure the bearing is kept square to the bore while installing.

cardiagn.com

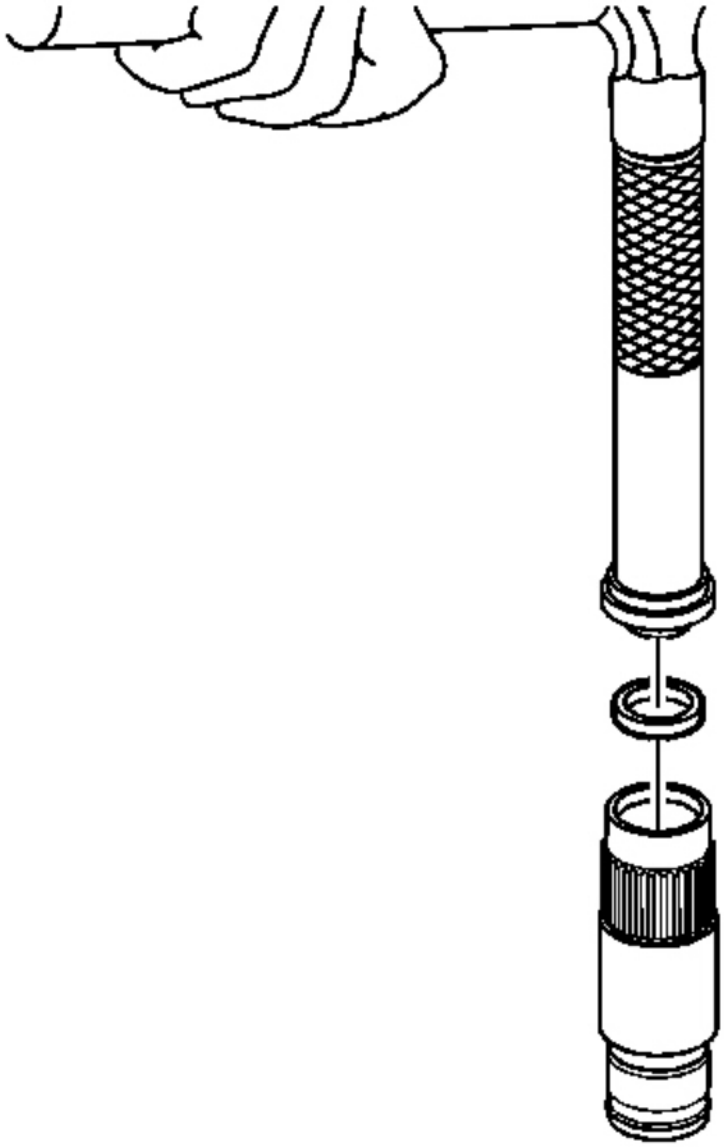

Fig. 67: View Of Front Output Shaft Cup Plug
Courtesy of GENERAL MOTORS CORP.

8. If it is a new shaft or if the cup plug was removed, install the cup plug in the front output shaft, using a suitable driver. Install the cup plug 1 mm (0.039 in) from flush with the end of the shaft.

cardiagn.com

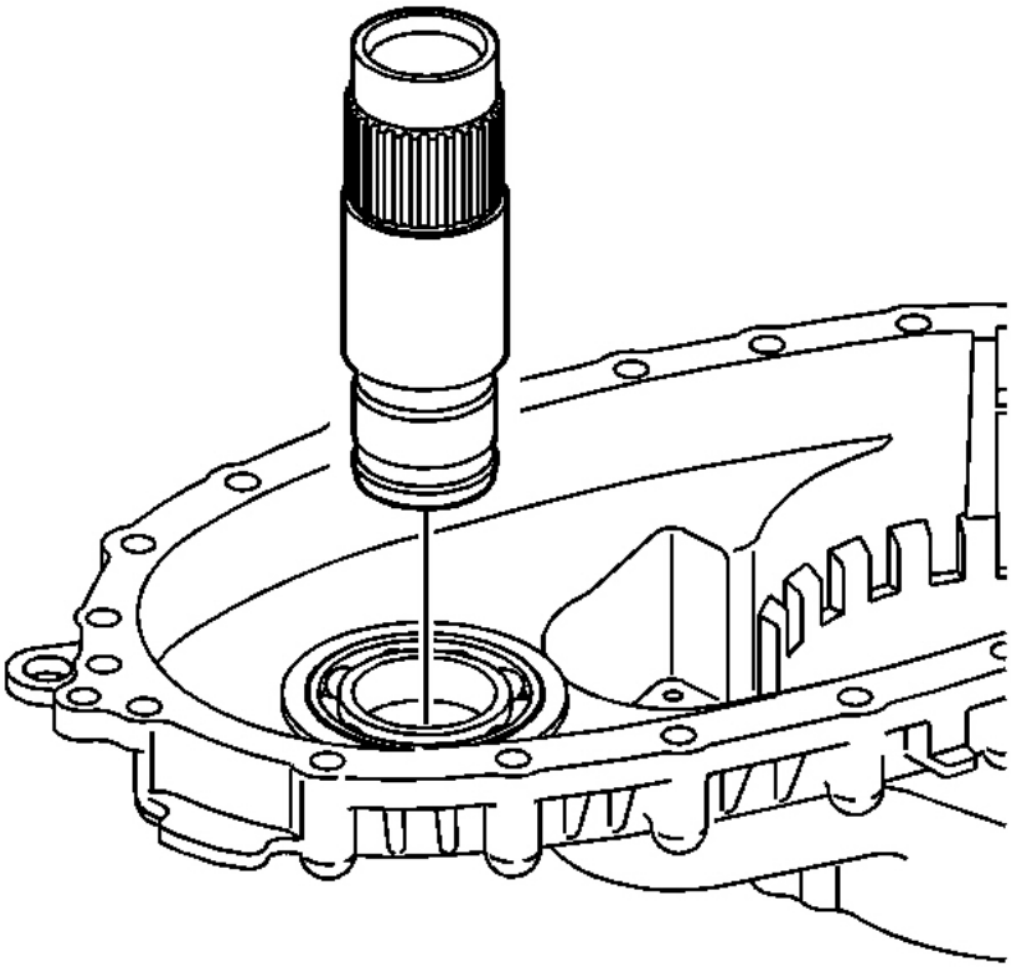

Fig. 68: View Of Front Output Shaft Assembly
Courtesy of GENERAL MOTORS CORP.

9. Install the front output shaft assembly.

cardiagn.com

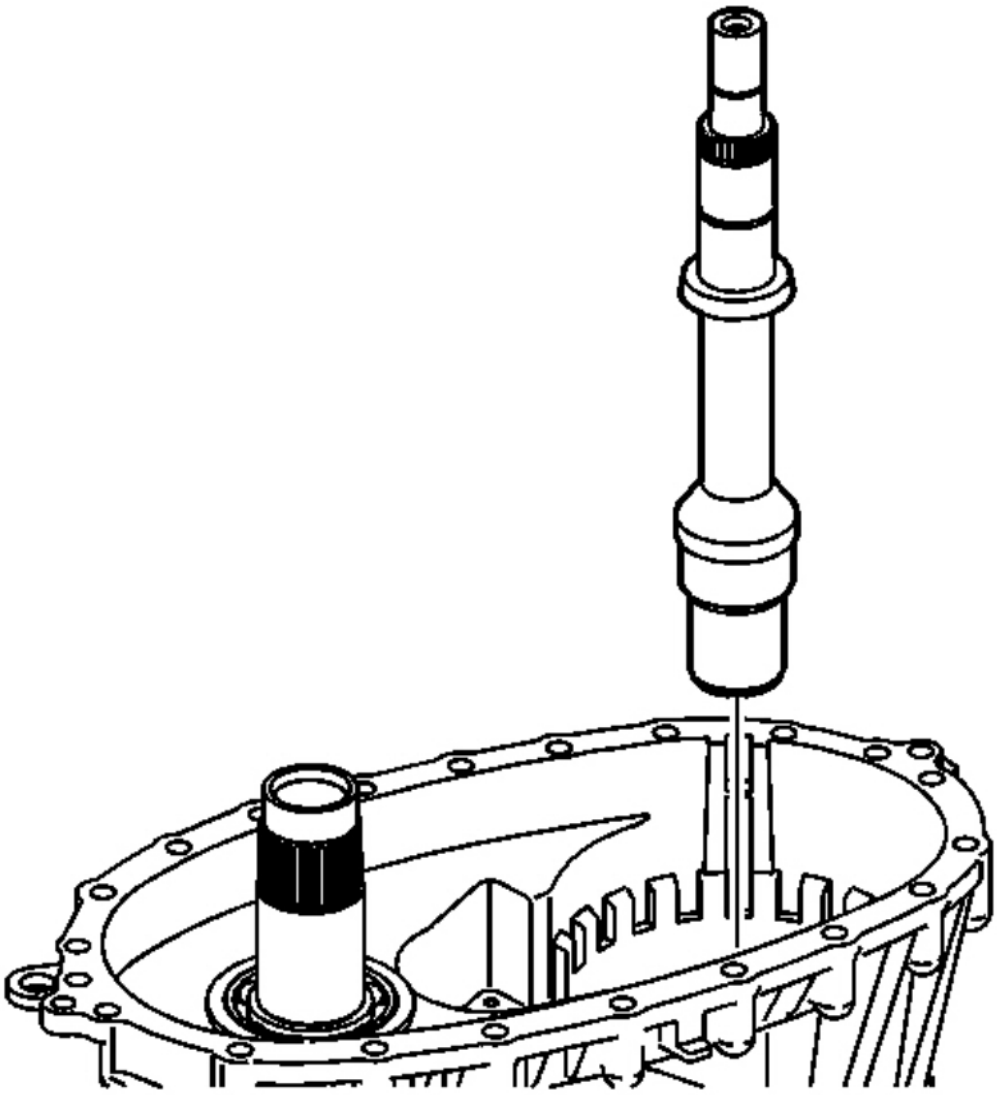

Fig. 69: Identifying Input Shaft
Courtesy of GENERAL MOTORS CORP.

10. Install the input shaft.

cardiagn.com

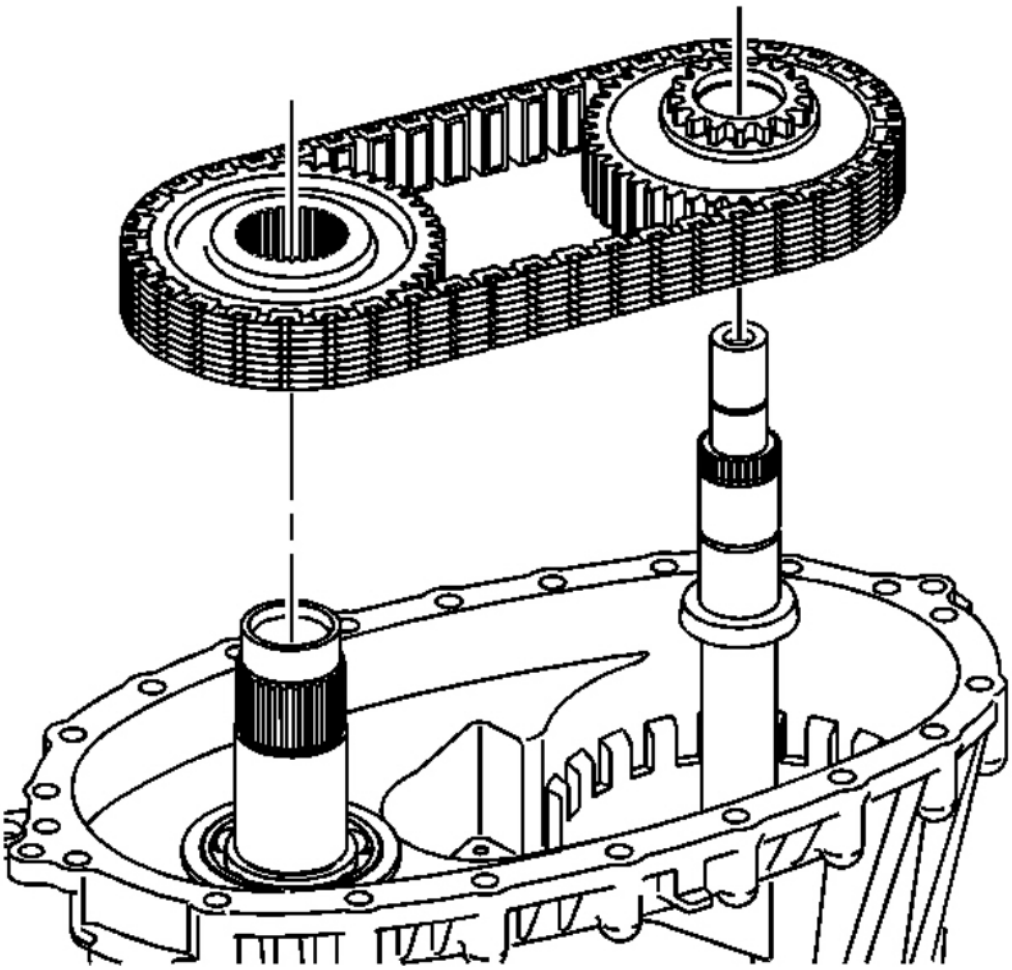

Fig. 70: Locating Drive Chain & Sprockets
Courtesy of GENERAL MOTORS CORP.

IMPORTANT: If using the chain and sprockets again, ensure to align the marks of the drive chain and sprockets.

11. Install the drive chain and sprockets. The blue link on the chain faces up.

cardiagn.com

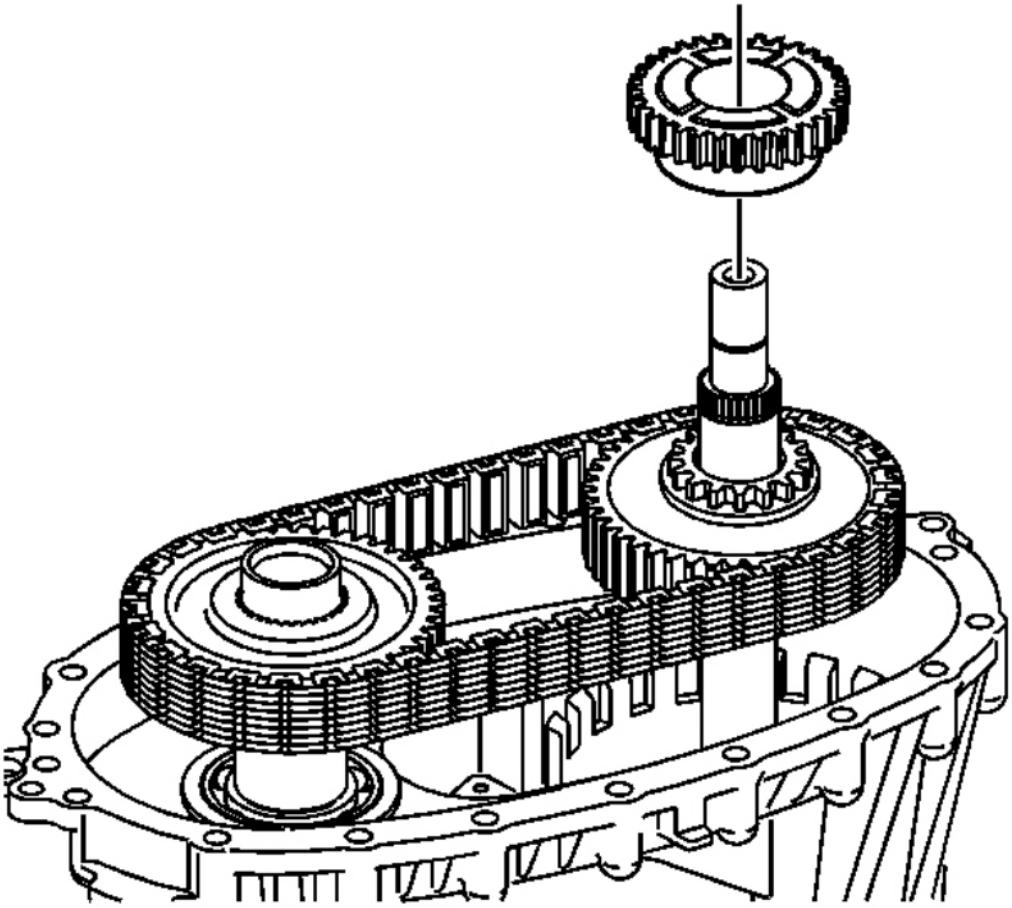

Fig. 71: View Of Front Sun Gear
Courtesy of GENERAL MOTORS CORP.

12. Install the front sun gear.

cardiagn.com

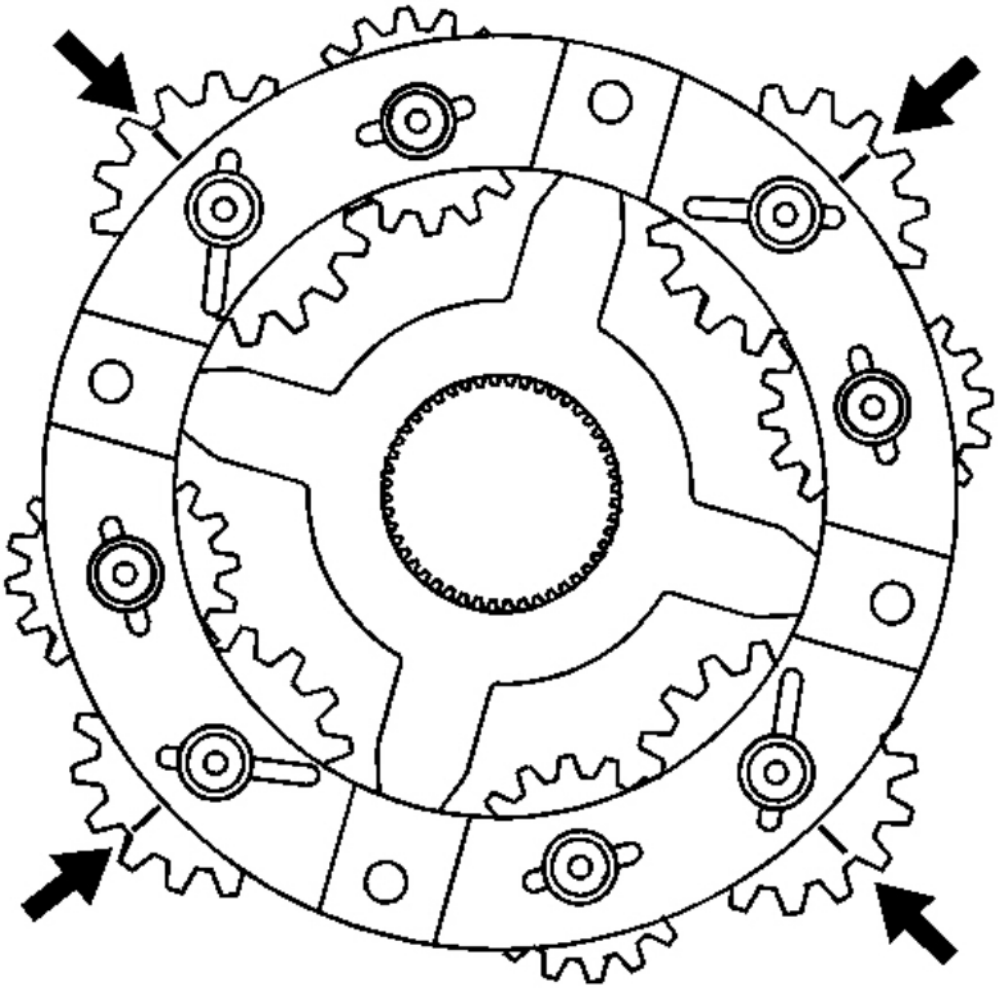

Fig. 72: Aligning Marks On Pinion Gears
Courtesy of GENERAL MOTORS CORP.

IMPORTANT: The planetary differential gears are timed to the sun gears. If the gears are not timed properly, the differential will not rotate without binding.

13. With the rear side of the planetary differential facing up, align the marks on the pinion gears. Position the alignment marks with an area on the planetary housing that can be reference for all gears.

cardiagn.com

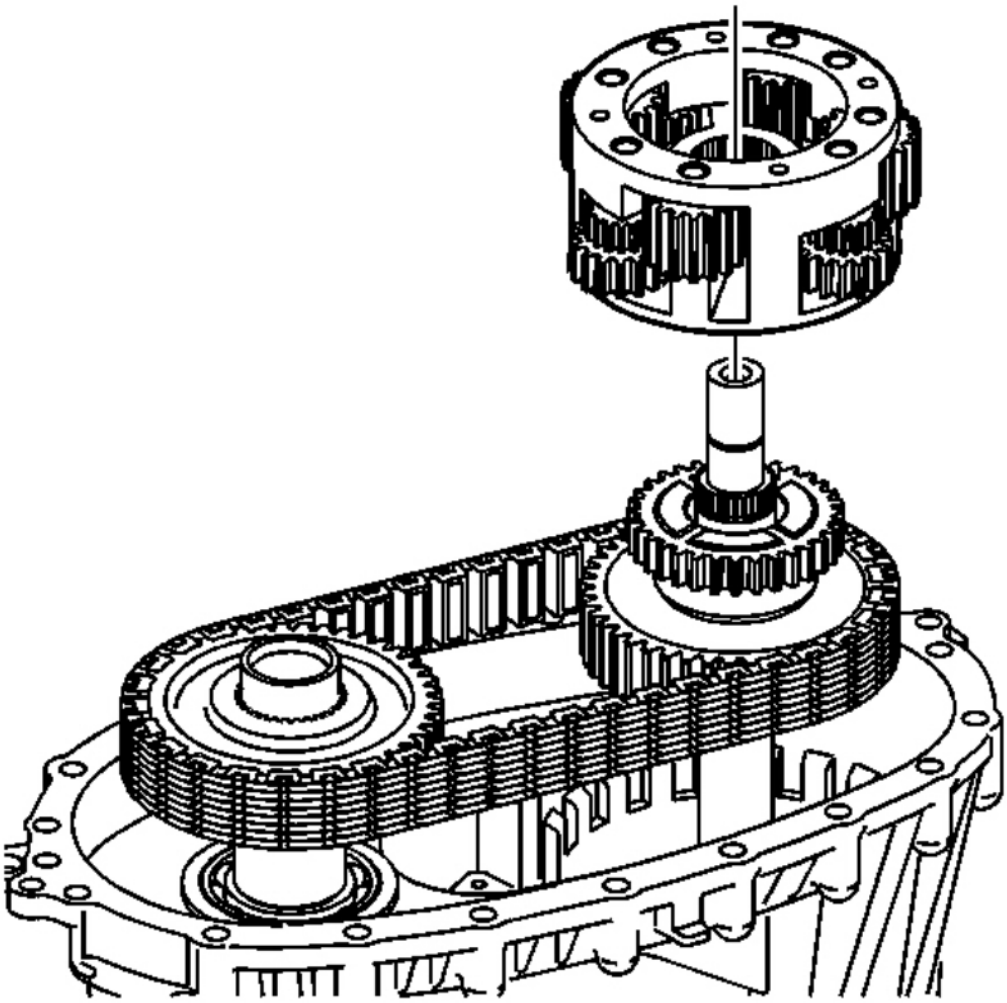

Fig. 73: Identifying Planetary Differential Assembly
Courtesy of GENERAL MOTORS CORP.

14. Install the planetary differential assembly.
    - Do not rotate the planetary differential pinion gears when installing.
    - Ensure the alignment marks are still in position.

cardiagn.com

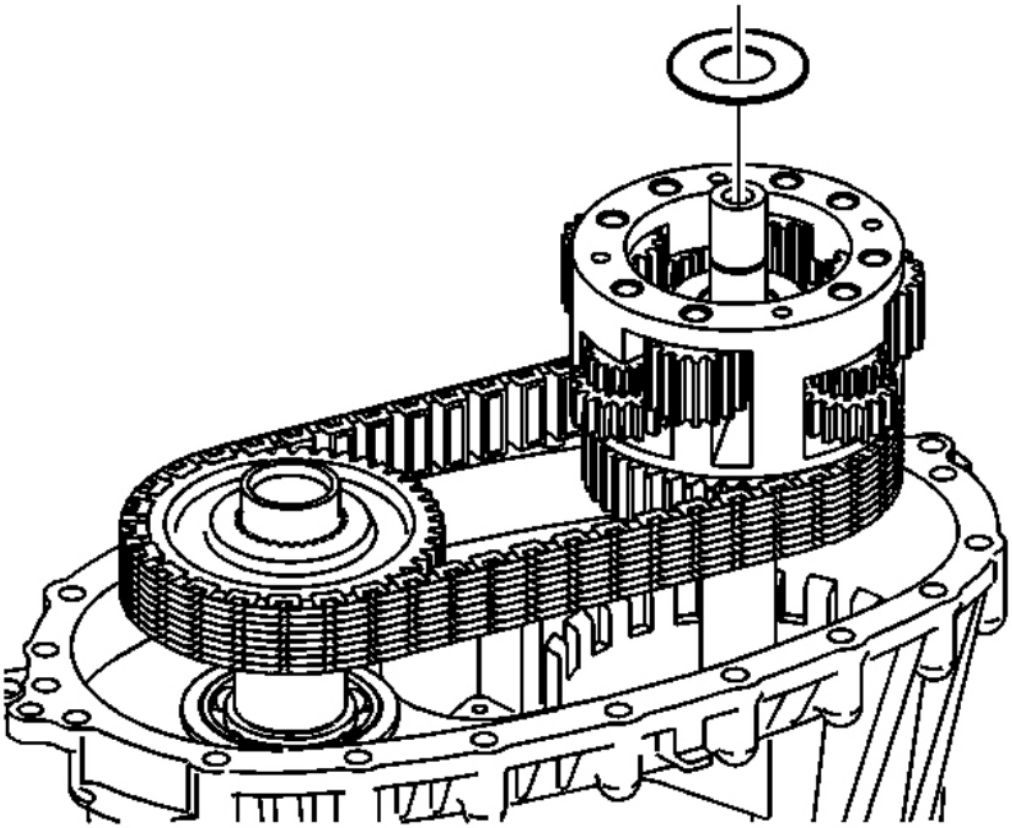

Fig. 74: View Of Sun Gear Thrust Washer
Courtesy of GENERAL MOTORS CORP.

15. Lubricate the sun gear thrust washer with **J 36850** or equivalent. See **Special Tools**.
16. Install the sun gear thrust washer.

cardiagn.com

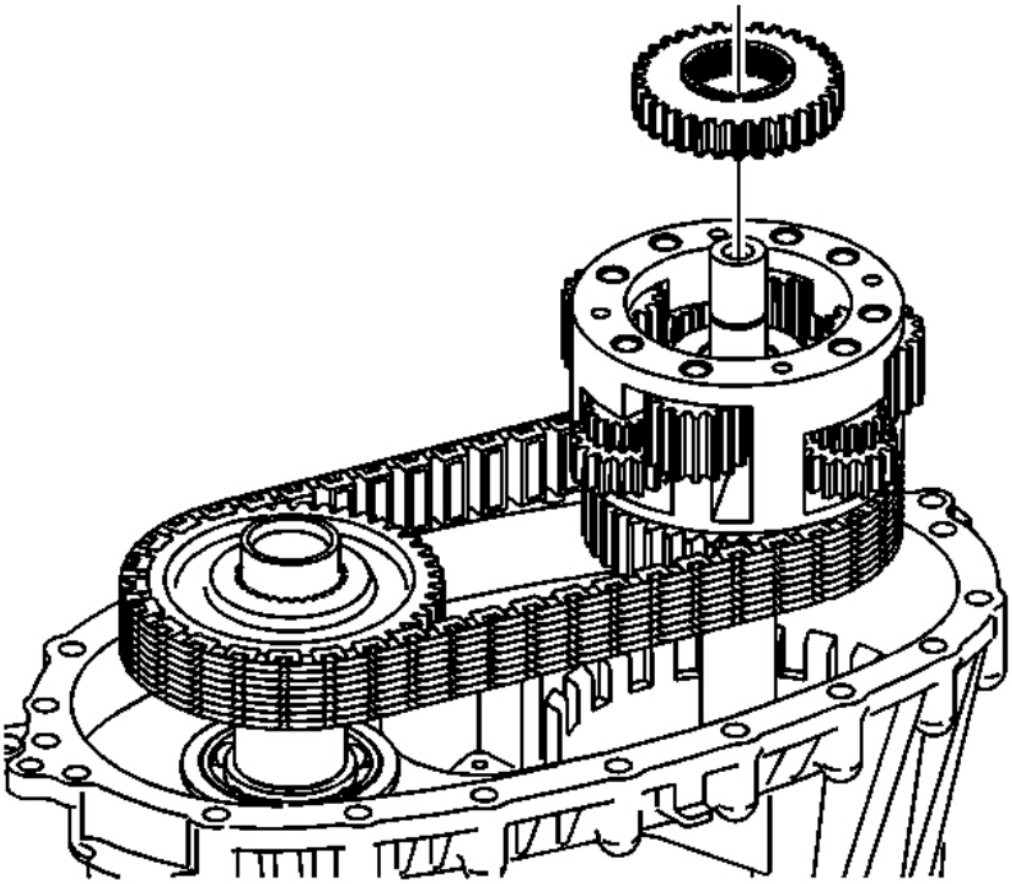

Fig. 75: Aligning Sun Gear
Courtesy of GENERAL MOTORS CORP.

17. Install the rear sun gear.
    - The shoulder side of the gear faces up.
    - Do not rotate the planetary pinion gears.

cardiagn.com

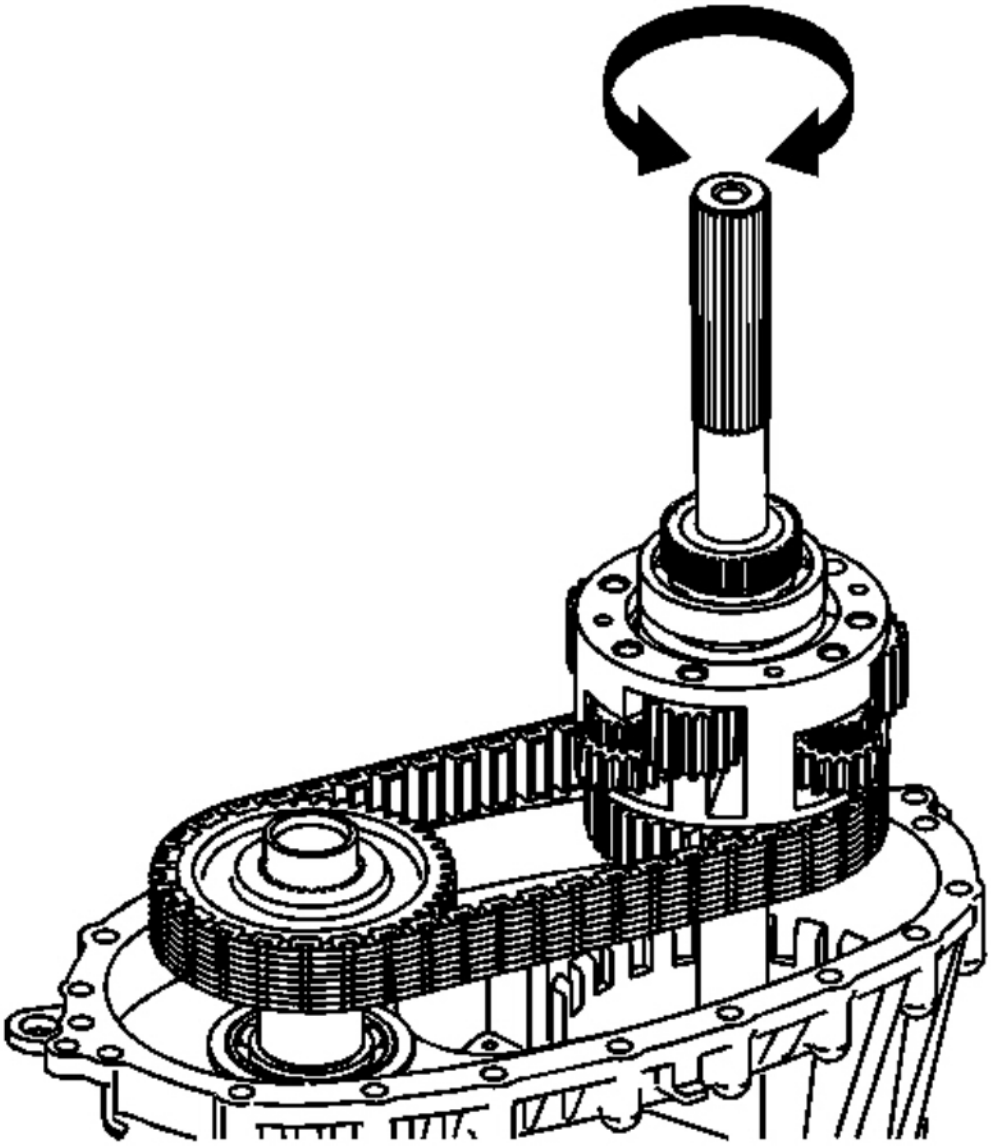

Fig. 76: Checking Planetary Differential Pinion Gear Rotation
Courtesy of GENERAL MOTORS CORP.

18. Temporarily install the rear output shaft to the planetary differential and the rear sun gear.
19. Rotate the rear output shaft three or four revolutions to rotate the planetary differential pinion gears. If properly aligned, the planetary pinion gears will rotate freely, and there will be no binding.
20. Remove the rear output shaft without disturbing the rear sun gear.

cardiagn.com

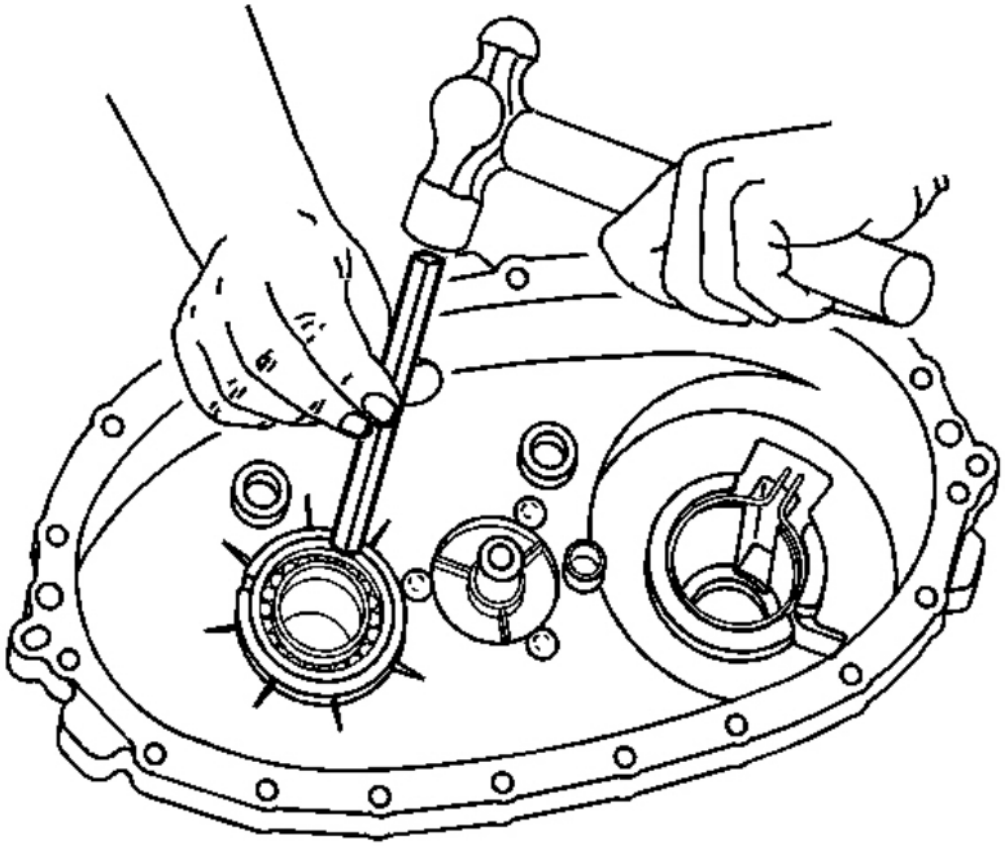

Fig. 77: View Of Front Output Shaft Rear Bearing
Courtesy of GENERAL MOTORS CORP.

21. Install the front output shaft rear bearing in the rear case half.
    - Use a hammer and a brass drift only on the outer bearing race.
    - Ensure the bearing is kept square to the bore while installing.

cardiagn.com

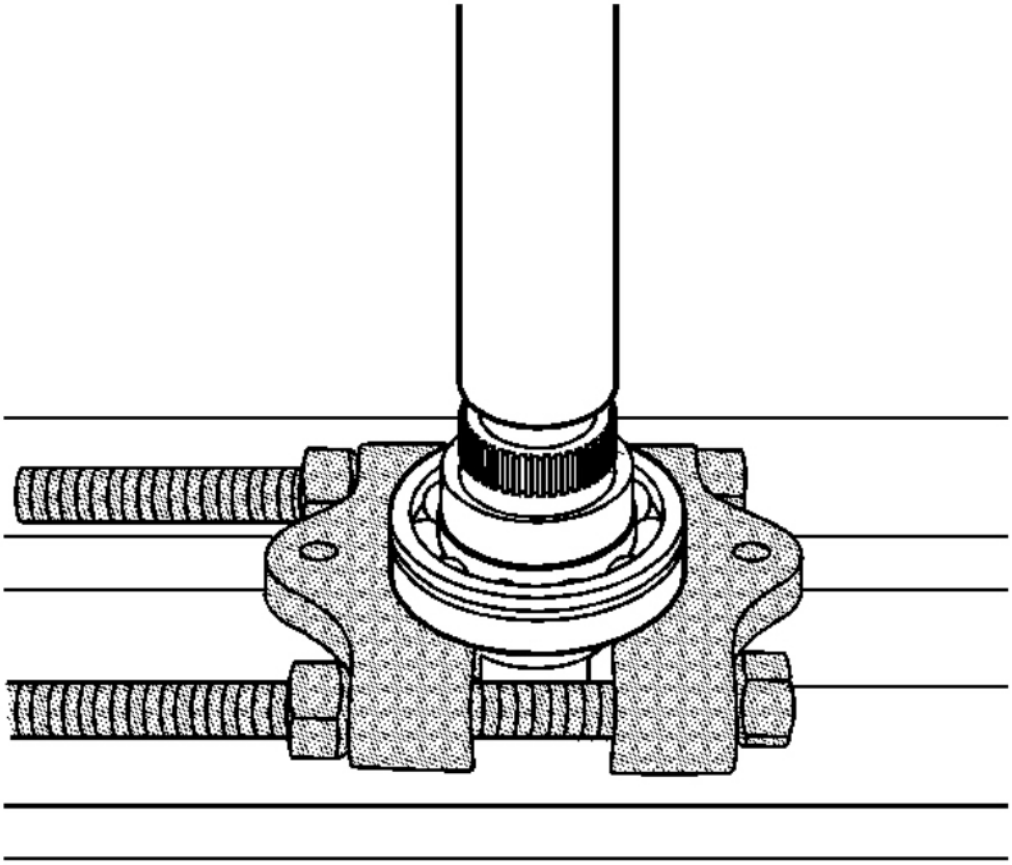

Fig. 78: Using J 22912-01 To Install Rear Output Shaft Bearing
Courtesy of GENERAL MOTORS CORP.

22. Using a hydraulic press and the **J 22912-01** , install the rear output shaft bearing.
    - The retaining ring groove on the bearing goes toward the input end or forward.
    - Use a suitable press plate on the end of the rear output shaft.
    - Ensure the bearing is supported on the inner race.

cardiagn.com

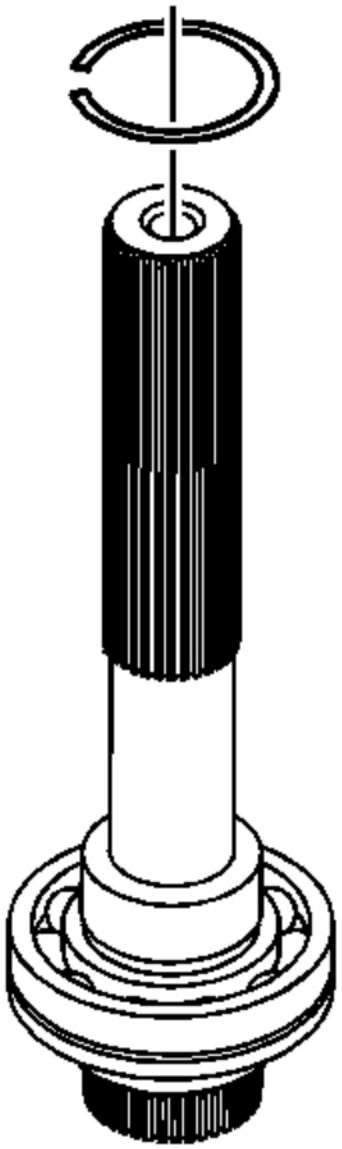

Fig. 79: Identifying Rear Output Shaft Bearing Retaining Ring
Courtesy of GENERAL MOTORS CORP.

23. Install a NEW retaining ring for the rear output shaft bearing.

cardiagn.com

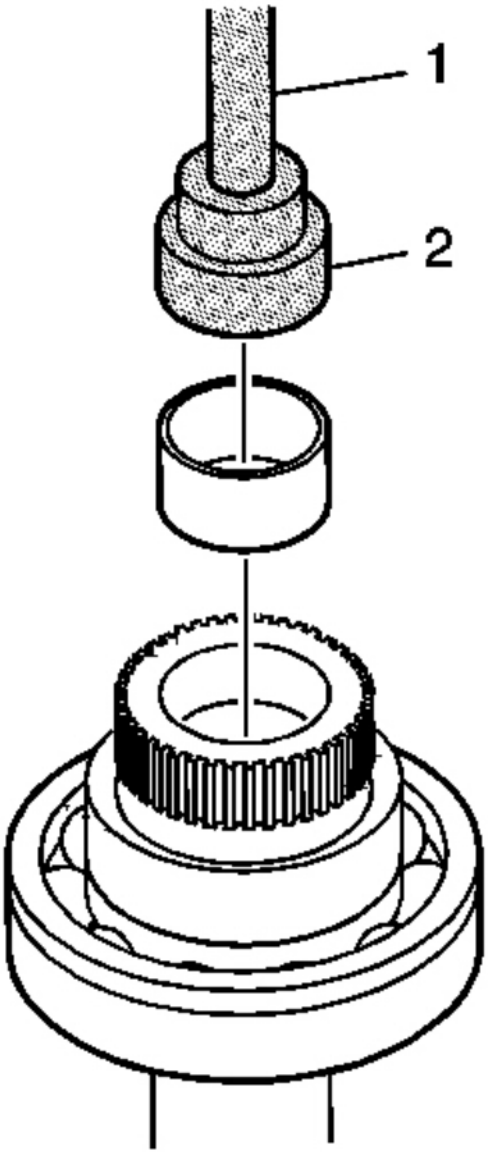

Fig. 80: View Of Input Shaft Rear Support Bushing & Special Tools
Courtesy of GENERAL MOTORS CORP.

24. Using the **J 42176** (1) and the **J 45757** (2), install the input shaft rear support bushing in the rear output shaft. See **Special Tools**.

cardiagn.com

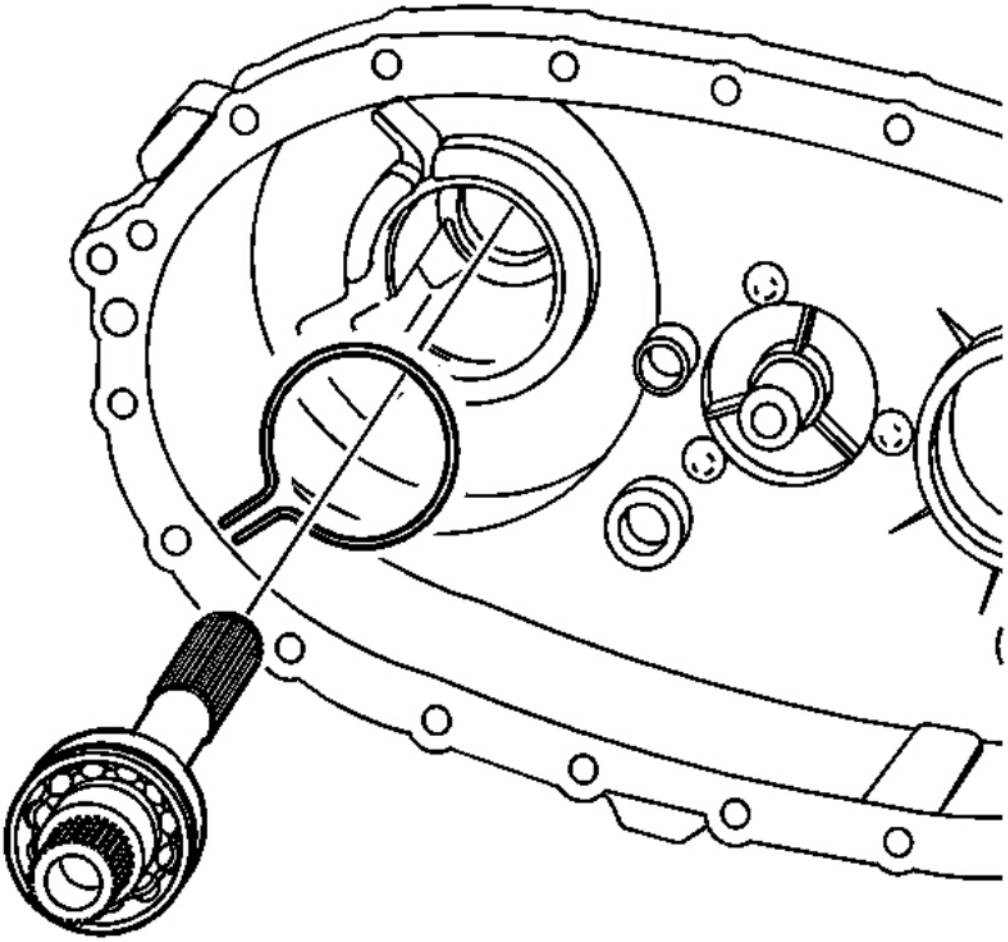

Fig. 81: View Of Rear Output Shaft In The Rear Case Half
Courtesy of GENERAL MOTORS CORP.

25. Install the rear output shaft in the rear case half.
    1. Spread the rear output shaft rear bearing outer retaining ring.
    2. Install, until the rear output shaft bearing outer retaining ring is seated in the bearing groove.

cardiagn.com

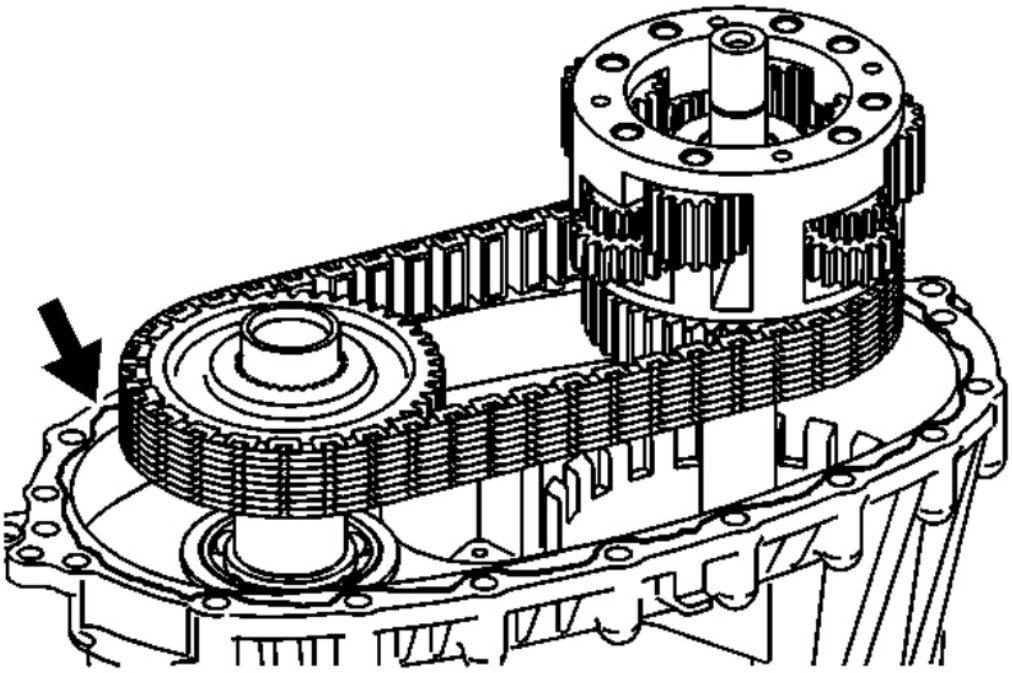

Fig. 82: Identifying Mating Surfaces On Case Half
Courtesy of GENERAL MOTORS CORP.

IMPORTANT:

- **Ensure that both the sealing surfaces on the front and rear case halves are free of dirt, oil, and cleaning solvent.**
- **Ensure the locating pins are installed in the case halves.**

26. Install the locating pins in the front case and rear case half, if necessary.
27. Apply a 3.175 mm (1/8 in) bead of room temperature vulcanizing (RTV) sealant GM P/N 12345739 (Canadian P/N 10953541), or equivalent, to the mating surfaces of the front case half.

cardiagn.com

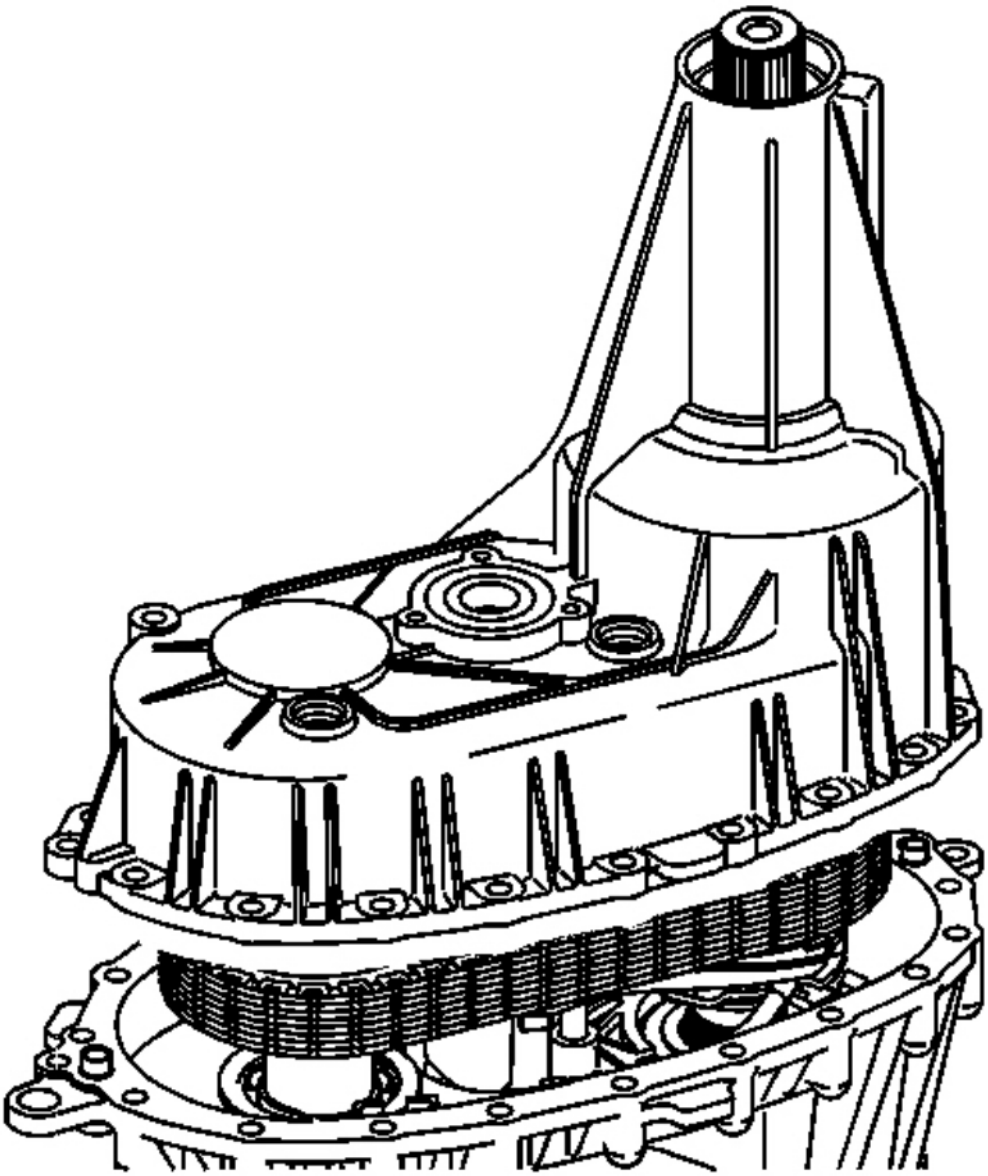

Fig. 83: View Of Rear Case Half & Front Case Half
Courtesy of GENERAL MOTORS CORP.

28. Lower the rear case half into place.

    The rear output may require rotating to align the teeth with the planetary carrier.

cardiagn.com

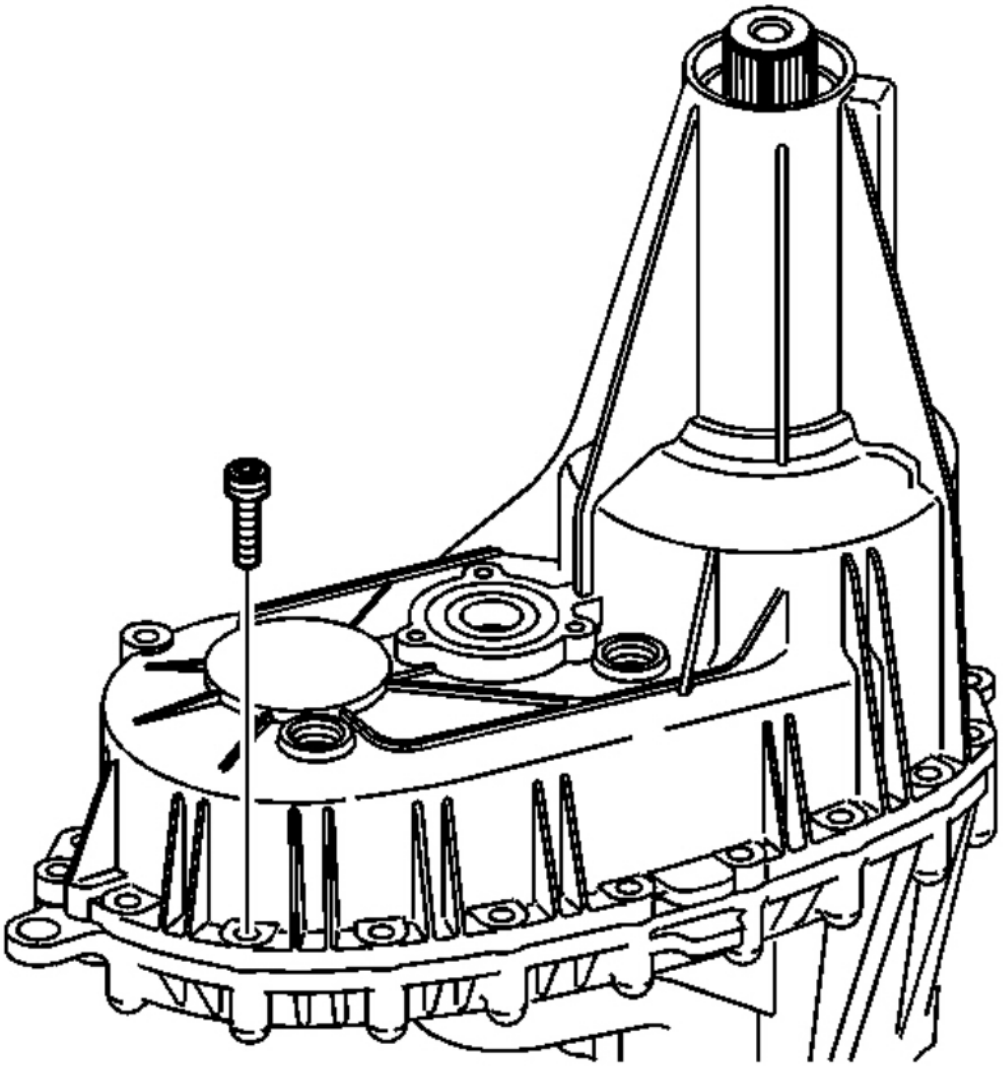

Fig. 84: View Of Transfer Case Bolts
Courtesy of GENERAL MOTORS CORP.

NOTE: **This component is made of magnesium. Proper assembly is required to prevent damage. Ensure the magnesium transfer case housings are properly insulated from all external steel components, or galvanic corrosion will occur. New nylon coated case bolts and aluminum washers must be used. Use only aluminum fill and drain plugs. Use only aluminum brackets under the case bolts. Ensure new seals are installed that have a**

cardiagn.com

rubber insulated outside diameter and have no tears or cuts. Extensive damage will occur if there is galvanic corrosion between the magnesium and steel components.

29. Inspect the nylon coating on the case bolts for cuts or tears.
30. Replace the case bolts if there is any damage to the nylon coating.

IMPORTANT: The case bolts are self-tapping; they must be hand started. Do not use power assisted tools to install the bolts.

31. Install the case bolts, the washers, and the brackets.

    Tighten: Tighten the case bolts to 21 N.m (15 lb ft).

cardiagn.com

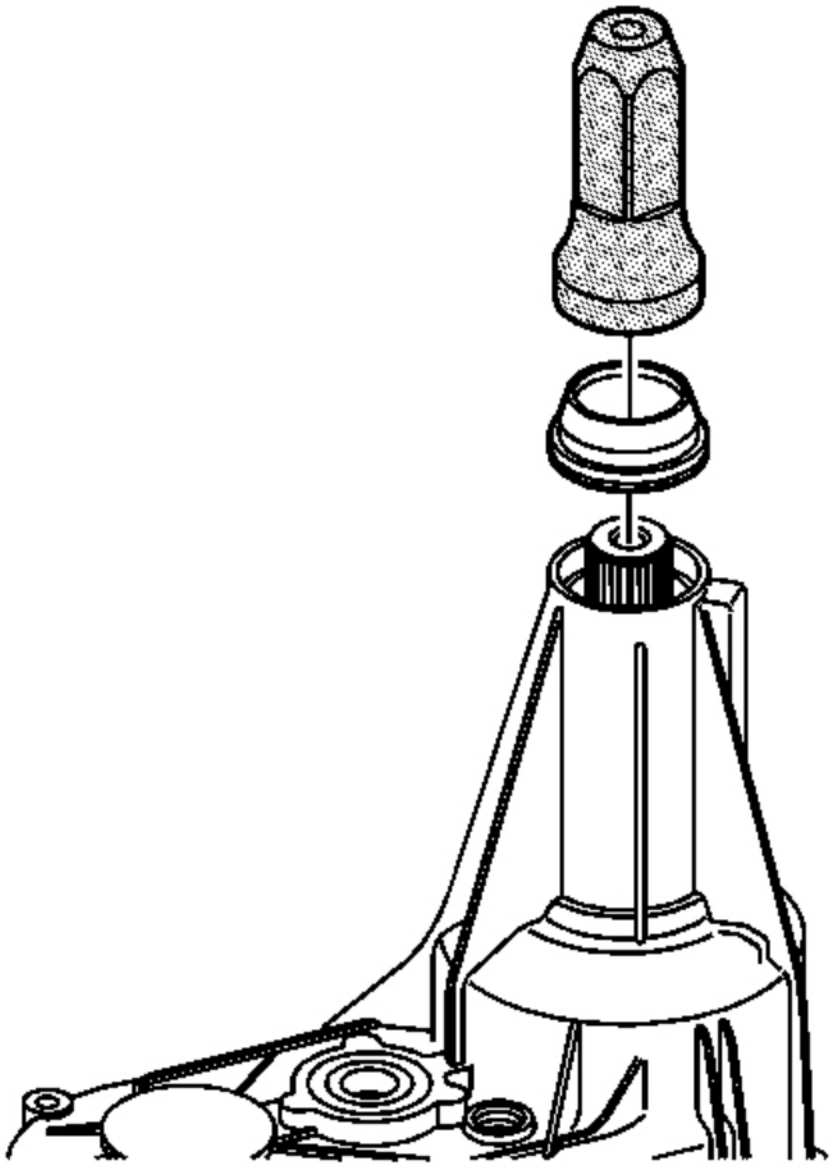

Fig. 85: Installing Rear Output Shaft Seal Using J 45756
Courtesy of GENERAL MOTORS CORP.

32. Using **J 45756** , install the rear output shaft seal. See **Special Tools**.

cardiagn.com

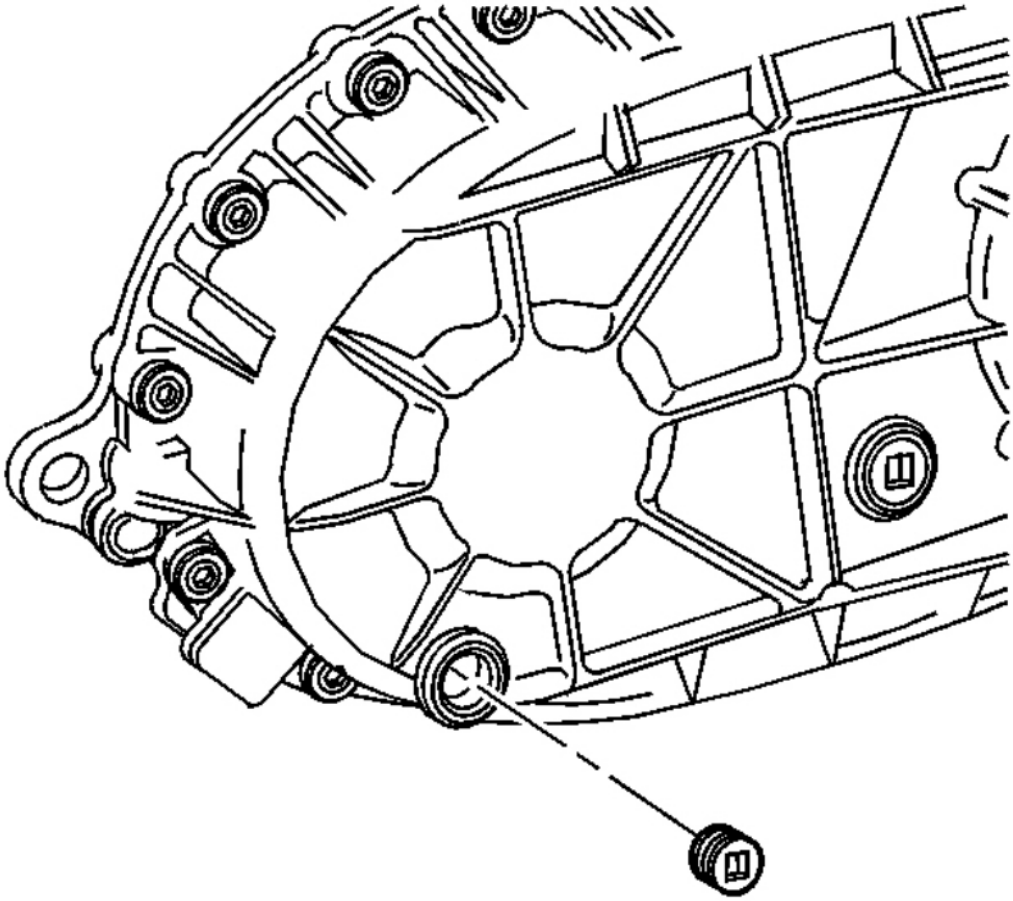

Fig. 86: View Of Transfer Case Drain Plug
Courtesy of GENERAL MOTORS CORP.

33. Apply pipe sealant GM P/N 12346004 (Canadian P/N 10953480) to the threads on the drain plug and fill plug.
34. Install the drain plug and the fill plug.

Tighten: Tighten the drain plug and fill plug to 25 N.m (18 lb ft).

cardiagn.com

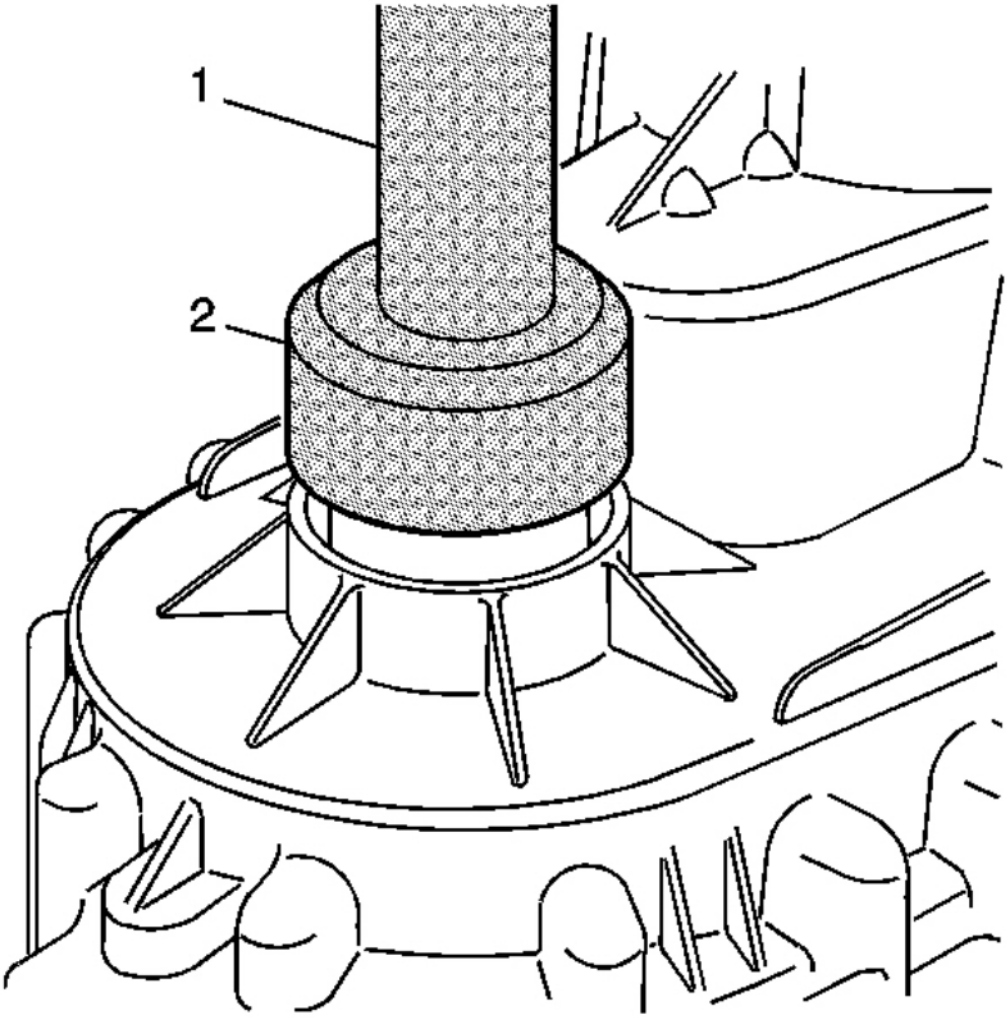

Fig. 87: Installing Front Output Shaft Seal Using J 43484 & J 8092
Courtesy of GENERAL MOTORS CORP.

35. Using the **J 43484** (2) and the **J 8092** (1), install the front output shaft seal. See **Special Tools**.

cardiagn.com

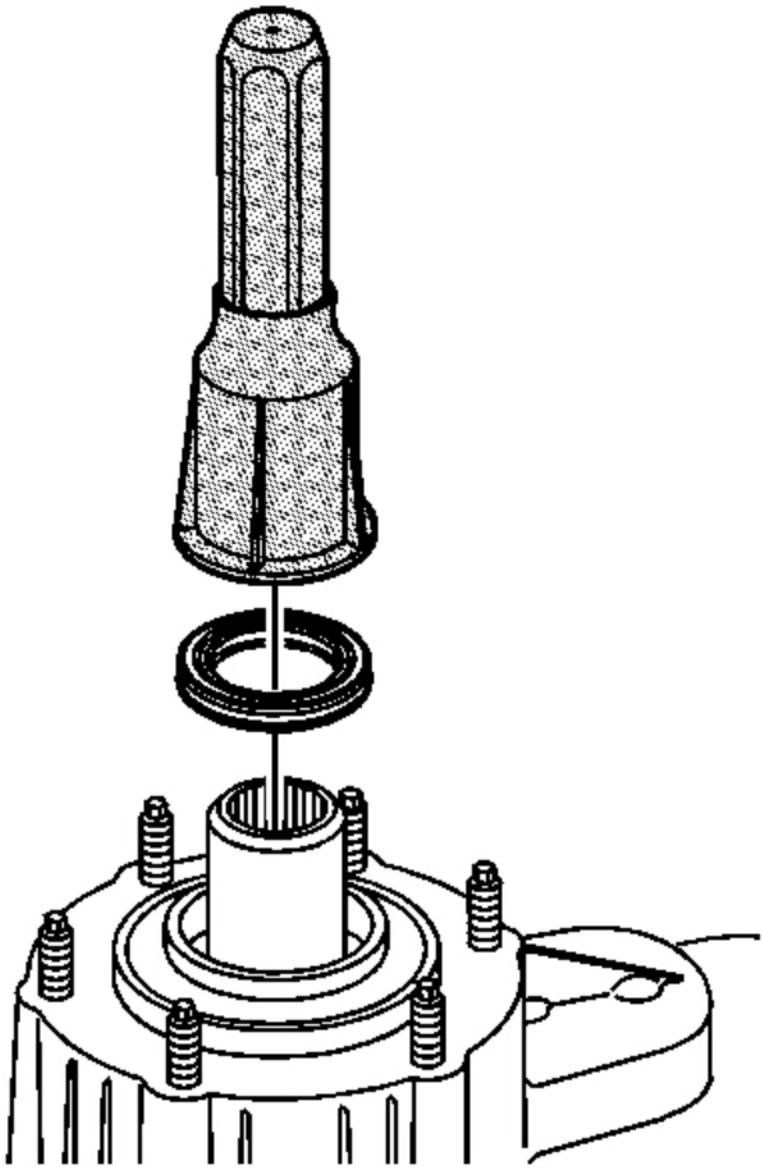

Fig. 88: Installing Input Shaft Seal Using J 42738
Courtesy of GENERAL MOTORS CORP.

36. Using the **J 42738** , install the front input shaft seal. See **Special Tools**.
37. Remove the transfer case from the **J 45759** . See **Special Tools**.

cardiagn.com

DESCRIPTION AND OPERATION

TRANSFER CASE DESCRIPTION AND OPERATION

The Borg Warner (BW) model 4485, RPO NR3 transfer case is a 1-speed, full time, all wheel drive (AWD), transfer case. The transfer case provides power to both axles, through an external planetary type differential, which has 2 different sets of pinion gears. The planetary differential provides a 40/60 torque split, front/rear, full time. This means both axles are constantly being driven for maximum traction in all conditions.

The transfer case external type planetary differential functions the same as a typical rear axle differential. The transfer case differential pinion gears function as the spider gears, and the sun gears function as the side gears.

The following actions occur because of the planetary differential:

- If the vehicle is on a hoist, the front propeller shaft can be rotated by hand.
- The vehicle cannot be driven if 1 propeller shaft is removed.
- Operating the vehicle on the hoist can damage the differential pinion gears, by over-spinning.
- Operating the vehicle with 1 propeller shaft removed causes over-spinning of the differential pinion gears.

The BW 4485 design of the planetary differential allows the use with the Vehicle Stability Enhancement System (VSES) vehicles. The VSES takes use of the planetary differential, by applying braking to a tire that has less traction and dividing the engine torque to the other axle.

The BW 4485 case halves are high-pressure, die-cast magnesium. Ball bearings support the input shaft, the front output shaft, and the rear output shaft. The transfer case requires DEXRON®III Automatic Transmission Fluid (ATF) GM P/N 12378470 (Canadian P/N 10952622), which is red in color.

Power Flow

cardiagn.com

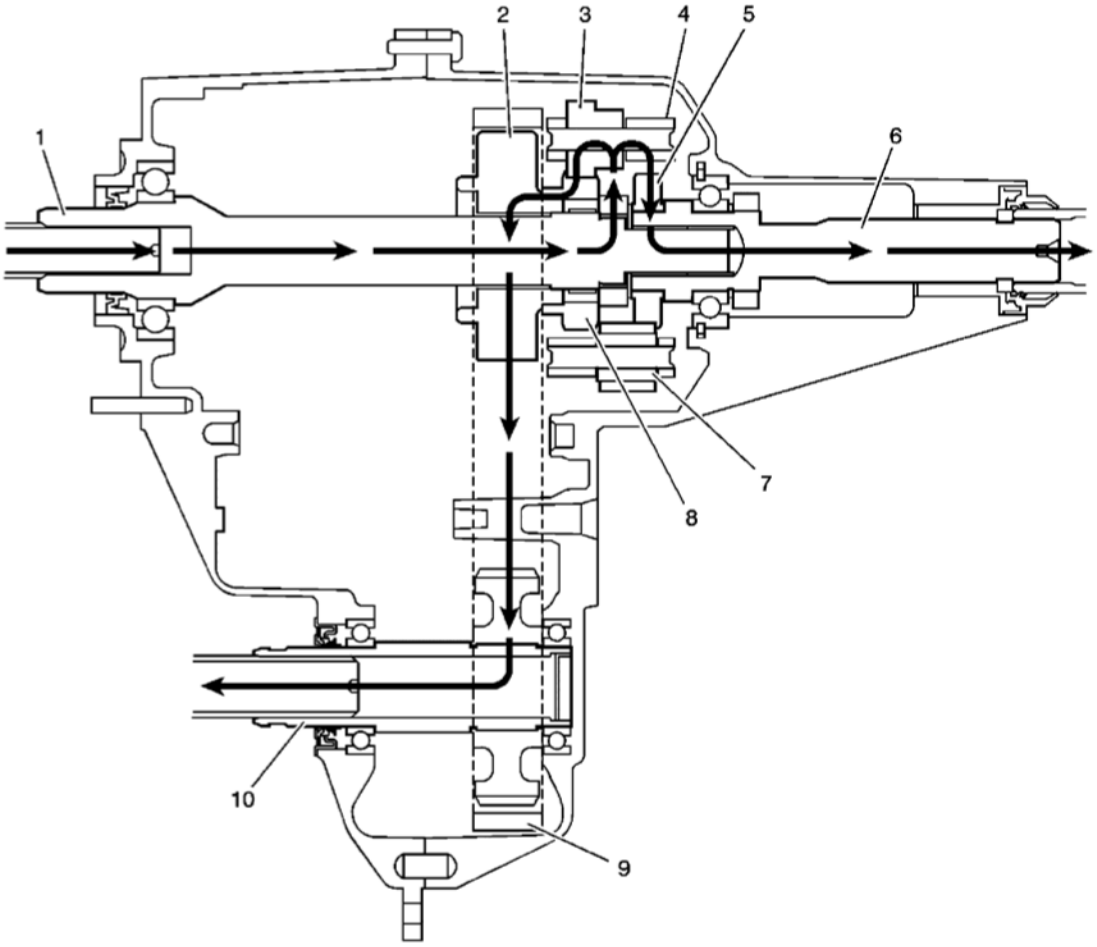

Fig. 89: Power Flow
Courtesy of GENERAL MOTORS CORP.

When the BW 4485 is operating in the AWD mode, the power flows from the transmission to the transfer case input shaft (1). The input shaft (1) delivers the power to the planetary differential (4). The case of the planetary differential (4) is splined to the input shaft (1). The planetary differential (4) splits the torque 40 percent through the front differential pinion gears (3) to the front sun gear (8). The front sun gear (8) is engaged with the drive sprocket (2), which drives the chain (9) to the front output shaft (10), and power is delivered to the front propeller shaft. 60 percent of the torque to the rear output shaft (6) goes through the rear differential pinion gears (7) and rear sun gear (5), which is connected to the rear output shaft (6) and to the rear propeller shaft.

SPECIAL TOOLS AND EQUIPMENT

SPECIAL TOOLS

Special Tools

Illustration	Tool Number/Description

cardiagn.com

	J 2619-01 Slide Hammer
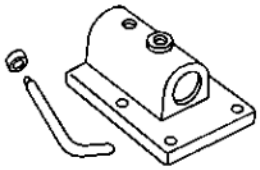	J 3289-20 Holding Fixture
	J 8092 Driver Handle
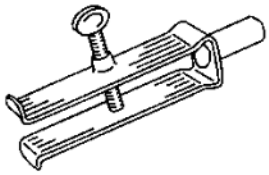	J 22912-01 Rear Pinion and Axle Bearing Remover
	J 23907 Slide Hammer with Bearing Adapter

cardiagn.com

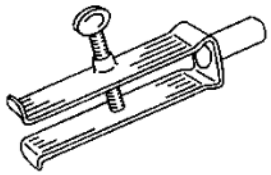	J 26941 Bushing and Bearing Remover - 3-4 inch
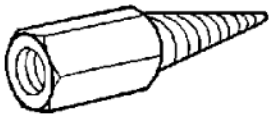	J 36825 Output Shaft Oil Seal Remover (4WD Models Only)
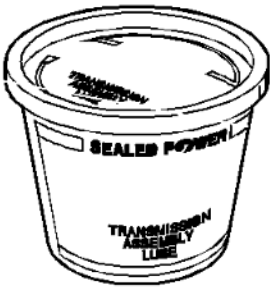	J 36850 Transjel Lubricant
	J 42176 Universal Driver Handle - Non-Threaded

cardiagn.com

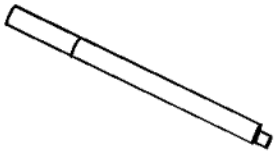	
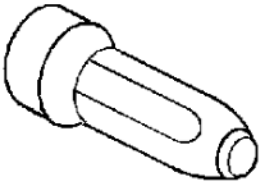	J 42738 Seal Installer
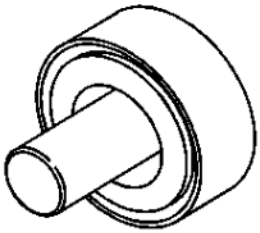	J 43484 Front Output Shaft Seal Installer
	J 45124 Removal Bridge

cardiagn.com

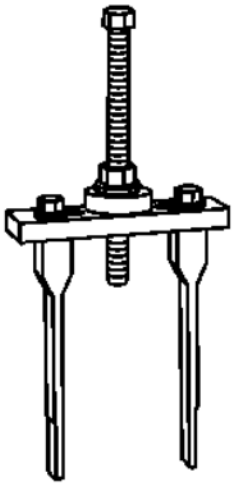

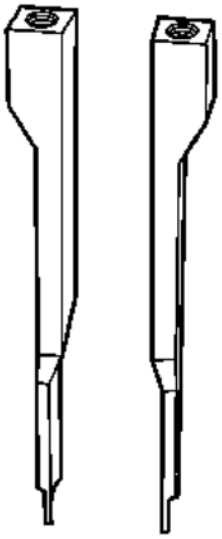

J-45124-9
Puller Legs

cardiagn.com

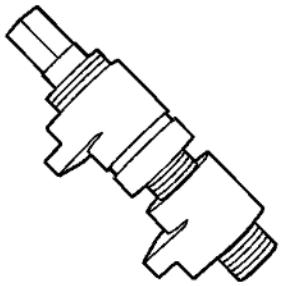	J 45358 Case Spreader
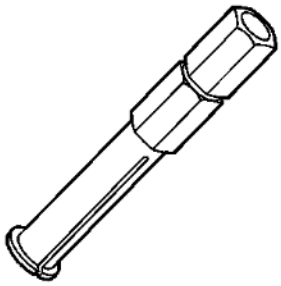	J 45548 Mainshaft Support Bushing/Bearing Remover
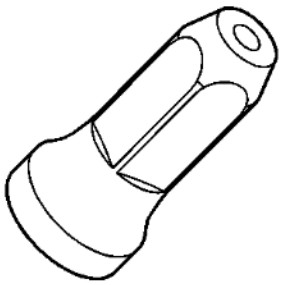	J 45756 Rear Output Shaft Seal Installer
	J 45757 Mainshaft Support Bushing and Bearing Installer

cardiagn.com

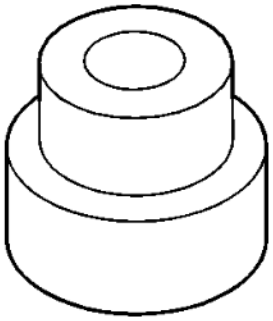	
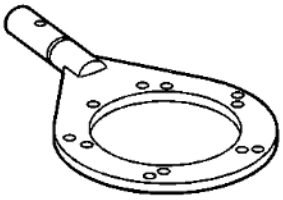	J 45759 Assembly Fixture

cardiagn.com