Workshop Manual

Audi A4 2008 ➤ ,
Audi A5 Cabriolet 2009 ➤ ,
Audi A5 Coupé 2008 ➤ , Audi A6 2011 ➤ ,
Audi A6 China 2012 ➤ ,
Audi A7 Sportback 2011 ➤ ,
Audi A8 2010 ➤ , Audi Q5 2008 ➤ ,
Audi Q5 China 2010 ➤

Rear final drive 0BC, 0BD, 0BE, 0BF

Protected by copyright. Copying for private or commercial purposes, in part or in whole, is not permitted unless authorized by AUDI AG. AUDI AG does not guarantee or accept any liability with respect to the correctness and completeness of this document. Copyright by AUDI AG.

Edition 06.2018

List of Workshop Manual Repair Groups

Repair Group

00 - Technical data

39 - Final drive - rear differential

Protected by copyright. Copying for private or commercial purposes, in part or in whole, is not permitted unless authorised by AUDI AG. AUDI AG does not guarantee or accept any liability with respect to the correctness of information in this document. Copyright by AUDI AG.

Technical information should always be available to the foremen and mechanics, because their careful and constant adherence to the instructions is essential to ensure vehicle road-worthiness and safety. In addition, the normal basic safety precautions for working on motor vehicles must, as a matter of course, be observed.

All rights reserved.
No reproduction without prior agreement from publisher.

Copyright © 2018 Audi AG, Ingolstadt

A005A502720

Contents

00 - Technical data 1
1 **Identification** 1
1.1 Identification of final drive 1
2 **Technical data** 5
2.1 Allocation of gearbox to engine 5
2.2 Capacities 5
3 **Transmission layout** 8
4 **Electrical components** 9
4.1 Overview of fitting locations - electrical components 9
5 **Safety precautions** 10
5.1 General safety precautions 10
5.2 Safety precautions when working on high-voltage vehicles 11
6 **Repair instructions** 14
6.1 General repair instructions 14
6.2 Safety precautions and testing 14
6.3 Jacking mode for vehicles with air suspension 16
6.4 Special tools 16
6.5 Components 16

39 - Final drive - rear differential 19
1 **Propshaft** 19
1.1 Exploded view - propshaft 19
1.2 Removing and installing propshaft 24
1.3 Detaching and attaching propshaft at rear final drive 37
1.4 Detaching and attaching propshaft at gearbox 39
1.5 Renewing protective boot 41
2 **Final drive** 45
2.1 Exploded view - final drive 45
2.2 Removing and installing final drive 48
3 **Dismantling and assembling final drive** 90
3.1 Exploded view - dismantling and assembling final drive 90
3.2 Removing and installing hydraulic control unit 93
3.3 Dismantling and assembling hydraulic control unit 96
3.4 Removing and installing all-wheel drive pump V415 99
3.5 Removing and installing oil pressure and oil temperature sender G437 or oil pressure and oil temperature sender 2 G640 101
3.6 Removing and installing clutch valve for all-wheel drive N445 or clutch valve 2 for all-wheel drive N446 104
3.7 Checking torque distribution 106
4 **Gear oil** 107
4.1 Overview of fitting locations - drain and inspection plugs 107
4.2 Checking gear oil level 107
4.3 Draining and filling gear oil 109
5 **ATF** 118
5.1 Overview of fitting locations - drain and inspection plugs 118
5.2 Checking ATF level 118
5.3 Draining and filling ATF 119
6 **Oil seals** 124
6.1 Overview of fitting locations - oil seals 124
6.2 Renewing oil seal (left-side) 125
6.3 Renewing oil seal (right-side) 132
6.4 Renewing input shaft oil seal 132

Protected by copyright. Copying for private or commercial purposes, in part or in whole, is not permitted unless authorised by AUDI AG. AUDI AG does not guarantee or accept any liability with respect to the correctness of information in this document. Copyright by AUDI AG.

6.5 Renewing protective ring on flange shaft 156
6.6 Renewing protective ring on input shaft flange 163
7 Renewing propshaft flange - 0BD 169
8 Gearbox control system 173
8.1 Overview of fitting locations - gearbox control system 173
8.2 Removing and installing all-wheel drive control unit J492 175
8.3 Additional work required after renewing all-wheel drive control unit J492 176

Protected by copyright. Copying for private or commercial purposes, in part or in whole, is not permitted unless authorised by AUDI AG. AUDI AG does not guarantee or accept any liability with respect to the correctness of information in this document. Copyright by AUDI AG.

00 – Technical data

1 Identification

(ARL005854; Edition 06.2018)

⇒ “1.1 Identification of final drive”, page 1

1.1 Identification of final drive

⇒ “1.1.1 Identification of final drive 0BC”, page 1

⇒ “1.1.2 Identification of final drive 0BD”, page 2

⇒ “1.1.3 Identification of final drive 0BE, 0BF”, page 3

1.1.1 Identification of final drive 0BC

The rear final drive 0BC is installed in conjunction with the following gearbox types:

- 6-speed manual gearbox 0B2, four-wheel drive
- 6-speed manual gearbox 0B4, four-wheel drive
- 7-speed dual clutch gearbox 0B5, four-wheel drive
- Automatic gearbox 0B6, four-wheel drive
- 8-speed automatic gearbox 0BK, four-wheel drive
- 8-speed automatic gearbox 0BW, four-wheel drive (Q5 hybrid only)

Rear final drive allocation

- ⇒ “2.1 Allocation of gearbox to engine”, page 5

Location on rear final drive

Final drive 0BC -arrow 1- and 0AR

Code letters and date of manufacture -arrow 2-

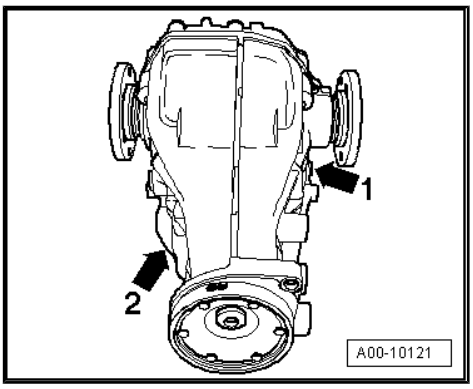

Final drive 0BC -arrow- and 0AR

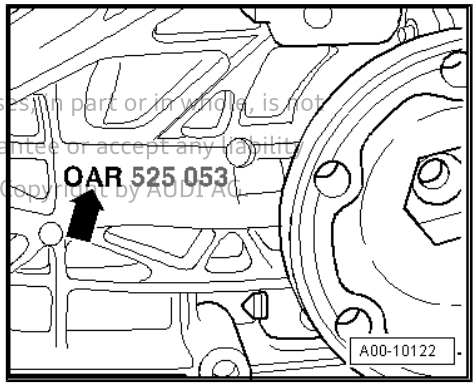

Protected by copyright. Copying for private or commercial purposes, in part or in whole, is not permitted unless authorised by AUDI AG. AUDI AG does not guarantee or accept any liability with respect to the correctness of information in this document. Copyright by AUDI AG.

Note

- *The designation "0AR" always appears on the rear final drive housing. The distinguishing features for final drives "0BC" and "0AR" are housing modifications.*
- *An additional distinguishing feature is the position of the threaded holes -arrows- used to secure the cross member to the rear final drive.*
- *On the final drive unit "0BC" there are four threaded holes -arrows- in the final drive housing for securing the cross member. There is also an additional threaded hole below the propshaft flange, for securing the final drive to the subframe.*

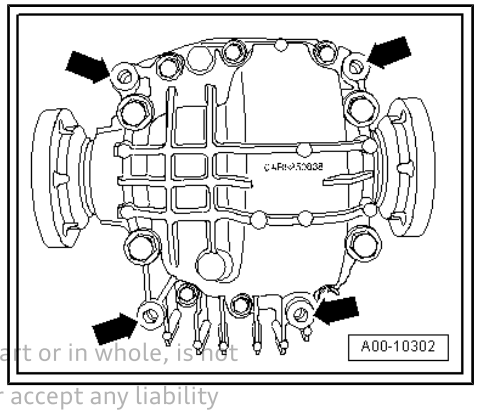

Protected by copyright. Copying for private or commercial purposes, in part or in whole, is not permitted unless authorised by AUDI AG. AUDI AG does not guarantee or accept any liability with respect to the correctness of information in this document. Copyright by AUDI AG.

Code letters and date of manufacture for rear final drive

Example:	JKS	15	03	07
	I	I	I	I
	Code letters	Day	Month	Year -2007- of manufacture

Other information can be disregarded.

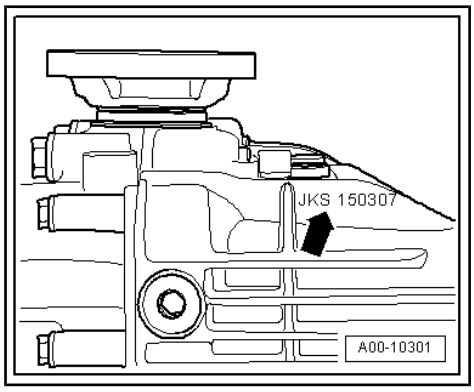

Note

When installing a new rear final drive unit, it is important to verify not only the code letters but also the PR No. and the engine code of the vehicle in the ⇒ Electronic parts catalogue . This is necessary to ensure that the correct version is installed.

1.1.2 Identification of final drive 0BD

The rear final drive 0BD is installed in conjunction with the following gearbox types:

- 6-speed manual gearbox 0B2, four-wheel drive
- 6-speed manual gearbox 0B4, four-wheel drive
- 7-speed dual clutch gearbox 0B5, four-wheel drive
- Automatic gearbox 0B6, four-wheel drive
- 8-speed automatic gearbox 0BK, four-wheel drive

Rear final drive allocation

- ⇒ "2.1 Allocation of gearbox to engine", page 5

Location on rear final drive

Final drive 0BD, code letters and date of manufacture -arrow-

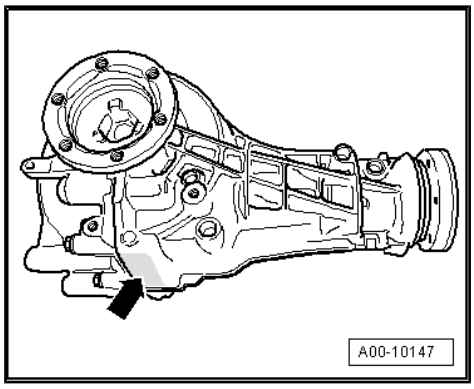

-Arrow A- Final drive 0BD with Part No. (in this example 0BD 500 043A)

-Arrow B- Code letters "JTN"

-Arrow C- Manufacturing data of rear final drive

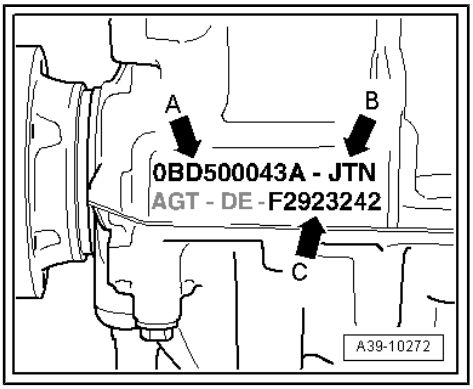

Example:	F	292	3242
	I	I	I
	Year of manufacture -2006- F = 2006, G = 2007, H = 2008 ...	Day of manufacture -292nd day of year- (always specified in three digits)	Serial number on day of manufacture

Other information can be disregarded.

Note

When installing a new rear final drive unit, it is important to verify not only the code letters of the rear final drive but also the PR No. and the engine code of the vehicle in the ⇒ Electronic parts catalogue . This is necessary to ensure that the correct version is installed.

Protected by copyright. Copying for private or commercial purposes, in part or in whole, is not permitted unless authorised by AUDI AG. AUDI AG does not guarantee or accept any liability with respect to the correctness of information in this document. Copyright by AUDI AG.

1.1.3 Identification of final drive 0BE, 0BF

The »rear final drive 0BF« is installed in the Audi A4 2008 ►, Audi A5 Coupé 2008 ►, Audi A5 Cabriolet 2009 ►, Audi A6 2011 ►, Audi A7 2011 ► and Audi A8 2010 ►.

It is employed in conjunction with the following gearbox types:

- 6-speed manual gearbox 0B2, four-wheel drive
- 6-speed manual gearbox 0B4, four-wheel drive
- 7-speed dual clutch gearbox 0B5, four-wheel drive
- Automatic gearbox 0B6, four-wheel drive
- 8-speed automatic gearbox 0BK, four-wheel drive

The »rear final drive 0BE« is an uprated version of the »0BF« unit and is installed exclusively with the V8 TDI engine in the Audi A8 2010 ►.

It is employed in conjunction with the following gearbox:

- 8-speed automatic gearbox 0BL, four-wheel drive

Rear final drive allocation

- ⇒ "2.1 Allocation of gearbox to engine", page 5

Location on rear final drive

Classification of clutches -arrow 1-

Code letters and date of manufacture -arrow 2-

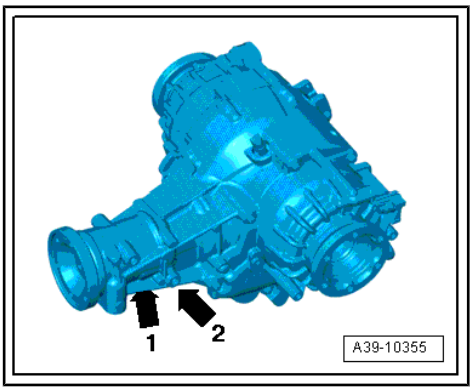

Note

The rear final drive units 0BF and 0BE can be identified by the hydraulic control unit with superposition gears at the sides.

- -Arrow 1- Code letters -LFW-
- -Arrow 2- Manufacturing data of rear final drive

Example:	08	12	09
	I Year -2008- of manufacture	I Month	I Day

- -Arrow 3- Classification of clutch on right side (classification of friction coefficients for clutch). Example: -272D-
- -Arrow 4- Classification of clutch on left side (classification of friction coefficients for clutch). Example: -4A10-

Other information can be disregarded.

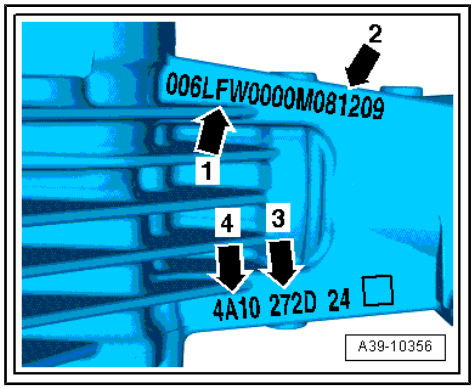

Note

When installing a new rear final drive unit, it is important to verify not only the code letters of the final drive but also the PR No. and the engine code of the vehicle in the ⇒ Electronic parts catalogue . This is necessary to ensure that the correct version is installed.

Protected by copyright. Copying for private or commercial purposes, in part or in whole, is not permitted unless authorised by AUDI AG. AUDI AG does not guarantee or accept any liability with respect to the correctness of information in this document. Copyright by AUDI AG.

2 Technical data

⇒ "2.1 Allocation of gearbox to engine", page 5

⇒ "2.2 Capacities", page 5

Protected by copyright. Copying for private or commercial purposes, in part or in whole, is not permitted unless authorised by AUDI AG. AUDI AG does not guarantee or accept any liability with respect to the correctness of information in this document. Copyright by AUDI AG.

2.1 Allocation of gearbox to engine

The following data can be found in the ⇒ Electronic parts catalogue .

- Code letters
- Production dates
- Axle ratio
- Allocation of drive shaft flanges
- Allocation to engine and manual or automatic gearbox according to code letters and PR numbers

2.2 Capacities

⇒ "2.2.1 Capacities - rear final drive 0BC", page 5

⇒ "2.2.2 Capacities - rear final drive 0BD", page 5

⇒ "2.2.3 Capacities - rear final drive 0BF", page 5

⇒ "2.2.4 Capacities - rear final drive 0BE", page 6

2.2.1 Capacities - rear final drive 0BC

Rear final drive	0BC
Capacity	0.9 ltr.
♦ Gear oil specifications ⇒ Electronic parts catalogue	

– Checking gear oil level (bevel box) ⇒ page 107

2.2.2 Capacities - rear final drive 0BD

Rear final drive	0BC
Capacity	0.9 ltr.
♦ Gear oil specifications ⇒ Electronic parts catalogue	

– Checking gear oil level (bevel box) ⇒ page 107

2.2.3 Capacities - rear final drive 0BF

⚠ Caution

Gear oil and ATF change

- *On some RS models, the gear oil and the ATF must be changed.*
- *For change interval, refer to ⇒ Maintenance tables .*
- *For all other vehicles no change is required.*

Rear final drive	0BF
Gear oil capacity ◆ For final drive (differential and pinion shaft) ◆ No change required, except for RS models ◆ Change interval for RS models ⇒ Maintenance tables ◆ ⇒ “4.2 Checking gear oil level”, page 107 ◆ ⇒ “4.3 Draining and filling gear oil”, page 109	0.95 ltr.
Gear oil specification	⇒ Electronic parts catalogue
ATF capacity ◆ For hydraulic control unit and superposition gears ◆ No change required, except for RS models ◆ Change interval for RS models ⇒ Maintenance tables ◆ ⇒ “5.2 Checking ATF level”, page 118 ◆ ⇒ “5.3 Draining and filling ATF”, page 119	approx. 0.85 ltr.
ATF specification	⇒ Electronic parts catalogue

2.2.4 Capacities - rear final drive 0BE

Note

The rear final drive 0BE is only installed in conjunction with the V8 TDI engine.

Protected by copyright. Copying for private or commercial purposes, in part or in whole, is not permitted unless authorised by AUDI AG. AUDI AG does not guarantee or accept any liability with respect to the correctness of information in this document. Copyright by AUDI AG.

Rear final drive	0BE
Gear oil capacity ◆ For final drive (differential and pinion shaft) ◆ No change required, except for RS models ◆ Change interval for RS models ⇒ Maintenance tables ◆ ⇒ “4.2 Checking gear oil level”, page 107	1.4 ltr.
Gear oil specification	⇒ Electronic parts catalogue
ATF capacity ◆ For hydraulic control unit and superposition gears ◆ No change required, except for RS models ◆ Change interval for RS models ⇒ Maintenance tables ◆ ⇒ “5.2 Checking ATF level”, page 118	1.4 ltr.
ATF specification	⇒ Electronic parts catalogue

Protected by copyright. Copying for private or commercial purposes, in part or in whole, is not permitted unless authorised by AUDI AG. AUDI AG does not guarantee or accept any liability with respect to the correctness of information in this document. Copyright by AUDI AG.

3 Transmission layout

1 - Gearbox

2 - Propshaft

- ❑ Exploded view ⇒ page 19
- ❑ Removing and installing ⇒ page 24

3 - Rear final drive

- ❑ Removing and installing ⇒ page 45
- ❑ Dismantling and assembling ⇒ page 90

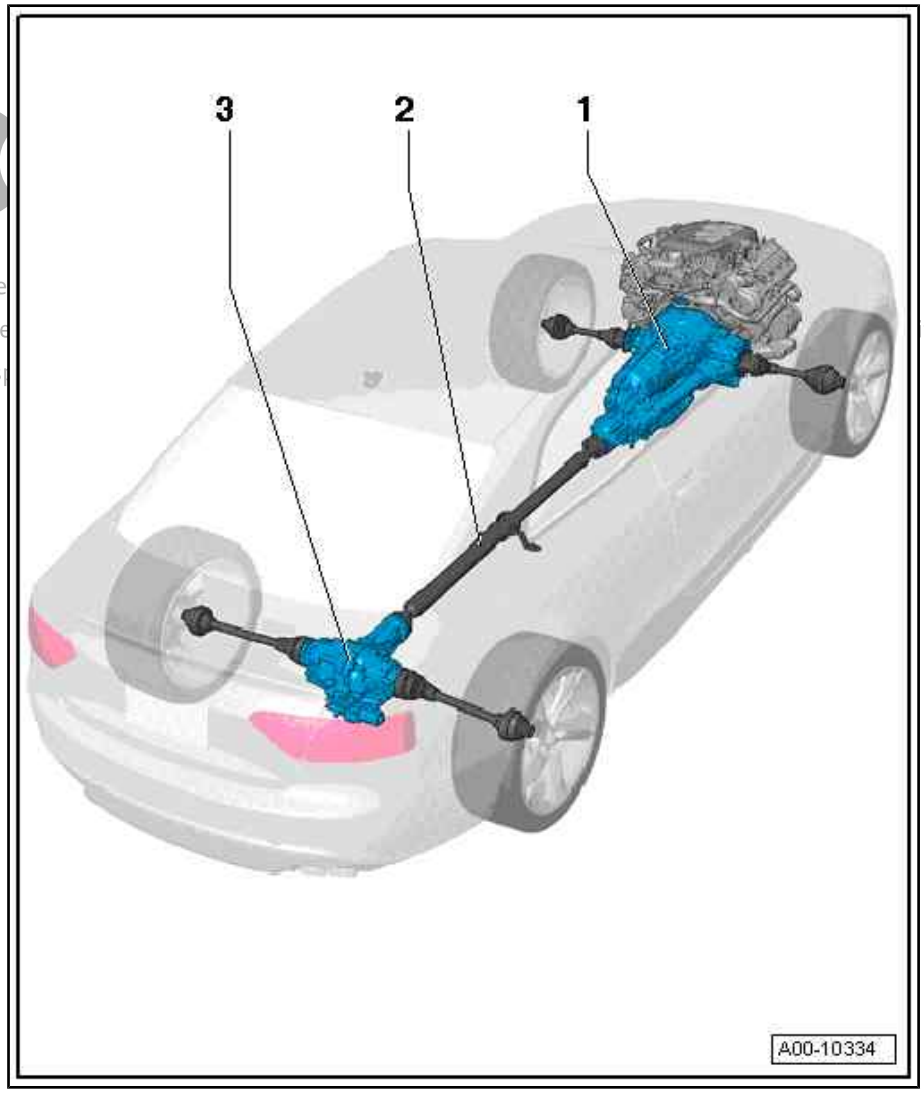

Protected not permitted ty with resp

4 Electrical components

⇒ "4.1 Overview of fitting locations - electrical components", page 9

4.1 Overview of fitting locations - electrical components

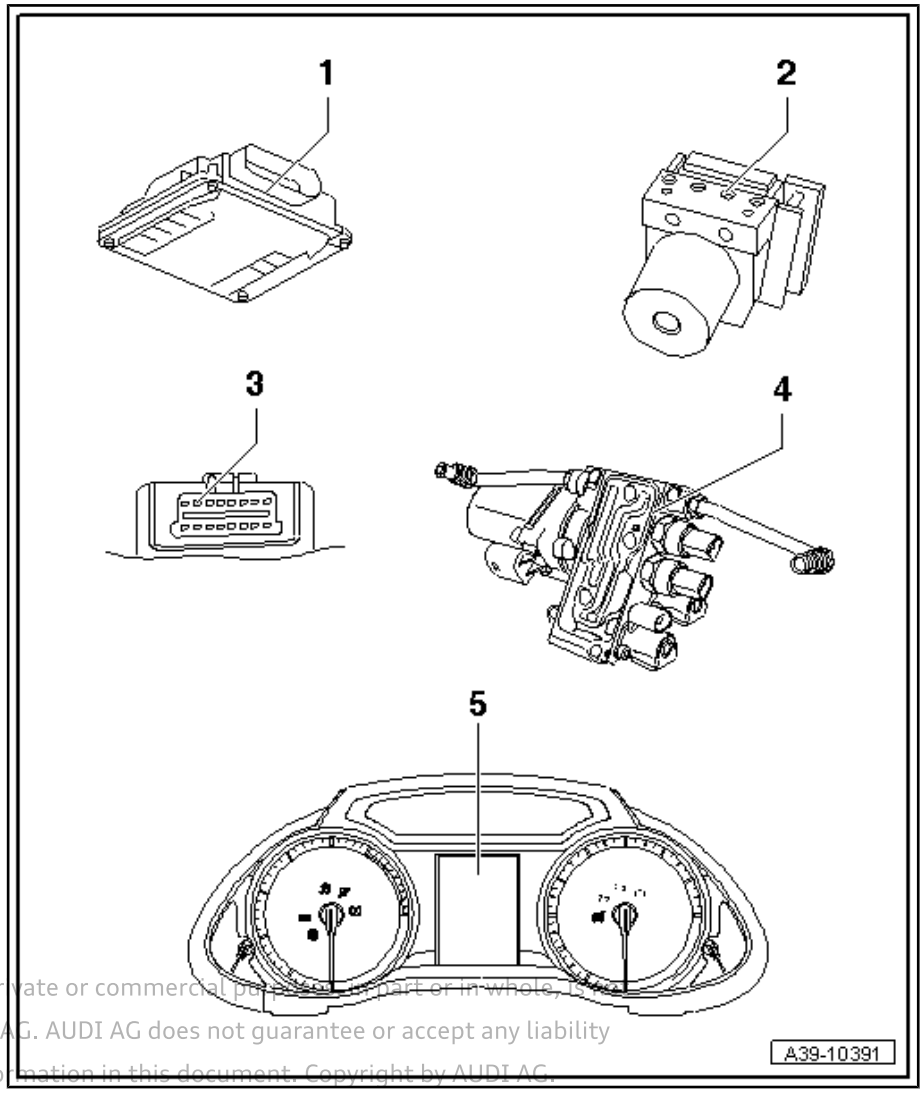

1 - All-wheel drive control unit - J492-

- ❑ Fitting location in A4 saloon, A5 Coupé and A5 Cabriolet ⇒ page 173
- ❑ Fitting location in A4 Avant ⇒ page 173
- ❑ Fitting location in A5 Sportback ⇒ page 174
- ❑ Fitting location in A6 and A7 ⇒ page 174
- ❑ Fitting location in A8 ⇒ page 174
- ❑ Removing and installing ⇒ page 175
- ❑ Additional work required after renewing control unit ⇒ page 176
- ❑ Important signals are transferred from the engine control unit and ABS control unit - J104- via data bus to the all-wheel drive control unit

2 - ABS control unit - J104-

- ❑ Fitting location; removing and installing ⇒ Brake system; Rep. gr. 45 ; Overview of fitting locations

3 - Diagnostic connection

- ❑ Fitting location: in driver's footwell (front) ⇒ page 173
- ❑ Connecting vehicle diagnostic tester and selecting functions

Protected by copyright. Copying for private or commercial purposes, in part or in whole, is not permitted unless authorised by AUDI AG. AUDI AG does not guarantee or accept any liability with respect to the correctness of information in this document. Copyright by AUDI AG.

4 - Hydraulic control unit

- ❑ Fitting location: on rear final drive
- ❑ Removing and installing ⇒ page 93
- ❑ Dismantling and assembling ⇒ page 96
- ❑ Hydraulic control unit with:

- ♦ All-wheel drive pump - V415- ⇒ page 99
- ♦ Oil pressure and oil temperature sender 2 - G640- ⇒ page 101
- ♦ Oil pressure and oil temperature sender - G437- ⇒ page 101
- ♦ Clutch valve 2 for all-wheel drive - N446- ⇒ page 104
- ♦ Clutch valve for all-wheel drive - N445- ⇒ page 104

5 - Instrument cluster display

5 Safety precautions

⇒ “5.1 General safety precautions”, page 10

⇒ “5.2 Safety precautions when working on high-voltage vehicles”, page 11

Protected by copyright. Copying for private or commercial purposes, in part or in whole, is not permitted unless authorised by AUDI AG. AUDI AG does not guarantee or accept any liability with respect to the correctness of information in this document. Copyright by AUDI AG.

5.1 General safety precautions

Observe the following precautions to avoid possible injury and/or damage to the vehicle:

> ⚠ WARNING
>
> *Accidents and injury can be caused if a gear is inadvertently engaged while the engine is running.*
>
> - *Before performing any work with the engine running, set the gearbox to position “P” and pull up the parking brake button to apply the electromechanical parking brake.*
>
> *Danger from toxic exhaust gases when engine is running.*
>
> - *When the engine is running, the exhaust system must always be connected to the exhaust gas extractor.*

Safety precautions for vehicles with start/stop system

> ⚠ WARNING
>
> *Risk of injury due to automatic engine start on vehicles with start/stop system.*
>
> - *On vehicles with activated start/stop system (indicated by a message in the instrument cluster), the engine may start automatically if it needs to.*
> - *Therefore it is important to ensure that the start/stop system is deactivated when performing repairs (switch off ignition, if required switch on ignition again).*

Observe the following precautions to avoid possible injury and/or irreparable damage to electrical and electronic components:

- Switch off ignition before disconnecting and connecting test equipment.

> ⚠ Caution
>
> *When disconnecting the battery there is a risk of irreparable damage to electronic components.*
>
> - *Observe notes on procedure for disconnecting the battery.*
> - *Always switch off the ignition before disconnecting the battery.*

– Disconnect battery ⇒ Electrical system; Rep. gr. 27 ; Battery; Disconnecting and connecting battery .

Note the following if testers and measuring instruments have to be used during a road test:

WARNING

Accidents can be caused if the driver is distracted by test equipment or if test equipment is not secured.

There is a risk of injury if the front passenger's airbag is triggered during an accident.

- *The use of test equipment while driving causes distraction.*
- *There is an increased risk of injury if test equipment is not secured.*

◆ *Always secure test equipment to the rear seat with a strap and have it operated from there by a second person.*

5.2 Safety precautions when working on high-voltage vehicles

⇒ "5.2.1 Safety precautions for de-energising high-voltage system", page 11

⇒ "5.2.2 Safety precautions for re-energising high-voltage system", page 12

5.2.1 Safety precautions for de-energising high-voltage system

- The high-voltage system may only be de-energised by a suitably qualified person (Audi high-voltage technician). For a definition and explanation of the relevant qualifications, please refer to ⇒ Electrical system, hybrid; Rep. gr. 93 ; General warning instructions for work on the high-voltage system .
- The system must first be de-energised before any work is done on the high-voltage system. The types of work for which the high-voltage system has to be de-energised are indicated in the instructions for the procedure. For further information on the procedure for de-energising the high-voltage system please refer to ⇒ Electrical system, hybrid; Rep. gr. 93 ; De-energising high-voltage system .
- Read and observe all additional warnings and descriptions for work on the high-voltage system ⇒ Electrical system, hybrid; Rep. gr. 93 ; General warning instructions for work on the high-voltage system .

Protected by copyright. Copying for private or commercial purposes, in part or in whole, is not permitted unless authorised by AUDI AG. AUDI AG does not guarantee or accept any liability with respect to the correctness of information in this document. Copyright by AUDI AG.

Note

In the event of queries or uncertainty regarding the terms "electrically instructed person", "Audi high-voltage technician", "Audi specialist for work on high-voltage systems" or the high-voltage system itself, the relevant importer must be contacted prior to the start of all work.

For work that requires de-energising of the high-voltage system, please note:

The high-voltage system must be de-energised according to the `Guided Fault Finding` routine in the ⇒ Vehicle diagnostic tester , and ONLY by this method.

DANGER!

High voltage can cause fatal injury.

Danger of severe or fatal injuries from electric shock

- *The high-voltage system may only be de-energised by a suitably qualified person (Audi high-voltage technician).*
- *It must be definitely confirmed that the high-voltage system is de-energised. The system may only be de-energised using the vehicle diagnostic tester via "Guided Fault Finding".*
- *The qualified person (Audi high-voltage technician) confirms that the system is de-energised and uses the locking cap - T40262- to ensure that the system cannot be re-energised. As an additional precaution, the ignition key and the maintenance connector for high-voltage system - TW- are then stored in a safe place by the qualified person.*
- *The qualified person (Audi high-voltage technician) marks the vehicle by attaching the appropriate warning signs.*

5.2.2 Safety precautions for re-energising high-voltage system

- The high-voltage system may only be re-energised by a suitably qualified person (Audi high-voltage technician). For a definition and explanation of the relevant qualifications, please refer to ⇒ Electrical system, hybrid; Rep. gr. 93 ; General warning instructions for work on the high-voltage system .
- Re-energising the high-voltage system ⇒ Electrical system, hybrid; Rep. gr. 93 ; Re-energising high-voltage system .
- Read and observe all additional warnings and descriptions for work on the high-voltage system ⇒ Electrical system, hybrid; Rep. gr. 93 ; General warning instructions for work on the high-voltage system .

Note

In the event of queries or uncertainty regarding the terms "electrically instructed person", "Audi high-voltage technician", "Audi specialist for work on high-voltage systems" or the high-voltage system itself, the relevant importer must be contacted prior to the start of all work.

The high-voltage system must be re-energised according to the `Guided Fault Finding` routine in the vehicle diagnostic tester , and ONLY by this method.

Protected by copyright. Copying for private or commercial purposes, in part or in whole, is not permitted unless authorised by AUDI AG. AUDI AG does not guarantee or accept any liability with respect to the correctness of information in this document. Copyright by AUDI AG.

DANGER!

High voltage can cause fatal injury.

Danger of severe or fatal injuries from electric shock.

- *The high-voltage system may only be re-energised by a suitably qualified person (Audi high-voltage technician).*
- *The system may only be re-energised using the vehicle diagnostic tester via "Guided Fault Finding".*
- *The vehicle is then made ready for operation again by the qualified person (Audi high-voltage technician).*
- *The qualified person (Audi high-voltage technician) marks the vehicle by attaching the appropriate warning signs.*

Protected by copyright. Copying for private or commercial purposes, in part or in whole, is not permitted unless authorised by AUDI AG. AUDI AG does not guarantee or accept any liability with respect to the correctness of information in this document. Copyright by AUDI AG.

6 Repair instructions

⇒ “6.1 General repair instructions”, page 14

⇒ “6.2 Safety precautions and testing”, page 14

⇒ “6.3 Jacking mode for vehicles with air suspension”, page 16

⇒ “6.4 Special tools”, page 16

⇒ “6.5 Components”, page 16

6.1 General repair instructions

Proper tools and the maximum possible care and cleanliness are essential for satisfactory repairs to the transmission units. The usual basic safety precautions also naturally apply when carrying out repair work.

To avoid unnecessary repetition, a number of generally applicable instructions for the various repair procedures are summarised here under the heading “Components” ⇒ page 16 . They apply to the work described in this Manual.

6.2 Safety precautions and testing

WARNING

If repairs to the rear final drive 0BF and 0BE are not carried out correctly, this can lead to malfunctions of the final drive.

- *Tests, repairs and service work may only be performed by suitably qualified staff.*

Protected by copyright. Copying for private or commercial purposes, in part or in whole, is not permitted unless authorised by AUDI AG. AUDI AG does not guarantee or accept any liability with respect to the correctness of information in this document. Copyright by AUDI AG.

Correct oil level

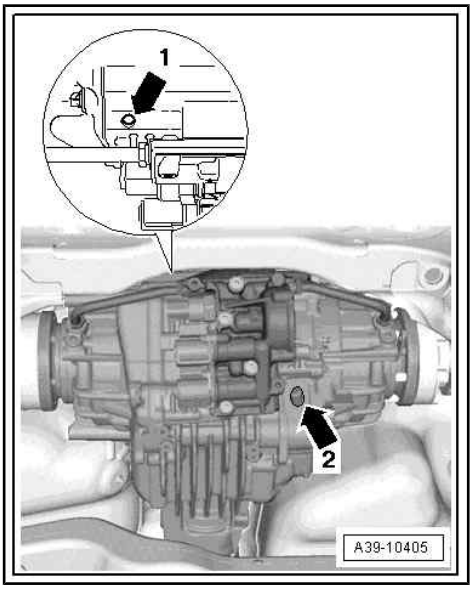

- Ensure that the rear final drive is filled with specified quantity of oil ⇒ page 5 .
- Eliminate any leaks on the rear final drive, e.g. at sealing surfaces or oil seals. The oil might also escape via the oil escape holes between the superposition gears on the left side -arrow 1- or right side -arrow 2- and the rear final drive.

> ⚠ **Caution**
>
> *Malfunction of rear final drive.*
>
> - *Do NOT operate the rear final drive if you have detected any leaks or if the oil level is low.*
> - *Eliminate any leaks on the rear final drive.*
> - *Top up any missing ATF or gear oil.*
> - *Use only the ATF or gear oil available as a replacement part ⇒ Electronic parts catalogue .*
> - *If the leaks cannot be repaired, the rear final drive must be renewed.*

Rear final drive control functions

> ⚠ **WARNING**
>
> *Malfunction of gearbox/final drive activation*
>
> - *It is important to follow all instructions closely when renewing components of the gearbox or final drive. Only then can the correct response and torque control characteristics of the rear final drive 0BF and 0BE be ensured.*

Renewing final drive components

- When the all-wheel drive control unit - J492- is renewed, the learnt values (adaptive values) for the degradation of the final drive (e.g. clutch wear, oil ageing) must be transferred using the ⇒ Vehicle diagnostic tester, as otherwise the performance of the rear final drive can be impaired.
- When a superposition gear or the complete rear final drive is renewed, the clutch classification must be entered again in the all-wheel drive control unit - J492- ⇒ Vehicle diagnostic tester. If the clutch classification is not carried out in the all-wheel drive control unit - J492- , the performance of the rear final drive will be impaired. In addition, the corresponding classification mark on the rear final drive housing must be made unrecognisable when a superposition gear has been renewed. There is a mark for the new classification on the housing of the new superposition gear.
- Do not place the removed rear final drive on the components of the hydraulic control unit (e.g. clutch valves). This could damage the components.

Protected by copyright. Copying for private or commercial purposes, in part or in whole, is not permitted unless authorised by AUDI AG. AUDI AG does not guarantee or accept any liability with respect to the correctness of information in this document. Copyright by AUDI AG.

Renewing oil pressure and oil temperature sender -G437- and/or -G640-

- After renewing the oil pressure and oil temperature sender -G437- or the oil pressure and oil temperature sender 2 -G640- , the identity of the corresponding sender must be re-adapted in the all-wheel drive control unit - J492- ⇒ Vehicle diagnostic tester.

- Do not renew both oil pressure and oil temperature senders (-G437- and -G640-) at the same time, as at least one valid sender identity is required at any time for the allocation of the rear final drive to the all-wheel drive control unit - J492- . If both senders are renewed at the same time, the all-wheel drive control unit - J492- would interpret this as the replacement of the rear final drive. This would erase all the learnt values in the control unit and impair the performance of the rear final drive.
- If both oil pressure and oil temperature senders (-G437- and -G640-) have to be renewed due to mechanical damage, e.g. damage to the connector housing, this should be done in two steps: After the first sender has been renewed, the identity of the sender must be re-adapted in the all-wheel drive control unit - J492- ⇒ Vehicle diagnostic tester. Proceed in the same manner for the second sender.
- If both oil pressure and oil temperature senders (-G437- and -G640- have to be renewed due to an electrical fault, the clutch classification must be entered again in the all-wheel drive control unit - J492- ⇒ Vehicle diagnostic tester. In addition, the ATF must be renewed ⇒ page 119 .

Checking torque distribution

The function `22 - Check torque distribution` must be performed after the following operations:

- Work on wiring of rear final drive
- Work on valves: clutch valve for all-wheel drive - N445- and clutch valve 2 for all-wheel drive - N446-
- Work on hydraulic control unit

⇒ “3.7 Checking torque distribution”, page 106

6.3 Jacking mode for vehicles with air suspension

Before raising a vehicle with air suspension on a two pillar vehicle hoist (wheels off the ground) you must first activate the jacking mode ⇒ Running gear, front-wheel drive and four-wheel drive; Rep. gr. 00 ; Repair instructions; Lifting suspension to reference position (vehicles with air suspension) .

6.4 Special tools

For a complete list of special tools used in this Workshop Manual ⇒ Workshop equipment and special tools catalogue .

6.5 Components

Rear final drive

- Allocate bolts and other components according to final drive code letters, refer to ⇒ Electronic parts catalogue .
- When installing a new rear final drive unit, check the oil level in the final drive ⇒ page 107 and the ATF level ⇒ page 118 and top up as required.
- Capacities and specifications ⇒ page 5 .
- When installing mounting brackets as well as other waxed components, the contact surfaces must be cleaned. The contact surfaces must be free of wax and grease.
- Thoroughly clean all joints and connections and the surrounding areas before disconnecting.

Protected by copyright. Copying for private or commercial purposes, in part or in whole, is not permitted unless authorised by AUDI AG. AUDI AG does not guarantee or accept any liability with respect to the correctness of information in this document. Copyright by AUDI AG.

Environmental and waste disposal regulations for oil

- Gear oil and any other type of oil must be handled with care.
- Dispose of drained oil properly.
- Always adhere to statutory environmental and waste disposal regulations.
- Observe the information shown on the packaging of the oil.

ATF and gear oil

The rear final drive unit 0BF/0BE has separate fillings for ATF and gear oil.

- For the hydraulic system (hydraulic control unit and superposition gears, left and right) use only the ATF available as a replacement part ⇒ Electronic parts catalogue .
- For the final drive (gear set and differential) use only the gear oil available as a replacement part ⇒ Electronic parts catalogue .
- Other types of ATF or gear oil will cause malfunctions of the final drive.

> ⚠ **Caution**
>
> *Gear oil and ATF change*
>
> - *On some RS models, the gear oil and the ATF must be changed.*
> - *For change interval, refer to ⇒ Maintenance tables .*
> - *For all other vehicles no change is required.*

Protected by copyright. Copying for private or commercial purposes, in part or in whole, is not permitted unless authorised by AUDI AG. AUDI AG does not guarantee or accept any liability with respect to the correctness of information in this document. Copyright by AUDI AG.

Oil seals

- Lightly lubricate outer circumference of oil seals before installation.
- The open side of the oil seal should face the side containing the fluid.
- After renewing oil seals, check gear oil level ⇒ page 107 or ATF level ⇒ page 118 (depending on fitting location of oil seal) in final drive.

Oil seal for propshaft flange

- Pack space between sealing lips -arrow- half-full with sealing grease - G 052 128 A1- .

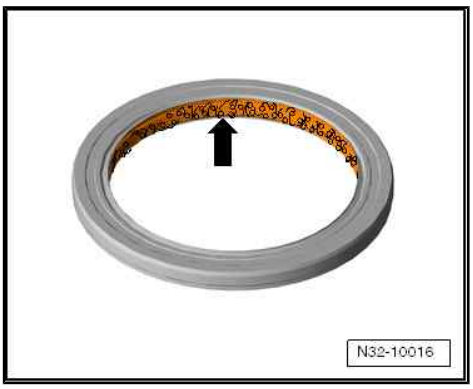

Oil seals for flange shafts

- Coat space between sealing lips -arrow- with ATF .

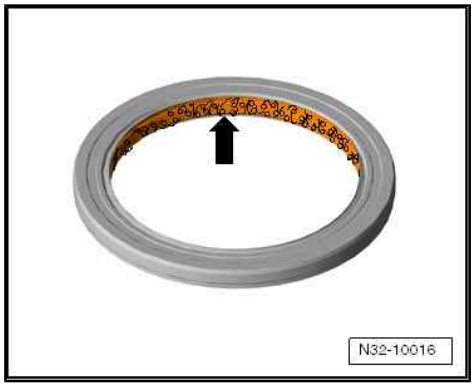

O-rings, seals, oil seals and gaskets

- Always renew O-rings, seals, oil seals and gaskets.
- After removing gaskets and seals, always inspect the contact surface on the housing or shaft for burrs resulting from removal or for other signs of damage.
- Thoroughly clean housing joint surfaces before assembling.
- Lightly lubricate O-rings before installation to prevent them from being trapped and damaged during assembly.
- After renewing gaskets, seals or O-rings, check gear oil level ⇒ page 107 or ATF level ⇒ page 118 (depending on fitting location) in final drive.

Locking elements

Protected by copyright. Copying for private or commercial purposes, in part or in whole, is not permitted unless authorised by AUDI AG. AUDI AG does not guarantee or accept any liability with respect to the correctness of information in this document. Copyright by AUDI AG.

- Do not over-stretch circlips.
- Always renew circlips which have been damaged or over-stretched.
- Circlips must be properly seated in the base of the groove.
- Renew spring pins. Position: the slit -A- should be in line with the line of force -arrow-.

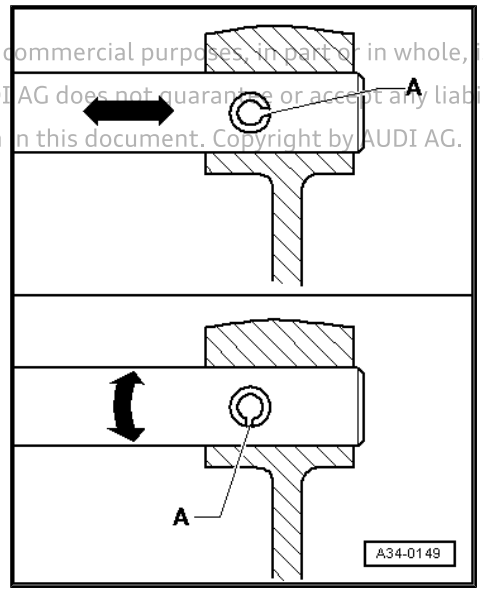

Bolts/nuts

- Nuts and bolts for securing covers and housings must be slackened and tightened in diagonal sequence.
- Loosen and tighten particularly sensitive parts in diagonal sequence and in stages, taking care to keep them straight.
- The tightening torques stated apply to non-oiled nuts and bolts.
- Always renew self-locking bolts and nuts.
- Clean the threads of bolts which are secured with locking fluid using a wire brush (does not apply to propshaft bolts: these must be renewed). Then apply locking fluid - AMV 185 101 A1- to bolt threads before installing.
- Threaded holes which take self-locking bolts or bolts coated with locking fluid must be cleaned using a thread tap or similar. Otherwise there is a danger of the bolts shearing off the next time they are removed.

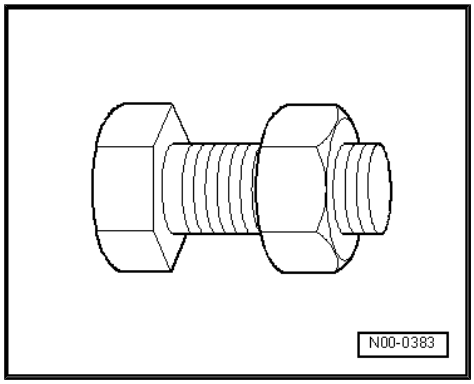

39 – Final drive - rear differential

1 Propshaft

⇒ "1.1 Exploded view - propshaft", page 19

⇒ "1.2 Removing and installing propshaft", page 24

⇒ "1.3 Detaching and attaching propshaft at rear final drive", page 37

⇒ "1.4 Detaching and attaching propshaft at gearbox", page 39

⇒ "1.5 Renewing protective boot", page 41

1.1 Exploded view - propshaft

⇒ "1.1.1 Exploded view - propshaft with splines on gearbox end", page 19

⇒ "1.1.2 Exploded view - propshaft with bolted connection at gearbox end", page 22

1.1.1 Exploded view - propshaft with splines on gearbox end

Note

- *Refer to general repair instructions ⇒ page 14 .*
- *The propshaft of the type with splines on the gearbox end can only be separated from the gearbox by removing it completely.*
- *No repair work can be carried out on the propshaft with the exception of removing, installing and adjusting.*
- *The propshaft should normally be kept straight when it is stored or transported.*
- *The propshaft can be bent as far as the stop at the centre joint, but must not be subjected to any kind of force. The centre joint or the protective boot can be damaged if the joint is forced against its stop.*
- *The propshaft must be tied up or supported at one end if it is detached only at the rear final drive. If necessary, the propshaft can be bent as far as the stop at the centre joint, but it must not be subjected to force.*
- *Use counterhold tool - T10172- with adapters - T10172/5- to slacken and tighten the propshaft bolts.*
- *Always keep the propshaft horizontal while pulling it off or fitting it on the rear splined shaft of the gearbox.*
- *Observe correct tightening sequence for bolts securing propshaft to rear final drive ⇒ page 21 .*

Protected by copyright. Copying for private or commercial purposes, in part or in whole, is not permitted unless authorised by AUDI AG. AUDI AG does not guarantee or accept any liability with respect to the correctness of information in this document. Copyright by AUDI AG.

Note the following before renewing the propshaft due to complaints concerning noise and/or vibrations.

- Check that centre bearing is free of stress or tension.
- Remove bolts securing propshaft to rear final drive. Re-tighten propshaft bolts in specified sequence ⇒ page 21 .

Protected by copyright. Copying for private or commercial purposes, in part or in whole, is not permitted unless authorised by AUDI AG. AUDI AG does not guarantee or accept any liability with respect to the correctness of information in this document. Copyright by AUDI AG.

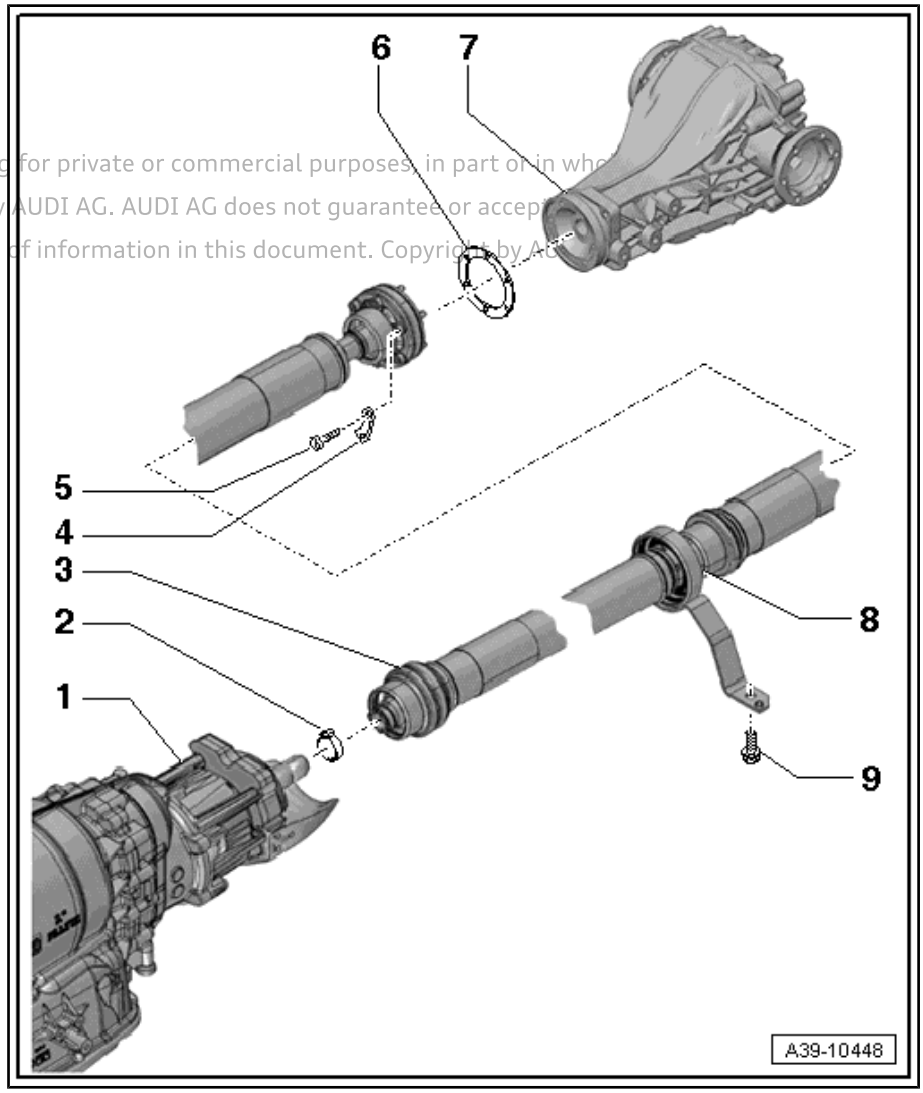

1 - Gearbox

2 - Hose clip

- ❑ Renew

3 - Propshaft

- ❑ Removing and installing ⇒ page 24
- ❑ Detaching and attaching propshaft at rear final drive ⇒ page 37
- ❑ Renewing protective boot ⇒ page 41

4 - Lock plate

5 - Bolt

- ❑ Self-locking
- ❑ Always renew
- ❑ Clean remaining locking fluid out of threaded holes in flange shaft on rear final drive. The threads can be cleaned with a thread tap

Final drive 0BC, 0BD, 0BF

- ❑ M8 x 45
- ❑ Tightening torque and sequence ⇒ page 21

Final drive 0BE

- ❑ M10 x 45 x 1
- ❑ Tightening torque and sequence ⇒ page 21

6 - Gasket

- ❑ Renew gasket if damaged (buckled or kinked)
- ❑ Renew gasket if rubber coating has become detached
- ❑ Degrease flange shaft and fit gasket
- ❑ Different coloured sides can be disregarded for installation

7 - Rear final drive

Removing and installing ⇒ page 45

8 - Centre bearing

9 - Bolt

- ❑ 20 Nm

Securing propshaft to rear final drive - tightening torque and sequence

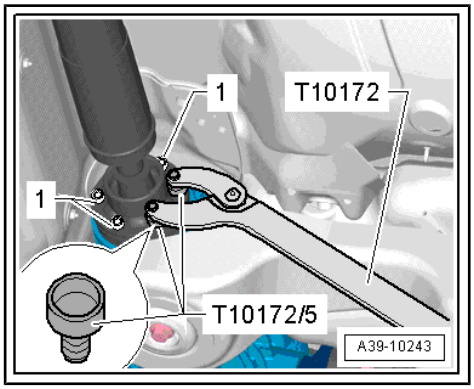

- Always renew propshaft bolts -1-.
- Counterhold using counterhold tool - T10172- and adapters - T10172/5- .

– Tighten bolts -1- in 3 stages as follows:

Stage	Bolts	Tightening torque/angle specification
1.	-1-	Bolt nearest to coloured dots: 30 Nm[1)]
2.	-1-	All remaining bolts: 30 Nm
3.	-1-	All bolts: turn 90° further

- [1)] This pushes the CV joint slightly towards the opposite side and reduces the imbalance.

Heat shield for propshaft - tightening torque

– Tighten bolts -arrows- to 24 Nm.

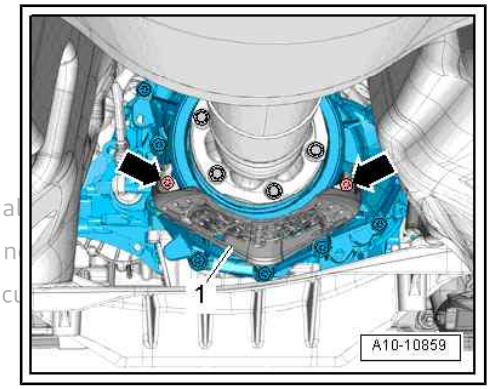

Protected by copyright. Copying for private or commercial
permitted unless authorised by AUDI AG. AUDI AG does n
with respect to the correctness of information in this docu

1.1.2 Exploded view - propshaft with bolted connection at gearbox end

Note

- *Refer to general repair instructions* *⇒ page 14* *.*
- *No repair work can be carried out on the propshaft with the exception of removing, installing and adjusting.*
- *The propshaft should normally be kept straight when it is stored or transported.*
- *The propshaft can be bent as far as the stop at the centre joint, but must not be subjected to any kind of force. The centre joint or the protective boot can be damaged if the joint is forced against its stop.*
- *The propshaft must be tied up or supported at one end if it is detached only at the gearbox or at the rear final drive. If necessary, the propshaft can be bent as far as the stop at the centre joint, but it must not be subjected to force.*
- *Before removing, mark the positions of all parts in relation to each other. Reinstall in the same position to avoid excessive imbalance, which could result in bearing damage and rumbling noises.*
- *Use counterhold tool - T10172- with adapters - T10172/5- to slacken and tighten the propshaft bolts.*
- *After detaching the propshaft from the rear final drive, an additional balancing washer (thicker washer) that may be fitted between the lock plate and the bolt head (multi-point socket head bolt) must not be reinstalled.*
- *If problems are reported concerning noise and/or vibration, check that the centre bearing is stress-free before renewing the propshaft.*

Protected by copyright. Copying for private or commercial purposes, in part or in whole, is not permitted unless authorized by AUDI AG. AUDI AG does not guarantee or accept any liability with respect to the correctness of information in this document. Copyright by AUDI AG.

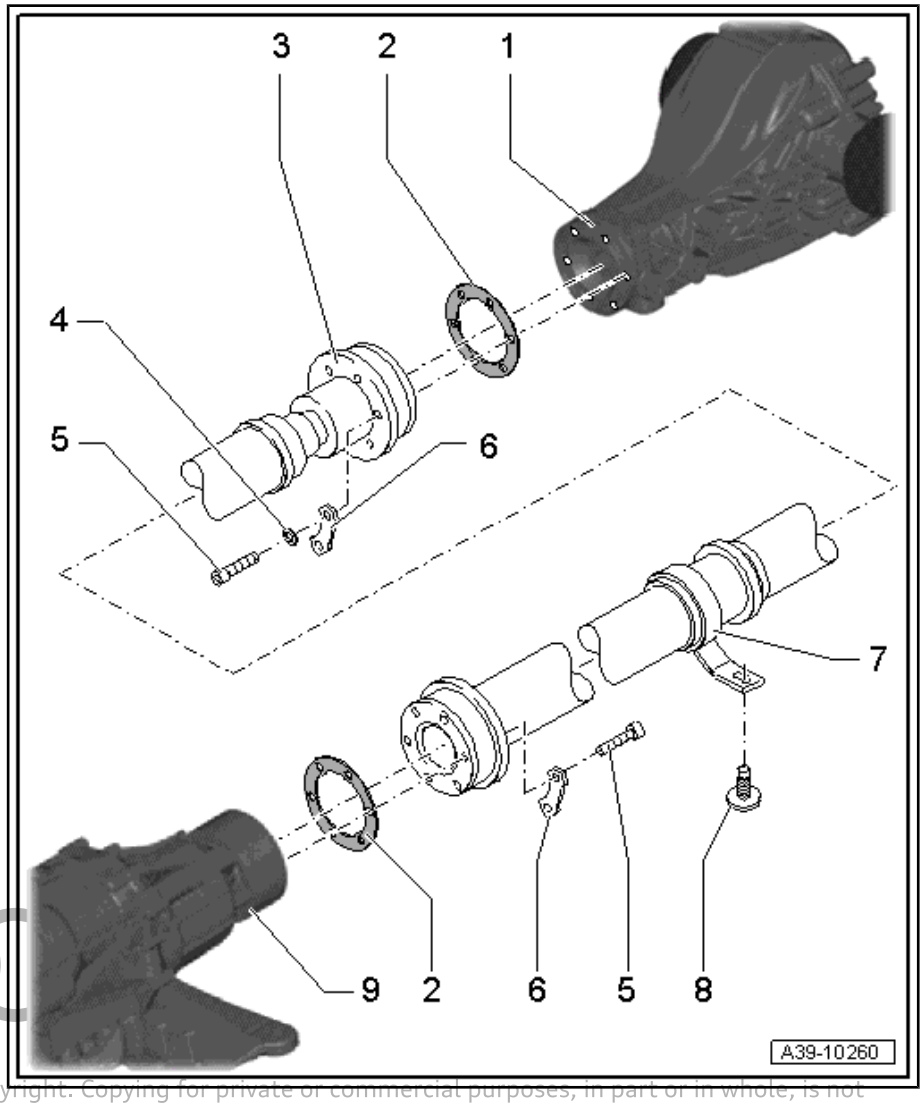

1 - Rear final drive

- ❑ Removing and installing ⇒ page 45

2 - Gasket

- ❑ Renew gasket if damaged (buckled or kinked)
- ❑ Renew gasket if rubber coating has become detached
- ❑ Degrease flange shaft and fit gasket
- ❑ Different coloured sides can be disregarded for installation

3 - Propshaft

- ❑ Removing and installing ⇒ page 31
- ❑ Detaching and attaching propshaft at gearbox ⇒ page 39
- ❑ Detaching and attaching propshaft at rear final drive ⇒ page 37

4 - Balancing washer

- ❑ Not fitted on all vehicles
- ❑ May be fitted between a multi-point socket head bolt ⇒ Item 5 (page 23) and a lock plate ⇒ Item 6 (page 23) on the rear final drive
- ❑ If fitted, this balancing washer must not be re-installed after the propshaft has been detached from the rear final drive.

Protected by copyright. Copying for private or commercial purposes, in part or in whole, is not permitted unless authorised by AUDI AG. AUDI AG does not guarantee or accept any liability with respect to the correctness of information in this document. Copyright by AUDI AG.

5 - Bolt

- ❑ Always renew
- ❑ Self-locking
- ❑ Always clean threaded holes for bolts in flange shaft (e.g. with a thread tap)

- On rear final drive
  - ❑ Tightening torque and sequence ⇒ page 24

- On gearbox
  - ❑ 30 Nm + 90°

6 - Lock plate

7 - Centre bearing

8 - Bolt

- ❑ 20 Nm

9 - Gearbox

Securing propshaft to rear final drive - tightening torque and sequence

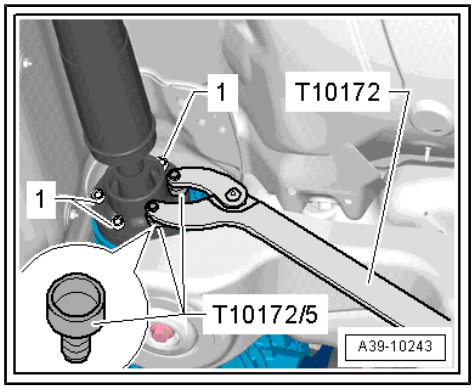

- Always renew propshaft bolts -1-.
- Counterhold using counterhold tool - T10172- and adapters - T10172/5- .

– Tighten bolts -1- in 3 stages as follows:

Stage	Bolts	Tightening torque/angle specification
1.	-1-	Bolt nearest to coloured dots: 30 Nm[1)]
2.	-1-	All remaining bolts: 30 Nm
3.	-1-	All bolts: turn 90° further

- [1)] This pushes the CV joint slightly towards the opposite side and reduces the imbalance.

Protected by copyright. Copying for private or commercial purposes, in part or in whole, is not permitted unless authorised by AUDI AG. AUDI AG does not guarantee or accept any liability with respect to the correctness of information in this document. Copyright by AUDI AG.

Heat shield for propshaft - tightening torque

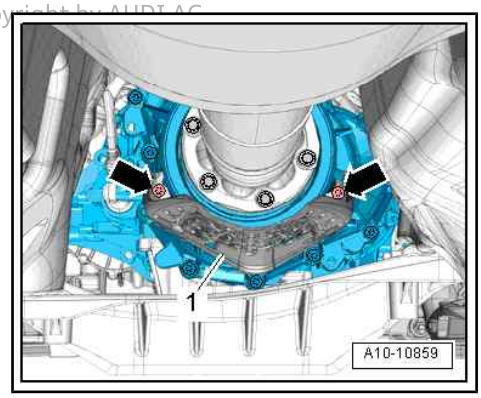

– Tighten bolts -arrows- to 24 Nm.

1.2 Removing and installing propshaft

⇒ "1.2.1 Removing and installing propshaft with splines on gearbox end", page 24

⇒ "1.2.2 Removing and installing propshaft with bolted connection at gearbox end", page 31

1.2.1 Removing and installing propshaft with splines on gearbox end

Special tools and workshop equipment required

♦ Retaining tool - VW 785/1 B-

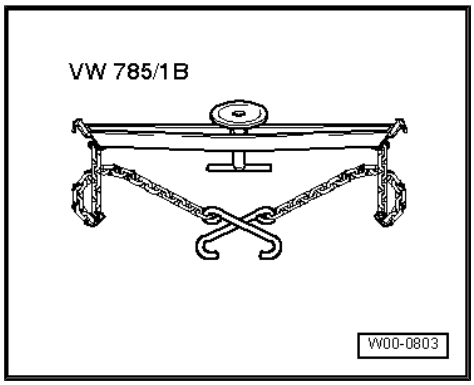

- Counterhold tool - T10172-

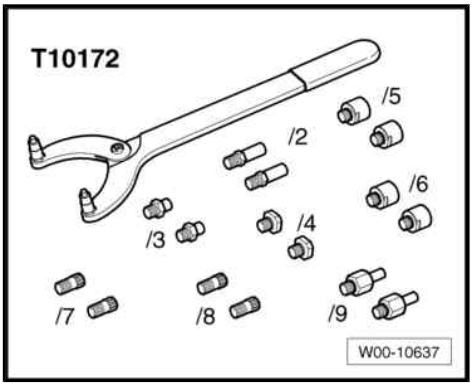

- Adapter -T10172/5-
- Hose clip pliers - V.A.G 1275-

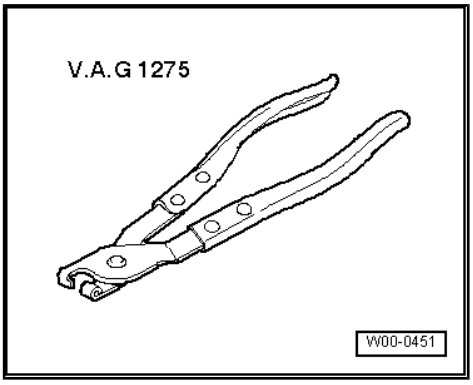

- High-temperature grease ; refer to ⇒ Electronic parts catalogue

Removing

Protected by copyright. Copying for private or commercial purposes, in part or in whole, is not permitted unless authorised by AUDI AG. AUDI AG does not guarantee or accept any liability with respect to the correctness of information in this document. Copyright by AUDI AG.

Note

- *The propshaft of the type with splines on the gearbox end can only be separated from the gearbox by removing it completely.*
- *Repairs on the propshaft should preferably be carried out on a two-pillar hoist.*
- *After unbolting propshaft from rear final drive, tie up or support end of propshaft.*
- *The propshaft can be bent as far as the stop at the centre joint, but must not be subjected to any kind of force. The centre joint or the protective boot can be damaged if the joint is forced against its stop.*
- *Always keep the propshaft horizontal while pulling it off or fitting it on the rear splined shaft of the gearbox.*

Caution

The flexible joints in the exhaust system can be damaged.

- ***Do not bend flexible joint more than 10°.***
- ***Install flexible joint so that it is not under tension.***
- ***Take care not to damage wire mesh on flexible joint.***

Vehicles with 3.0 ltr. TDI engine and two turbochargers

– Remove particulate filter/SCR catalytic converter ⇒ 6-cylinder TDI engine (3.0 ltr. 4-valve common rail - generation II); Rep. gr. 26 ; Emission control system; Removing and installing particulate filter .

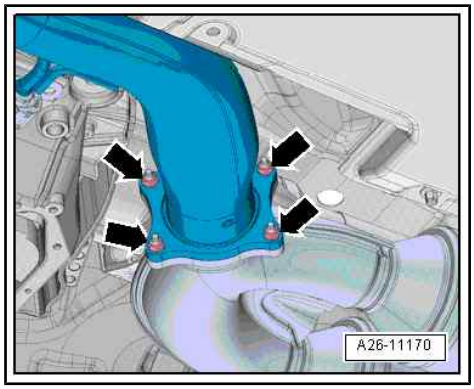

All vehicles (continued)

– Loosen clamp(s) -arrows- and slide towards rear.

– Tie up front silencers or front exhaust pipes (left and right) on vehicle underside.

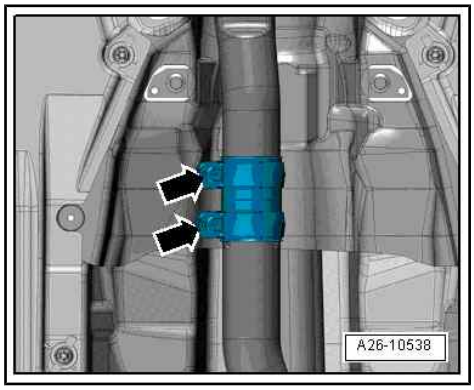

– If fitted, remove bolts -arrows- and detach heat shield -1- for propshaft.

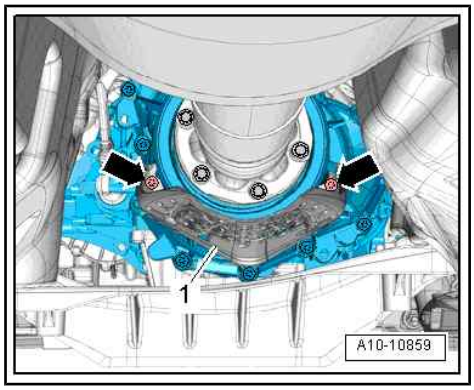

– Cut open hose clip -1- for protective boot on propshaft and remove hose clip.

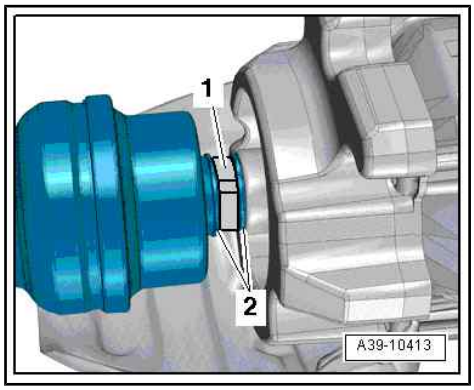

Note

Disregard -item 2-.

Protected by copyright. Copying for private or commercial purposes, in part or in whole, is not permitted unless authorised by AUDI AG. AUDI AG does not guarantee or accept any liability with respect to the correctness of information in this document. Copyright by AUDI AG.

– If fitted, remove cross pieces -2, 3-.
– Remove heat shield -1-.

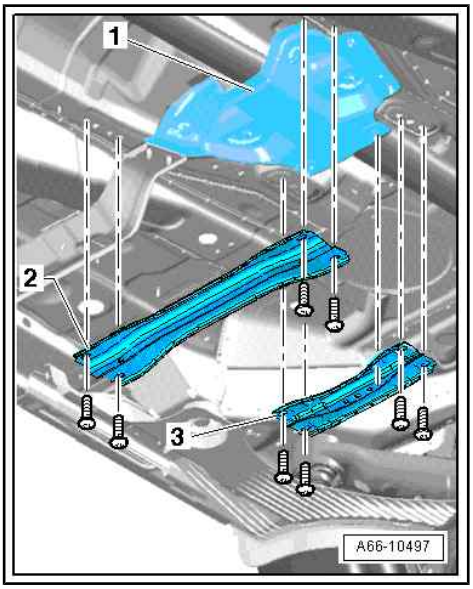

– If fitted, remove diagonal struts.

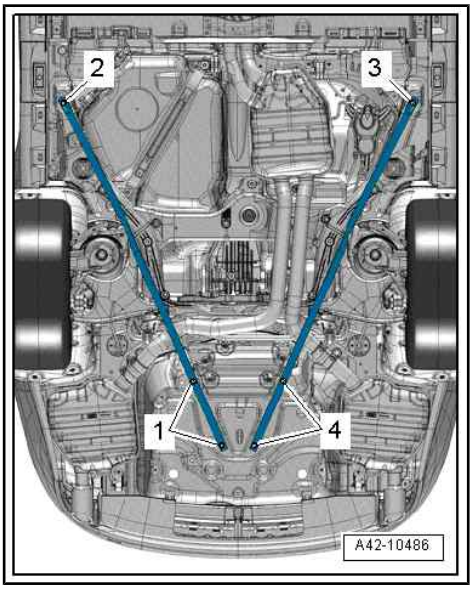

– Lower rear section of exhaust system at the front and support using retaining tool - VW 785/1 B- as shown in illustration.

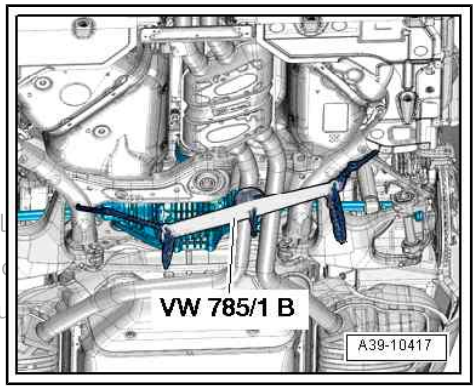

Protected by copyright. Copying for private or commercial
permitted unless authorised by AUDI AG. AUDI AG does n
with respect to the correctness of information in this docu

– Check whether there is a factory marking (coloured dot) -arrow A- and -arrow B- on the propshaft and on the rear final drive flange.

– If one of these markings is no longer visible, make a new paint marking accordingly.

• The markings on the propshaft -arrow A- and on the rear final drive -arrow B- should be aligned.

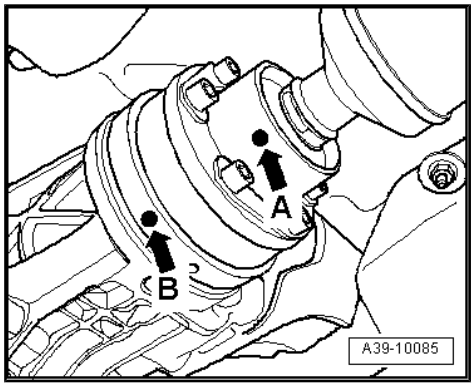

– Remove bolts -1- securing propshaft to rear final drive.

– To do so, use counterhold tool - T10172- and adapters - T10172/5- .

Protected by copyright. Copying for private or commercial purposes, in pa
permitted unless authorised by AUDI AG. AUDI AG does not guarantee or a
with respect to the correctness of information in this document. Copyrigh

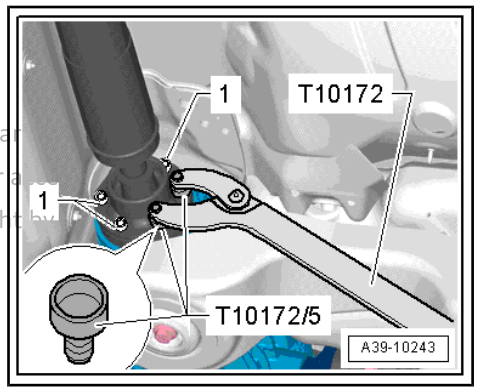

– Adapter -T10172/6- must be used for rear final drive 0BE.

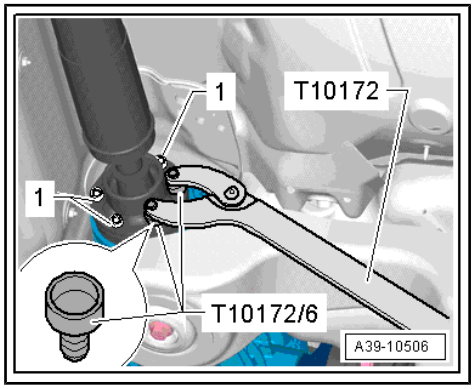

– Remove bolts -arrows- securing centre propshaft bearing.

– Without applying force, kink propshaft as far as stop at centre bearing.

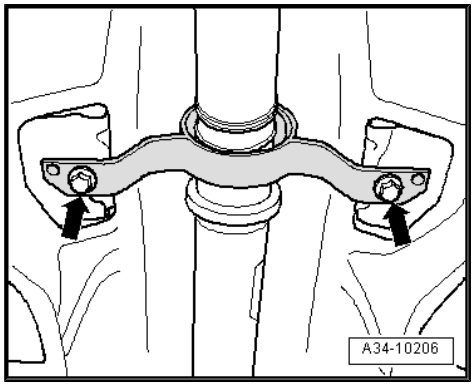

Note

♦ *In some positions, the propshaft can be kinked slightly further.*

♦ *To do so, turn the propshaft slightly.*

– Guide propshaft downwards at rear, past fuel tank and rear subframe, and detach from gearbox.

Installing

• Tightening torques
⇒ “1.1.1 Exploded view - propshaft with splines on gearbox end”, page 19 and
⇒ Fig. ““Heat shield for propshaft - tightening torque”“ , page 21 .

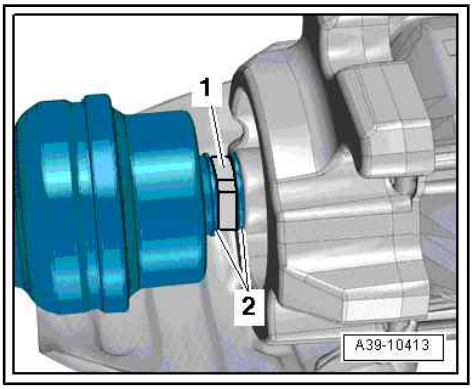

Note

- *Remove old, dried-out high-temperature grease from CV joint and flange for propshaft. Put in exactly the same quantity of fresh high-temperature grease .*
- *Clean remaining locking fluid out of threaded holes in flange shaft on rear final drive. The threads can be cleaned with a thread tap. Otherwise the securing bolts can shear off when they are screwed in.*
- *Renew self-locking bolts for propshaft.*
- *Renew hose clip -1- for protective boot -2- on propshaft.*
- *Check for damage to gasket for propshaft on rear final drive flange (kinked gasket or partially detached rubber coating). A damaged gasket must be renewed.*
- *Wipe off splines of rear splined shaft on gearbox with a cloth before sliding on propshaft. Do not apply grease to splines.*

Protected by copyright. Copying for private or commercial purposes, in part or in whole, is not permitted unless authorised by AUDI AG. AUDI AG does not guarantee or accept any liability with respect to the correctness of information in this document. Copyright by AUDI AG.

– Fit propshaft onto gearbox first.
- Do not bend further than 10° when fitting propshaft on splines.
- After sliding the propshaft approx. 50 mm onto the rear splined shaft of the gearbox, turn it slightly to ensure that the splines on the shaft engage in the internal splines of the propshaft.
- Push propshaft onto splines of rear splined shaft as far as stop.

– Without applying force, kink propshaft as far as stop at centre bearing.

Note

- *In some positions, the propshaft can be kinked slightly further.*
- *To do so, turn the propshaft slightly.*

– Guide propshaft upwards at rear at subframe and fuel tank.

– Screw in securing bolts -arrows- so that centre bearing can still be moved.

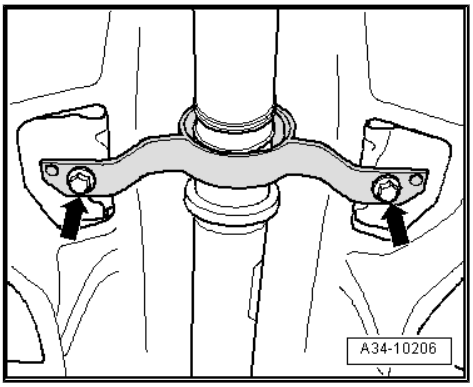

– Fit propshaft on rear final drive, paying attention to installation position:

- The markings on the propshaft -arrow A- and on the rear final drive -arrow B- should be aligned.
- Maximum misalignment of markings: 30°

– Screw in new bolts by hand until they make contact, but do not tighten.

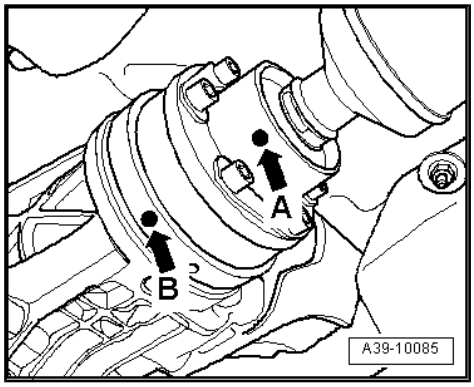

– Align hose clip -1- for protective boot on propshaft with shaped sections -2- and tighten using hose clip pliers - V.A.G 1275- or similar.

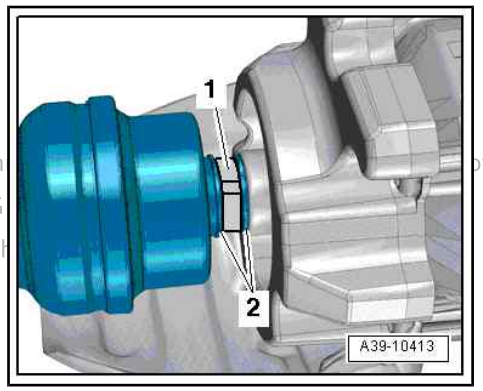

Note

Push the propshaft slightly towards the rear in order to be able to apply the hose clip pliers - V.A.G 1275- properly.

Protected by copyright. Copying for private or com ot
permitted unless authorised by AUDI AG. AUDI AG
will not accept liability for the correctness of information in th

– Tighten bolts for propshaft -1-. Follow correct tightening sequence ⇒ page 21 .

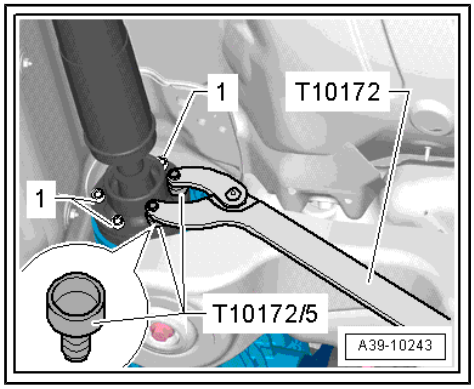

– Secure centre propshaft bearing to body so it is free of stress and tighten. Tightening torque ⇒ Item 9 (page 20)

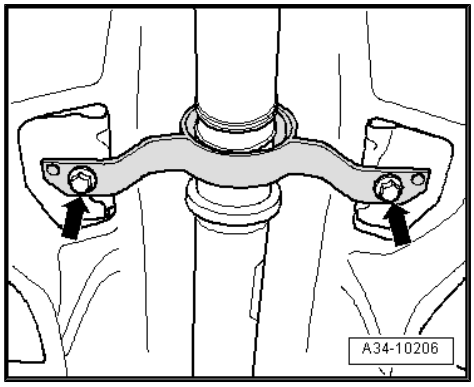

The remaining installation steps are carried out in reverse sequence; note the following:

– If fitted, bolt heat shield -A- onto gearbox -arrows-. Tightening torque ⇒ page 21

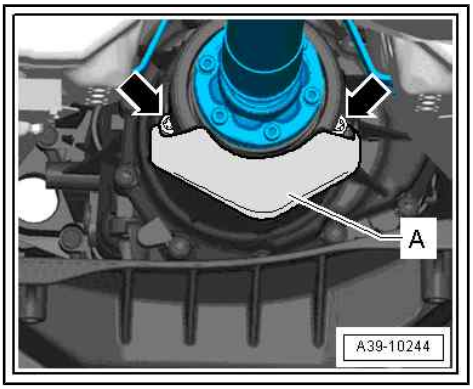

– Install heat shield -1- ⇒ General body repairs, exterior; Rep. gr. 66 ; Underbody trim; Exploded view - underbody trim .
– If originally fitted, install cross member -2- (front) and cross member -3- (rear) ⇒ General body repairs, exterior; Rep. gr. 66 ; Underbody trim .
– If originally fitted, install diagonal struts ⇒ General body repairs, exterior; Rep. gr. 66 ; Underbody trim .

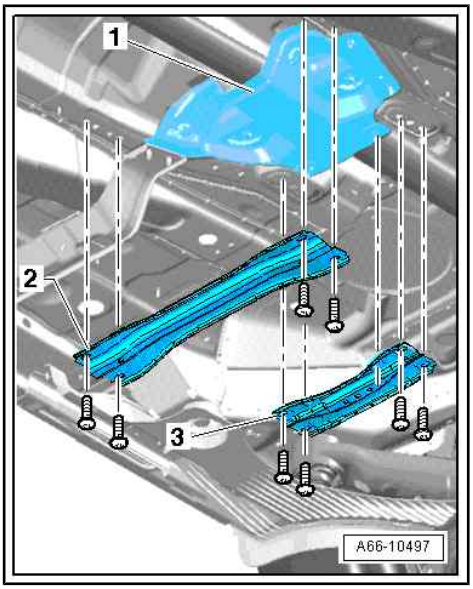

Vehicles with 3.0 ltr. TDI engine and two turbochargers

– Install particulate filter/SCR catalytic converter ⇒ 6-cylinder TDI engine (3.0 ltr. 4-valve common rail - generation II); Rep. gr. 26 ; Emission control system; Removing and installing particulate filter .
– Install exhaust system and perform stress-free alignment ⇒ Rep. gr. 26 ; Exhaust pipes/silencers; Exploded view - silencers .

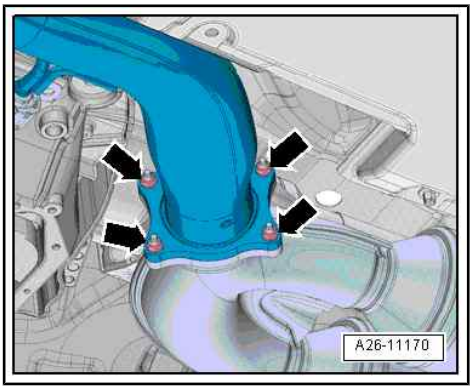

1.2.2 Removing and installing propshaft with bolted connection at gearbox end

Special tools and workshop equipment required

Protected by copyright. Copying for private or commercial purposes, in part or in whole, is not permitted unless authorised by AUDI AG. AUDI AG does not guarantee or accept any liability with respect to the correctness of information in this document. Copyright by AUDI AG.

- Assembly tool - 3139-

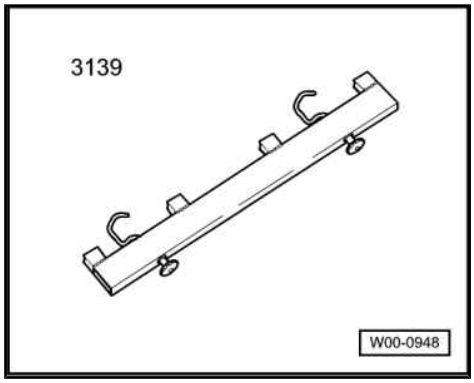

Protected by copyright. Copying for private or commercial purposes, in part or in whole, is not permitted unless authorised by AUDI AG. AUDI AG does not guarantee or assume any liability with respect to the correctness of information

- Counterhold tool - T10172- with adapters - T10172/5-

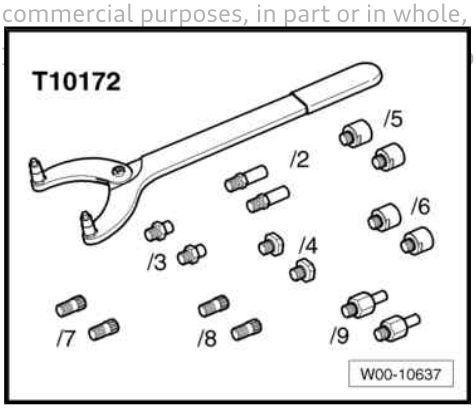

- Engine and gearbox jack - V.A.G 1383 A- with universal support - V.A.G 1359/2-

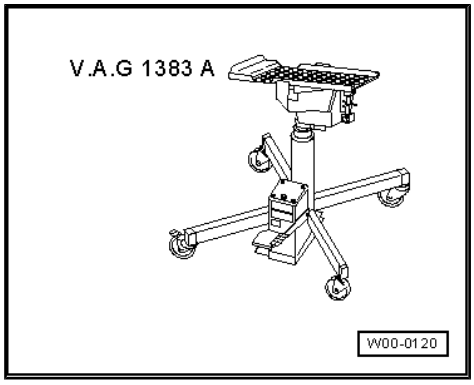

- High-temperature grease ; refer to ⇒ Electronic parts catalogue

Removing propshaft

- Observe notes ⇒ page 22 .
- Repairs on the propshaft should be carried out on a two pillar hoist.

Note

The flexible joint in the front exhaust pipe must not be bent more than 10° – otherwise it can be damaged.

– Unfasten clamp(s) -arrows- and disconnect exhaust system.

– Tie front exhaust pipe(s) up to side of underbody.

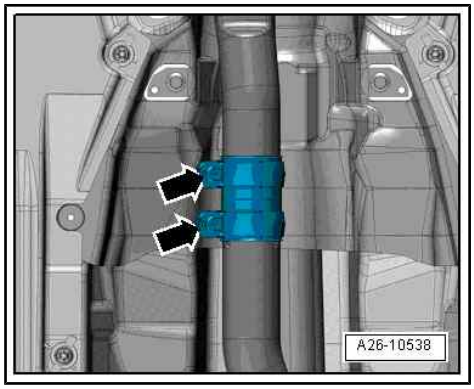

– Remove rear section of exhaust system -2- ⇒ Rep. gr. 26 ; Exhaust pipes/silencers; Exploded view - silencers .

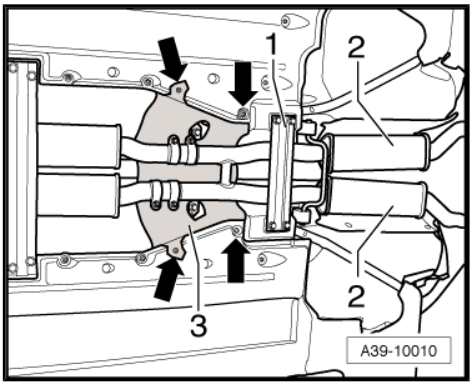

Note

A second mechanic is required for removing the rear section of the exhaust system.

– If fitted, remove cross pieces -2, 3-.

– Remove heat shield -1-.

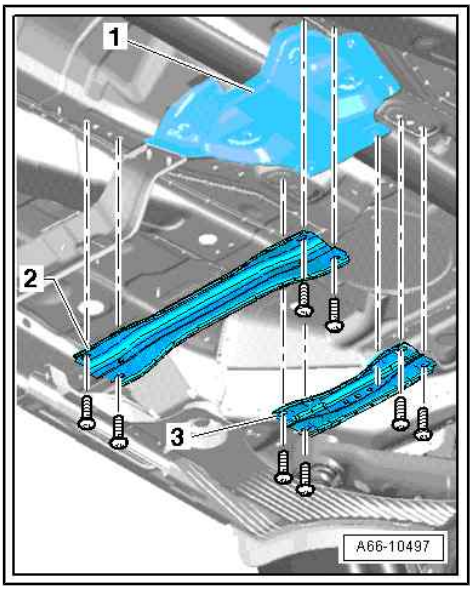

Protected by copyright. Copying for private or commercial purposes, in part o
permitted unless authorized by AUDI AG. AUDI AG does not guarantee or acce
with respect to the correctness of information in this document. Copyright by

– If fitted, remove diagonal struts.

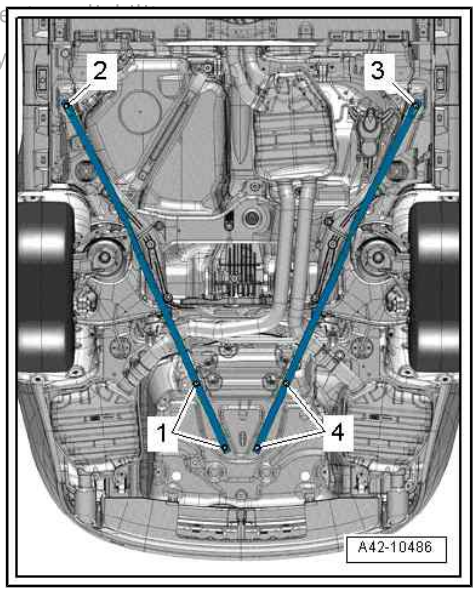

– If fitted, detach heat shield -A- from gearbox -arrows-.

Protected by copyright. Copying for private or commercial purpose
permitted unless authorised by AUDI AG. AUDI AG does not guaran
with respect to the correctness of information in this document. Co

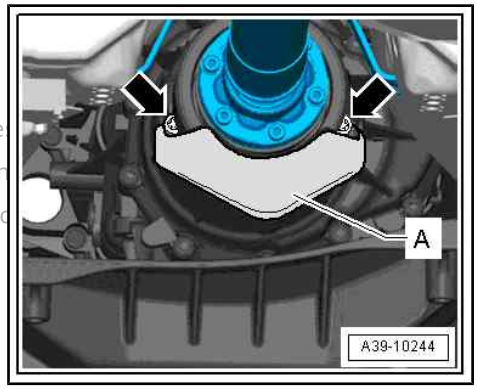

– Check whether there is a factory marking (coloured dot) -arrow A- and -arrow B- on the propshaft and on the propshaft flange on the rear final drive.
– If one of these markings is no longer visible (for example -arrow A- on the propshaft), make a new coloured marking accordingly.
• The markings on the propshaft -arrow A- and on the rear final drive -arrow B- should be aligned.

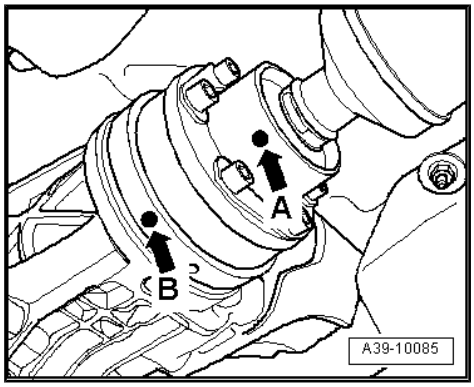

– Attach assembly tool - 3139- and tighten plastic nuts.

Note

Do not fit assembly tool onto balance plates.

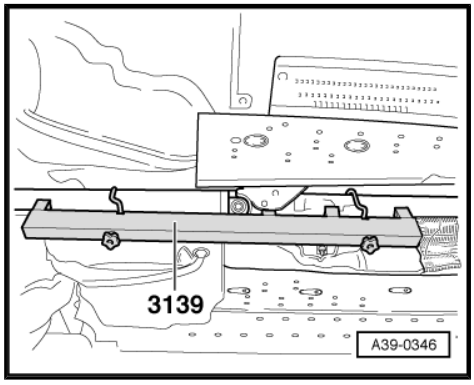

– Remove bolts -arrows- securing centre bearing.

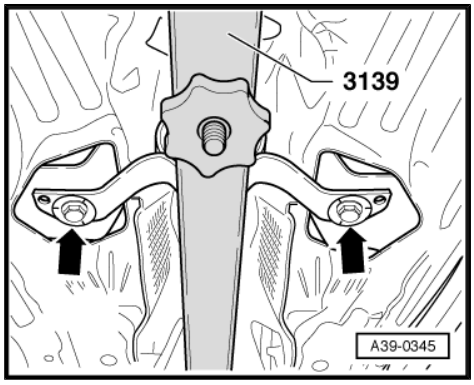

– Remove securing bolts from connection between propshaft and gearbox (counterhold using counterhold tool - T10172- and -T10172/5- or -T10172/6-).

– Remove propshaft from gearbox and support propshaft with engine and gearbox jack - V.A.G 1383 A- .

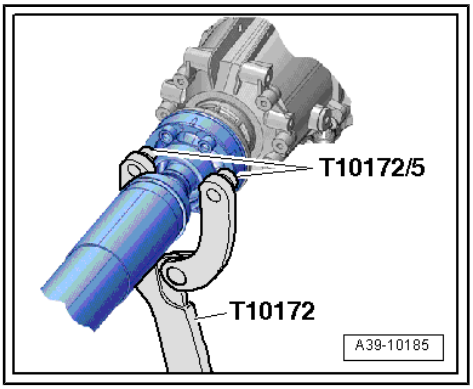

Protected by copyright. Copying for private or commercial purposes, in part or in whole, is not permitted unless authorised by AUDI AG. AUDI AG does not guarantee or assume any liability with respect to the correctness of information in this document. Copyright by AUDI AG.

– Remove bolts -1- (6x) on rear CV joint.

– Use counterhold tool - T10172- with adapters - T10172/5- or -T10172/6- .

– Remove propshaft.

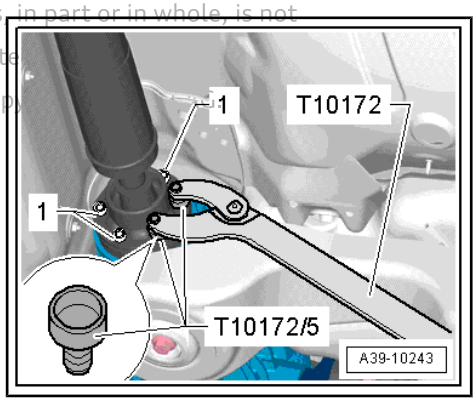

Note

The propshaft must be kept straight when it is stored or transported.

Installing propshaft

Installation is carried out in reverse sequence. Note the following:

- Remove old, dried-out high-temperature grease from CV joints and flanges for propshaft. Put in exactly the same quantity of fresh high-temperature grease .
- Clean all remaining locking fluid out of the threaded holes in the propshaft flange shafts on the gearbox and rear final drive. The threads can be cleaned with a thread tap. Otherwise the securing bolts can shear off when they are screwed in.
- After detaching the propshaft from the rear final drive, the additional balancing washer (thicker washer) that may be fitted between the lock plate and one of the securing bolts must not be reinstalled.
- Always install new securing bolts for propshaft (self-locking bolts).
- Note correct position of propshaft: the central CV joint is located behind the centre bearing and towards the rear final drive.
- Check for damage to gasket for propshaft on rear final drive flange and on gearbox (kinked gasket or partially detached rubber coating). A damaged gasket must be renewed.

– Fit propshaft, paying attention to installation position at rear final drive:

- The markings on the propshaft -arrow A- and on the rear final drive -arrow B- should be aligned.
- Maximum misalignment of markings: 30°.

– Screw in new bolts by hand until they make contact, but do not tighten.

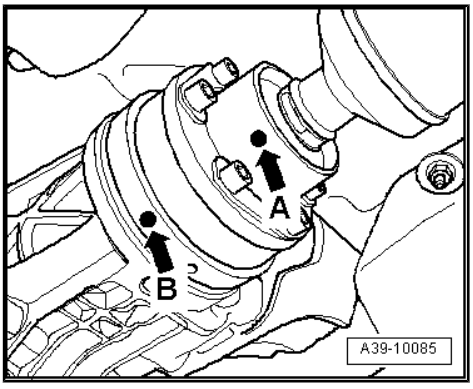

– Screw in securing bolts -arrows- so that centre bearing can still be moved.

Protected by copyright. Copying for private or commercial purposes, in part or in whole, is not permitted unless authorised by AUDI AG. AUDI AG does not guarantee or accept any liability with respect to the correctness of information in this document. Copyright by AUDI AG.

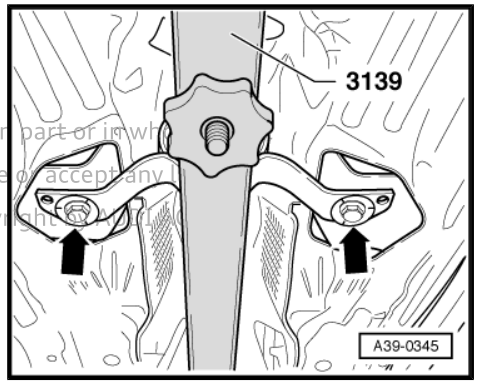

– Tighten bolts -1- at rear of propshaft. Follow correct tightening sequence ⇒ page 24 .

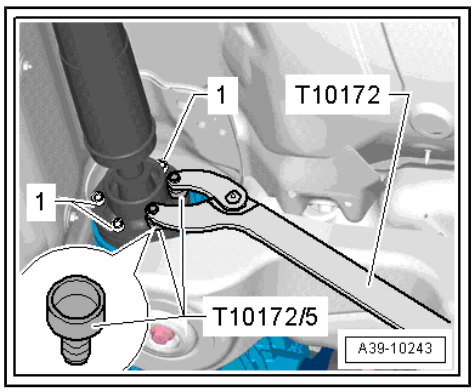

– Tighten bolts securing propshaft (front end). Tightening torque ⇒ Item 5 (page 23)
– Detach assembly tool - 3139- .
– Secure centre propshaft bearing to body so it is free of stress and tighten. Tightening torque ⇒ Item 8 (page 23)

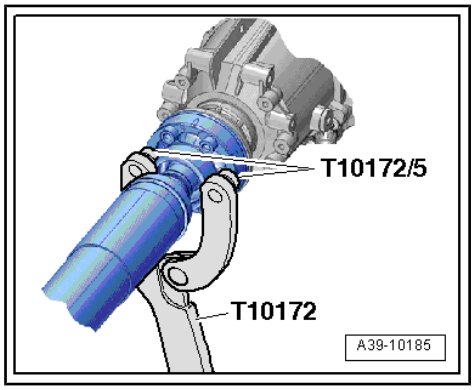

– If fitted, bolt heat shield -A- onto gearbox -arrows-. Tightening torque ⇒ page 24

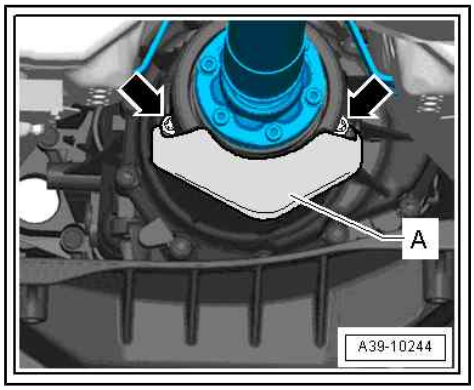

– Install heat shield -1-.
– If originally fitted, install cross member -2- (front) and cross member -3- (rear) ⇒ General body repairs, exterior; Rep. gr. 66 ; Underbody trim .
– If originally fitted, install diagonal struts ⇒ General body repairs, exterior; Rep. gr. 66 ; Underbody trim .
– Install exhaust system and perform stress-free alignment ⇒ Rep. gr. 26 ; Exhaust pipes/silencers; Exploded view - silencers .

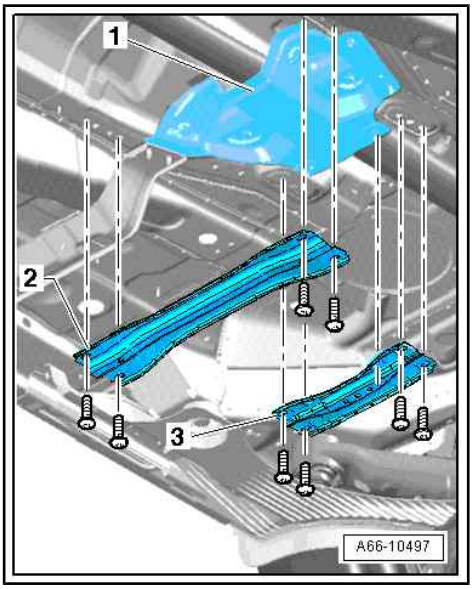

1.3 Detaching and attaching propshaft at rear final drive

Special tools and workshop equipment required

♦ Counterhold tool - T10172-

Protected by copyright. Copying for private or commercial purpos
permitted unless authorised by AUDI AG. AUDI AG does not guar
with respect to the correctness of information in this document.

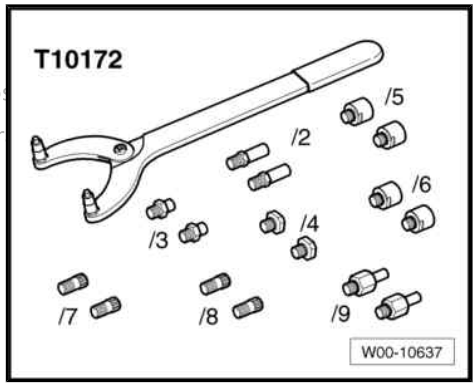

♦ Adapter -T10172/5- (M8 bolts)
♦ Adapter -T10172/6- (M10 bolts)
♦ High-temperature grease ; refer to ⇒ Electronic parts catalogue
♦ Please refer to notes ⇒ page 22
♦ Repairs on the propshaft should be carried out on a two pillar hoist.

Detaching propshaft from rear final drive

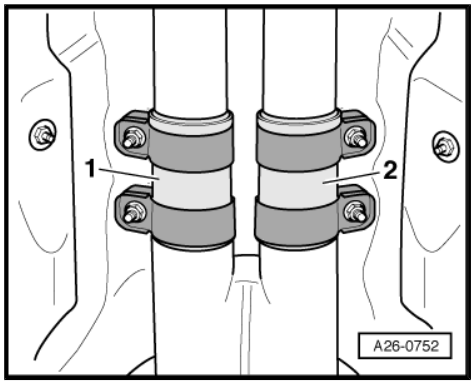

– Disconnect exhaust system at clamps -1- and -2-.

– Tie front exhaust pipe(s) up to side of underbody.

Note

- *The flexible joint in the front exhaust pipe must not be bent more than 10° – otherwise it can be damaged. To prevent this, tie up front exhaust pipes to body on one side.*
- *A second mechanic is required for removing the rear section of the exhaust system.*

– Remove rear section of exhaust system ⇒ Rep. gr. 26 ; Exhaust pipes/silencers; Exploded view - silencers .

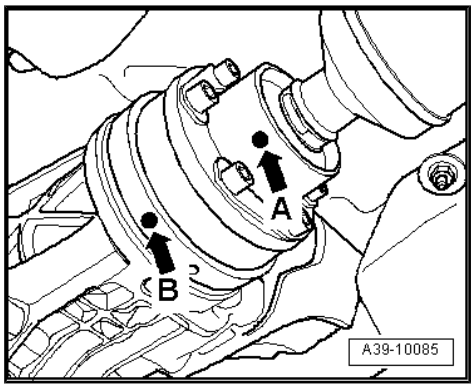

– Check whether there is a factory marking (coloured dot) -arrow A- and -arrow B- on the propshaft and on the propshaft flange on the rear final drive.

– If one of these markings is no longer visible (for example -arrow A- on the propshaft), make a new paint marking accordingly.

- The markings on the propshaft -arrow A- and on the rear final drive -arrow B- should be aligned.

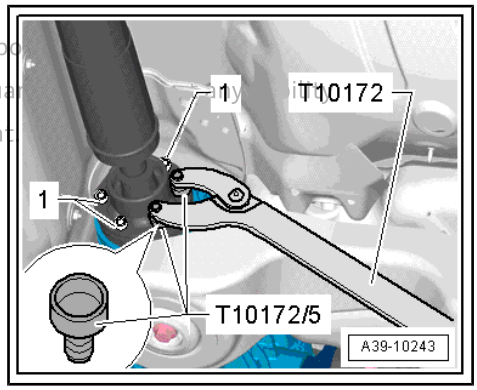

– Remove bolts -1- (6x) on rear CV joint.

– To do so, use counterhold tool - T10172- and adapters - T10172/5- or -T10172/6- .

– Separate propshaft from rear final drive and move clear to one side on subframe.

Protected by copyright. Copying for private or commercial purpo
authorised by AUDI AG. AUDI AG does not gua
with respect to the correctness of information in this document

Attaching propshaft to rear final drive

Installation is carried out in reverse sequence. Note the following:

- Remove old, dried-out high-temperature grease from CV joint and flange for propshaft. Put in exactly the same quantity of fresh high-temperature grease .
- Clean remaining locking fluid out of threaded holes in flange shaft on rear final drive. The threads can be cleaned with a thread tap. Otherwise the securing bolts can shear off when they are screwed in.
- After detaching the propshaft from the rear final drive, the additional balancing washer (thicker washer) that may be fitted between the lock plate and one of the securing bolts must not be reinstalled.
- Always install new securing bolts for propshaft (self-locking bolts).
- Check for damage to gasket for propshaft on rear final drive flange (kinked gasket or partially detached rubber coating). A damaged gasket must be renewed.

– Fit propshaft on rear final drive, paying attention to installation position:

- The markings on the propshaft -arrow A- and on the rear final drive -arrow B- should be aligned.
- Maximum misalignment of markings: 30°.

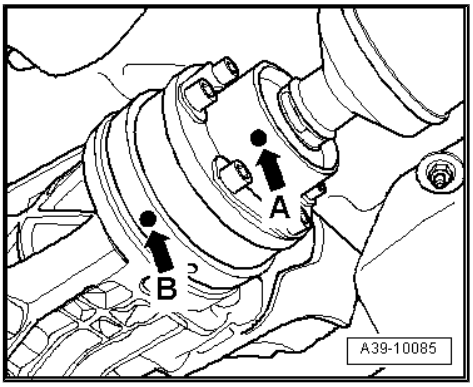

– Install and tighten new securing bolts -1- for propshaft. Follow correct tightening sequence ⇒ page 24 .

– Install rear section of exhaust system ⇒ Rep. gr. 26 ; Exhaust pipes/silencers; Exploded view - silencers .

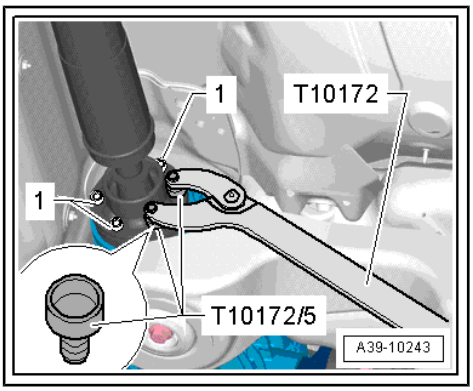

1.4 Detaching and attaching propshaft at gearbox

⇒ "1.4.1 Detaching and attaching propshaft at gearbox - propshaft with splines on gearbox end", page 39

⇒ "1.4.2 Detaching and attaching propshaft at gearbox - propshaft with bolted connection at gearbox end", page 39

1.4.1 Detaching and attaching propshaft at gearbox - propshaft with splines on gearbox end

The propshaft version with splines on the gearbox end can only removed completely; refer to ⇒ page 24 .

1.4.2 Detaching and attaching propshaft at gearbox - propshaft with bolted connection at gearbox end

Special tools and workshop equipment required

- Counterhold tool - T10172- with adapters
- Adapter -T10172/5- (M8 bolts)

Protected by copyright. Copying for private or commercial purposes, in part or in whole, is not permitted unless authorised by AUDI AG. AUDI AG does not guarantee or accept any liability with respect to the correctness of information in this document. Copyright by AUDI AG.

- Adapter -T10172/6- (M10 bolts)

Protected by copyright. Copying for private or commercial pu
permitted unless authorised by AUDI AG. AUDI AG does not g
with respect to the correctness of information in this docume

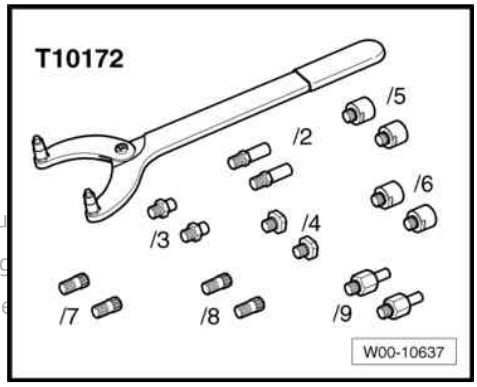

- High-temperature grease ; refer to ⇒ Electronic parts catalogue

Detaching propshaft

- Observe notes ⇒ page 22 .
- Repairs on the propshaft should be carried out on a two pillar hoist.

Note

The flexible joint in the front exhaust pipe must not be bent more than 10° – otherwise it can be damaged.

– Unfasten clamps -1- and -2- and disconnect exhaust system.

– Tie front exhaust pipe(s) up to side of underbody.

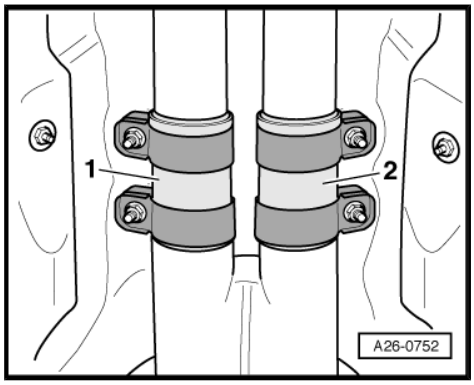

– If fitted, detach heat shield -A- from gearbox -arrows-.

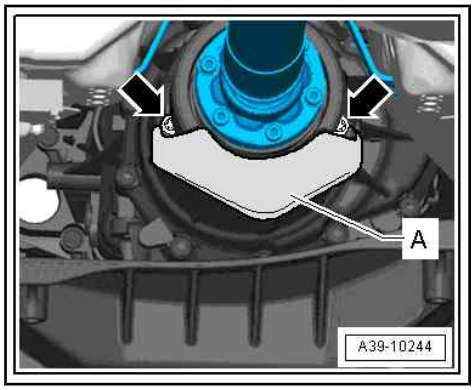

– Remove securing bolts from connection between propshaft and gearbox (counterhold using counterhold tool - T10172- and -T10172/5-).

– Secure propshaft to side of underbody.

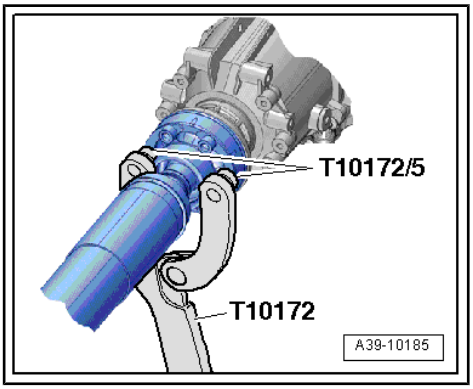

Attaching propshaft

Installation is carried out in reverse sequence. Note the following:

- ♦ Remove old, dried-out high-temperature grease from CV joint and flange for propshaft. Put in exactly the same quantity of fresh high-temperature grease .
- ♦ Clean remaining locking fluid out of threaded holes in flange shaft on gearbox. The threads can be cleaned with a thread tap. Otherwise the securing bolts can shear off when they are screwed in.
- ♦ Always install new securing bolts for propshaft (self-locking bolts).
- ♦ Check for damage to gasket for propshaft on gearbox flange (kinked gasket or partially detached rubber coating). A damaged gasket must be renewed.

– Bring propshaft into position and fit new bolts on CV joint.

– Tighten bolts securing propshaft (front end). Tightening torque ⇒ Item 5 (page 23)

• Use counterhold tool - T10172- with adapters - T10172/5- .

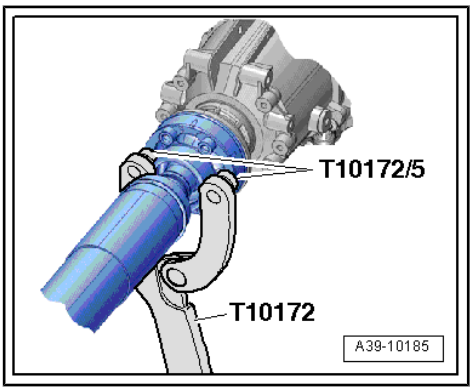

– If fitted, bolt heat shield -A- onto gearbox -arrows-. Tightening torque ⇒ page 24

– Assemble exhaust system and perform stress-free alignment ⇒ Rep. gr. 26 ; Exhaust pipes/silencers; Exploded view - silencers .

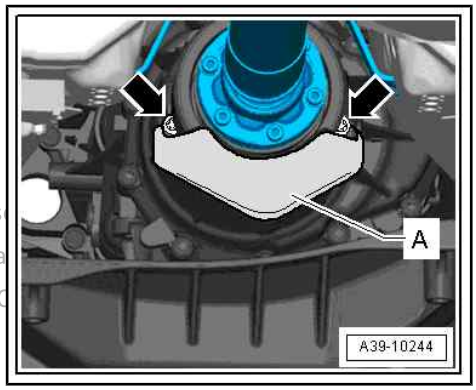

Protected by copyright. Copying for private or commercial purpos
permitted unless authorised by AUDI AG. AUDI AG does not guara
with respect to the correctness of information in this document. C

1.5 Renewing protective boot

⇒ "1.5.1 Renewing protective boot for propshaft with splines on gearbox end", page 41

1.5.1 Renewing protective boot for propshaft with splines on gearbox end

Special tools and workshop equipment required

♦ Flanging tool - T40261-

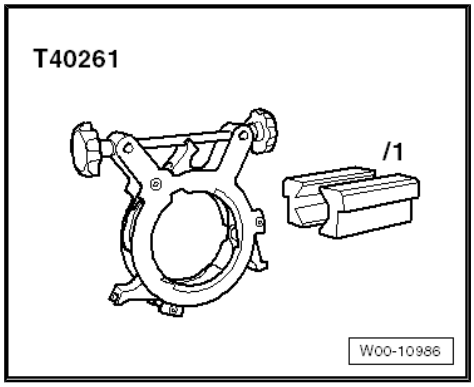

♦ Hose clip - ∅ 23 ... 35 mm-

Procedure

– Remove propshaft ⇒ page 24 .

– Clamp propshaft in vice using protective jaw covers - T40261/1- as shown in illustration.

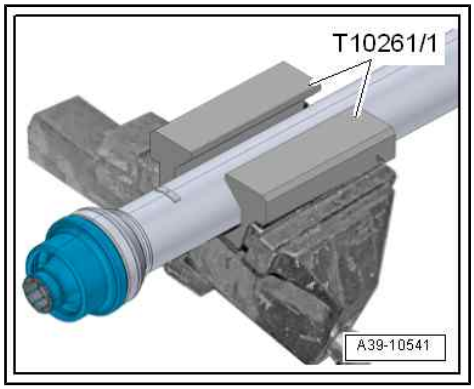

– Using a screwdriver, carefully open an initial section of seam between metal sleeve -1- and propshaft joint.

• Take care not to damage surface of propshaft joint.

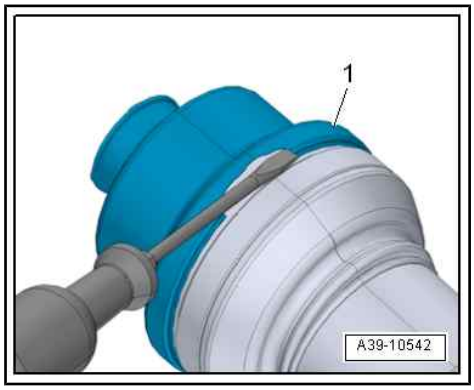

– Open rest of seam on metal sleeve -arrow- using side-cutting pliers.

– Detach old protective boot with metal sleeve from propshaft joint.

Protected by copyright. Copying for private or commercial purpos[illegible] not permitted unless authorised by AUDI AG. AUDI AG does not guara[illegible] liability with respect to the correctness of information in this document. Co[illegible]DI AG.

– Destroy support ring using water pump pliers -arrows- and remove protective boot with metal sleeve.

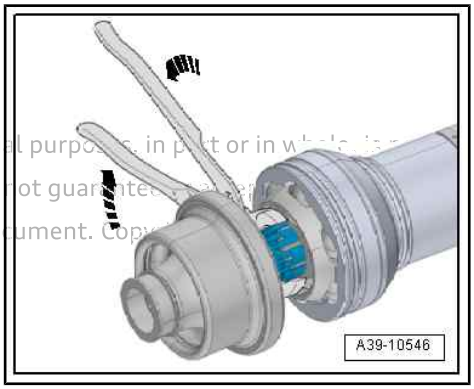

Note

Protected by copyright. Copying for private or commercial purposes, in part or in whole, is not permitted unless authorized by AUDI AG. AUDI AG does not guarantee or assume liability with respect to the correctness of information in this document. Copyright by AUDI AG.

Inner part of joint and balls remain in propshaft joint.

– Wipe off old excess grease.

– Regrease propshaft joint with grease from installation kit.

Note

Use the same amount of grease as you wiped off plus the amount that remained in the old protective boot.

– Clean sealing surface -arrow- on propshaft joint -2-.

– Smooth down any scoring caused by removal of old protective boot.

– Insert new O-ring -1- in groove.

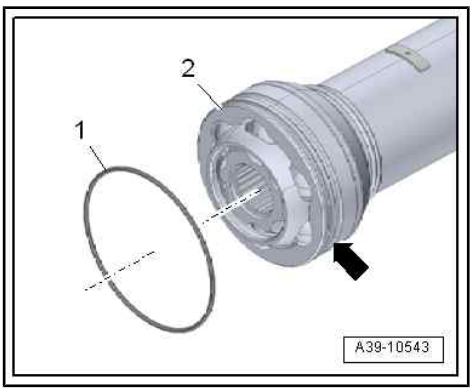

– Slide support ring -2- into opening of protective boot -1-.

- Installation direction: Recess -arrow A- is inserted into protective boot.
- Teeth -arrow B- on support ring should be visible at edge of opening on protective boot.

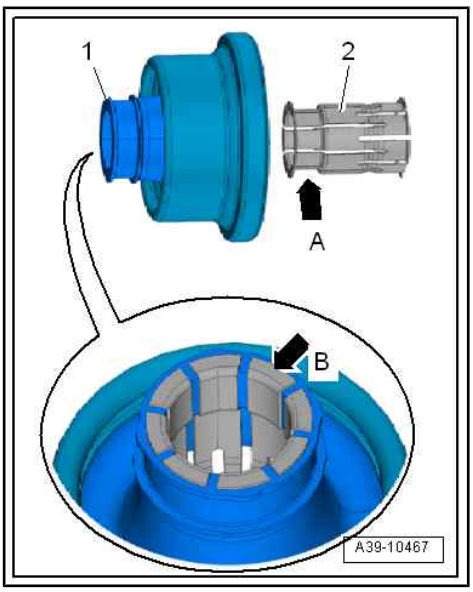

– Roll back protective boot -2- inside metal sleeve -1-.
– Slide hose clip -arrow- onto exposed teeth of support ring -3-, as shown in illustration.
• Do not cover ends of support ring.

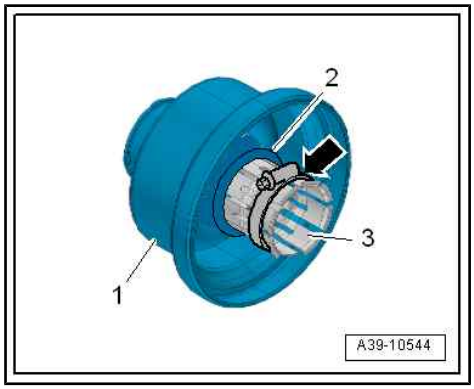

– Tighten hose clip -2- until teeth -1- of support ring can be inserted into groove -3- on inner part of joint.
– Release and detach hose clip -2-.
• Teeth of support ring must mate with groove on inner part of joint -arrow-.
– Push metal sleeve of protective boot onto joint as far as stop.

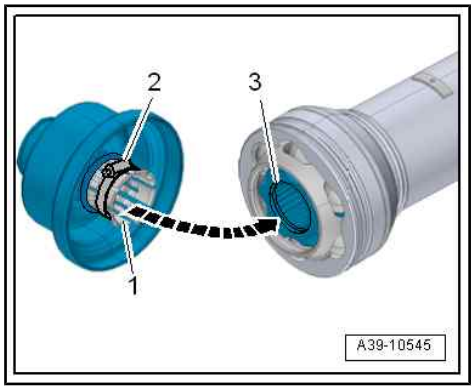

– Apply flanging tool - T40261- to metal sleeve so that stops of guide rollers -arrow- are resting on edge of metal sleeve.
– Turn flanging tool -T40261- back and forth to close seam of metal sleeve.
• Angle of rotation must be at least 90° when moving tool back and forth.
• Tighten adjusting wheel on flanging tool -T40261- as you move tool back and forth.
• Seam is finished when adjusting wheel of -T40261- can no longer be turned without difficulty.

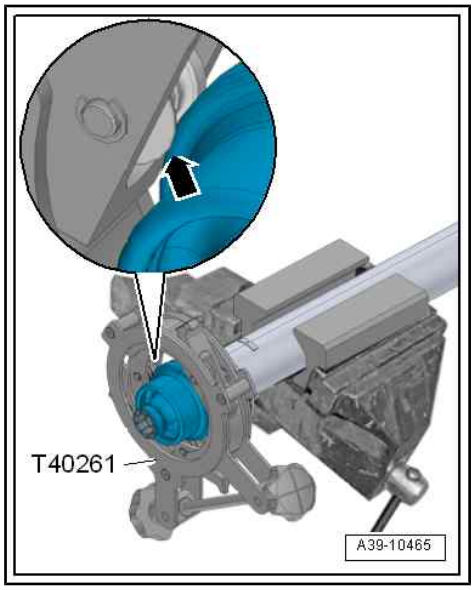

Protected by copyright. Copying for private or commercial purposes, in part or in whole, is not permitted unless authorised by AUDI AG. AUDI AG does not guarantee or accept any liability with respect to the correctness of information in this document. Copyright by AUDI AG.

2 Final drive

⇒ “2.1 Exploded view - final drive”, page 45

⇒ “2.2 Removing and installing final drive”, page 48

2.1 Exploded view - final drive

⇒ “2.1.1 Exploded view - final drive 0BC, 0BD”, page 45

⇒ “2.1.2 Exploded view - final drive 0BE, 0BF”, page 47

2.1.1 Exploded view - final drive 0BC, 0BD

Rear final drive

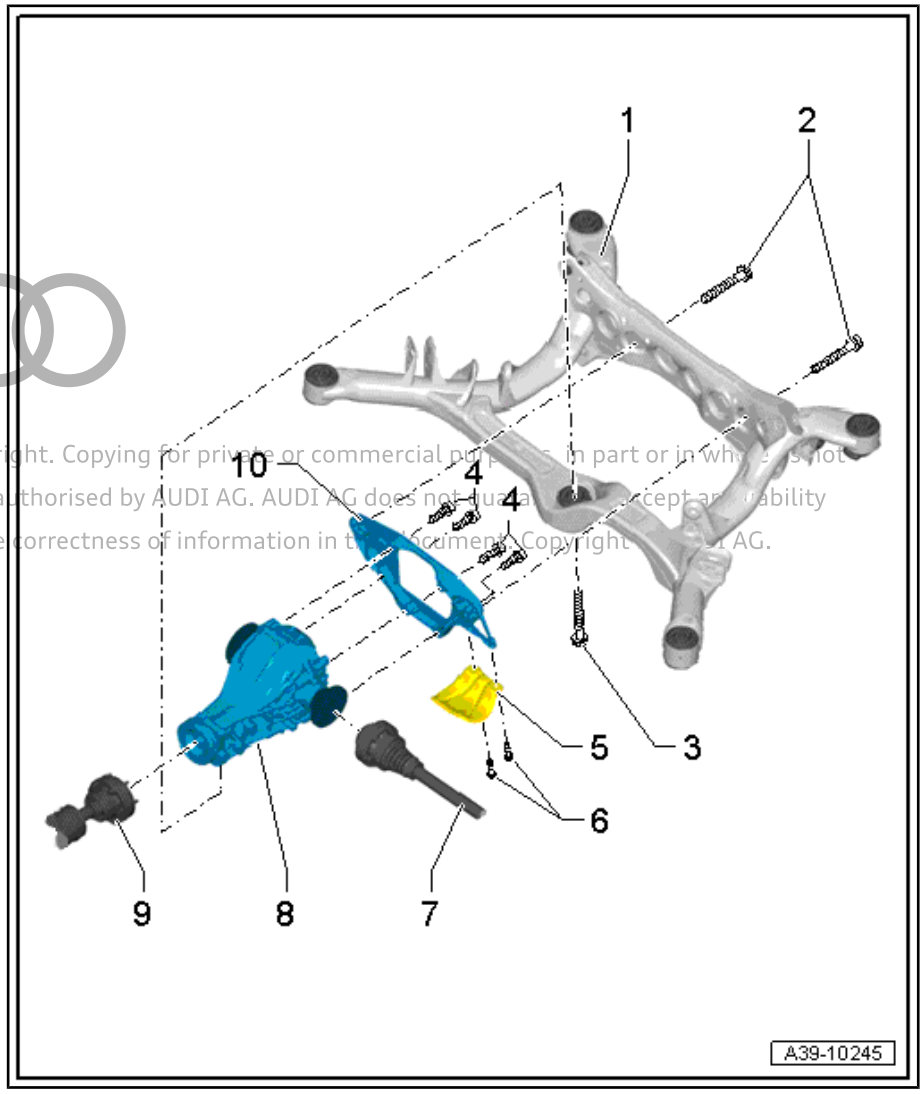

1 - Subframe

- ♦ Removing and installing ⇒ Running gear, axles, steering; Rep. gr. 42 ; Subframe; Exploded view - subframe

2 - Bolt

- ❑ 95 Nm

3 - Bolt

- ❑ 55 Nm

4 - Bolt

- ❑ 55 Nm
- ❑ Used to secure a damper weight on some versions ⇒ page 45

5 - Heat shield

6 - Bolt

- ❑ 20 Nm

7 - Drive shaft

- ❑ Removing and installing ⇒ Running gear, axles, steering; Rep. gr. 42 ; Drive shaft; Removing and installing drive shaft .

8 - Rear final drive

- ❑ With damper weight (depending on version) ⇒ page 45
- ❑ ⇒ “2.2 Removing and installing final drive”, page 48

9 - Propshaft

- ❑ Removing and installing ⇒ page 24
- ❑ Detaching and attaching propshaft at rear final drive ⇒ page 37

10 - Cross member

Protected by copyright. Copying for private or commercial purposes, in part or in whole, is not permitted unless authorised by AUDI AG. AUDI AG does not guarantee or accept any liability with respect to the correctness of information in this document. Copyright © 2011 AUDI AG.

Damper weights on rear final drive

1 - Bolt

- ❑ 22 Nm

2 - Damper weight

- ❑ Depends on version; refer to ⇒ Electronic parts catalogue

3 - Rear final drive

- ❑ ⇒ "2.2 Removing and installing final drive", page 48

4 - Cross member

5 - Damper weight

- ❑ Depends on vehicle version; refer to ⇒ Electronic parts catalogue

6 - Bolt

- ❑ Tightening torque ⇒ Item 4 (page 45)

7 - Damper weight

- ❑ Depends on version; refer to ⇒ Electronic parts catalogue

8 - Washer

9 - Bolt

- ❑ Tightening torque ⇒ Item 4 (page 45)

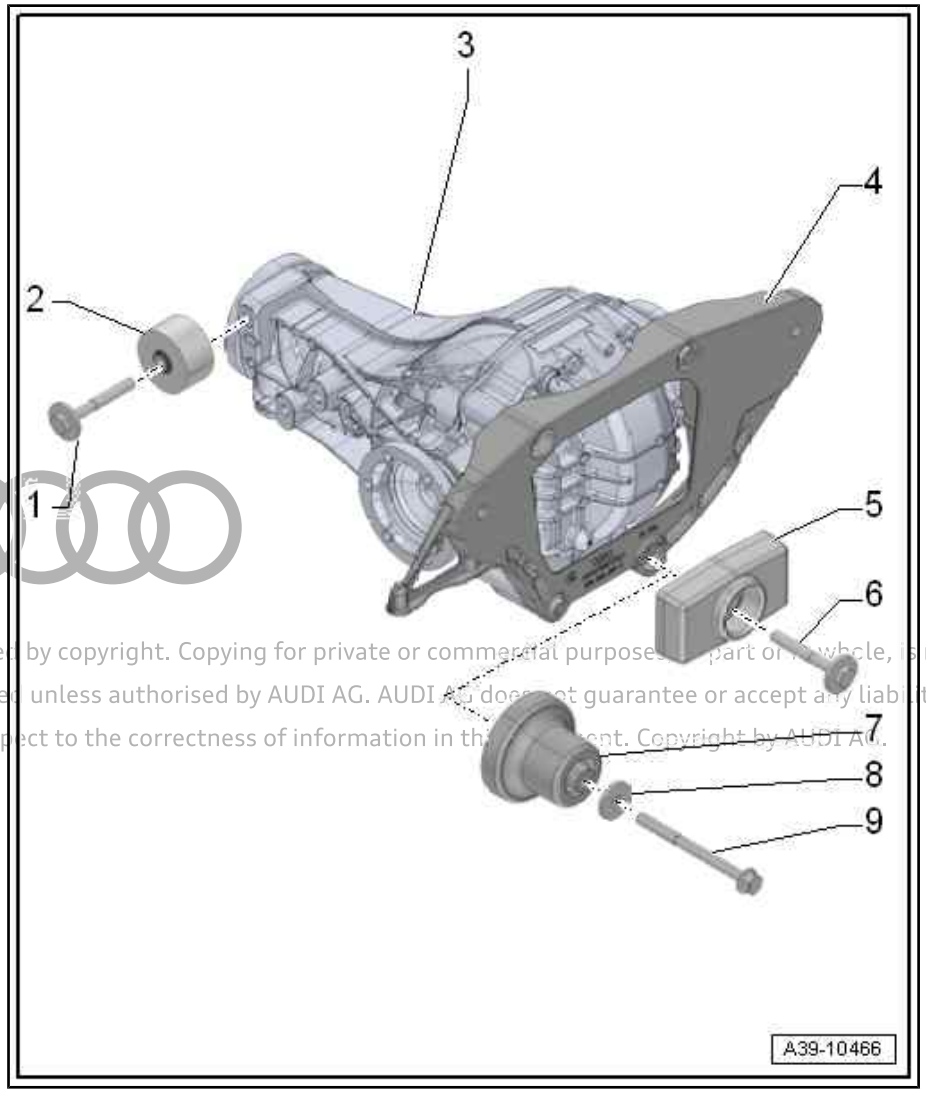

Protected by copyright. Copying for private or commercial purposes, in part or in whole, is not permitted unless authorised by AUDI AG. AUDI AG does not guarantee or accept any liability with respect to the correctness of information in this document. Copyright by AUDI AG.

2.1.2 Exploded view - final drive 0BE, 0BF

1 - Bolt

- ❑ 55 Nm

2 - Subframe

- ❑ Exploded view ⇒ Running gear, axles, steering; Rep. gr. 42 ; Subframe; Exploded view - subframe

3 - Propshaft

- ❑ Exploded view ⇒ page 19
- ❑ Removing and installing ⇒ page 24

4 - Rear final drive

- ❑ ⇒ "2.2 Removing and installing final drive", page 48
- ❑ Additional work required after renewing rear final drive ⇒ page 88

5 - Drive shaft

- ❑ Exploded view ⇒ Running gear, axles, steering; Rep. gr. 42 ; Drive shaft; Removing and installing drive shaft

6 - Heat shield

7 - Bolt

- ❑ 20 Nm

8 - Bolt

- ❑ 95 Nm

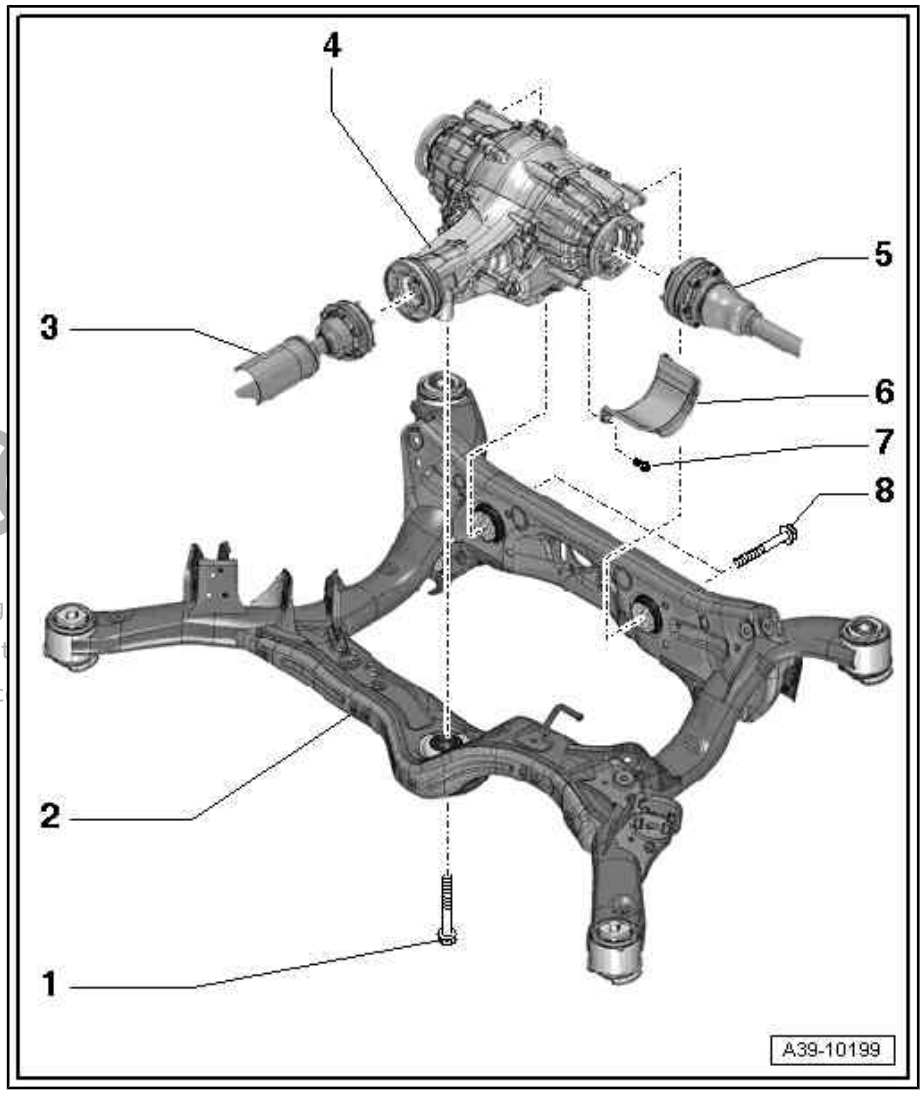

Protected by copyright. Copying for private or commercial purposes, in part or in whole, is not permitted unless authorised with respect to the c

2.2 Removing and installing final drive

⇒ “2.2.1 Removing and installing final drive 0BC for Audi A4, A5, A6, A7, Q5 (not Q5 hybrid)”, page 48

⇒ “2.2.2 Removing and installing final drive 0BC for Audi Q5 hybrid”, page 55

⇒ “2.2.3 Removing and installing final drive 0BC for Audi A8”, page 63

⇒ “2.2.4 Removing and installing final drive 0BD for Audi A4, A5, Q5”, page 70

⇒ “2.2.5 Removing and installing final drive 0BF for Audi A4, A5, A6, A7, Q5”, page 76

⇒ “2.2.6 Removing and installing final drive 0BF for Audi RS 4, RS 5”, page 82

⇒ “2.2.7 Removing and installing final drive 0BE, 0BF for Audi A8”, page 85

⇒ “2.2.8 Additional work required after renewing final drive 0BE, 0BF”, page 88

2.2.1 Removing and installing final drive 0BC for Audi A4, A5, A6, A7, Q5 (not Q5 hybrid)

Removing ⇒ page 49

Installing ⇒ page 52

Special tools and workshop equipment required

- Engine and gearbox jack - V.A.G 1383 A- with universal gearbox support - V.A.G 1359/2-

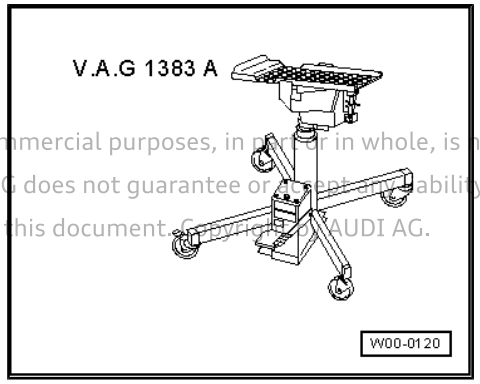

Protected by copyright. Copying for private or commercial purposes, in part or in whole, is not permitted unless authorised by AUDI AG. AUDI AG does not guarantee or assume liability with respect to the correctness of information in this document. Copyright by AUDI AG.

- Tensioning strap - T10038-

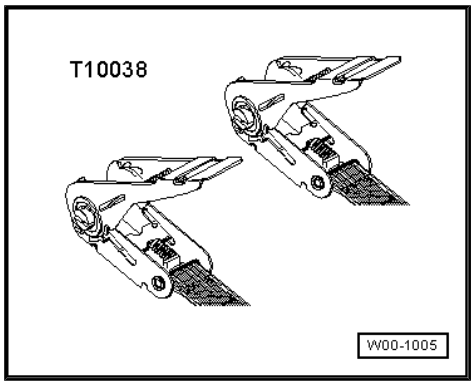

- Support - T10149-

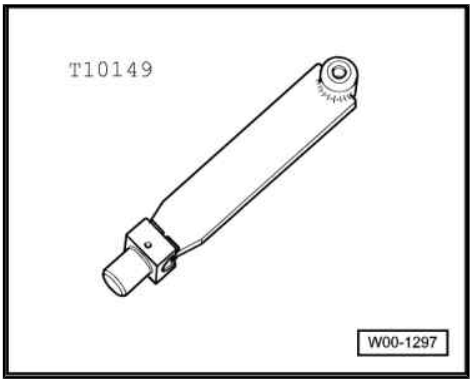

- Counterhold tool - T10172- with adapters - T10172/5-

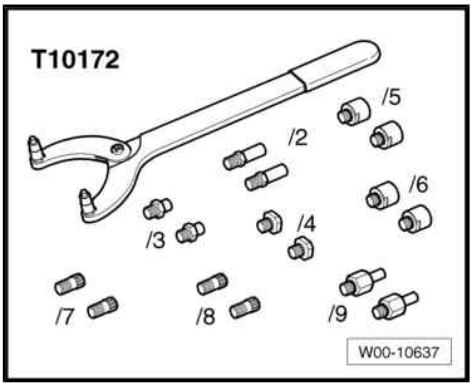

- Socket - T40154-

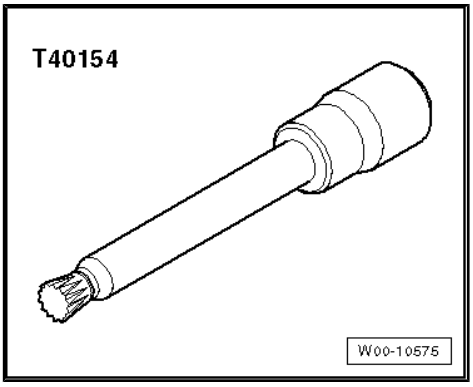

Removing:

Refer to general repair instructions ⇒ page 14 .

– Place vehicle on lifting platform.

– Detach wheel trim from rear left wheel (on vehicles with light alloy wheels, pull off trim cap using puller from vehicle tool kit).

– Remove rear left wheel.

Protected by copyright. Copying for private or commercial purposes, in part or in whole, is not permitted unless authorised by AUDI AG. AUDI AG does not guarantee or accept any liability with respect to the correctness of information in this document. Copyright by AUDI AG.

Vehicles with 6-cylinder or 8-cylinder engine (except Q5)

– Remove rear cross member -1-.

– Remove rear section of exhaust system -2- ⇒ Rep. gr. 26 ; Exhaust pipes/silencers; Exploded view - silencers .

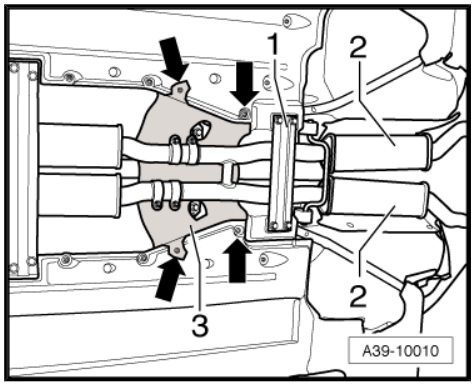

Note

A second mechanic is required for removing the rear section of the exhaust system.

– Re-attach rear cross member -1- to body.

All vehicles (continued)

– Detach heat shield -3- from body -arrows-.

– Detach propshaft from rear final drive ⇒ page 37 .

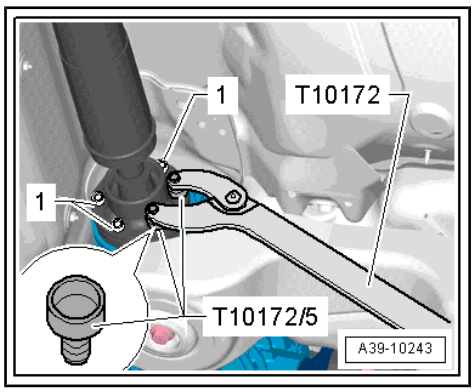

– Place a block of wood -A- (approx. 40 mm high) on rear cross member -C- to support propshaft -B-.

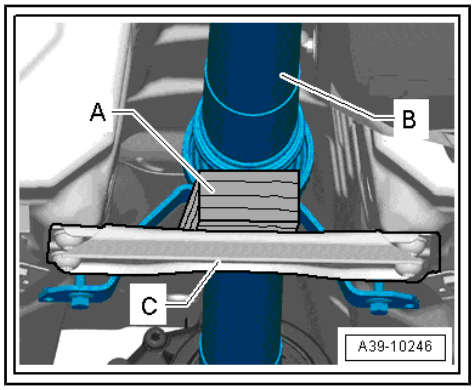

Note

- *On the Audi Q5, the propshaft -B- is supported by the heat shield below the centre bearing.*
- *The propshaft can be bent as far as the stop at the centre joint, but must not be subjected to any kind of force. The centre joint or the protective boot can be damaged if the joint is forced against its stop.*

– Remove bolts -arrows- securing centre propshaft bearing.

– Push propshaft forwards and at the same time pull it off rear final drive.

– Tie propshaft up to one side on subframe.

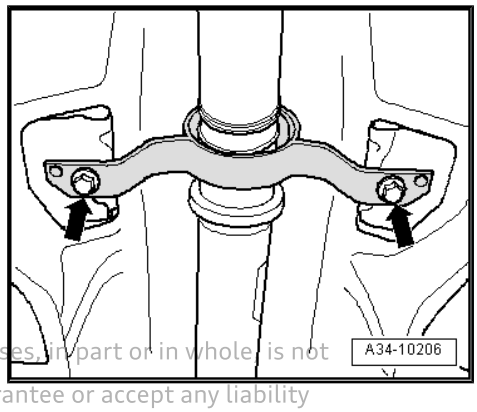

Protected by copyright. Copying for private or commercial purposes, in part or in whole, is not permitted unless authorised by AUDI AG. AUDI AG does not guarantee or accept any liability with respect to the correctness of information in this document. Copyright by AUDI AG.

– Detach heat shield -A- for drive shaft (left-side) from cross member/rear final drive -arrows-.

Protected by copyright. Copying for private or commercial purposes, permitted unless authorised by AUDI AG. AUDI AG does not guarante with respect to the correctness of information in this document. Cop

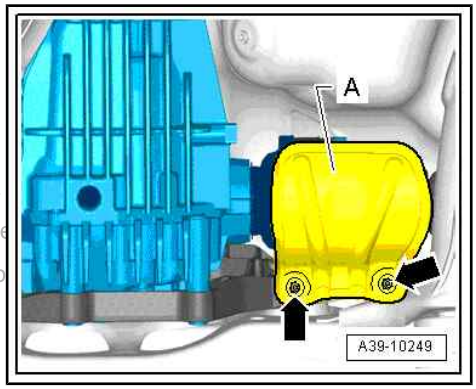

– Unbolt drive shafts on both sides -1- and -3-.
– Slacken off bolts -2- approx. 3 turns.
– Remove bolt -4-.

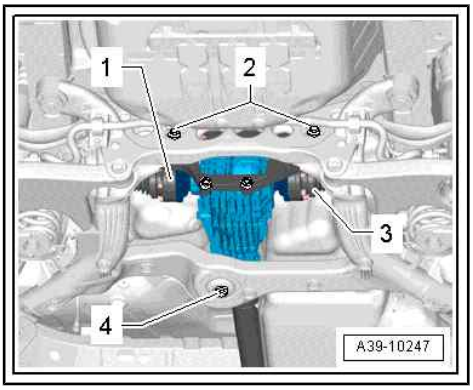

– Place engine and gearbox jack - V.A.G 1383 A- with universal gearbox support - V.A.G 1359/2- and a suitable block of wood -A- (approx. 80 mm high) below rear final drive.

Note

Make sure that universal gearbox support - V.A.G 1359/2- does not make contact with fuel tank.

– Remove bolts -1- (bottom bolts securing cross member to rear final drive) and -2-.

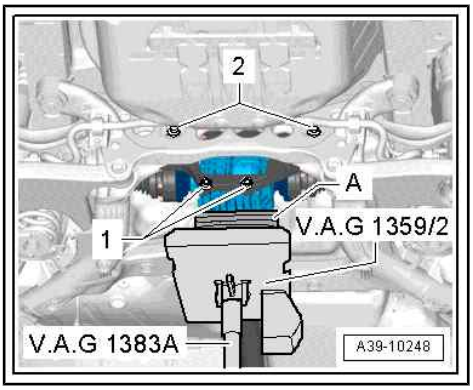

– Remove 2 top bolts securing cross member -B- to rear final drive.
– For this step, guide socket - T40154- through holes in sub-frame -A-. If necessary, move final drive slightly to either side.

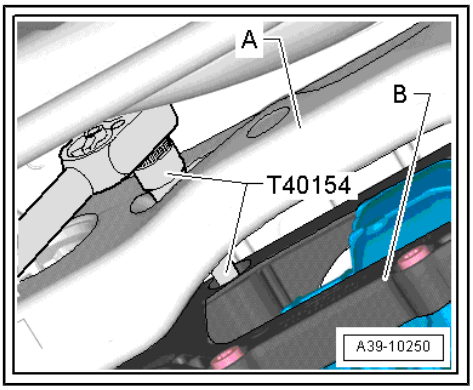

– Then push final drive -A- slightly forwards.

– Turn cross member -B- towards the bottom left -arrow 1-, guide past final drive -arrow 2- and remove.

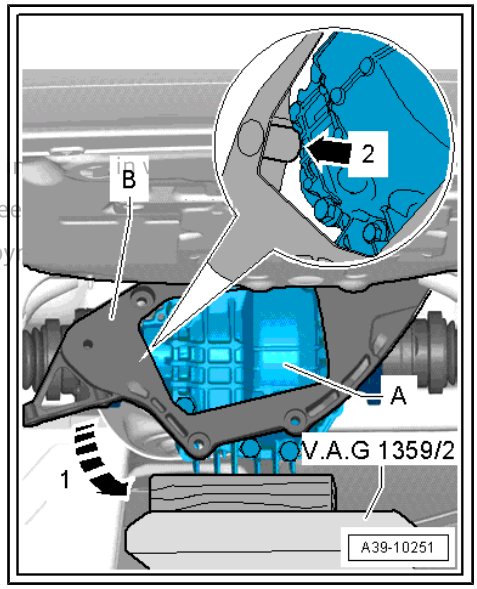

Protected by copyright. Copying for private or commercial purposes, in whole or in part, is not permitted unless authorised by AUDI AG. AUDI AG does not guarantee or assume any liability with respect to the correctness of information in this document. Copyright by AUDI AG.

Note

- *A 2nd mechanic is required for the next steps when removing the rear final drive.*
- *Before lifting the rear left suspension, the vehicle must be secured to the lifting arm of the lifting platform with tensioning strap - T10038- .*

– Take out engine and gearbox jack - V.A.G 1383 A- from below rear final drive; 2nd mechanic must hold final drive to prevent it from dropping.

– Attach support - T10149- to engine and gearbox jack - V.A.G 1383 A- .

– Attach support - T10149- to rear left wheel hub using wheel bolt -arrow A-.

– Using engine and gearbox jack - V.A.G 1383 A- , lift rear left suspension until vehicle starts to come clear of lifting arm -1- of lifting platform -arrow B-. Do not lift vehicle further.

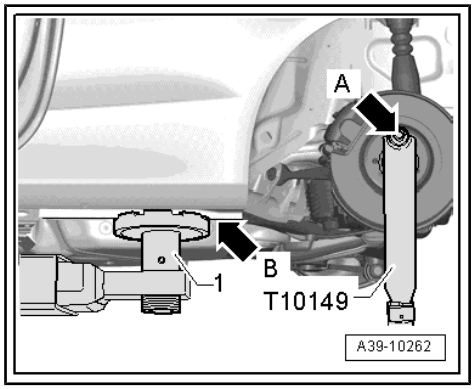

WARNING

- *Do not raise or lower vehicle while engine and gearbox jack - V.A.G 1383 A- is positioned under the vehicle.*
- *Do not leave engine and gearbox jack - V.A.G 1383 A- under vehicle for longer than necessary.*

– 2nd mechanic must now push rear final drive -1- towards left side of vehicle in direction of -arrow-.

– Guide drive shaft (right-side) -5- upwards out of flange shaft -4- of rear final drive.

– Then disengage drive shaft (left-side) -3- and, with assistance of 2nd mechanic, detach final drive rearwards from subframe -2-.

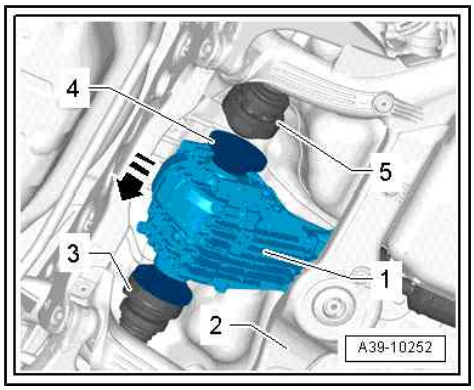

– When renewing a rear final drive on which a damper weight -arrow- is fitted, damper weight must be transferred to new rear final drive ⇒ page 45 .

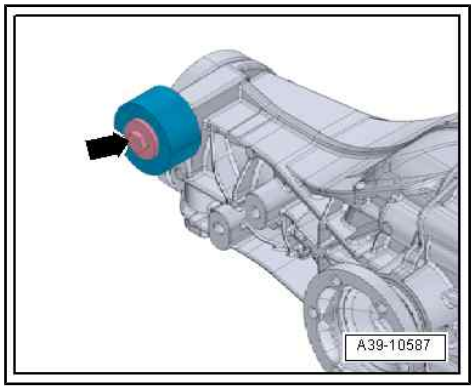

Installing:

Installation is carried out in reverse sequence. Note the following:

- Tightening torques ⇒ page 45

– With assistance of 2nd mechanic, bring rear final drive -1- into installation position on subframe -2-.
– Fit drive shaft (left-side) -arrow 3- into flange shaft of final drive.
– 2nd mechanic must now push rear final drive -1- towards left side of vehicle in direction of -arrow-.
– Then fit drive shaft (right-side) -5- into flange shaft -4- of final drive.
– Detach engine and gearbox jack - V.A.G 1383 A- with support - T10149- from rear left suspension.

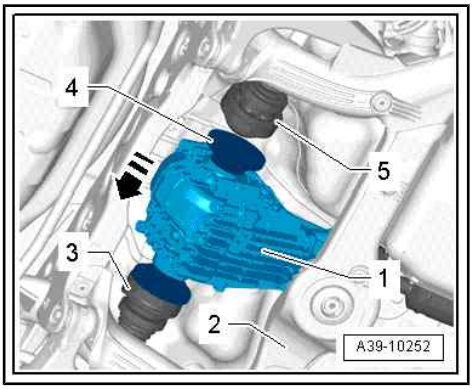

– Place engine and gearbox jack - V.A.G 1383 A- with universal gearbox support - V.A.G 1359/2- and a suitable block of wood (approx. 80 mm high) below rear final drive -A-.
– Then push final drive -A- slightly forwards.
– Turn cross member -B- towards top left in opposite direction to -arrow 1- and bring into position, guiding past final drive -arrow 2-.

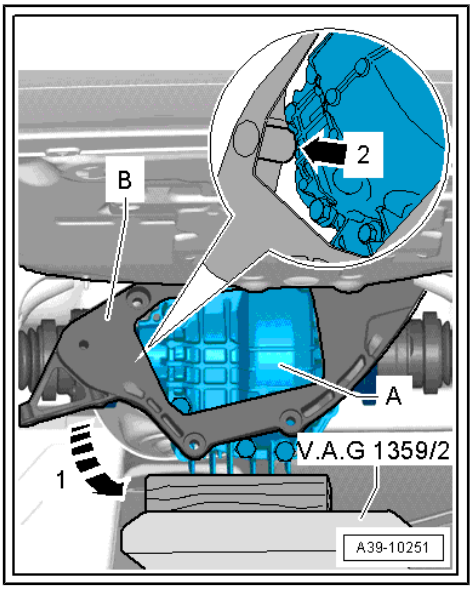

– Now tighten 4 bolts securing cross member -B- to rear final drive in diagonal sequence. Tightening torque ⇒ Item 4 (page 45)
– For this step, guide socket - T40154- through holes in sub-frame -A-. If necessary, move final drive slightly to either side.

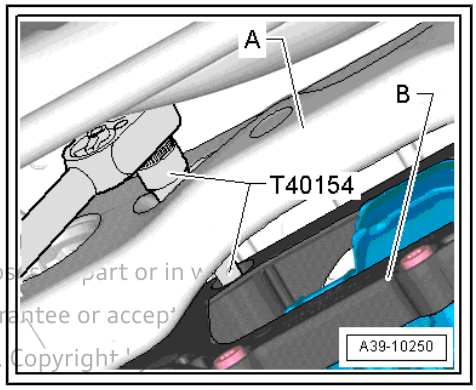

Protected by copyright. Copying for private or commercial purpos part or in w
permitted unless authorised by AUDI AG. AUDI AG does not guarantee or accep
with respect to the correctness of information in this document. Copyright

– Screw in bolts -2- and -4- and tighten hand-tight initially.

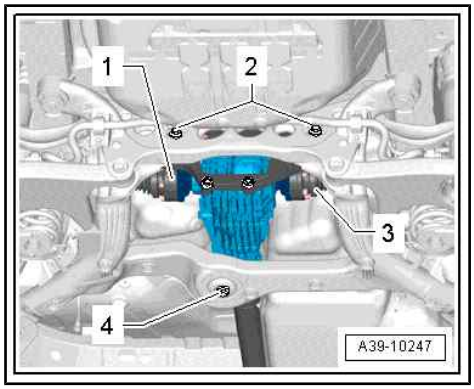

Note

For illustration purposes the final drive is shown without engine and gearbox jack - V.A.G 1383 A- and universal gearbox support - V.A.G 1359/2- .

– Tighten bolt -4-. Tightening torque ⇒ Item 3 (page 45)

– Then tighten bolts -2-. Tightening torque ⇒ Item 2 (page 45)

– Take out engine and gearbox jack - V.A.G 1383 A- from below final drive.

– Secure drive shafts -1- (left-side) and -3- (right-side) ⇒ Running gear, axles, steering; Rep. gr. 42 ; Drive shaft; Removing and installing drive shaft .

– Install heat shield -A- for drive shaft (left-side) on cross member/rear final drive -arrows- ⇒ Item 6 (page 45) .

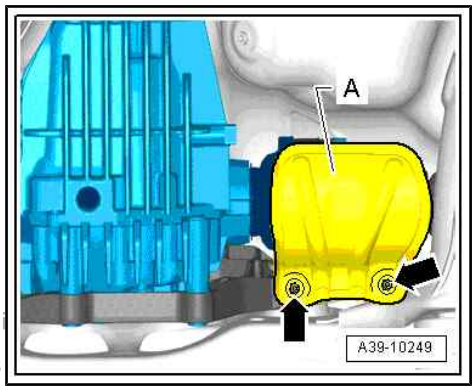

Protected by copyright. Copying for private or commerci
permitted unless authorised by AUDI AG. AUDI AG does
with respect to the correctness of information in this document. Copyright by AUDI AG.

– Bolt propshaft onto rear final drive ⇒ page 38 .

– Secure centre propshaft bearing to body so it is free of stress. Tightening torque ⇒ Item 8 (page 23)

– Check gear oil level in rear final drive ⇒ page 107 .

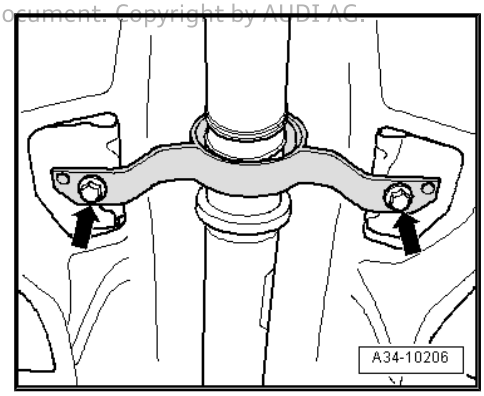

– Secure heat shield -3- to body -arrows-.

– Install rear section of exhaust system and perform stress-free alignment ⇒ Rep. gr. 26 ; Exhaust pipes/silencers; Exploded view - silencers .

– If originally fitted, install cross member -1- ⇒ General body repairs, exterior; Rep. gr. 66 ; Underbody trim; Exploded view - underbody trim .

– Fit rear wheel (left-side) and tighten wheel bolts ⇒ Running gear, axles, steering; Rep. gr. 44 ; Wheels, tyres .

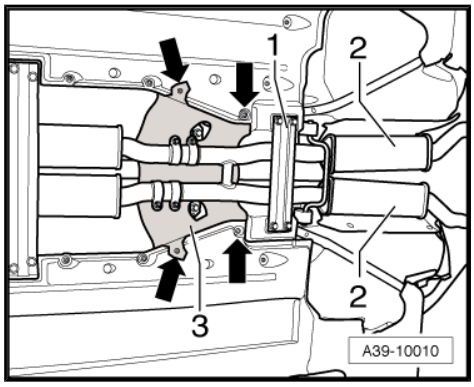

2.2.2 Removing and installing final drive 0BC for Audi Q5 hybrid

Removing ⇒ page 56

Installing ⇒ page 60

Special tools and workshop equipment required

- Engine and gearbox jack - V.A.G 1383 A- with universal gearbox support - V.A.G 1359/2-

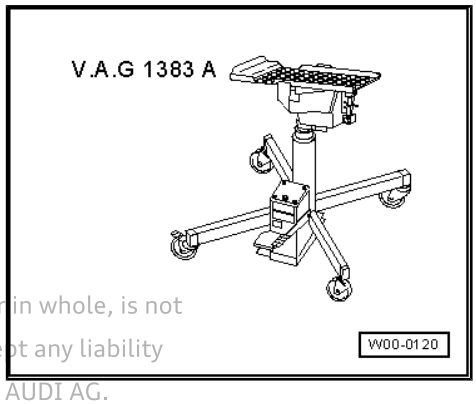

Protected by copyright. Copying for private or commercial purposes, in part or in whole, is not permitted unless authorised by AUDI AG. AUDI AG does not guarantee or accept any liability with respect to the correctness of information in this document. Copyright by AUDI AG.

- Tensioning strap - T10038-

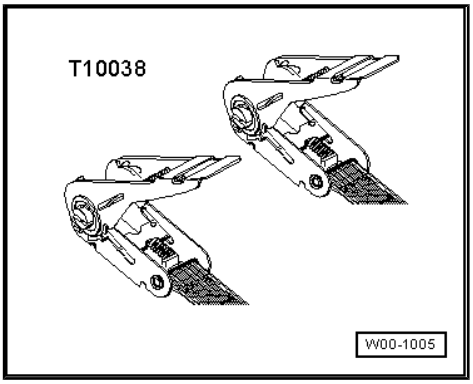

- Support - T10149-

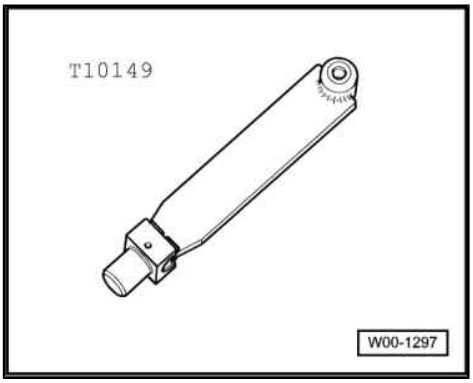

- Counterhold tool - T10172- with adapters - T10172/5-

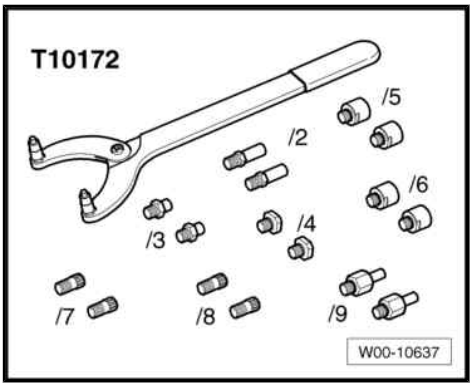

- Socket - T40154-

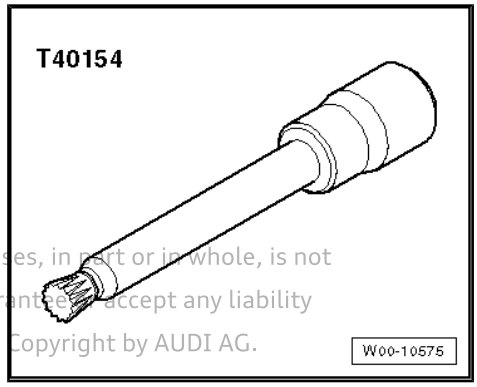

Protected by copyright. Copying for private or commercial purposes, in part or in whole, is not permitted unless authorised by AUDI AG. AUDI AG does not guarantee or accept any liability with respect to the correctness of information in this document. Copyright by AUDI AG.

Removing:

Observe safety precautions ⇒ page 10 .

Refer to general repair instructions ⇒ page 14 .

– Place vehicle on lifting platform.

De-energising high-voltage system

> ⚠ **WARNING**
>
> *Observe general warning instructions for work on the high-voltage system ⇒ Electrical system, hybrid; Rep. gr. 93 ; General warning instructions for work on the high-voltage system .*

The high-voltage system must be de-energised according to the `Guided Fault Finding` routine in the ⇒ Vehicle diagnostic tester , and ONLY by this method.

> ⚠ **DANGER!**
>
> *High voltage can cause fatal injury.*
>
> *Danger of severe or fatal injuries from electric shock*
>
> - *The high-voltage system may only be de-energised by a suitably qualified person (Audi high-voltage technician).*
> - *It must be definitely confirmed that the high-voltage system is de-energised. The system may only be de-energised using the vehicle diagnostic tester via "Guided Fault Finding".*
> - *The qualified person (Audi high-voltage technician) confirms that the system is de-energised and uses the locking cap - T40262- to ensure that the system cannot be re-energised. As an additional precaution, the ignition key and the maintenance connector for high-voltage system - TW- are then stored in a safe place by the qualified person.*
> - *The qualified person (Audi high-voltage technician) marks the vehicle by attaching the appropriate warning signs.*

Protected by copyright. Copying for private or commercial purposes, in part or in whole, is not permitted without the consent of AUDI AG. AUDI AG does not guarantee or accept any liability with respect to the correctness of information in this document. Copyright by AUDI AG.

Note

- *De-energising high-voltage system:*
- *Connect vehicle diagnostic tester.*
- *Select* `Guided Fault Finding` *mode.*
- *Using the* `GoTo` *button, select the following menu options in succession.*
- `Function/Component Selection`
- `Body`
- `Electrical system`
- `Self-diagnosis compatible systems`
- `8C - Hybrid battery management -J840`
- `8C - Hybrid battery management, functions`
-
- `51 - De-energise high-voltage system (Rep. Gr. 93)`

– Detach wheel trim from rear left wheel (on vehicles with light alloy wheels, pull off trim cap using puller from vehicle tool kit).

– Remove rear left wheel.

– Unfasten clamps -1- and -2- and remove rear section of exhaust system ⇒ Rep. gr. 26 ; Exhaust pipes/silencers; Exploded view - silencers .

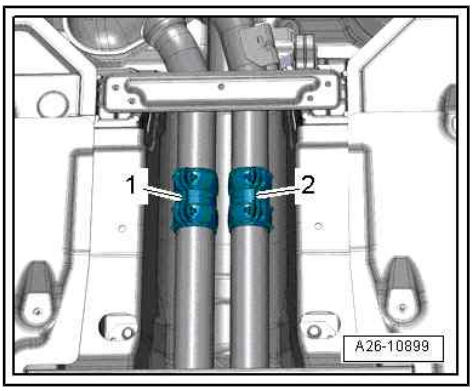

Note

A second mechanic is required for removing the rear section of the exhaust system.

– Detach propshaft from rear final drive ⇒ page 37 .

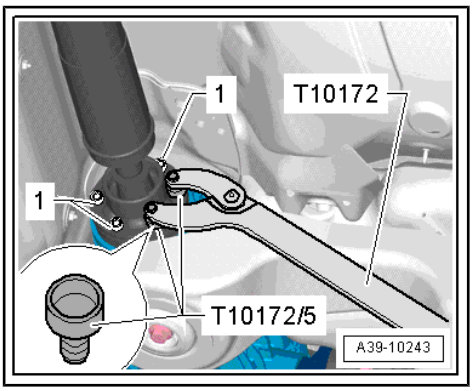

– Remove bolts -arrows- securing centre propshaft bearing.

– Push propshaft forwards and at the same time pull it off rear final drive.

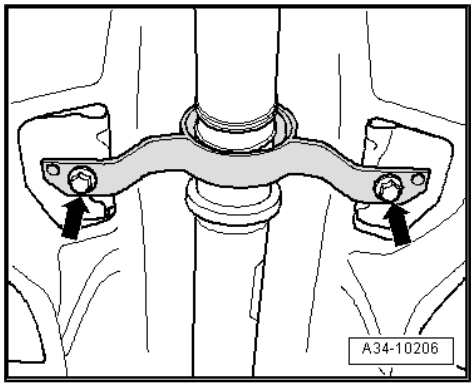

Note

- *The propshaft is supported by the heat shield under the centre bearing.*
- *The propshaft can be bent as far as the stop at the centre joint, but must not be subjected to any kind of force. The centre joint or the protective boot can be damaged if the joint is forced against its stop.*

– Tie propshaft up to one side on subframe.

– Remove bolt -3- for potential equalisation line -2-.

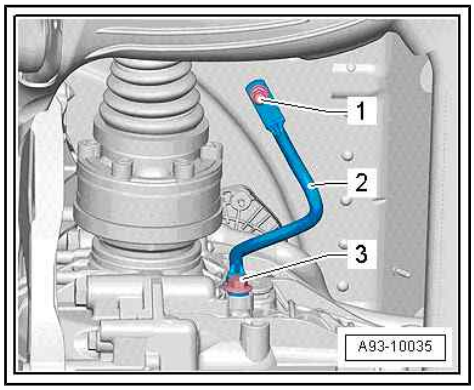

– Detach heat shield -A- for drive shaft (left-side) from cross member/rear final drive -arrows-.

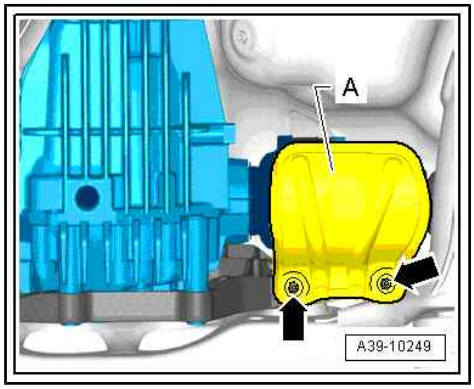

– Unbolt drive shafts on both sides -1- and -3-.

– Slacken off bolts -2- approx. 3 turns.

– Remove bolt -4-.

Protected by copyright. Copying for private or comm
permitted unless authorised by AUDI AG. AUDI AG
with respect to the correctness of information in th

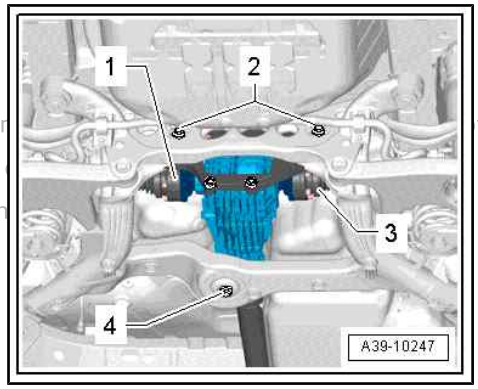

– Place engine and gearbox jack - V.A.G 1383 A- with universal gearbox support - V.A.G 1359/2- and a suitable block of wood -A- (approx. 80 mm high) below rear final drive.

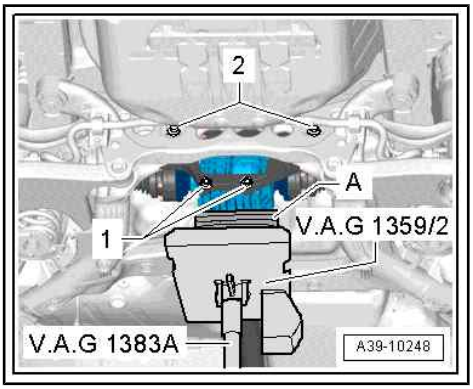

Note

Make sure that universal gearbox support - V.A.G 1359/2- does not make contact with fuel tank.

– Remove bolts -1- (bottom bolts securing cross member to rear final drive) and -2-.

– Remove 2 top bolts securing cross member -B- to rear final drive.

– For this step, guide socket - T40154- through holes in sub-frame -A-. If necessary, move final drive slightly to either side.

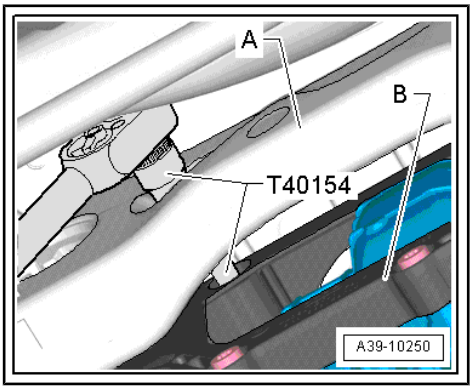

– Then push final drive -A- slightly forwards.

– Turn cross member -B- towards the bottom left -arrow 1-, guide past final drive -arrow 2- and remove.

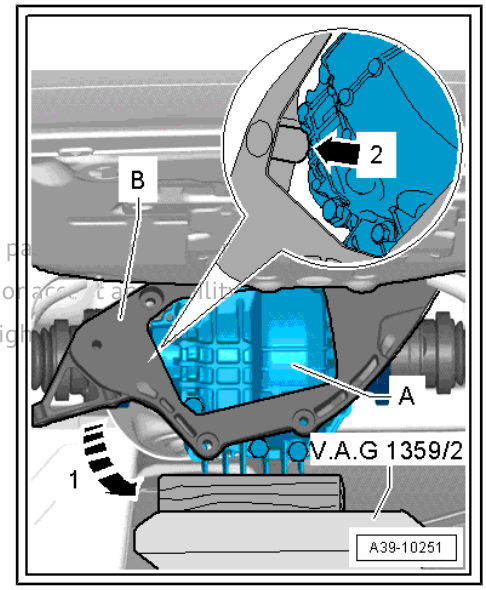

Note

Protected by copyright. Copying for private or commercial purposes, in part or in whole, is not permitted unless authorised by AUDI AG. AUDI AG does not guarantee or accept any liability with respect to the correctness of information. Copyright

- *A 2nd mechanic is required for the next steps when removing the rear final drive.*
- *Before lifting the rear left suspension, the vehicle must be secured to the lifting arm of the lifting platform with tensioning strap - T10038- .*

– Take out engine and gearbox jack - V.A.G 1383 A- from below rear final drive; 2nd mechanic must hold final drive to prevent it from dropping.

– Attach support - T10149- to engine and gearbox jack - V.A.G 1383 A- .

– Attach support - T10149- to rear left wheel hub using wheel bolt -arrow A-.

– Using engine and gearbox jack - V.A.G 1383 A- , lift rear left suspension until vehicle starts to come clear of lifting arm -1- of lifting platform -arrow B-. Do not lift vehicle further.

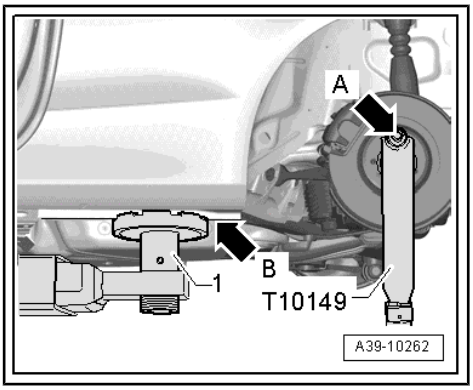

WARNING

- *Do not raise or lower vehicle while engine and gearbox jack - V.A.G 1383 A- is positioned under the vehicle.*
- *Do not leave engine and gearbox jack - V.A.G 1383 A- under vehicle for longer than necessary.*

Protected by copyright. Copying for private or commercial purposes, in part or in whole, is not permitted unless authorised by AUDI AG. AUDI AG does not guarantee or assume any liability with respect to the correctness of information in this document. Copy

– 2nd mechanic must now push rear final drive -1- towards left side of vehicle in direction of -arrow-.
– Guide drive shaft (right-side) -5- upwards out of flange shaft -4- of rear final drive.
– Then disengage drive shaft (left-side) -3- and, with assistance of 2nd mechanic, detach final drive rearwards from subframe -2-.

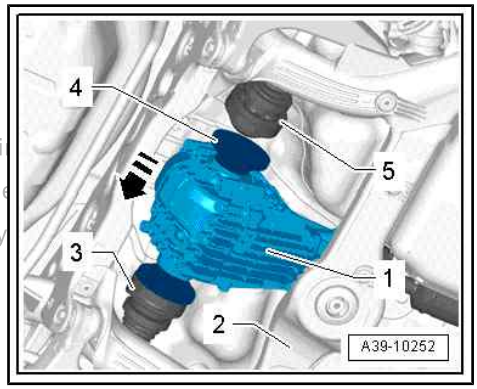

– When renewing a rear final drive on which a damper weight -arrow- is fitted, damper weight must be transferred to new rear final drive ⇒ page 45 .

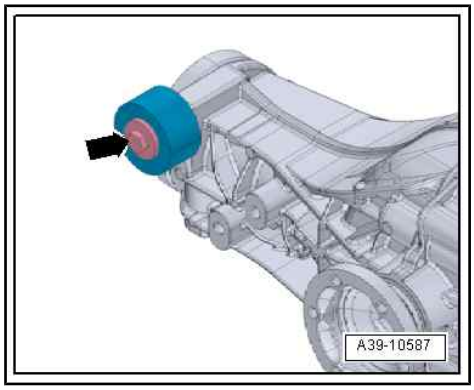

Installing:

Installation is carried out in reverse sequence. Note the following:

- Tightening torques ⇒ page 45

> ⚠ **WARNING**
>
> *Working on vehicles with high-voltage wiring:*
>
> - *Do not support yourself or tools on high-voltage wiring or associated components --> this can damage the insulation.*
> - *High-voltage wiring must not be excessively bent or kinked --> this can damage the insulation.*
> - *The round high-voltage connectors are colour-coded with an external coloured ring and are provided with mechanical coding or guide lugs. It is important to observe this coding when joining up the round high-voltage connectors; otherwise the connectors can be damaged.*

– With assistance of 2nd mechanic, bring rear final drive -1- into installation position on subframe -2-.
– Fit drive shaft (left-side) -arrow 3- into flange shaft of final drive.
– 2nd mechanic must now push rear final drive -1- towards left side of vehicle in direction of -arrow-.
– Then fit drive shaft (right-side) -5- into flange shaft -4- of final drive.
– Detach engine and gearbox jack - V.A.G 1383 A- with support - T10149- from rear left suspension.

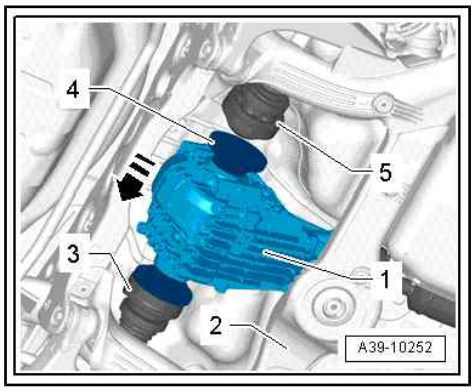

– Place engine and gearbox jack - V.A.G 1383 A- with universal gearbox support - V.A.G 1359/2- and a suitable block of wood (approx. 80 mm high) below rear final drive -A-.
– Then push final drive -A- slightly forwards.
– Turn cross member -B- towards top left in opposite direction to -arrow 1- and bring into position, guiding past final drive -arrow 2-.

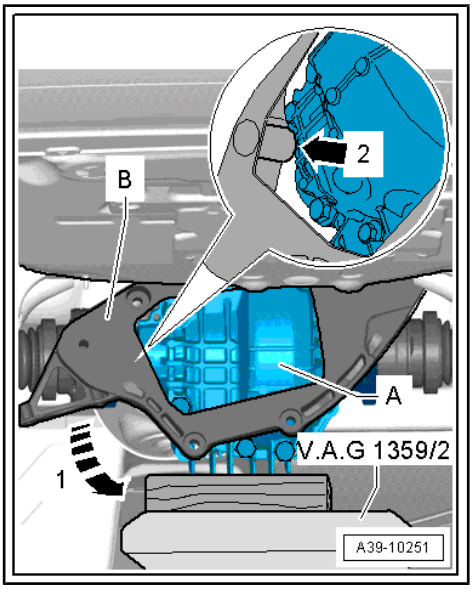

– Now tighten 4 bolts securing cross member -B- to rear final drive in diagonal sequence. Tightening torque ⇒ Item 4 (page 45)
– For this step, guide socket - T40154- through holes in sub-frame -A-. If necessary, move final drive slightly to either side.

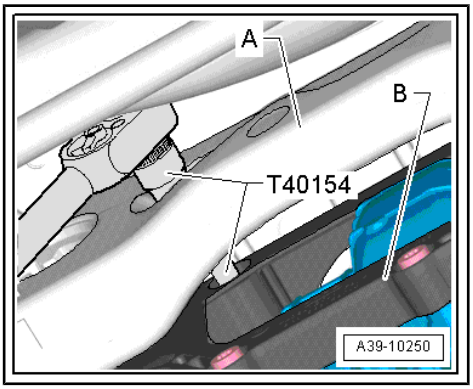

– Screw in bolts -2- and -4- and tighten hand-tight initially.

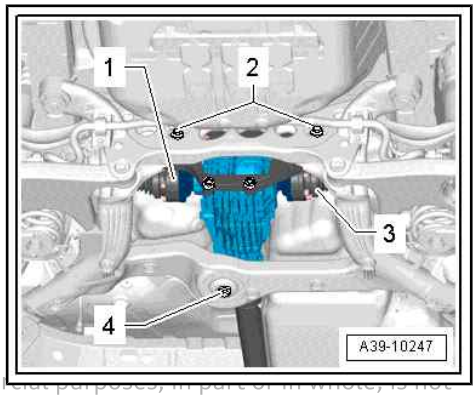

Note

For illustration purposes the final drive is shown without engine and gearbox jack - V.A.G 1383 A- and universal gearbox support - V.A.G 1359/2- .

– Tighten bolt -4-. Tightening torque ⇒ Item 3 (page 45)
– Then tighten bolts -2-. Tightening torque ⇒ Item 2 (page 45)
– Take out engine and gearbox jack - V.A.G 1383 A- from below final drive.
– Secure drive shafts -1- (left-side) and -3- (right-side) ⇒ Running gear, axles, steering; Rep. gr. 42 ; Drive shaft; Removing and installing drive shaft .

Protected by copyright. Copying for private or commercial purposes, in part or in whole, is not permitted unless authorised by AUDI AG. AUDI AG does not guarantee or accept any liability with respect to the correctness of information in this document. Copyright by AUDI AG.

– Bolt potential equalisation line -2- onto rear final drive.

• Tightening torque for bolt -3- on final drive: 20 Nm

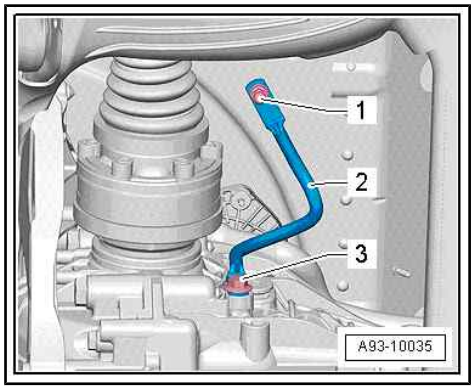

– Install heat shield -A- for drive shaft (left-side) on cross member/rear final drive -arrows- ⇒ Item 6 (page 45) .

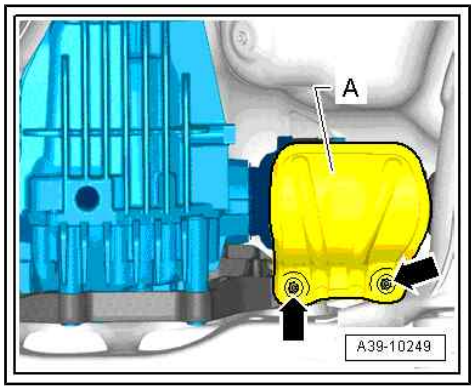

Protected by copyright. Copying for private or commercial purposes, in part or in whole, is not permitted unless authorised by AUDI AG. AUDI AG does not guarantee or accept any liability with respect to the correctness of information in this document. Copyright by AUDI AG.

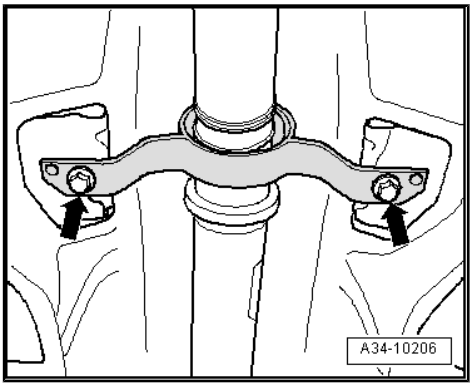

– Bolt propshaft onto rear final drive ⇒ page 38 .
– Secure centre propshaft bearing to body so it is free of stress. Tightening torque ⇒ Item 8 (page 23)
– Check gear oil level in rear final drive ⇒ page 107 .
– Install rear section of exhaust system and perform stress-free alignment ⇒ Rep. gr. 26 ; Exhaust pipes/silencers; Exploded view - silencers .
– Fit rear wheel (left-side) and tighten wheel bolts ⇒ Running gear, axles, steering; Rep. gr. 44 ; Wheels, tyres .

Re-energising high-voltage system

The high-voltage system must be re-energised according to the `Guided Fault Finding` routine in the vehicle diagnostic tester , and ONLY by this method.

DANGER!

High voltage can cause fatal injury.

Danger of severe or fatal injuries from electric shock.

- *The high-voltage system may only be re-energised by a suitably qualified person (Audi high-voltage technician).*
- *The system may only be re-energised using the vehicle diagnostic tester via "Guided Fault Finding".*
- *The vehicle is then made ready for operation again by the qualified person (Audi high-voltage technician).*
- *The qualified person (Audi high-voltage technician) marks the vehicle by attaching the appropriate warning signs.*

Protected by copyright. Copying for private or commercial purposes, in part or in whole, is not permitted unless authorised by AUDI AG. AUDI AG does not guarantee or accept any liability with respect to the correctness of information in this document. Copyright by AUDI AG.

Note

- *Re-energising high-voltage system:*
- *Connect vehicle diagnostic tester.*
- *Select* `Guided Fault Finding` *mode.*
- *Using the* `GoTo` *button, select the following menu options in succession.*
- `Function/Component Selection`
- `Body`
- `Electrical system`
- `Self-diagnosis compatible systems`
- `8C - Hybrid battery management -J840`
- `8C - Hybrid battery management, functions`
- `51 - Re-energise high-voltage system (Rep. Gr. 93)`

2.2.3 Removing and installing final drive 0BC for Audi A8

Removing ⇒ page 65

Installing ⇒ page 67

Special tools and workshop equipment required

- Engine and gearbox jack - V.A.G 1383 A- with universal gearbox support - V.A.G 1359/2-

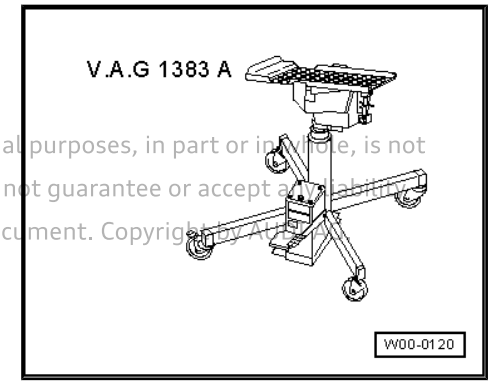

Protected by copyright. Copying for private or commercial purposes, in part or in whole, is not permitted unless authorised by AUDI AG. AUDI AG does not guarantee or accept any liability with respect to the correctness of information in this document. Copyright by AUDI AG.

- Tensioning strap - T10038-

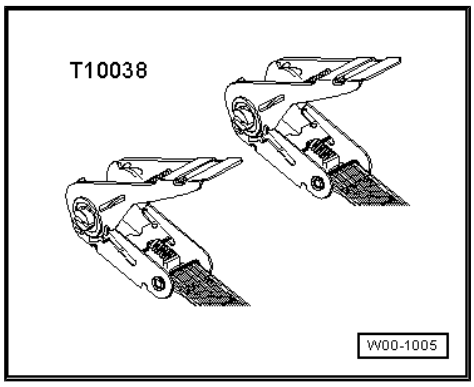

- Support - T10149-

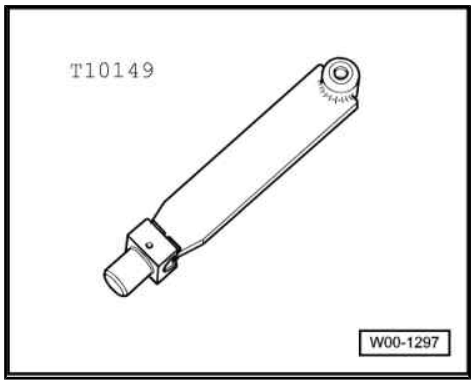

- Counterhold tool - T10172- with adapters - T10172/5-

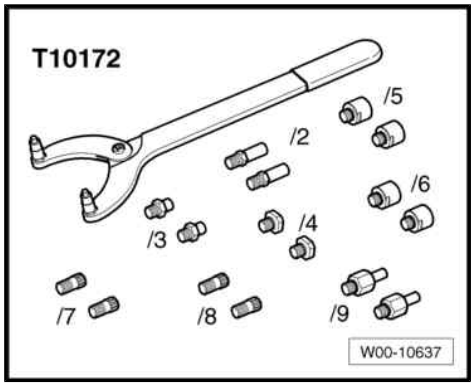

♦ Socket - T40154-

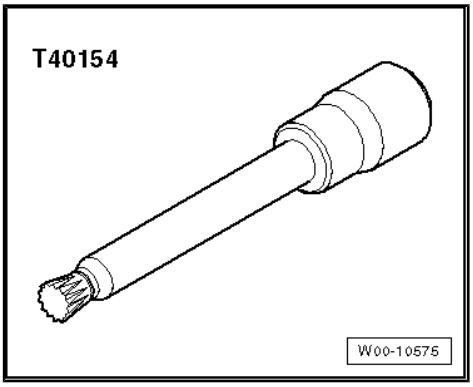

Removing:

Refer to general repair instructions ⇒ page 14 .

– Place vehicle on lifting platform.

– Remove rear left wheel.

– Remove rear cross member -1-.

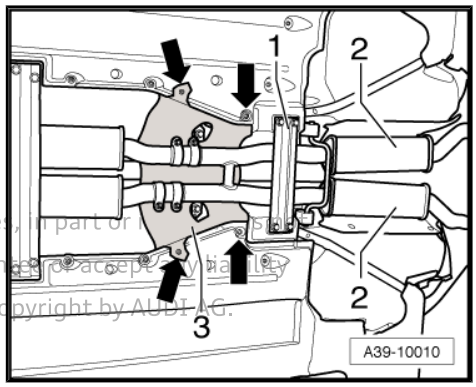

Note

A second mechanic is required for removing the rear section of the exhaust system.

Protected by copyright. Copying for private or commercial purposes, in part or in whole, is not permitted unless authorised by AUDI AG. AUDI AG does not guarantee or accept any liability with respect to the correctness of information in this document. Copyright by AUDI AG.

– Remove rear section -2- of exhaust system ⇒ Rep. gr. 26 ; Exhaust pipes/silencers; Exploded view - silencers .

– Detach propshaft from rear final drive ⇒ page 37 .

– To support propshaft -B-, place a wooden block -A- (approx. 40 mm high) on rear cross member -C-.

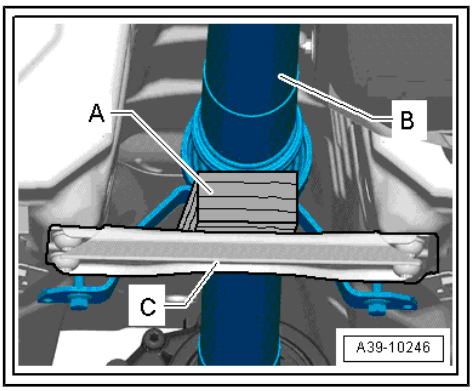

Note

The propshaft can be bent as far as the stop at the centre joint, but must not be subjected to any kind of force. The centre joint or the protective boot can be damaged if the joint is forced against its stop.

– Remove bolts -arrows- securing centre propshaft bearing.

– Push propshaft forwards and at the same time pull it off rear final drive.

– Tie propshaft to one side.

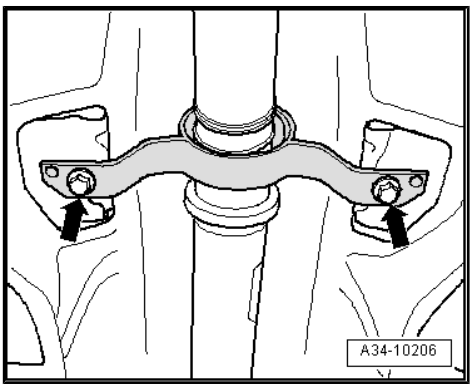

– Detach heat shield -A- for drive shaft (left-side) from cross member/rear final drive -arrows-.

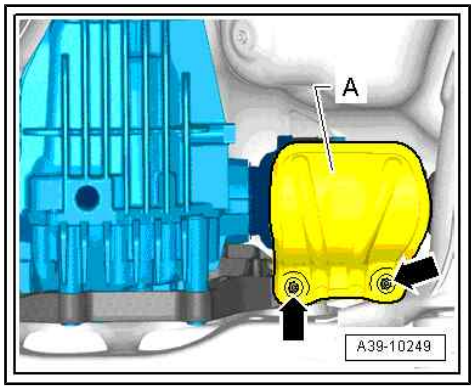

– Unbolt drive shafts on both sides -1- and -3-.
– Slacken off bolts -2- approx. 3 turns.
– Remove bolt -4-.

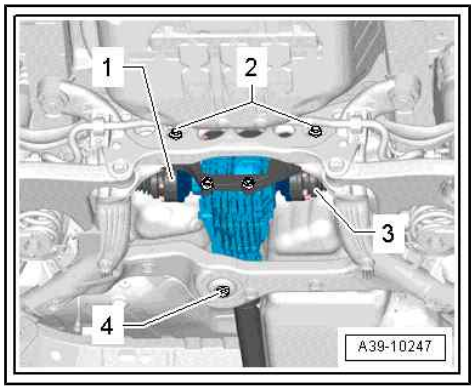

– Place engine and gearbox jack - V.A.G 1383 A- with universal gearbox support - V.A.G 1359/2- and a suitable block of wood -A- (approx. 80 mm high) below rear final drive.

Protected by copyright. Copying for private or commercial purposes, in p
mitted unless authorised by AUDI AG. AUDI AG does not guarantee c
with respect to the correctness of information in this document. Copyri

Note

Make sure that universal gearbox support - V.A.G 1359/2- does not make contact with fuel tank.

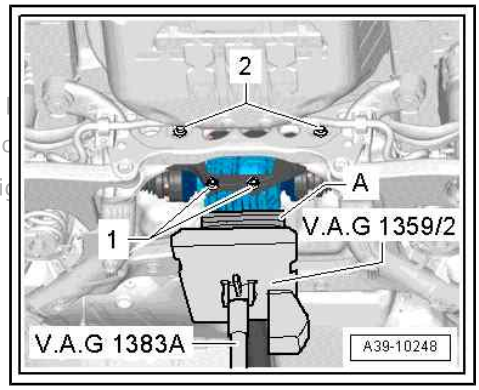

– Remove bolts -1- (bottom bolts securing cross member to rear final drive) and -2-.

– Remove 2 top bolts securing cross member -B- to rear final drive.
– For this step, guide socket - T40154- through holes in sub-frame -A-. If necessary, move final drive slightly to either side.

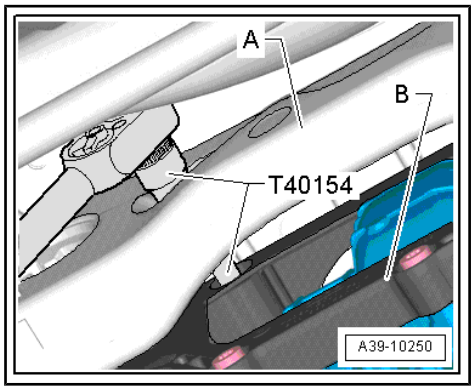

– Then push final drive -A- slightly forwards.

– Turn cross member -B- towards the bottom left -arrow 1-, guide past final drive -arrow 2- and remove.

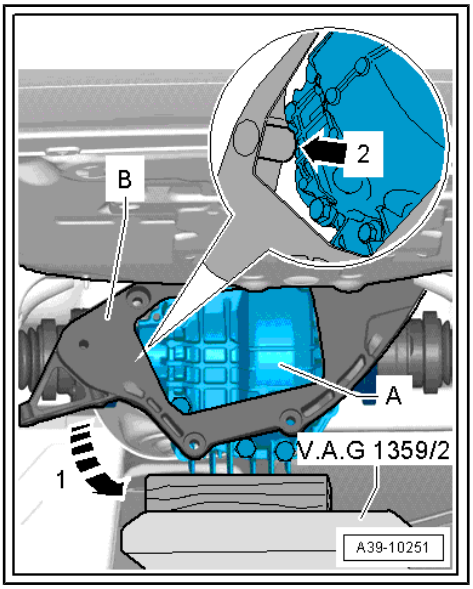

Note

- *A 2nd mechanic is required for the next steps when removing the rear final drive.*
- *Before lifting the rear left suspension, the vehicle must be secured to the lifting arm of the lifting platform with tensioning strap - T10038- .*

– Take out engine and gearbox jack - V.A.G 1383 A- from below rear final drive; 2nd mechanic must hold final drive to prevent it from dropping.

– Attach support - T10149- to engine and gearbox jack - V.A.G 1383 A- .

– Attach support - T10149- to rear left wheel hub using wheel bolt -arrow A-.

– Using engine and gearbox jack - V.A.G 1383 A- , lift rear left suspension until vehicle starts to come clear of lifting arm -1- of lifting platform -arrow B-. Do not lift vehicle further.

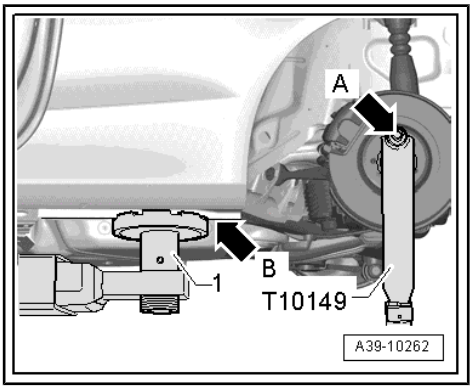

WARNING

- *Do not raise or lower vehicle while engine and gearbox jack - V.A.G 1383 A- is positioned under the vehicle.*
- *Do not leave engine and gearbox jack - V.A.G 1383 A- under vehicle for longer than necessary.*

Protected by copyright. Copying for private or commercial purposes, in part or in whole, is not permitted unless authorized by Audi AG. Audi AG does not guarantee or assume any liability with respect to the correctness of information in this document. Copyright by Audi AG.

– 2nd mechanic must now push rear final drive -1- towards left side of vehicle in direction of -arrow-.

– Guide drive shaft (right-side) -5- upwards out of flange shaft -4- of rear final drive.

– Then disengage drive shaft (left-side) -3- and, with assistance of 2nd mechanic, detach final drive rearwards from subframe -2-.

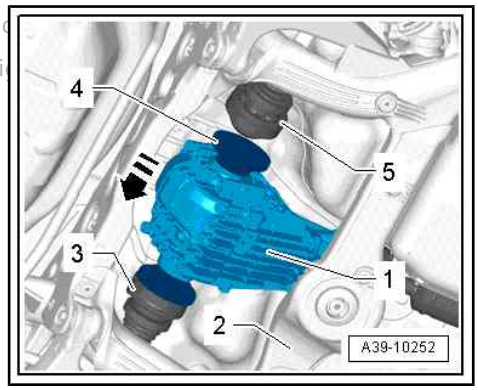

– When renewing a rear final drive on which a damper weight -arrow- is fitted, damper weight must be transferred to new rear final drive ⇒ page 45 .

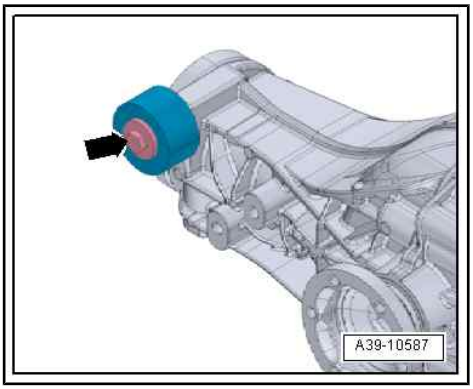

Installing:

Installation is carried out in reverse sequence. Note the following:

- Tightening torques
  ⇒ “2.1.1 Exploded view - final drive 0BC, 0BD”, page 45

– With assistance of 2nd mechanic, bring rear final drive -1- into installation position on subframe -2-.

– Fit drive shaft (left-side) -arrow 3- into flange shaft of final drive.

– 2nd mechanic must now push rear final drive -1- towards left side of vehicle in direction of -arrow-.

– Then fit drive shaft (right-side) -5- into flange shaft -4- of final drive.

– Detach engine and gearbox jack - V.A.G 1383 A- with support - T10149- from rear left suspension.

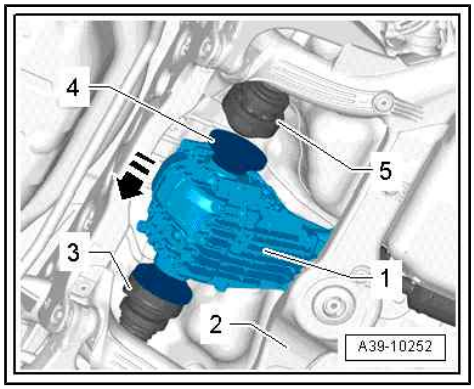

– Place engine and gearbox jack - V.A.G 1383 A- with universal gearbox support - V.A.G 1359/2- and a suitable block of wood (approx. 80 mm high) below rear final drive -A-.

– Then push final drive -A- slightly forwards.

– Turn cross member -B- towards top left in opposite direction to -arrow 1- and bring into position, guiding past final drive -arrow 2-.

Protected by copyright. Copying for private or commercial purpose, in part or in whole, is not permitted unless authorised by AUDI AG. AUDI AG does not guarantee the accuracy of the information in this document. Copyright is not limited to the correctness of information in this document.

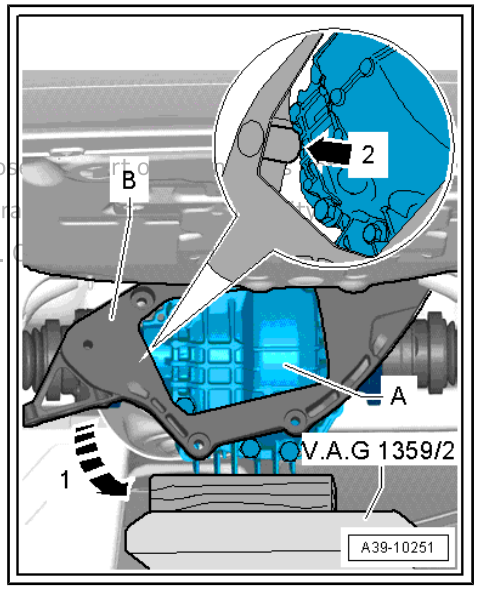

– Now tighten 4 bolts securing cross member -B- to rear final drive in diagonal sequence. Tightening torque
⇒ Item 4 (page 45)

– For this step, guide socket - T40154- through holes in sub-frame -A-. If necessary, move final drive slightly to either side.

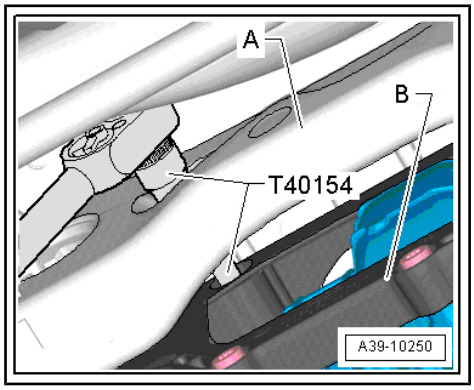

– Screw in bolts -2- and -4- and tighten hand-tight initially.

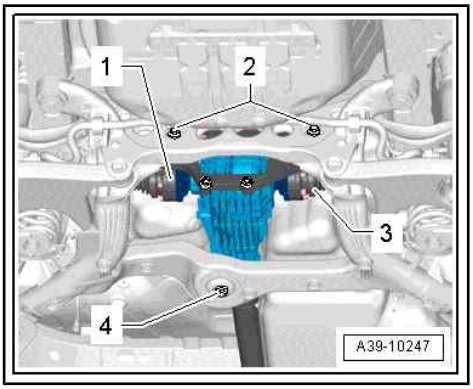

Note

For illustration purposes the final drive is shown without engine and gearbox jack - V.A.G 1383 A- and universal gearbox support - V.A.G 1359/2- .

– Tighten bolt -4-. Tightening torque ⇒ Item 3 (page 45)

– Then tighten bolts -2-. Tightening torque ⇒ Item 2 (page 45)

– Take out engine and gearbox jack - V.A.G 1383 A- from below final drive.

– Attach drive shafts -1- (left-side) and -3- (right-side) ⇒ Running gear, axles, steering; Rep. gr. 42 ; Drive shaft; Removing and installing drive shaft .

– Install heat shield -A- for drive shaft (left-side) on cross member/rear final drive -arrows- ⇒ Item 6 (page 45) .

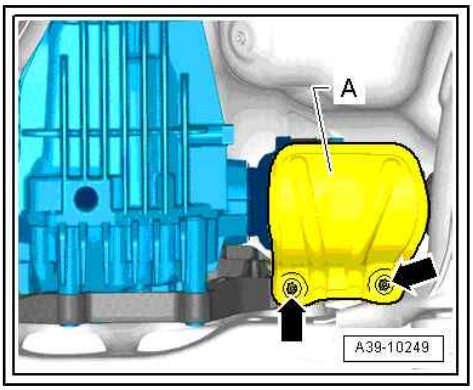

– Bolt propshaft onto rear final drive ⇒ page 38 .

– Secure centre propshaft bearing to body so it is free of stress. Tightening torque ⇒ Item 8 (page 23)

– Check gear oil level in rear final drive ⇒ page 107 .

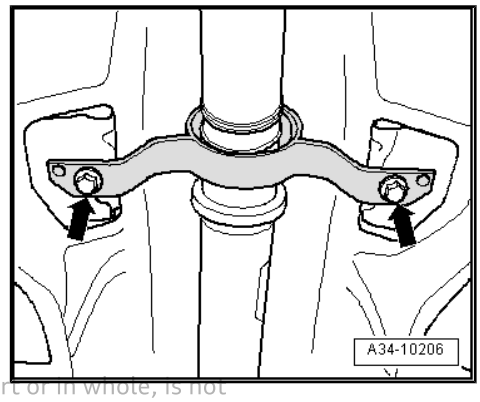

Protected by copyright. Copying for private or commercial purposes, in part or in whole, is not permitted unless authorised by AUDI AG. AUDI AG does not guarantee or accept any liability with respect to the correctness of information in this document. Copyright by AUDI AG.

– Secure heat shield -3- to body -arrows-.

– Install rear section of exhaust system and perform stress-free alignment ⇒ Rep. gr. 26 ; Exhaust pipes/silencers; Exploded view - silencers .

– If originally fitted, install cross member -1- ⇒ General body repairs, exterior; Rep. gr. 66 ; Underbody trim; Exploded view - underbody trim .

– Fit rear wheel (left-side) and tighten wheel bolts ⇒ Running gear, axles, steering; Rep. gr. 44 ; Wheels, tyres .

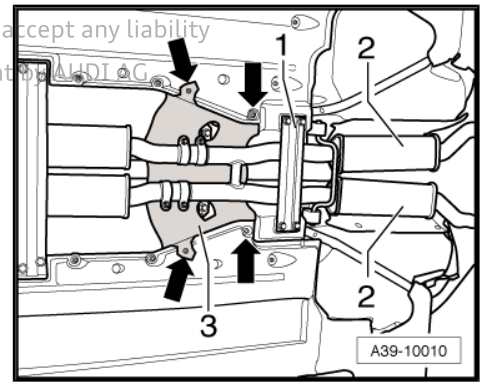

2.2.4 Removing and installing final drive 0BD for Audi A4, A5, Q5

Removing ⇒ page 70

Installing ⇒ page 74

Special tools and workshop equipment required

- Counterhold tool - T10172- with adapters - T10172/5-

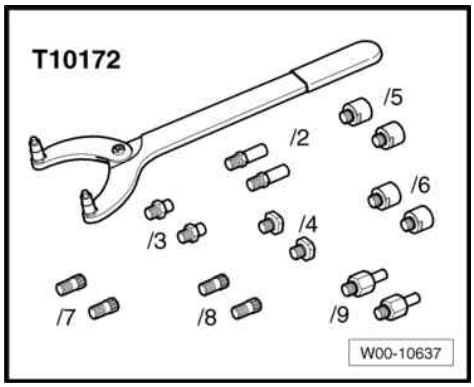

- Socket - T40154-

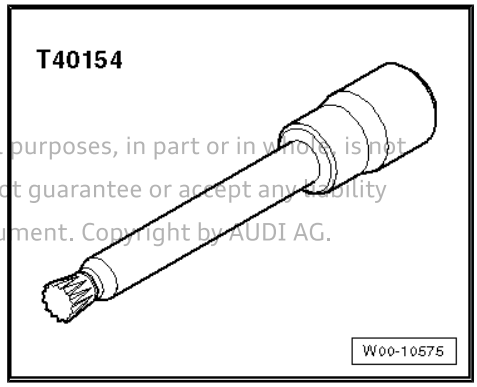

Protected by copyright. Copying for private or commercial purposes, in part or in whole, is not permitted unless authorised by AUDI AG. AUDI AG does not guarantee or accept any liability with respect to the correctness of information in this document. Copyright by AUDI AG.

- Engine and gearbox jack - V.A.G 1383 A- with universal gearbox support - V.A.G 1359/2-

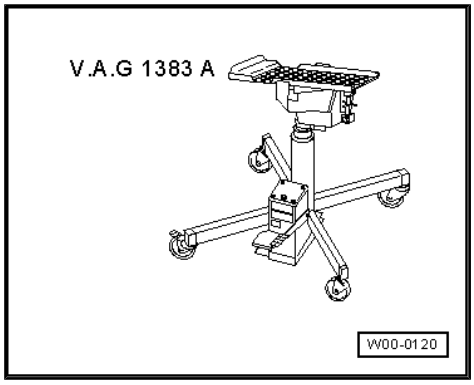

Removing:

Refer to general repair instructions ⇒ page 14 .

– Place vehicle on lifting platform.

Note

The flexible joint in the front exhaust pipe must not be bent more than 10° – otherwise it can be damaged.

– Unfasten clamp(s) -arrows- and disconnect exhaust system.

– Tie front exhaust pipe(s) up to side of underbody.

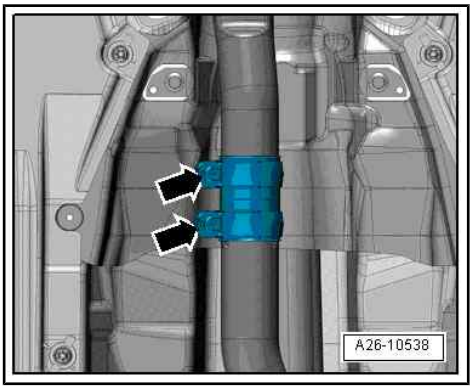

– If fitted, remove rear cross member -1-.

– Remove rear section of exhaust system -2- ⇒ Rep. gr. 26 ; Exhaust pipes/silencers; Exploded view - silencers .

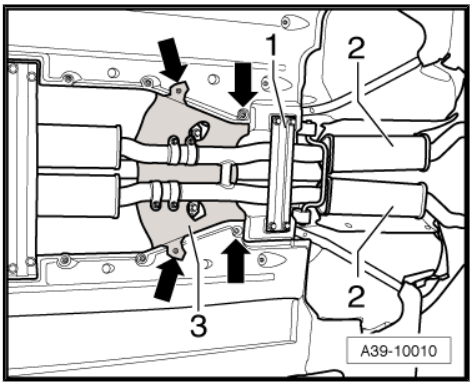

Note

A second mechanic is required for removing the rear section of the exhaust system.

Audi A4, Audi A5

– Detach heat shield -3- from body -arrows-.

All vehicles (continued)

– Check whether there is a factory marking (coloured dot) -arrow A- and -arrow B- on the propshaft and on the propshaft flange on the rear final drive.

– If one of these markings is no longer visible (for example -arrow A- on the propshaft), make a new coloured marking accordingly.

• The markings on the propshaft -arrow A- and on the rear final drive -arrow B- should be aligned.

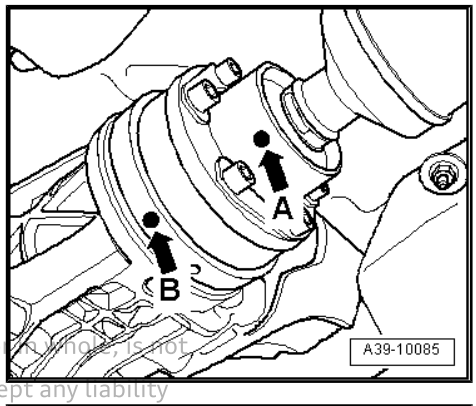

Protected by copyright. Copying for private or commercial purposes, in part or in whole, is not permitted unless authorised by AUDI AG. AUDI AG does not guarantee or accept any liability with respect to the correctness of information in this document. Copyright by AUDI AG.

– Remove bolts -1- (6x) on rear CV joint.

– Use counterhold tool - T10172- with adapters - T10172/5- .

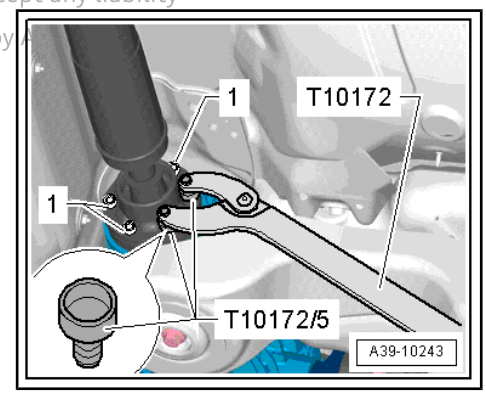

Audi A4, Audi A5

– If removed, re-attach rear cross member -C- to body.

– Place a block of wood -A- (approx. 40 mm high) on rear cross member -C- to support propshaft -B-.

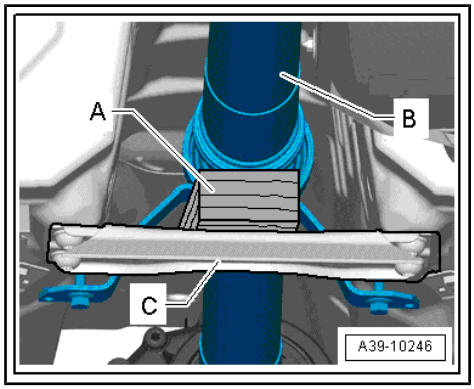

Note

- *On the Audi Q5, the propshaft -B- is supported by the heat shield below the centre bearing.*
- *The propshaft can be bent as far as the stop at the centre joint, but must not be subjected to any kind of force. The centre joint or the protective boot can be damaged if the joint is forced against its stop.*

All vehicles (continued)

Protected by copyright. Copying for private or commercial purposes, in part or in whole, is not permitted unless authorised by AUDI AG. AUDI AG does not guarantee or accept any liability with respect to the correctness of information in this document. Copyright by AUDI AG.

– Remove bolts -arrows- securing centre propshaft bearing.

– Push propshaft forwards and at the same time pull it off rear final drive.

– Tie propshaft up to one side on subframe.

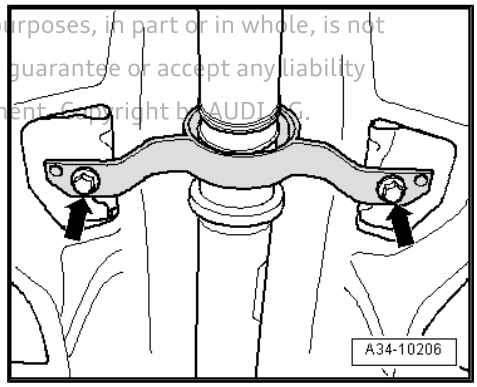

– Detach heat shield -A- for drive shaft (left-side) from cross member/rear final drive -arrows-.

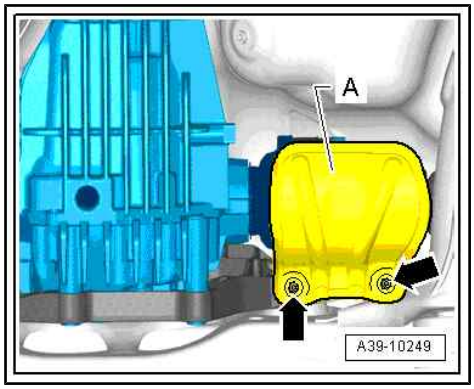

– Unbolt drive shafts on both sides -1- and -3-.

– Slacken off bolts -2- approx. 3 turns.

– Remove bolt -4-.

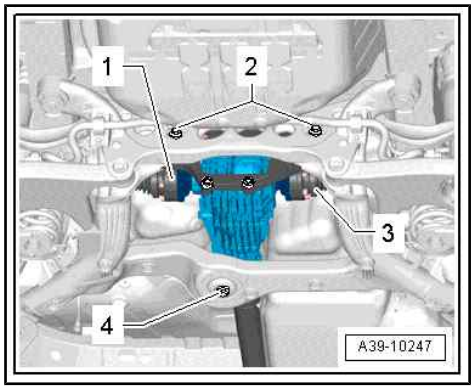

– Place engine and gearbox jack - V.A.G 1383 A- with universal gearbox support - V.A.G 1359/2- and a suitable block of wood -A- (approx. 80 mm high) below rear final drive.

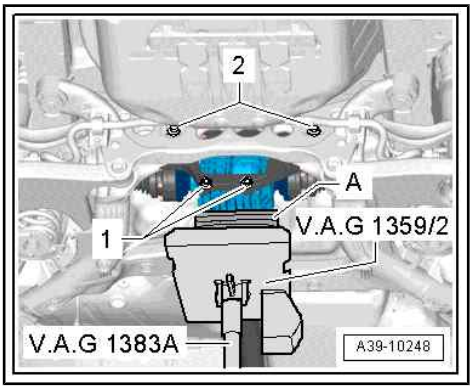

Note

Make sure that universal gearbox support - V.A.G 1359/2- does not make contact with fuel tank.

– Remove bolts -1- (bottom bolts securing cross member to rear final drive) and -2-.

– Remove 2 top bolts securing cross member -B- to rear final drive.

– For this step, guide socket - T40154- through holes in sub-frame -A-. If necessary, move final drive slightly to either side.

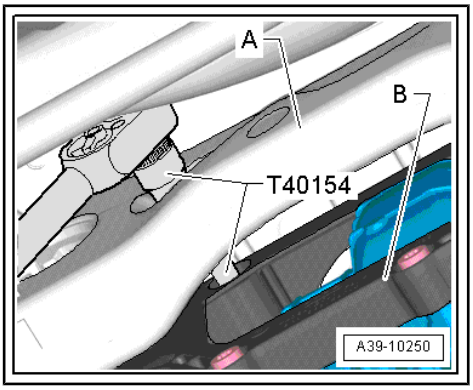

– Then push final drive -A- slightly forwards.

– Turn cross member -B- towards the bottom left -arrow 1-, guide past final drive -arrow 2- and remove.

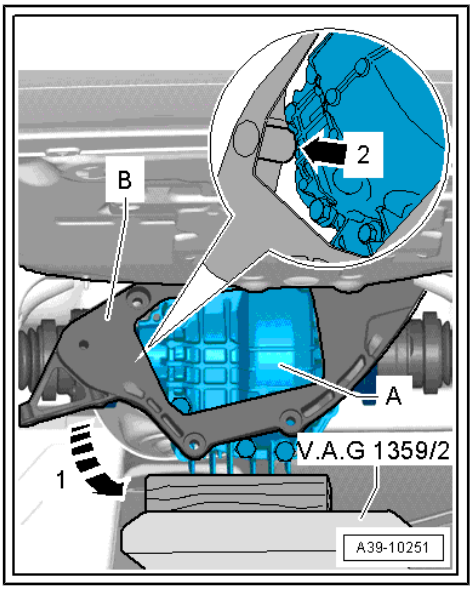

Note

A 2nd mechanic is required for the next steps when removing the rear final drive.

Protected by copyright. Copying for private or commercial purposes, in part or in whole, is not permitted unless authorised by AUDI AG. AUDI AG does not guarantee or accept any liability with respect to the correctness of information in this document. Copyright by AUDI AG.

– 2nd mechanic must now lift right side of rear final drive -1- slightly and push it towards left side of vehicle in direction of -arrow-.

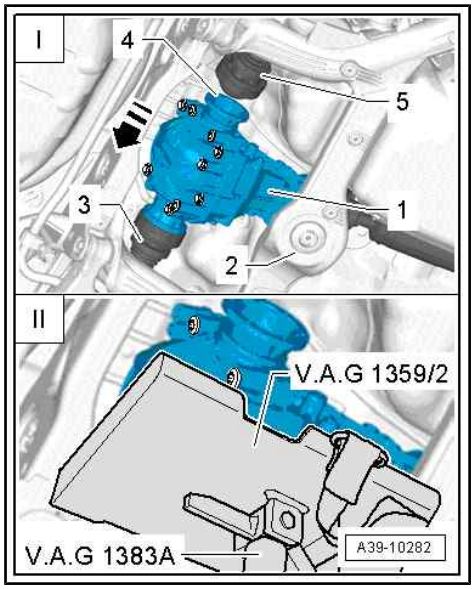

Note

The top part of the illustration "I" shows the rear final drive without engine and gearbox jack - V.A.G 1383 A- and universal gearbox support - V.A.G 1359/2- .

– Guide drive shaft (right-side) -5- upwards out of flange shaft (right-side) -4- of rear final drive.

– Then guide out drive shaft (left-side) -3-.

– Secure rear final drive with strap -B-.

A - Block of wood

– Lower rear final drive completely.

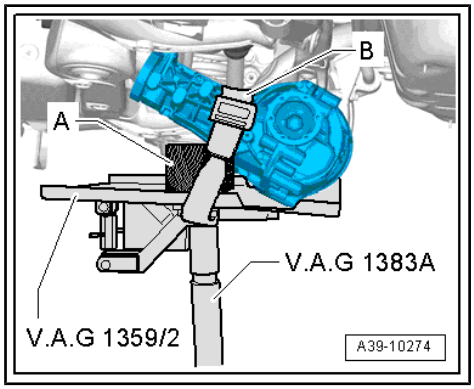

Installing:

Installation is carried out in reverse sequence. Note the following:

– Using engine and gearbox jack - V.A.G 1383 A- with universal gearbox support - V.A.G 1359/2- , bring rear final drive -1- into position on subframe -2-.

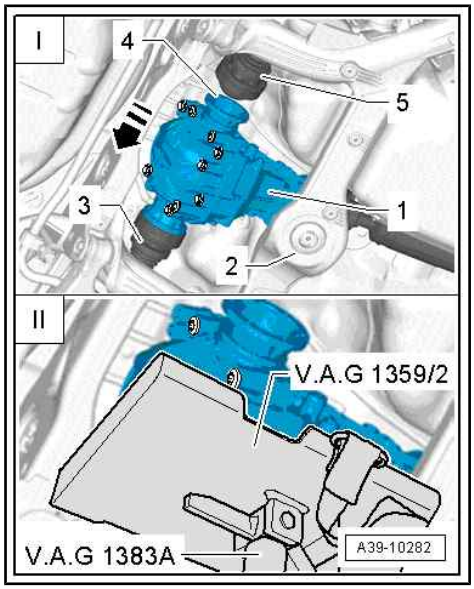

Note

The top part of the illustration "I" shows the rear final drive without engine and gearbox jack - V.A.G 1383 A- and universal gearbox support - V.A.G 1359/2- .

– Fit drive shaft (left-side) -arrow 3- into flange shaft of final drive.

– 2nd mechanic must now lift right side of rear final drive -1- slightly and push it towards left side of vehicle in direction of -arrow-.

– Then fit drive shaft (right-side) -5- into flange shaft (right-side) -4- of final drive.

Protected by copyright. Copying for private or commercial purposes, in part or in whole, is not permitted unless authorised by AUDI AG. AUDI AG does not guarantee or accept any liability with respect to the correctness of information in this document. Copyright by AUDI AG.

– Then push final drive -A- slightly forwards.
– Turn cross member -B- towards top left in opposite direction to -arrow 1- and bring into position, guiding past final drive -arrow 2-.

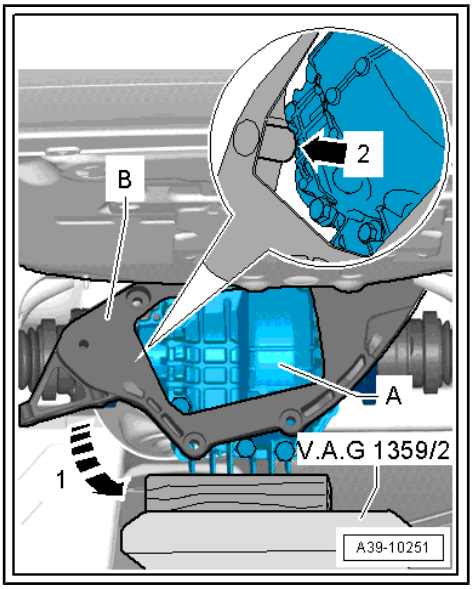

– Tighten 4 bolts securing cross member -B- to rear final drive in diagonal sequence to specified torque ⇒ Item 4 (page 45) .
– For this step, guide socket - T40154- through holes in sub-frame -A-. If necessary, move final drive slightly to either side.

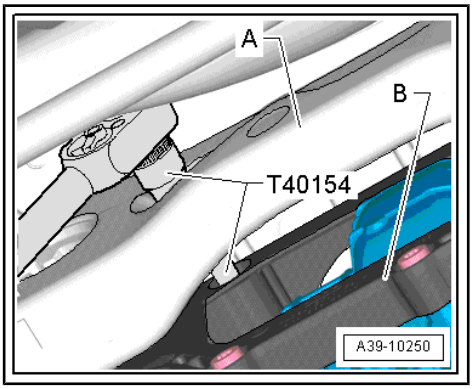

– Screw in bolts -2- and -4- and tighten hand-tight initially.

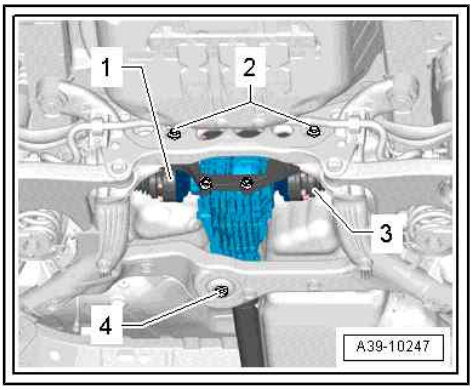

Note

For illustration purposes the final drive is shown without engine and gearbox jack - V.A.G 1383 A- and universal gearbox support - V.A.G 1359/2- .

– Tighten bolt -4- to specified torque ⇒ Item 3 (page 45) .
– Then tighten bolts -2- to specified torque ⇒ Item 2 (page 45) .
– Take out engine and gearbox jack - V.A.G 1383 A- from below final drive.
– Attach drive shafts -1- (left-side) and -3- (right-side) ⇒ Running gear, axles, steering; Rep. gr. 42 ; Drive shaft; Removing and installing drive shaft .

Protected by copyright. Copying for private or commercial purposes, in part or in whole, is not permitted unless authorised by AUDI AG. AUDI AG does not guarantee or accept any liability with respect to the correctness of information in this document. Copyright by AUDI AG.

– Install heat shield -A- for drive shaft (left-side) on cross member/rear final drive -arrows- ⇒ Item 6 (page 45) .

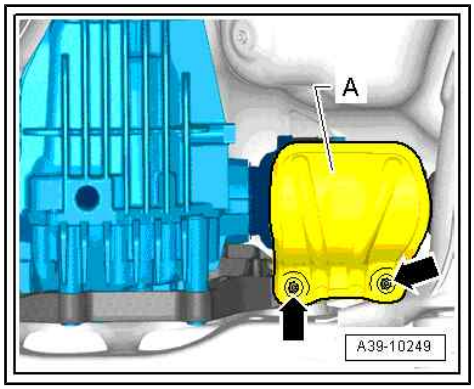

– Bolt propshaft onto rear final drive. Align markings as described and observe tightening sequence ⇒ page 38 .
– Secure centre propshaft bearing to body so it is free of stress and tighten -arrows-. Tightening torque ⇒ Item 8 (page 23)
– Check gear oil level in rear final drive ⇒ page 108 .

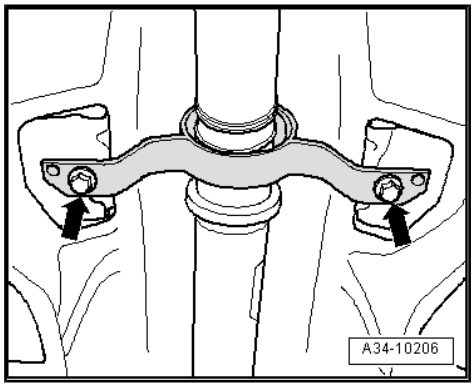

Audi A4, Audi A5

– Secure heat shield -3- to body -arrows-.

All vehicles (continued)

– Install rear section of exhaust system and perform stress-free alignment ⇒ Rep. gr. 26 ; Exhaust pipes/silencers; Exploded view - silencers .
– If originally fitted, secure cross member -1- to body ⇒ General body repairs, exterior; Rep. gr. 66 ; Underbody trim; Exploded view - underbody trim .

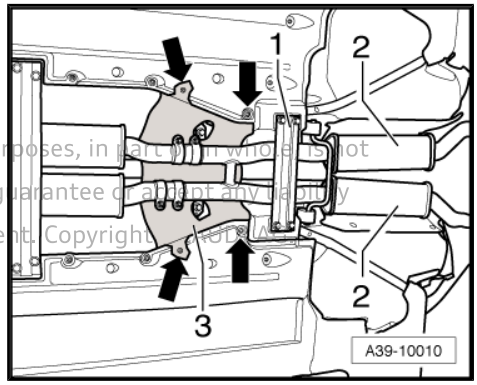

Protected by copyright. Copying for private or commercial purposes, in part or in whole, is not permitted unless authorised by AUDI AG. AUDI AG does not guarantee or assume any liability with respect to the correctness of information in this document. Copyright © 2018 AUDI AG

2.2.5 Removing and installing final drive 0BF for Audi A4, A5, A6, A7, Q5

Removing ⇒ page 77

Installing ⇒ page 80

Refer to general repair instructions ⇒ page 14 .

Observe safety precautions ⇒ page 10 .

Special tools and workshop equipment required

- Engine and gearbox jack - V.A.G 1383 A- with universal gearbox support - V.A.G 1359/2-

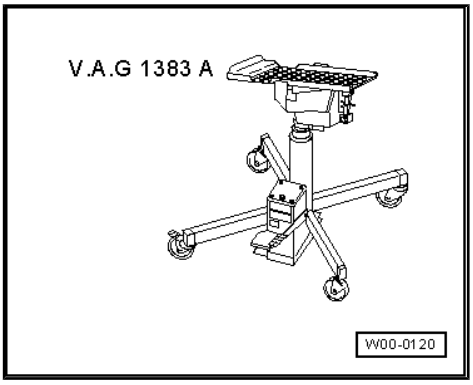

- Tensioning strap - T10038-

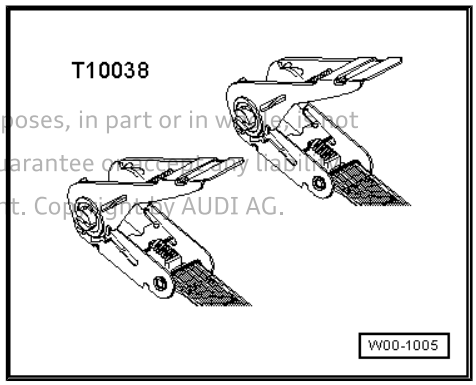

Protected by copyright. Copying for private or commercial purposes, in part or in whole, is not permitted unless authorised by AUDI AG. AUDI AG does not guarantee or accept any liability with respect to the correctness of information in this document. Copyright by AUDI AG.

- Counterhold tool - T10172- with adapters - T10172/5-

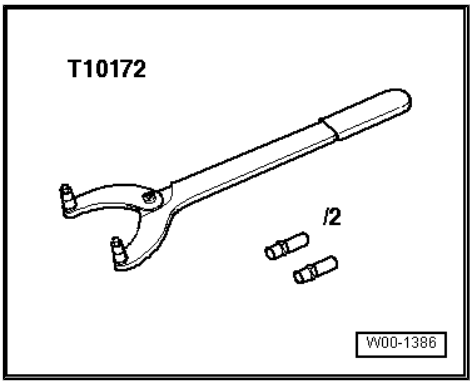

Removing:

– Place vehicle on lifting platform.

– Detach wheel trim from rear left wheel (on vehicles with light alloy wheels, pull off trim cap using puller from vehicle tool kit).

– Remove rear wheels.

Note

The flexible joint in the front exhaust pipe must not be bent more than 10° – otherwise it can be damaged.

– Unfasten clamps -1- and -2- and disconnect exhaust system.

– Tie front exhaust pipes to side of underbody.

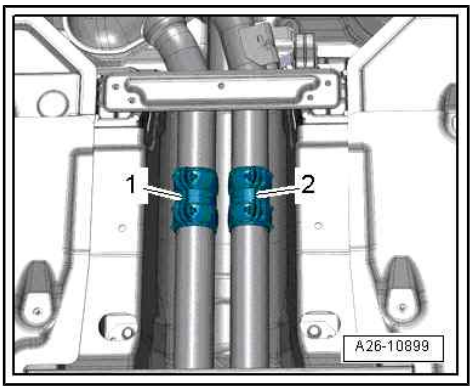

– If fitted, remove cross member -1- (rear) ⇒ General body repairs, exterior; Rep. gr. 66 ; Underbody trim; Exploded view - underbody trim .

– Remove rear section of exhaust system -2- ⇒ Rep. gr. 26 ; Exhaust pipes/silencers; Exploded view - silencers .

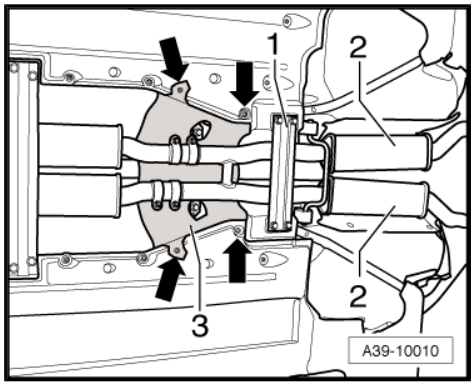

Note

A second mechanic is required for removing the rear section of the exhaust system.

– Remove propshaft ⇒ page 24 .

– Detach heat shield -A- for drive shaft (left-side) from rear final drive -arrows-.

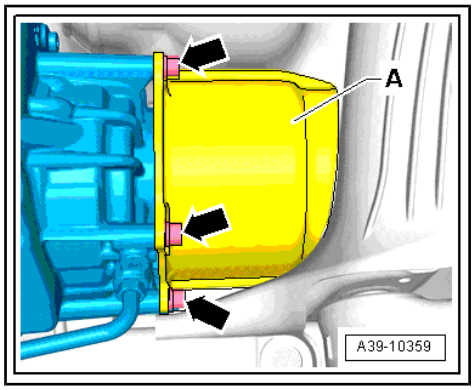

– Unscrew bolts -arrows- and detach bracket -1- from rear final drive.

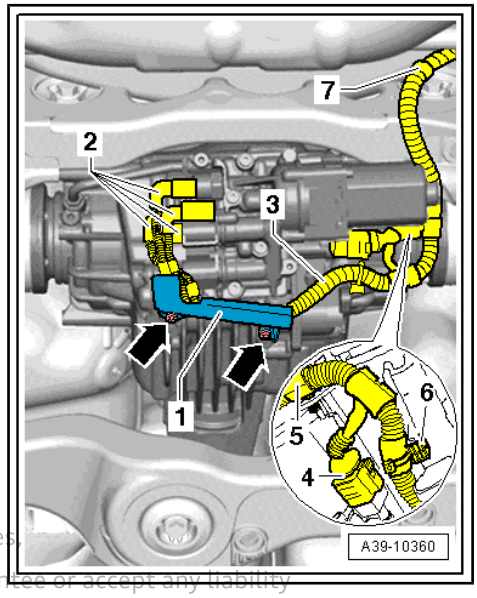

Note

Mark connectors -2- for oil pressure and oil temperature senders and at clutch valves .

– Unplug connectors -2- from oil pressure and oil temperature senders and clutch valves .

– Then unplug connector -4- from all-wheel drive pump - V415- .

– Subsequently, unclip wiring harness -3- from final drive and subframe -items 5 ... 7- and tie up.

Protected by copyright. Copying for private or commercial purposes, permitted unless authorised by AUDI AG. AUDI AG does not guarantee or accept any liability

– Unbolt drive shafts (left -1- and right -3-) from final drive.

– Slacken off bolts -2- approx. 3 turns.

– Remove bolt -4-.

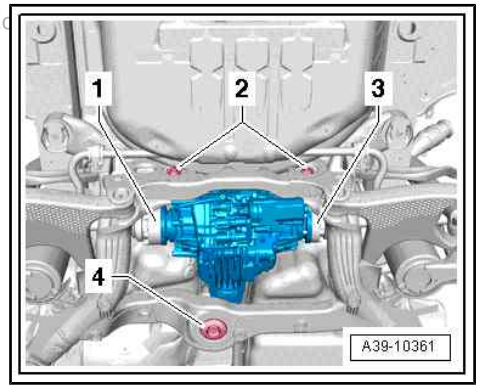

Lower rear section of subframe -1- as follows:

– Unscrew rear bolt (right-side) securing subframe to body.
– Screw spindle - 3346- with nut - 3346/3- and thrust pad from assembly tool - 3301- into this threaded hole.
– Then unscrew rear bolt (left-side) securing subframe to body.
– Subsequently, lower subframe a distance of -a- = 40 mm. While doing so, counterhold spindle - 3346- and turn nut - 3346/3- in anti-clockwise direction.

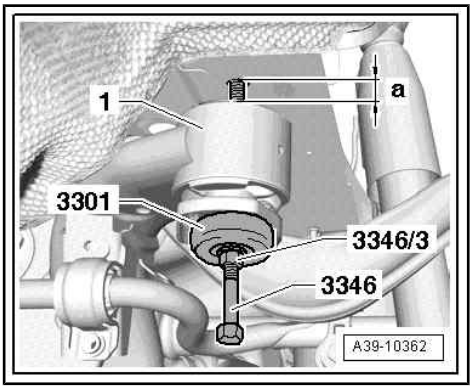

– Place engine and gearbox jack - V.A.G 1383 A- with universal gearbox support - V.A.G 1359/2- and a suitable rubber mat or hard-foam slab -A- below rear final drive.

> **Caution**
>
> *The rubber mat or hard-foam slab are necessary to prevent damage to the clutch valves on the rear final drive.*
>
> *Use tensioning strap - T10038- to secure rear final drive to prevent it from dropping.*

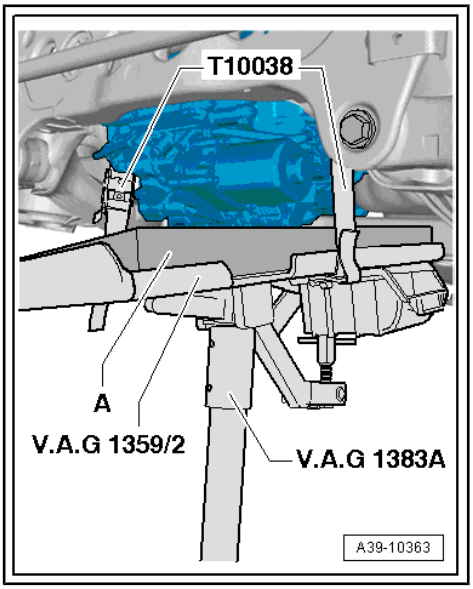

– Unscrew the two rear bolts -2- securing rear final drive to sub-frame.
– A 2nd mechanic is required for the next steps when removing the final drive.

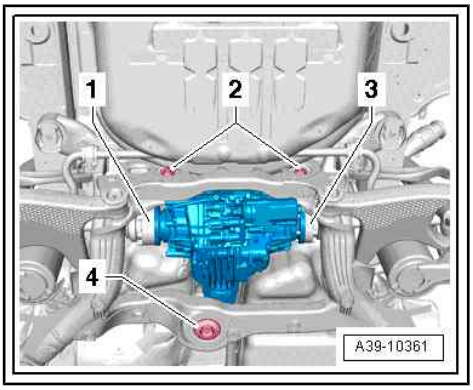

Protected by copyright. Copying for private or commercial purposes, in part or in whole, is not permitted unless authorised by AUDI AG. AUDI AG does not guarantee or accept any liability with respect to the correctness of information in this document. Copyright by AUDI AG.

– 2nd mechanic must now push rear final drive towards right side of vehicle in direction of -arrow-.
– At the same time, guide drive shaft (left-side) -1- upwards out of flange shaft -2- of final drive.
– Then guide out drive shaft (right-side) and tilt rear final drive down towards rear.
– Carefully lower final drive together with 2nd mechanic, paying attention to subframe.

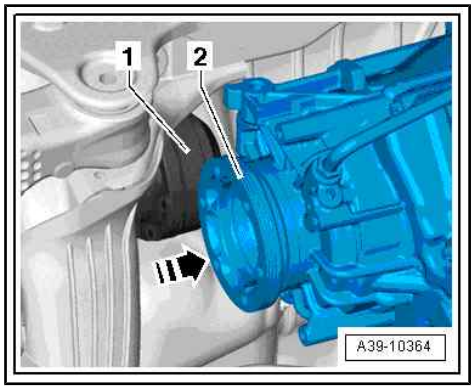

> ⚠ **WARNING**
>
> ◆ *Do not raise or lower vehicle while engine and gearbox jack - V.A.G 1383 A- is positioned under the vehicle.*
>
> ◆ *Do not leave engine and gearbox jack - V.A.G 1383 A- under vehicle for longer than necessary.*

Installing:

Installation is carried out in reverse sequence. Note the following:

> ⚠ **WARNING**
>
> *Malfunctions can occur on rear final drive!*
>
> *Additional work is required if the rear final drive has been renewed* *⇒ page 88* *.*

– Using engine and gearbox jack carefully raise rear final drive and, working with 2nd mechanic, bring it into installation position on subframe.

-A- = rubber mat or hard-foam slab

> ⚠ **Caution**
>
> *The rubber mat or hard-foam slab are necessary to prevent damage to the clutch valves on the rear final drive.*
>
> *Use tensioning strap - T10038- to secure rear final drive to prevent it from dropping.*

– Fit drive shaft (right-side) into flange shaft of final drive.

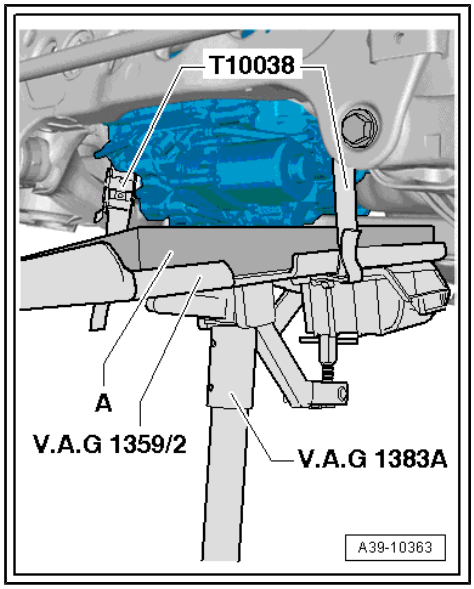

Protected by copyright. Copying for private or commercial purposes, in part or in whole, is not permitted unless authorised by AUDI AG. AUDI AG does not guarantee or accept any liability with respect to the correctness of information in this document. Copyright by AUDI AG.

– 2nd mechanic must now push rear final drive towards right side of vehicle in direction of -arrow-.
– Then fit drive shaft (left-side) -1- into flange shaft -2- of final drive.

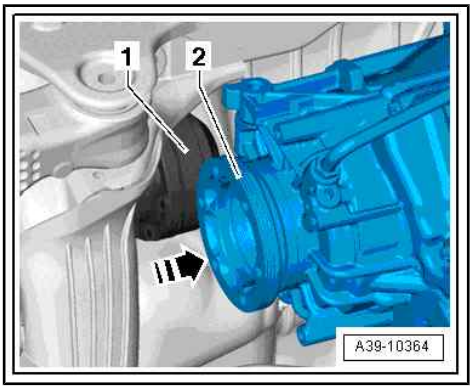

– Screw in bolts -2- securing rear final drive to subframe (hand-tight).

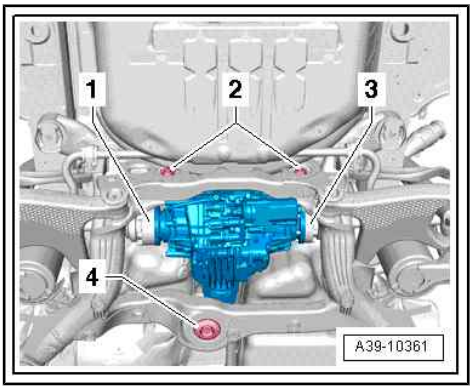

Note

For illustration purposes the final drive is shown without engine and gearbox jack - V.A.G 1383 A- and universal gearbox support - V.A.G 1359/2- .

– Tighten bolt -4- to specified torque and then tighten bolts -2- to specified torque ⇒ page 47 .
– Take out engine and gearbox jack - V.A.G 1383 A- from below final drive.
– Attach drive shafts -1- (left-side) and -3- (right-side) ⇒ Running gear, axles, steering; Rep. gr. 42 ; Drive shaft; Removing and installing drive shaft .

Then secure rear section of subframe -1- to body as follows:

– First turn nut - 3346/3- in clockwise direction while counter-holding spindle - 3346- until subframe makes contact with body.
– Then screw in rear bolt (left-side) securing subframe to body and tighten to specified torque ⇒ Running gear, axles, steering; Rep. gr. 42 ; Subframe; Exploded view - subframe .
– Then remove spindle - 3346- , screw in rear bolt (right-side) securing subframe to body and tighten to specified torque ⇒ Running gear, axles, steering; Rep. gr. 42 ; Subframe; Exploded view - subframe .

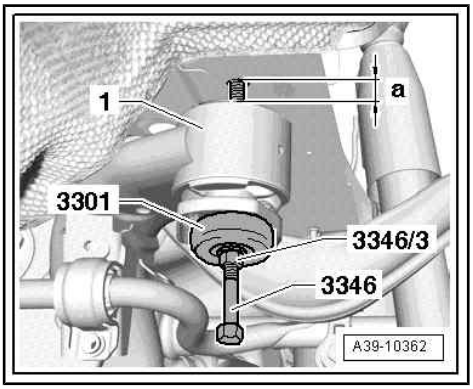

– Install heat shield -A- for drive shaft (left-side) on rear final drive -arrows- ⇒ page 47 .

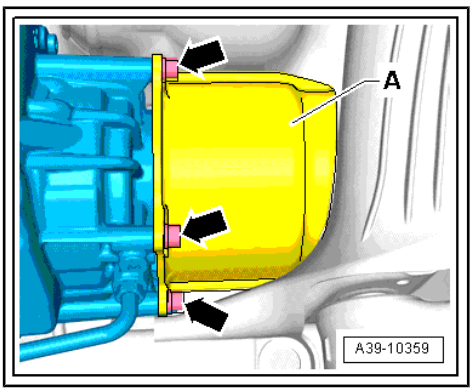

Protected by copyright. Copying for private or commercial purposes, in part or in whole, is not permitted unless authorised by AUDI AG. AUDI AG does not guarantee or accept any liability with respect to the correctness of information in this document. Copyright by AUDI AG.

– Clip in wiring harness -3- at final drive and subframe -items 5 ... 7-.

– Plug in connectors -4- and -2-, paying attention to marks made during removal for identification of oil pressure and oil temperature senders and clutch valves .

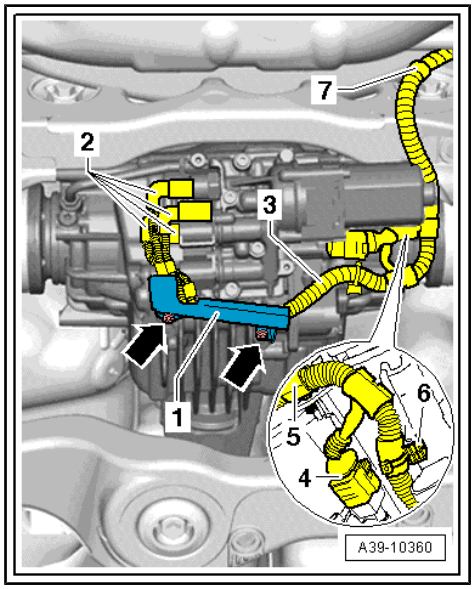

Caution

Risk of damage to the wiring harness.

- *When attaching bracket -1- to rear final drive, make sure wiring harness -3- is not trapped.*

– Install bracket -1- at rear final drive and tighten bolts -arrows- to specified torque ⇒ page 89 .

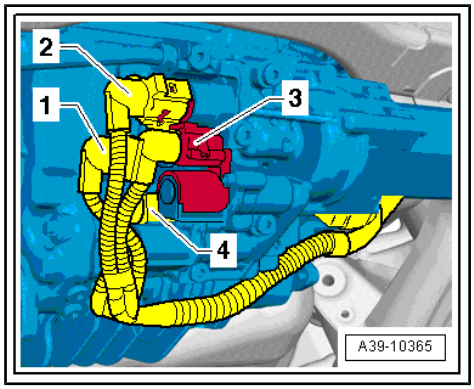

Note

- *Allocation of connectors for oil pressure and oil temperature senders and clutch valves :*
- *-1- = connector for oil pressure and oil temperature sender 2 - G640-*
- *-2- = connector for oil pressure and oil temperature sender - G437-*
- *-3- = connector for clutch valve 2 for all-wheel drive - N446-*
- *-4- = connector for clutch valve for all-wheel drive - N445-*

– Install propshaft (align markings and observe tightening sequence ⇒ page 38).

– Check oil level in rear final drive ⇒ page 108 .

– Check ATF level in rear final drive ⇒ page 118 .

– Install rear section of exhaust system and perform stress-free alignment ⇒ Rep. gr. 26 ; Exhaust pipes/silencers; Exploded view - silencers .

Protected by copyright. Copying for private or commercial purposes, in part or in whole, is not permitted unless authorised by AUDI AG. AUDI AG does not guarantee or accept any liability with respect to the correctness of information in this document. Copyright by AUDI AG.

– If originally fitted, install rear cross member ⇒ General body repairs, exterior; Rep. gr. 66 ; Underbody trim; Exploded view - underbody trim .

– Fit rear wheels and tighten wheel bolts ⇒ Running gear, axles, steering; Rep. gr. 44 ; Wheels, tyres .

• Additional work is required if the rear final drive has been renewed ⇒ page 88 .

2.2.6 Removing and installing final drive 0BF for Audi RS 4, RS 5

Removing ⇒ page 83

Installing ⇒ page 85

Special tools and workshop equipment required

♦ Engine and gearbox jack - V.A.G 1383 A-

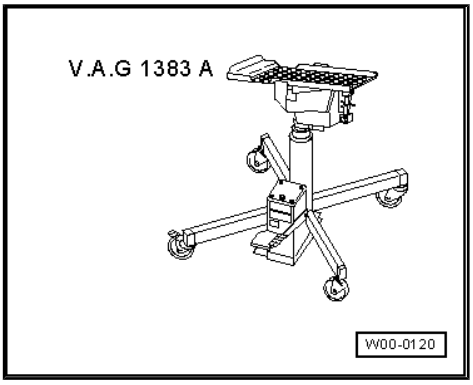

Removing:

– Remove rear cross member -1- ⇒ General body repairs, exterior; Rep. gr. 66 ; Underbody trim; Exploded view - underbody trim .

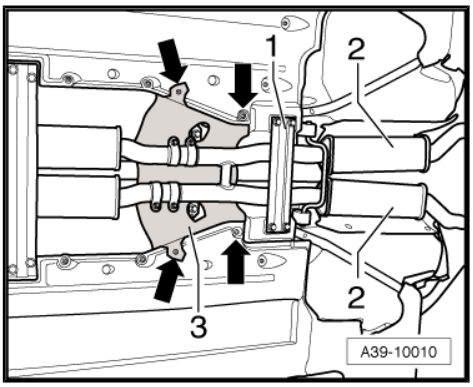

Note

A second mechanic is required for removing the rear section of the exhaust system.

– Remove rear section -2- of exhaust system ⇒ Rep. gr. 26 ; Exhaust pipes/silencers; Exploded view - silencers .

– Detach propshaft from rear final drive ⇒ page 37 .

– To support propshaft -B-, place a wooden block -A- (approx. 40 mm high) on rear cross member -C-.

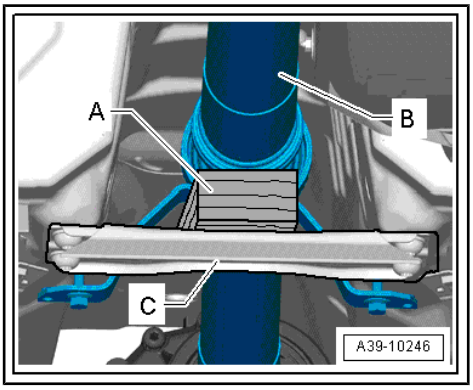

Note

The propshaft can be bent as far as the stop at the centre joint, but must not be subjected to any kind of force. The centre joint or the protective boot can be damaged if the joint is forced against its stop.

– Remove bolts -arrows- and detach heat shield -1- for drive shaft (left-side).

– Unbolt drive shafts (both sides) from rear final drive ⇒ Running gear, axles, steering; Rep. gr. 42 ; Drive shaft; Removing and installing drive shaft .

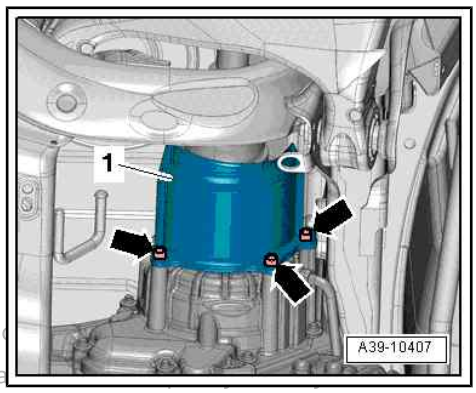

Protected by copyright. Copying for private or commercial purpo
permitted unless authorised by AUDI AG. AUDI AG does not gua
with respect to the correctness of information in this document. Copyright by AUDI AG.

– Remove bolts -arrows- and detach guard plate for electrical wiring.

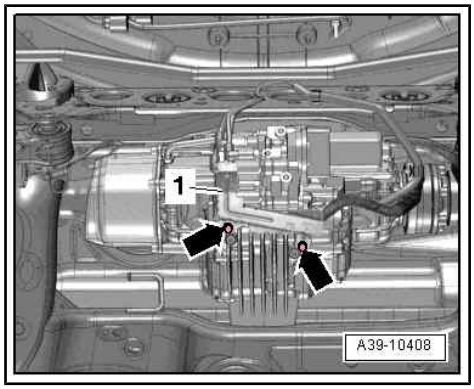

– Unplug electrical connectors -1 ... 5- and move wiring harness clear -arrow-.

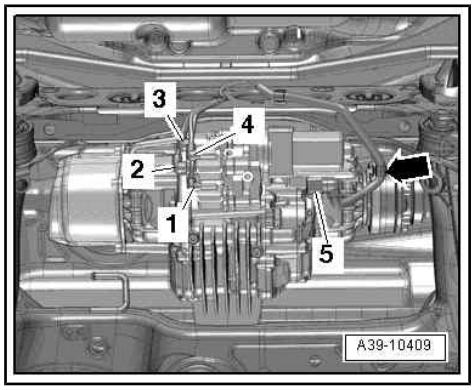

– Remove bolt -1- and slacken bolts -2-.

Protected by copyright. Copying for private or commerci
permitted unless authorised by AUDI AG. AUDI AG does
with respect to the correctness of information in this do

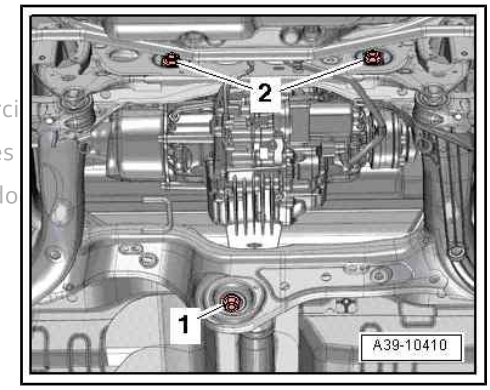

– Place engine and gearbox jack - V.A.G 1383 A- below rear final drive, with wooden block -A- on support plate of jack, and take up weight of final drive.

Note

Make sure that the support plate of the engine and gearbox jack does not come into contact with the fuel tank.

– Remove bolts -arrows-.

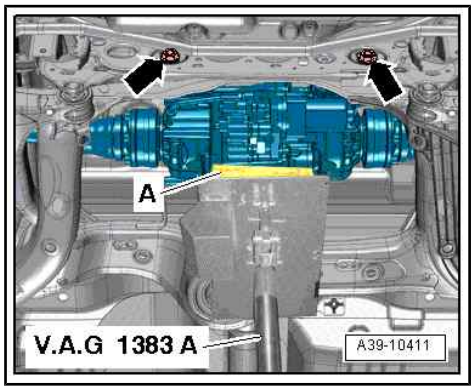

– Push rear final drive towards the left -arrow A-.
– Lift drive shaft (right-side) -1- clear.
– In order to detach flange shaft (left-side) from drive shaft, lower rear final drive at right side first -arrow B-.
– Secure rear final drive with a strap and lower final drive further using engine and gearbox jack - V.A.G 1383 A- .

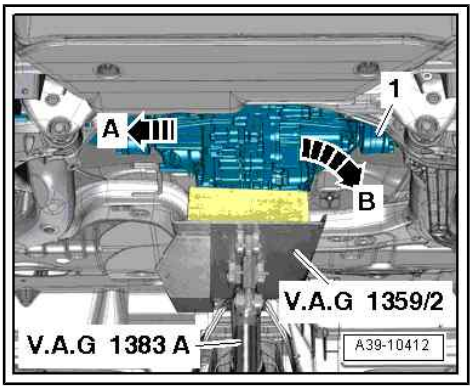

Installing:

Installation is carried out in reverse sequence; note the following:

> ⚠ **WARNING**
>
> *Malfunctions can occur on rear final drive!*
>
> *Additional work is required if the rear final drive has been renewed ⇒ page 88 .*

- Tightening torques ⇒ page 47
– Secure drive shafts to rear final drive ⇒ Running gear, axles, steering; Rep. gr. 42 ; Drive shaft; Removing and installing drive shaft .
– Install propshaft ⇒ page 38 .
– Install exhaust system ⇒ Rep. gr. 26 ; Exhaust pipes/silencers; Exploded view - silencers and perform stress-free alignment.
– Install rear cross member ⇒ General body repairs, exterior; Rep. gr. 66 ; Underbody trim; Exploded view - underbody trim .
– Check ATF level in rear final drive ⇒ page 118 .
– Check gear oil level in rear final drive ⇒ page 108 .
- Additional work is required if the rear final drive has been renewed ⇒ page 88 .

2.2.7 Removing and installing final drive 0BE, 0BF for Audi A8

Removing ⇒ page 86

Installing ⇒ page 88

Special tools and workshop equipment required

♦ Engine and gearbox jack - V.A.G 1383 A-

Protected by copyright. Copying for private or commercial purposes, in part or in whole, is not permitted unless authorised by AUDI AG. AUDI AG does not guarantee or accept any liability with respect to the correctness of information in this document. Copyright by AUDI AG.

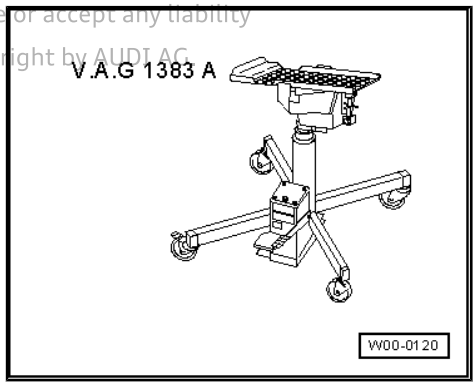

Removing:

– Remove rear cross member -1- ⇒ General body repairs, exterior; Rep. gr. 66 ; Underbody trim; Exploded view - underbody trim .

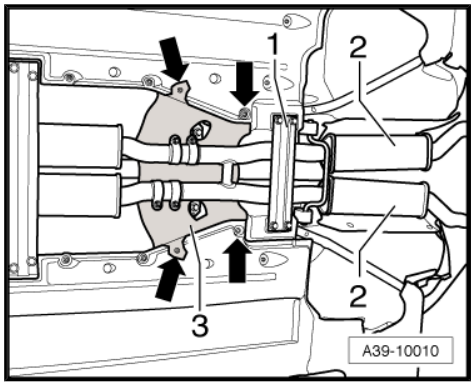

Note

A second mechanic is required for removing the rear section of the exhaust system.

– Remove rear section -2- of exhaust system ⇒ Rep. gr. 26 ; Exhaust pipes/silencers; Exploded view - silencers .

– Detach propshaft from rear final drive ⇒ page 37 .

– To support propshaft -B-, place a wooden block -A- (approx. 40 mm high) on rear cross member -C-.

Protected by copyright. Copying for private or commercial purposes, in part or in whole, is not permitted unless authorised by AUDI AG. AUDI AG does not guarantee or assume any liability with respect to the correctness of information in this document. © Copyright by AUDI AG.

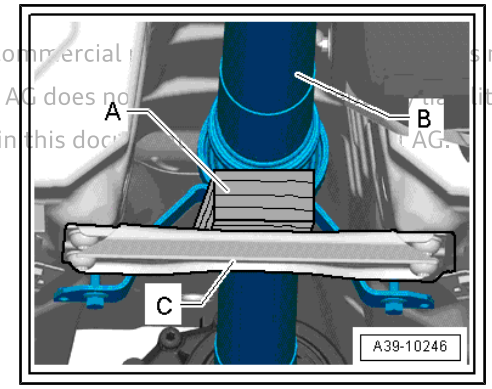

Note

The propshaft can be bent as far as the stop at the centre joint, but must not be subjected to any kind of force. The centre joint or the protective boot can be damaged if the joint is forced against its stop.

– Remove bolts -arrows- and detach heat shield -1- for drive shaft (left-side).

– Unbolt drive shafts (both sides) from rear final drive ⇒ Running gear, axles, steering; Rep. gr. 42 ; Drive shaft; Removing and installing drive shaft .

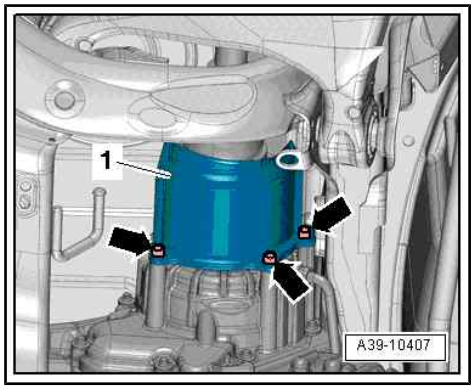

– Unplug electrical connectors -1 ... 5- and move wiring harness clear -arrow-.

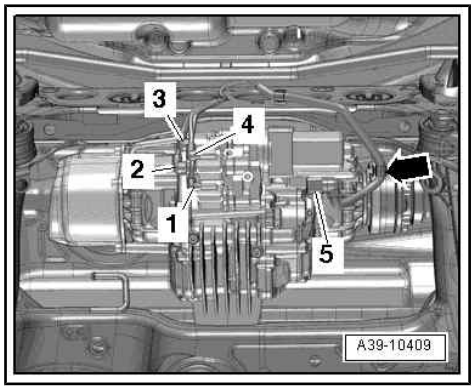

– Remove bolt -1- and slacken bolts -2-.

Protected by copyright. Copying for private or commercial purposes, in p
permitted unless authorised by AUDI AG. AUDI AG does not guarantee o
with respect to the correctness of information in this document. Copyrig

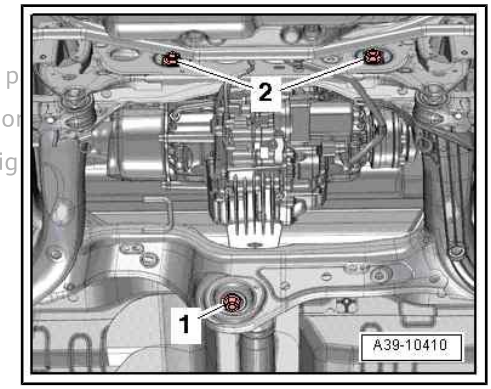

– Place engine and gearbox jack - V.A.G 1383 A- below rear final drive, with wooden block -A- on support plate of jack, and take up weight of final drive.

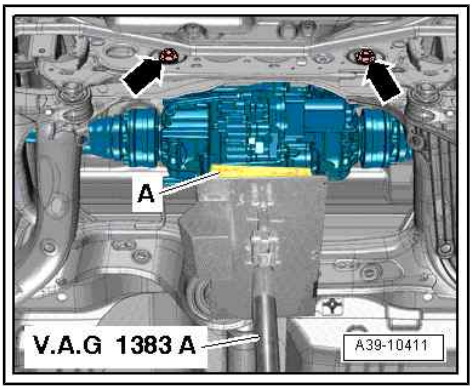

Note

Make sure that the support plate of the engine and gearbox jack does not come into contact with the fuel tank.

– Remove bolts -arrows-.

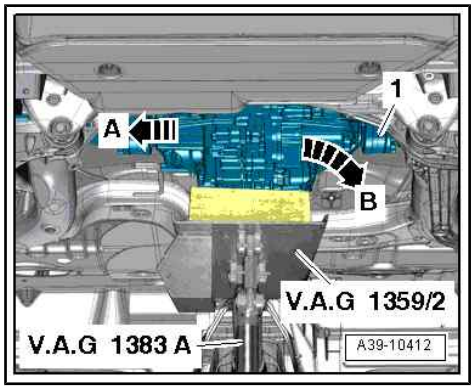

– Push rear final drive towards the left -arrow A-.
– Lift drive shaft (right-side) -1- clear.
– In order to detach flange shaft (left-side) from drive shaft, lower rear final drive at right side first -arrow B-.
– Secure rear final drive with a strap and lower final drive further using engine and gearbox jack - V.A.G 1383 A- .

Installing:

Installation is carried out in reverse sequence; note the following:

> ⚠ **WARNING**
>
> *Malfunctions can occur on rear final drive!*
>
> *Additional work is required if the rear final drive has been renewed ⇒ page 88 .*

- Tightening torques ⇒ page 47
– Secure drive shafts to rear final drive ⇒ Running gear, axles, steering; Rep. gr. 42 ; Drive shaft; Removing and installing drive shaft .
– Install propshaft ⇒ page 38 .
– Install exhaust system ⇒ Rep. gr. 26 ; Exhaust pipes/silencers; Exploded view - silencers and perform stress-free alignment.
– Install rear cross member ⇒ General body repairs, exterior; Rep. gr. 66 ; Underbody trim; Exploded view - underbody trim .
– Check gear oil level in rear final drive ⇒ page 108 .
– Check ATF level in rear final drive ⇒ page 118 .
- Additional work is required if the rear final drive has been renewed ⇒ page 88 .

2.2.8 Additional work required after renewing final drive 0BE, 0BF

> ⚠ **WARNING**
>
> *Malfunctions can occur on rear final drive!*
>
> *The following additional work is required if the rear final drive has been renewed:*
>
> ♦ *Bleeding hydraulic control unit ⇒ Vehicle diagnostic tester*
>
> ♦ *Adapting all-wheel drive control unit - J492- to rear final drive ⇒ Vehicle diagnostic tester*
>
> - *Only perform this additional work if the rear final drive has been renewed.*

Protected by copyright. Copying for private or commercial purposes, in part or in whole, is not permitted unless authorised by AUDI AG. AUDI AG does not guarantee or accept any liability with respect to the correctness of information in this document. Copyright by AUDI AG.

Procedure:

– Connect vehicle diagnostic tester and switch on ignition.
– Using vehicle diagnostic tester in `Guided Functions` mode, select `22 - Four-wheel electronics` and then select the function `22 - Replace rear final drive`.

- It is important to follow all instructions given by the vehicle diagnostic tester exactly.

Using the vehicle diagnostic tester, the new rear final drive is “adapted” to the all-wheel drive control unit - J492- .

Note

When `22 - Replacing rear final drive` *function has been completed, a system check is performed. Any malfunctions during this test must be eliminated via the “Guided Fault Finding”.*

Tightening torque

Component	Nm
Bracket for wiring harness to rear final drive	9

Protected by copyright. Copying for private or commercial purposes, in part or in whole, is not permitted unless authorised by AUDI AG. AUDI AG does not guarantee or accept any liability with respect to the correctness of information in this document. Copyright by AUDI AG.

3 Dismantling and assembling final drive

Note

At present there is no provision for dismantling final drives 0BC and 0BD.

⇒ “3.1 Exploded view - dismantling and assembling final drive”, page 90

⇒ “3.2 Removing and installing hydraulic control unit”, page 93

⇒ “3.3 Dismantling and assembling hydraulic control unit”, page 96

⇒ “3.4 Removing and installing all-wheel drive pump V415 ”, page 99

⇒ “3.5 Removing and installing oil pressure and oil temperature sender G437 or oil pressure and oil temperature sender 2 G640 ”, page 101

⇒ “3.6 Removing and installing clutch valve for all-wheel drive N445 or clutch valve 2 for all-wheel drive N446 ”, page 104

⇒ “3.7 Checking torque distribution”, page 106

3.1 Exploded view - dismantling and assembling final drive

⇒ “3.1.1 Exploded view - dismantling and assembling final drive 0BE, 0BF”, page 90

3.1.1 Exploded view - dismantling and assembling final drive 0BE, 0BF

Caution

Only certain parts of the rear final drive may be dismantled.

- *Currently the two superposition gears ⇒ Item 12 (page 92) and ⇒ Item 26 (page 92) may not be removed from the final drive.*
- *Therefore it is currently not possible to repair the components inside.*

Protected by copyright. Copying for private or commercial purposes, in part or in whole, is not permitted unless authorised by AUDI AG. AUDI AG does not guarantee or accept any liability with respect to the correctness of information in this document. Copyright by AUDI AG.

Protected by copyright. Copy for private or commercial purposes, in part or in whole, is not permitted unless authorised by AUDI AG. AUDI AG does not guarantee or accept any liability with respect to the correctness of information in this document. Copyright by AUDI AG.

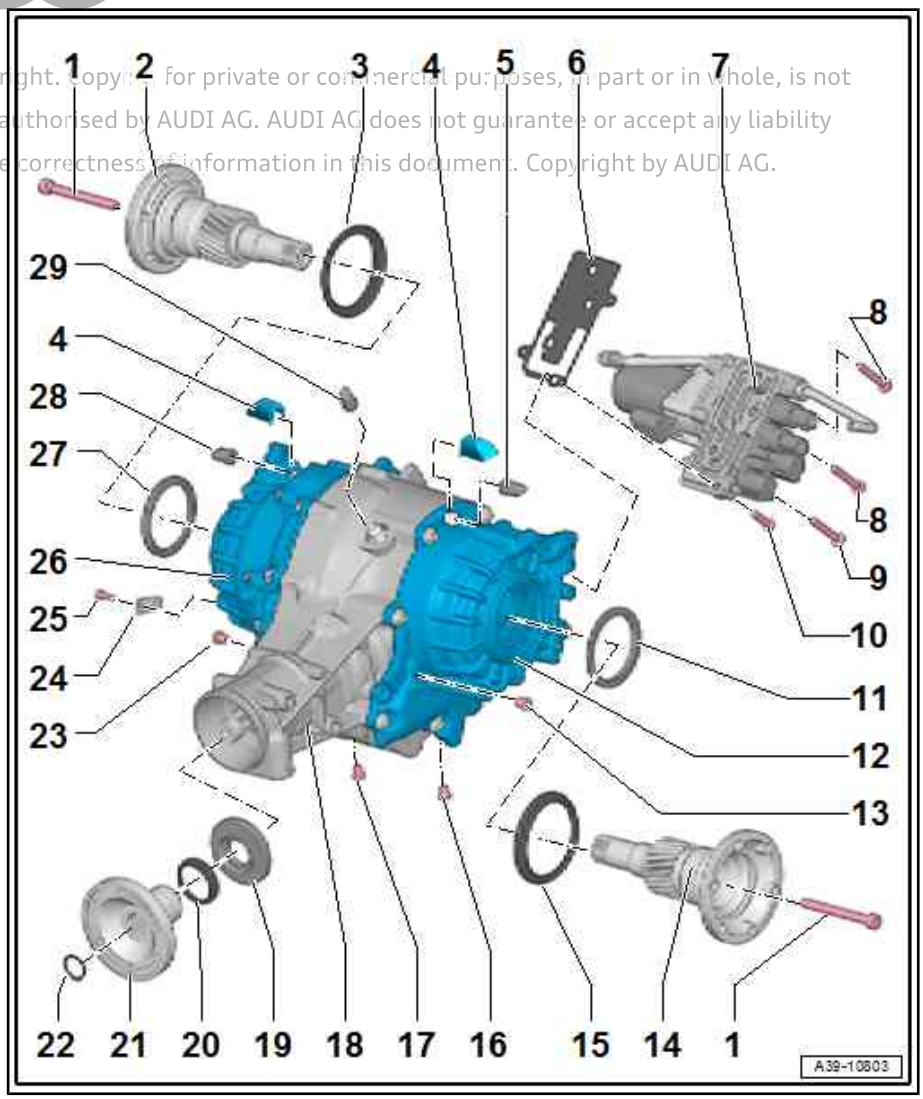

1 - Bolt

- ❑ 50 Nm and then turn 180° further
- ❑ Always renew

2 - Flange shaft (right-side)

- ❑ Removing and installing ⇒ page 130
- ❑ Do not interchange with flange shaft (left-side); the two shafts are different

3 - Protective ring

- ❑ Renewing ⇒ page 160

4 - Protective cap

- ❑ For Audi A8 only
- ❑ Retrofit this component on Audi A8 if not fitted ⇒ Electronic parts catalogue
- ❑ Installation position ⇒ page 93

5 - ATF breather

- ❑ For superposition gear (left-side)
- ❑ Clip onto breather pipe

6 - Gasket

- ❑ With strainer

7 - Hydraulic control unit

- ❑ With all-wheel drive pump - V415- and pipes to superposition gears
- ❑ Removing and installing ⇒ page 93
- ❑ Dismantling and assembling ⇒ page 96

8 - Bolt

- ❑ 20 Nm
- ❑ 2x
- ❑ M8, 50 mm long
- ❑ Note tightening sequence ⇒ page 95

9 - Bolt

- ❑ 20 Nm
- ❑ M8, 50 mm long
- ❑ With captive seal underneath bolt head
- ❑ Coat thread with sealing paste - D 176 501 A1-
- ❑ Note tightening sequence ⇒ page 95

10 - Bolt

- ❑ 20 Nm
- ❑ M8, 30 mm long
- ❑ Note tightening sequence ⇒ page 95

11 - Oil seal

- ❑ For flange shaft (left-side)

- ❑ Renewing ⇒ page 130

12 - Superposition gear (left-side)

13 - ATF inspection plug
- ❑ 15 Nm
- ❑ Always renew
- ❑ With captive seal

14 - Flange shaft (left-side)
- ❑ Removing and installing ⇒ page 130
- ❑ Do not interchange with flange shaft (right-side); the two shafts are different

15 - Protective ring
- ❑ Renewing ⇒ page 160

16 - ATF drain plug
- ❑ 15 Nm
- ❑ Always renew
- ❑ With captive seal

17 - Drain plug for gear oil
- ❑ 15 Nm
- ❑ Always renew
- ❑ With captive seal

This document is copyright. Copying for private or commercial purposes, in part or in whole, is not permitted unless authorised by AUDI AG. AUDI AG does not guarantee or accept any liability with respect to the correctness of information in this document. Copyright by AUDI AG.

18 - Final drive housing

19 - Oil seal
- ❑ For propshaft flange
- ❑ Renewing (final drive 0BF) ⇒ page 149
- ❑ Renewing (final drive 0BE) ⇒ page 144

20 - Protective ring
- ❑ Renewing ⇒ page 166

21 - Propshaft flange
- ❑ Removing and installing (final drive 0BF) ⇒ page 149
- ❑ Removing and installing (final drive 0BE) ⇒ page 144

22 - Circlip
- ❑ Always renew
- ❑ Installing (final drive 0BF) ⇒ page 156
- ❑ Installing (final drive 0BE) ⇒ page 149

23 - Gear oil inspection plug
- ❑ 15 Nm
- ❑ Always renew
- ❑ With captive seal

24 - Retainer
- ❑ For wiring harness

25 - Bolt
- ❑ 9 Nm

26 - Superposition gear (right-side)

27 - Oil seal
- ❑ For flange shaft (right-side)
- ❑ Renewing ⇒ page 130

28 - ATF breather

- ❑ For superposition gear (right-side)
- ❑ Clip onto breather pipe

29 - Breather for final drive

- ❑ Clip onto breather pipe

Installation position of protective cap (for Audi A8 only)

– Protective cap -A- is clipped into groove behind ATF breather pipe -B-.

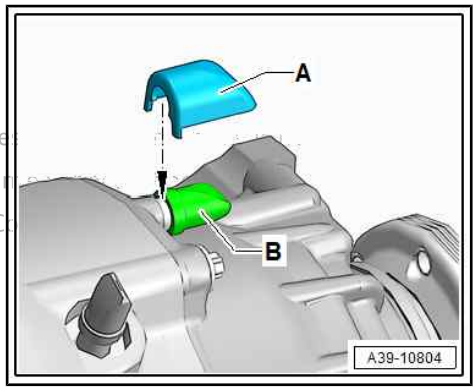

Protected by copyright. Copying for private or commercial purposes, in part, is not permitted unless authorised by AUDI AG. AUDI AG does not guarantee or assume liability with respect to the correctness of information in this document. Copyright by AUDI AG.

Note

The protective cap must be fitted on both sides of the ATF breather pipe.

3.2 Removing and installing hydraulic control unit

⇒ "3.2.1 Removing and installing hydraulic control unit - 0BE, 0BF", page 93

3.2.1 Removing and installing hydraulic control unit - 0BE, 0BF

Note

- ♦ *Refer to general repair instructions ⇒ page 14 .*
- ♦ *Observe safety precautions ⇒ page 10 .*

Removing

- Ignition is switched off.

– Place vehicle on lifting platform.

– Lower rear section of exhaust system slightly and secure; if necessary remove rear section of exhaust system ⇒ Rep. gr. 26 ; Exhaust pipes/silencers; Exploded view - silencers .

Note

A second mechanic is required for removing the rear section of the exhaust system.

– If fitted, unscrew bolts -arrows- and detach bracket -1- for wiring harness from rear final drive.

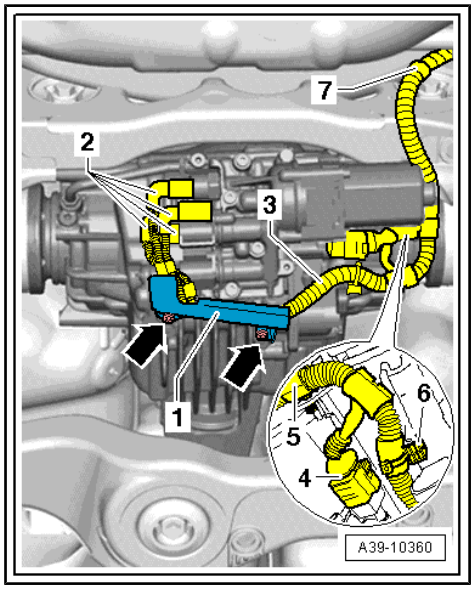

Note

Mark connectors -2- for oil pressure and oil temperature senders and clutch valves .

– Unplug connectors -2- from oil pressure and oil temperature senders and clutch valves .
– Then unplug connector -4- from all-wheel drive pump - V415- .
– Subsequently, unclip wiring harness -3- from final drive and subframe -items 5 ... 7- and tie up.
– Position drip tray under rear final drive.
– Drain ATF from rear final drive ⇒ page 119 .
– Drain gear oil from rear final drive ⇒ page 109 .
– Remove all-wheel drive pump - V415- ⇒ page 99 .

Note

To loosen and tighten the nut for the pipe (right-side) at the hydraulic control unit ⇒ page 94 , the all-wheel drive pump - V415- must be removed.

– Loosen pipe (left-side) -6- and pipe (right-side) -7- to hydraulic control unit -1- one turn -arrows A- and remove from superposition gears -arrows B-.
– Unscrew bolts -2 ... 5- and detach hydraulic control unit -1- with gasket.

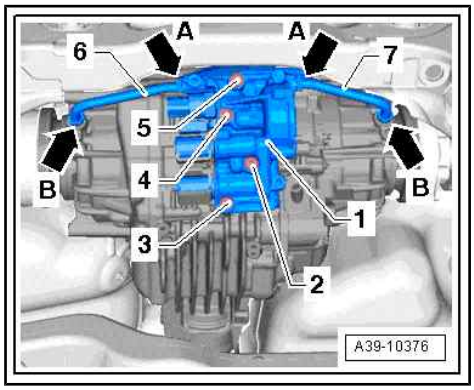

Protected by copyright. Copying for private or commercial purposes, in part or in whole, is not permitted unless authorised by AUDI AG. AUDI AG does not guarantee or accept any liability with respect to the correctness of information in this document. Copyright by AUDI AG.

Installing

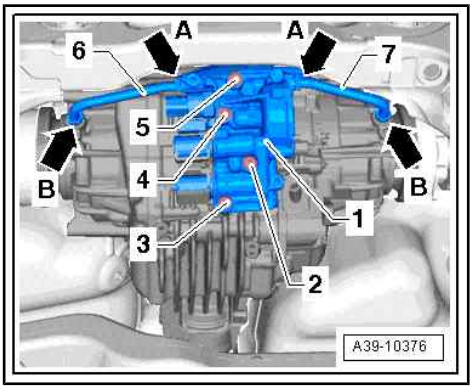

Note

Carefully observe safety precautions when renewing hydraulic control unit. If possible the "old" senders must be re-installed *⇒ page 14* *.*

Requirements:

- Renew gasket between hydraulic control unit -1- and final drive housing
- Centring pins ⇒ Item 18 (page 98) must be installed in housing of hydraulic control unit.
- To attach hydraulic control unit -1- to rear final drive, pipes (left -6- and right -7-) must be screwed into control unit loosely.

Attach hydraulic control unit -1- to rear final drive as follows:

– First screw pipe connections -6- and -7- hand-tight into superposition gears -arrows B-.

– Screw in bolts -2 ... 5- (hand-tight).

– Coat thread of bolt -2- with sealing paste - D 176 501 A1- and attach corresponding seal.

– Tighten bolts -2 ... 5- to specified torque in the sequence -4-, -2-, -5- and -3- (M8 x 30 mm).

– Tighten nuts -arrows A- and -arrows B- at pipes (left -6- and right -7-) to specified torque.

– Install all-wheel drive pump - V415- ⇒ page 99 .

– Clip in wiring harness -3- at final drive and subframe -items 5 ... 7-.

– Plug in connectors -4- and -2-, paying attention to marks made during removal for identification of oil pressure and oil temperature senders and clutch valves .

– If fitted, install bracket -1- for wiring harness at rear final drive and tighten bolts -arrows- to specified torque. Take care not to trap wiring harness -3-.

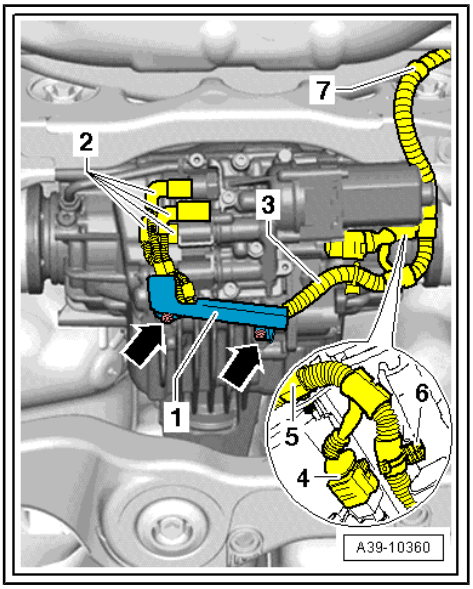

Protected by copyright. Copying for private or commercial purposes, in part or in whole, is not permitted unless authorised by AUDI AG. AUDI AG does not guarantee or accept any liability with respect to the correctness of information in this document. Copyright by AUDI AG.

Note

- *Allocation of connectors for oil pressure and oil temperature senders and clutch valves :*
- *-1- = connector for oil pressure and oil temperature sender 2 - G640-*
- *-2- = connector for oil pressure and oil temperature sender - G437-*
- *-3- = connector for clutch valve 2 for all-wheel drive - N446-*
- *-4- = connector for clutch valve for all-wheel drive - N445-*

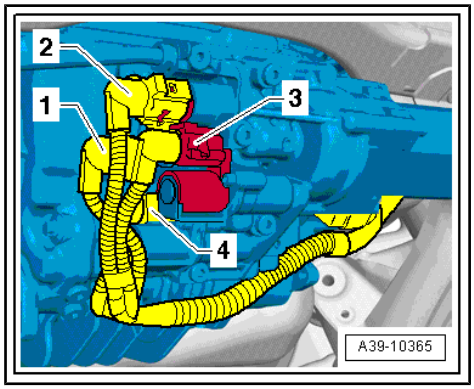

– Fill up gear oil in rear final drive and check oil level ⇒ page 108 .

– Fill up ATF in rear final drive and check ATF level ⇒ page 118 .

– Install rear section of exhaust system and perform stress-free alignment ⇒ Rep. gr. 26 ; Exhaust pipes/silencers; Exploded view - silencers .

3.3 Dismantling and assembling hydraulic control unit

⇒ “3.3.1 Dismantling and assembling hydraulic control unit - 0BE, 0BF”, page 96

3.3.1 Dismantling and assembling hydraulic control unit - 0BE, 0BF

Protected by copyright. Copying for private or commercial purposes, in part or in whole, is not permitted unless authorised by AUDI AG. AUDI AG does not guarantee or accept any liability with respect to the correctness of information in this document. Copyright by AUDI AG.

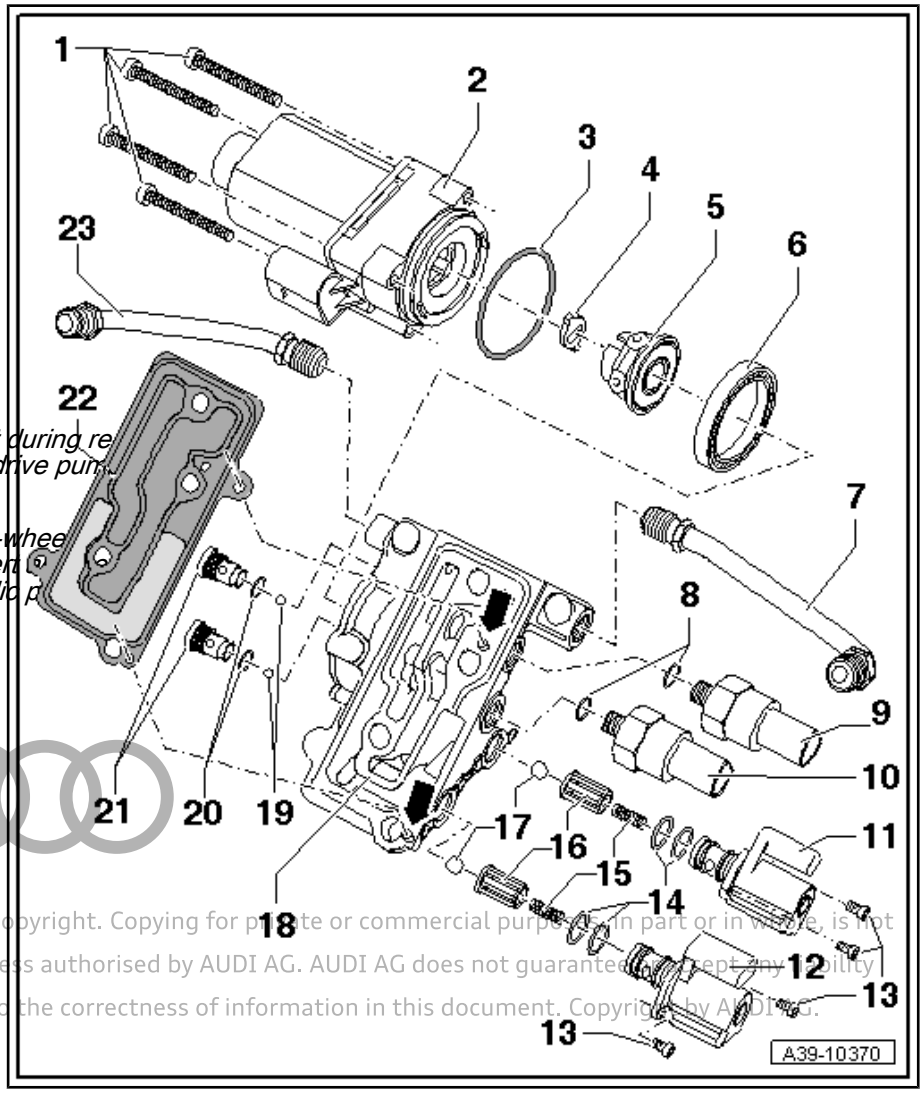

1 - Bolt

- ❑ 5 Nm

2 - All-wheel drive pump - V415-

- ❑ Removing and installing ⇒ page 99

3 - O-ring

- ❑ Always renew

4 - Adapter

Note

- ♦ *Adapter can fall out during removal of all-wheel drive pump - V415-*
- ♦ *Before installing all-wheel drive pump - V415- , insert recesses in hydraulic p*

5 - Hydraulic pump

- ❑ Consists of guide ring, housing and 6 pistons
- ❑ Assembling ⇒ page 99

6 - Ball bearing

- ❑ Can be removed and installed by hand

7 - Pipe (left-side)

- ❑ Tighten nuts to 30 Nm
- ❑ Installed between hydraulic control unit and superposition gear (left-side)
- ❑ When installing, first screw in both nuts hand-tight

8 - O-ring

- ❑ Always renew

9 - Oil pressure and oil temperature sender - G437-

- ❑ 10 Nm
- ❑ Brown connection
- ❑ Removing and installing ⇒ page 101

10 - Oil pressure and oil temperature sender 2 - G640-

- ❑ 10 Nm
- ❑ Black connection
- ❑ Removing and installing ⇒ page 101

11 - Clutch valve 2 for all-wheel drive - N446-

- ❑ Colour: brown
- ❑ Removing and installing ⇒ page 104
- ❑ Installation position: connector must face upwards towards oil pressure and oil temperature sender

Protected by copyright. Copying for private or commercial purposes, in part or in whole, is not permitted unless authorised by AUDI AG. AUDI AG does not guarantee or accept any liability with respect to the correctness of information in this document. Copyright by AUDI AG.

> **Caution**
> *Do not interchange with clutch valve for all-wheel drive - N445- .*

12 - Clutch valve for all-wheel drive - N445-

- ❑ Colour: black
- ❑ Removing and installing ⇒ page 104
- ❑ Installation position: connector must face upwards towards oil pressure and oil temperature sender

> **Caution**
> *Do not interchange with clutch valve 2 for all-wheel drive - N446- .*

13 - Bolt

- ❑ 2.5 Nm

14 - O-ring

- ❑ Always renew
- ❑ Fit on clutch valve

Protected by copyright. Copying for private or commercial purposes, in part or in whole, is not permitted unless authorised by AUDI AG. AUDI AG does not guarantee or accept any liability with respect to the correctness of information in this document. Copyright by AUDI AG.

15 - Spring

- ❑ Insert in guide ⇒ Item 16 (page 98)

16 - Guide

- ❑ Installation position: large diameter must face ball ⇒ Item 17 (page 98)

17 - Ball

- ❑ Before installing, insert in guide ⇒ Item 16 (page 98)

18 - Housing for hydraulic control unit

- ❑ With centring pins -arrows-
- ❑ Centring pins lock hydraulic control unit with gasket on final drive housing

19 - Ball

- ❑ Before installing, insert in hole in shuttle valve ⇒ Item 21 (page 98)

20 - O-ring

- ❑ Always renew

21 - Shuttle valve

- ❑ 8 Nm
- ❑ Removing and installing ⇒ page 99

22 - Gasket

- ❑ With strainer
- ❑ Position on centring pins of housing for hydraulic control unit

23 - Pipe (right-side)

- ❑ Tighten nuts to 30 Nm
- ❑ Installed between hydraulic control unit and superposition gear (right-side)
- ❑ When installing, first screw in both nuts hand-tight

Assembling hydraulic pump

– Insert the 6 pistons -A- into housing -B-.

– Then position guide ring -C- so that pistons make contact with shoulder -arrow-.

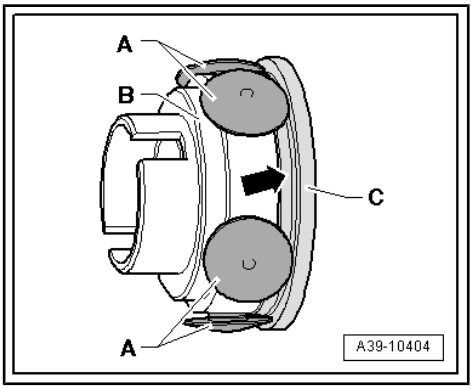

– Fit hydraulic pump -1- with guide ring -2- in housing for hydraulic control unit.

Protected by copyright. Copying for private or commercial purposes, in part or in whole, is not permitted unless authorised by AUDI AG. AUDI AG does not guarantee or accept any liability with respect to the correctness of information in this document.

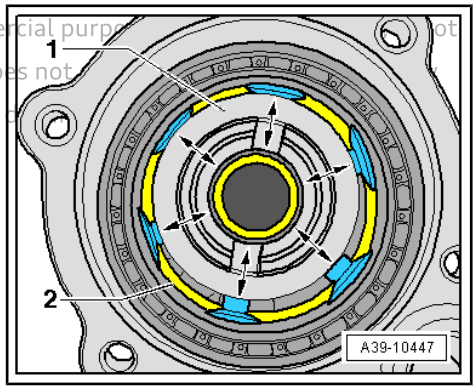

Functional check:

– Rotate hydraulic pump -1- several times. Check the following:

♦ The hydraulic pump must turn smoothly without sticking or catching.

♦ All pistons must move in and out.

Removing and installing shuttle valves

Note

First remove all-wheel drive pump - V415- , hydraulic pump and ball bearing ⇒ *Item 6 (page 97)* .

– Unscrew shuttle valves -A- (it is important to also remove ball -C-).

– To install, insert ball in hole in shuttle valve.

– Then carefully screw in shuttle valve with new O-ring -B- as far as stop.

• The shuttle valve must be below the surface of the housing -arrow-. If this is not the case, remove the valve and position the ball correctly.

– Tighten shuttle valve to specified torque ⇒ Item 21 (page 98) .

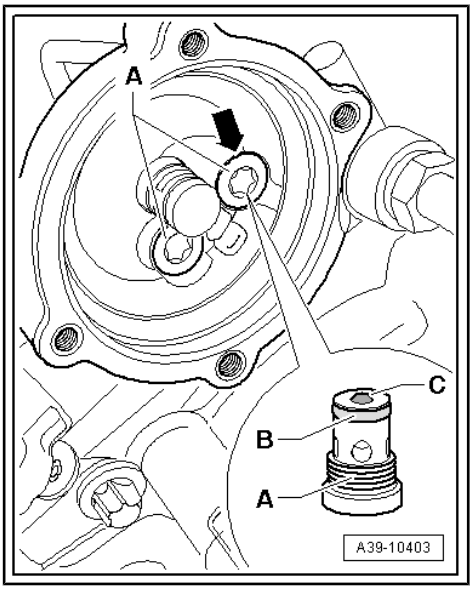

3.4 Removing and installing all-wheel drive pump - V415-

⇒ "3.4.1 Removing and installing all-wheel drive pump V415 - 0BE, 0BF", page 99

3.4.1 Removing and installing all-wheel drive pump - V415- - 0BE, 0BF

Special tools and workshop equipment required

- Socket - T10058-

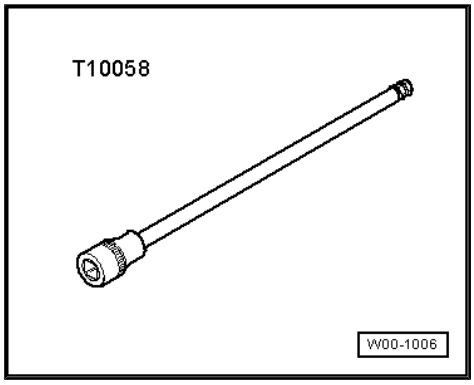

Note

- *Refer to general repair instructions ⇒ page 14 .*
- *Observe safety precautions ⇒ page 10 .*

Removing

– Place vehicle on lifting platform.

• Ignition is switched off.

– Position drip tray under rear final drive.

– Unplug connector -1- from all-wheel drive pump - V415- -2-.

– Unscrew the four bolts securing all-wheel drive pump - V415- to hydraulic control unit using Allen key - T10058- .

– Carefully detach all-wheel drive pump - V415- -2-; pay attention to adapter ⇒ Item 4 (page 97) in hydraulic pump.

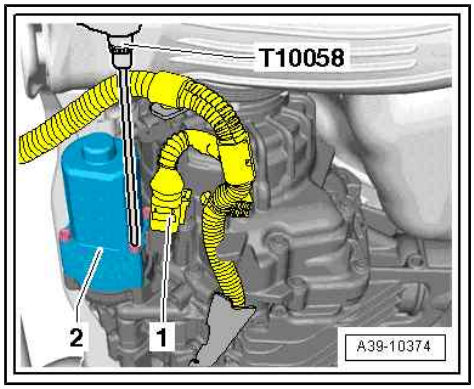

Note

- *Adapter can fall out during removal of all-wheel drive pump - V415- .*
- *Before installing all-wheel drive pump - V415- , insert adapter in recesses in hydraulic pump.*

Protected by copyright. Copying for private or commercial purposes, in part or in whole, is not permitted unless authorised by AUDI AG. AUDI AG does not guarantee or assume any liability with respect to the correctness of information in this document.

Installing

• Hydraulic pump -A- is fitted in installation position in hydraulic control unit; assembling hydraulic pump ⇒ page 99 .

• Adapter -B- is fitted in recesses in hydraulic pump.

• A new O-ring -D- is fitted on all-wheel drive pump - V415- .

– Insert all-wheel drive pump - V415- with actuating pin -C- in adapter -B-.

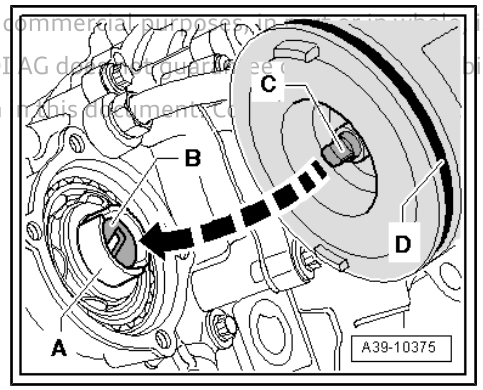

– Tighten the four bolts securing all-wheel drive pump - V415- -2- to specified torque in diagonal sequence ⇒ Item 1 (page 97) .
– Attach connector -1- to all-wheel drive pump - V415- .
– Top up ATF in rear final drive ⇒ page 120 .

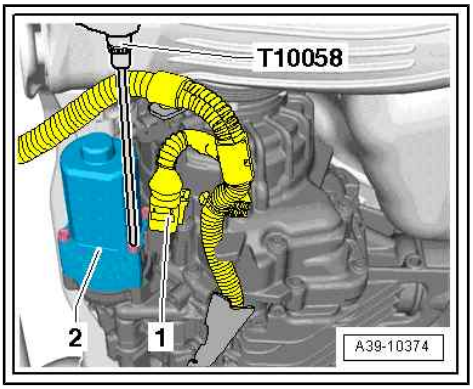

3.5 Removing and installing oil pressure and oil temperature sender - G437- or oil pressure and oil temperature sender 2 - G640-

⇒ "3.5.1 Removing and installing oil pressure and oil temperature sender G437 or oil pressure and oil temperature sender 2 G640 - 0BE, 0BF", page 101

3.5.1 Removing and installing oil pressure and oil temperature sender - G437- or oil pressure and oil temperature sender 2 - G640- - 0BE, 0BF

Special tools and workshop equipment required

♦ Socket, 27 mm - T40218-

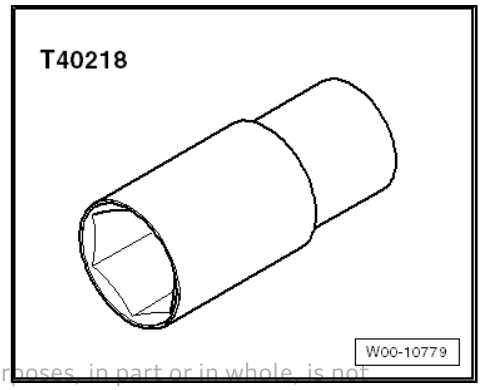

Protected by copyright. Copying for private or commercial purposes, in part or in whole, is not permitted unless authorised by AUDI AG. AUDI AG does not guarantee or accept any liability with respect to the correctness of information in this document. Copyright by AUDI AG.

♦ Vehicle diagnostic tester

Important safety precautions:

♦ After renewing the oil pressure and oil temperature sender - G437- or the oil pressure and oil temperature sender 2 - G640- , the identity of the corresponding sender must be re-adapted in the all-wheel drive control unit - J492- ⇒ Vehicle diagnostic tester.

♦ Do not renew both oil pressure and oil temperature senders (-G437- and -G640-) at the same time, as at least one valid sender identity is required at any time for the allocation of the rear final drive to the all-wheel drive control unit - J492- . If both senders are renewed at the same time, the all-wheel drive control unit - J492- would interpret this as the replacement of the rear final drive. This would erase all the learnt values in the control unit and impair the performance of the rear final drive.

♦ If both oil pressure and oil temperature senders (-G437- and -G640-) have to be renewed due to mechanical damage, e.g. damage to the connector housing, this should be done in two

steps: After the first sender has been renewed, the identity of the sender must be re-adapted in the all-wheel drive control unit - J492- ⇒ Vehicle diagnostic tester. Proceed in the same manner for the second sender.

- If both oil pressure and oil temperature senders (-G437- and -G640- have to be renewed due to an electrical fault, the clutch classification must be entered again in the all-wheel drive control unit - J492- ⇒ Vehicle diagnostic tester. In addition, the ATF in the rear final drive must be renewed ⇒ page 119 .

Note

- *Refer to general repair instructions* *⇒ page 14* *.*
- *Observe safety precautions* *⇒ page 10* *.*

Removing

- Ignition is switched off.

– Place vehicle on lifting platform.

– Lower rear section of exhaust system slightly and secure.

– If necessary, remove bracket for wiring harness from rear final drive ⇒ page 94 .

– Unplug connector -1- from oil pressure and oil temperature sender 2 - G640- / connector -2- from oil pressure and oil temperature sender - G437- .

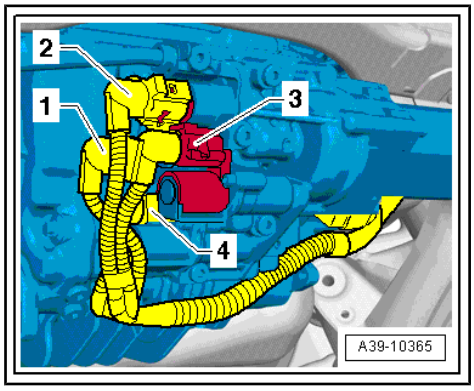

Note

If necessary, unplug connectors -3- and -4-.

– Position drip tray under rear final drive.

– Remove corresponding sender using socket - T40218- .

-A- = oil pressure and oil temperature sender 2 - G640- - black connection

-B- = oil pressure and oil temperature sender - G437- - brown connection

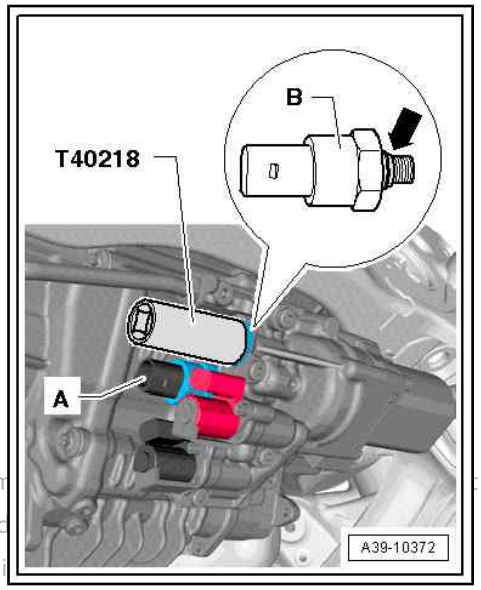

Protected by copyright. Copying for private or comm
permitted unless authorised by AUDI AG. AUDI AG d
with respect to the correctness of information in thi

Installing

– Carefully screw in new sender with new O-ring -arrow- at its fitting location and tighten to specified torque ⇒ Item 9 (page 97) or ⇒ Item 10 (page 97) .

  -A- = oil pressure and oil temperature sender 2 - G640- - black connection

  -B- = oil pressure and oil temperature sender - G437- - brown connection

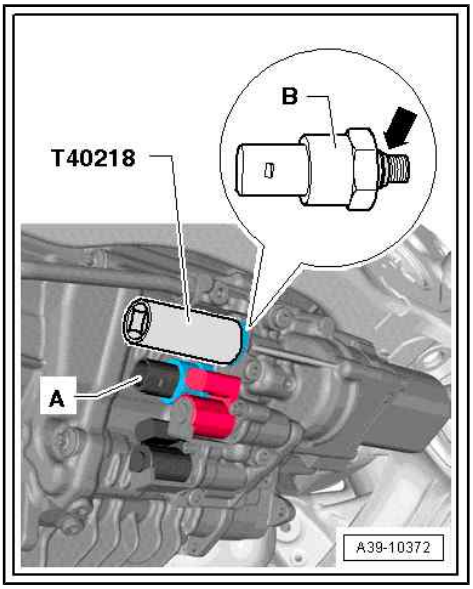

– Plug in connector -1- at oil pressure and oil temperature sender 2 - G640- / connector -2- at oil pressure and oil temperature sender - G437- .

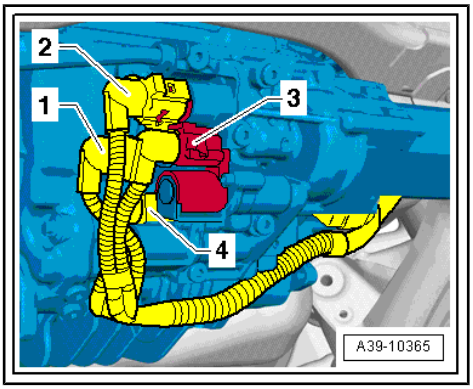

Note

If unplugged earlier, plug in connectors -3- and -4-.

– If removed earlier, install bracket for wiring harness at rear final drive ⇒ page 82 .

– Connect vehicle diagnostic tester and switch on ignition.

– Using vehicle diagnostic tester in `Guided Functions` mode, select `22 - Four-wheel electronics` and then select the function `22 - Adapt sender`.

Protected by copyright. Copying or distribution of this document, in whole or in part, is not permitted unless authorised by AUDI AG. AUDI AG does not guarantee or accept any liability with respect to the correctness of information in this document. Copyright by AUDI AG.

• It is important to follow all instructions given by the vehicle diagnostic tester exactly.

Using the vehicle diagnostic tester, the new sender is “adapted” to the all-wheel drive control unit - J492- .

Note

When `22 - Adapt sender` function has been completed, a system check is performed. Any malfunctions during this test must be eliminated via the “Guided Fault Finding”.

– Top up ATF in rear final drive ⇒ page 120 .

– Attach rear section of exhaust system to body and perform stress-free alignment ⇒ Rep. gr. 26 ; Exhaust pipes/silencers; Exploded view - silencers .

3.6 Removing and installing clutch valve for all-wheel drive - N445- or clutch valve 2 for all-wheel drive - N446-

⇒ "3.6.1 Removing and installing clutch valve for all-wheel drive N445 or clutch valve 2 for all-wheel drive N446 - 0BE, 0BF", page 104

3.6.1 Removing and installing clutch valve for all-wheel drive - N445- or clutch valve 2 for all-wheel drive - N446- - 0BE, 0BF

Special tools and workshop equipment required

- Socket, 4 mm - T10370-

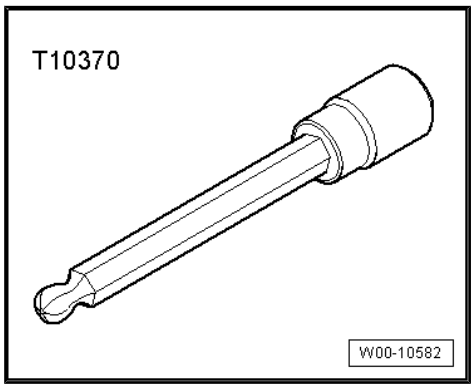

Note

Protected by copyright. Copying for private or commercial purposes, in part or in whole, is not permitted unless authorised by AUDI AG. AUDI AG does not guarantee or accept any liability with respect to the correctness of information in this document. Copyright by AUDI AG.

- *Refer to general repair instructions ⇒ page 14 .*
- *Observe safety precautions ⇒ page 10 .*

Caution

Malfunctions on rear final drive.

- *Do NOT interchange fitting location of clutch valve for all-wheel drive - N445- with fitting location of clutch valve 2 for all-wheel drive - N446- .*

Removing

- Ignition is switched off.
- Place vehicle on lifting platform.
- Lower rear section of exhaust system slightly and secure.
- Remove bracket for wiring harness from rear final drive ⇒ page 94 .

Protected by copyright. Copying for private or commercial purposes, in part or in whole, is not permitted unless authorised by AUDI AG. AUDI AG does not guarantee the correctness of information in this document.

Note

- *Mark connectors -1 ... 4- for oil pressure and oil temperature senders and clutch valves.*
- *Unplug connectors -1- and -2-.*

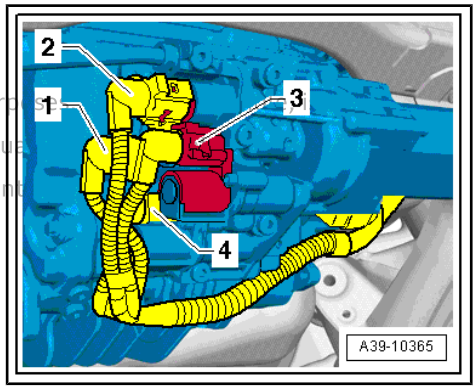

– Unplug connector -3- from clutch valve 2 for all-wheel drive - N446- / connector -4- from clutch valve for all-wheel drive - N445- .

– Position drip tray under rear final drive.

– Unscrew bolts -1- of corresponding clutch valve using 4 mm socket - T10370-

– Carefully prise out clutch valve e.g. using a flat screwdriver; observe spring -3-. Spring can fall out of opening in hydraulic control unit -6-.

-A- = clutch valve 2 for all-wheel drive - N446- , brown colour coding

-B- = clutch valve for all-wheel drive - N445- , black colour coding

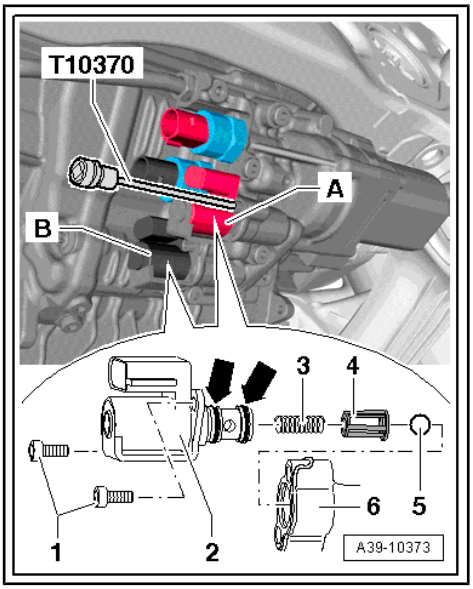

Installing

- Ball -5-, guide -4- (small diameter facing spring) and spring -3- must be installed in opening in housing -6- for clutch valve -2-.

– Install new clutch valve with new O-rings -arrows- (coat O-rings with ATF).

– Pre-tighten bolts -1- evenly hand-tight until they make contact. Then tighten to specified torque ⇒ Item 13 (page 98) .

The remaining installation steps are carried out in the reverse sequence. Note the following:

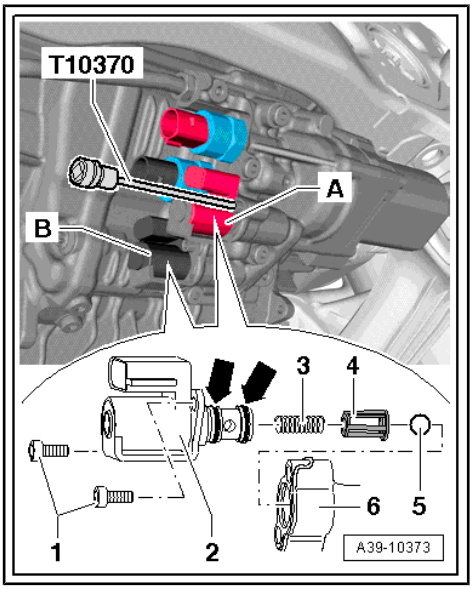

Protected by copyright. Copying for private or commercial purposes, in part or in whole, is not permitted unless authorised by AUDI AG. AUDI AG does not guarantee or accept any liability with respect to the correctness of information in this document.

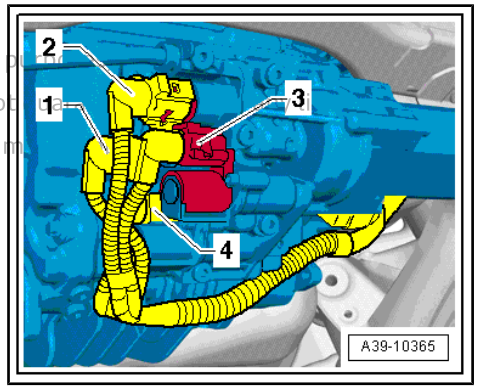

Note

- *Allocation of connectors for oil pressure and oil temperature senders and clutch valves :*
- *-1- = connector for oil pressure and oil temperature sender 2 - G640-*
- *-2- = connector for oil pressure and oil temperature sender - G437-*
- *-3- = connector for clutch valve 2 for all-wheel drive - N446-*
- *-4- = connector for clutch valve for all-wheel drive - N445-*

– Attach bracket for wiring harness to rear final drive ⇒ page 82 .

– Top up ATF in rear final drive ⇒ page 120 .

– Attach rear section of exhaust system to body and perform stress-free alignment ⇒ Rep. gr. 26 ; Exhaust pipes/silencers; Exploded view - silencers .

3.7 Checking torque distribution

⇒ “3.7.1 Checking torque distribution - 0BE, 0BF”, page 106

3.7.1 Checking torque distribution - 0BE, 0BF

Special tools and workshop equipment required

- Vehicle diagnostic tester

Procedure:

Note

- *Refer to general repair instructions* ⇒ page 14 .
- *Observe safety precautions* ⇒ page 10 .

The function `22 - Check torque distribution` must be performed after the following operations:

- Work on wiring of rear final drive
- Work on valves: clutch valve for all-wheel drive - N445- and clutch valve 2 for all-wheel drive - N446-
- Work on hydraulic control unit

– Raise vehicle on a platform until wheels no longer make contact with the floor.

– Connect vehicle diagnostic tester and switch on ignition.

– Using vehicle diagnostic tester in `Guided Functions` mode, select `22 - Four-wheel electronics` and then select the function `22 - Check torque displacement (torque distribution)`.

• It is important to follow all instructions given by the vehicle diagnostic tester exactly.

The vehicle diagnostic tester is used to check whether the torque is directed to the correct side when the rear final drive is activated.

4 Gear oil

⇒ “4.1 Overview of fitting locations - drain and inspection plugs”, page 107

⇒ “4.2 Checking gear oil level”, page 107

⇒ “4.3 Draining and filling gear oil”, page 109

4.1 Overview of fitting locations - drain and inspection plugs

⇒ “4.1.1 Overview of fitting locations - drain and inspection plugs, 0BE, 0BF”, page 107

4.1.1 Overview of fitting locations - drain and inspection plugs, 0BE, 0BF

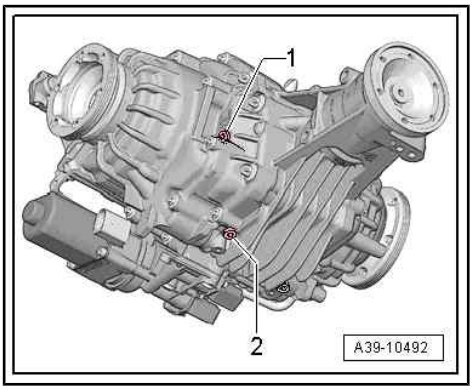

Screw plugs for gear oil in rear final drive 0BF

1 - Gear oil inspection plug

- Tightening torque ⇒ Item 23 (page 92)
- Always renew

2 - Gear oil drain plug

- Tightening torque ⇒ Item 17 (page 92)
- Always renew

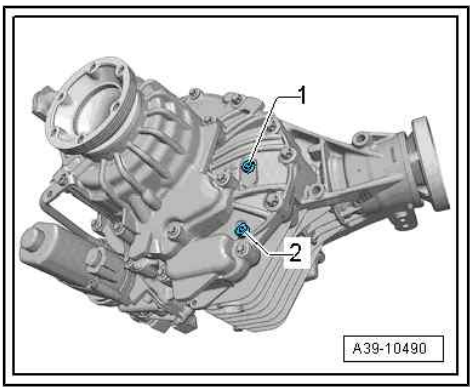

Screw plugs for gear oil in rear final drive 0BE

1 - Gear oil inspection plug

- Tightening torque ⇒ Item 23 (page 92)
- Always renew

2 - Gear oil drain plug

- Tightening torque ⇒ Item 17 (page 92)
- Always renew

4.2 Checking gear oil level

⇒ “4.2.1 Checking gear oil level - 0BC”, page 107

⇒ “4.2.2 Checking gear oil level - 0BD”, page 108

⇒ “4.2.3 Checking gear oil level - 0BE, 0BF”, page 108

4.2.1 Checking gear oil level - 0BC

Special tools and workshop equipment required

- Drip tray

Protected by copyright. Copying for private or commercial purposes, in part or in whole, is not permitted unless authorised by AUDI AG. AUDI AG does not guarantee or accept any liability with respect to the correctness of information in this document. Copyright by AUDI AG.

– Remove inspection plug -arrow- to check gear oil.

The oil level is correct when the rear final drive is filled to the bottom lip of the filler hole.

- For gear oil specification, refer to ⇒ Electronic parts catalogue .

– Screw in plug -arrow- and tighten.

Tightening torque: 30 Nm

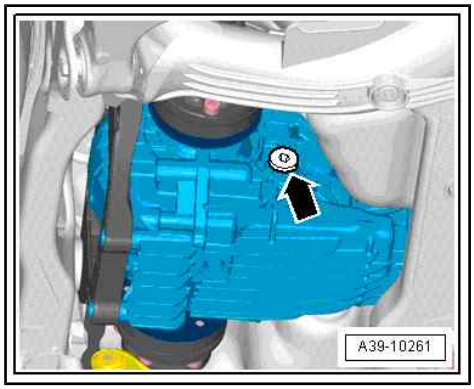

4.2.2 Checking gear oil level - 0BD

Special tools and workshop equipment required

♦ Drip tray

– Remove inspection plug -arrow- to check gear oil.

The oil level is correct when the rear final drive is filled to the bottom lip of the filler hole.

- For gear oil specification, refer to ⇒ Electronic parts catalogue .

– Screw in plug -arrow- and tighten.

Tightening torque: 45 Nm

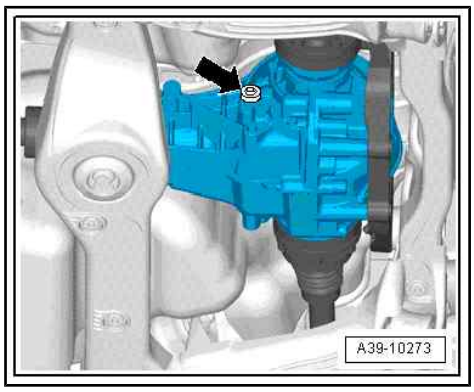

4.2.3 Checking gear oil level - 0BE, 0BF

Test requirement

- Gear oil temperature: 10°C ... 60°C
- Rear final drive must be in installation position.
- Vehicle must be level (horizontal).
- Overview of plugs for gear oil ⇒ page 107

Special tools and workshop equipment required

♦ Drip tray

Protected by copyright. Copying for private or commercial purposes, in part or in whole, is not permitted unless authorised by AUDI AG. AUDI AG does not guarantee or accept any liability with respect to the correctness of information in this document. Copyright by AUDI AG.

Rear final drive 0BF

– Remove gear oil inspection plug -arrow- (located on right side of final drive).

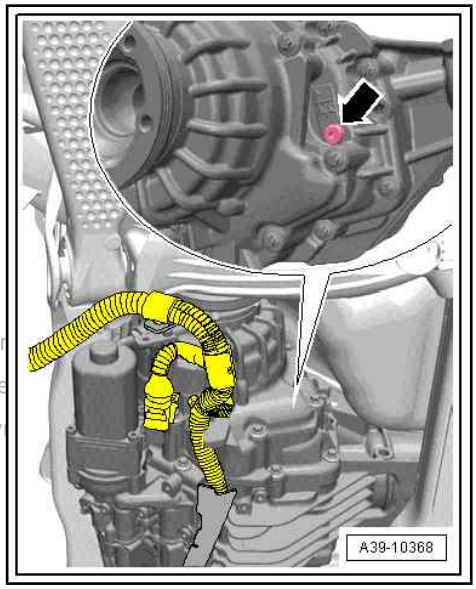

Protected by copyright. Copying for private or commercial purposes, in
permitted unless authorised by AUDI AG. AUDI AG does not guarantee
with respect to the correctness of information in this document. Copy

Rear final drive 0BE

– Remove gear oil inspection plug -1-.

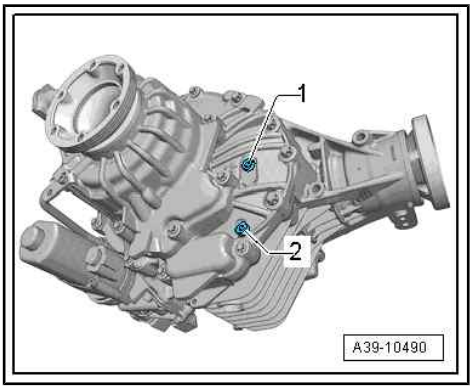

Continued for all rear final drive versions

- The oil level is correct when the rear final drive is filled to the bottom lip of the filler hole.
- For gear oil specification, refer to ⇒ Electronic parts catalogue .

– Top up gear oil if necessary.

◆ ⇒ page 111

◆ ⇒ page 114

– Screw in and tighten gear oil inspection plug -arrow-. Tightening torque ⇒ Item 23 (page 92)

4.3 Draining and filling gear oil

⇒ “4.3.1 Draining gear oil - 0BE, 0BF”, page 109
⇒ “4.3.2 Filling up gear oil - 0BE”, page 111
⇒ “4.3.3 Filling up gear oil - 0BF”, page 114

4.3.1 Draining gear oil - 0BE, 0BF

Special tools and workshop equipment required

◆ Drip tray

Rear final drive 0BF

– Remove gear oil inspection plug -arrow-.

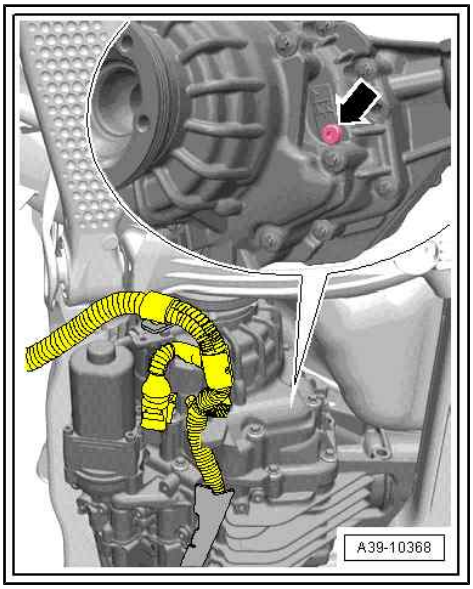

Note

- *Overview of plugs for gear oil* ⇒ page 107
- *The gear oil drains out of the drain hole faster if the inspection plug is removed.*

– Remove gear oil drain plug -arrow- and drain off gear oil.

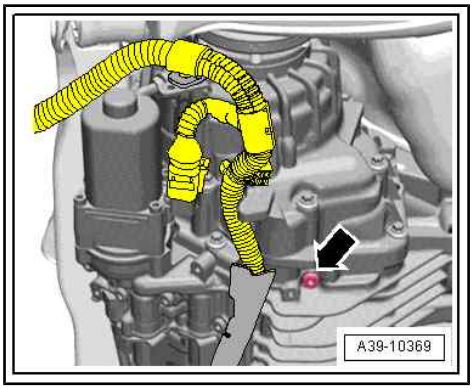

Rear final drive 0BE

– Remove gear oil inspection plug -1-.

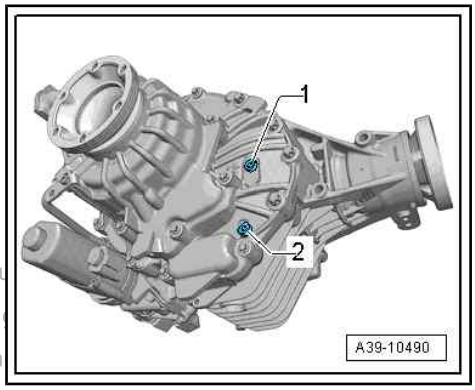

Note

- *Overview of plugs for gear oil* ⇒ page 107
- *The gear oil drains out of the drain hole faster if the inspection plug is removed.*

Protected by copyright. Copying for private or commercial pu
permitted unless authorised by AUDI AG. AUDI AG does not
with respect to the correctness of information in this docum

– Remove gear oil drain plug -arrow- and drain off gear oil.

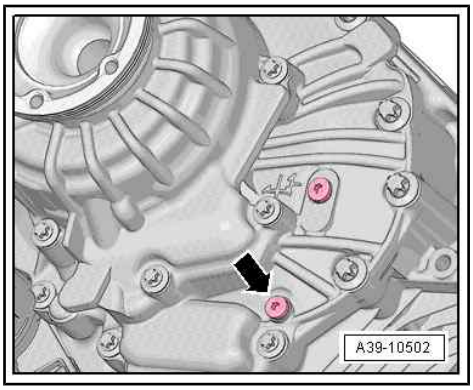

Continued for all rear final drive versions

– Screw in and tighten new gear oil drain plug -arrow-. Tightening torque ⇒ Item 17 (page 92)

- ⇒ “4.3.2 Filling up gear oil - 0BE”, page 111
- ⇒ “4.3.3 Filling up gear oil - 0BF”, page 114

4.3.2 Filling up gear oil - 0BE

Special tools and workshop equipment required

- Charging device for Haldex coupling 2 - VAS 6291- or -VAS 6291A-

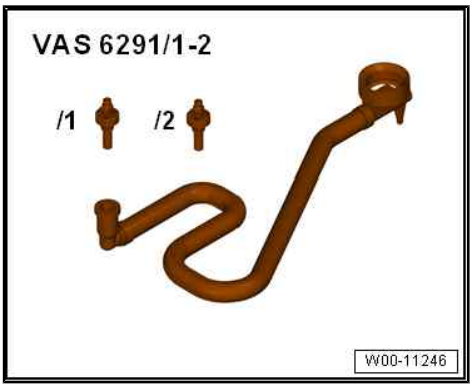

- Adapter for oil filling - VAS 6291/2- or -VAS 6291/3-
- Used oil collection and extraction unit - VAS 6622A-

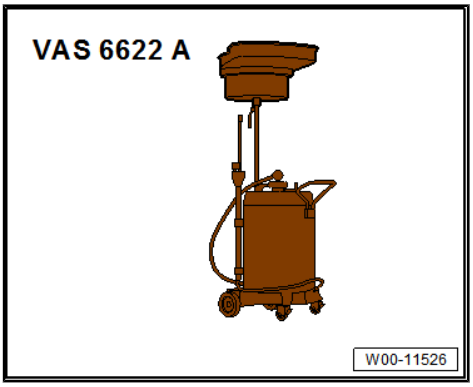

- If necessary, adapter - VAS 6262/6- or adapter - VAS 6262/7-

- Rear final drive must be in installation position.
- Vehicle must be level (horizontal).
- Overview of plugs for gear oil ⇒ page 107
- Gear oil drain plug must be fitted and tightened. Tightening torque ⇒ Item 17 (page 92)
- For oil specification, refer to ⇒ Electronic parts catalogue .

– For topping up, use charging device - VAS 6291- .

– Raise vehicle.

Protected by copyright. Copying for private or commercial purposes, in part or in whole, is not permitted unless authorised by AUDI AG. AUDI AG does not guarantee or accept any liability with respect to the correctness of information in this document. Copyright by AUDI AG.

– Remove gear oil inspection plug -1-.

Protected by copyright. Copying for private or commercial purpo
permitted unless authorised by AUDI AG. AUDI AG does not guar
with respect to the correctness of information in this document.

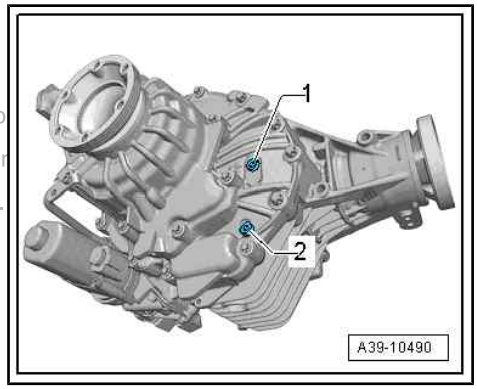

– Screw in adapter for oil filling - VAS 6291/1- or -VAS 6291/2- -1-.

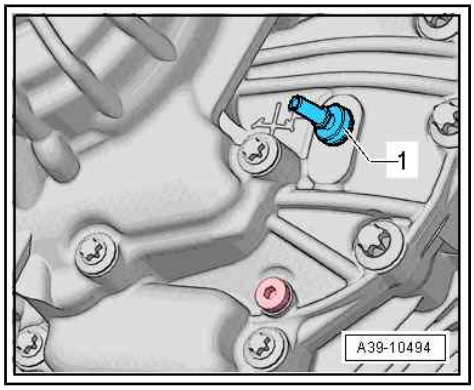

– Connect elbow joint -A- and adapter -B-, making sure they engage.
– Route hose above drive shaft (right-side).
• The hose must not hang down. It must emerge above rear wheel on right side of vehicle.
– Lower vehicle.

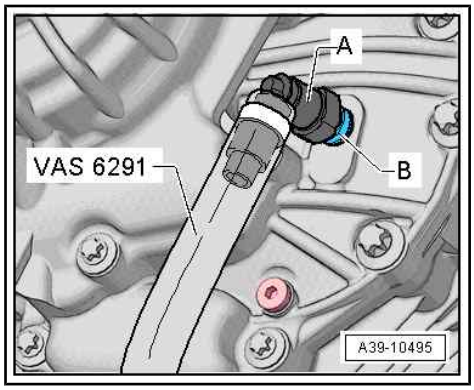

– Please make sure that valve -arrow- is closed.
– Screw oil container -A- onto charging device - VAS 6291- .
– Now open valve -arrow- and hold oil container as shown in illustration.

The rear final drive will now be filled.

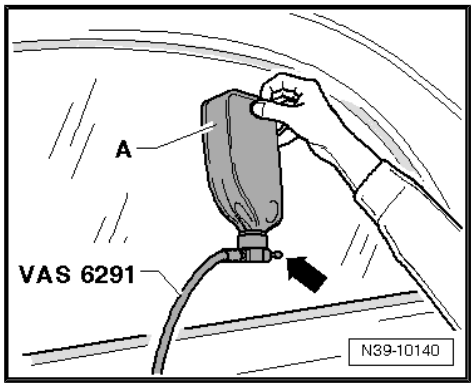

Protected by copyright. Copying for private or commercial purposes, in part or
permitted unless authorised by AUDI AG. AUDI AG does not guarantee or accep
with respect to the correctness of information in this document. Copyright by A

- The rear final drive is filled correctly when oil comes out between the adapter -B- and the rear final drive housing.

– Raise vehicle.

– When oil has started to emerge at adapter -B-, place oil reservoir e.g. onto a workshop trolley.

Part of the excess oil will now flow back into the oil reservoir.

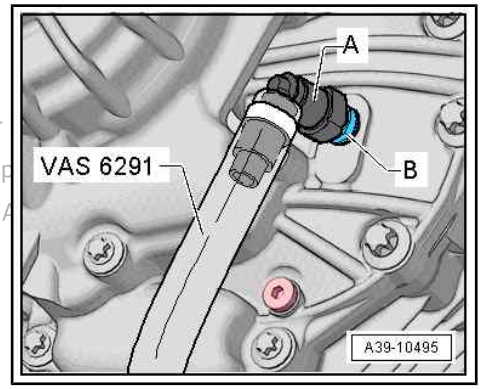

– Remove charging device - VAS 6291- as soon as oil stops flowing back into the reservoir.

- The oil level is correct when the rear final drive is filled to the bottom lip of the filler hole.

– Top up gear oil again if necessary.

– Screw in new plug -1- and tighten. Tightening torque
⇒ Item 23 (page 92)

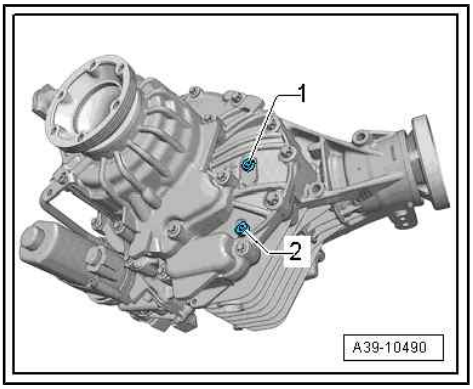

4.3.3 Filling up gear oil - 0BF

Special tools and workshop equipment required

- Charging device for Haldex coupling 2 - VAS 6291- or -VAS 6291A-

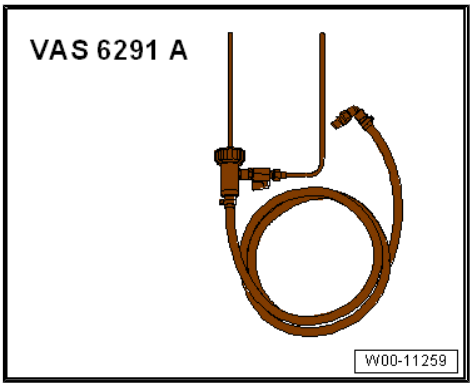

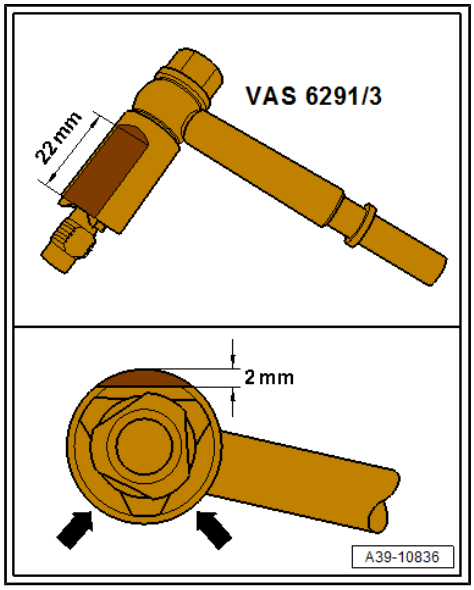

- Adapter for oil filling - VAS 6291/3- (rework if necessary ⇒ page 115)

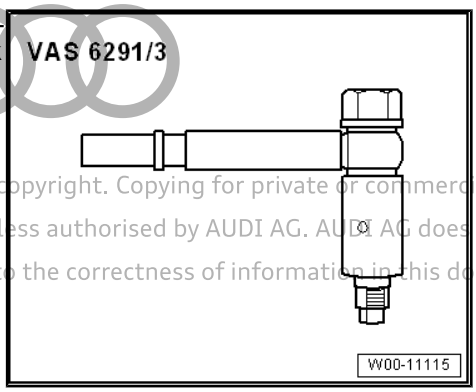

Protected by copyright. Copying for private or commercial purposes, in part or in whole, is not permitted unless authorised by AUDI AG. AUDI AG does not guarantee or accept any liability with respect to the correctness of information in this document. Copyright by AUDI AG.

- Used oil collection and extraction unit - VAS 6622A-

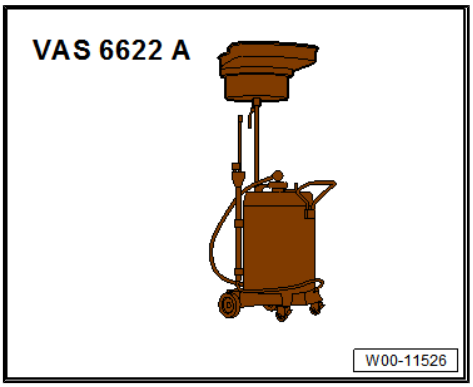

- If necessary, adapter - VAS 6262/6- or adapter - VAS 6262/7-

Depending on version, the spacer tube of the adapter for oil filling - VAS 6291/3- may make contact with a housing rib on the final drive.

– File down the spacer tube of the adapter opposite the two holes on the side -arrows-, as shown in illustration.

Filling up gear oil

- Rear final drive must be in installation position.
- Vehicle must be level (horizontal).
- Overview of plugs for gear oil ⇒ page 107
- Gear oil drain plug must be fitted and tightened. Tightening torque ⇒ Item 17 (page 92)
- For oil specification, refer to ⇒ Electronic parts catalogue .

The content is copyright. Copying for private or commercial purposes, in part or in whole, is not permitted unless authorised by AUDI AG. AUDI AG does not guarantee or accept any liability with respect to the correctness of information in this document. Copyright by AUDI AG.

– Raise vehicle.

– Remove gear oil inspection plug -arrow-.

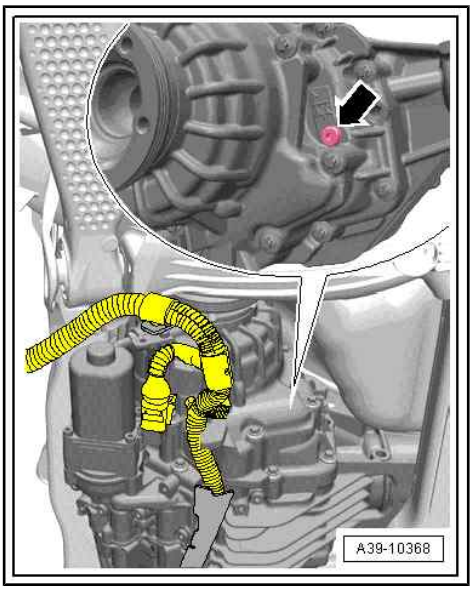

– Disconnect adapter -A- and elbow joint -B-.

– Screw adapter -A- in onto stop.

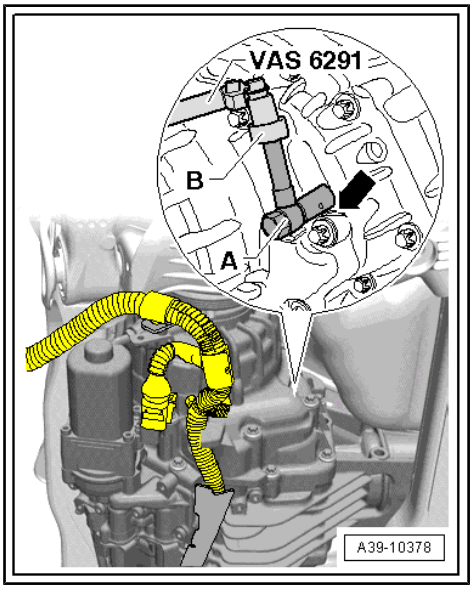

> **Caution**
>
> *Risk of damage to thread of oil filler hole.*
>
> - *Do not screw adapter -A- in at an angle.*
> - *The filed down side of adapter -A- must point towards housing rib -arrow-.*

– Connect elbow joint -B- and adapter -A-, making sure they engage.

– Route hose above drive shaft (right-side).

• The hose must not hang down. It must emerge above rear wheel on right side of vehicle.

– Lower vehicle.

– Please make sure that valve -arrow- is closed.

– Screw oil container -A- onto charging device - VAS 6291- .

– Now open valve -arrow- and hold oil container as shown in illustration.

The rear final drive will now be filled.

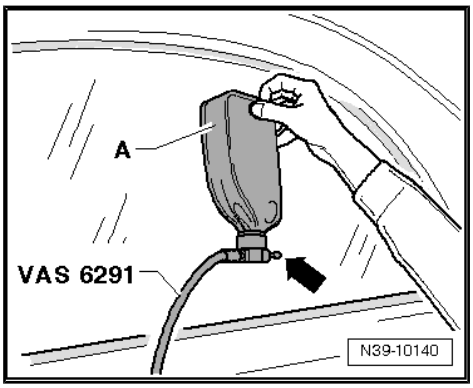

• The rear final drive is filled correctly when oil comes out between the adapter -A- and the rear final drive housing -arrow-.

– Raise vehicle.

– If oil has started to emerge at adapter -A-, place oil reservoir e.g. onto a workshop trolley.

Part of the excess oil will now flow back into the oil reservoir.

– Remove charging device - VAS 6291- as soon as oil stops flowing back into the reservoir.

• The oil level is correct when the rear final drive is filled to the bottom lip of the filler hole.

– Top up gear oil again if necessary.

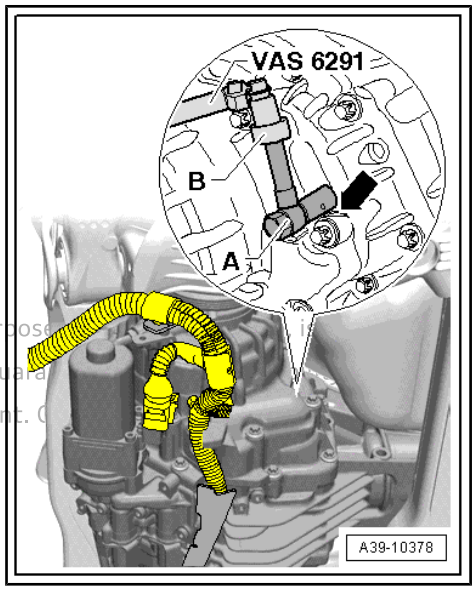

Protected by copyright. Copying for private or commercial purposes, in part or in whole, is not permitted unless authorised by AUDI AG. AUDI AG does not guarantee or assume any liability with respect to the correctness of information in this document. Copyright by AUDI AG.

– Screw in and tighten new gear oil inspection plug -arrow-.
  Tightening torque ⇒ Item 23 (page 92)

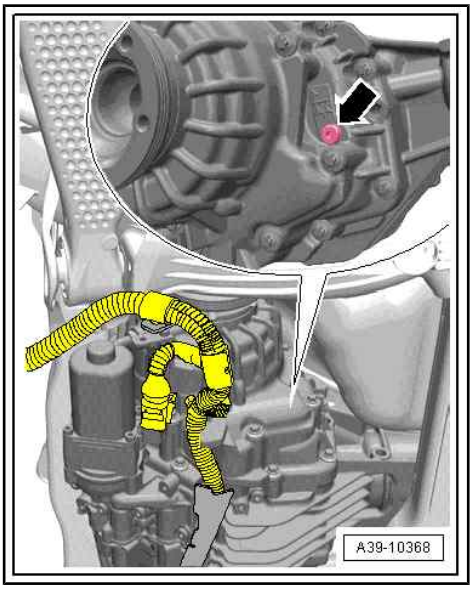

Protected by copyright. Copying for private or commercial purposes, in part or in whole, is not permitted unless authorised by AUDI AG. AUDI AG does not guarantee or accept any liability with respect to the correctness of information in this document. Copyright by AUDI AG.

5 ATF

⇒ “5.1 Overview of fitting locations - drain and inspection plugs”, page 118

⇒ “5.2 Checking ATF level”, page 118

⇒ “5.3 Draining and filling ATF”, page 119

5.1 Overview of fitting locations - drain and inspection plugs

⇒ “5.1.1 Overview of fitting locations - drain and inspection plugs, 0BE”, page 118

⇒ “5.1.2 Overview of fitting locations - drain and inspection plugs, 0BF”, page 118

5.1.1 Overview of fitting locations - drain and inspection plugs, 0BE

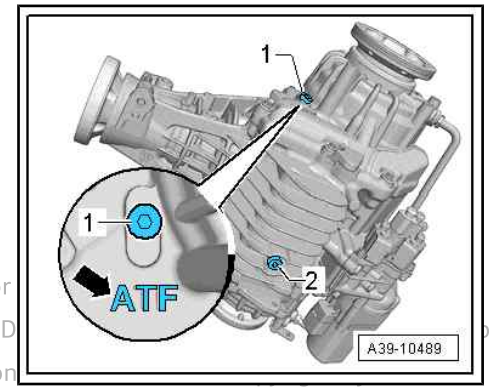

1 - ATF inspection plug

- Identification: »ATF« on final drive housing -arrow-
- Tightening torque ⇒ Item 13 (page 92)
- Always renew

2 - ATF drain plug

- Tightening torque ⇒ Item 16 (page 92)
- Always renew

Protected by copyright. Copying for private or is not permitted unless authorised by AUDI AG. AUD ility with respect to the correctness of information

5.1.2 Overview of fitting locations - drain and inspection plugs, 0BF

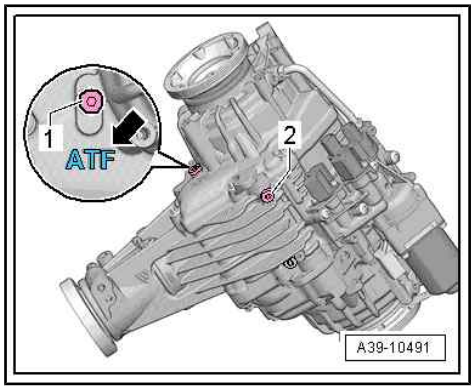

1 - ATF inspection plug

- Identification: »ATF« on housing -arrow-
- Tightening torque ⇒ Item 13 (page 92)
- Always renew

2 - ATF drain plug

- Tightening torque ⇒ Item 16 (page 92)
- Always renew

5.2 Checking ATF level

⇒ “5.2.1 Checking ATF level - 0BE, 0BF”, page 118

5.2.1 Checking ATF level - 0BE, 0BF

Test requirement

- ATF temperature 10°C ... 60°C
- Rear final drive must be in installation position.
- Vehicle must be level (horizontal).

Special tools and workshop equipment required

♦ Drip tray

– Unscrew ATF inspection plug -1- to check ATF level.

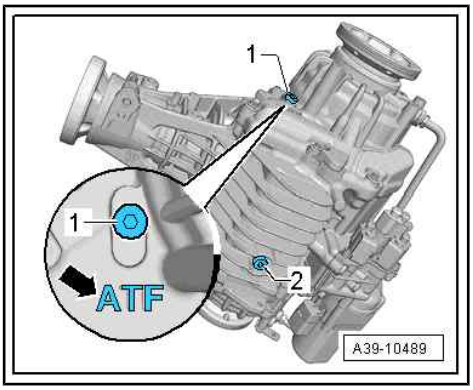

> ⚠ **Caution**
>
> ♦ *The inspection plug -1- for checking the ATF level is located on the left side of the rear final drive. Identification: »ATF« on final drive housing -arrow-.*
>
> ♦ *Overview of plugs for ATF ⇒ page 118*

- The ATF level is correct when the rear final drive is filled to the bottom lip of the filler hole.

If ATF level is correct:

– Screw in and tighten new ATF inspection plug. Tightening torque ⇒ Item 13 (page 92)

If ATF level is not correct:

– Top up with ATF ⇒ page 120 .

5.3 Draining and filling ATF

⇒ "5.3.1 Draining ATF - 0BE", page 119

⇒ "5.3.2 Draining ATF - 0BF", page 119

⇒ "5.3.3 Filling up ATF - 0BE, 0BF", page 120

5.3.1 Draining ATF - 0BE

Special tools and workshop equipment required

♦ Drip tray

- Overview of plugs for ATF ⇒ page 118

– Remove ATF inspection plug -1- so that ATF drains faster from drain hole.

– Remove ATF drain plug -2- and drain off ATF.

– Screw in and tighten new ATF drain plug -2-. Tightening torque ⇒ Item 16 (page 92)

– Fill up ATF in rear final drive ⇒ page 120 .

Protected by copyright. Copying for private or commercial purposes, in part or in whole, is not permitted unless authorised by AUDI AG. AUDI AG does not guarantee or assume any liability with respect to the correctness of information in this document. Copyright by AUDI AG.

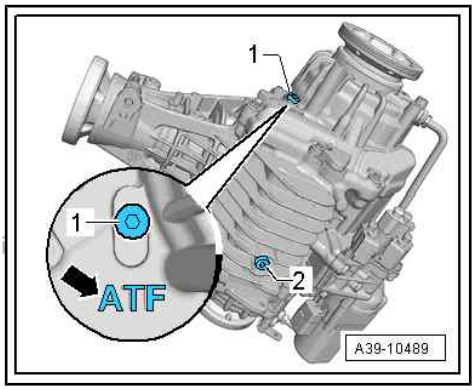

5.3.2 Draining ATF - 0BF

Special tools and workshop equipment required

♦ Drip tray

- Overview of plugs for ATF ⇒ page 118

– Remove ATF inspection plug -arrow- so that ATF drains from drain hole faster.

Protected by copyright. Copying for private or is not permitted unless authorised by AUDI AG. AUD ility with respect to the correctness of information

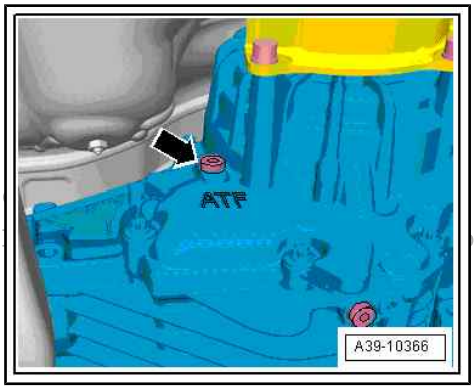

– Remove ATF drain plug -arrow- and drain off ATF.
– Screw in and tighten new ATF drain plug -arrow-. Tightening torque ⇒ Item 16 (page 92)
– Fill up ATF in rear final drive ⇒ page 120 .

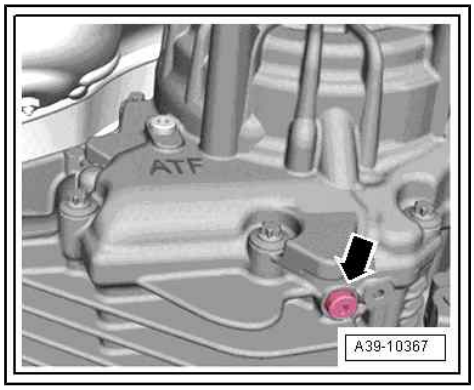

5.3.3 Filling up ATF - 0BE, 0BF

Special tools and workshop equipment required

- Vehicle diagnostic tester
- Charging device for Haldex coupling 2 - VAS 6291- or -VAS 6291A-

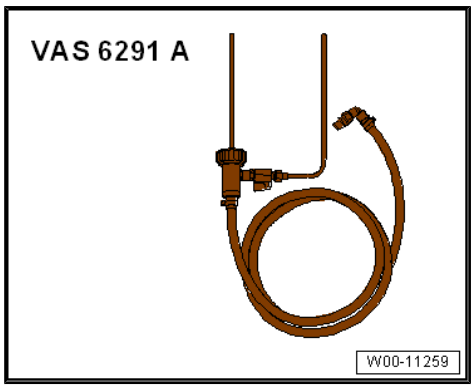

- Adapter for oil filling - VAS 6291/3-

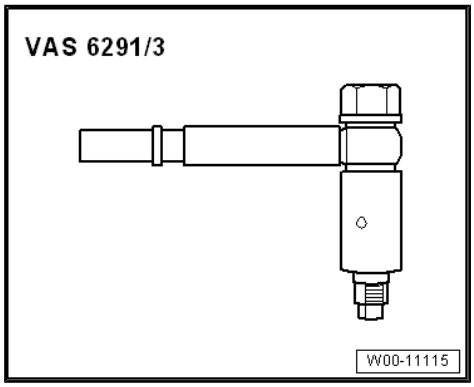

- If necessary, adapter - VAS 6262/6- or adapter - VAS 6262/7-

- Drip tray

Test conditions:

- Rear final drive must be in installation position.
- Vehicle must be level (horizontal).
- ATF drain plug must be inserted and tightened. Tightening torque ⇒ Item 16 (page 92)

Protected by copyright. Copying for private or commercial purposes, in part or in whole, is not permitted unless authorized by AUDI AG. AUDI AG does not guarantee or accept any liability with respect to the correctness and completeness of this document. Copyright by AUDI AG.

Caution

Risk of damage to rear final drive.

- *Use only the ATF available as a replacement part ⇒ Electronic parts catalogue .*
- *Other lubricants will cause malfunctions and/or failure of the final drive.*
- *Select correct type ⇒ Electronic parts catalogue .*
- *The ATF charging device must be clean and the ATF must not be mixed with other types of lubricant!*

– For topping up, use charging device - VAS 6291- .
– Raise vehicle.
– Unscrew ATF inspection plug -1-.

Caution

The inspection plug -1- for checking the ATF level is located on the left side of the rear final drive. Identification: »ATF« on final drive housing -arrow-.

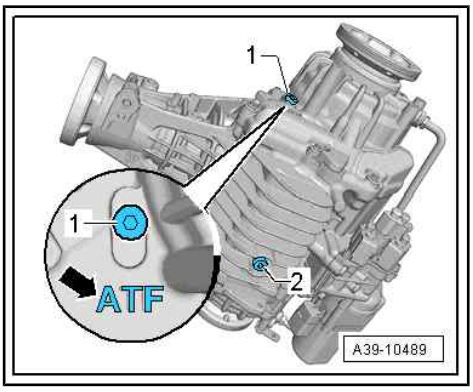

– Disconnect adapter -A- and elbow joint -B-.
– Screw adapter -A- in onto stop.
– Connect elbow joint -B- and adapter -A-, making sure they engage.
– Route hose above drive shaft (left-side).
• The hose must not hang down. It must emerge above rear wheel on left side of vehicle.
– Lower vehicle.

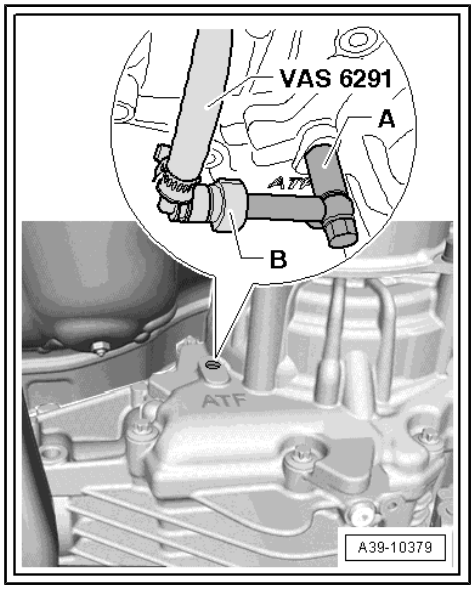

– Please make sure that valve -arrow- is closed.
– Screw oil container -A- onto charging device - VAS 6291- .
– Now open valve -arrow- and hold oil container as shown in illustration.

The hydraulic control unit and the superposition gears (left and right) in the rear final drive will now be filled.

Protected by copyright. Copying for private or commercial purposes, in part or in whole, is not permitted unless authorised by AUDI AG. AUDI AG does not guarantee or accept any liability with respect to the correctness of information in this document. Copyright by AUDI AG.

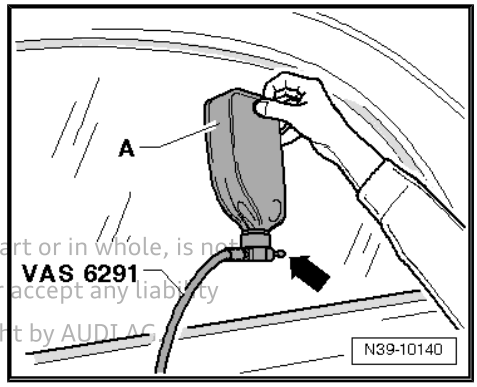

• The hydraulic control unit for the rear final drive is filled correctly when ATF starts to come out at adapter -A-.

If no ATF has emerged at adapter -A-:

– Continue with filling procedure until fluid level is correct.

If ATF has emerged at adapter -A-:

– Raise vehicle.
– Place reservoir e.g. onto a workshop trolley.

Part of the excess oil will now flow back into the oil reservoir.

– Remove charging device - VAS 6291- as soon as ATF stops flowing back into the reservoir.
• The oil level is correct when the rear final drive is filled to the bottom lip of the filler hole.

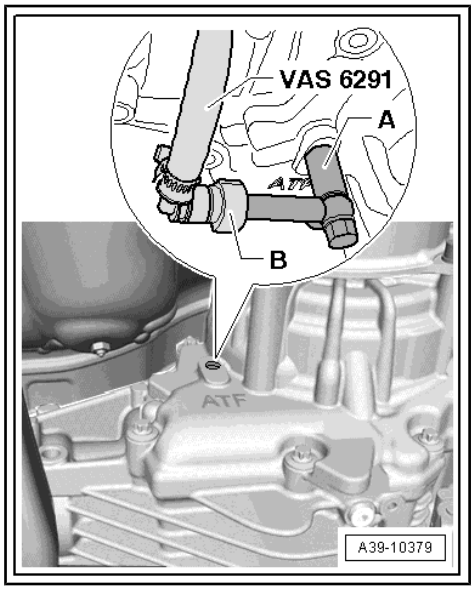

– Screw in ATF inspection plug -arrow- hand-tight.

– Connect vehicle diagnostic tester and switch on ignition.

– Using vehicle diagnostic tester in `Guided Functions` mode, select `22 - Four-wheel electronics` and then select the function `22 - Adding ATF`.

• It is important to follow all instructions given by the vehicle diagnostic tester exactly.

Use vehicle diagnostic tester to fill and vent air from the system.

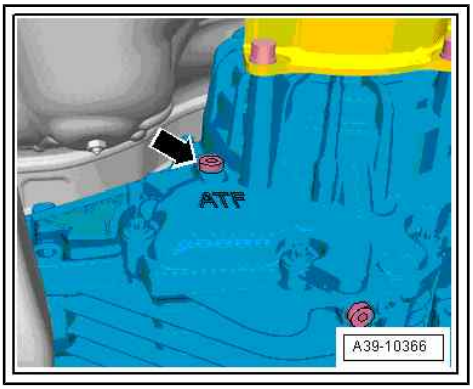

Note

If the system detects that there is still air in the system after the function `22 - Adding ATF` has been performed, the filling process must be repeated.

– Unscrew ATF inspection plug -arrow- once again.

Test condition:

• The ATF level is correct when the rear final drive is filled to the bottom lip of the filler hole -arrow-.

• Top up ATF if necessary.

• No entries (either static or sporadic) stored in event memory ⇒ Vehicle diagnostic tester.

– Screw in and tighten new ATF inspection plug -arrow-. Tightening torque ⇒ Item 13 (page 92)

Protected by copyright. Copying for private or commercial purposes, in part or in whole, is not permitted unless authorised by AUDI AG. AUDI AG does not guarantee or accept any liability with respect to the correctness of information in this document. Copyright by AUDI AG.

6 Oil seals

⇒ “6.1 Overview of fitting locations - oil seals”, page 124

⇒ “6.2 Renewing oil seal (left-side)”, page 125

⇒ “6.3 Renewing oil seal (right-side)”, page 132

⇒ “6.5 Renewing protective ring on flange shaft”, page 156

⇒ “6.6 Renewing protective ring on input shaft flange”, page 163

6.1 Overview of fitting locations - oil seals

⇒ “6.1.1 Overview of fitting locations - oil seals, 0BC, 0BD”, page 124

⇒ “6.1.2 Overview of fitting locations - oil seals, 0BE, 0BF”, page 125

6.1.1 Overview of fitting locations - oil seals, 0BC, 0BD

1 - Protective ring (right-side)
- ❑ Renewing ⇒ page 156

2 - Oil seal (right-side)
- ❑ Renewing ⇒ page 132

3 - Oil seal (left-side)
- ❑ Renewing ⇒ page 125

4 - Protective ring (left-side)
- ❑ Renewing ⇒ page 156

5 - Input shaft oil seal
- ❑ Renewing ⇒ page 132

6 - Protective ring on input shaft
- ❑ Renewing ⇒ page 163

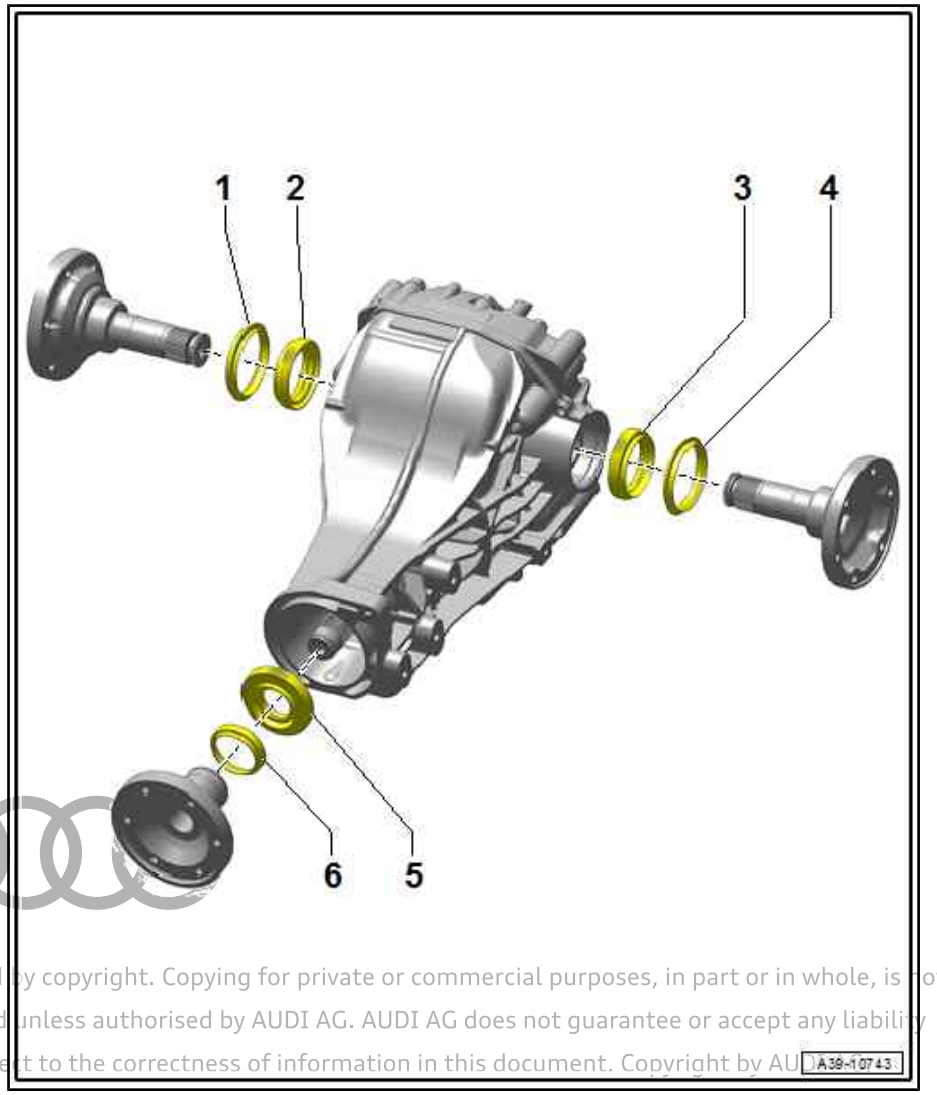

Protected by copyright. Copying for private or commercial purposes, in part or in whole, is not permitted unless authorised by AUDI AG. AUDI AG does not guarantee or accept any liability with respect to the correctness of information in this document. Copyright by AUDI AG.

6.1.2 Overview of fitting locations - oil seals, 0BE, 0BF

1 - Protective ring (right-side)
- ❑ Renewing ⇒ page 160

2 - Oil seal (right-side)
- ❑ Renewing ⇒ page 132

3 - Oil seal (left-side)
- ❑ Renewing ⇒ page 130

4 - Protective ring (left-side)
- ❑ Renewing ⇒ page 160

5 - Input shaft oil seal
- ❑ Renewing ⇒ page 132

6 - Protective ring on input shaft
- ❑ Renewing ⇒ page 166

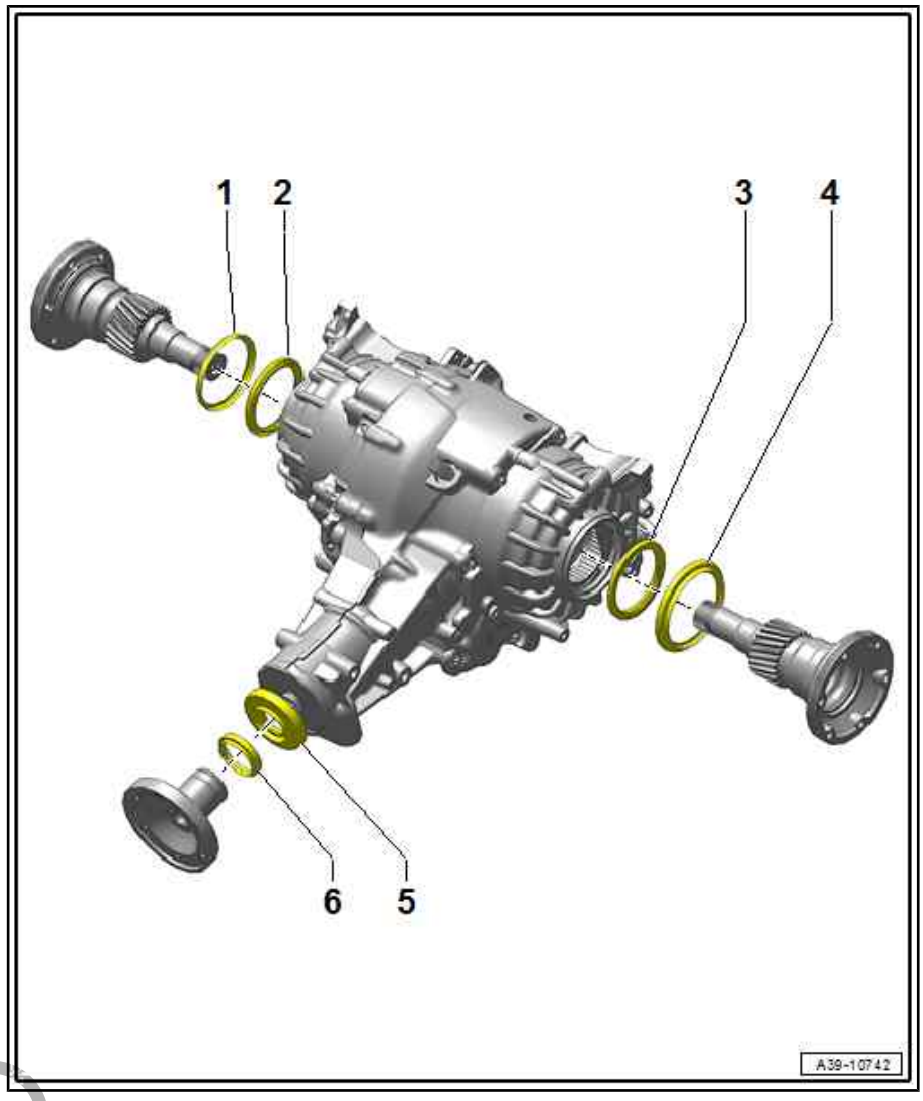

6.2 Renewing oil seal (left-side)

⇒ "6.2.1 Renewing oil seal (left-side) - 0BC", page 125
⇒ "6.2.2 Renewing oil seal (left-side) - 0BD", page 128
⇒ "6.2.3 Renewing oil seal (left-side) - 0BE, 0BF", page 130

Protected by copyright. Copying for private or commercial purposes, in part or in whole, is not permitted unless authorised by AUDI AG. AUDI AG does not guarantee or accept any liability with respect to the correctness of information in this document. Copyright by AUDI AG.

6.2.1 Renewing oil seal (left-side) - 0BC

- This chapter also contains "Renewing oil seal (right-side)".
- The oil seals can only be renewed with the final drive removed.

Special tools and workshop equipment required

♦ Puller - T10037-

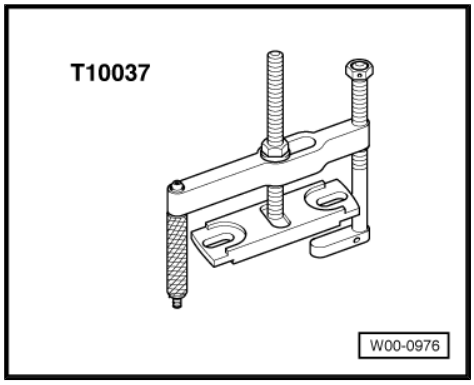

♦ Drift - VW 295-

Protected by copyright. Copying for private or commercial purposes, in part or in whole, is not permitted unless authorised by AUDI AG. AUDI AG does not guarantee or accept any liability with respect to the correctness of information in this document. Copyright by AUDI AG.

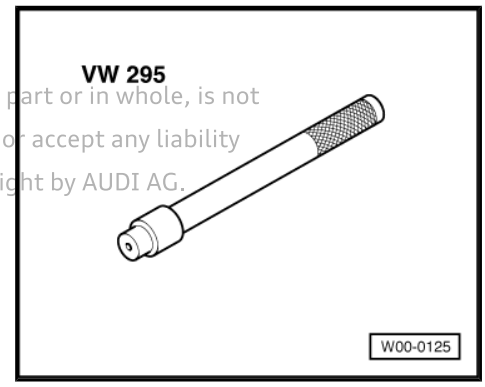

♦ Thrust piece - T40108-

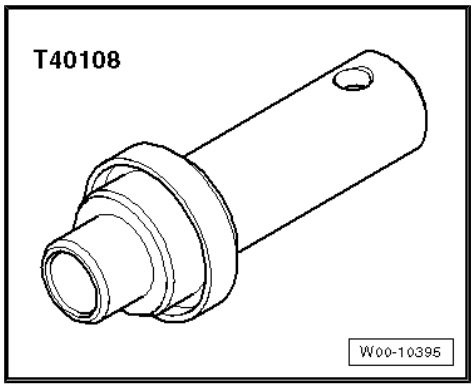

♦ Sealing grease - G 052 128 A1-

Removing

– Observe the general repair instructions ⇒ page 14 .

– Remove rear final drive ⇒ page 48 .

Removing flange shaft (right-side)

– Secure puller - T10037- to housing -arrow- and pull out flange shaft.

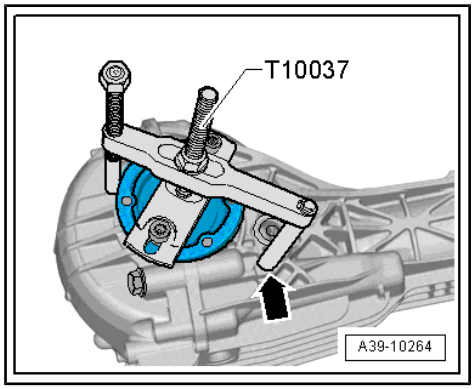

Removing flange shaft (left-side)

– Secure puller - T10037- to housing -arrow- and pull out flange shaft.

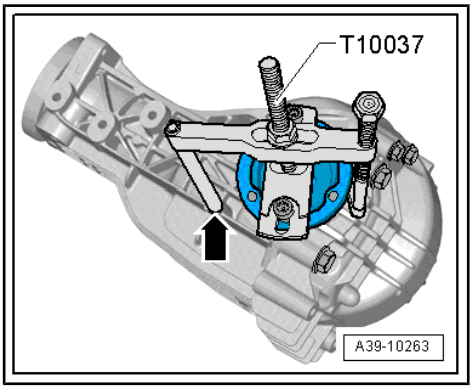

– Pry out oil seal with a suitable assembly lever.

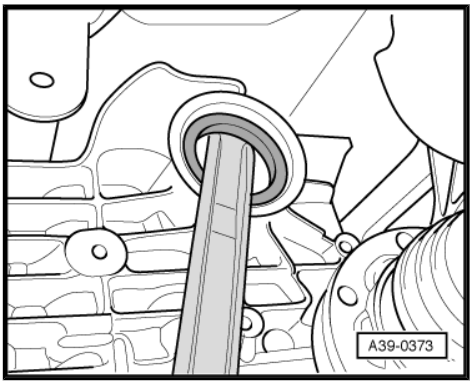

Installing

Installation is carried out in reverse sequence. Note the following:

Installing oil seal (right-side)

– Lightly lubricate outer circumference of oil seal with gear oil.

– Pack space between sealing lip and dust lip half-full with sealing grease - G 052 128 A1- .

– Drive in new oil seal onto stop (take care to keep oil seal straight).

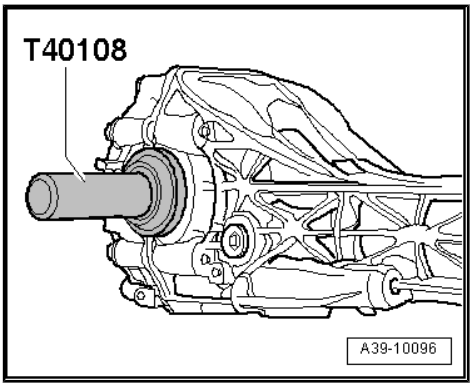

Installing oil seal (left-side)

– Lightly lubricate outer circumference of oil seal with gear oil.

– Pack space between sealing lip and dust lip half-full with sealing grease - G 052 128 A1- .

– Drive in new oil seal onto stop (take care to keep oil seal straight).

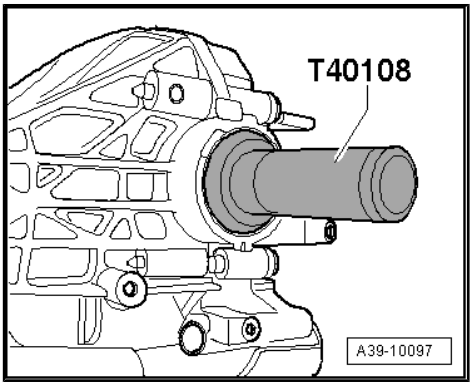

Protected by copyright. Copying for private or commercial purposes, in part or in whole, is not permitted unless authorised by AUDI AG. AUDI AG does not guarantee or accept any liability with respect to the correctness of information in this document. Copyright by AUDI AG.

Protected by copyright. Copying for private or commercial purposes, in part or in whole, is not permitted unless authorised by AUDI AG. AUDI AG does not guarantee or accept any liability with respect to the correctness of information in this document. Copyright by AUDI AG.

Installing flange shaft (right and left)

– Drive in flange shaft with drift - VW 295- .
– Install rear final drive ⇒ page 48 .
– Check oil level in rear final drive ⇒ page 107 .

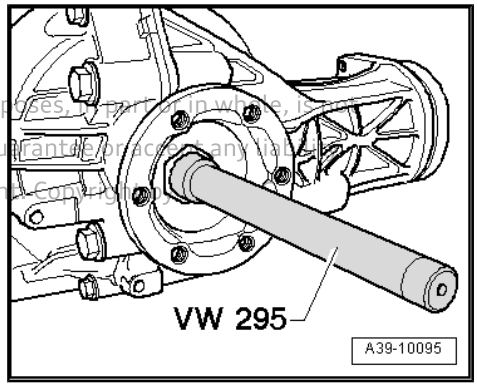

6.2.2 Renewing oil seal (left-side) - 0BD

- This chapter also contains “Renewing oil seal (right-side)”.
- The oil seals can only be renewed with the final drive removed.

Special tools and workshop equipment required

♦ Drift - VW 295-

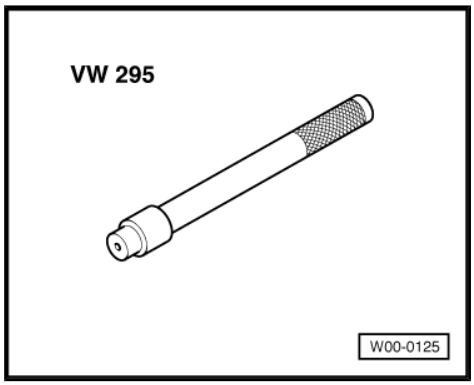

♦ Puller - T10037-

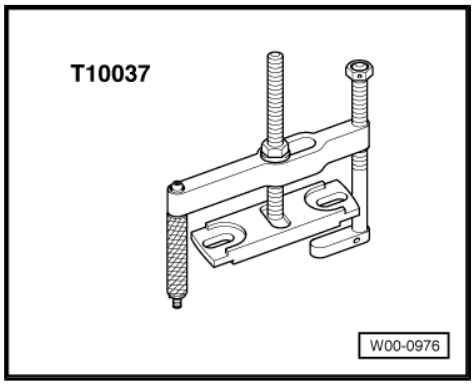

♦ Thrust piece - T40110-

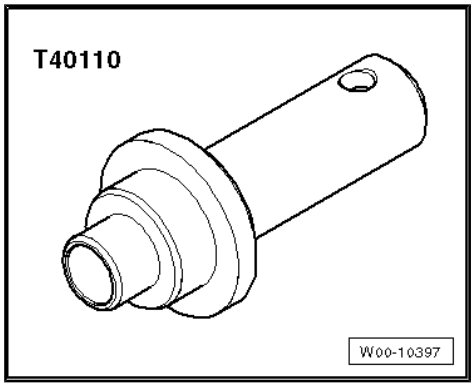

Protected by copyright. Copying for private or commercial purposes, in part or in whole, is not permitted unless authorised by AUDI AG. AUDI AG does not guarantee or accept any liability with respect to the correctness of information in this document. Copyright by AUDI AG.

♦ Thrust piece - T40111-

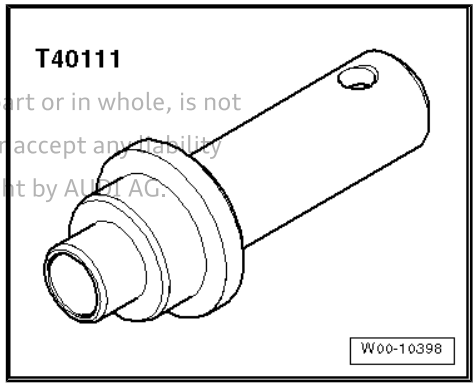

♦ Sealing grease - G 052 128 A1-

– Observe the general repair instructions ⇒ page 14 .

– Remove rear final drive ⇒ page 48 .

Removing flange shaft (left-side)

– Secure puller - T10037- to housing -arrow- and pull out flange shaft.

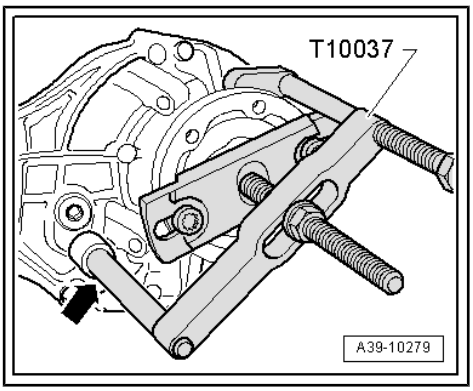

Removing flange shaft (right-side)

– Secure puller - T10037- to housing -arrow- and pull out flange shaft.

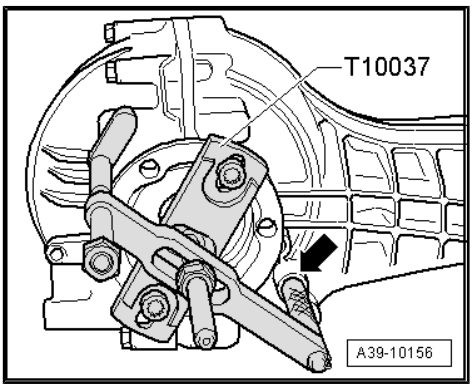

– Pry out oil seal with a suitable assembly lever.

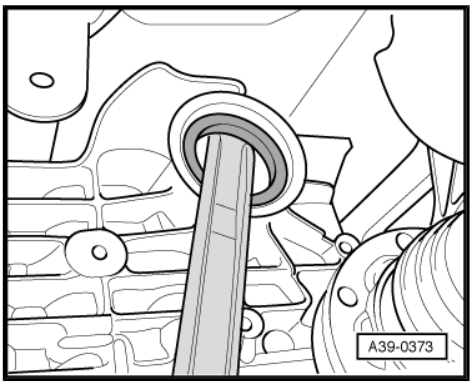

Installing oil seal (left-side)

– Lightly lubricate outer circumference of oil seal with gear oil.

– Pack space between sealing lip and dust lip half-full with sealing grease - G 052 128 A1- .

– Drive in new oil seal onto stop (take care to keep oil seal straight).

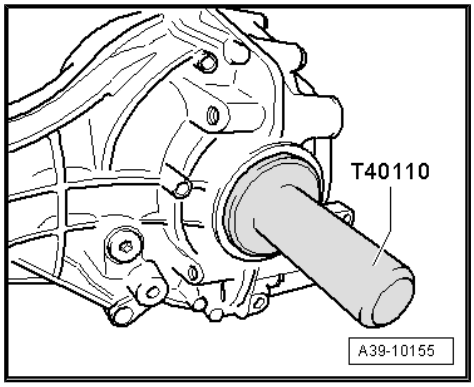

Installing oil seal (right-side)

– Lightly lubricate outer circumference of oil seal with gear oil.

– Pack space between sealing lip and dust lip half-full with sealing grease - G 052 128 A1- .

– Drive in new oil seal onto stop (take care to keep oil seal straight).

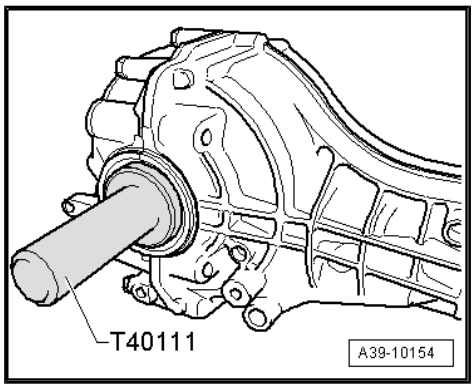

Before installing flange shaft, check protective ring for damage. Renew protective ring if necessary ⇒ page 158 **.**

– Remove old circlip -A- from groove in flange shaft using pliers .

B - Protective jaw covers

– Insert new circlip in groove in flange shaft, taking care not to overstretch circlip.

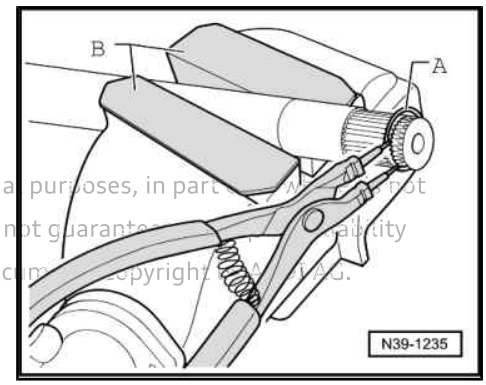

Protected by copyright. Copying for private or commercial purposes, in part or in whole, is not permitted unless authorised by AUDI AG. AUDI AG does not guarantee or assume liability with respect to the correctness of information in this document. Copyright by AUDI AG.

Installing flange shaft (right and left)

– Drive in flange shaft with drift - VW 295- .

– Install rear final drive ⇒ page 48 .

– Check oil level in rear final drive ⇒ page 108 .

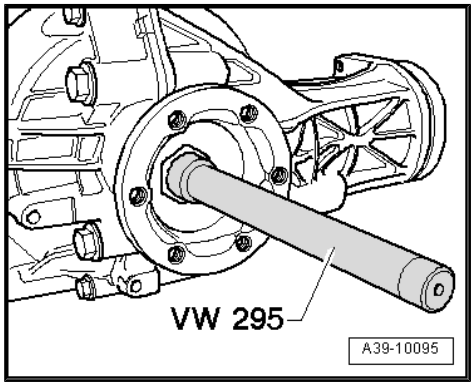

6.2.3 Renewing oil seal (left-side) - 0BE, 0BF

- This chapter also contains “Renewing oil seal (right-side)”.
- The oil seals can only be renewed with the final drive removed.

Special tools and workshop equipment required

- Multi-purpose tool - VW 771-

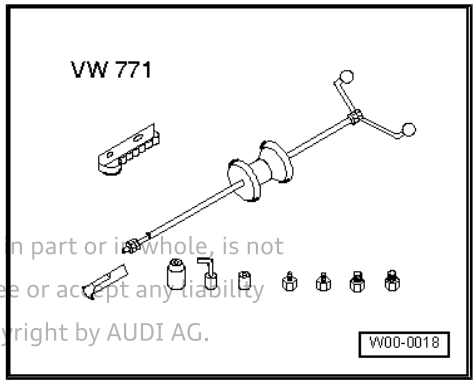

Protected by copyright. Copying for private or commercial purposes, in part or in whole, is not permitted unless authorised by AUDI AG. AUDI AG does not guarantee or accept any liability with respect to the correctness of information in this document. Copyright by AUDI AG.

- Thrust piece - T40221-
- ATF

Removing

– Observe the general repair instructions ⇒ page 14 .

– Remove rear final drive ⇒ page 48 .

– Remove flange shaft securing bolt. To do this, screw two bolts into flange and counterhold flange shaft with tyre iron or other suitable lever.

– Pull out flange shaft.

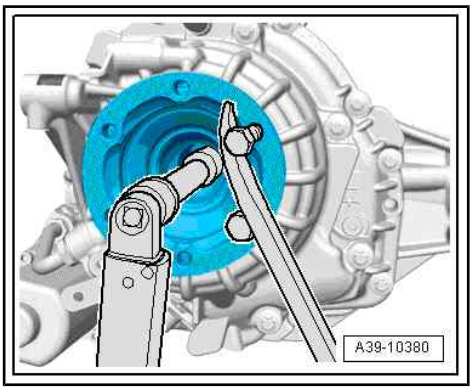

Note

If flange shaft cannot be pulled out by hand, use multi-purpose tool -VW 771-.

– Pull out flange shaft oil seal using -VW 771- and -VW 771/37- .

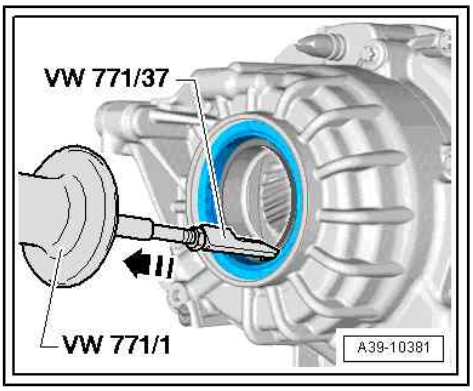

Installing

Installation is carried out in reverse sequence. Note the following:

Installing oil seal (right-side)

– Coat outer circumference and sealing lips of oil seal with ATF.

– Drive in new oil seal onto stop (take care to keep seal straight).

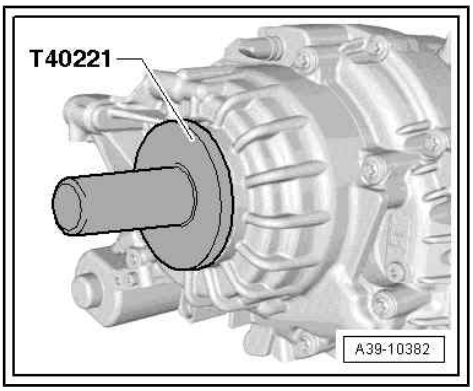

Installing oil seal (left-side)

– Coat outer circumference and sealing lips of oil seal with ATF.
– Drive in new oil seal onto stop (take care to keep seal straight).
– Install flange shaft.

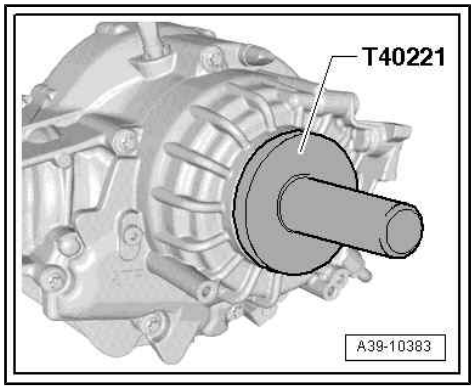

Note

If flange shaft cannot be inserted as far as stop by hand, knock it in using a plastic hammer.

– Tighten new bolt securing flange shaft to specified torque ⇒ Item 1 (page 91) .
– Install rear final drive ⇒ page 48 .
– Check ATF level in rear final drive ⇒ page 118 .

6.3 Renewing oil seal (right-side)

Note

Protected by copyright. Copying for private or commercial purposes, in part or in whole, is not permitted unless authorised by AUDI AG. AUDI AG does not guarantee or accept any liability with respect to the correctness of information in this document. Copyright by AUDI AG.

The procedure for renewing the oil seal (right-side) is described in the chapter "Renewing oil seal (left-side)".

⇒ "6.2.1 Renewing oil seal (left-side) - 0BC", page 125
⇒ "6.2.2 Renewing oil seal (left-side) - 0BD", page 128
⇒ "6.2.3 Renewing oil seal (left-side) - 0BE, 0BF", page 130

6.4 Renewing input shaft oil seal

⇒ "6.4.1 Renewing input shaft oil seal - 0BC", page 132
⇒ "6.4.2 Renewing input shaft oil seal - 0BD", page 139
⇒ "6.4.3 Renewing input shaft oil seal - 0BE", page 144
⇒ "6.4.4 Renewing input shaft oil seal - 0BF", page 149

6.4.1 Renewing input shaft oil seal - 0BC

Special tools and workshop equipment required

♦ Drive flange installing tool - VW 391-

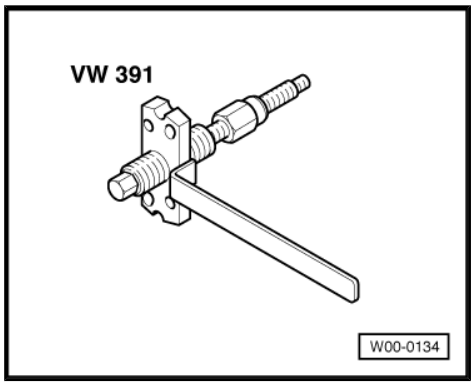

- Adapter - VW 771/40- from multi-purpose tool set - VW 771-

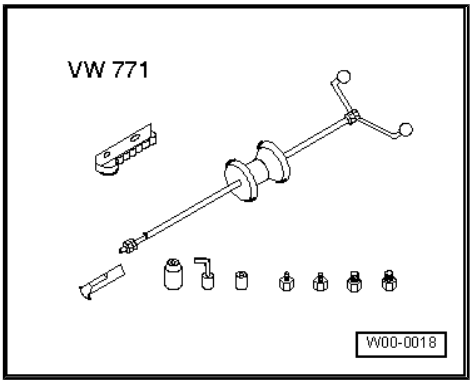

- Counterhold tool - 3028-

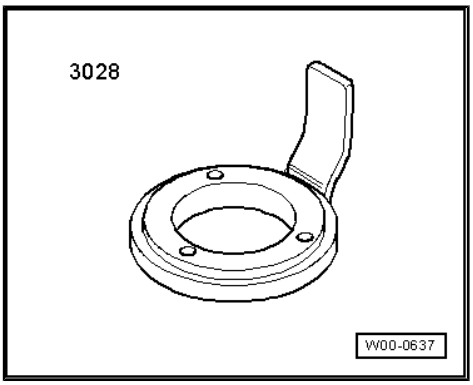

- Puller - T10055-

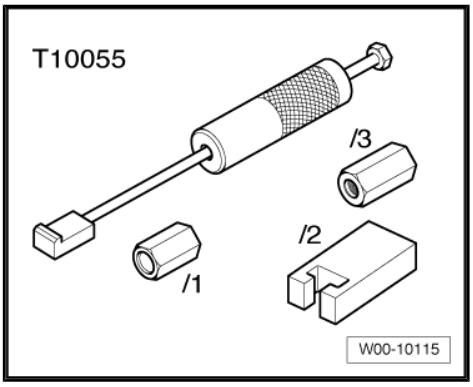

- -2- Adapter - T10055/2-
- Thrust piece - T40109-

Protected by copyright. Copying for private or commercial purposes, in part or in whole, is not permitted unless authorised by AUDI AG. AUDI AG does not guarantee or accept any liability with respect to the correctness of information in this document. Copyright by AUDI AG.

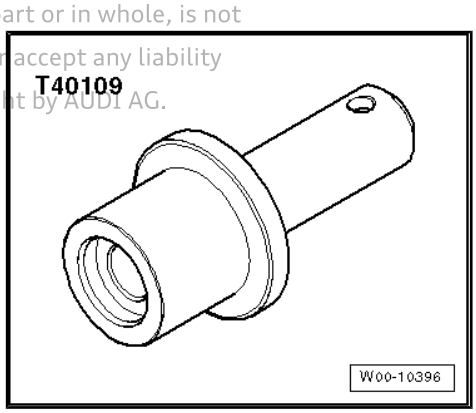

♦ Assembly sleeve - T40222/1-

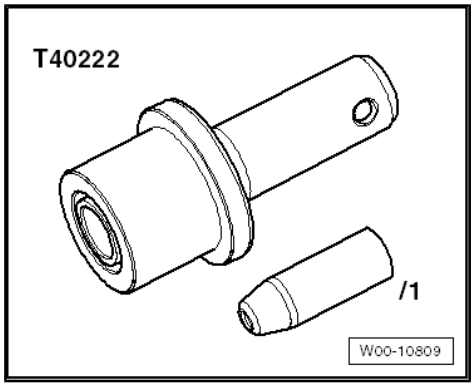

♦ Sealing grease - G 052 128 A1-

♦ Bolts (2x) M 8 x 30

♦ Bolts (1x) M 8 x 45

Removing

- Rear final drive installed
- Refer to general repair instructions ⇒ page 14 .

– Disconnect exhaust system at clamps -1- and -2-.

– Remove rear section of exhaust system ⇒ Rep. gr. 26 ; Exhaust pipes/silencers; Exploded view - silencers .

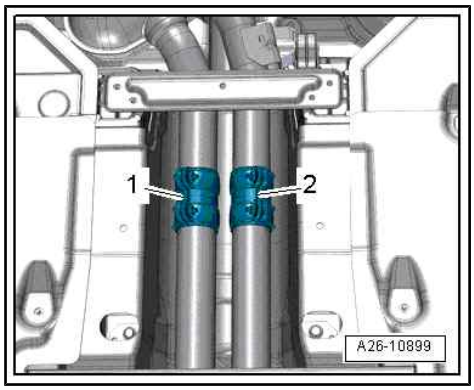

Note

A second mechanic is required for removing the rear section of the exhaust system.

– Unscrew gear oil drain plug -arrow- and drain off approx. 250 ml of gear oil.

– Screw in and tighten drain plug -arrow-.

- Tightening torque: 30 Nm

This page is copyright. Copying for private or commercial purposes is permitted unless authorised by AUDI AG. AUDI AG does not guarantee the correctness of information in this document.

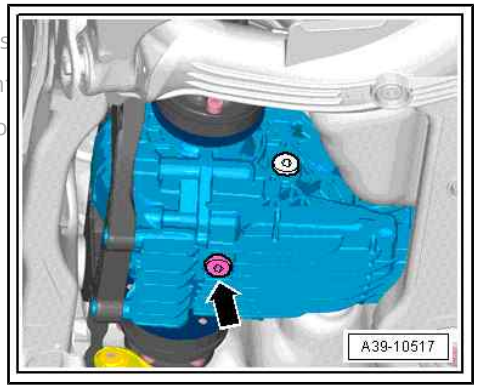

– Detach propshaft from rear final drive ⇒ page 37 .

Audi A8

– Guide propshaft downwards between fuel tank and rear subframe and tie up on one side.

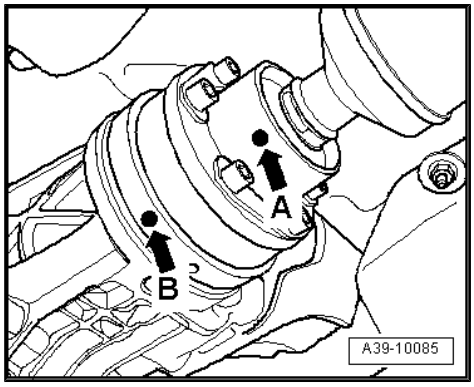

Audi A4, A5 Coupé/Sportback/Cabriolet, Q5

– If fitted, remove front cross member -2-.

– Remove rear cross member -3- and heat shield -1-.

Protected by copyright. Copying for private or commercial purpos
permitted unless authorised by AUDI AG. AUDI AG does not guara
with respect to the correctness of information in this document. C

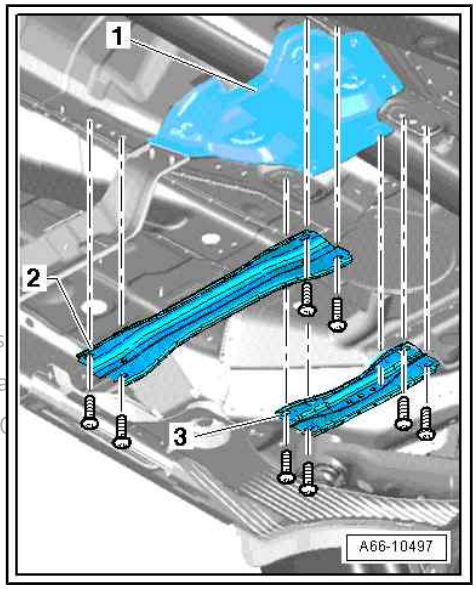

Audi A6 and A7

– Remove cross-piece -2- ⇒ General body repairs, exterior; Rep. gr. 66 ; Underbody trim; Exploded view - underbody trim .

Continued for all vehicles (except Audi A8)

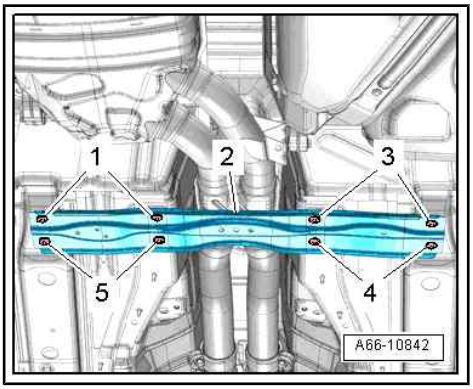

– Remove bolts -arrows- securing centre propshaft bearing.

– Lower propshaft at centre bearing.

– When doing so, guide propshaft downwards between fuel tank and rear subframe.

– Fit bolts -arrows- for centre bearing and hand-tighten.

– Tie propshaft to one side.

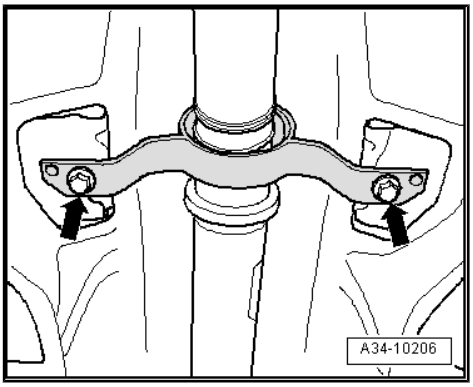

All vehicles (continued)

– Remove high-temperature grease in propshaft flange on rear final drive.

– Remove circlip -arrow-.

> ⚠ **Caution**
>
> *Renew circlip with new circlip of same thickness if overstretched or damaged during removal. For correct version, refer to ⇒ Electronic parts catalogue .*

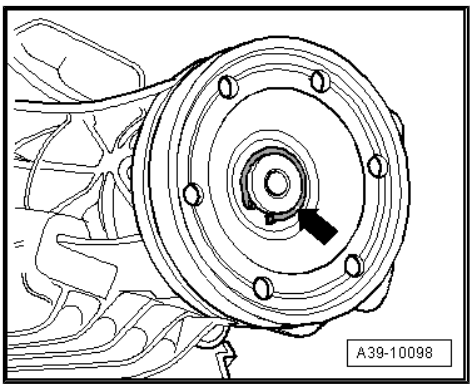

– Mark position of flange -B- for propshaft relative to pinion shaft -A- -arrow-.

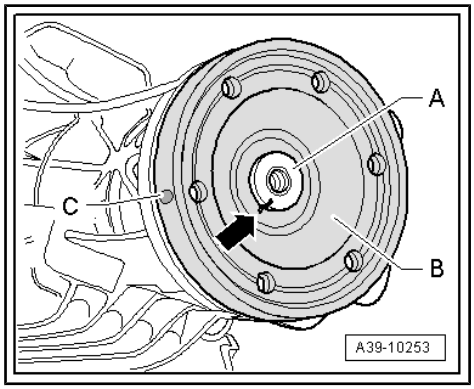

Note

- *This marking -arrow- is necessary in order to maintain the original position of the coloured dot -C- on the outside of the flange.*
- *This is the only effective way to minimise the imbalance in the rear final drive.*

– Screw 2 bolts M 8 x 30 -arrow- into flange.

– Pull off propshaft flange using drive flange installing tool - VW 391- .

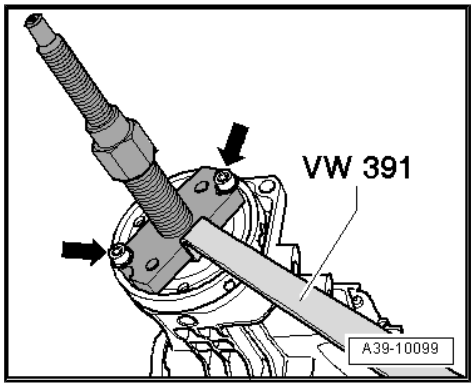

– Lay absorbent cloth -A- on subframe under final drive.

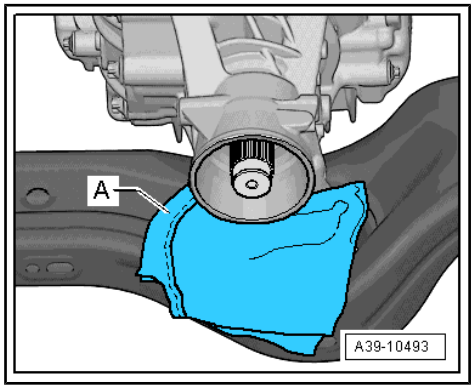

– Pierce metal ring of oil seal -A- in direction of -arrow - using e.g. a scriber -B-.

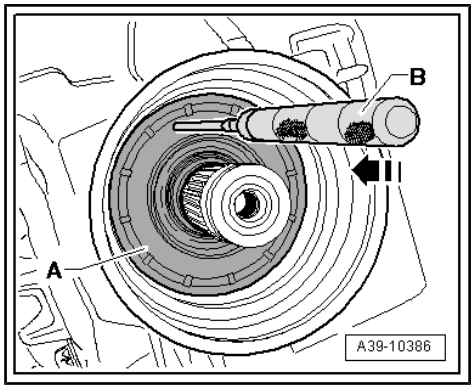

Protected by copyright. Copying for private or commercial purposes, in part or in whole, is not permitted unless authorised by AUDI AG. AUDI AG does not guarantee or accept any liability with respect to the correctness of information in this document. Copyright by AUDI AG.

– Then screw a self-tapping screw -arrow- into this hole in oil seal -A-.

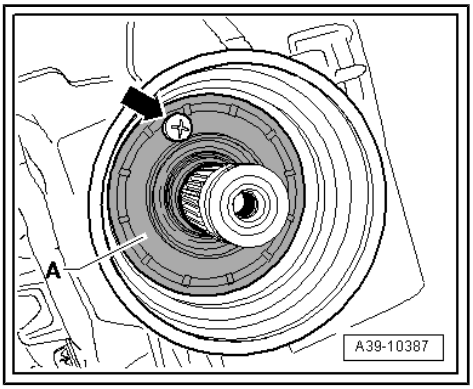

– Pull out oil seal -A- for propshaft flange in direction of -arrow-.

-B- Self-tapping screw

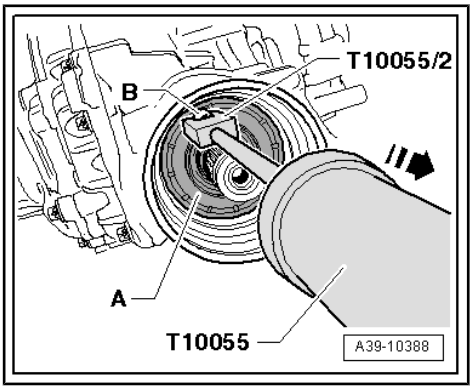

Installing

Installation is carried out in reverse sequence. Note the following:

– Pack space between sealing lip and dust lip half-full with sealing grease - G 052 128 A1- .

– Fit new oil seal -A- on assembly sleeve - T40222/1- .

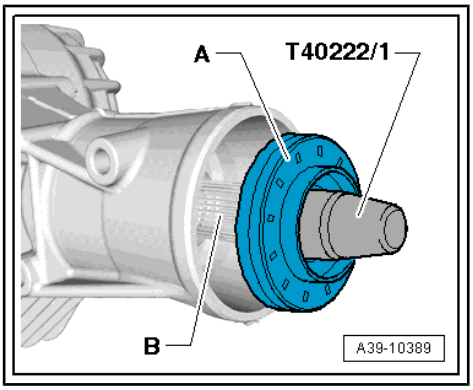

Note

Check that spring of oil seal behind sealing lip is in installation position.

– Lightly lubricate outer circumference of oil seal with gear oil.

– Fit assembly sleeve - T40222/1- onto pinion shaft -B- together with oil seal -A-.

– Push oil seal -A- in as far as it will go.

– Remove assembly sleeve - T40222/1- .

– Drive in new oil seal onto stop (take care to keep oil seal straight).

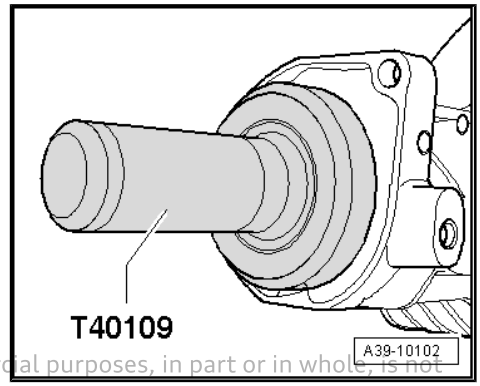

Protected by copyright. Copying for private or commercial purposes, in part or in whole, is not permitted unless authorised by AUDI AG. AUDI AG does not guarantee or accept any liability with respect to the correctness of information in this document. Copyright by AUDI AG.

– Position propshaft flange -B- on pinion shaft -A- so that markings -arrow- are in line.

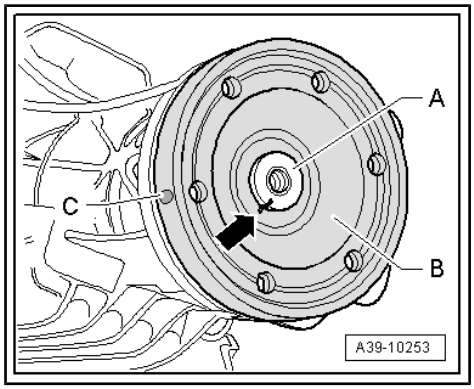

– Screw adapter - VW 771/40- into threaded hole in pinion shaft.
– Attach counterhold tool - 3028- to propshaft flange with bolts (M 8 x 30) -arrows A-.
– Secure installing tool - VW 391- with bolt (M 8 x 45) -arrow B-. At the same time, screw spindle of installing tool into adapter - VW 771/40- .
– Pull in propshaft flange as far as stop (counterhold spindle of installing tool with spanner).

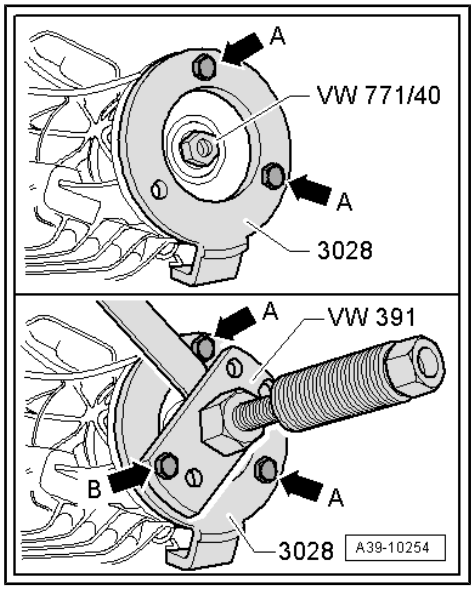

Install circlip -1- as follows:

- Chamfer on inner diameter of circlip -arrow A- must face outwards towards propshaft.
- If provided, the wider lug on the circlip -arrow B- must be on the right side, as shown in the illustration.

When renewing flange for propshaft, please note:

- The thickness of the circlip -1- must be re-determined.
- To do so, determine the thickest circlip -1- that will just fit in the groove and install it. For part number refer to ⇒ Electronic parts catalogue .

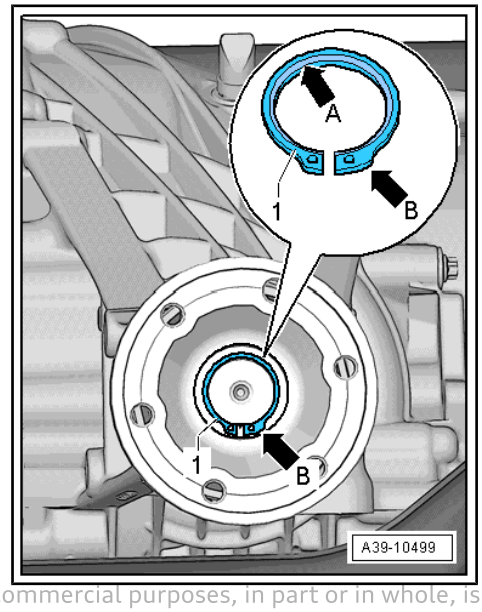

Protected by copyright. Copying for private or commercial purposes, in part or in whole, is not permitted unless authorised by AUDI AG. AUDI AG does not guarantee or accept any liability with respect to the correctness of information in this document. Copyright by AUDI AG.

– Attach propshaft to rear final drive ⇒ page 38 .

Audi A4, A5 Coupé/Sportback/Cabriolet, Q5, A6, A7

– Secure centre propshaft bearing to body so it is free of stress. Tightening torque ⇒ Item 9 (page 20)

– Install heat shield and cross member ⇒ General body repairs, exterior; Rep. gr. 66 ; Underbody trim; Exploded view - underbody trim .

All vehicles (continued)

– Check oil level in rear final drive ⇒ page 107 .

– Install rear section of exhaust system ⇒ Rep. gr. 26 ; Exhaust pipes/silencers; Exploded view - silencers .

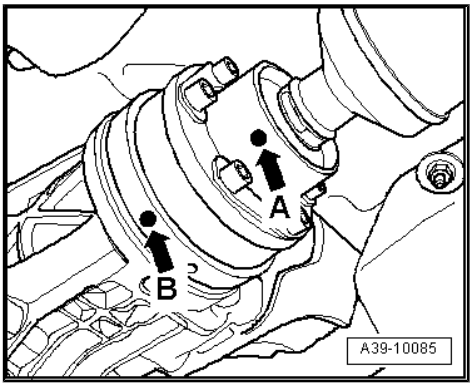

6.4.2 Renewing input shaft oil seal - 0BD

- Original flange for propshaft must be re-installed.
- If flange for propshaft also has to be renewed, please use the following description: ⇒ page 158 .

Special tools and workshop equipment required

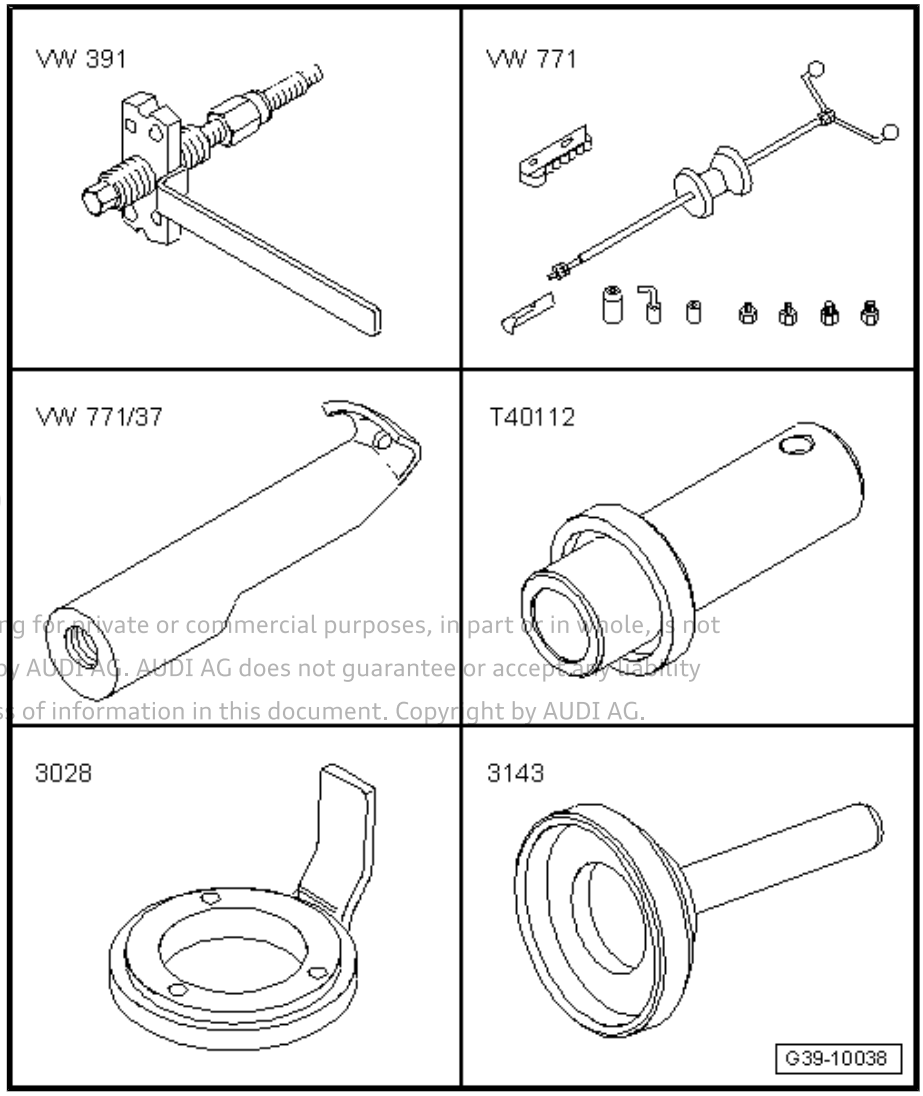

Protected by copyright. Copying for private or commercial purposes, in part or in whole, is not permitted unless authorised by AUDI AG. AUDI AG does not guarantee or accept any liability with respect to the correctness of information in this document. Copyright by AUDI AG.

- Drive flange installing tool - VW 391-
- Multi-purpose tool - VW 771-

- Extractor tool - VW 771/37-
- Thrust piece - T40112-
- Counterhold tool - 3028-
- Drift sleeve - 3143-
- Adapters - T10235-

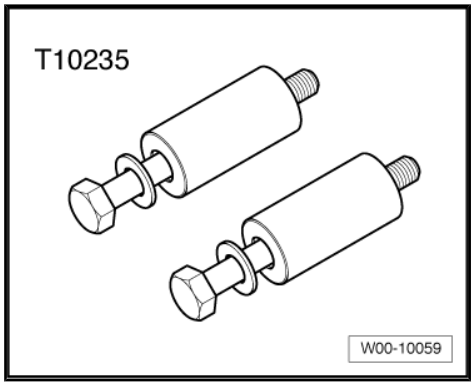

- Friction gauge - VAS 6222-

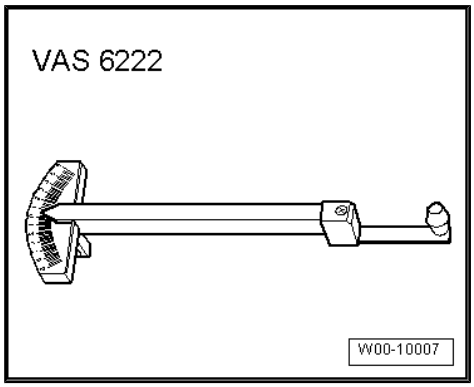

- Inductive heater - VAS 6414-
- Sealing grease - G 052 128 A1-
- Locking fluid - AMV 185 101 A1-
- 3 bolts (M8 x 25)
- 2 bolts (M10 x 40)

Protected by copyright. Copying for private or commercial purposes, in part or in whole, is not permitted unless authorised by AUDI AG. AUDI AG does not guarantee or accept any liability with respect to the correctness of information in this document. Copyright by AUDI AG.

Removing

- The oil seal for the propshaft flange can only be renewed with the rear final drive removed.

Refer to general repair instructions ⇒ page 14 .

– Remove rear final drive ⇒ page 48 .

– Secure rear final drive to engine and gearbox support - VW 540- with bolts (M10 × 40) -arrows-.

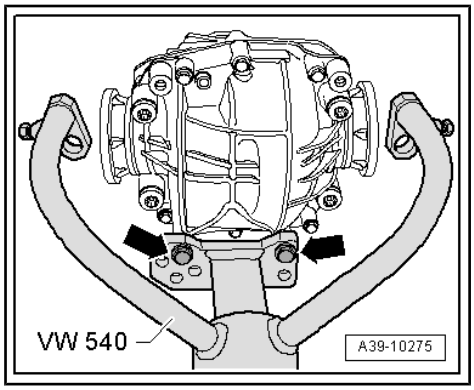

– Measure friction torque before slackening pinion shaft nut.

– Make a note of the measurement.

> **Caution**
>
> *This value must be reproduced on assembly if you find that the flange for the propshaft has to be renewed as part of the repair* *⇒ page 158* *.*

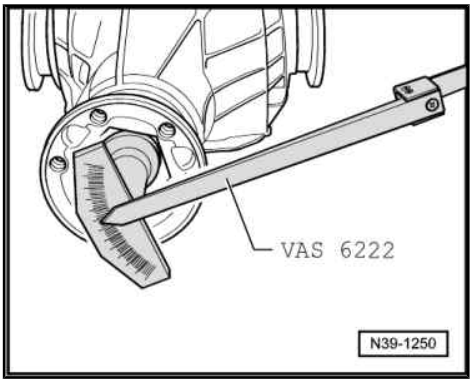

– Mark position of pinion shaft nut relative to pinion shaft -arrow-.

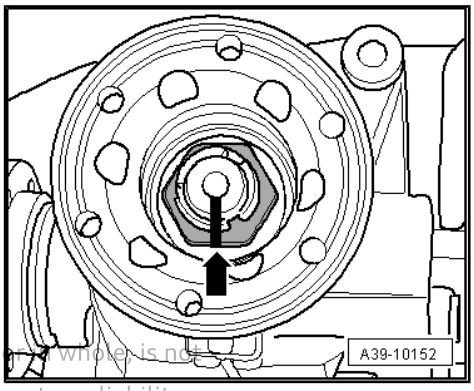

Protected by copyright. Copying for private or commercial purposes, in part or in whole is not permitted unless authorised by AUDI AG. AUDI AG does not guarantee or accept any liability with respect to the correctness of information in this document. Copyright by AUDI AG.

Calculate dimension "a" and dimension "b"

♦ Distance from flange to pinion shaft = dimension -a-

♦ Distance from flange to pinion shaft nut = dimension -b-

– Note measurements.

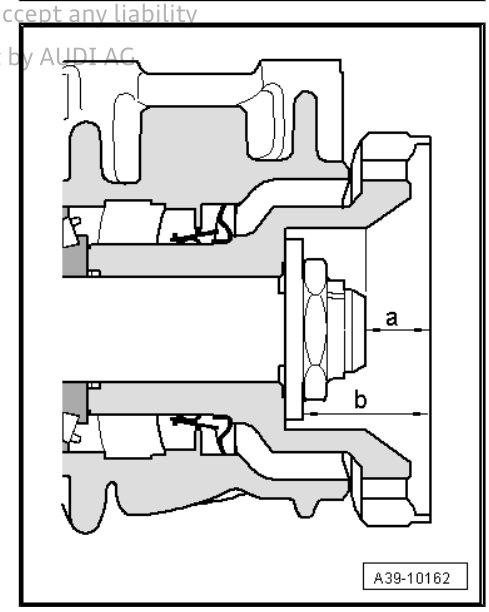

– Fit counterhold tool - 3028- to flange for propshaft with bolts -A-.

– Secure adapter - T10235- in threaded hole below flange for propshaft.

– Slacken pinion shaft nut, allowing counterhold tool - 3028- to rest against adapter - T10235- -arrow-.

– Count the turns when screwing off the pinion shaft nut and make a note of the number.

-A- 3 bolts M 8 x 25

-B- Socket (32 mm)

-C- Handle

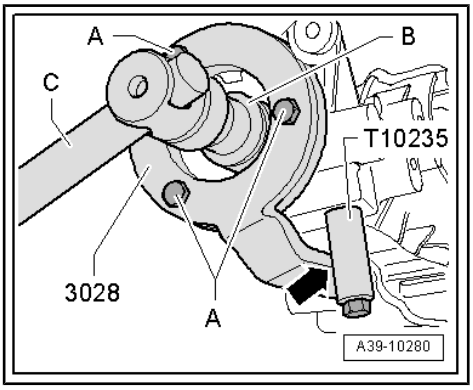

– Mark position of flange for propshaft -arrow A- in relation to pinion shaft -arrow B-.

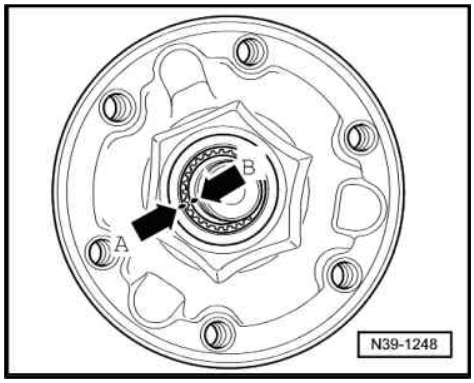

– Place drip tray underneath.
– Secure installing tool - VW 391- with 2 bolts M 8 x 25 -arrows-.
– Pull off flange for propshaft.

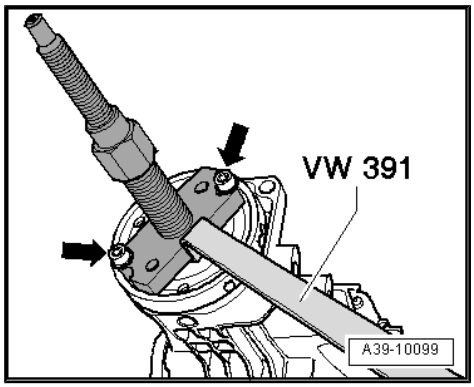

– Pull out the oil seal.
– Clean thread of pinion shaft.

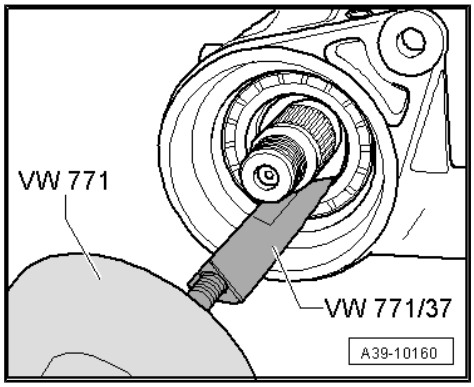

Installing

Installation is carried out in reverse sequence. Note the following:

– Lightly lubricate outer circumference of oil seal with gear oil.
– Pack space between sealing lip and dust lip half-full with sealing grease - G 052 128 A1- .
– Drive in new oil seal onto stop (take care to keep oil seal straight).

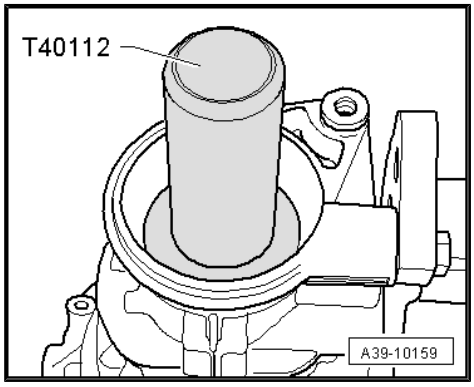

Protected by copyright. Copying for private or commercial purposes, in part or in whole, is not permitted unless authorised by AUDI AG. AUDI AG does not guarantee or accept any liability with respect to the correctness of information in this document. Copyright by AUDI AG.

– Using inductive heater - VAS 6414- , heat flange for propshaft to approx. 80 °C.

– Align mark on flange for propshaft -arrow A- with mark on pinion shaft -arrow B-.

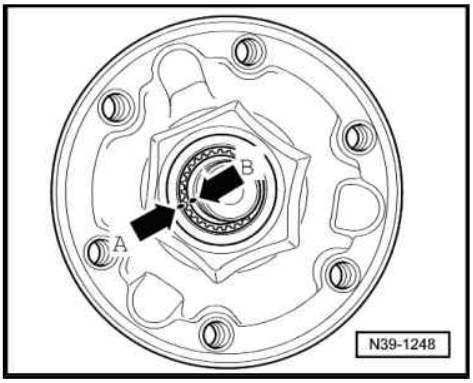

– Drive flange for propshaft onto pinion shaft.

– Install originally fitted pinion shaft nut with locking fluid - AMV 185 101 A1- .

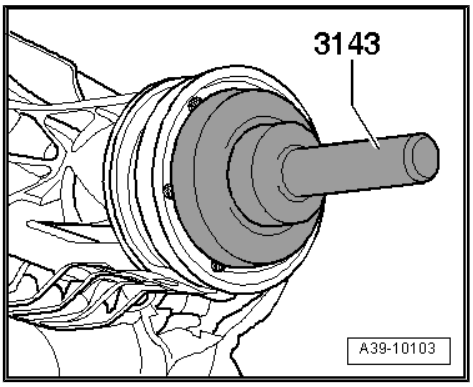

– Fit counterhold tool - 3028- to flange for propshaft with bolts -A-.

– Counterhold tool - 3028- must rest against lug -arrow- on housing when tightening pinion shaft nut.

-A- 3 bolts M 8 x 25

-B- Socket (32 mm)

-C- Handle

Protected by copyright. Copying for private or commercial purposes, in whole or in part, is not permitted unless authorised by AUDI AG. AUDI AG does not guarantee or assume any liability with respect to the correctness of information in this document. © AUDI AG.

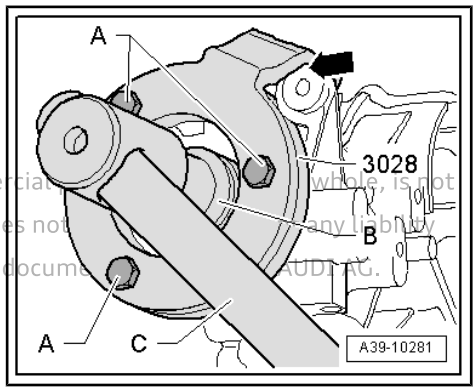

– Tighten pinion shaft nut to the previously marked position -arrow- by turning the same number of turns as noted on removal.

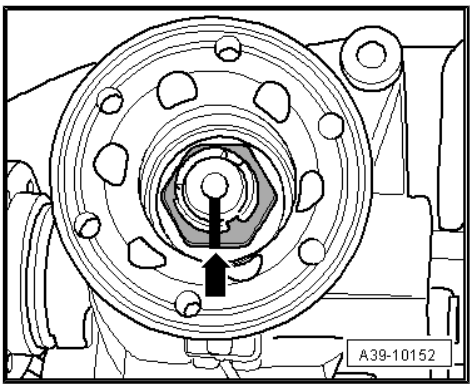

Checking dimension “a” and dimension “b”

- The measurements must be the same as noted previously within a tolerance of ± 0.2 mm.

– Install rear final drive ⇒ page 48 .

– Check oil level in rear final drive ⇒ page 108 .

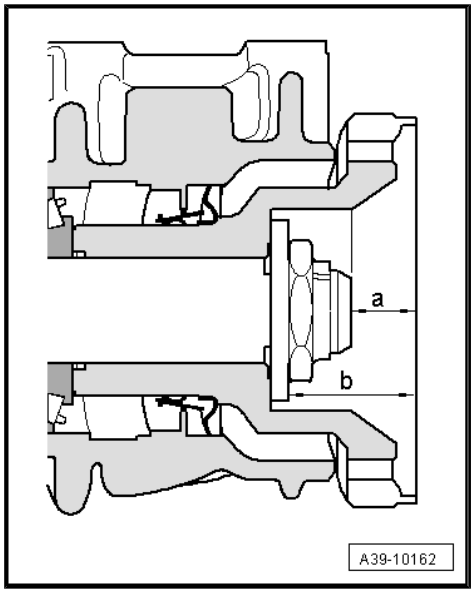

6.4.3 Renewing input shaft oil seal - 0BE

Special tools and workshop equipment required

♦ Thrust piece - VW 431-

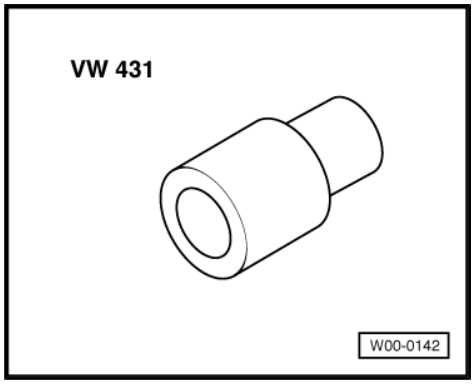

♦ Puller - T10055-

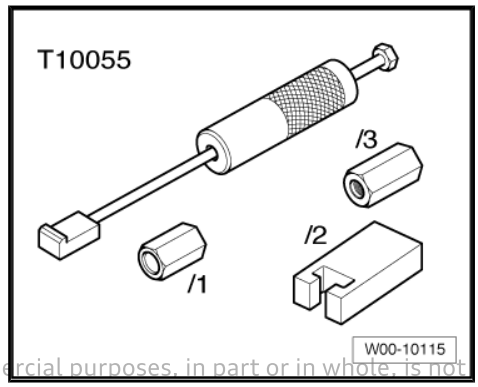

Protected by copyright. Copying for private or commercial purposes, in part or in whole, is not permitted unless authorised by AUDI AG. AUDI AG does not guarantee or accept any liability with respect to the correctness of information in this document. Copyright by AUDI AG.

♦ -2- Adapter - T10055/2-

- Thrust piece - T10380-

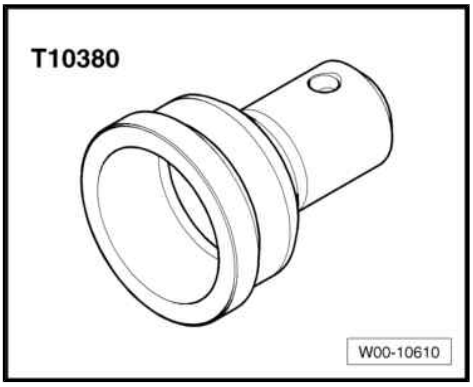

- Assembly tool - T40247-

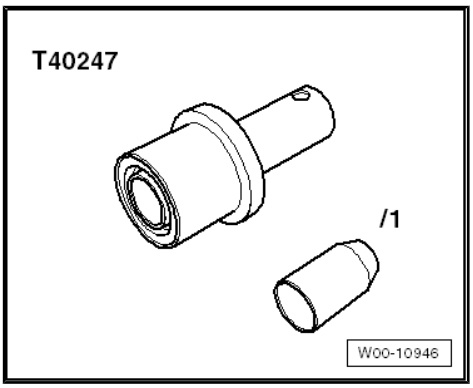

- Assembly sleeve - T40247/1-
- -1- Two-arm puller - Kukko 20/10-

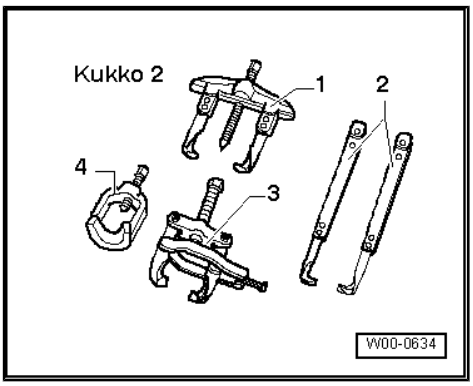

- Inductive heater - VAS 6414-

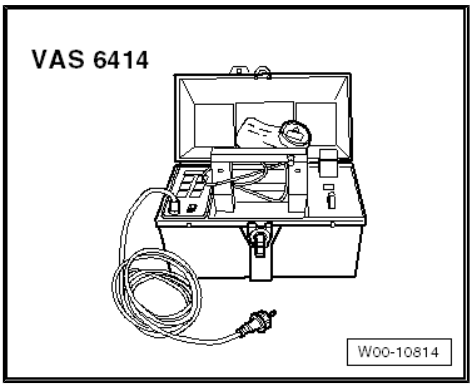

Protected by copyright. Copying for private or commercial purposes, in part or in whole, is not permitted unless authorised by AUDI AG. AUDI AG does not guarantee or accept any liability with respect to the correctness of information in this document. Copyright by AUDI AG.

- or
- Hotplate (commercially available)
- and
- Temperature gauge - VAS 6519-

- Drip tray
- Sealing grease - G 052 128 A1-

Removing

- Rear final drive installed

– Disconnect exhaust system at clamps -1- and -2-.

– Remove rear section of exhaust system ⇒ Rep. gr. 26 ; Exhaust pipes/silencers; Exploded view - silencers .

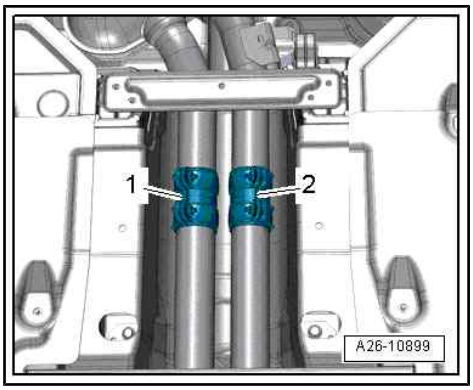

Note

A second mechanic is required for removing the rear section of the exhaust system.

– Unscrew gear oil drain plug -arrow- and drain off approx. 300 ml of gear oil.

– Screw in and tighten new drain plug -arrow-. Tightening torque ⇒ Item 17 (page 92)

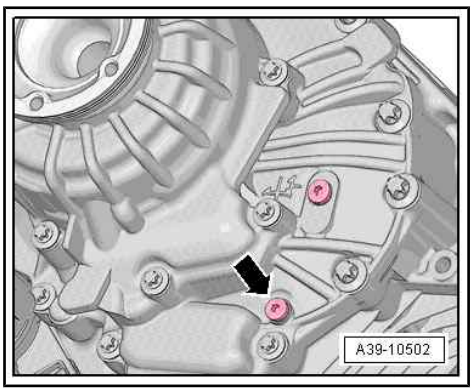

– Detach propshaft from rear final drive ⇒ page 37 .

– Guide propshaft downwards between fuel tank and rear subframe and tie up on one side.

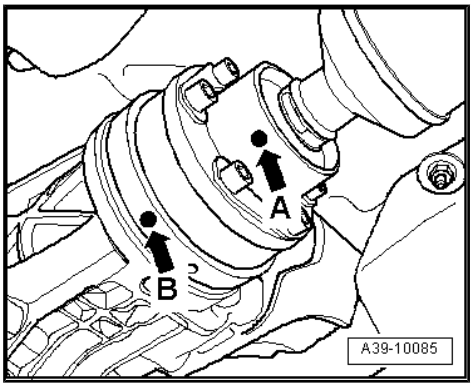

– Remove high-temperature grease in propshaft flange on rear final drive.

– Remove circlip -arrow-.

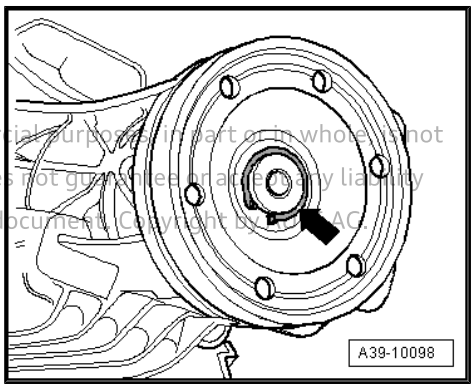

Protected by copyright. Copying for private or commercial purposes, in part or in whole, is not permitted unless authorised by AUDI AG. AUDI AG does not guarantee or assume any liability with respect to the correctness of information in this document. Copyright by AUDI AG.

– Mark position of flange -B- for propshaft relative to pinion shaft -A- -arrow-.

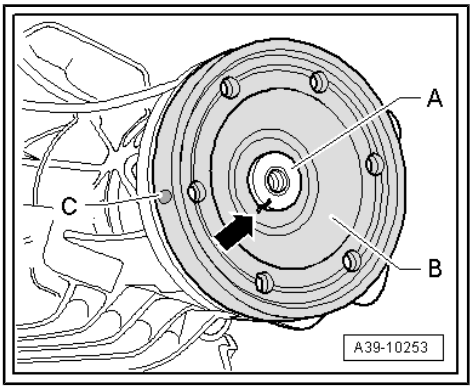

Note

- *This marking -arrow- is necessary in order to maintain the original position of the coloured dot -C- on the outside of the flange.*
- *This is the only effective way to minimise the imbalance in the rear final drive.*

– Pull off propshaft flange.

A - E.g. two-arm puller - Kukko 20-10-

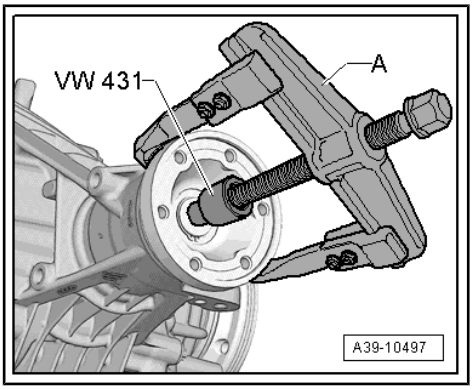

– Lay absorbent cloth -A- on subframe under final drive.

Protected by copyright. Copying for private or commercial purposes, in part or
permitted unless authorised by AUDI AG. AUDI AG does not guarantee or accept any
with respect to the correctness of information in this document. Copyright by AUDI

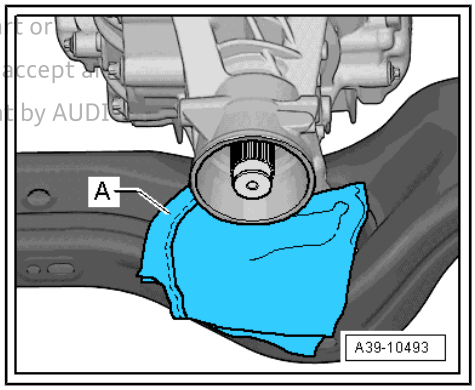

– Pierce metal ring of oil seal -A- in direction of -arrow - using e.g. a scriber -B-.

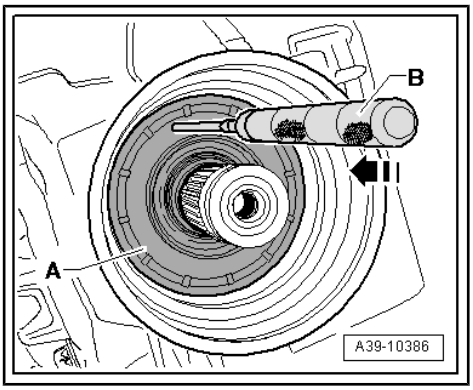

– Then screw a self-tapping screw -arrow- into this hole in oil seal -A-.

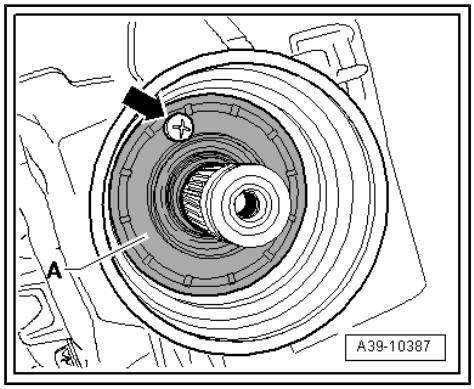

– Pull out oil seal -A- for propshaft flange in direction of -arrow-.

B - Self-tapping screw

Protected by copyright. Copying for private or commercial purposes, in part or in whole, is not permitted unless authorised by AUDI AG. AUDI AG does not guarantee or assume liability with respect to the correctness of information in this document.

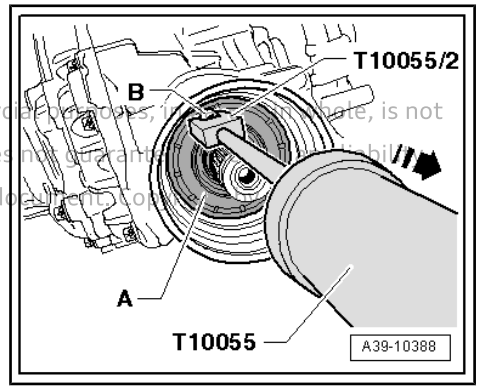

Installing

Installation is carried out in reverse sequence. Note the following:

– Pack space between sealing lip and dust lip half-full with sealing grease - G 052 128 A1- .

– Lightly lubricate outer circumference of oil seal with gear oil.

– Fit new oil seal -A- on assembly sleeve - T40247/1- .

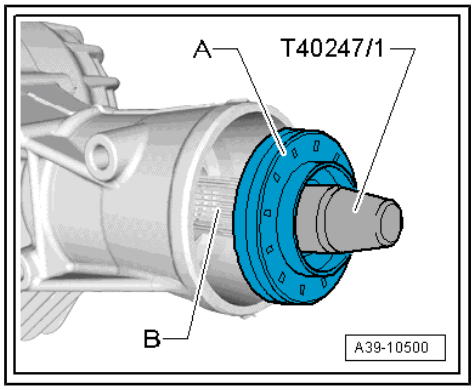

Note

Check that spring of oil seal behind sealing lip is in installation position.

– Fit assembly sleeve - T40247/1- onto pinion shaft -B- together with oil seal -A-.

– Drive in new oil seal onto stop (take care to keep seal straight).

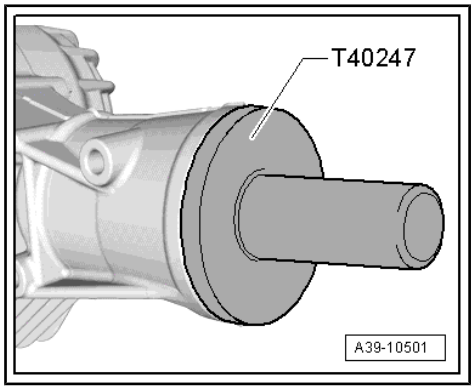

– Heat propshaft flange -B- to 115 °C using inductive heater - VAS 6414- or a hotplate .

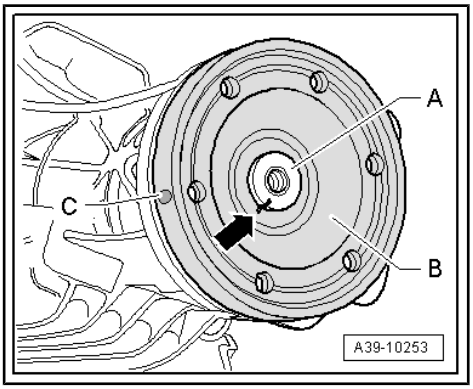

WARNING

- *Wear protective gloves.*
- *If using a hotplate , the temperature value must be monitored constantly with temperature gauge - VAS 6519- .*

– Position propshaft flange -B- on pinion shaft -A- so that markings -arrow- are in line.

– Drive on propshaft flange as far as stop using thrust piece - T10380- .

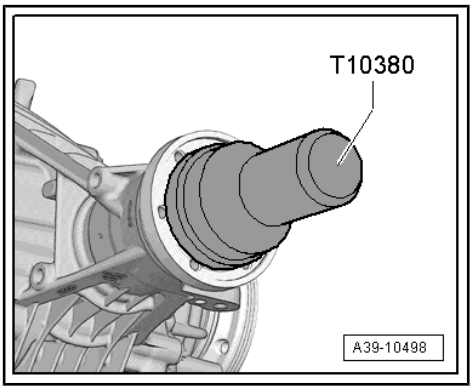

Install circlip -1- as follows:

- Always renew circlip -1-.
- Chamfer on inner diameter of circlip -arrow A- must face outwards towards propshaft.
- The wider lug on the circlip -arrow B- must be on the right side, as shown in the illustration.

– Measure thickness of old circlip -1-.

– Replace circlip -1- with a new circlip of the same thickness ⇒ Electronic parts catalogue .

– Fit new circlip -1-.

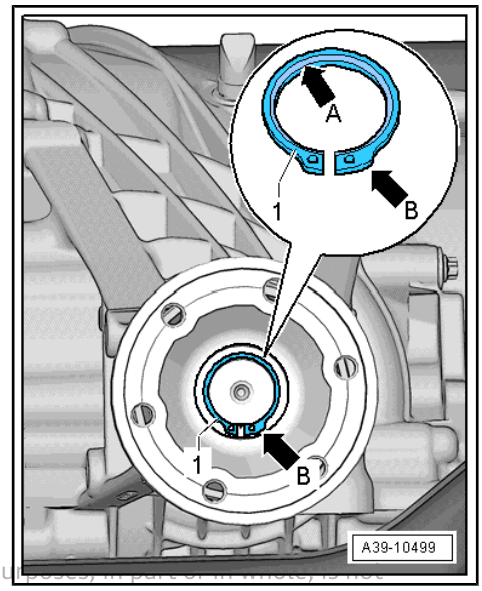

Note

- *If the propshaft flange is being renewed, the thickness of the circlip -arrow- must be re-determined.*
- *To do so, determine the thickest circlip -arrow- that will just fit in the groove and install it. For part number refer to ⇒ Electronic parts catalogue .*

Protected by copyright. Copying for private or commercial purposes, in part or in whole, is not permitted unless authorised by AUDI AG. AUDI AG does not guarantee or accept any liability with respect to the correctness of information in this document. Copyright by AUDI AG.

– Fill up gear oil in rear final drive 0BE ⇒ page 111 .

– Attach propshaft to rear final drive ⇒ page 38 .

– Install rear section of exhaust system ⇒ Rep. gr. 26 ; Exhaust pipes/silencers; Exploded view - silencers .

6.4.4 Renewing input shaft oil seal - 0BF

Special tools and workshop equipment required

- Drive flange installing tool - VW 391-

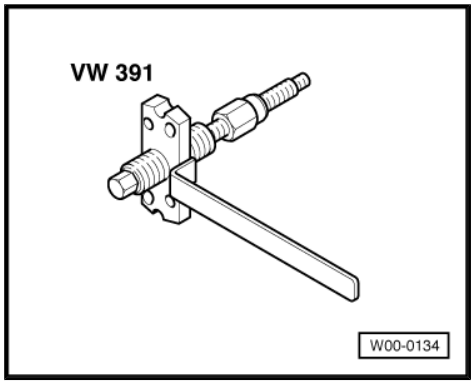

- Puller - T10055-

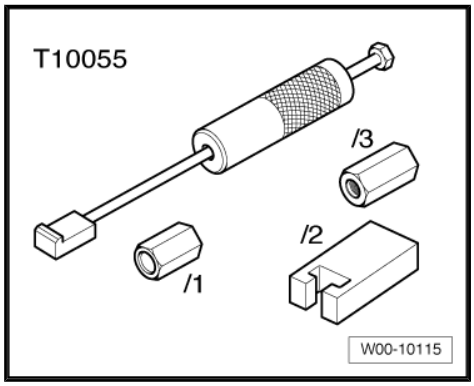

- -2- Adapter - T10055/2-
- Bolts (2x) M 8 x 30
- Thrust piece - T10380-

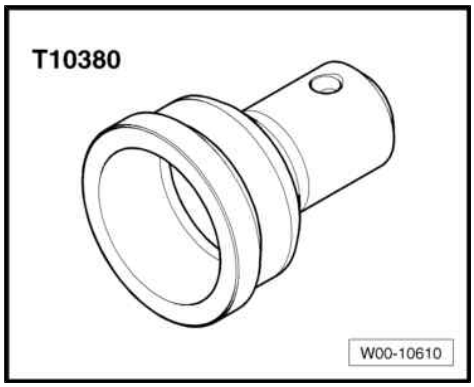

- Thrust piece - T40222-

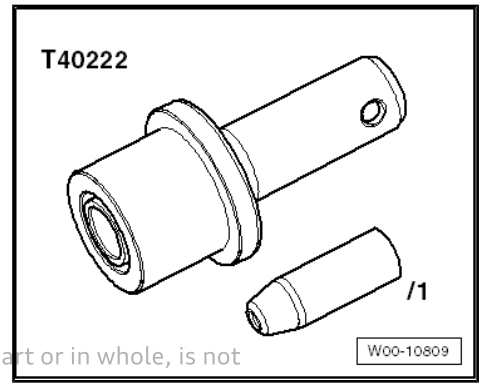

Protected by copyright. Copying for private or commercial purposes, in part or in whole, is not permitted unless authorised by AUDI AG. AUDI AG does not guarantee or accept any liability with respect to the correctness of information in this document. Copyright by AUDI AG.

- Assembly sleeve - T40222/1-
- Sealing grease - G 052 128 A1-

♦ Inductive heater - VAS 6414-

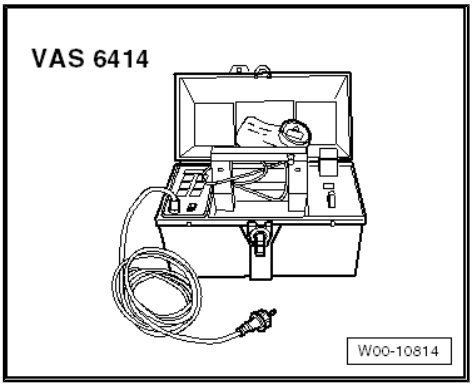

Protected by copyright. Copying for private or commercial purposes, in part or in whole, is not permitted unless authorised by AUDI AG. AUDI AG does not guarantee or accept any liability with respect to the correctness of information in this document. Copyright by AUDI AG.

♦ Or

♦ Hotplate (commercially available)

♦ and

♦ Temperature gauge - VAS 6519-

Removing

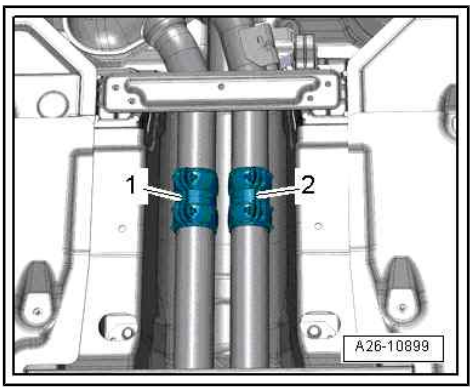

- Rear final drive installed
- Refer to general repair instructions ⇒ page 14 .

– Disconnect exhaust system at clamps -1- and -2-.

– Remove rear section of exhaust system ⇒ Rep. gr. 26 ; Exhaust pipes/silencers; Exploded view - silencers .

Note

A second mechanic is required for removing the rear section of the exhaust system.

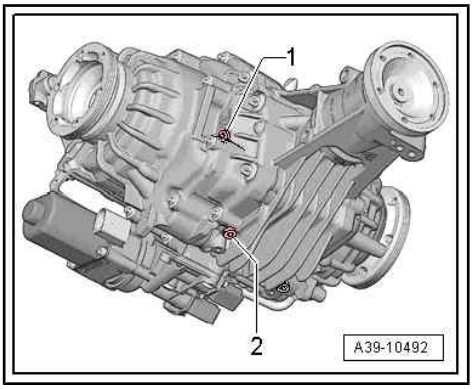

– Unscrew gear oil drain plug -2- and drain off approx. 300 ml of gear oil.

– Screw in and tighten new drain plug -2-. Tightening torque ⇒ Item 17 (page 92)

– Detach propshaft from rear final drive ⇒ page 37 .

Audi A8

– Guide propshaft downwards between fuel tank and rear subframe and tie up on one side.

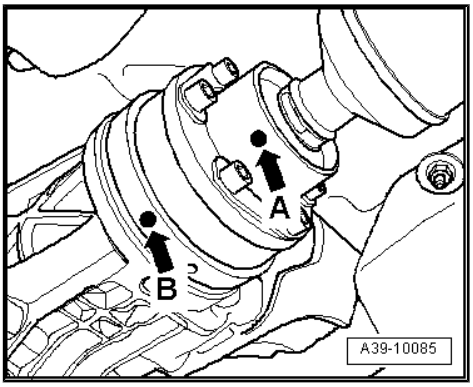

Audi A4, A5 Coupé/Sportback/Cabriolet

– If fitted, remove front cross member -2-.

– Remove rear cross member -3- and heat shield -1-.

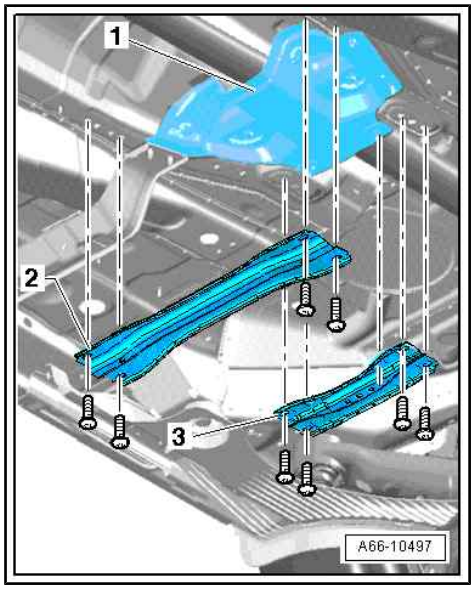

Audi A6 and A7

– Remove cross-piece -2- ⇒ General body repairs, exterior; Rep. gr. 66 ; Underbody trim; Exploded view - underbody trim .

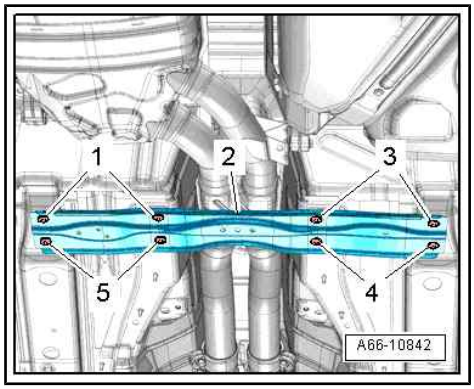

Audi A4, A5 Coupé/Sportback/Cabriolet, A6, A7

– Remove bolts -arrows- securing centre propshaft bearing.

– Lower propshaft at centre bearing.

– When doing so, guide propshaft downwards between fuel tank and rear subframe.

– Fit bolts -arrows- for centre bearing and hand-tighten.

– Tie propshaft to one side.

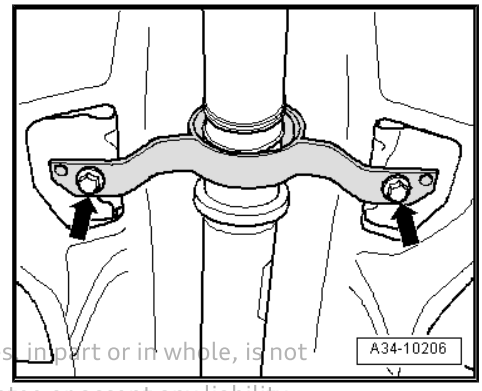

Protected by copyright. Copying for private or commercial purposes, in part or in whole, is not permitted unless authorised by AUDI AG. AUDI AG does not guarantee or accept any liability with respect to the correctness of information in this document. Copyright by AUDI AG.

All vehicles (continued)

– Remove high-temperature grease in propshaft flange on rear final drive.

– Remove circlip -arrow-.

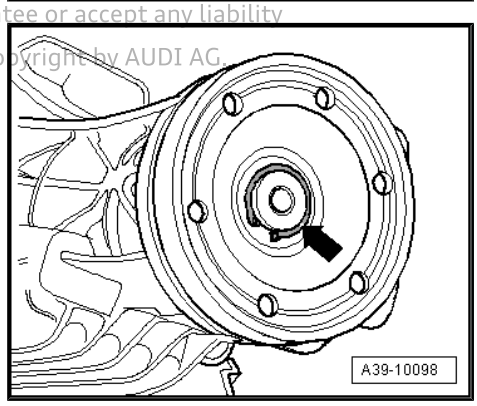

– Mark position of flange -B- for propshaft relative to pinion shaft -A- -arrow-.

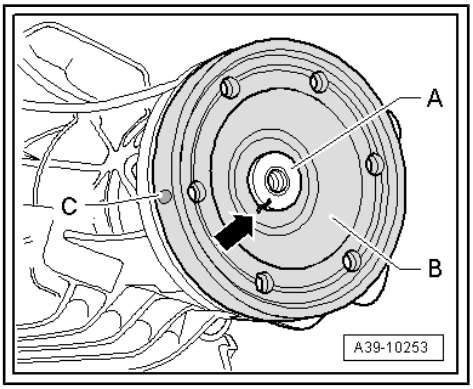

Note

- *This marking -arrow- is necessary in order to maintain the original position of the coloured dot -C- on the outside of the flange.*
- *This is the only effective way to minimise the imbalance in the rear final drive.*

– Screw 2 bolts M 8 x 30 mm -arrow- into flange.

– Pull off propshaft flange using drive flange installing tool - VW 391- .

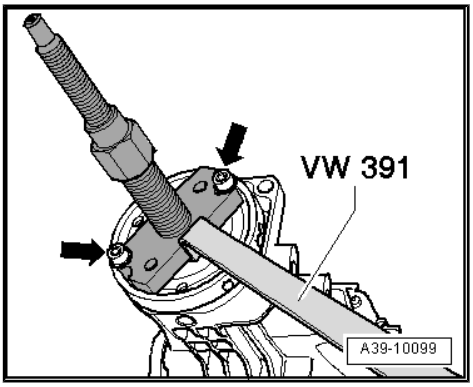

– Lay absorbent cloth -A- on subframe under final drive.

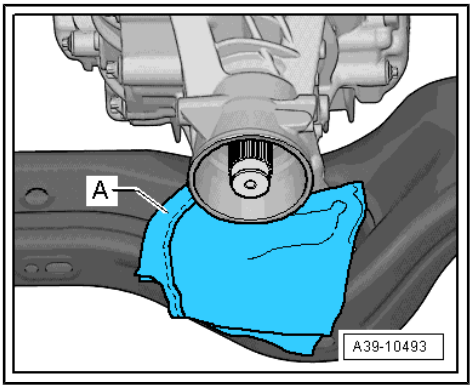

– Pierce metal ring of oil seal -A- in direction of -arrow - using e.g. a scriber -B-.

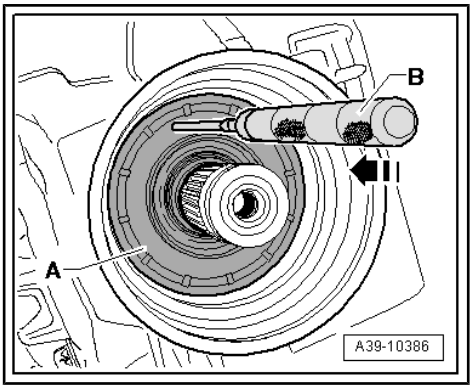

Protected by copyright. Copying for private or commercial purposes, in part or in whole, is not permitted unless authorised by AUDI AG. AUDI AG does not guarantee or accept any liability with respect to the correctness of information in this document. Copyright by AUDI AG.

– Then screw a self-tapping screw -arrow- into this hole in oil seal -A-.

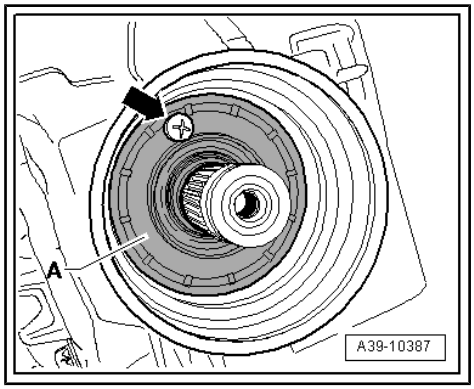

– Pull out oil seal -A- for propshaft flange in direction of -arrow-.

-B- Self-tapping screw

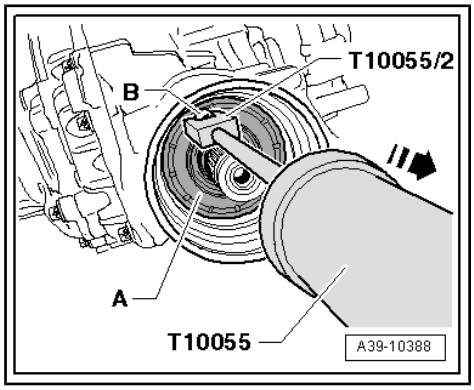

Installing

Installation is carried out in reverse sequence. Note the following:

– Pack space between sealing lip and dust lip half-full with sealing grease - G 052 128 A1- .

– Fit new oil seal -A- on assembly sleeve - T40222/1- .

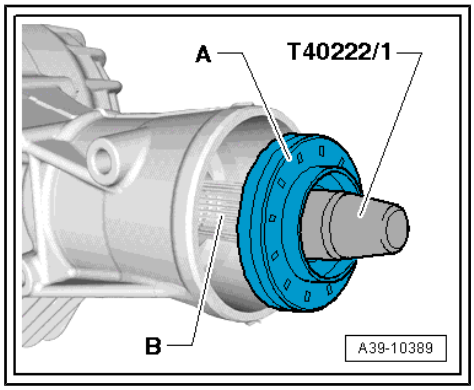

Note

Check that spring of oil seal behind sealing lip is in installation position.

– Lightly lubricate outer circumference of oil seal with gear oil.

– Fit assembly sleeve - T40222/1- onto pinion shaft -B- together with oil seal -A-.

– Drive in new oil seal onto stop (take care to keep seal straight).

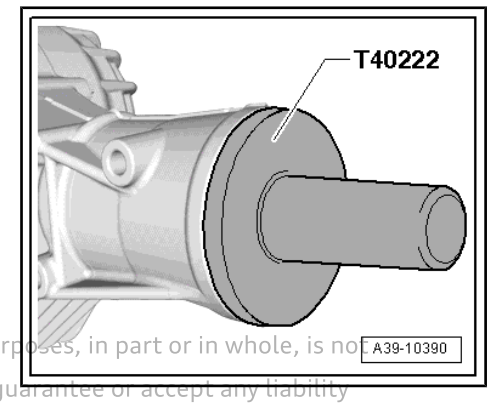

Protected by copyright. Copying for private or commercial purposes, in part or in whole, is not permitted unless authorised by AUDI AG. AUDI AG does not guarantee or accept any liability with respect to the correctness of information in this document. Copyright by AUDI AG.

– Heat propshaft flange -B- to 115 °C using inductive heater - VAS 6414- or a hotplate .

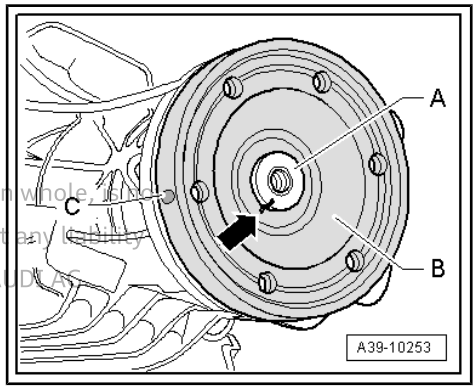

WARNING

- *Wear protective gloves.*
- *If using a hotplate , the temperature value must be monitored constantly with temperature gauge - VAS 6519- .*

Protected by copyright. Copying for private or commercial purposes, in part or in whole, is not permitted unless authorized by AUDI AG. AUDI AG does not guarantee or accept any liability with respect to the correctness of information in this document. Copyright by AUDI AG.

– Position propshaft flange -B- on pinion shaft -A- so that markings -arrow- are in line.

– Drive on propshaft flange as far as stop using thrust piece - T10380- .

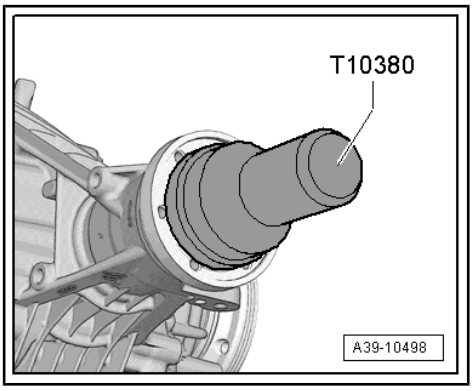

Install circlip -1- as follows:

- Always renew circlip -1-.
- Chamfer on inner diameter of circlip -arrow A- must face outwards towards propshaft.
- The wider lug on the circlip -arrow B- must be on the right side, as shown in the illustration.

– Measure thickness of old circlip -1-.

– Replace circlip -1- with a new circlip of the same thickness ⇒ Electronic parts catalogue .

– Fit new circlip -1-.

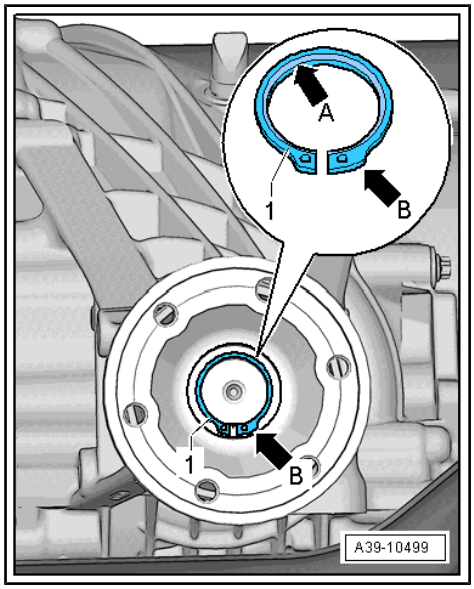

Note

◆ *If the propshaft flange is being renewed, the thickness of the circlip -arrow- must be re-determined.*

◆ *To do so, determine the thickest circlip -arrow- that will just fit in the groove and install it. For part number refer to ⇒ Electronic parts catalogue .*

– Top up gear oil in rear final drive 0BF ⇒ page 114 .

– Attach propshaft to rear final drive ⇒ page 38 .

Audi A4, A5 Coupé/Sportback/Cabriolet, A6, A7

– Secure centre propshaft bearing to body so it is free of stress. Tightening torque ⇒ Item 9 (page 20)

– Install heat shield and cross member ⇒ General body repairs, exterior; Rep. gr. 66 ; Underbody trim; Exploded view - underbody trim .

All vehicles (continued)

– Install rear section of exhaust system ⇒ Rep. gr. 26 ; Exhaust pipes/silencers; Exploded view - silencers .

6.5 Renewing protective ring on flange shaft

⇒ "6.5.1 Renewing protective ring on flange shaft - 0BC", page 156

⇒ "6.5.2 Renewing protective ring on flange shaft - 0BD", page 158

⇒ "6.5.3 Renewing protective ring on flange shaft - 0BE, 0BF", page 160

Protected by copyright. Copying for private or commercial purposes, in part or in whole, is not permitted unless authorised by AUDI AG. AUDI AG does not guarantee or accept any liability with respect to the correctness of information in this document. Copyright by AUDI AG.

6.5.1 Renewing protective ring on flange shaft - 0BC

- The protective rings can only be renewed with the final drive and flange shafts removed.

Special tools and workshop equipment required

- Thrust plate - VW 401-

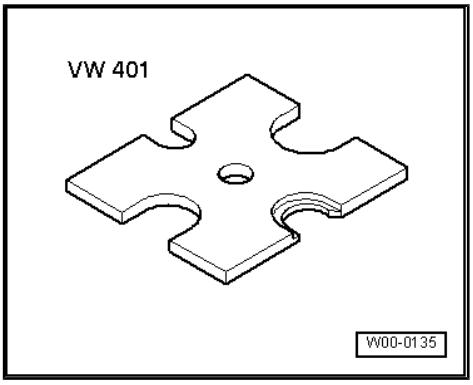

- Thrust plate - VW 402-

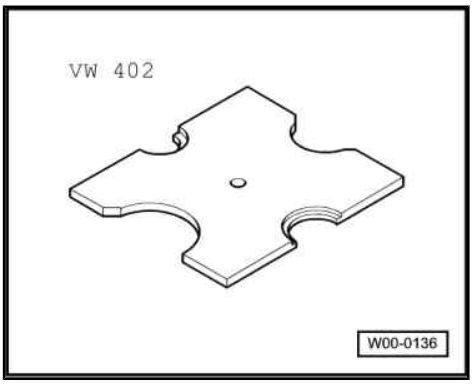

- Press tool - VW 412-

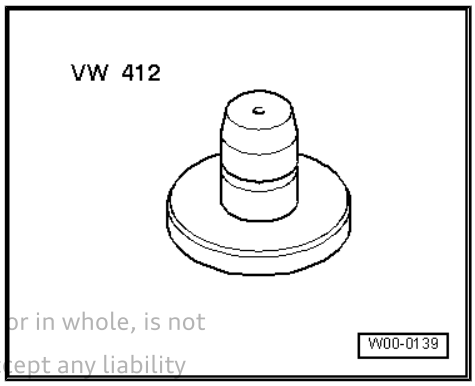

Protected by copyright. Copying for private or commercial purposes, in part or in whole, is not permitted unless authorised by AUDI AG. AUDI AG does not guarantee or accept any liability with respect to the correctness of information in this document. Copyright by AUDI AG.

- Tube - 3146-

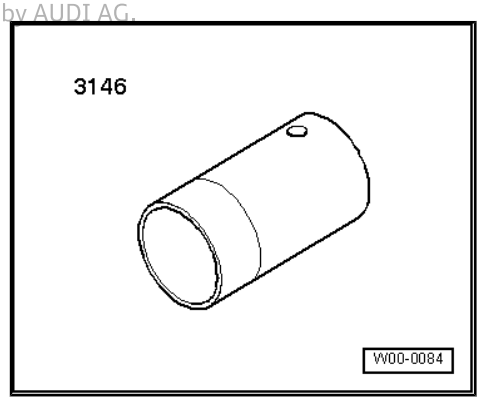

♦ -3- Splitter 22...115 mm , e.g. -Kukko 17/2-

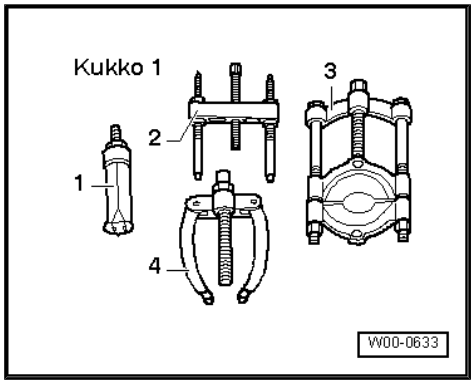

- Rear final drive removed ⇒ page 48
- Flange shaft removed ⇒ page 125

Protected by copyright. Copying for private or commercial purposes, in part or in whole, is not permitted unless authorised by AUDI AG. AUDI AG does not guarantee or accept any liability with respect to the correctness of information in this document. Copyright by AUDI AG.

Pressing protective ring -A- off flange shaft

B - Splitter 22...115 mm , e.g. -Kukko 17/2-

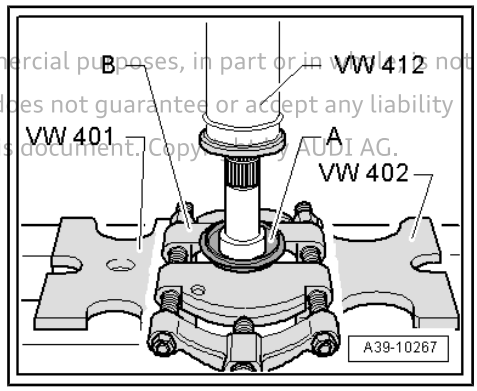

Pressing protective ring -A- onto flange shaft

- Installation position of protective ring -A-: larger outside diameter of protective ring faces towards flange

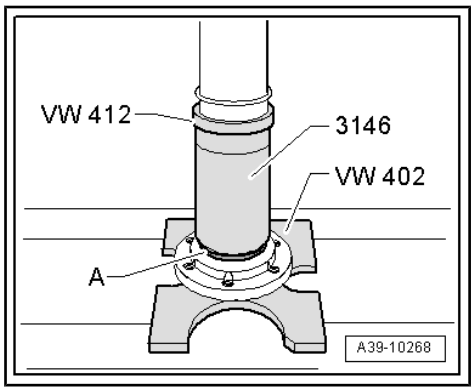

6.5.2 Renewing protective ring on flange shaft - 0BD

- The protective rings can only be renewed with the final drive and flange shafts removed.

Special tools and workshop equipment required

♦ Thrust plate - VW 401-

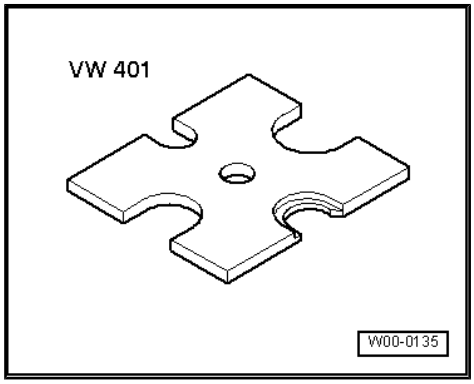

- Thrust plate - VW 402-

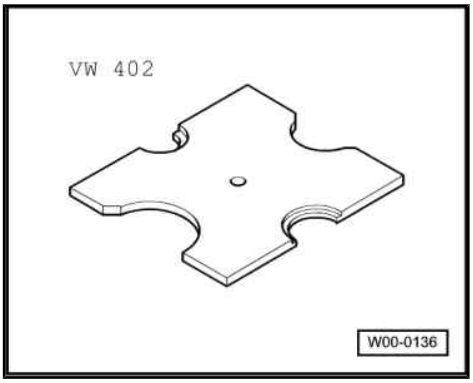

- Press tool - VW 407-

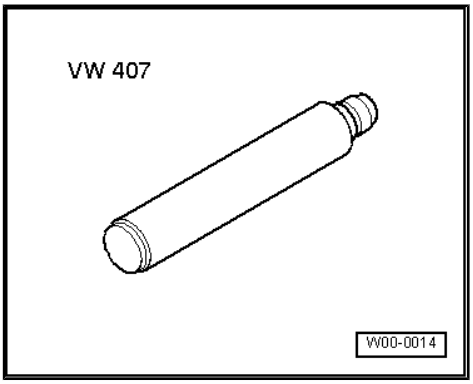

- Tube - 32 - 119-

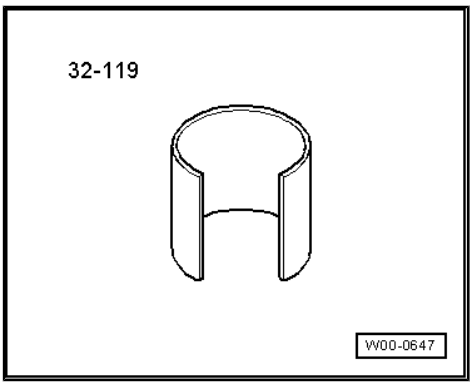

- Thrust pad - 3062-

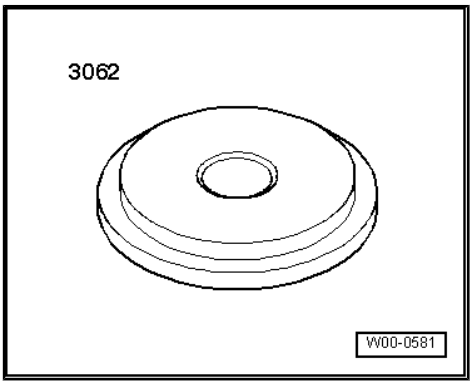

Protected by copyright. Copying for private or commercial purposes, in part or in whole, is not permitted unless authorised by AUDI AG. AUDI AG does not guarantee or accept any liability with respect to the correctness of information in this document. Copyright by AUDI AG.

♦ -3- Splitter 22...115 mm , e.g. -Kukko 17/2-

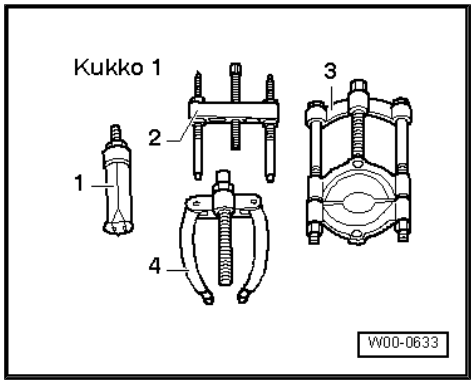

- Rear final drive removed ⇒ page 48
- Flange shaft removed ⇒ page 128

Pressing protective ring -B- off flange shaft

A - Splitter 22...115 mm , e.g. -Kukko 17/2-

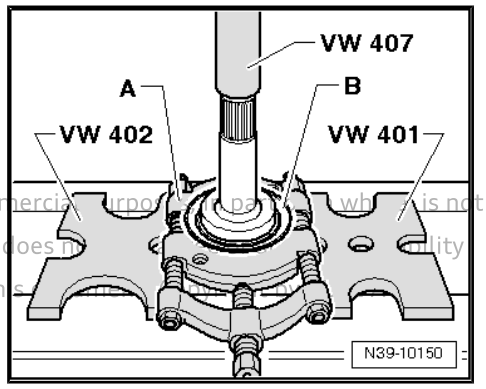

Protected by copyright. Copying for private or commercial purposes, in part or in whole, is not permitted unless authorised by AUDI AG. AUDI AG does not guarantee or assume any liability with respect to the correctness of information in this document.

Pressing protective ring -A- onto flange shaft

- Installation position of protective ring -A-: recess in protective ring faces towards tube - 32 - 119- .

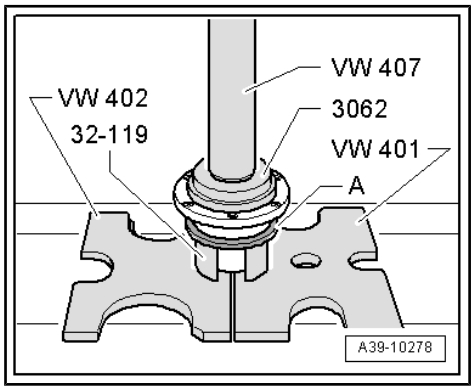

6.5.3 Renewing protective ring on flange shaft - 0BE, 0BF

- The protective rings can only be renewed with the final drive and flange shafts removed.

Special tools and workshop equipment required

♦ Thrust plate - VW 401-

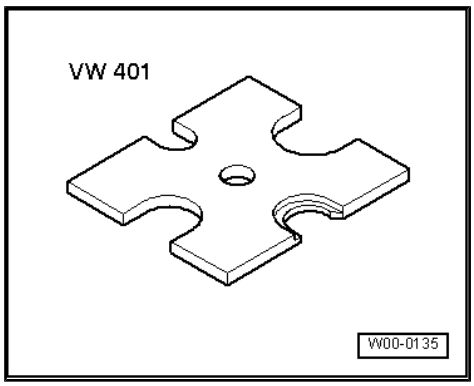

- Thrust plate - VW 402-

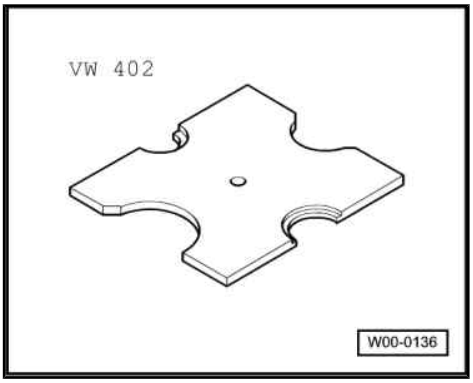

- Press tool - VW 412-

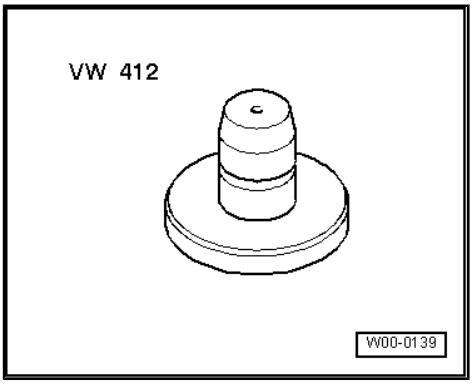

- Drift sleeve - 40 - 21-

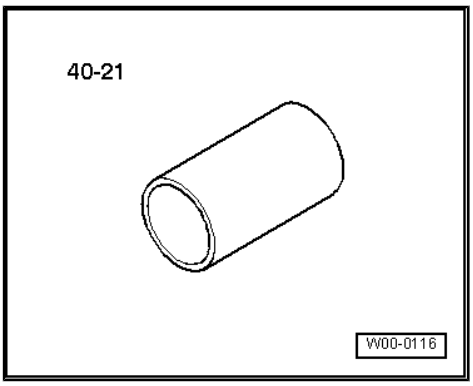

- Installing ring - 2003/1- from fitting tool - 2003-

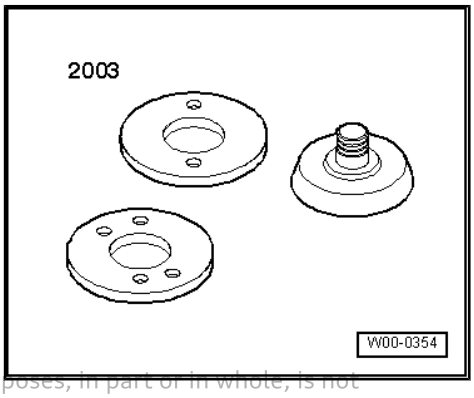

Protected by copyright. Copying for private or commercial purposes, in part or in whole, is not permitted unless authorised by AUDI AG. AUDI AG does not guarantee or accept any liability with respect to the correctness of information in this document. Copyright by AUDI AG.

♦ Wheel bearing tube - 3345-

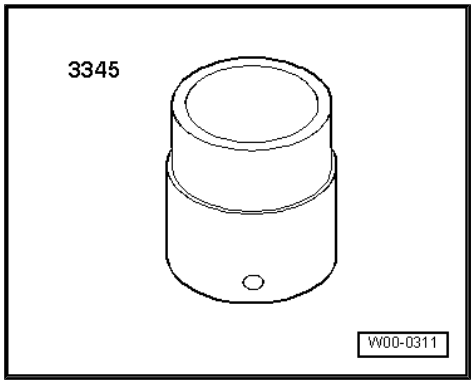

♦ -3- Splitter 22...115 mm , e.g. -Kukko 17/2-

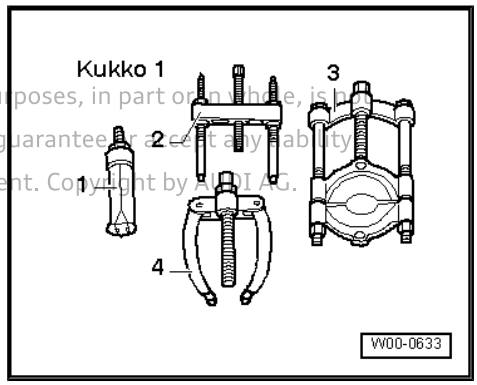

Protected by copyright. Copying for private or commercial purposes, in part or in whole, is not permitted unless authorised by AUDI AG. AUDI AG does not guarantee or accept any liability with respect to the correctness of information in this document. Copyright by AUDI AG.

- Rear final drive removed ⇒ page 48
- Flange shaft removed ⇒ page 130

Pressing protective ring -A- off flange shaft

B - Splitter 22...115 mm , e.g. -Kukko 17/2-

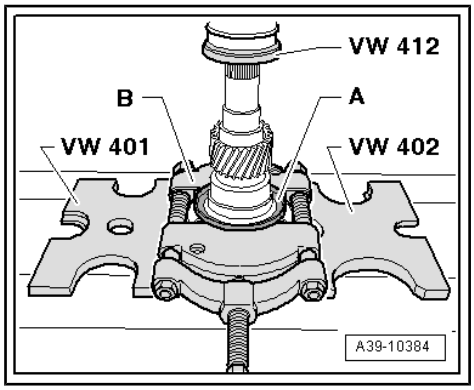

Pressing protective ring -A- onto flange shaft (press on carefully)

- Installation position of protective ring -A-: larger outside diameter of protective ring faces towards wheel bearing tube - 3345-

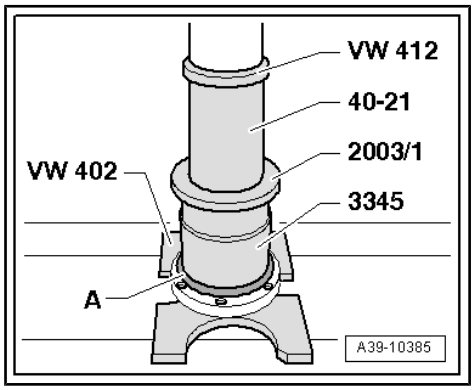

6.6 Renewing protective ring on input shaft flange

⇒ "6.6.1 Renewing protective ring on input shaft flange - 0BC", page 163

⇒ "6.6.2 Renewing protective ring on input shaft flange - 0BD", page 165

⇒ "6.6.3 Renewing protective ring on input shaft flange - 0BE, 0BF", page 166

6.6.1 Renewing protective ring on input shaft flange - 0BC

- The protective ring can only be renewed with the input shaft removed.

Special tools and workshop equipment required

♦ Adapter - VW 295 A-

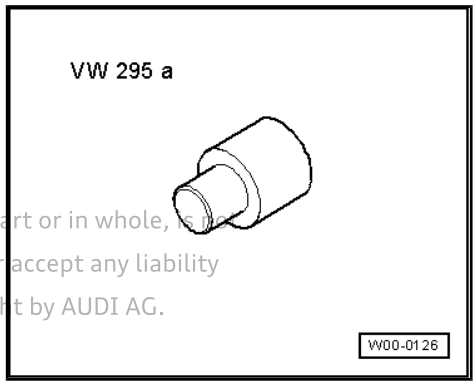

Protected by copyright. Copying for private or commercial purposes, in part or in whole, is not permitted unless authorised by AUDI AG. AUDI AG does not guarantee or accept any liability with respect to the correctness of information in this document. Copyright by AUDI AG.

♦ Thrust plate - VW 402-

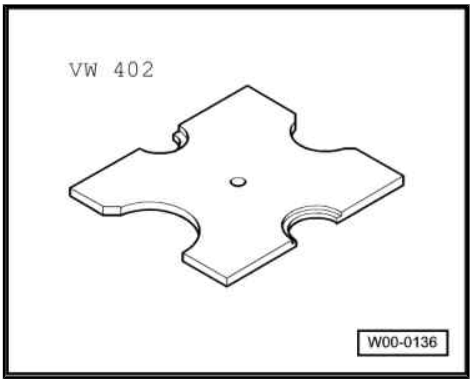

♦ Press tool - VW 408 A-

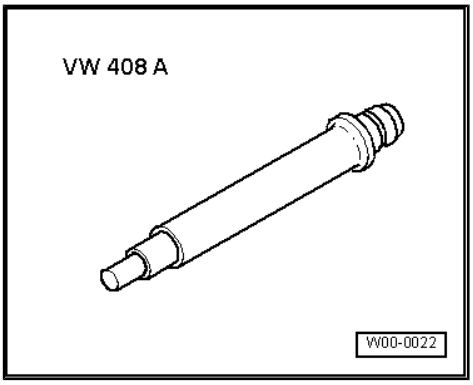

♦ Support rails - VW 457-

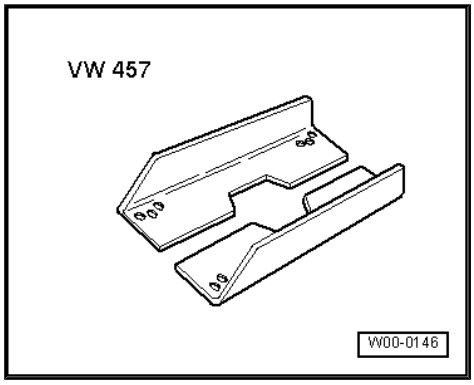

♦ -3- Splitter 22...75 mm , e.g. -Kukko 17/1-

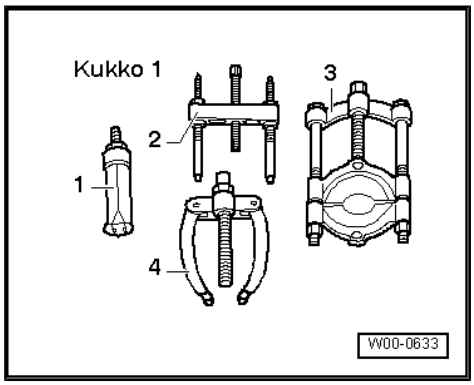

- Input shaft removed ⇒ page 132

Pressing protective ring -A- off flange for propshaft

B - Splitter 12...75 mm , e.g. -Kukko 17/1-

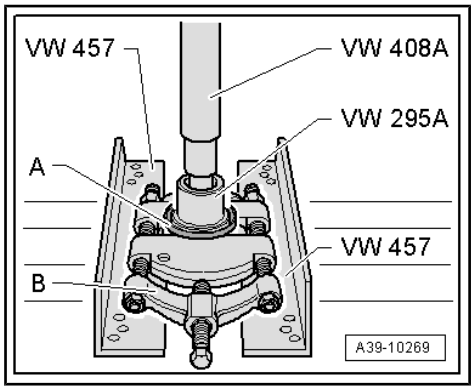

Installation position of protective ring -A- on flange for propshaft

- The projecting ridge -arrow 1- on the protective ring -A- must be fitted in the annular groove -arrow 2- on the flange -B-. The smaller outside diameter -arrow 3- then faces towards the flange.

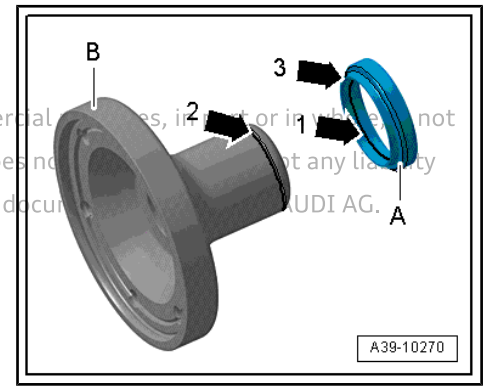

Protected by copyright. Copying for private or commercial purposes, in part or in whole, is not permitted unless authorised by AUDI AG. AUDI AG does not [illegible] any liability with respect to the correctness of information in this document [illegible] AUDI AG.

Pressing protective ring -A- onto flange for propshaft

- The protective ring -A- must engage in the annular groove on the flange ⇒ page 164 .

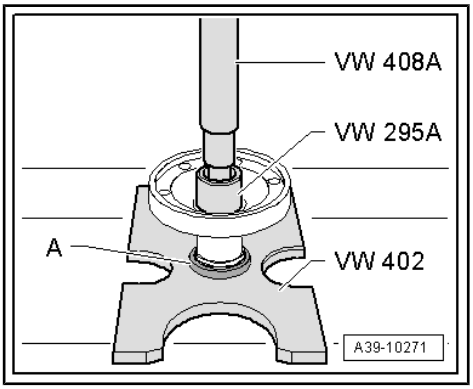

6.6.2 Renewing protective ring on input shaft flange - 0BD

- The protective ring can only be renewed with the input shaft removed.

Special tools and workshop equipment required

♦ Thrust plate - VW 402-

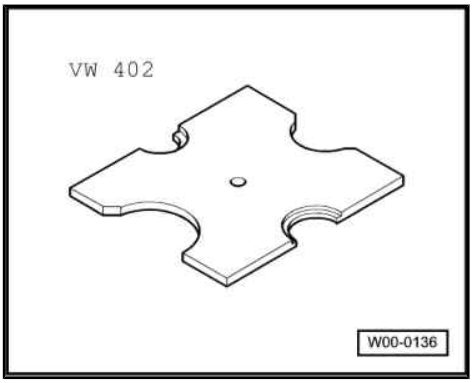

♦ Press tool - VW 407-

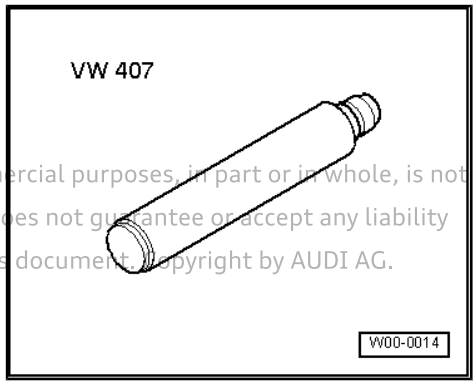

Protected by copyright. Copying for private or commercial purposes, in part or in whole, is not permitted unless authorised by AUDI AG. AUDI AG does not guarantee or accept any liability with respect to the correctness of information in this document. Copyright by AUDI AG.

♦ Press tool - VW 412-

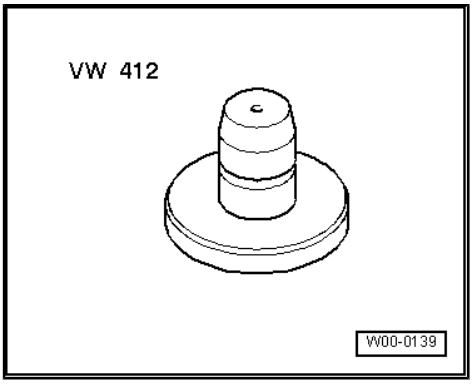

♦ Drift sleeve - 40 - 20-

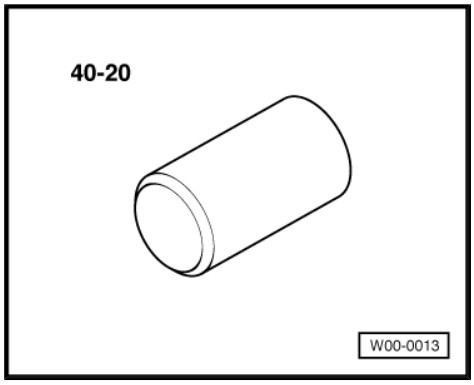

♦ -3- Splitter 22...75 mm , e.g. -Kukko 17/1-

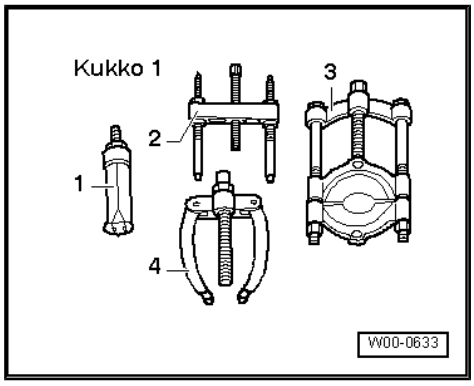

- Input shaft removed ⇒ page 139

Pressing protective ring off flange for propshaft

A - Splitter 22...115 mm , e.g. -Kukko 17/2-

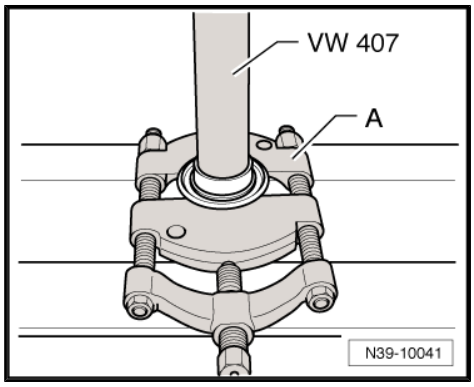

Pressing protective ring -A- onto flange for propshaft

- Installation position of protective ring -A-: recess in protective ring faces upwards towards drift sleeve - 40 - 20- .

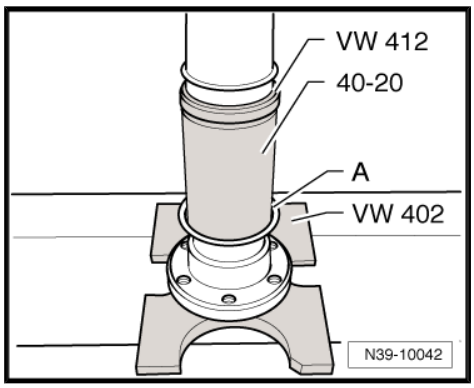

6.6.3 Renewing protective ring on input shaft flange - 0BE, 0BF

- The protective ring can only be renewed with the input shaft removed.

Protected by copyright. Copying for private or commercial purposes, in part or in whole, is not permitted unless authorised by AUDI AG. AUDI AG does not guarantee or accept any liability with respect to the correctness of information in this document. Copyright by AUDI AG.

Special tools and workshop equipment required

- Adapter - VW 295 A-

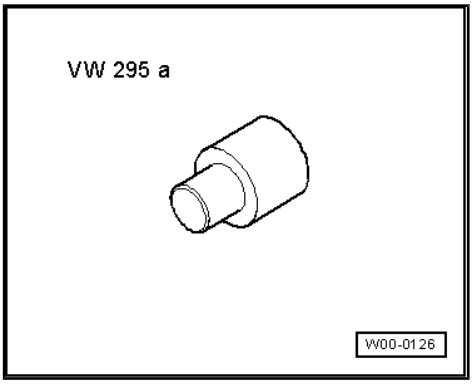

- Thrust plate - VW 402-

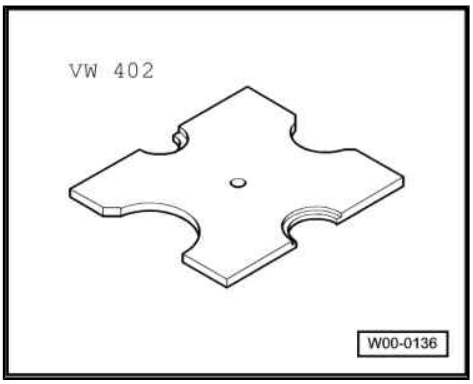

- Press tool - VW 408 A-

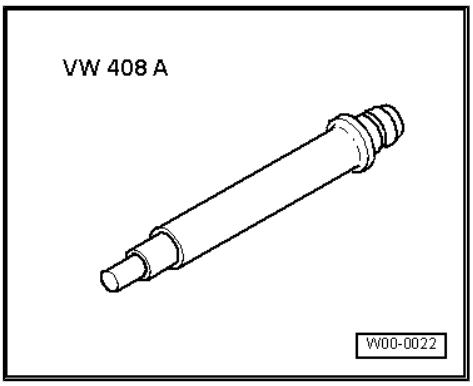

- Support rails - VW 457-

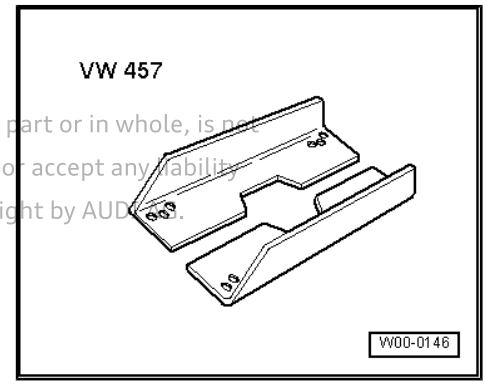

Protected by copyright. Copying for private or commercial purposes, in part or in whole, is not permitted unless authorised by AUDI AG. AUDI AG does not guarantee or accept any liability with respect to the correctness of information in this document. Copyright by AUDI AG.

♦ -3- Splitter 22...75 mm , e.g. -Kukko 17/1-

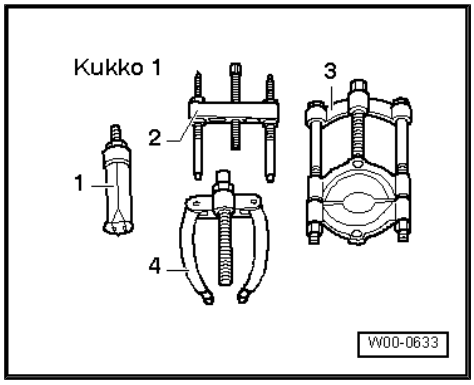

- Input shaft removed: 0BE ⇒ page 144 , 0BF ⇒ page 149

Pressing protective ring -A- off flange for propshaft

B - Splitter 12...75 mm , e.g. -Kukko 17/1-

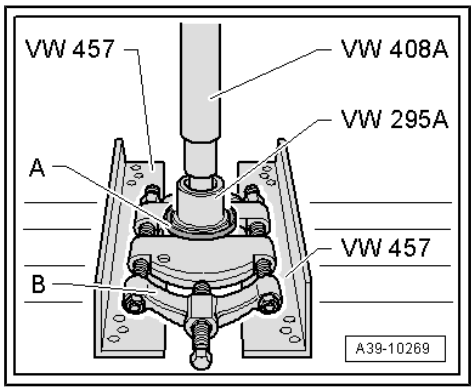

Installation position of protective ring -A- on flange for propshaft

- The projecting ridge -arrow 1- on the protective ring -A- must be fitted in the annular groove -arrow 2- on the flange -B-. The smaller outside diameter -arrow 3- then faces towards the flange.

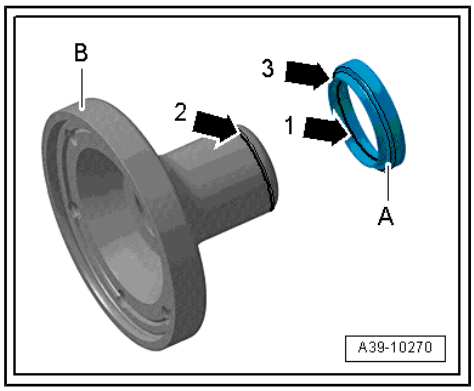

Pressing protective ring -A- onto flange for propshaft

- The protective ring -A- must engage in the annular groove on the flange ⇒ page 168 .

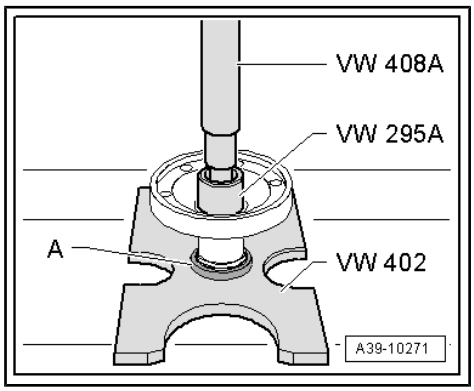

Protected by copyright. Copying for private or commercial purposes, in part or in whole, is not permitted unless authorised by AUDI AG. AUDI AG does not guarantee or accept any liability with respect to the correctness of information in this document. Copyright by AUDI AG.

7 Renewing propshaft flange - 0BD

- (Rear final drive removed)

Special tools and workshop equipment required

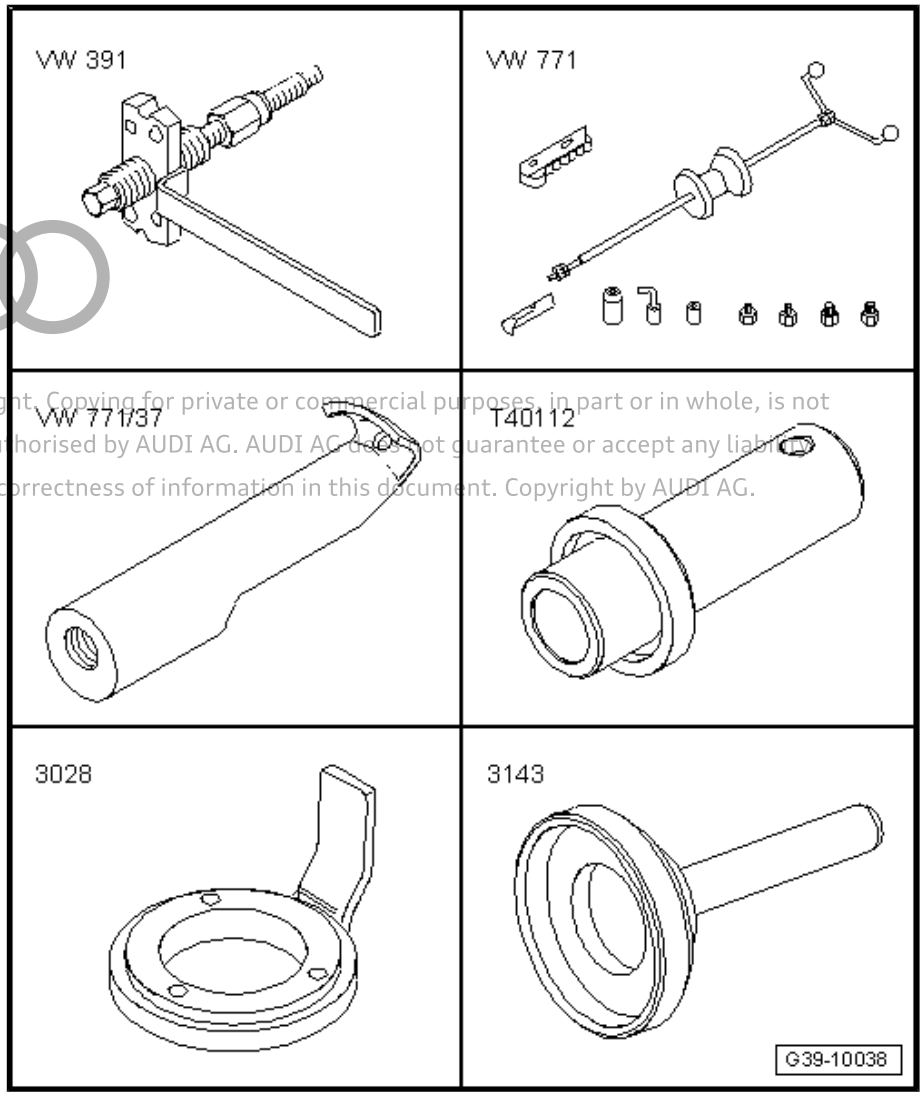

Protected by copyright. Copying for private or commercial purposes, in part or in whole, is not permitted unless authorised by AUDI AG. AUDI AG does not guarantee or accept any liability with respect to the correctness of information in this document. Copyright by AUDI AG.

- Drive flange installing tool - VW 391-
- Multi-purpose tool - VW 771-
- Extractor tool - VW 771/37-
- Thrust piece - T40112-
- Counterhold tool - 3028-
- Drift sleeve - 3143-

- Adapters - T10235-

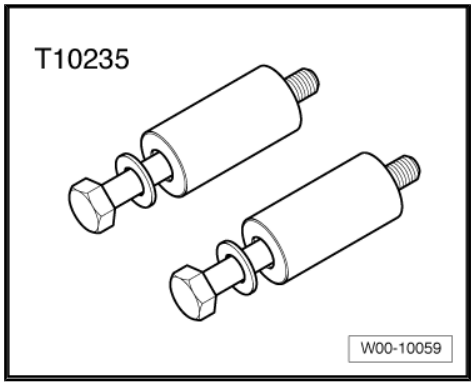

- Friction gauge - VAS 6222-

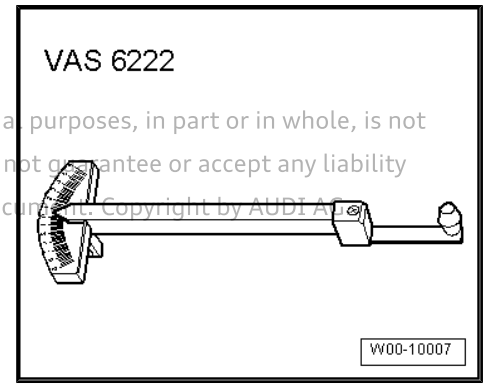

Protected by copyright. Copying for private or commercial purposes, in part or in whole, is not permitted unless authorised by AUDI AG. AUDI AG does not guarantee or accept any liability with respect to the correctness of information in this document. Copyright by AUDI AG.

- Inductive heater - VAS 6414-
- Sealing grease - G 052 128 A1-
- Locking fluid - AMV 185 101 A1-
- 3 bolts (M8 x 25)
- 2 bolts (M10 x 40)

Refer to general repair instructions ⇒ page 14 .

– Remove rear final drive ⇒ page 48 .

– Secure rear final drive to engine and gearbox support - VW 540- with bolts (M10 × 40) -arrows-.

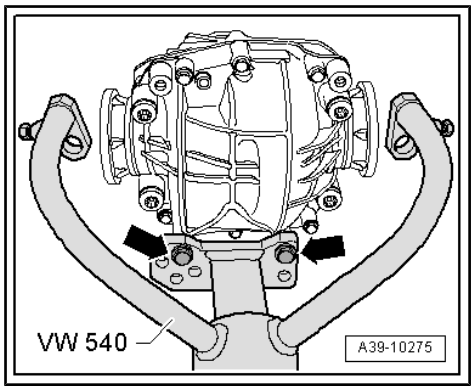

– Measure friction torque before slackening pinion shaft nut.
– Make a note of the measurement.

> ⚠ **Caution**
>
> ***The friction torque must be set to this measured value after renewing the oil seal.***

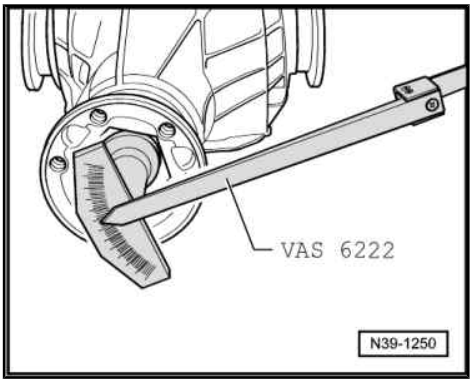

– Fit counterhold tool - 3028- to flange for propshaft with bolts -A-.
– Secure adapter - T10235- in threaded hole below flange for propshaft.
– Slacken pinion shaft nut, allowing counterhold tool - 3028- to rest against adapter - T10235- -arrow-.

-A- 3 bolts M8 x 25

-B- Socket (32 mm)

-C- Handle

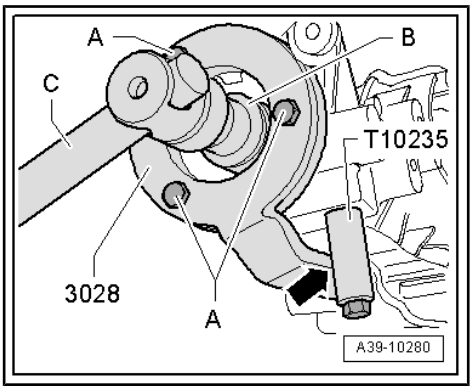

– Secure installing tool - VW 391- with 2 bolts M 8 x 25 -arrows-.
– Pull off flange for propshaft.

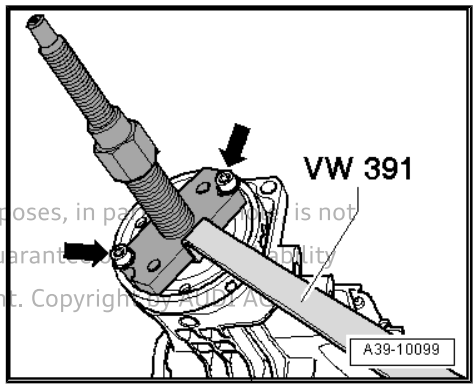

Protected by copyright. Copying for private or commercial purposes, in part or in whole, is not permitted unless authorised by AUDI AG. AUDI AG does not guarantee or assume liability with respect to the correctness of information in this document. Copyright by AUDI AG.

– Pull out the oil seal.
– Clean thread of pinion shaft.

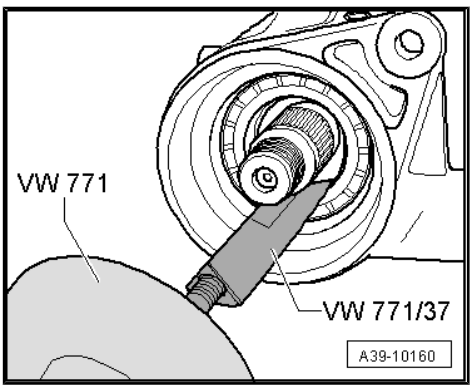

– Lightly lubricate outer circumference of oil seal with gear oil.
– Pack space between sealing lip and dust lip half-full with sealing grease - G 052 128 A1- .
– Drive in new oil seal onto stop (take care to keep oil seal straight).

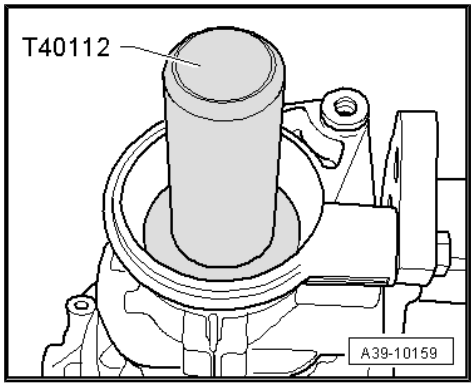

– Using inductive heater - VAS 6414- , heat flange for propshaft to approx. 80 °C.
– Drive new flange for propshaft onto pinion shaft.
– Apply locking fluid - AMV 185 101 A1- to thread of new nut.

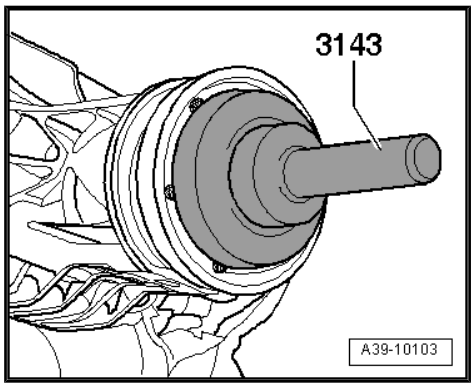

– Fit counterhold tool - 3028- to flange for propshaft with bolts -A-.
– Counterhold tool - 3028- must rest against lug -arrow- on housing when tightening pinion shaft nut.

-A- 3 bolts M 8 x 25

-B- Socket (32 mm)

-C- Handle

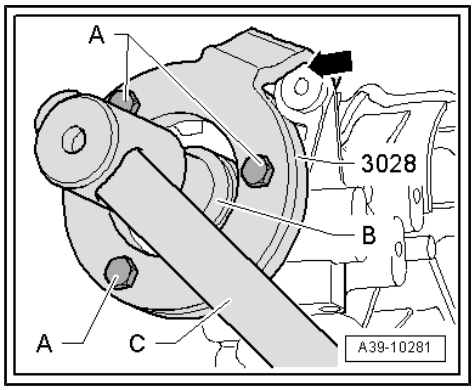

> **Caution**
>
> ***Only increase tightening torque slowly. Stop and check friction torque several times. Friction torque measured prior to removal must not be exceeded otherwise rear final drive will have to be renewed!***

– Tighten new pinion shaft nut until torque friction measured before removal is attained.
– Install rear final drive ⇒ page 48 .
– Check oil level in rear final drive ⇒ page 108 .

Protected by copyright. Copying for private or commercial purposes, in part or in whole, is not permitted unless authorised by AUDI AG. AUDI AG does not guarantee or accept any liability with respect to the correctness of information in this document. Copyright by AUDI AG.

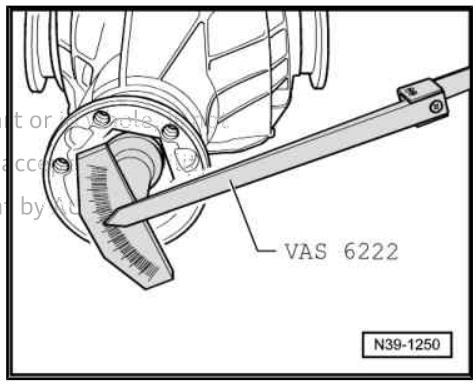

8 Gearbox control system

⇒ “8.1 Overview of fitting locations - gearbox control system”, page 173

⇒ “8.2 Removing and installing all-wheel drive control unit J492 ”, page 175

⇒ “8.3 Additional work required after renewing all-wheel drive control unit J492 ”, page 176

8.1 Overview of fitting locations - gearbox control system

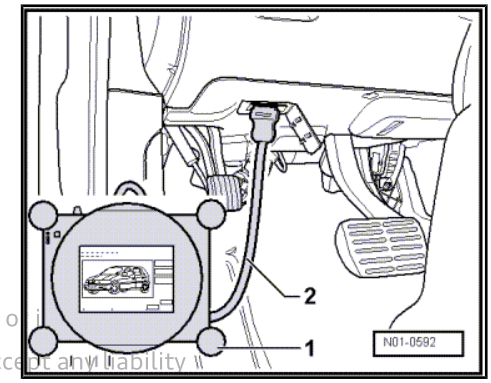

Diagnostic connection

Fitting location: the diagnostic connection for the vehicle diagnostic tester is located in the driver's footwell.

Protected by copyright. Copying for private or commercial purposes, in part or in whole, is not permitted unless authorised by AUDI AG. AUDI AG does not guarantee or accept any liability with respect to the correctness of information in this document. Copyright by AUDI AG.

All-wheel drive control unit - J492- in A4 saloon, A5 Coupé and A5 Cabriolet

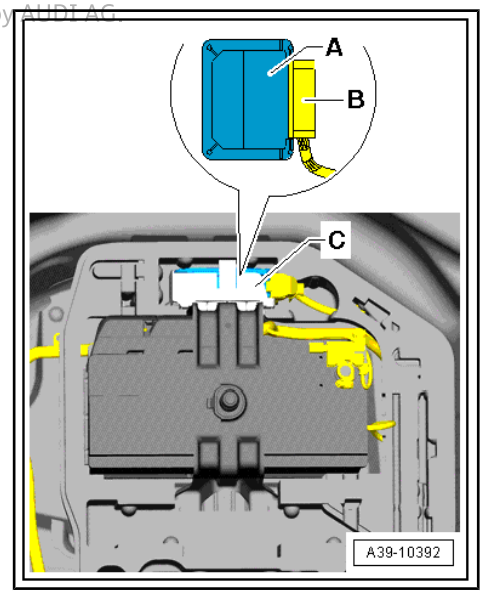

Fitting location: the all-wheel drive control unit - J492- -A- is located in the spare wheel well in front of the battery.

⇒ “8.2 Removing and installing all-wheel drive control unit J492 ”, page 175

All-wheel drive control unit - J492- in A4 Avant

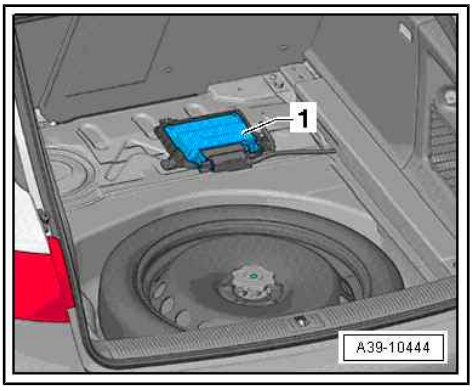

Fitting location: the all-wheel drive control unit - J492- -1- is located on the right of the luggage compartment in front of the spare wheel well.

⇒ “8.2 Removing and installing all-wheel drive control unit J492 ”, page 175

All-wheel drive control unit - J492- in A5 Sportback

Fitting location: the all-wheel drive control unit - J492- -1- is located on the rear wheel housing (right-side) behind the luggage compartment side trim ⇒ General body repairs, interior; Rep. gr. 70 ; Luggage compartment trim panels .

⇒ “8.2 Removing and installing all-wheel drive control unit J492 ”, page 175

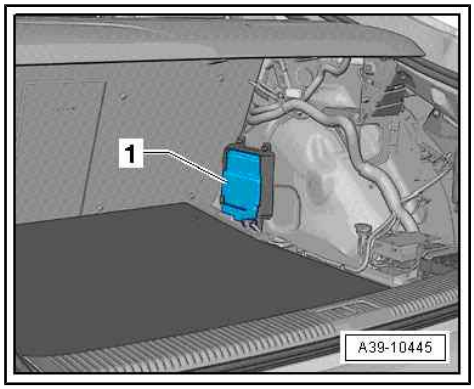

All-wheel drive control unit - J492- in Audi A6/A7

Fitting location: the all-wheel drive control unit - J492- -A- is located on the right side of the spare wheel well.

⇒ “8.2 Removing and installing all-wheel drive control unit J492 ”, page 175

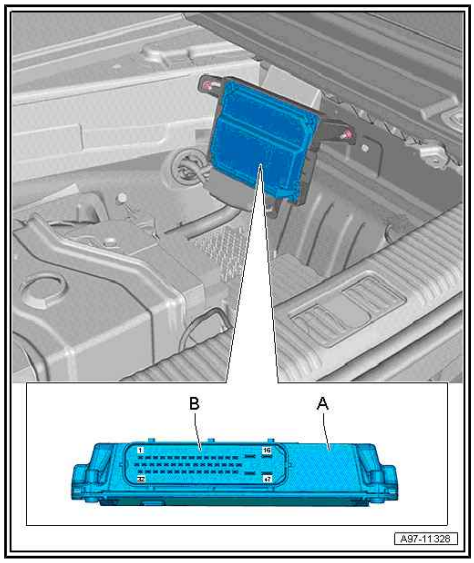

All-wheel drive control unit - J492- in A8

Fitting location: the all-wheel drive control unit - J492- -1- is located on the left side of the spare wheel well.

⇒ “8.2 Removing and installing all-wheel drive control unit J492 ”, page 175

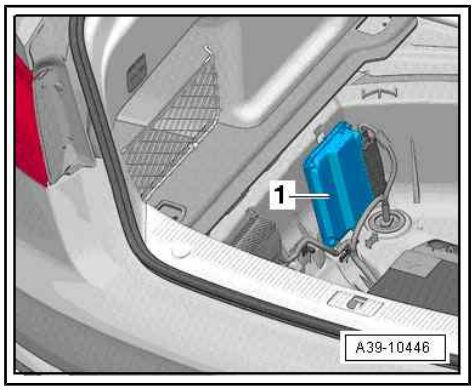

Protected by copyright. Copying for private or commercial purposes, in part or in whole, is not permitted unless authorised by AUDI AG. AUDI AG does not guarantee or accept any liability with respect to the correctness of information in this document. Copyright by AUDI AG.

All-wheel drive control unit - J492- in Q5

⇒ “8.2 Removing and installing all-wheel drive control unit J492 ”, page 175

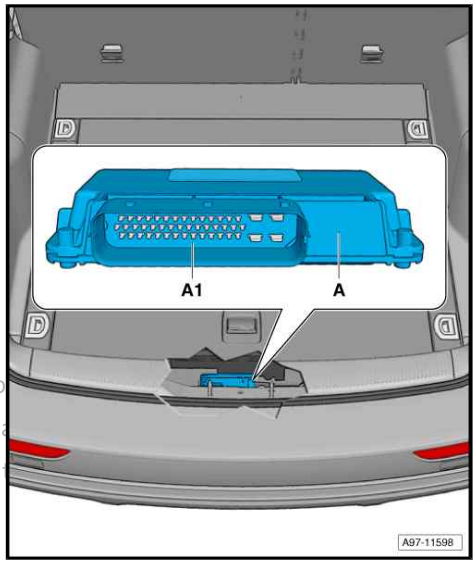

Protected by copyright. Copying for private or commercial purp
permitted unless authorised by AUDI AG. AUDI AG does not gua
with respect to the correctness of information in this document

8.2 Removing and installing all-wheel drive control unit - J492-

Note

- *Fitting locations of all-wheel drive control unit - J492- ⇒ page 173*
- *The removal and installation procedures are described for the A4 saloon.*

- Ignition is switched off.

– Remove luggage compartment floor covering.

– Remove cover and mounting for vehicle tool kit.

– Unclip all-wheel drive control unit - J492- -A- from bracket -C-.

– Release connector -B- and unplug from all-wheel drive control unit - J492- .

– Installation of all-wheel drive control unit - J492- is carried out in reverse order of removal.

- Additional work is required if all-wheel drive control unit - J492- has been renewed ⇒ page 176 .

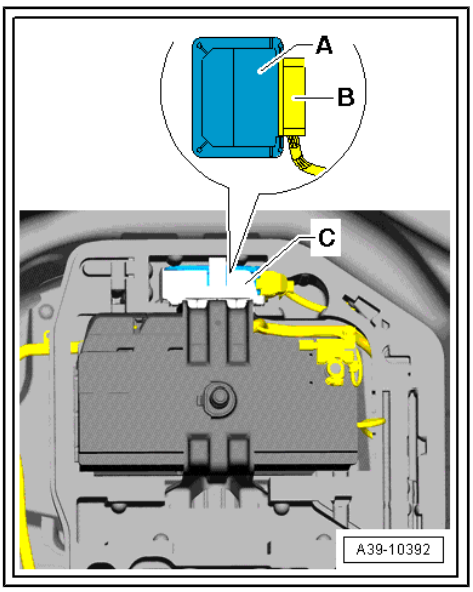

8.3 Additional work required after renewing all-wheel drive control unit - J492-

Note

Only perform this additional work if all-wheel drive control unit - J492- has been renewed.

– Connect vehicle diagnostic tester and switch on ignition.

– Using vehicle diagnostic tester in `Guided Functions` mode, select `22 - Four-wheel electronics` and then select the function `22 - Replace control unit`.

• It is important to follow all instructions given by the vehicle diagnostic tester exactly.

Using the vehicle diagnostic tester, the rear final drive fitted in the vehicle is “adapted” to the all-wheel drive control unit - J492- .

Note

When the function `22 - Replace control unit` has been completed, a system check is performed. Any malfunctions during this test must be eliminated via the “Guided Fault Finding”.

Protected by copyright. Copying for private or commercial purposes, in part or in whole, is not permitted unless authorised by AUDI AG. AUDI AG does not guarantee or accept any liability with respect to the correctness of information in this document. Copyright by AUDI AG.